This document was too large to scan as a single document. It has been divided into smaller sections.

Section 3 of 4

Document Information			
Document #	RPP-24544	Revision	1C
Title	DEMONSTRATION BULK VITRIFICATION SYS INDEPENDENT QUALIFIED REGISTERED PROFESSIONAL ENGINEER (IQRPE) & RCRA REVIEW PACKAGE		
Date	04/25/2006		
Originator	SHUFORD DH	ORG CO	CH2M
Recipient		Recipient Co.	
References			
Keywords			
Projects			
Other Information			

0069628
3/4

ARES CORPORATION	CALCULATION SHEET		
Project No. 0509206.01	Calculation No. 0509206.01-M-002	Rev. No. 1	Page 167 of 252
Title: DBVS ICV™ Off-Gas Hood Thermal Analysis			
Prepared By: P.S. Lowery	Date: 2.17.06	Checked By: S.R. Pierce	Date: 2.17.06

7 of 8

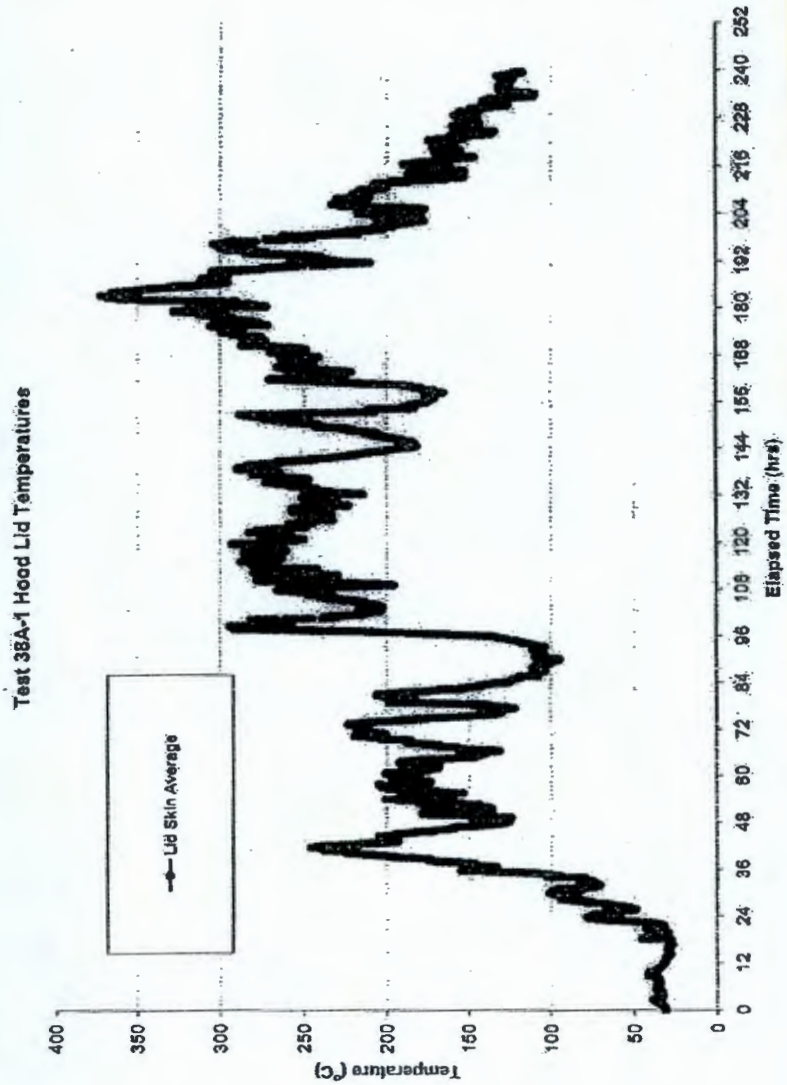

ARES CORPORATION	CALCULATION SHEET		
Project No. 0509206.01	Calculation No. 0509206.01-M-002	Rev. No. 1	Page 168 of 252
Title: DBVS ICV™ Off-Gas Hood Thermal Analysis			
Prepared By: P.S. Lowery	Date: 2.17.06	Checked By: S.R. Pierce	Date: 2.17.06

B of B

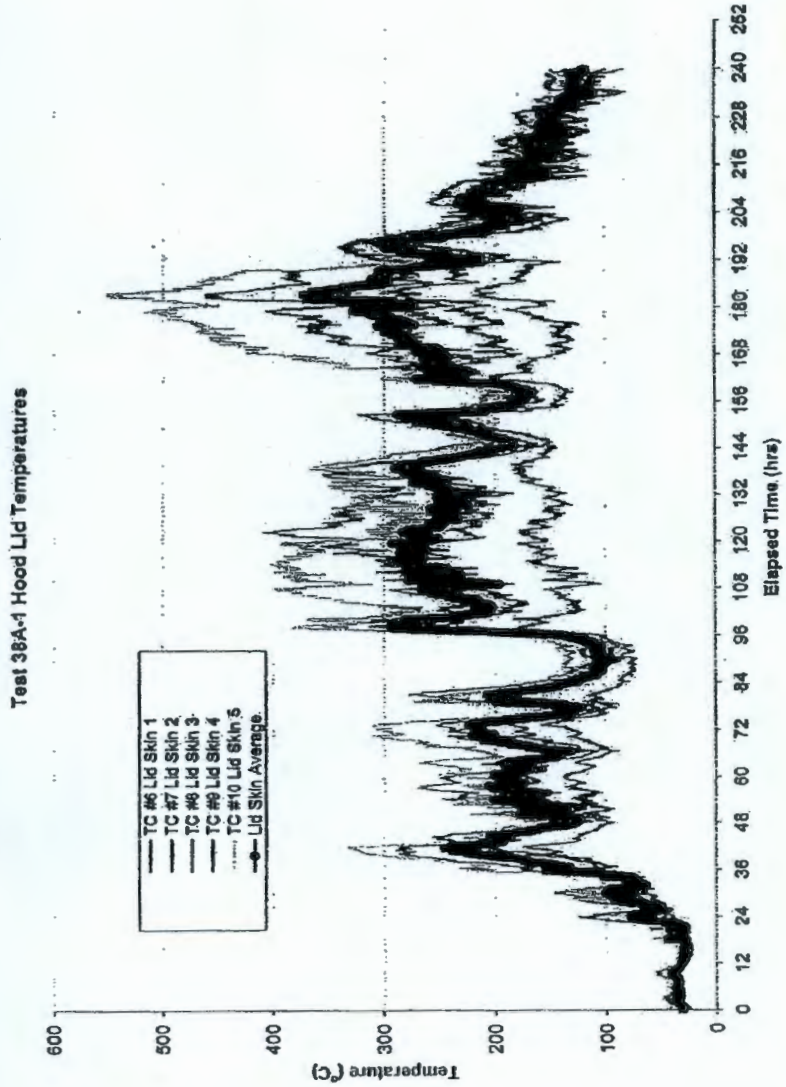

ARES CORPORATION	CALCULATION SHEET		
Project No. 0509206.01	Calculation No. 0509206.01-M-002	Rev. No. 1	Page 169 of 252
Title: DBVS ICV™ Off-Gas Hood Thermal Analysis			
Prepared By: P.S. Lowery	Date: 2.17.06	Checked By: S.R. Pierce	Date: 2.17.06

APPENDIX G

MATHCAD MODEL FOR THE HRTS CONDITIONS WITH ADJUSTED MELT SURFACE TEMPERATURE

ARES CORPORATION	CALCULATION SHEET		
Project No. 0509206.01	Calculation No. 0509206.01-M-002	Rev. No. 1	Page 170 of 252
Title: DBVS ICV™ Off-Gas Hood Thermal Analysis			
Prepared By: P.S. Lowery	Date: 2.17.06	Checked By: S.R. Pierce	Date: 2.17.06

DBVS ICV™ Off-Gas Hood Thermal Analysis

$°F = 1$

$°C = 1$

$CtoF(x) := \left(\frac{9}{5} \cdot \frac{x}{°C} + 32\right) °F$ $\quad CtoK(x) := \left(\frac{x}{°C} + 273.15\right) K$ $\quad KtoC(x) := \left(\frac{x}{K} - 273.15\right) °C$

$FtoC(x) := \frac{5}{9}\left(\frac{x}{°F} - 32\right) °C$ $\quad FtoR(x) := \left(\frac{x}{°F} + 459.67\right) R$

$w_1 := 5.5ft$ $\quad w_2 := 3.5ft$ $\quad L_1 := 22ft$ $\quad h_1 := 14in$ $\quad h_2 := 16in$ $\quad \theta := 52deg$ $\quad N_{ribs} := 12$ $\quad w_{ribs} := 2in$ $\quad h_{ribs} := 4in$

$\delta_{hood} := 0.3125in$ $\quad \theta_{ir} := 52deg$ $\quad \delta_{floor} := 3.5in$ $\quad \delta_{CR} := 6in$ $\quad \delta_{sand} := 6in$

Matrix of surface areas ...

$$A_r := \begin{bmatrix} w_1 \cdot L_1 & 0 & 0 \\ w_1 \cdot h_1 & 0 & 0 \\ L_1 \cdot h_1 & 0 & 0 \\ w_1 \cdot h_1 & 0 & 0 \\ L_1 \cdot h_1 & 0 & 0 \\ \frac{(w_1 + w_2) \cdot h_2}{2} & 0 & 0 \\ L_1 \cdot \frac{h_2}{\sin(\theta)} & N_{ribs} \cdot w_{ribs} \cdot \frac{h_2}{\sin(\theta)} & 2N_{ribs} \cdot h_{ribs} \cdot \frac{h_2}{\sin(\theta)} \\ \frac{(w_1 + w_2) \cdot h_2}{2} & 0 & 0 \\ L_1 \cdot \frac{h_2}{\sin(\theta)} & N_{ribs} \cdot w_{ribs} \cdot \frac{h_2}{\sin(\theta)} & 2N_{ribs} \cdot h_{ribs} \cdot \frac{h_2}{\sin(\theta)} \\ w_2 \cdot L_1 & N_{ribs} \cdot w_{ribs} \cdot w_2 & 2N_{ribs} \cdot h_{ribs} \cdot w_2 \\ (8ft + w_1 + 3ft) \cdot (5ft + L_1 + 5ft) & 0 & 0 \\ w_1 \cdot h_1 & 0 & 0 \\ L_1 \cdot h_1 & 0 & 0 \\ w_1 \cdot h_1 & 0 & 0 \\ L_1 \cdot h_1 & 0 & 0 \end{bmatrix}$$

The first column of dat contains the area of the element for radiant heat transfer. The second column of data contains the horizontal component of area associated with the 4"x2" steel tubing ribs on that elemental area. The third column of data contains the vertical component of the ribs for that elemental area.

$A =$

1	121	0	0
2	6.4	0	0
3	25.7	0	0
4	6.4	0	0
5	25.7	0	0
6	6	0	0
7	37.2	3.4	13.6
8	6	0	0
9	37.2	3.4	13.6
10	77	7	28
11	322	0	0
12	6.4	0	0
13	25.7	0	0
14	6.4	0	0
15	25.7	0	0

ft^2

CALCULATION SHEET

Project No. 0509206.01	Calculation No. 0509206.01-M-002	Rev. No. 1	Page 171 of 252
Title: DBVS ICV™ Off-Gas Hood Thermal Analysis			
Prepared By: P.S. Lowery	Date: 2.17.06	Checked By: S.R. Pierce	Date: 2.17.06

DBVS ICV™ Off-Gas Hood Thermal Analysis

$$F := \begin{pmatrix} 0 & .021 & .091 & .021 & .091 & .028 & .177 & .028 & .177 & .366 & 0 \\ .397 & 0 & .026 & .004 & .026 & 0 & .129 & .021 & .129 & .265 & 0 \\ .428 & .006 & 0 & .006 & .052 & .019 & .039 & .019 & .077 & .354 & 0 \\ .400 & .004 & .026 & 0 & .026 & .021 & .129 & 0 & .129 & .265 & 0 \\ .428 & .006 & .052 & .006 & 0 & .019 & .077 & .019 & .039 & .354 & 0 \\ .565 & 0 & .081 & .022 & .081 & 0 & .081 & .003 & .081 & .086 & 0 \\ .575 & .022 & .027 & .022 & .053 & .013 & 0 & .013 & .015 & .125 & .616 \\ .565 & .022 & .081 & 0 & .081 & .003 & .081 & 0 & .081 & .086 & 0 \\ .575 & .022 & .053 & .022 & .027 & .013 & .150 & .013 & 0 & .125 & .616 \\ .574 & .022 & .118 & .022 & .118 & .013 & .060 & .013 & .060 & 0 & 1 \end{pmatrix}$$

Matrix F contains the view factors for radiant heat transfer between surfaces of the model. The first (row) index corresponds to the ID of the source surface; the second to the receiving surface. For example, the top of the soil surface above the melt has ID=0; the ID of the "short" box wall surface (width = 5.5 ft, height = 14in) has ID = 1. The view factor between these two surfaces is located at F[0,1] = 0.021 (obtained from Configuration 16, p. 1030 in Siegel & Howell's Thermal Radiation Heat Transfer, 3rd Edition). The "reciprocity" view factor for these two surfaces is F[1,0] = A[0,0]*F[0,1]/A[1,0] = 0.397.

F :=

	0	1	2	3	4	5	6	7	8	9	10
0	0	0.021	0.091	0.021	0.091	0.028	0.177	0.028	0.177	0.366	0
1	0.397	0	0.026	0.004	0.026	0	0.129	0.021	0.129	0.265	0
2	0.428	0.006	0	0.006	0.052	0.019	0.039	0.019	0.077	0.354	0
3	0.4	0.004	0.026	0	0.026	0.021	0.129	0	0.129	0.265	0
4	0.428	0.006	0.052	0.006	0	0.019	0.077	0.019	0.039	0.354	0
5	0.565	0	0.081	0.022	0.081	0	0.081	0.003	0.081	0.086	0
6	0.575	0.022	0.027	0.022	0.053	0.013	0	0.013	0.015	0.125	0.616
7	0.565	0.022	0.081	0	0.081	0.003	0.081	0	0.081	0.086	0
8	0.575	0.022	0.053	0.022	0.027	0.013	0.15	0.013	0	0.125	0.616
9	0.574	0.022	0.118	0.022	0.118	0.013	0.06	0.013	0.06	0	1

ARES CORPORATION	CALCULATION SHEET		
Project No. 0509206.01	Calculation No. 0509206.01-M-002	Rev. No. 1	Page 172 of 252
Title: DBVS ICV™ Off-Gas Hood Thermal Analysis			
Prepared By: P.S. Lowery	Date: 2.17.06	Checked By: S.R. Pierce	Date: 2.17.06

DBVS ICV™ Off-Gas Hood Thermal Analysis

Temperature Boundary Conditions ...

$Tmelt := 1157°F$	$TmC := FtoC(Tmelt)$	$T_{melt} := CtoK(TmC)$	$T_{melt} = 898.15\ K$
$TAWTE := 77°F$	$TAC := FtoC(TAWTE)$	$T_{AWTE} := CtoK(TAC)$	$T_{AWTE} = 298.1\ K$
$TOG := 1112°F$	$Tog := FtoC(TOG)$	$T_{OG} := CtoK(Tog)$	$T_{OG} = 873.15\ K$
	$Tamb := 12°C$	$T_{amb} := CtoK(Tamb)$	$T_{amb} = 285.1\ K$

Initial guess for temperatures ...

$T_0 := T_{melt}$

$T_1 := 773K$ $T_3 := 773K$ $T_5 := 773K$ $T_7 := 773K$ $T_9 := 773K$

$T_2 := 773K$ $T_4 := 773K$ $T_6 := 773K$ $T_8 := 773K$ $T_{10} := 773K$ (T_{10} not used in this model)

$T_{11} := 473K$ $T_{13} := 473K$

$T_{12} := 473K$ $T_{14} := 473K$

Material properties ...

$\sigma := 5.67 \cdot 10^{-8} \cdot \frac{W}{m^2 \cdot K^4}$

$\varepsilon_{melt} := 0.7$

$\varepsilon_{all} := .85$ $k_{all} := 60.5 \frac{W}{m \cdot K}$

$\varepsilon_{CR} := 0.66$ $k_{CR} := 1.44 \frac{W}{m \cdot K}$ $k_{sand} := 2 \frac{W}{m \cdot K}$

$\alpha_{OG} := 0$ $\varepsilon_{OG} := 1 - \alpha_{OG}$ $\xi_{OG} := 1$

Convective heat transfer coefficients ... $n := \frac{1}{3}$ $\xi_V := 1.32 \cdot W \cdot m^{-2} \cdot K^{\frac{-4}{3}}$ $\xi_{HD} := 0.691 \cdot W \cdot m^{-2} \cdot K^{-\frac{4}{3}}$ $\xi_{HU} := 1.52 \cdot W \cdot m^{-2} \cdot K^{-\frac{4}{3}}$

CALCULATION SHEET

Project No. 0509206.01	Calculation No. 0509206.01-M-002	Rev. No. 1	Page 173 of 252
Title: DBVS ICV™ Off-Gas Hood Thermal Analysis			
Prepared By: P.S. Lowery	Date: 2.17.06	Checked By: S.R. Pierce	Date: 2.17.06

DBVS ICV™ Off-Gas Hood Thermal Analysis

$T_{amb} = 285.1\ K$ $\quad T_{OG} = 872.1\ K$

Given

j=1

$$\sigma \cdot \varepsilon_{OG} \cdot \left(T_1^4 - T_0^4\right) \cdot \left(\frac{1-\varepsilon_{melt}}{\varepsilon_{melt} \cdot A_{0,0}}\right) + \frac{1}{A_{0,0} \cdot F_{0,1}} + \left(\frac{1-\varepsilon_{CR}}{\varepsilon_{CR} \cdot A_{1,0}}\right)$$

$$+ \sigma \cdot \varepsilon_{OG} \cdot \left(T_1^4 - T_4^4\right) \cdot \left(\frac{1-\varepsilon_{CR}}{\varepsilon_{CR} \cdot A_{1,0}}\right) + \frac{1}{A_{1,0} \cdot F_{1,4}} + \left(\frac{1-\varepsilon_{CR}}{\varepsilon_{CR} \cdot A_{1,0}}\right)$$

$$+ \sigma \cdot \varepsilon_{OG} \cdot \left(T_1^4 - T_8^4\right) \cdot \left(\frac{1-\varepsilon_{CR}}{\varepsilon_{CR} \cdot A_{1,0}}\right) + \frac{1}{A_{1,0} \cdot F_{1,8}} + \frac{1-\varepsilon_{all}}{\varepsilon_{all} \cdot A_{8,0}}$$

$$+ A_{1,0} \cdot \left(T_1 - T_{11}\right) \cdot \left(\frac{\varepsilon_{sump}}{k_{CR}}\right) + \left(\frac{\varepsilon_{mid}}{k_{mid}}\right) + \sigma \cdot \varepsilon_{OG} \cdot \left(T_1^4 - T_{OG}^4\right) \cdot \left(\frac{1-\varepsilon_{CR}}{\varepsilon_{CR} \cdot A_{1,0}}\right) + \frac{1}{A_{1,0}}$$

$$\sigma \cdot \varepsilon_{OG} \cdot \left(T_1^4 - T_2^4\right) \cdot \left(\frac{1-\varepsilon_{CR}}{\varepsilon_{CR} \cdot A_{1,0}}\right) + \frac{1}{A_{1,0} \cdot F_{1,2}} + \left(\frac{1-\varepsilon_{CR}}{\varepsilon_{CR} \cdot A_{1,0}}\right)$$

$$\sigma \cdot \varepsilon_{OG} \cdot \left(T_1^4 - T_6^4\right) \cdot \left(\frac{1-\varepsilon_{CR}}{\varepsilon_{CR} \cdot A_{1,0}}\right) + \frac{1}{A_{1,0} \cdot F_{1,6}} + \left(\frac{1-\varepsilon_{all}}{\varepsilon_{all} \cdot A_{6,0}}\right)$$

$$\sigma \cdot \varepsilon_{OG} \cdot \left(T_1^4 - T_9^4\right) \cdot \left(\frac{1-\varepsilon_{CR}}{\varepsilon_{CR} \cdot A_{1,0}}\right) + \frac{1}{A_{1,0} \cdot F_{1,9}} + \frac{1-\varepsilon_{all}}{\varepsilon_{all} \cdot A_{9,0}}$$

$$+ \varepsilon_V \cdot A_{1,0} \cdot \left(\left|T_1 - T_{OG}\right|\right)^{\frac{1}{3}} \cdot \left(T_1 - T_{OG}\right) \ldots$$

$$\sigma \cdot \varepsilon_{OG} \cdot \left(T_1^4 - T_3^4\right) \cdot \left(\frac{1-\varepsilon_{CR}}{\varepsilon_{CR} \cdot A_{1,0}}\right) + \frac{1}{A_{1,0} \cdot F_{1,3}} + \left(\frac{1-\varepsilon_{CR}}{\varepsilon_{CR} \cdot A_{3,0}}\right) \ldots = 0$$

$$\sigma \cdot \varepsilon_{OG} \cdot \left(T_1^4 - T_7^4\right) \cdot \left(\frac{1-\varepsilon_{CR}}{\varepsilon_{CR} \cdot A_{1,0}}\right) + \frac{1}{A_{1,0} \cdot F_{1,7}} + \frac{1-\varepsilon_{all}}{\varepsilon_{all} \cdot A_{7,0}} \ldots$$

ARES CORPORATION	CALCULATION SHEET		
Project No. 0509206.01	Calculation No. 0509206.01-M-002	Rev. No. 1	Page 174 of 252
Title: DBVS ICV™ Off-Gas Hood Thermal Analysis			
Prepared By: P.S. Lowery	Date: 2.17.06	Checked By: S.R. Pierce	Date: 2.17.06

DBVS ICV™ Off-Gas Hood Thermal Analysis

j=3

$$\frac{\sigma\cdot\tau_{OG}\cdot\left(T_3^4-T_0^4\right)}{\left(\frac{1-\varepsilon_{melt}}{\varepsilon_{melt}\cdot A_{0,0}}\right)+\frac{1}{A_{0,0}\cdot F_{0,3}}+\left(\frac{1-\varepsilon_{CR}}{\varepsilon_{CR}\cdot A_{3,0}}\right)}+\frac{\sigma\cdot\tau_{OG}\cdot\left(T_3^4-T_1^4\right)}{\left(\frac{1-\varepsilon_{CR}}{\varepsilon_{CR}\cdot A_{3,0}}\right)+\frac{1}{A_{3,0}\cdot F_{3,1}}+\left(\frac{1-\varepsilon_{CR}}{\varepsilon_{CR}\cdot A_{3,0}}\right)}+\frac{\sigma\cdot\tau_{OG}\cdot\left(T_3^4-T_2^4\right)}{\left(\frac{1-\varepsilon_{CR}}{\varepsilon_{CR}\cdot A_{3,0}}\right)+\frac{1}{A_{3,0}\cdot F_{3,2}}+\left(\frac{1-\varepsilon_{CR}}{\varepsilon_{CR}\cdot A_{2,0}}\right)}\cdots=0$$

$$+\frac{\sigma\cdot\tau_{OG}\cdot\left(T_3^4-T_4^4\right)}{\left(\frac{1-\varepsilon_{CR}}{\varepsilon_{CR}\cdot A_{3,0}}\right)+\frac{1}{A_{3,0}\cdot F_{3,4}}+\left(\frac{1-\varepsilon_{CR}}{\varepsilon_{CR}\cdot A_{4,0}}\right)}+\frac{\sigma\cdot\tau_{OG}\cdot\left(T_3^4-T_5^4\right)}{\left(\frac{1-\varepsilon_{CR}}{\varepsilon_{CR}\cdot A_{3,0}}\right)+\frac{1}{A_{3,0}\cdot F_{3,5}}+\left(\frac{1-\varepsilon_{stl}}{\varepsilon_{stl}\cdot A_{5,0}}\right)}+\frac{\sigma\cdot\tau_{OG}\cdot\left(T_3^4-T_6^4\right)}{\left(\frac{1-\varepsilon_{CR}}{\varepsilon_{CR}\cdot A_{3,0}}\right)+\frac{1}{A_{3,0}\cdot F_{3,6}}+\frac{1-\varepsilon_{stl}}{\varepsilon_{stl}\cdot A_{6,0}}}\cdots$$

$$+\frac{\sigma\cdot\tau_{OG}\cdot\left(T_3^4-T_8^4\right)}{\left(\frac{1-\varepsilon_{CR}}{\varepsilon_{CR}\cdot A_{3,0}}\right)+\frac{1}{A_{3,0}\cdot F_{3,8}}+\frac{1-\varepsilon_{stl}}{\varepsilon_{stl}\cdot A_{8,0}}}+\frac{\sigma\cdot\tau_{OG}\cdot\left(T_3^4-T_9^4\right)}{\left(\frac{1-\varepsilon_{CR}}{\varepsilon_{CR}\cdot A_{3,0}}\right)+\frac{1}{A_{3,0}\cdot F_{3,9}}+\frac{1-\varepsilon_{stl}}{\varepsilon_{stl}\cdot A_{9,0}}}+\xi_V\cdot A_{3,0}\cdot\left(\left|T_3-T_{OG}\right|\right)^{\frac{1}{3}}\cdot\left(T_3-T_{OG}\right)\cdots$$

$$+\frac{A_{3,0}\cdot\left(T_3-T_{13}\right)}{\left(\frac{\delta_{CR}}{k_{CR}}\right)+\left(\frac{\delta_{sand}}{k_{sand}}\right)}+\frac{\sigma\cdot\alpha_{OG}\cdot\left(T_3^4-T_{OG}^4\right)}{\left(\frac{1-\varepsilon_{CR}}{\varepsilon_{CR}\cdot A_{3,0}}\right)+\frac{1}{A_{3,0}}}$$

ARES CORPORATION	CALCULATION SHEET		
Project No. 0509206.01	Calculation No. 0509206.01-M-002	Rev. No. 1	Page 175 of 252
Title: DBVS ICV™ Off-Gas Hood Thermal Analysis			
Prepared By: P.S. Lowery	Date: 2.17.06	Checked By: S.R. Pierce	Date: 2.17.06

DBVS ICV™ Off-Gas Hood Thermal Analysis

j=4

$$\frac{\sigma\cdot\varepsilon_{OG}\cdot\left(T_4^4-T_0^4\right)}{\left(\frac{1-\varepsilon_{melt}}{\varepsilon_{melt}\cdot A_{0,0}}\right)+\frac{1}{A_{0,0}\cdot F_{0,4}}+\left(\frac{1-\varepsilon_{CR}}{\varepsilon_{CR}\cdot A_{4,0}}\right)}+\frac{\sigma\cdot\varepsilon_{OG}\cdot\left(T_4^4-T_1^4\right)}{\left(\frac{1-\varepsilon_{CR}}{\varepsilon_{CR}\cdot A_{4,0}}\right)+\frac{1}{A_{4,0}\cdot F_{4,1}}+\left(\frac{1-\varepsilon_{CR}}{\varepsilon_{CR}\cdot A_{1,0}}\right)}+\frac{\sigma\cdot\varepsilon_{OG}\cdot\left(T_4^4-T_2^4\right)}{\left(\frac{1-\varepsilon_{CR}}{\varepsilon_{CR}\cdot A_{4,0}}\right)+\frac{1}{A_{4,0}\cdot F_{4,2}}+\left(\frac{1-\varepsilon_{CR}}{\varepsilon_{CR}\cdot A_{2,0}}\right)}\cdots=0$$

$$+\frac{\sigma\cdot\varepsilon_{OG}\cdot\left(T_4^4-T_3^4\right)}{\left(\frac{1-\varepsilon_{CR}}{\varepsilon_{CR}\cdot A_{4,0}}\right)+\frac{1}{A_{4,0}\cdot F_{4,3}}+\left(\frac{1-\varepsilon_{CR}}{\varepsilon_{CR}\cdot A_{3,0}}\right)}+\frac{\sigma\cdot\varepsilon_{OG}\cdot\left(T_4^4-T_5^4\right)}{\left(\frac{1-\varepsilon_{CR}}{\varepsilon_{CR}\cdot A_{4,0}}\right)+\frac{1}{A_{4,0}\cdot F_{4,5}}+\left(\frac{1-\varepsilon_{stl}}{\varepsilon_{stl}\cdot A_{5,0}}\right)}+\frac{\sigma\cdot\varepsilon_{OG}\cdot\left(T_4^4-T_6^4\right)}{\left(\frac{1-\varepsilon_{CR}}{\varepsilon_{CR}\cdot A_{4,0}}\right)+\frac{1}{A_{4,0}\cdot F_{4,6}}+\frac{1-\varepsilon_{stl}}{\varepsilon_{stl}\cdot A_{6,0}}}\cdots$$

$$+\frac{\sigma\cdot\varepsilon_{OG}\cdot\left(T_4^4-T_7^4\right)}{\left(\frac{1-\varepsilon_{CR}}{\varepsilon_{CR}\cdot A_{4,0}}\right)+\frac{1}{A_{4,0}\cdot F_{4,7}}+\frac{1-\varepsilon_{stl}}{\varepsilon_{stl}\cdot A_{7,0}}}+\frac{\sigma\cdot\varepsilon_{OG}\cdot\left(T_4^4-T_8^4\right)}{\left(\frac{1-\varepsilon_{CR}}{\varepsilon_{CR}\cdot A_{4,0}}\right)+\frac{1}{A_{4,0}\cdot F_{4,8}}+\frac{1-\varepsilon_{stl}}{\varepsilon_{stl}\cdot A_{8,0}}}+\frac{\sigma\cdot\varepsilon_{OG}\cdot\left(T_4^4-T_9^4\right)}{\left(\frac{1-\varepsilon_{CR}}{\varepsilon_{CR}\cdot A_{4,0}}\right)+\frac{1}{A_{4,0}\cdot F_{4,9}}+\frac{1-\varepsilon_{stl}}{\varepsilon_{stl}\cdot A_{9,0}}}\cdots$$

$$+\frac{A_{4,0}\cdot\left(T_4-T_{14}\right)}{\left(\frac{\delta_{CR}}{k_{CR}}\right)+\left(\frac{\delta_{sand}}{k_{sand}}\right)}+\xi_V\cdot A_{4,0}\cdot\left(\left|T_4-T_{OG}\right|\right)^{\frac{1}{3}}\cdot\left(T_4-T_{OG}\right)+\frac{\sigma\cdot\alpha_{OG}\cdot\left(T_4^4-T_{OG}^4\right)}{\left(\frac{1-\varepsilon_{CR}}{\varepsilon_{CR}\cdot A_{4,0}}\right)+\frac{1}{A_{4,0}}}$$

ARES CORPORATION	CALCULATION SHEET		
Project No. 0509206.01	Calculation No. 0509206.01-M-002	Rev. No. 1	Page 176 of 252
Title: DBVS ICV™ Off-Gas Hood Thermal Analysis			
Prepared By: P.S. Lowery	Date: 2.17.06	Checked By: S.R. Pierce	Date: 2.17.06

DBVS ICV™ Off-Gas Hood Thermal Analysis

$j=5$

$$\frac{\sigma\cdot\tau_{OG}\cdot\left(T_5^4-T_0^4\right)}{\left(\frac{1-\varepsilon_{melt}}{\varepsilon_{melt}\cdot A_{0,0}}\right)+\frac{1}{A_{0,0}\cdot F_{0,3}}+\left(\frac{1-\varepsilon_{stl}}{\varepsilon_{stl}\cdot A_{3,0}}\right)}+\frac{\sigma\cdot\tau_{OG}\cdot\left(T_5^4-T_2^4\right)}{\left(\frac{1-\varepsilon_{stl}}{\varepsilon_{stl}\cdot A_{5,0}}\right)+\frac{1}{A_{5,0}\cdot F_{5,2}}+\left(\frac{1-\varepsilon_{CR}}{\varepsilon_{CR}\cdot A_{2,0}}\right)}\cdots$$

$$+\frac{\sigma\cdot\tau_{OG}\cdot\left(T_5^4-T_3^4\right)}{\left(\frac{1-\varepsilon_{stl}}{\varepsilon_{stl}\cdot A_{5,0}}\right)+\frac{1}{A_{5,0}\cdot F_{5,3}}+\left(\frac{1-\varepsilon_{CR}}{\varepsilon_{CR}\cdot A_{3,0}}\right)}+\frac{\sigma\cdot\tau_{OG}\cdot\left(T_5^4-T_4^4\right)}{\left(\frac{1-\varepsilon_{stl}}{\varepsilon_{stl}\cdot A_{5,0}}\right)+\frac{1}{A_{5,0}\cdot F_{5,4}}+\left(\frac{1-\varepsilon_{CR}}{\varepsilon_{CR}\cdot A_{4,0}}\right)}+\frac{\sigma\cdot\tau_{OG}\cdot\left(T_5^4-T_6^4\right)}{\left(\frac{1-\varepsilon_{stl}}{\varepsilon_{stl}\cdot A_{5,0}}\right)+\frac{1}{A_{5,0}\cdot F_{5,6}}+\frac{1-\varepsilon_{stl}}{\varepsilon_{stl}\cdot A_{6,0}}}=$$

$$+\frac{\sigma\cdot\tau_{OG}\cdot\left(T_5^4-T_7^4\right)}{\left(\frac{1-\varepsilon_{stl}}{\varepsilon_{stl}\cdot A_{5,0}}\right)+\frac{1}{A_{5,0}\cdot F_{5,7}}+\frac{1-\varepsilon_{stl}}{\varepsilon_{stl}\cdot A_{7,0}}}+\frac{\sigma\cdot\tau_{OG}\cdot\left(T_5^4-T_8^4\right)}{\left(\frac{1-\varepsilon_{stl}}{\varepsilon_{stl}\cdot A_{5,0}}\right)+\frac{1}{A_{5,0}\cdot F_{5,8}}+\frac{1-\varepsilon_{stl}}{\varepsilon_{stl}\cdot A_{8,0}}}+\frac{\sigma\cdot\tau_{OG}\cdot\left(T_5^4-T_9^4\right)}{\left(\frac{1-\varepsilon_{stl}}{\varepsilon_{stl}\cdot A_{5,0}}\right)+\frac{1}{A_{5,0}\cdot F_{5,9}}+\frac{1-\varepsilon_{stl}}{\varepsilon_{stl}\cdot A_{9,0}}}\cdots$$

$$+\frac{\sigma\cdot\left(T_5^4-T_{amb}^4\right)}{\left(\frac{1-\varepsilon_{stl}}{\varepsilon_{stl}\cdot A_{5,0}}\right)+\frac{1}{A_{5,0}}}+\xi_V\cdot A_{5,0}\cdot\left(\left|T_5-T_{amb}\right|\right)^{\frac{1}{3}}\cdot\left(T_5-T_{amb}\right)+\xi_V\cdot A_{5,0}\cdot\left(\left|T_5-T_{OG}\right|\right)^{\frac{1}{3}}\cdot\left(T_5-T_{OG}\right)+\frac{\sigma\cdot\alpha_{OG}\cdot\left(T_5^4-T_{OG}^4\right)}{\left(\frac{1-\varepsilon_{stl}}{\varepsilon_{stl}\cdot A_{5,0}}\right)+\frac{1}{A_{5,0}}}=0$$

ARES CORPORATION	CALCULATION SHEET		
Project No. 0509206.01	Calculation No. 0509206.01-M-002	Rev. No. 1	Page 177 of 252
Title: DBVS ICV™ Off-Gas Hood Thermal Analysis			
Prepared By: P.S. Lowery	Date: 2.17.06	Checked By: S.R. Pierce	Date: 2.17.06

DBVS ICV™ Off-Gas Hood Thermal Analysis

j=6

$$\frac{\sigma\cdot\varepsilon_{OG}\cdot\left(T_6^4-T_0^4\right)}{\left(\frac{1-\varepsilon_{melt}}{\varepsilon_{melt}\cdot A_{0,0}}\right)+\frac{1}{A_{6,0}\cdot F_{0,6}}+\left(\frac{1-\varepsilon_{stl}}{\varepsilon_{stl}\cdot A_{6,0}}\right)}+\frac{\sigma\cdot\varepsilon_{OG}\cdot\left(T_6^4-T_1^4\right)}{\left(\frac{1-\varepsilon_{stl}}{\varepsilon_{stl}\cdot A_{6,0}}\right)+\frac{1}{A_{6,0}\cdot F_{6,1}}+\left(\frac{1-\varepsilon_{CR}}{\varepsilon_{CR}\cdot A_{1,0}}\right)}+\frac{\sigma\cdot\varepsilon_{OG}\cdot\left(T_6^4-T_2^4\right)}{\left(\frac{1-\varepsilon_{stl}}{\varepsilon_{stl}\cdot A_{6,0}}\right)+\frac{1}{A_{6,0}\cdot F_{6,2}}+\left(\frac{1-\varepsilon_{CR}}{\varepsilon_{CR}\cdot A_{2,0}}\right)}\cdots=0$$

$$+\frac{\sigma\cdot\varepsilon_{OG}\cdot\left(T_6^4-T_3^4\right)}{\left(\frac{1-\varepsilon_{stl}}{\varepsilon_{stl}\cdot A_{6,0}}\right)+\frac{1}{A_{6,0}\cdot F_{6,3}}+\left(\frac{1-\varepsilon_{CR}}{\varepsilon_{CR}\cdot A_{3,0}}\right)}+\frac{\sigma\cdot\varepsilon_{OG}\cdot\left(T_6^4-T_4^4\right)}{\left(\frac{1-\varepsilon_{stl}}{\varepsilon_{stl}\cdot A_{6,0}}\right)+\frac{1}{A_{6,0}\cdot F_{6,4}}+\left(\frac{1-\varepsilon_{CR}}{\varepsilon_{CR}\cdot A_{4,0}}\right)}+\frac{\sigma\cdot\varepsilon_{OG}\cdot\left(T_6^4-T_5^4\right)}{\left(\frac{1-\varepsilon_{stl}}{\varepsilon_{stl}\cdot A_{6,0}}\right)+\frac{1}{A_{6,0}\cdot F_{6,5}}+\frac{1-\varepsilon_{stl}}{\varepsilon_{stl}\cdot A_{5,0}}}\cdots$$

$$+\frac{\sigma\cdot\varepsilon_{OG}\cdot\left(T_6^4-T_7^4\right)}{\left(\frac{1-\varepsilon_{stl}}{\varepsilon_{stl}\cdot A_{6,0}}\right)+\frac{1}{A_{6,0}\cdot F_{6,7}}+\frac{1-\varepsilon_{stl}}{\varepsilon_{stl}\cdot A_{7,0}}}+\frac{\sigma\cdot\varepsilon_{OG}\cdot\left(T_6^4-T_8^4\right)}{\left(\frac{1-\varepsilon_{stl}}{\varepsilon_{stl}\cdot A_{6,0}}\right)+\frac{1}{A_{6,0}\cdot F_{6,8}}+\frac{1-\varepsilon_{stl}}{\varepsilon_{stl}\cdot A_{8,0}}}+\frac{\sigma\cdot\varepsilon_{OG}\cdot\left(T_6^4-T_9^4\right)}{\left(\frac{1-\varepsilon_{stl}}{\varepsilon_{stl}\cdot A_{6,0}}\right)+\frac{1}{A_{6,0}\cdot F_{6,9}}+\frac{1-\varepsilon_{stl}}{\varepsilon_{stl}\cdot A_{9,0}}}\cdots$$

$$+\frac{\sigma\cdot\left(T_6^4-T_{amb}^4\right)}{\left(\frac{1-\varepsilon_{stl}}{\varepsilon_{stl}\cdot A_{6,0}}\right)+\frac{1}{A_{6,0}}}+\xi_V\cdot\left(A_{6,0}+A_{6,2}\right)\cdot\left(\left|T_6-T_{amb}\right|\right)^{\frac{1}{3}}\cdot\left(T_6-T_{amb}\right)\cdots$$

$$+\xi_{HU}\cdot A_{6,1}\cdot\left(\left|T_6-T_{amb}\right|\right)^{\frac{1}{3}}\cdot\left(T_6-T_{amb}\right)+\xi_V\cdot A_{6,0}\cdot\left(\left|T_6-T_{OG}\right|\right)^{\frac{1}{3}}\cdot\left(T_6-T_{OG}\right)+\frac{\sigma\cdot\alpha_{OG}\cdot\left(T_6^4-T_{OG}^4\right)}{\left(\frac{1-\varepsilon_{CR}}{\varepsilon_{stl}\cdot A_{6,0}}\right)+\frac{1}{A_{6,0}}}$$

ARES CORPORATION	CALCULATION SHEET		
Project No. 0509206.01	Calculation No. 0509206.01-M-002	Rev. No. 1	Page 178 of 252
Title: DBVS ICV™ Off-Gas Hood Thermal Analysis			
Prepared By: P.S. Lowery	Date: 2.17.06	Checked By: S.R. Pierce	Date: 2.17.06

DBVS ICV™ Off-Gas Hood Thermal Analysis

$$\sigma \cdot \varepsilon_{OG} \cdot \left(T_7^4 - T_0^4\right) + \left(\frac{1-\varepsilon_{melt}}{\varepsilon_{melt} \cdot A_{1,0}} + \frac{1}{A_{1,0} \cdot F_{0,7}} + \frac{1-\varepsilon_{stl}}{\varepsilon_{stl} \cdot A_{7,0}}\right) \sigma \cdot \varepsilon_{OG} \cdot \left(T_7^4 - T_1^4\right) + \left(\frac{1-\varepsilon_{stl}}{\varepsilon_{stl} \cdot A_{7,0}} + \frac{1}{A_{7,0} \cdot F_{7,1}} + \frac{1-\varepsilon_{CR}}{\varepsilon_{CR} \cdot A_{1,0}}\right) \sigma \cdot \varepsilon_{OG} \cdot \left(T_7^4 - T_2^4\right) + \left(\frac{1-\varepsilon_{stl}}{\varepsilon_{stl} \cdot A_{7,0}} + \frac{1}{A_{7,0} \cdot F_{7,2}} + \frac{1-\varepsilon_{CR}}{\varepsilon_{CR} \cdot A_{2,0}}\right)$$

$$+ \left(\frac{1-\varepsilon_{stl}}{\varepsilon_{stl} \cdot A_{7,0}} + \frac{1}{A_{7,0} \cdot F_{7,4}} + \frac{1-\varepsilon_{CR}}{\varepsilon_{CR} \cdot A_{4,0}}\right) \sigma \cdot \varepsilon_{OG} \cdot \left(T_7^4 - T_4^4\right) + \left(\frac{1-\varepsilon_{stl}}{\varepsilon_{stl} \cdot A_{7,0}} + \frac{1}{A_{7,0} \cdot F_{7,5}} + \frac{1-\varepsilon_{stl}}{\varepsilon_{stl} \cdot A_{5,0}}\right) \sigma \cdot \varepsilon_{OG} \cdot \left(T_7^4 - T_5^4\right) + \left(\frac{1-\varepsilon_{stl}}{\varepsilon_{stl} \cdot A_{7,0}} + \frac{1}{A_{7,0} \cdot F_{7,6}} + \frac{1-\varepsilon_{stl}}{\varepsilon_{stl} \cdot A_{6,0}}\right) \sigma \cdot \varepsilon_{OG} \cdot \left(T_7^4 - T_6^4\right) = 0$$

$$+ \left(\frac{1-\varepsilon_{stl}}{\varepsilon_{stl} \cdot A_{7,0}} + \frac{1}{A_{7,0} \cdot F_{7,8}} + \frac{1-\varepsilon_{stl}}{\varepsilon_{stl} \cdot A_{8,0}}\right) \sigma \cdot \varepsilon_{OG} \cdot \left(T_7^4 - T_8^4\right) + \left(\frac{1-\varepsilon_{stl}}{\varepsilon_{stl} \cdot A_{7,0}} + \frac{1}{A_{7,0} \cdot F_{7,9}} + \frac{1-\varepsilon_{stl}}{\varepsilon_{stl} \cdot A_{9,0}}\right) \sigma \cdot \varepsilon_{OG} \cdot \left(T_7^4 - T_9^4\right) \ldots$$

$$+ \sigma \cdot \left(T_7^4 - T_{amb}^4\right) + \frac{1}{\left(\frac{1-\varepsilon_{stl}}{\varepsilon_{stl} \cdot A_{7,0}} + \frac{1}{A_{7,0}}\right)} \cdot \left(T_7 - T_{amb}\right) + \xi_V \cdot A_{7,0} \cdot \left(\left|T_7 - T_{OG}\right|\right)^{\frac{1}{3}} \cdot \left(T_7 - T_{OG}\right) + \frac{\sigma \cdot \varepsilon_{OG} \cdot \left(T_7^4 - T_{OG}^4\right)}{\left(\frac{1-\varepsilon_{stl}}{\varepsilon_{stl} \cdot A_{7,0}} + \frac{1}{A_{7,0}}\right)}$$

ARES CORPORATION	CALCULATION SHEET		
Project No. 0509206.01	Calculation No. 0509206.01-M-002	Rev. No. 1	Page 179 of 252
Title: DBVS ICV™ Off-Gas Hood Thermal Analysis			
Prepared By: P.S. Lowery	Date: 2.17.06	Checked By: S.R. Pierce	Date: 2.17.06

DBVS ICV™ Off-Gas Hood Thermal Analysis

j=8

$$\frac{\sigma\cdot\tau_{OG}\cdot\left(T_8^4-T_0^4\right)}{\left(\frac{1-\varepsilon_{molt}}{\varepsilon_{molt}\cdot A_{0,0}}\right)+\frac{1}{A_{0,0}\cdot F_{0,8}}+\left(\frac{1-\varepsilon_{stl}}{\varepsilon_{stl}\cdot A_{8,0}}\right)}+\frac{\sigma\cdot\tau_{OG}\cdot\left(T_8^4-T_1^4\right)}{\left(\frac{1-\varepsilon_{stl}}{\varepsilon_{stl}\cdot A_{8,0}}\right)+\frac{1}{A_{8,0}\cdot F_{8,1}}+\left(\frac{1-\varepsilon_{CR}}{\varepsilon_{CR}\cdot A_{1,0}}\right)}+\frac{\sigma\cdot\tau_{OG}\cdot\left(T_8^4-T_2^4\right)}{\left(\frac{1-\varepsilon_{stl}}{\varepsilon_{stl}\cdot A_{8,0}}\right)+\frac{1}{A_{8,b}\cdot F_{8,2}}+\left(\frac{1-\varepsilon_{CR}}{\varepsilon_{CR}\cdot A_{2,0}}\right)}\cdots=0.$$

$$+\frac{\sigma\cdot\tau_{OG}\cdot\left(T_8^4-T_3^4\right)}{\left(\frac{1-\varepsilon_{stl}}{\varepsilon_{stl}\cdot A_{8,0}}\right)+\frac{1}{A_{8,0}\cdot F_{8,3}}+\left(\frac{1-\varepsilon_{CR}}{\varepsilon_{CR}\cdot A_{3,0}}\right)}+\frac{\sigma\cdot\tau_{OG}\cdot\left(T_8^4-T_4^4\right)}{\left(\frac{1-\varepsilon_{stl}}{\varepsilon_{stl}\cdot A_{8,0}}\right)+\frac{1}{A_{8,0}\cdot F_{8,4}}+\left(\frac{1-\varepsilon_{CR}}{\varepsilon_{CR}\cdot A_{4,0}}\right)}+\frac{\sigma\cdot\tau_{OG}\cdot\left(T_8^4-T_5^4\right)}{\left(\frac{1-\varepsilon_{stl}}{\varepsilon_{stl}\cdot A_{8,0}}\right)+\frac{1}{A_{8,0}\cdot F_{8,5}}+\frac{1-\varepsilon_{stl}}{\varepsilon_{stl}\cdot A_{5,0}}}\cdots$$

$$+\frac{\sigma\cdot\tau_{OG}\cdot\left(T_8^4-T_6^4\right)}{\left(\frac{1-\varepsilon_{stl}}{\varepsilon_{stl}\cdot A_{8,0}}\right)+\frac{1}{A_{8,0}\cdot F_{8,6}}+\frac{1-\varepsilon_{stl}}{\varepsilon_{stl}\cdot A_{6,0}}}+\frac{\sigma\cdot\tau_{OG}\cdot\left(T_8^4-T_7^4\right)}{\left(\frac{1-\varepsilon_{stl}}{\varepsilon_{stl}\cdot A_{8,0}}\right)+\frac{1}{A_{8,0}\cdot F_{8,7}}+\frac{1-\varepsilon_{stl}}{\varepsilon_{stl}\cdot A_{7,0}}}+\frac{\sigma\cdot\tau_{OG}\cdot\left(T_8^4-T_9^4\right)}{\left(\frac{1-\varepsilon_{stl}}{\varepsilon_{stl}\cdot A_{8,0}}\right)+\frac{1}{A_{8,0}\cdot F_{8,9}}+\frac{1-\varepsilon_{stl}}{\varepsilon_{stl}\cdot A_{9,0}}}\cdots$$

$$+\frac{\sigma\cdot\left(T_8^4-T_{amb}^4\right)}{\left(\frac{1-\varepsilon_{stl}}{\varepsilon_{stl}\cdot A_{8,0}}\right)+\frac{1}{A_{8,0}}}+\xi_V\cdot\left(A_{8,0}+A_{8,2}\right)\cdot\left(\left|T_8-T_{amb}\right|\right)^{\frac{1}{3}}\cdot\left(T_8-T_{amb}\right)\cdots$$

$$+\xi_{HU}\cdot A_{8,1}\cdot\left(\left|T_8-T_{amb}\right|\right)^{\frac{1}{3}}\cdot\left(T_8-T_{amb}\right)+\xi_V\cdot A_{8,0}\cdot\left(\left|T_8-T_{OG}\right|\right)^{\frac{1}{3}}\cdot\left(T_8-T_{OG}\right)+\frac{\sigma\cdot\tau_{OG}\cdot\left(T_8^4-T_{OG}^4\right)}{\left(\frac{1-\varepsilon_{stl}}{\varepsilon_{stl}\cdot A_{8,0}}\right)+\frac{1}{A_{8,0}}}$$

ARES CORPORATION	CALCULATION SHEET		
Project No. 0509206.01	Calculation No. 0509206.01-M-002	Rev. No. 1	Page 180 of 252
Title: DBVS ICV™ Off-Gas Hood Thermal Analysis			
Prepared By: P.S. Lowery	Date: 2.17.06	Checked By: S.R. Pierce	Date: 2.17.06

DBVS ICV™ Off-Gas Hood Thermal Analysis

j=9

$$\frac{\sigma\cdot\tau_{OG}\cdot\left(T_9^{\,4}-T_0^{\,4}\right)}{\left(\frac{1-\varepsilon_{melt}}{\varepsilon_{melt}\cdot A_{0,0}}\right)+\frac{1}{A_{0,0}\cdot F_{0,9}}+\left(\frac{1-\varepsilon_{stl}}{\varepsilon_{stl}\cdot A_{9,0}}\right)}+\frac{\sigma\cdot\tau_{OG}\cdot\left(T_9^{\,4}-T_1^{\,4}\right)}{\left(\frac{1-\varepsilon_{stl}}{\varepsilon_{stl}\cdot A_{9,0}}\right)+\frac{1}{A_{9,0}\cdot F_{9,1}}+\left(\frac{1-\varepsilon_{CR}}{\varepsilon_{CR}\cdot A_{1,0}}\right)}+\frac{\sigma\cdot\tau_{OG}\cdot\left(T_9^{\,4}-T_2^{\,4}\right)}{\left(\frac{1-\varepsilon_{stl}}{\varepsilon_{stl}\cdot A_{9,0}}\right)+\frac{1}{A_{9,0}\cdot F_{9,2}}+\left(\frac{1-\varepsilon_{CR}}{\varepsilon_{CR}\cdot A_{2,0}}\right)}\cdots=0$$

$$+\frac{\sigma\cdot\tau_{OG}\cdot\left(T_9^{\,4}-T_3^{\,4}\right)}{\left(\frac{1-\varepsilon_{stl}}{\varepsilon_{stl}\cdot A_{9,0}}\right)+\frac{1}{A_{9,0}\cdot F_{9,3}}+\left(\frac{1-\varepsilon_{CR}}{\varepsilon_{CR}\cdot A_{3,0}}\right)}+\frac{\sigma\cdot\tau_{OG}\cdot\left(T_9^{\,4}-T_4^{\,4}\right)}{\left(\frac{1-\varepsilon_{stl}}{\varepsilon_{stl}\cdot A_{9,0}}\right)+\frac{1}{A_{9,0}\cdot F_{9,4}}+\left(\frac{1-\varepsilon_{CR}}{\varepsilon_{CR}\cdot A_{4,0}}\right)}+\frac{\sigma\cdot\tau_{OG}\cdot\left(T_9^{\,4}-T_5^{\,4}\right)}{\left(\frac{1-\varepsilon_{stl}}{\varepsilon_{stl}\cdot A_{9,0}}\right)+\frac{1}{A_{9,0}\cdot F_{9,5}}+\frac{1-\varepsilon_{stl}}{\varepsilon_{stl}\cdot A_{5,0}}}\cdots$$

$$+\frac{\sigma\cdot\tau_{OG}\cdot\left(T_9^{\,4}-T_6^{\,4}\right)}{\left(\frac{1-\varepsilon_{stl}}{\varepsilon_{stl}\cdot A_{9,0}}\right)+\frac{1}{A_{9,0}\cdot F_{9,6}}+\frac{1-\varepsilon_{stl}}{\varepsilon_{stl}\cdot A_{6,0}}}+\frac{\sigma\cdot\tau_{OG}\cdot\left(T_9^{\,4}-T_7^{\,4}\right)}{\left(\frac{1-\varepsilon_{stl}}{\varepsilon_{stl}\cdot A_{9,0}}\right)+\frac{1}{A_{9,0}\cdot F_{9,7}}+\frac{1-\varepsilon_{stl}}{\varepsilon_{stl}\cdot A_{7,0}}}+\frac{\sigma\cdot\tau_{OG}\cdot\left(T_9^{\,4}-T_8^{\,4}\right)}{\left(\frac{1-\varepsilon_{stl}}{\varepsilon_{stl}\cdot A_{9,0}}\right)+\frac{1}{A_{9,0}\cdot F_{9,8}}+\frac{1-\varepsilon_{stl}}{\varepsilon_{stl}\cdot A_{8,0}}}\cdots$$

$$+\frac{\sigma\cdot\left(T_9^{\,4}-T_{amb}^{\,4}\right)}{\left(\frac{1-\varepsilon_{stl}}{\varepsilon_{stl}\cdot A_{9,0}}\right)+\frac{1}{A_{9,0}}}+\xi_V\cdot\left(A_{9,0}+A_{9,2}\right)\cdot\left(\left|T_9-T_{amb}\right|\right)^{\frac{1}{3}}\cdot\left(T_9-T_{amb}\right)-$$

$$+\xi_{HU}\cdot A_{9,1}\cdot\left(\left|T_9-T_{amb}\right|\right)^{\frac{1}{3}}\cdot\left(T_9-T_{amb}\right)+\xi_{HD}\cdot A_{9,0}\cdot\left(\left|T_9-T_{OG}\right|\right)^{\frac{1}{3}}\cdot\left(T_9-T_{OG}\right)+\frac{\sigma\cdot\alpha_{OG}\cdot\left(T_9^{\,4}-T_{OG}^{\,4}\right)}{\left(\frac{1-\varepsilon_{stl}}{\varepsilon_{stl}\cdot A_{9,0}}\right)+\frac{1}{A_{9,0}}}$$

ARES CORPORATION	CALCULATION SHEET		
Project No. 0509206.01	Calculation No. 0509206.01-M-002	Rev. No. 1	Page 181 of 252
Title: DBVS ICV™ Off-Gas Hood Thermal Analysis			
Prepared By: P.S. Lowery	Date: 2.17.06	Checked By: S.R. Pierce	Date: 2.17.06

DBVS ICV™ Off-Gas Hood Thermal Analysis

j=10

$$T_{10} - T_{10} = 0$$

j=11

$$\frac{A_{11,0}\cdot(T_{11} - T_1)}{\left(\frac{\delta_{CR}}{k_{CR}}\right) + \left(\frac{\delta_{sand}}{k_{sand}}\right)} + \frac{\sigma\cdot\left(T_{11}^4 - T_{amb}^4\right)}{\left(\frac{1 - \varepsilon_{gd}}{\varepsilon_{gd}\cdot A_{11,0}}\right) + \frac{1}{A_{11,0}}} + \xi_{11}\cdot A_{11,0}\cdot\left(|T_{11} - T_{amb}|\right)^{\frac{1}{3}}\cdot(T_{11} - T_{amb}) = 0$$

j=12

$$\frac{A_{12,0}\cdot(T_{12} - T_2)}{\left(\frac{\delta_{CR}}{k_{CR}}\right) + \left(\frac{\delta_{sand}}{k_{sand}}\right)} + \frac{\sigma\cdot\left(T_{12}^4 - T_{amb}^4\right)}{\left(\frac{1 - \varepsilon_{gd}}{\varepsilon_{gd}\cdot A_{12,0}}\right) + \frac{1}{A_{12,0}}} + \xi_{12}\cdot A_{12,0}\cdot\left(|T_{12} - T_{amb}|\right)^{\frac{1}{3}}\cdot(T_{12} - T_{amb}) = 0$$

ARES CORPORATION	CALCULATION SHEET		
Project No. 0509206.01	Calculation No. 0509206.01-M-002	Rev. No. 1	Page 182 of 252
Title: DBVS ICV™ Off-Gas Hood Thermal Analysis			
Prepared By: P.S. Lowery	Date: 2.17.06	Checked By: S.R. Pierce	Date: 2.17.06

DBVS ICV™ Off-Gas Hood Thermal Analysis

j=13

$$\frac{A_{13,0}\cdot(T_{13}-T_3)}{\left(\frac{\delta_{CR}}{k_{CR}}\right)+\left(\frac{\delta_{sand}}{k_{sand}}\right)}+\frac{\sigma\cdot\left(T_{13}^{4}-T_{amb}^{4}\right)}{\left(\frac{1-\varepsilon_{stl}}{\varepsilon_{stl}\cdot A_{13,0}}\right)+\frac{1}{A_{13,0}}}+\zeta_V\cdot A_{13,0}\cdot\left(\left|T_{13}-T_{amb}\right|\right)^{\frac{1}{3}}\cdot\left(T_{13}-T_{amb}\right)=0$$

j=14

$$\frac{A_{14,0}\cdot(T_{14}-T_4)}{\left(\frac{\delta_{CR}}{k_{CR}}\right)+\left(\frac{\delta_{sand}}{k_{sand}}\right)}+\frac{\sigma\cdot\left(T_{14}^{4}-T_{amb}^{4}\right)}{\left(\frac{1-\varepsilon_{stl}}{\varepsilon_{stl}\cdot A_{14,0}}\right)+\frac{1}{A_{14,0}}}+\zeta_V\cdot A_{14,0}\cdot\left(\left|T_{14}-T_{amb}\right|\right)^{\frac{1}{3}}\cdot\left(T_{14}-T_{amb}\right)=0$$

$$\begin{pmatrix} T1 \\ T2 \\ T3 \\ T4 \\ T5 \\ T6 \\ T7 \\ T8 \\ T9 \\ T10 \\ T11 \\ T12 \\ T13 \\ T14 \end{pmatrix} := \mathrm{Find}(T_1,T_2,T_3,T_4,T_5,T_6,T_7,T_8,T_9,T_{10},T_{11},T_{12},T_{13},T_{14})$$

ARES CORPORATION	CALCULATION SHEET		
Project No. 0509206.01	Calculation No. 0509206.01-M-002	Rev. No. 1	Page 183 of 252
Title: DBVS ICV™ Off-Gas Hood Thermal Analysis			
Prepared By: P.S. Lowery	Date: 2.17.06	Checked By: S.R. Pierce	Date: 2.17.06

DBVS ICV™ Off-Gas Hood Thermal Analysis

$T1 = 771.1\ K$ $T1C := KtoC(T1)$ $T1C = 497.9$

$T2 = 777.8\ K$ $T2C := KtoC(T2)$ $T2C = 504.6$

$T3 = 771.1\ K$ $T3C := KtoC(T3)$ $T3C = 497.9$

$T4 = 777.8\ K$ $T4C := KtoC(T4)$ $T4C = 504.6$

$T5 = 690.7\ K$ $T5C := KtoC(T5)$ $T5C = 417.5$

$T6 = 672.2\ K$ $T6C := KtoC(T6)$ $T6C = 399$

$T7 = 690.7\ K$ $T7C := KtoC(T7)$ $T7C = 417.5$

$T8 = 672.2\ K$ $T8C := KtoC(T8)$ $T8C = 399$

$T9 = 669\ K$ $T9C := KtoC(T9)$ $T9C = 395.9$

$T10 = 386.5\ K$ $T10C := KtoC(T10)$ $T10C = 113.4$

$T11 = 414.2\ K$ $T11C := KtoC(T11)$ $T11C = 141$

$T12 = 415.5\ K$ $T12C := KtoC(T12)$ $T12C = 142.3$

$T13 = 414.2\ K$ $T13C := KtoC(T13)$ $T13C = 141$

$T14 = 415.5\ K$ $T14C := KtoC(T14)$ $T14C = 142.3$

$T1F := CtoF(T1C)$ $T2F := CtoF(T2C)$ $T3F := CtoF(T3C)$ $T4F := CtoF(T4C)$ $T5F := CtoF(T5C)$ $T6F := CtoF(T6C)$

$T7F := CtoF(T7C)$ $T8F := CtoF(T8C)$ $T9F := CtoF(T9C)$ $T10F := CtoF(T10C)$ $T11F := CtoF(T11C)$ $T12F := CtoF(T12C)$

$T13F := CtoF(T13C)$ $T14F := CtoF(T14C)$

ARES CORPORATION	CALCULATION SHEET		
Project No. 0509206.01	Calculation No. 0509206.01-M-002	Rev. No. 1	Page 184 of 252
Title: DBVS ICV™ Off-Gas Hood Thermal Analysis			
Prepared By: P.S. Lowery	Date: 2.17.06	Checked By: S.R. Pierce	Date: 2.17.06

DBVS ICV™ Off-Gas Hood Thermal Analysis

Results in °F ...

T1F = 928.266 T2F = 940.286 T3F = 928.266 T4F = 940.286 T5F = 783.507 T6F = 750.273

T7F = 783.507 T8F = 750.273 T9F = 744.558 T10F = 236 T11F = 285.9 T12F = 288.2 T13F = 285.9 T14F = 288.2

Check results ...

$T0 := T_{melt}$ $T0 = 898.1\ K$

$T1 = 771.1\ K$ $T2 = 777.8\ K$ $T3 = 771.1\ K$ $T4 = 777.8\ K$ $T5 = 690.7\ K$ $T6 = 672.2\ K$

$T7 = 690.7\ K$ $T8 = 672.2\ K$ $T9 = 669\ K$ $T10 = 386.5\ K$ $T11 = 414.2\ K$ $T12 = 415.5\ K$ $T13 = 414.2\ K$

$T14 = 415.5\ K$ $T_{AWTE} = 298.1\ K$ $T_{amb} = 285.1\ K$ $T_{OG} = 873.1\ K$

$j := 1$

$$\frac{\sigma\cdot\tau_{OG}\cdot\left(T1^4 - T0^4\right)}{\left(\frac{1-\varepsilon_{melt}}{\varepsilon_{melt}\cdot A_{0,0}}\right) + \frac{1}{A_{0,0}\cdot F_{0,1}} + \left(\frac{1-\varepsilon_{CR}}{\varepsilon_{CR}\cdot A_{1,0}}\right)} + \frac{\sigma\cdot\tau_{OG}\cdot\left(T1^4 - T2^4\right)}{\left(\frac{1-\varepsilon_{CR}}{\varepsilon_{CR}\cdot A_{1,0}}\right) + \frac{1}{A_{1,0}\cdot F_{1,2}} + \left(\frac{1-\varepsilon_{CR}}{\varepsilon_{CR}\cdot A_{2,0}}\right)} + \frac{\sigma\cdot\tau_{OG}\cdot\left(T1^4 - T3^4\right)}{\left(\frac{1-\varepsilon_{CR}}{\varepsilon_{CR}\cdot A_{1,0}}\right) + \frac{1}{A_{1,0}\cdot F_{1,3}} + \left(\frac{1-\varepsilon_{CR}}{\varepsilon_{CR}\cdot A_{3,0}}\right)} \ldots = 0.W$$

$$+ \frac{\sigma\cdot\tau_{OG}\cdot\left(T1^4 - T4^4\right)}{\left(\frac{1-\varepsilon_{CR}}{\varepsilon_{CR}\cdot A_{1,0}}\right) + \frac{1}{A_{1,0}\cdot F_{1,4}} + \left(\frac{1-\varepsilon_{CR}}{\varepsilon_{CR}\cdot A_{4,0}}\right)} + \frac{\sigma\cdot\tau_{OG}\cdot\left(T1^4 - T6^4\right)}{\left(\frac{1-\varepsilon_{CR}}{\varepsilon_{CR}\cdot A_{1,0}}\right) + \frac{1}{A_{1,0}\cdot F_{1,6}} + \left(\frac{1-\varepsilon_{sil}}{\varepsilon_{sil}\cdot A_{6,0}}\right)} + \frac{\sigma\cdot\tau_{OG}\cdot\left(T1^4 - T7^4\right)}{\left(\frac{1-\varepsilon_{CR}}{\varepsilon_{CR}\cdot A_{1,0}}\right) + \frac{1}{A_{1,0}\cdot F_{1,7}} + \frac{1-\varepsilon_{sil}}{\varepsilon_{sil}\cdot A_{7,0}}} \ldots$$

$$+ \frac{\sigma\cdot\tau_{OG}\cdot\left(T1^4 - T8^4\right)}{\left(\frac{1-\varepsilon_{CR}}{\varepsilon_{CR}\cdot A_{1,0}}\right) + \frac{1}{A_{1,0}\cdot F_{1,8}} + \frac{1-\varepsilon_{sil}}{\varepsilon_{sil}\cdot A_{8,0}}} + \frac{\sigma\cdot\tau_{OG}\cdot\left(T1^4 - T9^4\right)}{\left(\frac{1-\varepsilon_{CR}}{\varepsilon_{CR}\cdot A_{1,0}}\right) + \frac{1}{A_{1,0}\cdot F_{1,9}} + \frac{1-\varepsilon_{sil}}{\varepsilon_{sil}\cdot A_{9,0}}} + \delta_V\cdot A_{1,0}\cdot\left(\left|T1 - T_{OG}\right|\right)^{\frac{1}{3}}\cdot\left(T1 - T_{OG}\right) \ldots$$

$$+ \frac{A_{1,0}\cdot(T1 - T11)}{\left(\frac{\delta_{CR}}{k_{CR}}\right) + \left(\frac{\delta_{sand}}{k_{sand}}\right)} + \frac{\sigma\cdot\tau_{OG}\cdot\left(T1^4 - T_{OG}^4\right)}{\left(\frac{1-\varepsilon_{CR}}{\varepsilon_{CR}\cdot A_{1,0}}\right) + \frac{1}{A_{1,0}}}$$

ARES CORPORATION	CALCULATION SHEET		
Project No. 0509206.01	Calculation No. 0509206.01-M-002	Rev. No. 1	Page 185 of 252
Title: DBVS ICV™ Off-Gas Hood Thermal Analysis			
Prepared By: P.S. Lowery	Date: 2.17.06	Checked By: S.R. Pierce	Date: 2.17.06

DBVS ICV™ Off-Gas Hood Thermal Analysis

j=2

$$\frac{\sigma\cdot\varepsilon_{OG}\cdot\left(T2^4-T0^4\right)}{\left(\frac{1-\varepsilon_{melt}}{\varepsilon_{melt}\cdot A_{0,0}}\right)+\frac{1}{A_{0,0}\cdot F_{0,2}}+\left(\frac{1-\varepsilon_{CR}}{\varepsilon_{CR}\cdot A_{2,0}}\right)}+\frac{\sigma\cdot\varepsilon_{OG}\cdot\left(T2^4-T1^4\right)}{\left(\frac{1-\varepsilon_{CR}}{\varepsilon_{CR}\cdot A_{2,0}}\right)+\frac{1}{A_{2,0}\cdot F_{2,1}}+\left(\frac{1-\varepsilon_{CR}}{\varepsilon_{CR}\cdot A_{1,0}}\right)}+\frac{\sigma\cdot\varepsilon_{OG}\cdot\left(T2^4-T3^4\right)}{\left(\frac{1-\varepsilon_{CR}}{\varepsilon_{CR}\cdot A_{2,0}}\right)+\frac{1}{A_{2,0}\cdot F_{2,3}}+\left(\frac{1-\varepsilon_{CR}}{\varepsilon_{CR}\cdot A_{3,0}}\right)}\cdots$$

$$+\frac{\sigma\cdot\varepsilon_{OG}\cdot\left(T2^4-T4^4\right)}{\left(\frac{1-\varepsilon_{CR}}{\varepsilon_{CR}\cdot A_{2,0}}\right)+\frac{1}{A_{2,0}\cdot F_{2,4}}+\left(\frac{1-\varepsilon_{CR}}{\varepsilon_{CR}\cdot A_{4,0}}\right)}+\frac{\sigma\cdot\varepsilon_{OG}\cdot\left(T2^4-T5^4\right)}{\left(\frac{1-\varepsilon_{CR}}{\varepsilon_{CR}\cdot A_{2,0}}\right)+\frac{1}{A_{2,0}\cdot F_{2,5}}+\left(\frac{1-\varepsilon_{stl}}{\varepsilon_{stl}\cdot A_{5,0}}\right)}+\frac{\sigma\cdot\varepsilon_{OG}\cdot\left(T2^4-T6^4\right)}{\left(\frac{1-\varepsilon_{CR}}{\varepsilon_{CR}\cdot A_{2,0}}\right)+\frac{1}{A_{2,0}\cdot F_{2,6}}+\left(\frac{1-\varepsilon_{stl}}{\varepsilon_{stl}\cdot A_{6,0}}\right)}\cdots$$

$$+\frac{\sigma\cdot\varepsilon_{OG}\cdot\left(T2^4-T7^4\right)}{\left(\frac{1-\varepsilon_{CR}}{\varepsilon_{CR}\cdot A_{2,0}}\right)+\frac{1}{A_{2,0}\cdot F_{2,7}}+\frac{1-\varepsilon_{stl}}{\varepsilon_{stl}\cdot A_{7,0}}}+\frac{\sigma\cdot\varepsilon_{OG}\cdot\left(T2^4-T8^4\right)}{\left(\frac{1-\varepsilon_{CR}}{\varepsilon_{CR}\cdot A_{2,0}}\right)+\frac{1}{A_{2,0}\cdot F_{2,8}}+\frac{1-\varepsilon_{stl}}{\varepsilon_{stl}\cdot A_{8,0}}}+\frac{\sigma\cdot\varepsilon_{OG}\cdot\left(T2^4-T9^4\right)}{\left(\frac{1-\varepsilon_{CR}}{\varepsilon_{CR}\cdot A_{2,0}}\right)+\frac{1}{A_{2,0}\cdot F_{2,9}}+\frac{1-\varepsilon_{stl}}{\varepsilon_{stl}\cdot A_{9,0}}}\cdots$$

$$+\xi_{ir}\cdot A_{2,0}\cdot\left(\left|T2-T_{OG}\right|\right)^{\frac{1}{3}}\cdot\left(T2-T_{OG}\right)+\frac{A_{2,0}\cdot(T2-T12)}{\left(\frac{\delta_{CR}}{k_{CR}}\right)+\left(\frac{\delta_{sand}}{k_{sand}}\right)}+\frac{\sigma\cdot\alpha_{OG}\cdot\left(T2^4-T_{OG}^4\right)}{\left(\frac{1-\varepsilon_{CR}}{\varepsilon_{CR}\cdot A_{2,0}}\right)+\frac{1}{A_{2,0}}}=-Q\cdot W$$

ARES CORPORATION	CALCULATION SHEET		
Project No. 0509206.01	Calculation No. 0509206.01-M-002	Rev. No. 1	Page 186 of 252
Title: DBVS ICV™ Off-Gas Hood Thermal Analysis			
Prepared By: P.S. Lowery	Date: 2.17.06	Checked By: S.R. Pierce	Date: 2.17.06

DBVS ICV™ Off-Gas Hood Thermal Analysis

j=3

$$\frac{\sigma\cdot\tau_{OG}\cdot\left(T3^4-T0^4\right)}{\left(\frac{1-\varepsilon_{melt}}{\varepsilon_{melt}\cdot A_{0,0}}\right)+\frac{1}{A_{0,0}\cdot F_{0,3}}+\left(\frac{1-\varepsilon_{CR}}{\varepsilon_{CR}\cdot A_{3,0}}\right)}+\frac{\sigma\cdot\tau_{OG}\cdot\left(T3^4-T1^4\right)}{\left(\frac{1-\varepsilon_{CR}}{\varepsilon_{CR}\cdot A_{3,0}}\right)+\frac{1}{A_{3,0}\cdot F_{3,1}}+\left(\frac{1-\varepsilon_{CR}}{\varepsilon_{CR}\cdot A_{3,0}}\right)}+\frac{\sigma\cdot\tau_{OG}\cdot\left(T3^4-T2^4\right)}{\left(\frac{1-\varepsilon_{CR}}{\varepsilon_{CR}\cdot A_{3,0}}\right)+\frac{1}{A_{3,0}\cdot F_{3,2}}+\left(\frac{1-\varepsilon_{CR}}{\varepsilon_{CR}\cdot A_{3,0}}\right)}\cdots=-0\ W$$

$$+\frac{\sigma\cdot\tau_{OG}\cdot\left(T3^4-T4^4\right)}{\left(\frac{1-\varepsilon_{CR}}{\varepsilon_{CR}\cdot A_{3,0}}\right)+\frac{1}{A_{3,0}\cdot F_{3,4}}+\left(\frac{1-\varepsilon_{CR}}{\varepsilon_{CR}\cdot A_{4,0}}\right)}+\frac{\sigma\cdot\tau_{OG}\cdot\left(T3^4-T5^4\right)}{\left(\frac{1-\varepsilon_{CR}}{\varepsilon_{CR}\cdot A_{3,0}}\right)+\frac{1}{A_{3,0}\cdot F_{3,5}}+\left(\frac{1-\varepsilon_{sil}}{\varepsilon_{sil}\cdot A_{5,0}}\right)}+\frac{\sigma\cdot\tau_{OG}\cdot\left(T3^4-T6^4\right)}{\left(\frac{1-\varepsilon_{CR}}{\varepsilon_{CR}\cdot A_{3,0}}\right)+\frac{1}{A_{3,0}\cdot F_{3,6}}+\frac{1-\varepsilon_{sil}}{\varepsilon_{sil}\cdot A_{6,0}}}\cdots$$

$$+\frac{\sigma\cdot\tau_{OG}\cdot\left(T3^4-T8^4\right)}{\left(\frac{1-\varepsilon_{CR}}{\varepsilon_{CR}\cdot A_{3,0}}\right)+\frac{1}{A_{3,0}\cdot F_{3,8}}+\frac{1-\varepsilon_{sil}}{\varepsilon_{sil}\cdot A_{8,0}}}+\frac{\sigma\cdot\tau_{OG}\cdot\left(T3^4-T9^4\right)}{\left(\frac{1-\varepsilon_{CR}}{\varepsilon_{CR}\cdot A_{3,0}}\right)+\frac{1}{A_{3,0}\cdot F_{3,9}}+\frac{1-\varepsilon_{sil}}{\varepsilon_{sil}\cdot A_{9,0}}}+\xi_V\cdot A_{3,0}\cdot\left(\left|T3-T_{OG}\right|\right)^{\frac{1}{3}}\cdot\left(T3-T_{OG}\right)\cdots$$

$$+\frac{A_{3,0}\cdot(T3-T13)}{\left(\frac{\delta_{CR}}{k_{CR}}\right)+\left(\frac{\delta_{sand}}{k_{sand}}\right)}+\frac{\sigma\cdot\alpha_{OG}\cdot\left(T3^4-T_{OG}^4\right)}{\left(\frac{1-\varepsilon_{CR}}{\varepsilon_{CR}\cdot A_{3,0}}\right)+\frac{1}{A_{3,0}}}$$

ARES CORPORATION	CALCULATION SHEET		
Project No. 0509206.01	Calculation No. 0509206.01-M-002	Rev. No. 1	Page 187 of 252
Title: DBVS ICV™ Off-Gas Hood Thermal Analysis			
Prepared By: P.S. Lowery	Date: 2.17.06	Checked By: S.R. Pierce	Date: 2.17.06

DBVS ICV™ Off-Gas Hood Thermal Analysis

j=4

$$\frac{\sigma\cdot\varepsilon_{OG}\cdot\left(T4^4-T0^4\right)}{\left(\frac{1-\varepsilon_{melt}}{\varepsilon_{melt}\cdot A_{0,0}}\right)+\frac{1}{A_{0,0}\cdot F_{0,4}}+\left(\frac{1-\varepsilon_{CR}}{\varepsilon_{CR}\cdot A_{4,0}}\right)}+\frac{\sigma\cdot\varepsilon_{OG}\cdot\left(T4^4-T1^4\right)}{\left(\frac{1-\varepsilon_{CR}}{\varepsilon_{CR}\cdot A_{4,0}}\right)+\frac{1}{A_{4,0}\cdot F_{4,1}}+\left(\frac{1-\varepsilon_{CR}}{\varepsilon_{CR}\cdot A_{1,0}}\right)}+\frac{\sigma\cdot\varepsilon_{OG}\cdot\left(T4^4-T2^4\right)}{\left(\frac{1-\varepsilon_{CR}}{\varepsilon_{CR}\cdot A_{4,0}}\right)+\frac{1}{A_{4,0}\cdot F_{4,2}}+\left(\frac{1-\varepsilon_{CR}}{\varepsilon_{CR}\cdot A_{2,0}}\right)}\ldots=-0\ W$$

$$+\frac{\sigma\cdot\varepsilon_{OG}\cdot\left(T4^4-T3^4\right)}{\left(\frac{1-\varepsilon_{CR}}{\varepsilon_{CR}\cdot A_{4,0}}\right)+\frac{1}{A_{4,0}\cdot F_{4,3}}+\left(\frac{1-\varepsilon_{CR}}{\varepsilon_{CR}\cdot A_{3,0}}\right)}+\frac{\sigma\cdot\varepsilon_{OG}\cdot\left(T4^4-T5^4\right)}{\left(\frac{1-\varepsilon_{CR}}{\varepsilon_{CR}\cdot A_{4,0}}\right)+\frac{1}{A_{4,0}\cdot F_{4,5}}+\left(\frac{1-\varepsilon_{stl}}{\varepsilon_{stl}\cdot A_{5,0}}\right)}+\frac{\sigma\cdot\varepsilon_{OG}\cdot\left(T4^4-T6^4\right)}{\left(\frac{1-\varepsilon_{CR}}{\varepsilon_{CR}\cdot A_{4,0}}\right)+\frac{1}{A_{4,0}\cdot F_{4,6}}+\frac{1-\varepsilon_{stl}}{\varepsilon_{stl}\cdot A_{6,0}}}\ldots$$

$$+\frac{\sigma\cdot\varepsilon_{OG}\cdot\left(T4^4-T7^4\right)}{\left(\frac{1-\varepsilon_{CR}}{\varepsilon_{CR}\cdot A_{4,0}}\right)+\frac{1}{A_{4,0}\cdot F_{4,7}}+\frac{1-\varepsilon_{stl}}{\varepsilon_{stl}\cdot A_{7,0}}}+\frac{\sigma\cdot\varepsilon_{OG}\cdot\left(T4^4-T8^4\right)}{\left(\frac{1-\varepsilon_{CR}}{\varepsilon_{CR}\cdot A_{4,0}}\right)+\frac{1}{A_{4,0}\cdot F_{4,8}}+\frac{1-\varepsilon_{stl}}{\varepsilon_{stl}\cdot A_{8,0}}}+\frac{\sigma\cdot\varepsilon_{OG}\cdot\left(T4^4-T9^4\right)}{\left(\frac{1-\varepsilon_{CR}}{\varepsilon_{CR}\cdot A_{4,0}}\right)+\frac{1}{A_{4,0}\cdot F_{4,9}}+\frac{1-\varepsilon_{stl}}{\varepsilon_{stl}\cdot A_{9,0}}}\ldots$$

$$+\frac{A_{4,0}\cdot(T4-T14)}{\left(\frac{\delta_{CR}}{k_{CR}}\right)+\left(\frac{\delta_{sand}}{k_{sand}}\right)}+\xi_V\cdot A_{4,0}\cdot\left(\left|T4-T_{OG}\right|\right)^{\frac{1}{3}}\cdot\left(T4-T_{OG}\right)+\frac{\sigma\cdot\varepsilon_{OG}\cdot\left(T4^4-T_{OG}^4\right)}{\left(\frac{1-\varepsilon_{CR}}{\varepsilon_{CR}\cdot A_{4,0}}\right)+\frac{1}{A_{4,0}}}$$

CALCULATION SHEET

Project No. 0509206.01	Calculation No. 0509206.01-M-002	Rev. No. 1	Page 188 of 252
Title: DBVS ICV™ Off-Gas Hood Thermal Analysis			
Prepared By: P.S. Lowery	Date: 2.17.06	Checked By: S.R. Pierce	Date: 2.17.06

DBVS ICV™ Off-Gas Hood Thermal Analysis

$j=5$

$$\frac{\sigma\cdot\tau_{OG}\cdot\left(T5^4-T0^4\right)}{\left(\frac{1-\varepsilon_{melt}}{\varepsilon_{melt}\cdot A_{0,0}}\right)+\frac{1}{A_{0,0}\cdot F_{0,5}}+\left(\frac{1-\varepsilon_{stl}}{\varepsilon_{stl}\cdot A_{5,0}}\right)}+\frac{\sigma\cdot\tau_{OG}\cdot\left(T5^4-T2^4\right)}{\left(\frac{1-\varepsilon_{stl}}{\varepsilon_{stl}\cdot A_{5,0}}\right)+\frac{1}{A_{5,0}\cdot F_{5,2}}+\left(\frac{1-\varepsilon_{CR}}{\varepsilon_{CR}\cdot A_{2,0}}\right)}\cdots \qquad = 0\ W$$

$$+\frac{\sigma\cdot\tau_{OG}\cdot\left(T5^4-T3^4\right)}{\left(\frac{1-\varepsilon_{stl}}{\varepsilon_{stl}\cdot A_{5,0}}\right)+\frac{1}{A_{5,0}\cdot F_{5,3}}+\left(\frac{1-\varepsilon_{CR}}{\varepsilon_{CR}\cdot A_{3,0}}\right)}+\frac{\sigma\cdot\tau_{OG}\cdot\left(T5^4-T4^4\right)}{\left(\frac{1-\varepsilon_{stl}}{\varepsilon_{stl}\cdot A_{5,0}}\right)+\frac{1}{A_{5,0}\cdot F_{5,4}}+\left(\frac{1-\varepsilon_{CR}}{\varepsilon_{CR}\cdot A_{4,0}}\right)}+\frac{\sigma\cdot\tau_{OG}\cdot\left(T5^4-T6^4\right)}{\left(\frac{1-\varepsilon_{stl}}{\varepsilon_{stl}\cdot A_{5,0}}\right)+\frac{1}{A_{5,0}\cdot F_{5,6}}+\frac{1-\varepsilon_{stl}}{\varepsilon_{stl}\cdot A_{6,0}}}\cdots$$

$$+\frac{\sigma\cdot\tau_{OG}\cdot\left(T5^4-T7^4\right)}{\left(\frac{1-\varepsilon_{stl}}{\varepsilon_{stl}\cdot A_{5,0}}\right)+\frac{1}{A_{5,0}\cdot F_{5,7}}+\frac{1-\varepsilon_{stl}}{\varepsilon_{stl}\cdot A_{7,0}}}+\frac{\sigma\cdot\tau_{OG}\cdot\left(T5^4-T8^4\right)}{\left(\frac{1-\varepsilon_{stl}}{\varepsilon_{stl}\cdot A_{5,0}}\right)+\frac{1}{A_{5,0}\cdot F_{5,8}}+\frac{1-\varepsilon_{stl}}{\varepsilon_{stl}\cdot A_{8,0}}}+\frac{\sigma\cdot\tau_{OG}\cdot\left(T5^4-T9^4\right)}{\left(\frac{1-\varepsilon_{stl}}{\varepsilon_{stl}\cdot A_{5,0}}\right)+\frac{1}{A_{5,0}\cdot F_{5,9}}+\frac{1-\varepsilon_{stl}}{\varepsilon_{stl}\cdot A_{9,0}}}\cdots$$

$$+\frac{\sigma\cdot\left(T5^4-T_{amb}^4\right)}{\left(\frac{1-\varepsilon_{stl}}{\varepsilon_{stl}\cdot A_{5,0}}\right)+\frac{1}{A_{5,0}}}+\xi_V\cdot A_{5,0}\cdot\left(\left|T5-T_{amb}\right|\right)^{\frac{1}{3}}\cdot\left(T5-T_{amb}\right)+\xi_V\cdot A_{5,0}\cdot\left(\left|T5-T_{OG}\right|\right)^{\frac{1}{3}}\cdot\left(T5-T_{OG}\right)+\frac{\sigma\cdot\tau_{OG}\cdot\left(T5^4-T_{OG}^4\right)}{\left(\frac{1-\varepsilon_{stl}}{\varepsilon_{stl}\cdot A_{5,0}}\right)+\frac{1}{A_{5,0}}}$$

ARES CORPORATION	CALCULATION SHEET		
Project No. 0509206.01	Calculation No. 0509206.01-M-002	Rev. No. 1	Page 189 of 252
Title: DBVS ICV™ Off-Gas Hood Thermal Analysis			
Prepared By: P.S. Lowery	Date: 2.17.06	Checked By: S.R. Pierce	Date: 2.17.06

DBVS ICV™ Off-Gas Hood Thermal Analysis

j=6

$$\frac{\sigma\cdot\varepsilon_{OG}\cdot\left(T6^4 - T0^4\right)}{\left(\frac{1-\varepsilon_{melt}}{\varepsilon_{melt}\cdot A_{0,0}}\right)+\frac{1}{A_{0,0}\cdot F_{6,6}}+\left(\frac{1-\varepsilon_{stl}}{\varepsilon_{stl}\cdot A_{6,0}}\right)}+\frac{\sigma\cdot\varepsilon_{OG}\cdot\left(T6^4 - T1^4\right)}{\left(\frac{1-\varepsilon_{stl}}{\varepsilon_{stl}\cdot A_{6,0}}\right)+\frac{1}{A_{6,0}\cdot F_{6,1}}+\left(\frac{1-\varepsilon_{CR}}{\varepsilon_{CR}\cdot A_{1,0}}\right)}+\frac{\sigma\cdot\varepsilon_{OG}\cdot\left(T6^4 - T2^4\right)}{\left(\frac{1-\varepsilon_{stl}}{\varepsilon_{stl}\cdot A_{6,0}}\right)+\frac{1}{A_{6,0}\cdot F_{6,2}}+\left(\frac{1-\varepsilon_{CR}}{\varepsilon_{CR}\cdot A_{2,0}}\right)}\ldots = -Q\cdot W$$

$$+\frac{\sigma\cdot\varepsilon_{OG}\cdot\left(T6^4 - T3^4\right)}{\left(\frac{1-\varepsilon_{stl}}{\varepsilon_{stl}\cdot A_{6,0}}\right)+\frac{1}{A_{6,0}\cdot F_{6,3}}+\left(\frac{1-\varepsilon_{CR}}{\varepsilon_{CR}\cdot A_{3,0}}\right)}+\frac{\sigma\cdot\varepsilon_{OG}\cdot\left(T6^4 - T4^4\right)}{\left(\frac{1-\varepsilon_{stl}}{\varepsilon_{stl}\cdot A_{6,0}}\right)+\frac{1}{A_{6,0}\cdot F_{6,4}}+\left(\frac{1-\varepsilon_{CR}}{\varepsilon_{CR}\cdot A_{4,0}}\right)}+\frac{\sigma\cdot\varepsilon_{OG}\cdot\left(T6^4 - T5^4\right)}{\left(\frac{1-\varepsilon_{stl}}{\varepsilon_{stl}\cdot A_{6,0}}\right)+\frac{1}{A_{6,0}\cdot F_{6,5}}+\frac{1-\varepsilon_{stl}}{\varepsilon_{stl}\cdot A_{5,0}}}\ldots$$

$$+\frac{\sigma\cdot\varepsilon_{OG}\cdot\left(T6^4 - T7^4\right)}{\left(\frac{1-\varepsilon_{stl}}{\varepsilon_{stl}\cdot A_{6,0}}\right)+\frac{1}{A_{6,0}\cdot F_{6,7}}+\frac{1-\varepsilon_{stl}}{\varepsilon_{stl}\cdot A_{7,0}}}+\frac{\sigma\cdot\varepsilon_{OG}\cdot\left(T6^4 - T8^4\right)}{\left(\frac{1-\varepsilon_{stl}}{\varepsilon_{stl}\cdot A_{6,0}}\right)+\frac{1}{A_{6,0}\cdot F_{6,8}}+\frac{1-\varepsilon_{stl}}{\varepsilon_{stl}\cdot A_{8,0}}}+\frac{\sigma\cdot\varepsilon_{OG}\cdot\left(T6^4 - T9^4\right)}{\left(\frac{1-\varepsilon_{stl}}{\varepsilon_{stl}\cdot A_{6,0}}\right)+\frac{1}{A_{6,0}\cdot F_{6,9}}+\frac{1-\varepsilon_{stl}}{\varepsilon_{stl}\cdot A_{9,0}}}\ldots$$

$$+\frac{\sigma\cdot\left(T6^4 - T_{amb}^4\right)}{\left(\frac{1-\varepsilon_{stl}}{\varepsilon_{stl}\cdot A_{6,0}}\right)+\frac{1}{A_{6,0}}}+\zeta_V\cdot\left(A_{6,0}+A_{6,2}\right)\cdot\left(\left|T6-T_{amb}\right|\right)^{\frac{1}{3}}\cdot\left(T6-T_{amb}\right)\ldots$$

$$+\zeta_H\cdot A_{6,1}\cdot\left(\left|T6-T_{amb}\right|\right)^{\frac{1}{3}}\cdot\left(T6-T_{amb}\right)+\zeta_V\cdot A_{6,0}\cdot\left(\left|T6-T_{OG}\right|\right)^{\frac{1}{3}}\cdot\left(T6-T_{OG}\right)+\frac{\sigma\cdot\varepsilon_{OG}\cdot\left(T6^4 - T_{OG}^4\right)}{\left(\frac{1-\varepsilon_{CR}}{\varepsilon_{stl}\cdot A_{6,0}}\right)+\frac{1}{A_{6,0}}}$$

ARES CORPORATION	CALCULATION SHEET		
Project No. 0509206.01	Calculation No. 0509206.01-M-002	Rev. No. 1	Page 190 of 252
Title: DBVS ICV™ Off-Gas Hood Thermal Analysis			
Prepared By: P.S. Lowery	Date: 2.17.06	Checked By: S.R. Pierce	Date: 2.17.06

DBVS ICV™ Off-Gas Hood Thermal Analysis

$j=7$

$$\frac{\sigma\cdot\varepsilon_{OG}\cdot\left(T7^4-T0^4\right)}{\left(\frac{1-\varepsilon_{melt}}{\varepsilon_{melt}\cdot A_{0,0}}\right)+\frac{1}{A_{0,0}\cdot F_{0,7}}+\left(\frac{1-\varepsilon_{stl}}{\varepsilon_{stl}\cdot A_{7,0}}\right)}+\frac{\sigma\cdot\varepsilon_{OG}\cdot\left(T5^4-T1^4\right)}{\left(\frac{1-\varepsilon_{stl}}{\varepsilon_{stl}\cdot A_{7,0}}\right)+\frac{1}{A_{7,0}\cdot F_{7,1}}+\left(\frac{1-\varepsilon_{CR}}{\varepsilon_{CR}\cdot A_{1,0}}\right)}+\frac{\sigma\cdot\varepsilon_{OG}\cdot\left(T7^4-T2^4\right)}{\left(\frac{1-\varepsilon_{stl}}{\varepsilon_{stl}\cdot A_{7,0}}\right)+\frac{1}{A_{7,0}\cdot F_{7,2}}+\left(\frac{1-\varepsilon_{CR}}{\varepsilon_{CR}\cdot A_{2,0}}\right)}\ldots=-Q\,W$$

$$+\frac{\sigma\cdot\varepsilon_{OG}\cdot\left(T7^4-T4^4\right)}{\left(\frac{1-\varepsilon_{stl}}{\varepsilon_{stl}\cdot A_{7,0}}\right)+\frac{1}{A_{7,0}\cdot F_{7,4}}+\left(\frac{1-\varepsilon_{CR}}{\varepsilon_{CR}\cdot A_{4,0}}\right)}+\frac{\sigma\cdot\varepsilon_{OG}\cdot\left(T7^4-T5^4\right)}{\left(\frac{1-\varepsilon_{stl}}{\varepsilon_{stl}\cdot A_{7,0}}\right)+\frac{1}{A_{7,0}\cdot F_{7,5}}+\frac{1-\varepsilon_{stl}}{\varepsilon_{stl}\cdot A_{5,0}}}+\frac{\sigma\cdot\varepsilon_{OG}\cdot\left(T7^4-T6^4\right)}{\left(\frac{1-\varepsilon_{stl}}{\varepsilon_{stl}\cdot A_{7,0}}\right)+\frac{1}{A_{7,0}\cdot F_{7,6}}+\frac{1-\varepsilon_{stl}}{\varepsilon_{stl}\cdot A_{6,0}}}\ldots$$

$$+\frac{\sigma\cdot\varepsilon_{OG}\cdot\left(T7^4-T8^4\right)}{\left(\frac{1-\varepsilon_{stl}}{\varepsilon_{stl}\cdot A_{7,0}}\right)+\frac{1}{A_{7,0}\cdot F_{7,8}}+\frac{1-\varepsilon_{stl}}{\varepsilon_{stl}\cdot A_{8,0}}}+\frac{\sigma\cdot\varepsilon_{OG}\cdot\left(T7^4-T9^4\right)}{\left(\frac{1-\varepsilon_{stl}}{\varepsilon_{stl}\cdot A_{7,0}}\right)+\frac{1}{A_{7,0}\cdot F_{7,9}}+\frac{1-\varepsilon_{stl}}{\varepsilon_{stl}\cdot A_{9,0}}}\ldots$$

$$+\frac{\sigma\cdot\left(T7^4-T_{amb}^4\right)}{\left(\frac{1-\varepsilon_{stl}}{\varepsilon_{stl}\cdot A_{7,0}}\right)+\frac{1}{A_{7,0}}}+4\cdot\nu\cdot A_{7,0}\cdot\left(\left|T7-T_{amb}\right|\right)^{\frac{1}{3}}\cdot\left(T7-T_{amb}\right)+4\cdot\nu\cdot A_{7,0}\cdot\left(\left|T7-T_{OG}\right|\right)^{\frac{1}{3}}\cdot\left(T7-T_{OG}\right)+\frac{\sigma\cdot\varepsilon_{OG}\cdot\left(T7^4-T_{OG}^4\right)}{\left(\frac{1-\varepsilon_{stl}}{\varepsilon_{stl}\cdot A_{7,0}}\right)+\frac{1}{A_{7,0}}}$$

ARES CORPORATION	CALCULATION SHEET		
Project No. 0509206.01	Calculation No. 0509206.01-M-002	Rev. No. 1	Page 191 of 252
Title: DBVS ICV™ Off-Gas Hood Thermal Analysis			
Prepared By: P.S. Lowery	Date: 2.17.06	Checked By: S.R. Pierce	Date: 2.17.06

DBVS1CV™ Off-Gas Hood Thermal Analysis

j=8

$$\frac{\sigma\cdot\tau_{OG}\cdot\left(T8^4 - T0^4\right)}{\left(\frac{1-\varepsilon_{melt}}{\varepsilon_{melt}\cdot A_{0,0}}\right)+\frac{1}{A_{0,0}\cdot F_{0,8}}+\left(\frac{1-\varepsilon_{stl}}{\varepsilon_{stl}\cdot A_{8,0}}\right)}+\frac{\sigma\cdot\tau_{OG}\cdot\left(T8^4 - T1^4\right)}{\left(\frac{1-\varepsilon_{stl}}{\varepsilon_{stl}\cdot A_{8,0}}\right)+\frac{1}{A_{8,0}\cdot F_{8,1}}+\left(\frac{1-\varepsilon_{CR}}{\varepsilon_{CR}\cdot A_{1,0}}\right)}+\frac{\sigma\cdot\tau_{OG}\cdot\left(T8^4 - T2^4\right)}{\left(\frac{1-\varepsilon_{stl}}{\varepsilon_{stl}\cdot A_{8,0}}\right)+\frac{1}{A_{8,0}\cdot F_{8,2}}+\left(\frac{1-\varepsilon_{CR}}{\varepsilon_{CR}\cdot A_{2,0}}\right)}\ldots = -0\ \mathrm{W}$$

$$+\frac{\sigma\cdot\tau_{OG}\cdot\left(T8^4 - T3^4\right)}{\left(\frac{1-\varepsilon_{stl}}{\varepsilon_{stl}\cdot A_{8,0}}\right)+\frac{1}{A_{8,0}\cdot F_{8,3}}+\left(\frac{1-\varepsilon_{CR}}{\varepsilon_{CR}\cdot A_{3,0}}\right)}+\frac{\sigma\cdot\tau_{OG}\cdot\left(T8^4 - T4^4\right)}{\left(\frac{1-\varepsilon_{stl}}{\varepsilon_{stl}\cdot A_{8,0}}\right)+\frac{1}{A_{8,0}\cdot F_{8,4}}+\left(\frac{1-\varepsilon_{CR}}{\varepsilon_{CR}\cdot A_{4,0}}\right)}+\frac{\sigma\cdot\tau_{OG}\cdot\left(T8^4 - T5^4\right)}{\left(\frac{1-\varepsilon_{stl}}{\varepsilon_{stl}\cdot A_{8,0}}\right)+\frac{1}{A_{8,0}\cdot F_{8,5}}+\frac{1-\varepsilon_{stl}}{\varepsilon_{stl}\cdot A_{5,0}}}\ldots$$

$$+\frac{\sigma\cdot\tau_{OG}\cdot\left(T8^4 - T6^4\right)}{\left(\frac{1-\varepsilon_{stl}}{\varepsilon_{stl}\cdot A_{8,0}}\right)+\frac{1}{A_{8,0}\cdot F_{8,6}}+\frac{1-\varepsilon_{stl}}{\varepsilon_{stl}\cdot A_{6,0}}}+\frac{\sigma\cdot\tau_{OG}\cdot\left(T8^4 - T7^4\right)}{\left(\frac{1-\varepsilon_{stl}}{\varepsilon_{stl}\cdot A_{8,0}}\right)+\frac{1}{A_{8,0}\cdot F_{8,7}}+\frac{1-\varepsilon_{stl}}{\varepsilon_{stl}\cdot A_{7,0}}}+\frac{\sigma\cdot\tau_{OG}\cdot\left(T8^4 - T9^4\right)}{\left(\frac{1-\varepsilon_{stl}}{\varepsilon_{stl}\cdot A_{8,0}}\right)+\frac{1}{A_{8,0}\cdot F_{8,9}}+\frac{1-\varepsilon_{stl}}{\varepsilon_{stl}\cdot A_{9,0}}}\ldots$$

$$+\frac{\sigma\cdot\left(T8^4 - T_{amb}^4\right)}{\left(\frac{1-\varepsilon_{stl}}{\varepsilon_{stl}\cdot A_{8,0}}\right)+\frac{1}{A_{8,0}}}+\xi_V\cdot\left(A_{8,0}+A_{8,2}\right)\cdot\left(\left|T8 - T_{amb}\right|\right)^{\frac{1}{3}}\cdot\left(T8 - T_{amb}\right)\ldots$$

$$+\xi_{HU}\cdot A_{8,1}\cdot\left(\left|T8 - T_{amb}\right|\right)^{\frac{1}{3}}\cdot\left(T8 - T_{amb}\right)+\xi_V\cdot A_{8,0}\cdot\left(\left|T8 - T_{OG}\right|\right)^{\frac{1}{3}}\cdot\left(T8 - T_{OG}\right)+\frac{\sigma\cdot\alpha_{OG}\cdot\left(T8^4 - T_{OG}^4\right)}{\left(\frac{1-\varepsilon_{stl}}{\varepsilon_{stl}\cdot A_{8,0}}\right)+\frac{1}{A_{8,0}}}$$

CALCULATION SHEET

Project No. 0509206.01	Calculation No. 0509206.01-M-002	Rev. No. 1	Page 192 of 252
Title: DBVS ICV™ Off-Gas Hood Thermal Analysis			
Prepared By: P.S. Lowry	Date: 2.17.06	Checked By: S.R. Pierce	Date: 2.17.06

DBVS ICV™ Off-Gas Hood Thermal Analysis

$j=9$

$$\frac{\sigma\cdot\varepsilon_{OG}\cdot\left(T9^4-T0^4\right)}{\left(\frac{1-\varepsilon_{molt}}{\varepsilon_{molt}\cdot A_{0,0}}\right)+\frac{1}{A_{0,0}\cdot F_{0,9}}+\left(\frac{1-\varepsilon_{stl}}{\varepsilon_{stl}\cdot A_{9,0}}\right)}+\frac{\sigma\cdot\varepsilon_{OG}\cdot\left(T9^4-T1^4\right)}{\left(\frac{1-\varepsilon_{stl}}{\varepsilon_{stl}\cdot A_{9,0}}\right)+\frac{1}{A_{9,0}\cdot F_{9,1}}+\left(\frac{1-\varepsilon_{CR}}{\varepsilon_{CR}\cdot A_{1,0}}\right)}+\frac{\sigma\cdot\varepsilon_{OG}\cdot\left(T9^4-T2^4\right)}{\left(\frac{1-\varepsilon_{stl}}{\varepsilon_{stl}\cdot A_{9,0}}\right)+\frac{1}{A_{9,0}\cdot F_{9,2}}+\left(\frac{1-\varepsilon_{CR}}{\varepsilon_{CR}\cdot A_{2,0}}\right)}\ldots=-0\ \mathrm{W}$$

$$+\frac{\sigma\cdot\varepsilon_{OG}\cdot\left(T9^4-T3^4\right)}{\left(\frac{1-\varepsilon_{stl}}{\varepsilon_{stl}\cdot A_{9,0}}\right)+\frac{1}{A_{9,0}\cdot F_{9,3}}+\left(\frac{1-\varepsilon_{CR}}{\varepsilon_{CR}\cdot A_{3,0}}\right)}+\frac{\sigma\cdot\varepsilon_{OG}\cdot\left(T9^4-T4^4\right)}{\left(\frac{1-\varepsilon_{stl}}{\varepsilon_{stl}\cdot A_{9,0}}\right)+\frac{1}{A_{9,0}\cdot F_{9,4}}+\left(\frac{1-\varepsilon_{CR}}{\varepsilon_{CR}\cdot A_{4,0}}\right)}+\frac{\sigma\cdot\varepsilon_{OG}\cdot\left(T9^4-T5^4\right)}{\left(\frac{1-\varepsilon_{stl}}{\varepsilon_{stl}\cdot A_{9,0}}\right)+\frac{1}{A_{9,0}\cdot F_{9,5}}+\frac{1-\varepsilon_{stl}}{\varepsilon_{stl}\cdot A_{5,0}}}\ldots$$

$$+\frac{\sigma\cdot\varepsilon_{OG}\cdot\left(T9^4-T6^4\right)}{\left(\frac{1-\varepsilon_{stl}}{\varepsilon_{stl}\cdot A_{9,0}}\right)+\frac{1}{A_{9,0}\cdot F_{9,6}}+\frac{1-\varepsilon_{stl}}{\varepsilon_{stl}\cdot A_{6,0}}}+\frac{\sigma\cdot\varepsilon_{OG}\cdot\left(T9^4-T7^4\right)}{\left(\frac{1-\varepsilon_{stl}}{\varepsilon_{stl}\cdot A_{9,0}}\right)+\frac{1}{A_{9,0}\cdot F_{9,7}}+\frac{1-\varepsilon_{stl}}{\varepsilon_{stl}\cdot A_{7,0}}}+\frac{\sigma\cdot\varepsilon_{OG}\cdot\left(T9^4-T8^4\right)}{\left(\frac{1-\varepsilon_{stl}}{\varepsilon_{stl}\cdot A_{9,0}}\right)+\frac{1}{A_{9,0}\cdot F_{9,8}}+\frac{1-\varepsilon_{stl}}{\varepsilon_{stl}\cdot A_{8,0}}}\ldots$$

$$+\frac{\sigma\cdot\left(T9^4-T_{amb}^{\,4}\right)}{\left(\frac{1-\varepsilon_{stl}}{\varepsilon_{stl}\cdot A_{9,0}}\right)+\frac{1}{A_{9,0}}}+\xi_V\cdot\left(A_{9,0}+A_{9,2}\right)\cdot\left(\left|T9-T_{amb}\right|\right)^{\frac{1}{3}}\cdot\left(T9-T_{amb}\right)\ldots$$

$$+\xi_{HU}\cdot A_{9,1}\cdot\left(\left|T9-T_{amb}\right|\right)^{\frac{1}{3}}\cdot\left(T9-T_{amb}\right)+\xi_{HD}\cdot A_{9,0}\cdot\left(\left|T9-T_{OG}\right|\right)^{\frac{1}{3}}\cdot\left(T9-T_{OG}\right)+\frac{\sigma\cdot\varepsilon_{OG}\cdot\left(T9^4-T_{OG}^{\,4}\right)}{\left(\frac{1-\varepsilon_{stl}}{\varepsilon_{stl}\cdot A_{9,0}}\right)+\frac{1}{A_{9,0}}}$$

ARES CORPORATION	CALCULATION SHEET		
Project No. 0509206.01	Calculation No. 0509206.01-M-002	Rev. No. 1	Page 193 of 252
Title: DBVS ICV™ Off-Gas Hood Thermal Analysis			
Prepared By: P.S. Lowery	Date: 2.17.06	Checked By: S.R. Pierce	Date: 2.17.06

DBVS ICV™ Off-Gas Hood Thermal Analysis

j=10

$$T10 - T10 = 0\ K$$

j=11

$$\frac{A_{11,0}\cdot(T11 - T1)}{\left(\frac{s_{CR}}{k_{CR}}\right) + \left(\frac{s_{sand}}{k_{sand}}\right)} + \frac{\sigma\cdot\left(T11^4 - T_{amb}^4\right)}{\left(\frac{1 - e_{stl}}{e_{stl}\cdot A_{11,0}}\right) + \frac{1}{A_{11,0}}} + h_v\cdot A_{11,0}\cdot\left(\left|T11 - T_{amb}\right|\right)^{\frac{1}{3}}\cdot\left(T11 - T_{amb}\right) = 0\ W$$

j=12

$$\frac{A_{12,0}\cdot(T12 - T2)}{\left(\frac{s_{CR}}{k_{CR}}\right) + \left(\frac{s_{sand}}{k_{sand}}\right)} + \frac{\sigma\cdot\left(T12^4 - T_{amb}^4\right)}{\left(\frac{1 - e_{stl}}{e_{stl}\cdot A_{12,0}}\right) + \frac{1}{A_{12,0}}} + h_v\cdot A_{12,0}\cdot\left(\left|T12 - T_{amb}\right|\right)^{\frac{1}{3}}\cdot\left(T12 - T_{amb}\right) = 0\ W$$

ARES CORPORATION	CALCULATION SHEET		
Project No. 0509206.01	Calculation No. 0509206.01-M-002	Rev. No. 1	Page 194 of 252
Title: DBVS ICV™ Off-Gas Hood Thermal Analysis			
Prepared By: P.S. Lowery	Date: 2.17.06	Checked By: S.R. Pierce	Date: 2.17.06

DBVS ICV™ Off-Gas Hood Thermal Analysis

j=13

$$\frac{A_{13,0}\cdot(T13 - T3)}{\left(\frac{\delta_{CR}}{k_{CR}}\right) + \left(\frac{\delta_{sand}}{k_{sand}}\right)} + \frac{\sigma\cdot\left(T13^4 - T_{amb}^4\right)}{\left(\frac{1 - \varepsilon_{all}}{\varepsilon_{all}\cdot A_{13,0}}\right) + \frac{1}{A_{13,0}}} + hv\cdot A_{13,0}\cdot\left(\left|T13 - T_{amb}\right|\right)^{\frac{1}{3}}\cdot(T13 - T_{amb}) = -0\ W$$

j=14

$$\frac{A_{14,0}\cdot(T14 - T4)}{\left(\frac{\delta_{CR}}{k_{CR}}\right) + \left(\frac{\delta_{sand}}{k_{sand}}\right)} + \frac{\sigma\cdot\left(T14^4 - T_{amb}^4\right)}{\left(\frac{1 - \varepsilon_{all}}{\varepsilon_{all}\cdot A_{14,0}}\right) + \frac{1}{A_{14,0}}} + hv\cdot A_{14,0}\cdot\left(\left|T14 - T_{amb}\right|\right)^{\frac{1}{3}}\cdot(T14 - T_{amb}) = -0\ W$$

ARES CORPORATION	CALCULATION SHEET		
Project No. 0509206.01	Calculation No. 0509206.01-M-002	Rev. No. 1	Page 195 of 252
Title: DBVS ICV™ Off-Gas Hood Thermal Analysis			
Prepared By: P.S. Lowery	Date: 2.17.06	Checked By: S.R. Pierce	Date: 2.17.06

DBVS ICV™ Off-Gas Hood Thermal Analysis

Total radiant heat loss from the melt surface ...

$$\frac{\sigma\cdot\varepsilon_{OG}\cdot\left(T1^4-T0^4\right)}{\left(\frac{1-\varepsilon_{melt}}{\varepsilon_{melt}\cdot A_{0,0}}\right)+\frac{1}{A_{0,0}\cdot F_{0,1}}+\left(\frac{1-\varepsilon_{CR}}{\varepsilon_{CR}\cdot A_{1,0}}\right)}+\frac{\sigma\cdot\varepsilon_{OG}\cdot\left(T2^4-T0^4\right)}{\left(\frac{1-\varepsilon_{melt}}{\varepsilon_{melt}\cdot A_{0,0}}\right)+\frac{1}{A_{0,0}\cdot F_{0,2}}+\left(\frac{1-\varepsilon_{CR}}{\varepsilon_{CR}\cdot A_{2,0}}\right)}+\frac{\sigma\cdot\varepsilon_{OG}\cdot\left(T3^4-T0^4\right)}{\left(\frac{1-\varepsilon_{melt}}{\varepsilon_{melt}\cdot A_{0,0}}\right)+\frac{1}{A_{0,0}\cdot F_{0,3}}+\left(\frac{1-\varepsilon_{CR}}{\varepsilon_{CR}\cdot A_{3,0}}\right)}\ldots=-215.4\,kW$$

$$+\frac{\sigma\cdot\varepsilon_{OG}\cdot\left(T4^4-T0^4\right)}{\left(\frac{1-\varepsilon_{melt}}{\varepsilon_{melt}\cdot A_{0,0}}\right)+\frac{1}{A_{0,0}\cdot F_{0,4}}+\left(\frac{1-\varepsilon_{CR}}{\varepsilon_{CR}\cdot A_{4,0}}\right)}+\frac{\sigma\cdot\varepsilon_{OG}\cdot\left(T5^4-T0^4\right)}{\left(\frac{1-\varepsilon_{melt}}{\varepsilon_{melt}\cdot A_{0,0}}\right)+\frac{1}{A_{0,0}\cdot F_{0,5}}+\left(\frac{1-\varepsilon_{stl}}{\varepsilon_{stl}\cdot A_{5,0}}\right)}+\frac{\sigma\cdot\varepsilon_{OG}\cdot\left(T6^4-T0^4\right)}{\left(\frac{1-\varepsilon_{melt}}{\varepsilon_{melt}\cdot A_{0,0}}\right)+\frac{1}{A_{0,0}\cdot F_{0,6}}+\left(\frac{1-\varepsilon_{stl}}{\varepsilon_{stl}\cdot A_{6,0}}\right)}\ldots$$

$$+\frac{\sigma\cdot\varepsilon_{OG}\cdot\left(T7^4-T0^4\right)}{\left(\frac{1-\varepsilon_{melt}}{\varepsilon_{melt}\cdot A_{0,0}}\right)+\frac{1}{A_{0,0}\cdot F_{0,7}}+\left(\frac{1-\varepsilon_{stl}}{\varepsilon_{stl}\cdot A_{7,0}}\right)}+\frac{\sigma\cdot\varepsilon_{OG}\cdot\left(T8^4-T0^4\right)}{\left(\frac{1-\varepsilon_{melt}}{\varepsilon_{melt}\cdot A_{0,0}}\right)+\frac{1}{A_{0,0}\cdot F_{0,8}}+\left(\frac{1-\varepsilon_{stl}}{\varepsilon_{stl}\cdot A_{8,0}}\right)}+\frac{\sigma\cdot\varepsilon_{OG}\cdot\left(T9^4-T0^4\right)}{\left(\frac{1-\varepsilon_{melt}}{\varepsilon_{melt}\cdot A_{0,0}}\right)+\frac{1}{A_{0,0}\cdot F_{0,9}}+\left(\frac{1-\varepsilon_{stl}}{\varepsilon_{stl}\cdot A_{9,0}}\right)}\ldots$$

$$+\frac{\sigma\cdot\varepsilon_{OG}\cdot\left(T9^4-T0^4\right)}{\left(\frac{1-\varepsilon_{melt}}{\varepsilon_{melt}\cdot A_{0,0}}\right)+\frac{1}{A_{0,d}}}$$

$$F_{0,1}+F_{0,2}+F_{0,3}+F_{0,4}+F_{0,5}+F_{0,6}+F_{0,7}+F_{0,8}+F_{0,9}=1$$

Compute the average hood temperature ...

$$T_{HA}:=\frac{A_{5,0}\cdot T5C+A_{6,0}\cdot T6C+A_{7,0}\cdot T7C+A_{8,0}\cdot T8C+A_{9,0}\cdot T9C}{A_{5,0}+A_{6,0}+A_{7,0}+A_{8,0}+A_{9,0}}$$

$T_{HA}=398.9$ $\quad T_{HAF}:=CtoF\left(T_{HA}\right)$ $\quad T_{HAF}=750$

A.R.E.S. CORPORATION	CALCULATION SHEET		
Project No. 0509206.01	Calculation No. 0509206.01-M-002	Rev. No. 1	Page 196 of 252
Title: DBVS ICV™ Off-Gas Hood Thermal Analysis			
Prepared By: P.S. Lowery	Date: 2.17.06	Checked By: S.R. Pierce	Date: 2.17.06

APPENDIX H

MATHCAD MODEL FOR THE HRTS CONDITIONS WITH ADJUSTED MELT SURFACE TEMPERATURE AND LOWER MELT SURFACE LEVEL

CALCULATION SHEET

Project No. 0509206.01	Calculation No. 0509206.01-M-002	Rev. No. 1	Page 197 of 252
Title: DBVS ICV™ Off-Gas Hood Thermal Analysis			
Prepared By: P.S. Lowery	Date: 2.17.06	Checked By: S.R. Pierce	Date: 2.17.06

DBVS ICV™ Off-Gas Hood Thermal Analysis

$°F = 1$

$°C = 1$

$CtoF(x) := \left(\frac{9}{5}\cdot\frac{x}{°C} + 32\right)°F$ $\quad CtoK(x) := \left(\frac{x}{°C} + 273.15\right)K$ $\quad KtoC(x) := \left(\frac{x}{K} - 273.15\right)°C$

$FtoC(x) := \frac{5}{9}\cdot\left(\frac{x}{°F} - 32\right)°C$ $\quad FtoR(x) := \left(\frac{x}{°F} + 459.67\right)R$

$w_1 := 5.5ft$ $\quad w_2 := 3.5ft$ $\quad L_1 := 22ft$ $\quad h_1 := 39in$ $\quad h_2 := 18in$ $\quad \theta := 52deg$ $\quad N_{ribs} := 12$ $\quad w_{ribs} := 2in$ $\quad h_{ribs} := 4in$

$\delta_{hood} := 0.3125in$ $\quad \theta_w := 52deg$ $\quad \delta_{floor} := 3.5in$ $\quad \delta_{CR} := 6in$ $\quad \delta_{stand} := 6in$

Matrix of surface areas ...

$$A := \begin{bmatrix} w_1\cdot L_1 & 0 & 0 \\ w_1\cdot h_1 & 0 & 0 \\ L_1\cdot h_1 & 0 & 0 \\ w_1\cdot h_2 & 0 & 0 \\ L_1\cdot h_1 & 0 & 0 \\ \frac{(w_1 + w_2)\cdot h_2}{2} & 0 & 0 \\ L_1\cdot\frac{h_2}{\sin(\theta)} & N_{ribs}\cdot w_{ribs}\cdot\frac{h_2}{\sin(\theta)} & 2N_{ribs}\cdot h_{ribs}\cdot\frac{h_2}{\sin(\theta)} \\ \frac{(w_1 + w_2)\cdot h_2}{2} & 0 & 0 \\ L_1\cdot\frac{h_2}{\sin(\theta)} & N_{ribs}\cdot w_{ribs}\cdot\frac{h_2}{\sin(\theta)} & 2N_{ribs}\cdot h_{ribs}\cdot\frac{h_2}{\sin(\theta)} \\ w_2\cdot L_1 & N_{ribs}\cdot w_{ribs}\cdot w_2 & 2N_{ribs}\cdot h_{ribs}\cdot w_2 \\ (3ft + w_1 + 3ft)\cdot(3ft + L_1 + 3ft) & 0 & 0 \\ w_1\cdot h_1 & 0 & 0 \\ L_1\cdot h_1 & 0 & 0 \\ w_1\cdot h_1 & 0 & 0 \\ L_1\cdot h_1 & 0 & 0 \end{bmatrix}$$

The first column of dat contains the area of the element for radiant heat transfer. The second column of data contains the horizontal component of area associated with the 4"x2" steel tubing ribs on that elemental area. The third column of data contains the vertical component of the ribs for that elemental area.

$A =$

	0	1	2
0	121	0	0
1	27	0	0
2	108.2	0	0
3	27	0	0
4	108.2	0	0
5	6	0	0
6	37.2	3.4	13.6
7	6	0	0
8	37.2	3.4	13.6
9	77	7	28
10	322	0	0
11	27	0	0
12	108.2	0	0
13	27	0	0
14	108.2	0	0

ft^2

CALCULATION SHEET

Project No. 0509206.01	Calculation No. 0509206.01-M-002	Rev. No. 1	Page 198 of 252
Title: DBVS ICV™ Off-Gas Hood Thermal Analysis			
Prepared By: P.S. Lowery	Date: 2.17.06	Checked By: S.R. Pierce	Date: 2.17.06

DBVS ICV™ Off-Gas Hood Thermal Analysis

$$F = \begin{bmatrix} 0 & .058 & .252 & .058 & .252 & .007 & .029 & .007 & .029 & .308 & 0 \\ .251 & 0 & .233 & .017 & .233 & 0 & .051 & .011 & .051 & .153 & 0 \\ .282 & .06 & 0 & .060 & .319 & .015 & .065 & .015 & .055 & .109 & 0 \\ .251 & .017 & .233 & 0 & .233 & .011 & .051 & 0 & .051 & .153 & 0 \\ .282 & .060 & .319 & .060 & 0 & .015 & .055 & .015 & .065 & .109 & 0 \\ .141 & 0 & .270 & .051 & .270 & 0 & .081 & .010 & .081 & .086 & 0 \\ .094 & .038 & .246 & .038 & .159 & .013 & 0 & .013 & .150 & .249 & .616 \\ .141 & .051 & .270 & 0 & .270 & .010 & .081 & 0 & .081 & .096 & 0 \\ .094 & .038 & .159 & .038 & .246 & .013 & .150 & .013 & 0 & .249 & .616 \\ .484 & .056 & .153 & .056 & .153 & .007 & .120 & .007 & .120 & 0 & 1 \end{bmatrix}$$

Matrix F contains the view factors for radiant heat transfer between surfaces of the model. The first (row) index corresponds to the ID of the source surface; the second to the receiving surface. For example, the top of the soil surface above the melt has ID=0; the ID of the "short box-wall surface (width = 5.5 ft, height = 14 in) has ID = 1. The view factor between these two surfaces is located at F[0,1] = 0.021 (obtained from Configuration 16, p. 1030 in Siegel & Howell's Thermal Radiation Heat Transfer, 3rd Edition). The "reciprocity" view factor for these two surfaces is F[1,0]=A[0,0]*F[0,1]/A[1,0] = 0.397.

	NO. 0	NO. 1	NO. 2	NO. 3	NO. 4	NO. 5	NO. 6	NO. 7	NO. 8	NO. 9	NO. 10
0	0	0.058	0.252	0.058	0.252	0.007	0.029	0.007	0.029	0.308	0
1	0.251	0	0.233	0.017	0.233	0	0.051	0.011	0.051	0.153	0
2	0.282	0.06	0	0.06	0.319	0.015	0.065	0.015	0.055	0.109	0
3	0.251	0.017	0.233	0	0.233	0.011	0.051	0	0.051	0.153	0
4	0.282	0.06	0.319	0.06	0	0.015	0.055	0.015	0.065	0.109	0
5	0.141	0	0.27	0.051	0.27	0	0.081	0.01	0.081	0.086	0
6	0.094	0.038	0.246	0.038	0.159	0.013	0	0.013	0.15	0.249	0.616
7	0.141	0.051	0.27	0	0.27	0.01	0.081	0	0.081	0.096	0
8	0.094	0.038	0.159	0.038	0.246	0.013	0.15	0.013	0	0.249	0.616
9	0.484	0.056	0.153	0.056	0.153	0.007	0.12	0.007	0.12	0	1

$F =$

ARES CORPORATION	CALCULATION SHEET		
Project No. 0509206.01	Calculation No. 0509206.01-M-002	Rev. No. 1	Page 199 of 252
Title: DBVS ICV™ Off-Gas Hood Thermal Analysis			
Prepared By: P.S. Lowry	Date: 2.17.06	Checked By: S.R. Pierce	Date: 2.17.06

DBVS ICV™ Off-Gas Hood Thermal Analysis

Temperature Boundary Conditions ...

$T_{melt} := 1121°F$	$T_{mC} := F_{to}C(T_{melt})$	$T_{melt} := C_{to}K(T_{mC})$	$T_{melt} = 878.15\ K$
$T_{AWTE} := 77°F$	$T_{AC} := F_{to}C(T_{AWTE})$	$T_{AWTE} := C_{to}K(T_{AC})$	$T_{AWTE} = 298.1\ K$
$T_{OG} := 1112°F$	$T_{og} := F_{to}C(T_{OG})$	$T_{OG} := C_{to}K(T_{og})$	$T_{OG} = 873.15\ K$
	$T_{amb} := 0°C$	$T_{amb} := C_{to}K(T_{amb})$	$T_{amb} = 273.1\ K$

Initial guess for temperatures ...

$T_0 := T_{melt}$

$T_1 := 773K$ $T_3 := 773K$ $T_5 := 773K$ $T_7 := 773K$ $T_9 := 773K$

$T_2 := 773K$ $T_4 := 773K$ $T_6 := 773K$ $T_8 := 773K$ $T_{10} := 773K$ (T_{10} not used in this model)

$T_{11} := 473K$ $T_{12} := 473K$ $T_{13} := 473K$ $T_{14} := 473K$

Material properties ...

$\sigma := 5.67 \cdot 10^{-8} \cdot \frac{W}{m^2 \cdot K^4}$

$\alpha_{melt} := 0.7$

$\alpha_{sil} := .85$ $k_{sil} := 60.5 \frac{W}{m \cdot K}$

$\alpha_{CR} := 0.66$ $k_{CR} := 1.44 \frac{W}{m \cdot K}$ $k_{sand} := 2 \frac{W}{m \cdot K}$

$\alpha_{OG} := 0$ $\tau_{OG} := 1 - \alpha_{OG}$ $\tau_{OG} = 1$

Convective heat transfer coefficients... $n := \frac{1}{3}$ $\xi_V := 1.32 \cdot W \cdot m^{-2} \cdot K^{-\frac{4}{3}}$ $\xi_{HD} := 0.691 \cdot W \cdot m^{-2} \cdot K^{-\frac{4}{3}}$ $\xi_{HU} := 1.52 \cdot W \cdot m^{-2} \cdot K^{-\frac{4}{3}}$

ARES CORPORATION	CALCULATION SHEET		
Project No. 0509206.01	Calculation No. 0509206.01-M-002	Rev. No. 1	Page 200 of 252
Title: DBVS ICV™ Off-Gas Hood Thermal Analysis			
Prepared By: P.S. Lowery	Date: 2.17.06	Checked By: S.R. Pierce	Date: 2.17.06

DBVS ICV™ Off-Gas Hood Thermal Analysis

$T_{amb} = 273.1\ K \qquad T_{OG} = 873.1\ K$

Given

j=1

$$\frac{\sigma\cdot\tau_{OG}\cdot\left(T_1^{\,4}-T_0^{\,4}\right)}{\left(\frac{1-\varepsilon_{melt}}{\varepsilon_{melt}\cdot A_{0,0}}\right)+\frac{1}{A_{0,0}\cdot F_{0,1}}+\left(\frac{1-\varepsilon_{CR}}{\varepsilon_{CR}\cdot A_{1,0}}\right)}+\frac{\sigma\cdot\tau_{OG}\cdot\left(T_1^{\,4}-T_2^{\,4}\right)}{\left(\frac{1-\varepsilon_{CR}}{\varepsilon_{CR}\cdot A_{1,0}}\right)+\frac{1}{A_{1,0}\cdot F_{1,2}}+\left(\frac{1-\varepsilon_{CR}}{\varepsilon_{CR}\cdot A_{2,0}}\right)}+\frac{\sigma\cdot\tau_{OG}\cdot\left(T_1^{\,4}-T_3^{\,4}\right)}{\left(\frac{1-\varepsilon_{CR}}{\varepsilon_{CR}\cdot A_{1,0}}\right)+\frac{1}{A_{1,0}\cdot F_{1,3}}+\left(\frac{1-\varepsilon_{CR}}{\varepsilon_{CR}\cdot A_{3,0}}\right)}\cdots=0$$

$$+\frac{\sigma\cdot\tau_{OG}\cdot\left(T_1^{\,4}-T_4^{\,4}\right)}{\left(\frac{1-\varepsilon_{CR}}{\varepsilon_{CR}\cdot A_{1,0}}\right)+\frac{1}{A_{1,0}\cdot F_{1,4}}+\left(\frac{1-\varepsilon_{CR}}{\varepsilon_{CR}\cdot A_{4,0}}\right)}+\frac{\sigma\cdot\tau_{OG}\cdot\left(T_1^{\,4}-T_6^{\,4}\right)}{\left(\frac{1-\varepsilon_{CR}}{\varepsilon_{CR}\cdot A_{1,0}}\right)+\frac{1}{A_{1,0}\cdot F_{1,6}}+\left(\frac{1-\varepsilon_{stl}}{\varepsilon_{stl}\cdot A_{6,0}}\right)}+\frac{\sigma\cdot\tau_{OG}\cdot\left(T_1^{\,4}-T_7^{\,4}\right)}{\left(\frac{1-\varepsilon_{CR}}{\varepsilon_{CR}\cdot A_{1,0}}\right)+\frac{1}{A_{1,0}\cdot F_{1,7}}+\frac{1-\varepsilon_{stl}}{\varepsilon_{stl}\cdot A_{7,0}}}\cdots$$

$$+\frac{\sigma\cdot\tau_{OG}\cdot\left(T_1^{\,4}-T_8^{\,4}\right)}{\left(\frac{1-\varepsilon_{CR}}{\varepsilon_{CR}\cdot A_{1,0}}\right)+\frac{1}{A_{1,0}\cdot F_{1,8}}+\frac{1-\varepsilon_{stl}}{\varepsilon_{stl}\cdot A_{8,0}}}+\frac{\sigma\cdot\tau_{OG}\cdot\left(T_1^{\,4}-T_9^{\,4}\right)}{\left(\frac{1-\varepsilon_{CR}}{\varepsilon_{CR}\cdot A_{1,0}}\right)+\frac{1}{A_{1,0}\cdot F_{1,9}}+\frac{1-\varepsilon_{stl}}{\varepsilon_{stl}\cdot A_{9,0}}}+\delta v\cdot A_{1,0}\cdot\left(\left|T_1-T_{OG}\right|\right)^{\frac{1}{3}}\cdot\left(T_1-T_{OG}\right)\cdots$$

$$+\frac{A_{1,0}\cdot\left(T_1-T_{11}\right)}{\left(\frac{\delta_{CR}}{k_{CR}}\right)+\left(\frac{\delta_{sand}}{k_{sand}}\right)}+\frac{\sigma\cdot\tau_{OG}\cdot\left(T_1^{\,4}-T_{OG}^{\,4}\right)}{\left(\frac{1-\varepsilon_{CR}}{\varepsilon_{CR}\cdot A_{1,0}}\right)+\frac{1}{A_{1,0}}}$$

ARES CORPORATION	CALCULATION SHEET		
Project No. 0509206.01	Calculation No. 0509206.01-M-002	Rev. No. 1	Page 201 of 252
Title: DBVS ICV™ Off-Gas Hood Thermal Analysis			
Prepared By: P.S. Lowery	Date: 2.17.06	Checked By: S.R. Pierce	Date: 2.17.06

DBVS ICV™ Off-Gas Hood Thermal Analysis

j=2

$$\frac{\sigma\cdot\tau_{OG}\cdot\left(T_2^4-T_0^4\right)}{\left(\frac{1-\varepsilon_{melt}}{\varepsilon_{melt}\cdot A_{0,0}}\right)+\frac{1}{A_{0,0}\cdot F_{0,2}}+\left(\frac{1-\varepsilon_{CR}}{\varepsilon_{CR}\cdot A_{2,0}}\right)}+\frac{\sigma\cdot\tau_{OG}\cdot\left(T_2^4-T_1^4\right)}{\left(\frac{1-\varepsilon_{CR}}{\varepsilon_{CR}\cdot A_{2,0}}\right)+\frac{1}{A_{2,0}\cdot F_{2,1}}+\left(\frac{1-\varepsilon_{CR}}{\varepsilon_{CR}\cdot A_{1,0}}\right)}+\frac{\sigma\cdot\tau_{OG}\cdot\left(T_2^4-T_3^4\right)}{\left(\frac{1-\varepsilon_{CR}}{\varepsilon_{CR}\cdot A_{3,0}}\right)+\frac{1}{A_{2,0}\cdot F_{2,3}}+\left(\frac{1-\varepsilon_{CR}}{\varepsilon_{CR}\cdot A_{3,0}}\right)}\ldots=0$$

$$+\frac{\sigma\cdot\tau_{OG}\cdot\left(T_2^4-T_4^4\right)}{\left(\frac{1-\varepsilon_{CR}}{\varepsilon_{CR}\cdot A_{2,0}}\right)+\frac{1}{A_{2,0}\cdot F_{2,4}}+\left(\frac{1-\varepsilon_{CR}}{\varepsilon_{CR}\cdot A_{4,0}}\right)}+\frac{\sigma\cdot\tau_{OG}\cdot\left(T_2^4-T_5^4\right)}{\left(\frac{1-\varepsilon_{CR}}{\varepsilon_{CR}\cdot A_{2,0}}\right)+\frac{1}{A_{2,0}\cdot F_{2,5}}+\left(\frac{1-\varepsilon_{stl}}{\varepsilon_{stl}\cdot A_{5,0}}\right)}+\frac{\sigma\cdot\tau_{OG}\cdot\left(T_2^4-T_6^4\right)}{\left(\frac{1-\varepsilon_{CR}}{\varepsilon_{CR}\cdot A_{2,0}}\right)+\frac{1}{A_{2,0}\cdot F_{2,6}}+\left(\frac{1-\varepsilon_{stl}}{\varepsilon_{stl}\cdot A_{6,0}}\right)}\ldots$$

$$+\frac{\sigma\cdot\tau_{OG}\cdot\left(T_2^4-T_7^4\right)}{\left(\frac{1-\varepsilon_{CR}}{\varepsilon_{CR}\cdot A_{2,0}}\right)+\frac{1}{A_{2,0}\cdot F_{2,7}}+\frac{1-\varepsilon_{stl}}{\varepsilon_{stl}\cdot A_{7,0}}}+\frac{\sigma\cdot\tau_{OG}\cdot\left(T_2^4-T_8^4\right)}{\left(\frac{1-\varepsilon_{CR}}{\varepsilon_{CR}\cdot A_{2,0}}\right)+\frac{1}{A_{2,0}\cdot F_{2,8}}+\frac{1-\varepsilon_{stl}}{\varepsilon_{stl}\cdot A_{8,0}}}+\frac{\sigma\cdot\tau_{OG}\cdot\left(T_2^4-T_9^4\right)}{\left(\frac{1-\varepsilon_{CR}}{\varepsilon_{CR}\cdot A_{2,0}}\right)+\frac{1}{A_{2,0}\cdot F_{2,9}}+\frac{1-\varepsilon_{stl}}{\varepsilon_{stl}\cdot A_{9,0}}}\ldots$$

$$+\xi_V\cdot A_{2,0}\cdot\left(\left|T_2-T_{\infty}\right|\right)^{\frac{1}{3}}\cdot\left(T_2-T_{\infty}\right)+\frac{A_{2,0}\cdot\left(T_2-T_{12}\right)}{\left(\frac{\delta_{CR}}{k_{CR}}\right)+\left(\frac{\delta_{sand}}{k_{sand}}\right)}+\frac{\sigma\cdot\alpha_{OG}\cdot\left(T_2^4-T_{\infty}^4\right)}{\left(\frac{1-\varepsilon_{CR}}{\varepsilon_{CR}\cdot A_{2,0}}\right)+\frac{1}{A_{2,0}}}$$

ARES CORPORATION	CALCULATION SHEET		
Project No. 0509206.01	Calculation No. 0509206.01-M-002	Rev. No. 1	Page 202 of 252
Title: DBVS ICV™ Off-Gas Hood Thermal Analysis			
Prepared By: P.S. Lowery	Date: 2.17.06	Checked By: S.R. Pierce	Date: 2.17.06

DBVS ICV™ Off-Gas Hood Thermal Analysis

j=3

$$\frac{\sigma\cdot\varepsilon_{OG}\cdot\left(T_3^4-T_0^4\right)}{\left(\frac{1-\varepsilon_{melt}}{\varepsilon_{melt}\cdot A_{0,0}}\right)+\frac{1}{A_{0,0}\cdot F_{0,3}}+\left(\frac{1-\varepsilon_{CR}}{\varepsilon_{CR}\cdot A_{3,0}}\right)}+\frac{\sigma\cdot\varepsilon_{OG}\cdot\left(T_3^4-T_1^4\right)}{\left(\frac{1-\varepsilon_{CR}}{\varepsilon_{CR}\cdot A_{3,0}}\right)+\frac{1}{A_{3,0}\cdot F_{3,1}}+\left(\frac{1-\varepsilon_{CR}}{\varepsilon_{CR}\cdot A_{3,0}}\right)}+\frac{\sigma\cdot\varepsilon_{OG}\cdot\left(T_3^4-T_2^4\right)}{\left(\frac{1-\varepsilon_{CR}}{\varepsilon_{CR}\cdot A_{3,0}}\right)+\frac{1}{A_{3,0}\cdot F_{3,2}}+\left(\frac{1-\varepsilon_{CR}}{\varepsilon_{CR}\cdot A_{3,0}}\right)}\cdots=0$$

$$+\frac{\sigma\cdot\varepsilon_{OG}\cdot\left(T_3^4-T_4^4\right)}{\left(\frac{1-\varepsilon_{CR}}{\varepsilon_{CR}\cdot A_{3,0}}\right)+\frac{1}{A_{3,0}\cdot F_{3,4}}+\left(\frac{1-\varepsilon_{CR}}{\varepsilon_{CR}\cdot A_{4,0}}\right)}+\frac{\sigma\cdot\varepsilon_{OG}\cdot\left(T_3^4-T_5^4\right)}{\left(\frac{1-\varepsilon_{CR}}{\varepsilon_{CR}\cdot A_{3,0}}\right)+\frac{1}{A_{3,0}\cdot F_{3,5}}+\left(\frac{1-\varepsilon_{sil}}{\varepsilon_{sil}\cdot A_{5,0}}\right)}+\frac{\sigma\cdot\varepsilon_{OG}\cdot\left(T_3^4-T_6^4\right)}{\left(\frac{1-\varepsilon_{CR}}{\varepsilon_{CR}\cdot A_{3,0}}\right)+\frac{1}{A_{3,0}\cdot F_{3,6}}+\frac{1-\varepsilon_{sil}}{\varepsilon_{sil}\cdot A_{6,0}}}\cdots$$

$$+\frac{\sigma\cdot\varepsilon_{OG}\cdot\left(T_3^4-T_8^4\right)}{\left(\frac{1-\varepsilon_{CR}}{\varepsilon_{CR}\cdot A_{3,0}}\right)+\frac{1}{A_{3,0}\cdot F_{3,8}}+\frac{1-\varepsilon_{sil}}{\varepsilon_{sil}\cdot A_{8,0}}}+\frac{\sigma\cdot\varepsilon_{OG}\cdot\left(T_3^4-T_9^4\right)}{\left(\frac{1-\varepsilon_{CR}}{\varepsilon_{CR}\cdot A_{3,0}}\right)+\frac{1}{A_{3,0}\cdot F_{3,9}}+\frac{1-\varepsilon_{sil}}{\varepsilon_{sil}\cdot A_{9,0}}}+\xi_V\cdot A_{3,0}\cdot\left(\left|T_3-T_{OG}\right|\right)^{\frac{1}{3}}\cdot\left(T_3-T_{OG}\right)\cdots$$

$$+\frac{A_{3,0}\cdot\left(T_3-T_{13}\right)}{\left(\frac{\delta_{CR}}{k_{CR}}\right)+\left(\frac{\delta_{sand}}{k_{sand}}\right)}+\frac{\sigma\cdot\alpha_{OG}\cdot\left(T_3^4-T_{OG}^4\right)}{\left(\frac{1-\varepsilon_{CR}}{\varepsilon_{CR}\cdot A_{3,0}}\right)+\frac{1}{A_{3,0}}}$$

CALCULATION SHEET

Project No. 0509206.01	Calculation No. 0509206.01-M-002	Rev. No. 1	Page 203 of 252
Title: DBVS ICV™ Off-Gas Hood Thermal Analysis			
Prepared By: P.S. Lowery	Date: 2.17.06	Checked By: S.R. Pierce	Date: 2.17.06

DBVS ICV™ Off-Gas Hood Thermal Analysis

$j=4$

$$\frac{\sigma\cdot\tau_{OG}\cdot\left(T_4^4-T_0^4\right)}{\left(\frac{1-\varepsilon_{melt}}{\varepsilon_{melt}\cdot A_{0,0}}\right)+\frac{1}{A_{0,0}\cdot F_{0,4}}+\left(\frac{1-\varepsilon_{CR}}{\varepsilon_{CR}\cdot A_{4,0}}\right)}+\frac{\sigma\cdot\tau_{OG}\cdot\left(T_4^4-T_1^4\right)}{\left(\frac{1-\varepsilon_{CR}}{\varepsilon_{CR}\cdot A_{4,0}}\right)+\frac{1}{A_{4,0}\cdot F_{4,1}}+\left(\frac{1-\varepsilon_{CR}}{\varepsilon_{CR}\cdot A_{1,0}}\right)}+\frac{\sigma\cdot\tau_{OG}\cdot\left(T_4^4-T_2^4\right)}{\left(\frac{1-\varepsilon_{CR}}{\varepsilon_{CR}\cdot A_{4,0}}\right)+\frac{1}{A_{4,0}\cdot F_{4,2}}+\left(\frac{1-\varepsilon_{CR}}{\varepsilon_{CR}\cdot A_{2,0}}\right)}\cdots=0$$

$$+\frac{\sigma\cdot\tau_{OG}\cdot\left(T_4^4-T_3^4\right)}{\left(\frac{1-\varepsilon_{CR}}{\varepsilon_{CR}\cdot A_{4,0}}\right)+\frac{1}{A_{4,0}\cdot F_{4,3}}+\left(\frac{1-\varepsilon_{CR}}{\varepsilon_{CR}\cdot A_{3,0}}\right)}+\frac{\sigma\cdot\tau_{OG}\cdot\left(T_4^4-T_5^4\right)}{\left(\frac{1-\varepsilon_{CR}}{\varepsilon_{CR}\cdot A_{4,0}}\right)+\frac{1}{A_{4,0}\cdot F_{4,5}}+\left(\frac{1-\varepsilon_{stl}}{\varepsilon_{stl}\cdot A_{5,0}}\right)}+\frac{\sigma\cdot\tau_{OG}\cdot\left(T_4^4-T_6^4\right)}{\left(\frac{1-\varepsilon_{CR}}{\varepsilon_{CR}\cdot A_{4,0}}\right)+\frac{1}{A_{4,0}\cdot F_{4,6}}+\frac{1-\varepsilon_{stl}}{\varepsilon_{stl}\cdot A_{6,0}}}\cdots$$

$$+\frac{\sigma\cdot\tau_{OG}\cdot\left(T_4^4-T_7^4\right)}{\left(\frac{1-\varepsilon_{CR}}{\varepsilon_{CR}\cdot A_{4,0}}\right)+\frac{1}{A_{4,0}\cdot F_{4,7}}+\frac{1-\varepsilon_{stl}}{\varepsilon_{stl}\cdot A_{7,0}}}+\frac{\sigma\cdot\tau_{OG}\cdot\left(T_4^4-T_8^4\right)}{\left(\frac{1-\varepsilon_{CR}}{\varepsilon_{CR}\cdot A_{4,0}}\right)+\frac{1}{A_{4,0}\cdot F_{4,8}}+\frac{1-\varepsilon_{stl}}{\varepsilon_{stl}\cdot A_{8,0}}}+\frac{\sigma\cdot\tau_{OG}\cdot\left(T_4^4-T_9^4\right)}{\left(\frac{1-\varepsilon_{CR}}{\varepsilon_{CR}\cdot A_{4,0}}\right)+\frac{1}{A_{4,0}\cdot F_{4,9}}+\frac{1-\varepsilon_{stl}}{\varepsilon_{stl}\cdot A_{9,0}}}\cdots$$

$$+\frac{A_{4,0}\cdot\left(T_4-T_{14}\right)}{\left(\frac{\delta_{CR}}{k_{CR}}\right)+\left(\frac{\delta_{sand}}{k_{sand}}\right)}+\xi_V\cdot A_{4,0}\cdot\left(\left|T_4-T_{OG}\right|\right)^{\frac{1}{3}}\cdot\left(T_4-T_{OG}\right)+\frac{\sigma\cdot\alpha_{OG}\cdot\left(T_4^4-T_{OG}^4\right)}{\left(\frac{1-\varepsilon_{CR}}{\varepsilon_{CR}\cdot A_{4,0}}\right)+\frac{1}{A_{4,0}}}$$

CALCULATION SHEET

Project No. 0509206.01	Calculation No. 0509206.01-M-002	Rev. No. 1	Page 204 of 252
Title: DBVS ICV™ Off-Gas Hood Thermal Analysis			
Prepared By: P.S. Lowery	Date: 2.17.06	Checked By: S.R. Pierce	Date: 2.17.06

DBVS ICV™ Off-Gas Hood Thermal Analysis

j=5

$$
\begin{aligned}
&\frac{\sigma\cdot\tau_{OG}\cdot\left(T_5^4-T_0^4\right)}{\left(\frac{1-\varepsilon_{melt}}{\varepsilon_{melt}\cdot A_{0,0}}\right)+\frac{1}{A_{0,0}\cdot F_{0,5}}+\left(\frac{1-\varepsilon_{stl}}{\varepsilon_{stl}\cdot A_{5,0}}\right)}+\frac{\sigma\cdot\tau_{OG}\cdot\left(T_5^4-T_2^4\right)}{\left(\frac{1-\varepsilon_{stl}}{\varepsilon_{stl}\cdot A_{5,0}}\right)+\frac{1}{A_{5,0}\cdot F_{5,2}}+\left(\frac{1-\varepsilon_{CR}}{\varepsilon_{CR}\cdot A_{5,0}}\right)}+\\
&+\frac{\sigma\cdot\tau_{OG}\cdot\left(T_5^4-T_3^4\right)}{\left(\frac{1-\varepsilon_{stl}}{\varepsilon_{stl}\cdot A_{5,0}}\right)+\frac{1}{A_{5,0}\cdot F_{5,3}}+\left(\frac{1-\varepsilon_{CR}}{\varepsilon_{CR}\cdot A_{3,0}}\right)}+\frac{\sigma\cdot\tau_{OG}\cdot\left(T_5^4-T_4^4\right)}{\left(\frac{1-\varepsilon_{stl}}{\varepsilon_{stl}\cdot A_{5,0}}\right)+\frac{1}{A_{5,0}\cdot F_{5,4}}+\left(\frac{1-\varepsilon_{CR}}{\varepsilon_{CR}\cdot A_{4,0}}\right)}+\frac{\sigma\cdot\tau_{OG}\cdot\left(T_5^4-T_6^4\right)}{\left(\frac{1-\varepsilon_{stl}}{\varepsilon_{stl}\cdot A_{5,0}}\right)+\frac{1}{A_{5,0}\cdot F_{5,6}}+\frac{1-\varepsilon_{stl}}{\varepsilon_{stl}\cdot A_{6,0}}}+\\
&+\frac{\sigma\cdot\tau_{OG}\cdot\left(T_5^4-T_7^4\right)}{\left(\frac{1-\varepsilon_{stl}}{\varepsilon_{stl}\cdot A_{5,0}}\right)+\frac{1}{A_{5,0}\cdot F_{5,7}}+\frac{1-\varepsilon_{stl}}{\varepsilon_{stl}\cdot A_{7,0}}}+\frac{\sigma\cdot\tau_{OG}\cdot\left(T_5^4-T_8^4\right)}{\left(\frac{1-\varepsilon_{stl}}{\varepsilon_{stl}\cdot A_{5,0}}\right)+\frac{1}{A_{5,0}\cdot F_{5,8}}+\frac{1-\varepsilon_{stl}}{\varepsilon_{stl}\cdot A_{8,0}}}+\frac{\sigma\cdot\tau_{OG}\cdot\left(T_5^4-T_9^4\right)}{\left(\frac{1-\varepsilon_{stl}}{\varepsilon_{stl}\cdot A_{5,0}}\right)+\frac{1}{A_{5,0}\cdot F_{5,9}}+\frac{1-\varepsilon_{stl}}{\varepsilon_{stl}\cdot A_{9,0}}}+\\
&+\frac{\sigma\cdot\left(T_5^4-T_{amb}^4\right)}{\left(\frac{1-\varepsilon_{stl}}{\varepsilon_{stl}\cdot A_{5,0}}\right)+\frac{1}{A_{5,0}}}+\xi_V\cdot A_{5,0}\cdot\left(\left|T_5-T_{amb}\right|\right)^{\frac{1}{3}}\cdot\left(T_5-T_{amb}\right)+\xi_V\cdot A_{5,0}\cdot\left(\left|T_5-T_{OG}\right|\right)^{\frac{1}{3}}\cdot\left(T_5-T_{OG}\right)+\frac{\sigma\cdot\alpha_{OG}\cdot\left(T_5^4-T_{OG}^4\right)}{\left(\frac{1-\varepsilon_{stl}}{\varepsilon_{stl}\cdot A_{5,0}}\right)+\frac{1}{A_{5,0}}}=0
\end{aligned}
$$

ARES CORPORATION	CALCULATION SHEET		
Project No. 0509206.01	Calculation No. 0509206.01-M-002	Rev. No. 1	Page 205 of 252
Title: DBVS ICV™ Off-Gas Hood Thermal Analysis			
Prepared By: P.S. Lowery	Date: 2.17.06	Checked By: S.R. Pierce	Date: 2.17.06

DBVS ICV™ Off-Gas Hood Thermal Analysis

j=6

$$\frac{\sigma\cdot\tau_{OG}\cdot\left(T_6^{\,4}-T_0^{\,4}\right)}{\left(\frac{1-\varepsilon_{melt}}{\varepsilon_{melt}\cdot A_{0,0}}\right)+\frac{1}{A_{0,0}\cdot F_{0,6}}+\left(\frac{1-\varepsilon_{stl}}{\varepsilon_{stl}\cdot A_{6,0}}\right)}+\frac{\sigma\cdot\tau_{OG}\cdot\left(T_6^{\,4}-T_1^{\,4}\right)}{\left(\frac{1-\varepsilon_{stl}}{\varepsilon_{stl}\cdot A_{6,0}}\right)+\frac{1}{A_{6,0}\cdot F_{6,1}}+\left(\frac{1-\varepsilon_{CR}}{\varepsilon_{CR}\cdot A_{1,0}}\right)}+\frac{\sigma\cdot\tau_{OG}\cdot\left(T_6^{\,4}-T_2^{\,4}\right)}{\left(\frac{1-\varepsilon_{stl}}{\varepsilon_{stl}\cdot A_{6,0}}\right)+\frac{1}{A_{6,0}\cdot F_{6,2}}+\left(\frac{1-\varepsilon_{CR}}{\varepsilon_{CR}\cdot A_{2,0}}\right)}\cdots=0$$

$$+\frac{\sigma\cdot\tau_{OG}\cdot\left(T_6^{\,4}-T_3^{\,4}\right)}{\left(\frac{1-\varepsilon_{stl}}{\varepsilon_{stl}\cdot A_{6,0}}\right)+\frac{1}{A_{6,0}\cdot F_{6,3}}+\left(\frac{1-\varepsilon_{CR}}{\varepsilon_{CR}\cdot A_{3,0}}\right)}+\frac{\sigma\cdot\tau_{OG}\cdot\left(T_6^{\,4}-T_4^{\,4}\right)}{\left(\frac{1-\varepsilon_{stl}}{\varepsilon_{stl}\cdot A_{6,0}}\right)+\frac{1}{A_{6,0}\cdot F_{6,4}}+\left(\frac{1-\varepsilon_{CR}}{\varepsilon_{CR}\cdot A_{4,0}}\right)}+\frac{\sigma\cdot\tau_{OG}\cdot\left(T_6^{\,4}-T_5^{\,4}\right)}{\left(\frac{1-\varepsilon_{stl}}{\varepsilon_{stl}\cdot A_{6,0}}\right)+\frac{1}{A_{6,0}\cdot F_{6,5}}+\frac{1-\varepsilon_{stl}}{\varepsilon_{stl}\cdot A_{5,0}}}\cdots$$

$$+\frac{\sigma\cdot\tau_{OG}\cdot\left(T_6^{\,4}-T_7^{\,4}\right)}{\left(\frac{1-\varepsilon_{stl}}{\varepsilon_{stl}\cdot A_{6,0}}\right)+\frac{1}{A_{6,0}\cdot F_{6,7}}+\frac{1-\varepsilon_{stl}}{\varepsilon_{stl}\cdot A_{7,0}}}+\frac{\sigma\cdot\tau_{OG}\cdot\left(T_6^{\,4}-T_8^{\,4}\right)}{\left(\frac{1-\varepsilon_{stl}}{\varepsilon_{stl}\cdot A_{6,0}}\right)+\frac{1}{A_{6,0}\cdot F_{6,8}}+\frac{1-\varepsilon_{stl}}{\varepsilon_{stl}\cdot A_{8,0}}}+\frac{\sigma\cdot\tau_{OG}\cdot\left(T_6^{\,4}-T_9^{\,4}\right)}{\left(\frac{1-\varepsilon_{stl}}{\varepsilon_{stl}\cdot A_{6,0}}\right)+\frac{1}{A_{6,0}\cdot F_{6,9}}+\frac{1-\varepsilon_{stl}}{\varepsilon_{stl}\cdot A_{9,0}}}\cdots$$

$$+\frac{\sigma\cdot\left(T_6^{\,4}-T_{amb}^{\,4}\right)}{\left(\frac{1-\varepsilon_{stl}}{\varepsilon_{stl}\cdot A_{6,0}}\right)+\frac{1}{A_{6,0}}}+\xi_V\cdot\left(A_{6,0}+A_{6,2}\right)\cdot\left(\left|T_6-T_{amb}\right|\right)^{\frac{1}{3}}\cdot\left(T_6-T_{amb}\right)\cdots$$

$$+\xi_H\cdot U\cdot A_{6,1}\cdot\left(\left|T_6-T_{amb}\right|\right)^{\frac{1}{3}}\cdot\left(T_6-T_{amb}\right)+\xi_V\cdot A_{6,0}\cdot\left(\left|T_6-T_{OG}\right|\right)^{\frac{1}{3}}\cdot\left(T_6-T_{OG}\right)+\frac{\sigma\cdot\alpha_{OG}\cdot\left(T_6^{\,4}-T_{OG}^{\,4}\right)}{\left(\frac{1-\varepsilon_{CR}}{\varepsilon_{stl}\cdot A_{6,0}}\right)+\frac{1}{A_{6,0}}}$$

ARES CORPORATION	CALCULATION SHEET		
Project No. 0509206.01	Calculation No. 0509206.01-M-002	Rev. No. 1	Page 206 of 252
Title: DBVS ICV™ Off-Gas Hood Thermal Analysis			
Prepared By: P.S. Lowery	Date: 2.17.06	Checked By: S.R. Pierce	Date: 2.17.06

DBVS ICV™ Off-Gas Hood Thermal Analysis

j=7

$$\frac{\sigma\cdot\tau_{OG}\cdot\left(T_7^{\,4}-T_0^{\,4}\right)}{\left(\frac{1-\varepsilon_{melt}}{\varepsilon_{melt}\cdot A_{0,0}}\right)+\frac{1}{A_{0,0}\cdot F_{0,7}}+\left(\frac{1-\varepsilon_{stl}}{\varepsilon_{stl}\cdot A_{7,0}}\right)}+\frac{\sigma\cdot\tau_{OG}\cdot\left(T_5^{\,4}-T_1^{\,4}\right)}{\left(\frac{1-\varepsilon_{stl}}{\varepsilon_{stl}\cdot A_{7,0}}\right)+\frac{1}{A_{7,0}\cdot F_{7,1}}+\left(\frac{1-\varepsilon_{CR}}{\varepsilon_{CR}\cdot A_{1,0}}\right)}+\frac{\sigma\cdot\tau_{OG}\cdot\left(T_7^{\,4}-T_2^{\,4}\right)}{\left(\frac{1-\varepsilon_{stl}}{\varepsilon_{stl}\cdot A_{7,0}}\right)+\frac{1}{A_{7,0}\cdot F_{7,2}}+\left(\frac{1-\varepsilon_{CR}}{\varepsilon_{CR}\cdot A_{2,0}}\right)}\cdots=0$$

$$+\frac{\sigma\cdot\tau_{OG}\cdot\left(T_7^{\,4}-T_4^{\,4}\right)}{\left(\frac{1-\varepsilon_{stl}}{\varepsilon_{stl}\cdot A_{7,0}}\right)+\frac{1}{A_{7,0}\cdot F_{7,4}}+\left(\frac{1-\varepsilon_{CR}}{\varepsilon_{CR}\cdot A_{4,0}}\right)}+\frac{\sigma\cdot\tau_{OG}\cdot\left(T_7^{\,4}-T_5^{\,4}\right)}{\left(\frac{1-\varepsilon_{stl}}{\varepsilon_{stl}\cdot A_{7,0}}\right)+\frac{1}{A_{7,0}\cdot F_{7,5}}+\frac{1-\varepsilon_{stl}}{\varepsilon_{stl}\cdot A_{5,0}}}+\frac{\sigma\cdot\tau_{OG}\cdot\left(T_7^{\,4}-T_6^{\,4}\right)}{\left(\frac{1-\varepsilon_{stl}}{\varepsilon_{stl}\cdot A_{7,0}}\right)+\frac{1}{A_{7,0}\cdot F_{7,6}}+\frac{1-\varepsilon_{stl}}{\varepsilon_{stl}\cdot A_{6,0}}}\cdots$$

$$+\frac{\sigma\cdot\tau_{OG}\cdot\left(T_7^{\,4}-T_8^{\,4}\right)}{\left(\frac{1-\varepsilon_{stl}}{\varepsilon_{stl}\cdot A_{7,0}}\right)+\frac{1}{A_{7,0}\cdot F_{7,8}}+\frac{1-\varepsilon_{stl}}{\varepsilon_{stl}\cdot A_{8,0}}}+\frac{\sigma\cdot\tau_{OG}\cdot\left(T_7^{\,4}-T_9^{\,4}\right)}{\left(\frac{1-\varepsilon_{stl}}{\varepsilon_{stl}\cdot A_{7,0}}\right)+\frac{1}{A_{7,0}\cdot F_{7,9}}+\frac{1-\varepsilon_{stl}}{\varepsilon_{stl}\cdot A_{9,0}}}\cdots$$

$$+\frac{\sigma\cdot\left(T_7^{\,4}-T_{amb}^{\,4}\right)}{\left(\frac{1-\varepsilon_{stl}}{\varepsilon_{stl}\cdot A_{7,0}}\right)+\frac{1}{A_{7,0}}}+\xi_V\cdot A_{7,0}\cdot\left(\left|T_7-T_{amb}\right|\right)^{\frac{1}{3}}\cdot\left(T_7-T_{amb}\right)+\xi_V\cdot A_{7,0}\cdot\left(\left|T_7-T_{OG}\right|\right)^{\frac{1}{3}}\cdot\left(T_7-T_{OG}\right)+\frac{\sigma\cdot\alpha_{OG}\cdot\left(T_7^{\,4}-T_{OG}^{\,4}\right)}{\left(\frac{1-\varepsilon_{stl}}{\varepsilon_{stl}\cdot A_{7,0}}\right)+\frac{1}{A_{7,0}}}$$

ARES CORPORATION	CALCULATION SHEET		
Project No. 0509206.01	Calculation No. 0509206.01-M-002	Rev. No. 1	Page 207 of 252
Title: DBVS ICV™ Off-Gas Hood Thermal Analysis			
Prepared By: P.S. Lowery	Date: 2.17.06	Checked By: S.R. Pierce	Date: 2.17.06

DBVS ICV™ Off-Gas Hood Thermal Analysis

$j=8$

$$\frac{\sigma\cdot\varepsilon_{OG}\cdot\left(T_8^{\,4}-T_0^{\,4}\right)}{\left(\frac{1-\varepsilon_{melt}}{\varepsilon_{melt}\cdot A_{0,0}}+\frac{1}{A_{0,0}\cdot F_{0,8}}+\frac{1-\varepsilon_{stl}}{\varepsilon_{stl}\cdot A_{8,0}}\right)}+\frac{\sigma\cdot\varepsilon_{OG}\cdot\left(T_8^{\,4}-T_1^{\,4}\right)}{\left(\frac{1-\varepsilon_{stl}}{\varepsilon_{stl}\cdot A_{8,0}}+\frac{1}{A_{8,0}\cdot F_{8,1}}+\frac{1-\varepsilon_{CR}}{\varepsilon_{CR}\cdot A_{1,0}}\right)}+\frac{\sigma\cdot\varepsilon_{OG}\cdot\left(T_8^{\,4}-T_2^{\,4}\right)}{\left(\frac{1-\varepsilon_{stl}}{\varepsilon_{stl}\cdot A_{8,0}}+\frac{1}{A_{8,0}\cdot F_{8,2}}+\frac{1-\varepsilon_{CR}}{\varepsilon_{CR}\cdot A_{2,0}}\right)}\cdots=0$$

$$+\frac{\sigma\cdot\varepsilon_{OG}\cdot\left(T_8^{\,4}-T_3^{\,4}\right)}{\left(\frac{1-\varepsilon_{stl}}{\varepsilon_{stl}\cdot A_{8,0}}+\frac{1}{A_{8,0}\cdot F_{8,3}}+\frac{1-\varepsilon_{CR}}{\varepsilon_{CR}\cdot A_{3,0}}\right)}+\frac{\sigma\cdot\varepsilon_{OG}\cdot\left(T_8^{\,4}-T_4^{\,4}\right)}{\left(\frac{1-\varepsilon_{stl}}{\varepsilon_{stl}\cdot A_{8,0}}+\frac{1}{A_{8,0}\cdot F_{8,4}}+\frac{1-\varepsilon_{CR}}{\varepsilon_{CR}\cdot A_{4,0}}\right)}+\frac{\sigma\cdot\varepsilon_{OG}\cdot\left(T_8^{\,4}-T_5^{\,4}\right)}{\left(\frac{1-\varepsilon_{stl}}{\varepsilon_{stl}\cdot A_{8,0}}+\frac{1}{A_{8,0}\cdot F_{8,5}}+\frac{1-\varepsilon_{stl}}{\varepsilon_{stl}\cdot A_{5,0}}\right)}\cdots$$

$$+\frac{\sigma\cdot\varepsilon_{OG}\cdot\left(T_8^{\,4}-T_6^{\,4}\right)}{\left(\frac{1-\varepsilon_{stl}}{\varepsilon_{stl}\cdot A_{8,0}}+\frac{1}{A_{8,0}\cdot F_{8,6}}+\frac{1-\varepsilon_{stl}}{\varepsilon_{stl}\cdot A_{6,0}}\right)}+\frac{\sigma\cdot\varepsilon_{OG}\cdot\left(T_8^{\,4}-T_7^{\,4}\right)}{\left(\frac{1-\varepsilon_{stl}}{\varepsilon_{stl}\cdot A_{8,0}}+\frac{1}{A_{8,0}\cdot F_{8,7}}+\frac{1-\varepsilon_{stl}}{\varepsilon_{stl}\cdot A_{7,0}}\right)}+\frac{\sigma\cdot\varepsilon_{OG}\cdot\left(T_8^{\,4}-T_9^{\,4}\right)}{\left(\frac{1-\varepsilon_{stl}}{\varepsilon_{stl}\cdot A_{8,0}}+\frac{1}{A_{8,0}\cdot F_{8,9}}+\frac{1-\varepsilon_{stl}}{\varepsilon_{stl}\cdot A_{9,0}}\right)}\cdots$$

$$+\frac{\sigma\cdot\left(T_8^{\,4}-T_{amb}^{\,4}\right)}{\left(\frac{1-\varepsilon_{stl}}{\varepsilon_{stl}\cdot A_{8,0}}+\frac{1}{A_{8,0}}\right)}+\xi_V\cdot\left(A_{8,0}+A_{8,2}\right)\cdot\left(\left|T_8-T_{amb}\right|\right)^{\frac{1}{3}}\cdot\left(T_8-T_{amb}\right)\cdots$$

$$+\xi_{HU}\cdot A_{8,1}\cdot\left(\left|T_8-T_{amb}\right|\right)^{\frac{1}{3}}\cdot\left(T_8-T_{amb}\right)+\xi_V\cdot A_{8,0}\cdot\left(\left|T_8-T_{OG}\right|\right)^{\frac{1}{3}}\cdot\left(T_8-T_{OG}\right)+\frac{\sigma\cdot\varepsilon_{OG}\cdot\left(T_8^{\,4}-T_{OG}^{\,4}\right)}{\left(\frac{1-\varepsilon_{stl}}{\varepsilon_{stl}\cdot A_{8,0}}+\frac{1}{A_{8,0}}\right)}$$

ARES CORPORATION	CALCULATION SHEET		
Project No. 0509206.01	Calculation No. 0509206.01-M-002	Rev. No. 1	Page 208 of 252
Title: DBVS ICV™ Off-Gas Hood Thermal Analysis			
Prepared By: P.S. Lowery	Date: 2.17.06	Checked By: S.R. Pierce	Date: 2.17.06

DBVS ICV™ Off-Gas Hood Thermal Analysis

j=9

$$\frac{\sigma\cdot\varepsilon_{OG}\cdot\left(T_9^{\,4}-T_0^{\,4}\right)}{\left(\frac{1-\varepsilon_{melt}}{\varepsilon_{melt}\cdot A_{9,0}}\right)+\frac{1}{A_{9,0}\cdot F_{0,9}}+\left(\frac{1-\varepsilon_{stl}}{\varepsilon_{stl}\cdot A_{9,0}}\right)}+\frac{\sigma\cdot\varepsilon_{OG}\cdot\left(T_9^{\,4}-T_1^{\,4}\right)}{\left(\frac{1-\varepsilon_{stl}}{\varepsilon_{stl}\cdot A_{9,0}}\right)+\frac{1}{A_{9,0}\cdot F_{9,1}}+\left(\frac{1-\varepsilon_{CR}}{\varepsilon_{CR}\cdot A_{1,0}}\right)}+\frac{\sigma\cdot\varepsilon_{OG}\cdot\left(T_9^{\,4}-T_2^{\,4}\right)}{\left(\frac{1-\varepsilon_{stl}}{\varepsilon_{stl}\cdot A_{9,0}}\right)+\frac{1}{A_{9,0}\cdot F_{9,2}}+\left(\frac{1-\varepsilon_{CR}}{\varepsilon_{CR}\cdot A_{2,0}}\right)}\cdots=0$$

$$+\frac{\sigma\cdot\varepsilon_{OG}\cdot\left(T_9^{\,4}-T_3^{\,4}\right)}{\left(\frac{1-\varepsilon_{stl}}{\varepsilon_{stl}\cdot A_{9,0}}\right)+\frac{1}{A_{9,0}\cdot F_{9,3}}+\left(\frac{1-\varepsilon_{CR}}{\varepsilon_{CR}\cdot A_{3,0}}\right)}+\frac{\sigma\cdot\varepsilon_{OG}\cdot\left(T_9^{\,4}-T_4^{\,4}\right)}{\left(\frac{1-\varepsilon_{stl}}{\varepsilon_{stl}\cdot A_{9,0}}\right)+\frac{1}{A_{9,0}\cdot F_{9,4}}+\left(\frac{1-\varepsilon_{CR}}{\varepsilon_{CR}\cdot A_{4,0}}\right)}+\frac{\sigma\cdot\varepsilon_{OG}\cdot\left(T_9^{\,4}-T_5^{\,4}\right)}{\left(\frac{1-\varepsilon_{stl}}{\varepsilon_{stl}\cdot A_{9,0}}\right)+\frac{1}{A_{9,0}\cdot F_{9,5}}+\frac{1-\varepsilon_{stl}}{\varepsilon_{stl}\cdot A_{5,0}}}\cdots$$

$$+\frac{\sigma\cdot\varepsilon_{OG}\cdot\left(T_9^{\,4}-T_6^{\,4}\right)}{\left(\frac{1-\varepsilon_{stl}}{\varepsilon_{stl}\cdot A_{9,0}}\right)+\frac{1}{A_{9,0}\cdot F_{9,6}}+\frac{1-\varepsilon_{stl}}{\varepsilon_{stl}\cdot A_{6,0}}}+\frac{\sigma\cdot\varepsilon_{OG}\cdot\left(T_9^{\,4}-T_7^{\,4}\right)}{\left(\frac{1-\varepsilon_{stl}}{\varepsilon_{stl}\cdot A_{9,0}}\right)+\frac{1}{A_{9,0}\cdot F_{9,7}}+\frac{1-\varepsilon_{stl}}{\varepsilon_{stl}\cdot A_{7,0}}}+\frac{\sigma\cdot\varepsilon_{OG}\cdot\left(T_9^{\,4}-T_8^{\,4}\right)}{\left(\frac{1-\varepsilon_{stl}}{\varepsilon_{stl}\cdot A_{9,0}}\right)+\frac{1}{A_{9,0}\cdot F_{9,8}}+\frac{1-\varepsilon_{stl}}{\varepsilon_{stl}\cdot A_{8,0}}}\cdots$$

$$+\frac{\sigma\cdot\left(T_9^{\,4}-T_{amb}^{\,4}\right)}{\left(\frac{1-\varepsilon_{stl}}{\varepsilon_{stl}\cdot A_{9,0}}\right)+\frac{1}{A_{9,0}}}+\xi_V\cdot\left(A_{9,0}+A_{9,2}\right)\cdot\left(\left|T_9-T_{amb}\right|\right)^{\frac{1}{3}}\cdot\left(T_9-T_{amb}\right)\cdots$$

$$+\xi_{HU}\cdot A_{9,1}\cdot\left(\left|T_9-T_{amb}\right|\right)^{\frac{1}{3}}\cdot\left(T_9-T_{amb}\right)+\xi_{HD}\cdot A_{9,0}\cdot\left(\left|T_9-T_{OG}\right|\right)^{\frac{1}{3}}\cdot\left(T_9-T_{OG}\right)+\frac{\sigma\cdot\alpha_{OG}\cdot\left(T_9^{\,4}-T_{OG}^{\,4}\right)}{\left(\frac{1-\varepsilon_{stl}}{\varepsilon_{stl}\cdot A_{9,0}}\right)+\frac{1}{A_{9,0}}}$$

ARES CORPORATION	CALCULATION SHEET		
Project No. 0509206.01	Calculation No. 0509206.01-M-002	Rev. No. 1	Page 209 of 252
Title: DBVS ICV™ Off-Gas Hood Thermal Analysis			
Prepared By: P.S. Lowery	Date: 2.17.06	Checked By: S.R. Pierce	Date: 2.17.06

DBVS ICV™ Off-Gas Hood Thermal Analysis

j=10

$$T_{10} - T_{10} = 0$$

j=11

$$\frac{A_{11,0}\cdot(T_{11} - T_1)}{\left(\frac{\delta_{CR}}{k_{CR}}\right) + \left(\frac{\delta_{sand}}{k_{sand}}\right)} + \frac{\sigma\cdot\left(T_{11}^{\ 4} - T_{amb}^{\ 4}\right)}{\left(\frac{1-\varepsilon_{11}}{\varepsilon_{11}\cdot A_{11,0}}\right) + \frac{1}{A_{11,0}}} + \xi_V\cdot A_{11,0}\cdot\left(T_{11} - T_{amb}\right)^{\frac{1}{3}}\cdot\left(T_{11} - T_{amb}\right) = 0$$

j=12

$$\frac{A_{12,0}\cdot(T_{12} - T_2)}{\left(\frac{\delta_{CR}}{k_{CR}}\right) + \left(\frac{\delta_{sand}}{k_{sand}}\right)} + \frac{\sigma\cdot\left(T_{12}^{\ 4} - T_{amb}^{\ 4}\right)}{\left(\frac{1-\varepsilon_{11}}{\varepsilon_{11}\cdot A_{12,0}}\right) + \frac{1}{A_{12,0}}} + \xi_V\cdot A_{12,0}\cdot\left(T_{12} - T_{amb}\right)^{\frac{1}{3}}\cdot\left(T_{12} - T_{amb}\right) = 0$$

CALCULATION SHEET

Project No. 0509206.01	Calculation No. 0509206.01-M-002	Rev. No. 1	Page 210 of 252
Title: DBVS ICV™ Off-Gas Hood Thermal Analysis			
Prepared By: P.S. Lowery	Date: 2.17.06	Checked By: S.R. Pierce	Date: 2.17.06

DBVS ICV™ Off-Gas Hood Thermal Analysis

$j := 13$

$$\frac{A_{13,0}\cdot(T_{13}-T_3)}{\left(\frac{\delta_{CR}}{k_{CR}}\right)+\left(\frac{\delta_{hood}}{k_{hood}}\right)}+\frac{\sigma\cdot\left(T_{13}^4-T_{amb}^4\right)}{\left(\frac{1-\varepsilon_{all}}{\varepsilon_{all}\cdot A_{13,0}}\right)+\frac{1}{A_{13,0}}}+h_v\cdot A_{13,0}\cdot\left(\left|T_{13}-T_{amb}\right|\right)^{\frac{1}{3}}\cdot\left(T_{13}-T_{amb}\right)=0$$

$j := 14$

$$\frac{A_{14,0}\cdot(T_{14}-T_4)}{\left(\frac{\delta_{CR}}{k_{CR}}\right)+\left(\frac{\delta_{hood}}{k_{hood}}\right)}+\frac{\sigma\cdot\left(T_{14}^4-T_{amb}^4\right)}{\left(\frac{1-\varepsilon_{all}}{\varepsilon_{all}\cdot A_{14,0}}\right)+\frac{1}{A_{14,0}}}+h_v\cdot A_{14,0}\cdot\left(\left|T_{14}-T_{amb}\right|\right)^{\frac{1}{3}}\cdot\left(T_{14}-T_{amb}\right)=0$$

$$\begin{pmatrix} T1 \\ T2 \\ T3 \\ T4 \\ T5 \\ T6 \\ T7 \\ T8 \\ T9 \\ T10 \\ T11 \\ T12 \\ T13 \\ T14 \end{pmatrix} := \mathrm{Find}(T_1, T_2, T_3, T_4, T_5, T_6, T_7, T_8, T_9, T_{10}, T_{11}, T_{12}, T_{13}, T_{14})$$

CALCULATION SHEET

Project No. 0509206.01	Calculation No. 0509206.01-M-002	Rev. No. 1	Page 211 of 252
Title: DBVS ICV™ Off-Gas Hood Thermal Analysis			
Prepared By: P.S. Lowery	Date: 2.17.06	Checked By: S.R. Pierce	Date: 2.17.06

DBVS ICV™ Off-Gas Hood Thermal Analysis

T1 = 751.3 K	T1C := KtoC(T1)	T1C = 478.1
T2 = 749.8 K	T2C := KtoC(T2)	T2C = 476.7
T3 = 751.3 K	T3C := KtoC(T3)	T3C = 478.1
T4 = 749.8 K	T4C := KtoC(T4)	T4C = 476.7
T5 = 626.8 K	T5C := KtoC(T5)	T5C = 353.6
T6 = 597.9 K	T6C := KtoC(T6)	T6C = 324.8
T7 = 626.9 K	T7C := KtoC(T7)	T7C = 353.7
T8 = 597.9 K	T8C := KtoC(T8)	T8C = 324.8
T9 = 643.2 K	T9C := KtoC(T9)	T9C = 370.1
T10 = 386.5 K	T10C := KtoC(T10)	T10C = 113.4
T11 = 404.6 K	T11C := KtoC(T11)	T11C = 131.4
T12 = 404.3 K	T12C := KtoC(T12)	T12C = 131.1
T13 = 404.6 K	T13C := KtoC(T13)	T13C = 131.4
T14 = 404.3 K	T14C := KtoC(T14)	T14C = 131.1

T1F := CtoF(T1C)	T2F := CtoF(T2C)	T3F := CtoF(T3C)	T4F := CtoF(T4C)	T5F := CtoF(T5C)	T6F := CtoF(T6C)
T7F := CtoF(T7C)	T8F := CtoF(T8C)	T9F := CtoF(T9C)	T10F := CtoF(T10C)	T11F := CtoF(T11C)	T12F := CtoF(T12C)
T13F := CtoF(T13C)	T14F := CtoF(T14C)				

CALCULATION SHEET

Project No. 0509206.01	Calculation No. 0509206.01-M-002	Rev. No. 1	Page 212 of 252
Title: DBVS ICV™ Off-Gas Hood Thermal Analysis			
Prepared By: P.S. Lowery	Date: 2.17.06	Checked By: S.R. Pierce	Date: 2.17.06

DBVS ICV™ Off-Gas Hood Thermal Analysis

Results in °F ...

T1F = 892.634 T2F = 890.051 T3F = 892.634 T4F = 890.051 T5F = 668.543 T6F = 615.625

T7F = 608.678 T8F = 616.623 T9F = 698.141 T10F = 236 T11F = 268.5 T12F = 268 T13F = 268.5 T14F = 268

Check results ...

$T0 := T_{melt}$ T0 = 878.1 K

T1 = 751.3 K T2 = 749.8 K T3 = 751.3 K T4 = 749.8 K T5 = 626.8 K T6 = 597.9 K

T7 = 626.9 K T8 = 597.9 K T9 = 643.2 K T10 = 386.5 K T11 = 404.6 K T12 = 404.2 K T13 = 404.6 K

T14 = 404.3 K T_{AWTB} = 298.1 K T_{amb} = 273.1 K T_{OG} = 873.1 K

j=1

$$\frac{\sigma\cdot\varepsilon_{OG}\cdot\left(T1^4-T0^4\right)}{\left(\frac{1-\varepsilon_{melt}}{\varepsilon_{melt}\cdot A_{0,0}}\right)+\frac{1}{A_{0,0}\cdot F_{0,1}}+\left(\frac{1-\varepsilon_{CR}}{\varepsilon_{CR}\cdot A_{1,0}}\right)}+\frac{\sigma\cdot\varepsilon_{OG}\cdot\left(T1^4-T2^4\right)}{\left(\frac{1-\varepsilon_{CR}}{\varepsilon_{CR}\cdot A_{1,0}}\right)+\frac{1}{A_{1,0}\cdot F_{1,2}}+\left(\frac{1-\varepsilon_{CR}}{\varepsilon_{CR}\cdot A_{2,0}}\right)}+\frac{\sigma\cdot\varepsilon_{OG}\cdot\left(T1^4-T3^4\right)}{\left(\frac{1-\varepsilon_{CR}}{\varepsilon_{CR}\cdot A_{1,0}}\right)+\frac{1}{A_{1,0}\cdot F_{1,3}}+\left(\frac{1-\varepsilon_{CR}}{\varepsilon_{CR}\cdot A_{3,0}}\right)}\ldots=0\ W$$

$$+\frac{\sigma\cdot\varepsilon_{OG}\cdot\left(T1^4-T4^4\right)}{\left(\frac{1-\varepsilon_{CR}}{\varepsilon_{CR}\cdot A_{1,0}}\right)+\frac{1}{A_{1,0}\cdot F_{1,4}}+\left(\frac{1-\varepsilon_{CR}}{\varepsilon_{CR}\cdot A_{4,0}}\right)}+\frac{\sigma\cdot\varepsilon_{OG}\cdot\left(T1^4-T6^4\right)}{\left(\frac{1-\varepsilon_{CR}}{\varepsilon_{CR}\cdot A_{1,0}}\right)+\frac{1}{A_{1,0}\cdot F_{1,6}}+\left(\frac{1-\varepsilon_{sil}}{\varepsilon_{sil}\cdot A_{6,0}}\right)}+\frac{\sigma\cdot\varepsilon_{OG}\cdot\left(T1^4-T7^4\right)}{\left(\frac{1-\varepsilon_{CR}}{\varepsilon_{CR}\cdot A_{1,0}}\right)+\frac{1}{A_{1,0}\cdot F_{1,7}}+\frac{1-\varepsilon_{sil}}{\varepsilon_{sil}\cdot A_{7,0}}}\ldots$$

$$+\frac{\sigma\cdot\varepsilon_{OG}\cdot\left(T1^4-T8^4\right)}{\left(\frac{1-\varepsilon_{CR}}{\varepsilon_{CR}\cdot A_{1,0}}\right)+\frac{1}{A_{1,0}\cdot F_{1,8}}+\frac{1-\varepsilon_{sil}}{\varepsilon_{sil}\cdot A_{8,0}}}+\frac{\sigma\cdot\varepsilon_{OG}\cdot\left(T1^4-T9^4\right)}{\left(\frac{1-\varepsilon_{CR}}{\varepsilon_{CR}\cdot A_{1,0}}\right)+\frac{1}{A_{1,0}\cdot F_{1,9}}+\frac{1-\varepsilon_{sil}}{\varepsilon_{sil}\cdot A_{9,0}}}+\zeta_V\cdot A_{1,0}\cdot\left(\left|T1-T_{OG}\right|\right)^{\frac{1}{3}}\cdot\left(T1-T_{OG}\right)\ldots$$

$$+\frac{A_{1,0}\cdot(T1-T11)}{\left(\frac{\delta_{CR}}{k_{CR}}\right)+\left(\frac{\delta_{sand}}{k_{sand}}\right)}+\frac{\sigma\cdot\varepsilon_{OG}\cdot\left(T1^4-T_{OG}^4\right)}{\left(\frac{1-\varepsilon_{CR}}{\varepsilon_{CR}\cdot A_{1,0}}\right)+\frac{1}{A_{1,0}}}$$

CALCULATION SHEET

Project No. 0509206.01	Calculation No. 0509206.01-M-002	Rev. No. 1	Page 213 of 252
Title: DBVS ICV™ Off-Gas Hood Thermal Analysis			
Prepared By: P.S. Lowery	Date: 2.17.06	Checked By: S.R. Pierce	Date: 2.17.06

DBVS ICV™ Off-Gas Hood Thermal Analysis

j=2

$$\frac{\sigma\cdot\varepsilon_{OG}\cdot\left(T2^4-T0^4\right)}{\left(\frac{1-\varepsilon_{melt}}{\varepsilon_{melt}\cdot A_{0,0}}\right)+\frac{1}{A_{0,0}\cdot F_{0,2}}+\left(\frac{1-\varepsilon_{CR}}{\varepsilon_{CR}\cdot A_{2,0}}\right)}+\frac{\sigma\cdot\varepsilon_{OG}\cdot\left(T2^4-T1^4\right)}{\left(\frac{1-\varepsilon_{CR}}{\varepsilon_{CR}\cdot A_{2,0}}\right)+\frac{1}{A_{2,0}\cdot F_{2,1}}+\left(\frac{1-\varepsilon_{CR}}{\varepsilon_{CR}\cdot A_{1,0}}\right)}+\frac{\sigma\cdot\varepsilon_{OG}\cdot\left(T2^4-T3^4\right)}{\left(\frac{1-\varepsilon_{CR}}{\varepsilon_{CR}\cdot A_{2,0}}\right)+\frac{1}{A_{2,0}\cdot F_{2,3}}+\left(\frac{1-\varepsilon_{CR}}{\varepsilon_{CR}\cdot A_{3,0}}\right)}\cdots = -0\ W$$

$$+\frac{\sigma\cdot\varepsilon_{OG}\cdot\left(T2^4-T4^4\right)}{\left(\frac{1-\varepsilon_{CR}}{\varepsilon_{CR}\cdot A_{2,0}}\right)+\frac{1}{A_{2,0}\cdot F_{2,4}}+\left(\frac{1-\varepsilon_{CR}}{\varepsilon_{CR}\cdot A_{4,0}}\right)}+\frac{\sigma\cdot\varepsilon_{OG}\cdot\left(T2^4-T5^4\right)}{\left(\frac{1-\varepsilon_{CR}}{\varepsilon_{CR}\cdot A_{2,0}}\right)+\frac{1}{A_{2,0}\cdot F_{2,5}}+\left(\frac{1-\varepsilon_{stl}}{\varepsilon_{stl}\cdot A_{5,0}}\right)}+\frac{\sigma\cdot\varepsilon_{OG}\cdot\left(T2^4-T6^4\right)}{\left(\frac{1-\varepsilon_{CR}}{\varepsilon_{CR}\cdot A_{2,0}}\right)+\frac{1}{A_{2,0}\cdot F_{2,6}}+\left(\frac{1-\varepsilon_{stl}}{\varepsilon_{stl}\cdot A_{6,0}}\right)}\cdots$$

$$+\frac{\sigma\cdot\varepsilon_{OG}\cdot\left(T2^4-T7^4\right)}{\left(\frac{1-\varepsilon_{CR}}{\varepsilon_{CR}\cdot A_{2,0}}\right)+\frac{1}{A_{2,0}\cdot F_{2,7}}+\frac{1-\varepsilon_{stl}}{\varepsilon_{stl}\cdot A_{7,0}}}+\frac{\sigma\cdot\varepsilon_{OG}\cdot\left(T2^4-T8^4\right)}{\left(\frac{1-\varepsilon_{CR}}{\varepsilon_{CR}\cdot A_{2,0}}\right)+\frac{1}{A_{2,0}\cdot F_{2,8}}+\frac{1-\varepsilon_{stl}}{\varepsilon_{stl}\cdot A_{8,0}}}+\frac{\sigma\cdot\varepsilon_{OG}\cdot\left(T2^4-T9^4\right)}{\left(\frac{1-\varepsilon_{CR}}{\varepsilon_{CR}\cdot A_{2,0}}\right)+\frac{1}{A_{2,0}\cdot F_{2,9}}+\frac{1-\varepsilon_{stl}}{\varepsilon_{stl}\cdot A_{9,0}}}\cdots$$

$$+\xi_V\cdot A_{2,0}\cdot\left(\left|T2-T_{OG}\right|\right)^{\frac{1}{3}}\cdot\left(T2-T_{OG}\right)+\frac{A_{2,0}\cdot(T2-T12)}{\left(\frac{\delta_{CR}}{k_{CR}}\right)+\left(\frac{\delta_{sand}}{k_{sand}}\right)}+\frac{\sigma\cdot\alpha_{OG}\cdot\left(T2^4-T_{OG}^4\right)}{\left(\frac{1-\varepsilon_{CR}}{\varepsilon_{CR}\cdot A_{2,0}}\right)+\frac{1}{A_{2,0}}}$$

ARES CORPORATION	CALCULATION SHEET		
Project No. 0509206.01	Calculation No. 0509206.01-M-002	Rev. No. 1	Page 214 of 252
Title: DBVS ICV™ Off-Gas Hood Thermal Analysis			
Prepared By: P.S. Lowery	Date: 2.17.06	Checked By: S.R. Pierce	Date: 2.17.06

DBVS ICV™ Off-Gas Hood Thermal Analysis

j=3

$$\frac{\sigma\cdot\varepsilon_{OG}\cdot\left(T3^4 - T0^4\right)}{\left(\frac{1-\varepsilon_{melt}}{\varepsilon_{melt}\cdot A_{0,0}}\right)+\frac{1}{A_{0,0}\cdot F_{0,3}}+\left(\frac{1-\varepsilon_{CR}}{\varepsilon_{CR}\cdot A_{3,0}}\right)}+\frac{\sigma\cdot\varepsilon_{OG}\cdot\left(T3^4 - T1^4\right)}{\left(\frac{1-\varepsilon_{CR}}{\varepsilon_{CR}\cdot A_{3,0}}\right)+\frac{1}{A_{3,0}\cdot F_{3,1}}+\left(\frac{1-\varepsilon_{CR}}{\varepsilon_{CR}\cdot A_{1,0}}\right)}+\frac{\sigma\cdot\varepsilon_{OG}\cdot\left(T3^4 - T2^4\right)}{\left(\frac{1-\varepsilon_{CR}}{\varepsilon_{CR}\cdot A_{3,0}}\right)+\frac{1}{A_{3,0}\cdot F_{3,2}}+\left(\frac{1-\varepsilon_{CR}}{\varepsilon_{CR}\cdot A_{2,0}}\right)}\cdots = -Q\ W$$

$$+\frac{\sigma\cdot\varepsilon_{OG}\cdot\left(T3^4 - T4^4\right)}{\left(\frac{1-\varepsilon_{CR}}{\varepsilon_{CR}\cdot A_{3,0}}\right)+\frac{1}{A_{3,0}\cdot F_{3,4}}+\left(\frac{1-\varepsilon_{CR}}{\varepsilon_{CR}\cdot A_{4,0}}\right)}+\frac{\sigma\cdot\varepsilon_{OG}\cdot\left(T3^4 - T5^4\right)}{\left(\frac{1-\varepsilon_{CR}}{\varepsilon_{CR}\cdot A_{3,0}}\right)+\frac{1}{A_{3,0}\cdot F_{3,5}}+\left(\frac{1-\varepsilon_{sil}}{\varepsilon_{sil}\cdot A_{5,0}}\right)}+\frac{\sigma\cdot\varepsilon_{OG}\cdot\left(T3^4 - T6^4\right)}{\left(\frac{1-\varepsilon_{CR}}{\varepsilon_{CR}\cdot A_{3,0}}\right)+\frac{1}{A_{3,0}\cdot F_{3,6}}+\frac{1-\varepsilon_{sil}}{\varepsilon_{sil}\cdot A_{6,0}}}\cdots$$

$$+\frac{\sigma\cdot\varepsilon_{OG}\cdot\left(T3^4 - T8^4\right)}{\left(\frac{1-\varepsilon_{CR}}{\varepsilon_{CR}\cdot A_{3,0}}\right)+\frac{1}{A_{3,0}\cdot F_{3,8}}+\frac{1-\varepsilon_{sil}}{\varepsilon_{sil}\cdot A_{8,0}}}+\frac{\sigma\cdot\varepsilon_{OG}\cdot\left(T3^4 - T9^4\right)}{\left(\frac{1-\varepsilon_{CR}}{\varepsilon_{CR}\cdot A_{3,0}}\right)+\frac{1}{A_{3,0}\cdot F_{3,9}}+\frac{1-\varepsilon_{sil}}{\varepsilon_{sil}\cdot A_{9,0}}}+\xi_V\cdot A_{3,0}\cdot\left(\left|T3 - T_{OG}\right|\right)^{\frac{1}{3}}\cdot\left(T3 - T_{OG}\right)\cdots$$

$$+\frac{A_{3,0}\cdot(T3 - T13)}{\left(\frac{\delta_{CR}}{k_{CR}}\right)+\left(\frac{\delta_{sand}}{k_{sand}}\right)}+\frac{\sigma\cdot\varepsilon_{OG}\cdot\left(T3^4 - T_{OG}^4\right)}{\left(\frac{1-\varepsilon_{CR}}{\varepsilon_{CR}\cdot A_{3,0}}\right)+\frac{1}{A_{3,0}}}$$

ARES CORPORATION	CALCULATION SHEET		
Project No. 0509206.01	Calculation No. 0509206.01-M-002	Rev. No. 1	Page 215 of 252
Title: DBVS ICV™ Off-Gas Hood Thermal Analysis			
Prepared By: P.S. Lowery	Date: 2.17.06	Checked By: S.R. Pierce	Date: 2.17.06

DBVS ICV™ Off-Gas Hood Thermal Analysis

$$\sigma \cdot \tau_{OG} \cdot \left(T4^4 - T0^4\right) + \sigma \cdot \tau_{OG} \cdot \left(T4^4 - T1^4\right) + \sigma \cdot \tau_{OG} \cdot \left(T4^4 - T2^4\right) = -Q\,W$$

$$\left(\frac{1-\varepsilon_{melt}}{\varepsilon_{melt} \cdot A_{0,0}} + \frac{1}{A_{0,0} \cdot F_{0,4}} + \left(\frac{1-\varepsilon_{CR}}{\varepsilon_{CR} \cdot A_{4,0}}\right)\right) \cdot \sigma \cdot \tau_{OG} \cdot \left(T4^4 - T0^4\right) + \left(\frac{1-\varepsilon_{CR}}{\varepsilon_{CR} \cdot A_{4,0}} + \frac{1}{A_{4,0} \cdot F_{4,1}} + \left(\frac{1-\varepsilon_{CR}}{\varepsilon_{CR} \cdot A_{1,0}}\right)\right) \cdot \sigma \cdot \tau_{OG} \cdot \left(T4^4 - T1^4\right) + \left(\frac{1-\varepsilon_{CR}}{\varepsilon_{CR} \cdot A_{4,0}} + \frac{1}{A_{4,0} \cdot F_{4,6}} + \left(\frac{1-\varepsilon_{CR}}{\varepsilon_{CR} \cdot A_{2,0}}\right)\right) \cdot \sigma \cdot \tau_{OG} \cdot \left(T4^4 - T2^4\right) =$$

$$\left(\frac{1-\varepsilon_{CR}}{\varepsilon_{CR} \cdot A_{4,0}} + \frac{1}{A_{4,0} \cdot F_{4,3}} + \left(\frac{1-\varepsilon_{CR}}{\varepsilon_{CR} \cdot A_{3,0}}\right)\right) \cdot \sigma \cdot \tau_{OG} \cdot \left(T4^4 - T3^4\right) + \left(\frac{1-\varepsilon_{CR}}{\varepsilon_{CR} \cdot A_{4,0}} + \frac{1}{A_{4,0} \cdot F_{4,5}} + \left(\frac{1-\varepsilon_{sd}}{\varepsilon_{sd} \cdot A_{5,0}}\right)\right) \cdot \sigma \cdot \tau_{OG} \cdot \left(T4^4 - T5^4\right) + \left(\frac{1-\varepsilon_{CR}}{\varepsilon_{CR} \cdot A_{4,0}} + \frac{1}{A_{4,0} \cdot F_{4,6}} + \frac{1-\varepsilon_{sd}}{\varepsilon_{sd} \cdot A_{6,0}}\right) \cdot \sigma \cdot \tau_{OG} \cdot \left(T4^4 - T6^4\right) =$$

$$\left(\frac{1-\varepsilon_{CR}}{\varepsilon_{CR} \cdot A_{4,0}} + \frac{1}{A_{4,0} \cdot F_{4,7}} + \frac{1-\varepsilon_{sd}}{\varepsilon_{sd} \cdot A_{7,0}}\right) \cdot \sigma \cdot \tau_{OG} \cdot \left(T4^4 - T7^4\right) + \left(\frac{1-\varepsilon_{CR}}{\varepsilon_{CR} \cdot A_{4,0}} + \frac{1}{A_{4,0} \cdot F_{4,8}} + \frac{1-\varepsilon_{sd}}{\varepsilon_{sd} \cdot A_{8,0}}\right) \cdot \sigma \cdot \tau_{OG} \cdot \left(T4^4 - T8^4\right) + \left(\frac{1-\varepsilon_{CR}}{\varepsilon_{CR} \cdot A_{4,0}} + \frac{1}{A_{4,0} \cdot F_{4,9}} + \frac{1-\varepsilon_{sd}}{\varepsilon_{sd} \cdot A_{9,0}}\right) \cdot \sigma \cdot \tau_{OG} \cdot \left(T4^4 - T9^4\right) =$$

$$A_{4,0} \cdot (T4 - T1) + \left(\frac{\delta_{CR}}{k_{CR}} + \left(\frac{\delta_{sand}}{k_{sand}}\right)\right) \cdot \varepsilon_V \cdot A_{4,0} \cdot \left(\left|T4 - T_{OG}\right|\right)^{\frac{1}{3}} \cdot \left(T4 - T_{OG}\right) + \sigma \cdot \tau_{OG} \cdot \left(T4^4 - T_{OG}^4\right) \cdot \left(\frac{1-\varepsilon_{CR}}{\varepsilon_{CR} \cdot A_{4,0}} + \frac{1}{A_{4,0}}\right)$$

ARES CORPORATION	CALCULATION SHEET		
Project No. 0509206.01	Calculation No. 0509206.01-M-002	Rev. No. 1	Page 216 of 252
Title: DBVS ICV™ Off-Gas Hood Thermal Analysis			
Prepared By: P.S. Lowery	Date: 2.17.06	Checked By: S.R. Pierce	Date: 2.17.06

DBVS ICV™ Off-Gas Hood Thermal Analysis

j=5

$$\frac{\sigma\cdot\tau_{OG}\cdot\left(T5^4-T0^4\right)}{\left(\frac{1-\varepsilon_{melt}}{\varepsilon_{melt}\cdot A_{0,0}}\right)+\frac{1}{A_{0,0}\cdot F_{0,5}}+\left(\frac{1-\varepsilon_{stl}}{\varepsilon_{stl}\cdot A_{5,0}}\right)}+\frac{\sigma\cdot\tau_{OG}\cdot\left(T5^4-T2^4\right)}{\left(\frac{1-\varepsilon_{stl}}{\varepsilon_{stl}\cdot A_{5,0}}\right)+\frac{1}{A_{5,0}\cdot F_{5,2}}+\left(\frac{1-\varepsilon_{CR}}{\varepsilon_{CR}\cdot A_{2,0}}\right)}\cdots$$

$$+\frac{\sigma\cdot\tau_{OG}\cdot\left(T5^4-T3^4\right)}{\left(\frac{1-\varepsilon_{stl}}{\varepsilon_{stl}\cdot A_{5,0}}\right)+\frac{1}{A_{5,0}\cdot F_{5,3}}+\left(\frac{1-\varepsilon_{CR}}{\varepsilon_{CR}\cdot A_{3,0}}\right)}+\frac{\sigma\cdot\tau_{OG}\cdot\left(T5^4-T4^4\right)}{\left(\frac{1-\varepsilon_{stl}}{\varepsilon_{stl}\cdot A_{5,0}}\right)+\frac{1}{A_{5,0}\cdot F_{5,4}}+\left(\frac{1-\varepsilon_{CR}}{\varepsilon_{CR}\cdot A_{4,0}}\right)}+\frac{\sigma\cdot\tau_{OG}\cdot\left(T5^4-T6^4\right)}{\left(\frac{1-\varepsilon_{stl}}{\varepsilon_{stl}\cdot A_{5,0}}\right)+\frac{1}{A_{5,0}\cdot F_{5,6}}+\frac{1-\varepsilon_{stl}}{\varepsilon_{stl}\cdot A_{6,0}}}\cdots$$

$$+\frac{\sigma\cdot\tau_{OG}\cdot\left(T5^4-T7^4\right)}{\left(\frac{1-\varepsilon_{stl}}{\varepsilon_{stl}\cdot A_{5,0}}\right)+\frac{1}{A_{5,0}\cdot F_{5,7}}+\frac{1-\varepsilon_{stl}}{\varepsilon_{stl}\cdot A_{7,0}}}+\frac{\sigma\cdot\tau_{OG}\cdot\left(T5^4-T8^4\right)}{\left(\frac{1-\varepsilon_{stl}}{\varepsilon_{stl}\cdot A_{5,0}}\right)+\frac{1}{A_{5,0}\cdot F_{5,8}}+\frac{1-\varepsilon_{stl}}{\varepsilon_{stl}\cdot A_{8,0}}}+\frac{\sigma\cdot\tau_{OG}\cdot\left(T5^4-T9^4\right)}{\left(\frac{1-\varepsilon_{stl}}{\varepsilon_{stl}\cdot A_{5,0}}\right)+\frac{1}{A_{5,0}\cdot F_{5,9}}+\frac{1-\varepsilon_{stl}}{\varepsilon_{stl}\cdot A_{9,0}}}\cdots$$

$$+\frac{\sigma\cdot\left(T5^4-T_{amb}^4\right)}{\left(\frac{1-\varepsilon_{stl}}{\varepsilon_{stl}\cdot A_{5,0}}\right)+\frac{1}{A_{5,0}}}+\xi_V\cdot A_{5,0}\cdot\left(\left|T5-T_{amb}\right|\right)^{\frac{1}{3}}\cdot\left(T5-T_{amb}\right)+\xi_V\cdot A_{5,0}\cdot\left(\left|T5-T_{OG}\right|\right)^{\frac{1}{3}}\cdot\left(T5-T_{OG}\right)+\frac{\sigma\cdot\alpha_{OG}\cdot\left(T5^4-T_{OG}^4\right)}{\left(\frac{1-\varepsilon_{stl}}{\varepsilon_{stl}\cdot A_{5,0}}\right)+\frac{1}{A_{5,0}}}=0\ W$$

ARES CORPORATION	CALCULATION SHEET		
Project No. 0509206.01	Calculation No. 0509206.01-M-002	Rev. No. 1	Page 217 of 252
Title: DBVS ICV™ Off-Gas Hood Thermal Analysis			
Prepared By: P.S. Lowery	Date: 2.17.06	Checked By: S.R. Pierce	Date: 2.17.06

DBVS ICV™ Off-Gas Hood Thermal Analysis

j=6

$$\frac{\sigma\cdot\tau_{OG}\cdot\left(T6^4 - T0^4\right)}{\left(\frac{1-\varepsilon_{melt}}{\varepsilon_{melt}\cdot A_{0,0}}\right)+\frac{1}{A_{0,0}\cdot F_{0,6}}+\left(\frac{1-\varepsilon_{stl}}{\varepsilon_{stl}\cdot A_{6,0}}\right)}+\frac{\sigma\cdot\tau_{OG}\cdot\left(T6^4 - T1^4\right)}{\left(\frac{1-\varepsilon_{stl}}{\varepsilon_{stl}\cdot A_{6,0}}\right)+\frac{1}{A_{6,0}\cdot F_{6,1}}+\left(\frac{1-\varepsilon_{CR}}{\varepsilon_{CR}\cdot A_{1,0}}\right)}+\frac{\sigma\cdot\tau_{OG}\cdot\left(T6^4 - T2^4\right)}{\left(\frac{1-\varepsilon_{stl}}{\varepsilon_{stl}\cdot A_{6,0}}\right)+\frac{1}{A_{6,0}\cdot F_{6,2}}+\left(\frac{1-\varepsilon_{CR}}{\varepsilon_{CR}\cdot A_{2,0}}\right)}\ldots = -0\ \mathrm{W}$$

$$+\frac{\sigma\cdot\tau_{OG}\cdot\left(T6^4 - T3^4\right)}{\left(\frac{1-\varepsilon_{stl}}{\varepsilon_{stl}\cdot A_{6,0}}\right)+\frac{1}{A_{6,0}\cdot F_{6,3}}+\left(\frac{1-\varepsilon_{CR}}{\varepsilon_{CR}\cdot A_{3,0}}\right)}+\frac{\sigma\cdot\tau_{OG}\cdot\left(T6^4 - T4^4\right)}{\left(\frac{1-\varepsilon_{stl}}{\varepsilon_{stl}\cdot A_{6,0}}\right)+\frac{1}{A_{6,0}\cdot F_{6,4}}+\left(\frac{1-\varepsilon_{CR}}{\varepsilon_{CR}\cdot A_{4,0}}\right)}+\frac{\sigma\cdot\tau_{OG}\cdot\left(T6^4 - T5^4\right)}{\left(\frac{1-\varepsilon_{stl}}{\varepsilon_{stl}\cdot A_{6,0}}\right)+\frac{1}{A_{6,0}\cdot F_{6,5}}+\frac{1-\varepsilon_{stl}}{\varepsilon_{stl}\cdot A_{5,0}}}\ldots$$

$$+\frac{\sigma\cdot\tau_{OG}\cdot\left(T6^4 - T7^4\right)}{\left(\frac{1-\varepsilon_{stl}}{\varepsilon_{stl}\cdot A_{6,0}}\right)+\frac{1}{A_{6,0}\cdot F_{6,7}}+\frac{1-\varepsilon_{stl}}{\varepsilon_{stl}\cdot A_{7,0}}}+\frac{\sigma\cdot\tau_{OG}\cdot\left(T6^4 - T8^4\right)}{\left(\frac{1-\varepsilon_{stl}}{\varepsilon_{stl}\cdot A_{6,0}}\right)+\frac{1}{A_{6,0}\cdot F_{6,8}}+\frac{1-\varepsilon_{stl}}{\varepsilon_{stl}\cdot A_{8,0}}}+\frac{\sigma\cdot\tau_{OG}\cdot\left(T6^4 - T9^4\right)}{\left(\frac{1-\varepsilon_{stl}}{\varepsilon_{stl}\cdot A_{6,0}}\right)+\frac{1}{A_{6,0}\cdot F_{6,9}}+\frac{1-\varepsilon_{stl}}{\varepsilon_{stl}\cdot A_{9,0}}}\ldots$$

$$+\frac{\sigma\cdot\left(T6^4 - T_{amb}^4\right)}{\left(\frac{1-\varepsilon_{stl}}{\varepsilon_{stl}\cdot A_{6,0}}\right)+\frac{1}{A_{6,0}}}+\xi_V\cdot\left(A_{6,0}+A_{6,2}\right)\cdot\left(\left|T6-T_{amb}\right|\right)^{\frac{1}{3}}\cdot\left(T6-T_{amb}\right)\ldots$$

$$+\xi_{HU}\cdot A_{6,1}\cdot\left(\left|T6-T_{amb}\right|\right)^{\frac{1}{3}}\cdot\left(T6-T_{amb}\right)+\xi_V\cdot A_{6,0}\cdot\left(\left|T6-T_{OG}\right|\right)^{\frac{1}{3}}\cdot\left(T6-T_{OG}\right)+\frac{\sigma\cdot\alpha_{OG}\cdot\left(T6^4 - T_{OG}^4\right)}{\left(\frac{1-\varepsilon_{CR}}{\varepsilon_{stl}\cdot A_{6,0}}\right)+\frac{1}{A_{6,0}}}$$

ARES CORPORATION	CALCULATION SHEET		
Project No. 0509206.01	Calculation No. 0509206.01-M-002	Rev. No. 1	Page 218 of 252
Title: DBVS ICV™ Off-Gas Hood Thermal Analysis			
Prepared By: P.S. Lowery	Date: 2.17.06	Checked By: S.R. Pierce	Date: 2.17.06

DBVS ICV™ Off-Gas Hood Thermal Analysis

j=7.

$$\frac{\sigma\cdot\tau_{OG}\cdot\left(T7^4-T0^4\right)}{\left(\frac{1-\varepsilon_{melt}}{\varepsilon_{melt}\cdot A_{0,0}}\right)+\frac{1}{A_{0,0}\cdot F_{0,7}}+\left(\frac{1-\varepsilon_{stl}}{\varepsilon_{stl}\cdot A_{7,0}}\right)}+\frac{\sigma\cdot\tau_{OG}\cdot\left(T5^4-T1^4\right)}{\left(\frac{1-\varepsilon_{stl}}{\varepsilon_{stl}\cdot A_{7,0}}\right)+\frac{1}{A_{7,0}\cdot F_{7,1}}+\left(\frac{1-\varepsilon_{CR}}{\varepsilon_{CR}\cdot A_{1,0}}\right)}+\frac{\sigma\cdot\tau_{OG}\cdot\left(T7^4-T2^4\right)}{\left(\frac{1-\varepsilon_{stl}}{\varepsilon_{stl}\cdot A_{7,0}}\right)+\frac{1}{A_{7,0}\cdot F_{7,2}}+\left(\frac{1-\varepsilon_{CR}}{\varepsilon_{CR}\cdot A_{2,0}}\right)}\ldots = -Q\ W$$

$$+\frac{\sigma\cdot\tau_{OG}\cdot\left(T7^4-T4^4\right)}{\left(\frac{1-\varepsilon_{stl}}{\varepsilon_{stl}\cdot A_{7,0}}\right)+\frac{1}{A_{7,0}\cdot F_{7,4}}+\left(\frac{1-\varepsilon_{CR}}{\varepsilon_{CR}\cdot A_{4,0}}\right)}+\frac{\sigma\cdot\tau_{OG}\cdot\left(T7^4-T5^4\right)}{\left(\frac{1-\varepsilon_{stl}}{\varepsilon_{stl}\cdot A_{7,0}}\right)+\frac{1}{A_{7,0}\cdot F_{7,5}}+\frac{1-\varepsilon_{stl}}{\varepsilon_{stl}\cdot A_{5,0}}}+\frac{\sigma\cdot\tau_{OG}\cdot\left(T7^4-T6^4\right)}{\left(\frac{1-\varepsilon_{stl}}{\varepsilon_{stl}\cdot A_{7,0}}\right)+\frac{1}{A_{7,0}\cdot F_{7,6}}+\frac{1-\varepsilon_{stl}}{\varepsilon_{stl}\cdot A_{6,0}}}\ldots$$

$$+\frac{\sigma\cdot\tau_{OG}\cdot\left(T7^4-T8^4\right)}{\left(\frac{1-\varepsilon_{stl}}{\varepsilon_{stl}\cdot A_{7,0}}\right)+\frac{1}{A_{7,0}\cdot F_{7,8}}+\frac{1-\varepsilon_{stl}}{\varepsilon_{stl}\cdot A_{8,0}}}+\frac{\sigma\cdot\tau_{OG}\cdot\left(T7^4-T9^4\right)}{\left(\frac{1-\varepsilon_{stl}}{\varepsilon_{stl}\cdot A_{7,0}}\right)+\frac{1}{A_{7,0}\cdot F_{7,9}}+\frac{1-\varepsilon_{stl}}{\varepsilon_{stl}\cdot A_{9,0}}}\ldots$$

$$+\frac{\sigma\cdot\left(T7^4-T_{amb}^4\right)}{\left(\frac{1-\varepsilon_{stl}}{\varepsilon_{stl}\cdot A_{7,0}}\right)+\frac{1}{A_{7,0}}}+\xi_V\cdot A_{7,0}\cdot\left(\left|T7-T_{amb}\right|\right)^{\frac{1}{3}}\cdot\left(T7-T_{amb}\right)+\xi_V\cdot A_{7,0}\cdot\left(\left|T7-T_{OG}\right|\right)^{\frac{1}{3}}\cdot\left(T7-T_{OG}\right)+\frac{\sigma\cdot\alpha_{OG}\cdot\left(T7^4-T_{OG}^4\right)}{\left(\frac{1-\varepsilon_{stl}}{\varepsilon_{stl}\cdot A_{7,0}}\right)+\frac{1}{A_{7,0}}}$$

ARES CORPORATION	CALCULATION SHEET		
Project No. 05092206.01	Calculation No. 05092206.01-M-002	Rev. No. 1	Page 219 of 252
Title: DBVS ICV™ Off-Gas Hood Thermal Analysis			
Prepared By: P.S. Lowery	Date: 2.17.06	Checked By: S.R. Pierce	Date: 2.17.06

DBVS ICV™ Off-Gas Hood Thermal Analysis

$j=8$

$$\frac{\sigma\cdot\tau_{OG}\cdot\left(T8^4-T0^4\right)}{\left(\frac{1-\varepsilon_{melt}}{\varepsilon_{melt}\cdot A_{0,0}}\right)+\frac{1}{A_{0,0}\cdot F_{0,8}}+\left(\frac{1-\varepsilon_{stl}}{\varepsilon_{stl}\cdot A_{8,0}}\right)}+\frac{\sigma\cdot\tau_{OG}\cdot\left(T8^4-T1^4\right)}{\left(\frac{1-\varepsilon_{stl}}{\varepsilon_{stl}\cdot A_{8,0}}\right)+\frac{1}{A_{8,0}\cdot F_{8,1}}+\left(\frac{1-\varepsilon_{CR}}{\varepsilon_{CR}\cdot A_{1,0}}\right)}+\frac{\sigma\cdot\tau_{OG}\cdot\left(T8^4-T2^4\right)}{\left(\frac{1-\varepsilon_{stl}}{\varepsilon_{stl}\cdot A_{8,0}}\right)+\frac{1}{A_{8,0}\cdot F_{8,2}}+\left(\frac{1-\varepsilon_{CR}}{\varepsilon_{CR}\cdot A_{2,0}}\right)}\ldots=-Q\ W$$

$$+\frac{\sigma\cdot\tau_{OG}\cdot\left(T8^4-T3^4\right)}{\left(\frac{1-\varepsilon_{stl}}{\varepsilon_{stl}\cdot A_{8,0}}\right)+\frac{1}{A_{8,0}\cdot F_{8,3}}+\left(\frac{1-\varepsilon_{CR}}{\varepsilon_{CR}\cdot A_{3,0}}\right)}+\frac{\sigma\cdot\tau_{OG}\cdot\left(T8^4-T4^4\right)}{\left(\frac{1-\varepsilon_{stl}}{\varepsilon_{stl}\cdot A_{8,0}}\right)+\frac{1}{A_{8,0}\cdot F_{8,4}}+\left(\frac{1-\varepsilon_{CR}}{\varepsilon_{CR}\cdot A_{4,0}}\right)}+\frac{\sigma\cdot\tau_{OG}\cdot\left(T8^4-T5^4\right)}{\left(\frac{1-\varepsilon_{stl}}{\varepsilon_{stl}\cdot A_{8,0}}\right)+\frac{1}{A_{8,0}\cdot F_{8,5}}+\frac{1-\varepsilon_{stl}}{\varepsilon_{stl}\cdot A_{5,0}}}\ldots$$

$$+\frac{\sigma\cdot\tau_{OG}\cdot\left(T8^4-T6^4\right)}{\left(\frac{1-\varepsilon_{stl}}{\varepsilon_{stl}\cdot A_{8,0}}\right)+\frac{1}{A_{8,0}\cdot F_{8,6}}+\frac{1-\varepsilon_{stl}}{\varepsilon_{stl}\cdot A_{6,0}}}+\frac{\sigma\cdot\tau_{OG}\cdot\left(T8^4-T7^4\right)}{\left(\frac{1-\varepsilon_{stl}}{\varepsilon_{stl}\cdot A_{8,0}}\right)+\frac{1}{A_{8,0}\cdot F_{8,7}}+\frac{1-\varepsilon_{stl}}{\varepsilon_{stl}\cdot A_{7,0}}}+\frac{\sigma\cdot\tau_{OG}\cdot\left(T8^4-T9^4\right)}{\left(\frac{1-\varepsilon_{stl}}{\varepsilon_{stl}\cdot A_{8,0}}\right)+\frac{1}{A_{8,0}\cdot F_{8,9}}+\frac{1-\varepsilon_{stl}}{\varepsilon_{stl}\cdot A_{9,0}}}\ldots$$

$$+\frac{\sigma\cdot\left(T8^4-T_{amb}^4\right)}{\left(\frac{1-\varepsilon_{stl}}{\varepsilon_{stl}\cdot A_{8,0}}\right)+\frac{1}{A_{8,0}}}+\xi_V\cdot\left(A_{8,0}+A_{8,2}\right)\cdot\left(\left|T8-T_{amb}\right|\right)^{\frac{1}{3}}\cdot\left(T8-T_{amb}\right)\ldots$$

$$+\xi_{HU}\cdot A_{8,1}\cdot\left(\left|T8-T_{amb}\right|\right)^{\frac{1}{3}}\cdot\left(T8-T_{amb}\right)+\xi_V\cdot A_{8,0}\cdot\left(\left|T8-T_{OG}\right|\right)^{\frac{1}{3}}\cdot\left(T8-T_{OG}\right)+\frac{\sigma\cdot\alpha_{OG}\cdot\left(T8^4-T_{OG}^4\right)}{\left(\frac{1-\varepsilon_{stl}}{\varepsilon_{stl}\cdot A_{8,0}}\right)+\frac{1}{A_{8,0}}}$$

ARES CORPORATION	CALCULATION SHEET		
Project No. 05092206.01	Calculation No. 05092206.01-M-002	Rev. No. 1	Page 220 of 252
Title: DBVS ICV™ Off-Gas Hood Thermal Analysis			
Prepared By: P.S. Lowery	Date: 2.17.06	Checked By: S.R. Pierce	Date: 2.17.06

DBVS ICV™ Off-Gas Hood Thermal Analysis

$j=9$

$$\frac{\sigma\cdot\tau_{OG}\cdot\left(T9^4-T0^4\right)}{\left(\frac{1-\varepsilon_{melt}}{\varepsilon_{melt}\cdot A_{0,0}}\right)+\frac{1}{A_{0,0}\cdot F_{0,9}}+\left(\frac{1-\varepsilon_{stl}}{\varepsilon_{stl}\cdot A_{9,0}}\right)}+\frac{\sigma\cdot\tau_{OG}\cdot\left(T9^4-T1^4\right)}{\left(\frac{1-\varepsilon_{stl}}{\varepsilon_{stl}\cdot A_{9,0}}\right)+\frac{1}{A_{9,0}\cdot F_{9,1}}+\left(\frac{1-\varepsilon_{CR}}{\varepsilon_{CR}\cdot A_{1,0}}\right)}+\frac{\sigma\cdot\tau_{OG}\cdot\left(T9^4-T2^4\right)}{\left(\frac{1-\varepsilon_{stl}}{\varepsilon_{stl}\cdot A_{9,0}}\right)+\frac{1}{A_{9,0}\cdot F_{9,2}}+\left(\frac{1-\varepsilon_{CR}}{\varepsilon_{CR}\cdot A_{2,0}}\right)}\ldots=-Q_{IV}$$

$$+\frac{\sigma\cdot\tau_{OG}\cdot\left(T9^4-T3^4\right)}{\left(\frac{1-\varepsilon_{stl}}{\varepsilon_{stl}\cdot A_{9,0}}\right)+\frac{1}{A_{9,0}\cdot F_{9,3}}+\left(\frac{1-\varepsilon_{CR}}{\varepsilon_{CR}\cdot A_{3,0}}\right)}+\frac{\sigma\cdot\tau_{OG}\cdot\left(T9^4-T4^4\right)}{\left(\frac{1-\varepsilon_{stl}}{\varepsilon_{stl}\cdot A_{9,0}}\right)+\frac{1}{A_{9,0}\cdot F_{9,4}}+\left(\frac{1-\varepsilon_{CR}}{\varepsilon_{CR}\cdot A_{4,0}}\right)}+\frac{\sigma\cdot\tau_{OG}\cdot\left(T9^4-T5^4\right)}{\left(\frac{1-\varepsilon_{stl}}{\varepsilon_{stl}\cdot A_{9,0}}\right)+\frac{1}{A_{9,0}\cdot F_{9,5}}+\frac{1-\varepsilon_{stl}}{\varepsilon_{stl}\cdot A_{5,0}}}\ldots$$

$$+\frac{\sigma\cdot\tau_{OG}\cdot\left(T9^4-T6^4\right)}{\left(\frac{1-\varepsilon_{stl}}{\varepsilon_{stl}\cdot A_{9,0}}\right)+\frac{1}{A_{9,0}\cdot F_{9,6}}+\frac{1-\varepsilon_{stl}}{\varepsilon_{stl}\cdot A_{6,0}}}+\frac{\sigma\cdot\tau_{OG}\cdot\left(T9^4-T7^4\right)}{\left(\frac{1-\varepsilon_{stl}}{\varepsilon_{stl}\cdot A_{9,0}}\right)+\frac{1}{A_{9,0}\cdot F_{9,7}}+\frac{1-\varepsilon_{stl}}{\varepsilon_{stl}\cdot A_{7,0}}}+\frac{\sigma\cdot\tau_{OG}\cdot\left(T9^4-T8^4\right)}{\left(\frac{1-\varepsilon_{stl}}{\varepsilon_{stl}\cdot A_{9,0}}\right)+\frac{1}{A_{9,0}\cdot F_{9,8}}+\frac{1-\varepsilon_{stl}}{\varepsilon_{stl}\cdot A_{8,0}}}\ldots$$

$$+\frac{\sigma\cdot\left(T9^4-T_{amb}^4\right)}{\left(\frac{1-\varepsilon_{stl}}{\varepsilon_{stl}\cdot A_{9,0}}\right)+\frac{1}{A_{9,0}}}+\zeta_V\cdot\left(A_{9,0}+A_{9,2}\right)\cdot\left(\left|T9-T_{amb}\right|\right)^{\frac{1}{3}}\cdot\left(T9-T_{amb}\right)\ldots$$

$$+\zeta_{HU}\cdot A_{9,1}\cdot\left(\left|T9-T_{amb}\right|\right)^{\frac{1}{3}}\cdot\left(T9-T_{amb}\right)+\zeta_{HD}\cdot A_{9,0}\cdot\left(\left|T9-T_{OG}\right|\right)^{\frac{1}{3}}\cdot\left(T9-T_{OG}\right)+\frac{\sigma\cdot\tau_{OG}\cdot\left(T9^4-T_{OG}^4\right)}{\left(\frac{1-\varepsilon_{stl}}{\varepsilon_{stl}\cdot A_{9,0}}\right)+\frac{1}{A_{9,0}}}$$

ARES CORPORATION	CALCULATION SHEET		
Project No. 0509206.01	Calculation No. 0509206.01-M-002	Rev. No. 1	Page 221 of 252
Title: DBVS ICV™ Off-Gas Hood Thermal Analysis			
Prepared By: P.S. Lowery	Date: 2.17.06	Checked By: S.R. Pierce	Date: 2.17.06

DBVS ICV™ Off-Gas Hood Thermal Analysis

j=10

$$T10 - T10 = 0\ K$$

j=11

$$\frac{A_{11,0}\cdot(T11 - T1)}{\left(\frac{\delta_{CR}}{k_{CR}}\right) + \left(\frac{\delta_{wmd}}{k_{wmd}}\right)} + \frac{\sigma\cdot\left(T11^4 - T_{amb}^4\right)}{\left(\frac{1 - \varepsilon_{wd}}{\varepsilon_{wd}\cdot A_{11,0}}\right) + \frac{1}{A_{11,0}}} + \varepsilon_v\cdot A_{11,0}\cdot\left(|T11 - T_{amb}|\right)^{\frac{1}{3}}\cdot(T11 - T_{amb}) = 0\ W$$

j=12

$$\frac{A_{12,0}\cdot(T12 - T2)}{\left(\frac{\delta_{CR}}{k_{CR}}\right) + \left(\frac{\delta_{wmd}}{k_{wmd}}\right)} + \frac{\sigma\cdot\left(T12^4 - T_{amb}^4\right)}{\left(\frac{1 - \varepsilon_{wd}}{\varepsilon_{wd}\cdot A_{12,0}}\right) + \frac{1}{A_{12,0}}} + \varepsilon_v\cdot A_{12,0}\cdot\left(|T12 - T_{amb}|\right)^{\frac{1}{3}}\cdot(T12 - T_{amb}) = -0\ W$$

ARES CORPORATION	**CALCULATION SHEET**		
Project No. 0509206.01	Calculation No. 0509206.01-M-002	Rev. No. 1	Page 222 of 252
Title: DBVS ICV™ Off-Gas Hood Thermal Analysis			
Prepared By: P.S. Lowery	Date: 2.17.06	Checked By: S.R. Pierce	Date: 2.17.06

DBVS ICV™ Off-Gas Hood Thermal Analysis

j=13

$$\frac{\Lambda_{13,0}\cdot(T13-T3)}{\left(\frac{s_{CR}}{k_{CR}}\right)+\left(\frac{s_{hood}}{k_{hood}}\right)}+\frac{\sigma\cdot\left(T13^4-T_{amb}^4\right)}{\left(\frac{1-\varepsilon_{hd}}{\varepsilon_{hd}\cdot\Lambda_{13,0}}\right)+\frac{1}{\Lambda_{13,0}}}+\xi_V\cdot\Lambda_{13,0}\cdot\left(\left|T13-T_{amb}\right|\right)^{\frac{1}{3}}\cdot\left(T13-T_{amb}\right)=-Q\ W$$

j=14

$$\frac{\Lambda_{14,0}\cdot(T14-T4)}{\left(\frac{s_{CR}}{k_{CR}}\right)+\left(\frac{s_{hood}}{k_{hood}}\right)}+\frac{\sigma\cdot\left(T14^4-T_{amb}^4\right)}{\left(\frac{1-\varepsilon_{hd}}{\varepsilon_{hd}\cdot\Lambda_{14,0}}\right)+\frac{1}{\Lambda_{14,0}}}+\xi_V\cdot\Lambda_{14,0}\cdot\left(\left|T14-T_{amb}\right|\right)^{\frac{1}{3}}\cdot\left(T14-T_{amb}\right)=-Q\ W$$

ARES CORPORATION	CALCULATION SHEET		
Project No. 0509206.01	Calculation No. 0509206.01-M-002	Rev. No. 1	Page 223 of 252
Title: DBVS ICV™ Off-Gas Hood Thermal Analysis			
Prepared By: P.S. Lowery	Date: 2.17.06	Checked By: S.R. Pierce	Date: 2.17.06

DBVS ICV™ Off-Gas Hood Thermal Analysis

Total radiant heat loss from the melt surface ...

$$\frac{\sigma\cdot\tau_{OG}\cdot\left(T1^4-T0^4\right)}{\left(\frac{1-\varepsilon_{melt}}{\varepsilon_{melt}\cdot A_{0,0}}\right)+\frac{1}{A_{0,0}\cdot F_{0,1}}+\left(\frac{1-\varepsilon_{CR}}{\varepsilon_{CR}\cdot A_{1,0}}\right)}+\frac{\sigma\cdot\tau_{OG}\cdot\left(T2^4-T0^4\right)}{\left(\frac{1-\varepsilon_{melt}}{\varepsilon_{melt}\cdot A_{0,0}}\right)+\frac{1}{A_{0,0}\cdot F_{0,2}}+\left(\frac{1-\varepsilon_{CR}}{\varepsilon_{CR}\cdot A_{2,0}}\right)}+\frac{\sigma\cdot\tau_{OG}\cdot\left(T3^4-T0^4\right)}{\left(\frac{1-\varepsilon_{melt}}{\varepsilon_{melt}\cdot A_{0,0}}\right)+\frac{1}{A_{0,0}\cdot F_{0,3}}+\left(\frac{1-\varepsilon_{CR}}{\varepsilon_{CR}\cdot A_{3,0}}\right)}\ldots = -177.9\,kW$$

$$+\frac{\sigma\cdot\tau_{OG}\cdot\left(T4^4-T0^4\right)}{\left(\frac{1-\varepsilon_{melt}}{\varepsilon_{melt}\cdot A_{0,0}}\right)+\frac{1}{A_{0,0}\cdot F_{0,4}}+\left(\frac{1-\varepsilon_{CR}}{\varepsilon_{CR}\cdot A_{4,0}}\right)}+\frac{\sigma\cdot\tau_{OG}\cdot\left(T5^4-T0^4\right)}{\left(\frac{1-\varepsilon_{melt}}{\varepsilon_{melt}\cdot A_{0,0}}\right)+\frac{1}{A_{0,0}\cdot F_{0,5}}+\left(\frac{1-\varepsilon_{sil}}{\varepsilon_{sil}\cdot A_{5,0}}\right)}+\frac{\sigma\cdot\tau_{OG}\cdot\left(T6^4-T0^4\right)}{\left(\frac{1-\varepsilon_{melt}}{\varepsilon_{melt}\cdot A_{0,0}}\right)+\frac{1}{A_{0,0}\cdot F_{0,6}}+\left(\frac{1-\varepsilon_{sil}}{\varepsilon_{sil}\cdot A_{6,0}}\right)}\ldots$$

$$+\frac{\sigma\cdot\tau_{OG}\cdot\left(T7^4-T0^4\right)}{\left(\frac{1-\varepsilon_{melt}}{\varepsilon_{melt}\cdot A_{0,0}}\right)+\frac{1}{A_{0,0}\cdot F_{0,7}}+\left(\frac{1-\varepsilon_{sil}}{\varepsilon_{sil}\cdot A_{7,0}}\right)}+\frac{\sigma\cdot\tau_{OG}\cdot\left(T8^4-T0^4\right)}{\left(\frac{1-\varepsilon_{melt}}{\varepsilon_{melt}\cdot A_{0,0}}\right)+\frac{1}{A_{0,0}\cdot F_{0,8}}+\left(\frac{1-\varepsilon_{sil}}{\varepsilon_{sil}\cdot A_{8,0}}\right)}+\frac{\sigma\cdot\tau_{OG}\cdot\left(T9^4-T0^4\right)}{\left(\frac{1-\varepsilon_{melt}}{\varepsilon_{melt}\cdot A_{0,0}}\right)+\frac{1}{A_{0,0}\cdot F_{0,9}}+\left(\frac{1-\varepsilon_{sil}}{\varepsilon_{sil}\cdot A_{9,0}}\right)}\ldots$$

$$+\frac{\sigma\cdot\tau_{OG}\cdot\left(T9^4-T0^4\right)}{\left(\frac{1-\varepsilon_{melt}}{\varepsilon_{melt}\cdot A_{0,0}}\right)+\frac{1}{A_{0,0}}}$$

$$F_{0,1}+F_{0,2}+F_{0,3}+F_{0,4}+F_{0,5}+F_{0,6}+F_{0,7}+F_{0,8}+F_{0,9}=1$$

Compute the average hood temperature ...

$$T_{HA} := \frac{A_{3,0}\cdot T3C+A_{6,0}\cdot T6C+A_{7,0}\cdot T7C+A_{8,0}\cdot T8C+A_{9,0}\cdot T9C}{A_{3,0}+A_{6,0}+A_{7,0}+A_{8,0}+A_{9,0}}$$

$T_{HA} = 348.2$ $\quad T_{HAF} := CtoF(T_{HA})$ $\quad T_{HAF} = 658.8$

ARES CORPORATION	CALCULATION SHEET		
Project No. 0509206.01	Calculation No. 0509206.01-M-002	Rev. No. 1	Page 224 of 252
Title: DBVS ICV™ Off-Gas Hood Thermal Analysis			
Prepared By: P.S. Lowery	Date: 2.17.06	Checked By: S.R. Pierce	Date: 2.17.06

APPENDIX I

MATHCAD MODEL FOR THE DBVS CONDITIONS WITH ADJUSTED MELT SURFACE TEMPERATURE

ARES CORPORATION	CALCULATION SHEET	
Project No. 0509206.01	Calculation No. 0509206.01-M-002	Rev. No. 1	Page 225 of 252
Title: DBVS ICV™ Off-Gas Hood Thermal Analysis		
Prepared By: P.S. Lowery	Date: 2.17.06	Checked By: S.R. Pierce	Date: 2.17.06

DBVS Off-Gas Hood Thermal Model

°F = 1

°C = 1

$CtoF(x) := \left(\frac{9}{5}\cdot\frac{x}{°C} + 32\right)°F \quad CtoK(x) := \left(\frac{x}{°C} + 273.15\right)K \quad KtoC(x) := \left(\frac{x}{K} - 273.15\right)°C$

$FtoC(x) := \frac{5}{9}\left(\frac{x}{°F} - 32\right)°C \quad FtoR(x) := \left(\frac{x}{°F} + 459.67\right)R$

$w_1 := 5.5ft \quad w_2 := 3.5ft \quad L_1 := 22ft \quad h_1 := 14in \quad h_2 := 16in \quad \theta := 52deg \quad N_{ribs} := 12 \quad w_{ribs} := 2in \quad h_{ribs} := 4in$

$\delta_{hood} := 0.3125in \quad \phi := 52deg \quad \delta_{floor} := 3.3in \quad \delta_{CR} := 6in \quad \delta_{sand} := 6in$

Matrix of surface areas ...

$$A := \begin{bmatrix} w_1 \cdot L_1 & 0 & 0 \\ w_1 \cdot h_1 & 0 & 0 \\ L_1 \cdot h_1 & 0 & 0 \\ w_1 \cdot h_1 & 0 & 0 \\ L_1 \cdot h_1 & 0 & 0 \\ \frac{(w_1 + w_2)\cdot h_2}{2} & 0 & 0 \\ L_1 \cdot \frac{h_2}{\sin(\theta)} & N_{ribs} \cdot w_{ribs} \cdot \frac{h_2}{\sin(\theta)} & 2N_{ribs} \cdot h_{ribs} \cdot \frac{h_2}{\sin(\theta)} \\ \frac{(w_1 + w_2)\cdot h_2}{2} & 0 & 0 \\ L_1 \cdot \frac{h_2}{\sin(\theta)} & N_{ribs} \cdot w_{ribs} \cdot \frac{h_2}{\sin(\theta)} & 2N_{ribs} \cdot h_{ribs} \cdot \frac{h_2}{\sin(\theta)} \\ w_2 \cdot L_1 & N_{ribs} \cdot w_{ribs} \cdot w_2 & 2N_{ribs} \cdot h_{ribs} \cdot w_2 \\ (5ft + w_1 + 3ft)\cdot(3ft + L_1 + 3ft) & 0 & 0 \\ w_1 \cdot h_1 & 0 & 0 \\ L_1 \cdot h_1 & 0 & 0 \\ w_1 \cdot h_1 & 0 & 0 \\ L_1 \cdot h_1 & 0 & 0 \end{bmatrix}$$

The first column of dat contains the area of the element for radiant heat transfer. The second column of data contains the horizontal component of area associated with the 4"x2" steel tubing ribs on that elemental area. The third column of data contains the vertical component of the rib for that elemental area.

A =

	0	1	2
0	121	0	0
1	6.4	0	0
2	25.7	0	0
3	6.4	0	0
4	25.7	0	0
5	6	0	0
6	37.2	3.4	13.6
7	6	0	0
8	37.2	3.4	13.6
9	77	7	28
10	322	0	0
11	6.4	0	0
12	25.7	0	0
13	6.4	0	0
14	25.7	0	0

ft^2

Page 1

CALCULATION SHEET

Project No. 0509206.01	Calculation No. 0509206.01-M-002	Rev. No. 1	Page 226 of 252
Title: DBVS ICV™ Off-Gas Hood Thermal Analysis			
Prepared By: P.S. Lowery	Date: 2.17.06	Checked By: S.R. Pierce	Date: 2.17.06

DBVS Off-Gas Hood Thermal Model

$$F_{i,j} = \begin{pmatrix} 0 & .021 & .091 & .021 & .091 & .028 & .177 & .028 & .177 & .366 & 0 \\ .397 & 0 & .026 & .004 & .026 & 0 & .129 & .021 & .129 & .265 & 0 \\ .428 & .006 & 0 & .006 & .052 & .019 & .039 & .019 & .077 & .354 & 0 \\ .400 & .004 & .026 & 0 & .026 & .021 & .129 & 0 & .129 & .265 & 0 \\ .428 & .006 & .052 & .006 & 0 & .019 & .077 & .019 & .039 & .354 & 0 \\ .565 & 0 & .081 & .022 & .081 & 0 & .081 & .003 & .081 & .086 & 0 \\ .575 & .022 & .021 & .022 & .053 & .013 & 0 & .013 & .013 & .125 & .616 \\ .565 & .022 & .081 & 0 & .081 & .003 & .081 & 0 & .081 & .086 & 0 \\ .575 & .022 & .053 & .022 & .027 & .013 & .130 & .013 & 0 & .125 & .616 \\ .574 & .022 & .118 & .022 & .118 & .013 & .060 & .013 & .060 & 0 & 1 \end{pmatrix}$$

Matrix F contains the view factors for radiant heat transfer between surfaces of the model. The first (row) index corresponds to the ID of the source surface; the second to the receiving surface. For example, the top of the soil surface above the melt has ID=0; the ID of the "short" box wall surface (width = 5.5 ft, height = 14in) has ID = 1. The view factor between these two surfaces is located at F[0,1] = 0.021 (obtained from Configuration 16, p. 1030 in Siegel & Howell's Thermal Radiation Heat Transfer, 3rd Edition). The "reciprocity" view factor for these two surfaces is F[1,0]= A[0,0]*F[0,1]/A[1,0] = 0.397.

F =

	0	1	2	3	4	5	6	7	8	9	10
0	0	0.021	0.091	0.021	0.091	0.028	0.177	0.028	0.177	0.366	0
1	0.397	0	0.026	0.004	0.026	0	0.129	0.021	0.129	0.265	0
2	0.428	0.006	0	0.006	0.052	0.019	0.039	0.019	0.077	0.354	0
3	0.4	0.004	0.026	0	0.026	0.021	0.129	0	0.129	0.265	0
4	0.428	0.006	0.052	0.006	0	0.019	0.077	0.019	0.039	0.354	0
5	0.565	0	0.081	0.022	0.081	0	0.081	0.003	0.081	0.086	0
6	0.575	0.022	0.027	0.022	0.053	0.013	0	0.013	0.015	0.125	0.616
7	0.565	0.022	0.081	0	0.081	0.003	0.081	0	0.081	0.086	0
8	0.575	0.022	0.053	0.022	0.027	0.013	0.15	0.013	0	0.125	0.616
9	0.574	0.022	0.118	0.022	0.118	0.013	0.06	0.013	0.06	0	1

Page 2

ARES CORPORATION	CALCULATION SHEET		
Project No. 0509206.01	Calculation No. 0509206.01-M-002	Rev. No. 1	Page 227 of 252
Title: DBVS ICV™ Off-Gas Hood Thermal Analysis			
Prepared By: P.S. Lowery	Date: 2.17.06	Checked By: S.R. Pierce	Date: 2.17.06

DBVS Off-Gas Hood Thermal Model

Temperature Boundary Conditions ...

$Tmelt := 1157°F$	$TmC := FtoC(Tmelt)$	$T_{melt} := CtoK(TmC)$	$T_{melt} = 898.15\ K$
$TAWTB := 77°F$	$TAC := FtoC(TAWTB)$	$T_{AWTB} := CtoK(TAC)$	$T_{AWTB} = 298.1\ K$
$TOG := 1112°F$	$Tog := FtoC(TOG)$	$T_{OG} := CtoK(Tog)$	$T_{OG} = 873.15\ K$
	$Tamb := 50°C$	$T_{amb} := CtoK(Tamb)$	$T_{amb} = 323.1\ K$

Initial guess for temperatures ...

$T_0 := T_{melt}$ $\quad T_0 = 898.15\ K$

$T_1 := 773K$ $\quad T_3 := 773K$ $\quad T_5 := 773K$ $\quad T_7 := 773K$ $\quad T_9 := 773K$

$T_2 := 773K$ $\quad T_4 := 773K$ $\quad T_6 := 773K$ $\quad T_8 := 773K$ $\quad T_{10} := 773K$

Page 3

ARES CORPORATION	CALCULATION SHEET		
Project No. 0509206.01	Calculation No. 0509206.01-M-002	Rev. No. 1	Page 228 of 252
Title: DBVS ICV™ Off-Gas Hood Thermal Analysis			
Prepared By: P.S. Lowery	Date: 2.17.06	Checked By: S.R. Pierce	Date: 2.17.06

$T_{11} := 473K$ $\quad T_{12} := 473K$ $\quad T_{13} := 473K$ $\quad$ DBVS Off-Gas Hood Thermal Model $\quad T_{14} := 473K$ $\quad T_{15} := T_{OG}$

Material properties ...

$\varepsilon_{melt} := .7$ $\quad \sigma := 5.67 \cdot 10^{-8} \cdot \frac{W}{m^2 \cdot K^4}$

$\varepsilon_{stl} := .85$ $\quad k_{stl} := 60.5 \frac{W}{m \cdot K}$

$\varepsilon_{CR} := 0.66$ $\quad k_{CR} := 1.44 \frac{W}{m \cdot K}$ $\quad k_{sand} := 2 \frac{W}{m \cdot K}$

$\alpha_{OG} := 0$ $\quad \tau_{OG} := 1 - \alpha_{OG}$ $\quad \tau_{OG} = 1$

Convective heat transfer coefficients

$n := \frac{1}{3}$ $\quad \xi_V := 1.32 \cdot W \cdot m^{-2} \cdot K^{-\frac{4}{3}}$ $\quad \xi_{HD} := 0.691 \cdot W \cdot m^{-2} \cdot K^{-\frac{4}{3}}$ $\quad \xi_{HU} := 1.52 \cdot W \cdot m^{-2} \cdot K^{-\frac{4}{3}}$

$T_{amb} = 323.1\ K$ $\quad T_{OG} = 873.1\ K$

Given

j=1

$$\frac{\sigma \cdot \tau_{OG} \cdot \left(T_1^4 - T_0^4\right)}{\left(\frac{1 - \varepsilon_{melt}}{\varepsilon_{melt} \cdot A_{0,0}}\right) + \frac{1}{A_{0,0} \cdot F_{0,1}} + \left(\frac{1 - \varepsilon_{CR}}{\varepsilon_{CR} \cdot A_{1,0}}\right)} + \frac{\sigma \cdot \tau_{OG} \cdot \left(T_1^4 - T_2^4\right)}{\left(\frac{1 - \varepsilon_{CR}}{\varepsilon_{CR} \cdot A_{1,0}}\right) + \frac{1}{A_{1,0} \cdot F_{1,2}} + \left(\frac{1 - \varepsilon_{CR}}{\varepsilon_{CR} \cdot A_{2,0}}\right)} + \frac{\sigma \cdot \tau_{OG} \cdot \left(T_1^4 - T_3^4\right)}{\left(\frac{1 - \varepsilon_{CR}}{\varepsilon_{CR} \cdot A_{1,0}}\right) + \frac{1}{A_{1,0} \cdot F_{1,3}} + \left(\frac{1 - \varepsilon_{CR}}{\varepsilon_{CR} \cdot A_{3,0}}\right)} \ldots = 0$$

$$+ \frac{\sigma \cdot \tau_{OG} \cdot \left(T_1^4 - T_4^4\right)}{\left(\frac{1 - \varepsilon_{CR}}{\varepsilon_{CR} \cdot A_{1,0}}\right) + \frac{1}{A_{1,0} \cdot F_{1,4}} + \left(\frac{1 - \varepsilon_{CR}}{\varepsilon_{CR} \cdot A_{4,0}}\right)} + \frac{\sigma \cdot \tau_{OG} \cdot \left(T_1^4 - T_6^4\right)}{\left(\frac{1 - \varepsilon_{CR}}{\varepsilon_{CR} \cdot A_{1,0}}\right) + \frac{1}{A_{1,0} \cdot F_{1,6}} + \left(\frac{1 - \varepsilon_{stl}}{\varepsilon_{stl} \cdot A_{6,0}}\right)} + \frac{\sigma \cdot \tau_{OG} \cdot \left(T_1^4 - T_7^4\right)}{\left(\frac{1 - \varepsilon_{CR}}{\varepsilon_{CR} \cdot A_{1,0}}\right) + \frac{1}{A_{1,0} \cdot F_{1,7}} + \frac{1 - \varepsilon_{stl}}{\varepsilon_{stl} \cdot A_{7,0}}} \ldots$$

$$+ \frac{\sigma \cdot \tau_{OG} \cdot \left(T_1^4 - T_8^4\right)}{\left(\frac{1 - \varepsilon_{CR}}{\ }\right) \cdot \frac{1}{\ } \cdot \frac{1 - \varepsilon_{stl}}{\ }} + \frac{\sigma \cdot \tau_{OG} \cdot \left(T_1^4 - T_9^4\right)}{\left(\frac{1 - \varepsilon_{CR}}{\ }\right) \cdot \frac{1}{\ } \cdot \frac{1 - \varepsilon_{stl}}{\ }} + \xi_V \cdot A_{1,0} \cdot \left(\left|T_1 - T_{OG}\right|\right)^{\frac{1}{3}} \cdot \left(T_1 - T_{OG}\right) \ldots$$

CALCULATION SHEET

Project No. 0509206.01	Calculation No. 0509206.01-M-002	Rev. No. 1	Page 229 of 252
Title: DBVS ICV™ Off-Gas Hood Thermal Analysis			
Prepared By: P.S. Lowery	Date: 2.17.06	Checked By: S.R. Pierce	Date: 2.17.06

$$\left(\frac{\varepsilon_{CR}A_{1,0}}{}\right) + \frac{A_{1,0}F_{1,8}}{} + \frac{\varepsilon_{HF}A_{8,0}}{}\left(\frac{\varepsilon_{CR}A_{1,0}}{}\right) + \frac{A_{1,0}F_{1,9}}{} + \frac{\varepsilon_{HF}A_{9,0}}{}$$

$$+ \frac{A_{1,0}(T_1 - T_{11})}{} + \frac{\sigma\varepsilon_{OD}(T_1^4 - T_{1,5}^4)}{} + \left(\frac{\delta_{CR}}{k_{CR}} + \frac{\delta_{mod}}{k_{mod}}\right)\left(\frac{1 - \eta_{CR}}{\varepsilon_{CR}A_{1,8}}\right) + \frac{1}{A_{1,8}}$$

Page 5

ARES CORPORATION	CALCULATION SHEET		
Project No. 0509206.01	Calculation No. 0509206.01-M-002	Rev. No. 1	Page 230 of 252
Title: DBVS ICV™ Off-Gas Hood Thermal Analysis			
Prepared By: P.S. Lowery	Date: 2.17.06	Checked By: S.R. Pierce	Date: 2.17.06

DBVS Off-Gas Hood Thermal Model

j=2

$$\frac{\sigma\cdot\varepsilon_{OG}\cdot\left(T_2^4-T_0^4\right)}{\left(\frac{1-\varepsilon_{melt}}{\varepsilon_{melt}\cdot A_{0,0}}\right)+\frac{1}{A_{0,0}\cdot F_{0,2}}+\left(\frac{1-\varepsilon_{CR}}{\varepsilon_{CR}\cdot A_{2,0}}\right)}+\frac{\sigma\cdot\varepsilon_{OG}\cdot\left(T_2^4-T_1^4\right)}{\left(\frac{1-\varepsilon_{CR}}{\varepsilon_{CR}\cdot A_{2,0}}\right)+\frac{1}{A_{2,0}\cdot F_{2,1}}+\left(\frac{1-\varepsilon_{CR}}{\varepsilon_{CR}\cdot A_{1,0}}\right)}+\frac{\sigma\cdot\varepsilon_{OG}\cdot\left(T_2^4-T_3^4\right)}{\left(\frac{1-\varepsilon_{CR}}{\varepsilon_{CR}\cdot A_{2,0}}\right)+\frac{1}{A_{2,0}\cdot F_{2,3}}+\left(\frac{1-\varepsilon_{CR}}{\varepsilon_{CR}\cdot A_{3,0}}\right)}\ldots=0$$

$$+\frac{\sigma\cdot\varepsilon_{OG}\cdot\left(T_2^4-T_4^4\right)}{\left(\frac{1-\varepsilon_{CR}}{\varepsilon_{CR}\cdot A_{2,0}}\right)+\frac{1}{A_{2,0}\cdot F_{2,4}}+\left(\frac{1-\varepsilon_{CR}}{\varepsilon_{CR}\cdot A_{4,0}}\right)}+\frac{\sigma\cdot\varepsilon_{OG}\cdot\left(T_2^4-T_5^4\right)}{\left(\frac{1-\varepsilon_{CR}}{\varepsilon_{CR}\cdot A_{2,0}}\right)+\frac{1}{A_{2,0}\cdot F_{2,5}}+\left(\frac{1-\varepsilon_{stl}}{\varepsilon_{stl}\cdot A_{5,0}}\right)}+\frac{\sigma\cdot\varepsilon_{OG}\cdot\left(T_2^4-T_6^4\right)}{\left(\frac{1-\varepsilon_{CR}}{\varepsilon_{CR}\cdot A_{2,0}}\right)+\frac{1}{A_{2,0}\cdot F_{2,6}}+\left(\frac{1-\varepsilon_{stl}}{\varepsilon_{stl}\cdot A_{6,0}}\right)}\ldots$$

$$+\frac{\sigma\cdot\varepsilon_{OG}\cdot\left(T_2^4-T_7^4\right)}{\left(\frac{1-\varepsilon_{CR}}{\varepsilon_{CR}\cdot A_{2,0}}\right)+\frac{1}{A_{2,0}\cdot F_{2,7}}+\frac{1-\varepsilon_{stl}}{\varepsilon_{stl}\cdot A_{7,0}}}+\frac{\sigma\cdot\varepsilon_{OG}\cdot\left(T_2^4-T_8^4\right)}{\left(\frac{1-\varepsilon_{CR}}{\varepsilon_{CR}\cdot A_{2,0}}\right)+\frac{1}{A_{2,0}\cdot F_{2,8}}+\frac{1-\varepsilon_{stl}}{\varepsilon_{stl}\cdot A_{8,0}}}+\frac{\sigma\cdot\varepsilon_{OG}\cdot\left(T_2^4-T_9^4\right)}{\left(\frac{1-\varepsilon_{CR}}{\varepsilon_{CR}\cdot A_{2,0}}\right)+\frac{1}{A_{2,0}\cdot F_{2,9}}+\frac{1-\varepsilon_{stl}}{\varepsilon_{stl}\cdot A_{9,0}}}\ldots$$

$$+\xi_V\cdot A_{2,0}\cdot\left(\left|T_2-T_{OG}\right|\right)^{\frac{1}{3}}\cdot\left(T_2-T_{OO}\right)+\frac{A_{2,0}\cdot\left(T_2-T_{T2}\right)}{\left(\frac{\delta_{CR}}{k_{CR}}\right)+\left(\frac{\delta_{sand}}{k_{sand}}\right)}+\frac{\sigma\cdot\varepsilon_{OG}\cdot\left(T_2^4-T_{15}^4\right)}{\left(\frac{1-\varepsilon_{CR}}{\varepsilon_{CR}\cdot A_{2,0}}\right)+\frac{1}{A_{2,0}}}$$

Page 8

ARES CORPORATION	CALCULATION SHEET		
Project No. 0509206.01	Calculation No. 0509206.01-M-002	Rev. No. 1	Page 231 of 252
Title: DBVS ICV™ Off-Gas Hood Thermal Analysis			
Prepared By: P.S. Lowery	Date: 2.17.06	Checked By: S.R. Pierce	Date: 2.17.06

DBVS Off-Gas Hood Thermal Model

j=3

$$\frac{\sigma\cdot\tau_{OG}\cdot\left(T_3^{\,4}-T_0^{\,4}\right)}{\left(\frac{1-\varepsilon_{melt}}{\varepsilon_{melt}\cdot A_{0,0}}\right)+\frac{1}{A_{0,0}\cdot F_{0,3}}+\left(\frac{1-\varepsilon_{CR}}{\varepsilon_{CR}\cdot A_{3,0}}\right)}+\frac{\sigma\cdot\tau_{OG}\cdot\left(T_3^{\,4}-T_1^{\,4}\right)}{\left(\frac{1-\varepsilon_{CR}}{\varepsilon_{CR}\cdot A_{3,0}}\right)+\frac{1}{A_{3,0}\cdot F_{3,1}}+\left(\frac{1-\varepsilon_{CR}}{\varepsilon_{CR}\cdot A_{3,0}}\right)}+\frac{\sigma\cdot\tau_{OG}\cdot\left(T_3^{\,4}-T_2^{\,4}\right)}{\left(\frac{1-\varepsilon_{CR}}{\varepsilon_{CR}\cdot A_{3,0}}\right)+\frac{1}{A_{3,0}\cdot F_{3,2}}+\left(\frac{1-\varepsilon_{CR}}{\varepsilon_{CR}\cdot A_{2,0}}\right)}\ldots=0$$

$$+\frac{\sigma\cdot\tau_{OG}\cdot\left(T_3^{\,4}-T_4^{\,4}\right)}{\left(\frac{1-\varepsilon_{CR}}{\varepsilon_{CR}\cdot A_{3,0}}\right)+\frac{1}{A_{3,0}\cdot F_{3,4}}+\left(\frac{1-\varepsilon_{CR}}{\varepsilon_{CR}\cdot A_{4,0}}\right)}+\frac{\sigma\cdot\tau_{OG}\cdot\left(T_3^{\,4}-T_5^{\,4}\right)}{\left(\frac{1-\varepsilon_{CR}}{\varepsilon_{CR}\cdot A_{3,0}}\right)+\frac{1}{A_{3,0}\cdot F_{3,5}}+\left(\frac{1-\varepsilon_{stl}}{\varepsilon_{stl}\cdot A_{5,0}}\right)}+\frac{\sigma\cdot\tau_{OG}\cdot\left(T_3^{\,4}-T_6^{\,4}\right)}{\left(\frac{1-\varepsilon_{CR}}{\varepsilon_{CR}\cdot A_{3,0}}\right)+\frac{1}{A_{3,0}\cdot F_{3,6}}+\frac{1-\varepsilon_{stl}}{\varepsilon_{stl}\cdot A_{6,0}}}\ldots$$

$$+\frac{\sigma\cdot\tau_{OG}\cdot\left(T_3^{\,4}-T_8^{\,4}\right)}{\left(\frac{1-\varepsilon_{CR}}{\varepsilon_{CR}\cdot A_{3,0}}\right)+\frac{1}{A_{3,0}\cdot F_{3,8}}+\frac{1-\varepsilon_{stl}}{\varepsilon_{stl}\cdot A_{8,0}}}+\frac{\sigma\cdot\tau_{OG}\cdot\left(T_3^{\,4}-T_9^{\,4}\right)}{\left(\frac{1-\varepsilon_{CR}}{\varepsilon_{CR}\cdot A_{3,0}}\right)+\frac{1}{A_{3,9}\cdot F_{3,9}}+\frac{1-\varepsilon_{stl}}{\varepsilon_{stl}\cdot A_{9,0}}}+\xi_V\cdot A_{3,0}\cdot\left(\left|T_3-T_{OG}\right|\right)^{\frac{1}{3}}\cdot\left(T_3-T_{OG}\right)\ldots$$

$$+\frac{A_{3,0}\cdot\left(T_3-T_{13}\right)}{\left(\frac{\delta_{CR}}{k_{CR}}\right)+\left(\frac{\delta_{sand}}{k_{sand}}\right)}+\frac{\sigma\cdot\alpha_{OG}\cdot\left(T_3^{\,4}-T_{15}^{\,4}\right)}{\left(\frac{1-\varepsilon_{CR}}{\varepsilon_{CR}\cdot A_{3,0}}\right)+\frac{1}{A_{3,0}}}$$

Page 7

ARES CORPORATION	CALCULATION SHEET		
Project No. 0509206.01	Calculation No. 0509206.01-M-002	Rev. No. 1	Page 232 of 252
Title: DBVS ICV™ Off-Gas Hood Thermal Analysis			
Prepared By: P.S. Lowery	Date: 2.17.06	Checked By: S.R. Pierce	Date: 2.17.06

DBVS Off-Gas Hood Thermal Model

$j=4$

$$\frac{\sigma\cdot\tau_{OG}\cdot\left(T_4^4-T_0^4\right)}{\left(\frac{1-\varepsilon_{melt}}{\varepsilon_{melt}\cdot A_{0,0}}\right)+\frac{1}{A_{0,0}\cdot F_{0,4}}+\left(\frac{1-\varepsilon_{CR}}{\varepsilon_{CR}\cdot A_{4,0}}\right)}+\frac{\sigma\cdot\tau_{OG}\cdot\left(T_4^4-T_1^4\right)}{\left(\frac{1-\varepsilon_{CR}}{\varepsilon_{CR}\cdot A_{4,0}}\right)+\frac{1}{A_{4,0}\cdot F_{4,1}}+\left(\frac{1-\varepsilon_{CR}}{\varepsilon_{CR}\cdot A_{1,0}}\right)}+\frac{\sigma\cdot\tau_{OG}\cdot\left(T_4^4-T_2^4\right)}{\left(\frac{1-\varepsilon_{CR}}{\varepsilon_{CR}\cdot A_{4,0}}\right)+\frac{1}{A_{4,0}\cdot F_{4,2}}+\left(\frac{1-\varepsilon_{CR}}{\varepsilon_{CR}\cdot A_{2,0}}\right)}\ldots=0$$

$$+\frac{\sigma\cdot\tau_{OG}\cdot\left(T_4^4-T_3^4\right)}{\left(\frac{1-\varepsilon_{CR}}{\varepsilon_{CR}\cdot A_{4,0}}\right)+\frac{1}{A_{4,0}\cdot F_{4,3}}+\left(\frac{1-\varepsilon_{CR}}{\varepsilon_{CR}\cdot A_{3,0}}\right)}+\frac{\sigma\cdot\tau_{OG}\cdot\left(T_4^4-T_5^4\right)}{\left(\frac{1-\varepsilon_{CR}}{\varepsilon_{CR}\cdot A_{4,0}}\right)+\frac{1}{A_{4,0}\cdot F_{4,5}}+\left(\frac{1-\varepsilon_{stl}}{\varepsilon_{stl}\cdot A_{5,0}}\right)}+\frac{\sigma\cdot\tau_{OG}\cdot\left(T_4^4-T_6^4\right)}{\left(\frac{1-\varepsilon_{CR}}{\varepsilon_{CR}\cdot A_{4,0}}\right)+\frac{1}{A_{4,0}\cdot F_{4,6}}+\frac{1-\varepsilon_{stl}}{\varepsilon_{stl}\cdot A_{6,0}}}\ldots$$

$$+\frac{\sigma\cdot\tau_{OG}\cdot\left(T_4^4-T_7^4\right)}{\left(\frac{1-\varepsilon_{CR}}{\varepsilon_{CR}\cdot A_{4,0}}\right)+\frac{1}{A_{4,0}\cdot F_{4,7}}+\frac{1-\varepsilon_{stl}}{\varepsilon_{stl}\cdot A_{7,0}}}+\frac{\sigma\cdot\tau_{OG}\cdot\left(T_4^4-T_8^4\right)}{\left(\frac{1-\varepsilon_{CR}}{\varepsilon_{CR}\cdot A_{4,0}}\right)+\frac{1}{A_{4,0}\cdot F_{4,8}}+\frac{1-\varepsilon_{stl}}{\varepsilon_{stl}\cdot A_{8,0}}}+\frac{\sigma\cdot\tau_{OG}\cdot\left(T_4^4-T_9^4\right)}{\left(\frac{1-\varepsilon_{CR}}{\varepsilon_{CR}\cdot A_{4,0}}\right)+\frac{1}{A_{4,0}\cdot F_{4,9}}+\frac{1-\varepsilon_{stl}}{\varepsilon_{stl}\cdot A_{9,0}}}\ldots$$

$$+\frac{A_{4,0}\cdot\left(T_4-T_{14}\right)}{\left(\frac{\delta_{CR}}{k_{CR}}\right)+\left(\frac{\delta_{sand}}{k_{sand}}\right)}+\xi_V\cdot A_{4,0}\cdot\left(\left|T_4-T_{OG}\right|\right)^{\frac{1}{3}}\cdot\left(T_4-T_{OG}\right)+\frac{\sigma\cdot\alpha_{OG}\cdot\left(T_4^4-T_{15}^4\right)}{\left(\frac{1-\varepsilon_{CR}}{\varepsilon_{CR}\cdot A_{4,0}}\right)+\frac{1}{A_{4,0}}}$$

Page 5

CALCULATION SHEET

Project No. 0509206.01	Calculation No. 0509206.01-M-002	Rev. No. 1	Page 233 of 252
Title: DBVS ICV™ Off-Gas Hood Thermal Analysis			
Prepared By: P.S. Lowry	Date: 2.17.06	Checked By: S.R. Pierce	Date: 2.17.06

DBVS Off-Gas Hood Thermal Model

j=5

$$= 0$$

$$\frac{\sigma\cdot\tau_{OG}\cdot\left(T_5^4 - T_0^4\right)}{\left(\frac{1-\varepsilon_{melt}}{\varepsilon_{melt}\cdot A_{0,0}}\right) + \frac{1}{A_{0,0}\cdot F_{0,5}} + \left(\frac{1-\varepsilon_{stl}}{\varepsilon_{stl}\cdot A_{5,0}}\right)} + \frac{\sigma\cdot\tau_{OG}\cdot\left(T_5^4 - T_2^4\right)}{\left(\frac{1-\varepsilon_{stl}}{\varepsilon_{stl}\cdot A_{5,0}}\right) + \frac{1}{A_{5,0}\cdot F_{5,2}} + \left(\frac{1-\varepsilon_{CR}}{\varepsilon_{CR}\cdot A_{2,0}}\right)} \cdots$$

$$+ \frac{\sigma\cdot\tau_{OG}\cdot\left(T_5^4 - T_3^4\right)}{\left(\frac{1-\varepsilon_{stl}}{\varepsilon_{stl}\cdot A_{5,0}}\right) + \frac{1}{A_{5,0}\cdot F_{5,3}} + \left(\frac{1-\varepsilon_{CR}}{\varepsilon_{CR}\cdot A_{3,0}}\right)} + \frac{\sigma\cdot\tau_{OG}\cdot\left(T_5^4 - T_4^4\right)}{\left(\frac{1-\varepsilon_{stl}}{\varepsilon_{stl}\cdot A_{5,0}}\right) + \frac{1}{A_{5,0}\cdot F_{5,4}} + \left(\frac{1-\varepsilon_{CR}}{\varepsilon_{CR}\cdot A_{4,0}}\right)} + \frac{\sigma\cdot\tau_{OG}\cdot\left(T_5^4 - T_6^4\right)}{\left(\frac{1-\varepsilon_{stl}}{\varepsilon_{stl}\cdot A_{5,0}}\right) + \frac{1}{A_{5,0}\cdot F_{5,6}} + \frac{1-\varepsilon_{stl}}{\varepsilon_{stl}\cdot A_{6,0}}} \cdots$$

$$+ \frac{\sigma\cdot\tau_{OG}\cdot\left(T_5^4 - T_7^4\right)}{\left(\frac{1-\varepsilon_{stl}}{\varepsilon_{stl}\cdot A_{5,0}}\right) + \frac{1}{A_{5,0}\cdot F_{5,7}} + \frac{1-\varepsilon_{stl}}{\varepsilon_{stl}\cdot A_{7,0}}} + \frac{\sigma\cdot\tau_{OG}\cdot\left(T_5^4 - T_8^4\right)}{\left(\frac{1-\varepsilon_{stl}}{\varepsilon_{stl}\cdot A_{5,0}}\right) + \frac{1}{A_{5,0}\cdot F_{5,8}} + \frac{1-\varepsilon_{stl}}{\varepsilon_{stl}\cdot A_{8,0}}} + \frac{\sigma\cdot\tau_{OG}\cdot\left(T_5^4 - T_9^4\right)}{\left(\frac{1-\varepsilon_{stl}}{\varepsilon_{stl}\cdot A_{5,0}}\right) + \frac{1}{A_{5,0}\cdot F_{5,9}} + \frac{1-\varepsilon_{stl}}{\varepsilon_{stl}\cdot A_{9,0}}} \cdots$$

$$+ \frac{\sigma\cdot\left(T_5^4 - T_{amb}^4\right)}{\left(\frac{1-\varepsilon_{stl}}{\varepsilon_{stl}\cdot A_{5,0}}\right) + \frac{1}{A_{5,0}}} + \xi_V\cdot A_{5,0}\cdot\left[\left|T_5 - \left(\frac{T_5 + T_{10}}{2}\right)\right|\right]^{\frac{1}{3}}\cdot\left[T_5 - \left(\frac{T_5 + T_{10}}{2}\right)\right] + \xi_V\cdot A_{5,0}\cdot\left(\left|T_5 - T_{OO}\right|\right)^{\frac{1}{3}}\cdot\left(T_5 - T_{OO}\right) + \frac{\sigma\cdot\alpha_{OO}\cdot\left(T_5^4 - T_{15}^4\right)}{\left(\frac{1-\varepsilon_{stl}}{\varepsilon_{stl}\cdot A_{5,0}}\right) + \frac{1}{A_{5,0}}}$$

CALCULATION SHEET

Project No. 0509206.01	Calculation No. 0509206.01-M-002	Rev. No. 1	Page 234 of 252
Title: DBVS ICV™ Off-Gas Hood Thermal Analysis			
Prepared By: P.S. Lowery	Date: 2.17.06	Checked By: S.R. Pierce	Date: 2.17.06

DBVS Off-Gas Hood Thermal Model

$j=6$

$$\frac{\sigma\cdot\tau_{OG}\cdot\left(T_6^4-T_0^4\right)}{\left(\frac{1-\varepsilon_{melt}}{\varepsilon_{melt}\cdot A_{0,0}}\right)+\frac{1}{A_{0,0}\cdot F_{0,6}}+\left(\frac{1-\varepsilon_{stl}}{\varepsilon_{stl}\cdot A_{6,0}}\right)}+\frac{\sigma\cdot\tau_{OG}\cdot\left(T_6^4-T_1^4\right)}{\left(\frac{1-\varepsilon_{stl}}{\varepsilon_{stl}\cdot A_{6,0}}\right)+\frac{1}{A_{6,0}\cdot F_{6,1}}+\left(\frac{1-\varepsilon_{CR}}{\varepsilon_{CR}\cdot A_{1,0}}\right)}+\frac{\sigma\cdot\tau_{OG}\cdot\left(T_6^4-T_2^4\right)}{\left(\frac{1-\varepsilon_{stl}}{\varepsilon_{stl}\cdot A_{6,0}}\right)+\frac{1}{A_{6,0}\cdot F_{6,2}}+\left(\frac{1-\varepsilon_{CR}}{\varepsilon_{CR}\cdot A_{2,0}}\right)}\cdots$$

$$+\frac{\sigma\cdot\tau_{OG}\cdot\left(T_6^4-T_3^4\right)}{\left(\frac{1-\varepsilon_{stl}}{\varepsilon_{stl}\cdot A_{6,0}}\right)+\frac{1}{A_{6,0}\cdot F_{6,3}}+\left(\frac{1-\varepsilon_{CR}}{\varepsilon_{CR}\cdot A_{3,0}}\right)}+\frac{\sigma\cdot\tau_{OG}\cdot\left(T_6^4-T_4^4\right)}{\left(\frac{1-\varepsilon_{stl}}{\varepsilon_{stl}\cdot A_{6,0}}\right)+\frac{1}{A_{6,0}\cdot F_{6,4}}+\left(\frac{1-\varepsilon_{CR}}{\varepsilon_{CR}\cdot A_{4,0}}\right)}+\frac{\sigma\cdot\tau_{OG}\cdot\left(T_6^4-T_5^4\right)}{\left(\frac{1-\varepsilon_{stl}}{\varepsilon_{stl}\cdot A_{6,0}}\right)+\frac{1}{A_{6,0}\cdot F_{6,5}}+\frac{1-\varepsilon_{stl}}{\varepsilon_{stl}\cdot A_{5,0}}}\cdots$$

$$+\frac{\sigma\cdot\tau_{OG}\cdot\left(T_6^4-T_7^4\right)}{\left(\frac{1-\varepsilon_{stl}}{\varepsilon_{stl}\cdot A_{6,0}}\right)+\frac{1}{A_{6,0}\cdot F_{6,7}}+\frac{1-\varepsilon_{stl}}{\varepsilon_{stl}\cdot A_{7,0}}}+\frac{\sigma\cdot\tau_{OG}\cdot\left(T_6^4-T_8^4\right)}{\left(\frac{1-\varepsilon_{stl}}{\varepsilon_{stl}\cdot A_{6,0}}\right)+\frac{1}{A_{6,0}\cdot F_{6,8}}+\frac{1-\varepsilon_{stl}}{\varepsilon_{stl}\cdot A_{8,0}}}+\frac{\sigma\cdot\tau_{OG}\cdot\left(T_6^4-T_9^4\right)}{\left(\frac{1-\varepsilon_{stl}}{\varepsilon_{stl}\cdot A_{6,0}}\right)+\frac{1}{A_{6,0}\cdot F_{6,9}}+\frac{1-\varepsilon_{stl}}{\varepsilon_{stl}\cdot A_{9,0}}}\cdots$$

$$+\frac{\sigma\cdot\left(T_6^4-T_{10}^4\right)}{\left(\frac{1-\varepsilon_{stl}}{\varepsilon_{stl}\cdot A_{6,0}}\right)+\frac{1}{A_{6,0}\cdot F_{6,10}}+\left(\frac{1-\varepsilon_{stl}}{\varepsilon_{stl}\cdot A_{10,0}}\right)}+\frac{\sigma\cdot\left(T_6^4-T_{amb}^4\right)}{\left(\frac{1-\varepsilon_{stl}}{\varepsilon_{stl}\cdot A_{6,0}}\right)+\frac{1}{A_{6,0}\cdot\left(1-F_{6,10}\right)}}+\xi_V\cdot\left(A_{2,0}+A_{6,2}\right)\cdot\left[\left[T_6-\left(\frac{T_6+T_{10}}{2}\right)\right]\right]^{\frac{1}{3}}\cdot\left[T_6-\left(\frac{T_6+T_{10}}{2}\right)\right]\cdots$$

$$+\xi_{HV}\cdot A_{6,1}\cdot\left[\left[T_6-\left(\frac{T_6+T_{10}}{2}\right)\right]\right]^{\frac{1}{3}}\cdot\left[T_6-\left(\frac{T_6+T_{10}}{2}\right)\right]+\xi_V\cdot A_{6,0}\cdot\left(\left|T_6-T_{OG}\right|\right)^{\frac{1}{3}}\cdot\left(T_6-T_{OG}\right)+\frac{\sigma\cdot\tau_{OG}\cdot\left(T_6^4-T_{15}^4\right)}{\left(\frac{1-\varepsilon_{CR}}{\varepsilon_{stl}\cdot A_{6,0}}\right)+\frac{1}{A_{6,0}}}=0$$

Page 10

ARES CORPORATION	CALCULATION SHEET		
Project No. 0509206.01	Calculation No. 0509206.01-M-002	Rev. No. 1	Page 235 of 252
Title: DBVS ICV™ Off-Gas Hood Thermal Analysis			
Prepared By: P.S. Lowery	Date: 2.17.06	Checked By: S.R. Pierce	Date: 2.17.06

DBVS Off-Gas Hood Thermal Model

j=7

$$\frac{\sigma\cdot\varepsilon_{OG}\cdot\left(T_7^4-T_0^4\right)}{\left(\frac{1-\varepsilon_{melt}}{\varepsilon_{melt}\cdot A_{0,0}}\right)+\frac{1}{A_{0,0}\cdot F_{0,7}}+\left(\frac{1-\varepsilon_{stl}}{\varepsilon_{stl}\cdot A_{7,0}}\right)}+\frac{\sigma\cdot\varepsilon_{OG}\cdot\left(T_7^4-T_1^4\right)}{\left(\frac{1-\varepsilon_{stl}}{\varepsilon_{stl}\cdot A_{7,0}}\right)+\frac{1}{A_{7,0}\cdot F_{7,1}}+\left(\frac{1-\varepsilon_{CR}}{\varepsilon_{CR}\cdot A_{1,0}}\right)}+\frac{\sigma\cdot\varepsilon_{OG}\cdot\left(T_7^4-T_2^4\right)}{\left(\frac{1-\varepsilon_{stl}}{\varepsilon_{stl}\cdot A_{7,0}}\right)+\frac{1}{A_{7,0}\cdot F_{7,2}}+\left(\frac{1-\varepsilon_{CR}}{\varepsilon_{CR}\cdot A_{2,0}}\right)}\cdots$$

$$+\frac{\sigma\cdot\varepsilon_{OG}\cdot\left(T_7^4-T_4^4\right)}{\left(\frac{1-\varepsilon_{stl}}{\varepsilon_{stl}\cdot A_{7,0}}\right)+\frac{1}{A_{7,0}\cdot F_{7,4}}+\left(\frac{1-\varepsilon_{CR}}{\varepsilon_{CR}\cdot A_{4,0}}\right)}+\frac{\sigma\cdot\varepsilon_{OG}\cdot\left(T_7^4-T_5^4\right)}{\left(\frac{1-\varepsilon_{stl}}{\varepsilon_{stl}\cdot A_{7,0}}\right)+\frac{1}{A_{7,0}\cdot F_{7,5}}+\frac{1-\varepsilon_{stl}}{\varepsilon_{stl}\cdot A_{5,0}}}+\frac{\sigma\cdot\varepsilon_{OG}\cdot\left(T_7^4-T_6^4\right)}{\left(\frac{1-\varepsilon_{stl}}{\varepsilon_{stl}\cdot A_{7,0}}\right)+\frac{1}{A_{7,0}\cdot F_{7,6}}+\frac{1-\varepsilon_{stl}}{\varepsilon_{stl}\cdot A_{6,0}}}\cdots$$

$$+\frac{\sigma\cdot\varepsilon_{OG}\cdot\left(T_7^4-T_8^4\right)}{\left(\frac{1-\varepsilon_{stl}}{\varepsilon_{stl}\cdot A_{7,0}}\right)+\frac{1}{A_{7,0}\cdot F_{7,8}}+\frac{1-\varepsilon_{stl}}{\varepsilon_{stl}\cdot A_{8,0}}}+\frac{\sigma\cdot\varepsilon_{OG}\cdot\left(T_7^4-T_9^4\right)}{\left(\frac{1-\varepsilon_{stl}}{\varepsilon_{stl}\cdot A_{7,0}}\right)+\frac{1}{A_{7,0}\cdot F_{7,9}}+\frac{1-\varepsilon_{stl}}{\varepsilon_{stl}\cdot A_{9,0}}}\cdots$$

$$+\frac{\sigma\cdot\left(T_7^4-T_{amb}^4\right)}{\left(\frac{1-\varepsilon_{stl}}{\varepsilon_{stl}\cdot A_{7,0}}\right)+\frac{1}{A_{7,0}}}+\xi_V\cdot A_{7,0}\cdot\left[T_7-\left(\frac{T_7+T_{10}}{2}\right)\right]\cdot\left[T_7-\left(\frac{T_7+T_{10}}{2}\right)\right]^{\frac{1}{3}}+\xi_V\cdot A_{7,0}\cdot\left(\left|T_7-T_{OG}\right|\right)^{\frac{1}{3}}\cdot\left(T_7-T_{OG}\right)+\frac{\sigma\cdot\alpha_{OG}\cdot\left(T_7^4-T_{15}^4\right)}{\left(\frac{1-\varepsilon_{stl}}{\varepsilon_{stl}\cdot A_{7,0}}\right)+\frac{1}{A_{7,0}}}=0$$

Page 11

ARES CORPORATION	CALCULATION SHEET		
Project No. 0509206.01	Calculation No. 0509206.01-M-002	Rev. No. 1	Page 236 of 252
Title: DBVS ICV™ Off-Gas Hood Thermal Analysis			
Prepared By: P.S. Lowery	Date: 2.17.06	Checked By: S.R. Pierce	Date: 2.17.06

DBVS Off-Gas Hood Thermal Model

j=8

$$\frac{\sigma\cdot\tau_{OG}\cdot\left(T_g^4-T_0^4\right)}{\left(\frac{1-\varepsilon_{melt}}{\varepsilon_{melt}\cdot A_{0,0}}\right)+\frac{1}{A_{0,0}\cdot F_{0,8}}+\left(\frac{1-\varepsilon_{stl}}{\varepsilon_{stl}\cdot A_{8,0}}\right)}+\frac{\sigma\cdot\tau_{OG}\cdot\left(T_g^4-T_1^4\right)}{\left(\frac{1-\varepsilon_{stl}}{\varepsilon_{stl}\cdot A_{8,0}}\right)+\frac{1}{A_{8,0}\cdot F_{8,1}}+\left(\frac{1-\varepsilon_{CR}}{\varepsilon_{CR}\cdot A_{1,0}}\right)}+\frac{\sigma\cdot\tau_{OG}\cdot\left(T_g^4-T_2^4\right)}{\left(\frac{1-\varepsilon_{stl}}{\varepsilon_{stl}\cdot A_{8,0}}\right)+\frac{1}{A_{8,0}\cdot F_{8,2}}+\left(\frac{1-\varepsilon_{CR}}{\varepsilon_{CR}\cdot A_{2,0}}\right)}\cdots$$

$$+\frac{\sigma\cdot\tau_{OG}\cdot\left(T_g^4-T_3^4\right)}{\left(\frac{1-\varepsilon_{stl}}{\varepsilon_{stl}\cdot A_{8,0}}\right)+\frac{1}{A_{8,0}\cdot F_{8,3}}+\left(\frac{1-\varepsilon_{CR}}{\varepsilon_{CR}\cdot A_{3,0}}\right)}+\frac{\sigma\cdot\tau_{OG}\cdot\left(T_g^4-T_4^4\right)}{\left(\frac{1-\varepsilon_{stl}}{\varepsilon_{stl}\cdot A_{8,0}}\right)+\frac{1}{A_{8,0}\cdot F_{8,4}}+\left(\frac{1-\varepsilon_{CR}}{\varepsilon_{CR}\cdot A_{4,0}}\right)}+\frac{\sigma\cdot\tau_{OG}\cdot\left(T_g^4-T_5^4\right)}{\left(\frac{1-\varepsilon_{stl}}{\varepsilon_{stl}\cdot A_{8,0}}\right)+\frac{1}{A_{8,0}\cdot F_{8,5}}+\frac{1-\varepsilon_{stl}}{\varepsilon_{stl}\cdot A_{5,0}}}\cdots$$

$$+\frac{\sigma\cdot\tau_{OG}\cdot\left(T_g^4-T_6^4\right)}{\left(\frac{1-\varepsilon_{stl}}{\varepsilon_{stl}\cdot A_{8,0}}\right)+\frac{1}{A_{8,0}\cdot F_{8,6}}+\frac{1-\varepsilon_{stl}}{\varepsilon_{stl}\cdot A_{6,0}}}+\frac{\sigma\cdot\tau_{OG}\cdot\left(T_g^4-T_7^4\right)}{\left(\frac{1-\varepsilon_{stl}}{\varepsilon_{stl}\cdot A_{8,0}}\right)+\frac{1}{A_{8,0}\cdot F_{8,7}}+\frac{1-\varepsilon_{stl}}{\varepsilon_{stl}\cdot A_{7,0}}}+\frac{\sigma\cdot\tau_{OG}\cdot\left(T_g^4-T_9^4\right)}{\left(\frac{1-\varepsilon_{stl}}{\varepsilon_{stl}\cdot A_{8,0}}\right)+\frac{1}{A_{8,0}\cdot F_{8,9}}+\frac{1-\varepsilon_{stl}}{\varepsilon_{stl}\cdot A_{9,0}}}\cdots$$

$$+\frac{\sigma\cdot\left(T_g^4-T_{10}^4\right)}{\left(\frac{1-\varepsilon_{stl}}{\varepsilon_{stl}\cdot A_{8,0}}\right)+\frac{1}{A_{8,0}\cdot F_{8,10}}+\left(\frac{1-\varepsilon_{stl}}{\varepsilon_{stl}\cdot A_{10,0}}\right)}+\frac{\sigma\cdot\left(T_g^4-T_{amb}^4\right)}{\left(\frac{1-\varepsilon_{stl}}{\varepsilon_{stl}\cdot A_{8,0}}\right)+\frac{1}{A_{8,0}\cdot\left(1-F_{8,10}\right)}}+\xi_V\cdot\left(A_{8,0}+A_{8,2}\right)\cdot\left[\left|T_g-\left(\frac{T_g+T_{10}}{2}\right)\right|\right]^{\frac{1}{3}}\cdot\left[T_g-\left(\frac{T_g+T_{10}}{2}\right)\right]\cdots$$

$$+\xi_{HU}\cdot A_{8,1}\cdot\left[\left|T_g-\left(\frac{T_g+T_{10}}{2}\right)\right|\right]^{\frac{1}{3}}\cdot\left[T_g-\left(\frac{T_g+T_{10}}{2}\right)\right]+\xi_V\cdot A_{8,0}\cdot\left(\left|T_g-T_{OG}\right|\right)^{\frac{1}{3}}\cdot\left(T_g-T_{OG}\right)+\frac{\sigma\cdot\alpha_{OG}\cdot\left(T_g^4-T_{15}^4\right)}{\left(\frac{1-\varepsilon_{stl}}{\varepsilon_{stl}\cdot A_{8,0}}\right)+\frac{1}{A_{8,0}}}=0$$

Page 12

CALCULATION SHEET

Project No. 0509206.01	Calculation No. 0509206.01-M-002	Rev. No. 1	Page 237 of 252
Title: DBVS ICV™ Off-Gas Hood Thermal Analysis			
Prepared By: P.S. Lowery	Date: 2.17.06	Checked By: S.R. Pierce	Date: 2.17.06

j=9

DBVS Off-Gas Hood Thermal Model

$$\frac{\sigma\cdot\tau_{OG}\cdot\left(T_9^{\,4}-T_0^{\,4}\right)}{\left(\frac{1-\varepsilon_{melt}}{\varepsilon_{melt}\cdot A_{9,0}}\right)+\frac{1}{A_{9,0}\cdot F_{0,9}}+\left(\frac{1-\varepsilon_{stl}}{\varepsilon_{stl}\cdot A_{9,0}}\right)}+\frac{\sigma\cdot\tau_{OG}\cdot\left(T_9^{\,4}-T_1^{\,4}\right)}{\left(\frac{1-\varepsilon_{stl}}{\varepsilon_{stl}\cdot A_{9,0}}\right)+\frac{1}{A_{9,0}\cdot F_{9,1}}+\left(\frac{1-\varepsilon_{CR}}{\varepsilon_{CR}\cdot A_{1,0}}\right)}+\frac{\sigma\cdot\tau_{OG}\cdot\left(T_9^{\,4}-T_2^{\,4}\right)}{\left(\frac{1-\varepsilon_{stl}}{\varepsilon_{stl}\cdot A_{9,0}}\right)+\frac{1}{A_{9,0}\cdot F_{9,2}}+\left(\frac{1-\varepsilon_{CR}}{\varepsilon_{CR}\cdot A_{2,0}}\right)}\ldots=0$$

$$+\frac{\sigma\cdot\tau_{OG}\cdot\left(T_9^{\,4}-T_3^{\,4}\right)}{\left(\frac{1-\varepsilon_{stl}}{\varepsilon_{stl}\cdot A_{9,0}}\right)+\frac{1}{A_{9,0}\cdot F_{9,3}}+\left(\frac{1-\varepsilon_{CR}}{\varepsilon_{CR}\cdot A_{3,0}}\right)}+\frac{\sigma\cdot\tau_{OG}\cdot\left(T_9^{\,4}-T_4^{\,4}\right)}{\left(\frac{1-\varepsilon_{stl}}{\varepsilon_{stl}\cdot A_{9,0}}\right)+\frac{1}{A_{9,0}\cdot F_{9,4}}+\left(\frac{1-\varepsilon_{CR}}{\varepsilon_{CR}\cdot A_{4,0}}\right)}+\frac{\sigma\cdot\tau_{OG}\cdot\left(T_9^{\,4}-T_5^{\,4}\right)}{\left(\frac{1-\varepsilon_{stl}}{\varepsilon_{stl}\cdot A_{9,0}}\right)+\frac{1}{A_{9,0}\cdot F_{9,5}}+\frac{1-\varepsilon_{stl}}{\varepsilon_{stl}\cdot A_{5,0}}}\ldots$$

$$+\frac{\sigma\cdot\tau_{OG}\cdot\left(T_9^{\,4}-T_6^{\,4}\right)}{\left(\frac{1-\varepsilon_{stl}}{\varepsilon_{stl}\cdot A_{9,0}}\right)+\frac{1}{A_{9,0}\cdot F_{9,6}}+\frac{1-\varepsilon_{stl}}{\varepsilon_{stl}\cdot A_{6,0}}}+\frac{\sigma\cdot\tau_{OG}\cdot\left(T_9^{\,4}-T_7^{\,4}\right)}{\left(\frac{1-\varepsilon_{stl}}{\varepsilon_{stl}\cdot A_{9,0}}\right)+\frac{1}{A_{9,0}\cdot F_{9,7}}+\frac{1-\varepsilon_{stl}}{\varepsilon_{stl}\cdot A_{7,0}}}+\frac{\sigma\cdot\tau_{OG}\cdot\left(T_9^{\,4}-T_8^{\,4}\right)}{\left(\frac{1-\varepsilon_{stl}}{\varepsilon_{stl}\cdot A_{9,0}}\right)+\frac{1}{A_{9,0}\cdot F_{9,8}}+\frac{1-\varepsilon_{stl}}{\varepsilon_{stl}\cdot A_{8,0}}}\ldots$$

$$+\frac{\sigma\cdot\left(T_9^{\,4}-T_{10}^{\,4}\right)}{\left(\frac{1-\varepsilon_{stl}}{\varepsilon_{stl}\cdot A_{9,0}}\right)+\frac{1}{A_{9,0}\cdot F_{9,10}}+\left(\frac{1-\varepsilon_{stl}}{\varepsilon_{stl}\cdot A_{10,0}}\right)}+\xi_V\cdot\left(A_{9,0}+A_{9,2}\right)\cdot\left[T_9-\left(\frac{T_9+T_{10}}{2}\right)\right]\cdot\left[T_9-\left(\frac{T_9+T_{10}}{2}\right)\right]^{\frac{1}{3}}\ldots$$

$$+\xi_{HU}\cdot A_{9,1}\cdot\left[T_9-\left(\frac{T_9+T_{10}}{2}\right)\right]\cdot\left[T_9-\left(\frac{T_9+T_{10}}{2}\right)\right]^{\frac{1}{3}}+\xi_{HD}\cdot A_{9,0}\cdot\left(\left|T_9-T_{OG}\right|\right)^{\frac{1}{3}}\cdot\left(T_9-T_{OG}\right)+\frac{\sigma\cdot\alpha_{OG}\cdot\left(T_9^{\,4}-T_{15}^{\,4}\right)}{\left(\frac{1-\varepsilon_{stl}}{\varepsilon_{stl}\cdot A_{9,0}}\right)+\frac{1}{A_{9,0}}}$$

Page 13

ARES CORPORATION	CALCULATION SHEET		
Project No. 0509206.01	Calculation No. 0509206.01-M-002	Rev. No. 1	Page 238 of 252
Title: DBVS ICV™ Off-Gas Hood Thermal Analysis			
Prepared By: P.S. Lowery	Date: 2.17.06	Checked By: S.R. Pierce	Date: 2.17.06

DBVS Off-Gas Hood Thermal Model

j=10

$$\frac{\sigma\cdot\left(T_{10}^{4}-T_{6}^{4}\right)}{\left(\frac{1-\varepsilon_{stl}}{\varepsilon_{stl}\cdot A_{10,0}}\right)+\frac{1}{A_{6,0}\cdot F_{6,10}}+\frac{1-\varepsilon_{stl}}{\varepsilon_{stl}\cdot A_{6,0}}}+\frac{\sigma\cdot\left(T_{10}^{4}-T_{8}^{4}\right)}{\left(\frac{1-\varepsilon_{stl}}{\varepsilon_{stl}\cdot A_{10,0}}\right)+\frac{1}{A_{8,0}\cdot F_{8,10}}+\frac{1-\varepsilon_{stl}}{\varepsilon_{stl}\cdot A_{8,0}}}+$$

$$+\frac{\sigma\cdot\left(T_{10}^{4}-T_{9}^{4}\right)}{\left(\frac{1-\varepsilon_{stl}}{\varepsilon_{stl}\cdot A_{10,0}}\right)+\frac{1}{A_{9,0}\cdot F_{9,10}}+\frac{1-\varepsilon_{stl}}{\varepsilon_{stl}\cdot A_{9,0}}}+\frac{\sigma\cdot\left(T_{10}^{4}-T_{amb}^{4}\right)}{\left(\frac{1-\varepsilon_{stl}}{\varepsilon_{stl}\cdot A_{10,0}}\right)+\frac{1}{A_{10,0}\cdot\left(1-\frac{A_{6,0}\cdot F_{6,10}}{A_{10,0}}-\frac{A_{8,0}\cdot F_{8,10}}{A_{10,0}}-\frac{A_{9,0}\cdot F_{9,10}}{A_{10,0}}\right)}}+$$

$$+\zeta_{HD}\cdot A_{10,0}\cdot\left[\left|T_{10}-\left(\frac{T_9+T_{10}}{2}\right)\right|\right]^{\frac{1}{3}}\cdot\left[T_{10}-\left(\frac{T_9+T_{10}}{2}\right)\right]+\frac{A_{10,0}\cdot\left(T_{10}-T_{AWTB}\right)}{\frac{\delta_{floor}}{k_{st}}}=0$$

j=11

$$\frac{A_{11,0}\cdot\left(T_{11}-T_{1}\right)}{\left(\frac{\delta_{CR}}{k_{CR}}\right)+\left(\frac{\delta_{sand}}{k_{sand}}\right)}+\frac{\sigma\cdot\left(T_{11}^{4}-T_{amb}^{4}\right)}{\left(\frac{1-\varepsilon_{stl}}{\varepsilon_{stl}\cdot A_{11,0}}\right)+\frac{1}{A_{11,0}}}+\zeta_{V}\cdot A_{11,0}\cdot\left(\left|T_{11}-T_{amb}\right|\right)^{\frac{1}{3}}\cdot\left(T_{11}-T_{amb}\right)=0$$

j=12

$$\frac{A_{12,0}\cdot\left(T_{12}-T_{2}\right)}{\left(\frac{\delta_{CR}}{k_{CR}}\right)+\left(\frac{\delta_{sand}}{k_{sand}}\right)}+\frac{\sigma\cdot\left(T_{12}^{4}-T_{amb}^{4}\right)}{\left(\frac{1-\varepsilon_{stl}}{\varepsilon_{stl}\cdot A_{12,0}}\right)+\frac{1}{A_{12,0}}}+\zeta_{V}\cdot A_{12,0}\cdot\left(\left|T_{12}-T_{amb}\right|\right)^{\frac{1}{3}}\cdot\left(T_{12}-T_{amb}\right)=0$$

ARES CORPORATION	CALCULATION SHEET		
Project No. 0509206.01	Calculation No. 0509206.01-M-002	Rev. No. 1	Page 239 of 252
Title: DBVS ICV™ Off-Gas Hood Thermal Analysis			
Prepared By: P.S. Lowery	Date: 2.17.06	Checked By: S.R. Pierce	Date: 2.17.06

DBVS Off-Gas Hood Thermal Model

j=13

$$\frac{A_{13,0}\cdot(T_{13}-T_3)}{\left(\frac{\delta_{CR}}{k_{CR}}\right)+\left(\frac{\delta_{sand}}{k_{sand}}\right)}+\frac{\sigma\cdot\left(T_{13}^{\,4}-T_{amb.}^{\,4}\right)}{\left(\frac{1-\varepsilon_{stl}}{\varepsilon_{stl}\cdot A_{13,0}}\right)+\frac{1}{A_{13,0}}}+\xi_V\cdot A_{13,0}\cdot\left(\left|T_{13}-T_{amb}\right|\right)^{\frac{1}{3}}\cdot\left(T_{13}-T_{amb}\right)=0$$

j=14

$$\frac{A_{14,0}\cdot(T_{14}-T_4)}{\left(\frac{\delta_{CR}}{k_{CR}}\right)+\left(\frac{\delta_{sand}}{k_{sand}}\right)}+\frac{\sigma\cdot\left(T_{14}^{\,4}-T_{amb.}^{\,4}\right)}{\left(\frac{1-\varepsilon_{stl}}{\varepsilon_{stl}\cdot A_{14,0}}\right)+\frac{1}{A_{14,0}}}+\xi_V\cdot A_{14,0}\cdot\left(\left|T_{14}-T_{amb}\right|\right)^{\frac{1}{3}}\cdot\left(T_{14}-T_{amb}\right)=0$$

$$\begin{pmatrix} T1 \\ T2 \\ T3 \\ T4 \\ T5 \\ T6 \\ T7 \\ T8 \\ T9 \\ T10 \\ T11 \\ T12 \\ T13 \\ T14 \end{pmatrix} := \mathrm{Find}(T_1,T_2,T_3,T_4,T_5,T_6,T_7,T_8,T_9,T_{10},T_{11},T_{12},T_{13},T_{14})$$

ARES CORPORATION	CALCULATION SHEET		
Project No. 0509206.01	Calculation No. 0509206.01-M-002	Rev. No. 1	Page 240 of 252
Title: DBVS ICV™ Off-Gas Hood Thermal Analysis			
Prepared By: P.S. Lowery	Date: 2.17.06	Checked By: S.R. Pierce	Date: 2.17.06

DBVS Off-Gas Hood Thermal Model

T1 = 782.4 K	T1C := KtoC(T1)	T1C = 509.2
T2 = 788.7 K	T2C := KtoC(T2)	T2C = 515.5
T3 = 782.4 K	T3C := KtoC(T3)	T3C = 509.2
T4 = 788.7 K	T4C := KtoC(T4)	T4C = 515.5
T5 = 712.7 K	T5C := KtoC(T5)	T5C = 439.5
T6 = 696.9 K	T6C := KtoC(T6)	T6C = 423.7
T7 = 712.7 K	T7C := KtoC(T7)	T7C = 439.5
T8 = 696.9 K	T8C := KtoC(T8)	T8C = 423.7
T9 = 701.7 K	T9C := KtoC(T9)	T9C = 428.6
T10 = 305.6 K	T10C := KtoC(T10)	T10C = 33.5
T11 = 434.9 K	T11C := KtoC(T11)	T11C = 161.7
T12 = 436.1 K	T12C := KtoC(T12)	T12C = 162.9
T13 = 434.9 K	T13C := KtoC(T13)	T13C = 161.7
T14 = 436.1 K	T14C := KtoC(T14)	T14C = 162.9

T1F := CtoF(T1C) T2F := CtoF(T2C) T3F := CtoF(T3C) T4F := CtoF(T4C) T5F := CtoF(T5C) T6F := CtoF(T6C)

T7F := CtoF(T7C) T8F := CtoF(T8C) T9F := CtoF(T9C) T10F := CtoF(T10C) T11F := CtoF(T11C) T12F := CtoF(T12C)

T13F := CtoF(T13C) T14F := CtoF(T14C)

Results in °F ...

T1F = 948.574 T2F = 959.978 T3F = 948.574 T4F = 959.978 T5F = 823.158 T6F = 794.676

T7F = 823.158 T8F = 794.676 T9F = 803.426 T10F = 90.5 T11F = 323.1 T12F = 326.2 T13F = 323.1 T14F = 326.2

Page 16

ARES CORPORATION	CALCULATION SHEET		
Project No. 0509206.01	Calculation No. 0509206.01-M-002	Rev. No. 1	Page 241 of 252
Title: DBVS ICV™ Off-Gas Hood Thermal Analysis			
Prepared By: P.S. Lowery	Date: 2.17.06	Checked By: S.R. Pierce	Date: 2.17.06

DBVS Off-Gas Hood Thermal Model

Check results...

$T_0 = 898.1$ K

$T1 = 782.4$ K $T2 = 788.7$ K $T3 = 782.4$ K $T4 = 788.7$ K $T5 = 712.7$ K $T6 = 696.9$ K

$T7 = 712.7$ K $T8 = 696.9$ K $T9 = 701.7$ K $T10 = 305.5$ K $T11 = 434.9$ K $T12 = 436.1$ K $T13 = 434.9$ K

$T14 = 436.1$ K $T_{AWTF} = 298.1$ K $T_{amb} = 323.1$ K $T_{OG} = 873.1$ K

j=1

$$\frac{\sigma\cdot\tau_{OG}\cdot\left(T1^4 - T_0^4\right)}{\left(\frac{1-\varepsilon_{melt}}{\varepsilon_{melt}\cdot A_{0,0}}\right)+\frac{1}{A_{0,0}\cdot F_{0,1}}+\left(\frac{1-\varepsilon_{CR}}{\varepsilon_{CR}\cdot A_{1,0}}\right)}+\frac{\sigma\cdot\tau_{OG}\cdot\left(T1^4 - T2^4\right)}{\left(\frac{1-\varepsilon_{CR}}{\varepsilon_{CR}\cdot A_{1,0}}\right)+\frac{1}{A_{1,0}\cdot F_{1,2}}+\left(\frac{1-\varepsilon_{CR}}{\varepsilon_{CR}\cdot A_{2,0}}\right)}+\frac{\sigma\cdot\tau_{OG}\cdot\left(T1^4 - T3^4\right)}{\left(\frac{1-\varepsilon_{CR}}{\varepsilon_{CR}\cdot A_{1,0}}\right)+\frac{1}{A_{1,0}\cdot F_{1,3}}+\left(\frac{1-\varepsilon_{CR}}{\varepsilon_{CR}\cdot A_{3,0}}\right)} = 0\ \text{W}$$

$$+\frac{\sigma\cdot\tau_{OG}\cdot\left(T1^4 - T4^4\right)}{\left(\frac{1-\varepsilon_{CR}}{\varepsilon_{CR}\cdot A_{1,0}}\right)+\frac{1}{A_{1,0}\cdot F_{1,4}}+\left(\frac{1-\varepsilon_{CR}}{\varepsilon_{CR}\cdot A_{4,0}}\right)}+\frac{\sigma\cdot\tau_{OG}\cdot\left(T1^4 - T6^4\right)}{\left(\frac{1-\varepsilon_{CR}}{\varepsilon_{CR}\cdot A_{1,0}}\right)+\frac{1}{A_{1,0}\cdot F_{1,6}}+\left(\frac{1-\varepsilon_{sil}}{\varepsilon_{sil}\cdot A_{6,0}}\right)}+\frac{\sigma\cdot\tau_{OG}\cdot\left(T1^4 - T7^4\right)}{\left(\frac{1-\varepsilon_{CR}}{\varepsilon_{CR}\cdot A_{1,0}}\right)+\frac{1}{A_{1,0}\cdot F_{1,7}}+\frac{1-\varepsilon_{sil}}{\varepsilon_{sil}\cdot A_{7,0}}}\ldots$$

$$+\frac{\sigma\cdot\tau_{OG}\cdot\left(T1^4 - T8^4\right)}{\left(\frac{1-\varepsilon_{CR}}{\varepsilon_{CR}\cdot A_{1,0}}\right)+\frac{1}{A_{1,0}\cdot F_{1,8}}+\frac{1-\varepsilon_{sil}}{\varepsilon_{sil}\cdot A_{8,0}}}+\frac{\sigma\cdot\tau_{OG}\cdot\left(T1^4 - T9^4\right)}{\left(\frac{1-\varepsilon_{CR}}{\varepsilon_{CR}\cdot A_{1,0}}\right)+\frac{1}{A_{1,0}\cdot F_{1,9}}+\frac{1-\varepsilon_{sil}}{\varepsilon_{sil}\cdot A_{9,0}}}+\xi_V\cdot A_{1,0}\cdot\left(\left|T1 - T_{OG}\right|\right)^{\frac{1}{3}}\cdot\left(T1 - T_{OG}\right)\ldots$$

$$+\frac{A_{1,0}\cdot\left(T1 - T11\right)}{\left(\frac{\delta_{CR}}{k_{CR}}\right)+\left(\frac{\delta_{sand}}{k_{sand}}\right)}+\frac{\sigma\cdot\alpha_{OG}\cdot\left(T1^4 - T_{15}^4\right)}{\left(\frac{1-\varepsilon_{CR}}{\varepsilon_{CR}\cdot A_{1,0}}\right)+\frac{1}{A_{1,0}}}$$

Page 17

ARES CORPORATION	CALCULATION SHEET		
Project No. 0509206.01	Calculation No. 0509206.01-M-002	Rev. No. 1	Page 242 of 252
Title: DBVS ICV™ Off-Gas Hood Thermal Analysis			
Prepared By: P.S. Lowery	Date: 2.17.06	Checked By: S.R. Pierce	Date: 2.17.06

DBVS Off-Gas Hood Thermal Model

j=2

$$\frac{\sigma\cdot\tau_{OG}\cdot\left(T2^4-T_0^4\right)}{\left(\frac{1-\varepsilon_{melt}}{\varepsilon_{melt}\cdot A_{0,0}}\right)+\frac{1}{A_{0,0}\cdot F_{0,2}}+\left(\frac{1-\varepsilon_{CR}}{\varepsilon_{CR}\cdot A_{2,0}}\right)}+\frac{\sigma\cdot\tau_{OG}\cdot\left(T2^4-T1^4\right)}{\left(\frac{1-\varepsilon_{CR}}{\varepsilon_{CR}\cdot A_{2,0}}\right)+\frac{1}{A_{2,0}\cdot F_{2,1}}+\left(\frac{1-\varepsilon_{CR}}{\varepsilon_{CR}\cdot A_{1,0}}\right)}+\frac{\sigma\cdot\tau_{OG}\cdot\left(T2^4-T3^4\right)}{\left(\frac{1-\varepsilon_{CR}}{\varepsilon_{CR}\cdot A_{2,0}}\right)+\frac{1}{A_{2,0}\cdot F_{2,3}}+\left(\frac{1-\varepsilon_{CR}}{\varepsilon_{CR}\cdot A_{3,0}}\right)}\ldots=0\,W$$

$$+\frac{\sigma\cdot\tau_{OG}\cdot\left(T2^4-T4^4\right)}{\left(\frac{1-\varepsilon_{CR}}{\varepsilon_{CR}\cdot A_{2,0}}\right)+\frac{1}{A_{2,0}\cdot F_{2,4}}+\left(\frac{1-\varepsilon_{CR}}{\varepsilon_{CR}\cdot A_{4,0}}\right)}+\frac{\sigma\cdot\tau_{OG}\cdot\left(T2^4-T5^4\right)}{\left(\frac{1-\varepsilon_{CR}}{\varepsilon_{CR}\cdot A_{2,0}}\right)+\frac{1}{A_{2,0}\cdot F_{2,5}}+\left(\frac{1-\varepsilon_{stl}}{\varepsilon_{stl}\cdot A_{5,0}}\right)}+\frac{\sigma\cdot\tau_{OG}\cdot\left(T2^4-T6^4\right)}{\left(\frac{1-\varepsilon_{CR}}{\varepsilon_{CR}\cdot A_{2,0}}\right)+\frac{1}{A_{2,0}\cdot F_{2,6}}+\left(\frac{1-\varepsilon_{stl}}{\varepsilon_{stl}\cdot A_{6,0}}\right)}\ldots$$

$$+\frac{\sigma\cdot\tau_{OG}\cdot\left(T2^4-T7^4\right)}{\left(\frac{1-\varepsilon_{CR}}{\varepsilon_{CR}\cdot A_{2,0}}\right)+\frac{1}{A_{2,0}\cdot F_{2,7}}+\frac{1-\varepsilon_{stl}}{\varepsilon_{stl}\cdot A_{7,0}}}+\frac{\sigma\cdot\tau_{OG}\cdot\left(T2^4-T8^4\right)}{\left(\frac{1-\varepsilon_{CR}}{\varepsilon_{CR}\cdot A_{2,0}}\right)+\frac{1}{A_{2,0}\cdot F_{2,8}}+\frac{1-\varepsilon_{stl}}{\varepsilon_{stl}\cdot A_{8,0}}}+\frac{\sigma\cdot\tau_{OG}\cdot\left(T2^4-T9^4\right)}{\left(\frac{1-\varepsilon_{CR}}{\varepsilon_{CR}\cdot A_{2,0}}\right)+\frac{1}{A_{2,0}\cdot F_{2,9}}+\frac{1-\varepsilon_{stl}}{\varepsilon_{stl}\cdot A_{9,0}}}\ldots$$

$$+\xi_V\cdot A_{2,0}\cdot\left(\left|T2-T_{OG}\right|\right)^{\frac{1}{3}}\cdot\left(T2-T_{OG}\right)+\frac{A_{2,0}\cdot(T2-T12)}{\left(\frac{\delta_{CR}}{k_{CR}}\right)+\left(\frac{\delta_{sand}}{k_{sand}}\right)}+\frac{\sigma\cdot\alpha_{OG}\cdot\left(T2^4-T_{15}^4\right)}{\left(\frac{1-\varepsilon_{CR}}{\varepsilon_{CR}\cdot A_{2,0}}\right)+\frac{1}{A_{2,0}}}$$

Page 16

ARES CORPORATION	CALCULATION SHEET		
Project No. 0509206.01	Calculation No. 0509206.01-M-002	Rev. No. 1	Page 243 of 252
Title: DBVS ICV™ Off-Gas Hood Thermal Analysis			
Prepared By: P.S. Lowry	Date: 2.17.06	Checked By: S.R. Pierce	Date: 2.17.06

DBVS Off-Gas Hood Thermal Model

j=3

$$\frac{\sigma\cdot\varepsilon_{OG}\cdot\left(T3^4 - T_0^{\,4}\right)}{\left(\frac{1-\varepsilon_{melt}}{\varepsilon_{melt}\cdot A_{0,0}}\right)+\frac{1}{A_{0,0}\cdot F_{0,3}}+\left(\frac{1-\varepsilon_{CR}}{\varepsilon_{CR}\cdot A_{3,0}}\right)}+\frac{\sigma\cdot\varepsilon_{OG}\cdot\left(T3^4 - T1^4\right)}{\left(\frac{1-\varepsilon_{CR}}{\varepsilon_{CR}\cdot A_{3,0}}\right)+\frac{1}{A_{3,0}\cdot F_{3,1}}+\left(\frac{1-\varepsilon_{CR}}{\varepsilon_{CR}\cdot A_{3,0}}\right)}+\frac{\sigma\cdot\varepsilon_{OG}\cdot\left(T3^4 - T2^4\right)}{\left(\frac{1-\varepsilon_{CR}}{\varepsilon_{CR}\cdot A_{3,0}}\right)+\frac{1}{A_{3,0}\cdot F_{3,2}}+\left(\frac{1-\varepsilon_{CR}}{\varepsilon_{CR}\cdot A_{3,0}}\right)}\ldots = -Q\ W$$

$$+\frac{\sigma\cdot\varepsilon_{OG}\cdot\left(T3^4 - T4^4\right)}{\left(\frac{1-\varepsilon_{CR}}{\varepsilon_{CR}\cdot A_{3,0}}\right)+\frac{1}{A_{3,0}\cdot F_{3,4}}+\left(\frac{1-\varepsilon_{CR}}{\varepsilon_{CR}\cdot A_{4,0}}\right)}+\frac{\sigma\cdot\varepsilon_{OG}\cdot\left(T3^4 - T5^4\right)}{\left(\frac{1-\varepsilon_{CR}}{\varepsilon_{CR}\cdot A_{3,0}}\right)+\frac{1}{A_{3,0}\cdot F_{3,5}}+\left(\frac{1-\varepsilon_{sil}}{\varepsilon_{sil}\cdot A_{5,0}}\right)}+\frac{\sigma\cdot\varepsilon_{OG}\cdot\left(T3^4 - T6^4\right)}{\left(\frac{1-\varepsilon_{CR}}{\varepsilon_{CR}\cdot A_{3,0}}\right)+\frac{1}{A_{3,0}\cdot F_{3,6}}+\frac{1-\varepsilon_{sil}}{\varepsilon_{sil}\cdot A_{6,0}}}\ldots$$

$$+\frac{\sigma\cdot\varepsilon_{OG}\cdot\left(T3^4 - T8^4\right)}{\left(\frac{1-\varepsilon_{CR}}{\varepsilon_{CR}\cdot A_{3,0}}\right)+\frac{1}{A_{3,0}\cdot F_{3,8}}+\frac{1-\varepsilon_{sil}}{\varepsilon_{sil}\cdot A_{8,0}}}+\frac{\sigma\cdot\varepsilon_{OG}\cdot\left(T3^4 - T9^4\right)}{\left(\frac{1-\varepsilon_{CR}}{\varepsilon_{CR}\cdot A_{3,0}}\right)+\frac{1}{A_{3,0}\cdot F_{3,9}}+\frac{1-\varepsilon_{sil}}{\varepsilon_{sil}\cdot A_{9,0}}}+\xi_V\cdot A_{3,0}\cdot\left(\left|T3 - T_{OG}\right|\right)^{\frac{1}{3}}\cdot\left(T3 - T_{OG}\right)\ldots$$

$$+\frac{A_{3,0}\cdot(T3 - T13)}{\left(\frac{\delta_{CR}}{k_{CR}}\right)+\left(\frac{\delta_{semi}}{k_{semi}}\right)}+\frac{\sigma\cdot\alpha_{OG}\cdot\left(T3^4 - T_{15}^{\,4}\right)}{\left(\frac{1-\varepsilon_{CR}}{\varepsilon_{CR}\cdot A_{3,0}}\right)+\frac{1}{A_{3,0}}}$$

Page 19

ARES CORPORATION	CALCULATION SHEET		
Project No. 0509206.01	Calculation No. 0509206.01-M-002	Rev. No. 1	Page 244 of 252
Title: DBVS ICV™ Off-Gas Hood Thermal Analysis			
Prepared By: P.S. Lowery	Date: 2.17.06	Checked By: S.R. Pierce	Date: 2.17.06

DBVS Off-Gas Hood Thermal Model

j=4

$$\frac{\sigma\cdot\varepsilon_{OG}\cdot\left(T4^4-T_0^{\,4}\right)}{\left(\frac{1-\varepsilon_{melt}}{\varepsilon_{melt}\cdot A_{0,0}}\right)+\frac{1}{A_{0,0}\cdot F_{0,4}}+\left(\frac{1-\varepsilon_{CR}}{\varepsilon_{CR}\cdot A_{4,0}}\right)}+\frac{\sigma\cdot\varepsilon_{OG}\cdot\left(T4^4-T1^4\right)}{\left(\frac{1-\varepsilon_{CR}}{\varepsilon_{CR}\cdot A_{4,0}}\right)+\frac{1}{A_{4,0}\cdot F_{4,1}}+\left(\frac{1-\varepsilon_{CR}}{\varepsilon_{CR}\cdot A_{1,0}}\right)}+\frac{\sigma\cdot\varepsilon_{OG}\cdot\left(T4^4-T2^4\right)}{\left(\frac{1-\varepsilon_{CR}}{\varepsilon_{CR}\cdot A_{4,0}}\right)+\frac{1}{A_{4,0}\cdot F_{4,2}}+\left(\frac{1-\varepsilon_{CR}}{\varepsilon_{CR}\cdot A_{2,0}}\right)}\ldots=0\,W$$

$$+\frac{\sigma\cdot\varepsilon_{OG}\cdot\left(T4^4-T3^4\right)}{\left(\frac{1-\varepsilon_{CR}}{\varepsilon_{CR}\cdot A_{4,0}}\right)+\frac{1}{A_{4,0}\cdot F_{4,3}}+\left(\frac{1-\varepsilon_{CR}}{\varepsilon_{CR}\cdot A_{3,0}}\right)}+\frac{\sigma\cdot\varepsilon_{OG}\cdot\left(T4^4-T5^4\right)}{\left(\frac{1-\varepsilon_{CR}}{\varepsilon_{CR}\cdot A_{4,0}}\right)+\frac{1}{A_{4,0}\cdot F_{4,5}}+\left(\frac{1-\varepsilon_{sil}}{\varepsilon_{sil}\cdot A_{5,0}}\right)}+\frac{\sigma\cdot\varepsilon_{OG}\cdot\left(T4^4-T6^4\right)}{\left(\frac{1-\varepsilon_{CR}}{\varepsilon_{CR}\cdot A_{4,0}}\right)+\frac{1}{A_{4,0}\cdot F_{4,6}}+\frac{1-\varepsilon_{sil}}{\varepsilon_{sil}\cdot A_{6,0}}}\ldots$$

$$+\frac{\sigma\cdot\varepsilon_{OG}\cdot\left(T4^4-T7^4\right)}{\left(\frac{1-\varepsilon_{CR}}{\varepsilon_{CR}\cdot A_{4,0}}\right)+\frac{1}{A_{4,0}\cdot F_{4,7}}+\frac{1-\varepsilon_{sil}}{\varepsilon_{sil}\cdot A_{7,0}}}+\frac{\sigma\cdot\varepsilon_{OG}\cdot\left(T4^4-T8^4\right)}{\left(\frac{1-\varepsilon_{CR}}{\varepsilon_{CR}\cdot A_{4,0}}\right)+\frac{1}{A_{4,0}\cdot F_{4,8}}+\frac{1-\varepsilon_{sil}}{\varepsilon_{sil}\cdot A_{8,0}}}+\frac{\sigma\cdot\varepsilon_{OG}\cdot\left(T4^4-T9^4\right)}{\left(\frac{1-\varepsilon_{CR}}{\varepsilon_{CR}\cdot A_{4,0}}\right)+\frac{1}{A_{4,0}\cdot F_{4,9}}+\frac{1-\varepsilon_{sil}}{\varepsilon_{sil}\cdot A_{9,0}}}\ldots$$

$$+\frac{A_{4,0}\cdot(T4-T14)}{\left(\frac{\delta_{CR}}{k_{CR}}\right)+\left(\frac{\delta_{sand}}{k_{sand}}\right)}+\varepsilon_V\cdot A_{4,0}\cdot\left(\left|T4-T_{OG}\right|\right)^{\frac{1}{3}}\cdot\left(T4-T_{OG}\right)+\frac{\sigma\cdot\varepsilon_{OG}\cdot\left(T4^4-T_{15}^{\,4}\right)}{\left(\frac{1-\varepsilon_{CR}}{\varepsilon_{CR}\cdot A_{4,0}}\right)+\frac{1}{A_{4,0}}}$$

Page 20

ARES CORPORATION	CALCULATION SHEET		
Project No. 0509206.01	Calculation No. 0509206.01-M-002	Rev. No. 1	Page 245 of 252
Title: DBVS ICV™ Off-Gas Hood Thermal Analysis			
Prepared By: P.S. Lowery	Date: 2.17.06	Checked By: S.R. Pierce	Date: 2.17.06

DBVS Off-Gas Hood Thermal Model

j=5

$$\frac{\sigma\cdot\tau_{OG}\cdot\left(T5^4-T_0^{\,4}\right)}{\left(\frac{1-\varepsilon_{melt}}{\varepsilon_{melt}\cdot A_{0,0}}\right)+\frac{1}{A_{0,0}\cdot F_{0,5}}+\left(\frac{1-\varepsilon_{stl}}{\varepsilon_{stl}\cdot A_{5,0}}\right)}+\frac{\sigma\cdot\tau_{OG}\cdot\left(T5^4-T2^4\right)}{\left(\frac{1-\varepsilon_{stl}}{\varepsilon_{stl}\cdot A_{5,0}}\right)+\frac{1}{A_{5,0}\cdot F_{5,2}}+\left(\frac{1-\varepsilon_{CR}}{\varepsilon_{CR}\cdot A_{2,0}}\right)}\cdots$$

$$+\frac{\sigma\cdot\tau_{OG}\cdot\left(T5^4-T3^4\right)}{\left(\frac{1-\varepsilon_{stl}}{\varepsilon_{stl}\cdot A_{5,0}}\right)+\frac{1}{A_{5,0}\cdot F_{5,3}}+\left(\frac{1-\varepsilon_{CR}}{\varepsilon_{CR}\cdot A_{3,0}}\right)}+\frac{\sigma\cdot\tau_{OG}\cdot\left(T5^4-T4^4\right)}{\left(\frac{1-\varepsilon_{stl}}{\varepsilon_{stl}\cdot A_{5,0}}\right)+\frac{1}{A_{5,0}\cdot F_{5,4}}+\left(\frac{1-\varepsilon_{CR}}{\varepsilon_{CR}\cdot A_{4,0}}\right)}+\frac{\sigma\cdot\tau_{OG}\cdot\left(T5^4-T6^4\right)}{\left(\frac{1-\varepsilon_{stl}}{\varepsilon_{stl}\cdot A_{5,0}}\right)+\frac{1}{A_{5,0}\cdot F_{5,6}}+\frac{1-\varepsilon_{stl}}{\varepsilon_{stl}\cdot A_{6,0}}}\cdots$$

$$+\frac{\sigma\cdot\tau_{OG}\cdot\left(T5^4-T7^4\right)}{\left(\frac{1-\varepsilon_{stl}}{\varepsilon_{stl}\cdot A_{5,0}}\right)+\frac{1}{A_{5,0}\cdot F_{5,7}}+\frac{1-\varepsilon_{stl}}{\varepsilon_{stl}\cdot A_{7,0}}}+\frac{\sigma\cdot\tau_{OG}\cdot\left(T5^4-T8^4\right)}{\left(\frac{1-\varepsilon_{stl}}{\varepsilon_{stl}\cdot A_{5,0}}\right)+\frac{1}{A_{5,0}\cdot F_{5,8}}+\frac{1-\varepsilon_{stl}}{\varepsilon_{stl}\cdot A_{8,0}}}+\frac{\sigma\cdot\tau_{OG}\cdot\left(T5^4-T9^4\right)}{\left(\frac{1-\varepsilon_{stl}}{\varepsilon_{stl}\cdot A_{5,0}}\right)+\frac{1}{A_{5,0}\cdot F_{5,9}}+\frac{1-\varepsilon_{stl}}{\varepsilon_{stl}\cdot A_{9,0}}}\cdots$$

$$+\frac{\sigma\cdot\left(T5^4-T_{amb}^{\,4}\right)}{\left(\frac{1-\varepsilon_{stl}}{\varepsilon_{stl}\cdot A_{5,0}}\right)+\frac{1}{A_{5,0}}}+\xi_V\cdot A_{5,0}\cdot\left[\left|T5-\left(\frac{T5+T10}{2}\right)\right|\right]^{\frac{1}{3}}\cdot\left[T5-\left(\frac{T5+T10}{2}\right)\right]+\xi_V\cdot A_{5,0}\cdot\left(\left|T5-T_{OA}\right|\right)^{\frac{1}{3}}\cdot\left(T5-T_{OA}\right)+\frac{\sigma\cdot\alpha_{OG}\cdot\left(T5^4-T_{15}^{\,4}\right)}{\left(\frac{1-\varepsilon_{stl}}{\varepsilon_{stl}\cdot A_{5,0}}\right)+\frac{1}{A_{5,0}}}$$

$$=-0\ \mathrm{W}$$

Page 21

ARES CORPORATION	CALCULATION SHEET		
Project No. 0509206.01	Calculation No. 0509206.01-M-002	Rev. No. 1	Page 246 of 252
Title: DBVS ICV™ Off-Gas Hood Thermal Analysis			
Prepared By: P.S. Lowery	Date: 2.17.06	Checked By: S.R. Pierce	Date: 2.17.06

DBVS Off-Gas Hood Thermal Model

$j=6$

$$\frac{\sigma\cdot\tau_{OG}\cdot\left(T6^4-T_0^{\,4}\right)}{\left(\frac{1-\varepsilon_{melt}}{\varepsilon_{melt}\cdot A_{0,0}}\right)+\frac{1}{A_{0,0}\cdot F_{0,6}}+\left(\frac{1-\varepsilon_{stl}}{\varepsilon_{stl}\cdot A_{6,0}}\right)}+\frac{\sigma\cdot\tau_{OG}\cdot\left(T6^4-T1^4\right)}{\left(\frac{1-\varepsilon_{stl}}{\varepsilon_{stl}\cdot A_{6,0}}\right)+\frac{1}{A_{6,0}\cdot F_{6,1}}+\left(\frac{1-\varepsilon_{CR}}{\varepsilon_{CR}\cdot A_{1,0}}\right)}+\frac{\sigma\cdot\tau_{OG}\cdot\left(T6^4-T2^4\right)}{\left(\frac{1-\varepsilon_{stl}}{\varepsilon_{stl}\cdot A_{6,0}}\right)+\frac{1}{A_{6,0}\cdot F_{6,2}}+\left(\frac{1-\varepsilon_{CR}}{\varepsilon_{CR}\cdot A_{2,0}}\right)}\cdots = 0\ W$$

$$+\frac{\sigma\cdot\tau_{OG}\cdot\left(T6^4-T3^4\right)}{\left(\frac{1-\varepsilon_{stl}}{\varepsilon_{stl}\cdot A_{6,0}}\right)+\frac{1}{A_{6,0}\cdot F_{6,3}}+\left(\frac{1-\varepsilon_{CR}}{\varepsilon_{CR}\cdot A_{3,0}}\right)}+\frac{\sigma\cdot\tau_{OG}\cdot\left(T6^4-T4^4\right)}{\left(\frac{1-\varepsilon_{stl}}{\varepsilon_{stl}\cdot A_{6,0}}\right)+\frac{1}{A_{6,0}\cdot F_{6,4}}+\left(\frac{1-\varepsilon_{CR}}{\varepsilon_{CR}\cdot A_{4,0}}\right)}+\frac{\sigma\cdot\tau_{OG}\cdot\left(T6^4-T5^4\right)}{\left(\frac{1-\varepsilon_{stl}}{\varepsilon_{stl}\cdot A_{6,0}}\right)+\frac{1}{A_{6,0}\cdot F_{6,5}}+\frac{1-\varepsilon_{stl}}{\varepsilon_{stl}\cdot A_{5,0}}}\cdots$$

$$+\frac{\sigma\cdot\tau_{OG}\cdot\left(T6^4-T7^4\right)}{\left(\frac{1-\varepsilon_{stl}}{\varepsilon_{stl}\cdot A_{6,0}}\right)+\frac{1}{A_{6,0}\cdot F_{6,7}}+\frac{1-\varepsilon_{stl}}{\varepsilon_{stl}\cdot A_{7,0}}}+\frac{\sigma\cdot\tau_{OG}\cdot\left(T6^4-T8^4\right)}{\left(\frac{1-\varepsilon_{stl}}{\varepsilon_{stl}\cdot A_{6,0}}\right)+\frac{1}{A_{6,0}\cdot F_{6,8}}+\frac{1-\varepsilon_{stl}}{\varepsilon_{stl}\cdot A_{8,0}}}+\frac{\sigma\cdot\tau_{OG}\cdot\left(T6^4-T9^4\right)}{\left(\frac{1-\varepsilon_{stl}}{\varepsilon_{stl}\cdot A_{6,0}}\right)+\frac{1}{A_{6,0}\cdot F_{6,9}}+\frac{1-\varepsilon_{stl}}{\varepsilon_{stl}\cdot A_{9,0}}}\cdots$$

$$+\frac{\sigma\cdot\left(T6^4-T10^4\right)}{\left(\frac{1-\varepsilon_{stl}}{\varepsilon_{stl}\cdot A_{6,0}}\right)+\frac{1}{A_{6,0}\cdot F_{6,10}}+\left(\frac{1-\varepsilon_{stl}}{\varepsilon_{stl}\cdot A_{10,0}}\right)}+\frac{\sigma\cdot\left(T6^4-T_{amb}^{\,4}\right)}{\left(\frac{1-\varepsilon_{stl}}{\varepsilon_{stl}\cdot A_{6,0}}\right)+\frac{1}{A_{6,0}\cdot\left(1-F_{6,10}\right)}}+\xi_V\cdot\left(A_{6,0}+A_{6,2}\right)\cdot\left[T6-\left(\frac{T6+T10}{2}\right)\right]^{\frac{1}{3}}\cdot\left[T6-\left(\frac{T6+T10}{2}\right)\right]\cdots$$

$$+\xi_H\cdot A_{6,1}\cdot\left[T6-\left(\frac{T6+T10}{2}\right)\right]^{\frac{1}{3}}\cdot\left[T6-\left(\frac{T6+T10}{2}\right)\right]+\xi_V\cdot A_{6,0}\cdot\left(\left|T6-T_{OG}\right|\right)^{\frac{1}{3}}\cdot\left(T6-T_{OG}\right)+\frac{\sigma\cdot\alpha_{OG}\cdot\left(T6^4-T_{15}^{\,4}\right)}{\left(\frac{1-\varepsilon_{CR}}{\varepsilon_{stl}\cdot A_{6,0}}\right)+\frac{1}{A_{6,0}}}$$

Page 22

ARES CORPORATION	CALCULATION SHEET		
Project No. 0509206.01	Calculation No. 0509206.01-M-002	Rev. No. 1	Page 247 of 252
Title: DBVS ICV™ Off-Gas Hood Thermal Analysis			
Prepared By: P.S. Lowery	Date: 2.17.06	Checked By: S.R. Pierce	Date: 2.17.06

DBVS Off-Gas Hood Thermal Model

$j=7$

$$\frac{\sigma\cdot\tau_{OG}\cdot\left(T7^4-T_0^4\right)}{\left(\frac{1-\varepsilon_{melt}}{\varepsilon_{melt}\cdot A_{0,0}}\right)+\frac{1}{A_{0,0}\cdot F_{0,7}}+\left(\frac{1-\varepsilon_{stl}}{\varepsilon_{stl}\cdot A_{7,0}}\right)}+\frac{\sigma\cdot\tau_{OG}\cdot\left(T7^4-T1^4\right)}{\left(\frac{1-\varepsilon_{stl}}{\varepsilon_{stl}\cdot A_{7,0}}\right)+\frac{1}{A_{7,0}\cdot F_{7,1}}+\left(\frac{1-\varepsilon_{CR}}{\varepsilon_{CR}\cdot A_{1,0}}\right)}+\frac{\sigma\cdot\tau_{OG}\cdot\left(T7^4-T2^4\right)}{\left(\frac{1-\varepsilon_{stl}}{\varepsilon_{stl}\cdot A_{7,0}}\right)+\frac{1}{A_{7,0}\cdot F_{7,2}}+\left(\frac{1-\varepsilon_{CR}}{\varepsilon_{CR}\cdot A_{2,0}}\right)}\cdots$$

$$+\frac{\sigma\cdot\tau_{OG}\cdot\left(T7^4-T4^4\right)}{\left(\frac{1-\varepsilon_{stl}}{\varepsilon_{stl}\cdot A_{7,0}}\right)+\frac{1}{A_{7,0}\cdot F_{7,4}}+\left(\frac{1-\varepsilon_{CR}}{\varepsilon_{CR}\cdot A_{4,0}}\right)}+\frac{\sigma\cdot\tau_{OG}\cdot\left(T7^4-T5^4\right)}{\left(\frac{1-\varepsilon_{stl}}{\varepsilon_{stl}\cdot A_{7,0}}\right)+\frac{1}{A_{7,0}\cdot F_{7,5}}+\frac{1-\varepsilon_{stl}}{\varepsilon_{stl}\cdot A_{5,0}}}+\frac{\sigma\cdot\tau_{OG}\cdot\left(T7^4-T6^4\right)}{\left(\frac{1-\varepsilon_{stl}}{\varepsilon_{stl}\cdot A_{7,0}}\right)+\frac{1}{A_{7,0}\cdot F_{7,6}}+\frac{1-\varepsilon_{stl}}{\varepsilon_{stl}\cdot A_{6,0}}}\cdots$$

$$+\frac{\sigma\cdot\tau_{OG}\cdot\left(T7^4-T8^4\right)}{\left(\frac{1-\varepsilon_{stl}}{\varepsilon_{stl}\cdot A_{7,0}}\right)+\frac{1}{A_{7,0}\cdot F_{7,8}}+\frac{1-\varepsilon_{stl}}{\varepsilon_{stl}\cdot A_{8,0}}}+\frac{\sigma\cdot\tau_{OG}\cdot\left(T7^4-T9^4\right)}{\left(\frac{1-\varepsilon_{stl}}{\varepsilon_{stl}\cdot A_{7,0}}\right)+\frac{1}{A_{7,0}\cdot F_{7,9}}+\frac{1-\varepsilon_{stl}}{\varepsilon_{stl}\cdot A_{9,0}}}\cdots$$

$$+\frac{\sigma\cdot\left(T7^4-T_{amb}^4\right)}{\left(\frac{1-\varepsilon_{stl}}{\varepsilon_{stl}\cdot A_{7,0}}\right)+\frac{1}{A_{7,0}}}+\xi_V\cdot A_{7,0}\cdot\left[\left|T7-\left(\frac{T7+T10}{2}\right)\right|\right]^{\frac{1}{3}}\cdot\left[T7-\left(\frac{T7+T10}{2}\right)\right]+\xi_V\cdot A_{7,0}\cdot\left(\left|T7-T_{OG}\right|\right)^{\frac{1}{3}}\cdot\left(T7-T_{OG}\right)+\frac{\sigma\cdot\tau_{OG}\cdot\left(T7^4-T_{15}^4\right)}{\left(\frac{1-\varepsilon_{stl}}{\varepsilon_{stl}\cdot A_{7,0}}\right)+\frac{1}{A_{7,0}}}$$

$= -0\ W$

Page 23

ARES CORPORATION	CALCULATION SHEET		
Project No. 0509206.01	Calculation No. 0509206.01-M-002	Rev. No. 1	Page 248 of 252
Title: DBVS ICV™ Off-Gas Hood Thermal Analysis			
Prepared By: P.S. Lowery	Date: 2.17.06	Checked By: S.R. Pierce	Date: 2.17.06

DBVS Off-Gas Hood Thermal Model

$j=8$

$$\frac{\sigma\cdot\tau_{OG}\cdot\left(T8^4-T0^4\right)}{\left(\frac{1-\varepsilon_{melt}}{\varepsilon_{melt}\cdot A_{0,0}}\right)+\frac{1}{A_{0,0}\cdot F_{0,8}}+\left(\frac{1-\varepsilon_{stl}}{\varepsilon_{stl}\cdot A_{8,0}}\right)}+\frac{\sigma\cdot\tau_{OG}\cdot\left(T8^4-T1^4\right)}{\left(\frac{1-\varepsilon_{stl}}{\varepsilon_{stl}\cdot A_{8,0}}\right)+\frac{1}{A_{8,0}\cdot F_{8,1}}+\left(\frac{1-\varepsilon_{CR}}{\varepsilon_{CR}\cdot A_{1,0}}\right)}+\frac{\sigma\cdot\tau_{OG}\cdot\left(T8^4-T2^4\right)}{\left(\frac{1-\varepsilon_{stl}}{\varepsilon_{stl}\cdot A_{8,0}}\right)+\frac{1}{A_{8,0}\cdot F_{8,2}}+\left(\frac{1-\varepsilon_{CR}}{\varepsilon_{CR}\cdot A_{2,0}}\right)}\cdots$$

$$+\frac{\sigma\cdot\tau_{OG}\cdot\left(T8^4-T3^4\right)}{\left(\frac{1-\varepsilon_{stl}}{\varepsilon_{stl}\cdot A_{8,0}}\right)+\frac{1}{A_{8,0}\cdot F_{8,3}}+\left(\frac{1-\varepsilon_{CR}}{\varepsilon_{CR}\cdot A_{3,0}}\right)}+\frac{\sigma\cdot\tau_{OG}\cdot\left(T8^4-T4^4\right)}{\left(\frac{1-\varepsilon_{stl}}{\varepsilon_{stl}\cdot A_{8,0}}\right)+\frac{1}{A_{8,0}\cdot F_{8,4}}+\left(\frac{1-\varepsilon_{CR}}{\varepsilon_{CR}\cdot A_{4,0}}\right)}+\frac{\sigma\cdot\tau_{OG}\cdot\left(T8^4-T5^4\right)}{\left(\frac{1-\varepsilon_{stl}}{\varepsilon_{stl}\cdot A_{8,0}}\right)+\frac{1}{A_{8,0}\cdot F_{8,5}}+\frac{1-\varepsilon_{stl}}{\varepsilon_{stl}\cdot A_{5,0}}}\cdots$$

$$+\frac{\sigma\cdot\tau_{OG}\cdot\left(T8^4-T6^4\right)}{\left(\frac{1-\varepsilon_{stl}}{\varepsilon_{stl}\cdot A_{8,0}}\right)+\frac{1}{A_{8,0}\cdot F_{8,6}}+\frac{1-\varepsilon_{stl}}{\varepsilon_{stl}\cdot A_{6,0}}}+\frac{\sigma\cdot\tau_{OG}\cdot\left(T8^4-T7^4\right)}{\left(\frac{1-\varepsilon_{stl}}{\varepsilon_{stl}\cdot A_{8,0}}\right)+\frac{1}{A_{8,0}\cdot F_{8,7}}+\frac{1-\varepsilon_{stl}}{\varepsilon_{stl}\cdot A_{7,0}}}+\frac{\sigma\cdot\tau_{OG}\cdot\left(T8^4-T9^4\right)}{\left(\frac{1-\varepsilon_{stl}}{\varepsilon_{stl}\cdot A_{8,0}}\right)+\frac{1}{A_{8,0}\cdot F_{8,9}}+\frac{1-\varepsilon_{stl}}{\varepsilon_{stl}\cdot A_{9,0}}}\cdots$$

$$+\frac{\sigma\cdot\left(T8^4-T10^4\right)}{\left(\frac{1-\varepsilon_{stl}}{\varepsilon_{stl}\cdot A_{8,0}}\right)+\frac{1}{A_{8,0}\cdot F_{8,10}}+\left(\frac{1-\varepsilon_{stl}}{\varepsilon_{stl}\cdot A_{10,0}}\right)}+\frac{\sigma\cdot\left(T8^4-T_{amb}^4\right)}{\left(\frac{1-\varepsilon_{stl}}{\varepsilon_{stl}\cdot A_{8,0}}\right)+\frac{1}{A_{8,0}\cdot\left(1-F_{8,10}\right)}}+\xi_V\cdot\left(A_{8,0}+A_{8,2}\right)\cdot\left[T8-\left(\frac{T8+T10}{2}\right)\right]^{\frac{1}{3}}\cdot\left[T8-\left(\frac{T8+T10}{2}\right)\right]\cdots$$

$$+\xi_{HU}\cdot A_{8,1}\cdot\left[T8-\left(\frac{T8+T10}{2}\right)\right]^{\frac{1}{3}}\cdot\left[T8-\left(\frac{T8+T10}{2}\right)\right]+\xi_V\cdot A_{8,0}\cdot\left(\left|T8-T_{OG}\right|\right)^{\frac{1}{3}}\cdot\left(T8-T_{OG}\right)+\frac{\sigma\cdot\alpha_{OG}\cdot\left(T8^4-T_{15}^4\right)}{\left(\frac{1-\varepsilon_{stl}}{\varepsilon_{stl}\cdot A_{8,0}}\right)+\frac{1}{A_{8,0}}}=0\,W$$

Page 24

ARES CORPORATION	CALCULATION SHEET		
Project No. 0509206.01	Calculation No. 0509206.01-M-002	Rev. No. 1	Page 249 of 252
Title: DBVS ICV™ Off-Gas Hood Thermal Analysis			
Prepared By: P.S. Lowery	Date: 2.17.06	Checked By: S.R. Pierce	Date: 2.17.06

DBVS Off-Gas Hood Thermal Model

$j=9$

$$\frac{\sigma\cdot\varepsilon_{OG}\cdot\left(T9^4-T0^4\right)}{\left(\frac{1-\varepsilon_{melt}}{\varepsilon_{melt}\cdot A_{0,0}}\right)+\frac{1}{A_{0,0}\cdot F_{0,9}}+\left(\frac{1-\varepsilon_{stl}}{\varepsilon_{stl}\cdot A_{9,0}}\right)}+\frac{\sigma\cdot\varepsilon_{OG}\cdot\left(T9^4-T1^4\right)}{\left(\frac{1-\varepsilon_{stl}}{\varepsilon_{stl}\cdot A_{9,0}}\right)+\frac{1}{A_{9,0}\cdot F_{9,1}}+\left(\frac{1-\varepsilon_{CR}}{\varepsilon_{CR}\cdot A_{1,0}}\right)}+\frac{\sigma\cdot\varepsilon_{OG}\cdot\left(T9^4-T2^4\right)}{\left(\frac{1-\varepsilon_{stl}}{\varepsilon_{stl}\cdot A_{9,0}}\right)+\frac{1}{A_{9,0}\cdot F_{9,2}}+\left(\frac{1-\varepsilon_{CR}}{\varepsilon_{CR}\cdot A_{2,0}}\right)}\cdots=-0\ W$$

$$+\frac{\sigma\cdot\varepsilon_{OG}\cdot\left(T9^4-T3^4\right)}{\left(\frac{1-\varepsilon_{stl}}{\varepsilon_{stl}\cdot A_{9,0}}\right)+\frac{1}{A_{9,0}\cdot F_{9,3}}+\left(\frac{1-\varepsilon_{CR}}{\varepsilon_{CR}\cdot A_{3,0}}\right)}+\frac{\sigma\cdot\varepsilon_{OG}\cdot\left(T9^4-T4^4\right)}{\left(\frac{1-\varepsilon_{stl}}{\varepsilon_{stl}\cdot A_{9,0}}\right)+\frac{1}{A_{9,0}\cdot F_{9,4}}+\left(\frac{1-\varepsilon_{CR}}{\varepsilon_{CR}\cdot A_{4,0}}\right)}+\frac{\sigma\cdot\varepsilon_{OG}\cdot\left(T9^4-T5^4\right)}{\left(\frac{1-\varepsilon_{stl}}{\varepsilon_{stl}\cdot A_{9,0}}\right)+\frac{1}{A_{9,0}\cdot F_{9,5}}+\frac{1-\varepsilon_{stl}}{\varepsilon_{stl}\cdot A_{5,0}}}\cdots$$

$$+\frac{\sigma\cdot\varepsilon_{OG}\cdot\left(T9^4-T6^4\right)}{\left(\frac{1-\varepsilon_{stl}}{\varepsilon_{stl}\cdot A_{9,0}}\right)+\frac{1}{A_{9,0}\cdot F_{9,6}}+\frac{1-\varepsilon_{stl}}{\varepsilon_{stl}\cdot A_{6,0}}}+\frac{\sigma\cdot\varepsilon_{OG}\cdot\left(T9^4-T7^4\right)}{\left(\frac{1-\varepsilon_{stl}}{\varepsilon_{stl}\cdot A_{9,0}}\right)+\frac{1}{A_{9,0}\cdot F_{9,7}}+\frac{1-\varepsilon_{stl}}{\varepsilon_{stl}\cdot A_{7,0}}}+\frac{\sigma\cdot\varepsilon_{OG}\cdot\left(T9^4-T8^4\right)}{\left(\frac{1-\varepsilon_{stl}}{\varepsilon_{stl}\cdot A_{9,0}}\right)+\frac{1}{A_{9,0}\cdot F_{9,8}}+\frac{1-\varepsilon_{stl}}{\varepsilon_{stl}\cdot A_{8,0}}}\cdots$$

$$+\frac{\sigma\cdot\left(T9^4-T10^4\right)}{\left(\frac{1-\varepsilon_{stl}}{\varepsilon_{stl}\cdot A_{9,0}}\right)+\frac{1}{A_{9,0}\cdot F_{9,10}}+\left(\frac{1-\varepsilon_{stl}}{\varepsilon_{stl}\cdot A_{10,0}}\right)}+\xi_V\cdot\left(A_{9,0}+A_{9,2}\right)\cdot\left[\left|T9-\left(\frac{T9+T10}{2}\right)\right|\right]^{\frac{1}{3}}\cdot\left[T9-\left(\frac{T9+T10}{2}\right)\right]\cdots$$

$$+\xi_{HU}\cdot A_{9,1}\cdot\left[\left|T9-\left(\frac{T9+T10}{2}\right)\right|\right]^{\frac{1}{3}}\cdot\left[T9-\left(\frac{T9+T10}{2}\right)\right]+\xi_{HD}\cdot A_{9,0}\cdot\left(\left|T9-T_{OG}\right|\right)^{\frac{1}{3}}\cdot\left(T9-T_{OG}\right)+\frac{\sigma\cdot\varepsilon_{OG}\cdot\left(T9^4-T_{1,g}^4\right)}{\left(\frac{1-\varepsilon_{stl}}{\varepsilon_{stl}\cdot A_{9,0}}\right)+\frac{1}{A_{9,0}}}$$

Page 25

ARES CORPORATION	CALCULATION SHEET		
Project No. 0509206.01	Calculation No. 0509206.01-M-002	Rev. No. 1	Page 250 of 252
Title: DBVS ICV™ Off-Gas Hood Thermal Analysis			
Prepared By: P.S. Lowery	Date: 2.17.06	Checked By: S.R. Pierce	Date: 2.17.06

DBVS Off-Gas Hood Thermal Model

j=10

$$\frac{\sigma\cdot\left(T10^4 - T6^4\right)}{\left(\frac{1-\varepsilon_{stl}}{\varepsilon_{stl}\cdot A_{10,0}}\right) + \frac{1}{A_{6,0}\cdot F_{6,10}} + \frac{1-\varepsilon_{stl}}{\varepsilon_{stl}\cdot A_{6,0}}} + \frac{\sigma\cdot\left(T10^4 - T8^4\right)}{\left(\frac{1-\varepsilon_{stl}}{\varepsilon_{stl}\cdot A_{10,0}}\right) + \frac{1}{A_{8,0}\cdot F_{8,10}} + \frac{1-\varepsilon_{stl}}{\varepsilon_{stl}\cdot A_{8,0}}} \ldots \qquad = -0\ W$$

$$+ \frac{\sigma\cdot\left(T10^4 - T9^4\right)}{\left(\frac{1-\varepsilon_{stl}}{\varepsilon_{stl}\cdot A_{10,0}}\right) + \frac{1}{A_{9,0}\cdot F_{9,10}} + \frac{1-\varepsilon_{stl}}{\varepsilon_{stl}\cdot A_{9,0}}} + \frac{\sigma\cdot\left(T10^4 - T_{amb}^4\right)}{\left(\frac{1-\varepsilon_{stl}}{\varepsilon_{stl}\cdot A_{10,0}}\right) + \frac{1}{A_{10,0}\cdot\left(1 - \frac{A_{6,0}\cdot F_{6,10}}{A_{10,0}} - \frac{A_{8,0}\cdot F_{8,10}}{A_{10,0}} - \frac{A_{9,0}\cdot F_{9,10}}{A_{10,0}}\right)}} \ldots$$

$$+ \xi_{HD}\cdot A_{10,0}\cdot\left[T10 - \left(\frac{T9 + T10}{2}\right)\right]\cdot\left|T10 - \left(\frac{T9 + T10}{2}\right)\right|^{\frac{1}{3}} + \frac{A_{10,0}\cdot\left(T10 - T_{AWTB}\right)}{\frac{\delta_{floor}}{k_{stl}}}$$

j=11

$$\frac{A_{11,0}\cdot(T11 - T1)}{\left(\frac{\delta_{CR}}{k_{CR}}\right) + \left(\frac{\delta_{sand}}{k_{sand}}\right)} + \frac{\sigma\cdot\left(T11^4 - T_{amb}^4\right)}{\left(\frac{1-\varepsilon_{stl}}{\varepsilon_{stl}\cdot A_{T1,0}}\right) + \frac{1}{A_{11,0}}} + \xi_V\cdot A_{11,0}\cdot\left(\left|T11 - T_{amb}\right|\right)^{\frac{1}{3}}\cdot\left(T11 - T_{amb}\right) = 0\ W$$

j=12

$$\frac{A_{12,0}\cdot(T12 - T2)}{\left(\frac{\delta_{CR}}{k_{CR}}\right) + \left(\frac{\delta_{sand}}{k_{sand}}\right)} + \frac{\sigma\cdot\left(T12^4 - T_{amb}^4\right)}{\left(\frac{1-\varepsilon_{stl}}{\varepsilon_{stl}\cdot A_{12,0}}\right) + \frac{1}{A_{12,0}}} + \xi_V\cdot A_{12,0}\cdot\left(\left|T12 - T_{amb}\right|\right)^{\frac{1}{3}}\cdot\left(T12 - T_{amb}\right) = -0\ W$$

Page 26

ARES CORPORATION	CALCULATION SHEET		
Project No. 0509206.01	Calculation No. 0509206.01-M-002	Rev. No. 1	Page 251 of 252
Title: DBVS ICV™ Off-Gas Hood Thermal Analysis			
Prepared By: P.S. Lowery	Date: 2.17.06	Checked By: S.R. Pierce	Date: 2.17.06

DBVS Off-Gas Hood Thermal Model

j=13

$$\frac{A_{13,0}\cdot(T13-T3)}{\left(\frac{\delta_{CR}}{k_{CR}}\right)+\left(\frac{\delta_{sand}}{k_{sand}}\right)}+\frac{\sigma\cdot\left(T13^4-T_{amb}^4\right)}{\left(\frac{1-\varepsilon_{sfl}}{\varepsilon_{sfl}\cdot A_{13,0}}\right)+\frac{1}{A_{13,0}}}+\xi_V\cdot A_{13,0}\cdot\left(\left|T13-T_{amb}\right|\right)^{\frac{1}{3}}\cdot\left(T13-T_{amb}\right)=0\ W$$

j=14

$$\frac{A_{14,0}\cdot(T14-T4)}{\left(\frac{\delta_{CR}}{k_{CR}}\right)+\left(\frac{\delta_{sand}}{k_{sand}}\right)}+\frac{\sigma\cdot\left(T14^4-T_{amb}^4\right)}{\left(\frac{1-\varepsilon_{sfl}}{\varepsilon_{sfl}\cdot A_{14,0}}\right)+\frac{1}{A_{14,0}}}+\xi_V\cdot A_{14,0}\cdot\left(\left|T14-T_{amb}\right|\right)^{\frac{1}{3}}\cdot\left(T14-T_{amb}\right)=-0\ W$$

Page 27

ARES CORPORATION	CALCULATION SHEET		
Project No. 0509206.01	Calculation No. 0509206.01-M-002	Rev. No. 1	Page 252 of 252
Title: DBVS ICV™ Off-Gas Hood Thermal Analysis			
Prepared By: P.S. Lowery	Date: 2.17.06	Checked By: S.R. Pierce	Date: 2.17.06

DBVS Off-Gas Hood Thermal Model

Total radiant heat loss from the melt surface ...

$$\frac{\sigma\cdot\left(T1^4 - T_0^4\right)}{\left(\frac{1-\varepsilon_{melt}}{\varepsilon_{melt}\cdot A_{0,0}}\right) + \frac{1}{A_{0,0}\cdot F_{0,1}} + \left(\frac{1-\varepsilon_{CR}}{\varepsilon_{CR}\cdot A_{1,0}}\right)} + \frac{\sigma\cdot\left(T2^4 - T_0^4\right)}{\left(\frac{1-\varepsilon_{melt}}{\varepsilon_{melt}\cdot A_{0,0}}\right) + \frac{1}{A_{0,0}\cdot F_{0,2}} + \left(\frac{1-\varepsilon_{CR}}{\varepsilon_{CR}\cdot A_{2,0}}\right)} + \frac{\sigma\cdot\left(T3^4 - T_0^4\right)}{\left(\frac{1-\varepsilon_{melt}}{\varepsilon_{melt}\cdot A_{0,0}}\right) + \frac{1}{A_{0,0}\cdot F_{0,3}} + \left(\frac{1-\varepsilon_{CR}}{\varepsilon_{CR}\cdot A_{3,0}}\right)} \ldots = -198.0\,kW$$

$$+ \frac{\sigma\cdot\left(T4^4 - T_0^4\right)}{\left(\frac{1-\varepsilon_{melt}}{\varepsilon_{melt}\cdot A_{0,0}}\right) + \frac{1}{A_{0,0}\cdot F_{0,4}} + \left(\frac{1-\varepsilon_{CR}}{\varepsilon_{CR}\cdot A_{4,0}}\right)} + \frac{\sigma\cdot\left(T5^4 - T_0^4\right)}{\left(\frac{1-\varepsilon_{melt}}{\varepsilon_{melt}\cdot A_{0,0}}\right) + \frac{1}{A_{0,0}\cdot F_{0,5}} + \left(\frac{1-\varepsilon_{stl}}{\varepsilon_{stl}\cdot A_{5,0}}\right)} + \frac{\sigma\cdot\left(T6^4 - T_0^4\right)}{\left(\frac{1-\varepsilon_{melt}}{\varepsilon_{melt}\cdot A_{0,0}}\right) + \frac{1}{A_{0,0}\cdot F_{0,6}} + \left(\frac{1-\varepsilon_{stl}}{\varepsilon_{stl}\cdot A_{6,0}}\right)} \ldots$$

$$+ \frac{\sigma\cdot\left(T7^4 - T_0^4\right)}{\left(\frac{1-\varepsilon_{melt}}{\varepsilon_{melt}\cdot A_{0,0}}\right) + \frac{1}{A_{0,0}\cdot F_{0,7}} + \left(\frac{1-\varepsilon_{stl}}{\varepsilon_{stl}\cdot A_{7,0}}\right)} + \frac{\sigma\cdot\left(T8^4 - T_0^4\right)}{\left(\frac{1-\varepsilon_{melt}}{\varepsilon_{melt}\cdot A_{0,0}}\right) + \frac{1}{A_{0,0}\cdot F_{0,8}} + \left(\frac{1-\varepsilon_{stl}}{\varepsilon_{stl}\cdot A_{8,0}}\right)} + \frac{\sigma\cdot\left(T9^4 - T_0^4\right)}{\left(\frac{1-\varepsilon_{melt}}{\varepsilon_{melt}\cdot A_{0,0}}\right) + \frac{1}{A_{0,0}\cdot F_{0,9}} + \left(\frac{1-\varepsilon_{stl}}{\varepsilon_{stl}\cdot A_{9,0}}\right)}$$

$$F_{0,1} + F_{0,2} + F_{0,3} + F_{0,4} + F_{0,5} + F_{0,6} + F_{0,7} + F_{0,8} + F_{0,9} = 1$$

Compute the average hood temperature ...

$$T_{HA} := \frac{A_{5,0}\cdot T5C + A_{6,0}\cdot T6C + A_{7,0}\cdot T7C + A_{8,0}\cdot T8C + A_{9,0}\cdot T9C}{A_{5,0} + A_{6,0} + A_{7,0} + A_{8,0} + A_{9,0}}$$

$T_{HA} = 427.2$ $\quad T_{HAF} := CtoF(T_{HA})$ $\quad T_{HAF} = 800.9$

Heat flux through AWTE floor ...

$$q_{AWTE} := \frac{T10 - T_{AWTE}}{\frac{s_{floor}}{k_{stl}}}$$

$q_{AWTE} = 5.1\,\frac{kW}{m^2}$ $\quad Q_{AWTE} := A_{10,0}\cdot q_{AWTE}$ $\quad Q_{AWTE} = 152.6\,kW$

Page 27

Subcontractor Calculation Review Checklist.

Subject: Heat Transfer Analysis – ICV™ Lid

The subject document has been reviewed by the undersigned.
The checker reviewed and verified the following items as applicable.

Documents Reviewed: **145579-D-CA-060, Rev. A**

Analysis Performed By: **AMEC/DMJM**

- Design Input
- Basic Assumptions
- Approach/Design Methodology
- Consistency with item or document supported by the calculation
- Conclusion/Results Interpretation
- Impact on existing requirements
- _____

Checker (printed name, signature, and date): **M. W. Leonard** M.W. L 3/27/06

Organizational Manager (printed name, signature and date): **D. H. Shuford** David H Shuford 4/5/06

145579-D-CA-011

amec

CALCULATION SHEET

CALC. NO.: 145579-D-CA-011 **REV:** 4 **DATE:** April 19, 2006

CALC. TITLE: ICV™ Box Structural Analysis

PROJECT NO.: 145579 **PROJECT TITLE:** Final DBVS Design

Design Verification Required: ☒ Yes ☐ No

Calculation Type: ☐ Scoping ☐ Preliminary ☒ Final

Superseded by Calculation No.: ☐ Voided

ORIGINAL AND REVISED CALCULATIONS/ANALYSIS APPROVAL

REV.	ORIGINATOR:	DATE:	CHECKED:	DATE:	APPROVED	DATE
B	Michael Paul	07-Mar-05	Tom Wilson	07-Mar-05	Tony Heim	08-Mar-05
C	James Van Corbach	21-Oct-05	Mike Custer	21-Oct-05		
0	James Van Corbach	18-Jan-06	Mike Custer	18-Jan-06	Ja-Kael Luey	18-Jan-06
1	James Van Corbach	24-Jan-06	Mike Custer	24-Jan-06	Ja-Kael Luey	24-Jan-06
2	James Van Corbach	29-Mar-06	Kevin Jones	29-Mar-06	Ja-Kael Luey	29-Mar-06
3	James Van Corbach	17-Apr-06	Doug Chenault	17-Apr-06	Ja-Kael Luey	17-Apr-06
4	James Van Corbach	4-19-06	Doug Chenault	4-19-06	Ja-Kael Luey	19-APR-06

JVC Douglas M. Chenault Ja-Kael Luey

AFFECTED DOCUMENTS

DOCUMENT NUMBER:	TITLE:	REV. NO.:	DISC. LEAD INITIALS

RECORD OF REVISION

REV. NO.	REASON FOR REVISION:
0	Incorporate CH2M HILL Comments – Issue as Final
1	Incorporate AMEC Comments
2	Address Design Input changes
3	Include PC-2 analysis of ICV™ Box
4	Per client comment - Remove last three sentences from page 29 of Attachment 1. Remove reference 17.

ATTACHMENTS

DOCUMENT NUMBER/ID:	TITLE:	TOTAL PAGES
1	ICV™ Box and Lid Structural Calculation (MathCAD Calculations)	35
2	Design Parameters	3
3	Drawings	7
4	Lid Lift Analysis – RISA-3D Input/Output Data	79
5	RISA 3D Validation & Verification Cover Sheet	2
6	E-mail – From George Janicek, Design Authority - ICV™ Box PC rating	3

Total Pages 137

Typed names/dates in this box indicate the calculation has been signed off/approved and the originals have been placed in the Project files.

ORIGINATOR:	DATE:	CHECKER:	DATE:
James Van Corbach JVC	4/19/06	Doug Chenault DMC	4-19-06

CALCULATION SHEET

amec

CALC. NO.:	145579-D-CA-011	REV:	4	DATE:	April 19, 2006
CALC. TITLE:	ICV™ Box Structural Analysis				
PROJECT NO.:	145579	PROJECT TITLE:	Final DBVS Design		

1 INTRODUCTION

1.1 PURPOSE

The purpose of this calculation is to verify adequate strength of all members in the ICV™ Box and lid design for the projected load conditions they will be subjected to. The plate thickness and stiffeners are examined for stress at two temperatures, 662°F (350°C) and 1058°F (570°C). This calculation provides a breakdown for each section of the box (i.e. lid, sides, ends and floor) and, if areas of concern are identified, will specify modifications to the material selection and spacing of structural members for the current design of the ICV™ Box. An analysis of the lifting points is completed and the results stated.

1.2 SCOPE

The scope of this calculation is the analysis of the structural integrity of the ICV™ Box for the following conditions:

- Lifting of the box when empty.
- Box at melt station as Performance Category 2, PC-2 (analyzed at two ICV™ box surface temperatures).
- Lifting of the box when filled with material (refractory, glass, top-off soil, and void space filler).

Additional discussion of each condition is provided in the body of the calculation and in the Results and Conclusions section.

2 BASIS

2.1 DESIGN INPUTS

1. Box surface temperatures = 662°F (350°C) and 1058°F (570°C). Box surface temperature of 662°F is an anticipated upper value during normal operating conditions. A higher value of 1058°F represents point at which the yield strength of steel is significantly diminished. Note that this upper value also bounds the results from calculation 145579-D-CA-001, which determined the box skin temperature for normal and upset conditions.
2. Specific Gravity of glass = 2.65. Specific gravity of top-off soil = 1.43. From F-145579-00-A-0021, Rev. 0J, *Full DBVS Feed Preparation & Melt Process Flow*

CALCULATION SHEET

amec

CALC. NO.:	145579-D-CA-011	REV:	4	DATE:	April 19, 2006
CALC. TITLE:	ICV™ Box Structural Analysis				
PROJECT NO.:	145579	PROJECT TITLE:	Final DBVS Design		

Diagram.

3. Height of glass = 64.4 in. From calculation 145579-D-CA-010, Rev. 0, *ICV™ Box Weight Calculation.*
4. Height of top-off soil = 19 in. Bounding value for this calculation to determine effect of hydrostatic head on box design. Note that criteria for addition of top-off soil is minimum of 10.5 in. as stated in calculation 145579-D-CA-010, Rev. 0, *ICV™ Box Weight Calculation.*
5. Maximum weight of a full box = 234,882 lb. From calculation 145579-D-CA-010, Rev. 0, *ICV™ Box Weight Calculation.* The analysis will use 242,509 lb (110 metric tons) as a bounding case.
6. Weight of empty box with lid = 27,946 lb. Weight of lid is 5,810 lb. From calculation 145579-D-CA-010, Rev. 0, *ICV™ Box Weight Calculation.*
7. ICV™ Box Design
   a. F-145579-35-D-0004, Rev. 4A, *Bulk Vitrification ICV Box Data Sheet.*
   b. F-145579-35-D-0006, Rev. 2A, *Bulk Vitrification ICV Box Lid Steelwork 1 of 3.*
   c. F-145579-35-D-0008, Rev. 1, *Bulk Vitrification ICV Box Plan & Sections.*
   d. F-145579-35-D-0011, Rev 2A, *Bulk Vitrification ICV Box Assembly Details.*
   e. Lifting of empty box will be from all eight points utilizing the swivel hoist rings located near the center elevation of the side of the box as shown on drawing F-145579-35-D-0004.
   f. Lifting of the lid will be from the four points shown on the drawings.
   g. Lifting of full box will be from all eight points along the bottom perimeter of the box as shown on drawing F-145579-35-D-0004.
   h. For the calculation, the refractory, insulating layers and solid glass block do not add to the structural integrity of the ICV™ Box. The refractory and insulating layers do not provide restraint of the fluid pressures exerted on the box by the molten glass material.
8. ICV™ Box is to be designed to Performance Category 2 while in the melt area and PC-0 elsewhere, *E-mail from George Janicek*, Attachment 6.
9. Earthquake Loads design to *1997 UBC* with the following criteria: seismic zone is 2B (*TFC-ENG-STD-06*), Performance category is 2 (*TFC-ENG-STD-06*), and Soil profile is Sc, (*RPP-24544, Rev.1, Appendix H, Report of Geotechnical*

Typed names/dates in this box indicate the calculation has been signed off/approved and the originals have been placed in the Project files.

ORIGINATOR:	DATE:	CHECKER:	DATE:
James Van Corbach JVC	4/19/06	Doug Chenault DMC	4-19-06

Engineering Services). *1997 UBC* states that in general, the vertical seismic component may be taken as zero for Allowable Stress Design (Section 1630.1.1).

10. Wind Loads design to *ASCE 7-98* with the following criteria: Performance Category is 2, Exposure Category is C, velocity is 85 mph, and Importance Factor is 1.15, *TFC-ENG-STD-06*.

2.2 CRITERIA

The following is a direct quote from Section 3.2.1.5 of *RPP-17403, Rev. 3*:

"The ICV™ container shall be designed to maintain its integrity throughout:

- Handling and storage on the DBVS site;
- Loading of the container onto an ICV™ transporter (supplied by others);
- Transportation to the ICV™ container disposal site (e.g., Integrated Disposal Facility [IDF]); and
- Unloading and emplacement of the container in its final storage location."

The results from the analysis performed in this calculation will be discussed with regards to these criteria, with the exception that the third bullet is outside the scope of this calculation (analysis during transportation will be covered by the DBVS ICV™ box One Time Request for Shipment (OTRS)). In addition, the design of the mechanism used to move the ICV™ box on the DBVS site (a.k.a., the ICV™ Box Transporter) is not yet complete; therefore, ICV™ box stresses for loads imparted by the ICV™ Box Transporter cannot be analyzed at this time.

Member Stresses will be verified to Allowable Stress Design criteria as determined in *AISC ASD 9th Ed.*

The ICV™ Box is designed to PC-2 when in the melt area and is PC-0 elsewhere.

2.3 ASSUMPTIONS

Assumptions that require future design verification identified for this calculation.

1. No lifting device has been identified for the lifting of the full ICV™ Box. Assume lifting of the full ICV™ Box will occur from the bottom perimeter as indicated on drawing 145579-35-D-0008, a total of 8 lift points. The lifting device will utilize the lift points opposite each other along the length of the ICV™ Box. The lift will be vertical only and will transmit no lateral loads onto the box.

2. Weld analysis assumes type E70XX-X electrodes with an Ultimate Strength of filler metal of 70 ksi.

3 REFERENCES

1. Leonard, M.W. 2005. *Demonstration Bulk Vitrification System Specification.* RPP-17403, Revision 3. CH2M HILL Hanford Group, Inc. Richland, Washington.
2. *Design of Welded Structures*, O. W. Blodgett, 1996 printing, James F. Lincoln Arc Welding Foundation.
3. *Engineering Fluid Mechanics,* 5th Edition, John A. Roberson & Clayton T. Crowe, Houghton Mifflin Company, 1993.
4. *Manual of Steel Construction – Allowable Stress Design,* Ninth Edition, AISC, 1989.
5. *Ryerson Stock List*, Joseph T. Ryerson & Son, Inc., 1995.
6. 2004 ASME Boiler & Pressure Vessel Code, Section II Part D Subpart 2 – Physical Properties Tables.
7. AWS, Structural Welding Code, D1.1-96.
8. Calculation 145579-D-CA-001, Rev. 1, *Area 35 – Transient Heat Transfer Calculations of ICV™ Box*
9. Calculation 145579-B-CA-004, Rev. 3, *ICV™ Box Support Curbs Type 'C' and 'D' and 'E'*
10. Calculation 145579-D-CA-028, Rev. 0, *ICV™ Box Center of Gravity Calculation*
11. *Uniform Building Code 1997*, UBC.
12. *Minimum Design Loads for Buildings and Other Structures*, ASCE 7-98.
13. *Minimum Design Loads for Buildings and Other Structures*, ASCE 7-02.
14. *Design Loads for Tank Farm Facilities*, TFC-ENG-STD-06, Rev B-1.
15. *Seismic Design of Liquid-Containing Concrete Structures (ACI 350.3-01) and Commentary (350.3R-01)*, ACI 350.3/350.3R.
16. *Manual of Steel Construction Load and Resistance Factor (LRFD)*, AISC Second Edition.

CALCULATION SHEET

amec

CALC. NO.:	145579-D-CA-011	REV:	4	DATE:	April 19, 2006
CALC. TITLE:	ICV™ Box Structural Analysis				
PROJECT NO.:	145579	PROJECT TITLE:	Final DBVS Design		

4 METHODS

Calculations were performed using RISA 3D version 5.0d (Rapid Integrated Structural Analysis) computer software, which was previously verified and validated (DMJM H+N V&V Computer # 102561). Additional calculations were performed using MathCAD version 12.1 computer software, which were checked and verified using a handheld calculator.

5 RESULTS AND CONCLUSIONS

The following summarizes the results and conclusions from the analysis performed for the ICV™ Box for the integrity requirements stated in *RPP-17403*.

Handling and Storage on the DBVS Site

- Lifting of the Empty Box – The eight lifting points identified as LP2 per drawing *F-145579-35-D-0004* were evaluated for the ability to withstand the loads from lifting an empty box. Results of the analysis show that the design of the lift points is adequate. See page 15 and 16 in Attachment 1 for details.
- Lifting of the ICV™ Box Lid – The four lifting points were evaluated for the ability to withstand the self weight load from lifting the lid. Results of the analysis show that the design of the lift points is adequate. See pages 16 and 17 in Attachment 1 for details. An additional analysis evaluated the effects of the lift on the structure of the ICV™ Box Lid. Results of that analysis show that the design of the lid is adequate. See Attachment 4 for details.
- At rest at the Melt Station during operations – At the Melt Station the ICV™ Box, lined with refractory and insulating material, is resting on steel curbs that run the length of the box. The box is filled with material that is heated by electrodes in the box to create a glass product. Specific areas evaluated and the conditions used for the evaluation are summarized below:
    - Floor plate and Tube members - Total Dead Load of the entire Full ICV™ Box.
    - Sidewall plate and Sidewall Tube stiffeners – Hydrostatic and Hydrodynamic Loads including increased pressure as a result of the 19" of top-off soil, Lid dead weight, and Seismic acceleration of the loose components within the box.
    - Weld check of Sidewall and Floor Interface – Hydrostatic and hydrodynamic horizontal loads and vertical load as a percentage of the total dead load of the ICV™ Box based on affected area.

Typed names/dates in this box indicate the calculation has been signed off/approved and the originals have been placed in the Project files.

ORIGINATOR:	DATE:	CHECKER:	DATE:
James Van Corbach JVC	4/19/06	Doug Chenault DMC	4-19-06

CALCULATION SHEET

amec

CALC. NO.:	145579-D-CA-011	REV:	4	DATE:	April 19, 2006
CALC. TITLE:	ICV™ Box Structural Analysis				
PROJECT NO.:	145579	PROJECT TITLE:	Final DBVS Design		

- Lid Tube members – self weight.

Results from the analysis show that the box design is adequate to withstand the loads as outlined above. In addition, the analysis determined the maximum deflection of the floor members and sidewall tube members. The maximum deflection of the floor members at the mid span was 0.078 inches at 662°F and 0.104 inches at 1058°F. The maximum deflection of the sidewall members was 0.088 inches at 662°F and 0.118 inches at 1058°F. No criteria have been identified to determine the relevance of the deflections determined. UBC 1997, Table 16-D—Maximum Allowable Deflection for Structural Members lists two checks, l/360 and l/240. The length of the floor members are 7'-6", conservatively applying the l/360 results in 0.250 inches. The length of the sidewall tubes are 7'-1/4", conservatively applying the l/360 results in 0.234 inches. The deflections as determined in this analysis meet the maximum deflection criteria of the UBC 1997.

- Movement to and from the Melt Station – This is achieved using an ICV™ Box Transporter. Design of this system has not been completed; therefore, no analysis performed for this activity.
- At rest at ICV™ Box Storage Area – Bounded by analysis performed at Melt Station. Box will cool to ambient temperature and glass will solidify.

Cooling Stresses at the Melt Station

- The expected temperature range subjected to the steel of the ICV™ Box is not expected to create a situation of concern for cooling stresses.

Loading of the container onto an ICV™ Transporter

- This activity involves lifting a full box (full defined as the maximum weight from calculation 145579-D-CA-010). Although no lifting device has been identified an analysis was performed assuming that the "to be defined" lifting device will utilize the lift points opposite each other along the length of the ICV™ Box, refer to drawing F-145579-35-D-0004. The lift will be vertical only and will transmit no lateral loads onto the box. Utilizing these criteria, the box design is adequate for lifting in this manner. Note: this analysis conservatively considered only the box perimeter tube strength when lifting the contents of the box. It is possible that the number of lift points may be reduced if the strength of the other box members is considered in the analysis. Reduction of the number of lift points reduces risk and exposure to workers performing the lift. Reduced number of lift points will be revisited upon commencement of design activities associated with the ICV™ Box lifting device.

Typed names/dates in this box indicate the calculation has been signed off/approved and the originals have been placed in the Project files.

ORIGINATOR:	DATE:	CHECKER:	DATE:
James Van Corbach JVC	4/19/06	Doug Chenault DMC	4-19-06

CALCULATION SHEET

amec

CALC. NO.:	145579-D-CA-011	REV:	4	DATE:	April 19, 2006
CALC. TITLE:	ICV™ Box Structural Analysis				
PROJECT NO.:	145579	PROJECT TITLE:	Final DBVS Design		

Transportation to the ICV™ container disposal site

- To be addressed by the DBVS ICV™ Box One Time Request for Shipment (OTRS)(not part of this calculation).

Unloading and emplacement of the container in its final storage location

- Activity involves lifting a full box and placement in the storage location. Lifting aspect is covered by analysis for loading of the container onto an ICV™ Transporter.

The ICV™ Box and Lid design is adequate for Allowable Stress Design using AISC criteria. Results from the calculation indicate that, if the surface temperature is not allowed to exceed 662°F, there is an opportunity to modify the box design to simplify fabrication (i.e., plate thicknesses could be reduced, side wall stiffener spacing increased, floor member spacing increased). However, implementation of any of these potential modifications would need to include an analysis of impacts to the design of the internal refractory and insulating material due to reduced support potential from the box structure. Results from the calculation also identify areas of conservatism that represent opportunities for optimization of the ICV™ Box design.

Typed names/dates in this box indicate the calculation has been signed off/approved and the originals have been placed in the Project files.

ORIGINATOR:	DATE:	CHECKER:	DATE:
James Van Corbach JVC	4/19/06	Doug Chenault DMC	4-19-06

145579-D-CA-011 Rev. 4

Attachment 1
(35 pages)

ICV™ Box and Lid Structural Calculations
(MathCAD Calculations)

6 Calculation / Analysis

Design Loads

It is assumed that the worst case loading of the ICV™ Box will be during the melt due to the hydrostatic and seismic loading on the box at elevated temperatures. The ICV™ Box contains a liquid, molten glass, while at the melt station and is considered a vessel. Therefore the applicable codes for tanks/vessels will be applied. Additionally the ICV™ Box sits upon curbs, two W21x62, which are anchored to the concrete pad. The ICV™ Box is not anchored to the curbs, see calculation 145579-B-CA-004. Given the mounting configuration of the ICV™ Box this analysis will consider the box to be at grade. Due to the location of the box and the operating conditions, some loads will be neglected.

Dead Load

The Dead Load include self-weight and the weight of internal items. From Calculation 145579-D-CA-010, the total loose interior component weights are:

Insulation	189 lb
Support Ribs & Brick	6419 lb
Refractory	49824 lb
Sand	23095 lb
Glass	97577 lb

Total Weight of ICV™ Box at Melt Station 213126 lb

$D := 189 \cdot lbf + 6419 \cdot lbf + 49824 \cdot lbf + 23095 \cdot lbf$

$D = 79527.0\ lbf$ Dead Load on loose Interior components, excluding the glass.

$D_m := 213126 lbf - 97577 \cdot lbf$ Melt station weight excluding glass.

$D_m = 115549\ lbf$

Live Load

Live Load is neglected as no access to the ICV™ Box will be permitted during the melt process .

Seismic Load

The seismic load is determined, based on UBC-1997, Section 1632.

For PC-2, Seismic Zone 2B, Soil Profile Sc:

$I_p := 1.5$ Importance Factor, Design Inputs

$C_a := 0.24$ — Seismic Coefficient, Table 16-Q

$a_p := 1.0$ $\quad R_p := 3.0$ — Horizontal Force Factor - Table 16-O

$h_x := 21 \cdot in$ — Height of curbing in the melt station, W21x62.

$h_r := 9ft + 9in + h_x$ $\quad h_r = 11.5\ ft$ — Height of box

$$F_p := \frac{a_p \cdot C_a \cdot I_p}{R_p} \cdot \left(1 + 3 \cdot \frac{h_x}{h_r}\right) \cdot W_p$$

UBC 1997, 1632.2 Equation 32-2.

$F_p = 0.17 W_p$ — Seismic loading coefficient.

$F_{pmin} := 0.7 \cdot C_a \cdot I_p \cdot W_p$ $\quad F_{pmin} = 0.25 W_p$ — UBC 1997, 1632.2, eq. 32-3, total design lateral seismic force shall not be less than this.

$F_{pmax} := 4 \cdot C_a \cdot I_p \cdot W_p$ $\quad F_{pmax} = 1.44 W_p$ — UBC 1997, 1632.2, eq. 32-3, total design lateral seismic force shall not exceed this.

F_p is not between F_{pmin} and F_{pmax}, therefore use F_{pmin} value.

$F_p := 0.25 \cdot W_p$ — Seismic force on box.

Wind Load

The ICV™ Box is located within a building while in the melt area, therefore wind loads are neglected.

Snow Load

The ICV™ Box is located within a building while in the melt area, therefore snow loads are neglected.

Fluid Load

The load due to fluids will be based on the height of the molten glass and Top-Off Soil. The fluid load will be a lateral load.

Load Combinations

Load Combinations per 1997 UBC, Section 1612.3.1 and are as follows:

(12-12) D + L + S + F
(12-13) D + L + (W or E/1.4) + F
(12-14) D + L + W + S/2 + F
(12-15) D + L + S + W/2 + F
(12-16) D + L + S + E/1.4 + F
(12-16-1) 0.9D ± E/1.4 + F

where:

D - dead load
L - live load
S - snow load
W - wind Load
E - earthquake load
F - fluid load

Simplifying the load combination equations yield:

(12-12)	D + F
(12-13)	D + E/1.4 + F
(12-14)	D + F
(12-15)	D + F
(12-16)	D + E/1.4 + F
(12-16-1)	0.9D ± E/1.4 + F

Use equation 12-13 for this analysis.

Determine Heat effects on the ICV™ Box Steel

Analysis of ICV™ Box will be at two temperatures as indicated below.

$T_1 := 662°F$

$T_2 := 1058°F$

As listed in *AISC ASD* page 6-3, the yield strength of ratios for carbon steel at elevated temperatures are approximately 0.77 at 800°F, 0.63 at 1000°F and 0.37 at 1200°F. Use straight line interpolation to determine the yield strength ratio of steel for the temperatures as listed above. Using the yield strength ratio of 1.0 at an assumed ambient temperature of 60°F, results in the following yield strength reductions:

$$\delta_1 := \frac{662°F - 60°F}{\frac{800°F - 60°F}{0.77 - 1.0}} + 1.0 \qquad \delta_1 = 0.81$$

Reduction of yield strength as a result of the lower bounding temperature.

$$\delta_2 := \frac{1058°F - 1000°F}{\frac{1200°F - 1000°F}{0.37 - 0.63}} + 0.630 \qquad \delta_2 = 0.55$$

Reduction of yield strength as a result of the higher bounding temperature.

The modulus of elasticity will change with temperature but AISC does not give any guidance on the values to use at elevated temperatures. Use *ASME B&PV Code IID,* to determine the values at the temperatures as listed above. The modulus of elasticity of Carbon steel is 26.5×10^6 at 600°F, 25.5×10^6 at 700°F, 20.4×10^6 at 1000°F, and 18.0×10^6 at 1100°F. Use straight line interpolation to determine the value.

$E := 29000ksi$

Modulus of Elasticity at ambient temperatures, *AISC ASD, page 6-30.*

$$E_1 := \frac{662°F - 600°F}{\frac{700°F-600°F}{25500ksi-25600ksi}} + 25600ksi \quad E_1 = 25538\,ksi$$

Modulus of elasticity of steel at 662°F, *ASME B&PV Code Section II Part D Subpart 2*, see Attachment 2, page 2.

$$E_2 := \frac{1058°F - 1000°F}{\frac{1100°F-1000°F}{18000ksi-20400ksi}} + 20400ksi \quad E_2 = 19008\,ksi$$

Modulus of elasticity of steel at 1058°F, *ASME B&PV Code Section II Part D Subpart 2*, see Attachment 2, page 2.

ICV™ Box Sidewall Rigidity

In the analysis of the sidewall of the box, the molten glass material is treated as a fluid thus creating a hydrostatic load on the sidewall surface. An additional axial load on the Sidewall will be from the weight of the lid including self weight of the wall. Take no credit for the plate in the analysis for the Sidewall Rigidity, assume the stiffeners will take all of the hydrostatic load in bending and the weight of the lid axially. The hydrostatic load will be determined from the tributary area from the height times the distance center to center distance of the stiffener spacing. Include the increased pressure as a result of a maximum of 19" (refer to Design Inputs) of top-off soil to be added after the initial cooling down of the glass material. This is conservative considering that the surface of the glass must solidify for the soil to added. The plate will be checked by treating it as small sections, the width of the stiffener spacing, using Roark's Formulas for Stress and Strain, 7th edition, Chapter 11 - Flat Plates. All allowables have been reduced due to the anticipated temperatures the sidewall will incur during the vitrification process.

Stiffener Member properties

$t_{PL} := 0.1875in$

Thickness of the 3/16 plate, *Ryerson Stock List.*

$I_s := 5.04in^4$

Moment of Inertia of Sidewall Stiffener HSS 3.5x3.5x1/4, *AISC LRFD page 1-66.*

$S_s := 2.88in^3$

Elastic Section Modulus of Sidewall Stiffener HSS 3.5x3.5x1/4, *AISC LRFD page 1-66.*

$sp := 12in$

Sidewall Stiffener Spacing is 12 inches per drawing *F-145579-35-D-0008.*

$A_s := 2.91 \cdot in^2$

Cross Sectional Area of sidewall stiffener, *AISC LRFD page 1-66.*

$h_{stiff} := 3.5in$

Outside dimensions of HSS 3.5x3.5x1/4 stiffener, *AISC LRFD page 1-66.*

Determine Loads, axial loads from weight of box lid, bending loads from hydrostatic and seismic loads. Worst case Load Combination is UBC 12-13, D + E/1.4 + F.

$l := 288in$ $\quad w := 90in$

Length, Width, and height of Box, Inside of Steel Box (24'x7.5'x7.5'), *F-145579-35-D-0008.*

$l_p := 2 \cdot l + 2 \cdot w \quad l_p = 756.0in$

Total length of Top Perimeter Stiffener, *F-145579-35-D-0008.*

$P_{lid} := 58101bf$ — Compressive load caused by the lid weight, *145579-D-CA-010*.

$w_t := \frac{P_{lid}}{l_p}$ $\quad w_t = 92.2 \frac{lbf}{ft}$ — Axial load per foot of sidewall as a result of the lid weight.

Check the sidewall stiffeners

1997 UBC Section 1634.4 - Tanks with Supported Bottoms permits the design of a tank/vessel by an approved national standard, provided that the seismic zones and occupancy categories shall be in conformance with the provisions of Sections 1629.4 and 1629.2, respectively. *ASCE 7-02 Section 9.14.7.3* provides guidance on the evaluation of tanks/vessels. While in general this section refers to cylindrical tanks, however, *ASCE 7-02 Section 9.14.7.3.6.1.1* references *ACI 350.3/350.3R* as an acceptable method to determine the vertical and horizontal distribution of the hydrodynamic and inertia forces on the walls of circular and rectangular tanks. Analyze two cases for seismic: first - the seismic acceleration is parallel to the long edge of the ICV™ Box, second - seismic acceleration is parallel to the short edge of the ICV™ Box.

Case 1: Seismic acceleration parallel to long edge of the ICV™ Box.
Case 2: Seismic acceleration parallel to short edge of the ICV™ Box.

The following is adapted from *ACI 350.3/350.3R*

Determine the Lateral Inertia Force

$P'_w = Z \cdot S \cdot I \cdot C_i \cdot \frac{\varepsilon \cdot W'_w}{R_{wi}}$ — *ACI*, Equation 4-1a

$Z := 0.2$ — Seismic zone factor, *ACI*, Table 4(a)

$S := 1.2$ — Soil profile coefficient, *ACI*, Table 4(b), Type B

$I := 1.5$ — Importance factor, Design Inputs

Determine structure period

$C_t := 0.02$ $\quad x := 0.75$ — Table 9.5.5.3.2, *ACSE 7-02*, All other structural systems.

$h_n := \frac{9ft + 9in}{ft}$ $\quad h_n = 9.75$ — Height of ICV™ Box with Lid, in feet, must be unitless

$T_i := C_t \cdot h_n^{\,x}$ $\quad T_i = 0.11\,s$ — Equation 9.5.5.3.2-1, *ASCE 7-02*, $T_i \le 0.31s$ use equation 9-31 of *ACI 350.3/350.3R*.

$C_i := \frac{2.75}{S}$ $\quad C_i = 2.29$ — *ACI*, Equation 9-31.

$L_{Cl} := 24ft$ $\quad h := 7.5ft$ — Length and height of interior of ICV™ Box.

$L_{C2} := 7.5ft$

$B_{C1} := 7.5ft$ — Width of interior of ICV™ Box.

$B_{C2} := 24ft$

$H_L := 64.4 \cdot in$ $\quad H_L = 5.37\ ft$ — Height of liquid, *Calculation 145579-D-CA-010.*

$$\varepsilon_{C1} := 0.0151 \cdot \left(\frac{L_{C1}}{H_L}\right)^2 - 0.1908 \cdot \left(\frac{L_{C1}}{H_L}\right) + 1.021$$

Equivalent mass of vessel, *ACI,* Equation 9-34

$$\varepsilon_{C2} := 0.0151 \cdot \left(\frac{L_{C2}}{H_L}\right)^2 - 0.1908 \cdot \left(\frac{L_{C2}}{H_L}\right) + 1.021$$

$\varepsilon_{C1} = 0.47$ $\quad \varepsilon_{C2} = 0.78$

$w_{HSS} := 10.5 \frac{lbf}{ft} \cdot (7.5ft)$ $\quad w_{HSS} = 78.8\ lbf$ — Weight of HSS3-1/2x3-1/2x1/4wall tubes, *AISC LRFD page 1-66.*

$w_{pl} := 7.66 \cdot \frac{lbf}{ft} \cdot (7.5ft)$ $\quad w_{pl} = 57.5\ lbf$ — Weight of 3/16" wall plate, *AISC, page 1-111,* per 1 foot section.

$W'_w := w_{HSS} + w_{pl}$ $\quad W'_w = 136.2\ lbf$ — Approximate weight of wall per 1 foot section.

$R_{wi} := 2.0$ — Response modification factor, *ACI,* Table 4(d), Unanchored contained tanks.

$$P'_{w_coeff_C1} := Z \cdot S \cdot I \cdot C_i \cdot \frac{\varepsilon_{C1}}{R_{wi}}$$

ACI, seismic coefficient for wall section, compare to *1997 UBC* and use most conservative value.

$$P'_{w_coeff_C2} := Z \cdot S \cdot I \cdot C_i \cdot \frac{\varepsilon_{C2}}{R_{wi}}$$

$P'_{w_coeff_C1} = 0.19$ $\quad P'_{w_coeff_C2} = 0.32$

$P'_{w_coeff_C1} := if(P'_{w_coeff_C1} > F_p, P'_{w_coeff_C1}, F_p)$

$P'_{w_coeff_C2} := if(P'_{w_coeff_C2} > F_p, P'_{w_coeff_C2}, F_p)$

$P'_{w_coeff_C1} = 0.25W_p$ $\quad P'_{w_coeff_C2} = 0.32W_p$

$P'_{w_C1} := P'_{w_coeff_C1} \cdot W'_w$ $\quad P'_{w_C1} = 34.0\ lbf$ — Lateral Inertia force per unit section of wall using highest wall seismic coefficient.

$P'_{w_C2} := P'_{w_coeff_C2} \cdot W'_w$ $\quad P'_{w_C2} = 44.0\ lbf$

$D = 79527.0\ lbf$

Total weight of loose interior contents.

$$P_{cont_C1} := \frac{P'_{w_coeff_C1} \cdot D}{h \cdot B_{C1}} \qquad P_{cont_C1} = 2.45\ psi$$

$$P_{cont_C2} := \frac{P'_{w_coeff_C2} \cdot D}{h \cdot B_{C2}} \qquad P_{cont_C2} = 0.99\ psi$$

Total seismic pressure load on wall from loose ICV™ Box contents.

$$P'_{w_C1} := \frac{P'_{w_C1}}{h \cdot sp} + P_{cont_C1} \qquad P'_{w_C1} = 2.49 psi$$

$$P'_{w_C2} := \frac{P'_{w_C2}}{h \cdot sp} + P_{cont_C2} \qquad P'_{w_C2} = 1.03 psi$$

Total unit pressure on sidewall as a result of a self weight and loose interior contents during a seismic event.

Determine the Lateral Inertia Force

$$P_i = Z \cdot S \cdot I \cdot C_i \cdot \frac{W_i}{R_{wi}}$$

ACI, Equation 4-3

$W_L := 97577 \cdot lbf$

Weight of glass, *145579-D-CA-010*

$$W_{i_C1} := W_L \cdot \frac{\tanh\left[0.866 \cdot \left(\frac{L_{C1}}{H_L}\right)\right]}{0.866 \cdot \left(\frac{L_{C1}}{H_L}\right)}$$

$$W_{i_C2} := W_L \cdot \frac{\tanh\left[0.866 \cdot \left(\frac{L_{C2}}{H_L}\right)\right]}{0.866 \cdot \left(\frac{L_{C2}}{H_L}\right)}$$

Equivalent Mass of the impulsive component of the stored liquid, *ACI*, Equation 9-1

$W_{i_C1} = 25173.7\ lbf \qquad W_{i_C2} = 67463.8\ lbf$

$$P_{i_C1} := Z \cdot S \cdot I \cdot C_i \cdot \frac{W_{i_C1}}{R_{wi}} \qquad P_{i_C1} = 10384.2\ lbf$$

$$P_{i_C2} := Z \cdot S \cdot I \cdot C_i \cdot \frac{W_{i_C2}}{R_{wi}} \qquad P_{i_C2} = 27828.8\ lbf$$

Lateral Inertia Force from the accelerated liquid.

Determine the Lateral Convective Force

$$P_c = Z \cdot S \cdot I \cdot C_c \cdot \frac{W_c}{R_{wc}}$$ *ACI*, Equation 4-4

$$g = 32.17 \frac{ft}{s^2}$$ Gravity

$$\lambda_{C1} := \sqrt{3.16 \cdot g \cdot \tanh\left[3.16 \cdot \left(\frac{H_L}{L_{C1}}\right)\right]}$$ *ACI*, Equation 9-13

$$\lambda_{C2} := \sqrt{3.16 \cdot g \cdot \tanh\left[3.16 \cdot \left(\frac{H_L}{L_{C2}}\right)\right]}$$

$$\lambda_{C1} = 7.9 \frac{ft^{\frac{1}{2}}}{s} \qquad \lambda_{C2} = 10.0 \frac{ft^{\frac{1}{2}}}{s}$$

$$T_{c_C1} := \left(\frac{2 \cdot \pi}{\lambda_{C1}}\right) \cdot \sqrt{L_{C1}} \qquad T_{c_C1} = 3.9\,s$$

$$T_{c_C2} := \left(\frac{2 \cdot \pi}{\lambda_{C2}}\right) \cdot \sqrt{L_{C2}} \qquad T_{c_C2} = 1.7\,s$$

ACI, Equation 9-14, $T_c \geq 2.4\,s$ use equation 9-33

$$C_{c_C1} := \text{if}\left[T_{c_C1} \geq 2.4 \cdot s, \frac{6.0}{\left(\frac{T_{c_C1}}{s}\right)^2}, \frac{1.875}{\left(\frac{T_{c_C1}}{s}\right)^{\frac{2}{3}}}\right]$$

$$C_{c_C2} := \text{if}\left[T_{c_C2} \geq 2.4 \cdot s, \frac{6.0}{\left(\frac{T_{c_C2}}{s}\right)^2}, \frac{1.875}{\left(\frac{T_{c_C2}}{s}\right)^{\frac{2}{3}}}\right]$$

ACI, Equation 9-33 when $T_c \geq 2.4\,s$ and approximation equation when $T_c < 2.4\,s$, *ACI*, Section R9.4.

$$C_{c_C1} = 0.39 \qquad C_{c_C2} = 1.30$$

$$W_{c_C1} := W_L \cdot 0.264 \cdot \left(\frac{L_{C1}}{H_L}\right) \cdot \tanh\left[3.16 \cdot \left(\frac{H_L}{L_{C1}}\right)\right]$$

$$W_{c_C2} := W_L \cdot 0.264 \cdot \left(\frac{L_{C2}}{H_L}\right) \cdot \tanh\left[3.16 \cdot \left(\frac{H_L}{L_{C2}}\right)\right]$$

Equivalent Mass of the convective component of the stored liquid, *ACI*, Equation 9-2.

$W_{c_C1} = 70105.5\ lbf$ $\quad W_{c_C2} = 35226.7\ lbf$

$R_{wc} := 1.0$ — Response modification factor, *ACI*, Table 4(d), Unanchored contained tanks.

$P_{c_C1} := Z \cdot S \cdot I \cdot C_{c_C1} \cdot \frac{W_{c_C1}}{R_{wc}}$ — Lateral Convective Force from the accelerated liquid

$P_{c_C2} := Z \cdot S \cdot I \cdot C_{c_C2} \cdot \frac{W_{c_C2}}{R_{wc}}$

$P_{c_C1} = 9888.3\ lbf$ $\quad P_{c_C2} = 16530.5\ lbf$

Determine Hydrostatic Pressure

$\rho_{soil} := 89 \frac{lbf}{ft^3}$ — Density of top off soil, *145579-D-CA-010*, Attachment 1, page 9.

$h_{soil} := 19in$ — Maximum soil height per Design Input.

$q_{soil} := h_{soil} \cdot \rho_{soil}$ $\quad q_{soil} = 0.98\ psi$ — Added pressure on surface of glass per square inch of glass surface area.

$SG_{m_glass} := 2.65$ — Specific Gravity of molten glass, *145579-D-CA-010* and *F-145579-00-A-0021*.

$\gamma := 62.37 \frac{lbf}{ft^3}$ — Specific weight of water at 60°F, *Roberson / Crowe, page A-24*.

Add the layer of top-off soil to the top of the glass to maximize the liquid pressure. This is a conservative approach considering the top of the glass will have to solidify prior to the addition of the soil. This solidification will also dampen or eliminate the sloshing effect of the liquid during a seismic event.

$q_{hy} := \gamma \cdot H_L \cdot SG_{m_glass} + q_{soil}$ — Hydrostatic pressure at bottom of glass layer. *Blodgett, page 6.4-2.*

$q_{hy} = 7.14 psi$

Determine the Lateral Hydrodynamic Pressure

$p_{vy} = \ddot{u}_v \cdot q_{hy}$ — *ACI*, Equation 4-14

$C_v := 1.0$ — Period-dependent spectral amplification factor for vertical motion of the contained liquid for

rectangular tanks.

$b := \frac{2}{3}$

Ratio of vertical to horizontal design acceleration, *ACI*, Section 4.1.4.1 shall not be less than 2/3. Also *Section 1631.2 of 1997 UBC*.

$\ddot{u}_v := Z \cdot S \cdot C_v \cdot I \cdot \frac{b}{R_{wi}}$ $\quad \ddot{u}_v = 0.12$

Effective spectral acceleration from an inelastic vertical response spectrum, *ACI*, Equation 4-15

$p_{vy} := \ddot{u}_v \cdot q_{hy}$ $\quad p_{vy} = 0.86\ psi$

Equivalent hydrodynamic pressure due to vertical acceleration.

Determine height to center of gravity of forces

$\frac{L_{C1}}{H_L} = 4.47$ $\quad \frac{L_{C2}}{H_L} = 1.40$

$\frac{L}{H_L} \geq 1.333$, use *ACI*, Equation 9-4

$h_i := H_L \cdot 0.375$ $\quad h_i = 2.01\ ft$

$h_i = 24.15\,in$

ACI, Equation 9-4, Height above the base of the wall to the center of gravity of the impulsive lateral load.

$$h_{c_C1} := H_L \cdot \left[1 - \frac{\cosh\left[3.16 \cdot \left(\frac{H_L}{L_{C1}}\right)\right] - 1}{3.16 \cdot \left(\frac{H_L}{L_{C1}}\right) \cdot \sinh\left[3.16\left(\frac{H_L}{L_{C1}}\right)\right]}\right]$$

ACI, Equation 9-5

$$h_{c_C2} := H_L \cdot \left[1 - \frac{\cosh\left[3.16 \cdot \left(\frac{H_L}{L_{C2}}\right)\right] - 1}{3.16 \cdot \left(\frac{H_L}{L_{C2}}\right) \cdot \sinh\left[3.16\left(\frac{H_L}{L_{C2}}\right)\right]}\right]$$

$h_{c_C1} = 2.79\ ft$ $\quad h_{c_C1} = 33.5\,in$

$h_{c_C2} = 3.44\ ft$ $\quad h_{c_C2} = 41.3\,in$

Height to the center of gravity convective lateral force.

$$y := \begin{pmatrix} 0 \\ 12 \\ 24 \\ 36 \\ 48 \\ 60 \\ 64.4 \end{pmatrix} in$$

Maximum force is at the bottom of the glass layer which 14 inches above the interior bottom of the ICV™ Box .

$j := 0 .. 6$

$$P_{iy_C1_j} := \frac{\frac{P_{i_C1}}{2} \cdot \left[4 \cdot H_L - 6h_i - \left(6 \cdot H_L - 12 \cdot h_i\right) \cdot \left(\frac{y_j}{H_L}\right)\right]}{H_L^{\,2}}$$

$$P_{iy_C2_j} := \frac{\frac{P_{i_C2}}{2} \cdot \left[4 \cdot H_L - 6h_i - \left(6 \cdot H_L - 12 \cdot h_i\right) \cdot \left(\frac{y_j}{H_L}\right)\right]}{H_L^{\,2}}$$

Lateral impulsive force due to the equivalent mass of the impulsive component of the stored liquid per unit height, *ACI*, Section R5.3.1

$$P_{iy_C1} = \begin{pmatrix} 1693.1 \\ 1422.7 \\ 1152.2 \\ 881.8 \\ 611.4 \\ 341.0 \\ 241.9 \end{pmatrix} \frac{lbf}{ft} \qquad P_{iy_C2} = \begin{pmatrix} 4537.3 \\ 3812.6 \\ 3087.9 \\ 2363.3 \\ 1638.6 \\ 913.9 \\ 648.2 \end{pmatrix} \frac{lbf}{ft}$$

$$P_{cy_C1_j} := \frac{\frac{P_{c_C1}}{2} \cdot \left[4 \cdot H_L - 6 \cdot h_{c_C1} - \left(6 \cdot H_L - 12 \cdot h_{c_C1}\right) \cdot \left(\frac{y_j}{H_L}\right)\right]}{H_L^{\,2}}$$

$$P_{cy_C2_j} := \frac{\frac{P_{c_C2}}{2} \cdot \left[4 \cdot H_L - 6 \cdot h_{c_C2} - \left(6 \cdot H_L - 12 \cdot h_{c_C2}\right) \cdot \left(\frac{y_j}{H_L}\right)\right]}{H_L^{\,2}}$$

Lateral convective force, *ACI* Section R5.3.1, acts primarily to uplift the tank wall, *ACI* Section R9.1.

$$P_{cy_C1} = \begin{pmatrix} 811.7 \\ 852.6 \\ 893.4 \\ 934.2 \\ 975.0 \\ 1015.8 \\ 1030.8 \end{pmatrix} \frac{lbf}{ft} \qquad P_{cy_C2} = \begin{pmatrix} 235.0 \\ 721.4 \\ 1207.7 \\ 1694.1 \\ 2180.5 \\ 2666.9 \\ 2845.2 \end{pmatrix} \frac{lbf}{ft}$$

Lateral convective force per unit height.

$$p_{y_C1_j} := \sqrt{\left(\frac{P_{iy_C1_j}}{B_{C1}}\right)^2 + \left(\frac{P_{cy_C1_j}}{B_{C1}}\right)^2 + p_{vy}^2}$$

$$p_{y_C2_j} := \sqrt{\left(\frac{P_{iy_C2_j}}{B_{C2}}\right)^2 + \left(\frac{P_{cy_C2_j}}{B_{C2}}\right)^2 + p_{vy}^2}$$

Combined dynamic force at any given height y from the base, *ACI*, Equation 5-1 altered. This equation has been altered as a result of the center of gravity of the equivalent force of the wall section is not the same as the fluid. This is because the bottom fluid level is 14 inches above the base of the wall, refer to figures following. The seismic acceleration and center of gravity is determined separately.

$$p_{y_C1} = \begin{pmatrix} 1.94 \\ 1.76 \\ 1.60 \\ 1.47 \\ 1.37 \\ 1.31 \\ 1.30 \end{pmatrix} psi \qquad p_{y_C2} = \begin{pmatrix} 1.57 \\ 1.41 \\ 1.29 \\ 1.20 \\ 1.16 \\ 1.18 \\ 1.20 \end{pmatrix} psi$$

Total unit pressure on sidewall as a result of a seismic event. Pressure is relatively uniform, for conservatism use highest value and consider pressure as uniform across sidewall face.

$p_{y_C1} := \max(p_{y_C1})$ $\qquad p_{y_C1} = 1.94\ psi$

$p_{y_C2} := \max(p_{y_C2})$ $\qquad p_{y_C2} = 1.57\ psi$

$P_{y_C1} := \frac{p_{y_C1} \cdot sp \cdot H_L}{1.4}$ $\qquad P_{y_C1} = 1069.8\ lbf$

$P_{y_C2} := \frac{p_{y_C2} \cdot sp \cdot H_L}{1.4}$ $\qquad P_{y_C2} = 866.1\ lbf$

Find equivalent force of the liquid acting at the center of the uniform pressure per stiffener spacing. 1.4 reduction per UBC load combinations.

$h_{py} := \frac{H_L}{2} + 14in$ $\qquad h_{py} = 46.2\,in$

Center of gravity of equivalent liquid seismic force, bottom of glass layer is 14 inches above the ICV™ Box bottom.

$P_{w_C1} := \frac{p'_{w_C1} \cdot sp \cdot h}{1.4}$ $\quad P_{w_C1} = 1917.8\,lbf$

$P_{w_C2} := \frac{p'_{w_C2} \cdot sp \cdot h}{1.4}$ $\quad P_{w_C2} = 796.8\,lbf$

Find equivalent force of the sidewall inertia force acting at the center of the sidewall. 1.4 reduction per *1997 UBC* load combinations.

$h_{pw} := \frac{h}{2}$ $\quad h_{pw} = 45.0\,in$

Center of gravity of the equivalent sidewall seismic force.

$P_f := \frac{q_{hy} \cdot sp \cdot H_L}{2}$ $\quad P_f = 2758.3\ lbf$

Find equivalent hydrostatic force of the liquid acting at the 1/3 the height of the liquid from its bottom per stiffener spacing.

$h_{pf} := \frac{1}{3} \cdot H_L + 14 \cdot in$ $\quad h_{pf} = 35.5\,in$

Center of gravity of the equivalent hydrostatic force.

Maximum moment will occur at the base of the sidewall. Distributed loading and equivalent point loading on the sidewall as shown in figure following. The height of the interior wall is 90 inches. The term "a" is the distance from the base of the wall to the center of gravity of the equivalent force. The term "b" is the distance from the top of the wall to the equivalent force. The term "L" is the height of the wall. The term "sp" is the sidewall stiffener spacing or unit section of sidewall being checked, direction relative to figure is into the page. The term "p'_w•sp" is the distributed load of the inertia force of the wall. The term "p_y•sp" is the distributed load of the hydrodynamic force of the fluid. The term "q_{hy}•sp" is the distributed load of the hydrostatic force of the fluid. The second figure shows the equivalent forces of the distributed loads and the center of gravity of those forces.

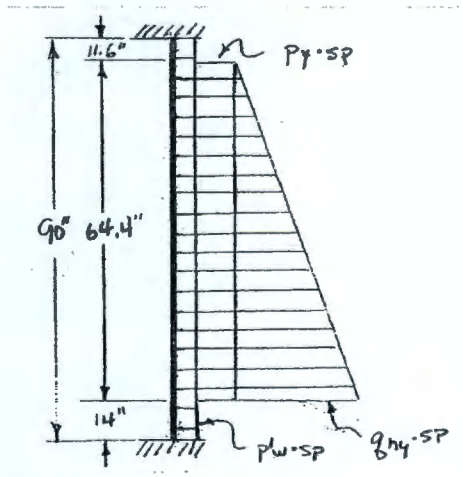

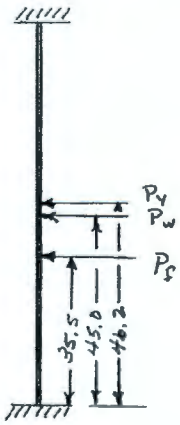

$M_2 = \frac{P \cdot a^2 \cdot b}{L^2}$

AISC, Fixed beam - Concentrated load at any point, page 2-301.

$h = 90.0\,in$ $\quad sp = 12.0\,in$

$$M_{2_C1} := \frac{P_{w_C1} \cdot (h - h_{pw})^2 h_{pw}}{h^2} + \frac{P_{y_C1} \cdot (h - h_{py})^2 \cdot h_{py}}{h^2} + \frac{P_f \cdot (h - h_{pf})^2 \cdot h_{pf}}{h^2}$$

$$M_{2_C2} := \frac{P_{w_C2} \cdot (h - h_{pw})^2 h_{pw}}{h^2} + \frac{P_{y_C2} \cdot (h - h_{py})^2 \cdot h_{py}}{h^2} + \frac{P_f \cdot (h - h_{pf})^2 \cdot h_{pf}}{h^2}$$

$M_{2_C1} = 69198.3\,lbf \cdot in$

$M_{2_C2} = 54357.4\,lbf \cdot in$

Wall section will be analyzed as a composite section consisting of the HSS 3-1/2x3-1/2x1/4 tube and the 3/16" plate. The composite section starts at the plate centered between the vertical stiffeners to the next section. The length of plate is the same as the spacing of the sidewall stiffeners. Use *Blodgetts* method to determine composite section properties, page 6.4-1. Check the stiffener spacing is not to great thus reducing the effective area of the plate. Use *Blodgett Section 2.12* to determine the effective area.

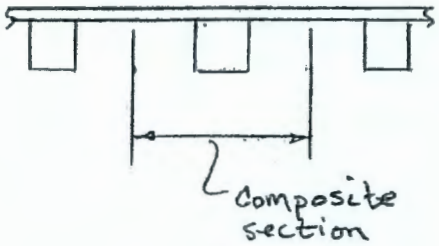

$F_y := 36ksi$

Yield Stress of A36, *AISC ASD, page 1-7.*

$k := 4$

Table 1 - Compression Load on Plate, *Blodgett, page 2.12-1*, plate is supported on two sides.

$$\frac{3820}{\sqrt{F_y}} = \frac{\frac{b}{t_{PL}}}{\sqrt{k}}$$

Table 4, $\sigma_{cr} = \sigma_y$, point B, Both Supported, *Blodgett, page 2.12-6.*

$$b := \frac{3820 \cdot \sqrt{k} \cdot t_{PL}}{\sqrt{\frac{F_y}{psi}}} \qquad b = 7.5\,in$$

Effective width of plate between stiffeners.

$sp - h_{stiff} = 8.50\,in$

Distance between stiffeners

amec

Project Number: 145579

CALCULATION SHEET

Calculation No.
145579-D-CA-011
Attachment No. 1
Calculation Title: ICV™ Box
Structural Analysis
Rev. No. 4

Originator: James Van Corbach JVC
Date: April 19, 2006
Checker: Doug Chenault DMC
Date: 4-19-06

For composite section area, use the effective area of the plate and tube section. The effective area is the area which the full yield stress can be used without reduction. Therefore the total width of plate is:

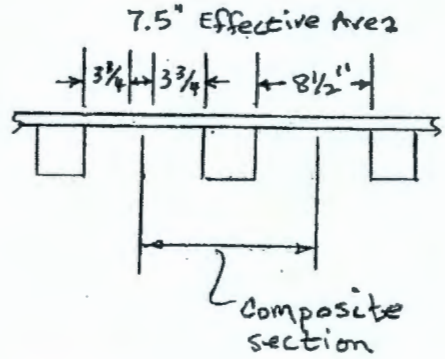

$w_e := b + h_{stiff}$

$w_e = 11.0\,in$

$A_p := w_e \cdot t_{PL}$ $\quad A_p = 2.07\,in^2$ — Cross Sectional Area of Side Panel, *Blodgett 6.4-1.*

$d := \frac{h_{stiff}}{2} + \frac{t_{PL}}{2}$ $\quad d = 1.84\,in$ — Distance from stiffener cg to sidewall cg. Since both the panel and the stiffener are symmetrical the cg is half the outside dimension of each, *Blodgett 6.4-1.*

$A_w := A_p + A_s$ $\quad A_w = 4.98\,in^2$ — Total area of panel section.

$I_{cs} := I_s + \frac{A_p \cdot t_{PL}^2}{12} + \frac{A_s \cdot A_p \cdot d^2}{A_w}$ — Moment of Inertia of panel section, *Blodgett page 6.4-1.*

$I_{cs} = 9.16\,in^4$

$c_p := \frac{A_s \cdot d}{A_w} + \frac{t_{PL}}{2}$ $\quad c_p = 1.17\,in$ — Distance from neutral axis of whole section to outer fiber of plate, inches, *Blodgett pg 6.4-1.*

$h_s := h_{stiff} + t_{PL}$ $\quad h_s = 3.69\,in$ — Distance from outer edge of Stiffener to inner edge of Panel, *Blodgett 6.4-1.*

$c_s := h_s - c_p$ $\quad c_s = 2.52\,in$ — Distance from neutral axis of whole section to outer fiber of stiffener, inches, *Blodgett page 6.4-1.*

$f_{b_C1} := \frac{M_{2_C1} \cdot c_s}{I_{cs}}$ $\quad f_{b_C1} = 19.0\,ksi$ — Maximum bending stress on stiffener, *Blodgett, page 6.4-2.*

$f_{b_C2} := \frac{M_{2_C2} \cdot c_s}{I_{cs}}$ $\quad f_{b_C2} = 14.9\,ksi$

amec

CALCULATION SHEET

Project Number: 145579

Calculation No.
145579-D-CA-011
Attachment No. 1
Calculation Title: ICV™ Box Structural Analysis
Rev. No. 4

Originator: James Van Corbach JVC
Date: April 19, 2006
Checker: Doug Chenault DMC
Date: 4-19-06

Allowable Width-Thickness Ratios (*AISC ASD, Table B5.1, page 5-36*)

$F_{yA500} := 50ksi$

Yield Strength of ASTM A500 Grade C, *AISC ASD page 1-92.*

$\frac{h}{t} = 12.0$

h/t of HSS 3.5x3.5x1/4 sidewall stiffener, *AISC LRFD, page 1-66.*

$\frac{190}{\sqrt{\frac{F_{yA500}}{1ksi}}} = 26.9$

h/t < 190 / $\sqrt{F_y}$, use *AISC ASD* equation *F3-1, page 5-48.*

$a_i := 1 + \frac{1}{3}$

Per 1997 UBC, when using the alternate basic load combinations a one-third increase shall be permitted for all combinations including *W* or *E*.

$F_{b1} := 0.66 \cdot F_{yA500} \cdot \delta_1 \cdot a_i$ $\quad F_{b1} = 35.8ksi$

Allowable Stress of stiffener with lower bounding temperature, *AISC ASD, page 5-48.*

$F_{b2} := 0.66 \cdot F_{yA500} \cdot \delta_2 \cdot a_i$ $\quad F_{b2} = 24.4ksi$

Allowable Stress of stiffener with higher bounding temperature, *AISC ASD, page 5-48.*

$f_{a_C1} := \frac{w_t \cdot sp}{A_s} + \frac{\frac{W'_w \cdot sp}{B_{C1}}}{A_s}$ $\quad f_{a_C1} = 37.9psi$

Axial Stress on stiffener per section of sidewall including self weight.

$f_{a_C2} := \frac{w_t \cdot sp}{A_s} + \frac{\frac{W'_w \cdot sp}{B_{C2}}}{A_s}$ $\quad f_{a_C2} = 33.6psi$

$K := 0.65$

K value for stiffener, *AISC, page 5-135, Table C-C2.1.*

$r_x := 1.32 \cdot in$

Radius of gyration of stiffener with respect to the X-X axis, *AISC LRFD, page 1-66.*

$h := 90 \cdot in$

Sidewall height, *F-145579-35-D-0008.*

$\frac{K \cdot h}{r_x} = 44.3$

AISC ASD page 5-42

$C_{c1} := \sqrt{\frac{2 \cdot \pi^2 \cdot E_1}{F_{yA500} \cdot \delta_1}}$ $\quad C_{c1} = 111.4$

$\frac{K \cdot h}{r} < C_c$, therefore use E2-1, *AISC page 5-42.*

$C_{c2} := \sqrt{\frac{2 \cdot \pi^2 \cdot E_2}{F_{yA500} \cdot \delta_2}}$ $\quad C_{c2} = 116.3$

amec

CALCULATION SHEET

Project Number: 145579

Calculation No.
145579-D-CA-011
Attachment No. 1
Calculation Title: ICV™ Box Structural Analysis
Rev. No. 4

Originator: James Van Corbach
Date: April 19, 2006
Checker: Doug Chenault
Date: 4-19-06

$$F_{a1} := \frac{\left[1 - \frac{\left(\frac{K \cdot h}{r_x}\right)^2}{2 \cdot C_{c1}^{\,2}}\right] \cdot F_{yA500} \cdot \delta_1}{\frac{5}{3} + \frac{3\left(\frac{K \cdot h}{r_x}\right)}{8 \cdot C_{c1}} - \frac{\left(\frac{K \cdot h}{r_x}\right)^3}{8 \cdot C_{c1}^{\,3}}}$$

Eq. E2-1 with lower bounding temperature reduction, *AISC, page 5-42.*

$F_{a1} = 20.70\,\text{ksi}$

$$F_{a2} := \frac{\left[1 - \frac{\left(\frac{K \cdot h}{r_x}\right)^2}{2 \cdot C_{c2}^{\,2}}\right] \cdot F_{yA500} \cdot \delta_2}{\frac{5}{3} + \frac{3\left(\frac{K \cdot h}{r_x}\right)}{8 \cdot C_{c2}} - \frac{\left(\frac{K \cdot h}{r_x}\right)^3}{8 \cdot C_{c2}^{\,3}}}$$

Eq. E2-1 with higher bounding temperature reduction, *AISC, page 5-42.*

$F_{a2} = 14.27\,\text{ksi}$

The load from the weight of the lid is negligible

$\frac{f_{a_C1}}{F_{a1}} = 0.00$ $\quad$ $\frac{f_{a_C1}}{F_{a2}} = 0.00$

$\frac{f_{a_C2}}{F_{a1}} = 0.00$ $\quad$ $\frac{f_{a_C2}}{F_{a2}} = 0.00$

$\frac{f_a}{F_a} \le 0.15$, therefore use equations H1-3, *AISC page 5-54.*

Check combined stresses of sidewall section.

$\frac{f_{a_C1}}{F_{a1}} + \frac{f_{b_C1}}{F_{b1}} = 0.53$

If equation $H1 - 2 \le 1.0$, Okay for short wall, at lower bounding temperature.

$\frac{f_{a_C1}}{F_{a2}} + \frac{f_{b_C1}}{F_{b2}} = 0.78$

If equation $H1 - 2 \le 1.0$, Okay for short wall, at upper bounding temperature.

$$\frac{f_{a_C2}}{F_{a1}} + \frac{f_{b_C2}}{F_{b1}} = 0.42$$

If equation $H1 - 2 \le 1.0$, Okay for long wall, at lower bounding temperature.

$$\frac{f_{a_C2}}{F_{a2}} + \frac{f_{b_C2}}{F_{b2}} = 0.61$$

If equation $H1 - 2 \le 1.0$, Okay for long wall, at upper bounding temperature.

Therefore, the HSS3.5x3.5x1/4 at 12" spacing is adequate for both the long and short walls of the ICV™ Box.

Check deflection. Maximum deflection will occur approximately at the center of the sidewall section, AISC *page 2-301, Beam Fixed at Both Ends - Concentrated load at any point* and *Beam Fixed at Both Ends - Concentrated Load at Center.*

Case 1: Deflections in Short Wall

$$\Delta_{pf1} := \frac{P_f \cdot h_{pf}^2 \cdot \left(\frac{h}{2}\right)^2}{6 \cdot E_1 \cdot I_{cs} \cdot h^3} \cdot \left[3 \cdot (h - h_{pf}) \cdot h - 3 \cdot (h - h_{pf}) \cdot \frac{h}{2} - h_{pf} \cdot \frac{h}{2}\right]$$

$\Delta_{pf1} = 0.040\,in$

Deflection at center as a result of static fluid pressure.

$$\Delta_{py_C1} := \frac{P_{y_C1} \cdot (h - h_{py})^2 \cdot \left(\frac{h}{2}\right)^2}{6 \cdot E_1 \cdot I_{cs} \cdot h^3} \cdot \left[3 \cdot h_{py} \cdot h - 3 \cdot h_{py} \cdot \frac{h}{2} - (h - h_{py}) \cdot \frac{h}{2}\right]$$

$\Delta_{py_C1} = 0.017\,in$

Deflection at center as a result of dynamic fluid pressure.

$$\Delta_{pw_C1} := \frac{P_{w_C1} \cdot h^3}{192 \cdot E_1 \cdot I_{cs}}$$

$\Delta_{pw_C1} = 0.031\,in$

Deflection at center as a result of self weight.

$\Delta_{max1} := \Delta_{pf1} + \Delta_{py_C1} + \Delta_{pw_C1}$

Maximum deflection of stiffener in short wall at lower bounding temperature.

$\Delta_{max1} = 0.088\,in$

$$\Delta_{pf2} := \frac{P_f \cdot h_{pf}^2 \cdot \left(\frac{h}{2}\right)^2}{6 \cdot E_2 \cdot I_{cs} \cdot h^3} \cdot \left[3 \cdot (h - h_{pf}) \cdot h - 3 \cdot (h - h_{pf}) \cdot \frac{h}{2} - h_{pf} \cdot \frac{h}{2}\right]$$

$\Delta_{pf2} = 0.053\,in$

Deflection at center as a result of static fluid pressure.

$$\Delta_{py_C1} := \frac{P_{y_C1} \cdot (h - h_{py})^2 \cdot \left(\frac{h}{2}\right)^2}{6 \cdot E_2 \cdot I_{cs} \cdot h^3} \cdot \left[3 \cdot h_{py} \cdot h - 3 \cdot h_{py} \cdot \frac{h}{2} - (h - h_{py}) \cdot \frac{h}{2}\right]$$

$\Delta_{py_C1} = 0.023\,in$

Deflection at center as a result of dynamic fluid pressure.

$$\Delta_{pw_C1} := \frac{P_{w_C1} \cdot h^3}{192 \cdot E_2 \cdot I_{cs}}$$

$\Delta_{pw_C1} = 0.042\,in$

Deflection at center as a result of self weight.

$\Delta_{max2} := \Delta_{pf2} + \Delta_{py_C1} + \Delta_{pw_C1}$

Maximum deflection of stiffener in short wall at upper bounding temperature.

$\Delta_{max2} = 0.118\,in$

Case 2: Deflections in long wall

$$\Delta_{py_C2} := \frac{P_{y_C2} \cdot (h - h_{py})^2 \cdot \left(\frac{h}{2}\right)^2}{6 \cdot E_1 \cdot I_{cs} \cdot h^3} \cdot \left[3 \cdot h_{py} \cdot h - 3 \cdot h_{py} \cdot \frac{h}{2} - (h - h_{py}) \cdot \frac{h}{2}\right]$$

$\Delta_{py_C2} = 0.014\,in$

Deflection at center as a result of dynamic fluid pressure.

$$\Delta_{pw_C2} := \frac{P_{w_C2} \cdot h^3}{192 \cdot E_1 \cdot I_{cs}}$$

$\Delta_{pw_C2} = 0.013\,in$

Deflection at center as a result of self weight.

$\Delta_{max1} := \Delta_{pf1} + \Delta_{py_C2} + \Delta_{pw_C2}$

Maximum deflection of stiffener in long wall at lower bounding temperature.

$\Delta_{max1} = 0.067\,in$

$$\Delta_{py_C2} := \frac{P_{y_C2} \cdot (h - h_{py})^2 \cdot \left(\frac{h}{2}\right)^2}{6 \cdot E_2 \cdot I_{cs} \cdot h^3} \cdot \left[3 \cdot h_{py} \cdot h - 3 \cdot h_{py} \cdot \frac{h}{2} - (h - h_{py}) \cdot \frac{h}{2}\right]$$

$\Delta_{py_C2} = 0.019\,in$

Deflection at center as a result of dynamic fluid pressure.

$$\Delta_{pw_C2} := \frac{P_{w_C2} \cdot h^3}{192 \cdot E_2 \cdot I_{cs}}$$

$\Delta_{pw_C2} = 0.017\,in$

Deflection at center as a result of self weight.

$\Delta_{max2} := \Delta_{pf2} + \Delta_{py_C2} + \Delta_{pw_C2}$

Maximum deflection of stiffener in long wall at upper bounding temperature.

$\Delta_{max2} = 0.089\,in$

Check sidewall 3/16" plate.

Roark's Table 11.4 Case 8, Rectangular Plate, All Edges Fixed

From *Roark's Formulas for Stress and Strain, 7th edition*, Chapter 11 - Flat Plates. Table 11.4 Formulas for flat plates with straight boundaries and constant thickness. Table 11.4 and the associated equations refer to following variables

a	plate dimension, of which *a* is the larger dimension
b	plate dimension, of which *b* is the smaller dimension
t	plate thickness
q	uniform distributed pressure
β_1	constant determined from a/b ratio
β_2	constant determined from a/b ratio
α	constant determined from a/b ratio
σ_{max}	maximum plate stress located at the center of the long edge

From Table 11.4, Case 8 Shapes and Supports, Rectangular plate, all edges fixed, Case 8a Loading, Uniform over entire plate, we get the following tabulated data.

$$data := \begin{pmatrix} 1 & 0.3078 & 0.1386 & 0.0138 \\ 1.2 & 0.3834 & 0.1794 & 0.0188 \\ 1.4 & 0.4356 & 0.2094 & 0.0226 \\ 1.6 & 0.4680 & 0.2286 & 0.0251 \\ 1.8 & 0.4872 & 0.2406 & 0.0267 \\ 2 & 0.4974 & 0.2472 & 0.0277 \end{pmatrix}$$

Set up functions to interpolate values from the data table and graph the resulting data.

$X := data^{\langle 0 \rangle}$ $\quad Y := data^{\langle 1 \rangle}$ $\quad Z := data^{\langle 2 \rangle}$ $\quad A := data^{\langle 3 \rangle}$

$S := cspline(X, Y)$ $\quad T := cspline(X, Z)$ $\quad U := cspline(X, A)$

$\beta_1(x) := interp(S, X, Y, x)$

$\beta_2(x) := interp(T, X, Z, x)$

$\alpha(x) := interp(U, X, A, x)$

From the resulting interpolated curves, the β_1, β_2, and α values can be determined for the a/b ratio of the floor plate in this analysis.

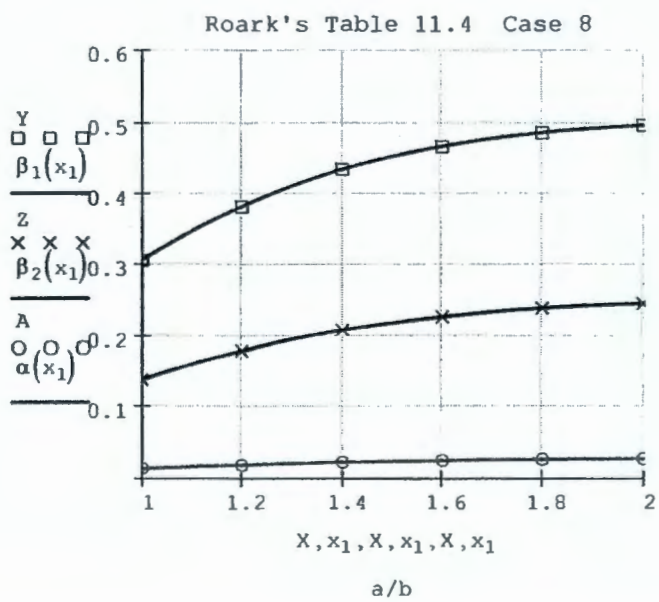

As indicated in the table of values for Case 8a and as shown in the graph, as β_1 approaches infinity, β_1 converges to 0.5, therefore the maximum value for β_1 is 0.5. Likewise, β_2 converges to 0.25 and α converges to 0.0284.

$q := q_{hy} + p_{vy}$ $\qquad q = 7.99psi$

Pressure exerted at the base of the sidewall, assume pressure is uniform over the entire plate, conservative.

$a := 90in$ $\quad b := 8.5in$ Sidewall unsupported section dimensions, 12 in - 3.5 in = 8.5 in.

a/b ratio for the various plate sizes to determine β_1, β_2, α from interpolation in the data table.

$x := \frac{a}{b}$ $\quad x = 10.6$

$\beta_1(x) = 39.9318$ $\quad \beta_2(x) = 10.6998$ $\quad \alpha(x) = 2.8965$

When $\beta_1 > 0.5$, set equal to 0.5, when $\beta_2 > 0.25$ set equal to 0.25, and when $\alpha > 0.0284$ set equal to 0.0284.

$\beta_1(x) := if(\beta_1(x) < 0.5, \beta_1(x), 0.5)$

$\beta_2(x) := if(\beta_2(x) < 0.25, \beta_2(x), 0.25)$

$\alpha(x) := if(\alpha(x) < 0.0284, \alpha(x), 0.0284)$

$x = 10.588$ $\quad \beta_1(x) = 0.5000$ $\quad \beta_2(x) = 0.2500$ $\quad \alpha(x) = 0.0284$

Determine the Stresses and Deflection of the Plate

$\sigma_{max} := \frac{\beta_1(x) \cdot q \cdot b^2}{t_{PL}^2}$ $\quad \sigma_{max} = 8.2\,ksi$ Maximum stress at center of long edge, *Roark's Table 11.4 Case 8.*

$\sigma := \frac{\beta_2(x) \cdot q \cdot b^2}{t_{PL}^2}$ $\quad \sigma = 4.1\,ksi$ Stress at center of plate, *Roark's Table 11.4 Case 8.*

$y_{max1} := \frac{\alpha(x) \cdot q \cdot b^4}{E_1 \cdot t_{PL}^3}$ $\quad y_{max1} = 0.007\,in$ Maximum deflection at center of plate at lower bounding temperature, *Roark's Table 11.4 Case 8.*

$y_{max2} := \frac{\alpha(x) \cdot q \cdot b^4}{E_2 \cdot t_{PL}^3}$ $\quad y_{max2} = 0.009\,in$ Maximum deflection at center of plate at upper bounding temperature, *Roark's Table 11.4 Case 8.*

$F_y = 36.0\,ksi$ Yield Stress of A36, *AISC ASD, page 1-7.*

As a result of the hydrostatic and hydrodynamic pressure load the sidewall plate is in tension. Allowable is $0.60F_y$ per *AISC ASD, page 5-40.*

$F_{b1} := 0.60 \cdot F_y \cdot \delta_1$ $\quad F_{b1} = 17.6\,ksi$ Allowable Stress of sidewall with temperature reduction, *AISC ASD, page 5-40.*

$F_{b2} := 0.60 \cdot F_y \cdot \delta_2$ $\quad F_{b2} = 12.0\,ksi$ — Allowable Stress of sidewall with temperature reduction, *AISC ASD, page 5-40.*

Maximum stress of sidewall plate, $\sigma < F_b$, therefore the 3/16" sidewall plate is adequate.

Check the 3/16" 4-12 skip weld at attachment of the 3/16 plate to the HSS3-1/2x3-1/2 tube , see Detail 5, *F-145579-35-D-0011.* Weld will fail in shear as a result of the outward bowing of the panel section due to the hydrostatic pressure. Because of the centerline of the plate being offset from the centerline of the tube, the resultant force on the weld is due to shear because the bend radius of the plate is not the same as the bend radius of the tube.

$M_{2_C1} = 69198.3\,lbf \cdot in$ — Maximum moment in HSS3-1/2x3-1/2 tube as previously determined.

$M_{2_C2} = 54357.4\,lbf \cdot in$

$d := \frac{3.5 \cdot in}{2}$ — Distance from the centerline of the tube to the weld.

$P_{y_C1} := \frac{M_{2_C1}}{d}$ $\quad P_{y_C1} = 39541.9\,lbf$ — Shear force on weld.

$P_{y_C2} := \frac{M_{2_C2}}{d}$ $\quad P_{y_C2} = 31061.4\,lbf$

$b := 84.25 \cdot in$ — Weld length based on 96.25" (height of box) - 8" (bottom perimeter tube height - 4" (Box lip height) = 84.25".

$A_w := 2b$ $\quad A_w = 168.5\,in$ — Total weld area, *Blodgett, page 7.4-6, Section 8.*

Determine stress per linear inch of weld.

$f_w := \frac{P_{y_C1}}{A_w}$ $\quad f_w = 234.7\,\frac{lbf}{in}$ — Stress in the welded connection

Allowable Weld Stress, AWS, D1.1, Table 3-1, assume E70XX-X electrodes are used in welding process.

$F_u := 70 \cdot ksi$ — Ultimate Strength of filler metal E70XX-X Electrode, *AWS, page 42, Table 3.1.*

$F_{w1} := .3 \cdot F_u \cdot \delta_1$ $\quad F_{w1} = 17.1\,ksi$ — Allowable weld stress, *AWS, page 13, Table 2.3,* at lower bounding temperature. Assume weld material reacts to temperature effects similar to base material.

$t_w := \frac{f_w}{F_{w1}}$ $\quad t_w = 0.014\,in$ — Throat size of weld needed.

$l_w := t_w \cdot \sqrt{2}$	$l_w = 0.019\,in$	l_w < 0.1875; 3/16" fillet weld Okay at lower bounding temperature.
$F_{w2} := .3 \cdot F_u \cdot \delta_2$	$F_{w2} = 11.6\,ksi$	Allowable weld stress, *AWS, page 13, Table 2.3*, at upper bounding temperature.
$t_w := \frac{f_w}{F_{w2}}$	$t_w = 0.02\,in$	Throat size of weld needed
$l_w := t_w \cdot \sqrt{2}$	$l_w = 0.028\,in$	l_w < 0.1875; 3/16" fillet weld Okay at upper bounding temperature.
$\frac{l_w}{0.1875 \cdot in} = 15\,\%$	% - Length of weld per unit length required	
$\frac{4}{12} = 33\,\%$	33% - Actual length per unit length of weld	

The 3/16" 4-12 skip fillet welds are sufficient to secure the plate to the tube on the short wall.

$f_w := \frac{P_{y_C2}}{A_w}$	$f_w = 184.3\,\frac{lbf}{in}$	Stress in the welded connection
$t_w := \frac{f_w}{F_{w1}}$	$t_w = 0.011\,in$	Throat size of weld needed.
$l_w := t_w \cdot \sqrt{2}$	$l_w = 0.015\,in$	l_w < 0.1875; 3/16" fillet weld Okay at lower bounding temperature.
$F_{w2} := .3 \cdot F_u \cdot \delta_2$	$F_{w2} = 11.6\,ksi$	Allowable weld stress, *AWS, page 13, Table 2.3*, at upper bounding temperature.
$t_w := \frac{f_w}{F_{w2}}$	$t_w = 0.016\,in$	Throat size of weld needed
$l_w := t_w \cdot \sqrt{2}$	$l_w = 0.022\,in$	l_w < 0.1875; 3/16" fillet weld Okay at upper bounding temperature.
$\frac{l_w}{0.1875 \cdot in} = 12\,\%$	% - Length of weld per unit length required	
$\frac{4}{12} = 33\,\%$	33% - Actual length per unit length of weld	

The 3/16" 4-12 skip fillet welds are sufficient to secure the plate to the tube on the long wall.

Check Floor and Supports

All allowables have been reduced due to the temperatures the box will incur during the vitrification process. The contribution of the plate has been ignored in the determination of the adequacy of the bottom cross tube.

Determine the weight of material contained within box per ft^2.

$P := 110\text{metricton}$	$P = 242508.5\,\text{lbf}$	Using mass of box found in weight calculation and rounded up for unforeseen weight additions, *145579-D-CA-010.*
$l = 288.0\,\text{in}$	$w = 90.0\,\text{in}$	Length, Width, and height of Box, Inside of Steel Box (24'x7.5'x7.5'), *F-145579-35-D-0008.*
$w_c := \frac{P}{w \cdot l}$	$w_c = 9.36\,\text{psi}$	Maximum weight of waste box divided by the floor area of the boxes contents.
$t_{PL} := 0.25\,\text{in}$		Thickness of 1/4in floor plate, *Ryerson Stock List & F-145579-35-D-0008.*
$I_s := 48.3 \cdot \text{in}^4$		Moment of Inertia of HSS6x6x1/2, *AISC LRFD page 1-62.*
$A_s := 9.74\,\text{in}^2$		Cross Sectional Area of floor support, *AISC LRFD page 1-62.*
$S_s := 16.1\,\text{in}^3$		Elastic Section Modulus of Sidewall Stiffener HSS 6x6x1/2, *AISC LRFD page 1-62.*
$sp := 12 \cdot \text{in}$		Center to Center spacing of HSS supports, *F-145579-35-D-0008.*
$M_{max} := \frac{(w_c \cdot sp) \cdot w^2}{8}$	$M_{max} = 113675.9\,\text{lbf} \cdot \text{in}$	Simple Beam, uniformly distributed load plus compression load applied at the end of beam, *AISC ASD, page 2-296.*
$\Delta_{max1} := \frac{5 \cdot w_c \cdot sp \cdot w^4}{384 \cdot E_1 \cdot I_s}$	$\Delta_{max1} = 0.078\,\text{in}$	Bottom tube deflection at lower bounding temperature, *AISC ASD, page 2-296.*
$\Delta_{max2} := \frac{5 \cdot w_c \cdot sp \cdot w^4}{384 \cdot E_2 \cdot I_s}$	$\Delta_{max2} = 0.104\,\text{in}$	Bottom tube deflection at higher bounding temperature, *AISC ASD, page 2-296.*
$f_b := \frac{M_{max}}{S_s}$	$f_b = 7.1\,\text{ksi}$	Maximum bending stress on bottom tube, *Blodgett, page 6.4-2.*

Allowable Width-Thickness Ratios (*AISC ASD, Table B5.1, page 5-36*)

$\frac{h}{t} = 9.90$	HSS 6x6x1/2 Member h/t, *AISC LRFD, page 1-62.*

$$\frac{190}{\sqrt{\frac{F_{yA500}}{1ksi}}} = 26.9$$

h/t < 190 / $\sqrt{F_y}$, use *AISC ASD* equation F3-1, page 5-48.

$F_{b1} := 0.66 \cdot F_{yA500} \cdot \delta_1$ $\quad F_{b1} = 26.8\,ksi$

Allowable Stress of tube at lower bounding temperature, *AISC ASD, page 5-48.*

$$\frac{f_b}{F_{b1}} = 0.26$$

Unity Check less than one, therefore okay for lower bounding temperature.

$F_{b2} := 0.66 \cdot F_{yA500} \cdot \delta_2$ $\quad F_{b2} = 18.3\,ksi$

Allowable Stress of stiffener at higher bounding temperature, *AISC ASD, page 5-48.*

$$\frac{f_b}{F_{b2}} = 0.39$$

Unity Check less than one, therefore okay for upper bounding temperature.

Therefore the HSS6x6x1/2 floor members at the spacing of 12" centers is adequate.

Check floor 1/4" plate using *Roark's Formulas for Stress and Strain, 7th edition*, Chapter 11 - Flat Plates. Table 11.4 Formulas for flat plates with straight boundaries and constant thickness, as derived previously in this calculation.

$q := w_c$ $\quad q = 9.36\,psi$

Pressure exerted on floor plate, assume pressure is uniform over the entire plate.

$a := 90in$ $\quad b := 6in$

Floor unsupported section dimensions.

a/b ratio for the various plate sizes to determine β_1, β_2, α from interpolation in the data table.

$x := \frac{a}{b}$ $\quad x = 15.0$

$\beta_1(x) = 0.5$ $\quad \beta_2(x) = 0.25$ $\quad \alpha(x) = 0.0284$

When $\beta_1 > 0.5$, set equal to 0.5, when $\beta_2 > 0.25$ set equal to 0.25, and when $\alpha > 0.0284$ set equal to 0.0284.

$\beta_1(x) := if(\beta_1(x) < 0.5, \beta_1(x), 0.5)$

$\beta_2(x) := if(\beta_2(x) < 0.25, \beta_2(x), 0.25)$

$\alpha(x) := if(\alpha(x) < 0.0284, \alpha(x), 0.0284)$

$x = 15.000$ $\quad \beta_1(x) = 0.5000$ $\quad \beta_2(x) = 0.2500$ $\quad \alpha(x) = 0.0284$

Determine the Stresses and Deflection of the Plate

$\sigma_{max} := \frac{\beta_1(x) \cdot q \cdot b^2}{t_{PL}^2}$ $\quad \sigma_{max} = 2.7\,ksi$

Maximum stress at center of long edge, *Roark's Table 11.4 Case 8.*

$\sigma := \frac{\beta_2(x) \cdot q \cdot b^2}{t_{PL}^2}$ $\quad \sigma = 1.3\,ksi$ — Stress at center of plate, *Roark's Table 11.4 Case 8.*

$y_{max1} := \frac{\alpha(x) \cdot q \cdot b^4}{E_1 \cdot t_{PL}^3}$ $\quad y_{max1} = 0.001\,in$ — Maximum deflection at center of plate at lower bounding temperature, *Roark's Table 11.4 Case 8.*

$y_{max2} := \frac{\alpha(x) \cdot q \cdot b^4}{E_2 \cdot t_{PL}^3}$ $\quad y_{max2} = 0.001\,in$ — Maximum deflection at center of plate at upper bounding temperature, *Roark's Table 11.4 Case 8.*

$F_y := 36ksi$ — Yield Stress of A36, *AISC ASD, page 1-7.*

$F_{b1} := 0.60 \cdot F_y \cdot \delta_1$ $\quad F_{b1} = 17.6\,ksi$ — Allowable Stress of sidewall with temperature reduction, *AISC ASD, page 5-40.*

$F_{b2} := 0.60 \cdot F_y \cdot \delta_2$ $\quad F_{b2} = 12.0\,ksi$ — Allowable Stress of sidewall with temperature reduction, *AISC ASD, page 5-40.*

Maximum stress of floor plate, $\sigma < F_b$, therefore the 1/4" floor plate is adequate.

Check Weld at attachment point to HSS8x4x3/8 tube , see Detail 3, *F-145579-35-D-0011.*

$w_u := 9.1875in$ — Unsupported plate width from last HSS6x6x1/2 tube to HSS8x4x3/8 tube, *F-145579-35-D-0008 & F-145579-35-D-0011.*

$w = 90.0\,in$ — Internal width of ICV™ Box.

$P_y := w_u \cdot w_c \cdot w$ $\quad P_y = 7736.3\,lbf$ — Vertical force on weld.

$q = 9.36\ psi$ — Hydrostatic and Hydrodynamic pressure at bottom of box as determined previously in this calculation.

$P_z := q \cdot w \cdot 1in$ $\quad P_z = 842.0\,lbf$ — Horizontal force on weld.

$b := 90 \cdot in$ $\quad d := 0.25in$ — Weld length and distance between welds.

$A_w := 2b$ $\quad A_w = 180.0\,in$ — Total weld area, *Blodgett, page 7.4-6, Section 8.*

Determine stress per linear inch of weld.

$f_w := \sqrt{\left(\frac{P_y}{A_w}\right)^2 + \left(\frac{P_z}{A_w}\right)^2}$ $\quad f_w = 43.2\,\frac{lbf}{in}$ — Stress in the welded connection

Allowable Weld Stress, AWS, D1.1, Table 3-1, assume E70XX-X electrodes are used in welding process.

$F_u := 70 \cdot ksi$ — Ultimate Strength of filler metal E70XX-X Electrode, *AWS, page 42, Table 3.1.*

$F_{w1} := .3 \cdot F_u \cdot \delta_1$ $\quad F_{w1} = 17.1\,ksi$ — Allowable weld stress, *AWS, page 13, Table 2.3*, at lower bounding temperature. Assume weld material reacts to temperature effects similar to base material.

$t_w := \frac{f_w}{F_{w1}}$ $\quad t_w = 0.003\,in$ — Throat size of weld needed.

$l_w := t_w \cdot \sqrt{2}$ $\quad l_w = 0.004\,in$ — $l_w < 0.25$; 1/4" fillet weld Okay at lower bounding temperature.

$F_{w2} := .3 \cdot F_u \cdot \delta_2$ $\quad F_{w2} = 11.6\,ksi$ — Allowable weld stress, *AWS, page 13, Table 2.3*, at upper bounding temperature.

$t_w := \frac{f_w}{F_{w2}}$ $\quad t_w = 0.004\,in$ — Throat size of weld needed

$l_w := t_w \cdot \sqrt{2}$ $\quad l_w = 0.005\,in$ — $l_w < 0.25$; 1/4" fillet weld Okay at upper bounding temperature.

The 1/4 fillet welds are **sufficient** to secure the plate to the tube.

Seismic Lateral Force for Overturning and Sliding

Determine the total seismic lateral force on the ICV™ Box at the melt station including effects from hydrodynamic loading.

$P_b := F_p \cdot D_m$ $\quad P_b = 28887.3\ lbf$ — Seismic lateral force on box and contents at melt station excluding liquid.

$P_{lat_C1} := \sqrt{(P_{i_C1} + P_b)^2 + P_{c_C1}{}^2 + (p_{vy} \cdot h \cdot B_{C1})^2}$ — *ACI*, Equation 5-1 altered to determine total lateral force of box.

$P_{lat_C1} = 41.1\,kip$ — Total lateral force along the long edge of the ICV™ Box.

$P_{lat_C2} := \sqrt{(P_{i_C2} + P_b)^2 + P_{c_C2}{}^2 + (p_{vy} \cdot h \cdot B_{C2})^2}$ — *ACI*, Equation 5-1 altered to determine total lateral force of box.

$P_{lat_C2} = 63.1\,kip$ — Total lateral force along the short edge of the ICV™ Box.

This results in a approximate 4% larger lateral seismic load than was determined in *145579-B-CA-004, ICV™ Box Curbs Type 'C' and 'D' and 'E', V = 60.5 kips* (page 14). However recalculating P_E results in: P_E = *63.1 kips x 0.90 = 56.8 kips* which P_E << ***106.5 kips*** (213126 lb/ 2, Total box weight at melt station divided by two curbs). Therefore effect from increased lateral force is negligible for overturning.

Lifting of Full ICV™ Box at Ambient Temperature

Assume that the ICV™ Box will have 8 lift points located along the bottom of the box as indicated on drawing *F-145579-35-D-0008*. This analysis will assume that the lifting device will utilize the lift points opposite each other along the length of the box. The lift will be vertical only and no lateral loads will be transferred to the box. This analysis will also assume for conservatism that load will carried by the HSS8x4x3/8 tube although the box is a rigid structure and could be considered a rigid member.

These lift points will tie into the sidewall stiffeners and in turn the bottom stiffeners.

A uniformly distributed load is also assumed to be reflected in the bottom transverse stiffeners. Therefore the maximum moment in the perimeter stiffener will be analyzed.

Check at the strength of the bottom perimeter HSS8x4x3/8 tube under the lifting locations as described previously. The maximum moment that will occur in the beam will be the cantilevered section on the ends of the box.

$L := 40.1875in$ — Length of the end section from the center of the end pick points, *F-145579-35-D-0008*.

$S_{HSS8x4} := 14.7 \cdot in^3$ — Elastic section modulus for HSS8x4x3/8, *AISC LRFD, page 1-62*.

$w_b := w_c \cdot \frac{w}{2}$ $\quad w_b = 421.0 \frac{lbf}{in}$ — The weight of the full ICV™ Box divided among the 8 lift points.

Check cantilevered section HSS8x4x3/8 beyond the end lift points.

$M_{max} := \frac{w_b \cdot L^2}{2}$ $\quad M_{max} = 340.0 kip \cdot in$ — Beam Overhanging One Support-Uniformly distributed load, *AISC ASD, page 2-304*.

$f_b := \frac{M_{max}}{S_{HSS8x4}}$ $\quad f_b = 23.1 ksi$ — Stress in tube member

$F_b := 0.66 \cdot F_{yA500}$ $\quad F_b = 33.0 ksi$ — Allowable Stress, *AISC ASD, page 5-48*.

$\frac{f_b}{F_b} = 0.70$ — Unity Check less than one, therefore okay.

Given that there is currently no lifting device identified for the lifting of the ICV™ Box, it has been assumed that this "to be designed" lifting device will lift the Box from the designated eight lifting points identified on Drawing *F-145579-35-D-0008*. If the lifting device does not satisfy the assumptions used in this analysis (e.g., lift points used) this analysis will need to be revisited.

Lifting of Empty ICV™ Box

$P := 27946 lbf$ — Total weight of empty ICV™ Box and Lid, per *145579-D-CA-010.*

Lifting lug plate dimensions, located on the side of the ICV™ Box, refer to drawing *F-145579-35-D-0008 and F-145579-35-D-0011, Detail 4* (14" x 8.5" x 1"). Assume the lift is vertical only. Plate welds will be in shear and moment bending from hoist ring pivot point offset from weld.

$P_y := \frac{P}{8}$ $\quad P_y = 3493.3 lbf$ — Vertical force on weld.

$b := 14 \cdot in$ $\quad d := 8.5 in$ — Weld length and distance between welds.

$A_w := 2d$ $\quad A_w = 17.0 in$ — Total weld area, *Blodgett, page 7.4-6, Section 8.*

$S_w := \frac{d^2}{3}$ $\quad S_w = 24.1 in^2$ — Properties of weld treated as a line, Table 5, *Blodgett, page 7.4-7.*

Plate is 1 inch thick, Crosby Swivel Hoist Ring base to pivot dimension is not available, for conservatism use distance from the base to top of mounting bolt 2", refer to Attachment 4. Total distance from weld to hoist ring pivot is 3". Look at weld along the bottom edge as identified by the resulting force P_z as a result of the moment, see figure.

$l := 3 in$

$M := P_y \cdot l$

$M = 10.5 kip \cdot in$ — Bending moment on weld

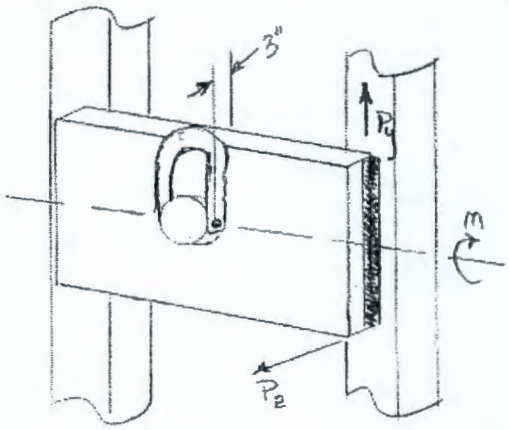

Determine stress per linear inch of weld.

$f_w := \sqrt{\left(\frac{P_y}{A_w}\right)^2 + \left(\frac{M}{S_w}\right)^2}$ $\quad f_w = 481.2 \frac{lbf}{in}$ — Stress in the welded connection

Allowable Weld Stress, AWS, D1.1, Table 3-1, assume E70XX-X electrodes are used in welding process.

$F_u := 70 \cdot ksi$ — Ultimate Strength of filler metal E70XX-X Electrode, *AWS, page 42, Table 3.1.*

$F_w := .3 \cdot F_u$	$F_w = 21.0\,ksi$	Allowable weld stress, *AWS, page 13, Table 2.3.*
$t_w := \frac{f_w}{F_w}$	$t_w = 0.023\,in$	Throat size of weld needed.
$l_w := t_w \cdot \sqrt{2}$	$l_w = 0.032\,in$	l_w < 0.25; 1/4" fillet weld Okay.

The 1/4 fillet weld **is sufficient** to secure the plate to the tube.

$$SF := \frac{.25 \cdot in}{l_w} \qquad SF = 7.7$$

Safety factor is greater than 3, therefore Okay.

Lifting of ICV™ Lid

$P := 5810\,lbf$		Total weight of empty ICV™ Lid, per *145579-D-CA-010.*

Lifting lug plate dimensions, located on the top of the ICV™ Lid, refer to drawing *F-145579-35-D-0006* and *F-145579-35-D-0009, Detail 4* (18" x 8" x 1"). Lid is lifted from 4 points (LP1), refer to drawing *F-145579-35-D-0004*. "LP1's to be used for lifting the ICV™ Box Lid only", per lifting criteria on drawing *F-145579-35-D-0004*. Based on the lift being vertical only by use of a spreader bar. Based on a sling angle of 60°, plate welds will be in shear and moment bending from hoist ring pivot point offset from weld.

$P_x := \frac{P}{4 \cdot \tan(60 \cdot deg)}$	$P_x = 838.6\,lbf$	Horizontal force on weld.
$P_y := \frac{P}{4}$	$P_y = 1452.5\,lbf$	Vertical force on weld.
$b := 18 \cdot in$	$d := 8\,in$	Weld length and distance between welds, drawing *F-145579-35-D-0009, Detail 4.*
$A_w := 2 \cdot b + 2d$	$A_w = 52.0\,in$	Total weld area, *Blodgett, page 7.4-6, Section 8.*
$S_w := b \cdot d + \frac{d^2}{3}$	$S_w = 165.3\,in^2$	Properties of weld treated as a line, Table 5, *Blodgett, page 7.4-7.*

Plate is 1 inch thick, Crosby Swivel Hoist Ring base to pivot dimension is not available, for conservatism use distance from the base to top of mounting bolt 2", refer to Attachment 4. Total distance from weld to hoist ring pivot is 3". Look at weld along the bottom edge as identified in the figure.

amec

CALCULATION SHEET

Project Number: 145579

Calculation No.
145579-D-CA-011
Attachment No. 1
Calculation Title: ICV™ Box Structural Analysis
Rev. No. 4

Originator: James Van Corbach JVC
Date: April 19, 2006
Checker: Doug Chenault DWC
Date: 4-19-06

$l := 3in$

$M := P_x \cdot l$

$M = 2.5\,kip \cdot in$ Bending moment on weld

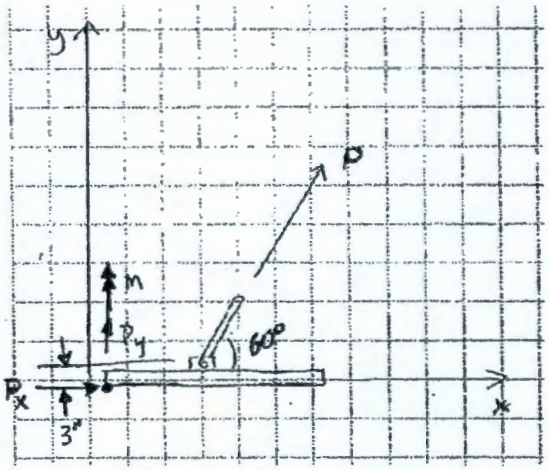

Determine stress per linear inch of weld.

$$f_w := \sqrt{\left(\frac{P_y}{A_w} + \frac{M}{S_w}\right)^2 + \left(\frac{P_x}{A_w}\right)^2} \qquad f_w = 46.1\,\frac{lbf}{in}$$

Stress in the welded connection

Allowable Weld Stress, AWS, D1.1, Table 3-1, assume E70XX-X electrodes are used in welding process.

$F_u := 70 \cdot ksi$ Ultimate Strength of filler metal E70XX-X Electrode, *AWS, page 42, Table 3.1.*

$F_w := .3 \cdot F_u$ $F_w = 21.0\,ksi$ Allowable weld stress, *AWS, page 13, Table 2.3.*

$t_w := \frac{f_w}{F_w}$ $t_w = 0.002\,in$ Throat size of weld needed.

$l_w := t_w \cdot \sqrt{2}$ $l_w = 0.003\,in$ l_w < 0.25; 1/4" fillet weld Okay.

The 1/4 fillet weld **is sufficient** to secure the plate to the tube.

$$SF := \frac{.25 \cdot in}{l_w} \qquad SF = 80.6$$

Safety factor is greater than 3, therefore Okay.

amec

CALCULATION SHEET

Project Number: 145579

Calculation No.
145579-D-CA-011
Attachment No. 1
Calculation Title: ICV™ Box Structural Analysis
Rev. No. 4

Originator: James Van Corbach JVC
Date: April 19, 2006
Checker: Doug Chenault DMC
Date: 4-19-06

Check Lid Members

This analysis of the lid conservatively checks the lid members assuming that the tube spans the entire length of the box with no support provided by the refractory. The lid only needs to sustain its own self weight.

$P_{lid} = 5810.0\ lbf$ — Weight of the lid, *145579-D-CA-010.*

$l := 296.375 \cdot in$ — Length dimensions of the box lid, *F-145579-35-D-0006.*

$t_{PL} := 0.3125in$ — Thickness of 5/16in Plate, *Ryerson Stock List.*

$L := 90in$ — Length of section of stiffener between support points. This distance is the width at the outside of the refractory on each side.

$w_c := \frac{P_{lid}}{l}$ $\quad w_c = 19.6 \frac{lbf}{in}$ — Weight of the lid per linear inch. Assume no concentrated loads.

Derive load, from drawing *F-145579-35-D-0006*, there are several center distances between the HSS4x2 tubes. The largest span between HSS4x2 centers is 33". Assume that a single HSS4x2x1/4 tube will carry the load of this 33" and the load of the span next to it of 22" for a total linear load of 55", conservative.

$s := 55in$ — Linear distance between HSS4x2 members in regards to load contributing area, 2'-9" / 2 + 1'-10" / 2

$w := \frac{w_c \cdot s}{L}$ $\quad w = 12.0 \frac{lbf}{in}$ — Load on HSS4x2x1/4 member per linear inch of member.

Check of members stresses using loads from maximum span.

$M_{max} := \frac{w \cdot L^2}{8}$ $\quad M_{max} = 12129.7\ in \cdot lbf$ — Simple beam uniformly distributed load *AISC ASD, page 2-296.* Assuming the beam spans the box and no support contribution from refractory.

$I_s := 4.49 \cdot in^4$ — Moment of Inertia of HSS4x2x1/4, *AISC LRFD page 1-66.*

$S_s := 2.25in^3$ — Elastic Section Modulus of HSS 4x2x1/4, *AISC LRFD page 1-66.*

$f_b := \frac{M_{max}}{S_s}$ $\quad f_b = 5391.0\ psi$

Allowable Width-Thickness Ratios (*AISC ASD, Table B5.1, page 5-36*)

$\frac{h}{t} = 14.2$ — HSS 4x2x1/4 Member h/t, *AISC LRFD, page 1-66.*

amec

CALCULATION SHEET

Project Number: 145579

Calculation No.
145579-D-CA-011
Attachment No. 1
Calculation Title: ICV™ Box Structural Analysis
Rev. No. 4

Originator: James Van Corbach JVC
Date: April 19, 2006
Checker: Doug Chenault DMC
Date: 4-19-06

$$\frac{190}{\sqrt{\frac{F_{yA500}}{1ksi}}} = 26.9$$

h/t < 190 / $\sqrt{F_y}$, use *AISC ASD* equation F3-1, page 5-48.

$F_{b1} := 0.66 \cdot F_{yA500} \cdot \delta_1$ $\quad F_{b1} = 26.8\,ksi$

Allowable Stress of tube at lower bounding temperature, *AISC ASD, page 5-48.*

$$\frac{f_b}{F_{b1}} = 0.20$$

Unity Check less than one, therefore okay for lower bounding temperature.

$F_{b2} := 0.66 \cdot F_{yA500} \cdot \delta_2$ $\quad F_{b2} = 18.3\,ksi$

Allowable Stress of stiffener at higher bounding temperature, *AISC ASD, page 5-48.*

$$\frac{f_b}{F_{b2}} = 0.29$$

Unity Check less than one, therefore okay for upper bounding temperature.

$\Delta_{max1} := \frac{5 \cdot w \cdot L^4}{384 \cdot E_1 \cdot I_s}$ $\quad \Delta_{max1} = 0.089\,in$

Member deflection at lower bounding temperature, *AISC ASD, page 2-296.*

$\Delta_{max2} := \frac{5 \cdot w \cdot L^4}{384 \cdot E_2 \cdot I_s}$ $\quad \Delta_{max2} = 0.120\,in$

Member deflection at higher bounding temperature, *AISC ASD, page 2-296.*

The HSS4x2 members are adequate.

145579-D-CA-011 Rev. 4

<u>Attachment 2</u>
(3 pages)

Design Parameters

1. Modulus of Elasticity – 1 page
2. Crosby Swivel Hoist Ring Cut Sheet – 1 page

04

TABLE TM-1
MODULI OF ELASTICITY *E* OF FERROUS MATERIALS FOR GIVEN TEMPERATURES

Materials	Modulus of Elasticity E = Value Given × 10^6 psi, for Temperature, °F, of																	
	−325	−200	−100	70	200	300	400	500	600	700	800	900	1000	1100	1200	1300	1400	1500
Carbon steels with C ≤ 0.30%	31.4	30.8	30.3	29.4	28.8	28.3	27.9	27.3	26.5	25.5	24.2	22.5	20.4	18.0	...	...	...	...
Carbon steels with C > 0.30%	31.2	30.6	30.1	29.2	28.6	28.1	27.7	27.1	26.4	25.3	24.0	22.3	20.2	17.9	15.4	...	...	...
Material Group A [Note (1)]	31.1	30.5	30.0	29.0	28.5	28.0	27.6	27.0	26.3	25.3	23.9	22.2	20.1	17.8	15.3	...	...	...
Material Group B [Note (2)]	29.6	29.0	28.6	27.8	27.1	26.7	26.2	25.7	25.1	24.6	23.9	23.2	22.4	21.5	20.4	19.2	17.7	...
Material Group C [Note (3)]	31.6	30.9	30.5	29.6	29.0	28.5	28.0	27.4	26.9	26.2	25.6	24.8	23.9	23.0	21.8	20.5	18.9	...
Material Group D [Note (4)]	32.6	31.9	31.4	30.6	29.9	29.4	28.8	28.3	27.7	27.0	26.3	25.6	24.7	23.7	22.5	21.1	19.4	...
Material Group E [Note (5)]	33.0	32.4	31.9	31.0	30.3	29.7	29.2	28.6	28.1	27.5	26.9	26.2	25.4	24.4	23.3	22.0	20.5	...
Material Group F [Note (6)]	31.2	30.7	30.2	29.2	28.4	27.9	27.3	26.8	26.2	25.5	24.5	23.2	21.5	19.2	16.5	...	...	...
Material Group G [Note (7)]	30.3	29.7	29.2	28.3	27.5	27.0	26.4	25.9	25.3	24.8	24.1	23.5	22.8	22.0	21.2	20.3	19.2	18.1
S13800 [Note (8)]	31.5	30.9	30.3	29.4	28.7	28.1	27.5	26.9	26.3	25.7	25.0	24.4	...	...	...	...	...	...
S15500 [Note (9)]	30.5	29.9	29.4	28.5	27.8	27.2	26.7	26.1	25.5	24.9	24.3	23.7	...	...	...	...	...	...
S45000 [Note (10)]	31.6	31.0	30.4	29.5	28.8	28.2	27.6	27.0	26.4	25.8	25.1	24.5	...	...	...	...	...	...
S17400 [Note (11)]	30.5	29.9	29.4	28.5	27.8	27.2	26.7	26.1	25.5	24.9	24.3	23.7	...	...	...	...	...	...
S17700 [Note (12)]	31.6	31.0	30.4	29.5	28.8	28.2	27.6	27.0	26.4	25.8	25.1	24.5	...	...	...	...	...	...
S66286 [Note (13)]	31.0	30.6	30.2	29.2	28.5	27.9	27.3	26.7	26.1	25.5	24.9	24.2	...	...	...	...	...	...

Notes appear on following page.

Copyright ASME International
Provided by IHS under license with ASME

Document provided by IHS Licensee=Battelle/5940137100, 10/29/2004 11:37:56 MDT
Questions or comments about this message: please call the Document Policy Group at 303-397-2295.

UNC Swivel Hoist Rings

Load Rated® Fatigue Rated®

SEE APPLICATION AND WARNING INFORMATION

Para Español: www.thecrosbygroup.com *On Pages 167-169*

HR-125

- Top washer has the following features:
- The Working Load Limit and Recommended Torque value are permanently stamped into each washer.
- Washer is color coded for easy identification: Red - UNC thread.
- Bolt specification is a Grade 8 Alloy socket head cap screw to ASTM A 574. All threads listed are UNC.
- BOLT SIZE IDENTIFICATION: The size of the bolt will be stated as in the drawing below.
  Illustration shows meaning of each dimension given.
- NOTE: For Special Applications, see page 354.

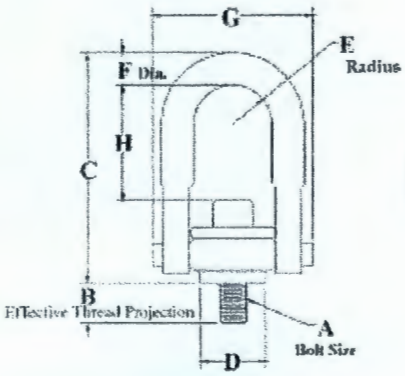

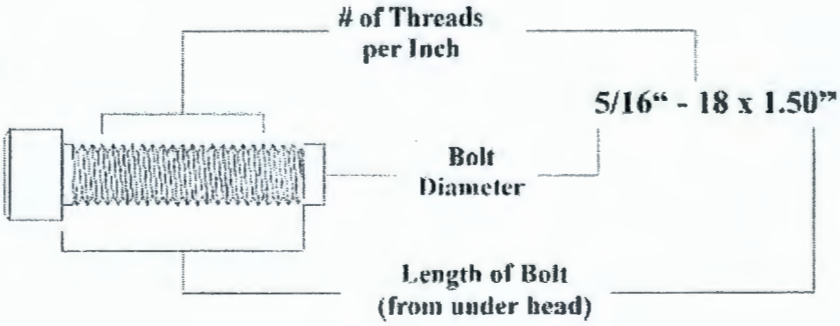

HR-125 UNC Treads

Frame Size No.	HR-125 Stock No.	Working Load Limit (lbs.)	Torque in Ft. Lbs.	Dimensions (in.) Bolt Size A ‡	Effective Thread Projection Length B	C	D	Radius E	Diameter F	G	H	Weight Each (lbs.)
1 †	1016887	800	7	5/16 - 18 x 1.50	.58	2.72	.97	.46	.34	1.87	1.12	.37
1 †	1016898	1000	12	3/8 - 16 x 1.50	.58	2.72	.97	.46	.34	1.87	1.05	.39
2	1016909	2500	28	1/2 - 13 x 2.00	.70	4.85	1.96	.87	.69	3.35	2.29	2.33
2 †	1016912	2500	28	1/2 - 13 x 2.50	1.20	4.85	1.96	.87	.69	3.35	2.29	2.36
2	1016920	4000	60	5/8 - 11 x 2.00	.70	4.85	1.96	.87	.69	3.35	2.16	2.41
2 †	1016924	4000	60	5/8 - 11 x 2.75	1.45	4.85	1.96	.87	.69	3.35	2.16	2.47
2	1016931	5000	100	3/4 - 10 x 2.25	.95	4.85	1.96	.87	.69	3.35	2.04	2.52
2 †	1016935	5000	100	3/4 - 10 x 2.75	1.45	4.85	1.96	.87	.69	3.35	2.04	2.59
3	1016942	7000 **	100	3/4 - 10 x 2.75	.89	6.57	2.96	1.36	.94	4.87	2.97	6.72
3 †	1016946	7000 **	100	3/4 - 10 x 2.75	1.64	6.57	2.96	1.36	.94	4.87	2.97	6.81
3	1016953	8000	160	7/8 - 9 x 2.75	.89	6.57	2.96	1.36	.94	4.87	2.84	6.84
3 †	1016957	8000	160	7/8 - 9 x 3.50	1.64	6.57	2.96	1.36	.94	4.87	2.84	6.96
3	1016964	10000	230	1 - 8 x 3.00	1.14	6.57	2.96	1.36	.94	4.87	2.72	7.09
3 †	1016969	10000	230	1 - 8 x 4.00	2.14	6.57	2.96	1.36	.94	4.87	2.72	7.31

145579-D-CA-011 Rev. 4

Attachment 3
(7 pages)

Drawings

1. F-145579-00-A-0021 Rev. 0J
2. F-145579-35-D-0004 Rev 4A
3. F-145579-35-D-0006 Rev. 2A
4. F-145579-35-D-0008 Rev. 1
5. F-145579-35-D-0009 Rev. 1
6. F-145579-35-D-0011 Rev. 2A

In making requests for transmittal of data by any electronic media, the Company receiving such data agrees that AMEC Americas Limited cannot be held responsible for users of the data outside of or beyond the scope of our original agreement. Also, because data stored in electronic media or transmitted by electronic means can deteriorate undetected or be modified without the consultant's knowledge, the Company receiving data agrees that AMEC Americas Limited cannot be held liable for the compatibility, completeness or correctness of the data.

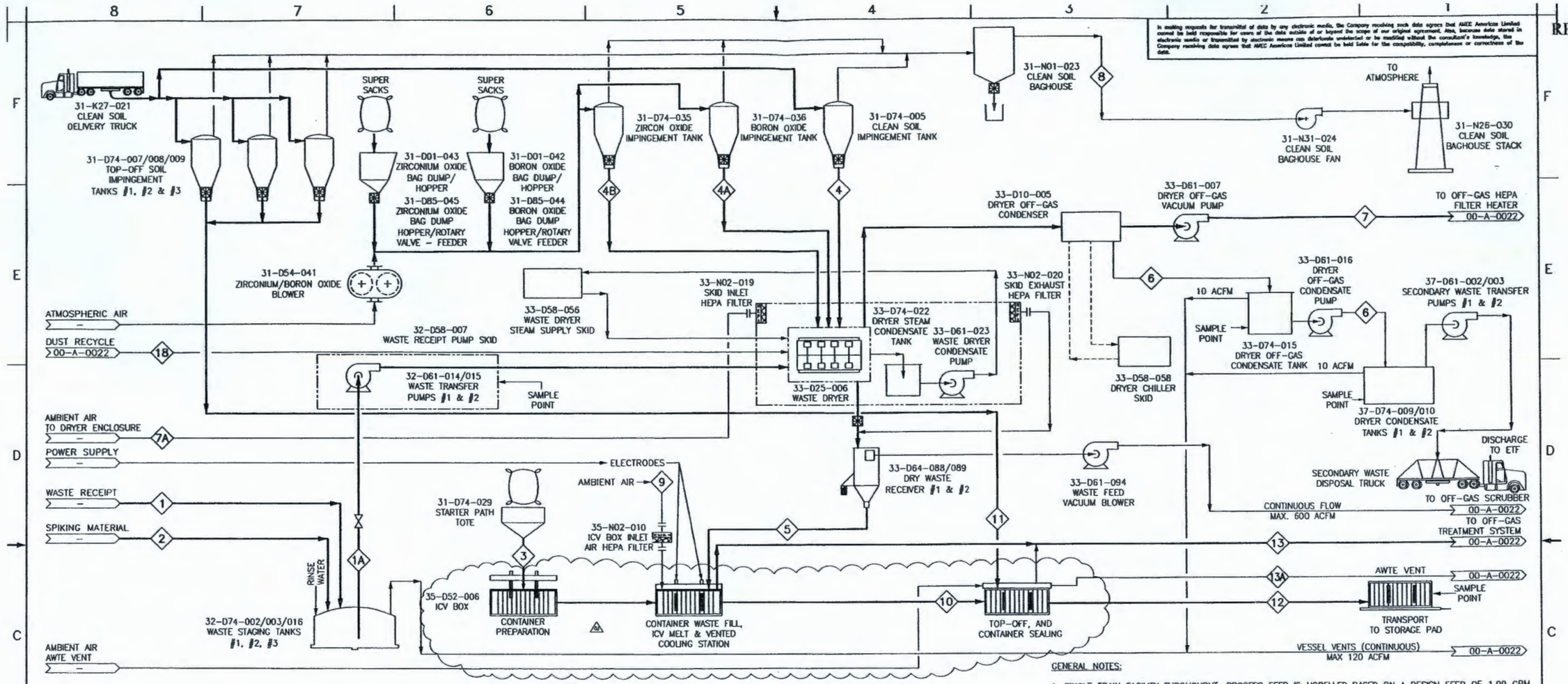

STREAM No.		1	2	1A	3	4	4A	4B	5	6	7	7A	8	9	10	11	12	13	13A	18
STREAM NAME	UNITS	WASTE RECEIPT	SPIKING FLOW	WASTE FLOW	STARTER PATHS	SOIL	B2O3 ADDITION	ZrO2 ADDITION	ICV FEED	DRYER CONDENSATE	DRYER AIR	DRYER VENT AIR	OFF GAS AIR	ICV AIR	HOT ICV PRODUCT	TOP LP SOIL	COOLED ICV PRODUCT	ICV OFF GAS	AWTE VENT AIR	DUST RECYCLE
PHASE		LIQUID	LIQUID	LIQUID	SOLID	SOLID	SOLID	SOLID	SOLID	LIQUID	GAS	GAS	GAS	GAS	SOLID	SOLID	SOLID	GAS	GAS	SOLID
CONTINUOUS MASS FLOWRATE	lb/hr	703		703	16	329	23.3	32.6	614	460	13	2566	851	350	467	66	467	513	350	5
CONT. VOL. FLOW RATE (LIQ/GAS)	GPM/ACFM	1.09		1.09						0.98	4.2	600	199	80				280	80	
BATCH VOLUME	USG/ACF	1646		1646						1483	2027	7236000	2400000	962168				3382386	962168	
BATCH MASS	lb	17671		17671	3300	8272	586	820	15420	12055	6345	515859	171097	70323	93769	13315	93769	103209	70323	125
BATCH TRANSFER TIME	Hr	1.14		1.14	0.5	0.25	0.25	0.25	1	8	8	201	5	139	201	4	201	139	139	139
BATCH VOLUME FLOW	USGPM/ACFM	24		24						3.1	13	600	1000	115				406	115	
BATCH MASS FLOW	lb/hr	15458		15458	6600	33088	2344	3281	15420	1507	42	2566	4277	506	467	3329	467	743	506	7.2
DESIGN FACTOR	DIMENSIONLESS	1		1	1	1	1	1	1	1.1	1	1	1	1	1	1	1	1	1	1
DESIGN VOLUME FLOW	USGPM/ACFM	24		24						3.4	13	600	1000	115				406	115	
DESIGN MASS FLOW	lb/hr	15458		15458	6600	33088	2344	3281	15420	1658	42	2566	4277	506	467	3329	467	743	506	7.2
SpG		1.29		1.29	2.32	2.40	1.51	5.76	2.09	0.96	0.001	0.001	0.001	0.001	2.65	2.40	2.7	0.0005	0.001	2.54
SpG (BULK SOLIDS ONLY)					1.50	1.43	1.03	1.96	1.49						2.65	1.43	2.7			1.50
PRESSURE	in. WG	n/a		n/a	n/a	n/a	n/a	n/a	n/a	n/a	-80.07			-2.24	n/a	n/a	n/a	-2.46	-2.57	n/a
TEMPERATURE	°F	82		82	77	77	77	77	83	122	212	77	77	77	2372	77	122	675	77	572
H2O LIQUID	lb/hr	469.5		469.5	0.41	16.5			6.1	479.6										
H2O GAS	lb/hr																			
FEED Na	lb/hr	62.6		62.6	0.2	6.5			70						69.2		69.2	0.7		0.7
SO2 GAS	ppmV																	1231		
NOx GAS	ppmV																	119238		
HCl GAS	ppmV																	119		
137Cs	Ci/hr	1.5E+00	0.0E+00	1.5E+00	0.0E+00	0.0E+00	0.0E+00	0.0E+00	1.5E-00	0.0E+00	0.00E+00	0.0E+00	0.0E+00	0.0E+00	1.5E+00	0.0E+00	1.5E+00	1.5E-02	0.0E+00	1.5E-02
99Tc	Ci/hr	1.2E-02	0.0E+00	1.2E-02	0.0E+00	0.0E+00	0.0E+00	0.0E+00	1.2E-02	0.0E+00	0.00E+00	0.0E+00	0.0E+00	0.0E+00	1.2E-02	0.0E+00	1.2E-02	6.2E-04	0.0E+00	6.2E-04
TRU	Ci/hr	9.0E-04	0.0E+00	9.0E-04	0.0E+00	0.0E+00	0.0E+00	0.0E+00	9.0E-04	0.0E+00	0.00E+00	0.0E+00	0.0E+00	0.0E+00	9.0E-04	0.0E+00	9.0E-04	9.0E-06	0.0E+00	9.0E-06
129I	Ci/hr	2.3E-05	0.0E+00	2.3E-05	0.0E+00	0.0E+00	0.0E+00	0.0E+00	2.05E-05	2.05E-05	0.00E+00	0.0E+00	0.0E+00	0.0E+00	2.0E-05	0.0E+00	2.05E-05	1.84E-05	0.0E+00	1.84E-05

GENERAL NOTES:

1. SINGLE TRAIN FACILITY THROUGHPUT: PROCESS FEED IS MODELLED BASED ON A DESIGN FEED OF 1.09 GPM. A TOTAL OPERATING EFFICIENCY OF 70 % SHOULD BE APPLIED TO ACHIEVE A 0.76 GPM PRODUCTION RATE WITH A 20.0 WT % Na2O GLASS LOADING IN THE GLASS PRODUCT.
2. FLOW IN STREAM 2 IS VARIABLE; A TESTING MATRIX WILL DETERMINE THE AMOUNT AND COMPOSITION OF SPIKING MATERIAL TO BE ADDED IN THE INDIVIDUAL TESTS.
3. VALVES ARE ONLY SHOWN TO INDICATE PROCESS INTENT.
4. FEED DATA BASED ON SECTIONS 3.1.2.1.1.1 AND 3.1.2.1.1.2 IN RPP-17403 REV 2.
5. RADIONUCLIDE CONTENT WAS BASED ON TABLE 3-3 IN SECTION 3.1.2.1.1.3 OF RPP-17403 REV 2.

LINES LEGEND:

MAJOR PROCESS STREAM
MINOR PROCESS STREAM
INTERMITTENT FLOWS

Rev.	REVISION DESCRIPTION	Date	By	Chk'd	Approved Proj. Eng.	Approved Proj. Mgr.
OJ	REMOVED PROPRIETARY BLOCK	15/SEP/05	JBM	JBM	PAC	PAG
OH	ISSUE FOR CH2 APPROVAL AND 90% REPORT	10 MAY 05	SB	TH	KM	TH
OG	ISSUED FOR CLIENT APPROVAL & 90% REPORT	24 MAR 05	RRB	RC	KM	TH
OF	ISSUED FOR CLIENT APPROVAL & 90% REPORT	15 MAR 05	SB	RC	KM	TH
OE	ISSUED FOR CLIENT APPROVAL & 90% REPORT	17 FEB 05	SB	LSG	KM	TH
OD	ISSUED FOR CLIENT APPROVAL & 90% REPORT	14 FEB 05	SB	LSG	KM	TH
OC	ISSUED FOR CLIENT APPROVAL & 90% REPORT	21 JAN 05	SB	LSG	KM	TH
OB	GENERAL REVISIONS, ISSUED FOR CLIENT COMMENT	16 DEC 04	SB	LSG	KM	TH
OA	GENERAL REVISIONS, ISSUED FOR INTERNAL REVIEW	15 NOV 04	SB	LSG	KM	TH
0	FOR CONSTRUCTION	20 AUG 04	SB	LSG	KM	TH
C	FORMERLY F-143643-00-A-0021, FOR APPROVAL	26 JULY 04	SB	LSG	KM	TH
B	FINAL ISSUE	14 APR 04	SG	LSG	KM	TH
A	ISSUED FOR CLIENT COMMENT	10 MAR 04	SLC		KM	TH

AMEC DRAWING NO: F-145579-00-A-0021 REV OJ

amec

AMEC PROJECT: 145579-FINAL DBVS DESIGN

U.S. DEPARTMENT OF ENERGY
Office of River Protection

FULL DBVS
FEED PREPARATION & MELT
PROCESS FLOW DIAGRAM

SIZE F | SCALE NTS

DWG NO	TITLE
DRAWING TRACEABILITY LIST	

REF NUMBER	TITLE
NEXT USED ON	REFERENCES

REVISIONS

No.	AMEC Dwg. No.	REFERENCE DRAWINGS
1	F-145579-35-D-0005	ICV BOX LID ASSEMBLY
2	F-145579-35-D-0006	ICV BOX LID STEEL WORK 1 OF 3
3	F-145579-35-D-0008	ICV BOX ASSEMBLY
4	F-145579-35-D-0012	ICV BOX CAMERA, T/C AND GROUND ASSEMBLY
5	F-145579-35-D-0014	ICV BOX STARTER PATH DETAILS
6	F-145579-35-D-0021	ICV BOX LID BREATHER HEPA FILTER
7	F-145579-35-D-0016	ICV BOX REFRACTORY ASSEMBLY

In sending requests for transmittal of data by any electronic media, the Company receiving such data agrees that AMEC Americas Limited cannot be held responsible for more of the data outside of or beyond the scope of our original agreement. Also, because data stored in electronic media or transmitted by electronic means can deteriorate undetected or be modified without the consultant's knowledge, the Company receiving data agrees that AMEC Americas Limited cannot be held liable for the compatibility, completeness or correctness of the data.

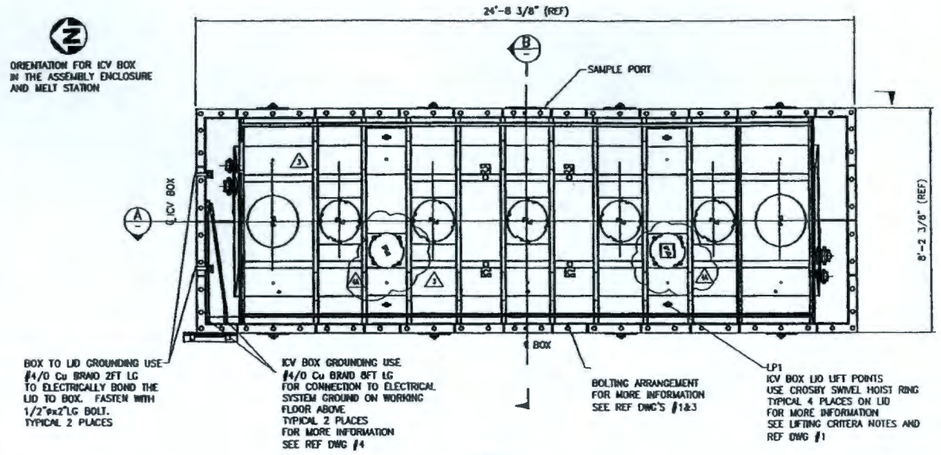

PLAN
SCALE: 1/2"=1'-0"

NOTES:

1. ICV BOX SHELL SHALL BE CONSTRUCTED WITH ALL INSIDE JOINTS SEAL WELDED (WATERTIGHT)
2. FINISHED CONSTRUCTION DIMENSIONAL TOLERANCE SHALL BE ±1/8"
3. PROVIDE DRAIN HOLES TO ALLOW FOR NO WATER RETENTION ON TOP OF BOX LID.
4. ALL PIPING FLANGES WILL BE IN ACCORDANCE WITH ASME B16.5
5. FOR ICV BOX DETAILS SEE DWG. F-145579-35-D-0008
6. FOR ICV BOX LID DETAILS SEE DWG. F-145579-35-D-0006
7. SUPPLY CROSBY LIFTING DEVICES MODEL HR-125 #1016920 (OR EQUAL)
8. NAME PLATES SHALL BE PROVIDED FOR THE ICV BOX AND LID. NAME PLATES SHALL MEET THE REQUIREMENTS OF THE HANFORD HOISTING AND RIGGING MANUAL AND AS A MINIMUM SHOW THE MANUFACTURES NAME AND WEIGHTS EMPTY AND FULL.
9. ALL HSS MEMBERS SHALL HAVE 0.25" BREATHER/DRAIN HOLES.
10. FOR CENTER OF GRAVITY DIMENSIONS SEE 145579-D-CA-0218.

LIFTING CRITERIA

1. ICV BOX LID
   - -FOUR (4) LIFT POINTS (LP1)
   - -USE LIFTING FRAME OR SPREADER BARS (SUPPLIED BY LID FABRICATOR).
   - -USE CROSBY SWIVEL HOIST RINGS MODEL HR-125 #1016920

   LIMITATIONS
   1. LP1'S TO BE USED FOR LIFTING THE ICV BOX LID ONLY
   2. REMOVE SWIVEL HOIST RINGS AFTER ICV BOX ASSEMBLY, FOR REUSE ON SUBSEQUENT BOXES
2. EMPTY BOX
   - -EIGHT (8) LIFT POINTS (LP2) ON BOX SIDES
   - -USE LIFTING FRAME OR SPREADER BARS (SUPPLIED BY BOX FABRICATOR)
   - -USE CROSBY SWIVEL HOIST RINGS MODEL HR-125 #1016920

   LIMITATIONS
   1. LP2 RESTRICTED TO LIFTING THE EMPTY ICV BOX AND LID ONLY
   2. THESE LP2 POINTS ARE NOT TO BE USED FOR LIFTING ICV BOX WHEN COMPOSITE LINER OF INSULATION, SAND AND REFRACTORY, HAVE BEEN INSTALLED.
   3. THESE LP2 POINTS ARE NOT TO BE USED TO LIFT THE FULL BOX
   4. REMOVE SWIVEL HOIST RINGS AFTER ICV BOX IS LIFTED INTO ASSEMBLY POSITION IN THE ASSEMBLY ENCLOSURE, FOR REUSE ON SUBSEQUENT BOXES.
3. FULL BOX
   - -EIGHT (8) LIFT POINTS (LP3)
   - -FULL ICV BOX TO BE LIFTED FROM UNDERNEATH BOTTOM PERIMETER FRAME
4. ALL SWIVEL HOIST RINGS TO BE TORQUED TO 60 FT LBS.

VESSEL DATA

FABRICATION, INSPECTION & TESTING

PRIMARY CONTAINMENT WELDS	FULL PENETRATION TO ANS D1.1		
RADIOGRAPHY	–	STRESS RELIEF	AS REQUIRED
IMPACT VALUES	–	WELD FINISH	SEE REF #3
WELD HARDNESS	–	INSPECTION BY	MANUFACTURER
OTHER REQ'T.	SEE NOTES	CODE CERT. REQ'D.	NO
WELL ANALYSIS / CERT.	–	STRESS CALCULATIONS	–
TESTING	WATER TIGHT/ FAT		

MATERIAL SPECIFICATIONS

	ASTM DESIGN	GRADE	DESCRIPTION
SHELL PLATE	A36		C.S.
REINFORCING RIBS (HSS)	A500	C	C.S.
INTERNAL CLIPS	A36		C.S.
BOLTS – EXTERNAL	A193	B7	C.S.
NUTS – EXTERNAL	A194	7 HEAVY HEX	C.S.
GASKETS: LID/BOX	SEE DWG SHT 0019		
REINF. PADS	A36		C.S.
INTERNAL LINERS	NOT IN SCOPE OF SUPPLY OF ICV BOX SHELL		
INSULATION	KAOWOOL M BOARD		
SAND			
REFRACTORY	VERCOCAST 60PC		
CLIPS	A36		

APPURTENANCES (APPLICABLE STDS. / SPECS.)

LIFTING LUGS	SEE DWG FOR DETAILS
EARTHING LUGS	SEE DWG FOR DETAILS
NAMEPLATES BOX	SEE NOTE 8
NAMEPLATES LID	SEE NOTE 8

FINISH (APPLICABLE STDS. / SPECS.)

SURFACE PREP – INTERNAL	N/A	INTERNAL FINISH	N/A
SURFACE PREP – EXTERNAL	SSPC SP10	EXTERNAL FINISH	THERMOLINE 4700
FIREPROOFING	N/A		

BOX WEIGHTS

ICV BOX BASE = 19,069#
ICV BOX LID = 4,737#
NOTE:
FOR WEIGHT BREAKDOWN OF ICV BOX & CONTENTS REFER TO DOCUMENT NO. 145579-D-CA-010.

GENERAL

PROJECT	DBVS FINAL DESIGN	PROJECT NUMBER	145579
		NUMBER REQ'D.	50
ITEM NO.	35-052-006 ICV BOX	P.O. NUMBER	
	35-052-012 ICV BOX LID	QA LEVEL	NQA-1
SITE	HANFORD		ENHANCED QUALITY

PROCUREMENT QUALITY

LEVEL	EQM

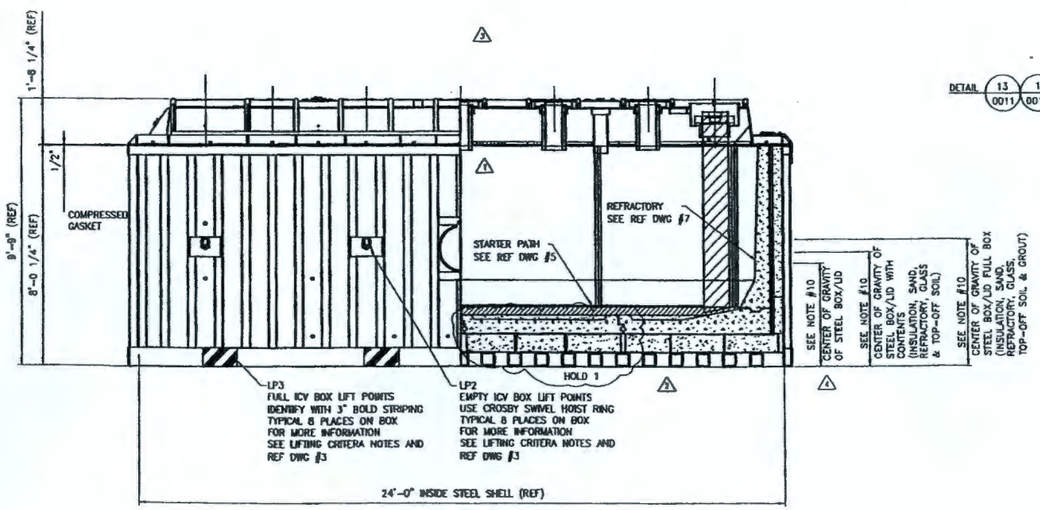

SECTION (A)
SCALE: 1/2"=1'-0"

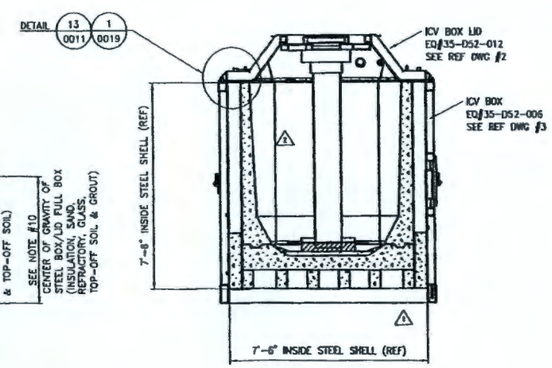

SECTION (B)
SCALE: 1/2"=1'-0"

HOLDS

1. ICV REFRACTORY JOINT ASSEMBLY DIMENSIONS ON-HOLD UNTIL VENDOR TESTING OF NEW JOINT DESIGN

Rev.	REVISION DESCRIPTION	Date	By	CHK'd	Approved Design Agent	Approved Project Eng.	DWG RD
4A	ISSUED FOR CH2M REVIEW/APPROVAL 90% DESIGN (PKG 6)	10 APR 06	THB	JM	SRB	JSG	
4	TECH EX-016	20 MAR 06	BE	SW	SB	JJ	
3	ISSUED FOR DESIGN REPORT	06 MAR 06	SW	JM	SB	JSG	
2	REVISED ICV BOX CORNER PANEL AND REFRACTORY JOINT	13 JAN 06	SW	SRB	KSM	JSG	
1	REVISED ICV BOX LINING	15 AUG 05	JDM	RDB	FWS	TH	
0	ISSUED FOR CONSTRUCTION	19 MAY 05	JBM	AA	FWS	TH	

AMEC DRAWING NO: F-145579-35-D-0004 — REV 4A

amec

AMEC PROJECT: 145579-FINAL DBVS DESIGN

U.S. DEPARTMENT OF ENERGY
Office of River Protection

BULK VITRIFICATION
ICV BOX
DATA SHEET

SIZE F — SCALE: AS NOTED

DWG NO	TITLE	REF NUMBER	TITLE
DRAWING TRACEABILITY LIST		NEXT USED ON	REFERENCES

REVISIONS

In making requests for transmittal of data by any electronic media, the Company receiving such data agrees that AMEC American Limited cannot be held responsible for errors of the data outside of or beyond the scope of our original agreement. Also, because data stored in electronic media or transmitted by electronic means can deteriorate undetected or be modified without the consultant's knowledge, the Company receiving data agrees that AMEC American Limited cannot be held liable for the compatibility, completeness or correctness of the data.

No.	AMEC Dwg. No.	REFERENCE DRAWINGS
1	F-145579-35-D-0004	ICV BOX DATA SHEET
2	F-145579-35-D-0005	ICV BOX LID ASSEMBLY
3	F-145579-35-D-0007	ICV BOX STEELWORK 2 OF 3
4	F-145579-35-D-0009	ICV BOX STEELWORK 3 OF 3

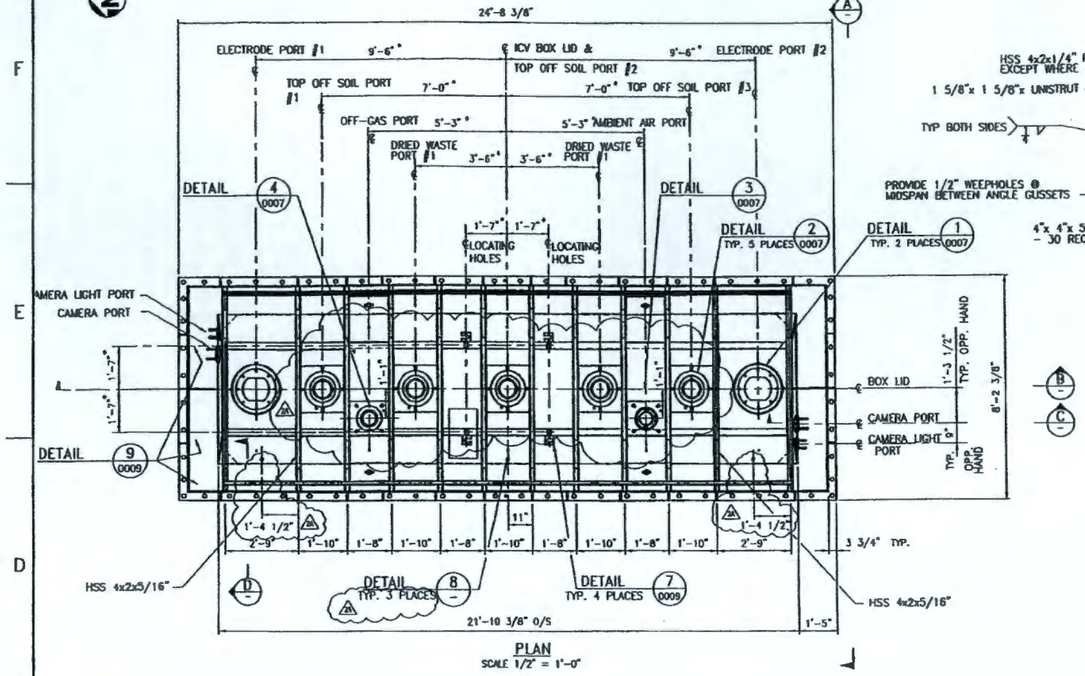

PLAN
SCALE 1/2" = 1'-0"

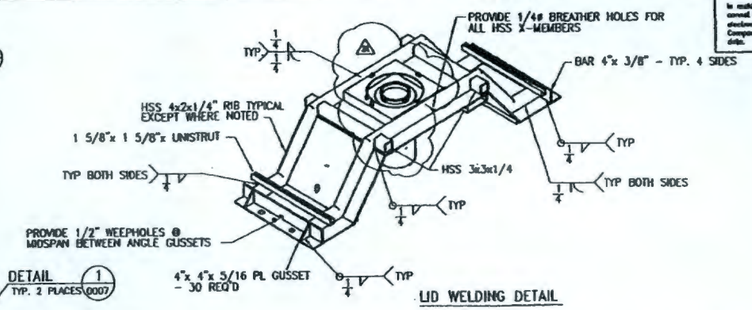

LID WELDING DETAIL

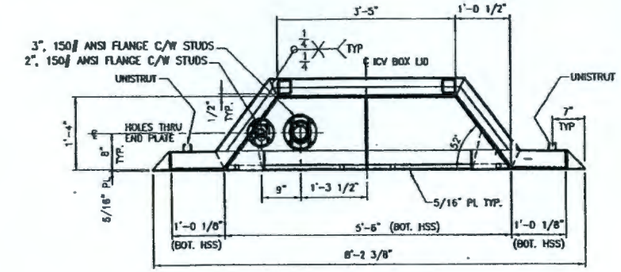

SECTION A
1"=1'-0"

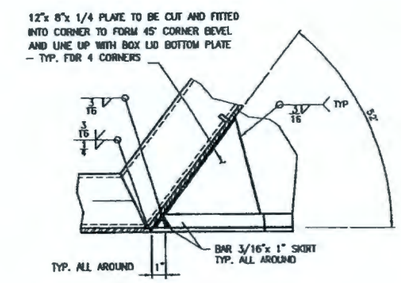

SECTION D
3"=1'-0"

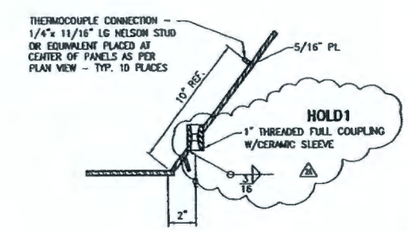

DETAIL 6 0005 8
3"=1'-0"

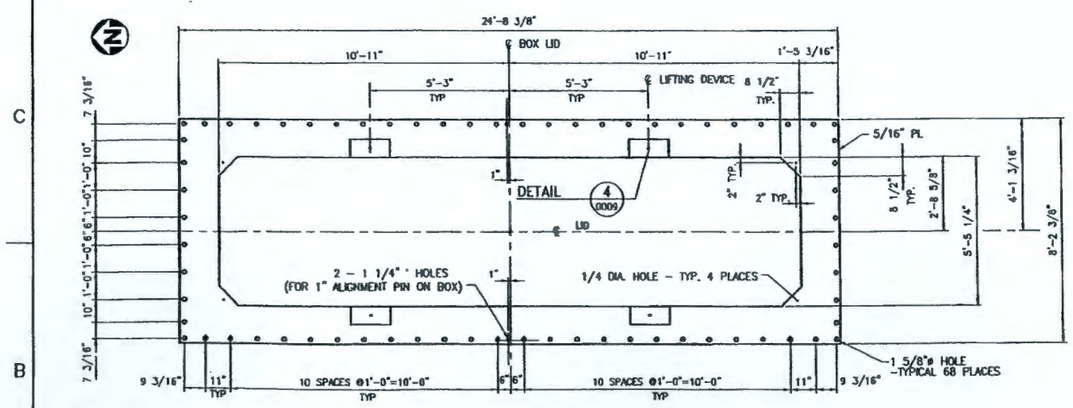

BOX LID BOTTOM PLATE
SCALE 1/2" = 1'-0"

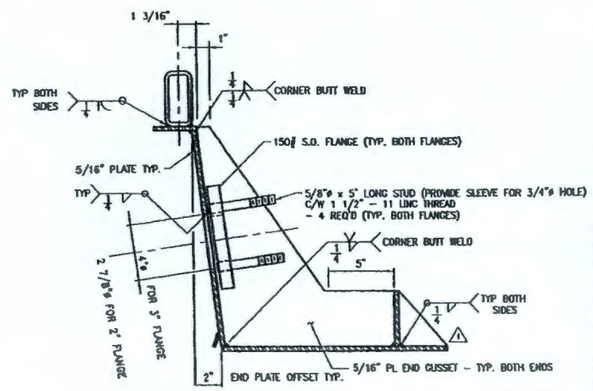

SECTION C
3"=1'-0"
THRU 3" FLANGE (SIMILAR FOR 2" FLANGE)

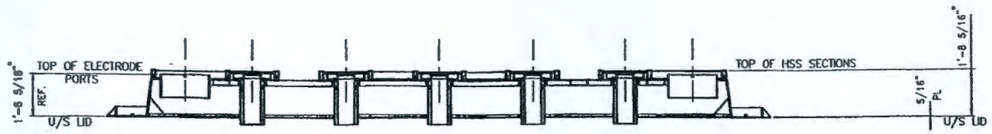

SECTION B
1/2"=1'-0"

GENERAL NOTES:

1. ALL DIMENSIONS MARKED WITH * HAVE MAX. TOLERANCE + OR - 1/16"
2. ALL REMS TO BE FABRICATED FROM:
   STRUCTURAL SHAPES - ASTM A36 OR BETTER
   PIPE - ASTM A53, GR.B
   PIPE FITTINGS - ASTM A105

HOLDS:

1. HOLD FOR TEST MELT 38-C RESULTS WITH CERAMIC SLEEVE

DWG NO	TITLE
DRAWING TRACEABILITY LIST	

REF NUMBER	TITLE
REFERENCES	
NEXT USED ON	

REV NO	REV DATE	DESCRIPTION	REV BY	REV CHK'D	CHECKED BY	DCS COMPANY
2A		ISSUED FOR CH2M APPROVAL/90% DESIGN (PKG 6)	10 APR 06	THB	JM	SRB	JGG
2		ISSUED FOR DESIGN REPORT	06 MAR 06	SW	JM	SB	JGG
1		ADDED GUSSETT	15 AUG 05	JBM	RDB	FWS	TH
0		ISSUED FOR CONSTRUCTION	19 MAY 05	JBM	AA	FWS	TH
Rev.		REVISION DESCRIPTION	Date	By	CHK'd	Appr. Tech	Appr. Mgr

REVISIONS

AMEC DRAWING NO: F-145579-35-D-0006 REV 2A

amec

AMEC PROJECT: 145579-FINAL DBVS DESIGN

U.S. DEPARTMENT OF ENERGY
Office of River Protection

BULK VITRIFICATION
ICV BOX LID
STEELWORK 1 OF 3

SIZE F | BLDG NO | MODEL NO | DWG NO | REV

SCALE AS NOTED | SHEET | OF

No.	AMEC Dwg. No.	REFERENCE DRAWINGS
1	F-145579-35-D-0004	ICV BOX DATA SHEET
2	F-145579-35-D-0005	ICV BOX LID ASSEMBLY DETAILS
3	F-145579-35-D-0006	ICV BOX LID STEEL WORK 1 OF 3
4	F-145579-35-D-0011	ICV BOX ASSEMBLY DETAILS
5	F-145579-00-F-0014	ICV BOX INSTRUMENT LOCATIONS

In making requests for transmittal of data by any electronic media, the Company receiving such data agrees that AMEC Americas Limited cannot be held responsible for users of the data outside of or beyond the scope of our original agreement. Also, because data stored in electronic media or transmitted by electronic means can deteriorate undetected or be modified without the consultant's knowledge, the Company receiving data agrees that AMEC Americas Limited cannot be held liable for the compatibility, completeness or correctness of the data.

PARTS/MATERIAL LIST

ITEM	REQD	PART/DASH NUMBER	NOMENCLATURE/DESCRIPTION	MATERIAL/REFERENCE	SYM	ITEM NO
1	1	35-DS2-006	ICV BOX	VARIES	-	1
2	8	1016920	CROSBY SWIVEL HOIST RING #HR-125	VARIES	-	2

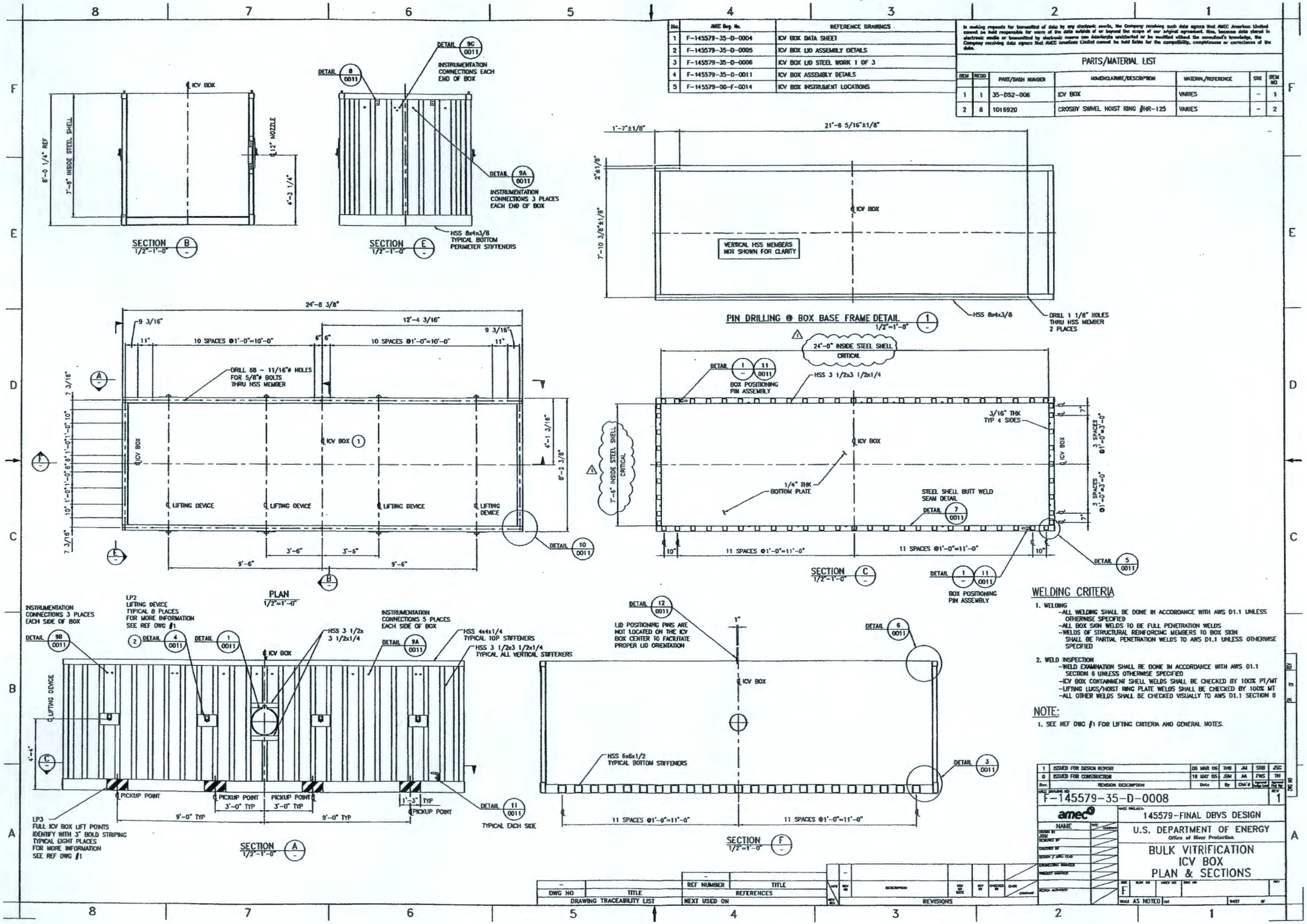

WELDING CRITERIA

1. WELDING
   - ALL WELDING SHALL BE DONE IN ACCORDANCE WITH AWS D1.1 UNLESS OTHERWISE SPECIFIED
   - ALL BOX SKIN WELDS TO BE FULL PENETRATION WELDS
   - WELDS OF STRUCTURAL REINFORCING MEMBERS TO BOX SKIN SHALL BE PARTIAL PENETRATION WELDS TO AWS D1.1 UNLESS OTHERWISE SPECIFIED
2. WELD INSPECTION
   - WELD EXAMINATION SHALL BE DONE IN ACCORDANCE WITH AWS D1.1 SECTION 6 UNLESS OTHERWISE SPECIFIED
   - ICV BOX CONTAINMENT SHELL WELDS SHALL BE CHECKED BY 100% PT/MT
   - LIFTING LUGS/HOIST RING PLATE WELDS SHALL BE CHECKED BY 100% MT
   - ALL OTHER WELDS SHALL BE CHECKED VISUALLY TO AWS D1.1 SECTION 6

NOTE:

1. SEE REF DWG #1 FOR LIFTING CRITERIA AND GENERAL NOTES.

Rev.	REVISION DESCRIPTION	Date	By	Chk'd	Approved	Eng Mgr	Proj Mgr
1	ISSUED FOR DESIGN REPORT	05 MAR 06	THB	JM	SRB	JSC	
0	ISSUED FOR CONSTRUCTION	19 MAY 05	JSM	AA	PWS	TN	

AMEC DRAWING NO: F-145579-35-D-0008 REV: 1

amec

AMEC PROJECT: 145579-FINAL DBVS DESIGN

U.S. DEPARTMENT OF ENERGY
Office of River Protection

BULK VITRIFICATION
ICV BOX
PLAN & SECTIONS

SIZE F | SCALE AS NOTED

DWG NO	TITLE	REF NUMBER	TITLE
DRAWING TRACEABILITY LIST		NEXT USED ON	REFERENCES

REVISIONS

In making requests for transmittal of data by any electronic media, the Company receiving such data agrees that AMEC Americas Limited cannot be held responsible for uses of the data outside of or beyond the scope of our original agreement. Also, because data stored in electronic media or transmitted by electronic means can deteriorate undetected or be modified without the consultant's knowledge, the Company receiving data agrees that AMEC Americas Limited cannot be held liable for the compatibility, completeness or correctness of the data.

No.	AMEC Dwg. No.	REFERENCE DRAWINGS
1	F-145579-35-D-0004	ICV BOX DATA SHEET
2	F-145579-35-D-0005	ICV BOX LID ASSEMBLY
3	F-145579-35-D-0006	ICV BOX STEELWORK 1 OF 3
4	F-145579-35-D-0009	ICV BOX STEELWORK 3 OF 3
5	F-145579-35-D-0022	LID HANDLING TOOL

GENERAL NOTES:

1. ALL DIMENSIONS MARKED WITH * HAVE MAX. TOLERANCE + OR - 1/16"
2. ALL ITEMS TO BE FABRICATED FROM:
   STRUCTURAL SHAPES - ASTM A36 OR BETTER
   PIPE - ASTM A53, GR.B
   PIPE FITTINGS - ASTM A105
3. QUANTITIES MARKED FOR LIDS REPRESENT TOTAL FOR '1' ICV BOX LID ONLY

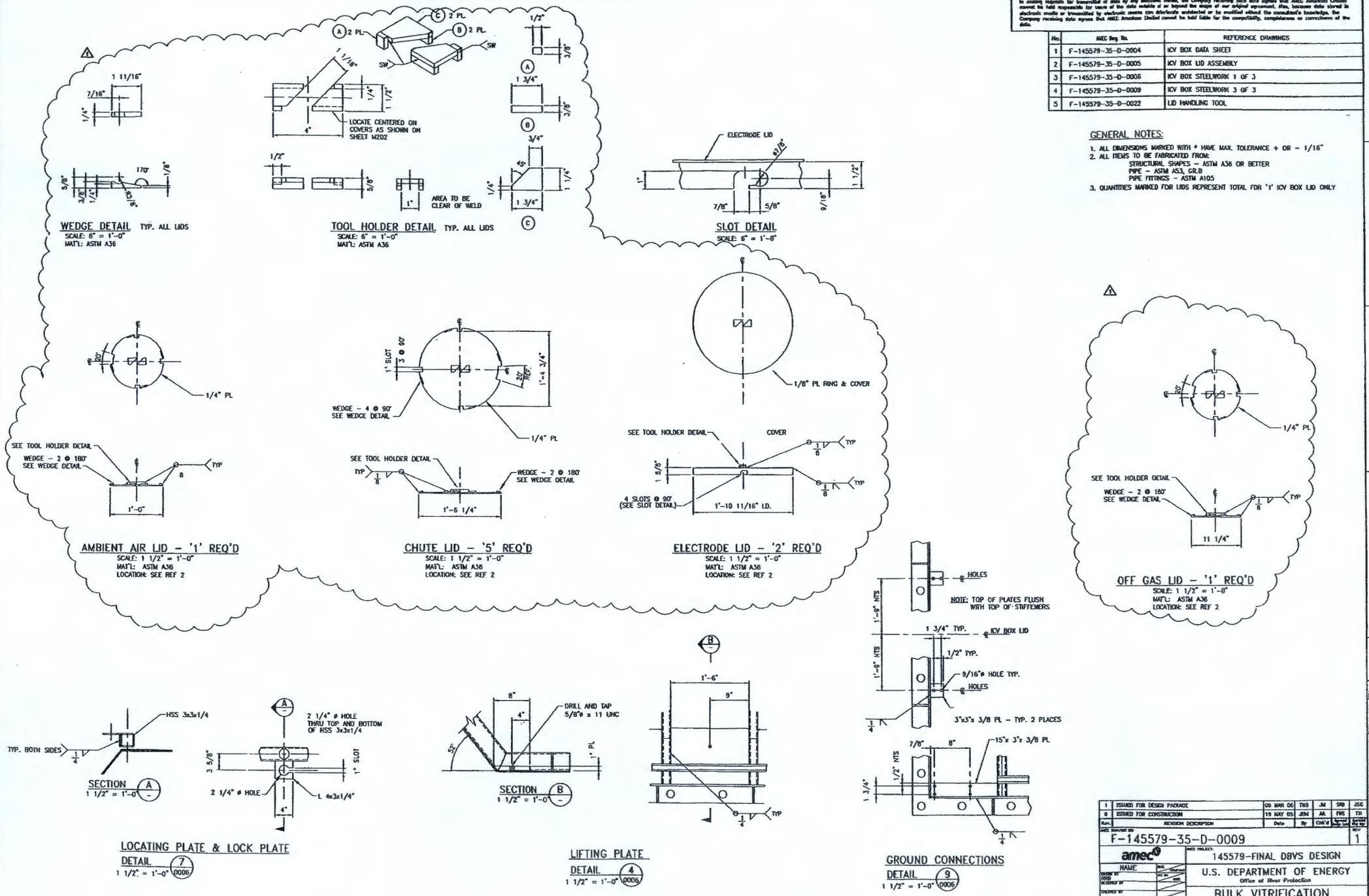

Rev.	REVISION DESCRIPTION	Date	By	Chk'd	Approved	Approved
1	ISSUED FOR DESIGN PACKAGE	05 MAR 06	TKB	JM	SRB	JSG
0	ISSUED FOR CONSTRUCTION	19 MAY 05	JBM	AA	FWS	TH

AMEC DRAWING NO: F-145579-35-D-0009 REV: 1

amec

AMEC PROJECT: 145579-FINAL DBVS DESIGN

U.S. DEPARTMENT OF ENERGY
Office of River Protection

BULK VITRIFICATION
ICV BOX LID DETAILS
STEELWORK 3 OF 3

SIZE F | SCALE: AS NOTED

DWG NO	TITLE
DRAWING TRACEABILITY LIST	

REF NUMBER	TITLE
NEXT USED ON	REFERENCES

REVISIONS

No.	AMEC Dwg. No.	REFERENCE DRAWINGS
1	F-145579-35-D-0004	ICV BOX DATA SHEET
2	F-145579-35-D-0005	ICV BOX LID ASSEMBLY
3	F-145579-35-D-0008	ICV BOX ASSEMBLY
4	F-145579-35-D-0019	ICV BOX LID GASKET DETAILS

In making requests for transmittal of data by any electronic media, the Company receiving such data agrees that AMEC Americas Limited cannot be held responsible for users of the data outside of or beyond the scope of our original agreement. Also, because data stored in electronic media or transmitted by electronic means can deteriorate undetected or be modified without the consultant's knowledge, the Company receiving data agrees that AMEC Americas Limited cannot be held liable for the compatibility, completeness or correctness of the data.

PARTS/MATERIAL LIST

REM	REQD	PART/DASH NUMBER	NOMENCLATURE/DESCRIPTION	MATERIAL/REFERENCE	SHT	REM NO
1	1	–	12" 150# ANSI BLIND FLANGE	ASTM A105	–	1
2	1	–	12" GASKET FLEXITALLIC H.O.T.	1/8" "CERAMIC"	–	2
3	12	–	7/8"ø HEV. HEX. NUTS	ASTM A194 G 8B	–	-3
4	68	–	5/8"ø x7"LG BOLTS C/W NUTS&WASHERS	BOLTS ASTM A193 G 8	–	4
			NUTS ASTM A194 G 8B HEV. HEX.			
5	68	–	2 1/2"ø x1/4" THK C/W 11/16"ø HOLE	ASTM A36	–	5
6	1	–	12"ø x1 1/2" THK FILLER BOARD	KAOWOOL M BOARD	–	6

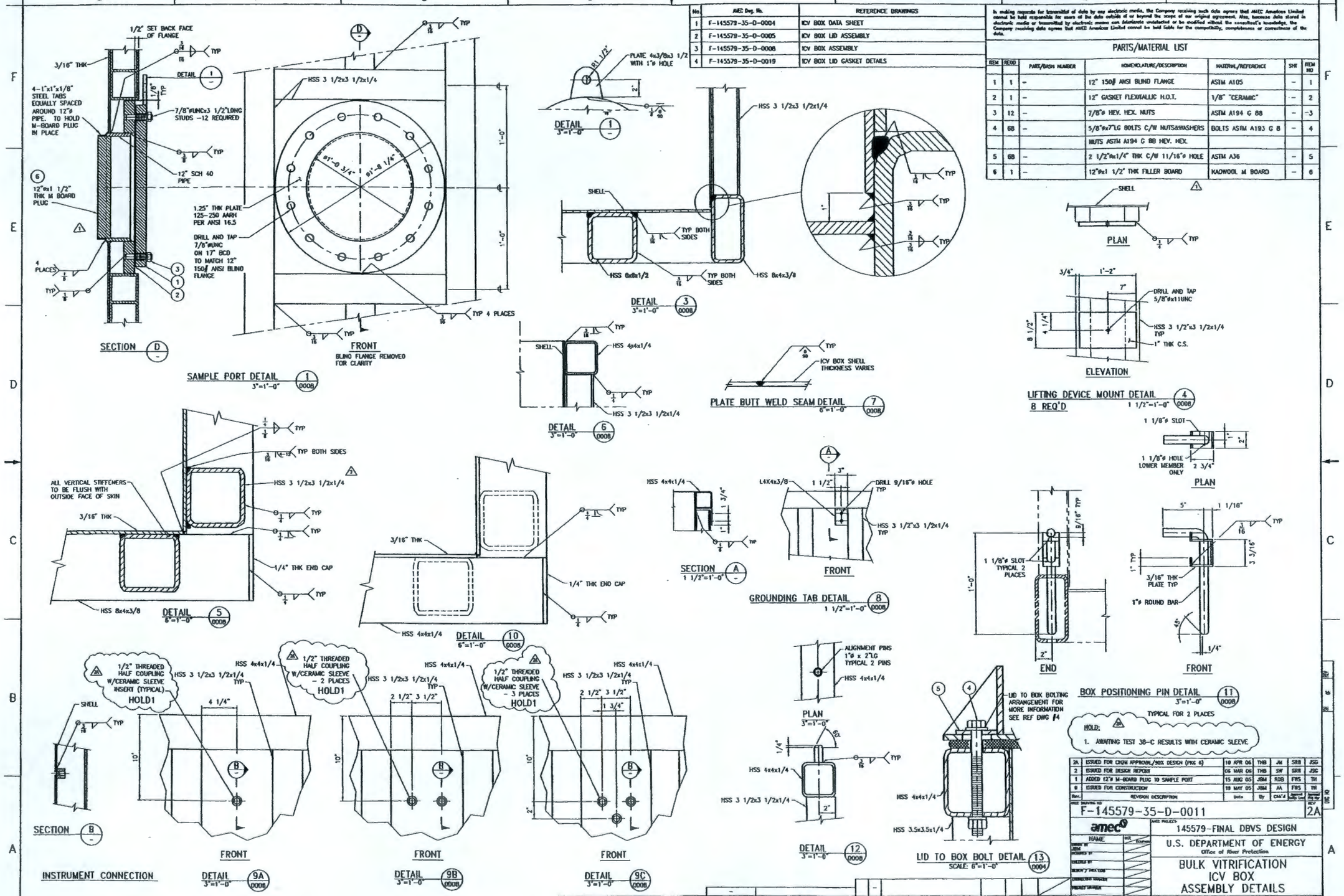

145579-D-CA-011 Rev. 4

Attachment 4
(79 pages)

Lid Lift Analysis – RISA 3D Input/Output Data

ATTACHMENT 4

Calculation No. 145579-D-CA-011	**ORIGINATOR:** J.Van Corbach JVC **DATE:** 4-19-06
Rev. No. 4	Print & Sign Name
Calculation Title ICV Box Lid Lift Analysis	**CHECKER:** D. Chenault DMC **DATE:** 4-19-06
	Print & Sign Name

Purpose - The purpose of this calculation is to provide design and analysis of the ICV Box Lid assembly during hoisting and rigging of the lid (four point lift) during assembly.

Methods

The analysis for the ICV Box was performed using RISA 3D version 5.0d (Rapid Integrated Structural Analysis) computer software, which was previously verified and validated (DMJM H+N V&V Computer # 102561).

Note: Signatures on this page represent the acceptance of the following pages in this attachment.

ATTACHMENT 4

Calculation No.: 145579-D-CA-011	ORIGINATOR: J. Van Corbach DATE: 4/19/06
Rev. No.: 4	CHECKER: D. Chenault DATE:
Calculation Title: icv Box Lid Lift Analysis	

ICV Box Lid Weight and Center of Gravity

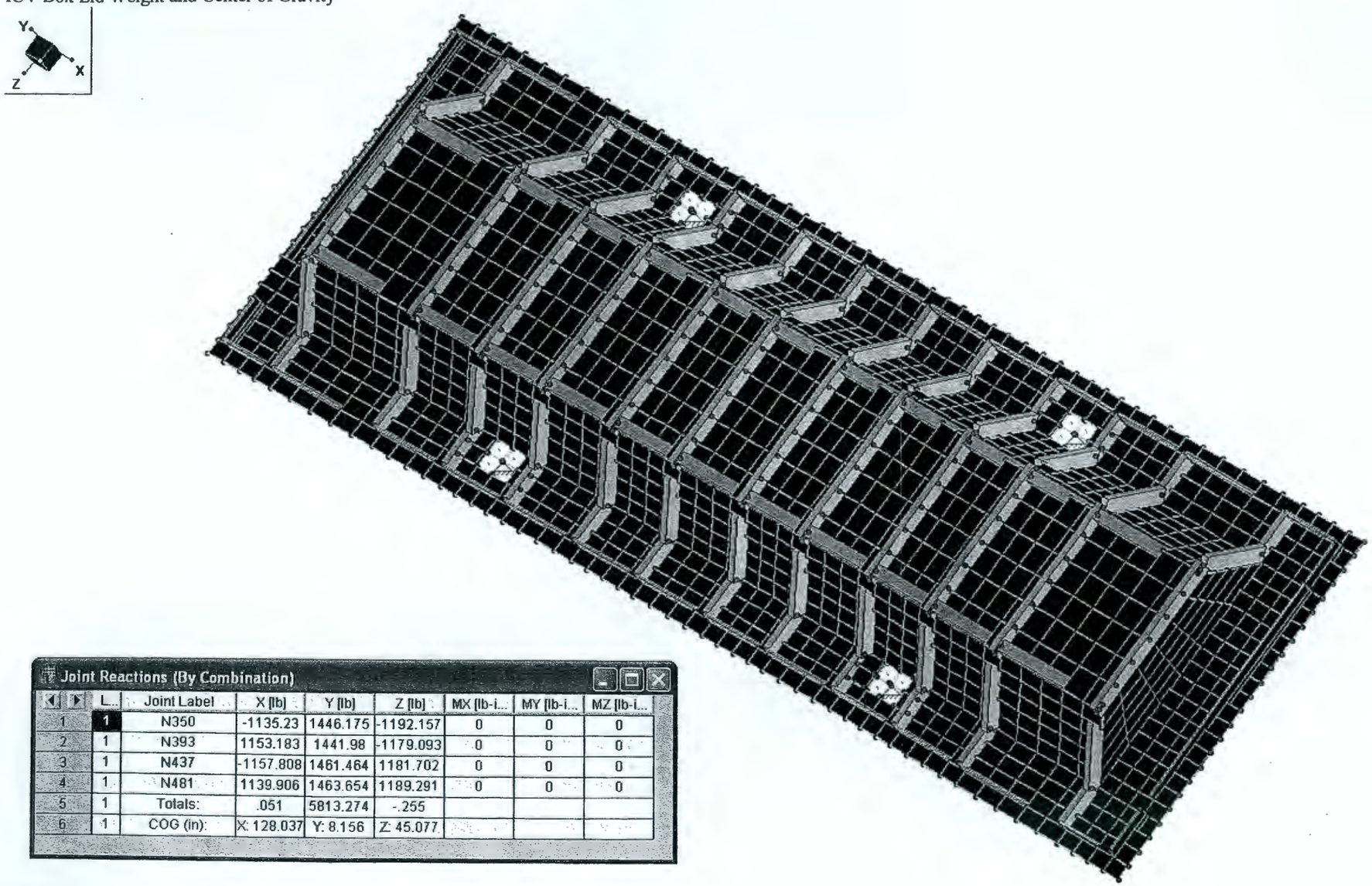

Joint Reactions (By Combination)

	L...	Joint Label	X [lb]	Y [lb]	Z [lb]	MX [lb-i...	MY [lb-i...	MZ [lb-i...
1	1	N350	-1135.23	1446.175	-1192.157	0	0	0
2	1	N393	1153.183	1441.98	-1179.093	0	0	0
3	1	N437	-1157.808	1461.464	1181.702	0	0	0
4	1	N481	1139.906	1463.654	1189.291	0	0	0
5	1	Totals:	.051	5813.274	-.255			
6	1	COG (in):	X: 128.037	Y: 8.156	Z: 45.077			

Results for LC 1, Dead Load

ATTACHMENT 4

Calculation No.: 145579-D-CA-011	ORIGINATOR: J. Van Corbach JVC DATE: 4/19/06
Rev. No.: 4	CHECKER: D. Chenault DATE:
Calculation Title: icv Box Lid Lift Analysis	

ICV Box Lid Typical Detail of Support at the Lift Point

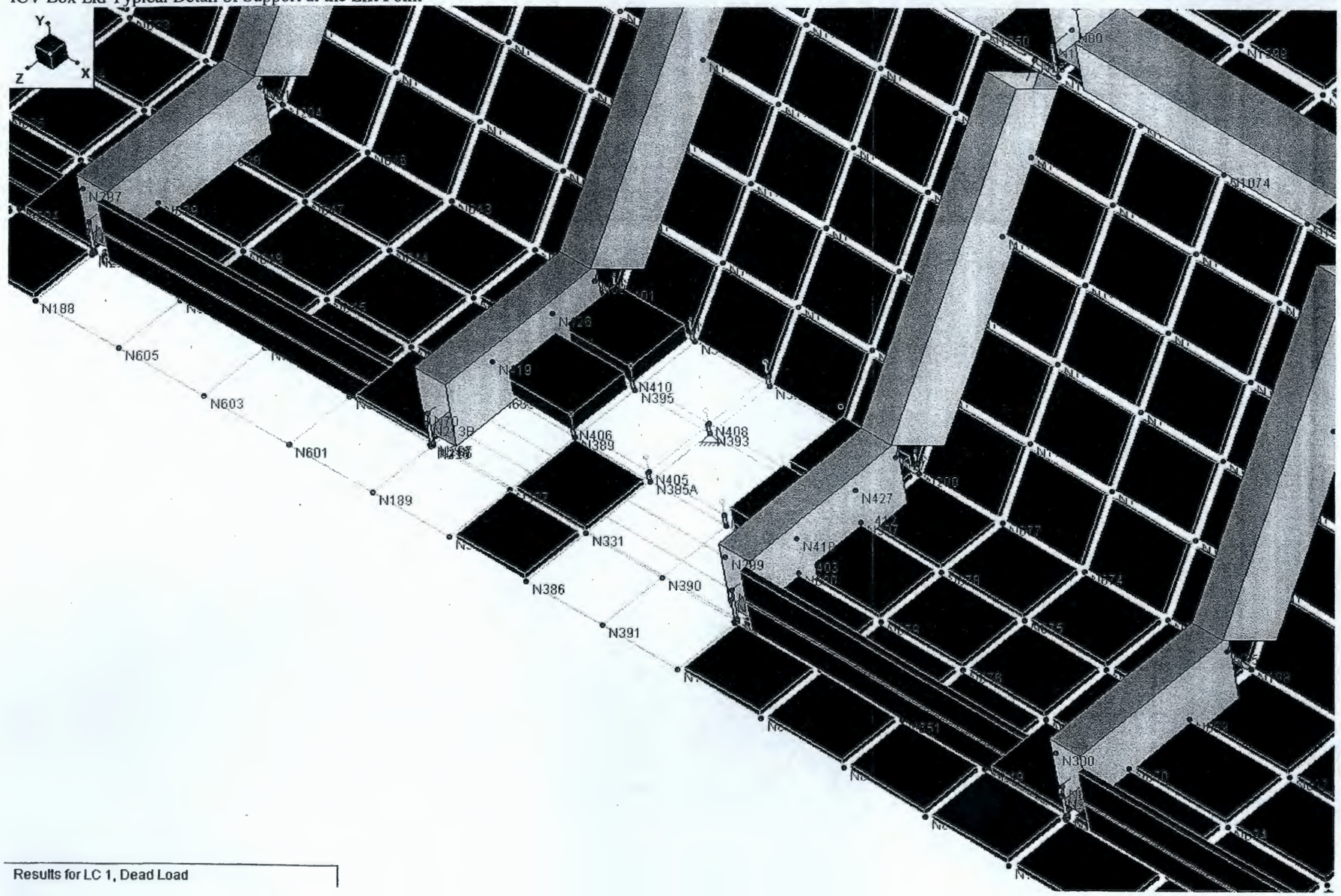

Results for LC 1, Dead Load

ATTACHMENT 4

Calculation No.: 145579-D-CA-011	ORIGINATOR: J. Van Corbach JVC DATE: 4/19/06
Rev. No.: 4	CHECKER: D. Chenault DATE:
Calculation Title: icv Box Lid Lift Analysis	

ICV Box Lid Support Framing and Lift Points

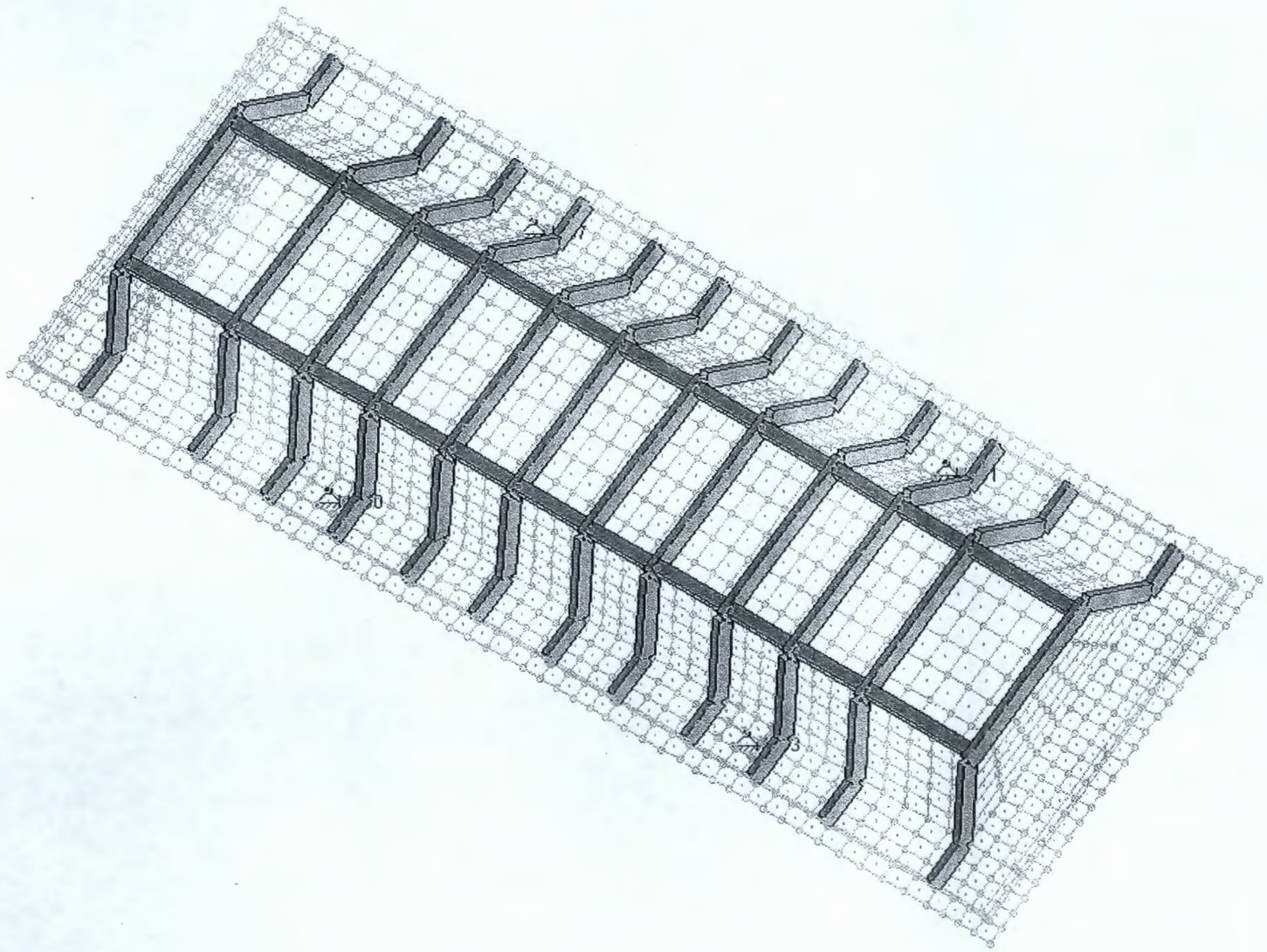

ATTACHMENT 4

Calculation No.: 145579-D-CA-011	ORIGINATOR: J. Van Corbach JVC DATE: 4/19/06
Rev. No.: 4	CHECKER: D. Chenault DATE:
Calculation Title: icv Box Lid Lift Analysis	

ICV Box Lid Showing Stress Contours (Von Mises)

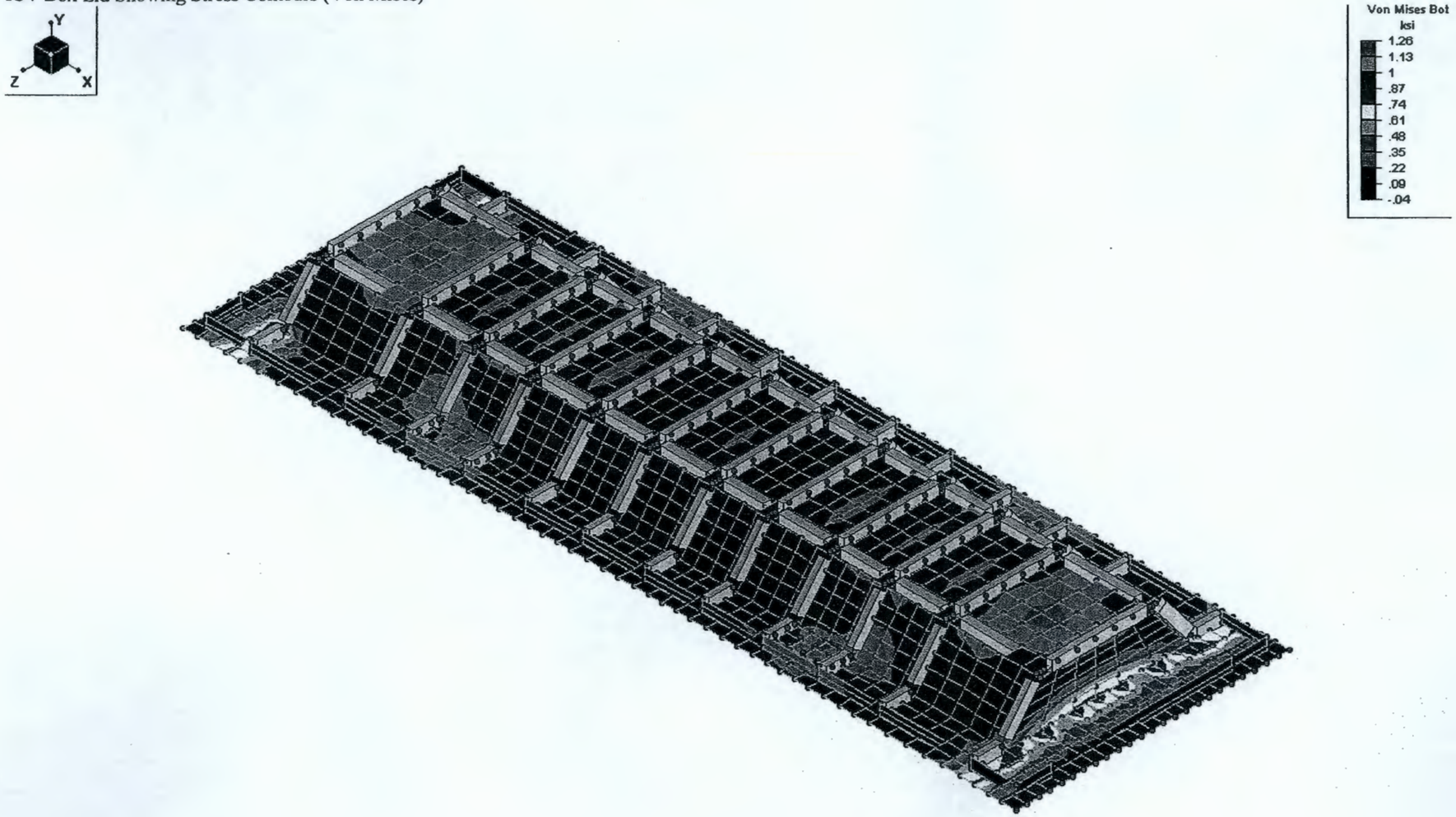

Results for LC 1, Dead Load

ATTACHMENT 4

Calculation No.: 145579-D-CA-011	ORIGINATOR: J. Van Corbach DATE: 4/19/06
Rev. No.: 4	CHECKER: D. Chenault DATE:
Calculation Title: icv Box Lid Lift Analysis	

ICV Box Lid Frame – ASD Code Check , Member data sorted by maximum UC max

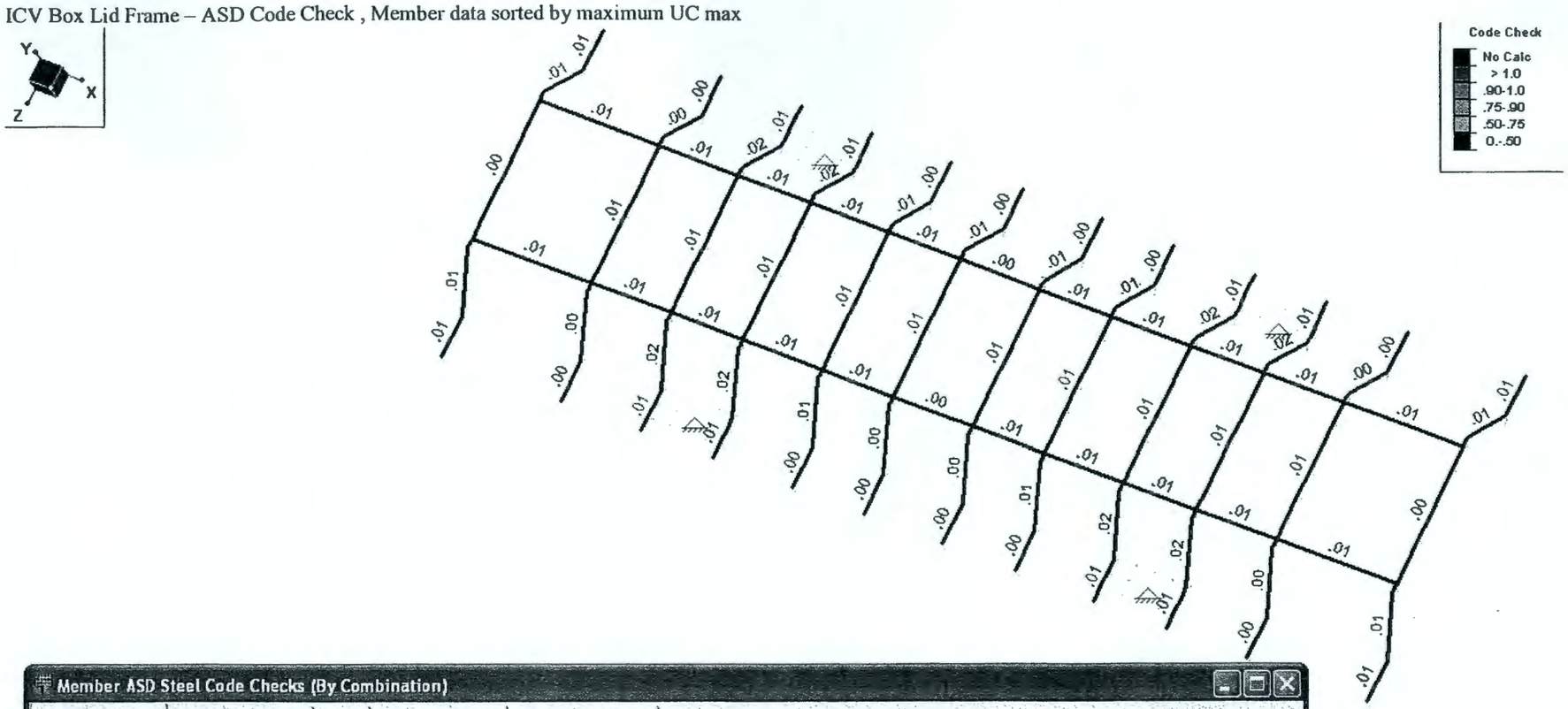

Member ASD Steel Code Checks (By Combination)

Hot Rolled Steel | Cold Formed Steel | Wood | Concrete Beams | Concrete Columns

	LC	Member	Shape	UC Max	Loc[in]	Shear UC	Loc[in]	D.	Fa[ksi]	Ft[ksi]	Fby[ksi]	Fbz[ksi]	Cb	Cmy	Cmz	Eqn
1	1	M14	HSS4X2X4	.024	20.304	.003	0	y	27.623	30	33	33	2.3	.444	.85	H1-2
2	1	M49	HSS4X2X4	.023	20.304	.003	0	y	27.623	30	33	33	2.3	.441	.85	H1-2
3	1	M19	HSS4X2X4	.023	20.304	.004	0	y	27.623	30	33	33	2.3	.446	.85	H1-2
4	1	M47	HSS4X2X4	.022	0	.003	20.304	y	27.623	30	33	33	2.3	.432	.85	H1-2
5	1	M12	HSS4X2X4	.022	0	.003	20.304	y	27.623	30	33	33	2.3	.432	.85	H1-2
6	1	M44	HSS4X2X4	.022	20.304	.004	0	y	27.623	30	33	33	2.3	.446	.85	H1-2
7	1	M42	HSS4X2X4	.021	0	.004	20.304	y	27.623	30	33	33	2.3	.444	.85	H1-2
8	1	M17	HSS4X2X4	.021	0	.004	20.304	y	27.623	30	33	33	2.3	.444	.85	H1-2
9	1	M50	HSS4X2X4	.014	0	.014	6.853	z	28.867	30	33	33	1.597	.372	.85	H1-2
10	1	M46	HSS4X2X4	.014	11.15	.014	0	z	28.867	30	33	33	1.536	.394	.85	H1-2
11	1	M11	HSS4X2X4	.014	11.15	.014	0	z	28.867	30	33	33	1.535	.395	.85	H1-2
12	1	M15	HSS4X2X4	.013	2.788	.015	6.853	z	28.867	30	33	33	1.623	.529	.85	H1-2

Global

Display Sections for Member Calcs	5
Max Internal Sections for Member Calcs	97
Include Shear Deformation	Yes
Include Warping	Yes
Area Load Mesh (in^2)	144
Merge Tolerance (in)	.12
P-Delta Analysis Tolerance	0.50%
Vertical Axis	Y

Hot Rolled Steel Code	AISC: ASD 9th
Cold Formed Steel Code	AISI 99: ASD
NDS Wood Code	NDS 91: ASD
NDS Temperature	< 100F
Concrete Code	ACI 1999

Number of Shear Regions	4
Region Spacing Increment (in)	4
Biaxial Column Method	PCA Load Contour
Parme Beta Factor (PCA)	.65
Concrete Stress Block	Rectangular
Use Cracked Sections	Yes
Bad Framing Warnings	No
Unused Force Warnings	Yes

Joint Coordinates and Temperatures

	Label	X [in]	Y [in]	Z [in]	Temp [F]	Detach From Dia...
1	N1	0	.5	0	0	
2	N2	0	.5	11.15	0	
3	N3	0	16.5	23.65	0	
4	N4	0	16.5	66.6	0	
5	N5	0	.5	79.1	0	
6	N6	0	.5	90.25	0	
7	N7	0	16.5	26.125	0	
8	N8	0	16.5	64.125	0	
9	N9	33	.5	0	0	
10	N10	33	.5	11.15	0	
11	N11	33	16.5	23.65	0	
12	N12	33	16.5	66.6	0	
13	N13	33	.5	79.1	0	
14	N14	33	.5	90.25	0	
15	N15	33	16.5	26.125	0	
16	N16	33	16.5	64.125	0	
17	N17	55	.5	0	0	
18	N18	55	.5	11.15	0	
19	N19	55	16.5	23.65	0	
20	N20	55	16.5	66.6	0	
21	N21	55	.5	79.1	0	
22	N22	55	.5	90.25	0	
23	N23	55	16.5	26.125	0	
24	N24	55	16.5	64.125	0	
25	N25	75	.5	0	0	
26	N26	75	.5	11.15	0	
27	N27	75	16.5	23.65	0	
28	N28	75	16.5	66.6	0	
29	N29	75	.5	79.1	0	
30	N30	75	.5	90.25	0	
31	N31	75	16.5	26.125	0	
32	N32	75	16.5	64.125	0	
33	N33	97	.5	0	0	

Joint Coordinates and Temperatures (Continued)

	Label	X [in]	Y [in]	Z [in]	Temp [F]	Detach From Dia...
34	N34	97	.5	11.15	0	
35	N35	97	16.5	23.65	0	
36	N36	97	16.5	66.6	0	
37	N37	97	.5	79.1	0	
38	N38	97	.5	90.25	0	
39	N39	97	16.5	26.125	0	
40	N40	97	16.5	64.125	0	
41	N41	117	.5	0	0	
42	N42	117	.5	11.15	0	
43	N43	117	16.5	23.65	0	
44	N44	117	16.5	66.6	0	
45	N45	117	.5	79.1	0	
46	N46	117	.5	90.25	0	
47	N47	117	16.5	26.125	0	
48	N48	117	16.5	64.125	0	
49	N49	139	.5	0	0	
50	N50	139	.5	11.15	0	
51	N51	139	16.5	23.65	0	
52	N52	139	16.5	66.6	0	
53	N53	139	.5	79.1	0	
54	N54	139	.5	90.25	0	
55	N55	139	16.5	26.125	0	
56	N56	139	16.5	64.125	0	
57	N57	159	.5	0	0	
58	N58	159	.5	11.15	0	
59	N59	159	16.5	23.65	0	
60	N60	159	16.5	66.6	0	
61	N61	159	.5	79.1	0	
62	N62	159	.5	90.25	0	
63	N63	159	16.5	26.125	0	
64	N64	159	16.5	64.125	0	
65	N65	181	.5	0	0	
66	N66	181	.5	11.15	0	
67	N67	181	16.5	23.65	0	
68	N68	181	16.5	66.6	0	
69	N69	181	.5	79.1	0	
70	N70	181	.5	90.25	0	
71	N71	181	16.5	26.125	0	
72	N72	181	16.5	64.125	0	
73	N73	201	.5	0	0	
74	N74	201	.5	11.15	0	
75	N75	201	16.5	23.65	0	
76	N76	201	16.5	66.6	0	
77	N77	201	.5	79.1	0	
78	N78	201	.5	90.25	0	
79	N79	201	16.5	26.125	0	
80	N80	201	16.5	64.125	0	
81	N81	223	.5	0	0	
82	N82	223	.5	11.15	0	
83	N83	223	16.5	23.65	0	
84	N84	223	16.5	66.6	0	
85	N85	223	.5	79.1	0	
86	N86	223	.5	90.25	0	
87	N87	223	16.5	26.125	0	
88	N88	223	16.5	64.125	0	
89	N89	256	.5	0	0	
90	N90	256	.5	11.15	0	
91	N91	256	16.5	23.65	0	
92	N92	256	16.5	66.6	0	

Joint Coordinates and Temperatures (Continued)

	Label	X [in]	Y [in]	Z [in]	Temp [F]	Detach From Dia...
93	N93	256	.5	79.1	0	
94	N94	256	.5	90.25	0	
95	N95	256	16.5	26.125	0	
96	N96	256	16.5	64.125	0	
97	N97	0	-1.53125	0	0	
98	N102	0	-1.53125	90.25	0	
99	N105	33	-1.53125	0	0	
100	N110	33	-1.53125	90.25	0	
101	N113	55	-1.53125	0	0	
102	N118	55	-1.53125	90.25	0	
103	N121	75	-1.53125	0	0	
104	N126	75	-1.53125	90.25	0	
105	N129	97	-1.531	0	0	
106	N134	97	-1.53125	90.25	0	
107	N137	117	-1.53125	0	0	
108	N142	117	-1.53125	90.25	0	
109	N145	139	-1.53125	0	0	
110	N150	139	-1.53125	90.25	0	
111	N153	159	-1.53125	0	0	
112	N158	159	-1.53125	90.25	0	
113	N161	181	-1.53125	0	0	
114	N166	181	-1.53125	90.25	0	
115	N169	201	-1.53125	0	0	
116	N174	201	-1.53125	90.25	0	
117	N177	223	-1.53125	0	0	
118	N182	223	-1.53125	90.25	0	
119	N185	256	-1.53125	0	0	
120	N190	256	-1.53125	90.25	0	
121	N193	256	14.46875	65.40391	0	
122	N194	256	-1.53125	77.90391	0	
123	N197	223	14.46875	65.40391	0	
124	N198	223	-1.53125	77.90391	0	
125	N199	201	14.46875	65.40391	0	
126	N200	201	-1.53125	77.90391	0	
127	N201	181	14.46875	65.40391	0	
128	N202	181	-1.53125	77.90391	0	
129	N203	159	14.46875	65.40391	0	
130	N204	159	-1.53125	77.90391	0	
131	N205	139	14.46875	65.40391	0	
132	N206	139	-1.53125	77.90391	0	
133	N207	117	14.46875	65.40391	0	
134	N208	117	-1.53125	77.90391	0	
135	N209	97	14.46875	65.40391	0	
136	N210	97	-1.53125	77.90391	0	
137	N211	75	14.46875	65.40391	0	
138	N212	75	-1.53125	77.90391	0	
139	N213	55	14.46875	65.40391	0	
140	N214	55	-1.53125	77.90391	0	
141	N215	33	14.46875	65.40391	0	
142	N216	33	-1.53125	77.90391	0	
143	N217	0	14.46875	65.40391	0	
144	N218	0	-1.53125	77.90391	0	
145	N196	0	-1.53125	12.681	0	
146	N197A	0	14.469	25.181	0	
147	N198A	33	-1.53125	12.681	0	
148	N199A	33	14.46875	25.181	0	
149	N200A	55	-1.53125	12.681	0	
150	N201A	55	14.46875	25.181	0	
151	N202A	75	-1.53125	12.681	0	

Joint Coordinates and Temperatures (Continued)

	Label	X [in]	Y [in]	Z [in]	Temp [F]	Detach From Dia...
152	N203A	75	14.46875	25.181	0	
153	N204A	97	-1.53125	12.681	0	
154	N205A	97	14.46875	25.181	0	
155	N206A	117	-1.53125	12.681	0	
156	N207A	117	14.46875	25.181	0	
157	N208A	139	-1.53125	12.681	0	
158	N209A	139	14.46875	25.181	0	
159	N210A	159	-1.53125	12.681	0	
160	N211A	159	14.46875	25.181	0	
161	N212A	181	-1.53125	12.681	0	
162	N213A	181	14.46875	25.181	0	
163	N214A	201	-1.53125	12.681	0	
164	N215A	201	14.46875	25.181	0	
165	N216A	223	-1.53125	12.681	0	
166	N217A	223	14.46875	25.181	0	
167	N218A	256	-1.53125	12.681	0	
168	N219	256	14.46875	25.181	0	
169	N169A	0	-1.53125	-4	0	
170	N170	33	-1.53125	-4	0	
171	N171	55	-1.53125	-4	0	
172	N172	75	-1.53125	-4	0	
173	N173	97	-1.53125	-4	0	
174	N174A	117	-1.53125	-4	0	
175	N175	139	-1.53125	-4	0	
176	N176	159	-1.53125	-4	0	
177	N177A	181	-1.53125	-4	0	
178	N178	201	-1.53125	-4	0	
179	N179	223	-1.53125	-4	0	
180	N180	256	-1.531	-4	0	
181	N181	0	-1.53125	94.25	0	
182	N182A	33	-1.53125	94.25	0	
183	N183	55	-1.53125	94.25	0	
184	N184	75	-1.53125	94.25	0	
185	N185A	97	-1.53125	94.25	0	
186	N186	117	-1.53125	94.25	0	
187	N187	139	-1.53125	94.25	0	
188	N188	159	-1.53125	94.25	0	
189	N189	181	-1.53125	94.25	0	
190	N190A	201	-1.53125	94.25	0	
191	N191	223	-1.53125	94.25	0	
192	N192	256	-1.53125	94.25	0	
193	N193A	-20.1875	-1.53125	-4	0	
194	N194A	-20.1875	-1.53125	94.25	0	
195	N195	276.1875	-1.53125	-4	0	
196	N196A	276.1875	-1.53125	94.25	0	
197	N197B	-20.188	-1.53125	0	0	
198	N198B	-20.188	-1.53125	90.25	0	
199	N199B	-20.188	-1.53125	77.90391	0	
200	N200B	-20.188	-1.53125	12.681	0	
201	N201B	276.187	-1.53125	0	0	
202	N202B	276.187	-1.53125	90.25	0	
203	N203B	276.187	-1.53125	77.90391	0	
204	N204B	276.187	-1.53125	12.681	0	
205	N205B	0	0	90.40625	0	
206	N206B	33	0	90.40625	0	
207	N207B	55	0	90.40625	0	
208	N208B	75	0	90.40625	0	
209	N209B	97	0	90.40625	0	
210	N210B	117	0	90.40625	0	

Joint Coordinates and Temperatures (Continued)

	Label	X [in]	Y [in]	Z [in]	Temp [F]	Detach From Dia...
211	N211B	139	0	90.40625	0	
212	N212B	159	0	90.40625	0	
213	N213B	181	0	90.40625	0	
214	N214B	201	0	90.40625	0	
215	N215B	223	0	90.40625	0	
216	N216B	256	0	90.40625	0	
217	N217B	0	-1.53125	90.40625	0	
218	N218B	33	-1.53125	90.40625	0	
219	N219A	55	-1.53125	90.40625	0	
220	N220	75	-1.53125	90.40625	0	
221	N221	97	-1.53125	90.40625	0	
222	N222	117	-1.53125	90.40625	0	
223	N223	139	-1.53125	90.40625	0	
224	N224	159	-1.53125	90.40625	0	
225	N225	181	-1.53125	90.40625	0	
226	N226	201	-1.53125	90.40625	0	
227	N227	223	-1.53125	90.40625	0	
228	N228	256	-1.53125	90.40625	0	
229	N229	0	-1.375	90.25	0	
230	N230	33	-1.375	90.25	0	
231	N231	55	-1.375	90.25	0	
232	N232	75	-1.375	90.25	0	
233	N233	97	-1.375	90.25	0	
234	N234	117	-1.375	90.25	0	
235	N235	139	-1.375	90.25	0	
236	N236	159	-1.375	90.25	0	
237	N237	181	-1.375	90.25	0	
238	N238	201	-1.375	90.25	0	
239	N239	223	-1.375	90.25	0	
240	N240	256	-1.375	90.25	0	
241	N241	0	-1.375	90.40625	0	
242	N242	33	-1.375	90.40625	0	
243	N243	55	-1.375	90.40625	0	
244	N244	75	-1.375	90.40625	0	
245	N245	97	-1.375	90.40625	0	
246	N246	117	-1.375	90.40625	0	
247	N247	139	-1.375	90.40625	0	
248	N248	159	-1.375	90.40625	0	
249	N249	181	-1.375	90.40625	0	
250	N250	201	-1.375	90.40625	0	
251	N251	223	-1.375	90.40625	0	
252	N252	256	-1.375	90.40625	0	
253	N253	272.28075	-1.53125	0	0	
254	N254	272.28075	-1.53125	90.25	0	
255	N255	272.28075	-1.53125	77.90391	0	
256	N256	272.28075	-1.53125	12.681	0	
257	N274	272.28075	-1.375	0	0	
258	N275	272.28075	-1.375	90.25	0	
259	N276	272.28075	-1.375	77.90391	0	
260	N277	272.28075	-1.375	12.681	0	
261	N278	-16.28175	-1.53125	0	0	
262	N279	-16.28175	-1.53125	90.25	0	
263	N280	-16.28175	-1.53125	77.90391	0	
264	N281	-16.28175	-1.53125	12.681	0	
265	N282	-16.28175	-1.375	0	0	
266	N283	-16.282	-1.375	90.25	0	
267	N284	-16.28175	-1.375	77.90391	0	
268	N285	-16.28175	-1.375	12.681	0	
269	N286	-16.28175	2.625	0	0	

Joint Coordinates and Temperatures (Continued)

	Label	X [in]	Y [in]	Z [in]	Temp [F]	Detach From Dia...
270	N288	-16.28175	2.625	77.90391	0	
271	N289	-16.28175	2.625	12.681	0	
272	N289A	-16.28175	2.625	90.25	0	
273	N290	0	2.625	90.25	0	
274	N291	33	2.625	90.25	0	
275	N292	55	2.625	90.25	0	
276	N293	75	2.625	90.25	0	
277	N294	97	2.625	90.25	0	
278	N295	117	2.625	90.25	0	
279	N296	139	2.625	90.25	0	
280	N297	159	2.625	90.25	0	
281	N298	181	2.625	90.25	0	
282	N299	201	2.625	90.25	0	
283	N300	223	2.625	90.25	0	
284	N301	256	2.625	90.25	0	
285	N302	272.28075	2.625	0	0	
286	N303	272.281	2.625	90.25	0	
287	N304	272.28075	2.625	77.90391	0	
288	N305	272.28075	2.625	12.681	0	
289	N289B	0	-1.375	0	0	
290	N290A	33	-1.375	0	0	
291	N291A	55	-1.375	0	0	
292	N292A	75	-1.375	0	0	
293	N293A	97	-1.37475	0	0	
294	N294A	117	-1.375	0	0	
295	N295A	139	-1.375	0	0	
296	N296A	159	-1.375	0	0	
297	N297A	181	-1.375	0	0	
298	N298A	201	-1.375	0	0	
299	N299A	223	-1.375	0	0	
300	N300A	256	-1.375	0	0	
301	N301A	0	2.625	0	0	
302	N302A	33	2.625	0	0	
303	N303A	55	2.625	0	0	
304	N304A	75	2.625	0	0	
305	N305A	97	2.62525	0	0	
306	N306	117	2.625	0	0	
307	N307	139	2.625	0	0	
308	N308	159	2.625	0	0	
309	N309	181	2.625	0	0	
310	N310	201	2.625	0	0	
311	N311	223	2.625	0	0	
312	N312	256	2.625	0	0	
313	N313	272.28075	0	0	0	
314	N314	272.28075	0	90.25	0	
315	N315	272.28075	0	77.90391	0	
316	N316	272.281	0	12.681	0	
317	N317	-16.28175	0	0	0	
318	N318	-16.282	0	90.25	0	
319	N319	-16.28175	0	77.90391	0	
320	N320	-16.28175	0	12.681	0	
321	N324	65	-1.53125	77.90391	0	
322	N326	65	-1.53125	90.25	0	
323	N329	191	-1.53125	77.90391	0	
324	N331	191	-1.53125	90.25	0	
325	N334	65	-1.53125	0	0	
326	N336	65	-1.53125	12.681	0	
327	N339	191	-1.53125	0	0	
328	N341	191	-1.53125	12.681	0	

Joint Coordinates and Temperatures (Continued)

	Label	X [in]	Y [in]	Z [in]	Temp [F]	Detach From Dia...
329	N343	75	-1.53125	85.90391	0	
330	N344	55	-1.53125	85.90391	0	
331	N345	65	-1.53125	85.90391	0	
332	N343A	65	-1.53125	94.25	0	
333	N344A	60	-1.53125	90.25	0	
334	N345A	60	-1.53125	94.25	0	
335	N346	70	-1.53125	90.25	0	
336	N347	70	-1.53125	94.25	0	
337	N348	60	-1.53125	85.90391	0	
338	N349	70	-1.53125	85.90391	0	
339	N350	65	-1.53125	81.90391	0	
340	N351	60	-1.53125	77.90391	0	
341	N352	60	-1.53125	81.90391	0	
342	N353	55	-1.53125	81.90391	0	
343	N354	75	-1.53125	81.90391	0	
344	N355	70	-1.53125	77.90391	0	
345	N356	70	-1.53125	81.90391	0	
346	N357	55	-0.87525	90.25	0	
347	N358	75	-0.87525	90.25	0	
348	N359	75	-0.87525	77.90391	0	
349	N360	55	-0.87525	77.90391	0	
350	N361	65	-0.87525	77.90391	0	
351	N362	75	-0.87525	85.90391	0	
352	N363	55	-0.87525	85.90391	0	
353	N364	65	-0.87525	85.90391	0	
354	N365	60	-0.87525	85.90391	0	
355	N366	70	-0.87525	85.90391	0	
356	N367	65	-0.87525	81.90391	0	
357	N368	60	-0.87525	77.90391	0	
358	N369	60	-0.87525	81.90391	0	
359	N370	55	-0.87525	81.90391	0	
360	N371	75	-0.87525	81.90391	0	
361	N372	70	-0.87525	77.90391	0	
362	N373	70	-0.87525	81.90391	0	
363	N374	56	-0.87525	77.90391	0	
364	N375	56	-0.87525	85.90391	0	
365	N376	56	-0.87525	81.90391	0	
366	N377	74	-0.87525	77.90391	0	
367	N378	74	-0.87525	85.90391	0	
368	N379	74	-0.87525	81.90391	0	
369	N380	75	-.00025	77.90391	0	
370	N381	55	-.00025	77.90391	0	
371	N382	75	0.49975	85.90391	0	
372	N383	55	0.49975	85.90391	0	
373	N384	55	0.49975	81.90391	0	
374	N385	75	0.49975	81.90391	0	
375	N383A	201	-1.53125	85.90391	0	
376	N384A	181	-1.53125	85.90391	0	
377	N385A	191	-1.53125	85.90391	0	
378	N386	191	-1.53125	94.25	0	
379	N387	186	-1.53125	90.25	0	
380	N388	186	-1.53125	94.25	0	
381	N389	186	-1.53125	85.90391	0	
382	N390	196	-1.53125	90.25	0	
383	N391	196	-1.53125	94.25	0	
384	N392	196	-1.53125	85.90391	0	
385	N393	191	-1.53125	81.90391	0	
386	N394	186	-1.53125	77.90391	0	
387	N395	186	-1.53125	81.90391	0	

Joint Coordinates and Temperatures (Continued)

	Label	X [in]	Y [in]	Z [in]	Temp [F]	Detach From Dia...
388	N396	181	-1.53125	81.90391	0	
389	N397	201	-1.53125	81.90391	0	
390	N398	196	-1.53125	77.90391	0	
391	N399	196	-1.53125	81.90391	0	
392	N400	201	-.875	77.90391	0	
393	N401	181	-.875	77.90391	0	
394	N402	191	-.875	77.90391	0	
395	N403	201	-.875	85.90391	0	
396	N404	181	-.875	85.90391	0	
397	N405	191	-.875	85.90391	0	
398	N406	186	-.875	85.90391	0	
399	N407	196	-.875	85.90391	0	
400	N408	191	-.875	81.90391	0	
401	N409	186	-.875	77.90391	0	
402	N410	186	-.875	81.90391	0	
403	N411	181	-.875	81.90391	0	
404	N412	201	-.875	81.90391	0	
405	N413	196	-.875	77.90391	0	
406	N414	196	-.875	81.90391	0	
407	N415	201	0	77.90391	0	
408	N416	181	0	77.90391	0	
409	N417	191	0	77.90391	0	
410	N418	201	.5	85.90391	0	
411	N419	181	.5	85.90391	0	
412	N420	191	0	85.90391	0	
413	N421	186	0	85.90391	0	
414	N422	196	0	85.90391	0	
415	N423	191	0	81.90391	0	
416	N424	186	0	77.90391	0	
417	N425	186	0	81.90391	0	
418	N426	181	.5	81.90391	0	
419	N427	201	.5	81.90391	0	
420	N428	196	0	77.90391	0	
421	N429	196	0	81.90391	0	
422	N430	55	-1.53125	4.681	0	
423	N431	75	-1.53125	4.681	0	
424	N432	65	-1.53125	4.681	0	
425	N430A	65	-1.53125	-4	0	
426	N431A	60	-1.53125	-4	0	
427	N432A	60	-1.53125	0	0	
428	N433	70	-1.53125	-4	0	
429	N434	70	-1.53125	0	0	
430	N435	60	-1.53125	4.681	0	
431	N436	70	-1.53125	4.681	0	
432	N437	65	-1.53125	8.681	0	
433	N438	60	-1.53125	8.681	0	
434	N439	60	-1.53125	12.681	0	
435	N440	55	-1.53125	8.681	0	
436	N441	75	-1.53125	8.681	0	
437	N442	70	-1.53125	8.681	0	
438	N443	70	-1.53125	12.681	0	
439	N444	55	-.875	12.681	0	
440	N445	75	-.875	12.681	0	
441	N446	65	-.875	12.681	0	
442	N447	55	-.875	4.681	0	
443	N448	75	-.875	4.681	0	
444	N449	65	-.875	4.681	0	
445	N450	60	-.875	4.681	0	
446	N451	70	-.875	4.681	0	

Joint Coordinates and Temperatures (Continued)

	Label	X [in]	Y [in]	Z [in]	Temp [F]	Detach From Dia...
447	N452	65	-.875	8.681	0	
448	N453	60	-.875	8.681	0	
449	N454	60	-.875	12.681	0	
450	N455	55	-.875	8.681	0	
451	N456	75	-.875	8.681	0	
452	N457	70	-.875	8.681	0	
453	N458	70	-.875	12.681	0	
454	N459	55	0	12.681	0	
455	N460	75	0	12.681	0	
456	N461	65	0	12.681	0	
457	N462	55	.5	4.681	0	
458	N463	75	.5	4.681	0	
459	N464	65	0	4.681	0	
460	N465	60	0	4.681	0	
461	N466	70	0	4.681	0	
462	N467	65	0	8.681	0	
463	N468	60	0	8.681	0	
464	N469	60	0	12.681	0	
465	N470	55	.5	8.681	0	
466	N471	75	.5	8.681	0	
467	N472	70	0	8.681	0	
468	N473	70	0	12.681	0	
469	N474	181	-1.53125	4.681	0	
470	N475	201	-1.53125	4.681	0	
471	N476	191	-1.53125	4.681	0	
472	N474A	191	-1.53125	-4	0	
473	N475A	186	-1.53125	-4	0	
474	N476A	186	-1.53125	0	0	
475	N477	196	-1.53125	-4	0	
476	N478	196	-1.53125	0	0	
477	N479	186	-1.53125	4.681	0	
478	N480	196	-1.53125	4.681	0	
479	N481	191	-1.53125	8.681	0	
480	N482	186	-1.53125	8.681	0	
481	N483	186	-1.53125	12.681	0	
482	N484	181	-1.53125	8.681	0	
483	N485	201	-1.53125	8.681	0	
484	N486	196	-1.53125	8.681	0	
485	N487	196	-1.53125	12.681	0	
486	N488	181	-.875	12.681	0	
487	N489	201	-.875	12.681	0	
488	N490	191	-.875	12.681	0	
489	N491	181	-.875	4.681	0	
490	N492	201	-.875	4.681	0	
491	N493	191	-.875	4.681	0	
492	N494	186	-.875	4.681	0	
493	N495	196	-.875	4.681	0	
494	N496	191	-.875	8.681	0	
495	N497	186	-.875	8.681	0	
496	N498	186	-.875	12.681	0	
497	N499	181	-.875	8.681	0	
498	N500	201	-.875	8.681	0	
499	N501	196	-.875	8.681	0	
500	N502	196	-.875	12.681	0	
501	N503	181	0	12.681	0	
502	N504	201	0	12.681	0	
503	N506	181	.5	4.681	0	
504	N507	201	.5	4.681	0	
505	N514	181	.5	8.681	0	

Joint Coordinates and Temperatures (Continued)

	Label	X [in]	Y [in]	Z [in]	Temp [F]	Detach From Dia...
506	N515	201	.5	8.681	0	
507	N507A	97	-1.53125	82.019273	0	
508	N508	97	-1.53125	86.134637	0	
509	N509	91.5	-1.53125	77.90391	0	
510	N510	91.5	-1.53125	82.019273	0	
511	N511	91.5	-1.53125	86.134637	0	
512	N512	91.5	-1.53125	90.25	0	
513	N513	86	-1.53125	77.90391	0	
514	N514A	86	-1.53125	82.019273	0	
515	N515A	86	-1.53125	86.134637	0	
516	N516	86	-1.53125	90.25	0	
517	N517	80.5	-1.53125	77.90391	0	
518	N518	80.5	-1.53125	82.019273	0	
519	N519	80.5	-1.53125	86.134637	0	
520	N520	80.5	-1.53125	90.25	0	
521	N521	75	-1.53125	86.134637	0	
522	N522	55	-1.53125	86.134637	0	
523	N523	49.5	-1.53125	77.90391	0	
524	N524	49.5	-1.53125	82.019273	0	
525	N525	49.5	-1.53125	86.134637	0	
526	N526	49.5	-1.53125	90.25	0	
527	N527	44	-1.53125	77.90391	0	
528	N528	44	-1.53125	82.019273	0	
529	N529	44	-1.53125	86.134637	0	
530	N530	44	-1.53125	90.25	0	
531	N531	38.5	-1.53125	77.90391	0	
532	N532	38.5	-1.53125	82.019273	0	
533	N533	38.5	-1.53125	86.134637	0	
534	N534	38.5	-1.53125	90.25	0	
535	N535	33	-1.53125	82.019273	0	
536	N536	33	-1.53125	86.134637	0	
537	N537	0	-1.53125	82.019273	0	
538	N538	0	-1.53125	86.134637	0	
539	N539	-5.047	-1.53125	77.90391	0	
540	N540	-5.047	-1.53125	82.019273	0	
541	N541	-5.047	-1.53125	86.134637	0	
542	N542	-5.047	-1.53125	90.25	0	
543	N543	-10.094	-1.53125	77.90391	0	
544	N544	-10.094	-1.53125	82.019273	0	
545	N545	-10.094	-1.53125	86.134637	0	
546	N546	-10.094	-1.53125	90.25	0	
547	N547	-15.141	-1.53125	77.90391	0	
548	N548	-15.141	-1.53125	82.019273	0	
549	N549	-15.141	-1.53125	86.134637	0	
550	N550	-15.141	-1.53125	90.25	0	
551	N551	-20.188	-1.53125	82.019273	0	
552	N552	-20.188	-1.53125	86.134637	0	
553	N553	-5.046875	-1.53125	94.25	0	
554	N554	-10.09375	-1.53125	94.25	0	
555	N555	-15.140625	-1.53125	94.25	0	
556	N556	26.4	-1.53125	90.25	0	
557	N557	26.4	-1.53125	94.25	0	
558	N558	19.8	-1.53125	90.25	0	
559	N559	19.8	-1.53125	94.25	0	
560	N560	13.2	-1.53125	90.25	0	
561	N561	13.2	-1.53125	94.25	0	
562	N562	6.6	-1.53125	90.25	0	
563	N563	6.6	-1.53125	94.25	0	
564	N564	26.4	-1.53125	77.90391	0	

Joint Coordinates and Temperatures (Continued)

	Label	X [in]	Y [in]	Z [in]	Temp [F]	Detach From Dia...
565	N565	26.4	-1.53125	82.019273	0	
566	N566	26.4	-1.53125	86.134637	0	
567	N567	19.8	-1.53125	77.90391	0	
568	N568	19.8	-1.53125	82.019273	0	
569	N569	19.8	-1.53125	86.134637	0	
570	N570	13.2	-1.53125	77.90391	0	
571	N571	13.2	-1.53125	82.019273	0	
572	N572	13.2	-1.53125	86.134637	0	
573	N573	6.6	-1.53125	77.90391	0	
574	N574	6.6	-1.53125	82.019273	0	
575	N575	6.6	-1.53125	86.134637	0	
576	N576	49.5	-1.53125	94.25	0	
577	N577	44	-1.53125	94.25	0	
578	N578	38.5	-1.53125	94.25	0	
579	N579	91.5	-1.53125	94.25	0	
580	N580	86	-1.53125	94.25	0	
581	N581	80.5	-1.53125	94.25	0	
582	N582	112	-1.53125	90.25	0	
583	N583	112	-1.53125	94.25	0	
584	N584	107	-1.53125	90.25	0	
585	N585	107	-1.53125	94.25	0	
586	N586	102	-1.53125	90.25	0	
587	N587	102	-1.53125	94.25	0	
588	N588	133.5	-1.53125	90.25	0	
589	N589	133.5	-1.53125	94.25	0	
590	N590	128	-1.53125	90.25	0	
591	N591	128	-1.53125	94.25	0	
592	N592	122.5	-1.53125	90.25	0	
593	N593	122.5	-1.53125	94.25	0	
594	N594	154	-1.53125	90.25	0	
595	N595	154	-1.53125	94.25	0	
596	N596	149	-1.53125	90.25	0	
597	N597	149	-1.53125	94.25	0	
598	N598	144	-1.53125	90.25	0	
599	N599	144	-1.53125	94.25	0	
600	N600	175.5	-1.53125	90.25	0	
601	N601	175.5	-1.53125	94.25	0	
602	N602	170	-1.53125	90.25	0	
603	N603	170	-1.53125	94.25	0	
604	N604	164.5	-1.53125	90.25	0	
605	N605	164.5	-1.53125	94.25	0	
606	N606	117	-1.53125	82.019273	0	
607	N607	117	-1.53125	86.134637	0	
608	N608	112	-1.53125	77.90391	0	
609	N609	112	-1.53125	82.019273	0	
610	N610	112	-1.53125	86.134637	0	
611	N611	107	-1.53125	77.90391	0	
612	N612	107	-1.53125	82.019273	0	
613	N613	107	-1.53125	86.134637	0	
614	N614	102	-1.53125	77.90391	0	
615	N615	102	-1.53125	82.019273	0	
616	N616	102	-1.53125	86.134637	0	
617	N617	139	-1.53125	82.019273	0	
618	N618	139	-1.53125	86.134637	0	
619	N619	133.5	-1.53125	77.90391	0	
620	N620	133.5	-1.53125	82.019273	0	
621	N621	133.5	-1.53125	86.134637	0	
622	N622	128	-1.53125	77.90391	0	
623	N623	128	-1.53125	82.019273	0	

Joint Coordinates and Temperatures (Continued)

	Label	X [in]	Y [in]	Z [in]	Temp [F]	Detach From Dia...
624	N624	128	-1.53125	86.134637	0	
625	N625	122.5	-1.53125	77.90391	0	
626	N626	122.5	-1.53125	82.019273	0	
627	N627	122.5	-1.53125	86.134637	0	
628	N628	159	-1.53125	82.019273	0	
629	N629	159	-1.53125	86.134637	0	
630	N630	154	-1.53125	77.90391	0	
631	N631	154	-1.53125	82.019273	0	
632	N632	154	-1.53125	86.134637	0	
633	N633	149	-1.53125	77.90391	0	
634	N634	149	-1.53125	82.019273	0	
635	N635	149	-1.53125	86.134637	0	
636	N636	144	-1.53125	77.90391	0	
637	N637	144	-1.53125	82.019273	0	
638	N638	144	-1.53125	86.134637	0	
639	N639	181	-1.53125	86.134637	0	
640	N640	175.5	-1.53125	77.90391	0	
641	N641	175.5	-1.53125	82.019273	0	
642	N642	175.5	-1.53125	86.134637	0	
643	N643	170	-1.53125	77.90391	0	
644	N644	170	-1.53125	82.019273	0	
645	N645	170	-1.53125	86.134637	0	
646	N646	164.5	-1.53125	77.90391	0	
647	N647	164.5	-1.53125	82.019273	0	
648	N648	164.5	-1.53125	86.134637	0	
649	N649	217.5	-1.53125	90.25	0	
650	N650	217.5	-1.53125	94.25	0	
651	N651	212	-1.53125	90.25	0	
652	N652	212	-1.53125	94.25	0	
653	N653	206.5	-1.53125	90.25	0	
654	N654	206.5	-1.53125	94.25	0	
655	N655	271.14025	-1.53125	90.25	0	
656	N656	271.140625	-1.53125	94.25	0	
657	N657	266.0935	-1.53125	90.25	0	
658	N658	266.09375	-1.53125	94.25	0	
659	N659	261.04675	-1.53125	90.25	0	
660	N660	261.046875	-1.53125	94.25	0	
661	N661	249.4	-1.53125	90.25	0	
662	N662	249.4	-1.53125	94.25	0	
663	N663	242.8	-1.53125	90.25	0	
664	N664	242.8	-1.53125	94.25	0	
665	N665	236.2	-1.53125	90.25	0	
666	N666	236.2	-1.53125	94.25	0	
667	N667	229.6	-1.53125	90.25	0	
668	N668	229.6	-1.53125	94.25	0	
669	N669	223	-1.53125	82.019273	0	
670	N670	223	-1.53125	86.134637	0	
671	N671	217.5	-1.53125	77.90391	0	
672	N672	217.5	-1.53125	82.019273	0	
673	N673	217.5	-1.53125	86.134637	0	
674	N674	212	-1.53125	77.90391	0	
675	N675	212	-1.53125	82.019273	0	
676	N676	212	-1.53125	86.134637	0	
677	N677	206.5	-1.53125	77.90391	0	
678	N678	206.5	-1.53125	82.019273	0	
679	N679	206.5	-1.53125	86.134637	0	
680	N680	201	-1.53125	86.134637	0	
681	N681	256	-1.53125	82.019273	0	
682	N682	256	-1.53125	86.134637	0	

Joint Coordinates and Temperatures (Continued)

	Label	X [in]	Y [in]	Z [in]	Temp [F]	Detach From Dia...
683	N683	249.4	-1.53125	77.90391	0	
684	N684	249.4	-1.53125	82.019273	0	
685	N685	249.4	-1.53125	86.134637	0	
686	N686	242.8	-1.53125	77.90391	0	
687	N687	242.8	-1.53125	82.019273	0	
688	N688	242.8	-1.53125	86.134637	0	
689	N689	236.2	-1.53125	77.90391	0	
690	N690	236.2	-1.53125	82.019273	0	
691	N691	236.2	-1.53125	86.134637	0	
692	N692	229.6	-1.53125	77.90391	0	
693	N693	229.6	-1.53125	82.019273	0	
694	N694	229.6	-1.53125	86.134637	0	
695	N695	276.187	-1.53125	82.019273	0	
696	N696	276.187	-1.53125	86.134637	0	
697	N697	271.14025	-1.53125	77.90391	0	
698	N698	271.14025	-1.53125	82.019273	0	
699	N699	271.14025	-1.53125	86.134637	0	
700	N700	266.0935	-1.53125	77.90391	0	
701	N701	266.0935	-1.53125	82.019273	0	
702	N702	266.0935	-1.53125	86.134637	0	
703	N703	261.04675	-1.53125	77.90391	0	
704	N704	261.04675	-1.53125	82.019273	0	
705	N705	261.04675	-1.53125	86.134637	0	
706	N706	-5.046875	-1.53125	-4	0	
707	N707	-5.047	-1.53125	0	0	
708	N708	-10.09375	-1.53125	-4	0	
709	N709	-10.094	-1.53125	0	0	
710	N710	-15.140625	-1.53125	-4	0	
711	N711	-15.141	-1.53125	0	0	
712	N712	26.4	-1.53125	-4	0	
713	N713	26.4	-1.53125	0	0	
714	N714	19.8	-1.53125	-4	0	
715	N715	19.8	-1.53125	0	0	
716	N716	13.2	-1.53125	-4	0	
717	N717	13.2	-1.53125	0	0	
718	N718	6.6	-1.53125	-4	0	
719	N719	6.6	-1.53125	0	0	
720	N720	0	-1.53125	4.227	0	
721	N721	0	-1.53125	8.454	0	
722	N722	-5.047	-1.53125	4.227	0	
723	N723	-5.047	-1.53125	8.454	0	
724	N724	-5.047	-1.53125	12.681	0	
725	N725	-10.094	-1.53125	4.227	0	
726	N726	-10.094	-1.53125	8.454	0	
727	N727	-10.094	-1.53125	12.681	0	
728	N728	-15.141	-1.53125	4.227	0	
729	N729	-15.141	-1.53125	8.454	0	
730	N730	-15.141	-1.53125	12.681	0	
731	N731	-20.188	-1.53125	4.227	0	
732	N732	-20.188	-1.53125	8.454	0	
733	N733	33	-1.53125	4.227	0	
734	N734	33	-1.53125	8.454	0	
735	N735	26.4	-1.53125	4.227	0	
736	N736	26.4	-1.53125	8.454	0	
737	N737	26.4	-1.53125	12.681	0	
738	N738	19.8	-1.53125	4.227	0	
739	N739	19.8	-1.53125	8.454	0	
740	N740	19.8	-1.53125	12.681	0	
741	N741	13.2	-1.53125	4.227	0	

Joint Coordinates and Temperatures (Continued)

	Label	X [in]	Y [in]	Z [in]	Temp [F]	Detach From Dia...
742	N742	13.2	-1.53125	8.454	0	
743	N743	13.2	-1.53125	12.681	0	
744	N744	6.6	-1.53125	4.227	0	
745	N745	6.6	-1.53125	8.454	0	
746	N746	6.6	-1.53125	12.681	0	
747	N747	55	-1.53125	4.227	0	
748	N748	55	-1.53125	8.454	0	
749	N749	49.5	-1.53125	0	0	
750	N750	49.5	-1.53125	4.227	0	
751	N751	49.5	-1.53125	8.454	0	
752	N752	49.5	-1.53125	12.681	0	
753	N753	44	-1.53125	0	0	
754	N754	44	-1.53125	4.227	0	
755	N755	44	-1.53125	8.454	0	
756	N756	44	-1.53125	12.681	0	
757	N757	38.5	-1.53125	0	0	
758	N758	38.5	-1.53125	4.227	0	
759	N759	38.5	-1.53125	8.454	0	
760	N760	38.5	-1.53125	12.681	0	
761	N761	49.5	-1.53125	-4	0	
762	N762	44	-1.53125	-4	0	
763	N763	38.5	-1.53125	-4	0	
764	N764	91.5	-1.53125	-4	0	
765	N765	91.5	-1.531062	0	0	
766	N766	86	-1.53125	-4	0	
767	N767	86	-1.531125	0	0	
768	N768	80.5	-1.53125	-4	0	
769	N769	80.5	-1.531188	0	0	
770	N770	112	-1.53125	-4	0	
771	N771	112	-1.531188	0	0	
772	N772	107	-1.53125	-4	0	
773	N773	107	-1.531125	0	0	
774	N774	102	-1.53125	-4	0	
775	N775	102	-1.531062	0	0	
776	N776	133.5	-1.53125	-4	0	
777	N777	133.5	-1.53125	0	0	
778	N778	128	-1.53125	-4	0	
779	N779	128	-1.53125	0	0	
780	N780	122.5	-1.53125	-4	0	
781	N781	122.5	-1.53125	0	0	
782	N782	154	-1.53125	-4	0	
783	N783	154	-1.53125	0	0	
784	N784	149	-1.53125	-4	0	
785	N785	149	-1.53125	0	0	
786	N786	144	-1.53125	-4	0	
787	N787	144	-1.53125	0	0	
788	N788	175.5	-1.53125	-4	0	
789	N789	175.5	-1.53125	0	0	
790	N790	170	-1.53125	-4	0	
791	N791	170	-1.53125	0	0	
792	N792	164.5	-1.53125	-4	0	
793	N793	164.5	-1.53125	0	0	
794	N794	97	-1.531083	4.227	0	
795	N795	97	-1.531167	8.454	0	
796	N796	91.5	-1.531125	4.227	0	
797	N797	91.5	-1.531188	8.454	0	
798	N798	91.5	-1.53125	12.681	0	
799	N799	86	-1.531167	4.227	0	
800	N800	86	-1.531208	8.454	0	

Joint Coordinates and Temperatures (Continued)

	Label	X [in]	Y [in]	Z [in]	Temp [F]	Detach From Dia...
801	N801	86	-1.53125	12.681	0	
802	N802	80.5	-1.531208	4.227	0	
803	N803	80.5	-1.531229	8.454	0	
804	N804	80.5	-1.53125	12.681	0	
805	N805	75	-1.53125	4.227	0	
806	N806	75	-1.53125	8.454	0	
807	N807	117	-1.53125	4.227	0	
808	N808	117	-1.53125	8.454	0	
809	N809	112	-1.531208	4.227	0	
810	N810	112	-1.531229	8.454	0	
811	N811	112	-1.53125	12.681	0	
812	N812	107	-1.531167	4.227	0	
813	N813	107	-1.531208	8.454	0	
814	N814	107	-1.53125	12.681	0	
815	N815	102	-1.531125	4.227	0	
816	N816	102	-1.531188	8.454	0	
817	N817	102	-1.53125	12.681	0	
818	N818	139	-1.53125	4.227	0	
819	N819	139	-1.53125	8.454	0	
820	N820	133.5	-1.53125	4.227	0	
821	N821	133.5	-1.53125	8.454	0	
822	N822	133.5	-1.53125	12.681	0	
823	N823	128	-1.53125	4.227	0	
824	N824	128	-1.53125	8.454	0	
825	N825	128	-1.53125	12.681	0	
826	N826	122.5	-1.53125	4.227	0	
827	N827	122.5	-1.53125	8.454	0	
828	N828	122.5	-1.53125	12.681	0	
829	N829	159	-1.53125	4.227	0	
830	N830	159	-1.53125	8.454	0	
831	N831	154	-1.53125	4.227	0	
832	N832	154	-1.53125	8.454	0	
833	N833	154	-1.53125	12.681	0	
834	N834	149	-1.53125	4.227	0	
835	N835	149	-1.53125	8.454	0	
836	N836	149	-1.53125	12.681	0	
837	N837	144	-1.53125	4.227	0	
838	N838	144	-1.53125	8.454	0	
839	N839	144	-1.53125	12.681	0	
840	N840	181	-1.53125	4.227	0	
841	N841	181	-1.53125	8.454	0	
842	N842	175.5	-1.53125	4.227	0	
843	N843	175.5	-1.53125	8.454	0	
844	N844	175.5	-1.53125	12.681	0	
845	N845	170	-1.53125	4.227	0	
846	N846	170	-1.53125	8.454	0	
847	N847	170	-1.53125	12.681	0	
848	N848	164.5	-1.53125	4.227	0	
849	N849	164.5	-1.53125	8.454	0	
850	N850	164.5	-1.53125	12.681	0	
851	N851	223	-1.53125	4.227	0	
852	N852	223	-1.53125	8.454	0	
853	N853	217.5	-1.53125	0	0	
854	N854	217.5	-1.53125	4.227	0	
855	N855	217.5	-1.53125	8.454	0	
856	N856	217.5	-1.53125	12.681	0	
857	N857	212	-1.53125	0	0	
858	N858	212	-1.53125	4.227	0	
859	N859	212	-1.53125	8.454	0	

Joint Coordinates and Temperatures (Continued)

	Label	X [in]	Y [in]	Z [in]	Temp [F]	Detach From Dia...
860	N860	212	-1.53125	12.681	0	
861	N861	206.5	-1.53125	0	0	
862	N862	206.5	-1.53125	4.227	0	
863	N863	206.5	-1.53125	8.454	0	
864	N864	206.5	-1.53125	12.681	0	
865	N865	201	-1.53125	4.227	0	
866	N866	201	-1.53125	8.454	0	
867	N867	276.187	-1.53125	4.227	0	
868	N868	276.187	-1.53125	8.454	0	
869	N869	271.14025	-1.53125	0	0	
870	N870	271.14025	-1.53125	4.227	0	
871	N871	271.14025	-1.53125	8.454	0	
872	N872	271.14025	-1.53125	12.681	0	
873	N873	266.0935	-1.53125	0	0	
874	N874	266.0935	-1.53125	4.227	0	
875	N875	266.0935	-1.53125	8.454	0	
876	N876	266.0935	-1.53125	12.681	0	
877	N877	261.04675	-1.53125	0	0	
878	N878	261.04675	-1.53125	4.227	0	
879	N879	261.04675	-1.53125	8.454	0	
880	N880	261.04675	-1.53125	12.681	0	
881	N881	256	-1.53125	4.227	0	
882	N882	256	-1.53125	8.454	0	
883	N883	217.5	-1.53125	-4	0	
884	N884	212	-1.53125	-4	0	
885	N885	206.5	-1.53125	-4	0	
886	N886	271.140625	-1.531188	-4	0	
887	N887	266.09375	-1.531125	-4	0	
888	N888	261.046875	-1.531062	-4	0	
889	N889	249.4	-1.53105	-4	0	
890	N890	249.4	-1.53125	0	0	
891	N891	242.8	-1.5311	-4	0	
892	N892	242.8	-1.53125	0	0	
893	N893	236.2	-1.53115	-4	0	
894	N894	236.2	-1.53125	0	0	
895	N895	229.6	-1.5312	-4	0	
896	N896	229.6	-1.53125	0	0	
897	N897	249.4	-1.53125	4.227	0	
898	N898	249.4	-1.53125	8.454	0	
899	N899	249.4	-1.53125	12.681	0	
900	N900	242.8	-1.53125	4.227	0	
901	N901	242.8	-1.53125	8.454	0	
902	N902	242.8	-1.53125	12.681	0	
903	N903	236.2	-1.53125	4.227	0	
904	N904	236.2	-1.53125	8.454	0	
905	N905	236.2	-1.53125	12.681	0	
906	N906	229.6	-1.53125	4.227	0	
907	N907	229.6	-1.53125	8.454	0	
908	N908	229.6	-1.53125	12.681	0	
909	N909	55	11.26875	67.90391	0	
910	N910	55	8.06875	70.40391	0	
911	N911	55	4.86875	72.90391	0	
912	N912	55	1.66875	75.40391	0	
913	N913	49.5	14.46875	65.40391	0	
914	N914	49.5	11.26875	67.90391	0	
915	N915	49.5	8.06875	70.40391	0	
916	N916	49.5	4.86875	72.90391	0	
917	N917	49.5	1.66875	75.40391	0	
918	N918	44	14.46875	65.40391	0	

Joint Coordinates and Temperatures (Continued)

	Label	X [in]	Y [in]	Z [in]	Temp [F]	Detach From Dia...
919	N919	44	11.26875	67.90391	0	
920	N920	44	8.06875	70.40391	0	
921	N921	44	4.86875	72.90391	0	
922	N922	44	1.66875	75.40391	0	
923	N923	38.5	14.46875	65.40391	0	
924	N924	38.5	11.26875	67.90391	0	
925	N925	38.5	8.06875	70.40391	0	
926	N926	38.5	4.86875	72.90391	0	
927	N927	38.5	1.66875	75.40391	0	
928	N928	33	11.26875	67.90391	0	
929	N929	33	8.06875	70.40391	0	
930	N930	33	4.86875	72.90391	0	
931	N931	33	1.66875	75.40391	0	
932	N932	75	11.26875	67.90391	0	
933	N933	75	8.06875	70.40391	0	
934	N934	75	4.86875	72.90391	0	
935	N935	75	1.66875	75.40391	0	
936	N936	70	14.46875	65.40391	0	
937	N937	70	11.26875	67.90391	0	
938	N938	70	8.06875	70.40391	0	
939	N939	70	4.86875	72.90391	0	
940	N940	70	1.66875	75.40391	0	
941	N941	65	14.46875	65.40391	0	
942	N942	65	11.26875	67.90391	0	
943	N943	65	8.06875	70.40391	0	
944	N944	65	4.86875	72.90391	0	
945	N945	65	1.66875	75.40391	0	
946	N946	60	14.46875	65.40391	0	
947	N947	60	11.26875	67.90391	0	
948	N948	60	8.06875	70.40391	0	
949	N949	60	4.86875	72.90391	0	
950	N950	60	1.66875	75.40391	0	
951	N951	97	11.26875	67.90391	0	
952	N952	97	8.06875	70.40391	0	
953	N953	97	4.86875	72.90391	0	
954	N954	97	1.66875	75.40391	0	
955	N955	91.5	14.46875	65.40391	0	
956	N956	91.5	11.26875	67.90391	0	
957	N957	91.5	8.06875	70.40391	0	
958	N958	91.5	4.86875	72.90391	0	
959	N959	91.5	1.66875	75.40391	0	
960	N960	86	14.46875	65.40391	0	
961	N961	86	11.26875	67.90391	0	
962	N962	86	8.06875	70.40391	0	
963	N963	86	4.86875	72.90391	0	
964	N964	86	1.66875	75.40391	0	
965	N965	80.5	14.46875	65.40391	0	
966	N966	80.5	11.26875	67.90391	0	
967	N967	80.5	8.06875	70.40391	0	
968	N968	80.5	4.86875	72.90391	0	
969	N969	80.5	1.66875	75.40391	0	
970	N970	117	11.26875	67.90391	0	
971	N971	117	8.06875	70.40391	0	
972	N972	117	4.86875	72.90391	0	
973	N973	117	1.66875	75.40391	0	
974	N974	112	14.46875	65.40391	0	
975	N975	112	11.26875	67.90391	0	
976	N976	112	8.06875	70.40391	0	
977	N977	112	4.86875	72.90391	0	

Joint Coordinates and Temperatures (Continued)

	Label	X [in]	Y [in]	Z [in]	Temp [F]	Detach From Dia...
978	N978	112	1.66875	75.40391	0	
979	N979	107	14.46875	65.40391	0	
980	N980	107	11.26875	67.90391	0	
981	N981	107	8.06875	70.40391	0	
982	N982	107	4.86875	72.90391	0	
983	N983	107	1.66875	75.40391	0	
984	N984	102	14.46875	65.40391	0	
985	N985	102	11.26875	67.90391	0	
986	N986	102	8.06875	70.40391	0	
987	N987	102	4.86875	72.90391	0	
988	N988	102	1.66875	75.40391	0	
989	N989	139	11.26875	67.90391	0	
990	N990	139	8.06875	70.40391	0	
991	N991	139	4.86875	72.90391	0	
992	N992	139	1.66875	75.40391	0	
993	N993	133.5	14.46875	65.40391	0	
994	N994	133.5	11.26875	67.90391	0	
995	N995	133.5	8.06875	70.40391	0	
996	N996	133.5	4.86875	72.90391	0	
997	N997	133.5	1.66875	75.40391	0	
998	N998	128	14.46875	65.40391	0	
999	N999	128	11.26875	67.90391	0	
1000	N1000	128	8.06875	70.40391	0	
1001	N1001	128	4.86875	72.90391	0	
1002	N1002	128	1.66875	75.40391	0	
1003	N1003	122.5	14.46875	65.40391	0	
1004	N1004	122.5	11.26875	67.90391	0	
1005	N1005	122.5	8.06875	70.40391	0	
1006	N1006	122.5	4.86875	72.90391	0	
1007	N1007	122.5	1.66875	75.40391	0	
1008	N1008	159	11.26875	67.90391	0	
1009	N1009	159	8.06875	70.40391	0	
1010	N1010	159	4.86875	72.90391	0	
1011	N1011	159	1.66875	75.40391	0	
1012	N1012	154	14.46875	65.40391	0	
1013	N1013	154	11.26875	67.90391	0	
1014	N1014	154	8.06875	70.40391	0	
1015	N1015	154	4.86875	72.90391	0	
1016	N1016	154	1.66875	75.40391	0	
1017	N1017	149	14.46875	65.40391	0	
1018	N1018	149	11.26875	67.90391	0	
1019	N1019	149	8.06875	70.40391	0	
1020	N1020	149	4.86875	72.90391	0	
1021	N1021	149	1.66875	75.40391	0	
1022	N1022	144	14.46875	65.40391	0	
1023	N1023	144	11.26875	67.90391	0	
1024	N1024	144	8.06875	70.40391	0	
1025	N1025	144	4.86875	72.90391	0	
1026	N1026	144	1.66875	75.40391	0	
1027	N1027	181	11.26875	67.90391	0	
1028	N1028	181	8.06875	70.40391	0	
1029	N1029	181	4.86875	72.90391	0	
1030	N1030	181	1.66875	75.40391	0	
1031	N1031	175.5	14.46875	65.40391	0	
1032	N1032	175.5	11.26875	67.90391	0	
1033	N1033	175.5	8.06875	70.40391	0	
1034	N1034	175.5	4.86875	72.90391	0	
1035	N1035	175.5	1.66875	75.40391	0	
1036	N1036	170	14.46875	65.40391	0	

Joint Coordinates and Temperatures (Continued)

	Label	X [in]	Y [in]	Z [in]	Temp [F]	Detach From Dia...
1037	N1037	170	11.26875	67.90391	0	
1038	N1038	170	8.06875	70.40391	0	
1039	N1039	170	4.86875	72.90391	0	
1040	N1040	170	1.66875	75.40391	0	
1041	N1041	164.5	14.46875	65.40391	0	
1042	N1042	164.5	11.26875	67.90391	0	
1043	N1043	164.5	8.06875	70.40391	0	
1044	N1044	164.5	4.86875	72.90391	0	
1045	N1045	164.5	1.66875	75.40391	0	
1046	N1046	201	11.26875	67.90391	0	
1047	N1047	201	8.06875	70.40391	0	
1048	N1048	201	4.86875	72.90391	0	
1049	N1049	201	1.66875	75.40391	0	
1050	N1050	196	14.46875	65.40391	0	
1051	N1051	196	11.26875	67.90391	0	
1052	N1052	196	8.06875	70.40391	0	
1053	N1053	196	4.86875	72.90391	0	
1054	N1054	196	1.66875	75.40391	0	
1055	N1055	191	14.46875	65.40391	0	
1056	N1056	191	11.26875	67.90391	0	
1057	N1057	191	8.06875	70.40391	0	
1058	N1058	191	4.86875	72.90391	0	
1059	N1059	191	1.66875	75.40391	0	
1060	N1060	186	14.46875	65.40391	0	
1061	N1061	186	11.26875	67.90391	0	
1062	N1062	186	8.06875	70.40391	0	
1063	N1063	186	4.86875	72.90391	0	
1064	N1064	186	1.66875	75.40391	0	
1065	N1065	223	11.26875	67.90391	0	
1066	N1066	223	8.06875	70.40391	0	
1067	N1067	223	4.86875	72.90391	0	
1068	N1068	223	1.66875	75.40391	0	
1069	N1069	217.5	14.46875	65.40391	0	
1070	N1070	217.5	11.26875	67.90391	0	
1071	N1071	217.5	8.06875	70.40391	0	
1072	N1072	217.5	4.86875	72.90391	0	
1073	N1073	217.5	1.66875	75.40391	0	
1074	N1074	212	14.46875	65.40391	0	
1075	N1075	212	11.26875	67.90391	0	
1076	N1076	212	8.06875	70.40391	0	
1077	N1077	212	4.86875	72.90391	0	
1078	N1078	212	1.66875	75.40391	0	
1079	N1079	206.5	14.46875	65.40391	0	
1080	N1080	206.5	11.26875	67.90391	0	
1081	N1081	206.5	8.06875	70.40391	0	
1082	N1082	206.5	4.86875	72.90391	0	
1083	N1083	206.5	1.66875	75.40391	0	
1084	N1084	223	1.66875	15.181	0	
1085	N1085	223	4.86875	17.681	0	
1086	N1086	223	8.06875	20.181	0	
1087	N1087	223	11.26875	22.681	0	
1088	N1088	217.5	1.66875	15.181	0	
1089	N1089	217.5	4.86875	17.681	0	
1090	N1090	217.5	8.06875	20.181	0	
1091	N1091	217.5	11.26875	22.681	0	
1092	N1092	217.5	14.46875	25.181	0	
1093	N1093	212	1.66875	15.181	0	
1094	N1094	212	4.86875	17.681	0	
1095	N1095	212	8.06875	20.181	0	

Joint Coordinates and Temperatures (Continued)

	Label	X [in]	Y [in]	Z [in]	Temp [F]	Detach From Dia...
1096	N1096	212	11.26875	22.681	0	
1097	N1097	212	14.46875	25.181	0	
1098	N1098	206.5	1.66875	15.181	0	
1099	N1099	206.5	4.86875	17.681	0	
1100	N1100	206.5	8.06875	20.181	0	
1101	N1101	206.5	11.26875	22.681	0	
1102	N1102	206.5	14.46875	25.181	0	
1103	N1103	201	1.66875	15.181	0	
1104	N1104	201	4.86875	17.681	0	
1105	N1105	201	8.06875	20.181	0	
1106	N1106	201	11.26875	22.681	0	
1107	N1107	196	1.66875	15.181	0	
1108	N1108	196	4.86875	17.681	0	
1109	N1109	196	8.06875	20.181	0	
1110	N1110	196	11.26875	22.681	0	
1111	N1111	196	14.46875	25.181	0	
1112	N1112	191	1.66875	15.181	0	
1113	N1113	191	4.86875	17.681	0	
1114	N1114	191	8.06875	20.181	0	
1115	N1115	191	11.26875	22.681	0	
1116	N1116	191	14.46875	25.181	0	
1117	N1117	186	1.66875	15.181	0	
1118	N1118	186	4.86875	17.681	0	
1119	N1119	186	8.06875	20.181	0	
1120	N1120	186	11.26875	22.681	0	
1121	N1121	186	14.46875	25.181	0	
1122	N1122	181	1.66875	15.181	0	
1123	N1123	181	4.86875	17.681	0	
1124	N1124	181	8.06875	20.181	0	
1125	N1125	181	11.26875	22.681	0	
1126	N1126	175.5	1.66875	15.181	0	
1127	N1127	175.5	4.86875	17.681	0	
1128	N1128	175.5	8.06875	20.181	0	
1129	N1129	175.5	11.26875	22.681	0	
1130	N1130	175.5	14.46875	25.181	0	
1131	N1131	170	1.66875	15.181	0	
1132	N1132	170	4.86875	17.681	0	
1133	N1133	170	8.06875	20.181	0	
1134	N1134	170	11.26875	22.681	0	
1135	N1135	170	14.46875	25.181	0	
1136	N1136	164.5	1.66875	15.181	0	
1137	N1137	164.5	4.86875	17.681	0	
1138	N1138	164.5	8.06875	20.181	0	
1139	N1139	164.5	11.26875	22.681	0	
1140	N1140	164.5	14.46875	25.181	0	
1141	N1141	159	1.66875	15.181	0	
1142	N1142	159	4.86875	17.681	0	
1143	N1143	159	8.06875	20.181	0	
1144	N1144	159	11.26875	22.681	0	
1145	N1145	154	1.66875	15.181	0	
1146	N1146	154	4.86875	17.681	0	
1147	N1147	154	8.06875	20.181	0	
1148	N1148	154	11.26875	22.681	0	
1149	N1149	154	14.46875	25.181	0	
1150	N1150	149	1.66875	15.181	0	
1151	N1151	149	4.86875	17.681	0	
1152	N1152	149	8.06875	20.181	0	
1153	N1153	149	11.26875	22.681	0	
1154	N1154	149	14.46875	25.181	0	

Joint Coordinates and Temperatures (Continued)

	Label	X [in]	Y [in]	Z [in]	Temp [F]	Detach From Dia...
1155	N1155	144	1.66875	15.181	0	
1156	N1156	144	4.86875	17.681	0	
1157	N1157	144	8.06875	20.181	0	
1158	N1158	144	11.26875	22.681	0	
1159	N1159	144	14.46875	25.181	0	
1160	N1160	139	1.66875	15.181	0	
1161	N1161	139	4.86875	17.681	0	
1162	N1162	139	8.06875	20.181	0	
1163	N1163	139	11.26875	22.681	0	
1164	N1164	133.5	1.66875	15.181	0	
1165	N1165	133.5	4.86875	17.681	0	
1166	N1166	133.5	8.06875	20.181	0	
1167	N1167	133.5	11.26875	22.681	0	
1168	N1168	133.5	14.46875	25.181	0	
1169	N1169	128	1.66875	15.181	0	
1170	N1170	128	4.86875	17.681	0	
1171	N1171	128	8.06875	20.181	0	
1172	N1172	128	11.26875	22.681	0	
1173	N1173	128	14.46875	25.181	0	
1174	N1174	122.5	1.66875	15.181	0	
1175	N1175	122.5	4.86875	17.681	0	
1176	N1176	122.5	8.06875	20.181	0	
1177	N1177	122.5	11.26875	22.681	0	
1178	N1178	122.5	14.46875	25.181	0	
1179	N1179	117	1.66875	15.181	0	
1180	N1180	117	4.86875	17.681	0	
1181	N1181	117	8.06875	20.181	0	
1182	N1182	117	11.26875	22.681	0	
1183	N1183	112	1.66875	15.181	0	
1184	N1184	112	4.86875	17.681	0	
1185	N1185	112	8.06875	20.181	0	
1186	N1186	112	11.26875	22.681	0	
1187	N1187	112	14.46875	25.181	0	
1188	N1188	107	1.66875	15.181	0	
1189	N1189	107	4.86875	17.681	0	
1190	N1190	107	8.06875	20.181	0	
1191	N1191	107	11.26875	22.681	0	
1192	N1192	107	14.46875	25.181	0	
1193	N1193	102	1.66875	15.181	0	
1194	N1194	102	4.86875	17.681	0	
1195	N1195	102	8.06875	20.181	0	
1196	N1196	102	11.26875	22.681	0	
1197	N1197	102	14.46875	25.181	0	
1198	N1198	97	1.66875	15.181	0	
1199	N1199	97	4.86875	17.681	0	
1200	N1200	97	8.06875	20.181	0	
1201	N1201	97	11.26875	22.681	0	
1202	N1202	91.5	1.66875	15.181	0	
1203	N1203	91.5	4.86875	17.681	0	
1204	N1204	91.5	8.06875	20.181	0	
1205	N1205	91.5	11.26875	22.681	0	
1206	N1206	91.5	14.46875	25.181	0	
1207	N1207	86	1.66875	15.181	0	
1208	N1208	86	4.86875	17.681	0	
1209	N1209	86	8.06875	20.181	0	
1210	N1210	86	11.26875	22.681	0	
1211	N1211	86	14.46875	25.181	0	
1212	N1212	80.5	1.66875	15.181	0	
1213	N1213	80.5	4.86875	17.681	0	

Joint Coordinates and Temperatures (Continued)

	Label	X [in]	Y [in]	Z [in]	Temp [F]	Detach From Dia...
1214	N1214	80.5	8.06875	20.181	0	
1215	N1215	80.5	11.26875	22.681	0	
1216	N1216	80.5	14.46875	25.181	0	
1217	N1217	75	1.66875	15.181	0	
1218	N1218	75	4.86875	17.681	0	
1219	N1219	75	8.06875	20.181	0	
1220	N1220	75	11.26875	22.681	0	
1221	N1221	70	1.66875	15.181	0	
1222	N1222	70	4.86875	17.681	0	
1223	N1223	70	8.06875	20.181	0	
1224	N1224	70	11.26875	22.681	0	
1225	N1225	70	14.46875	25.181	0	
1226	N1226	65	1.66875	15.181	0	
1227	N1227	65	4.86875	17.681	0	
1228	N1228	65	8.06875	20.181	0	
1229	N1229	65	11.26875	22.681	0	
1230	N1230	65	14.46875	25.181	0	
1231	N1231	60	1.66875	15.181	0	
1232	N1232	60	4.86875	17.681	0	
1233	N1233	60	8.06875	20.181	0	
1234	N1234	60	11.26875	22.681	0	
1235	N1235	60	14.46875	25.181	0	
1236	N1236	55	1.66875	15.181	0	
1237	N1237	55	4.86875	17.681	0	
1238	N1238	55	8.06875	20.181	0	
1239	N1239	55	11.26875	22.681	0	
1240	N1240	49.5	1.66875	15.181	0	
1241	N1241	49.5	4.86875	17.681	0	
1242	N1242	49.5	8.06875	20.181	0	
1243	N1243	49.5	11.26875	22.681	0	
1244	N1244	49.5	14.46875	25.181	0	
1245	N1245	44	1.66875	15.181	0	
1246	N1246	44	4.86875	17.681	0	
1247	N1247	44	8.06875	20.181	0	
1248	N1248	44	11.26875	22.681	0	
1249	N1249	44	14.46875	25.181	0	
1250	N1250	38.5	1.66875	15.181	0	
1251	N1251	38.5	4.86875	17.681	0	
1252	N1252	38.5	8.06875	20.181	0	
1253	N1253	38.5	11.26875	22.681	0	
1254	N1254	38.5	14.46875	25.181	0	
1255	N1255	33	1.66875	15.181	0	
1256	N1256	33	4.86875	17.681	0	
1257	N1257	33	8.06875	20.181	0	
1258	N1258	33	11.26875	22.681	0	
1259	N1259	26.4	14.46875	65.40391	0	
1260	N1260	26.4	11.26875	67.90391	0	
1261	N1261	26.4	8.06875	70.40391	0	
1262	N1262	26.4	4.86875	72.90391	0	
1263	N1263	26.4	1.66875	75.40391	0	
1264	N1264	19.8	14.46875	65.40391	0	
1265	N1265	19.8	11.26875	67.90391	0	
1266	N1266	19.8	8.06875	70.40391	0	
1267	N1267	19.8	4.86875	72.90391	0	
1268	N1268	19.8	1.66875	75.40391	0	
1269	N1269	13.2	14.46875	65.40391	0	
1270	N1270	13.2	11.26875	67.90391	0	
1271	N1271	13.2	8.06875	70.40391	0	
1272	N1272	13.2	4.86875	72.90391	0	

Joint Coordinates and Temperatures (Continued)

	Label	X [in]	Y [in]	Z [in]	Temp [F]	Detach From Dia...
1273	N1273	13.2	1.66875	75.40391	0	
1274	N1274	6.6	14.46875	65.40391	0	
1275	N1275	6.6	11.26875	67.90391	0	
1276	N1276	6.6	8.06875	70.40391	0	
1277	N1277	6.6	4.86875	72.90391	0	
1278	N1278	6.6	1.66875	75.40391	0	
1279	N1279	0	11.26875	67.90391	0	
1280	N1280	0	8.06875	70.40391	0	
1281	N1281	0	4.86875	72.90391	0	
1282	N1282	0	1.66875	75.40391	0	
1283	N1283	256	11.26875	67.90391	0	
1284	N1284	256	8.06875	70.40391	0	
1285	N1285	256	4.86875	72.90391	0	
1286	N1286	256	1.66875	75.40391	0	
1287	N1287	249.4	14.46875	65.40391	0	
1288	N1288	249.4	11.26875	67.90391	0	
1289	N1289	249.4	8.06875	70.40391	0	
1290	N1290	249.4	4.86875	72.90391	0	
1291	N1291	249.4	1.66875	75.40391	0	
1292	N1292	242.8	14.46875	65.40391	0	
1293	N1293	242.8	11.26875	67.90391	0	
1294	N1294	242.8	8.06875	70.40391	0	
1295	N1295	242.8	4.86875	72.90391	0	
1296	N1296	242.8	1.66875	75.40391	0	
1297	N1297	236.2	14.46875	65.40391	0	
1298	N1298	236.2	11.26875	67.90391	0	
1299	N1299	236.2	8.06875	70.40391	0	
1300	N1300	236.2	4.86875	72.90391	0	
1301	N1301	236.2	1.66875	75.40391	0	
1302	N1302	229.6	14.46875	65.40391	0	
1303	N1303	229.6	11.26875	67.90391	0	
1304	N1304	229.6	8.06875	70.40391	0	
1305	N1305	229.6	4.86875	72.90391	0	
1306	N1306	229.6	1.66875	75.40391	0	
1307	N1307	256	1.66875	15.181	0	
1308	N1308	256	4.86875	17.681	0	
1309	N1309	256	8.06875	20.181	0	
1310	N1310	256	11.26875	22.681	0	
1311	N1311	249.4	1.66875	15.181	0	
1312	N1312	249.4	4.86875	17.681	0	
1313	N1313	249.4	8.06875	20.181	0	
1314	N1314	249.4	11.26875	22.681	0	
1315	N1315	249.4	14.46875	25.181	0	
1316	N1316	242.8	1.66875	15.181	0	
1317	N1317	242.8	4.86875	17.681	0	
1318	N1318	242.8	8.06875	20.181	0	
1319	N1319	242.8	11.26875	22.681	0	
1320	N1320	242.8	14.46875	25.181	0	
1321	N1321	236.2	1.66875	15.181	0	
1322	N1322	236.2	4.86875	17.681	0	
1323	N1323	236.2	8.06875	20.181	0	
1324	N1324	236.2	11.26875	22.681	0	
1325	N1325	236.2	14.46875	25.181	0	
1326	N1326	229.6	1.66875	15.181	0	
1327	N1327	229.6	4.86875	17.681	0	
1328	N1328	229.6	8.06875	20.181	0	
1329	N1329	229.6	11.26875	22.681	0	
1330	N1330	229.6	14.46875	25.181	0	
1331	N1331	26.4	1.66876	15.181	0	

Joint Coordinates and Temperatures (Continued)

	Label	X [in]	Y [in]	Z [in]	Temp [F]	Detach From Dia...
1332	N1332	26.4	4.86877	17.681	0	
1333	N1333	26.4	8.06878	20.181	0	
1334	N1334	26.4	11.26879	22.681	0	
1335	N1335	26.4	14.4688	25.181	0	
1336	N1336	19.8	1.66877	15.181	0	
1337	N1337	19.8	4.86879	17.681	0	
1338	N1338	19.8	8.06881	20.181	0	
1339	N1339	19.8	11.26883	22.681	0	
1340	N1340	19.8	14.46885	25.181	0	
1341	N1341	13.2	1.66878	15.181	0	
1342	N1342	13.2	4.86881	17.681	0	
1343	N1343	13.2	8.06884	20.181	0	
1344	N1344	13.2	11.26887	22.681	0	
1345	N1345	13.2	14.4689	25.181	0	
1346	N1346	6.6	1.66879	15.181	0	
1347	N1347	6.6	4.86883	17.681	0	
1348	N1348	6.6	8.06887	20.181	0	
1349	N1349	6.6	11.26891	22.681	0	
1350	N1350	6.6	14.46895	25.181	0	
1351	N1351	0	1.6688	15.181	0	
1352	N1352	0	4.86885	17.681	0	
1353	N1353	0	8.0689	20.181	0	
1354	N1354	0	11.26895	22.681	0	
1355	N1355	256	14.46875	31.884818	0	
1356	N1356	256	14.46875	38.588637	0	
1357	N1357	256	14.46875	45.292455	0	
1358	N1358	256	14.46875	51.996273	0	
1359	N1359	256	14.46875	58.700092	0	
1360	N1360	249.4	14.46875	31.884818	0	
1361	N1361	249.4	14.46875	38.588637	0	
1362	N1362	249.4	14.46875	45.292455	0	
1363	N1363	249.4	14.46875	51.996273	0	
1364	N1364	249.4	14.46875	58.700092	0	
1365	N1365	242.8	14.46875	31.884818	0	
1366	N1366	242.8	14.46875	38.588637	0	
1367	N1367	242.8	14.46875	45.292455	0	
1368	N1368	242.8	14.46875	51.996273	0	
1369	N1369	242.8	14.46875	58.700092	0	
1370	N1370	236.2	14.46875	31.884818	0	
1371	N1371	236.2	14.46875	38.588637	0	
1372	N1372	236.2	14.46875	45.292455	0	
1373	N1373	236.2	14.46875	51.996273	0	
1374	N1374	236.2	14.46875	58.700092	0	
1375	N1375	229.6	14.46875	31.884818	0	
1376	N1376	229.6	14.46875	38.588637	0	
1377	N1377	229.6	14.46875	45.292455	0	
1378	N1378	229.6	14.46875	51.996273	0	
1379	N1379	229.6	14.46875	58.700092	0	
1380	N1380	223	14.46875	31.884818	0	
1381	N1381	223	14.46875	38.588637	0	
1382	N1382	223	14.46875	45.292455	0	
1383	N1383	223	14.46875	51.996273	0	
1384	N1384	223	14.46875	58.700092	0	
1385	N1385	217.5	14.46875	31.884818	0	
1386	N1386	217.5	14.46875	38.588637	0	
1387	N1387	217.5	14.46875	45.292455	0	
1388	N1388	217.5	14.46875	51.996273	0	
1389	N1389	217.5	14.46875	58.700092	0	
1390	N1390	212	14.46875	31.884818	0	

Joint Coordinates and Temperatures (Continued)

	Label	X [in]	Y [in]	Z [in]	Temp [F]	Detach From Dia...
1391	N1391	212	14.46875	38.588637	0	
1392	N1392	212	14.46875	45.292455	0	
1393	N1393	212	14.46875	51.996273	0	
1394	N1394	212	14.46875	58.700092	0	
1395	N1395	206.5	14.46875	31.884818	0	
1396	N1396	206.5	14.46875	38.588637	0	
1397	N1397	206.5	14.46875	45.292455	0	
1398	N1398	206.5	14.46875	51.996273	0	
1399	N1399	206.5	14.46875	58.700092	0	
1400	N1400	201	14.46875	31.884818	0	
1401	N1401	201	14.46875	38.588637	0	
1402	N1402	201	14.46875	45.292455	0	
1403	N1403	201	14.46875	51.996273	0	
1404	N1404	201	14.46875	58.700092	0	
1405	N1405	196	14.46875	31.884818	0	
1406	N1406	196	14.46875	38.588637	0	
1407	N1407	196	14.46875	45.292455	0	
1408	N1408	196	14.46875	51.996273	0	
1409	N1409	196	14.46875	58.700092	0	
1410	N1410	191	14.46875	31.884818	0	
1411	N1411	191	14.46875	38.588637	0	
1412	N1412	191	14.46875	45.292455	0	
1413	N1413	191	14.46875	51.996273	0	
1414	N1414	191	14.46875	58.700092	0	
1415	N1415	186	14.46875	31.884818	0	
1416	N1416	186	14.46875	38.588637	0	
1417	N1417	186	14.46875	45.292455	0	
1418	N1418	186	14.46875	51.996273	0	
1419	N1419	186	14.46875	58.700092	0	
1420	N1420	181	14.46875	31.884818	0	
1421	N1421	181	14.46875	38.588637	0	
1422	N1422	181	14.46875	45.292455	0	
1423	N1423	181	14.46875	51.996273	0	
1424	N1424	181	14.46875	58.700092	0	
1425	N1425	175.5	14.46875	31.884818	0	
1426	N1426	175.5	14.46875	38.588637	0	
1427	N1427	175.5	14.46875	45.292455	0	
1428	N1428	175.5	14.46875	51.996273	0	
1429	N1429	175.5	14.46875	58.700092	0	
1430	N1430	170	14.46875	31.884818	0	
1431	N1431	170	14.46875	38.588637	0	
1432	N1432	170	14.46875	45.292455	0	
1433	N1433	170	14.46875	51.996273	0	
1434	N1434	170	14.46875	58.700092	0	
1435	N1435	164.5	14.46875	31.884818	0	
1436	N1436	164.5	14.46875	38.588637	0	
1437	N1437	164.5	14.46875	45.292455	0	
1438	N1438	164.5	14.46875	51.996273	0	
1439	N1439	164.5	14.46875	58.700092	0	
1440	N1440	159	14.46875	31.884818	0	
1441	N1441	159	14.46875	38.588637	0	
1442	N1442	159	14.46875	45.292455	0	
1443	N1443	159	14.46875	51.996273	0	
1444	N1444	159	14.46875	58.700092	0	
1445	N1445	154	14.46875	31.884818	0	
1446	N1446	154	14.46875	38.588637	0	
1447	N1447	154	14.46875	45.292455	0	
1448	N1448	154	14.46875	51.996273	0	
1449	N1449	154	14.46875	58.700092	0	

Joint Coordinates and Temperatures (Continued)

	Label	X [in]	Y [in]	Z [in]	Temp [F]	Detach From Dia...
1450	N1450	149	14.46875	31.884818	0	
1451	N1451	149	14.46875	38.588637	0	
1452	N1452	149	14.46875	45.292455	0	
1453	N1453	149	14.46875	51.996273	0	
1454	N1454	149	14.46875	58.700092	0	
1455	N1455	144	14.46875	31.884818	0	
1456	N1456	144	14.46875	38.588637	0	
1457	N1457	144	14.46875	45.292455	0	
1458	N1458	144	14.46875	51.996273	0	
1459	N1459	144	14.46875	58.700092	0	
1460	N1460	139	14.46875	31.884818	0	
1461	N1461	139	14.46875	38.588637	0	
1462	N1462	139	14.46875	45.292455	0	
1463	N1463	139	14.46875	51.996273	0	
1464	N1464	139	14.46875	58.700092	0	
1465	N1465	133.5	14.46875	31.884818	0	
1466	N1466	133.5	14.46875	38.588637	0	
1467	N1467	133.5	14.46875	45.292455	0	
1468	N1468	133.5	14.46875	51.996273	0	
1469	N1469	133.5	14.46875	58.700092	0	
1470	N1470	128	14.46875	31.884818	0	
1471	N1471	128	14.46875	38.588637	0	
1472	N1472	128	14.46875	45.292455	0	
1473	N1473	128	14.46875	51.996273	0	
1474	N1474	128	14.46875	58.700092	0	
1475	N1475	122.5	14.46875	31.884818	0	
1476	N1476	122.5	14.46875	38.588637	0	
1477	N1477	122.5	14.46875	45.292455	0	
1478	N1478	122.5	14.46875	51.996273	0	
1479	N1479	122.5	14.46875	58.700092	0	
1480	N1480	117	14.46875	31.884818	0	
1481	N1481	117	14.46875	38.588637	0	
1482	N1482	117	14.46875	45.292455	0	
1483	N1483	117	14.46875	51.996273	0	
1484	N1484	117	14.46875	58.700092	0	
1485	N1485	112	14.46875	31.884818	0	
1486	N1486	112	14.46875	38.588637	0	
1487	N1487	112	14.46875	45.292455	0	
1488	N1488	112	14.46875	51.996273	0	
1489	N1489	112	14.46875	58.700092	0	
1490	N1490	107	14.46875	31.884818	0	
1491	N1491	107	14.46875	38.588637	0	
1492	N1492	107	14.46875	45.292455	0	
1493	N1493	107	14.46875	51.996273	0	
1494	N1494	107	14.46875	58.700092	0	
1495	N1495	102	14.46875	31.884818	0	
1496	N1496	102	14.46875	38.588637	0	
1497	N1497	102	14.46875	45.292455	0	
1498	N1498	102	14.46875	51.996273	0	
1499	N1499	102	14.46875	58.700092	0	
1500	N1500	97	14.46875	31.884818	0	
1501	N1501	97	14.46875	38.588637	0	
1502	N1502	97	14.46875	45.292455	0	
1503	N1503	97	14.46875	51.996273	0	
1504	N1504	97	14.46875	58.700092	0	
1505	N1505	91.5	14.46875	31.884818	0	
1506	N1506	91.5	14.46875	38.588637	0	
1507	N1507	91.5	14.46875	45.292455	0	
1508	N1508	91.5	14.46875	51.996273	0	

Joint Coordinates and Temperatures (Continued)

	Label	X [in]	Y [in]	Z [in]	Temp [F]	Detach From Dia...
1509	N1509	91.5	14.46875	58.700092	0	
1510	N1510	86	14.46875	31.884818	0	
1511	N1511	86	14.46875	38.588637	0	
1512	N1512	86	14.46875	45.292455	0	
1513	N1513	86	14.46875	51.996273	0	
1514	N1514	86	14.46875	58.700092	0	
1515	N1515	80.5	14.46875	31.884818	0	
1516	N1516	80.5	14.46875	38.588637	0	
1517	N1517	80.5	14.46875	45.292455	0	
1518	N1518	80.5	14.46875	51.996273	0	
1519	N1519	80.5	14.46875	58.700092	0	
1520	N1520	75	14.46875	31.884818	0	
1521	N1521	75	14.46875	38.588637	0	
1522	N1522	75	14.46875	45.292455	0	
1523	N1523	75	14.46875	51.996273	0	
1524	N1524	75	14.46875	58.700092	0	
1525	N1525	70	14.46875	31.884818	0	
1526	N1526	70	14.46875	38.588637	0	
1527	N1527	70	14.46875	45.292455	0	
1528	N1528	70	14.46875	51.996273	0	
1529	N1529	70	14.46875	58.700092	0	
1530	N1530	65	14.46875	31.884818	0	
1531	N1531	65	14.46875	38.588637	0	
1532	N1532	65	14.46875	45.292455	0	
1533	N1533	65	14.46875	51.996273	0	
1534	N1534	65	14.46875	58.700092	0	
1535	N1535	60	14.46875	31.884818	0	
1536	N1536	60	14.46875	38.588637	0	
1537	N1537	60	14.46875	45.292455	0	
1538	N1538	60	14.46875	51.996273	0	
1539	N1539	60	14.46875	58.700092	0	
1540	N1540	55	14.46875	31.884818	0	
1541	N1541	55	14.46875	38.588637	0	
1542	N1542	55	14.46875	45.292455	0	
1543	N1543	55	14.46875	51.996273	0	
1544	N1544	55	14.46875	58.700092	0	
1545	N1545	49.5	14.46875	31.884818	0	
1546	N1546	49.5	14.46875	38.588637	0	
1547	N1547	49.5	14.46875	45.292455	0	
1548	N1548	49.5	14.46875	51.996273	0	
1549	N1549	49.5	14.46875	58.700092	0	
1550	N1550	44	14.46875	31.884818	0	
1551	N1551	44	14.46875	38.588637	0	
1552	N1552	44	14.46875	45.292455	0	
1553	N1553	44	14.46875	51.996273	0	
1554	N1554	44	14.46875	58.700092	0	
1555	N1555	38.5	14.46875	31.884818	0	
1556	N1556	38.5	14.46875	38.588637	0	
1557	N1557	38.5	14.46875	45.292455	0	
1558	N1558	38.5	14.46875	51.996273	0	
1559	N1559	38.5	14.46875	58.700092	0	
1560	N1560	33	14.46875	31.884818	0	
1561	N1561	33	14.46875	38.588637	0	
1562	N1562	33	14.46875	45.292455	0	
1563	N1563	33	14.46875	51.996273	0	
1564	N1564	33	14.46875	58.700092	0	
1565	N1565	26.4	14.468792	31.884818	0	
1566	N1566	26.4	14.468783	38.588637	0	
1567	N1567	26.4	14.468775	45.292455	0	

Joint Coordinates and Temperatures (Continued)

	Label	X [in]	Y [in]	Z [in]	Temp [F]	Detach From Dia...
1568	N1568	26.4	14.468767	51.996273	0	
1569	N1569	26.4	14.468758	58.700092	0	
1570	N1570	19.8	14.468833	31.884818	0	
1571	N1571	19.8	14.468817	38.588637	0	
1572	N1572	19.8	14.4688	45.292455	0	
1573	N1573	19.8	14.468783	51.996273	0	
1574	N1574	19.8	14.468767	58.700092	0	
1575	N1575	13.2	14.468875	31.884818	0	
1576	N1576	13.2	14.46885	38.588637	0	
1577	N1577	13.2	14.468825	45.292455	0	
1578	N1578	13.2	14.4688	51.996273	0	
1579	N1579	13.2	14.468775	58.700092	0	
1580	N1580	6.6	14.468917	31.884818	0	
1581	N1581	6.6	14.468883	38.588637	0	
1582	N1582	6.6	14.46885	45.292455	0	
1583	N1583	6.6	14.468817	51.996273	0	
1584	N1584	6.6	14.468783	58.700092	0	
1585	N1585	0	14.468958	31.884818	0	
1586	N1586	0	14.468917	38.588637	0	
1587	N1587	0	14.468875	45.292455	0	
1588	N1588	0	14.468833	51.996273	0	
1589	N1589	0	14.469	58.7	0	
1590	N1590	276.187	-1.53125	16.757432	0	
1591	N1591	276.187	-1.53125	20.833864	0	
1592	N1592	276.187	-1.53125	24.910296	0	
1593	N1593	276.187	-1.53125	28.986728	0	
1594	N1594	276.187	-1.53125	33.063159	0	
1595	N1595	276.187	-1.53125	37.139591	0	
1596	N1596	276.187	-1.53125	41.216023	0	
1597	N1597	276.187	-1.53125	45.292455	0	
1598	N1598	276.187	-1.53125	49.368887	0	
1599	N1599	276.187	-1.53125	53.445319	0	
1600	N1600	276.187	-1.53125	57.521751	0	
1601	N1601	276.187	-1.53125	61.598182	0	
1602	N1602	276.187	-1.53125	65.674614	0	
1603	N1603	276.187	-1.53125	69.751046	0	
1604	N1604	276.187	-1.53125	73.827478	0	
1605	N1605	271.14025	-1.53125	16.757432	0	
1606	N1606	271.14025	-1.53125	20.833864	0	
1607	N1607	271.14025	-1.53125	24.910296	0	
1608	N1608	271.14025	-1.53125	28.986728	0	
1609	N1609	271.14025	-1.53125	33.063159	0	
1610	N1610	271.14025	-1.53125	37.139591	0	
1611	N1611	271.14025	-1.53125	41.216023	0	
1612	N1612	271.14025	-1.53125	45.292455	0	
1613	N1613	271.14025	-1.53125	49.368887	0	
1614	N1614	271.14025	-1.53125	53.445319	0	
1615	N1615	271.14025	-1.53125	57.521751	0	
1616	N1616	271.14025	-1.53125	61.598182	0	
1617	N1617	271.14025	-1.53125	65.674614	0	
1618	N1618	271.14025	-1.53125	69.751046	0	
1619	N1619	271.14025	-1.53125	73.827478	0	
1620	N1620	266.0935	-1.53125	16.757432	0	
1621	N1621	266.0935	-1.53125	20.833864	0	
1622	N1622	266.0935	-1.53125	24.910296	0	
1623	N1623	266.0935	-1.53125	28.986728	0	
1624	N1624	266.0935	-1.53125	33.063159	0	
1625	N1625	266.0935	-1.53125	37.139591	0	
1626	N1626	266.0935	-1.53125	41.216023	0	

Joint Coordinates and Temperatures (Continued)

	Label	X [in]	Y [in]	Z [in]	Temp [F]	Detach From Dia...
1627	N1627	266.0935	-1.53125	45.292455	0	
1628	N1628	266.0935	-1.53125	49.368887	0	
1629	N1629	266.0935	-1.53125	53.445319	0	
1630	N1630	266.0935	-1.53125	57.521751	0	
1631	N1631	266.0935	-1.53125	61.598182	0	
1632	N1632	266.0935	-1.53125	65.674614	0	
1633	N1633	266.0935	-1.53125	69.751046	0	
1634	N1634	266.0935	-1.53125	73.827478	0	
1635	N1635	261.04675	-1.53125	16.757432	0	
1636	N1636	261.04675	-1.53125	20.833864	0	
1637	N1637	261.04675	-1.53125	24.910296	0	
1638	N1638	261.04675	-1.53125	28.986728	0	
1639	N1639	261.04675	-1.53125	33.063159	0	
1640	N1640	261.04675	-1.53125	37.139591	0	
1641	N1641	261.04675	-1.53125	41.216023	0	
1642	N1642	261.04675	-1.53125	45.292455	0	
1643	N1643	261.04675	-1.53125	49.368887	0	
1644	N1644	261.04675	-1.53125	53.445319	0	
1645	N1645	261.04675	-1.53125	57.521751	0	
1646	N1646	261.04675	-1.53125	61.598182	0	
1647	N1647	261.04675	-1.53125	65.674614	0	
1648	N1648	261.04675	-1.53125	69.751046	0	
1649	N1649	261.04675	-1.53125	73.827478	0	
1650	N1650	256	-1.53125	16.757432	0	
1651	N1651	256	-1.53125	20.833864	0	
1652	N1652	256	-1.53125	24.910296	0	
1653	N1653	256	-1.53125	28.986728	0	
1654	N1654	256	-1.53125	33.063159	0	
1655	N1655	256	-1.53125	37.139591	0	
1656	N1656	256	-1.53125	41.216023	0	
1657	N1657	256	-1.53125	45.292455	0	
1658	N1658	256	-1.53125	49.368887	0	
1659	N1659	256	-1.53125	53.445319	0	
1660	N1660	256	-1.53125	57.521751	0	
1661	N1661	256	-1.53125	61.598182	0	
1662	N1662	256	-1.53125	65.674614	0	
1663	N1663	256	-1.53125	69.751046	0	
1664	N1664	256	-1.53125	73.827478	0	
1665	N1665	0	-1.53125	16.757432	0	
1666	N1666	0	-1.53125	20.833864	0	
1667	N1667	0	-1.53125	24.910296	0	
1668	N1668	0	-1.53125	28.986728	0	
1669	N1669	0	-1.53125	33.063159	0	
1670	N1670	0	-1.53125	37.139591	0	
1671	N1671	0	-1.53125	41.216023	0	
1672	N1672	0	-1.53125	45.292455	0	
1673	N1673	0	-1.53125	49.368887	0	
1674	N1674	0	-1.53125	53.445319	0	
1675	N1675	0	-1.53125	57.521751	0	
1676	N1676	0	-1.53125	61.598182	0	
1677	N1677	0	-1.53125	65.674614	0	
1678	N1678	0	-1.53125	69.751046	0	
1679	N1679	0	-1.53125	73.827478	0	
1680	N1680	-5.047	-1.53125	16.757432	0	
1681	N1681	-5.047	-1.53125	20.833864	0	
1682	N1682	-5.047	-1.53125	24.910296	0	
1683	N1683	-5.047	-1.53125	28.986728	0	
1684	N1684	-5.047	-1.53125	33.063159	0	
1685	N1685	-5.047	-1.53125	37.139591	0	

Joint Coordinates and Temperatures (Continued)

	Label	X [in]	Y [in]	Z [in]	Temp [F]	Detach From Dia...
1686	N1686	-5.047	-1.53125	41.216023	0	
1687	N1687	-5.047	-1.53125	45.292455	0	
1688	N1688	-5.047	-1.53125	49.368887	0	
1689	N1689	-5.047	-1.53125	53.445319	0	
1690	N1690	-5.047	-1.53125	57.521751	0	
1691	N1691	-5.047	-1.53125	61.598182	0	
1692	N1692	-5.047	-1.53125	65.674614	0	
1693	N1693	-5.047	-1.53125	69.751046	0	
1694	N1694	-5.047	-1.53125	73.827478	0	
1695	N1695	-10.094	-1.53125	16.757432	0	
1696	N1696	-10.094	-1.53125	20.833864	0	
1697	N1697	-10.094	-1.53125	24.910296	0	
1698	N1698	-10.094	-1.53125	28.986728	0	
1699	N1699	-10.094	-1.53125	33.063159	0	
1700	N1700	-10.094	-1.53125	37.139591	0	
1701	N1701	-10.094	-1.53125	41.216023	0	
1702	N1702	-10.094	-1.53125	45.292455	0	
1703	N1703	-10.094	-1.53125	49.368887	0	
1704	N1704	-10.094	-1.53125	53.445319	0	
1705	N1705	-10.094	-1.53125	57.521751	0	
1706	N1706	-10.094	-1.53125	61.598182	0	
1707	N1707	-10.094	-1.53125	65.674614	0	
1708	N1708	-10.094	-1.53125	69.751046	0	
1709	N1709	-10.094	-1.53125	73.827478	0	
1710	N1710	-15.141	-1.53125	16.757432	0	
1711	N1711	-15.141	-1.53125	20.833864	0	
1712	N1712	-15.141	-1.53125	24.910296	0	
1713	N1713	-15.141	-1.53125	28.986728	0	
1714	N1714	-15.141	-1.53125	33.063159	0	
1715	N1715	-15.141	-1.53125	37.139591	0	
1716	N1716	-15.141	-1.53125	41.216023	0	
1717	N1717	-15.141	-1.53125	45.292455	0	
1718	N1718	-15.141	-1.53125	49.368887	0	
1719	N1719	-15.141	-1.53125	53.445319	0	
1720	N1720	-15.141	-1.53125	57.521751	0	
1721	N1721	-15.141	-1.53125	61.598182	0	
1722	N1722	-15.141	-1.53125	65.674614	0	
1723	N1723	-15.141	-1.53125	69.751046	0	
1724	N1724	-15.141	-1.53125	73.827478	0	
1725	N1725	-20.188	-1.53125	16.757432	0	
1726	N1726	-20.188	-1.53125	20.833864	0	
1727	N1727	-20.188	-1.53125	24.910296	0	
1728	N1728	-20.188	-1.53125	28.986728	0	
1729	N1729	-20.188	-1.53125	33.063159	0	
1730	N1730	-20.188	-1.53125	37.139591	0	
1731	N1731	-20.188	-1.53125	41.216023	0	
1732	N1732	-20.188	-1.53125	45.292455	0	
1733	N1733	-20.188	-1.53125	49.368887	0	
1734	N1734	-20.188	-1.53125	53.445319	0	
1735	N1735	-20.188	-1.53125	57.521751	0	
1736	N1736	-20.188	-1.53125	61.598182	0	
1737	N1737	-20.188	-1.53125	65.674614	0	
1738	N1738	-20.188	-1.53125	69.751046	0	
1739	N1739	-20.188	-1.53125	73.827478	0	
1740	N1740	0	11.26885	45.292455	0	
1741	N1741	0	8.068825	45.292455	0	
1742	N1742	0	4.8688	45.292455	0	
1743	N1743	0	1.668775	45.292455	0	
1744	N1744	0	11.268917	30.218152	0	

Joint Coordinates and Temperatures (Continued)

	Label	X [in]	Y [in]	Z [in]	Temp [F]	Detach From Dia...
1745	N1745	0	11.268883	37.755303	0	
1746	N1746	0	8.068875	28.551485	0	
1747	N1747	0	8.06885	36.92197	0	
1748	N1748	0	4.868833	26.884818	0	
1749	N1749	0	4.868817	36.088637	0	
1750	N1750	0	1.668792	25.218152	0	
1751	N1751	0	1.668783	35.255303	0	
1752	N1754	0	11.268817	52.829607	0	
1753	N1755	0	11.268783	60.366758	0	
1754	N1756	0	8.0688	53.66294	0	
1755	N1757	0	8.068775	62.033425	0	
1756	N1758	0	4.868783	54.496273	0	
1757	N1759	0	4.868767	63.700092	0	
1758	N1760	0	1.668767	55.329607	0	
1759	N1761	0	1.668758	65.366758	0	
1760	N1760A	0	-1.375	24.910296	0	
1761	N1761A	0	-1.375	37.139591	0	
1762	N1762	0	-1.375	45.292455	0	
1763	N1763	0	-1.375	53.445319	0	
1764	N1764	0	-1.375	65.674614	0	
1765	N1765	0	-1.375	77.90391	0	
1766	N1766	0	-1.375	12.681	0	
1767	N1767	256	-1.375	77.90391	0	
1768	N1768	256	-1.375	12.681	0	
1769	N1769	256	-1.375	24.910296	0	
1770	N1770	256	-1.375	37.139591	0	
1771	N1771	256	-1.375	45.292455	0	
1772	N1772	256	-1.375	53.445319	0	
1773	N1773	256	-1.375	65.674614	0	
1774	N1774	256	14.3125	65.40391	0	
1775	N1775	256	14.3125	25.181	0	
1776	N1776	256	14.3125	31.884818	0	
1777	N1777	256	14.3125	38.588637	0	
1778	N1778	256	14.3125	45.292455	0	
1779	N1779	256	14.3125	51.996273	0	
1780	N1780	256	14.3125	58.700092	0	
1781	N1781	256	11.175	60.094996	0	
1782	N1782	256	8.0375	61.489901	0	
1783	N1783	256	4.9	62.884805	0	
1784	N1784	256	1.7625	64.27971	0	
1785	N1785	256	11.175	52.286082	0	
1786	N1786	256	8.0375	52.575892	0	
1787	N1787	256	4.9	52.865701	0	
1788	N1788	256	1.7625	53.15551	0	
1789	N1789	256	11.175	45.292455	0	
1790	N1790	256	8.0375	45.292455	0	
1791	N1791	256	4.9	45.292455	0	
1792	N1792	256	1.7625	45.292455	0	
1793	N1793	256	11.175	38.298828	0	
1794	N1794	256	8.0375	38.009018	0	
1795	N1795	256	4.9	37.719209	0	
1796	N1796	256	1.7625	37.4294	0	
1797	N1797	256	11.175	30.489914	0	
1798	N1798	256	8.0375	29.095009	0	
1799	N1799	256	4.9	27.700105	0	
1800	N1800	256	1.7625	26.3052	0	
1801	N1801	0	16.499958	31.884818	0	
1802	N1802	0	16.499917	38.588637	0	
1803	N1803	0	16.499875	45.292455	0	

Joint Coordinates and Temperatures (Continued)

	Label	X [in]	Y [in]	Z [in]	Temp [F]	Detach From Dia...
1804	N1804	0	16.499833	51.996273	0	
1805	N1805	0	16.5	58.7	0	
1806	N1806	256	16.49975	65.40391	0	
1807	N1807	256	16.49975	25.181	0	
1808	N1808	256	16.49975	31.884818	0	
1809	N1809	256	16.49975	38.588637	0	
1810	N1810	256	16.49975	45.292455	0	
1811	N1811	256	16.49975	51.996273	0	
1812	N1812	256	16.49975	58.700092	0	
1813	N1813	223	16.49975	65.40391	0	
1814	N1814	201	16.49975	65.40391	0	
1815	N1815	181	16.49975	65.40391	0	
1816	N1816	159	16.49975	65.40391	0	
1817	N1817	139	16.49975	65.40391	0	
1818	N1818	117	16.49975	65.40391	0	
1819	N1819	97	16.49975	65.40391	0	
1820	N1820	75	16.49975	65.40391	0	
1821	N1821	55	16.49975	65.40391	0	
1822	N1822	33	16.49975	65.40391	0	
1823	N1823	33	16.49975	25.181	0	
1824	N1824	55	16.49975	25.181	0	
1825	N1825	75	16.49975	25.181	0	
1826	N1826	97	16.49975	25.181	0	
1827	N1827	117	16.49975	25.181	0	
1828	N1828	139	16.49975	25.181	0	
1829	N1829	159	16.49975	25.181	0	
1830	N1830	181	16.49975	25.181	0	
1831	N1831	201	16.49975	25.181	0	
1832	N1832	223	16.49975	25.181	0	
1833	N1833	223	16.49975	31.884818	0	
1834	N1834	223	16.49975	38.588637	0	
1835	N1835	223	16.49975	45.292455	0	
1836	N1836	223	16.49975	51.996273	0	
1837	N1837	223	16.49975	58.700092	0	
1838	N1838	201	16.49975	31.884818	0	
1839	N1839	201	16.49975	38.588637	0	
1840	N1840	201	16.49975	45.292455	0	
1841	N1841	201	16.49975	51.996273	0	
1842	N1842	201	16.49975	58.700092	0	
1843	N1843	181	16.49975	31.884818	0	
1844	N1844	181	16.49975	38.588637	0	
1845	N1845	181	16.49975	45.292455	0	
1846	N1846	181	16.49975	51.996273	0	
1847	N1847	181	16.49975	58.700092	0	
1848	N1848	159	16.49975	31.884818	0	
1849	N1849	159	16.49975	38.588637	0	
1850	N1850	159	16.49975	45.292455	0	
1851	N1851	159	16.49975	51.996273	0	
1852	N1852	159	16.49975	58.700092	0	
1853	N1853	139	16.49975	31.884818	0	
1854	N1854	139	16.49975	38.588637	0	
1855	N1855	139	16.49975	45.292455	0	
1856	N1856	139	16.49975	51.996273	0	
1857	N1857	139	16.49975	58.700092	0	
1858	N1858	117	16.49975	31.884818	0	
1859	N1859	117	16.49975	38.588637	0	
1860	N1860	117	16.49975	45.292455	0	
1861	N1861	117	16.49975	51.996273	0	
1862	N1862	117	16.49975	58.700092	0	

Joint Coordinates and Temperatures (Continued)

	Label	X [in]	Y [in]	Z [in]	Temp [F]	Detach From Dia...
1863	N1863	97	16.49975	31.884818	0	
1864	N1864	97	16.49975	38.588637	0	
1865	N1865	97	16.49975	45.292455	0	
1866	N1866	97	16.49975	51.996273	0	
1867	N1867	97	16.49975	58.700092	0	
1868	N1868	75	16.49975	31.884818	0	
1869	N1869	75	16.49975	38.588637	0	
1870	N1870	75	16.49975	45.292455	0	
1871	N1871	75	16.49975	51.996273	0	
1872	N1872	75	16.49975	58.700092	0	
1873	N1873	55	16.49975	31.884818	0	
1874	N1874	55	16.49975	38.588637	0	
1875	N1875	55	16.49975	45.292455	0	
1876	N1876	55	16.49975	51.996273	0	
1877	N1877	55	16.49975	58.700092	0	
1878	N1878	33	16.49975	31.884818	0	
1879	N1879	33	16.49975	38.588637	0	
1880	N1880	33	16.49975	45.292455	0	
1881	N1881	33	16.49975	51.996273	0	
1882	N1882	33	16.49975	58.700092	0	

Joint Boundary Conditions

	Joint Label	X [k/in]	Y [k/in]	Z [k/in]	X Rot.[k-ft/rad]	Y Rot.[k-ft/rad]	Z Rot.[k-ft/rad]
1	N6						
2	N1						
3	N9						
4	N14						
5	N17						
6	N22						
7	N25						
8	N30						
9	N33						
10	N38						
11	N41						
12	N46						
13	N49						
14	N54						
15	N57						
16	N62						
17	N65						
18	N70						
19	N73						
20	N78						
21	N81						
22	N86						
23	N89						
24	N94						
25	N5						
26	N2						
27	N10						
28	N13						
29	N18						
30	N21						
31	N26						
32	N29						
33	N34						
34	N37						
35	N42						

Joint Boundary Conditions (Continued)

	Joint Label	X [k/in]	Y [k/in]	Z [k/in]	X Rot.[k-ft/rad]	Y Rot.[k-ft/rad]	Z Rot.[k-ft/rad]
36	N45						
37	N50						
38	N53						
39	N58						
40	N61						
41	N66						
42	N69						
43	N74						
44	N77						
45	N82						
46	N85						
47	N90						
48	N93						
49	N97						
50	N102						
51	N105						
52	N110						
53	N113						
54	N118						
55	N121						
56	N126						
57	N129						
58	N134						
59	N137						
60	N142						
61	N145						
62	N150						
63	N153						
64	N158						
65	N161						
66	N166						
67	N169						
68	N174						
69	N177						
70	N182						
71	N185						
72	N190						
73	N194						
74	N198						
75	N200						
76	N202						
77	N204						
78	N206						
79	N208						
80	N210						
81	N212						
82	N214						
83	N216						
84	N218						
85	N196						
86	N198A						
87	N200A						
88	N202A						
89	N204A						
90	N206A						
91	N208A						
92	N210A						
93	N212A						
94	N214A						

Joint Boundary Conditions (Continued)

	Joint Label	X [k/in]	Y [k/in]	Z [k/in]	X Rot.[k-ft/rad]	Y Rot.[k-ft/rad]	Z Rot.[k-ft/rad]
95	N216A						
96	N218A						
97	N169A						
98	N170						
99	N171						
100	N172						
101	N173						
102	N174A						
103	N175						
104	N176						
105	N177A						
106	N178						
107	N179						
108	N180						
109	N181						
110	N182A						
111	N183						
112	N184						
113	N185A						
114	N186						
115	N187						
116	N188						
117	N189						
118	N190A						
119	N191						
120	N192						
121	N193A						
122	N194A						
123	N195						
124	N196A						
125	N197B						
126	N198B						
127	N199B						
128	N200B						
129	N201B						
130	N202B						
131	N203B						
132	N204B						
133	N205B						
134	N206B						
135	N207B						
136	N208B						
137	N209B						
138	N210B						
139	N211B						
140	N212B						
141	N213B						
142	N214B						
143	N215B						
144	N216B						
145	N217B						
146	N218B						
147	N219A						
148	N220						
149	N221						
150	N222						
151	N223						
152	N224						
153	N225						

Joint Boundary Conditions (Continued)

	Joint Label	X [k/in]	Y [k/in]	Z [k/in]	X Rot.[k-ft/rad]	Y Rot.[k-ft/rad]	Z Rot.[k-ft/rad]
154	N226						
155	N227						
156	N228						
157	N229						
158	N230						
159	N231						
160	N232						
161	N233						
162	N234						
163	N235						
164	N236						
165	N237						
166	N238						
167	N239						
168	N240						
169	N241						
170	N242						
171	N243						
172	N244						
173	N245						
174	N246						
175	N247						
176	N248						
177	N249						
178	N250						
179	N251						
180	N252						
181	N253						
182	N254						
183	N255						
184	N256						
185	N274						
186	N275						
187	N276						
188	N277						
189	N278						
190	N279						
191	N280						
192	N281						
193	N282						
194	N283						
195	N284						
196	N285						
197	N286						
198	N288						
199	N289						
200	N289A						
201	N290						
202	N291						
203	N292						
204	N293						
205	N294						
206	N295						
207	N296						
208	N297						
209	N298						
210	N299						
211	N300						
212	N301						

Joint Boundary Conditions (Continued)

	Joint Label	X [k/in]	Y [k/in]	Z [k/in]	X Rot.[k-ft/rad]	Y Rot.[k-ft/rad]	Z Rot.[k-ft/rad]
213	N302						
214	N303						
215	N304						
216	N305						
217	N289B						
218	N290A						
219	N291A						
220	N292A						
221	N293A						
222	N294A						
223	N295A						
224	N296A						
225	N297A						
226	N298A						
227	N299A						
228	N300A						
229	N301A						
230	N302A						
231	N303A						
232	N304A						
233	N305A						
234	N306						
235	N307						
236	N308						
237	N309						
238	N310						
239	N311						
240	N312						
241	N313						
242	N314						
243	N315						
244	N316						
245	N317						
246	N318						
247	N319						
248	N320						
249	N343						
250	N344						
251	N357						
252	N358						
253	N359						
254	N360						
255	N362						
256	N363						
257	N374						
258	N375						
259	N377						
260	N378						
261	N350	Reaction	Reaction	Reaction			
262	N380						
263	N381						
264	N382						
265	N383						
266	N383A						
267	N384A						
268	N400						
269	N401						
270	N403						
271	N404						

Joint Boundary Conditions (Continued)

	Joint Label	X [k/in]	Y [k/in]	Z [k/in]	X Rot.[k-ft/rad]	Y Rot.[k-ft/rad]	Z Rot.[k-ft/rad]
272	N415						
273	N416						
274	N418						
275	N419						
276	N393	Reaction	Reaction	Reaction			
277	N430						
278	N431						
279	N444						
280	N445						
281	N447						
282	N448						
283	N459						
284	N460						
285	N462						
286	N463						
287	N437	Reaction	Reaction	Reaction			
288	N474						
289	N475						
290	N488						
291	N489						
292	N491						
293	N492						
294	N503						
295	N504						
296	N506						
297	N507						
298	N481	Reaction	Reaction	Reaction			
299	N1765						
300	N1766						
301	N1767						
302	N1768						

Hot Rolled Steel Properties

	Label	E [ksi]	G [ksi]	Nu	Therm (\1E5 F)	Density[k/ft^3]	Yield[ksi]
1	A36	29000	11154	.3	.65	.49	36
2	A572Grade50	29000	11154	.3	.65	.49	50
3	A992	29000	11154	.3	.65	.49	50
4	A500_42	29000	11154	.3	.65	.49	42
5	A500_46	29000	11154	.3	.65	.49	46
6	A500_50	29000	11154	.3	.65	.49	50

General Material Properties

	Label	E [ksi]	G [ksi]	Nu	Therm (\1E5 F)	Density[k/ft^3]
1	gen_Conc3NW	3155	1372	.15	.6	.145
2	gen_Conc4NW	3644	1584	.15	.6	.145
3	gen_Conc3LW	2085	906	.15	.6	.11
4	gen_Conc4LW	2408	1047	.15	.6	.11
5	gen_Alum	10600	4077	.3	1.29	.173
6	gen_Steel_33	29000	11154	.3	.65	1.12
7	gen_Steel_22	29000	11154	.3	.65	1.01
8	gen_Steel_20	29000	11154	.3	.65	.96
9	gen_Steel	29000	11154	.3	.65	.49
10	RIGID	1e+7		0	0	0

Hot Rolled Steel Section Sets

	Label	Shape	Design List	Type	Material	Design Rules	A [in2]	Iyy [in4]	Izz [in4]	J [in4]
1	HSS4x2x5/16	HSS4X2X5	Tube	Beam	A500_50	Typical	2.9321	1.6604	5.121	4.3972
2	HSS3x3x1/4	HSS3X3X4	Tube	Beam	A500_50	Typical	2.4346	3.0141	3.0141	5.0689
3	HSS4x2x1/4	HSS4X2X4	Tube	Beam	A500_50	Typical	2.4346	1.4746	4.484	3.8158

Member Primary Data

	Label	I Joint	J Joint	K Joint	Rotate(d...	Section/Shape	Design List	Type	Material	Design Rules
1	M1	N1	N2			HSS4x2x5/16	Tube	Beam	A500_50	Typical
2	M2	N2	N3			HSS4x2x5/16	Tube	Beam	A500_50	Typical
3	M3	N3	N4			HSS4x2x5/16	Tube	Beam	A500_50	Typical
4	M4	N4	N5			HSS4x2x5/16	Tube	Beam	A500_50	Typical
5	M5	N5	N6			HSS4x2x5/16	Tube	Beam	A500_50	Typical
6	M6	N9	N10			HSS4x2x5/16	Tube	Beam	A500_50	Typical
7	M7	N10	N11			HSS4x2x5/16	Tube	Beam	A500_50	Typical
8	M8	N11	N12			HSS4x2x5/16	Tube	Beam	A500_50	Typical
9	M9	N12	N13			HSS4x2x5/16	Tube	Beam	A500_50	Typical
10	M10	N13	N14			HSS4x2x5/16	Tube	Beam	A500_50	Typical
11	M11	N17	N18			HSS4x2x1/4	Tube	Beam	A500_50	Typical
12	M12	N18	N19			HSS4x2x1/4	Tube	Beam	A500_50	Typical
13	M13	N19	N20			HSS4x2x1/4	Tube	Beam	A500_50	Typical
14	M14	N20	N21			HSS4x2x1/4	Tube	Beam	A500_50	Typical
15	M15	N21	N22			HSS4x2x1/4	Tube	Beam	A500_50	Typical
16	M16	N25	N26			HSS4x2x1/4	Tube	Beam	A500_50	Typical
17	M17	N26	N27			HSS4x2x1/4	Tube	Beam	A500_50	Typical
18	M18	N27	N28			HSS4x2x1/4	Tube	Beam	A500_50	Typical
19	M19	N28	N29			HSS4x2x1/4	Tube	Beam	A500_50	Typical
20	M20	N29	N30			HSS4x2x1/4	Tube	Beam	A500_50	Typical
21	M21	N33	N34			HSS4x2x1/4	Tube	Beam	A500_50	Typical
22	M22	N34	N35			HSS4x2x1/4	Tube	Beam	A500_50	Typical
23	M23	N35	N36			HSS4x2x1/4	Tube	Beam	A500_50	Typical
24	M24	N36	N37			HSS4x2x1/4	Tube	Beam	A500_50	Typical
25	M25	N37	N38			HSS4x2x1/4	Tube	Beam	A500_50	Typical
26	M26	N41	N42			HSS4x2x1/4	Tube	Beam	A500_50	Typical
27	M27	N42	N43			HSS4x2x1/4	Tube	Beam	A500_50	Typical
28	M28	N43	N44			HSS4x2x1/4	Tube	Beam	A500_50	Typical
29	M29	N44	N45			HSS4x2x1/4	Tube	Beam	A500_50	Typical
30	M30	N45	N46			HSS4x2x1/4	Tube	Beam	A500_50	Typical
31	M31	N49	N50			HSS4x2x1/4	Tube	Beam	A500_50	Typical
32	M32	N50	N51			HSS4x2x1/4	Tube	Beam	A500_50	Typical
33	M33	N51	N52			HSS4x2x1/4	Tube	Beam	A500_50	Typical
34	M34	N52	N53			HSS4x2x1/4	Tube	Beam	A500_50	Typical
35	M35	N53	N54			HSS4x2x1/4	Tube	Beam	A500_50	Typical
36	M36	N57	N58			HSS4x2x1/4	Tube	Beam	A500_50	Typical
37	M37	N58	N59			HSS4x2x1/4	Tube	Beam	A500_50	Typical
38	M38	N59	N60			HSS4x2x1/4	Tube	Beam	A500_50	Typical
39	M39	N60	N61			HSS4x2x1/4	Tube	Beam	A500_50	Typical
40	M40	N61	N62			HSS4x2x1/4	Tube	Beam	A500_50	Typical
41	M41	N65	N66			HSS4x2x1/4	Tube	Beam	A500_50	Typical
42	M42	N66	N67			HSS4x2x1/4	Tube	Beam	A500_50	Typical
43	M43	N67	N68			HSS4x2x1/4	Tube	Beam	A500_50	Typical
44	M44	N68	N69			HSS4x2x1/4	Tube	Beam	A500_50	Typical
45	M45	N69	N70			HSS4x2x1/4	Tube	Beam	A500_50	Typical
46	M46	N73	N74			HSS4x2x1/4	Tube	Beam	A500_50	Typical
47	M47	N74	N75			HSS4x2x1/4	Tube	Beam	A500_50	Typical
48	M48	N75	N76			HSS4x2x1/4	Tube	Beam	A500_50	Typical
49	M49	N76	N77			HSS4x2x1/4	Tube	Beam	A500_50	Typical
50	M50	N77	N78			HSS4x2x1/4	Tube	Beam	A500_50	Typical
51	M51	N81	N82			HSS4x2x5/16	Tube	Beam	A500_50	Typical

Member Primary Data (Continued)

	Label	I Joint	J Joint	K Joint	Rotate(d...	Section/Shape	Design List	Type	Material	Design Rules
52	M52	N82	N83			HSS4x2x5/16	Tube	Beam	A500_50	Typical
53	M53	N83	N84			HSS4x2x5/16	Tube	Beam	A500_50	Typical
54	M54	N84	N85			HSS4x2x5/16	Tube	Beam	A500_50	Typical
55	M55	N85	N86			HSS4x2x5/16	Tube	Beam	A500_50	Typical
56	M56	N89	N90			HSS4x2x5/16	Tube	Beam	A500_50	Typical
57	M57	N90	N91			HSS4x2x5/16	Tube	Beam	A500_50	Typical
58	M58	N91	N92			HSS4x2x5/16	Tube	Beam	A500_50	Typical
59	M59	N92	N93			HSS4x2x5/16	Tube	Beam	A500_50	Typical
60	M60	N93	N94			HSS4x2x5/16	Tube	Beam	A500_50	Typical
61	M61	N8	N16			HSS3x3x1/4	Tube	Beam	A500_50	Typical
62	M62	N16	N24			HSS3x3x1/4	Tube	Beam	A500_50	Typical
63	M63	N24	N32			HSS3x3x1/4	Tube	Beam	A500_50	Typical
64	M64	N32	N40			HSS3x3x1/4	Tube	Beam	A500_50	Typical
65	M65	N40	N48			HSS3x3x1/4	Tube	Beam	A500_50	Typical
66	M66	N48	N56			HSS3x3x1/4	Tube	Beam	A500_50	Typical
67	M67	N56	N64			HSS3x3x1/4	Tube	Beam	A500_50	Typical
68	M68	N64	N72			HSS3x3x1/4	Tube	Beam	A500_50	Typical
69	M69	N72	N80			HSS3x3x1/4	Tube	Beam	A500_50	Typical
70	M70	N80	N88			HSS3x3x1/4	Tube	Beam	A500_50	Typical
71	M71	N88	N96			HSS3x3x1/4	Tube	Beam	A500_50	Typical
72	M72	N7	N15			HSS3x3x1/4	Tube	Beam	A500_50	Typical
73	M73	N15	N23			HSS3x3x1/4	Tube	Beam	A500_50	Typical
74	M74	N23	N31			HSS3x3x1/4	Tube	Beam	A500_50	Typical
75	M75	N31	N39			HSS3x3x1/4	Tube	Beam	A500_50	Typical
76	M76	N39	N47			HSS3x3x1/4	Tube	Beam	A500_50	Typical
77	M77	N47	N55			HSS3x3x1/4	Tube	Beam	A500_50	Typical
78	M78	N55	N63			HSS3x3x1/4	Tube	Beam	A500_50	Typical
79	M79	N63	N71			HSS3x3x1/4	Tube	Beam	A500_50	Typical
80	M80	N71	N79			HSS3x3x1/4	Tube	Beam	A500_50	Typical
81	M81	N79	N87			HSS3x3x1/4	Tube	Beam	A500_50	Typical
82	M82	N87	N95			HSS3x3x1/4	Tube	Beam	A500_50	Typical
83	M83	N6	N102			RIGID	None	None	RIGID	Typical
84	M90	N1	N97			RIGID	None	None	RIGID	Typical
85	M91	N14	N110			RIGID	None	None	RIGID	Typical
86	M98	N9	N105			RIGID	None	None	RIGID	Typical
87	M99	N17	N113			RIGID	None	None	RIGID	Typical
88	M105	N22	N118			RIGID	None	None	RIGID	Typical
89	M107	N30	N126			RIGID	None	None	RIGID	Typical
90	M114	N25	N121			RIGID	None	None	RIGID	Typical
91	M115	N33	N129			RIGID	None	None	RIGID	Typical
92	M122	N38	N134			RIGID	None	None	RIGID	Typical
93	M123	N41	N137			RIGID	None	None	RIGID	Typical
94	M130	N46	N142			RIGID	None	None	RIGID	Typical
95	M132	N54	N150			RIGID	None	None	RIGID	Typical
96	M133	N62	N158			RIGID	None	None	RIGID	Typical
97	M142	N49	N145			RIGID	None	None	RIGID	Typical
98	M143	N57	N153			RIGID	None	None	RIGID	Typical
99	M147	N65	N161			RIGID	None	None	RIGID	Typical
100	M154	N70	N166			RIGID	None	None	RIGID	Typical
101	M155	N78	N174			RIGID	None	None	RIGID	Typical
102	M159	N86	N182			RIGID	None	None	RIGID	Typical
103	M166	N73	N169			RIGID	None	None	RIGID	Typical
104	M170	N81	N177			RIGID	None	None	RIGID	Typical
105	M171	N94	N190			RIGID	None	None	RIGID	Typical
106	M178	N89	N185			RIGID	None	None	RIGID	Typical
107	M179	N93	N194			RIGID	None	None	RIGID	Typical
108	M180	N92	N193			RIGID	None	None	RIGID	Typical
109	M181	N85	N198			RIGID	None	None	RIGID	Typical
110	M182	N84	N197			RIGID	None	None	RIGID	Typical

Member Primary Data (Continued)

	Label	I Joint	J Joint	K Joint	Rotate(d...	Section/Shape	Design List	Type	Material	Design Rules
111	M183	N77	N200			RIGID	None	None	RIGID	Typical
112	M184	N76	N199			RIGID	None	None	RIGID	Typical
113	M185	N69	N202			RIGID	None	None	RIGID	Typical
114	M186	N68	N201			RIGID	None	None	RIGID	Typical
115	M187	N61	N204			RIGID	None	None	RIGID	Typical
116	M188	N60	N203			RIGID	None	None	RIGID	Typical
117	M189	N53	N206			RIGID	None	None	RIGID	Typical
118	M190	N52	N205			RIGID	None	None	RIGID	Typical
119	M191	N45	N208			RIGID	None	None	RIGID	Typical
120	M192	N44	N207			RIGID	None	None	RIGID	Typical
121	M193	N37	N210			RIGID	None	None	RIGID	Typical
122	M194	N36	N209			RIGID	None	None	RIGID	Typical
123	M195	N29	N212			RIGID	None	None	RIGID	Typical
124	M196	N28	N211			RIGID	None	None	RIGID	Typical
125	M197	N21	N214			RIGID	None	None	RIGID	Typical
126	M198	N20	N213			RIGID	None	None	RIGID	Typical
127	M199	N13	N216			RIGID	None	None	RIGID	Typical
128	M200	N12	N215			RIGID	None	None	RIGID	Typical
129	M201	N5	N218			RIGID	None	None	RIGID	Typical
130	M202	N4	N217			RIGID	None	None	RIGID	Typical
131	M180A	N2	N196			RIGID	None	None	RIGID	Typical
132	M181A	N3	N197A			RIGID	None	None	RIGID	Typical
133	M182A	N90	N218A			RIGID	None	None	RIGID	Typical
134	M183A	N91	N219			RIGID	None	None	RIGID	Typical
135	M184A	N74	N214A			RIGID	None	None	RIGID	Typical
136	M185A	N75	N215A			RIGID	None	None	RIGID	Typical
137	M186A	N66	N212A			RIGID	None	None	RIGID	Typical
138	M187A	N58	N210A			RIGID	None	None	RIGID	Typical
139	M188A	N59	N211A			RIGID	None	None	RIGID	Typical
140	M189A	N67	N213A			RIGID	None	None	RIGID	Typical
141	M190A	N10	N198A			RIGID	None	None	RIGID	Typical
142	M191A	N11	N199A			RIGID	None	None	RIGID	Typical
143	M192A	N19	N201A			RIGID	None	None	RIGID	Typical
144	M193A	N18	N200A			RIGID	None	None	RIGID	Typical
145	M194A	N26	N202A			RIGID	None	None	RIGID	Typical
146	M195A	N27	N203A			RIGID	None	None	RIGID	Typical
147	M196A	N34	N204A			RIGID	None	None	RIGID	Typical
148	M197A	N35	N205A			RIGID	None	None	RIGID	Typical
149	M198A	N42	N206A			RIGID	None	None	RIGID	Typical
150	M199A	N43	N207A			RIGID	None	None	RIGID	Typical
151	M200A	N51	N209A			RIGID	None	None	RIGID	Typical
152	M201A	N50	N208A			RIGID	None	None	RIGID	Typical
153	M202A	N83	N217A			RIGID	None	None	RIGID	Typical
154	M203	N82	N216A			RIGID	None	None	RIGID	Typical
155	M155B	N6	N205B			RIGID	None	None	RIGID	Typical
156	M156	N206B	N14			RIGID	None	None	RIGID	Typical
157	M157	N207B	N22			RIGID	None	None	RIGID	Typical
158	M158	N30	N208B			RIGID	None	None	RIGID	Typical
159	M159A	N38	N209B			RIGID	None	None	RIGID	Typical
160	M160	N211B	N54			RIGID	None	None	RIGID	Typical
161	M161	N212B	N62			RIGID	None	None	RIGID	Typical
162	M162	N213B	N70			RIGID	None	None	RIGID	Typical
163	M163	N214B	N78			RIGID	None	None	RIGID	Typical
164	M164	N215B	N86			RIGID	None	None	RIGID	Typical
165	M165	N216B	N94			RIGID	None	None	RIGID	Typical
166	M166A	N210B	N46			RIGID	None	None	RIGID	Typical
167	M167	N241	N217B			RIGID	None	None	RIGID	Typical
168	M168	N241	N229			RIGID	None	None	RIGID	Typical
169	M169	N242	N230			RIGID	None	None	RIGID	Typical

Member Primary Data (Continued)

	Label	I Joint	J Joint	K Joint	Rotate(d...	Section/Shape	Design List	Type	Material	Design Rules
170	M170A	N242	N218B			RIGID	None	None	RIGID	Typical
171	M171A	N243	N231			RIGID	None	None	RIGID	Typical
172	M172	N243	N219A			RIGID	None	None	RIGID	Typical
173	M173	N244	N232			RIGID	None	None	RIGID	Typical
174	M174	N244	N220			RIGID	None	None	RIGID	Typical
175	M175	N245	N233			RIGID	None	None	RIGID	Typical
176	M176	N245	N221			RIGID	None	None	RIGID	Typical
177	M177	N246	N234			RIGID	None	None	RIGID	Typical
178	M178A	N246	N222			RIGID	None	None	RIGID	Typical
179	M179A	N247	N235			RIGID	None	None	RIGID	Typical
180	M180B	N247	N223			RIGID	None	None	RIGID	Typical
181	M181B	N248	N236			RIGID	None	None	RIGID	Typical
182	M182B	N248	N224			RIGID	None	None	RIGID	Typical
183	M183B	N249	N237			RIGID	None	None	RIGID	Typical
184	M184B	N249	N225			RIGID	None	None	RIGID	Typical
185	M185B	N250	N238			RIGID	None	None	RIGID	Typical
186	M186B	N250	N226			RIGID	None	None	RIGID	Typical
187	M187B	N251	N239			RIGID	None	None	RIGID	Typical
188	M188B	N251	N227			RIGID	None	None	RIGID	Typical
189	M189B	N252	N240			RIGID	None	None	RIGID	Typical
190	M190B	N252	N228			RIGID	None	None	RIGID	Typical
191	M191B	N254	N275			RIGID	None	None	RIGID	Typical
192	M192B	N255	N276			RIGID	None	None	RIGID	Typical
193	M193B	N256	N277			RIGID	None	None	RIGID	Typical
194	M194B	N253	N274			RIGID	None	None	RIGID	Typical
195	M195B	N279	N283			RIGID	None	None	RIGID	Typical
196	M196B	N280	N284			RIGID	None	None	RIGID	Typical
197	M197B	N281	N285			RIGID	None	None	RIGID	Typical
198	M198B	N278	N282			RIGID	None	None	RIGID	Typical
199	M199B	N344	N363			RIGID	None	None	RIGID	Typical
200	M200B	N353	N370			RIGID	None	None	RIGID	Typical
201	M201B	N214	N360			RIGID	None	None	RIGID	Typical
202	M202B	N348	N365			RIGID	None	None	RIGID	Typical
203	M203A	N352	N369			RIGID	None	None	RIGID	Typical
204	M204	N351	N368			RIGID	None	None	RIGID	Typical
205	M205	N345	N364			RIGID	None	None	RIGID	Typical
206	M206	N350	N367			RIGID	None	None	RIGID	Typical
207	M207	N324	N361			RIGID	None	None	RIGID	Typical
208	M208	N349	N366			RIGID	None	None	RIGID	Typical
209	M209	N356	N373			RIGID	None	None	RIGID	Typical
210	M210	N355	N372			RIGID	None	None	RIGID	Typical
211	M211	N343	N362			RIGID	None	None	RIGID	Typical
212	M212	N354	N371			RIGID	None	None	RIGID	Typical
213	M213	N212	N359			RIGID	None	None	RIGID	Typical
214	M214	N363	N375			RIGID	None	None	RIGID	Typical
215	M215	N370	N376			RIGID	None	None	RIGID	Typical
216	M216	N360	N374			RIGID	None	None	RIGID	Typical
217	M217	N359	N377			RIGID	None	None	RIGID	Typical
218	M218	N371	N379			RIGID	None	None	RIGID	Typical
219	M219	N362	N378			RIGID	None	None	RIGID	Typical
220	M220	N363	N383			RIGID	None	None	RIGID	Typical
221	M221	N370	N384			RIGID	None	None	RIGID	Typical
222	M222	N360	N381			RIGID	None	None	RIGID	Typical
223	M223	N362	N382			RIGID	None	None	RIGID	Typical
224	M224	N371	N385			RIGID	None	None	RIGID	Typical
225	M225	N359	N380			RIGID	None	None	RIGID	Typical
226	M226	N384A	N404			RIGID	None	None	RIGID	Typical
227	M227	N396	N411			RIGID	None	None	RIGID	Typical
228	M228	N202	N401			RIGID	None	None	RIGID	Typical

Member Primary Data (Continued)

	Label	I Joint	J Joint	K Joint	Rotate(d...	Section/Shape	Design List	Type	Material	Design Rules
229	M229	N389	N406			RIGID	None	None	RIGID	Typical
230	M230	N395	N410			RIGID	None	None	RIGID	Typical
231	M231	N394	N409			RIGID	None	None	RIGID	Typical
232	M232	N385A	N405			RIGID	None	None	RIGID	Typical
233	M233	N393	N408			RIGID	None	None	RIGID	Typical
234	M234	N329	N402			RIGID	None	None	RIGID	Typical
235	M235	N392	N407			RIGID	None	None	RIGID	Typical
236	M236	N399	N414			RIGID	None	None	RIGID	Typical
237	M237	N398	N413			RIGID	None	None	RIGID	Typical
238	M238	N383A	N403			RIGID	None	None	RIGID	Typical
239	M239	N397	N412			RIGID	None	None	RIGID	Typical
240	M240	N200	N400			RIGID	None	None	RIGID	Typical
241	M241	N404	N419			RIGID	None	None	RIGID	Typical
242	M242	N411	N426			RIGID	None	None	RIGID	Typical
243	M243	N401	N416			RIGID	None	None	RIGID	Typical
244	M244	N406	N421			RIGID	None	None	RIGID	Typical
245	M245	N410	N425			RIGID	None	None	RIGID	Typical
246	M246	N409	N424			RIGID	None	None	RIGID	Typical
247	M247	N405	N420			RIGID	None	None	RIGID	Typical
248	M248	N408	N423			RIGID	None	None	RIGID	Typical
249	M249	N402	N417			RIGID	None	None	RIGID	Typical
250	M250	N407	N422			RIGID	None	None	RIGID	Typical
251	M251	N414	N429			RIGID	None	None	RIGID	Typical
252	M252	N413	N428			RIGID	None	None	RIGID	Typical
253	M253	N403	N418			RIGID	None	None	RIGID	Typical
254	M254	N412	N427			RIGID	None	None	RIGID	Typical
255	M255	N400	N415			RIGID	None	None	RIGID	Typical
256	M256	N444	N200A			RIGID	None	None	RIGID	Typical
257	M257	N455	N440			RIGID	None	None	RIGID	Typical
258	M258	N447	N430			RIGID	None	None	RIGID	Typical
259	M259	N454	N439			RIGID	None	None	RIGID	Typical
260	M260	N453	N438			RIGID	None	None	RIGID	Typical
261	M261	N450	N435			RIGID	None	None	RIGID	Typical
262	M262	N446	N336			RIGID	None	None	RIGID	Typical
263	M263	N452	N437			RIGID	None	None	RIGID	Typical
264	M264	N449	N432			RIGID	None	None	RIGID	Typical
265	M265	N458	N443			RIGID	None	None	RIGID	Typical
266	M266	N457	N442			RIGID	None	None	RIGID	Typical
267	M267	N451	N436			RIGID	None	None	RIGID	Typical
268	M268	N445	N202A			RIGID	None	None	RIGID	Typical
269	M269	N456	N441			RIGID	None	None	RIGID	Typical
270	M270	N448	N431			RIGID	None	None	RIGID	Typical
271	M271	N459	N444			RIGID	None	None	RIGID	Typical
272	M272	N470	N455			RIGID	None	None	RIGID	Typical
273	M273	N462	N447			RIGID	None	None	RIGID	Typical
274	M274	N469	N454			RIGID	None	None	RIGID	Typical
275	M275	N468	N453			RIGID	None	None	RIGID	Typical
276	M276	N465	N450			RIGID	None	None	RIGID	Typical
277	M277	N461	N446			RIGID	None	None	RIGID	Typical
278	M278	N467	N452			RIGID	None	None	RIGID	Typical
279	M279	N464	N449			RIGID	None	None	RIGID	Typical
280	M280	N473	N458			RIGID	None	None	RIGID	Typical
281	M281	N472	N457			RIGID	None	None	RIGID	Typical
282	M282	N466	N451			RIGID	None	None	RIGID	Typical
283	M283	N460	N445			RIGID	None	None	RIGID	Typical
284	M284	N471	N456			RIGID	None	None	RIGID	Typical
285	M285	N463	N448			RIGID	None	None	RIGID	Typical
286	M286	N212A	N488			RIGID	None	None	RIGID	Typical
287	M287	N488	N503			RIGID	None	None	RIGID	Typical

Member Primary Data (Continued)

	Label	I Joint	J Joint	K Joint	Rotate(d...	Section/Shape	Design List	Type	Material	Design Rules
288	M288	N484	N499			RIGID	None	None	RIGID	Typical
289	M289	N499	N514			RIGID	None	None	RIGID	Typical
290	M290	N474	N491			RIGID	None	None	RIGID	Typical
291	M291	N491	N506			RIGID	None	None	RIGID	Typical
292	M292	N483	N498			RIGID	None	None	RIGID	Typical
293	M294	N482	N497			RIGID	None	None	RIGID	Typical
294	M296	N479	N494			RIGID	None	None	RIGID	Typical
295	M298	N341	N490			RIGID	None	None	RIGID	Typical
296	M300	N481	N496			RIGID	None	None	RIGID	Typical
297	M302	N476	N493			RIGID	None	None	RIGID	Typical
298	M304	N487	N502			RIGID	None	None	RIGID	Typical
299	M306	N486	N501			RIGID	None	None	RIGID	Typical
300	M308	N480	N495			RIGID	None	None	RIGID	Typical
301	M310	N214A	N489			RIGID	None	None	RIGID	Typical
302	M311	N489	N504			RIGID	None	None	RIGID	Typical
303	M312	N485	N500			RIGID	None	None	RIGID	Typical
304	M313	N500	N515			RIGID	None	None	RIGID	Typical
305	M314	N475	N492			RIGID	None	None	RIGID	Typical
306	M315	N492	N507			RIGID	None	None	RIGID	Typical
307	M307	N1667	N1760A			RIGID	None	None	RIGID	Typical
308	M308A	N1670	N1761A			RIGID	None	None	RIGID	Typical
309	M309	N1672	N1762			RIGID	None	None	RIGID	Typical
310	M310A	N1677	N1764			RIGID	None	None	RIGID	Typical
311	M311A	N1674	N1763			RIGID	None	None	RIGID	Typical
312	M315A	N1662	N1773			RIGID	None	None	RIGID	Typical
313	M316	N1659	N1772			RIGID	None	None	RIGID	Typical
314	M317	N1657	N1771			RIGID	None	None	RIGID	Typical
315	M318	N1655	N1770			RIGID	None	None	RIGID	Typical
316	M319	N1652	N1769			RIGID	None	None	RIGID	Typical
317	M321	N193	N1774			RIGID	None	None	RIGID	Typical
318	M322	N1358	N1779			RIGID	None	None	RIGID	Typical
319	M323	N1359	N1780			RIGID	None	None	RIGID	Typical
320	M324	N1357	N1778			RIGID	None	None	RIGID	Typical
321	M325	N1356	N1777			RIGID	None	None	RIGID	Typical
322	M326	N1355	N1776			RIGID	None	None	RIGID	Typical
323	M327	N219	N1775			RIGID	None	None	RIGID	Typical
324	M324A	N1589	N1805			RIGID	None	None	RIGID	Typical
325	M325A	N1588	N1804			RIGID	None	None	RIGID	Typical
326	M326A	N1587	N1803			RIGID	None	None	RIGID	Typical
327	M327A	N1586	N1802			RIGID	None	None	RIGID	Typical
328	M328	N1585	N1801			RIGID	None	None	RIGID	Typical
329	M329	N219	N1807			RIGID	None	None	RIGID	Typical
330	M330	N1355	N1808			RIGID	None	None	RIGID	Typical
331	M331	N1356	N1809			RIGID	None	None	RIGID	Typical
332	M332	N1357	N1810			RIGID	None	None	RIGID	Typical
333	M333	N1358	N1811			RIGID	None	None	RIGID	Typical
334	M334	N1359	N1812			RIGID	None	None	RIGID	Typical
335	M335	N193	N1806			RIGID	None	None	RIGID	Typical
336	M336	N215	N1822			RIGID	None	None	RIGID	Typical
337	M337	N1564	N1882			RIGID	None	None	RIGID	Typical
338	M338	N1563	N1881			RIGID	None	None	RIGID	Typical
339	M339	N1562	N1880			RIGID	None	None	RIGID	Typical
340	M340	N1561	N1879			RIGID	None	None	RIGID	Typical
341	M341	N1560	N1878			RIGID	None	None	RIGID	Typical
342	M342	N199A	N1823			RIGID	None	None	RIGID	Typical
343	M343	N201A	N1824			RIGID	None	None	RIGID	Typical
344	M344	N1540	N1873			RIGID	None	None	RIGID	Typical
345	M345	N1541	N1874			RIGID	None	None	RIGID	Typical
346	M346	N1542	N1875			RIGID	None	None	RIGID	Typical

Member Primary Data (Continued)

	Label	I Joint	J Joint	K Joint	Rotate(d...	Section/Shape	Design List	Type	Material	Design Rules
347	M347	N1543	N1876			RIGID	None	None	RIGID	Typical
348	M348	N213	N1821			RIGID	None	None	RIGID	Typical
349	M349	N1544	N1877			RIGID	None	None	RIGID	Typical
350	M350	N211	N1820			RIGID	None	None	RIGID	Typical
351	M351	N1524	N1872			RIGID	None	None	RIGID	Typical
352	M352	N1523	N1871			RIGID	None	None	RIGID	Typical
353	M353	N1522	N1870			RIGID	None	None	RIGID	Typical
354	M354	N1521	N1869			RIGID	None	None	RIGID	Typical
355	M355	N1520	N1868			RIGID	None	None	RIGID	Typical
356	M356	N203A	N1825			RIGID	None	None	RIGID	Typical
357	M357	N205A	N1826			RIGID	None	None	RIGID	Typical
358	M358	N1500	N1863			RIGID	None	None	RIGID	Typical
359	M359	N1501	N1864			RIGID	None	None	RIGID	Typical
360	M360	N1502	N1865			RIGID	None	None	RIGID	Typical
361	M361	N1503	N1866			RIGID	None	None	RIGID	Typical
362	M362	N1504	N1867			RIGID	None	None	RIGID	Typical
363	M363	N209	N1819			RIGID	None	None	RIGID	Typical
364	M364	N207	N1818			RIGID	None	None	RIGID	Typical
365	M365	N1484	N1862			RIGID	None	None	RIGID	Typical
366	M366	N1483	N1861			RIGID	None	None	RIGID	Typical
367	M367	N1482	N1860			RIGID	None	None	RIGID	Typical
368	M368	N1481	N1859			RIGID	None	None	RIGID	Typical
369	M369	N1480	N1858			RIGID	None	None	RIGID	Typical
370	M370	N207A	N1827			RIGID	None	None	RIGID	Typical
371	M371	N209A	N1828			RIGID	None	None	RIGID	Typical
372	M372	N1460	N1853			RIGID	None	None	RIGID	Typical
373	M373	N1461	N1854			RIGID	None	None	RIGID	Typical
374	M374	N1462	N1855			RIGID	None	None	RIGID	Typical
375	M375	N1463	N1856			RIGID	None	None	RIGID	Typical
376	M376	N1464	N1857			RIGID	None	None	RIGID	Typical
377	M377	N205	N1817			RIGID	None	None	RIGID	Typical
378	M378	N203	N1816			RIGID	None	None	RIGID	Typical
379	M379	N1444	N1852			RIGID	None	None	RIGID	Typical
380	M380	N1443	N1851			RIGID	None	None	RIGID	Typical
381	M381	N1442	N1850			RIGID	None	None	RIGID	Typical
382	M382	N1441	N1849			RIGID	None	None	RIGID	Typical
383	M383	N1440	N1848			RIGID	None	None	RIGID	Typical
384	M384	N211A	N1829			RIGID	None	None	RIGID	Typical
385	M385	N213A	N1830			RIGID	None	None	RIGID	Typical
386	M386	N1420	N1843			RIGID	None	None	RIGID	Typical
387	M387	N1421	N1844			RIGID	None	None	RIGID	Typical
388	M388	N1422	N1845			RIGID	None	None	RIGID	Typical
389	M389	N1423	N1846			RIGID	None	None	RIGID	Typical
390	M390	N201	N1815			RIGID	None	None	RIGID	Typical
391	M391	N1424	N1847			RIGID	None	None	RIGID	Typical
392	M392	N199	N1814			RIGID	None	None	RIGID	Typical
393	M393	N1404	N1842			RIGID	None	None	RIGID	Typical
394	M394	N1403	N1841			RIGID	None	None	RIGID	Typical
395	M395	N1402	N1840			RIGID	None	None	RIGID	Typical
396	M396	N1401	N1839			RIGID	None	None	RIGID	Typical
397	M397	N1400	N1838			RIGID	None	None	RIGID	Typical
398	M398	N215A	N1831			RIGID	None	None	RIGID	Typical
399	M399	N217A	N1832			RIGID	None	None	RIGID	Typical
400	M400	N1380	N1833			RIGID	None	None	RIGID	Typical
401	M401	N1381	N1834			RIGID	None	None	RIGID	Typical
402	M402	N1382	N1835			RIGID	None	None	RIGID	Typical
403	M403	N1383	N1836			RIGID	None	None	RIGID	Typical
404	M404	N1384	N1837			RIGID	None	None	RIGID	Typical
405	M405	N197	N1813			RIGID	None	None	RIGID	Typical

Plates

	Label	A Joint	B Joint	C Joint	D Joint	Material	Thickness[in]	R Loc	S Loc	Inactive
1	P90	N6	N14	N230	N229	gen_Steel	.3125	0	0	
2	P93	N14	N22	N231	N230	gen_Steel	.3125	0	0	
3	P95	N22	N30	N232	N231	gen_Steel	.3125	0	0	
4	P97	N30	N38	N233	N232	gen_Steel	.3125	0	0	
5	P99	N38	N46	N234	N233	gen_Steel	.3125	0	0	
6	P101	N46	N54	N235	N234	gen_Steel	.3125	0	0	
7	P103	N54	N62	N236	N235	gen_Steel	.3125	0	0	
8	P105	N62	N70	N237	N236	gen_Steel	.3125	0	0	
9	P107	N70	N78	N238	N237	gen_Steel	.3125	0	0	
10	P109	N78	N86	N239	N238	gen_Steel	.3125	0	0	
11	P111	N86	N94	N240	N239	gen_Steel	.3125	0	0	
12	P107B	N301	N303	N275	N240	gen_Steel	.375	0	0	
13	P108	N300	N301	N94	N86	gen_Steel	.375	0	0	
14	P109B	N299	N300	N86	N78	gen_Steel	.375	0	0	
15	P110	N298	N299	N78	N70	gen_Steel	.375	0	0	
16	P111A	N297	N298	N70	N62	gen_Steel	.375	0	0	
17	P112	N296	N297	N62	N54	gen_Steel	.375	0	0	
18	P113	N295	N296	N54	N46	gen_Steel	.375	0	0	
19	P114	N294	N295	N46	N38	gen_Steel	.375	0	0	
20	P115	N293	N294	N38	N30	gen_Steel	.375	0	0	
21	P116A	N292	N293	N30	N22	gen_Steel	.375	0	0	
22	P117A	N291	N292	N22	N14	gen_Steel	.375	0	0	
23	P118A	N290	N291	N14	N6	gen_Steel	.375	0	0	
24	P120	N286	N301A	N289B	N282	gen_Steel	.375	0	0	
25	P121	N301A	N302A	N9	N1	gen_Steel	.375	0	0	
26	P122	N1	N9	N290A	N289B	gen_Steel	.375	0	0	
27	P123	N302A	N303A	N17	N9	gen_Steel	.375	0	0	
28	P124	N9	N17	N291A	N290A	gen_Steel	.375	0	0	
29	P125	N303A	N304A	N25	N17	gen_Steel	.375	0	0	
30	P126	N17	N25	N292A	N291A	gen_Steel	.375	0	0	
31	P127	N304A	N305A	N33	N25	gen_Steel	.375	0	0	
32	P128	N25	N33	N293A	N292A	gen_Steel	.375	0	0	
33	P129	N305A	N306	N41	N33	gen_Steel	.375	0	0	
34	P130	N33	N41	N294A	N293A	gen_Steel	.375	0	0	
35	P131	N306	N307	N49	N41	gen_Steel	.375	0	0	
36	P132	N41	N49	N295A	N294A	gen_Steel	.375	0	0	
37	P133	N307	N308	N57	N49	gen_Steel	.375	0	0	
38	P134	N49	N57	N296A	N295A	gen_Steel	.375	0	0	
39	P135	N308	N309	N65	N57	gen_Steel	.375	0	0	
40	P136	N57	N65	N297A	N296A	gen_Steel	.375	0	0	
41	P137	N309	N310	N73	N65	gen_Steel	.375	0	0	
42	P138	N65	N73	N298A	N297A	gen_Steel	.375	0	0	
43	P139	N310	N311	N81	N73	gen_Steel	.375	0	0	
44	P140	N73	N81	N299A	N298A	gen_Steel	.375	0	0	
45	P141	N311	N312	N89	N81	gen_Steel	.375	0	0	
46	P142	N81	N89	N300A	N299A	gen_Steel	.375	0	0	
47	P143	N312	N302	N313	N89	gen_Steel	.375	0	0	
48	P144	N89	N313	N274	N300A	gen_Steel	.375	0	0	
49	P143A	N289A	N290	N6	N318	gen_Steel	.375	0	0	
50	P144A	N318	N6	N229	N283	gen_Steel	.375	0	0	
51	P141B	N303	N304	N315	N314	gen_Steel	.375	0	0	
52	P142A	N314	N315	N276	N275	gen_Steel	.375	0	0	
53	P143B	N304	N305	N316	N315	gen_Steel	.375	0	0	
54	P144B	N315	N316	N277	N276	gen_Steel	.375	0	0	
55	P145A	N305	N302	N313	N316	gen_Steel	.375	0	0	
56	P146A	N316	N313	N274	N277	gen_Steel	.375	0	0	
57	P147	N288	N289A	N318	N319	gen_Steel	.375	0	0	
58	P148	N319	N318	N283	N284	gen_Steel	.375	0	0	

Plates (Continued)

	Label	A Joint	B Joint	C Joint	D Joint	Material	Thickness[in]	R Loc	S Loc	Inactive
59	P149	N289	N288	N319	N320	gen_Steel	.375	0	0	
60	P150	N320	N319	N284	N285	gen_Steel	.375	0	0	
61	P150A	N286	N289	N320	N317	gen_Steel	.375	0	0	
62	P151	N317	N320	N285	N282	gen_Steel	.375	0	0	
63	P166A	N326	N343A	N345A	N344A	gen_Steel	.3125	0	0	
64	P167	N344A	N345A	N183	N118	gen_Steel	.3125	0	0	
65	P167A	N126	N184	N347	N346	gen_Steel	.3125	0	0	
66	P168	N346	N347	N343A	N326	gen_Steel	.3125	0	0	
67	P168A	N345	N326	N344A	N348	gen_Steel	.3125	0	0	
68	P169	N348	N344A	N118	N344	gen_Steel	.3125	0	0	
69	P169A	N343	N126	N346	N349	gen_Steel	.3125	0	0	
70	P170	N349	N346	N326	N345	gen_Steel	.3125	0	0	
71	P170A	N324	N350	N352	N351	gen_Steel	.3125	0	0	
72	P171	N350	N345	N348	N352	gen_Steel	.3125	0	0	
73	P172	N351	N352	N353	N214	gen_Steel	.3125	0	0	
74	P173	N352	N348	N344	N353	gen_Steel	.3125	0	0	
75	P173A	N212	N354	N356	N355	gen_Steel	.3125	0	0	
76	P174	N354	N343	N349	N356	gen_Steel	.3125	0	0	
77	P175	N355	N356	N350	N324	gen_Steel	.3125	0	0	
78	P176	N356	N349	N345	N350	gen_Steel	.3125	0	0	
79	P176A	N369	N365	N375	N376	gen_Steel	1	0	0	
80	P177	N368	N369	N376	N374	gen_Steel	1	0	0	
81	P178	N361	N367	N369	N368	gen_Steel	1	0	0	
82	P179	N367	N364	N365	N369	gen_Steel	1	0	0	
83	P180	N372	N373	N367	N361	gen_Steel	1	0	0	
84	P181	N373	N366	N364	N367	gen_Steel	1	0	0	
85	P182	N379	N378	N366	N373	gen_Steel	1	0	0	
86	P183	N377	N379	N373	N372	gen_Steel	1	0	0	
87	P185	N331	N386	N388	N387	gen_Steel	.3125	0	0	
88	P186	N387	N388	N189	N166	gen_Steel	.3125	0	0	
89	P186A	N385A	N331	N387	N389	gen_Steel	.3125	0	0	
90	P187	N389	N387	N166	N384A	gen_Steel	.3125	0	0	
91	P187A	N174	N190A	N391	N390	gen_Steel	.3125	0	0	
92	P188	N390	N391	N386	N331	gen_Steel	.3125	0	0	
93	P188A	N383A	N174	N390	N392	gen_Steel	.3125	0	0	
94	P189	N392	N390	N331	N385A	gen_Steel	.3125	0	0	
95	P189A	N329	N393	N395	N394	gen_Steel	.3125	0	0	
96	P190	N393	N385A	N389	N395	gen_Steel	.3125	0	0	
97	P191	N394	N395	N396	N202	gen_Steel	.3125	0	0	
98	P192	N395	N389	N384A	N396	gen_Steel	.3125	0	0	
99	P192A	N200	N397	N399	N398	gen_Steel	.3125	0	0	
100	P193	N397	N383A	N392	N399	gen_Steel	.3125	0	0	
101	P194	N398	N399	N393	N329	gen_Steel	.3125	0	0	
102	P195	N399	N392	N385A	N393	gen_Steel	.3125	0	0	
103	P195A	N410	N406	N404	N411	gen_Steel	1	0	0	
104	P196	N409	N410	N411	N401	gen_Steel	1	0	0	
105	P197	N402	N408	N410	N409	gen_Steel	1	0	0	
106	P198	N408	N405	N406	N410	gen_Steel	1	0	0	
107	P199	N413	N414	N408	N402	gen_Steel	1	0	0	
108	P200	N414	N407	N405	N408	gen_Steel	1	0	0	
109	P201	N400	N412	N414	N413	gen_Steel	1	0	0	
110	P202	N412	N403	N407	N414	gen_Steel	1	0	0	
111	P204A	N430A	N334	N432A	N431A	gen_Steel	.3125	0	0	
112	P205	N431A	N432A	N113	N171	gen_Steel	.3125	0	0	
113	P205A	N172	N121	N434	N433	gen_Steel	.3125	0	0	
114	P206	N433	N434	N334	N430A	gen_Steel	.3125	0	0	
115	P206A	N334	N432	N435	N432A	gen_Steel	.3125	0	0	
116	P207	N432A	N435	N430	N113	gen_Steel	.3125	0	0	
117	P207A	N121	N431	N436	N434	gen_Steel	.3125	0	0	

Plates (Continued)

	Label	A Joint	B Joint	C Joint	D Joint	Material	Thickness[in]	R Loc	S Loc	Inactive
118	P208	N434	N436	N432	N334	gen_Steel	.3125	0	0	
119	P208A	N432	N437	N438	N435	gen_Steel	.3125	0	0	
120	P209	N437	N336	N439	N438	gen_Steel	.3125	0	0	
121	P210	N435	N438	N440	N430	gen_Steel	.3125	0	0	
122	P211	N438	N439	N200A	N440	gen_Steel	.3125	0	0	
123	P211A	N431	N441	N442	N436	gen_Steel	.3125	0	0	
124	P212	N441	N202A	N443	N442	gen_Steel	.3125	0	0	
125	P213	N436	N442	N437	N432	gen_Steel	.3125	0	0	
126	P214	N442	N443	N336	N437	gen_Steel	.3125	0	0	
127	P214A	N453	N454	N444	N455	gen_Steel	1	0	0	
128	P215	N450	N453	N455	N447	gen_Steel	1	0	0	
129	P216	N452	N446	N454	N453	gen_Steel	1	0	0	
130	P217	N449	N452	N453	N450	gen_Steel	1	0	0	
131	P218	N457	N458	N446	N452	gen_Steel	1	0	0	
132	P219	N451	N457	N452	N449	gen_Steel	1	0	0	
133	P220	N456	N445	N458	N457	gen_Steel	1	0	0	
134	P221	N448	N456	N457	N451	gen_Steel	1	0	0	
135	P223A	N474A	N339	N476A	N475A	gen_Steel	.3125	0	0	
136	P224	N475A	N476A	N161	N177A	gen_Steel	.3125	0	0	
137	P224A	N178	N169	N478	N477	gen_Steel	.3125	0	0	
138	P225	N477	N478	N339	N474A	gen_Steel	.3125	0	0	
139	P225A	N339	N476	N479	N476A	gen_Steel	.3125	0	0	
140	P226	N476A	N479	N474	N161	gen_Steel	.3125	0	0	
141	P226A	N169	N475	N480	N478	gen_Steel	.3125	0	0	
142	P227	N478	N480	N476	N339	gen_Steel	.3125	0	0	
143	P227A	N476	N481	N482	N479	gen_Steel	.3125	0	0	
144	P228	N481	N341	N483	N482	gen_Steel	.3125	0	0	
145	P229	N479	N482	N484	N474	gen_Steel	.3125	0	0	
146	P230	N482	N483	N212A	N484	gen_Steel	.3125	0	0	
147	P230A	N475	N485	N486	N480	gen_Steel	.3125	0	0	
148	P231	N485	N214A	N487	N486	gen_Steel	.3125	0	0	
149	P232	N480	N486	N481	N476	gen_Steel	.3125	0	0	
150	P233	N486	N487	N341	N481	gen_Steel	.3125	0	0	
151	P233A	N497	N498	N488	N499	gen_Steel	1	0	0	
152	P234	N494	N497	N499	N491	gen_Steel	1	0	0	
153	P235	N496	N490	N498	N497	gen_Steel	1	0	0	
154	P236	N493	N496	N497	N494	gen_Steel	1	0	0	
155	P237	N501	N502	N490	N496	gen_Steel	1	0	0	
156	P238	N495	N501	N496	N493	gen_Steel	1	0	0	
157	P239	N500	N489	N502	N501	gen_Steel	1	0	0	
158	P240	N492	N500	N501	N495	gen_Steel	1	0	0	
159	P240A	N210	N507A	N510	N509	gen_Steel	.312	0	0	
160	P241	N507A	N508	N511	N510	gen_Steel	.312	0	0	
161	P242	N508	N134	N512	N511	gen_Steel	.312	0	0	
162	P243	N509	N510	N514A	N513	gen_Steel	.312	0	0	
163	P244	N510	N511	N515A	N514A	gen_Steel	.312	0	0	
164	P245	N511	N512	N516	N515A	gen_Steel	.312	0	0	
165	P246	N513	N514A	N518	N517	gen_Steel	.312	0	0	
166	P247	N514A	N515A	N519	N518	gen_Steel	.312	0	0	
167	P248	N515A	N516	N520	N519	gen_Steel	.312	0	0	
168	P249	N517	N518	N354	N212	gen_Steel	.312	0	0	
169	P250	N518	N519	N521	N354	gen_Steel	.312	0	0	
170	P251	N519	N520	N126	N521	gen_Steel	.312	0	0	
171	P251A	N214	N353	N524	N523	gen_Steel	.3125	0	0	
172	P252	N353	N522	N525	N524	gen_Steel	.3125	0	0	
173	P253	N522	N118	N526	N525	gen_Steel	.3125	0	0	
174	P254	N523	N524	N528	N527	gen_Steel	.3125	0	0	
175	P255	N524	N525	N529	N528	gen_Steel	.3125	0	0	
176	P256	N525	N526	N530	N529	gen_Steel	.3125	0	0	

Plates (Continued)

	Label	A Joint	B Joint	C Joint	D Joint	Material	Thickness[in]	R Loc	S Loc	Inactive
177	P257	N527	N528	N532	N531	gen_Steel	.3125	0	0	
178	P258	N528	N529	N533	N532	gen_Steel	.3125	0	0	
179	P259	N529	N530	N534	N533	gen_Steel	.3125	0	0	
180	P260	N531	N532	N535	N216	gen_Steel	.3125	0	0	
181	P261	N532	N533	N536	N535	gen_Steel	.3125	0	0	
182	P262	N533	N534	N110	N536	gen_Steel	.3125	0	0	
183	P262A	N218	N537	N540	N539	gen_Steel	.312	0	0	
184	P263	N537	N538	N541	N540	gen_Steel	.312	0	0	
185	P264	N538	N102	N542	N541	gen_Steel	.312	0	0	
186	P265	N539	N540	N544	N543	gen_Steel	.312	0	0	
187	P266	N540	N541	N545	N544	gen_Steel	.312	0	0	
188	P267	N541	N542	N546	N545	gen_Steel	.312	0	0	
189	P268	N543	N544	N548	N547	gen_Steel	.312	0	0	
190	P269	N544	N545	N549	N548	gen_Steel	.312	0	0	
191	P270	N545	N546	N550	N549	gen_Steel	.312	0	0	
192	P271	N547	N548	N551	N199B	gen_Steel	.312	0	0	
193	P272	N548	N549	N552	N551	gen_Steel	.312	0	0	
194	P273	N549	N550	N198B	N552	gen_Steel	.312	0	0	
195	P273A	N102	N181	N553	N542	gen_Steel	.3125	0	0	
196	P274	N542	N553	N554	N546	gen_Steel	.3125	0	0	
197	P275	N546	N554	N555	N550	gen_Steel	.3125	0	0	
198	P276	N550	N555	N194A	N198B	gen_Steel	.3125	0	0	
199	P276A	N110	N182A	N557	N556	gen_Steel	.3125	0	0	
200	P277	N556	N557	N559	N558	gen_Steel	.3125	0	0	
201	P278	N558	N559	N561	N560	gen_Steel	.3125	0	0	
202	P279	N560	N561	N563	N562	gen_Steel	.3125	0	0	
203	P280	N562	N563	N181	N102	gen_Steel	.3125	0	0	
204	P280A	N216	N535	N565	N564	gen_Steel	.312	0	0	
205	P281	N535	N536	N566	N565	gen_Steel	.312	0	0	
206	P282	N536	N110	N556	N566	gen_Steel	.312	0	0	
207	P283	N564	N565	N568	N567	gen_Steel	.312	0	0	
208	P284	N565	N566	N569	N568	gen_Steel	.312	0	0	
209	P285	N566	N556	N558	N569	gen_Steel	.312	0	0	
210	P286	N567	N568	N571	N570	gen_Steel	.312	0	0	
211	P287	N568	N569	N572	N571	gen_Steel	.312	0	0	
212	P288	N569	N558	N560	N572	gen_Steel	.312	0	0	
213	P289	N570	N571	N574	N573	gen_Steel	.312	0	0	
214	P290	N571	N572	N575	N574	gen_Steel	.312	0	0	
215	P291	N572	N560	N562	N575	gen_Steel	.312	0	0	
216	P292	N573	N574	N537	N218	gen_Steel	.312	0	0	
217	P293	N574	N575	N538	N537	gen_Steel	.312	0	0	
218	P294	N575	N562	N102	N538	gen_Steel	.312	0	0	
219	P294A	N118	N183	N576	N526	gen_Steel	.3125	0	0	
220	P295	N526	N576	N577	N530	gen_Steel	.3125	0	0	
221	P296	N530	N577	N578	N534	gen_Steel	.3125	0	0	
222	P297	N534	N578	N182A	N110	gen_Steel	.3125	0	0	
223	P297A	N134	N185A	N579	N512	gen_Steel	.3125	0	0	
224	P298	N512	N579	N580	N516	gen_Steel	.3125	0	0	
225	P299	N516	N580	N581	N520	gen_Steel	.3125	0	0	
226	P300	N520	N581	N184	N126	gen_Steel	.3125	0	0	
227	P300A	N142	N186	N583	N582	gen_Steel	.3125	0	0	
228	P301	N582	N583	N585	N584	gen_Steel	.3125	0	0	
229	P302	N584	N585	N587	N586	gen_Steel	.3125	0	0	
230	P303	N586	N587	N185A	N134	gen_Steel	.3125	0	0	
231	P303A	N150	N187	N589	N588	gen_Steel	.3125	0	0	
232	P304	N588	N589	N591	N590	gen_Steel	.3125	0	0	
233	P305	N590	N591	N593	N592	gen_Steel	.3125	0	0	
234	P306	N592	N593	N186	N142	gen_Steel	.3125	0	0	
235	P306A	N158	N188	N595	N594	gen_Steel	.3125	0	0	

Plates (Continued)

	Label	A Joint	B Joint	C Joint	D Joint	Material	Thickness[in]	R Loc	S Loc	Inactive
236	P307	N594	N595	N597	N596	gen_Steel	.3125	0	0	
237	P308	N596	N597	N599	N598	gen_Steel	.3125	0	0	
238	P309	N598	N599	N187	N150	gen_Steel	.3125	0	0	
239	P309A	N166	N189	N601	N600	gen_Steel	.3125	0	0	
240	P310	N600	N601	N603	N602	gen_Steel	.3125	0	0	
241	P311	N602	N603	N605	N604	gen_Steel	.3125	0	0	
242	P312	N604	N605	N188	N158	gen_Steel	.3125	0	0	
243	P312A	N208	N606	N609	N608	gen_Steel	.312	0	0	
244	P313	N606	N607	N610	N609	gen_Steel	.312	0	0	
245	P314	N607	N142	N582	N610	gen_Steel	.312	0	0	
246	P315	N608	N609	N612	N611	gen_Steel	.312	0	0	
247	P316	N609	N610	N613	N612	gen_Steel	.312	0	0	
248	P317	N610	N582	N584	N613	gen_Steel	.312	0	0	
249	P318	N611	N612	N615	N614	gen_Steel	.312	0	0	
250	P319	N612	N613	N616	N615	gen_Steel	.312	0	0	
251	P320	N613	N584	N586	N616	gen_Steel	.312	0	0	
252	P321	N614	N615	N507A	N210	gen_Steel	.312	0	0	
253	P322	N615	N616	N508	N507A	gen_Steel	.312	0	0	
254	P323	N616	N586	N134	N508	gen_Steel	.312	0	0	
255	P323A	N206	N617	N620	N619	gen_Steel	.3125	0	0	
256	P324	N617	N618	N621	N620	gen_Steel	.3125	0	0	
257	P325	N618	N150	N588	N621	gen_Steel	.3125	0	0	
258	P326	N619	N620	N623	N622	gen_Steel	.3125	0	0	
259	P327	N620	N621	N624	N623	gen_Steel	.3125	0	0	
260	P328	N621	N588	N590	N624	gen_Steel	.3125	0	0	
261	P329	N622	N623	N626	N625	gen_Steel	.3125	0	0	
262	P330	N623	N624	N627	N626	gen_Steel	.3125	0	0	
263	P331	N624	N590	N592	N627	gen_Steel	.3125	0	0	
264	P332	N625	N626	N606	N208	gen_Steel	.3125	0	0	
265	P333	N626	N627	N607	N606	gen_Steel	.3125	0	0	
266	P334	N627	N592	N142	N607	gen_Steel	.3125	0	0	
267	P334A	N204	N628	N631	N630	gen_Steel	.3125	0	0	
268	P335	N628	N629	N632	N631	gen_Steel	.3125	0	0	
269	P336	N629	N158	N594	N632	gen_Steel	.3125	0	0	
270	P337	N630	N631	N634	N633	gen_Steel	.3125	0	0	
271	P338	N631	N632	N635	N634	gen_Steel	.3125	0	0	
272	P339	N632	N594	N596	N635	gen_Steel	.3125	0	0	
273	P340	N633	N634	N637	N636	gen_Steel	.3125	0	0	
274	P341	N634	N635	N638	N637	gen_Steel	.3125	0	0	
275	P342	N635	N596	N598	N638	gen_Steel	.3125	0	0	
276	P343	N636	N637	N617	N206	gen_Steel	.3125	0	0	
277	P344	N637	N638	N618	N617	gen_Steel	.3125	0	0	
278	P345	N638	N598	N150	N618	gen_Steel	.3125	0	0	
279	P345A	N202	N396	N641	N640	gen_Steel	.3125	0	0	
280	P346	N396	N639	N642	N641	gen_Steel	.3125	0	0	
281	P347	N639	N166	N600	N642	gen_Steel	.3125	0	0	
282	P348	N640	N641	N644	N643	gen_Steel	.3125	0	0	
283	P349	N641	N642	N645	N644	gen_Steel	.3125	0	0	
284	P350	N642	N600	N602	N645	gen_Steel	.3125	0	0	
285	P351	N643	N644	N647	N646	gen_Steel	.3125	0	0	
286	P352	N644	N645	N648	N647	gen_Steel	.3125	0	0	
287	P353	N645	N602	N604	N648	gen_Steel	.3125	0	0	
288	P354	N646	N647	N628	N204	gen_Steel	.3125	0	0	
289	P355	N647	N648	N629	N628	gen_Steel	.3125	0	0	
290	P356	N648	N604	N158	N629	gen_Steel	.3125	0	0	
291	P356A	N182	N191	N650	N649	gen_Steel	.3125	0	0	
292	P357	N649	N650	N652	N651	gen_Steel	.3125	0	0	
293	P358	N651	N652	N654	N653	gen_Steel	.3125	0	0	
294	P359	N653	N654	N190A	N174	gen_Steel	.3125	0	0	

Plates (Continued)

	Label	A Joint	B Joint	C Joint	D Joint	Material	Thickness[in]	R Loc	S Loc	Inactive
295	P359A	N202B	N196A	N656	N655	gen_Steel	.3125	0	0	
296	P360	N655	N656	N658	N657	gen_Steel	.3125	0	0	
297	P361	N657	N658	N660	N659	gen_Steel	.3125	0	0	
298	P362	N659	N660	N192	N190	gen_Steel	.3125	0	0	
299	P362A	N190	N192	N662	N661	gen_Steel	.3125	0	0	
300	P363	N661	N662	N664	N663	gen_Steel	.3125	0	0	
301	P364	N663	N664	N666	N665	gen_Steel	.3125	0	0	
302	P365	N665	N666	N668	N667	gen_Steel	.3125	0	0	
303	P366	N667	N668	N191	N182	gen_Steel	.3125	0	0	
304	P366A	N198	N669	N672	N671	gen_Steel	.3125	0	0	
305	P367	N669	N670	N673	N672	gen_Steel	.3125	0	0	
306	P368	N670	N182	N649	N673	gen_Steel	.3125	0	0	
307	P369	N671	N672	N675	N674	gen_Steel	.3125	0	0	
308	P370	N672	N673	N676	N675	gen_Steel	.3125	0	0	
309	P371	N673	N649	N651	N676	gen_Steel	.3125	0	0	
310	P372	N674	N675	N678	N677	gen_Steel	.3125	0	0	
311	P373	N675	N676	N679	N678	gen_Steel	.3125	0	0	
312	P374	N676	N651	N653	N679	gen_Steel	.3125	0	0	
313	P375	N677	N678	N397	N200	gen_Steel	.3125	0	0	
314	P376	N678	N679	N680	N397	gen_Steel	.3125	0	0	
315	P377	N679	N653	N174	N680	gen_Steel	.3125	0	0	
316	P377A	N194	N681	N684	N683	gen_Steel	.3125	0	0	
317	P378	N681	N682	N685	N684	gen_Steel	.3125	0	0	
318	P379	N682	N190	N661	N685	gen_Steel	.3125	0	0	
319	P380	N683	N684	N687	N686	gen_Steel	.3125	0	0	
320	P381	N684	N685	N688	N687	gen_Steel	.3125	0	0	
321	P382	N685	N661	N663	N688	gen_Steel	.3125	0	0	
322	P383	N686	N687	N690	N689	gen_Steel	.3125	0	0	
323	P384	N687	N688	N691	N690	gen_Steel	.3125	0	0	
324	P385	N688	N663	N665	N691	gen_Steel	.3125	0	0	
325	P386	N689	N690	N693	N692	gen_Steel	.3125	0	0	
326	P387	N690	N691	N694	N693	gen_Steel	.3125	0	0	
327	P388	N691	N665	N667	N694	gen_Steel	.3125	0	0	
328	P389	N692	N693	N669	N198	gen_Steel	.3125	0	0	
329	P390	N693	N694	N670	N669	gen_Steel	.3125	0	0	
330	P391	N694	N667	N182	N670	gen_Steel	.3125	0	0	
331	P391A	N203B	N695	N698	N697	gen_Steel	.3125	0	0	
332	P392	N695	N696	N699	N698	gen_Steel	.3125	0	0	
333	P393	N696	N202B	N655	N699	gen_Steel	.3125	0	0	
334	P394	N697	N698	N701	N700	gen_Steel	.3125	0	0	
335	P395	N698	N699	N702	N701	gen_Steel	.3125	0	0	
336	P396	N699	N655	N657	N702	gen_Steel	.3125	0	0	
337	P397	N700	N701	N704	N703	gen_Steel	.3125	0	0	
338	P398	N701	N702	N705	N704	gen_Steel	.3125	0	0	
339	P399	N702	N657	N659	N705	gen_Steel	.3125	0	0	
340	P400	N703	N704	N681	N194	gen_Steel	.3125	0	0	
341	P401	N704	N705	N682	N681	gen_Steel	.3125	0	0	
342	P402	N705	N659	N190	N682	gen_Steel	.3125	0	0	
343	P402A	N169A	N97	N707	N706	gen_Steel	.3125	0	0	
344	P403	N706	N707	N709	N708	gen_Steel	.3125	0	0	
345	P404	N708	N709	N711	N710	gen_Steel	.3125	0	0	
346	P405	N710	N711	N197B	N193A	gen_Steel	.3125	0	0	
347	P405A	N170	N105	N713	N712	gen_Steel	.3125	0	0	
348	P406	N712	N713	N715	N714	gen_Steel	.3125	0	0	
349	P407	N714	N715	N717	N716	gen_Steel	.3125	0	0	
350	P408	N716	N717	N719	N718	gen_Steel	.3125	0	0	
351	P409	N718	N719	N97	N169A	gen_Steel	.3125	0	0	
352	P409A	N97	N720	N722	N707	gen_Steel	.3125	0	0	
353	P410	N720	N721	N723	N722	gen_Steel	.3125	0	0	

Plates (Continued)

	Label	A Joint	B Joint	C Joint	D Joint	Material	Thickness[in]	R Loc	S Loc	Inactive
354	P411	N721	N196	N724	N723	gen_Steel	.3125	0	0	
355	P412	N707	N722	N725	N709	gen_Steel	.3125	0	0	
356	P413	N722	N723	N726	N725	gen_Steel	.3125	0	0	
357	P414	N723	N724	N727	N726	gen_Steel	.3125	0	0	
358	P415	N709	N725	N728	N711	gen_Steel	.3125	0	0	
359	P416	N725	N726	N729	N728	gen_Steel	.3125	0	0	
360	P417	N726	N727	N730	N729	gen_Steel	.3125	0	0	
361	P418	N711	N728	N731	N197B	gen_Steel	.3125	0	0	
362	P419	N728	N729	N732	N731	gen_Steel	.3125	0	0	
363	P420	N729	N730	N200B	N732	gen_Steel	.3125	0	0	
364	P420A	N105	N733	N735	N713	gen_Steel	.3125	0	0	
365	P421	N733	N734	N736	N735	gen_Steel	.3125	0	0	
366	P422	N734	N198A	N737	N736	gen_Steel	.3125	0	0	
367	P423	N713	N735	N738	N715	gen_Steel	.3125	0	0	
368	P424	N735	N736	N739	N738	gen_Steel	.3125	0	0	
369	P425	N736	N737	N740	N739	gen_Steel	.3125	0	0	
370	P426	N715	N738	N741	N717	gen_Steel	.3125	0	0	
371	P427	N738	N739	N742	N741	gen_Steel	.3125	0	0	
372	P428	N739	N740	N743	N742	gen_Steel	.3125	0	0	
373	P429	N717	N741	N744	N719	gen_Steel	.3125	0	0	
374	P430	N741	N742	N745	N744	gen_Steel	.3125	0	0	
375	P431	N742	N743	N746	N745	gen_Steel	.3125	0	0	
376	P432	N719	N744	N720	N97	gen_Steel	.3125	0	0	
377	P433	N744	N745	N721	N720	gen_Steel	.3125	0	0	
378	P434	N745	N746	N196	N721	gen_Steel	.3125	0	0	
379	P434A	N113	N747	N750	N749	gen_Steel	.3125	0	0	
380	P435	N747	N748	N751	N750	gen_Steel	.3125	0	0	
381	P436	N748	N200A	N752	N751	gen_Steel	.3125	0	0	
382	P437	N749	N750	N754	N753	gen_Steel	.3125	0	0	
383	P438	N750	N751	N755	N754	gen_Steel	.3125	0	0	
384	P439	N751	N752	N756	N755	gen_Steel	.3125	0	0	
385	P440	N753	N754	N758	N757	gen_Steel	.3125	0	0	
386	P441	N754	N755	N759	N758	gen_Steel	.3125	0	0	
387	P442	N755	N756	N760	N759	gen_Steel	.3125	0	0	
388	P443	N757	N758	N733	N105	gen_Steel	.3125	0	0	
389	P444	N758	N759	N734	N733	gen_Steel	.3125	0	0	
390	P445	N759	N760	N198A	N734	gen_Steel	.3125	0	0	
391	P445A	N171	N113	N749	N761	gen_Steel	.3125	0	0	
392	P446	N761	N749	N753	N762	gen_Steel	.3125	0	0	
393	P447	N762	N753	N757	N763	gen_Steel	.3125	0	0	
394	P448	N763	N757	N105	N170	gen_Steel	.3125	0	0	
395	P448A	N173	N129	N765	N764	gen_Steel	.3125	0	0	
396	P449	N764	N765	N767	N766	gen_Steel	.3125	0	0	
397	P450	N766	N767	N769	N768	gen_Steel	.3125	0	0	
398	P451	N768	N769	N121	N172	gen_Steel	.3125	0	0	
399	P451A	N174A	N137	N771	N770	gen_Steel	.3125	0	0	
400	P452	N770	N771	N773	N772	gen_Steel	.3125	0	0	
401	P453	N772	N773	N775	N774	gen_Steel	.3125	0	0	
402	P454	N774	N775	N129	N173	gen_Steel	.3125	0	0	
403	P454A	N175	N145	N777	N776	gen_Steel	.3125	0	0	
404	P455	N776	N777	N779	N778	gen_Steel	.3125	0	0	
405	P456	N778	N779	N781	N780	gen_Steel	.3125	0	0	
406	P457	N780	N781	N137	N174A	gen_Steel	.3125	0	0	
407	P457A	N176	N153	N783	N782	gen_Steel	.3125	0	0	
408	P458	N782	N783	N785	N784	gen_Steel	.3125	0	0	
409	P459	N784	N785	N787	N786	gen_Steel	.3125	0	0	
410	P460	N786	N787	N145	N175	gen_Steel	.3125	0	0	
411	P460A	N177A	N161	N789	N788	gen_Steel	.3125	0	0	
412	P461	N788	N789	N791	N790	gen_Steel	.3125	0	0	

Plates (Continued)

	Label	A Joint	B Joint	C Joint	D Joint	Material	Thickness[in]	R Loc	S Loc	Inactive
413	P462	N790	N791	N793	N792	gen_Steel	.3125	0	0	
414	P463	N792	N793	N153	N176	gen_Steel	.3125	0	0	
415	P463A	N129	N794	N796	N765	gen_Steel	.3125	0	0	
416	P464	N794	N795	N797	N796	gen_Steel	.3125	0	0	
417	P465	N795	N204A	N798	N797	gen_Steel	.3125	0	0	
418	P466	N765	N796	N799	N767	gen_Steel	.3125	0	0	
419	P467	N796	N797	N800	N799	gen_Steel	.3125	0	0	
420	P468	N797	N798	N801	N800	gen_Steel	.3125	0	0	
421	P469	N767	N799	N802	N769	gen_Steel	.3125	0	0	
422	P470	N799	N800	N803	N802	gen_Steel	.3125	0	0	
423	P471	N800	N801	N804	N803	gen_Steel	.3125	0	0	
424	P472	N769	N802	N805	N121	gen_Steel	.3125	0	0	
425	P473	N802	N803	N806	N805	gen_Steel	.3125	0	0	
426	P474	N803	N804	N202A	N806	gen_Steel	.3125	0	0	
427	P474A	N137	N807	N809	N771	gen_Steel	.3125	0	0	
428	P475	N807	N808	N810	N809	gen_Steel	.3125	0	0	
429	P476	N808	N206A	N811	N810	gen_Steel	.3125	0	0	
430	P477	N771	N809	N812	N773	gen_Steel	.3125	0	0	
431	P478	N809	N810	N813	N812	gen_Steel	.3125	0	0	
432	P479	N810	N811	N814	N813	gen_Steel	.3125	0	0	
433	P480	N773	N812	N815	N775	gen_Steel	.3125	0	0	
434	P481	N812	N813	N816	N815	gen_Steel	.3125	0	0	
435	P482	N813	N814	N817	N816	gen_Steel	.3125	0	0	
436	P483	N775	N815	N794	N129	gen_Steel	.3125	0	0	
437	P484	N815	N816	N795	N794	gen_Steel	.3125	0	0	
438	P485	N816	N817	N204A	N795	gen_Steel	.3125	0	0	
439	P485A	N145	N818	N820	N777	gen_Steel	.3125	0	0	
440	P486	N818	N819	N821	N820	gen_Steel	.3125	0	0	
441	P487	N819	N208A	N822	N821	gen_Steel	.3125	0	0	
442	P488	N777	N820	N823	N779	gen_Steel	.3125	0	0	
443	P489	N820	N821	N824	N823	gen_Steel	.3125	0	0	
444	P490	N821	N822	N825	N824	gen_Steel	.3125	0	0	
445	P491	N779	N823	N826	N781	gen_Steel	.3125	0	0	
446	P492	N823	N824	N827	N826	gen_Steel	.3125	0	0	
447	P493	N824	N825	N828	N827	gen_Steel	.3125	0	0	
448	P494	N781	N826	N807	N137	gen_Steel	.3125	0	0	
449	P495	N826	N827	N808	N807	gen_Steel	.3125	0	0	
450	P496	N827	N828	N206A	N808	gen_Steel	.3125	0	0	
451	P496A	N153	N829	N831	N783	gen_Steel	.3125	0	0	
452	P497	N829	N830	N832	N831	gen_Steel	.3125	0	0	
453	P498	N830	N210A	N833	N832	gen_Steel	.3125	0	0	
454	P499	N783	N831	N834	N785	gen_Steel	.3125	0	0	
455	P500	N831	N832	N835	N834	gen_Steel	.3125	0	0	
456	P501	N832	N833	N836	N835	gen_Steel	.3125	0	0	
457	P502	N785	N834	N837	N787	gen_Steel	.3125	0	0	
458	P503	N834	N835	N838	N837	gen_Steel	.3125	0	0	
459	P504	N835	N836	N839	N838	gen_Steel	.3125	0	0	
460	P505	N787	N837	N818	N145	gen_Steel	.3125	0	0	
461	P506	N837	N838	N819	N818	gen_Steel	.3125	0	0	
462	P507	N838	N839	N208A	N819	gen_Steel	.3125	0	0	
463	P507A	N161	N840	N842	N789	gen_Steel	.3125	0	0	
464	P508	N840	N841	N843	N842	gen_Steel	.3125	0	0	
465	P509	N841	N212A	N844	N843	gen_Steel	.3125	0	0	
466	P510	N789	N842	N845	N791	gen_Steel	.3125	0	0	
467	P511	N842	N843	N846	N845	gen_Steel	.3125	0	0	
468	P512	N843	N844	N847	N846	gen_Steel	.3125	0	0	
469	P513	N791	N845	N848	N793	gen_Steel	.3125	0	0	
470	P514	N845	N846	N849	N848	gen_Steel	.3125	0	0	
471	P515	N846	N847	N850	N849	gen_Steel	.3125	0	0	

Plates (Continued)

	Label	A Joint	B Joint	C Joint	D Joint	Material	Thickness[in]	R Loc	S Loc	Inactive
472	P516	N793	N848	N829	N153	gen_Steel	.3125	0	0	
473	P517	N848	N849	N830	N829	gen_Steel	.3125	0	0	
474	P518	N849	N850	N210A	N830	gen_Steel	.3125	0	0	
475	P518A	N177	N851	N854	N853	gen_Steel	.3125	0	0	
476	P519	N851	N852	N855	N854	gen_Steel	.3125	0	0	
477	P520	N852	N216A	N856	N855	gen_Steel	.3125	0	0	
478	P521	N853	N854	N858	N857	gen_Steel	.3125	0	0	
479	P522	N854	N855	N859	N858	gen_Steel	.3125	0	0	
480	P523	N855	N856	N860	N859	gen_Steel	.3125	0	0	
481	P524	N857	N858	N862	N861	gen_Steel	.3125	0	0	
482	P525	N858	N859	N863	N862	gen_Steel	.3125	0	0	
483	P526	N859	N860	N864	N863	gen_Steel	.3125	0	0	
484	P527	N861	N862	N865	N169	gen_Steel	.3125	0	0	
485	P528	N862	N863	N866	N865	gen_Steel	.3125	0	0	
486	P529	N863	N864	N214A	N866	gen_Steel	.3125	0	0	
487	P529A	N201B	N867	N870	N869	gen_Steel	.3125	0	0	
488	P530	N867	N868	N871	N870	gen_Steel	.3125	0	0	
489	P531	N868	N204B	N872	N871	gen_Steel	.3125	0	0	
490	P532	N869	N870	N874	N873	gen_Steel	.3125	0	0	
491	P533	N870	N871	N875	N874	gen_Steel	.3125	0	0	
492	P534	N871	N872	N876	N875	gen_Steel	.3125	0	0	
493	P535	N873	N874	N878	N877	gen_Steel	.3125	0	0	
494	P536	N874	N875	N879	N878	gen_Steel	.3125	0	0	
495	P537	N875	N876	N880	N879	gen_Steel	.3125	0	0	
496	P538	N877	N878	N881	N185	gen_Steel	.3125	0	0	
497	P539	N878	N879	N882	N881	gen_Steel	.3125	0	0	
498	P540	N879	N880	N218A	N882	gen_Steel	.3125	0	0	
499	P540A	N179	N177	N853	N883	gen_Steel	.3125	0	0	
500	P541	N883	N853	N857	N884	gen_Steel	.3125	0	0	
501	P542	N884	N857	N861	N885	gen_Steel	.3125	0	0	
502	P543	N885	N861	N169	N178	gen_Steel	.3125	0	0	
503	P543A	N195	N201B	N869	N886	gen_Steel	.3125	0	0	
504	P544	N886	N869	N873	N887	gen_Steel	.3125	0	0	
505	P545	N887	N873	N877	N888	gen_Steel	.3125	0	0	
506	P546	N888	N877	N185	N180	gen_Steel	.3125	0	0	
507	P546A	N180	N185	N890	N889	gen_Steel	.3125	0	0	
508	P547	N889	N890	N892	N891	gen_Steel	.3125	0	0	
509	P548	N891	N892	N894	N893	gen_Steel	.3125	0	0	
510	P549	N893	N894	N896	N895	gen_Steel	.3125	0	0	
511	P550	N895	N896	N177	N179	gen_Steel	.3125	0	0	
512	P550A	N185	N881	N897	N890	gen_Steel	.3125	0	0	
513	P551	N881	N882	N898	N897	gen_Steel	.3125	0	0	
514	P552	N882	N218A	N899	N898	gen_Steel	.3125	0	0	
515	P553	N890	N897	N900	N892	gen_Steel	.3125	0	0	
516	P554	N897	N898	N901	N900	gen_Steel	.3125	0	0	
517	P555	N898	N899	N902	N901	gen_Steel	.3125	0	0	
518	P556	N892	N900	N903	N894	gen_Steel	.3125	0	0	
519	P557	N900	N901	N904	N903	gen_Steel	.3125	0	0	
520	P558	N901	N902	N905	N904	gen_Steel	.3125	0	0	
521	P559	N894	N903	N906	N896	gen_Steel	.3125	0	0	
522	P560	N903	N904	N907	N906	gen_Steel	.3125	0	0	
523	P561	N904	N905	N908	N907	gen_Steel	.3125	0	0	
524	P562	N896	N906	N851	N177	gen_Steel	.3125	0	0	
525	P563	N906	N907	N852	N851	gen_Steel	.3125	0	0	
526	P564	N907	N908	N216A	N852	gen_Steel	.3125	0	0	
527	P564A	N213	N909	N914	N913	gen_Steel	.3125	0	0	
528	P565	N909	N910	N915	N914	gen_Steel	.3125	0	0	
529	P566	N910	N911	N916	N915	gen_Steel	.3125	0	0	
530	P567	N911	N912	N917	N916	gen_Steel	.3125	0	0	

Plates (Continued)

	Label	A Joint	B Joint	C Joint	D Joint	Material	Thickness[in]	R Loc	S Loc	Inactive
531	P568	N912	N214	N523	N917	gen_Steel	.3125	0	0	
532	P569	N913	N914	N919	N918	gen_Steel	.3125	0	0	
533	P570	N914	N915	N920	N919	gen_Steel	.3125	0	0	
534	P571	N915	N916	N921	N920	gen_Steel	.3125	0	0	
535	P572	N916	N917	N922	N921	gen_Steel	.3125	0	0	
536	P573	N917	N523	N527	N922	gen_Steel	.3125	0	0	
537	P574	N918	N919	N924	N923	gen_Steel	.3125	0	0	
538	P575	N919	N920	N925	N924	gen_Steel	.3125	0	0	
539	P576	N920	N921	N926	N925	gen_Steel	.3125	0	0	
540	P577	N921	N922	N927	N926	gen_Steel	.3125	0	0	
541	P578	N922	N527	N531	N927	gen_Steel	.3125	0	0	
542	P579	N923	N924	N928	N215	gen_Steel	.3125	0	0	
543	P580	N924	N925	N929	N928	gen_Steel	.3125	0	0	
544	P581	N925	N926	N930	N929	gen_Steel	.3125	0	0	
545	P582	N926	N927	N931	N930	gen_Steel	.3125	0	0	
546	P583	N927	N531	N216	N931	gen_Steel	.3125	0	0	
547	P583A	N211	N932	N937	N936	gen_Steel	.3125	0	0	
548	P584	N932	N933	N938	N937	gen_Steel	.3125	0	0	
549	P585	N933	N934	N939	N938	gen_Steel	.3125	0	0	
550	P586	N934	N935	N940	N939	gen_Steel	.3125	0	0	
551	P587	N935	N212	N355	N940	gen_Steel	.3125	0	0	
552	P588	N936	N937	N942	N941	gen_Steel	.3125	0	0	
553	P589	N937	N938	N943	N942	gen_Steel	.3125	0	0	
554	P590	N938	N939	N944	N943	gen_Steel	.3125	0	0	
555	P591	N939	N940	N945	N944	gen_Steel	.3125	0	0	
556	P592	N940	N355	N324	N945	gen_Steel	.3125	0	0	
557	P593	N941	N942	N947	N946	gen_Steel	.3125	0	0	
558	P594	N942	N943	N948	N947	gen_Steel	.3125	0	0	
559	P595	N943	N944	N949	N948	gen_Steel	.3125	0	0	
560	P596	N944	N945	N950	N949	gen_Steel	.3125	0	0	
561	P597	N945	N324	N351	N950	gen_Steel	.3125	0	0	
562	P598	N946	N947	N909	N213	gen_Steel	.3125	0	0	
563	P599	N947	N948	N910	N909	gen_Steel	.3125	0	0	
564	P600	N948	N949	N911	N910	gen_Steel	.3125	0	0	
565	P601	N949	N950	N912	N911	gen_Steel	.3125	0	0	
566	P602	N950	N351	N214	N912	gen_Steel	.3125	0	0	
567	P602A	N209	N951	N956	N955	gen_Steel	.3125	0	0	
568	P603	N951	N952	N957	N956	gen_Steel	.3125	0	0	
569	P604	N952	N953	N958	N957	gen_Steel	.3125	0	0	
570	P605	N953	N954	N959	N958	gen_Steel	.3125	0	0	
571	P606	N954	N210	N509	N959	gen_Steel	.3125	0	0	
572	P607	N955	N956	N961	N960	gen_Steel	.3125	0	0	
573	P608	N956	N957	N962	N961	gen_Steel	.3125	0	0	
574	P609	N957	N958	N963	N962	gen_Steel	.3125	0	0	
575	P610	N958	N959	N964	N963	gen_Steel	.3125	0	0	
576	P611	N959	N509	N513	N964	gen_Steel	.3125	0	0	
577	P612	N960	N961	N966	N965	gen_Steel	.3125	0	0	
578	P613	N961	N962	N967	N966	gen_Steel	.3125	0	0	
579	P614	N962	N963	N968	N967	gen_Steel	.3125	0	0	
580	P615	N963	N964	N969	N968	gen_Steel	.3125	0	0	
581	P616	N964	N513	N517	N969	gen_Steel	.3125	0	0	
582	P617	N965	N966	N932	N211	gen_Steel	.3125	0	0	
583	P618	N966	N967	N933	N932	gen_Steel	.3125	0	0	
584	P619	N967	N968	N934	N933	gen_Steel	.3125	0	0	
585	P620	N968	N969	N935	N934	gen_Steel	.3125	0	0	
586	P621	N969	N517	N212	N935	gen_Steel	.3125	0	0	
587	P621A	N207	N970	N975	N974	gen_Steel	.3125	0	0	
588	P622	N970	N971	N976	N975	gen_Steel	.3125	0	0	
589	P623	N971	N972	N977	N976	gen_Steel	.3125	0	0	

Plates (Continued)

	Label	A Joint	B Joint	C Joint	D Joint	Material	Thickness[in]	R Loc	S Loc	Inactive
590	P624	N972	N973	N978	N977	gen_Steel	.3125	0	0	
591	P625	N973	N208	N608	N978	gen_Steel	.3125	0	0	
592	P626	N974	N975	N980	N979	gen_Steel	.3125	0	0	
593	P627	N975	N976	N981	N980	gen_Steel	.3125	0	0	
594	P628	N976	N977	N982	N981	gen_Steel	.3125	0	0	
595	P629	N977	N978	N983	N982	gen_Steel	.3125	0	0	
596	P630	N978	N608	N611	N983	gen_Steel	.3125	0	0	
597	P631	N979	N980	N985	N984	gen_Steel	.3125	0	0	
598	P632	N980	N981	N986	N985	gen_Steel	.3125	0	0	
599	P633	N981	N982	N987	N986	gen_Steel	.3125	0	0	
600	P634	N982	N983	N988	N987	gen_Steel	.3125	0	0	
601	P635	N983	N611	N614	N988	gen_Steel	.3125	0	0	
602	P636	N984	N985	N951	N209	gen_Steel	.3125	0	0	
603	P637	N985	N986	N952	N951	gen_Steel	.3125	0	0	
604	P638	N986	N987	N953	N952	gen_Steel	.3125	0	0	
605	P639	N987	N988	N954	N953	gen_Steel	.3125	0	0	
606	P640	N988	N614	N210	N954	gen_Steel	.3125	0	0	
607	P640A	N205	N989	N994	N993	gen_Steel	.3125	0	0	
608	P641	N989	N990	N995	N994	gen_Steel	.3125	0	0	
609	P642	N990	N991	N996	N995	gen_Steel	.3125	0	0	
610	P643	N991	N992	N997	N996	gen_Steel	.3125	0	0	
611	P644	N992	N206	N619	N997	gen_Steel	.3125	0	0	
612	P645	N993	N994	N999	N998	gen_Steel	.3125	0	0	
613	P646	N994	N995	N1000	N999	gen_Steel	.3125	0	0	
614	P647	N995	N996	N1001	N1000	gen_Steel	.3125	0	0	
615	P648	N996	N997	N1002	N1001	gen_Steel	.3125	0	0	
616	P649	N997	N619	N622	N1002	gen_Steel	.3125	0	0	
617	P650	N998	N999	N1004	N1003	gen_Steel	.3125	0	0	
618	P651	N999	N1000	N1005	N1004	gen_Steel	.3125	0	0	
619	P652	N1000	N1001	N1006	N1005	gen_Steel	.3125	0	0	
620	P653	N1001	N1002	N1007	N1006	gen_Steel	.3125	0	0	
621	P654	N1002	N622	N625	N1007	gen_Steel	.3125	0	0	
622	P655	N1003	N1004	N970	N207	gen_Steel	.3125	0	0	
623	P656	N1004	N1005	N971	N970	gen_Steel	.3125	0	0	
624	P657	N1005	N1006	N972	N971	gen_Steel	.3125	0	0	
625	P658	N1006	N1007	N973	N972	gen_Steel	.3125	0	0	
626	P659	N1007	N625	N208	N973	gen_Steel	.3125	0	0	
627	P659A	N203	N1008	N1013	N1012	gen_Steel	.3125	0	0	
628	P660	N1008	N1009	N1014	N1013	gen_Steel	.3125	0	0	
629	P661	N1009	N1010	N1015	N1014	gen_Steel	.3125	0	0	
630	P662	N1010	N1011	N1016	N1015	gen_Steel	.3125	0	0	
631	P663	N1011	N204	N630	N1016	gen_Steel	.3125	0	0	
632	P664	N1012	N1013	N1018	N1017	gen_Steel	.3125	0	0	
633	P665	N1013	N1014	N1019	N1018	gen_Steel	.3125	0	0	
634	P666	N1014	N1015	N1020	N1019	gen_Steel	.3125	0	0	
635	P667	N1015	N1016	N1021	N1020	gen_Steel	.3125	0	0	
636	P668	N1016	N630	N633	N1021	gen_Steel	.3125	0	0	
637	P669	N1017	N1018	N1023	N1022	gen_Steel	.3125	0	0	
638	P670	N1018	N1019	N1024	N1023	gen_Steel	.3125	0	0	
639	P671	N1019	N1020	N1025	N1024	gen_Steel	.3125	0	0	
640	P672	N1020	N1021	N1026	N1025	gen_Steel	.3125	0	0	
641	P673	N1021	N633	N636	N1026	gen_Steel	.3125	0	0	
642	P674	N1022	N1023	N989	N205	gen_Steel	.3125	0	0	
643	P675	N1023	N1024	N990	N989	gen_Steel	.3125	0	0	
644	P676	N1024	N1025	N991	N990	gen_Steel	.3125	0	0	
645	P677	N1025	N1026	N992	N991	gen_Steel	.3125	0	0	
646	P678	N1026	N636	N206	N992	gen_Steel	.3125	0	0	
647	P678A	N201	N1027	N1032	N1031	gen_Steel	.3125	0	0	
648	P679	N1027	N1028	N1033	N1032	gen_Steel	.3125	0	0	

Plates (Continued)

	Label	A Joint	B Joint	C Joint	D Joint	Material	Thickness[in]	R Loc	S Loc	Inactive
649	P680	N1028	N1029	N1034	N1033	gen_Steel	.3125	0	0	
650	P681	N1029	N1030	N1035	N1034	gen_Steel	.3125	0	0	
651	P682	N1030	N202	N640	N1035	gen_Steel	.3125	0	0	
652	P683	N1031	N1032	N1037	N1036	gen_Steel	.3125	0	0	
653	P684	N1032	N1033	N1038	N1037	gen_Steel	.3125	0	0	
654	P685	N1033	N1034	N1039	N1038	gen_Steel	.3125	0	0	
655	P686	N1034	N1035	N1040	N1039	gen_Steel	.3125	0	0	
656	P687	N1035	N640	N643	N1040	gen_Steel	.3125	0	0	
657	P688	N1036	N1037	N1042	N1041	gen_Steel	.3125	0	0	
658	P689	N1037	N1038	N1043	N1042	gen_Steel	.3125	0	0	
659	P690	N1038	N1039	N1044	N1043	gen_Steel	.3125	0	0	
660	P691	N1039	N1040	N1045	N1044	gen_Steel	.3125	0	0	
661	P692	N1040	N643	N646	N1045	gen_Steel	.3125	0	0	
662	P693	N1041	N1042	N1008	N203	gen_Steel	.3125	0	0	
663	P694	N1042	N1043	N1009	N1008	gen_Steel	.3125	0	0	
664	P695	N1043	N1044	N1010	N1009	gen_Steel	.3125	0	0	
665	P696	N1044	N1045	N1011	N1010	gen_Steel	.3125	0	0	
666	P697	N1045	N646	N204	N1011	gen_Steel	.3125	0	0	
667	P697A	N199	N1046	N1051	N1050	gen_Steel	.3125	0	0	
668	P698	N1046	N1047	N1052	N1051	gen_Steel	.3125	0	0	
669	P699	N1047	N1048	N1053	N1052	gen_Steel	.3125	0	0	
670	P700	N1048	N1049	N1054	N1053	gen_Steel	.3125	0	0	
671	P701	N1049	N200	N398	N1054	gen_Steel	.3125	0	0	
672	P702	N1050	N1051	N1056	N1055	gen_Steel	.3125	0	0	
673	P703	N1051	N1052	N1057	N1056	gen_Steel	.3125	0	0	
674	P704	N1052	N1053	N1058	N1057	gen_Steel	.3125	0	0	
675	P705	N1053	N1054	N1059	N1058	gen_Steel	.3125	0	0	
676	P706	N1054	N398	N329	N1059	gen_Steel	.3125	0	0	
677	P707	N1055	N1056	N1061	N1060	gen_Steel	.3125	0	0	
678	P708	N1056	N1057	N1062	N1061	gen_Steel	.3125	0	0	
679	P709	N1057	N1058	N1063	N1062	gen_Steel	.3125	0	0	
680	P710	N1058	N1059	N1064	N1063	gen_Steel	.3125	0	0	
681	P711	N1059	N329	N394	N1064	gen_Steel	.3125	0	0	
682	P712	N1060	N1061	N1027	N201	gen_Steel	.3125	0	0	
683	P713	N1061	N1062	N1028	N1027	gen_Steel	.3125	0	0	
684	P714	N1062	N1063	N1029	N1028	gen_Steel	.3125	0	0	
685	P715	N1063	N1064	N1030	N1029	gen_Steel	.3125	0	0	
686	P716	N1064	N394	N202	N1030	gen_Steel	.3125	0	0	
687	P716A	N197	N1065	N1070	N1069	gen_Steel	.3125	0	0	
688	P717	N1065	N1066	N1071	N1070	gen_Steel	.3125	0	0	
689	P718	N1066	N1067	N1072	N1071	gen_Steel	.3125	0	0	
690	P719	N1067	N1068	N1073	N1072	gen_Steel	.3125	0	0	
691	P720	N1068	N198	N671	N1073	gen_Steel	.3125	0	0	
692	P721	N1069	N1070	N1075	N1074	gen_Steel	.3125	0	0	
693	P722	N1070	N1071	N1076	N1075	gen_Steel	.3125	0	0	
694	P723	N1071	N1072	N1077	N1076	gen_Steel	.3125	0	0	
695	P724	N1072	N1073	N1078	N1077	gen_Steel	.3125	0	0	
696	P725	N1073	N671	N674	N1078	gen_Steel	.3125	0	0	
697	P726	N1074	N1075	N1080	N1079	gen_Steel	.3125	0	0	
698	P727	N1075	N1076	N1081	N1080	gen_Steel	.3125	0	0	
699	P728	N1076	N1077	N1082	N1081	gen_Steel	.3125	0	0	
700	P729	N1077	N1078	N1083	N1082	gen_Steel	.3125	0	0	
701	P730	N1078	N674	N677	N1083	gen_Steel	.3125	0	0	
702	P731	N1079	N1080	N1046	N199	gen_Steel	.3125	0	0	
703	P732	N1080	N1081	N1047	N1046	gen_Steel	.3125	0	0	
704	P733	N1081	N1082	N1048	N1047	gen_Steel	.3125	0	0	
705	P734	N1082	N1083	N1049	N1048	gen_Steel	.3125	0	0	
706	P735	N1083	N677	N200	N1049	gen_Steel	.3125	0	0	
707	P735A	N216A	N1084	N1088	N856	gen_Steel	.3125	0	0	

Plates (Continued)

	Label	A Joint	B Joint	C Joint	D Joint	Material	Thickness[in]	R Loc	S Loc	Inactive
708	P736	N1084	N1085	N1089	N1088	gen_Steel	.3125	0	0	
709	P737	N1085	N1086	N1090	N1089	gen_Steel	.3125	0	0	
710	P738	N1086	N1087	N1091	N1090	gen_Steel	.3125	0	0	
711	P739	N1087	N217A	N1092	N1091	gen_Steel	.3125	0	0	
712	P740	N856	N1088	N1093	N860	gen_Steel	.3125	0	0	
713	P741	N1088	N1089	N1094	N1093	gen_Steel	.3125	0	0	
714	P742	N1089	N1090	N1095	N1094	gen_Steel	.3125	0	0	
715	P743	N1090	N1091	N1096	N1095	gen_Steel	.3125	0	0	
716	P744	N1091	N1092	N1097	N1096	gen_Steel	.3125	0	0	
717	P745	N860	N1093	N1098	N864	gen_Steel	.3125	0	0	
718	P746	N1093	N1094	N1099	N1098	gen_Steel	.3125	0	0	
719	P747	N1094	N1095	N1100	N1099	gen_Steel	.3125	0	0	
720	P748	N1095	N1096	N1101	N1100	gen_Steel	.3125	0	0	
721	P749	N1096	N1097	N1102	N1101	gen_Steel	.3125	0	0	
722	P750	N864	N1098	N1103	N214A	gen_Steel	.3125	0	0	
723	P751	N1098	N1099	N1104	N1103	gen_Steel	.3125	0	0	
724	P752	N1099	N1100	N1105	N1104	gen_Steel	.3125	0	0	
725	P753	N1100	N1101	N1106	N1105	gen_Steel	.3125	0	0	
726	P754	N1101	N1102	N215A	N1106	gen_Steel	.3125	0	0	
727	P754A	N214A	N1103	N1107	N487	gen_Steel	.3125	0	0	
728	P755	N1103	N1104	N1108	N1107	gen_Steel	.3125	0	0	
729	P756	N1104	N1105	N1109	N1108	gen_Steel	.3125	0	0	
730	P757	N1105	N1106	N1110	N1109	gen_Steel	.3125	0	0	
731	P758	N1106	N215A	N1111	N1110	gen_Steel	.3125	0	0	
732	P759	N487	N1107	N1112	N341	gen_Steel	.3125	0	0	
733	P760	N1107	N1108	N1113	N1112	gen_Steel	.3125	0	0	
734	P761	N1108	N1109	N1114	N1113	gen_Steel	.3125	0	0	
735	P762	N1109	N1110	N1115	N1114	gen_Steel	.3125	0	0	
736	P763	N1110	N1111	N1116	N1115	gen_Steel	.3125	0	0	
737	P764	N341	N1112	N1117	N483	gen_Steel	.3125	0	0	
738	P765	N1112	N1113	N1118	N1117	gen_Steel	.3125	0	0	
739	P766	N1113	N1114	N1119	N1118	gen_Steel	.3125	0	0	
740	P767	N1114	N1115	N1120	N1119	gen_Steel	.3125	0	0	
741	P768	N1115	N1116	N1121	N1120	gen_Steel	.3125	0	0	
742	P769	N483	N1117	N1122	N212A	gen_Steel	.3125	0	0	
743	P770	N1117	N1118	N1123	N1122	gen_Steel	.3125	0	0	
744	P771	N1118	N1119	N1124	N1123	gen_Steel	.3125	0	0	
745	P772	N1119	N1120	N1125	N1124	gen_Steel	.3125	0	0	
746	P773	N1120	N1121	N213A	N1125	gen_Steel	.3125	0	0	
747	P773A	N212A	N1122	N1126	N844	gen_Steel	.3125	0	0	
748	P774	N1122	N1123	N1127	N1126	gen_Steel	.3125	0	0	
749	P775	N1123	N1124	N1128	N1127	gen_Steel	.3125	0	0	
750	P776	N1124	N1125	N1129	N1128	gen_Steel	.3125	0	0	
751	P777	N1125	N213A	N1130	N1129	gen_Steel	.3125	0	0	
752	P778	N844	N1126	N1131	N847	gen_Steel	.3125	0	0	
753	P779	N1126	N1127	N1132	N1131	gen_Steel	.3125	0	0	
754	P780	N1127	N1128	N1133	N1132	gen_Steel	.3125	0	0	
755	P781	N1128	N1129	N1134	N1133	gen_Steel	.3125	0	0	
756	P782	N1129	N1130	N1135	N1134	gen_Steel	.3125	0	0	
757	P783	N847	N1131	N1136	N850	gen_Steel	.3125	0	0	
758	P784	N1131	N1132	N1137	N1136	gen_Steel	.3125	0	0	
759	P785	N1132	N1133	N1138	N1137	gen_Steel	.3125	0	0	
760	P786	N1133	N1134	N1139	N1138	gen_Steel	.3125	0	0	
761	P787	N1134	N1135	N1140	N1139	gen_Steel	.3125	0	0	
762	P788	N850	N1136	N1141	N210A	gen_Steel	.3125	0	0	
763	P789	N1136	N1137	N1142	N1141	gen_Steel	.3125	0	0	
764	P790	N1137	N1138	N1143	N1142	gen_Steel	.3125	0	0	
765	P791	N1138	N1139	N1144	N1143	gen_Steel	.3125	0	0	
766	P792	N1139	N1140	N211A	N1144	gen_Steel	.3125	0	0	

Plates (Continued)

	Label	A Joint	B Joint	C Joint	D Joint	Material	Thickness[in]	R Loc	S Loc	Inactive
767	P792A	N210A	N1141	N1145	N833	gen_Steel	.3125	0	0	
768	P793	N1141	N1142	N1146	N1145	gen_Steel	.3125	0	0	
769	P794	N1142	N1143	N1147	N1146	gen_Steel	.3125	0	0	
770	P795	N1143	N1144	N1148	N1147	gen_Steel	.3125	0	0	
771	P796	N1144	N211A	N1149	N1148	gen_Steel	.3125	0	0	
772	P797	N833	N1145	N1150	N836	gen_Steel	.3125	0	0	
773	P798	N1145	N1146	N1151	N1150	gen_Steel	.3125	0	0	
774	P799	N1146	N1147	N1152	N1151	gen_Steel	.3125	0	0	
775	P800	N1147	N1148	N1153	N1152	gen_Steel	.3125	0	0	
776	P801	N1148	N1149	N1154	N1153	gen_Steel	.3125	0	0	
777	P802	N836	N1150	N1155	N839	gen_Steel	.3125	0	0	
778	P803	N1150	N1151	N1156	N1155	gen_Steel	.3125	0	0	
779	P804	N1151	N1152	N1157	N1156	gen_Steel	.3125	0	0	
780	P805	N1152	N1153	N1158	N1157	gen_Steel	.3125	0	0	
781	P806	N1153	N1154	N1159	N1158	gen_Steel	.3125	0	0	
782	P807	N839	N1155	N1160	N208A	gen_Steel	.3125	0	0	
783	P808	N1155	N1156	N1161	N1160	gen_Steel	.3125	0	0	
784	P809	N1156	N1157	N1162	N1161	gen_Steel	.3125	0	0	
785	P810	N1157	N1158	N1163	N1162	gen_Steel	.3125	0	0	
786	P811	N1158	N1159	N209A	N1163	gen_Steel	.3125	0	0	
787	P811A	N208A	N1160	N1164	N822	gen_Steel	.3125	0	0	
788	P812	N1160	N1161	N1165	N1164	gen_Steel	.3125	0	0	
789	P813	N1161	N1162	N1166	N1165	gen_Steel	.3125	0	0	
790	P814	N1162	N1163	N1167	N1166	gen_Steel	.3125	0	0	
791	P815	N1163	N209A	N1168	N1167	gen_Steel	.3125	0	0	
792	P816	N822	N1164	N1169	N825	gen_Steel	.3125	0	0	
793	P817	N1164	N1165	N1170	N1169	gen_Steel	.3125	0	0	
794	P818	N1165	N1166	N1171	N1170	gen_Steel	.3125	0	0	
795	P819	N1166	N1167	N1172	N1171	gen_Steel	.3125	0	0	
796	P820	N1167	N1168	N1173	N1172	gen_Steel	.3125	0	0	
797	P821	N825	N1169	N1174	N828	gen_Steel	.3125	0	0	
798	P822	N1169	N1170	N1175	N1174	gen_Steel	.3125	0	0	
799	P823	N1170	N1171	N1176	N1175	gen_Steel	.3125	0	0	
800	P824	N1171	N1172	N1177	N1176	gen_Steel	.3125	0	0	
801	P825	N1172	N1173	N1178	N1177	gen_Steel	.3125	0	0	
802	P826	N828	N1174	N1179	N206A	gen_Steel	.3125	0	0	
803	P827	N1174	N1175	N1180	N1179	gen_Steel	.3125	0	0	
804	P828	N1175	N1176	N1181	N1180	gen_Steel	.3125	0	0	
805	P829	N1176	N1177	N1182	N1181	gen_Steel	.3125	0	0	
806	P830	N1177	N1178	N207A	N1182	gen_Steel	.3125	0	0	
807	P830A	N206A	N1179	N1183	N811	gen_Steel	.3125	0	0	
808	P831	N1179	N1180	N1184	N1183	gen_Steel	.3125	0	0	
809	P832	N1180	N1181	N1185	N1184	gen_Steel	.3125	0	0	
810	P833	N1181	N1182	N1186	N1185	gen_Steel	.3125	0	0	
811	P834	N1182	N207A	N1187	N1186	gen_Steel	.3125	0	0	
812	P835	N811	N1183	N1188	N814	gen_Steel	.3125	0	0	
813	P836	N1183	N1184	N1189	N1188	gen_Steel	.3125	0	0	
814	P837	N1184	N1185	N1190	N1189	gen_Steel	.3125	0	0	
815	P838	N1185	N1186	N1191	N1190	gen_Steel	.3125	0	0	
816	P839	N1186	N1187	N1192	N1191	gen_Steel	.3125	0	0	
817	P840	N814	N1188	N1193	N817	gen_Steel	.3125	0	0	
818	P841	N1188	N1189	N1194	N1193	gen_Steel	.3125	0	0	
819	P842	N1189	N1190	N1195	N1194	gen_Steel	.3125	0	0	
820	P843	N1190	N1191	N1196	N1195	gen_Steel	.3125	0	0	
821	P844	N1191	N1192	N1197	N1196	gen_Steel	.3125	0	0	
822	P845	N817	N1193	N1198	N204A	gen_Steel	.3125	0	0	
823	P846	N1193	N1194	N1199	N1198	gen_Steel	.3125	0	0	
824	P847	N1194	N1195	N1200	N1199	gen_Steel	.3125	0	0	
825	P848	N1195	N1196	N1201	N1200	gen_Steel	.3125	0	0	

Plates (Continued)

	Label	A Joint	B Joint	C Joint	D Joint	Material	Thickness[in]	R Loc	S Loc	Inactive
826	P849	N1196	N1197	N205A	N1201	gen_Steel	.3125	0	0	
827	P849A	N204A	N1198	N1202	N798	gen_Steel	.3125	0	0	
828	P850	N1198	N1199	N1203	N1202	gen_Steel	.3125	0	0	
829	P851	N1199	N1200	N1204	N1203	gen_Steel	.3125	0	0	
830	P852	N1200	N1201	N1205	N1204	gen_Steel	.3125	0	0	
831	P853	N1201	N205A	N1206	N1205	gen_Steel	.3125	0	0	
832	P854	N798	N1202	N1207	N801	gen_Steel	.3125	0	0	
833	P855	N1202	N1203	N1208	N1207	gen_Steel	.3125	0	0	
834	P856	N1203	N1204	N1209	N1208	gen_Steel	.3125	0	0	
835	P857	N1204	N1205	N1210	N1209	gen_Steel	.3125	0	0	
836	P858	N1205	N1206	N1211	N1210	gen_Steel	.3125	0	0	
837	P859	N801	N1207	N1212	N804	gen_Steel	.3125	0	0	
838	P860	N1207	N1208	N1213	N1212	gen_Steel	.3125	0	0	
839	P861	N1208	N1209	N1214	N1213	gen_Steel	.3125	0	0	
840	P862	N1209	N1210	N1215	N1214	gen_Steel	.3125	0	0	
841	P863	N1210	N1211	N1216	N1215	gen_Steel	.3125	0	0	
842	P864	N804	N1212	N1217	N202A	gen_Steel	.3125	0	0	
843	P865	N1212	N1213	N1218	N1217	gen_Steel	.3125	0	0	
844	P866	N1213	N1214	N1219	N1218	gen_Steel	.3125	0	0	
845	P867	N1214	N1215	N1220	N1219	gen_Steel	.3125	0	0	
846	P868	N1215	N1216	N203A	N1220	gen_Steel	.3125	0	0	
847	P868A	N202A	N1217	N1221	N443	gen_Steel	.3125	0	0	
848	P869	N1217	N1218	N1222	N1221	gen_Steel	.3125	0	0	
849	P870	N1218	N1219	N1223	N1222	gen_Steel	.3125	0	0	
850	P871	N1219	N1220	N1224	N1223	gen_Steel	.3125	0	0	
851	P872	N1220	N203A	N1225	N1224	gen_Steel	.3125	0	0	
852	P873	N443	N1221	N1226	N336	gen_Steel	.3125	0	0	
853	P874	N1221	N1222	N1227	N1226	gen_Steel	.3125	0	0	
854	P875	N1222	N1223	N1228	N1227	gen_Steel	.3125	0	0	
855	P876	N1223	N1224	N1229	N1228	gen_Steel	.3125	0	0	
856	P877	N1224	N1225	N1230	N1229	gen_Steel	.3125	0	0	
857	P878	N336	N1226	N1231	N439	gen_Steel	.3125	0	0	
858	P879	N1226	N1227	N1232	N1231	gen_Steel	.3125	0	0	
859	P880	N1227	N1228	N1233	N1232	gen_Steel	.3125	0	0	
860	P881	N1228	N1229	N1234	N1233	gen_Steel	.3125	0	0	
861	P882	N1229	N1230	N1235	N1234	gen_Steel	.3125	0	0	
862	P883	N439	N1231	N1236	N200A	gen_Steel	.3125	0	0	
863	P884	N1231	N1232	N1237	N1236	gen_Steel	.3125	0	0	
864	P885	N1232	N1233	N1238	N1237	gen_Steel	.3125	0	0	
865	P886	N1233	N1234	N1239	N1238	gen_Steel	.3125	0	0	
866	P887	N1234	N1235	N201A	N1239	gen_Steel	.3125	0	0	
867	P887A	N200A	N1236	N1240	N752	gen_Steel	.3125	0	0	
868	P888	N1236	N1237	N1241	N1240	gen_Steel	.3125	0	0	
869	P889	N1237	N1238	N1242	N1241	gen_Steel	.3125	0	0	
870	P890	N1238	N1239	N1243	N1242	gen_Steel	.3125	0	0	
871	P891	N1239	N201A	N1244	N1243	gen_Steel	.3125	0	0	
872	P892	N752	N1240	N1245	N756	gen_Steel	.3125	0	0	
873	P893	N1240	N1241	N1246	N1245	gen_Steel	.3125	0	0	
874	P894	N1241	N1242	N1247	N1246	gen_Steel	.3125	0	0	
875	P895	N1242	N1243	N1248	N1247	gen_Steel	.3125	0	0	
876	P896	N1243	N1244	N1249	N1248	gen_Steel	.3125	0	0	
877	P897	N756	N1245	N1250	N760	gen_Steel	.3125	0	0	
878	P898	N1245	N1246	N1251	N1250	gen_Steel	.3125	0	0	
879	P899	N1246	N1247	N1252	N1251	gen_Steel	.3125	0	0	
880	P900	N1247	N1248	N1253	N1252	gen_Steel	.3125	0	0	
881	P901	N1248	N1249	N1254	N1253	gen_Steel	.3125	0	0	
882	P902	N760	N1250	N1255	N198A	gen_Steel	.3125	0	0	
883	P903	N1250	N1251	N1256	N1255	gen_Steel	.3125	0	0	
884	P904	N1251	N1252	N1257	N1256	gen_Steel	.3125	0	0	

Plates (Continued)

	Label	A Joint	B Joint	C Joint	D Joint	Material	Thickness[in]	R Loc	S Loc	Inactive
885	P905	N1252	N1253	N1258	N1257	gen_Steel	.3125	0	0	
886	P906	N1253	N1254	N199A	N1258	gen_Steel	.3125	0	0	
887	P906A	N215	N928	N1260	N1259	gen_Steel	.3125	0	0	
888	P907	N928	N929	N1261	N1260	gen_Steel	.3125	0	0	
889	P908	N929	N930	N1262	N1261	gen_Steel	.3125	0	0	
890	P909	N930	N931	N1263	N1262	gen_Steel	.3125	0	0	
891	P910	N931	N216	N564	N1263	gen_Steel	.3125	0	0	
892	P911	N1259	N1260	N1265	N1264	gen_Steel	.3125	0	0	
893	P912	N1260	N1261	N1266	N1265	gen_Steel	.3125	0	0	
894	P913	N1261	N1262	N1267	N1266	gen_Steel	.3125	0	0	
895	P914	N1262	N1263	N1268	N1267	gen_Steel	.3125	0	0	
896	P915	N1263	N564	N567	N1268	gen_Steel	.3125	0	0	
897	P916	N1264	N1265	N1270	N1269	gen_Steel	.3125	0	0	
898	P917	N1265	N1266	N1271	N1270	gen_Steel	.3125	0	0	
899	P918	N1266	N1267	N1272	N1271	gen_Steel	.3125	0	0	
900	P919	N1267	N1268	N1273	N1272	gen_Steel	.3125	0	0	
901	P920	N1268	N567	N570	N1273	gen_Steel	.3125	0	0	
902	P921	N1269	N1270	N1275	N1274	gen_Steel	.3125	0	0	
903	P922	N1270	N1271	N1276	N1275	gen_Steel	.3125	0	0	
904	P923	N1271	N1272	N1277	N1276	gen_Steel	.3125	0	0	
905	P924	N1272	N1273	N1278	N1277	gen_Steel	.3125	0	0	
906	P925	N1273	N570	N573	N1278	gen_Steel	.3125	0	0	
907	P926	N1274	N1275	N1279	N217	gen_Steel	.3125	0	0	
908	P927	N1275	N1276	N1280	N1279	gen_Steel	.3125	0	0	
909	P928	N1276	N1277	N1281	N1280	gen_Steel	.3125	0	0	
910	P929	N1277	N1278	N1282	N1281	gen_Steel	.3125	0	0	
911	P930	N1278	N573	N218	N1282	gen_Steel	.3125	0	0	
912	P930A	N193	N1283	N1288	N1287	gen_Steel	.3125	0	0	
913	P931	N1283	N1284	N1289	N1288	gen_Steel	.3125	0	0	
914	P932	N1284	N1285	N1290	N1289	gen_Steel	.3125	0	0	
915	P933	N1285	N1286	N1291	N1290	gen_Steel	.3125	0	0	
916	P934	N1286	N194	N683	N1291	gen_Steel	.3125	0	0	
917	P935	N1287	N1288	N1293	N1292	gen_Steel	.3125	0	0	
918	P936	N1288	N1289	N1294	N1293	gen_Steel	.3125	0	0	
919	P937	N1289	N1290	N1295	N1294	gen_Steel	.3125	0	0	
920	P938	N1290	N1291	N1296	N1295	gen_Steel	.3125	0	0	
921	P939	N1291	N683	N686	N1296	gen_Steel	.3125	0	0	
922	P940	N1292	N1293	N1298	N1297	gen_Steel	.3125	0	0	
923	P941	N1293	N1294	N1299	N1298	gen_Steel	.3125	0	0	
924	P942	N1294	N1295	N1300	N1299	gen_Steel	.3125	0	0	
925	P943	N1295	N1296	N1301	N1300	gen_Steel	.3125	0	0	
926	P944	N1296	N686	N689	N1301	gen_Steel	.3125	0	0	
927	P945	N1297	N1298	N1303	N1302	gen_Steel	.3125	0	0	
928	P946	N1298	N1299	N1304	N1303	gen_Steel	.3125	0	0	
929	P947	N1299	N1300	N1305	N1304	gen_Steel	.3125	0	0	
930	P948	N1300	N1301	N1306	N1305	gen_Steel	.3125	0	0	
931	P949	N1301	N689	N692	N1306	gen_Steel	.3125	0	0	
932	P950	N1302	N1303	N1065	N197	gen_Steel	.3125	0	0	
933	P951	N1303	N1304	N1066	N1065	gen_Steel	.3125	0	0	
934	P952	N1304	N1305	N1067	N1066	gen_Steel	.3125	0	0	
935	P953	N1305	N1306	N1068	N1067	gen_Steel	.3125	0	0	
936	P954	N1306	N692	N198	N1068	gen_Steel	.3125	0	0	
937	P954A	N218A	N1307	N1311	N899	gen_Steel	.3125	0	0	
938	P955	N1307	N1308	N1312	N1311	gen_Steel	.3125	0	0	
939	P956	N1308	N1309	N1313	N1312	gen_Steel	.3125	0	0	
940	P957	N1309	N1310	N1314	N1313	gen_Steel	.3125	0	0	
941	P958	N1310	N219	N1315	N1314	gen_Steel	.3125	0	0	
942	P959	N899	N1311	N1316	N902	gen_Steel	.3125	0	0	
943	P960	N1311	N1312	N1317	N1316	gen_Steel	.3125	0	0	

Plates (Continued)

	Label	A Joint	B Joint	C Joint	D Joint	Material	Thickness[in]	R Loc	S Loc	Inactive
944	P961	N1312	N1313	N1318	N1317	gen_Steel	.3125	0	0	
945	P962	N1313	N1314	N1319	N1318	gen_Steel	.3125	0	0	
946	P963	N1314	N1315	N1320	N1319	gen_Steel	.3125	0	0	
947	P964	N902	N1316	N1321	N905	gen_Steel	.3125	0	0	
948	P965	N1316	N1317	N1322	N1321	gen_Steel	.3125	0	0	
949	P966	N1317	N1318	N1323	N1322	gen_Steel	.3125	0	0	
950	P967	N1318	N1319	N1324	N1323	gen_Steel	.3125	0	0	
951	P968	N1319	N1320	N1325	N1324	gen_Steel	.3125	0	0	
952	P969	N905	N1321	N1326	N908	gen_Steel	.3125	0	0	
953	P970	N1321	N1322	N1327	N1326	gen_Steel	.3125	0	0	
954	P971	N1322	N1323	N1328	N1327	gen_Steel	.3125	0	0	
955	P972	N1323	N1324	N1329	N1328	gen_Steel	.3125	0	0	
956	P973	N1324	N1325	N1330	N1329	gen_Steel	.3125	0	0	
957	P974	N908	N1326	N1084	N216A	gen_Steel	.3125	0	0	
958	P975	N1326	N1327	N1085	N1084	gen_Steel	.3125	0	0	
959	P976	N1327	N1328	N1086	N1085	gen_Steel	.3125	0	0	
960	P977	N1328	N1329	N1087	N1086	gen_Steel	.3125	0	0	
961	P978	N1329	N1330	N217A	N1087	gen_Steel	.3125	0	0	
962	P978A	N198A	N1255	N1331	N737	gen_Steel	.3125	0	0	
963	P979	N1255	N1256	N1332	N1331	gen_Steel	.3125	0	0	
964	P980	N1256	N1257	N1333	N1332	gen_Steel	.3125	0	0	
965	P981	N1257	N1258	N1334	N1333	gen_Steel	.3125	0	0	
966	P982	N1258	N199A	N1335	N1334	gen_Steel	.3125	0	0	
967	P983	N737	N1331	N1336	N740	gen_Steel	.3125	0	0	
968	P984	N1331	N1332	N1337	N1336	gen_Steel	.3125	0	0	
969	P985	N1332	N1333	N1338	N1337	gen_Steel	.3125	0	0	
970	P986	N1333	N1334	N1339	N1338	gen_Steel	.3125	0	0	
971	P987	N1334	N1335	N1340	N1339	gen_Steel	.3125	0	0	
972	P988	N740	N1336	N1341	N743	gen_Steel	.3125	0	0	
973	P989	N1336	N1337	N1342	N1341	gen_Steel	.3125	0	0	
974	P990	N1337	N1338	N1343	N1342	gen_Steel	.3125	0	0	
975	P991	N1338	N1339	N1344	N1343	gen_Steel	.3125	0	0	
976	P992	N1339	N1340	N1345	N1344	gen_Steel	.3125	0	0	
977	P993	N743	N1341	N1346	N746	gen_Steel	.3125	0	0	
978	P994	N1341	N1342	N1347	N1346	gen_Steel	.3125	0	0	
979	P995	N1342	N1343	N1348	N1347	gen_Steel	.3125	0	0	
980	P996	N1343	N1344	N1349	N1348	gen_Steel	.3125	0	0	
981	P997	N1344	N1345	N1350	N1349	gen_Steel	.3125	0	0	
982	P998	N746	N1346	N1351	N196	gen_Steel	.3125	0	0	
983	P999	N1346	N1347	N1352	N1351	gen_Steel	.3125	0	0	
984	P1000	N1347	N1348	N1353	N1352	gen_Steel	.3125	0	0	
985	P1001	N1348	N1349	N1354	N1353	gen_Steel	.3125	0	0	
986	P1002	N1349	N1350	N197A	N1354	gen_Steel	.3125	0	0	
987	P1002A	N219	N1355	N1360	N1315	gen_Steel_33	.3125	0	0	
988	P1003	N1355	N1356	N1361	N1360	gen_Steel_33	.3125	0	0	
989	P1004	N1356	N1357	N1362	N1361	gen_Steel_33	.3125	0	0	
990	P1005	N1357	N1358	N1363	N1362	gen_Steel_33	.3125	0	0	
991	P1006	N1358	N1359	N1364	N1363	gen_Steel_33	.3125	0	0	
992	P1007	N1359	N193	N1287	N1364	gen_Steel_33	.3125	0	0	
993	P1008	N1315	N1360	N1365	N1320	gen_Steel_33	.3125	0	0	
994	P1009	N1360	N1361	N1366	N1365	gen_Steel_33	.3125	0	0	
995	P1010	N1361	N1362	N1367	N1366	gen_Steel_33	.3125	0	0	
996	P1011	N1362	N1363	N1368	N1367	gen_Steel_33	.3125	0	0	
997	P1012	N1363	N1364	N1369	N1368	gen_Steel_33	.3125	0	0	
998	P1013	N1364	N1287	N1292	N1369	gen_Steel_33	.3125	0	0	
999	P1014	N1320	N1365	N1370	N1325	gen_Steel_33	.3125	0	0	
1000	P1015	N1365	N1366	N1371	N1370	gen_Steel_33	.3125	0	0	
1001	P1016	N1366	N1367	N1372	N1371	gen_Steel_33	.3125	0	0	
1002	P1017	N1367	N1368	N1373	N1372	gen_Steel_33	.3125	0	0	

Plates (Continued)

	Label	A Joint	B Joint	C Joint	D Joint	Material	Thickness[in]	R Loc	S Loc	Inactive
1003	P1018	N1368	N1369	N1374	N1373	gen_Steel_33	.3125	0	0	
1004	P1019	N1369	N1292	N1297	N1374	gen_Steel_33	.3125	0	0	
1005	P1020	N1325	N1370	N1375	N1330	gen_Steel_33	.3125	0	0	
1006	P1021	N1370	N1371	N1376	N1375	gen_Steel_33	.3125	0	0	
1007	P1022	N1371	N1372	N1377	N1376	gen_Steel_33	.3125	0	0	
1008	P1023	N1372	N1373	N1378	N1377	gen_Steel_33	.3125	0	0	
1009	P1024	N1373	N1374	N1379	N1378	gen_Steel_33	.3125	0	0	
1010	P1025	N1374	N1297	N1302	N1379	gen_Steel_33	.3125	0	0	
1011	P1026	N1330	N1375	N1380	N217A	gen_Steel_33	.3125	0	0	
1012	P1027	N1375	N1376	N1381	N1380	gen_Steel_33	.3125	0	0	
1013	P1028	N1376	N1377	N1382	N1381	gen_Steel_33	.3125	0	0	
1014	P1029	N1377	N1378	N1383	N1382	gen_Steel_33	.3125	0	0	
1015	P1030	N1378	N1379	N1384	N1383	gen_Steel_33	.3125	0	0	
1016	P1031	N1379	N1302	N197	N1384	gen_Steel_33	.3125	0	0	
1017	P1031A	N217A	N1380	N1385	N1092	gen_Steel_22	.3125	0	0	
1018	P1032	N1380	N1381	N1386	N1385	gen_Steel_22	.3125	0	0	
1019	P1033	N1381	N1382	N1387	N1386	gen_Steel_22	.3125	0	0	
1020	P1034	N1382	N1383	N1388	N1387	gen_Steel_22	.3125	0	0	
1021	P1035	N1383	N1384	N1389	N1388	gen_Steel_22	.3125	0	0	
1022	P1036	N1384	N197	N1069	N1389	gen_Steel_22	.3125	0	0	
1023	P1037	N1092	N1385	N1390	N1097	gen_Steel_22	.3125	0	0	
1024	P1038	N1385	N1386	N1391	N1390	gen_Steel_22	.3125	0	0	
1025	P1039	N1386	N1387	N1392	N1391	gen_Steel_22	.3125	0	0	
1026	P1040	N1387	N1388	N1393	N1392	gen_Steel_22	.3125	0	0	
1027	P1041	N1388	N1389	N1394	N1393	gen_Steel_22	.3125	0	0	
1028	P1042	N1389	N1069	N1074	N1394	gen_Steel_22	.3125	0	0	
1029	P1043	N1097	N1390	N1395	N1102	gen_Steel_22	.3125	0	0	
1030	P1044	N1390	N1391	N1396	N1395	gen_Steel_22	.3125	0	0	
1031	P1045	N1391	N1392	N1397	N1396	gen_Steel_22	.3125	0	0	
1032	P1046	N1392	N1393	N1398	N1397	gen_Steel_22	.3125	0	0	
1033	P1047	N1393	N1394	N1399	N1398	gen_Steel_22	.3125	0	0	
1034	P1048	N1394	N1074	N1079	N1399	gen_Steel_22	.3125	0	0	
1035	P1049	N1102	N1395	N1400	N215A	gen_Steel_22	.3125	0	0	
1036	P1050	N1395	N1396	N1401	N1400	gen_Steel_22	.3125	0	0	
1037	P1051	N1396	N1397	N1402	N1401	gen_Steel_22	.3125	0	0	
1038	P1052	N1397	N1398	N1403	N1402	gen_Steel_22	.3125	0	0	
1039	P1053	N1398	N1399	N1404	N1403	gen_Steel_22	.3125	0	0	
1040	P1054	N1399	N1079	N199	N1404	gen_Steel_22	.3125	0	0	
1041	P1054A	N215A	N1400	N1405	N1111	gen_Steel_20	.3125	0	0	
1042	P1055	N1400	N1401	N1406	N1405	gen_Steel_20	.3125	0	0	
1043	P1056	N1401	N1402	N1407	N1406	gen_Steel_20	.3125	0	0	
1044	P1057	N1402	N1403	N1408	N1407	gen_Steel_20	.3125	0	0	
1045	P1058	N1403	N1404	N1409	N1408	gen_Steel_20	.3125	0	0	
1046	P1059	N1404	N199	N1050	N1409	gen_Steel_20	.3125	0	0	
1047	P1060	N1111	N1405	N1410	N1116	gen_Steel_20	.3125	0	0	
1048	P1061	N1405	N1406	N1411	N1410	gen_Steel_20	.3125	0	0	
1049	P1062	N1406	N1407	N1412	N1411	gen_Steel_20	.3125	0	0	
1050	P1063	N1407	N1408	N1413	N1412	gen_Steel_20	.3125	0	0	
1051	P1064	N1408	N1409	N1414	N1413	gen_Steel_20	.3125	0	0	
1052	P1065	N1409	N1050	N1055	N1414	gen_Steel_20	.3125	0	0	
1053	P1066	N1116	N1410	N1415	N1121	gen_Steel_20	.3125	0	0	
1054	P1067	N1410	N1411	N1416	N1415	gen_Steel_20	.3125	0	0	
1055	P1068	N1411	N1412	N1417	N1416	gen_Steel_20	.3125	0	0	
1056	P1069	N1412	N1413	N1418	N1417	gen_Steel_20	.3125	0	0	
1057	P1070	N1413	N1414	N1419	N1418	gen_Steel_20	.3125	0	0	
1058	P1071	N1414	N1055	N1060	N1419	gen_Steel_20	.3125	0	0	
1059	P1072	N1121	N1415	N1420	N213A	gen_Steel_20	.3125	0	0	
1060	P1073	N1415	N1416	N1421	N1420	gen_Steel_20	.3125	0	0	
1061	P1074	N1416	N1417	N1422	N1421	gen_Steel_20	.3125	0	0	

Plates (Continued)

	Label	A Joint	B Joint	C Joint	D Joint	Material	Thickness[in]	R Loc	S Loc	Inactive
1062	P1075	N1417	N1418	N1423	N1422	gen_Steel_20	.3125	0	0	
1063	P1076	N1418	N1419	N1424	N1423	gen_Steel_20	.3125	0	0	
1064	P1077	N1419	N1060	N201	N1424	gen_Steel_20	.3125	0	0	
1065	P1077A	N213A	N1420	N1425	N1130	gen_Steel_22	.3125	0	0	
1066	P1078	N1420	N1421	N1426	N1425	gen_Steel_22	.3125	0	0	
1067	P1079	N1421	N1422	N1427	N1426	gen_Steel_22	.3125	0	0	
1068	P1080	N1422	N1423	N1428	N1427	gen_Steel_22	.3125	0	0	
1069	P1081	N1423	N1424	N1429	N1428	gen_Steel_22	.3125	0	0	
1070	P1082	N1424	N201	N1031	N1429	gen_Steel_22	.3125	0	0	
1071	P1083	N1130	N1425	N1430	N1135	gen_Steel_22	.3125	0	0	
1072	P1084	N1425	N1426	N1431	N1430	gen_Steel_22	.3125	0	0	
1073	P1085	N1426	N1427	N1432	N1431	gen_Steel_22	.3125	0	0	
1074	P1086	N1427	N1428	N1433	N1432	gen_Steel_22	.3125	0	0	
1075	P1087	N1428	N1429	N1434	N1433	gen_Steel_22	.3125	0	0	
1076	P1088	N1429	N1031	N1036	N1434	gen_Steel_22	.3125	0	0	
1077	P1089	N1135	N1430	N1435	N1140	gen_Steel_22	.3125	0	0	
1078	P1090	N1430	N1431	N1436	N1435	gen_Steel_22	.3125	0	0	
1079	P1091	N1431	N1432	N1437	N1436	gen_Steel_22	.3125	0	0	
1080	P1092	N1432	N1433	N1438	N1437	gen_Steel_22	.3125	0	0	
1081	P1093	N1433	N1434	N1439	N1438	gen_Steel_22	.3125	0	0	
1082	P1094	N1434	N1036	N1041	N1439	gen_Steel_22	.3125	0	0	
1083	P1095	N1140	N1435	N1440	N211A	gen_Steel_22	.3125	0	0	
1084	P1096	N1435	N1436	N1441	N1440	gen_Steel_22	.3125	0	0	
1085	P1097	N1436	N1437	N1442	N1441	gen_Steel_22	.3125	0	0	
1086	P1098	N1437	N1438	N1443	N1442	gen_Steel_22	.3125	0	0	
1087	P1099	N1438	N1439	N1444	N1443	gen_Steel_22	.3125	0	0	
1088	P1100	N1439	N1041	N203	N1444	gen_Steel_22	.3125	0	0	
1089	P1100A	N211A	N1440	N1445	N1149	gen_Steel_20	.312	0	0	
1090	P1101	N1440	N1441	N1446	N1445	gen_Steel_20	.312	0	0	
1091	P1102	N1441	N1442	N1447	N1446	gen_Steel_20	.312	0	0	
1092	P1103	N1442	N1443	N1448	N1447	gen_Steel_20	.312	0	0	
1093	P1104	N1443	N1444	N1449	N1448	gen_Steel_20	.312	0	0	
1094	P1105	N1444	N203	N1012	N1449	gen_Steel_20	.312	0	0	
1095	P1106	N1149	N1445	N1450	N1154	gen_Steel_20	.312	0	0	
1096	P1107	N1445	N1446	N1451	N1450	gen_Steel_20	.312	0	0	
1097	P1108	N1446	N1447	N1452	N1451	gen_Steel_20	.312	0	0	
1098	P1109	N1447	N1448	N1453	N1452	gen_Steel_20	.312	0	0	
1099	P1110	N1448	N1449	N1454	N1453	gen_Steel_20	.312	0	0	
1100	P1111	N1449	N1012	N1017	N1454	gen_Steel_20	.312	0	0	
1101	P1112	N1154	N1450	N1455	N1159	gen_Steel_20	.312	0	0	
1102	P1113	N1450	N1451	N1456	N1455	gen_Steel_20	.312	0	0	
1103	P1114	N1451	N1452	N1457	N1456	gen_Steel_20	.312	0	0	
1104	P1115	N1452	N1453	N1458	N1457	gen_Steel_20	.312	0	0	
1105	P1116	N1453	N1454	N1459	N1458	gen_Steel_20	.312	0	0	
1106	P1117	N1454	N1017	N1022	N1459	gen_Steel_20	.312	0	0	
1107	P1118	N1159	N1455	N1460	N209A	gen_Steel_20	.312	0	0	
1108	P1119	N1455	N1456	N1461	N1460	gen_Steel_20	.312	0	0	
1109	P1120	N1456	N1457	N1462	N1461	gen_Steel_20	.312	0	0	
1110	P1121	N1457	N1458	N1463	N1462	gen_Steel_20	.312	0	0	
1111	P1122	N1458	N1459	N1464	N1463	gen_Steel_20	.312	0	0	
1112	P1123	N1459	N1022	N205	N1464	gen_Steel_20	.312	0	0	
1113	P1123A	N209A	N1460	N1465	N1168	gen_Steel_22	.3125	0	0	
1114	P1124	N1460	N1461	N1466	N1465	gen_Steel_22	.3125	0	0	
1115	P1125	N1461	N1462	N1467	N1466	gen_Steel_22	.3125	0	0	
1116	P1126	N1462	N1463	N1468	N1467	gen_Steel_22	.3125	0	0	
1117	P1127	N1463	N1464	N1469	N1468	gen_Steel_22	.3125	0	0	
1118	P1128	N1464	N205	N993	N1469	gen_Steel_22	.3125	0	0	
1119	P1129	N1168	N1465	N1470	N1173	gen_Steel_22	.3125	0	0	
1120	P1130	N1465	N1466	N1471	N1470	gen_Steel_22	.3125	0	0	

Plates (Continued)

	Label	A Joint	B Joint	C Joint	D Joint	Material	Thickness[in]	R Loc	S Loc	Inactive
1121	P1131	N1466	N1467	N1472	N1471	gen_Steel_22	.3125	0	0	
1122	P1132	N1467	N1468	N1473	N1472	gen_Steel_22	.3125	0	0	
1123	P1133	N1468	N1469	N1474	N1473	gen_Steel_22	.3125	0	0	
1124	P1134	N1469	N993	N998	N1474	gen_Steel_22	.3125	0	0	
1125	P1135	N1173	N1470	N1475	N1178	gen_Steel_22	.3125	0	0	
1126	P1136	N1470	N1471	N1476	N1475	gen_Steel_22	.3125	0	0	
1127	P1137	N1471	N1472	N1477	N1476	gen_Steel_22	.3125	0	0	
1128	P1138	N1472	N1473	N1478	N1477	gen_Steel_22	.3125	0	0	
1129	P1139	N1473	N1474	N1479	N1478	gen_Steel_22	.3125	0	0	
1130	P1140	N1474	N998	N1003	N1479	gen_Steel_22	.3125	0	0	
1131	P1141	N1178	N1475	N1480	N207A	gen_Steel_22	.3125	0	0	
1132	P1142	N1475	N1476	N1481	N1480	gen_Steel_22	.3125	0	0	
1133	P1143	N1476	N1477	N1482	N1481	gen_Steel_22	.3125	0	0	
1134	P1144	N1477	N1478	N1483	N1482	gen_Steel_22	.3125	0	0	
1135	P1145	N1478	N1479	N1484	N1483	gen_Steel_22	.3125	0	0	
1136	P1146	N1479	N1003	N207	N1484	gen_Steel_22	.3125	0	0	
1137	P1146A	N207A	N1480	N1485	N1187	gen_Steel_20	.3125	0	0	
1138	P1147	N1480	N1481	N1486	N1485	gen_Steel_20	.3125	0	0	
1139	P1148	N1481	N1482	N1487	N1486	gen_Steel_20	.3125	0	0	
1140	P1149	N1482	N1483	N1488	N1487	gen_Steel_20	.3125	0	0	
1141	P1150	N1483	N1484	N1489	N1488	gen_Steel_20	.3125	0	0	
1142	P1151	N1484	N207	N974	N1489	gen_Steel_20	.3125	0	0	
1143	P1152	N1187	N1485	N1490	N1192	gen_Steel_20	.3125	0	0	
1144	P1153	N1485	N1486	N1491	N1490	gen_Steel_20	.3125	0	0	
1145	P1154	N1486	N1487	N1492	N1491	gen_Steel_20	.3125	0	0	
1146	P1155	N1487	N1488	N1493	N1492	gen_Steel_20	.3125	0	0	
1147	P1156	N1488	N1489	N1494	N1493	gen_Steel_20	.3125	0	0	
1148	P1157	N1489	N974	N979	N1494	gen_Steel_20	.3125	0	0	
1149	P1158	N1192	N1490	N1495	N1197	gen_Steel_20	.3125	0	0	
1150	P1159	N1490	N1491	N1496	N1495	gen_Steel_20	.3125	0	0	
1151	P1160	N1491	N1492	N1497	N1496	gen_Steel_20	.3125	0	0	
1152	P1161	N1492	N1493	N1498	N1497	gen_Steel_20	.3125	0	0	
1153	P1162	N1493	N1494	N1499	N1498	gen_Steel_20	.3125	0	0	
1154	P1163	N1494	N979	N984	N1499	gen_Steel_20	.3125	0	0	
1155	P1164	N1197	N1495	N1500	N205A	gen_Steel_20	.3125	0	0	
1156	P1165	N1495	N1496	N1501	N1500	gen_Steel_20	.3125	0	0	
1157	P1166	N1496	N1497	N1502	N1501	gen_Steel_20	.3125	0	0	
1158	P1167	N1497	N1498	N1503	N1502	gen_Steel_20	.3125	0	0	
1159	P1168	N1498	N1499	N1504	N1503	gen_Steel_20	.3125	0	0	
1160	P1169	N1499	N984	N209	N1504	gen_Steel_20	.3125	0	0	
1161	P1169A	N205A	N1500	N1505	N1206	gen_Steel_22	.3125	0	0	
1162	P1170	N1500	N1501	N1506	N1505	gen_Steel_22	.3125	0	0	
1163	P1171	N1501	N1502	N1507	N1506	gen_Steel_22	.3125	0	0	
1164	P1172	N1502	N1503	N1508	N1507	gen_Steel_22	.3125	0	0	
1165	P1173	N1503	N1504	N1509	N1508	gen_Steel_22	.3125	0	0	
1166	P1174	N1504	N209	N955	N1509	gen_Steel_22	.3125	0	0	
1167	P1175	N1206	N1505	N1510	N1211	gen_Steel_22	.3125	0	0	
1168	P1176	N1505	N1506	N1511	N1510	gen_Steel_22	.3125	0	0	
1169	P1177	N1506	N1507	N1512	N1511	gen_Steel_22	.3125	0	0	
1170	P1178	N1507	N1508	N1513	N1512	gen_Steel_22	.3125	0	0	
1171	P1179	N1508	N1509	N1514	N1513	gen_Steel_22	.3125	0	0	
1172	P1180	N1509	N955	N960	N1514	gen_Steel_22	.3125	0	0	
1173	P1181	N1211	N1510	N1515	N1216	gen_Steel_22	.3125	0	0	
1174	P1182	N1510	N1511	N1516	N1515	gen_Steel_22	.3125	0	0	
1175	P1183	N1511	N1512	N1517	N1516	gen_Steel_22	.3125	0	0	
1176	P1184	N1512	N1513	N1518	N1517	gen_Steel_22	.3125	0	0	
1177	P1185	N1513	N1514	N1519	N1518	gen_Steel_22	.3125	0	0	
1178	P1186	N1514	N960	N965	N1519	gen_Steel_22	.3125	0	0	
1179	P1187	N1216	N1515	N1520	N203A	gen_Steel_22	.3125	0	0	

Plates (Continued)

	Label	A Joint	B Joint	C Joint	D Joint	Material	Thickness[in]	R Loc	S Loc	Inactive
1180	P1188	N1515	N1516	N1521	N1520	gen_Steel_22	.3125	0	0	
1181	P1189	N1516	N1517	N1522	N1521	gen_Steel_22	.3125	0	0	
1182	P1190	N1517	N1518	N1523	N1522	gen_Steel_22	.3125	0	0	
1183	P1191	N1518	N1519	N1524	N1523	gen_Steel_22	.3125	0	0	
1184	P1192	N1519	N965	N211	N1524	gen_Steel_22	.3125	0	0	
1185	P1192A	N203A	N1520	N1525	N1225	gen_Steel_20	.3125	0	0	
1186	P1193	N1520	N1521	N1526	N1525	gen_Steel_20	.3125	0	0	
1187	P1194	N1521	N1522	N1527	N1526	gen_Steel_20	.3125	0	0	
1188	P1195	N1522	N1523	N1528	N1527	gen_Steel_20	.3125	0	0	
1189	P1196	N1523	N1524	N1529	N1528	gen_Steel_20	.3125	0	0	
1190	P1197	N1524	N211	N936	N1529	gen_Steel_20	.3125	0	0	
1191	P1198	N1225	N1525	N1530	N1230	gen_Steel_20	.3125	0	0	
1192	P1199	N1525	N1526	N1531	N1530	gen_Steel_20	.3125	0	0	
1193	P1200	N1526	N1527	N1532	N1531	gen_Steel_20	.3125	0	0	
1194	P1201	N1527	N1528	N1533	N1532	gen_Steel_20	.3125	0	0	
1195	P1202	N1528	N1529	N1534	N1533	gen_Steel_20	.3125	0	0	
1196	P1203	N1529	N936	N941	N1534	gen_Steel_20	.3125	0	0	
1197	P1204	N1230	N1530	N1535	N1235	gen_Steel_20	.3125	0	0	
1198	P1205	N1530	N1531	N1536	N1535	gen_Steel_20	.3125	0	0	
1199	P1206	N1531	N1532	N1537	N1536	gen_Steel_20	.3125	0	0	
1200	P1207	N1532	N1533	N1538	N1537	gen_Steel_20	.3125	0	0	
1201	P1208	N1533	N1534	N1539	N1538	gen_Steel_20	.3125	0	0	
1202	P1209	N1534	N941	N946	N1539	gen_Steel_20	.3125	0	0	
1203	P1210	N1235	N1535	N1540	N201A	gen_Steel_20	.3125	0	0	
1204	P1211	N1535	N1536	N1541	N1540	gen_Steel_20	.3125	0	0	
1205	P1212	N1536	N1537	N1542	N1541	gen_Steel_20	.3125	0	0	
1206	P1213	N1537	N1538	N1543	N1542	gen_Steel_20	.3125	0	0	
1207	P1214	N1538	N1539	N1544	N1543	gen_Steel_20	.3125	0	0	
1208	P1215	N1539	N946	N213	N1544	gen_Steel_20	.3125	0	0	
1209	P1215A	N201A	N1540	N1545	N1244	gen_Steel_22	.3125	0	0	
1210	P1216	N1540	N1541	N1546	N1545	gen_Steel_22	.3125	0	0	
1211	P1217	N1541	N1542	N1547	N1546	gen_Steel_22	.3125	0	0	
1212	P1218	N1542	N1543	N1548	N1547	gen_Steel_22	.3125	0	0	
1213	P1219	N1543	N1544	N1549	N1548	gen_Steel_22	.3125	0	0	
1214	P1220	N1544	N213	N913	N1549	gen_Steel_22	.3125	0	0	
1215	P1221	N1244	N1545	N1550	N1249	gen_Steel_22	.3125	0	0	
1216	P1222	N1545	N1546	N1551	N1550	gen_Steel_22	.3125	0	0	
1217	P1223	N1546	N1547	N1552	N1551	gen_Steel_22	.3125	0	0	
1218	P1224	N1547	N1548	N1553	N1552	gen_Steel_22	.3125	0	0	
1219	P1225	N1548	N1549	N1554	N1553	gen_Steel_22	.3125	0	0	
1220	P1226	N1549	N913	N918	N1554	gen_Steel_22	.3125	0	0	
1221	P1227	N1249	N1550	N1555	N1254	gen_Steel_22	.3125	0	0	
1222	P1228	N1550	N1551	N1556	N1555	gen_Steel_22	.3125	0	0	
1223	P1229	N1551	N1552	N1557	N1556	gen_Steel_22	.3125	0	0	
1224	P1230	N1552	N1553	N1558	N1557	gen_Steel_22	.3125	0	0	
1225	P1231	N1553	N1554	N1559	N1558	gen_Steel_22	.3125	0	0	
1226	P1232	N1554	N918	N923	N1559	gen_Steel_22	.3125	0	0	
1227	P1233	N1254	N1555	N1560	N199A	gen_Steel_22	.3125	0	0	
1228	P1234	N1555	N1556	N1561	N1560	gen_Steel_22	.3125	0	0	
1229	P1235	N1556	N1557	N1562	N1561	gen_Steel_22	.3125	0	0	
1230	P1236	N1557	N1558	N1563	N1562	gen_Steel_22	.3125	0	0	
1231	P1237	N1558	N1559	N1564	N1563	gen_Steel_22	.3125	0	0	
1232	P1238	N1559	N923	N215	N1564	gen_Steel_22	.3125	0	0	
1233	P1238A	N199A	N1560	N1565	N1335	gen_Steel_33	.3125	0	0	
1234	P1239	N1560	N1561	N1566	N1565	gen_Steel_33	.3125	0	0	
1235	P1240	N1561	N1562	N1567	N1566	gen_Steel_33	.3125	0	0	
1236	P1241	N1562	N1563	N1568	N1567	gen_Steel_33	.3125	0	0	
1237	P1242	N1563	N1564	N1569	N1568	gen_Steel_33	.3125	0	0	
1238	P1243	N1564	N215	N1259	N1569	gen_Steel_33	.3125	0	0	

Plates (Continued)

	Label	A Joint	B Joint	C Joint	D Joint	Material	Thickness[in]	R Loc	S Loc	Inactive
1239	P1244	N1335	N1565	N1570	N1340	gen_Steel_33	.3125	0	0	
1240	P1245	N1565	N1566	N1571	N1570	gen_Steel_33	.3125	0	0	
1241	P1246	N1566	N1567	N1572	N1571	gen_Steel_33	.3125	0	0	
1242	P1247	N1567	N1568	N1573	N1572	gen_Steel_33	.3125	0	0	
1243	P1248	N1568	N1569	N1574	N1573	gen_Steel_33	.3125	0	0	
1244	P1249	N1569	N1259	N1264	N1574	gen_Steel_33	.3125	0	0	
1245	P1250	N1340	N1570	N1575	N1345	gen_Steel_33	.3125	0	0	
1246	P1251	N1570	N1571	N1576	N1575	gen_Steel_33	.3125	0	0	
1247	P1252	N1571	N1572	N1577	N1576	gen_Steel_33	.3125	0	0	
1248	P1253	N1572	N1573	N1578	N1577	gen_Steel_33	.3125	0	0	
1249	P1254	N1573	N1574	N1579	N1578	gen_Steel_33	.3125	0	0	
1250	P1255	N1574	N1264	N1269	N1579	gen_Steel_33	.3125	0	0	
1251	P1256	N1345	N1575	N1580	N1350	gen_Steel_33	.3125	0	0	
1252	P1257	N1575	N1576	N1581	N1580	gen_Steel_33	.3125	0	0	
1253	P1258	N1576	N1577	N1582	N1581	gen_Steel_33	.3125	0	0	
1254	P1259	N1577	N1578	N1583	N1582	gen_Steel_33	.3125	0	0	
1255	P1260	N1578	N1579	N1584	N1583	gen_Steel_33	.3125	0	0	
1256	P1261	N1579	N1269	N1274	N1584	gen_Steel_33	.3125	0	0	
1257	P1262	N1350	N1580	N1585	N197A	gen_Steel_33	.3125	0	0	
1258	P1263	N1580	N1581	N1586	N1585	gen_Steel_33	.3125	0	0	
1259	P1264	N1581	N1582	N1587	N1586	gen_Steel_33	.3125	0	0	
1260	P1265	N1582	N1583	N1588	N1587	gen_Steel_33	.3125	0	0	
1261	P1266	N1583	N1584	N1589	N1588	gen_Steel_33	.3125	0	0	
1262	P1267	N1584	N1274	N217	N1589	gen_Steel_33	.3125	0	0	
1263	P1267A	N204B	N1590	N1605	N872	gen_Steel	.3125	0	0	
1264	P1268	N1590	N1591	N1606	N1605	gen_Steel	.3125	0	0	
1265	P1269	N1591	N1592	N1607	N1606	gen_Steel	.3125	0	0	
1266	P1270	N1592	N1593	N1608	N1607	gen_Steel	.3125	0	0	
1267	P1271	N1593	N1594	N1609	N1608	gen_Steel	.3125	0	0	
1268	P1272	N1594	N1595	N1610	N1609	gen_Steel	.3125	0	0	
1269	P1273	N1595	N1596	N1611	N1610	gen_Steel	.3125	0	0	
1270	P1274	N1596	N1597	N1612	N1611	gen_Steel	.3125	0	0	
1271	P1275	N1597	N1598	N1613	N1612	gen_Steel	.3125	0	0	
1272	P1276	N1598	N1599	N1614	N1613	gen_Steel	.3125	0	0	
1273	P1277	N1599	N1600	N1615	N1614	gen_Steel	.3125	0	0	
1274	P1278	N1600	N1601	N1616	N1615	gen_Steel	.3125	0	0	
1275	P1279	N1601	N1602	N1617	N1616	gen_Steel	.3125	0	0	
1276	P1280	N1602	N1603	N1618	N1617	gen_Steel	.3125	0	0	
1277	P1281	N1603	N1604	N1619	N1618	gen_Steel	.3125	0	0	
1278	P1282	N1604	N203B	N697	N1619	gen_Steel	.3125	0	0	
1279	P1283	N872	N1605	N1620	N876	gen_Steel	.3125	0	0	
1280	P1284	N1605	N1606	N1621	N1620	gen_Steel	.3125	0	0	
1281	P1285	N1606	N1607	N1622	N1621	gen_Steel	.3125	0	0	
1282	P1286	N1607	N1608	N1623	N1622	gen_Steel	.3125	0	0	
1283	P1287	N1608	N1609	N1624	N1623	gen_Steel	.3125	0	0	
1284	P1288	N1609	N1610	N1625	N1624	gen_Steel	.3125	0	0	
1285	P1289	N1610	N1611	N1626	N1625	gen_Steel	.3125	0	0	
1286	P1290	N1611	N1612	N1627	N1626	gen_Steel	.3125	0	0	
1287	P1291	N1612	N1613	N1628	N1627	gen_Steel	.3125	0	0	
1288	P1292	N1613	N1614	N1629	N1628	gen_Steel	.3125	0	0	
1289	P1293	N1614	N1615	N1630	N1629	gen_Steel	.3125	0	0	
1290	P1294	N1615	N1616	N1631	N1630	gen_Steel	.3125	0	0	
1291	P1295	N1616	N1617	N1632	N1631	gen_Steel	.3125	0	0	
1292	P1296	N1617	N1618	N1633	N1632	gen_Steel	.3125	0	0	
1293	P1297	N1618	N1619	N1634	N1633	gen_Steel	.3125	0	0	
1294	P1298	N1619	N697	N700	N1634	gen_Steel	.3125	0	0	
1295	P1299	N876	N1620	N1635	N880	gen_Steel	.3125	0	0	
1296	P1300	N1620	N1621	N1636	N1635	gen_Steel	.3125	0	0	
1297	P1301	N1621	N1622	N1637	N1636	gen_Steel	.3125	0	0	

Plates (Continued)

	Label	A Joint	B Joint	C Joint	D Joint	Material	Thickness[in]	R Loc	S Loc	Inactive
1298	P1302	N1622	N1623	N1638	N1637	gen_Steel	.3125	0	0	
1299	P1303	N1623	N1624	N1639	N1638	gen_Steel	.3125	0	0	
1300	P1304	N1624	N1625	N1640	N1639	gen_Steel	.3125	0	0	
1301	P1305	N1625	N1626	N1641	N1640	gen_Steel	.3125	0	0	
1302	P1306	N1626	N1627	N1642	N1641	gen_Steel	.3125	0	0	
1303	P1307	N1627	N1628	N1643	N1642	gen_Steel	.3125	0	0	
1304	P1308	N1628	N1629	N1644	N1643	gen_Steel	.3125	0	0	
1305	P1309	N1629	N1630	N1645	N1644	gen_Steel	.3125	0	0	
1306	P1310	N1630	N1631	N1646	N1645	gen_Steel	.3125	0	0	
1307	P1311	N1631	N1632	N1647	N1646	gen_Steel	.3125	0	0	
1308	P1312	N1632	N1633	N1648	N1647	gen_Steel	.3125	0	0	
1309	P1313	N1633	N1634	N1649	N1648	gen_Steel	.3125	0	0	
1310	P1314	N1634	N700	N703	N1649	gen_Steel	.3125	0	0	
1311	P1315	N880	N1635	N1650	N218A	gen_Steel	.3125	0	0	
1312	P1316	N1635	N1636	N1651	N1650	gen_Steel	.3125	0	0	
1313	P1317	N1636	N1637	N1652	N1651	gen_Steel	.3125	0	0	
1314	P1318	N1637	N1638	N1653	N1652	gen_Steel	.3125	0	0	
1315	P1319	N1638	N1639	N1654	N1653	gen_Steel	.3125	0	0	
1316	P1320	N1639	N1640	N1655	N1654	gen_Steel	.3125	0	0	
1317	P1321	N1640	N1641	N1656	N1655	gen_Steel	.3125	0	0	
1318	P1322	N1641	N1642	N1657	N1656	gen_Steel	.3125	0	0	
1319	P1323	N1642	N1643	N1658	N1657	gen_Steel	.3125	0	0	
1320	P1324	N1643	N1644	N1659	N1658	gen_Steel	.3125	0	0	
1321	P1325	N1644	N1645	N1660	N1659	gen_Steel	.3125	0	0	
1322	P1326	N1645	N1646	N1661	N1660	gen_Steel	.3125	0	0	
1323	P1327	N1646	N1647	N1662	N1661	gen_Steel	.3125	0	0	
1324	P1328	N1647	N1648	N1663	N1662	gen_Steel	.3125	0	0	
1325	P1329	N1648	N1649	N1664	N1663	gen_Steel	.3125	0	0	
1326	P1330	N1649	N703	N194	N1664	gen_Steel	.3125	0	0	
1327	P1330A	N196	N1665	N1680	N724	gen_Steel	.3125	0	0	
1328	P1331	N1665	N1666	N1681	N1680	gen_Steel	.3125	0	0	
1329	P1332	N1666	N1667	N1682	N1681	gen_Steel	.3125	0	0	
1330	P1333	N1667	N1668	N1683	N1682	gen_Steel	.3125	0	0	
1331	P1334	N1668	N1669	N1684	N1683	gen_Steel	.3125	0	0	
1332	P1335	N1669	N1670	N1685	N1684	gen_Steel	.3125	0	0	
1333	P1336	N1670	N1671	N1686	N1685	gen_Steel	.3125	0	0	
1334	P1337	N1671	N1672	N1687	N1686	gen_Steel	.3125	0	0	
1335	P1338	N1672	N1673	N1688	N1687	gen_Steel	.3125	0	0	
1336	P1339	N1673	N1674	N1689	N1688	gen_Steel	.3125	0	0	
1337	P1340	N1674	N1675	N1690	N1689	gen_Steel	.3125	0	0	
1338	P1341	N1675	N1676	N1691	N1690	gen_Steel	.3125	0	0	
1339	P1342	N1676	N1677	N1692	N1691	gen_Steel	.3125	0	0	
1340	P1343	N1677	N1678	N1693	N1692	gen_Steel	.3125	0	0	
1341	P1344	N1678	N1679	N1694	N1693	gen_Steel	.3125	0	0	
1342	P1345	N1679	N218	N539	N1694	gen_Steel	.3125	0	0	
1343	P1346	N724	N1680	N1695	N727	gen_Steel	.3125	0	0	
1344	P1347	N1680	N1681	N1696	N1695	gen_Steel	.3125	0	0	
1345	P1348	N1681	N1682	N1697	N1696	gen_Steel	.3125	0	0	
1346	P1349	N1682	N1683	N1698	N1697	gen_Steel	.3125	0	0	
1347	P1350	N1683	N1684	N1699	N1698	gen_Steel	.3125	0	0	
1348	P1351	N1684	N1685	N1700	N1699	gen_Steel	.3125	0	0	
1349	P1352	N1685	N1686	N1701	N1700	gen_Steel	.3125	0	0	
1350	P1353	N1686	N1687	N1702	N1701	gen_Steel	.3125	0	0	
1351	P1354	N1687	N1688	N1703	N1702	gen_Steel	.3125	0	0	
1352	P1355	N1688	N1689	N1704	N1703	gen_Steel	.3125	0	0	
1353	P1356	N1689	N1690	N1705	N1704	gen_Steel	.3125	0	0	
1354	P1357	N1690	N1691	N1706	N1705	gen_Steel	.3125	0	0	
1355	P1358	N1691	N1692	N1707	N1706	gen_Steel	.3125	0	0	
1356	P1359	N1692	N1693	N1708	N1707	gen_Steel	.3125	0	0	

Plates (Continued)

	Label	A Joint	B Joint	C Joint	D Joint	Material	Thickness[in]	R Loc	S Loc	Inactive
1357	P1360	N1693	N1694	N1709	N1708	gen_Steel	.3125	0	0	
1358	P1361	N1694	N539	N543	N1709	gen_Steel	.3125	0	0	
1359	P1362	N727	N1695	N1710	N730	gen_Steel	.3125	0	0	
1360	P1363	N1695	N1696	N1711	N1710	gen_Steel	.3125	0	0	
1361	P1364	N1696	N1697	N1712	N1711	gen_Steel	.3125	0	0	
1362	P1365	N1697	N1698	N1713	N1712	gen_Steel	.3125	0	0	
1363	P1366	N1698	N1699	N1714	N1713	gen_Steel	.3125	0	0	
1364	P1367	N1699	N1700	N1715	N1714	gen_Steel	.3125	0	0	
1365	P1368	N1700	N1701	N1716	N1715	gen_Steel	.3125	0	0	
1366	P1369	N1701	N1702	N1717	N1716	gen_Steel	.3125	0	0	
1367	P1370	N1702	N1703	N1718	N1717	gen_Steel	.3125	0	0	
1368	P1371	N1703	N1704	N1719	N1718	gen_Steel	.3125	0	0	
1369	P1372	N1704	N1705	N1720	N1719	gen_Steel	.3125	0	0	
1370	P1373	N1705	N1706	N1721	N1720	gen_Steel	.3125	0	0	
1371	P1374	N1706	N1707	N1722	N1721	gen_Steel	.3125	0	0	
1372	P1375	N1707	N1708	N1723	N1722	gen_Steel	.3125	0	0	
1373	P1376	N1708	N1709	N1724	N1723	gen_Steel	.3125	0	0	
1374	P1377	N1709	N543	N547	N1724	gen_Steel	.3125	0	0	
1375	P1378	N730	N1710	N1725	N200B	gen_Steel	.3125	0	0	
1376	P1379	N1710	N1711	N1726	N1725	gen_Steel	.3125	0	0	
1377	P1380	N1711	N1712	N1727	N1726	gen_Steel	.3125	0	0	
1378	P1381	N1712	N1713	N1728	N1727	gen_Steel	.3125	0	0	
1379	P1382	N1713	N1714	N1729	N1728	gen_Steel	.3125	0	0	
1380	P1383	N1714	N1715	N1730	N1729	gen_Steel	.3125	0	0	
1381	P1384	N1715	N1716	N1731	N1730	gen_Steel	.3125	0	0	
1382	P1385	N1716	N1717	N1732	N1731	gen_Steel	.3125	0	0	
1383	P1386	N1717	N1718	N1733	N1732	gen_Steel	.3125	0	0	
1384	P1387	N1718	N1719	N1734	N1733	gen_Steel	.3125	0	0	
1385	P1388	N1719	N1720	N1735	N1734	gen_Steel	.3125	0	0	
1386	P1389	N1720	N1721	N1736	N1735	gen_Steel	.3125	0	0	
1387	P1390	N1721	N1722	N1737	N1736	gen_Steel	.3125	0	0	
1388	P1391	N1722	N1723	N1738	N1737	gen_Steel	.3125	0	0	
1389	P1392	N1723	N1724	N1739	N1738	gen_Steel	.3125	0	0	
1390	P1393	N1724	N547	N199B	N1739	gen_Steel	.3125	0	0	
1391	P1402A	N197A	N1585	N1744	N1354	gen_Steel	.3125	0	0	
1392	P1403	N1585	N1586	N1745	N1744	gen_Steel	.3125	0	0	
1393	P1404	N1586	N1587	N1740	N1745	gen_Steel	.3125	0	0	
1394	P1404A	N1354	N1744	N1746	N1353	gen_Steel	.3125	0	0	
1395	P1405	N1744	N1745	N1747	N1746	gen_Steel	.3125	0	0	
1396	P1406	N1745	N1740	N1741	N1747	gen_Steel	.3125	0	0	
1397	P1406A	N1353	N1746	N1748	N1352	gen_Steel	.3125	0	0	
1398	P1407	N1746	N1747	N1749	N1748	gen_Steel	.3125	0	0	
1399	P1408	N1747	N1741	N1742	N1749	gen_Steel	.3125	0	0	
1400	P1408A	N1352	N1748	N1750	N1351	gen_Steel	.3125	0	0	
1401	P1409	N1748	N1749	N1751	N1750	gen_Steel	.3125	0	0	
1402	P1410	N1749	N1742	N1743	N1751	gen_Steel	.3125	0	0	
1403	P1412A	N1587	N1588	N1754	N1740	gen_Steel	.3125	0	0	
1404	P1413	N1588	N1589	N1755	N1754	gen_Steel	.3125	0	0	
1405	P1414	N1589	N217	N1279	N1755	gen_Steel	.3125	0	0	
1406	P1414A	N1740	N1754	N1756	N1741	gen_Steel	.3125	0	0	
1407	P1415	N1754	N1755	N1757	N1756	gen_Steel	.3125	0	0	
1408	P1416	N1755	N1279	N1280	N1757	gen_Steel	.3125	0	0	
1409	P1416A	N1741	N1756	N1758	N1742	gen_Steel	.3125	0	0	
1410	P1417	N1756	N1757	N1759	N1758	gen_Steel	.3125	0	0	
1411	P1418	N1757	N1280	N1281	N1759	gen_Steel	.3125	0	0	
1412	P1418A	N1742	N1758	N1760	N1743	gen_Steel	.3125	0	0	
1413	P1419	N1758	N1759	N1761	N1760	gen_Steel	.3125	0	0	
1414	P1420	N1759	N1281	N1282	N1761	gen_Steel	.3125	0	0	
1415	P1416C	N1351	N1750	N1760A	N1766	gen_Steel	.3125	0	0	

Plates (Continued)

	Label	A Joint	B Joint	C Joint	D Joint	Material	Thickness[in]	R Loc	S Loc	Inactive
1416	P1417A	N1750	N1751	N1761A	N1760A	gen_Steel	.3125	0	0	
1417	P1418B	N1751	N1743	N1762	N1761A	gen_Steel	.3125	0	0	
1418	P1419A	N1743	N1760	N1763	N1762	gen_Steel	.3125	0	0	
1419	P1420A	N1760	N1761	N1764	N1763	gen_Steel	.3125	0	0	
1420	P1421	N1761	N1282	N1765	N1764	gen_Steel	.3125	0	0	
1421	P1427	N1774	N1780	N1781	N1283	gen_Steel	.3125	0	0	
1422	P1428	N1283	N1781	N1782	N1284	gen_Steel	.3125	0	0	
1423	P1429	N1284	N1782	N1783	N1285	gen_Steel	.3125	0	0	
1424	P1430	N1285	N1783	N1784	N1286	gen_Steel	.3125	0	0	
1425	P1431	N1286	N1784	N1773	N1767	gen_Steel	.3125	0	0	
1426	P1431A	N1780	N1779	N1785	N1781	gen_Steel	.3125	0	0	
1427	P1432	N1781	N1785	N1786	N1782	gen_Steel	.3125	0	0	
1428	P1433	N1782	N1786	N1787	N1783	gen_Steel	.3125	0	0	
1429	P1434	N1783	N1787	N1788	N1784	gen_Steel	.3125	0	0	
1430	P1435	N1784	N1788	N1772	N1773	gen_Steel	.3125	0	0	
1431	P1435A	N1779	N1778	N1789	N1785	gen_Steel	.3125	0	0	
1432	P1436	N1785	N1789	N1790	N1786	gen_Steel	.3125	0	0	
1433	P1437	N1786	N1790	N1791	N1787	gen_Steel	.3125	0	0	
1434	P1438	N1787	N1791	N1792	N1788	gen_Steel	.3125	0	0	
1435	P1439	N1788	N1792	N1771	N1772	gen_Steel	.3125	0	0	
1436	P1439A	N1778	N1777	N1793	N1789	gen_Steel	.3125	0	0	
1437	P1440	N1789	N1793	N1794	N1790	gen_Steel	.3125	0	0	
1438	P1441	N1790	N1794	N1795	N1791	gen_Steel	.3125	0	0	
1439	P1442	N1791	N1795	N1796	N1792	gen_Steel	.3125	0	0	
1440	P1443	N1792	N1796	N1770	N1771	gen_Steel	.3125	0	0	
1441	P1443A	N1777	N1776	N1797	N1793	gen_Steel	.3125	0	0	
1442	P1444	N1793	N1797	N1798	N1794	gen_Steel	.3125	0	0	
1443	P1445	N1794	N1798	N1799	N1795	gen_Steel	.3125	0	0	
1444	P1446	N1795	N1799	N1800	N1796	gen_Steel	.3125	0	0	
1445	P1447	N1796	N1800	N1769	N1770	gen_Steel	.3125	0	0	
1446	P1447A	N1776	N1775	N1310	N1797	gen_Steel	.3125	0	0	
1447	P1448	N1797	N1310	N1309	N1798	gen_Steel	.3125	0	0	
1448	P1449	N1798	N1309	N1308	N1799	gen_Steel	.3125	0	0	
1449	P1450	N1799	N1308	N1307	N1800	gen_Steel	.3125	0	0	
1450	P1451	N1800	N1307	N1768	N1769	gen_Steel	.3125	0	0	

Basic Load Cases

	BLC Description	Category	X Grav...	Y Grav...	Z Grav...	Joint	Point	Distrib...	Area (...	Surfac...
1	Dead Load	None		-1						

Load Combinations

	Description	Sol.	PDelta	SRSS	BLC	Fact...	BLC	Fact...	BLC	Fact...	BLC	Fact...	BLC	Fact...	BLC	Fact...	BLC	Fact...	BLC	Fact...
1	Dead Load	Yes			1	1														

Joint Reactions

	LC	Joint Label	X [lb]	Y [lb]	Z [lb]	MX [lb-in]	MY [lb-in]	MZ [lb-in]
1	1	N350	-1135.23	1446.175	-1192.157	0	0	0
2	1	N393	1153.183	1441.98	-1179.093	0	0	0
3	1	N437	-1157.808	1461.464	1181.702	0	0	0
4	1	N481	1139.906	1463.654	1189.291	0	0	0
5	1	Totals:	.051	5813.274	-.255			
6	1	COG (in):	X: 128.037	Y: 8.156	Z: 45.077			

Member ASD Steel Code Checks

	LC	Member	Shape	UC Max	Loc[in]	Shear UC	Loc[in]	Dir	Fa[ksi]	Ft[ksi]	Fby[ksi]	Fbz[ksi]	Cb	Cmy	Cmz	Eqn
1	1	M14	HSS4X2X4	.024	20.304	.003	0	y	27.623	30	33	33	2.3	.444	.85	H1-2
2	1	M49	HSS4X2X4	.023	20.304	.003	0	y	27.623	30	33	33	2.3	.441	.85	H1-2
3	1	M19	HSS4X2X4	.023	20.304	.004	0	y	27.623	30	33	33	2.3	.446	.85	H1-2
4	1	M47	HSS4X2X4	.022	0	.003	20.304	y	27.623	30	33	33	2.3	.432	.85	H1-2
5	1	M12	HSS4X2X4	.022	0	.003	20.304	y	27.623	30	33	33	2.3	.432	.85	H1-2
6	1	M44	HSS4X2X4	.022	20.304	.004	0	y	27.623	30	33	33	2.3	.446	.85	H1-2
7	1	M42	HSS4X2X4	.021	0	.004	20.304	y	27.623	30	33	33	2.3	.444	.85	H1-2
8	1	M17	HSS4X2X4	.021	0	.004	20.304	y	27.623	30	33	33	2.3	.444	.85	H1-2
9	1	M50	HSS4X2X4	.014	0	.014	6.853	z	28.867	30	33	33	1.597	.372	.85	H1-2
10	1	M46	HSS4X2X4	.014	11.15	.014	0	z	28.867	30	33	33	1.536	.394	.85	H1-2
11	1	M11	HSS4X2X4	.014	11.15	.014	0	z	28.867	30	33	33	1.535	.395	.85	H1-2
12	1	M15	HSS4X2X4	.013	2.788	.015	6.853	z	28.867	30	33	33	1.623	.529	.85	H1-2
13	1	M45	HSS4X2X4	.013	0	.010	6.853	z	28.867	30	33	33	1.749	.221	.85	H1-2
14	1	M41	HSS4X2X4	.013	11.15	.010	8.711	y	28.867	30	33	33	1.759	.247	.85	H1-2
15	1	M16	HSS4X2X4	.013	11.15	.010	8.711	y	28.867	30	33	33	1.762	.249	.85	H1-2
16	1	M73	HSS3X3X4	.012	20	.001	20	y	28.509	30	33	33	2.179	.338	.85	H2-1
17	1	M81	HSS3X3X4	.012	0	.001	0	y	28.509	30	33	33	2.156	.342	.85	H2-1
18	1	M20	HSS4X2X4	.012	2.788	.011	6.853	z	28.867	30	33	33	1.758	.481	.85	H1-2
19	1	M62	HSS3X3X4	.011	20	.001	20	y	28.509	30	33	33	2.092	.324	.85	H2-1
20	1	M70	HSS3X3X4	.011	0	.001	0	y	28.509	30	33	33	2.073	.326	.85	H2-1
21	1	M79	HSS3X3X4	.011	20	.001	20	y	28.509	30	33	33	2.288	.326	.85	H2-1
22	1	M75	HSS3X3X4	.011	0	.001	0	y	28.509	30	33	33	2.287	.327	.85	H2-1
23	1	M2	HSS4X2X5	.011	0	.002	0	y	27.518	30	33	33	2.251	.729	.85	H2-1
24	1	M4	HSS4X2X5	.011	20.304	.002	20.304	y	27.518	30	33	33	2.223	.775	.85	H2-1
25	1	M59	HSS4X2X5	.011	20.304	.002	20.304	y	27.518	30	33	33	2.216	.812	.85	H2-1
26	1	M57	HSS4X2X5	.011	0	.002	0	y	27.518	30	33	33	2.235	.787	.85	H2-1
27	1	M13	HSS4X2X4	.010	2.237	.009	1.79	z	23.522	30	30	30	1	.974	.85	H1-2
28	1	M48	HSS4X2X4	.010	2.237	.009	1.79	z	23.522	30	30	30	1	.986	.85	H1-2
29	1	M64	HSS3X3X4	.010	0	.001	0	y	28.509	30	33	33	2.235	.312	.85	H2-1
30	1	M68	HSS3X3X4	.010	20	.001	20	y	28.509	30	33	33	2.239	.312	.85	H2-1
31	1	M80	HSS3X3X4	.010	18	.000	18	y	28.689	30	33	33	1.057	.867	.85	H2-1
32	1	M74	HSS3X3X4	.010	0	.000	0	y	28.689	30	33	33	1.055	.86	.85	H2-1
33	1	M43	HSS4X2X4	.010	2.237	.007	1.79	z	23.522	30	30	30	1	.978	.85	H1-2
34	1	M18	HSS4X2X4	.009	2.237	.007	1.79	z	23.522	30	30	30	1	.978	.85	H1-2
35	1	M69	HSS3X3X4	.009	18	.000	0	y	28.689	30	33	33	1.015	.872	.85	H2-1
36	1	M63	HSS3X3X4	.009	0	.000	18	y	28.689	30	33	33	1.029	.884	.85	H2-1
37	1	M8	HSS4X2X5	.009	40.713	.018	1.79	z	23.21	30	30	30	1	.982	.85	H1-2
38	1	M53	HSS4X2X5	.009	40.713	.018	1.79	z	23.21	30	30	30	1	.984	.85	H1-2
39	1	M1	HSS4X2X5	.008	11.15	.002	11.15	y	28.82	30	33	33	2.253	.638	.85	H2-1
40	1	M56	HSS4X2X5	.008	11.15	.002	11.15	y	28.82	30	33	33	2.246	.63	.85	H2-1
41	1	M60	HSS4X2X5	.008	0	.002	0	y	28.82	30	33	33	2.231	.621	.85	H2-1
42	1	M5	HSS4X2X5	.008	0	.002	0	y	28.82	30	33	33	2.23	.628	.85	H2-1
43	1	M23	HSS4X2X4	.007	40.713	.009	1.79	z	23.522	30	30	30	1	.984	.85	H1-2
44	1	M38	HSS4X2X4	.007	2.237	.009	1.79	z	23.522	30	30	30	1	.963	.85	H1-2
45	1	M82	HSS3X3X4	.007	31	.001	0	y	27.413	30	33	33	2.3	.327	.85	H2-1
46	1	M71	HSS3X3X4	.007	31	.001	0	y	27.413	30	33	33	2.3	.322	.85	H2-1
47	1	M61	HSS3X3X4	.007	0	.001	31	y	27.413	30	33	33	2.3	.317	.85	H2-1
48	1	M72	HSS3X3X4	.006	0	.001	31	y	27.413	30	33	33	2.3	.324	.85	H2-1
49	1	M37	HSS4X2X4	.006	20.304	.001	20.304	y	27.623	30	33	33	2.3	.502	.85	H1-2
50	1	M78	HSS3X3X4	.006	18	.001	18	y	28.689	30	33	33	2.3	.277	.85	H2-1
51	1	M65	HSS3X3X4	.006	0	.001	0	y	28.689	30	33	33	2.3	.286	.85	H2-1
52	1	M76	HSS3X3X4	.006	0	.001	0	y	28.689	30	33	33	2.3	.278	.85	H2-1
53	1	M22	HSS4X2X4	.006	20.304	.001	20.304	y	27.623	30	33	33	2.3	.503	.85	H1-2
54	1	M67	HSS3X3X4	.006	18	.001	18	y	28.689	30	33	33	2.3	.29	.85	H2-1
55	1	M24	HSS4X2X4	.006	0	.001	0	y	27.623	30	33	33	2.3	.532	.85	H1-2
56	1	M39	HSS4X2X4	.006	0	.001	0	y	27.623	30	33	33	2.3	.536	.85	H1-2
57	1	M33	HSS4X2X4	.006	2.237	.004	1.79	z	23.522	30	30	30	1	.6	.85	H2-1
58	1	M28	HSS4X2X4	.005	2.237	.004	1.79	z	23.522	30	30	30	1	.6	.85	H2-1

Member ASD Steel Code Checks (Continued)

	LC	Member	Shape	UC Max	Loc[in]	Shear UC	Loc[in]	Dir	Fa[ksi]	Ft[ksi]	Fby[ksi]	Fbz[ksi]	Cb	Cmy	Cmz	Eqn
59	1	M32	HSS4X2X4	.005	20.304	.001	20.304	y	27.623	30	33	33	1.853	.453	.85	H2-1
60	1	M27	HSS4X2X4	.005	20.304	.001	20.304	y	27.623	30	33	33	1.852	.456	.85	H2-1
61	1	M29	HSS4X2X4	.005	0	.001	0	y	27.623	30	33	33	1.769	.509	.85	H2-1
62	1	M34	HSS4X2X4	.005	0	.001	0	y	27.623	30	33	33	1.768	.51	.85	H2-1
63	1	M52	HSS4X2X5	.005	0	.001	20.304	y	27.518	30	33	33	2.3	.55	.85	H1-2
64	1	M7	HSS4X2X5	.005	0	.001	20.304	y	27.518	30	33	33	2.3	.569	.85	H1-2
65	1	M9	HSS4X2X5	.005	20.304	.001	0	y	27.518	30	33	33	2.3	.64	.85	H1-2
66	1	M54	HSS4X2X5	.005	20.304	.001	0	y	27.518	30	33	33	2.3	.625	.85	H1-2
67	1	M10	HSS4X2X5	.004	0	.002	11.15	y	28.82	30	33	33	2.097	.486	.85	H1-2
68	1	M55	HSS4X2X5	.004	0	.002	11.15	y	28.82	30	33	33	2.098	.464	.85	H1-2
69	1	M51	HSS4X2X5	.004	11.15	.002	0	y	28.82	30	33	33	2.128	.492	.85	H1-2
70	1	M6	HSS4X2X5	.004	11.15	.002	0	y	28.82	30	33	33	2.126	.498	.85	H1-2
71	1	M40	HSS4X2X4	.004	0	.002	11.15	y	28.867	30	33	33	2.3	.509	.85	H1-2
72	1	M66	HSS3X3X4	.004	10	.000	0	y	28.509	30	33	33	1	.873	.85	H2-1
73	1	M25	HSS4X2X4	.004	0	.002	11.15	y	28.867	30	33	33	2.3	.518	.85	H1-2
74	1	M36	HSS4X2X4	.004	11.15	.002	0	y	28.867	30	33	33	2.3	.544	.85	H1-2
75	1	M21	HSS4X2X4	.004	11.15	.002	0	y	28.867	30	33	33	2.3	.545	.85	H1-2
76	1	M77	HSS3X3X4	.004	10	.000	20	y	28.509	30	33	33	1	.935	.85	H2-1
77	1	M3	HSS4X2X5	.004	0	.004	2.684	z	23.21	30	30	30	1.097	.975	.85	H1-2
78	1	M58	HSS4X2X5	.003	14.764	.005	1.79	z	23.21	30	30	30	1	.97	.85	H1-1
79	1	M31	HSS4X2X4	.002	0	.001	0	z	28.867	30	33	33	1.684	.605	.85	H1-2
80	1	M26	HSS4X2X4	.002	0	.001	0	z	28.867	30	33	33	1.679	.605	.85	H1-2
81	1	M30	HSS4X2X4	.001	11.15	.001	0	z	28.867	30	33	33	1.762	.596	.85	H1-2
82	1	M35	HSS4X2X4	.001	11.15	.001	0	z	28.867	30	33	33	1.741	.597	.85	H1-2

145579-D-CA-011 Rev. 4

Attachment 5
(2 pages)

RISA 3D Validation & Verification Cover Sheet

DMJMH+N

VERIFICATION & VALIDATION REVIEW AND APPROVAL FORM

SOFTWARE TITLE	DMJM H+N SOFTWARE ID NO.	DMJM H+N COMPUTER ID NO.
RISA-3D Rapid Interactive Structural Analysis – 3 Dimensional	3D03875	102561

VALIDATION PERFORMED BY (Print Name/Sign): James Van Corbach **DATE: Nov. 10, 2004**

PURPOSE AND SCOPE OF VALIDATION:

PURPOSE:

The purpose of this verification and validation is to ensure RISA–3D produces reliable data consistent with industry standards.

SCOPE:

The scope of this verification and validation includes static analysis of structures for deflection, stress, thermal loading, and "code check" values on standard steel shapes as well as tapered wide flanges and wooden structures.

REQUIREMENTS FOR SOFTWARE (INPUT RANGE, ETC):

Perform standard checks on structures to determine structural adequacy.

REV.	AFFECTED PAGES	REVISION DESCRIPTION	PREPARER	APPROVED BY	DATE:
0	All	Initial V & V	James Van Corbach		

DESCRIPTION OF SOFTWARE/USE:

RISA-3D is a three-dimensional structural analysis modeling package used to reduce the length of time necessary to calculate stresses/forces in structures by hand.

ORIGIN OF SOFTWARE: © 2001 RISA Technologies

REVISION	DOCUMENT NUMBER	TITLE	DATE	
N/A	N/A	RISA-3D Rapid Interactive Structural Analysis – 3 Dimensional Verification Problems	N/A	V&V REFERENCE
5.0d	N/A	RISA-3D Rapid Interactive Structural Analysis – 3 Dimensional Version 5.0d User's Guide	©2004	USER MANUAL

METHOD OF SOFTWARE VALIDATION

A. ☒ COMPARE TO HAND CALCULATIONS
B. ☒ COMPARE TO VALIDATED COMPUTER ANALYSIS RESULTS
C. ☒ OTHER (DESCRIBE): Compare output to that in the V & V reference which compares previous output to both hand calculations and computer analysis results.

METHOD OF HARDWARE VALIDATION

A. ☒ COMPARE TO HAND CALCULATIONS
B. ☒ COMPARE TO VALIDATED COMPUTER ANALYSIS RESULTS
C. ☒ OTHER (DESCRIBE): Compare output to that in the V & V reference which compares previous output to both hand calculations and computer analysis results.

RESULTS: The Verification and Validation of RISA-3D on DMJMH+N computer # 102561 is acceptable.

ATTACHMENTS

Attachment	Name	Sheets
A	RISA-3D Verification Problems	37
B	RISA Technologies Letter	1

Total number of pages of this V&V, including cover sheets and attachments – 86

145579-D-CA-011 Rev. 4

Attachment 6
(3 pages)

E-mail from Design Authority – ICV™ Box PC Rating

Paul Meyer (Trail)

Subject: FW: PC-1M

From: Leonard, Michael W
Sent: Thursday, March 24, 2005 5:09 PM
To: 'Luey, Ja-Kael'
Cc: Shuford, David H (Dave); Janicek, George P
Subject: FW: PC-1M

Ja-Kael,

As detailed below we have a concern that B-CA-004 is treating the box as PC-1M in the melt station (i.e., when it's on a Type D curb) and therefore neglecting the seismic response of a "Design Feature" for the release of dried waste and of toxic off-gas accidents while in the melt station.

Our DA recommends that the box and box support curbs be analyzed to PC-2 while in the melt area.

Please incorporate this comment into the ICV System design package RCRs and forward to the Trail guys ASAP.

Thanks,
ML

From: Janicek, George P
Sent: Monday, March 21, 2005 10:46 AM
To: Leonard, Michael W
Cc: Shuford, David H (Dave); Haq, Mian A
Subject: RE: PC-1M

Mike,

First of all, the PC-1M designation is only allowable for use for in-tank-farm retrieval project activities/facilities. This categorization was negotiated with ORP specifically for these projects. It currently is not available to the DBVS facilities under discussion.

That being said, I believe the curbs should be categorized as PC-0. That is, NPHs are not an issue.

However, in this same calculation the statement is made that the ICV box itself has the same categorization (PC-1M) as the curbs. This cannot be. If the box were sitting out on the storage pad, containing a monolithic block of immobilized waste (glass), then I believe we could successfully argue that it was PC-0, like the curbs. But, the box initially is acting as secondary containment: for the dried waste being added to it during the melt process; for the molten glass itself; and, for the gases being generated (NOX) during melting. The PDSA credits the ICV box as a "design feature", meaning that it is not specifically Safety-Significant (SS), which would drive a PC-2 categorization, but is at least General-Service (GS), which would drive a, minimum, PC-1 categorization. But, as you should recall, we made a conservative call for the project and said that we would design all waste containing structures to a minimum PC-2. In keeping with this conservative approach, we should make the ICV box PC-2.

Mian, what structural qualification do you think is required for the ICV box during the fill/melt processing?

George

From: Leonard, Michael W
Sent: Friday, March 18, 2005 4:19 PM

To: Janicek, George P.
Cc: Shuford, David H (Dave)
Subject: PC-1M

George,

Can you please look at and comment on AMEC's use of PC-1M as the design criteria for the support curbs (pg. 2 of attached calc).

AMEC has used the logic that the boxes are inherently moveable (both within the DBVS site and off-site - i.e., transport to IDF) and are not tied-down/anchored; therefore, we do not need to design the box storage area & melt area curbs & foundations to withstand seismic.

Thanks,
ML

06/02/2005

CALCULATION DESIGN VERIFICATION CHECKLIST	Task/Project #: 145579	
Calculation Number: 145579-D-CA-011, ICV™ Box Structural Analysis	Revision 4	Safety Related? N/A
Reviewer/Checker (print name): Ja-Kael Luey Reviewer performed or supervised subject calculation. _X_NO ____YES Justification Attachment ____N/A____ pages Alternate Verification method approved ____N/A____ Method ____		Date 04/19/2006

ITEM (S) CHECKED	ACCEPT Y/N	OBJECTIVE EVIDENCE SHEETS	INITIAL/DATE
1. Cover forms properly completed.	Y	PAGES 1-2	JJ 4/19/06
2. Calculation Sheet headers complete with calc. no., rev., etc.	Y	PAGES 1-8	JJ. 4/19/06
3. Calculation Sheet contents complete per format.	Y	PAGES 1-8, ATTACH.	JJ. 4/19/06
4. Listed attachments included.	Y	PAGE 1	JJ. 4/19/06
5. Calculation Objective clearly described.	Y	SECT. 1 + 2.2	JJ. 4/19/06
6. Criteria are suitable and properly referenced to task-specific documents.	Y	SECT. 2.2	JJ. 4/19/06
7. Assumptions and data described and attached or referenced to task documents.	Y	PGS. 2-5	JJ. 4/19/06
8. Calculation method identified and appropriate for the design activity.	Y	SECT. 4	JJ. 4/19/06
9. Calculation results reasonable and correctly described in Results & Conclusions.	Y	PAGES 6-8	JJ. 4/19/06
10. Computer Program identified with version and revision.	Y	ATT. 1, 4, 5	JJ. 4/19/06
11. Computer Program references method used, etc.	Y	ATT. 1, 4	JJ. 4/19/06
12. Computer input/output provided.	Y	ATT. 1, 4	JJ. 4/19/06
13. Computer runs traceable to calculation.	Y	ATT 4	JJ. 4/19/06
14. Computer input data within permissible design input range.	Y	ATT. 4, SECT. 5	JJ. 4/19/06
15. Computer Program validation/verification addressed.	Y	ATT. 5	JJ. 4/19/06

REMARKS
None

Ja-Kael Luey JA-KAEL LUEY Date 4/19/06
Checker Print Name & Signature

James VanCorbach Date 4/19/06
Originator Print Name & Signature

EP 3.9-4F October 2003

Subcontractor Calculation Review Checklist.

Subject: ICV™ Box Structural Analysis

The subject document has been reviewed by the undersigned.
The checker reviewed and verified the following items as applicable.

Documents Reviewed: **145579-D-CA-011, Rev. 4**

Analysis Performed By: **AMEC/DMJM**

- Design Input
- Basic Assumptions
- Approach/Design Methodology
- Consistency with item or document supported by the calculation
- Conclusion/Results Interpretation
- Impact on existing requirements
- _____

Checker (printed name, signature, and date): **T.C. Mackey** T.C. Mackey 4/20/2006

Organizational Manager (printed name, signature and date): **D. H. Shuford** David H Shuford 4/20/06

Appendix C6

APPENDIX C6

IN-CONTAINER VITRIFICATION SYSTEM

Drawing or Sketch Number	Revision	Title	Page
F-145579-00-B-0018	I	Bulk Vitrification Miscellaneous Steel Structures	C6-3
F-145579-00-B-0022	J	Bulk Vitrification ICV Box Storage Area Curb Layout & Details	C6-4
F-145579-00-B-0025	F	Bulk Vitrification Melt Area Steel Curbs	C6-5
F-145579-00-D-0007	E	Bulk Vitrification ICV Package Sampling and Storage Area GA Plan	C6-6
F-145579-00-D-0041[(a)]	F	Bulk Vitrification Melt Area G.A. Sections	C6-7
F-145579-00-D-0051[(a)]	F	Bulk Vitrification Melt Area G.A. Plan Views	C6-8
F-145579-00-F-0014	0	Bulk Vitrification ICV Box Instrument Locations	C6-9
F-145579-35-D-0004	4A	Bulk Vitrification ICV Box Data Sheet	C6-10
F-145579-35-D-0005	2A	Bulk Vitrification ICV Box Lid Assembly	C6-11
F-145579-35-D-0006	2A	Bulk Vitrification ICV Box Lid Steelwork 1 of 3	C6-12
F-145579-35-D-0007	1A	Bulk Vitrification ICV Box Lid Steelwork 2 of 3	C6-13
F-145579-35-D-0008	1	Bulk Vitrification ICV Box Plan & Sections	C6-14
F-145579-35-D-0009	1A	Bulk Vitrification ICV Box Lid Steelwork 3 of 3	C6-15
F-145579-35-D-0011	2A	Bulk Vitrification ICV Box Assembly Details	C6-16
F-145579-35-D-0012	F	Bulk Vitrification ICV Box Lid Camera, T/C and Grounding Assembly	C6-17
F-145579-35-D-0013	D	Bulk Vitrification ICV Box Camera and Trolley Details	C6-18
F-145579-35-D-0014	H	Bulk Vitrification ICV Shell Starter Path Details	C6-19
F-145579-35-D-0016	K	Bulk Vitrification ICV Box Refractory Assembly	C6-20
F-145579-35-D-0017	K	Bulk Vitrification ICV Box Refractory Details	C6-21
F-145579-35-D-0018	1	Bulk Vitrification Assembly Enclosure G.A. Plans and Elevations	C6-22
F-145579-35-D-0019	2	Bulk Vitrification ICV Box Lid Gasket Details	C6-23
F-145579-35-D-0021	E	Bulk Vitrification ICV Box Breather HEPA Filter	C6-24

Drawing or Sketch Number	Revision	Title	Page
F-145579-35-D-0022	1	Bulk Vitrification ICV Box Lid Tool and Radar Plate	C6-25
F-145579-35-D-0023	C	Bulk Vitrification ICV Box Refractory Panel Clip Details	C6-26
F-145579-35-D-0024	B	Bulk Vitrification ICV Box Port Connections	C6-27
H-14-106790[b]	0	Bulk Vitrification ICV Box Storage Area Plan / Details	C6-28
H-14-106792[c]	1	Bulk Vitrification Melt Area FDN Plans & Sections	N/A
H-14-106797[b]	0	ICV Box Assembly Building Fdn-Plan & Details	C6-29

[a]Originally provided in the Dried Waste Handling System Design Package; included in this Design Review Package to assist review.

[b]Previously provided to the Department of Ecology under separate submittal. Provided in this Design Review Package to assist review.

[c]Foundation drawing reviewed by IQRPE with foundation calculations. Drawing not included in this Design Review Package.

In making requests for transmittal of data by any electronic media, the Company receiving such data agrees that AMEC Americas Limited cannot be held responsible for users of the data outside of or beyond the scope of our original agreement. Also, because data stored in electronic media or transmitted by electronic means can deteriorate undetected or be modified without the consultant's knowledge, the Company receiving data agrees that AMEC Americas Limited cannot be held liable for the compatibility, completeness or correctness of the data.

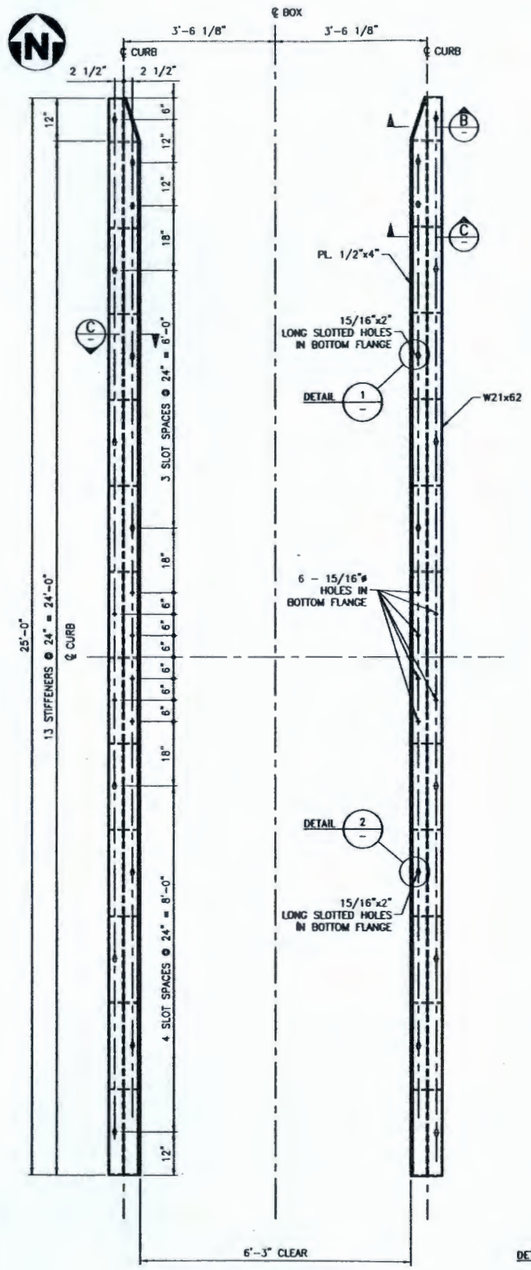

TYPE 'C' CURBS – PLAN
3/4"=1'-0"

1 PAIR REQUIRED AS SHOWN SEE F-145579-00-B-0022 FOR LOCATION

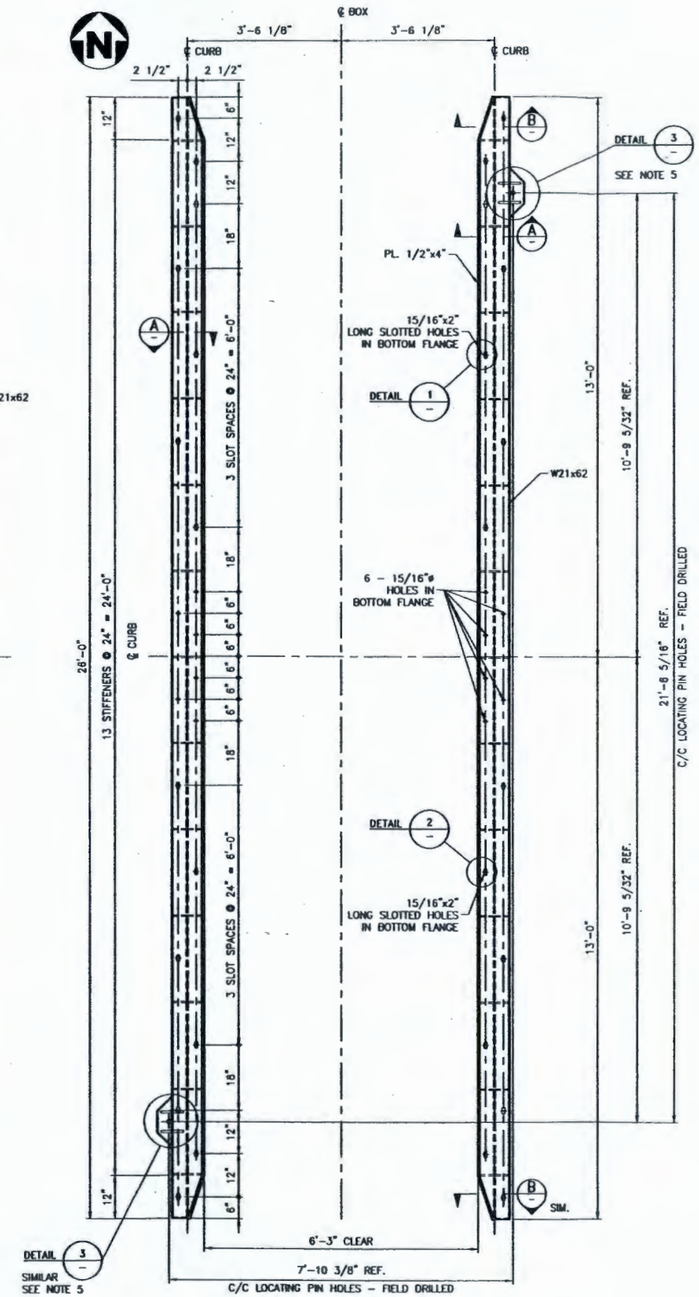

TYPE 'D' CURBS – PLAN
3/4"=1'-0"

1 PAIR REQUIRED AS SHOWN SEE F-145579-00-B-0022 FOR LOCATION

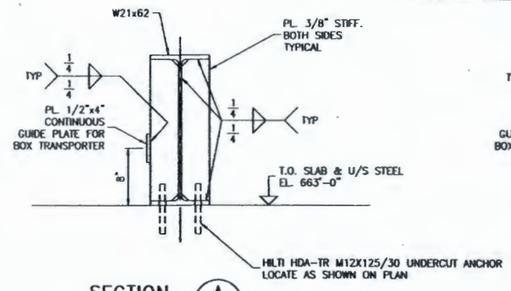

SECTION A
1 1/2"=1'-0"

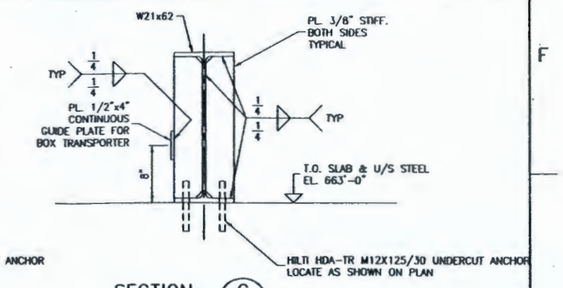

SECTION C
1 1/2"=1'-0"

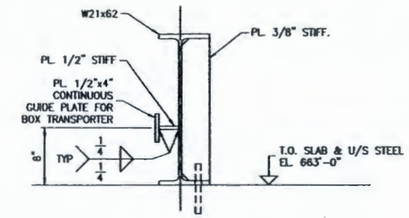

SECTION B
1 1/2"=1'-0"
TYPICAL 6 PLACES

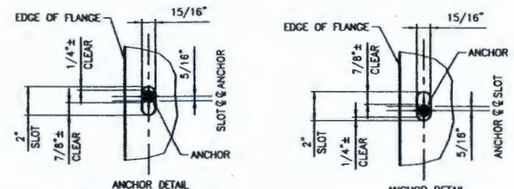

DETAIL 1
3"=1'-0"

DETAIL 2
3"=1'-0"

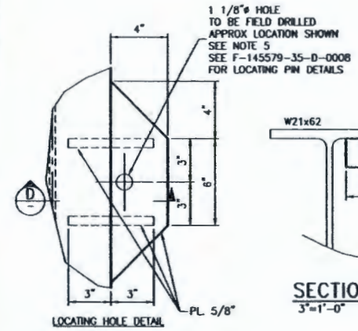

DETAIL 3
3"=1'-0"
TYPICAL 2 PLACES

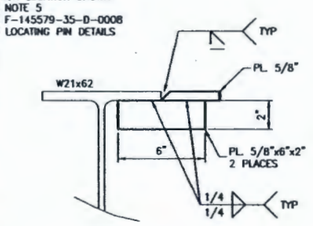

SECTION D
3"=1'-0"

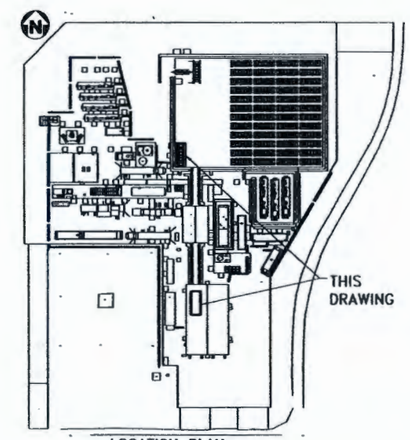

LOCATION PLAN

NOTES:

1. ALL CONSTRUCTION SHALL CONFORM TO CONSTRUCTION SPECIFICATION 145579-Q-SP-001.

2. FOR GENERAL NOTES & STRUCTURAL STEEL DETAILS SEE DRAWINGS F-145579-00-B-0001 TO 0004.

3. CURBS SHALL HAVE MAX. CAMBER AND SWEEP OF 5/16". INSTALL CONVEX SIDE UP. MAINTAIN 6'-3" CLEARANCE BETWEEN CURBS AT ALL LOCATIONS. TOLERANCE ±3/16".

4. FOR SUPPORTING DESIGN CALCULATIONS SEE 145579-B-CA-004.

5. FIELD DRILL 1-1/8" DIAMETER HOLES AS SHOWN. THESE HOLES ASSIST IN ACCURATE PLACEMENT OF THE ICV BOX. HOLES TO BE LOCATED AND DRILLED BY OTHERS USING A SAMPLE ICV BOX AS A TEMPLATE DURING COMMISSIONING PHASE.

6. ALL DRILL-IN ANCHORS SHALL BE INSTALLED IN CONFORMANCE WITH THE REQUIREMENTS FOR SPECIAL INSPECTION AS LISTED IN CHAPTER 17 OF THE UNIFORM BUILDING CODE AND ICBO REPORT ER-5608. AT SLOTTED HOLES, NUTS SECURING CURB SHALL BE SNUG-TIGHT ONLY.

Rev.	REVISION DESCRIPTION	Date	By	Ch'd	Approved Bldg Ctrl	Approved Proj Mgr
I	ISSUED FOR CH2M HILL APPROVAL AND 90% REPORT	10 MAR 06	CAC	PM	PM	JDS
H	ISSUED FOR INTERNAL APPROVAL	19 JAN 06	DPK		PM	FMS
G	ISSUED FOR INTERNAL REVIEW	19 DEC 05	CAC		PM	JTA
F	ISSUED FOR CH2M HILL APPROVAL & 90% REPORT	04 JUN 05	RDB		PM	TH
E	ISSUED FOR CH2M HILL APPROVAL & 90% REPORT	17 MAY 05	DPK		PM	TH
D	ISSUED FOR CH2M HILL REVIEW & 90% REPORT	04 APR 05	DPK		PM	SC
C	ISSUED FOR CH2M HILL REVIEW & 90% REPORT	07 MAR 05	DPK		DPK	TH
B	ISSUED FOR INTERNAL APPROVAL	03 MAR 05	DPK		PM	TH
A	ISSUED FOR INTERNAL REVIEW	27 JAN 05	DPK		PM	TH

AMEC DRAWING NO: F-145579-00-B-0018 REV: I

amec

AMEC PROJECT: 145579-FINAL DBVS DESIGN

	NAME	DATE	COMPANY
DRAWN BY	Don Kroeker	08 MAR 06	AMEC
DESIGNED BY			
CHECKED BY			
DESIGN / PROC LEAD			
ENGINEERING MANAGER			
PROJECT MANAGER			
DESIGN AUTHORITY			

U.S. DEPARTMENT OF ENERGY
Office of River Protection

BULK VITRIFICATION MISCELLANEOUS STEEL STRUCTURES

SIZE: F | BLDG NO | INDEX NO | DWG NO | REV
SCALE | DWG | SHEET OF

DWG NO F-145579-00-B-0018 REV I

DWG NO	TITLE
DRAWING TRACEABILITY LIST	

REF NUMBER	TITLE
REFERENCES	
NEXT USED ON	

REV NO	DESCRIPTION	REF DT DRWG	REV BY	CHECKED BY	DWGS COMPANY
REVISIONS					

RPP-24544 REV 1c

In making requests for transmittal of data by any electronic media, the Company receiving such data agrees that AMEC Americas Limited cannot be held responsible for users of the data outside of or beyond the scope of our original agreement. Also, because data stored in electronic media or transmitted by electronic means can deteriorate undetected or be modified without the consultant's knowledge, the Company receiving data agrees that AMEC Americas Limited cannot be held liable for the compatibility, completeness or correctness of the data.

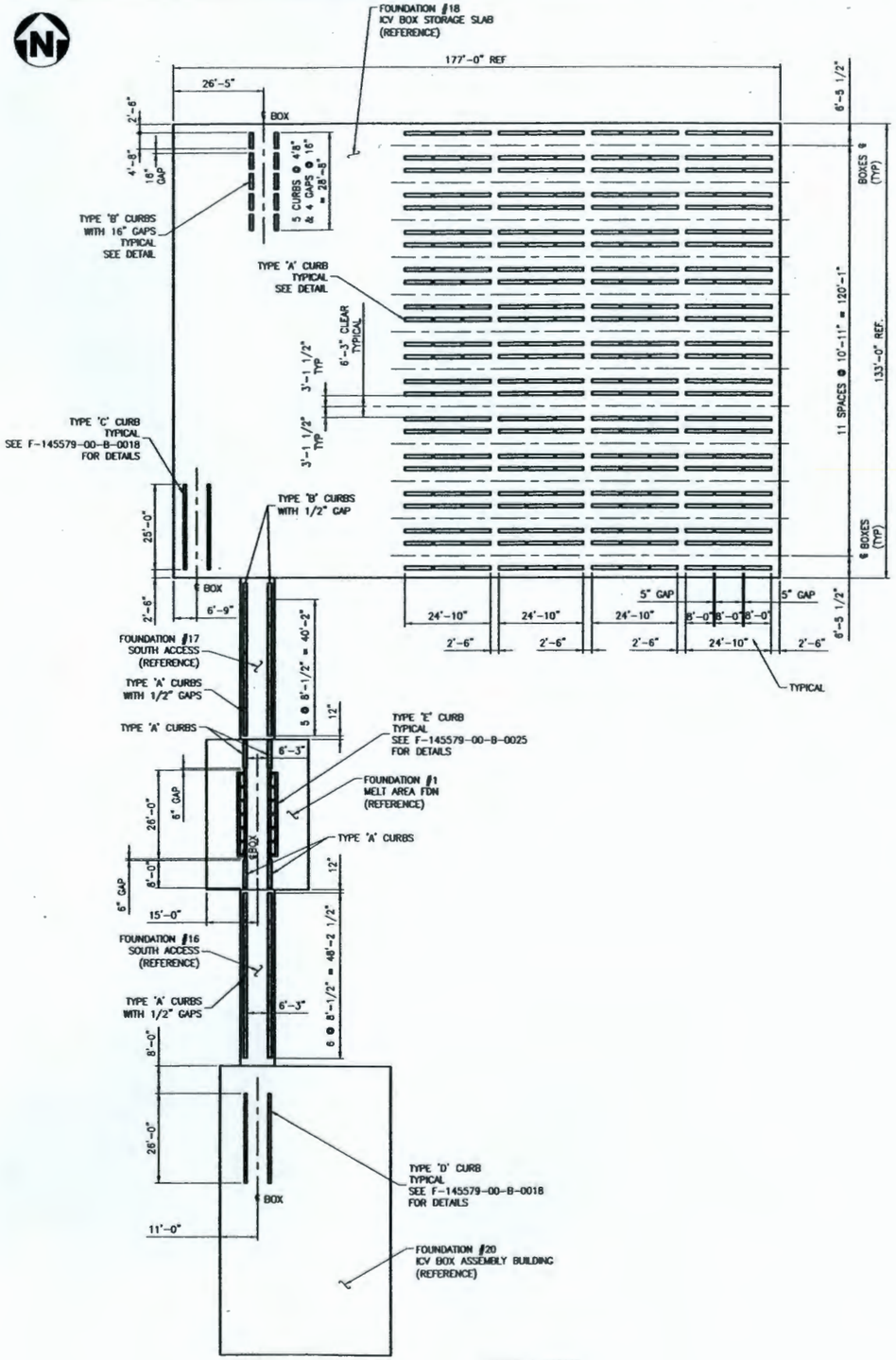

CURB LAYOUT
1/16"=1'-0"

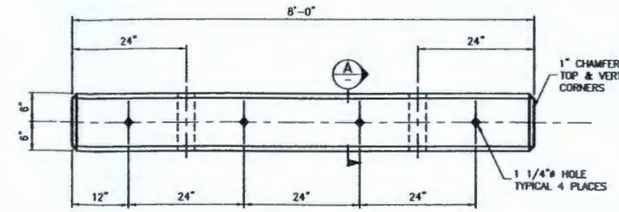

PLAN – TYPE 'A' CURB
PRE-CAST CONCRETE: 320 REQ'D 1"=1'-0"

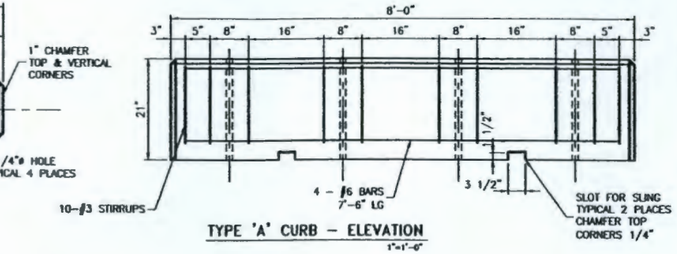

TYPE 'A' CURB – ELEVATION
1"=1'-0"

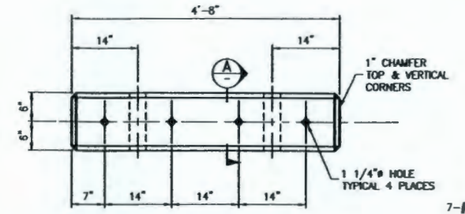

PLAN – TYPE 'B' CURB
PRE-CAST CONCRETE: 12 REQ'D 1"=1'-0"

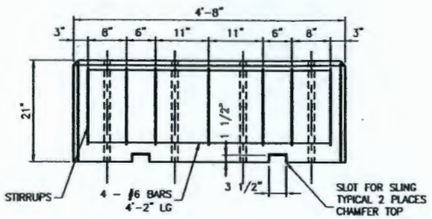

TYPE 'B' CURB – ELEVATION
1"=1'-0"

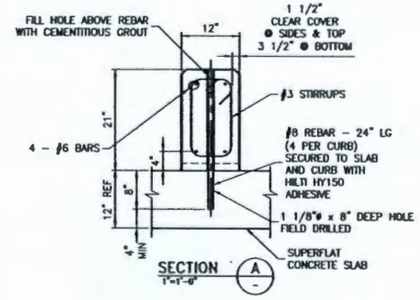

SECTION A
1"=1'-0"

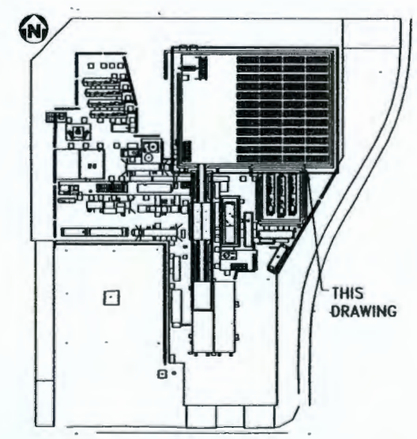

LOCATION PLAN

NOTES:

1. FOR DETAILS OF CONCRETE SLABS SEE DRAWINGS H-14-106790 AND H-14-106792.
2. ALL CONSTRUCTION SHALL CONFORM TO CONSTRUCTION SPECIFICATION 145579-Q-SP-001.
3. CONCRETE SHALL CONFORM TO CONSTRUCTION SPECIFICATION, SECTION 03480 "PRE-CAST CONCRETE".

THE FOLLOWING SPECIFIC REQUIREMENTS APPLY TO PRE-CAST CONCRETE.
REFER TO THE CONSTRUCTION SPECIFICATION FOR DETAILS.

a) MINIMUM COMPRESSIVE STRENGTH @ 28 DAYS = 4000 PSI.
b) MAXIMUM WATER/CEMENT RATIO = 0.5
c) AIR CONTENT SHALL BE 5% – 8%.
d) CONSTRUCTION AND CONTRACTION JOINTS SHALL BE PER ACI 224.3R AND ACI 302.1R.

4. TYPE 'A' & 'B' CURBS SHALL HAVE A TOLERANCE OF ±0.25 INCHES FROM DIMENSIONED HEIGHT AND WIDTH OVER FULL LENGTH OF CURBS.
5. ALL DRILL IN ANCHORS SHALL BE INSTALLED IN CONFORMANCE WITH THE REQUIREMENTS FOR SPECIAL INSPECTION AS LISTED IN CHAPTER 17 OF THE UNIFORM BUILDING CODE AND ICBO REPORT ER 5193.
6. FOR SUPPORTING DESIGN CALCULATIONS SEE 145579-C-CA-013, AND 145579-B-CA-004.

Rev.	REVISION DESCRIPTION	Date	By	Chk'd	Approved Indep. Rev.	Approved Proj. Eng.
J	ISSUED FOR CH2M HILL APPROVAL & 90% REPORT	16 MAR 06	DPK	PM	PM	FWS
I	ISSUED FOR INTERNAL APPROVAL	19 DEC 05	DPK		PM	JTA
H	ISSUED FOR INTERNAL REVIEW	06 DEC 05	DPK		PM	JDS
G	ISSUED FOR CH2M HILL APPROVAL & 90% REPORT	01 APR 05	DPK		PM	TH
F	ISSUED FOR CH2M HILL APPROVAL & 90% REPORT	03 MAR 05	DPK		PM	TH
E	ISSUED FOR CH2M HILL APPROVAL	27 JAN 05	DPK		PM	TH
D	ISSUED FOR CH2M HILL REVIEW	25 NOV 04	DPK		PM	TH
C	ISSUED FOR INTERNAL APPROVAL	23 NOV 04	DPK		PM	TH
B	ISSUED FOR INTERNAL REVIEW	04 NOV 04	DPK		PM	TH
A	ISSUED FOR REVIEW	19 OCT 04	DPK		PM	JDS

AMEC DRAWING NO: F-145579-00-B-0022 REV: J

amec

AMEC PROJECT: 145579-FINAL DBVS DESIGN

NAME	SIGNATURE
DRAWN BY: Don Kreuker	
REVIEWED BY	
CHECKED BY	
DESIGN / PROJ. ENG	
ENGINEERING MANAGER	
PROJECT MANAGER	
DESIGN AUTHORITY	

U.S. DEPARTMENT OF ENERGY
Office of River Protection

BULK VITRIFICATION
ICV BOX STORAGE AREA
CURB LAYOUT & DETAILS

SIZE: F | BLDG NO | DWG NO | SHEET NO | REV

SCALE: AS SHOWN | SHEET OF

DWG NO	TITLE
–	

DRAWING TRACEABILITY LIST

REF NUMBER	TITLE
–	

REFERENCES

NEXT USED ON

REV NO	REV BY	DESCRIPTION	REV BY DATE	REV BY	CHECKED BY	DRAWN
–						

REVISIONS

RPP-24544 REV 1c

In making requests for transmittal of data by any electronic media, the Company receiving such data agrees that AMEC Americas Limited cannot be held responsible for users of the data outside of or beyond the scope of our original agreement. Also, because data stored in electronic media or transmitted by electronic means can deteriorate undetected or be modified without the consultant's knowledge, the Company receiving data agrees that AMEC Americas Limited cannot be held liable for the compatibility, completeness or correctness of the data.

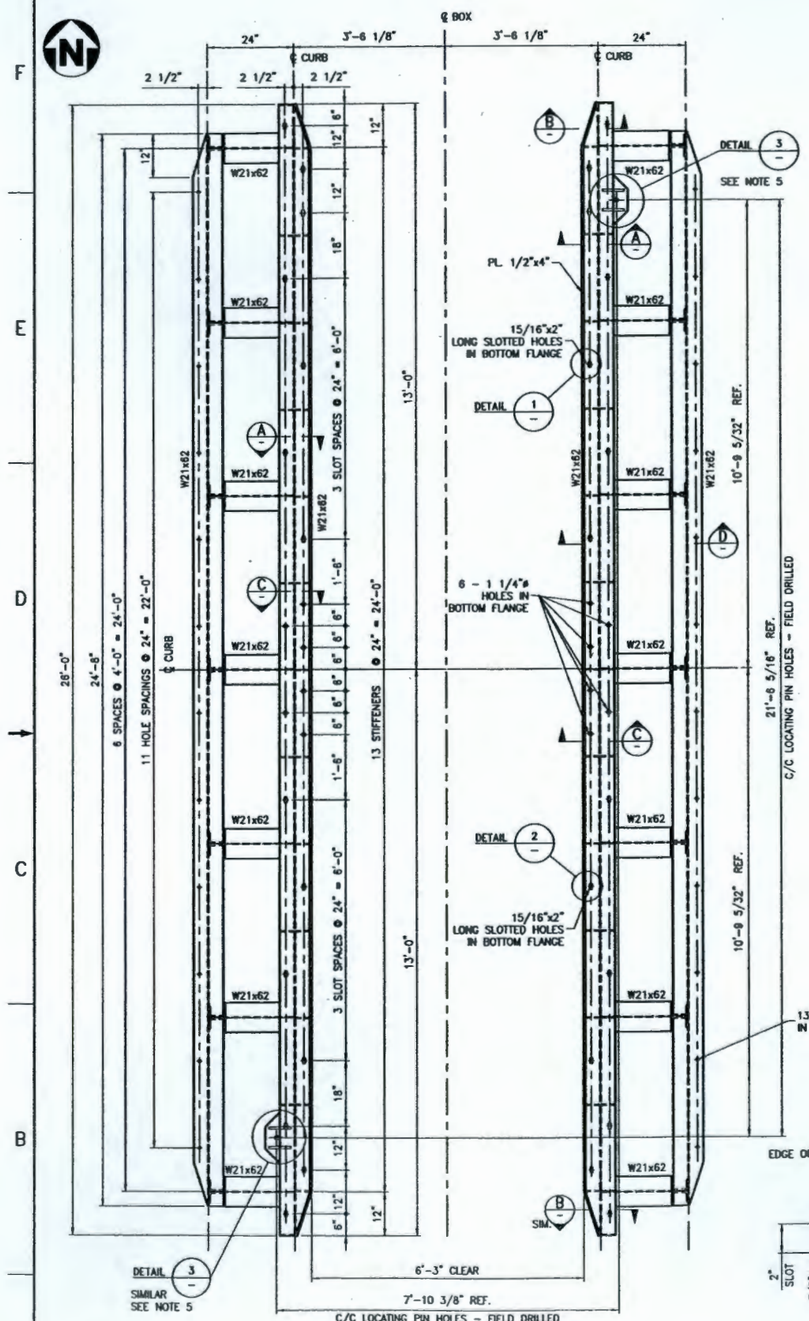

TYPE 'E' CURBS - PLAN
3/4"=1'-0"

1 PAIR REQUIRED AS SHOWN SEE F-145579-00-B-0022 FOR LOCATION

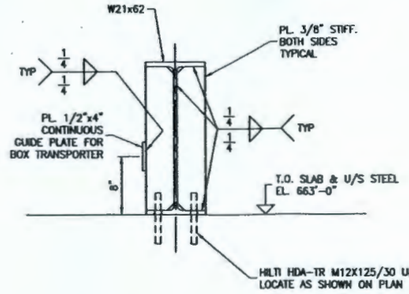

SECTION A
1 1/2"=1'-0"

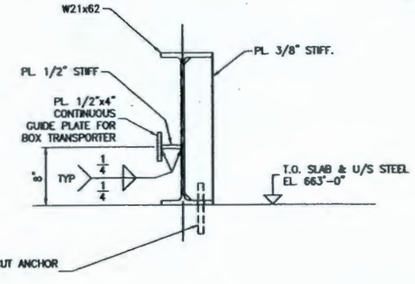

SECTION B
1 1/2"=1'-0"
TYPICAL 4 PLACES

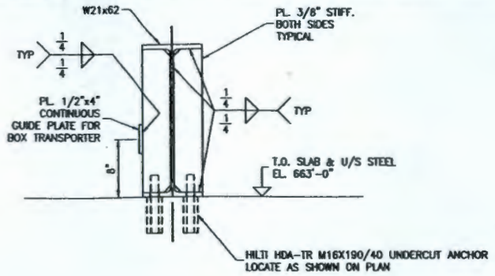

SECTION C
1 1/2"=1'-0"

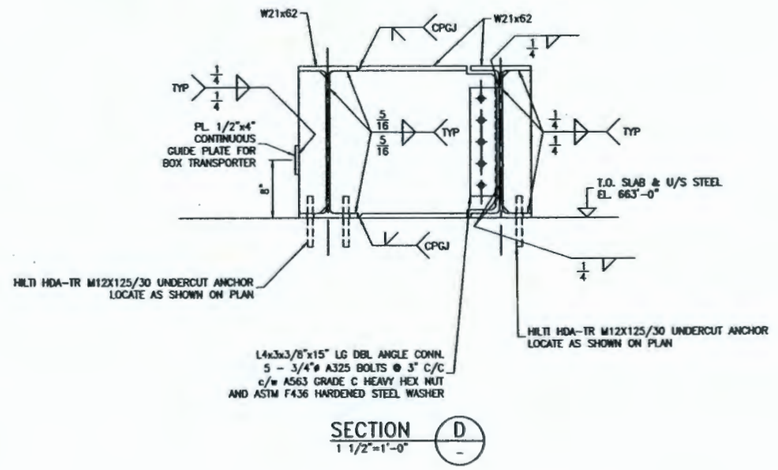

SECTION D
1 1/2"=1'-0"

NOTES:

1. ALL CONSTRUCTION SHALL CONFORM TO CONSTRUCTION SPECIFICATION 145579-Q-SP-001.
2. FOR GENERAL NOTES & STRUCTURAL STEEL DETAILS SEE DRAWINGS F-145579-00-B-0001 TO 0004.
3. CURBS SHALL HAVE MAX. CAMBER AND SWEEP OF 5/16". INSTALL CONVEX SIDE UP. MAINTAIN 6"-3" CLEARANCE BETWEEN CURBS AT ALL LOCATIONS. TOLERANCE ±3/16".
4. FOR SUPPORTING DESIGN CALCULATIONS SEE 145579-B-CA-004.
5. FIELD DRILL 1-1/8" DIAMETER HOLES AS SHOWN. THESE HOLES ASSIST IN ACCURATE PLACEMENT OF THE ICV BOX. HOLES TO BE LOCATED AND DRILLED BY OTHERS USING A SAMPLE ICV BOX AS A TEMPLATE DURING COMMISSIONING PHASE.
6. ALL DRILL-IN ANCHORS SHALL BE INSTALLED IN CONFORMANCE WITH THE REQUIREMENTS FOR SPECIAL INSPECTION AS LISTED IN CHAPTER 17 OF THE UNIFORM BUILDING CODE AND ICBO REPORT ER-5608. AT SLOTTED HOLES, NUTS SECURING CURB SHALL BE SNUG-TIGHT ONLY.

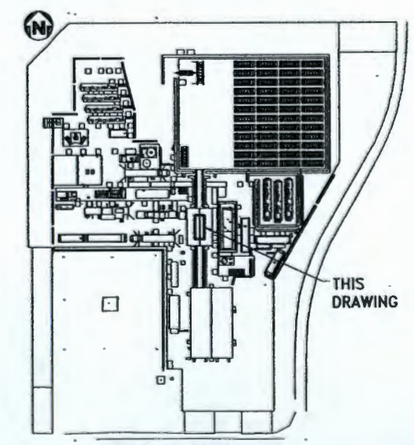

LOCATION PLAN

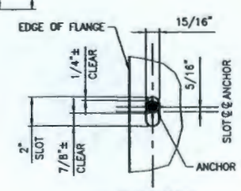

ANCHOR DETAIL NORTH OF RAIL CENTERLINE

DETAIL 1
3"=1'-0"

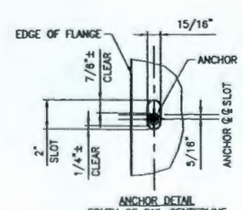

ANCHOR DETAIL SOUTH OF RAIL CENTERLINE

DETAIL 2
3"=1'-0"

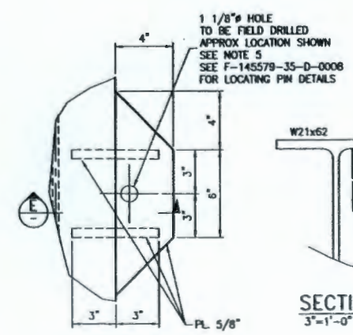

LOCATING HOLE DETAIL

DETAIL 3
3"=1'-0"
TYPICAL 2 PLACES

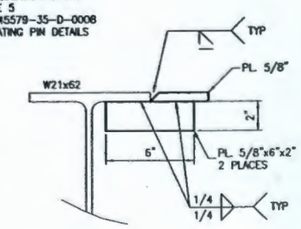

SECTION E
3"=1'-0"

Rev.	REVISION DESCRIPTION	Date	By	Chk'd		PM		JDS
F	ISSUED FOR CH2M HILL APPROVAL AND 90% REPORT	10 MAR 06	CAG	PM		PM		JDS
E	ISSUED FOR INTERNAL APPROVAL	19 JAN 06	DPK			PM		FWS
D	ISSUED FOR INTERNAL REVIEW	19 DEC 05	CAG			PM		JTA
C	ISSUED FOR CH2M HILL APPROVAL & 90% REPORT	04 JUN 05	RDB			PM		TH
B	ISSUED FOR CH2M HILL APPROVAL & 90% REPORT	17 MAY 05	DPK			PM		TH
A	ISSUED FOR CH2M HILL REVIEW & 90% REPORT	04 APR 05	DPK			PM		SC

AMEC DRAWING NO: F-145579-00-B-0025 REV: F

amec

NAME	DATE
DRAWN BY: Dan Kroeker	
DESIGNED BY	
CHECKED BY	
DESIGN / PROJ. ENG	
ENGINEERING MANAGER	
PROJECT MANAGER	
DESIGN AUTHORITY	

AMEC PROJECTS: 145579-FINAL DBVS DESIGN

U.S. DEPARTMENT OF ENERGY
Office of River Protection

BULK VITRIFICATION MELT AREA STEEL CURBS

SIZE: F | BLDG NO | CHECK NO | DWG NO | REV

SCALE | DIV | SHEET OF

DWG NO	TITLE
DRAWING TRACEABILITY LIST	

REF NUMBER	TITLE
REFERENCES	
NEXT USED ON	

REV NO	DESCRIPTION	REV BY	CHECKED BY	DATE
REVISIONS				

In making requests for transmittal of data by any electronic media, the Company receiving such data agrees that AMEC Americas Limited cannot be held responsible for users of the data outside of or beyond the scope of our original agreement. Also, because data stored in electronic media or transmitted by electronic means can deteriorate undetected or be modified without the consultant's knowledge, the Company receiving data agrees that AMEC Americas Limited cannot be held liable for the compatibility, completeness or correctness of the data.

No.	AMEC Dwg. No.	REFERENCE DRAWINGS
1	F-145579-35-D-0004	ICV BOX DATA SHEET
2	H-14-106789	CIVIL SITE IMPROVEMENTS PLAN
3	H-14-106790	ICV BOX STORAGE AREA PLAN / DETAILS
4	F-145579-00-B-0020	SHIELDING WALLS GENERAL ARRANGEMENT
5	F-145579-00-B-0022	ICV BOX STORAGE AREA CURB LAYOUT AND DETAILS
6	F-145579-00-D-0020	SAMPLING AND STORAGE AREA G.A. SECTIONS

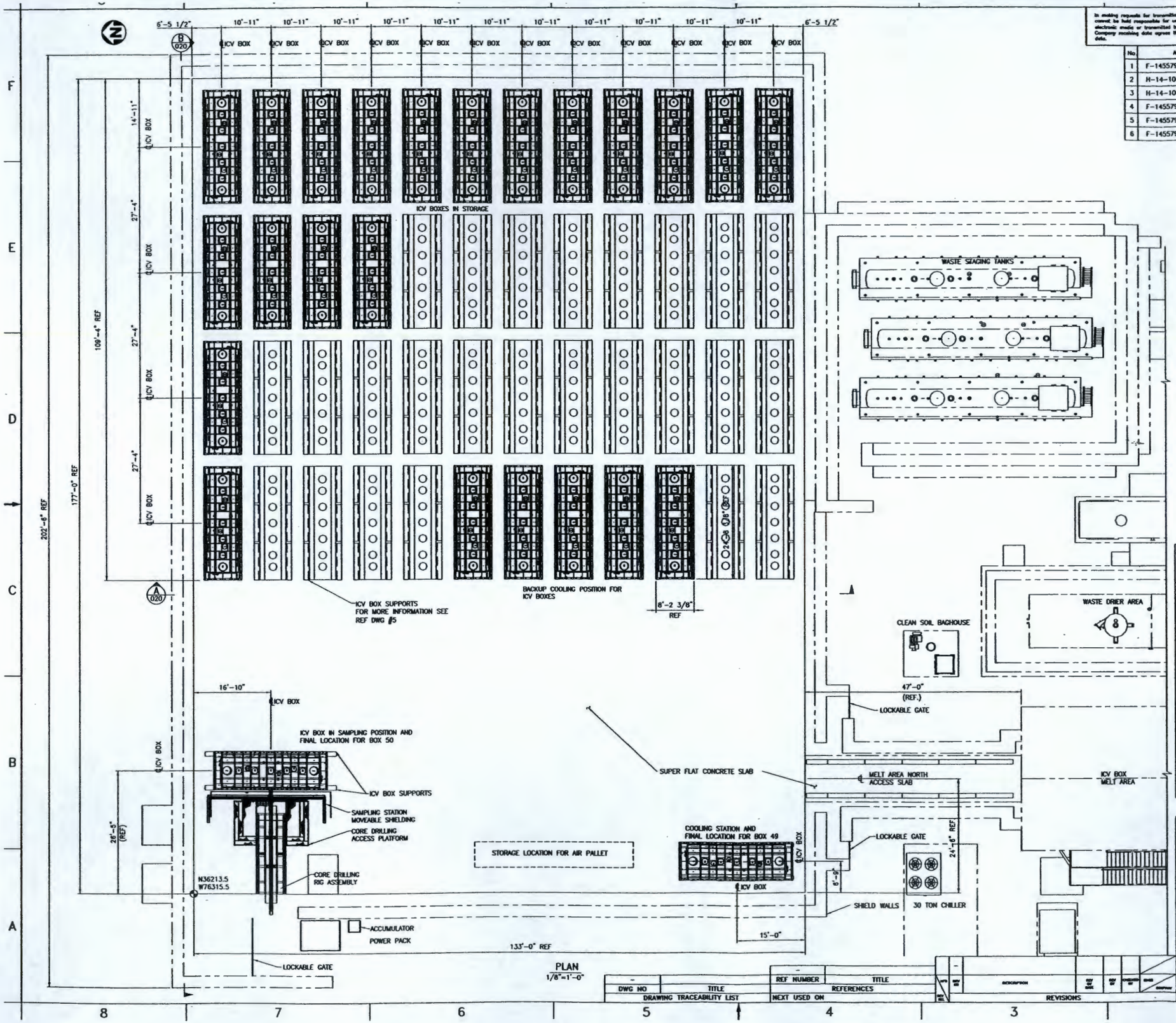

PLAN
1/8"=1'-0"

NOTES:

1. THE MINIMUM AISLE WIDTH BETWEEN ICV BOXES IN STORAGE IS 30 INCHES.
2. LOCKABLE GATES TO BE INSTALLED AT ALL LABYRINTH OPENINGS. FOR MORE INFORMATION SEE REF DWG #4.

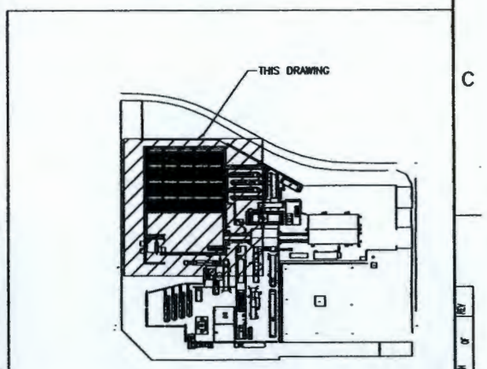

KEYPLAN

Rev.	REVISION DESCRIPTION	Date	By	Chk'd	Approved	Approved
E	ISSUED FOR DESIGN	16 DEC 05	RRB		FWS	JDS
D	ISSUED FOR CH2M HILL APPROVAL AND 90% REPORT	02 MAR 05	TW	AA	GJ	TH
C	ISSUED FOR CH2M HILL REVIEW	15 NOV 04	JBM	TW	FWS	TH
B	ISSUED FOR INTERNAL APPROVAL	2 NOV 04	JBM	TW	FWS	TH
A	ISSUED FOR REVIEW	13 SEPT 04	JBM	TW	FWS	JDS

AMEC DRAWING NO: F-145579-00-D-0007 REV: E

amec

AMEC PROJECT: 145579-FINAL DBVS DESIGN

U.S. DEPARTMENT OF ENERGY
Office of River Protection

BULK VITRIFICATION
ICV PACKAGE SAMPLING AND STORAGE AREA GA PLAN

NAME	DATE
DRAWN BY RDB	24 AUG 04
TECHNICAL BY	
CHECKED BY	
DESIGN / DISC. LEAD	
ENGINEERING MANAGER	
PROJECT MANAGER	
DESIGN AUTHORITY	

SIZE F | SCALE 1/8"=1'-0"

DWG NO	TITLE
DRAWING TRACEABILITY LIST	

REF NUMBER	TITLE
REFERENCES	
NEXT USED ON	

REV NO	DESCRIPTION	REF OF CHANGE	REV BY	CHECKED BY	DATE	APPROVED BY
REVISIONS						

In making requests for transmittal of data by any electronic media, the Company receiving such data agrees that AMEC Americas Limited cannot be held responsible for some of the data outside of or beyond the scope of our original agreement. Also, because data stored in electronic media or transmitted by electronic means can deteriorate undetected or be modified without the consultant's knowledge, the Company receiving data agrees that AMEC Americas Limited cannot be held liable for the compatibility, completeness or correctness of the data.

No.	AMEC Dwg. No.	REFERENCE DRAWINGS
1	F-145579-00-D-0051	MELT AREA G.A. PLAN VIEWS
2	F-145579-00-D-0044	MELT AREA G.A. SECTIONS
3	F-145579-00-D-0010	MELT AREA G.A.

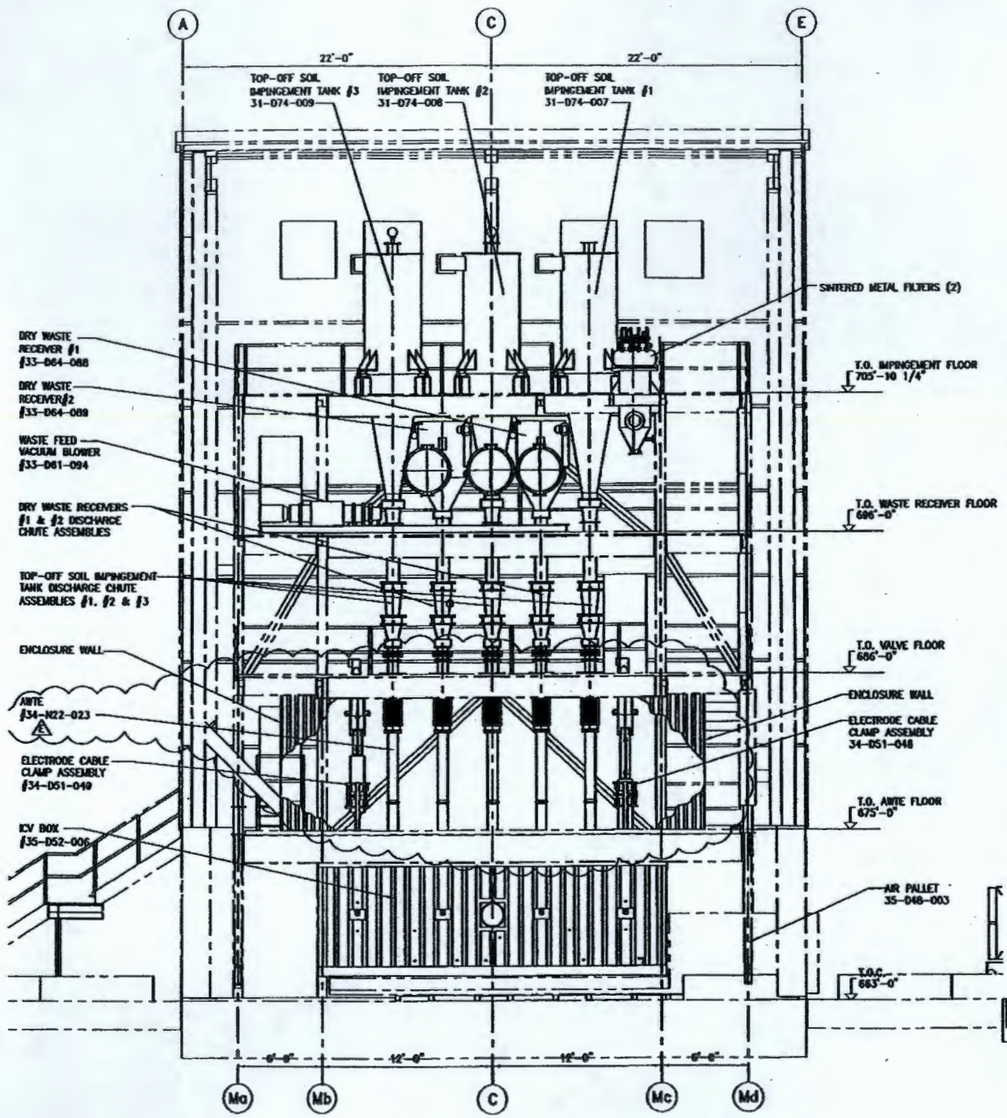

ELEVATION LOOKING WEST
SCALE: 1/4"=1'-0"

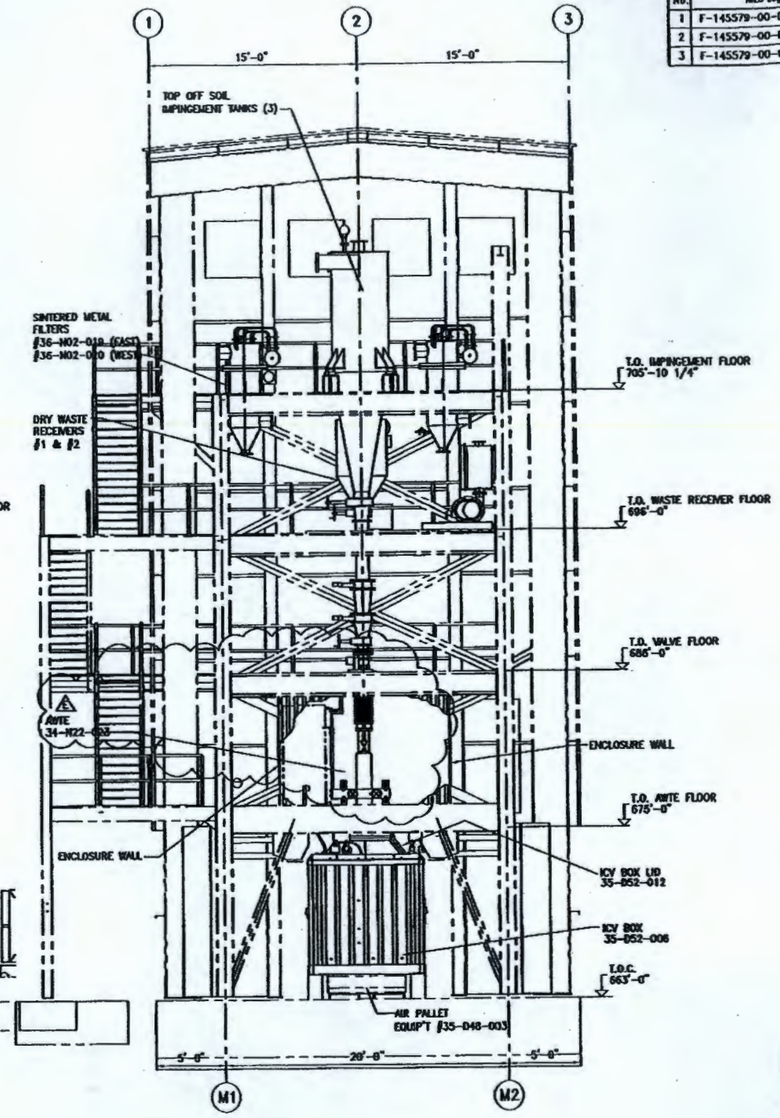

ELEVATION LOOKING NORTH
SCALE: 1/4"=1'-0"

NOT APPROVED FOR CONSTRUCTION

Rev.	REVISION DESCRIPTION	Date	By	Chk'd	Appr'd	Appr'd	Rev. Lev.
F	ISSUED FOR APPROVAL	06 FEB 06	AS				F
E	ISSUED FOR DESIGN	16 DEC 05	BRB		FWS	JDE	E
D	ISSUED FOR CHON MILL APPROVAL/DOE REPORT	02 MAR 05	BCS	AA	GJ	TH	D
C	ISSUED FOR CHON MILL REVIEW/APPROVAL	05 NOV 04	BCS		GJ/FS	TH	C
B	ISSUED FOR INTERNAL APPROVAL	10 OCT 04	BCS		FS	JDE	B
A	ISSUED FOR REVIEW	27 AUG 04	BRB		FS/GJ	TH	A

AMEC DRAWING NO: F-145579-00-D-0041

amec

NAME	SIGN	DATE
DRAWN BY: M. BENNETT		27 AUG 04
CHECKED BY: J. DE JONGE		27 AUG 04
REVIEWED BY: G. JONES		27 AUG 04
APPROVED BY:		
CLIENT / END USER: A. SHELL		27 AUG 04
CLIENT REVIEW: A. SIEBERT		27 AUG 04
CLIENT APPROVAL: J. STEPHENS		27 AUG 04
PROJECT MANAGER:		

AMEC PROJECT: 145579-FINAL DBVS DESIGN

U.S. DEPARTMENT OF ENERGY
Office of River Protection

BULK VITRIFICATION
MELT AREA G.A.
SECTIONS

SIZE: F | SCALE: 1/4"= 1' | SHEET 1 OF 1

DWG NO	TITLE
–	

DRAWING TRACEABILITY LIST

REF NUMBER	TITLE
–	

REFERENCES
NEXT USED ON

REV NO	REV BY	DESCRIPTION	REV BY	REV BY	REVIEWED BY	APPR	DRAWING
–	–						

REVISIONS

In making requests for transmittal of data by any electronic media, the Company receiving such data agrees that AMEC Americas Limited cannot be held responsible for users of the data outside of or beyond the scope of our original agreement. Also, because data stored in electronic media or transmitted by electronic means can deteriorate undetected or be modified without the consultant's knowledge, the Company receiving data agrees that AMEC Americas Limited cannot be held liable for the compatibility, completeness or correctness of the data.

No.	AMEC Dwg. No.	REFERENCE DRAWINGS
1	F-145579-00-D-0044	MELT AREA G.A. SECTION A
2	F-145579-00-D-0041	MELT AREA G.A. SECTION B
3	F-145579-34-D-0001	AREA 34 – WASTE TRANSFER AWTE PLAN & ELEVATIONS
4	F-145579-34-D-0010	MELT AREA G.A.

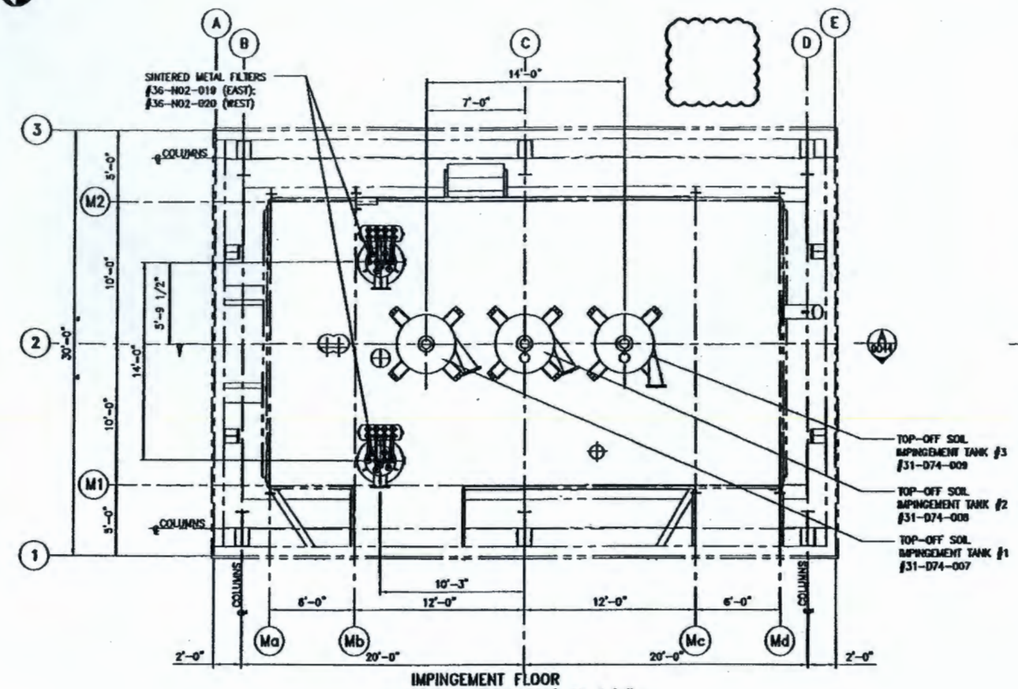

IMPINGEMENT FLOOR
PLAN @ ELEV. 705'-10 1/4"
1/4"=1'-0"

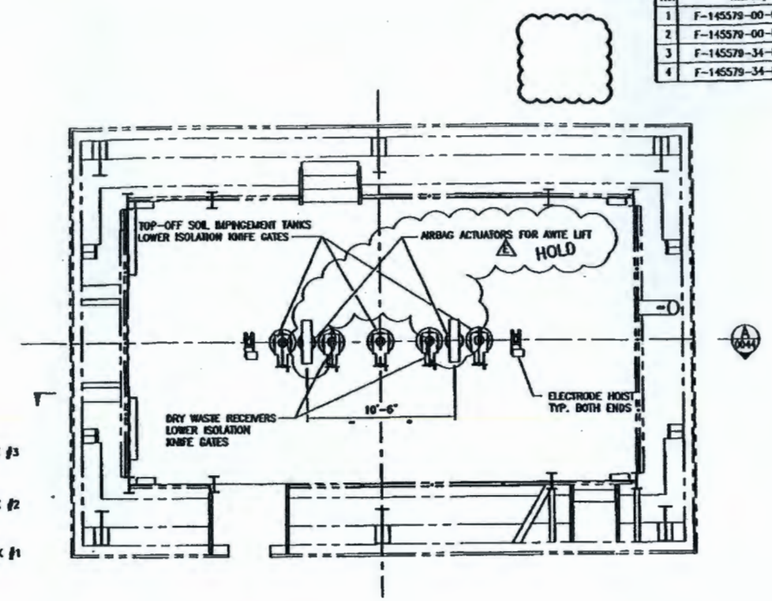

VALVE FLOOR
PLAN @ ELEV. 686'-0"
1/4"=1'-0"

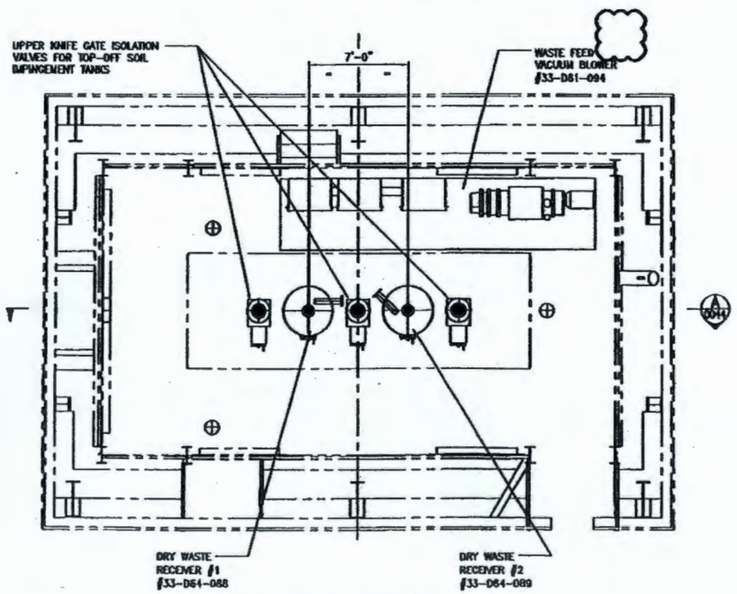

WASTE RECEIVER FLOOR
PLAN @ ELEV. 696'-0"
1/4"=1'-0"

NOT APPROVED FOR CONSTRUCTION

Rev.	REVISION DESCRIPTION	Date	By	Chk'd	Appd	Appd
F	ISSUED FOR APPROVAL	01 FEB 06	AS		FWS	JBS
E	ISSUED FOR DESIGN	16 DEC 05	RMB			
D	ISSUED FOR CH2M HILL APPROVAL/DOE REPORT	02 MAR 05	RCS	AA	GJ	TH
C	ISSUED FOR CH2M HILL REVIEW/APPROVAL	05 NOV 04	RCS		GJ/FS	TH
B	ISSUED FOR INTERNAL APPROVAL	18 OCT 04	RCS		FS	JBS
A	ISSUED FOR REVIEW	27 AUG 04	RMB		FS/GJ	TH

SPEC DRAWING NO: F-145579-00-D-0051
REV: F

amec

SITE PROJECT: 145579-FINAL DBVS DESIGN

U.S. DEPARTMENT OF ENERGY
Office of River Protection

BULK VITRIFICATION
MELT AREA G.A.
PLAN VIEWS

NAME	SIGN	DATE
DRAWN BY		
DESIGNED BY		
CHECKED BY		
PROJ. / DISC. ENG.		
APPROVED BY		
PROJECT MANAGER		
REVIEW AUTHORITY		

REV F
SCALE 1/4"=1'-0"

DWG NO	TITLE
–	

DRAWING TRACEABILITY LIST

REF NUMBER	TITLE
–	

REFERENCES
NEXT USED ON

REV NO	DESCRIPTION	REV BY	REV DATE	DRAWN	CHECKED
–					

REVISIONS

No.	AMEC Dwg. No.	REFERENCE DRAWINGS
1	F-145579-35-0-0006	ICV BOX LID STEEL WORK 1 OF 3
2	F-145579-35-0-0011	ICV BOX ASSEMBLY DETAILS

In making requests for transmittal of data by any electronic media, the Company receiving such data agrees that AMEC Americas Limited cannot be held responsible for errors of the data outside of or beyond the scope of our original agreement. Also, because data stored in electronic media or transmitted by electronic means can deteriorate undetected or be modified without the consultant's knowledge, the Company receiving data agrees that AMEC Americas Limited cannot be held liable for the compatibility, completeness or correctness of the data.

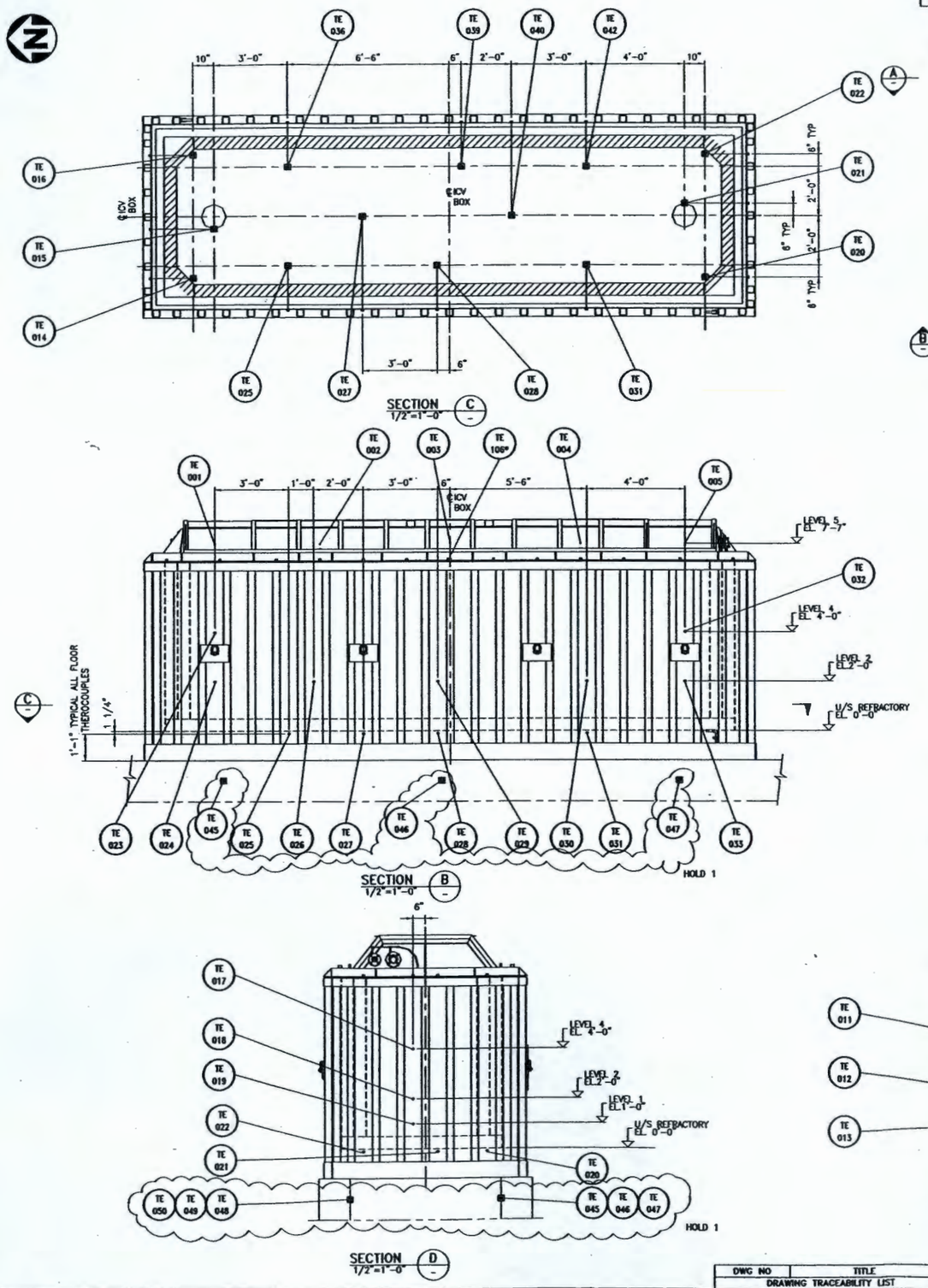

NOTES:

1. FOR WALL MOUNTED THERMOCOUPLES SEE REF DWG #2 FOR INSTALLATION DETAILS.
2. FOR LID MOUNTED THERMOCOUPLES SEE REF DWG #1 FOR INSTALLATION DETAILS.
3. ALL FLOOR THERMOCOUPLES SHALL BE INSTALLED IN THE SAND LAYER BEFORE THE FLOOR REFRACTORY IS PLACED

HOLDS:
1. HOLD FOR DESIGN DEVELOPMENT

Rev.	REVISION DESCRIPTION	Date	By	Chk'd	Approved	Approved
0	ISSUE FOR CONSTRUCTION	19 MAY 05	DRJ	LSK	JGA	TH
C	ISSUED FOR CH2M HILL REVIEW AND 90% REPORT	7 MAR 05	DRJ	BGW	JGA	TH
B	ISSUED FOR INTERNAL APPROVAL	6 DEC 04	BGW	LSK	JGA	TH
A	ISSUED FOR REVIEW	05 NOV 04	BgM	BW	JA	TH

AMEC DRAWING NO: F-145579-00-F-0014 REV: 0

amec

AMEC PROJECT: 145579-FINAL DBVS DESIGN

U.S. DEPARTMENT OF ENERGY
Office of River Protection

BULK VITRIFICATION
ICV BOX
INSTRUMENT LOCATIONS

SIZE F

DWG NO	TITLE
DRAWING TRACEABILITY LIST	

REF NUMBER	TITLE
NEXT USED ON	REFERENCES

REV NO	DATE	DESCRIPTION	REV BY	CHECKED BY	APPR
REVISIONS					

No.	AMEC Dwg. No.	REFERENCE DRAWINGS
1	F-145579-35-D-0005	ICV BOX LID ASSEMBLY
2	F-145579-35-D-0006	ICV BOX LID STEEL WORK 1 OF 3
3	F-145579-35-D-0008	ICV BOX ASSEMBLY
4	F-145579-35-D-0012	ICV BOX CAMERA, T/C AND GROUND ASSEMBLY
5	F-145579-35-D-0014	ICV BOX STARTER PATH DETAILS
6	F-145579-35-D-0021	ICV BOX LID BREATHER HEPA FILTER
7	F-145579-35-D-0016	ICV BOX REFRACTORY ASSEMBLY

In making requests for transmittal of data by any electronic media, the Company receiving such data agrees that AMEC Americas Limited cannot be held responsible for users of the data outside of or beyond the scope of our original agreement. Also, becomes data stored in electronic media or transmitted by electronic means can deteriorate undetected or be modified without the consultant's knowledge, the Company receiving data agrees that AMEC Americas Limited cannot be held liable for the compatibility, completeness or correctness of the data.

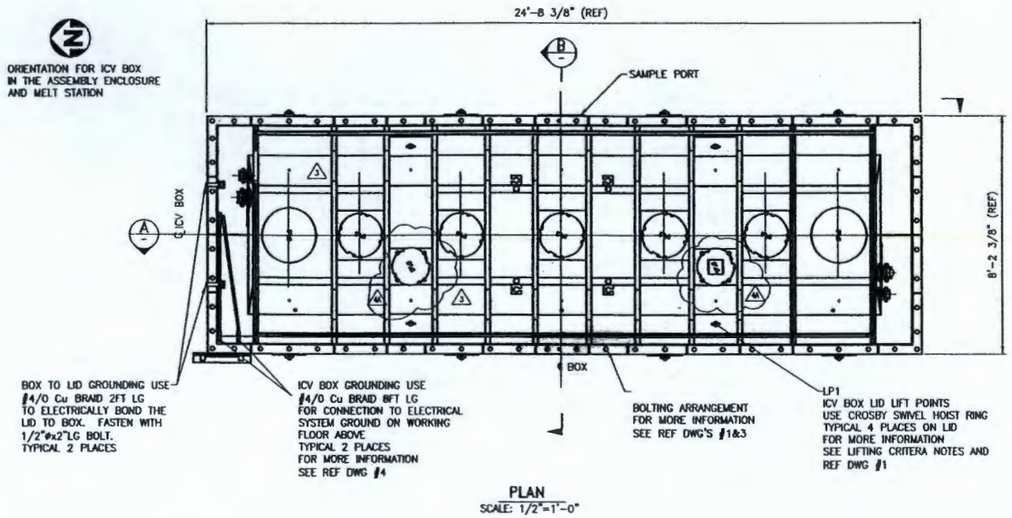

PLAN
SCALE: 1/2"=1'-0"

NOTES:

1. ICV BOX SHELL SHALL BE CONSTRUCTED WITH ALL INSIDE JOINTS SEAL WELDED (WATERTIGHT)
2. FINISHED CONSTRUCTION DIMENSIONAL TOLERANCE SHALL BE ±1/8"
3. PROVIDE DRAIN HOLES TO ALLOW FOR NO WATER RETENTION ON TOP OF BOX LID.
4. ALL PIPING FLANGES WILL BE IN ACCORDANCE WITH ASME B16.5
5. FOR ICV BOX DETAILS SEE DWG. F-145579-35-D-0008
6. FOR ICV BOX LID DETAILS SEE DWG. F-145579-35-D-0006
7. SUPPLY CROSBY LIFTING DEVICES MODEL HR-125 #1016920 (OR EQUAL)
8. NAME PLATES SHALL BE PROVIDED FOR THE ICV BOX AND LID. NAME PLATES SHALL MEET THE REQUIREMENTS OF THE HANFORD HOISTING AND RIGGING MANUAL AND AS A MINIMUM SHOW THE MANUFACTURES NAME AND WEIGHTS EMPTY AND FULL.
9. ALL HSS MEMBERS SHALL HAVE 0.25" BREATHER/DRAIN HOLES.
10. FOR CENTER OF GRAVITY DIMENSIONS SEE 145579-D-CA-028.

LIFTING CRITERIA

1. ICV BOX LID
   - -FOUR (4) LIFT POINTS (LP1)
   - -USE LIFTING FRAME OR SPREADER BARS (SUPPLIED BY LID FABRICATOR).
   - -USE CROSBY SWIVEL HOIST RINGS MODEL HR-125 #1016920

   LIMITATIONS
   1. LP1'S TO BE USED FOR LIFTING THE ICV BOX LID ONLY
   2. REMOVE SWIVEL HOIST RINGS AFTER ICV BOX ASSEMBLY, FOR REUSE ON SUBSEQUENT BOXES
2. EMPTY BOX
   - -EIGHT (8) LIFT POINTS (LP2) ON BOX SIDES
   - -USE LIFTING FRAME OR SPREADER BARS (SUPPLIED BY BOX FABRICATOR)
   - -USE CROSBY SWIVEL HOIST RINGS MODEL HR-125 #1016920

   LIMITATIONS
   1. LP2 RESTRICTED TO LIFTING THE EMPTY ICV BOX AND LID ONLY
   2. THESE LP2 POINTS ARE NOT TO BE USED FOR LIFTING ICV BOX WHEN COMPOSITE LINER OF INSULATION, SAND AND REFRACTORY, HAVE BEEN INSTALLED.
   3. THESE LP2 POINTS ARE NOT TO BE USED TO LIFT THE FULL BOX
   4. REMOVE SWIVEL HOIST RINGS AFTER ICV BOX IS LIFTED INTO ASSEMBLY POSITION IN THE ASSEMBLY ENCLOSURE, FOR REUSE ON SUBSEQUENT BOXES.
3. FULL BOX
   - -EIGHT (8) LIFT POINTS (LP3)
   - -FULL ICV BOX TO BE LIFTED FROM UNDERNEATH BOTTOM PERIMETER FRAME
4. ALL SWIVEL HOIST RINGS TO BE TORQUED TO 60 FT LBS.

VESSEL DATA

FABRICATION, INSPECTION & TESTING

PRIMARY CONTAINMENT WELDS	FULL PENETRATION TO AWS D1.1		
RADIOGRAPHY	–	STRESS RELIEF	AS REQUIRED
IMPACT VALUES	–	WELD FINISH	SEE REF #3
WELD HARDNESS	–	INSPECTION BY	MANUFACTURER
OTHER N.D.T.	SEE NOTES	CODE CERT. REQ'D.	NO
MILL ANALYSIS / CERT.	–	STRESS CALCULATIONS	–
TESTING	WATER TIGHT/ FAT		

MATERIAL SPECIFICATIONS

	ASTM DESIGN	GRADE	DESCRIPTION
SHELL PLATE	A36		C.S.
REINFORCING RIBS (HSS)	A500	C	C.S.
INTERNAL CLIPS	A36		C.S.
BOLTS - EXTERNAL	A193	B7	C.S.
NUTS - EXTERNAL	A194	7 HEAVY HEX	C.S. 2
GASKETS: LID/BOX	SEE DWG SHT 0019		
REINF. PADS	A36		C.S.
INTERNAL LINERS	NOT IN SCOPE OF SUPPLY OF ICV BOX SHELL		
INSULATION	KAOWOOL M BOARD		
SAND	4		
REFRACTORY	VEBROCAST 60PC		
CLIPS	A36		

APPURTENANCES (APPLICABLE STDS. / SPECS.)

LIFTING LUGS	SEE DWG FOR DETAILS
EARTHING LUGS	SEE DWG FOR DETAILS
NAMEPLATES BOX	SEE NOTE 8
NAMEPLATES LID	SEE NOTE 8

FINISH (APPLICABLE STDS. / SPECS.)

SURFACE PREP - INTERNAL	N/A	INTERNAL FINISH	N/A
SURFACE PREP - EXTERNAL	SSPC SP10	EXTERNAL FINISH	THERMOLINE 4700
FIREPROOFING	N/A		

BOX WEIGHTS

ICV BOX BASE = 19,069#
ICV BOX LID = 4,737#
NOTE:
FOR WEIGHT BREAKDOWN OF ICV BOX & CONTENTS REFER RO DOCUMENT NO. 145579-D-CA-010.

GENERAL

PROJECT	DBVS FINAL DESIGN	PROJECT NUMBER	145579
		NUMBER REQ'D.	50
ITEM NO.	35-D52-006 ICV BOX	P.O. NUMBER	
	35-D52-012 ICV BOX LID	QA LEVEL	NQA-1
SITE	HANFORD		ENHANCED QUALITY

PROCUREMENT QUALITY

LEVEL	EQM

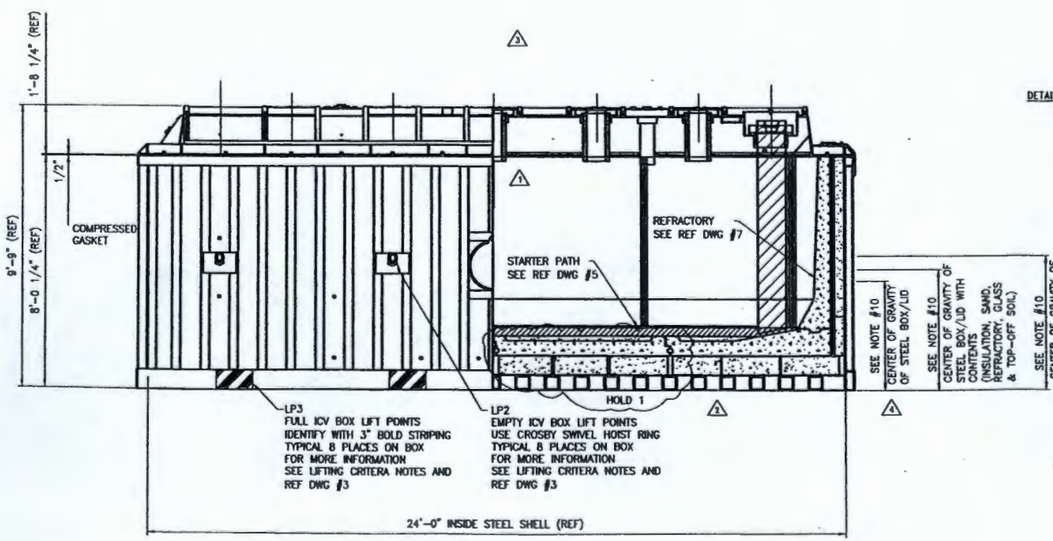

SECTION A
SCALE: 1/2"=1'-0"

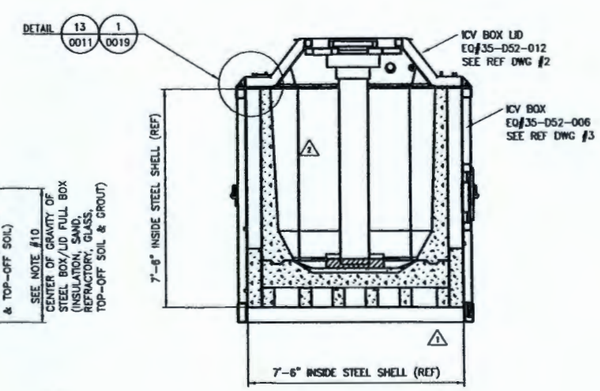

SECTION B
SCALE: 1/2"=1'-0"

HOLDS

1. ICV REFRACTORY JOINT ASSEMBLY DIMENSIONS ON-HOLD UNTIL VENDOR TESTING OF NEW JOINT DESIGN

Rev.	REVISION DESCRIPTION	Date	By	Chk'd	Appr'd	Appr'd Eng Mgr
4A	ISSUED FOR CH2M REVIEW/APPROVAL 90% DESIGN (PKG 6)	10 APR 06	THB	JM	SRB	JSG
4	TECN EE-016	20 MAR 06	RE	SW	SB	JJ
3	ISSUED FOR DESIGN REPORT	06 MAR 06	SW	JM	SB	JSG
2	REVISED ICV BOX CORNER PANEL AND REFRACTORY JOINT	13 JAN 06	SW	SRB	KSW	JSG
1	REVISED ICV BOX LINING	15 AUG 05	JBM	RDB	FWS	TH
0	ISSUED FOR CONSTRUCTION	19 MAY 05	JBM	AA	FWS	TH

AMEC DRAWING NO: F-145579-35-D-0004 REV 4A

amec

AMEC PROJECT: 145579-FINAL DBVS DESIGN

U.S. DEPARTMENT OF ENERGY
Office of River Protection

BULK VITRIFICATION
ICV BOX
DATA SHEET

NAME | DATE
DRAWN BY
DESIGNED BY
CHECKED BY
DESIGN / PROJ LEAD
ENGINEERING MANAGER
PROJECT MANAGER
AUTHORIZED AUTHORITY

SIZE F | SCALE AS NOTED | SHEET OF

DWG NO	TITLE	REF NUMBER	TITLE
DRAWING TRACEABILITY LIST		REFERENCES	

NEXT USED ON	REV	DESCRIPTION	REV BY	CHECKED BY	DATE	COMPANY
REVISIONS						

In making requests for transmittal of data by any electronic media, the Company receiving such data agrees that AMEC Americas Limited cannot be held responsible for users of the data outside of or beyond the scope of our original agreement. Also, because data stored in electronic media or transmitted by electronic means can deteriorate undetected or be modified without the consultant's knowledge, the Company receiving data agrees that AMEC Americas Limited cannot be held liable for the compatibility, completeness or correctness of the data.

No.	AMEC Dwg. No.	REFERENCE DRAWINGS
1	F-145579-35-D-0004	ICV BOX DATA SHEET
2	F-145579-35-D-0006	ICV BOX LID STEELWORK - 1 OF 3
3	F-145579-35-D-0007	ICV BOX LID STEELWORK - 2 OF 3
4	F-145579-35-D-0009	ICV BOX LID STEELWORK - 3 OF 3
5	F-145579-35-D-0012	ICV BOX LID CAMERA, T/C AND GROUND ASSEMBLY
6	F-145579-35-D-0019	ICV BOX LID GASKET DETAILS
7	F-145579-35-D-0021	ICV BOX BREATHER HEPA FILTER
8	F-145579-00-F-0018	LEVEL TC. DETAIL L1-106A-H
9	F-145579-00-D-0024	ICV BOX PORT CONNECTIONS

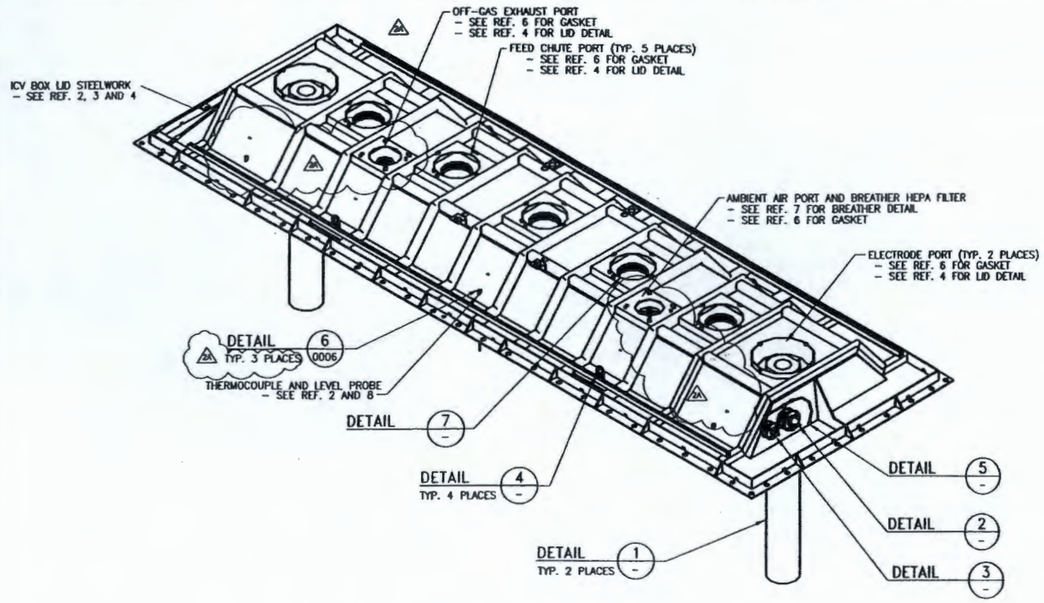

ICV BOX LID ASSEMBLY - EQUIP. #35-D52-012

LIFTING LUG
DETAIL 4
1 1/2" = 1'-0"

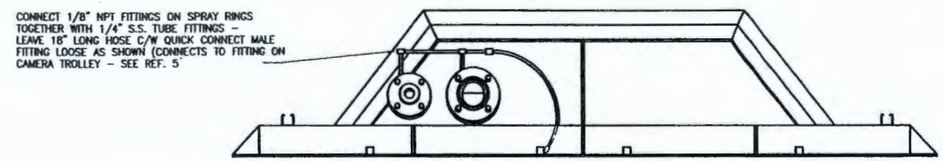

TYPICAL END CONNECTIONS
DETAIL 5
1 1/2" = 1'-0"

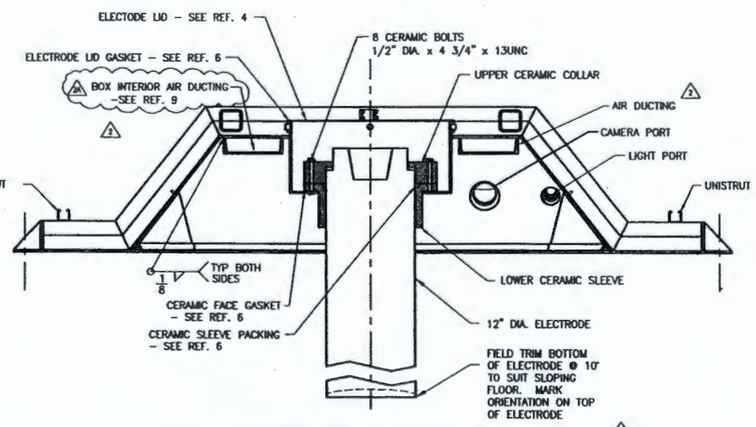

SECTION THRU ELECTRODE (C/W LID)
DETAIL 1
1 1/2" = 1'-0"

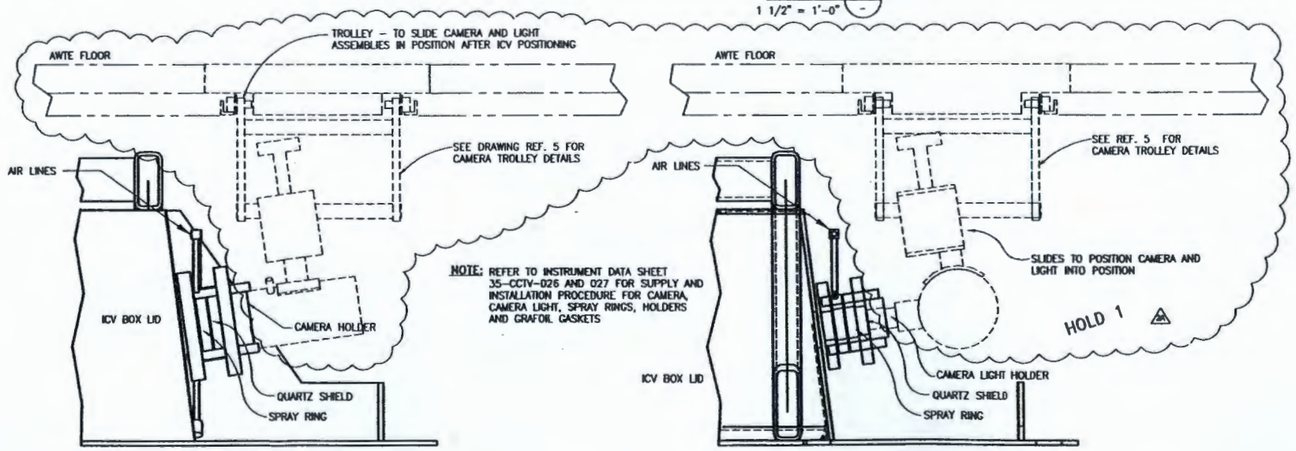

CAMERA MOUNT
DETAIL 2
3" = 1'-0"

CAMERA LIGHT MOUNT
DETAIL 3
3" = 1'-0"

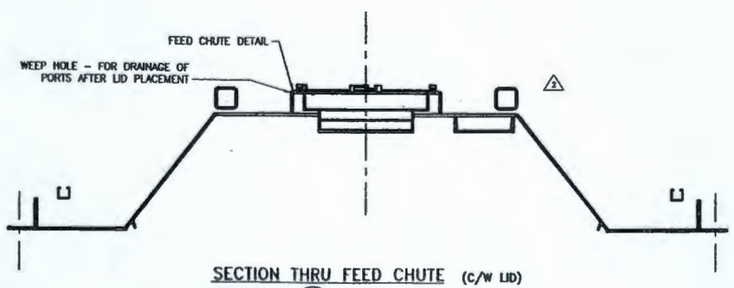

SECTION THRU FEED CHUTE (C/W LID)
DETAIL 7
1 1/2" = 1'-0"

HOLD:
1. ON HOLD AWAITING FINAL AWTE (PIC 230) CVI.

GENERAL NOTES:
1. NOTE REMOVED.
2. OFF GAS PORT TO BE USED AS GROUT INJECTION
3. THE PORT LIDS (EXCEPT FOR BREATHER) NOT SHOWN FOR CLARITY

DWG NO	TITLE
-	DRAWING TRACEABILITY LIST

REF NUMBER	TITLE
-	REFERENCES
NEXT USED ON	

REV NO	REV DATE	DESCRIPTION	REV BY	REV CH'D	CONSULTANT REV	CLIENT REV
-						

REVISIONS

Rev.	REVISION DESCRIPTION	Date	By	Ch'd	Approved Eng. Lead	Approved Proj. Mgr
2A	ISSUED FOR CH2M APPROVAL/BOX DESIGN (PKG 6)	10 APR 06	THB	JM	SRB	JSG
2	ISSUED FOR DESIGN PACKAGE	06 FEB 06	THB	JM	SRB	JSG
1	UPDATED DETAIL 1	15 AUG 05	JBM	RDB	FWS	TH
0	ISSUED FOR CONSTRUCTION	19 MAY 05	JBM	AA	FWS	TH

AMEC DRAWING NO: F-145579-35-D-0005 REV 2A

amec

AMEC PROJECT: 145579-FINAL DBVS DESIGN

NAME	DATE	Checked
DESIGN BY JBM		
DRAWN BY		
CHECKED BY		
DESIGN / ENG. LEAD		
ENGINEERING MANAGER		
PROJECT MANAGER		
DESIGN AUTHORITY		

U.S. DEPARTMENT OF ENERGY
Office of River Protection

BULK VITRIFICATION
ICV BOX LID
ASSEMBLY

REV F | SCALE AS SHOWN | SHEET OF

In making requests for transmittal of data by any electronic media, the Company receiving such data agrees that AMEC Americas Limited cannot be held responsible for users of the data outside of or beyond the scope of our original agreement. Also, because data stored in electronic media or transmitted by electronic means can deteriorate undetected or be modified without the consultant's knowledge, the Company receiving data agrees that AMEC Americas Limited cannot be held liable for the compatibility, completeness or correctness of the data.

No.	AMEC Dwg. No.	REFERENCE DRAWINGS
1	F-145579-35-D-0004	ICV BOX DATA SHEET
2	F-145579-35-D-0005	ICV BOX LID ASSEMBLY
3	F-145579-35-D-0007	ICV BOX STEELWORK 2 OF 3
4	F-145579-35-D-0009	ICV BOX STEELWORK 3 OF 3

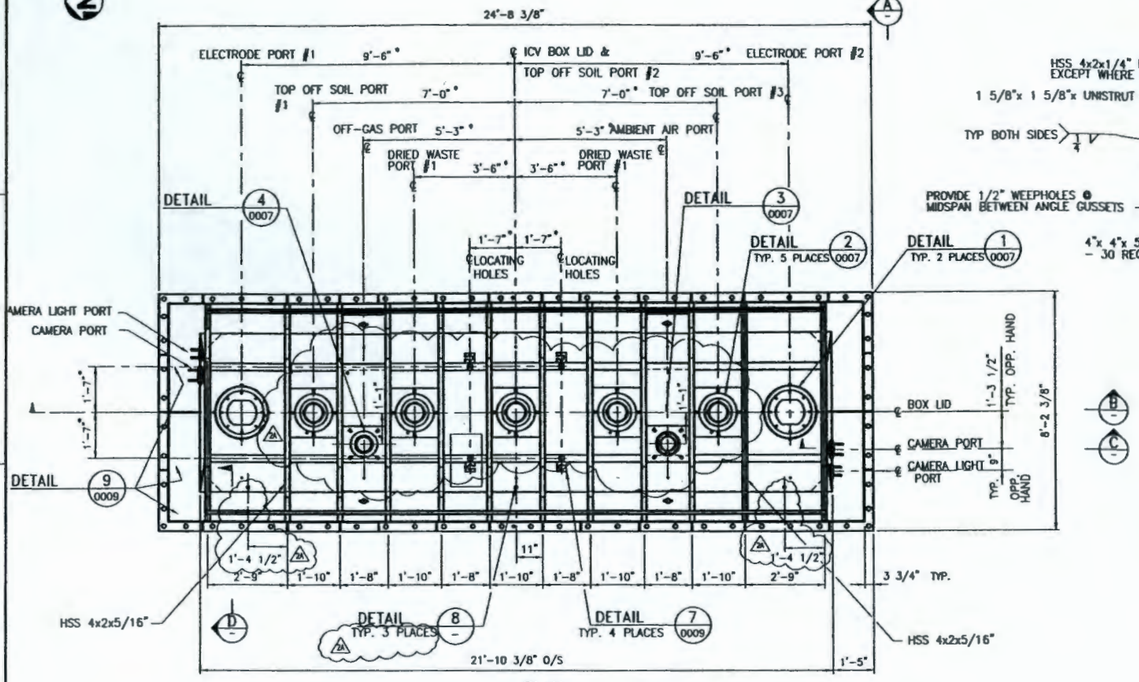

PLAN
SCALE 1/2" = 1'-0"

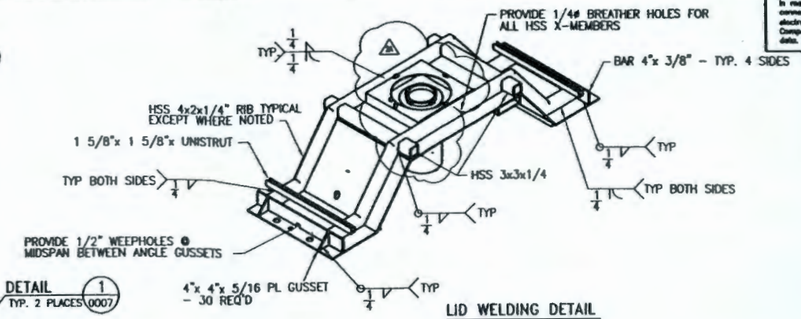

LID WELDING DETAIL

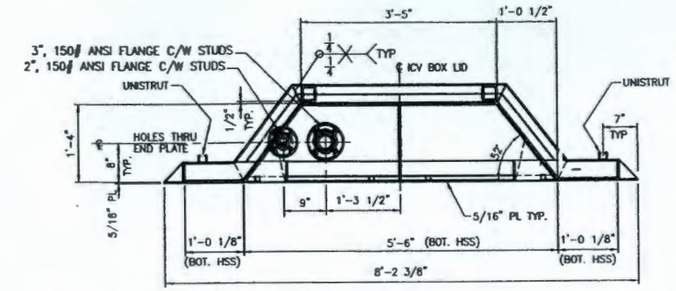

SECTION A
1"=1'-0"

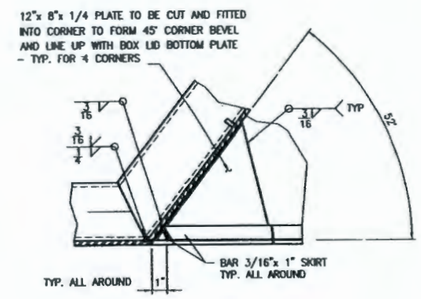

SECTION D
3"=1'-0"

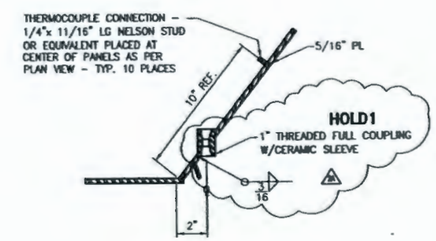

DETAIL 6 0005 8
3"=1'-0"

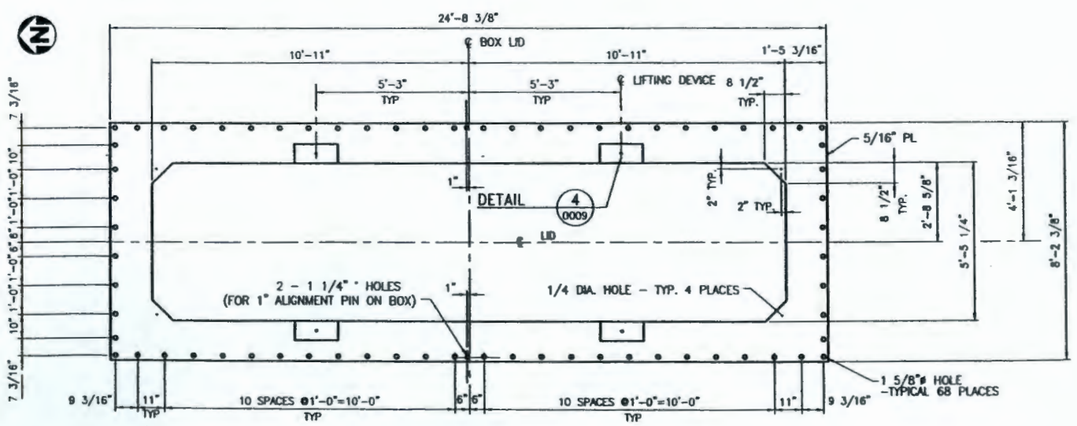

BOX LID BOTTOM PLATE
SCALE 1/2" = 1'-0"

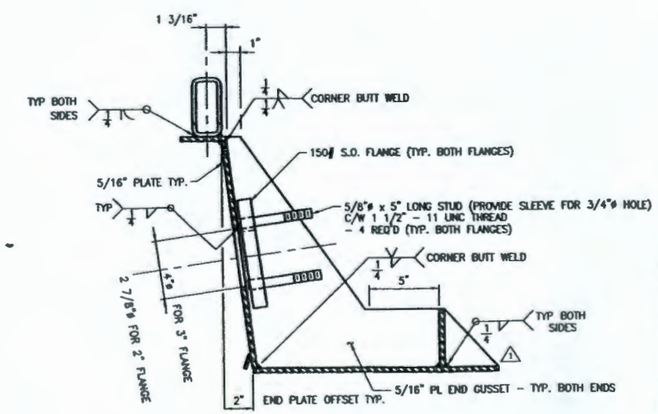

SECTION C
3"=1'-0"
THRU 3" FLANGE (SIMILAR FOR 2" FLANGE)

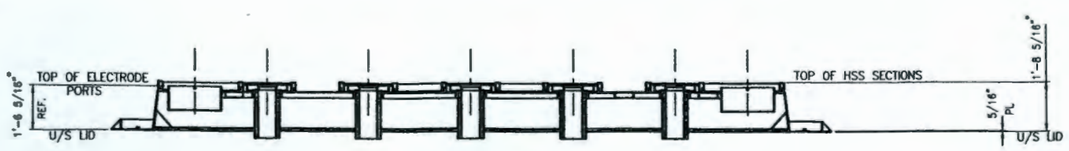

SECTION B
1/2"=1'-0"

GENERAL NOTES:

1. ALL DIMENSIONS MARKED WITH * HAVE MAX. TOLERANCE + OR - 1/16"
2. ALL ITEMS TO BE FABRICATED FROM:
   STRUCTURAL SHAPES - ASTM A36 OR BETTER
   PIPE - ASTM A53, GR.B
   PIPE FITTINGS - ASTM A105

HOLDS:

1. HOLD FOR TEST MELT 38-C RESULTS WITH CERAMIC SLEEVE

Rev.	REVISION DESCRIPTION	Date	By	Chk'd	Approved Resp. Eng.	Approved Proj. Mgr.
2A	ISSUED FOR CH2M APPROVAL/90% DESIGN (PKG 6)	10 APR 06	THB	JM	SRB	JSG
2	ISSUED FOR DESIGN REPORT	06 MAR 06	SW	JM	SB	JSG
1	ADDED GUSSET	15 AUG 05	JBM	RDB	FWS	TH
0	ISSUED FOR CONSTRUCTION	19 MAY 05	JBM	AA	FWS	TH

AMEC DRAWING NO F-145579-35-D-0006 REV 2A

amec

NAME

AMEC PROJECT: 145579-FINAL DBVS DESIGN

U.S. DEPARTMENT OF ENERGY
Office of River Protection

BULK VITRIFICATION
ICV BOX LID
STEELWORK 1 OF 3

SIZE F SCALE AS NOTED

DWG NO	TITLE	REF NUMBER	TITLE
DRAWING TRACEABILITY LIST		NEXT USED ON	REFERENCES

REVISIONS

In making requests for transmittal of data by any electronic media, the Company receiving such data agrees that AMEC Americas Limited cannot be held responsible for users of the data outside of or beyond the scope of our original agreement. Also, because data stored in electronic media or transmitted by electronic means can deteriorate undetected or be modified without the consultant's knowledge, the Company receiving data agrees that AMEC Americas Limited cannot be held liable for the compatibility, completeness or correctness of the data.

No.	AMEC Dwg. No.	REFERENCE DRAWINGS
1	F-145579-35-D-0004	ICV BOX DATA SHEET
2	F-145579-35-D-0005	ICV BOX LID ASSEMBLY
3	F-145579-35-D-0006	ICV BOX STEELWORK 1 OF 3
4	F-145579-35-D-0009	ICV BOX STEELWORK 3 OF 3

GENERAL NOTES:

1. ALL DIMENSIONS MARKED WITH * HAVE MAX. TOLERANCE + OR - 1/16"
2. ALL ITEMS TO BE FABRICATED FROM:
   STRUCTURAL SHAPES - ASTM A36 OR BETTER
   PIPE - ASTM A53, GR.B
   PIPE FITTINGS - ASTM A105

PARTS/MATERIAL LIST

ITEM	REQ'D	PART/DASH NUMBER	NOMENCLATURE/DESCRIPTION	MATERIAL/REFERENCE	SHT	ITEM NO
1	2		PLATE, 3/16 THK x 12.25 OD x 10.88 ID	ASTM A240 TYPE 316L		1
2	1		PIPE, 12 SCHED 10 x 3.00 LG	ASTM A312 TYPE 316L		2
3	1		PLATE 3/16 THK x 16.88 SQ x 10.88 ID	A36		3
4	4		PLATE, 3/16 THK x 16.69 x 2.31	A36		4
5	2		PLATE, 1/4 THK x 19.88 x 3.00	A36		5
6	1		PLATE, 1/4 THK x 19.88 x 15.75 ID	A36		6
7	12		SEE DETAIL 4 THIS SHEET	A36		7
8	3		BAR, 1/2 x 1/2 x 0.88	A36		8
9	2		PLATE, 3/16 THK x 7.50 OD x 6.13 ID	ASTM A240 TYPE 316L		9
10	1		MECH. TUBE ø8 x .188 WALL x 3.00 LG	ASTM A269 TYPE 316L		10
11	1		PLATE 3/16 THK x 14.13 SQ x 6.13 ID	A36		11
12	8		PLATE, 3/16 THK x 13.94 x 2.31	A36		12
13	4		PLATE, 1/4 THK x 17.88 x 3.00	A36		13
14	2		PLATE, 1/4 THK x 17.88 x 14.50 x 11.00 ID	A36		14
15	2		PLATE, 3/16 THK x 10.42 OD x 8.13 ID	A36		15
16	1		MECH. TUBE ø 10.75 x .165 WALL x 3.00 LG	A36		16
17	1		PLATE, 3/16 THK x 14.13 SQ x 8.13 ID	A36		17

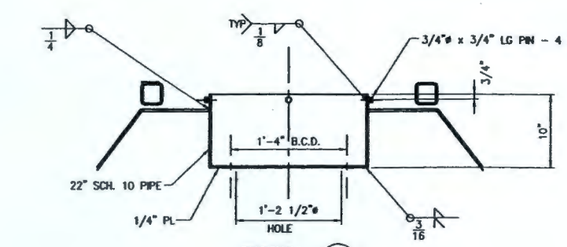

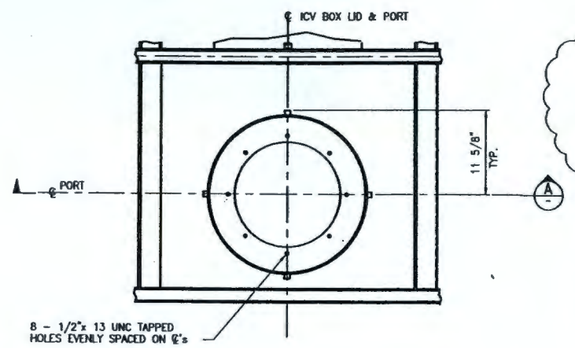

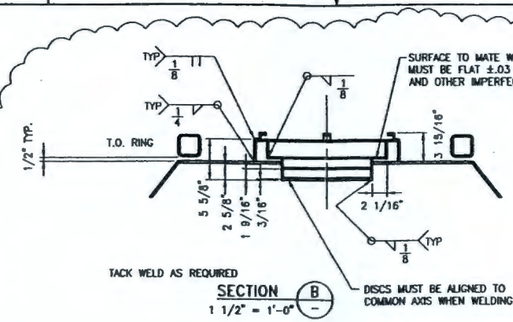

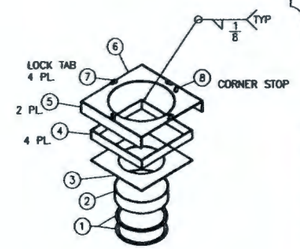

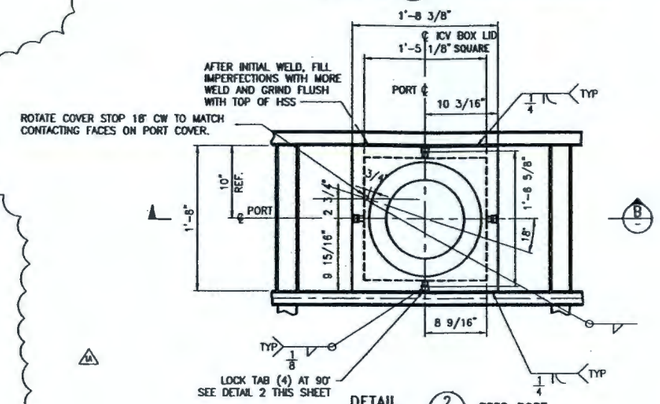

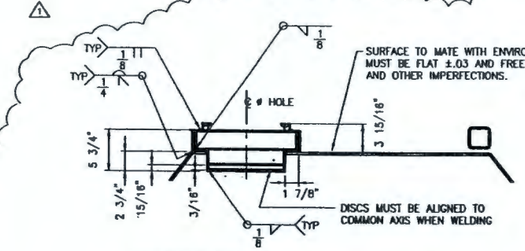

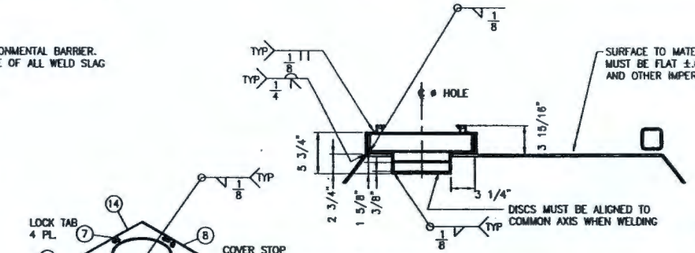

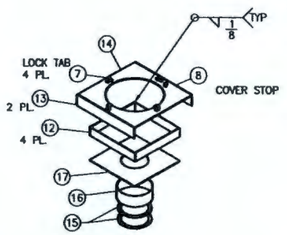

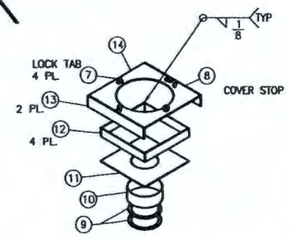

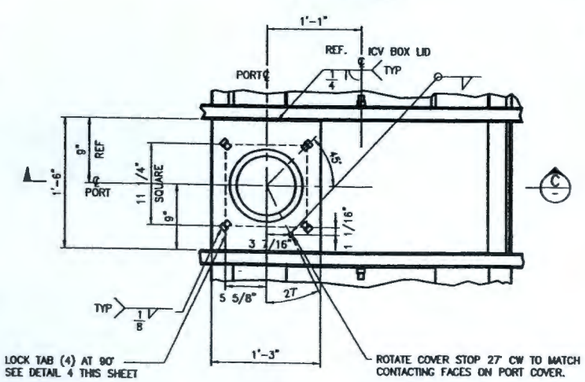

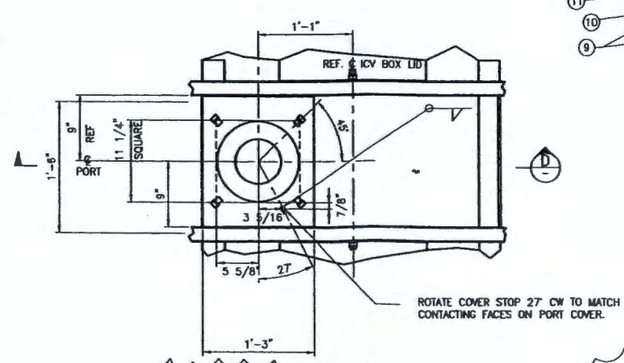

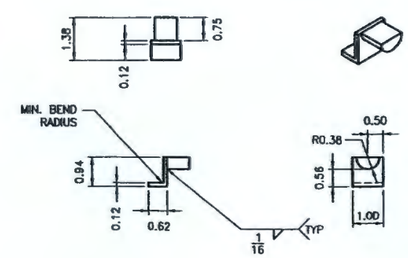

Rev.	REVISION DESCRIPTION	Date	By	Chk'd	Appr'd	Appr'd Mgr Sup	Appr'd Mgr Eng
1A	ISSUED FOR CH2M APPROVAL/BOX DESIGN (PKG 8)	10 APR 06	THB	JM	SRB	JSG	
1	REVISED PORTS AND DELETED RADAR PORT	05 MAR 06	THB	JM	SRB	JSG	
0	ISSUED FOR CONSTRUCTION	19 MAY 05	JBM	AA	FWS	TH	

AMEC DRAWING NO: F-145579-35-D-0007 REV: 1A

amec

AMEC PROJECT: 145579-FINAL DBVS DESIGN

U.S. DEPARTMENT OF ENERGY
Office of River Protection

BULK VITRIFICATION
ICV BOX LID
STEELWORK - 2 OF 3

SIZE F | BLDG NO | INDEX NO | DWG NO | REV

SCALE AS NOTED | SHEET OF

NAME	DATE	COMPANY
DRAWN BY		
DESIGNED BY		
CHECKED BY		
DESIGN / PROJ ENG		
ENGINEERING MANAGER		
PROJECT MANAGER		
DESIGN AUTHORITY		

DWG NO	TITLE	REF NUMBER	TITLE
DRAWING TRACEABILITY LIST		NEXT USED ON	REFERENCES

REV NO	DATE	REV BY	DESCRIPTION	REV BY CHKD	REV BY APPD	CHECKED BY	DATE	COMPANY
			REVISIONS					

No.	AMEC Dwg. No.	REFERENCE DRAWINGS
1	F-145579-35-D-0004	ICV BOX DATA SHEET
2	F-145579-35-D-0005	ICV BOX LID ASSEMBLY DETAILS
3	F-145579-35-D-0006	ICV BOX LID STEEL WORK 1 OF 3
4	F-145579-35-D-0011	ICV BOX ASSEMBLY DETAILS
5	F-145579-00-F-0014	ICV BOX INSTRUMENT LOCATIONS

In making requests for transmittal of data by any electronic media, the Company receiving such data agrees that AMEC Americas Limited cannot be held responsible for users of the data outside of or beyond the scope of our original agreement. Also, because data stored in electronic media or transmitted by electronic means can deteriorate undetected or be modified without the consultant's knowledge, the Company receiving data agrees that AMEC Americas Limited cannot be held liable for the compatibility, completeness or correctness of the data.

PARTS/MATERIAL LIST

ITEM	REQD	PART/DASH NUMBER	NOMENCLATURE/DESCRIPTION	MATERIAL/REFERENCE	SHT	ITEM NO
1	1	35-052-006	ICV BOX	VARIES	–	1
2	8	1016920	CROSBY SWIVEL HOIST RING #HR-125	VARIES	–	2

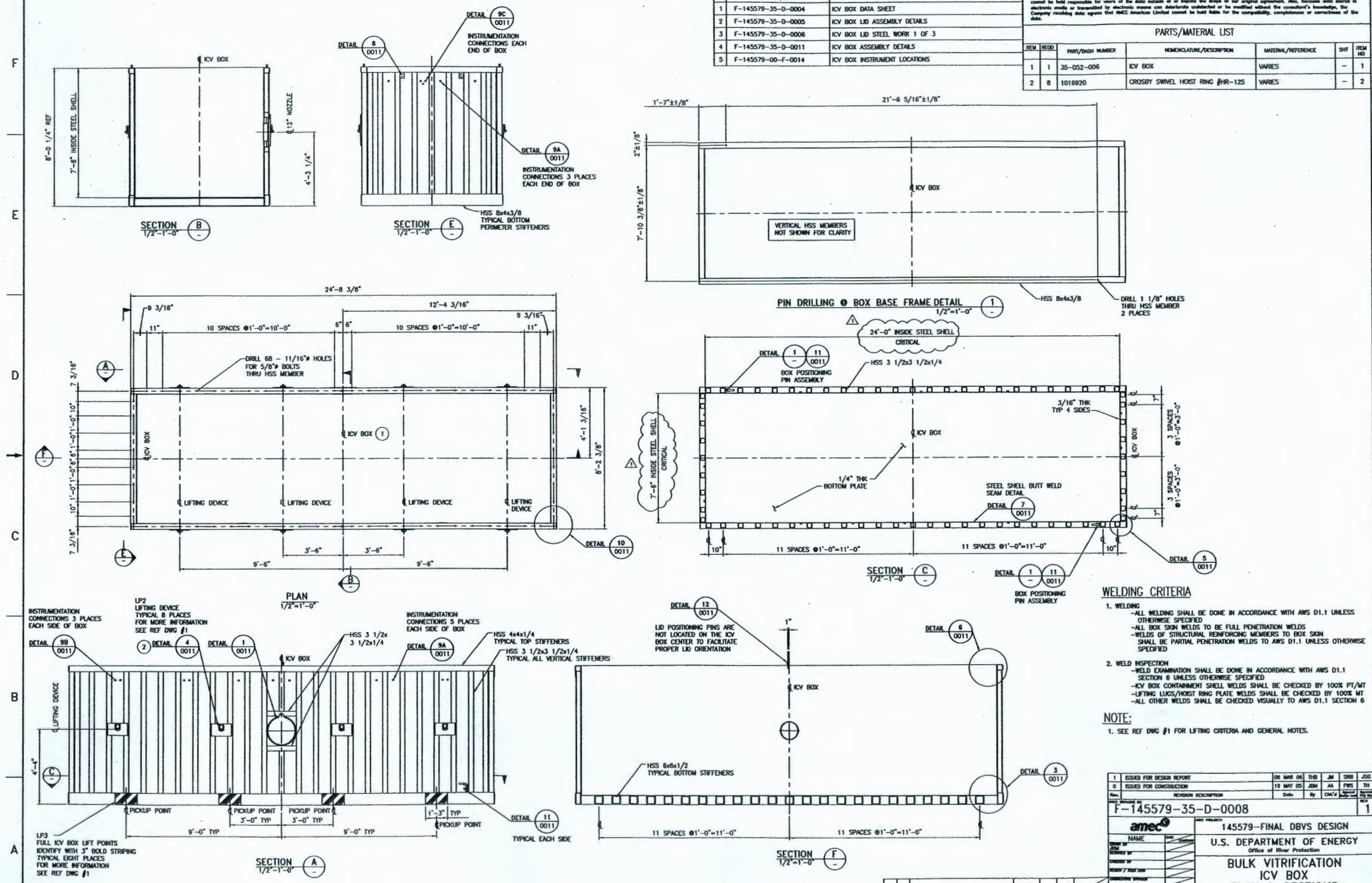

WELDING CRITERIA

1. WELDING
   - ALL WELDING SHALL BE DONE IN ACCORDANCE WITH AWS D1.1 UNLESS OTHERWISE SPECIFIED
   - ALL BOX SKIN WELDS TO BE FULL PENETRATION WELDS
   - WELDS OF STRUCTURAL REINFORCING MEMBERS TO BOX SKIN SHALL BE PARTIAL PENETRATION WELDS TO AWS D1.1 UNLESS OTHERWISE SPECIFIED
2. WELD INSPECTION
   - WELD EXAMINATION SHALL BE DONE IN ACCORDANCE WITH AWS D1.1 SECTION 6 UNLESS OTHERWISE SPECIFIED
   - ICV BOX CONTAINMENT SHELL WELDS SHALL BE CHECKED BY 100% PT/MT
   - LIFTING LUGS/HOIST RING PLATE WELDS SHALL BE CHECKED BY 100% MT
   - ALL OTHER WELDS SHALL BE CHECKED VISUALLY TO AWS D1.1 SECTION 6

NOTE:

1. SEE REF DWG #1 FOR LIFTING CRITERIA AND GENERAL NOTES.

Rev.	REVISION DESCRIPTION	Date	By	Chk'd	Approved Date	Approved By
1	ISSUED FOR DESIGN REPORT	06 MAR 06	THB	JM	SRB	JSG
0	ISSUED FOR CONSTRUCTION	19 MAY 05	JBM	AA	FWS	TH

AMEC DRAWING NO. F-145579-35-D-0008 — REV 1

amec

NAME	DATE
DRAWN BY JBM	
TECHNICAL BY	
CHECKED BY	
DESIGN / RISK ENG	
OPERATIONS ENGINEER	
PROJECT ENGINEER	
DESIGN AUTHORITY	

AMEC PROJECT: 145579-FINAL DBVS DESIGN

U.S. DEPARTMENT OF ENERGY
Office of River Protection

BULK VITRIFICATION
ICV BOX
PLAN & SECTIONS

SIZE F — SCALE: AS NOTED — SHEET OF

DWG NO	TITLE
–	

DRAWING TRACEABILITY LIST

REF NUMBER	TITLE
–	

REFERENCES — NEXT USED ON

REV NO	REV BY	DESCRIPTION	REV BY DATE	REV BY	CHECKED BY	DATE	CHECKED
–							

REVISIONS

In making requests for transmittal of data by any electronic media, the Company receiving such data agrees that AMEC Americas Limited cannot be held responsible for users of the data outside of or beyond the scope of our original agreement. Also, because data stored in electronic media or transmitted by electronic means can deteriorate undetected or be modified without the consultant's knowledge, the Company receiving data agrees that AMEC Americas Limited cannot be held liable for the compatibility, completeness or correctness of the data.

No.	AMEC Dwg. No.	REFERENCE DRAWINGS
1	F-145579-35-D-0004	ICV BOX DATA SHEET
2	F-145579-35-D-0005	ICV BOX LID ASSEMBLY
3	F-145579-35-D-0006	ICV BOX STEELWORK 1 OF 3
4	F-145579-35-D-0009	ICV BOX STEELWORK 3 OF 3
5	F-145579-35-D-0022	LID HANDLING TOOL

GENERAL NOTES:

1. ALL DIMENSIONS MARKED WITH * HAVE MAX. TOLERANCE + OR - 1/16"
2. ALL ITEMS TO BE FABRICATED FROM:
   STRUCTURAL SHAPES - ASTM A36 OR BETTER
   PIPE - ASTM A53, GR.B
   PIPE FITTINGS - ASTM A105
3. QUANTITIES MARKED FOR LIDS REPRESENT TOTAL FOR '1' ICV BOX LID ONLY

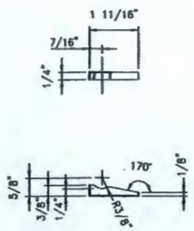

WEDGE DETAIL TYP. ALL LIDS EXCEPT ELECTRODE LIDS
SCALE: 6" = 1'-0"
MAT'L: ASTM A36

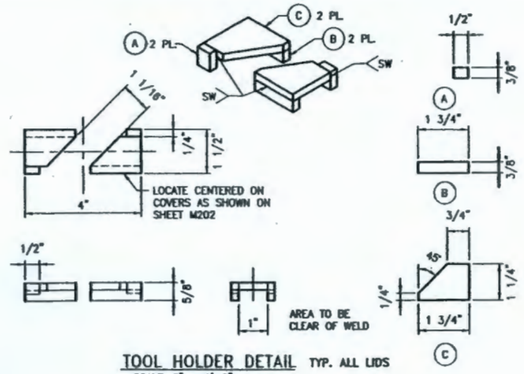

TOOL HOLDER DETAIL TYP. ALL LIDS
SCALE: 6" = 1'-0"
MAT'L: ASTM A36

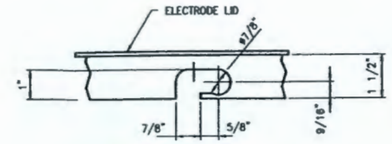

SLOT DETAIL
SCALE: 6" = 1'-0"

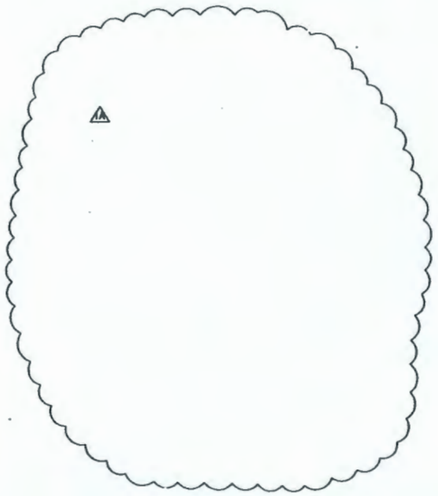

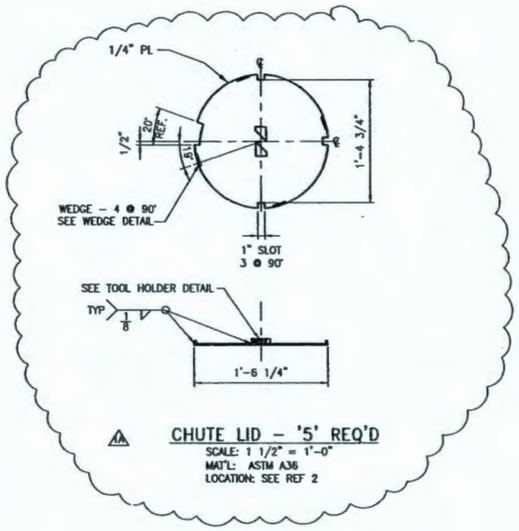

CHUTE LID - '5' REQ'D
SCALE: 1 1/2" = 1'-0"
MAT'L: ASTM A36
LOCATION: SEE REF 2

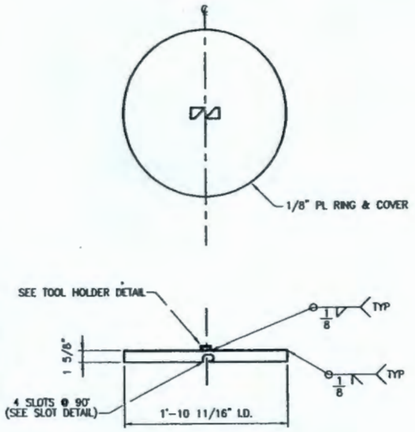

ELECTRODE LID - '2' REQ'D
SCALE: 1 1/2" = 1'-0"
MAT'L: ASTM A36
LOCATION: SEE REF 2

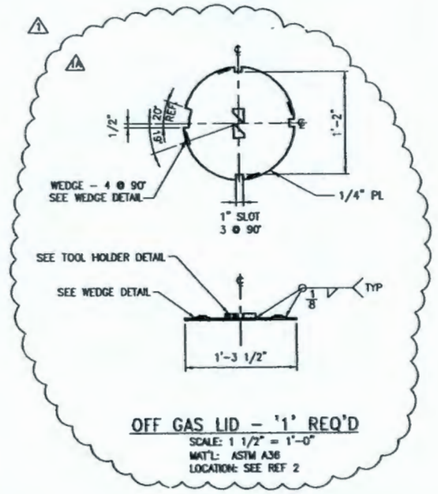

OFF GAS LID - '1' REQ'D
SCALE: 1 1/2" = 1'-0"
MAT'L: ASTM A36
LOCATION: SEE REF 2

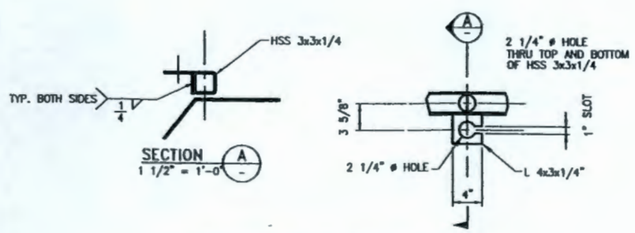

SECTION A
1 1/2" = 1'-0"

LOCATING PLATE & LOCK PLATE
DETAIL 7 / 0006
1 1/2" = 1'-0"

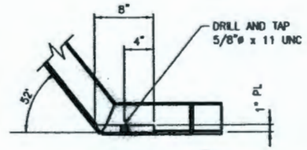

SECTION B
1 1/2" = 1'-0"

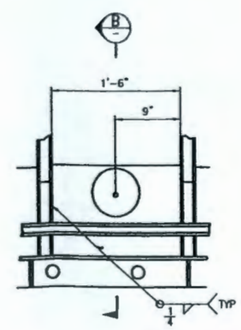

LIFTING PLATE
DETAIL 4 / 0006
1 1/2" = 1'-0"

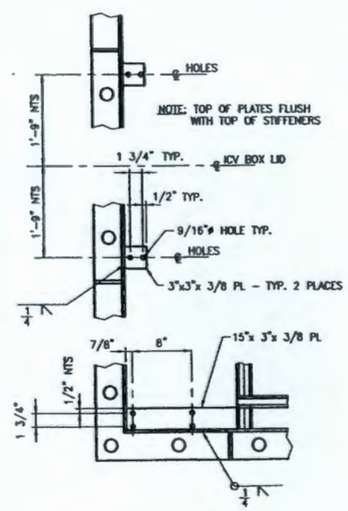

GROUND CONNECTIONS
DETAIL 9 / 0006
1 1/2" = 1'-0"

Rev.	REVISION DESCRIPTION	Date	By	Ch'd	Approved	Reg. Eng.	Rev. Date
1A	ISSUED FOR CHZN APPROVAL/BOX DESIGN (PKG 4)	10 APR 06	THB	JM	SRB	JSG	
1	ISSUED FOR DESIGN PACKAGE	06 MAR 06	THB	JM	SRB	JSG	
0	ISSUED FOR CONSTRUCTION	19 MAY 05	JBM	AA	FWS	TH	

AMEC DRAWING NO: F-145579-35-D-0009 REV: 1A

amec

AMEC PROJECT: 145579-FINAL DBVS DESIGN

U.S. DEPARTMENT OF ENERGY
Office of River Protection

BULK VITRIFICATION
ICV BOX LID DETAILS
STEELWORK 3 OF 3

SIZE F | SCALE AS NOTED

DWG NO	TITLE
-	

DRAWING TRACEABILITY LIST

REF NUMBER	TITLE
-	

REFERENCES
NEXT USED ON

REVISIONS

RPP-24544 REV 1c

No.	AMEC Dwg. No.	REFERENCE DRAWINGS
1	F-145579-35-D-0004	ICV BOX DATA SHEET
2	F-145579-35-D-0005	ICV BOX LID ASSEMBLY
3	F-145579-35-D-0008	ICV BOX ASSEMBLY
4	F-145579-35-D-0019	ICV BOX LID GASKET DETAILS

In making requests for transmittal of data by any electronic media, the Company receiving such data agrees that AMEC Americas Limited cannot be held responsible for users of the data outside of or beyond the scope of our original agreement. Also, because data stored in electronic media or transmitted by electronic means can deteriorate undetected or be modified without the consultant's knowledge, the Company receiving data agrees that AMEC Americas Limited cannot be held liable for the compatibility, completeness or correctness of the data.

PARTS/MATERIAL LIST

ITEM	REQD	PART/DASH NUMBER	NOMENCLATURE/DESCRIPTION	MATERIAL/REFERENCE	SHT	ITEM NO
1	1	–	12" 150# ANSI BLIND FLANGE	ASTM A105	–	1
2	1	–	12" GASKET FLEXITALLIC H.O.T.	1/8" "CERAMIC"	–	2
3	12	–	7/8"ø HEV. HEX. NUTS	ASTM A194 G 8B	–	3
4	68	–	5/8"øx7"LG BOLTS C/W NUTS&WASHERS	BOLTS ASTM A193 G 8	–	4
			NUTS ASTM A194 G 8B HEV. HEX.			
5	68	–	2 1/2"øx1/4" THK C/W 11/16"ø HOLE	ASTM A36	–	5
6	1	–	12"øx1 1/2" THK FILLER BOARD	KAOWOOL M BOARD	–	6

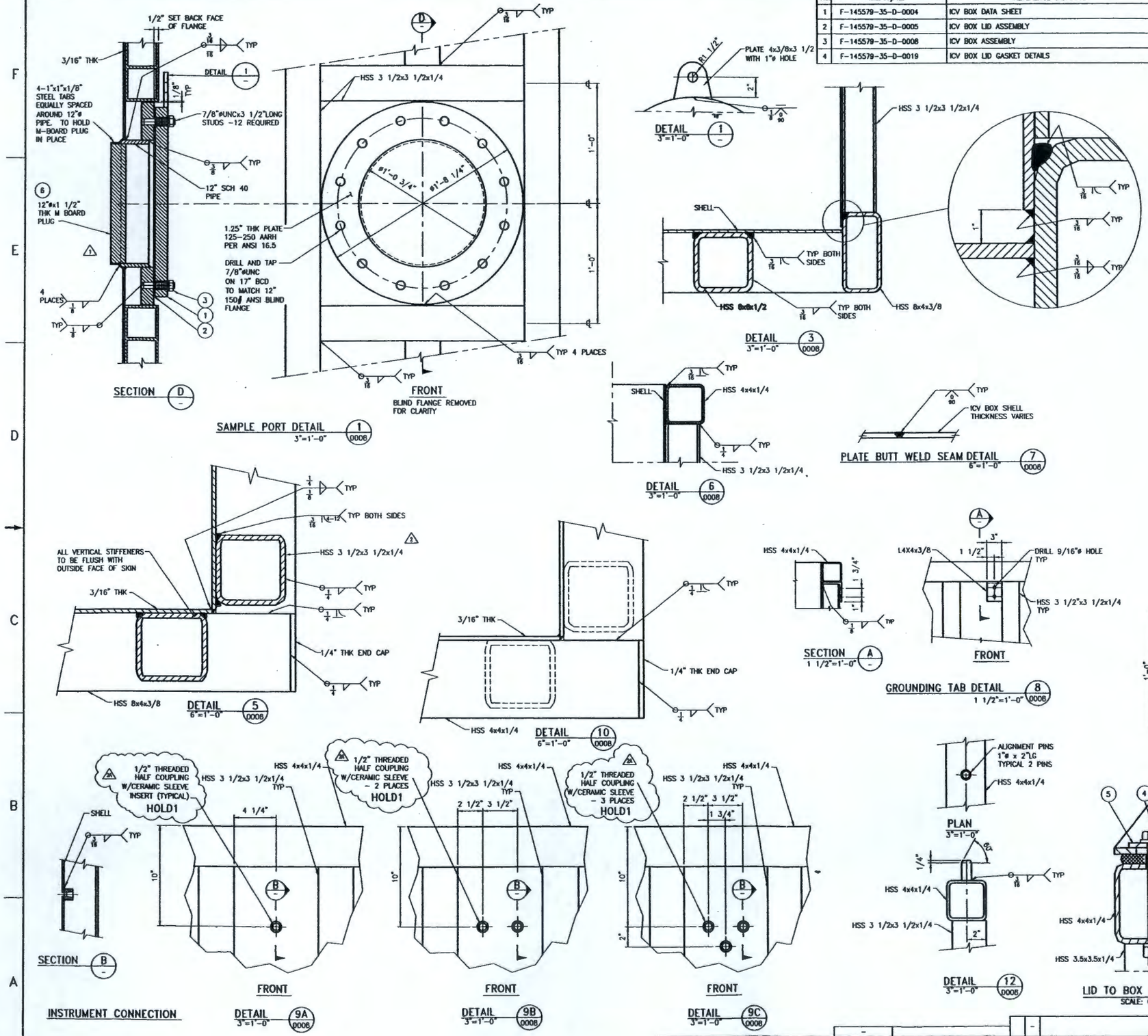

Rev.	REVISION DESCRIPTION	Date	By	Chk'd	Approved Eng Mgr	Approved Proj Mgr
2A	ISSUED FOR CH2M APPROVAL/90% DESIGN (PKG 6)	10 APR 06	THB	JM	SRB	JSG
2	ISSUED FOR DESIGN REPORT	06 MAR 06	THB	SW	SRB	JSG
1	ADDED 12"ø M-BOARD PLUG TO SAMPLE PORT	15 AUG 05	JBM	RDB	FWS	TH
0	ISSUED FOR CONSTRUCTION	19 MAY 05	JBM	AA	FWS	TH

AMEC DRAWING NO: F-145579-35-D-0011 REV 2A

amec

AMEC PROJECT: 145579-FINAL DBVS DESIGN

U.S. DEPARTMENT OF ENERGY
Office of River Protection

BULK VITRIFICATION ICV BOX ASSEMBLY DETAILS

SIZE F | SCALE AS NOTED

DWG NO	TITLE	REF NUMBER	TITLE
DRAWING TRACEABILITY LIST		NEXT USED ON	REFERENCES

REVISIONS

In making requests for transmittal of data by any electronic media, the Company receiving such data agrees that AMEC Americas Limited cannot be held responsible for users of the data outside of or beyond the scope of our original agreement. Also, because data stored in electronic media or transmitted by electronic means can deteriorate undetected or be modified without the consultant's knowledge, the Company receiving data agrees that AMEC Americas Limited cannot be held liable for the compatibility, completeness or correctness of the data.

PARTS/MATERIAL LIST

ITEM	REQD	PART/DASH NUMBER	NOMENCLATURE/DESCRIPTION	MATERIAL/REFERENCE	SHT	ITEM NO
1	1	5122M1-36:	PORTABLE DAVIT CRANE	WALLACE CRANES	–	1
2	1	MODEL NO. 514	PORTABLE DAVIT CRANE WHEEL BASE	WALLACE CRANES	–	2

No.	AMEC Dwg. No.	REFERENCE DRAWINGS
1	F-145579-35-D-0005	ICV BOX LID ASSEMBLY
2	F-145579-35-D-0013	ICV BOX LID CAMERA & TROLLEY DETAILS
3	F-145579-00-B-0007	MELT AREA – GRATING AND FLOOR PLATE LAYOUT
4	F-145579-00-F-0021	THERMOCOUPLE JBX LAYOUT DETAILS
5	F-145579-00-F-0028	JBX 35-1JB-03/04 TERMINATION DETAILS

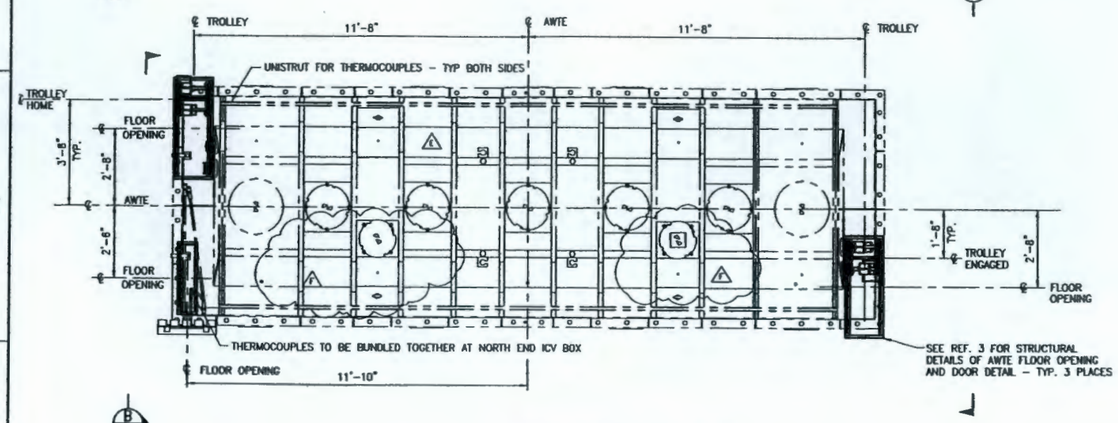

PLAN VIEW U/S AWTE FLOOR
1/2" = 1'-0"

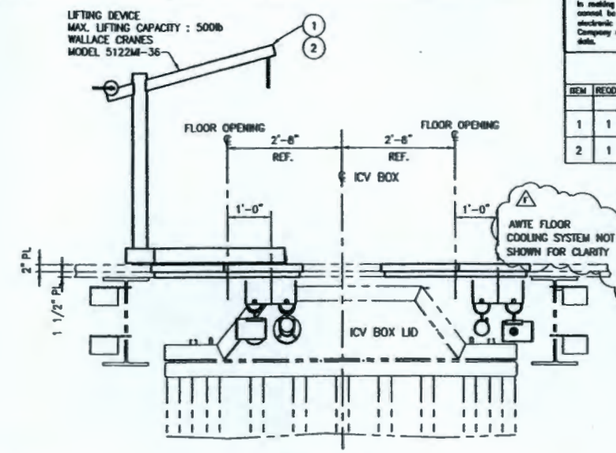

SECTION A
3/4" = 1'-0"

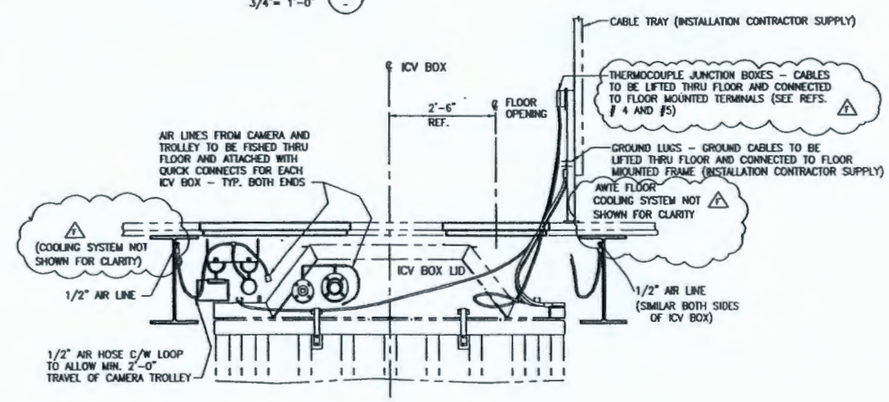

HOSE AND CABLE CONNECTIONS
SECTION B
3/4" = 1'-0"

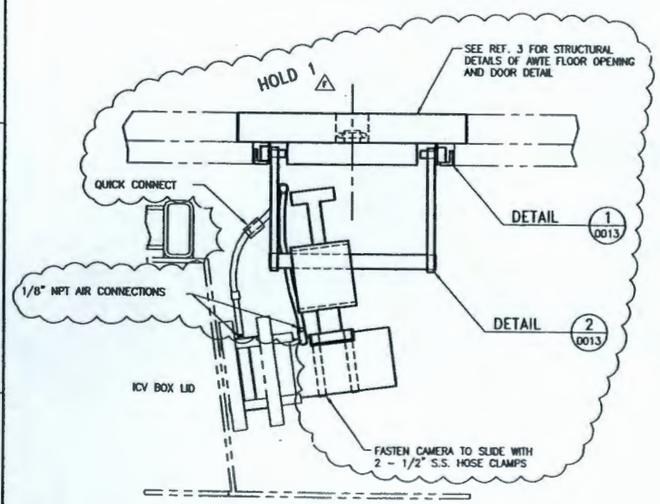

ELEVATION – CAMERA MOUNTING
SCALE 3"=1'-0"

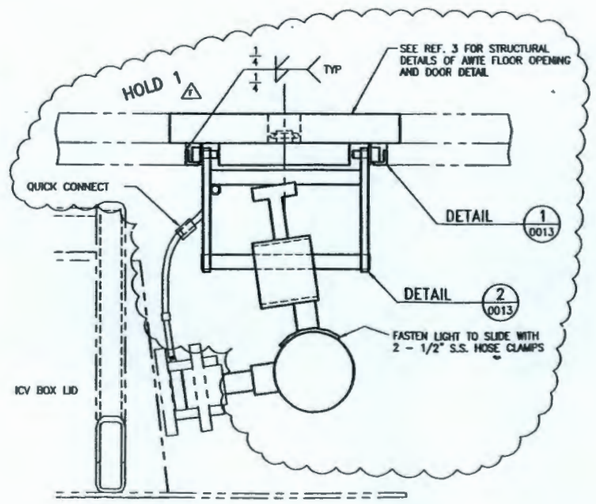

ELEVATION – LIGHT MOUNTING
SCALE 3"=1'-0"

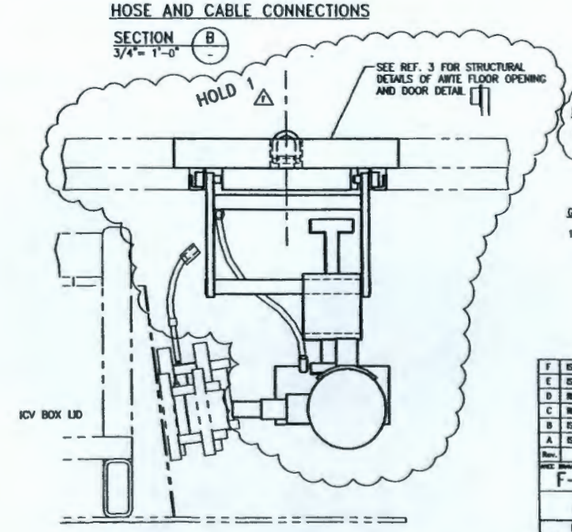

ELEVATION – CAMERA AND LIGHT IN REST POSITION
SCALE 3"=1'-0"

HOLD:
1. AWAITING FINAL AWTE (PIC 230) CVL

GENERAL NOTES:
1. REFER TO SPECIFICATION 145579-F-SP-003 AND INSTRUMENT DATA SHEET 35-CCTV-026 AND 027 FOR THE SUPPLY AND INSTALLATION PROCEDURE FOR THE CAMERA AND CAMERA LIGHT

Rev.	REVISION DESCRIPTION	Date	By	Chk'd	Approved Mgr. Lead	Approved Eng. Mgr.
F	ISSUE FOR DESIGN PACKAGE	10 APR 06	THB	JM	SRB	JSG
E	ISSUED FOR DESIGN REPORT	06 MAR 06	SW	JM	SB	JSG
D	REVISED – ISSUED FOR CH2M HILL REVIEW AND 90% REPORT	28 APR 05	JRM	AA	FWS	SC
C	REVISED – ISSUED FOR CH2M HILL REVIEW AND 90% REPORT	05 APR 05	RDB	TW	GJ	SC
B	ISSUED FOR CH2M HILL REVIEW AND 90% REPORT	03 MAR 05	RRB	AA	WS/TW	TH
A	ISSUED FOR INTERNAL APPROVAL	08 FEB 05	RRB		WS/TW	TH

AMEC DRAWING NO: F-145579-35-D-0012 REV F

amec

NAME	DATE	COMPANY
DRAWN BY JRM		
REVIEWED BY		
CHECKED BY		
DESIGN / AREA LEAD		
ENGINEERING MANAGER		
PROJECT MANAGER		
DESIGN AUTHORITY		

AMEC PROJECT: 145579-FINAL DBVS DESIGN

U.S. DEPARTMENT OF ENERGY
Office of River Protection

BULK VITRIFICATION
ICV BOX LID CAMERA, T/C AND GROUNDING ASSEMBLY

SIZE F | BLDG NO | BLOCK NO | DWG NO | REV

SCALE AS NOTED | SHEET OF

DWG NO	TITLE
–	

DRAWING TRACEABILITY LIST

REF NUMBER	TITLE
–	

REFERENCES
NEXT USED ON

REV	REV BY	DESCRIPTION	REV BY DATE	REV BY	VERIFIED BY	DATE	COMPANY
–	–						

REVISIONS

In making requests for transmittal of data by any electronic media, the Company receiving such data agrees that AMEC Americas Limited cannot be held responsible for users of the data outside of or beyond the scope of our original agreement. Also, because data stored in electronic media or transmitted by electronic means can deteriorate undetected or be modified without the consultant's knowledge, the Company receiving data agrees that AMEC Americas Limited cannot be held liable for the compatibility, completeness or correctness of the data.

No.	AMEC Dwg. No.	REFERENCE DRAWINGS
1	F-145579-35-D-0005	ICV BOX LID ASSEMBLY
2	F-145579-35-D-0012	ICV BOX LID CAMERA, T/C AND GROUNDING ASSEMBLY
3	F-145579-00-B-0007	MELT AREA – GRATING AND FLOOR PLATE LAYOUT

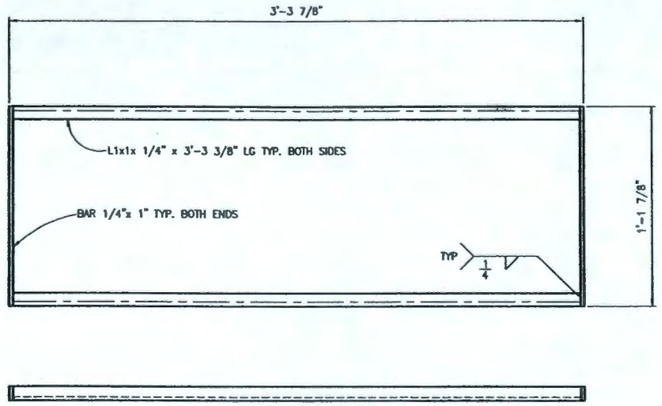

TROLLEY FRAME – '2' REQ'D
MAT'L: ASTM A36
DETAIL 1 / 0012
3" = 1'-0"

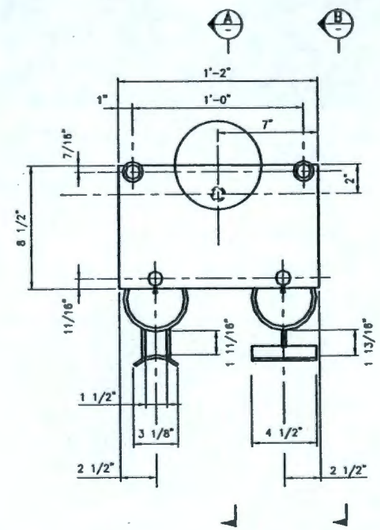

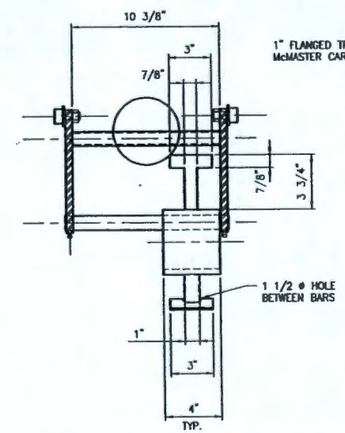

SECTION A

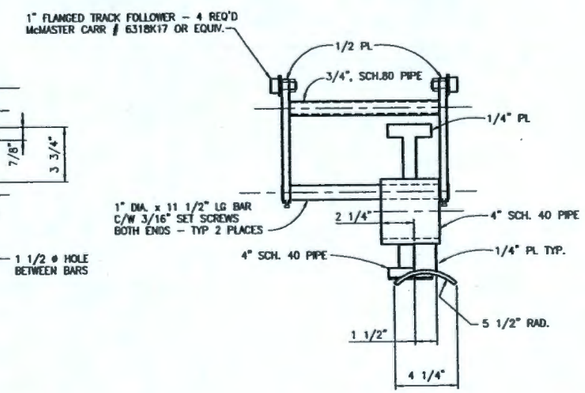

SECTION B

TROLLEY – '2' REQ'D
MAT'L: ASTM A36, A53-GR.B
DETAIL 2 / 0012
3" = 1'-0"

HOLD:
1. DRAWING ON HOLD AWAITING FINAL AWTE (PIC 230) CVL

Rev.	REVISION DESCRIPTION	Date	By	Chk'd	Approved Design Lead	Approved Proj Mgr
D	ISSUED FOR CH2M APPROVAL/90% DESIGN (PKG 6)	10 APR 06	THB	JM	SRB	JSG
C	ISSUED FOR DESIGN REPORT	06 MAR 06	THB	JM	SRB	JSG
B	ISSUED FOR CH2M HILL REVIEW AND 90% REPORT	03 MAR 05	RRB	AA	WS/TH	TH
A	ISSUED FOR INTERNAL APPROVAL	09 FEB 05	RRB		FWS	TH

AMEC DRAWING NO: F-145579-35-D-0013 REV: D

amec

NAME	DATE	SIGNATURE
DRAWN BY		
REVIEWED BY		
CHECKED BY		
DESIGN / AREA ENG		
ENGINEERING MANAGER		
PROJECT MANAGER		
DESIGN AUTHORITY		

AMEC PROJECT: 145579-FINAL DBVS DESIGN

U.S. DEPARTMENT OF ENERGY
Office of River Protection

BULK VITRIFICATION
ICV BOX CAMERA AND
TROLLEY DETAILS

SIZE F | SCALE AS NOTED | SHEET OF

DWG NO	TITLE
–	

DRAWING TRACEABILITY LIST

REF NUMBER	TITLE
–	

REFERENCES
NEXT USED ON

REV NO	DESCRIPTION	REV BY	CHK BY	APPROVED BY	DATE
–					

REVISIONS

RPP-24544 REV 1c

No.	AMEC Dwg. No.	REFERENCE DRAWINGS
1	F-145579-35-D-0004	ICV BOX DATA SHEET

In making requests for transmittal of data by any electronic media, the Company receiving such data agrees that AMEC Americas Limited cannot be held responsible for users of the data outside of or beyond the scope of our original agreement. Also, because data stored in electronic media or transmitted by electronic means can deteriorate undetected or be modified without the consultant's knowledge, the Company receiving data agrees that AMEC Americas Limited cannot be held liable for the compatibility, completeness or correctness of the data.

PARTS/MATERIAL LIST

ITEM	REQD	PART/DASH NUMBER	NOMENCLATURE/DESCRIPTION	MATERIAL/REFERENCE	SHT	ITEM NO
1		1	STARTER PATH	SEE PDC	–	1
2	6	–	STARTER PATH COVER	2'x3'x1/4" COMMON PLATE GLASS	–	2
3	–	–	FILLER	SEE PDC	–	3

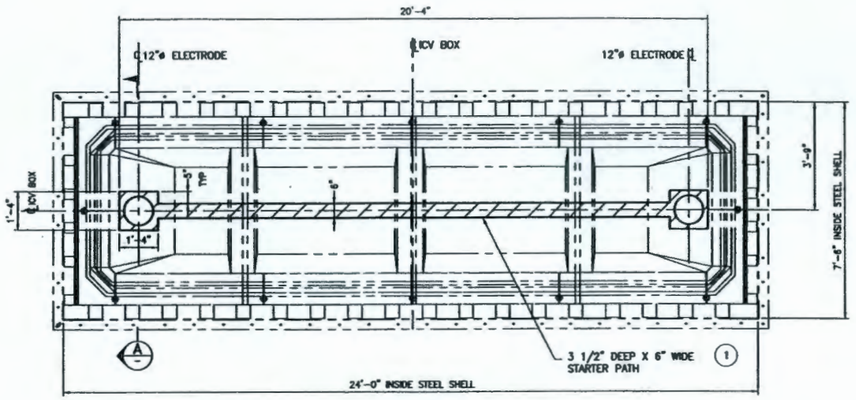

PLAN
1/2"=1'-0"

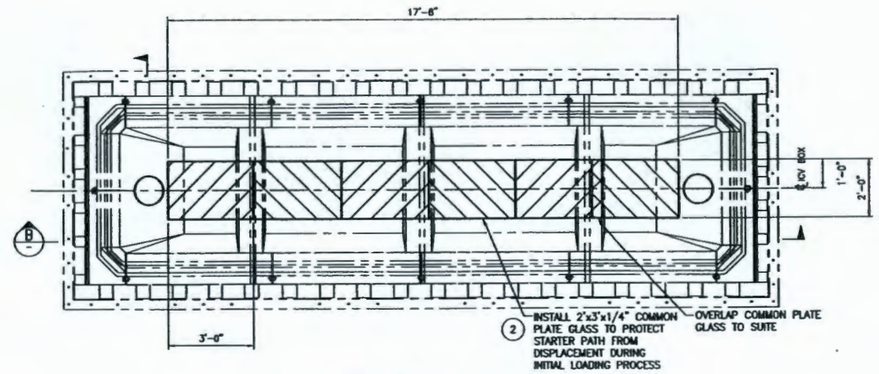

PLAN – STARTER PATH COVER
1/2"=1'-0"

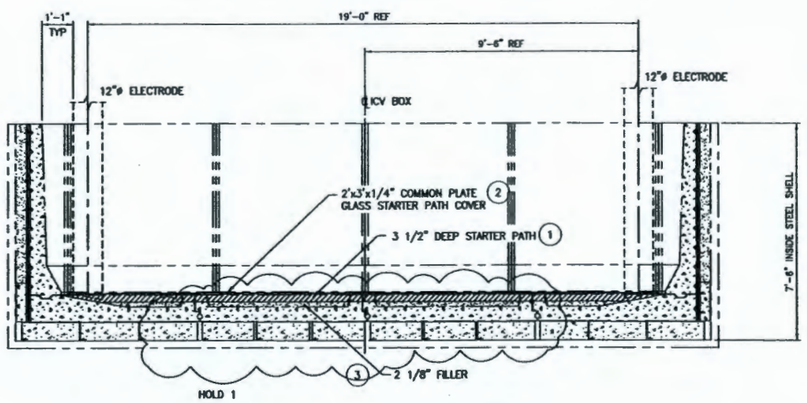

SECTION B
1/2"=1'-0"

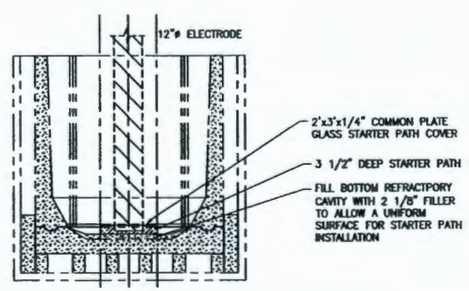

SECTION A
1/2"=1'-0"

HOLD:

1. ICV REFRACTORY JOINT ASSEMBLY DIMENSIONS ON HOLD FOR VENDOR TESTING OF RE-DESIGN

NOTES:

1. STARTER PATH TO BE MANUALLY DISTRIBUTED TO A UNIFORM DEPTH OF NOT LESS THAN 3 1/2"

Rev.	REVISION DESCRIPTION	Date	By	Ch'd	Approved Eng. Mgr.	Approved Proj. Mgr.
H	ISSUED FOR DESIGN REPORT	06 MAR 06	SW	JLM	SB	JSG
G	REVISED – REVISED CORNER PANEL AND REFRACTORY JOINT	13 JAN 06	SW	SRB	KSM	JSG
F	REVISED – ISSUED FOR CH2M HILL APPROVAL & 90% REPORT	15 AUG 05	JBM	RDB	FWS	TH
E	REVISED – ISSUED FOR CH2M HILL REVIEW AND 90% REPORT	01 APR 05	RRB	TW	FWS	TH
D	ISSUED FOR CH2M HILL REVIEW AND 90% REPORT	03 MAR 05	TW	AA	FWS	TH
C	ISSUED FOR INFORMATION	09 FEB 05	JBM		FWS/TH	TH
B	ISSUED FOR APPROVAL	30 SEPT 04	JBM	TW	FWS	TH
A	ISSUED FOR REVIEW	29 SEPT 04	JBM	TW	GJ	TH

AMEC DRAWING NO. F-145579-35-D-0014 REV. H

amec

AMEC PROJECT: 145579-FINAL DBVS DESIGN

U.S. DEPARTMENT OF ENERGY
Office of River Protection

BULK VITRIFICATION
ICV SHELL
STARTER PATH DETAILS

SIZE F | SCALE 1/2"=1'-0" | SHEET of

NAME	DATE	COMPANY
DRAWN BY		
DESIGNED BY		
CHECKED BY		
DESIGN / AREA LEAD		
LANDSCAPE ARCHITECT		
PROJECT ENGINEER		
DESIGN AUTHORITY		

DRAWING TRACEABILITY LIST

DWG NO	TITLE
–	

REFERENCES

REF NUMBER	TITLE
–	

NEXT USED ON

REVISIONS

REV NO	DESCRIPTION	DATE	CHECKED BY	APPROVED BY	DRAWN	COMPANY
–						

No.	AMEC Dwg. No.	REFERENCE DRAWINGS
1	F-145579-35-D-0004	ICV BOX DATA SHEET
2	F-145579-35-D-0008	ICV BOX ASSEMBLY
3	F-145579-35-D-0017	ICV BOX REFRACTORY DETAILS
4	F-145579-35-D-0023	ICV BOX REFRACTORY PANEL CLIP DETAILS

In making requests for transmittal of data by any electronic media, the Company receiving such data agrees that AMEC Americas Limited cannot be held responsible for users of the data outside of or beyond the scope of our original agreement. Also, because data stored in electronic media or transmitted by electronic means can deteriorate undetected or be modified without the consultant's knowledge, the Company receiving data agrees that AMEC Americas Limited cannot be held liable for the compatibility, completeness or correctness of the data.

PARTS/MATERIAL LIST

ITEM	REQ'D	PART/DASH NUMBER	NOMENCLATURE/DESCRIPTION	MATERIAL/REFERENCE	SHT	ITEM NO
1	2	–	CORNER PANEL	VIBRACAST 60PC	0016	1
2	2	–	CORNER PANEL	VIBRACAST 60PC	0017	2
3	8	–	SIDE PANEL	VIBRACAST 60PC	0017	3
4	2	–	FLOOR PANEL	VIBRACAST 60PC	0017	4
5	1	–	FLOOR PANEL	VIBRACAST 60PC	0017	5
6	1	–	FLOOR PANEL	VIBRACAST 60PC	0017	6
7	36	–	SUPPORT RIBS – 24" x 7 3/4" x 5"	RESCO 110	0016	7
8	30	–	SUPPORT RIB –21 1/2" x 7 3/4" x 5"	RESCO 110	0016	8
9	12	–	END BACKING BRICK – 4.25"x4.25"x16"	RESCO 110	0016	9
10	36	–	SIDE BACKING BRICK – 5.75"x5.75"x24"	RESCO 110	0016	10
11	2	–	FILLER BOARD – 1.5" x 6'-6" x 6'-10"	KAOWOOL M BOARD	0016	11
12	16	–	BASE PICKUP INSERT – TYPE T-10 x 1 1/4"	N.A.	0017	12
13	24	–	EDGE PICKUP INSERT – TYPE T-3-A x 1"	N.A.	0016 0017	13
14	20	0023 MK 'A'	PANEL CLIP	A36, A307	0023	14
15	4	0023 MK 'B'	CORNER CLIP	A36, A307	0023	15
16	–	SUPER ADAMANT	MORTAR/RECOMMENDED (EJ BARTELLS)	N/A	0023	16
17	6	–	SUPPORT RIBS – 20" x 7 3/4" x 5"	RESCO 110	0016	17

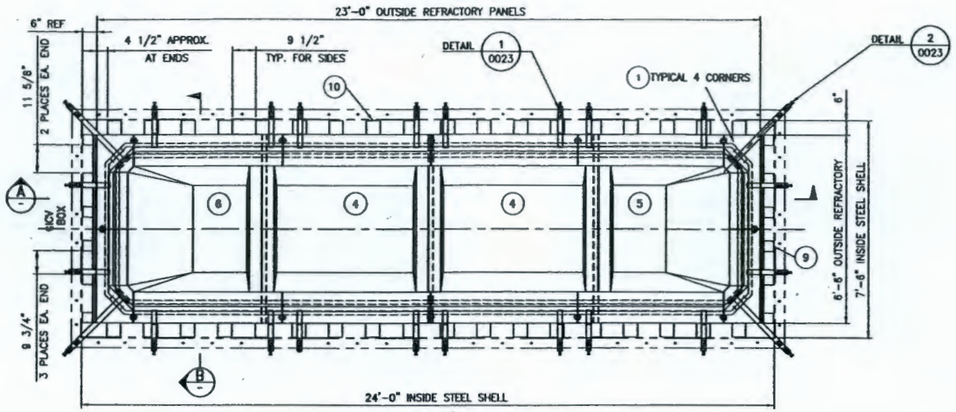

PLAN
1/2"=1'-0"

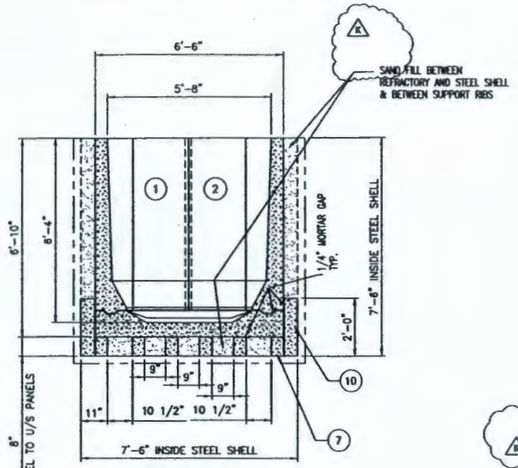

SECTION B
1/2"=1'-0"

HOLD:
1. ICV REFRACTORY JOINT ASSEMBLY DIMENSIONS ON HOLD UNTIL VENDOR TESTING OF RE-DESIGN

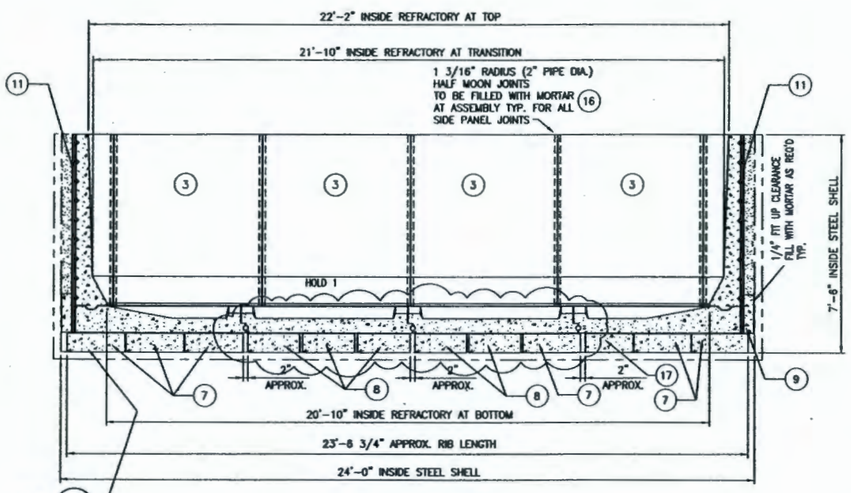

SECTION A
1/2"=1'-0"

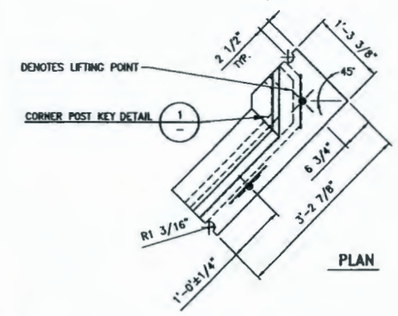

PLAN

NOTES:
1. THIS DESIGN IS BASED ON:
   - THE CURRENT ICV BOX DESIGN DWG. F-145579-35-D-0004.
   - RESULTS FROM EIT MEETING DISCUSSIONS AND TEST BOX RESULTS
   - INPUT FROM EJ BARTELLS
2. SAND TO BE USED TO FILL SPACES BETWEEN REFRACTORY PANELS AND STEEL SHELL ON SIDES, ENDS AND BOTTOM.
3. HALF MOON JOINT DESIGN IS BASED ON INFORMATION FROM EJ BARTELLS – HALF MOON JOINTS ARE PREFERRED FOR:
   - EASE OF PRODUCTION
   - EASE OF INSTALLATION
   - STRENGTH OF JOINT
   - JOINT IS SEALED AGAINST LEAKAGE UNLIKE A LAP JOINT
4. ALLOWANCE HAS BEEN MADE FOR MORTAR BETWEEN ALL JOINTS BASED ON DISCUSSIONS WITH EJ BARTELLS.
5. FLOOR PANEL SUPPORT RIBS HAVE BEEN SPACED AT THE MAXIMUM DISTANCE RECOMMENDED TO ENSURE THAT LOADS ON FLOOR PANELS ARE TAKEN IN SHEAR AND NOT BENDING.
6. ALL DIMENSIONS SHOWN ARE NOMINAL AND BASED ON AN EXPECTED +/- 1/8" PRODUCTION TOLERANCE FOR DIMENSIONS OVER 12" AND +0/- 1/8" FOR ALL OTHER DIMENSIONS EXCEPT WHERE NOTED.
7. ALL LIFTING DEVICES TO BE REMOVED BEFORE ICV BOX LEAVES ASSEMBLY ENCLOSURE.
8. LIFTING COMPONENT INSERTS NOT TO PROTRUDE BEYOND REFRACTORY SURFACE.

DETAIL 2

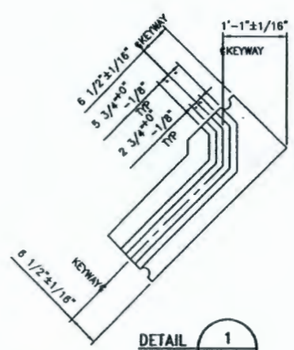

DETAIL 1

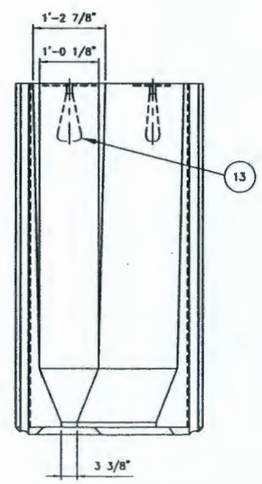

FRONT ELEVATION

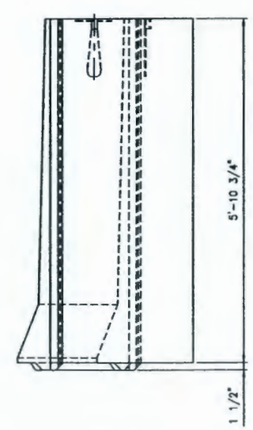

END ELEVATION

CORNER PANEL
2 REQ'D 1"=1'-0"

Rev.	REVISION DESCRIPTION	Date	By	Chk'd	Approved Eng. Mgr	Approved Prog. Mgr
K	ELIMINATE PROPRIETARY INFO	20 MAR 06	RE	JM	SB	JJ
J	REVISED DIMENSIONS	06 MAR 06	SW	JM	SB	JSG
H	REVISED CORNER PANEL AND REFRACTORY JOINT	13 JAN 06	SW	SRB	KSW	JSG
G	REVISED LIFTING POINT LOCATIONS	8 SEPT 05	JBM	RDB	FWS	FWS
F	REVISED – ISSUED FOR CH2M HILL APPROVAL & 90% REPORT	15 AUG 05	JBM	RDB	FWS	TH
E	ISSUED FOR CH2M HILL REVIEW AND 90% REPORT	03 MAR 05	TW	AA	FWS	TH
D	ISSUED FOR INFORMATION	09 FEB 05	JBM		FWS/TW	TH
C	ISSUED FOR INFORMATION	17 JAN 05	JBM	AA	FWS	TH
B	ISSUED FOR APPROVAL	30 SEPT 04	JBM	TW	FWS	TH
A	ISSUED FOR REVIEW	09 SEPT 04	JBM	TW	GJ	TH

AMEC DRAWING NO: F-145579-35-D-0016 REV: k

amec

AMEC PROJECT: 145579-FINAL DBVS DESIGN

U.S. DEPARTMENT OF ENERGY
Office of River Protection

BULK VITRIFICATION
ICV BOX
REFRACTORY ASSEMBLY

SIZE F | SCALE AS NOTED

DWG NO	TITLE
–	

DRAWING TRACEABILITY LIST

REF NUMBER	TITLE
–	

REFERENCES — NEXT USED ON

REVISIONS

RPP-24544 REV 1c

No.	AMEC Dwg. No.	REFERENCE DRAWINGS
1	145579-35-D-0016	ICV BOX REFRACTORY ASSEMBLY
2	145579-35-D-0023	ICV BOX REFRACTORY PANEL CLIP DETAILS

In making requests for transmittal of data by any electronic media, the Company receiving such data agrees that AMEC Americas Limited cannot be held responsible for users of the data outside of or beyond the scope of our original agreement. Also, because data stored in electronic media or transmitted by electronic means can deteriorate undetected or be modified without the consultant's knowledge, the Company receiving data agrees that AMEC Americas Limited cannot be held liable for the compatibility, completeness or correctness of the data.

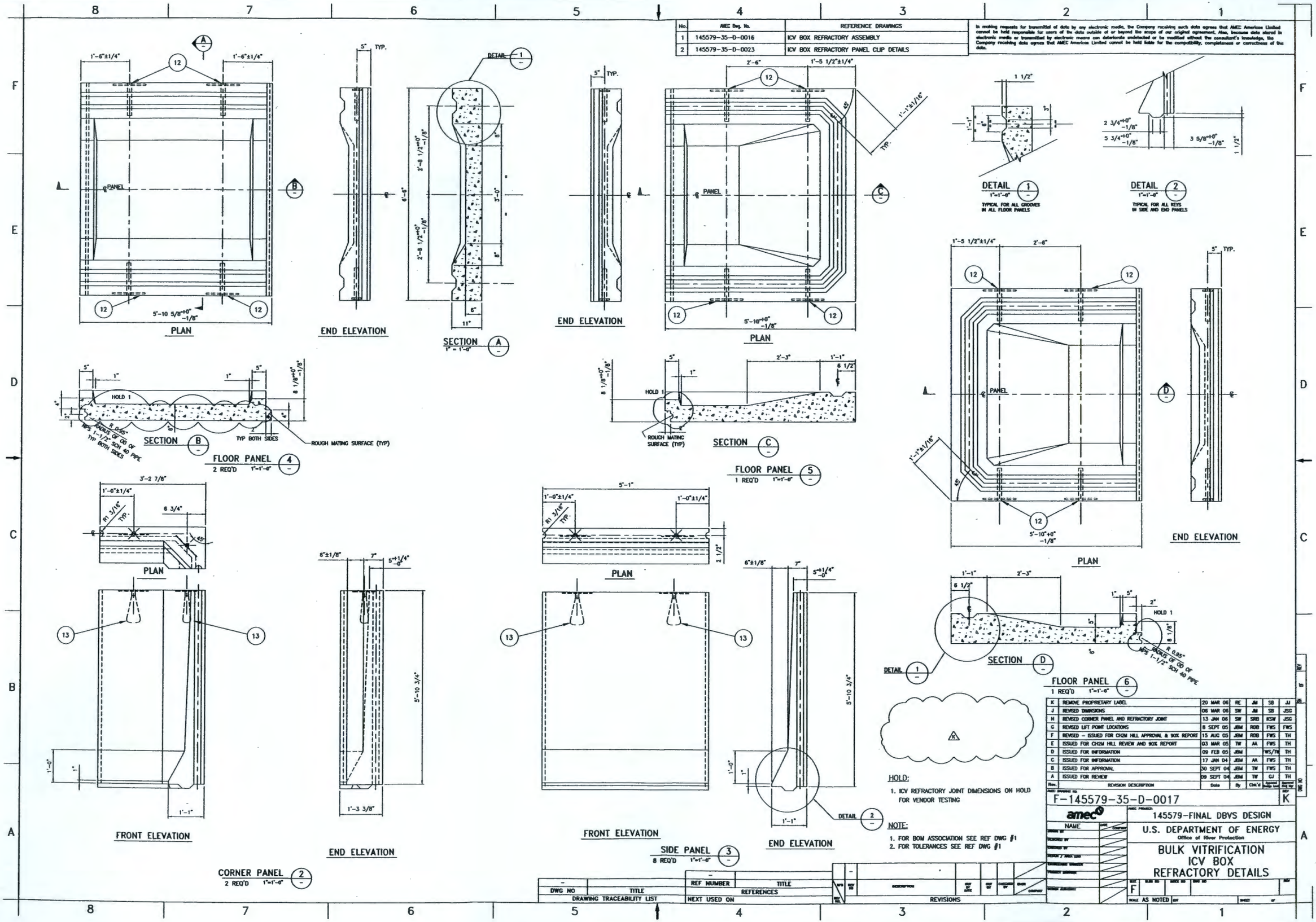

Rev.	REVISION DESCRIPTION	Date	By	Chk'd	Approved Design Lead	Approved Proj Eng
K	REMOVE PROPRIETARY LABEL	20 MAR 06	RE	JM	SB	JJ
J	REVISED DIMENSIONS	06 MAR 06	SW	JM	SB	JSG
H	REVISED CORNER PANEL AND REFRACTORY JOINT	13 JAN 06	SW	SRB	KSW	JSG
G	REVISED LIFT POINT LOCATIONS	8 SEPT 05	JBM	RDB	FWS	FWS
F	REVISED – ISSUED FOR CH2M HILL APPROVAL & 90% REPORT	15 AUG 05	JBM	RDB	FWS	TH
E	ISSUED FOR CH2M HILL REVIEW AND 90% REPORT	03 MAR 05	TW	AA	FWS	TH
D	ISSUED FOR INFORMATION	09 FEB 05	JBM		FWS/TH	TH
C	ISSUED FOR INFORMATION	17 JAN 04	JBM	AA	FWS	TH
B	ISSUED FOR APPROVAL	30 SEPT 04	JBM	TW	FWS	TH
A	ISSUED FOR REVIEW	09 SEPT 04	JBM	TW	GJ	TH

In making requests for transmittal of data by any electronic media, the Company receiving such data agrees that AMEC Americas Limited cannot be held responsible for users of the data outside of or beyond the scope of our original agreement. Also, because data stored in electronic media or transmitted by electronic means can deteriorate undetected or be modified without the consultant's knowledge, the Company receiving data agrees that AMEC Americas Limited cannot be held liable for the compatibility, completeness or correctness of the data.

No.	AMEC Dwg. No.	REFERENCE DRAWINGS
1	F-145579-00-D-0002	SITE LAYOUT PLAN
2	H-14-106797	FDN – PLAN & DETAILS
3	F-145579-00-B-0015	ICV BOX ASSEMBLY BUILDING – PLAN AND SECTION
4	F-145579-00-B-0018	MISCELLANEOUS STEEL STRUCTURES
5	F-145579-00-B-0019	ICV BOX ASSEMBLY BUILDING – STORAGE RACKS

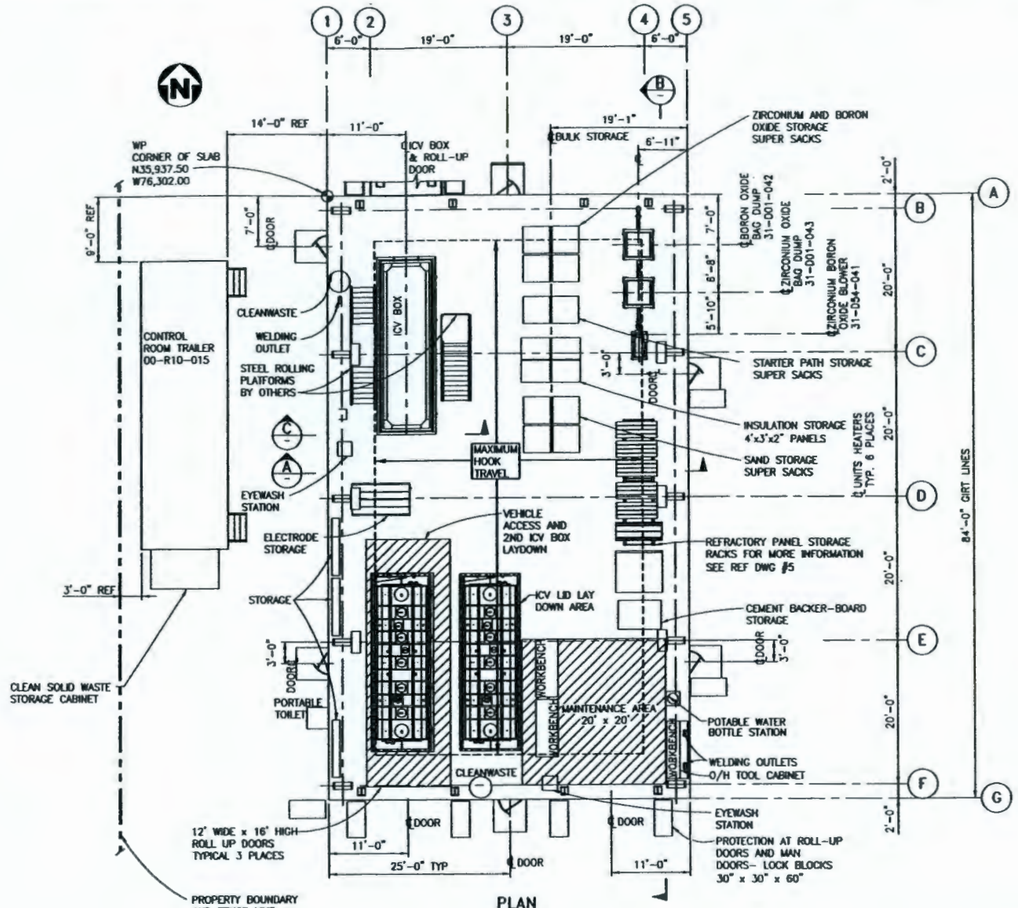

PLAN
1/8"=1'-0"

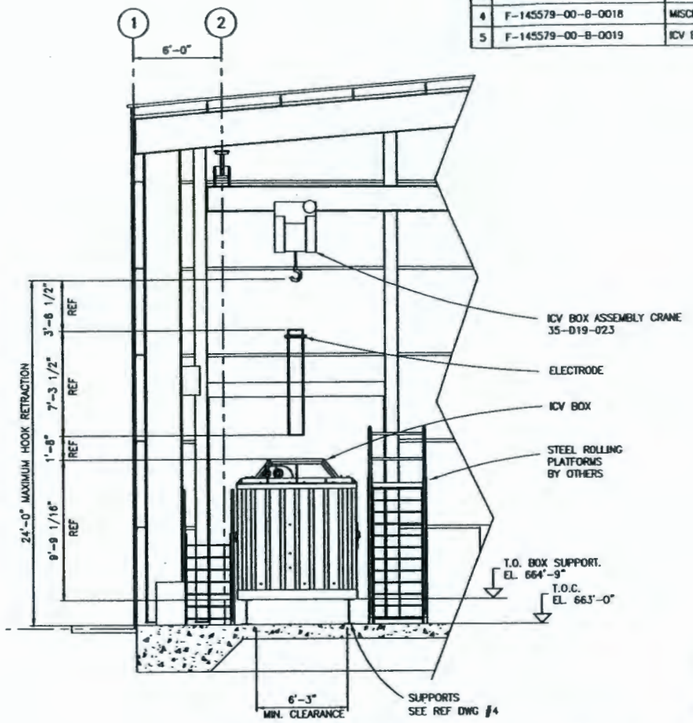

CRANE CLEARANCE SECTION
1/4"=1'-0"

NOTES:

1. ALL STANDARD SHOP MAINTENANCE EQUIPMENT (SHOP VACS, CLEAN-UP TOOLS, TOOL CABINETS, WELDERS, WORK BENCHES, ETC) WILL BE PURCHSED BY OTHERS.

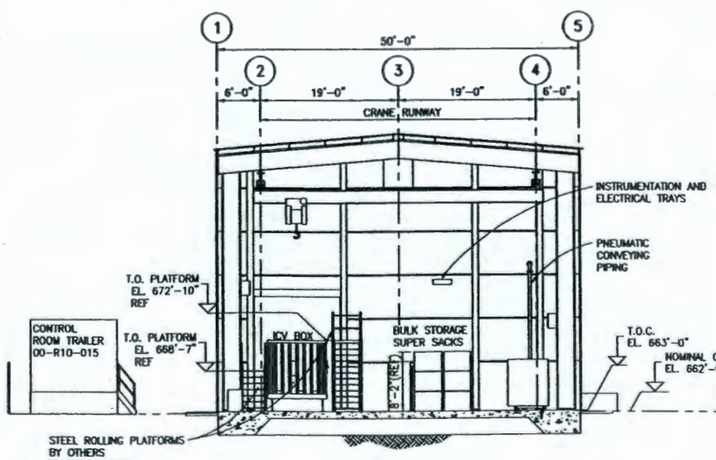

SECTION
1/8"=1'-0"

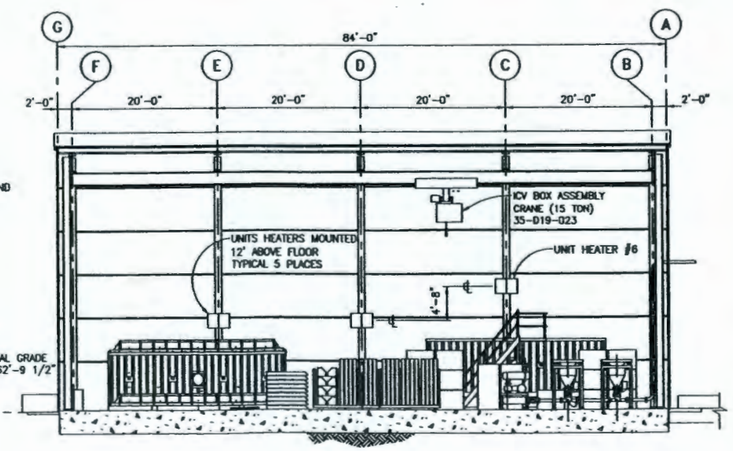

SECTION
1/8"=1'-0"

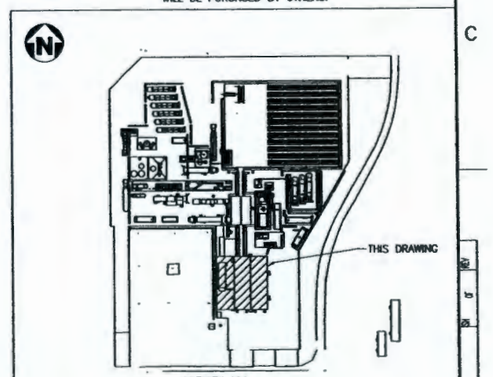

KEYPLAN

Rev.	REVISION DESCRIPTION	Date	By	Chk'd	Approved Design Lead	Approved Proj. Eng.	REV
1	ISSUED FOR DESIGN REPORT	06 MAR 06	THB	JM	SMB	JSG	
0	ISSUED FOR CONSTRUCTION	19 MAY 05	JBM	AA	PWS	TH	

AMEC DRAWING NO: F-145579-35-D-0018 REV: 1

amec

AMEC PROJECT: 145579-FINAL DBVS DESIGN

U.S. DEPARTMENT OF ENERGY
Office of River Protection

BULK VITRIFICATION ASSEMBLY ENCLOSURE G.A. PLANS AND ELEVATIONS

NAME	DATE	COMPANY
DESIGN BY R. BENNETT	07 MAR 06	AMEC
DESIGNED BY T. WILSON	07 MAR 06	AMEC
DESIGN / AREA LEAD F. SWEET	07 MAR 06	AMEC
ENGINEERING MANAGER	07 MAR 06	AMEC
PROJECT MANAGER A. STEPHENS	07 MAR 06	AMEC
REVISION ASSIGNMENT		

SIZE F | BLDG NO | SHEET NO | DWG NO | REV
SCALE AS NOTED | SHEET OF

DWG NO	TITLE
DRAWING TRACEABILITY LIST	

REF NUMBER	TITLE
REFERENCES	
NEXT USED ON	

REV NO	DATE	DESCRIPTION	PREP BY	REV BY	APPD BY	CHANGE NOTICE
REVISIONS						

In making requests for transmittal of data by any electronic media, the Company receiving such data agrees that AMEC Americas Limited cannot be held responsible for users of the data outside of or beyond the scope of our original agreement. Also, because data stored in electronic media or transmitted by electronic means can deteriorate undetected or be modified without the consultant's knowledge, the Company receiving data agrees that AMEC Americas Limited cannot be held liable for the compatibility, completeness or correctness of the data.

No.	AMEC Dwg. No.	REFERENCE DRAWINGS
1	F-145579-35-0-0004	ICV BOX DATA SHEET
2	F-145579-35-0-0005	ICV BOX LID ASSEMBLY
3	F-145579-35-0-0008	ICV BOX PLAN AND SECTIONS

GENERAL NOTES:

1. QUANTITIES MARKED FOR ITEMS REPRESENT TOTAL FOR '1' ICV BOX LID ONLY
2. MATERIALS: AS NOTED

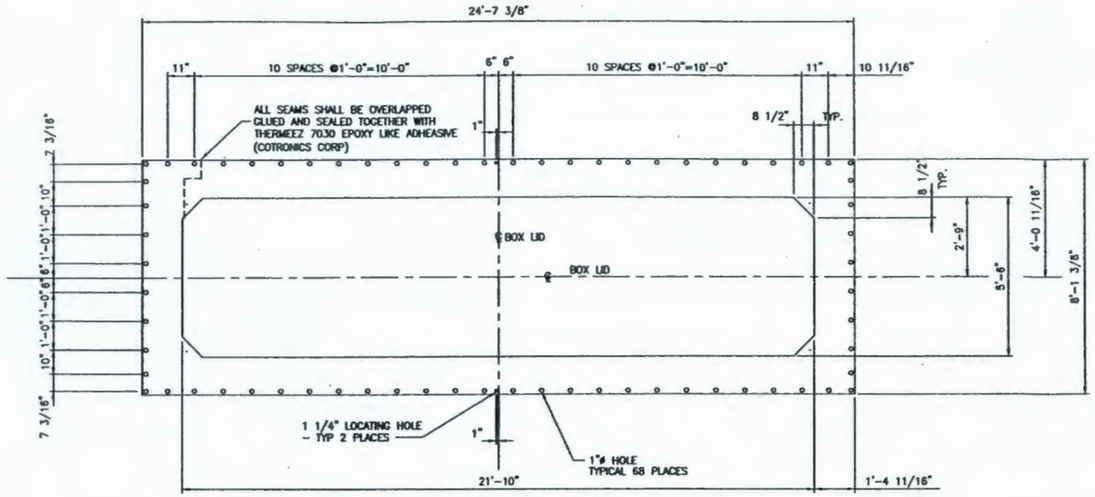

BOX LID GASKET - '1' REQ'D

MAT'L: 1" THICK 8# MA FIBRESEAL BLANKET OR EQUIV.
LOCATION: SEE REF. 2 & 3

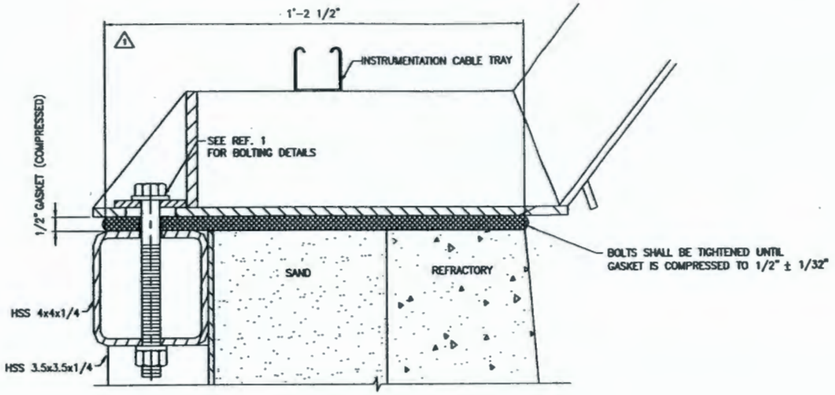

LID TO BOX GASKET CLOSURE DETAIL (1/0004)
SCALE: 6"=1'-0"

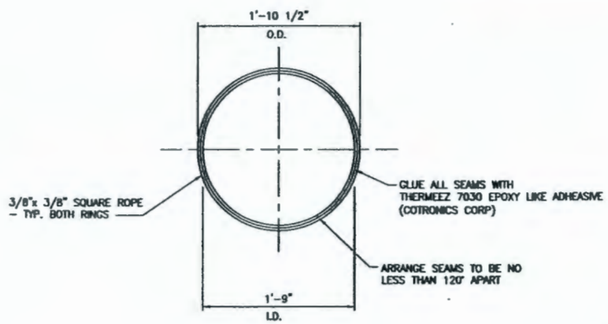

ELECTRODE LID GASKET - '2' REQ'D

SCALE: 1 1/2"=1'-0"
MAT'L: C9 CERAMIC FIBER OR EQUAL
LOCATION: SEE REF. 2

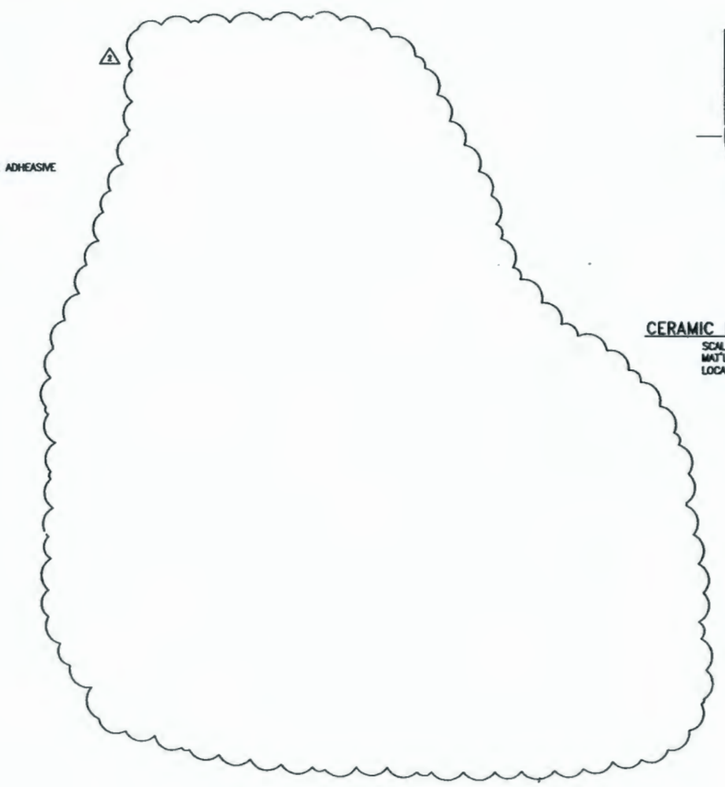

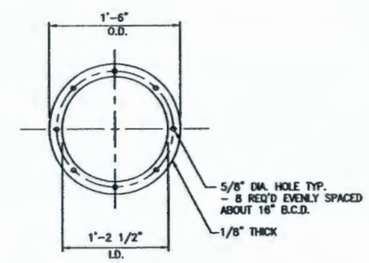

CERAMIC FACE GASKET - '2' REQ'D

SCALE 1 1/2"=1'-0"
MAT'L: PYROTEK M8 FABRIC OR EQUIV.
LOCATION: SEE REF. 2

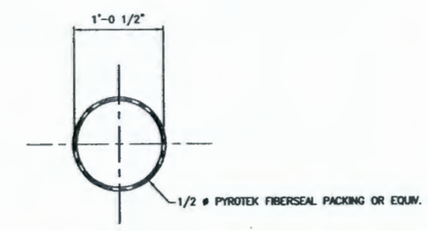

CERAMIC SLEEVE PACKING - '2' REQ'D

SCALE 1 1/2"=1'-0"
MAT'L: PYROTEK A-1 ROPE C/W GRAPHITE COATING OR EQUIV.
LOCATION: SEE REF. 2

Rev.	REVISION DESCRIPTION	Date	By	Chk'd	Appvd Amec Lead	Appvd Rep Mgr
2	ISSUED FOR DESIGN REPORT	08 MAR 06	THB	JM	SRB	JSC
1	CHANGED GASKET LENGTH FROM 1' 3 1/5" TO 1' 2 1/2"	15 AUG 05	JBM	RDB	FBS	TH
0	ISSUED FOR CONSTRUCTION	19 MAY 05	JBM	AA	FBS	TH

AMEC DRAWING NO: F-145579-35-D-0019 REV: 2

amec

AMEC PROJECT: 145579-FINAL DBVS DESIGN

U.S. DEPARTMENT OF ENERGY
Office of River Protection

BULK VITRIFICATION
ICV BOX LID
GASKET DETAILS

SIZE F | SCALE AS NOTED

DWG NO	TITLE
-	

DRAWING TRACEABILITY LIST

REF NUMBER	TITLE
-	

REFERENCES
NEXT USED ON

REV NO	DESCRIPTION	REV BY DATE	CHKD BY	APPD BY	DRAWN CHECKED
-					

REVISIONS

RPP-24544 REV 1c

In making requests for transmittal of data by any electronic media, the Company receiving such data agrees that AMEC Americas Limited cannot be held responsible for users of the data outside of or beyond the scope of our original agreement. Also, because data stored in electronic media or transmitted by electronic means can deteriorate undetected or be modified without the consultant's knowledge, the Company receiving data agrees that AMEC Americas Limited cannot be held liable for the compatibility, completeness or correctness of the data.

No.	AMEC Dwg. No.	REFERENCE DRAWINGS
1	F-145579-35-D-0009	BULK VITRIFICATION ICV BOX LID DETAILS STEELWORK 3 OF 3
2	F-145579-35-D-0005	ICV BOX LID ASSEMBLY

GENERAL NOTES:

1. QUANTITIES MARKED FOR ITEMS REPRESENT TOTAL FOR '1' ICV BOX LID ONLY
2. MATERIALS: AS NOTED

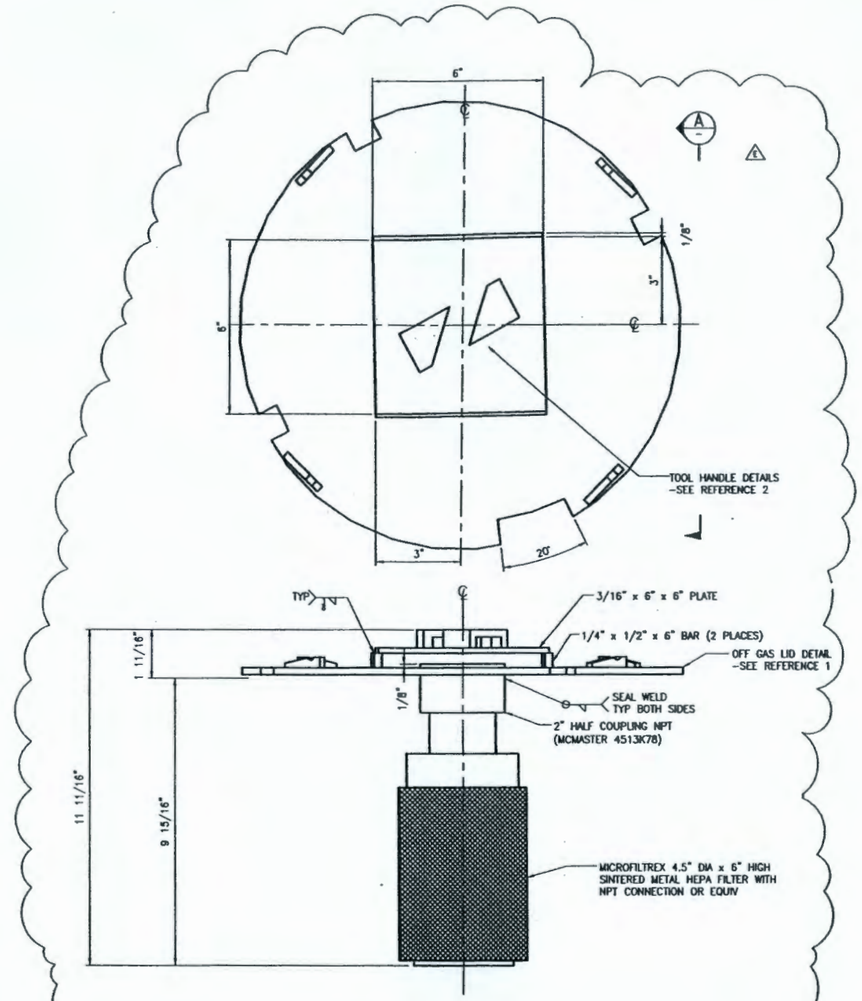

ICV BOX BREATHER HEPA FILTER & AMBIENT AIR LID – '1' REQ'D

SCALE 6" = 1'-0"
MAT'L: ASTM A36
LOCATION: SEE REF 2

Rev.	REVISION DESCRIPTION	Date	By	Chk'd	Approved Design Eng.	Approved Proj. Eng.
E	ISSUE FOR CH2M APPROVAL/90% DESIGN (PKG 6)	10 APR 06	THB	JM	SRB	JSG
D	ISSUED FOR DESIGN REPORT	20 MAR 06	RE	JM	SB	JJ
C	ISSUED FOR DESIGN REPORT	06 MAR 06	THB	JM	SRB	JSG
B	ISSUED FOR CH2M HILL REVIEW AND 90% REPORT	03 MAR 05	RRB	AA	WS/TY	TH
A	ISSUED FOR INTERNAL APPROVAL	21 FEB 05	RRB			

AMEC DRAWING NO: F-145579-35-D-0021 REV: E

amec

AMEC PROJECT: 145579-FINAL DBVS DESIGN

U.S. DEPARTMENT OF ENERGY
Office of River Protection

BULK VITRIFICATION
ICV BOX
BREATHER HEPA FILTER

SIZE F | SCALE AS NOTED

DWG NO	TITLE
DRAWING TRACEABILITY LIST	

REF NUMBER	TITLE
NEXT USED ON	REFERENCES

REVISIONS

RPP-24544 REV 1c

In making requests for transmittal of data by any electronic media, the Company receiving such data agrees that AMEC Americas Limited cannot be held responsible for users of the data outside of or beyond the scope of our original agreement. Also, because data stored in electronic media or transmitted by electronic means can deteriorate undetected or be modified without the consultant's knowledge, the Company receiving data agrees that AMEC Americas Limited cannot be held liable for the compatibility, completeness or correctness of the data.

No.	AMEC Dwg. No.	REFERENCE DRAWINGS
1	F-145579-35-D-0005	ICV BOX LID ASSEMBLY
2	F-145579-34-D-0002	AWTE FLOOR – AWTE DETAILS AND SECTIONS

GENERAL NOTES:

1. THE QUANTITIES LISTED FOR EACH ITEM ARE REQUIRED FOR ONE ICV BOX LID ASSEMBLY ONLY.
2. MATERIALS: AS NOTED

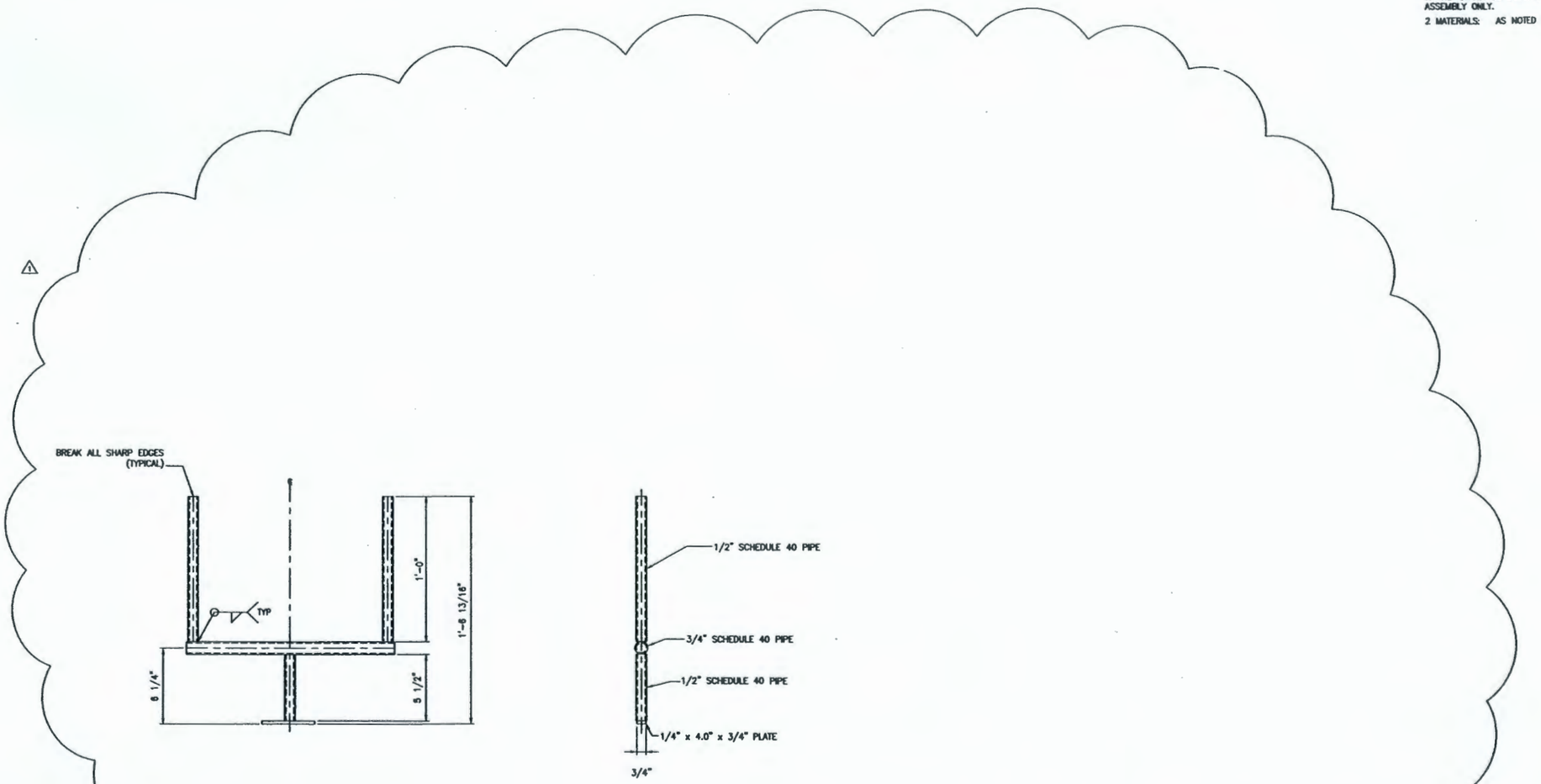

LID HANDLING TOOL – '10' REQ'D

SCALE 3" = 1'-0"
MAT'L ASTM A36, A53

Rev.	REVISION DESCRIPTION	Date	By	Chk'd	Approved Dsgn Eng	Approved Proj Eng
1	ISSUED FOR DESIGN PACKAGE	06 MAR 08	THB	JM	SRB	JSG
0	ISSUED FOR CONSTRUCTION	19 MAY 05	JBM	AA	PMS	TH

AMEC DRAWING NO: F-145579-35-D-0022 — REV: 1

amec

AMEC PROJECT: 145579-FINAL DBVS DESIGN

U.S. DEPARTMENT OF ENERGY
Office of River Protection

BULK VITRIFICATION
ICV BOX LID
TOOL AND RADAR PLATE

NAME	DATE	SIGNATURE
DRAWN BY		
DESIGNED BY		
CHECKED BY		
DSGN / PROJ ENG		
DISCIPLINE MANAGER		
PROJECT MANAGER		
REVIEWED AUTHORITY		

SIZE F — SCALE — DWG — SHEET OF

DWG NO	TITLE
DRAWING TRACEABILITY LIST	

REF NUMBER	TITLE
NEXT USED ON	REFERENCES

REV	DESCRIPTION	DATE	CHK'D BY	APPROVED BY	DRAWN COMPANY
–					

REVISIONS

No.	AMEC Dwg. No.	REFERENCE DRAWINGS
1	F-145579-35-D-0016	ICV BOX REFRACTORY ASSEMBLY

In making requests for transmittal of data by any electronic media, the Company receiving such data agrees that AMEC Americas Limited cannot be held responsible for users of the data outside of or beyond the scope of our original agreement. Also, because data stored in electronic media or transmitted by electronic means can deteriorate undetected or be modified without the consultant's knowledge, the Company receiving data agrees that AMEC Americas Limited cannot be held liable for the compatibility, completeness or correctness of the data.

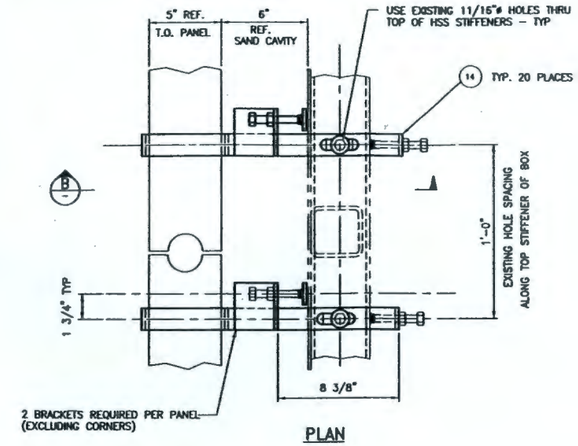

PLAN

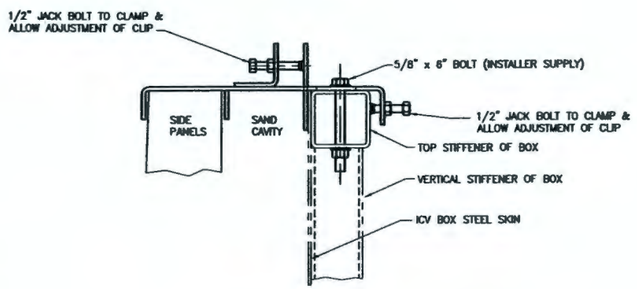

SECTION B 3"=1'-0"

DETAIL 1 / 0016

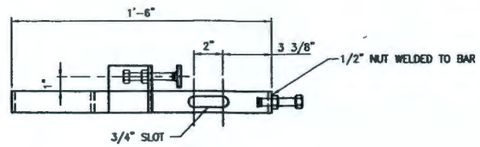

PLAN

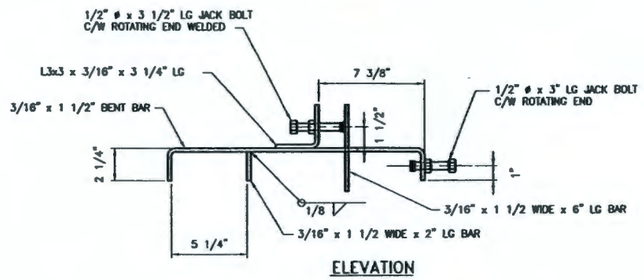

ELEVATION

(14) PANEL CLIP ~ ASTM A36
'20' REQ'D ~ MK 'A'
SCALE 3" = 1'-0"

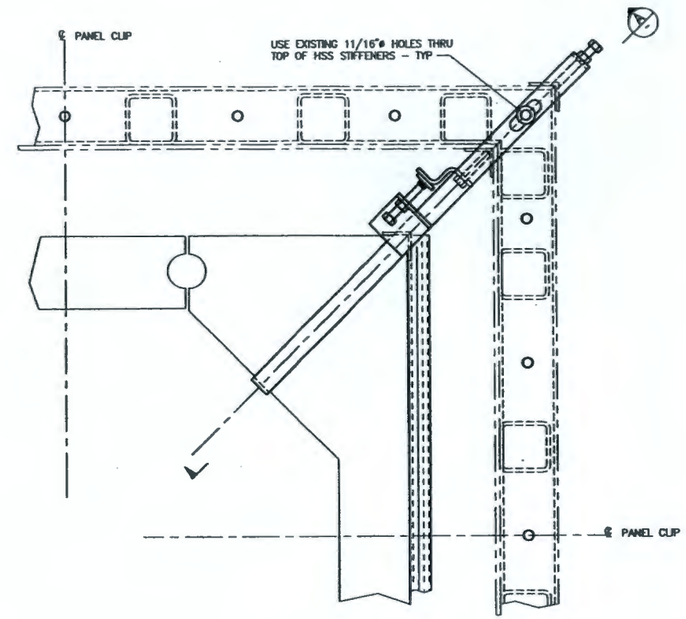

PLAN

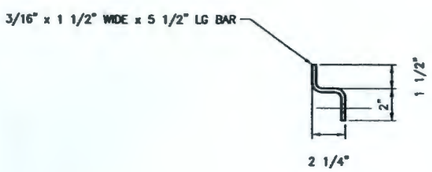

DETAIL 1 / –

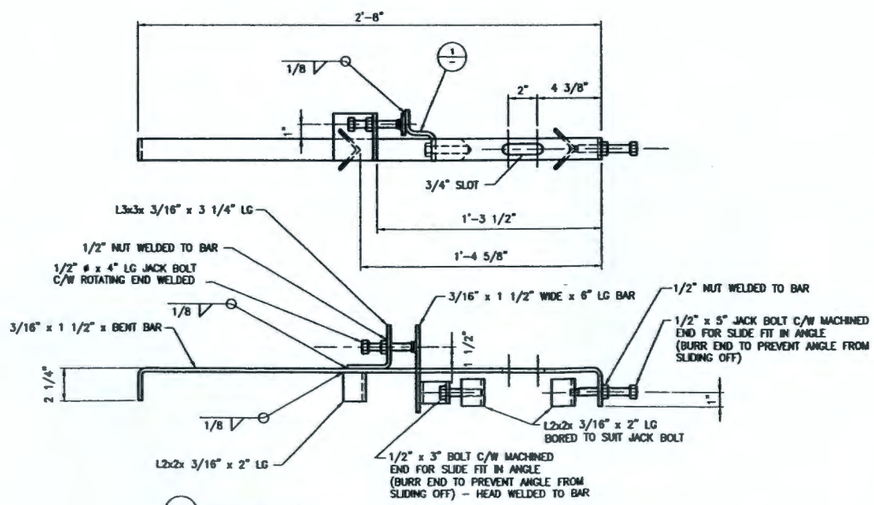

(15) CORNER CLIP ~ ASTM A36
'4' REQ'D ~ MK 'B'
SCALE 3" = 1'-0"

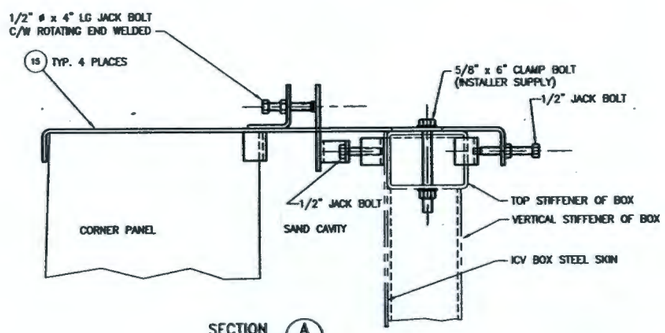

SECTION A –

DETAIL 2 / 0016

Rev.	REVISION DESCRIPTION	Date	By	Chk'd	Approved Design Eng.	Approved Proj. Eng.
C	ISSUED FOR DESIGN REPORT	06 MAR 06	SW	JM	SRB	JSG
B	REVISED – CORNER PANEL JOINT	13 JAN 06	SW	SRB	KSW	JSG
A	REVISED – ISSUED FOR CH2MHILL APPROVAL & 90% REPORT	15 AUG 05	JBM	RDB	FWS	TH

AMEC DRAWING NO. F-145579-35-D-0023 REV C

amec

AMEC PROJECT 145579-FINAL DBVS DESIGN

U.S. DEPARTMENT OF ENERGY
Office of River Protection

BULK VITRIFICATION
ICV BOX
REFRACTORY PANEL CLIP DETAILS

SIZE F SCALE AS NOTED

NAME	DATE	COMPANY
DRAWN BY		
REVIEWED BY		
CHECKED BY		
DESIGN / PROJ. ENG		
ENGINEERING MANAGER		
PROJECT MANAGER		
DESIGN AUTHORITY		

DWG NO	TITLE
–	

DRAWING TRACEABILITY LIST

REF NUMBER	TITLE
–	

REFERENCES
NEXT USED ON

REV	DESCRIPTION	REF DWG	CHK'D BY	CHECKED BY	DATE	COMPANY
–						

REVISIONS

In making requests for transmittal of data by any electronic media, the Company receiving such data agrees that AMEC Americas Limited cannot be held responsible for errors of the data outside of or beyond the scope of our original agreement. Also, because data stored in electronic media or transmitted by electronic means can deteriorate undetected or be modified without the consultant's knowledge, the Company receiving data agrees that AMEC Americas Limited cannot be held liable for the compatibility, completeness or correctness of the data.

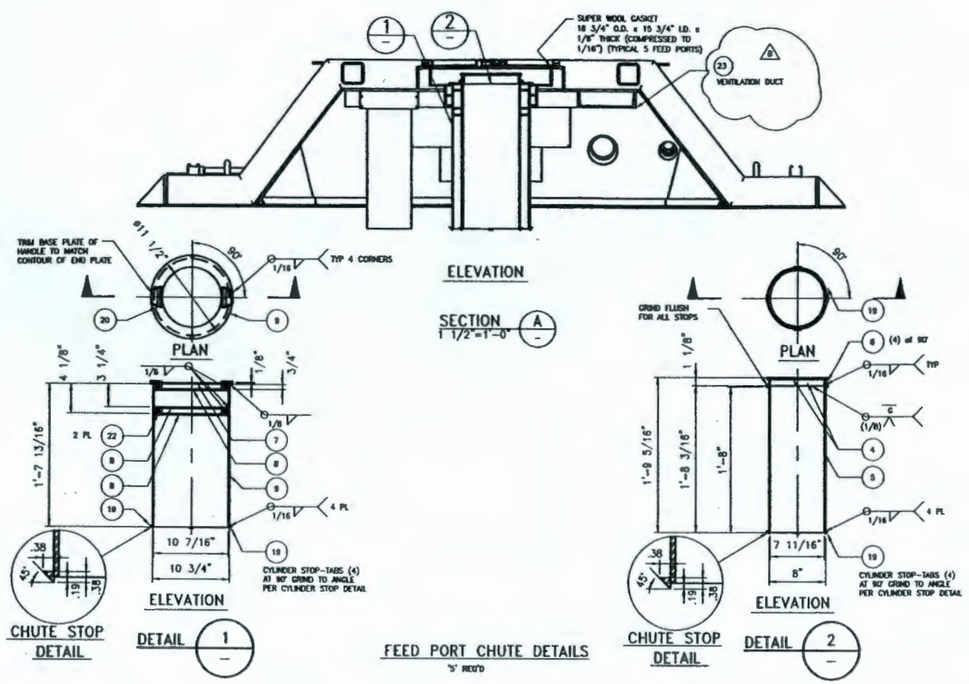

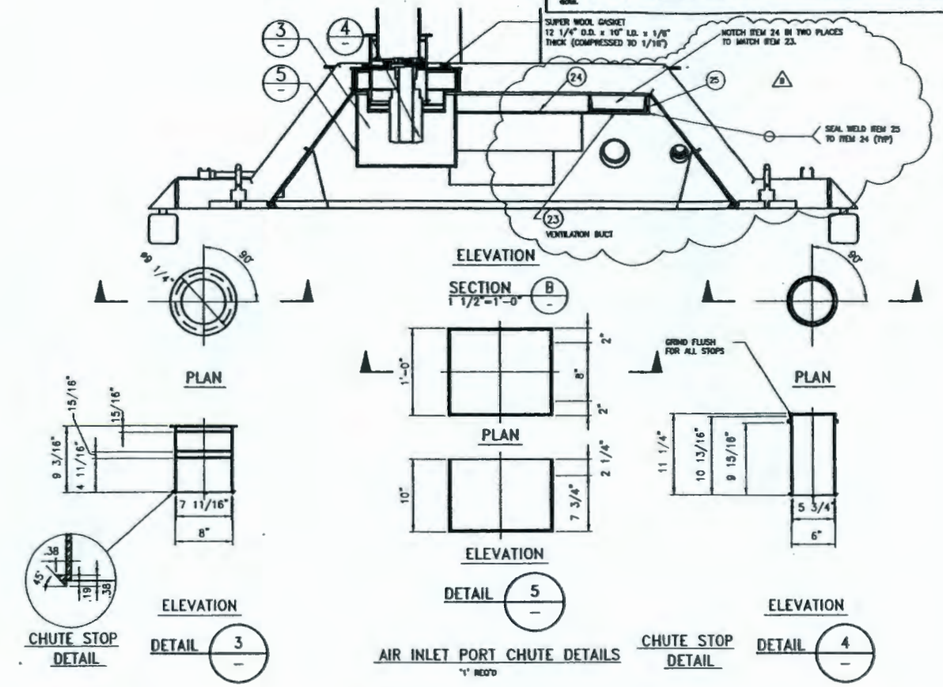

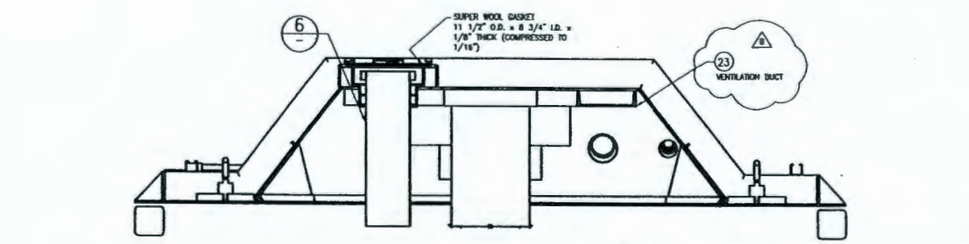

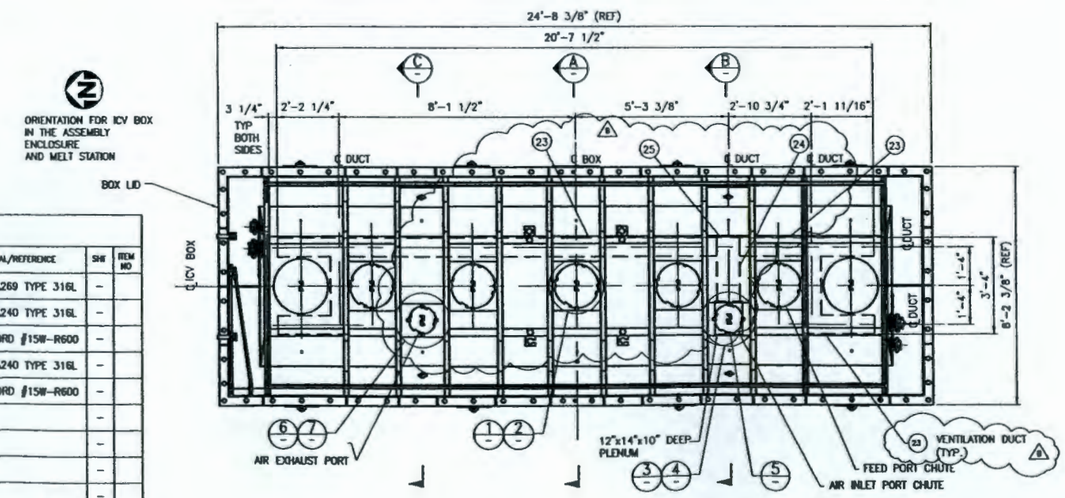

PARTS/MATERIAL LIST

ITEM	REQ'D	PART/DASH NUMBER	NOMENCLATURE/DESCRIPTION	MATERIAL/REFERENCE	SHF	REM NO
1	1	–	MECH. TUBE 6"ø x.134 WALL x19.93 LG	ASTM A269 TYPE 316L	–	
2	8	–	PLATE, 1"x3/8"x3/8"	ASTM A240 TYPE 316L	–	
3	1	–	6"ø I-LINE FEMALE FERRULE	BRADFORD #15W-R600	–	
4	4	–	PLATE, 3/8"x3/8"x3/8"	ASTM A240 TYPE 316L	–	
5	1	–	8"ø I-LINE FEMALE FERRULE	BRADFORD #15W-R600	–	
6	–	–	MECH. TUBE, 8øx.148" WALL x20.19" LG		–	
7	–	–	PLATE, 3/8" THK x1.50"x.38"		–	
8	1	–	PLATE, 3/16" THK x11.50" OD x8.13" ID	A36	–	
9	–	–	PLATE, 3/16" THK x10.31" OD x8.13" ID		–	
10	1	–	PIPE, 10ø" SCHED 10S x 19.81" LG	A36	–	
19	8	–	PLATE, 3/8"x3/8"x3/8"	A36	–	
20	2	–	HANDLE – McMASTER-CARR #1647A34	HEAVY DUTY	–	
22	3	–	GASKET – McMASTER-CARR #8818SKB6	2300F, 1"ø	–	
23	AR	–	MC CHANNEL 8x8.5	ASTM A36	–	
24	AR	–	C CHANNEL 10x15.3	ASTM A36	–	
25	AR	–	PLATE, 1/4" THK	ASTM A36	–	

NOTES:
1. DO NOT WELD LOWER TABS UNTIL SUB-ASSEMBLY IS INSERTED INTO THE FEED PORT HOUSING.
2. GRIND AWAY WELD WHERE STOP-TABS MAKE CONTACT WITH FEED PORT HOUSING.

REV	DESCRIPTION	Date	By	CHK'd	Approved By	Approved Date
B	ISSUE FOR CD2M APPROVAL/BOX DESIGN (PKG 6)	10 APR 06	THB	JM	SRB	JSG
A	REVISED ICV BOX LID PORTS AND DELETED RADAR PORT	06 MAR 06	THB	JM	SRB	JSG

AMEC DRAWING NO: F-145579-35-D-0024 REV: B

amec

AMEC PROJECT: 145579-FINAL DBVS DESIGN

U.S. DEPARTMENT OF ENERGY
Office of River Protection

BULK VITRIFICATION
ICV BOX
PORT CONNECTIONS

SIZE F SCALE AS NOTED

DWG NO	TITLE
–	–

DRAWING TRACEABILITY LIST

REF NUMBER	TITLE
–	–

REFERENCES
NEXT USED ON

REVISIONS

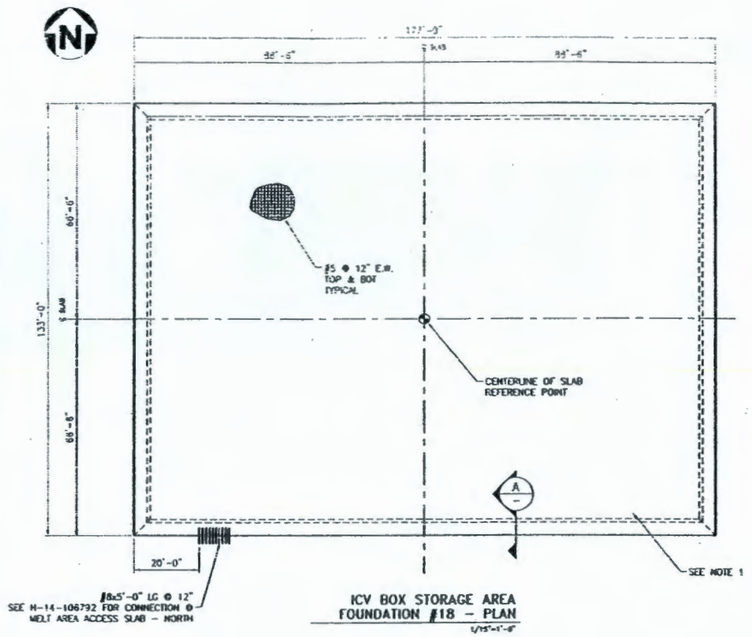

ICV BOX STORAGE AREA
FOUNDATION #18 - PLAN
1/15"=1'-0"

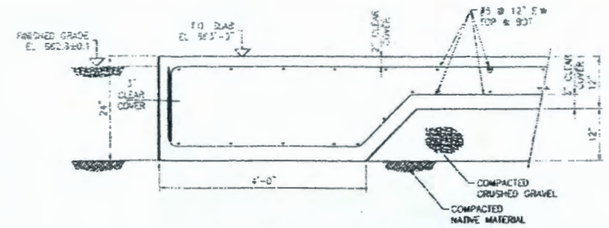

SLAB THICKENING @ PERIMETER
TYPICAL 4 SIDES

SECTION A
1"=1'-0"

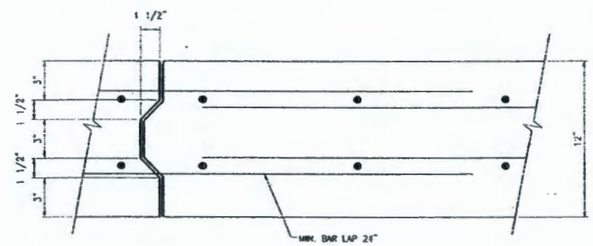

CONSTRUCTION JOINT DETAIL
3"=1'-0"

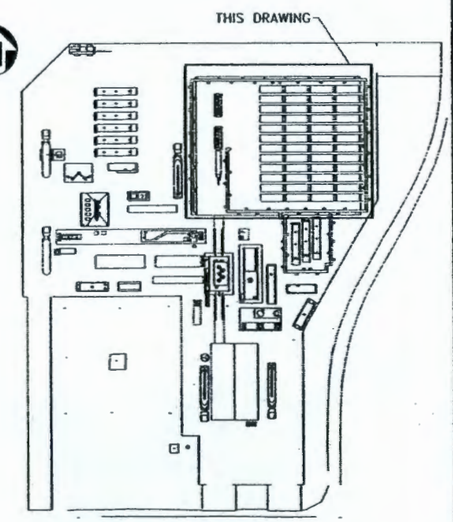

LOCATION PLAN

NOTES:

FOR GENERAL NOTES, DESIGN CRITERIA, MATERIAL SPECIFICATIONS, AND FOUNDATION LOCATIONS REFER TO DRAWING H-14-106789 "BULK VITRIFICATION - CIVIL SITE IMPROVEMENTS"

1. ICV BOX STORAGE AREA SLAB SUPPORTS LOADED AIR PALLET TRAFFIC. CONCRETE SURFACE SHALL BE CLASS 9 "SUPERFLAT" WITH MINIMUM FLATNESS NUMBERS OF Fr=100 AND Fl=50 AS DESCRIBED IN ACI 302.1R.

THIS DRAWING PREVIOUSLY ISSUED AS AMEC DRAWING F-143643-00-C-0005.

DWG NO	TITLE
DRAWING TRACEABILITY LIST	

REF NUMBER	TITLE
REFERENCES	
NEXT USED ON H-14-106789	

REVISIONS

amec

NAME	DATE
D.P. KROEKER	

145579-FINAL DBVS DESIGN

U.S. DEPARTMENT OF ENERGY
Office of River Protection

BULK VITRIFICATION
ICV BOX STORAGE AREA
PLAN / DETAILS

SIZE	CODE IDENT NO	PROJECT NO	DWG NO	REV
F	241C	0900	H-14-106790	0

SCALE AS SHOWN | SHT 1 OF 1

In making requests for transmittal of data by any electronic media, the Company receiving such data agrees that AMEC Americas Limited cannot be held responsible for users of the data outside of or beyond the scope of our original agreement. Also, because data stored in electronic media or transmitted by electronic means can deteriorate undetected or be modified without the consultant's knowledge, the Company receiving data agrees that AMEC Americas Limited cannot be held liable for the compatibility, completeness or correctness of the data.

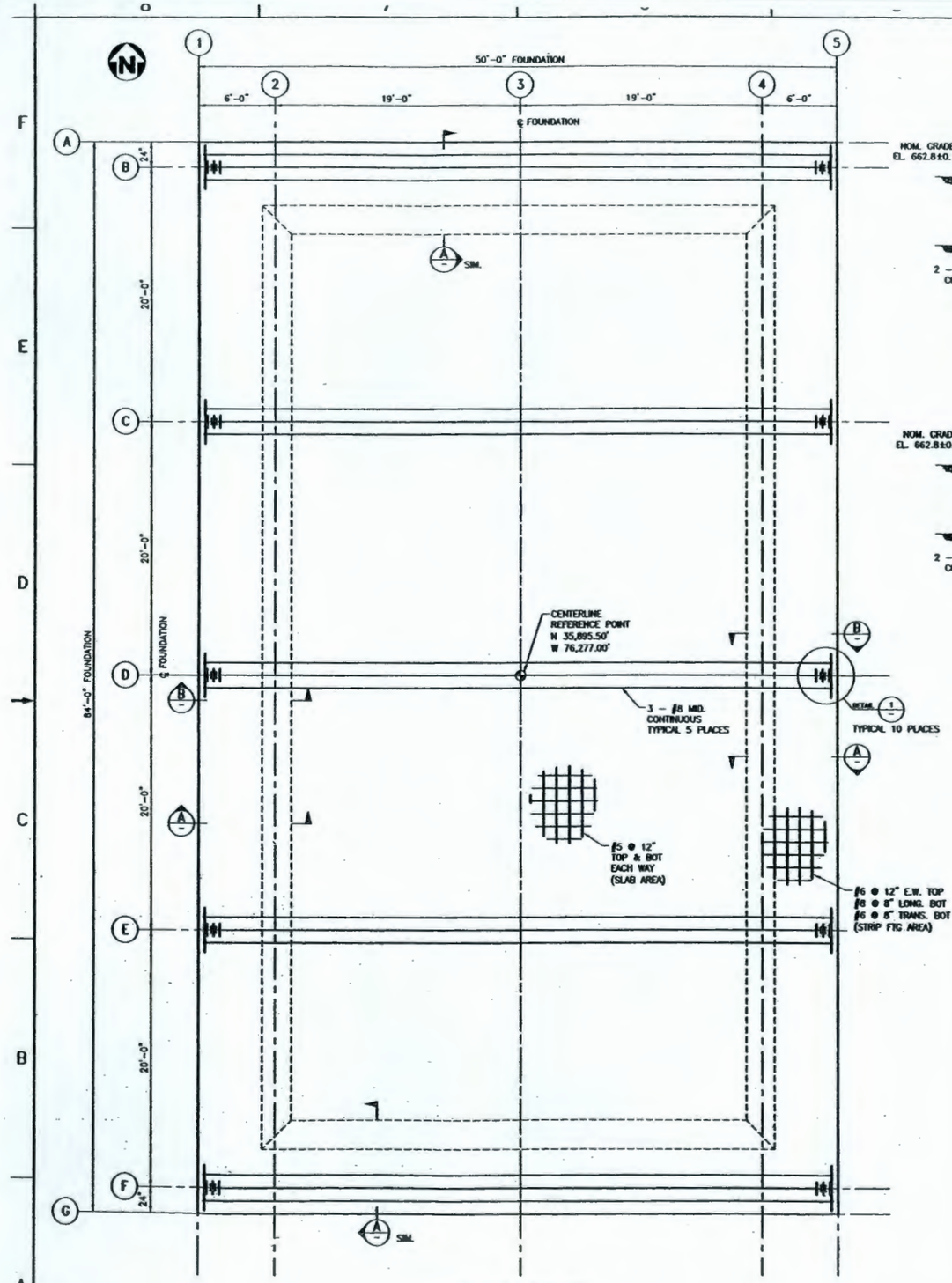

ASSEMBLY BUILDING
FOUNDATION #20 – PLAN
1/4"=1'-0"

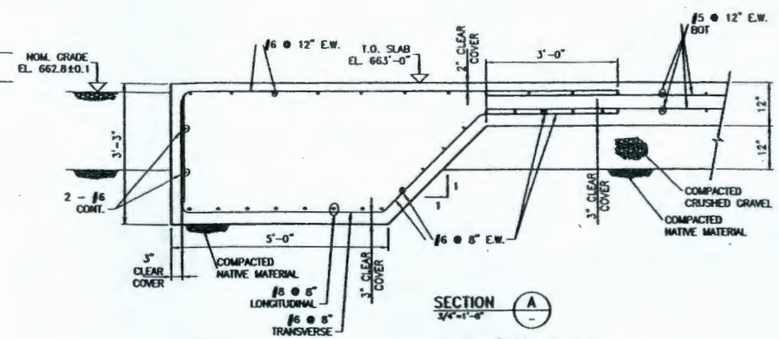

SECTION A
3/4"=1'-0"

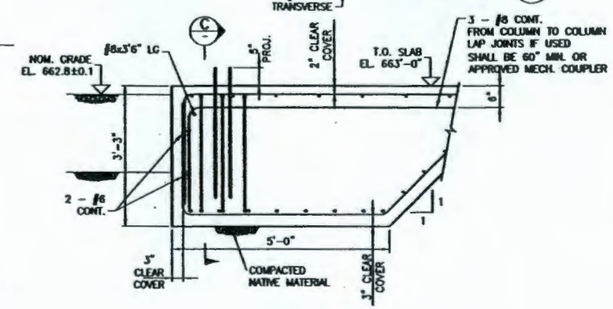

SECTION B
3/4"=1'-0"

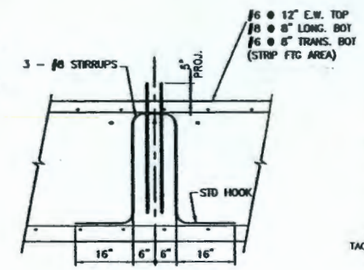

SECTION C
3/4"=1'-0"

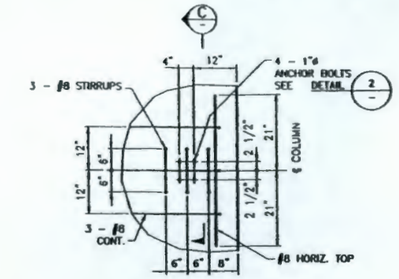

DETAIL 1
3/4"=1'-0"

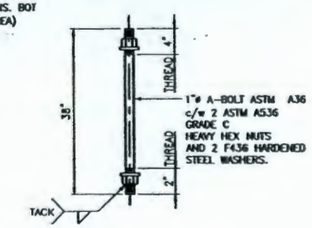

DETAIL 2
N.T.S.
40 REQ'D

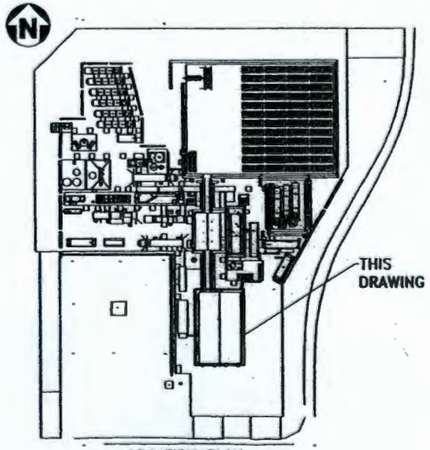

LOCATION PLAN

NOTES:

FOR GENERAL NOTES AND FOUNDATION LOCATIONS REFER TO DRAWING H-14-106789 "BULK VITRIFICATION – CIVIL SITE IMPROVEMENTS"

FOR DESIGN CRITERIA & MATERIAL SPECIFICATIONS SEE CONSTRUCTION SPECIFICATION 145579-Q-SP-002.

1. PRE-ENG METAL BUILDING RIGID FRAMES SHALL USE ANCHOR BOLT PATTERN SHOWN AND SHALL HAVE "PINNED" BASES.

2. MAXIMUM DESIGN LOADS AT RIGID FRAME BASES (UNFACTORED) FROM CALCULATION 145579-C-CA-014.

VERTICAL (DOWN) = 114000LB
(UP) = 17500LB
HORIZONTAL (E/W) = 19000LB
(N/S) = 15000LB

3. ENDWALL AND DOOR FRAMING WILL BE SECURED TO FOUNDATION USING DRILLED AND GROUTED ANCHORS.
DESIGN AND SUPPLY BY PRE-ENGINEERED METAL BUILDING VENDOR.

4. CONCRETE SHALL CONFORM TO CONSTRUCTION SPECIFICATION SECTION 3300 "CAST-IN-PLACE CONCRETE".

THE FOLLOWING SPECIFIC REQUIREMENTS APPLY TO CAST-IN-PLACE CONCRETE. REFER TO THE CONSTRUCTION SPECIFICATION FOR DETAILS.

a) MINIMUM COMPRESSIVE STRENGTH @ 28 DAYS = 4000 PSI.
b) MAXIMUM WATER/CEMENT RATIO = 0.5
c) AIR CONTENT SHALL BE 5% – 8%.
d) CONSTRUCTION AND CONTRACTION JOINTS SHALL BE PER ACI 224.3R AND ACI 302.1R.

5. COMPACTED CRUSHED GRAVEL AND COMPACTION OF NATIVE MATERIAL SHALL CONFORM TO CONSTRUCTION SPECIFICATION SECTION 02220.

DWG NO	TITLE
DRAWING TRACEABILITY LIST	

REF NUMBER	TITLE
REFERENCES	
NEXT USED ON	

REVISIONS

Rev.	REVISION DESCRIPTION	Date	By	Ch'd	Approved Mgr. Eng.	Approved Proj. Mgr.
0	ISSUED FOR CONSTRUCTION	01 APR 05	DPK		PM	TH
B	ISSUED FOR CH2M HILL APPROVAL	27 JAN 05	DPK		PM	TH
C	ISSUED FOR CH2M HILL REVIEW	7 DEC 04	DPK		PM	TH
B	ISSUED FOR INTERNAL APPROVAL	29 NOV 04	DPK		PM	TH
A	ISSUED FOR INTERNAL REVIEW	18 NOV 04	DPK		PM	TH

DWG NO H-14-106797 REV 0 SH 1 OF 1

DWG NO H-14-106797 REV 0

amec

145579-FINAL DBVS DESIGN

U.S. DEPARTMENT OF ENERGY
Office of River Protection

BULK VITRIFICATION
ICV BOX ASSEMBLY BUILDING
FDN – PLAN & DETAILS

F24100110 H-14-106797 0

SCALE AS NOTED DWG 821582 SHEET 1 OF 1

NAME
D. P. Kessler

Appendix D6

APPENDIX D6

IN-CONTAINER VITRIFICATION SYSTEM

Drawing Number	Revision	Title	Page
F-145579-34-A-0101	L	Bulk Vitrification AWTE Hood & Waste Feed P&ID	D6-2
F-145579-35-A-0100	P	Bulk Vitrification ICV Box P&ID	D6-3

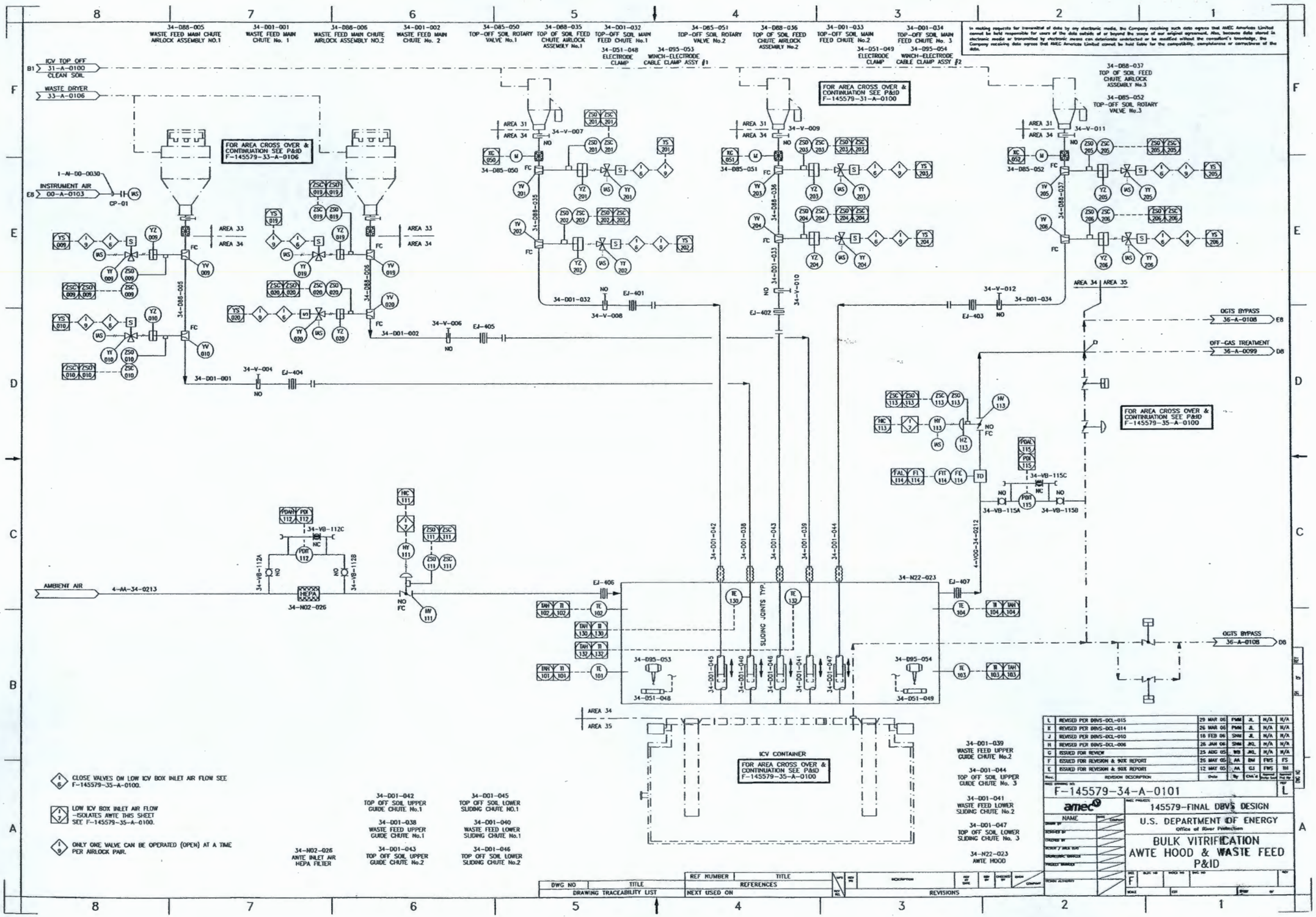
34-DB8-005 WASTE FEED MAIN CHUTE AIRLOCK ASSEMBLY NO.1
34-D01-001 WASTE FEED MAIN CHUTE No. 1
34-DB8-006 WASTE FEED MAIN CHUTE AIRLOCK ASSEMBLY NO.2
34-D01-002 WASTE FEED MAIN CHUTE No. 2
34-D85-050 TOP-OFF SOIL ROTARY VALVE No.1
34-DB8-035 TOP OF SOIL FEED CHUTE AIRLOCK ASSEMBLY No.1
34-D01-032 TOP-OFF SOIL MAIN FEED CHUTE No.1
34-D51-048 ELECTRODE CLAMP
34-D95-053 WINCH-ELECTRODE CABLE CLAMP ASSY #1
34-D85-051 TOP-OFF SOIL ROTARY VALVE No.2
34-DB8-036 TOP OF SOIL FEED CHUTE AIRLOCK ASSEMBLY No.2
34-D01-033 TOP-OFF SOIL MAIN FEED CHUTE No.2
34-D51-049 ELECTRODE CLAMP
34-D01-034 TOP-OFF SOIL MAIN FEED CHUTE No. 3
34-D95-054 WINCH-ELECTRODE CABLE CLAMP ASSY #2
34-DB8-037 TOP OF SOIL FEED CHUTE AIRLOCK ASSEMBLY No.3
34-D85-052 TOP-OFF SOIL ROTARY VALVE No.3
ICV TOP OFF 31-A-0100 CLEAN SOIL
WASTE DRYER 33-A-0106
INSTRUMENT AIR 00-A-0103
1-AI-00-0030
CP-01
FOR AREA CROSS OVER & CONTINUATION SEE P&ID F-145579-33-A-0106
FOR AREA CROSS OVER & CONTINUATION SEE P&ID F-145579-31-A-0100
FOR AREA CROSS OVER & CONTINUATION SEE P&ID F-145579-35-A-0100
AREA 31
AREA 34
AREA 33
AREA 35
34-V-007
34-V-009
34-V-011
34-V-008
34-V-010
34-V-012
34-V-006
34-V-004
34-D01-001
34-D01-002
34-D01-032
34-D01-033
34-D01-034
EJ-401
EJ-402
EJ-403
EJ-404
EJ-405
EJ-406
EJ-407
OGTS BYPASS 36-A-0108
OFF-GAS TREATMENT 36-A-0099
34-VB-115C
34-VB-115A
34-VB-115B
34-VB-112C
34-VB-112A
34-VB-112B
34-N02-026
AMBIENT AIR
4-AA-34-0213
34-N22-023
4-VOC-34-0212
SLIDING JOINTS TYP.
34-D51-048
34-D51-049
ICV CONTAINER
FOR AREA CROSS OVER & CONTINUATION SEE P&ID F-145579-35-A-0100
CLOSE VALVES ON LOW ICV BOX INLET AIR FLOW SEE F-145579-35-A-0100.
LOW ICV BOX INLET AIR FLOW -ISOLATES AWTE THIS SHEET SEE F-145579-35-A-0100.
ONLY ONE VALVE CAN BE OPERATED (OPEN) AT A TIME PER AIRLOCK PAIR.
34-N02-026 AWTE INLET AIR HEPA FILTER
34-D01-042 TOP OFF SOIL UPPER GUIDE CHUTE No.1
34-D01-038 WASTE FEED UPPER GUIDE CHUTE No.1
34-D01-043 TOP OFF SOIL UPPER GUIDE CHUTE No.2
34-D01-045 TOP OFF SOIL LOWER SLIDING CHUTE NO.1
34-D01-040 WASTE FEED LOWER SLIDING CHUTE No.1
34-D01-046 TOP OFF SOIL LOWER SLIDING CHUTE No.2
34-D01-039 WASTE FEED UPPER GUIDE CHUTE No.2
34-D01-044 TOP OFF SOIL UPPER GUIDE CHUTE No. 3
34-D01-041 WASTE FEED LOWER SLIDING CHUTE No.2
34-D01-047 TOP OFF SOIL LOWER SLIDING CHUTE No. 3
34-N22-023 AWTE HOOD
L REVISED PER DBVS-DCL-015 29 MAR 06 PMM JL N/A N/A
K REVISED PER DBVS-DCL-014 26 MAR 06 PMM JL N/A N/A
J REVISED PER DBVS-DCL-010 16 FEB 06 SNM JL N/A N/A
H REVISED PER DBVS-DCL-006 26 JAN 06 SNM JKL N/A N/A
G ISSUED FOR REVIEW 25 AUG 05 WB JKL N/A N/A
F ISSUED FOR REVISION & 90% REPORT 26 MAY 05 AA BM FWS FS
E ISSUED FOR REVISION & 90% REPORT 12 MAY 05 AA GJ FWS WI
F-145579-34-A-0101
amec
145579-FINAL DBVS DESIGN
U.S. DEPARTMENT OF ENERGY
Office of River Protection
BULK VITRIFICATION
AWTE HOOD & WASTE FEED
P&ID
DRAWING TRACEABILITY LIST
REFERENCES
REVISIONS

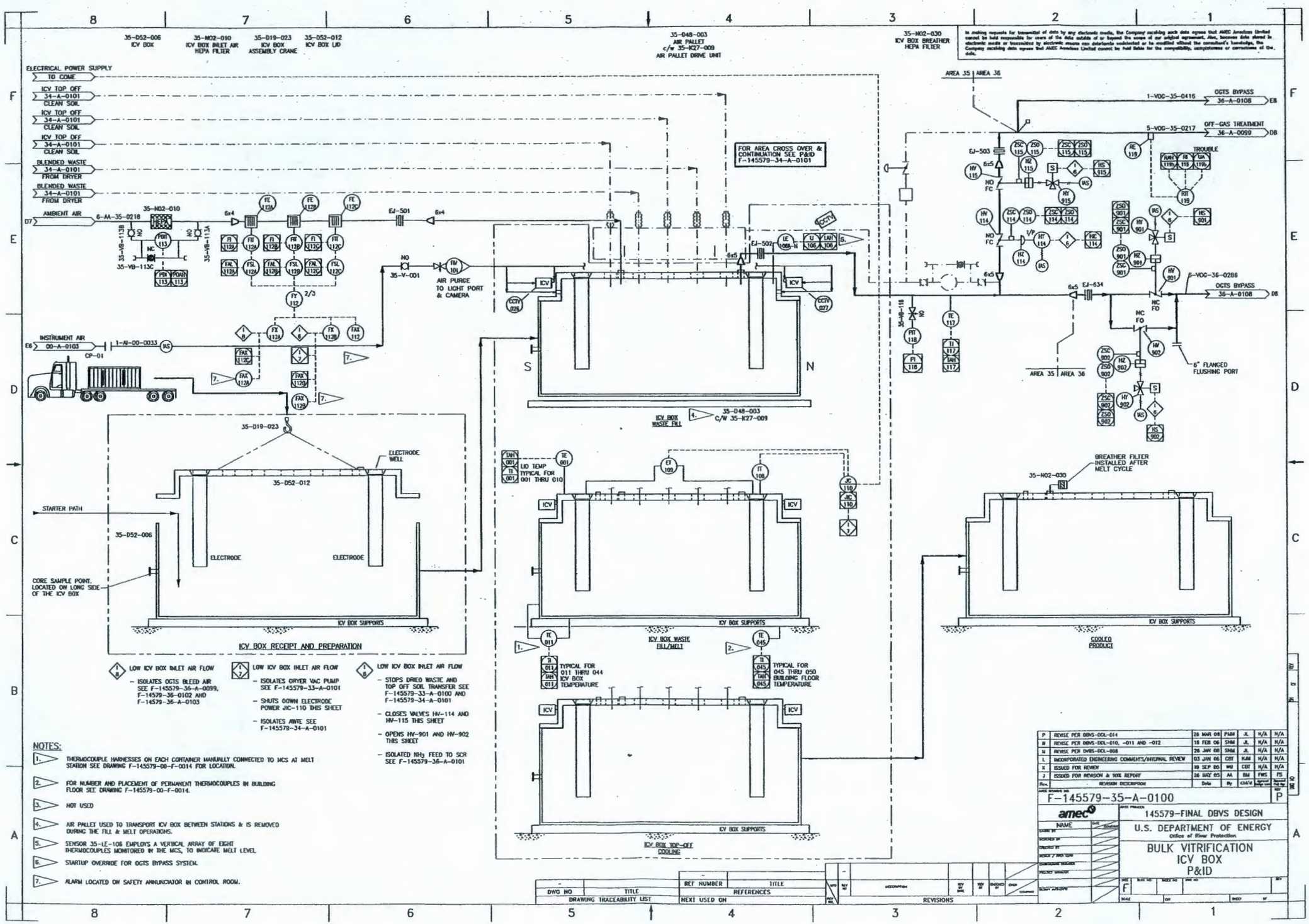
35-052-006 ICV BOX
35-N02-010 ICV BOX INLET AIR HEPA FILTER
35-019-023 ICV BOX ASSEMBLY CRANE
35-052-012 ICV BOX LID
35-048-003 AIR PALLET c/w 35-K27-009 AIR PALLET DRIVE UNIT
35-N02-030 ICV BOX BREATHER HEPA FILTER
ELECTRICAL POWER SUPPLY
TO COME
ICV TOP OFF 34-A-0101 CLEAN SOIL
BLENDED WASTE 34-A-0101 FROM DRYER
AMBIENT AIR
INSTRUMENT AIR 00-A-0103
AIR PURGE TO LIGHT PORT & CAMERA
FOR AREA CROSS OVER & CONTINUATION SEE P&ID F-145579-34-A-0101
AREA 35 | AREA 36
OGTS BYPASS 36-A-0108
OFF-GAS TREATMENT 36-A-0099
TROUBLE
6" FLANGED FLUSHING PORT
BREATHER FILTER INSTALLED AFTER MELT CYCLE
STARTER PATH
ELECTRODE WELL
ELECTRODE
CORE SAMPLE POINT. LOCATED ON LONG SIDE OF THE ICV BOX
ICV BOX SUPPORTS
ICV BOX RECEIPT AND PREPARATION
ICV BOX WASTE FILL
ICV BOX WASTE FILL/MELT
ICV BOX TOP-OFF COOLING
COOLED PRODUCT
LID TEMP TYPICAL FOR 001 THRU 010
TYPICAL FOR 011 THRU 044 ICV BOX TEMPERATURE
TYPICAL FOR 045 THRU 050 BUILDING FLOOR TEMPERATURE
LOW ICV BOX INLET AIR FLOW
- ISOLATES OGTS BLEED AIR SEE F-145579-36-A-0099, F-14579-36-0102 AND F-14579-36-A-0103
LOW ICV BOX INLET AIR FLOW
- ISOLATES DRYER VAC PUMP SEE F-145579-33-A-0101
- SHUTS DOWN ELECTRODE POWER JIC-110 THIS SHEET
- ISOLATES AWTE SEE F-145579-34-A-0101
LOW ICV BOX INLET AIR FLOW
- STOPS DRIED WASTE AND TOP OFF SOIL TRANSFER SEE F-145579-33-A-0100 AND F-145579-34-A-0101
- CLOSES VALVES HV-114 AND HV-115 THIS SHEET
- OPENS HV-901 AND HV-902 THIS SHEET
- ISOLATED NH3 FEED TO SCR SEE F-145579-36-A-0101
NOTES:
1. THERMOCOUPLE HARNESSES ON EACH CONTAINER MANUALLY CONNECTED TO MCS AT MELT STATION SEE DRAWING F-145579-00-F-0014 FOR LOCATION.
2. FOR NUMBER AND PLACEMENT OF PERMANENT THERMOCOUPLES IN BUILDING FLOOR SEE DRAWING F-145579-00-F-0014.
3. NOT USED
4. AIR PALLET USED TO TRANSPORT ICV BOX BETWEEN STATIONS & IS REMOVED DURING THE FILL & MELT OPERATIONS.
5. SENSOR 35-LE-106 EMPLOYS A VERTICAL ARRAY OF EIGHT THERMOCOUPLES MONITORED IN THE MCS, TO INDICATE MELT LEVEL
6. STARTUP OVERRIDE FOR OGTS BYPASS SYSTEM.
7. ALARM LOCATED ON SAFETY ANNUNCIATOR IN CONTROL ROOM.
P REVISE PER DBVS-DCL-014 28 MAR 06 PMM JL N/A N/A
N REVISE PER DBVS-DCL-010, -011 AND -012 16 FEB 06 SNM JL N/A N/A
M REVISE PER DVBS-DCL-008 26 JAN 06 SNM JL N/A N/A
L INCORPORATED ENGINEERING COMMENTS/INTERNAL REVIEW 03 JAN 06 CBT KJM N/A N/A
K ISSUED FOR REVIEW 19 SEP 05 WB CBT N/A N/A
J ISSUED FOR REVISION & 90% REPORT 26 MAY 05 AA BM FWS FS
F-145579-35-A-0100
P
amec
145579-FINAL DBVS DESIGN
U.S. DEPARTMENT OF ENERGY
Office of River Protection
BULK VITRIFICATION
ICV BOX
P&ID
F
DRAWING TRACEABILITY LIST
REFERENCES
REVISIONS

Appendix G6

APPENDIX G6

IN-CONTAINER VITRIFICATION SYSTEM

Specification Number	Revision	Title	Total Pages
145579-D-DS-012.1	2	*ICV Box Transporter Data Sheet*	G6-2
145579-D-DS-029.1	1	*ICV Electrodes & Accessories*	G6-7
145579-D-DS-047.1	0	*Ceramic Sleeve and Collar*	G6-13
TECN D-DS-047.1.R00.1	N/A	Technical Engineering Change Notice to Data Sheet 145579-D-DS-047.1	G6-19
145579-D-DS-050.1	1	*ICV Box Lid Seals*	G6-24
145579-D-SP-023	1	*ICV™ Box and Lid Specification*	G6-30

145579-D-DS-012.1

amec

TECHNICAL ENGINEERING CHANGE NOTICE (TECN)

DBVS DESIGN **TECN No.:** **EE-015**

DOCUMENT(S) AFFECTED BY CHANGE

Document No. of affected Docs.	Rev	Title:
145579-D-DS-012.1	1	ICV™ Box Transporter Data Sheet

Originator: J.S. (Jeff) Huisingh **Date:** 1/25/06

BASIS OF CHANGE:

The existing data sheet and associated notes for the ICV™ Box Transporter specified a transporter that would be supplied air to meet its operational air demands from a facility-provided source (e.g., via an umbilical air hose from a stationary air compressor skid in the facility). After assessing the facility modifications, costs, and operational implications of continuing with this design approach, it has been determined that a self-contained transporter design would be more desirable and cost effective.

DESCRIPTION OF CHANGE:

Requirements are modified to ensure that a self-contained transporter is specified – one that does not require facility-provided air or any other type of umbilical hose or line to physically supply a service to the transporter while it performs its normal operating functions.

The request for an option price for an integrated weighing system has also been removed.

The affected pages of the subject data sheet and associated notes will be superseded by the attached pages of this TECN.

AREA/DISC. LEAD:	SR Briggs / LR Bring	DATE:	2/8/06
ENG. MAKING CHANGE	JS Huisingh	DATE:	2/8/06
AMEC E&E (J. Jeffers):	Jeff Jeffers / JEFF JEFFERS	DATE:	2/8/06
AMEC E&E QA (H. Chafin)	for HS	DATE:	2/8/06
CLIENT APPROVAL:	for John VanBed	DATE:	2/8/06

Page 1 of 1

amec

TECHNICAL DATA SHEETS

PROJECT:	**Final DBVS Design**	**145579-D-DS-012.1**	**REV. 2**
PROJECT NO.:	**145579**	**ICV Box Transporter Data Sheet**	
CLIENT:	**AMEC E&E - Richland Washington**	**Equipment No.: 35-D48-003**	

No. Required	1	**Area**	35
P&ID#	N/A	**Stream No.**	N/A
Reference Specification:	N/A. See Notes, attached	**Quality Assurance Level**	C

Operating Conditions (see note 1)			**Rev**	**Operating Conditions**			**Rev**
Location	(indoors/outdoors)	Outdoors		Expected monthly hours of operation		50	D
Transporter operation	(continuous/intermittent)	Intermittent	D	Availability	(%)	95	
Capacity - Full Box	(lb)	240,000	C	Environment - Radioactive		Yes	
Capacity - Empty Box	(lb)	90,000		- Toxic		No	
Curb Height	(in)	21	D	- Corrosive		No	
Min. effective lift height	(in) *	see note 5	2	- Flammable		No	
Max. effective lift height	(in)	2	1	Load Min. Center of Gravity	(in)	55	D
Max. ambient air temperature	(°F)	115		Load -length	(ft-in)	24'-8 3/8"	
Minimum ambient temperature	(°F)	0	1	-width	(ft-in)	8'-2 3/8"	
Max. transporter surface temp.	(°F)	572	1	-height	(ft-in)	9'-9 5/16"	
Elevation	(ft)	663		Max. Transporter Length	(in)	see note 2	D
Max. bearing capacity of concrete	(psi)	4,000	1	Maximum Transporter Width	(ft)	6	C
Max. concrete temperature	(°F)	140	1	Maximum Transporter Height	(in)	20	D
				Actual Transporter Length	(ft) *		
Transporter Data				Actual Transporter Width	(ft) *		
Transporter model	*			Actual Transporter Height	(ft) *		D
System capacity	(lb) *			Maximum wind speed during operation	(mph) *		D
Number of load modules	*			Radiation Dose	(mrem/hr)	40	0
Load module dimensions	Length x width (ft) *						
Total deflated height	(in) *			**Weight**			
Effective lift	(in) *			Bare Compressor/Blower	(lb) *		
Control console model	*			Total Transporter System	(lb) *		
System net weight	(lb) *						
Horizontal Guide Wheels (yes/no)		Yes					
Braking Distance	(ft)	1.5	D	**Surface Preparation and Finish**			
Max. lateral load on Curb	(lb)	4,000	1	Surface Preparation	*		
				System	*		
Drive System				Finish type	*		
Drive System required?	(yes/no)	Yes		Finish Dry Film Thickness	(in) *		
Number Required	*						
Powered by:	(air/elect.) *						
Model	*		C				
Manufacturer	*						
Speed	(ft/sec) *						

Date	17-Sep-04	08-Oct-04	19-Oct-04	07-Mar-05	15-Mar-05	30-Aug-05	25-Jan-06
By	MEP	MEP	MEP	VL	VL	MWL	JSH
Chked		TW	TW	TW	TW		LRBy 2/8/06
Rev.	A	B	C	D	0	1	2

CLR 2/8/06

amec

TECHNICAL DATA SHEETS

Data sheet 2 of 2

Bolting Material			**Rev**				**Rev**
Bolts	*						
Nuts	*						
Accessories							
Air Inlet Filter Type: (Oil / Dry)	*						
Air Filter Element Material	*						
Air Filter Rated Capacity	(CFM) *						
Air Filter Efficiency	*						
Moisture Separator Model	*			Pressure Relief / Unloading Valve Mfg.	*		
Moisture Separator Efficiency	*			Pressure Relief / Unloading Max Pressure (psi)	*		
				Pressure Relief / Unloading Valve Material	*		
				Bearings			
				Inlet			
				Service life	*		
				Manufacturer	*		
				Type/Model Number	*		
				Discharge			
				Manufacturer	*		
				Type/Model Number	*		
				Drive			
				Sheave Manufacturer	*		
				Bushing Manufacturer	*		
				V Belt Ratio	*		
				Type of Belt	*		
Reducer				Mfg. Of Belt	*		
Type	*			Number of Belts	*		
Gear Reducer Manufacturer	*			Driver Pulley P.D.	*		
Reducer Ratio	*			Driven Pulley P.D.	*		
Service Factor	*			Bushing Type - Driver/Driven	*		
Thermal Power Rating	*			Bushing Size - Driver/Driven	*		
Mechanical Power Rating	*			**Coupling**			
				Manufacturer	*		
				Type	*		
				Material	*		
				Safety Factor	*		

Comments:

Items marked with an * shall be filled in by VENDOR, as applicable

1. Transporter to be designed in such a way that it can slide under the Box while it is on 21" high curbs and carry it to the required location.
2. Total length of transporter (including drive unit) must not be greater than 425 in.
3. Vendor shall supply transporter operational limitations in the snow and ice.
4. Use of insulation material to meet temperature requirements is acceptable to Buyer.
5. Minimum lift height is the height the transporter can lift the Box above the 21 in. curbs and clear the curbs along the entire length of the box.

Date	17-Sep-04	08-Oct-04	19-Oct-04	07-Mar-05	15-Mar-05	30-Aug-05	25-Jan-06
By	MEP	MEP	MEP	VL	VL	MWL	JSH
Chked		TW	TW	TW	TW		LLB 2/8/06
Rev.	A	B	C	D	0	1	2

NOTES

1.0 SCOPE OF SUPPLY

1.1 ICV™ BOX TRANSPORTER.

A frame structure designed to hold the loads of the ICV™ Box at the specified elevated temperature as stated in the attached data sheets. The ICV™ Box Transporter (transporter) shall be self-contained, requiring no facility provided services (e.g., via hoses and/or cables) to sustain it while performing its normal operating functions. The transporter shall be compatible with the bottom surface of the ICV™ Box. It shall include guiding wheels on the corners for ease of maneuvering between the support curbs.

1.2 TRANSPORTER DRIVE UNIT

Wheel drive unit to pneumatically propel and steer the ICV™ Box, including all of the seller's recommended power and mounting components for the drive system. The transporter shall be able to maneuver in all of the following functions: forward, backward, shift sideways left and right, turn left and right, and rotate around the physical center of the transporter.

1.3 REMOTE DRIVE CONTROL

The minimum functions available on the drive control console should be system power/emergency stop, drive speed, direction, and steering mode selection. The remote drive control console shall come complete with remote console batteries and corresponding battery charger.

1.4 START-UP ASSISTANCE AND FIELD SUPPORT

Seller to provide per diem rates for technical field support during construction and system start-up. The Seller to provide sufficient documentation and information for operation and repair of ICV™ Box Transporter.

1.5 WORK NOT INCLUDED IN THE SELLER SCOPE OF SUPPLY

a. Site installation of system;

b. Design and construction of the normal concrete flooring in the ICV™ Box assembly area and the concrete surface from the assembly area to the ICV™ melt station; also, the "super-flat" concrete surface from the melt station to the ICV™ Box storage area. For details on concrete slabs see drawing H-14-106792;

c. Electrical power, as needed, for the ICV™ Box Transporter.

2.0 ITEM DEFINITION

The ICV™ Box Transporter shall be capable of moving the empty box, (see attached data sheets) along normal concrete flooring provided by the Buyer from the assembly area to the melt area. This concrete surface will have flatness numbers $F_f = 30$ and $F_L = 15$ as described in American Concrete Institute (ACI) 302.1R *Guide to Concrete Floor and Slab Construction*. The Seller shall provide an ICV™ Box Transporter capable of moving on a "super-flat" concrete surface when fully loaded, which will be supplied by the Buyer from the melt area to and throughout the temporary storage area. The "super-flat" concrete surface exceeds measured flatness numbers of $F_f = 48$ and $F_L = 43$ as per ACI 302.1R.

The ICV™ Box Transporter must be able to slide under the ICV™ Box while it is sitting on 21" high curbs. The ICV™ Box Transporter will then lift the box off the curbs and transport it to the desired location. The curb arrangement for the ICV™ Box storage area is shown on drawing F-145579-00-B-0022.

Electrical power needed for the ICV™ Box Transporter will be provided by the Buyer and specified by the Seller.

The Buyer shall follow the Seller's specifications for providing a recharge station for the power unit, as applicable.

3.0 CHARACTERISTICS

The remote control for the ICV™ Box Transporter must be able to operate at a range of approximately 325 ft. The signal may pass through obstructions. Further functional characteristics can be found in the attached data sheets.

4.0 ENVIRONMENT

This equipment will mainly be operated outdoors and comply with HNF-SD-GN-ER-501 *Natural Phenomena Hazards Hanford Site Washington*. Any equipment and related enclosures installed outside shall be designed to operate and be stored in the climatic and environmental conditions listed below.

a. Ambient air temperature range is -25°F to 115°F with a maximum 24-hour differential of 50°F (Note: the transporter will not be operated below 0°F);
b. Relative humidity ranges from near 0 to 100%;
c. Maximum precipitation is 1.6 inches in a 24-hour period;

145579-D-DS-029.1

TECHNICAL DATA SHEET
AMEC Americas Limited

amec

The document revision number is indicated below. Please replace all revised pages of this document and destroy the superseded copies.

PROJECT:	**Final DBVS Design**	**145579-D-DS-029.1**	**Rev. 1**
PROJECT NO.:	**145579**	**ICV Electrodes & Accessories**	
CLIENT:	**AMEC E&E - Richland, Washington**	**EQUIPMENT NO.**	**N/A**

REV. NO.	ISSUED FOR	ORIGIN	DATE	INITIAL
A	For Internal Approval	GJ	10-Feb-05	GJ
B	CH2M Hill Review	GJ	21-Feb-05	GJ
0	Bid Request	GJ	18-Mar-05	
1	Direct Revision (TECN EE-017)	SB	21-Mar-05	LRB

DOCUMENT APPROVAL

AMEC RICHLAND

Original Approvals on File

Project Manager: LRB for J Jeffers — J JEFFERS

Date: 3/22/06

Q.A. Rep.: Hank M. Chelgren

Date: 03-22-06

CLIENT APPROVAL (CH2M HILL)

Project Manager: for John Lumber

Date: 3/24/06

amec

TECHNICAL DATA SHEET

PROJECT:	Final DBVS Design	D-DS-029.1 Rev. 1	
PROJECT NO.:	145579	ICV Electrodes & Accessories	
CLIENT:	AMEC E&E - Richland, Washington	EQUIPMENT NO.	N/A

REFERENCE SPECIFICATION

Document No.	Specification
N/A	N/A

CONTENTS

Data Sheet ..... 2 Pages

Bidders Drawing & Data Commitments Sheet ..... 1 Page

ATTACHMENTS

Drawing F-145579-35-D-0020 Rev. D ..... 1 Page

amec

TECHNICAL DATA SHEETS

PROJECT:	**Final DBVS Design**	**D-DS-029.1 Rev. 1**
PROJECT NO.:	**145579**	**ICV Electrodes & Accessories**
CLIENT:	**AMEC E&E - Richland Washington**	**EQ. NO.: N/A**

No. Required:	See individual items	**Area**	ICV Box	35
Reference Drawing:	F-145579-35-D-0020	**Stream No.**		N/A
Reference Specification:	N/A	**Quality Assurance Level**		CQ

Operating Conditions			**Rev**				**Rev**
Location (Indoors/Outdoors)		Indoors		Environmental Conditions			
Operation (Continuous / Intermittent)		Intermittent		- Max. Ambient Temp	(F)	2372	B
Days per year		365		- Max. Molten Glass Temp.	(F)	2372	
Hours per day		24		Relative Humidity Range	(%)	0 to 100	
Noise Level Allowable per 8 hr shift (dB - Lex)		85		Availability	(%)	95	
Shift Length	(hrs)	8		Environment - Radioactive		Yes	
Noise Level Allowable	(dB)	85		- Toxic		Yes	
Site Elevation	(ft)	663		- Corrosive		Yes	
				- Flammable		No	
Item 1: Main Electrode				**Item 2: Electrode Liftng Plug**			
Manufacturer (or approved equal)		SGL	0	Material		Graphite	
Model/Type (or approved equal)		UHP	0	Diameter	(in) *		
Max. Allowable Operating Temp.	(F) *			Pitch Diameter	(in) *		
Cleaning Method	*			Threads Per Inch	*		
Min. Acceptable Tightening Torque	(ft*lbs) *		0	Length	(in) *		
Torqe required to disassemble	(ft*lbs) *		0	Taper Angle	*		
Operating Current	(Amps)	6000		Density	(lb/ft^3) *		B
Operating Voltage	(V)	2500		Electrical Resistance	(ohm/in) *		
Quantity required		110		Flex Strength	(psi) *		
Material		Graphite					
Thread Per Inch	*			- CTE (Longitudinal) 400 C	*		
Length	(in)	88.5	1	- CTE (Transverse) 400 C	*		
Diameter	(in)	12		Tolernaces			
Socket				- Taper Angle	*		
- Diameter	(in) *			- Depth	(in) *		
- Depth	(in) *			- Thread Length	(in) *		
- Length	(in) *						
- Taper Angle	*			Quantity Required		10	
Density	(lb/ft^3) *		B				
Electrical Resistance	(ohm/in) *			(For use lifting main electrodes and extensions.)			
Flex Strength	(psi) *						
Coefficient of Thermal Expansion							1
- CTE (Longitudinal) 400 C	*						
- CTE (Transverse) 400 C	*						
Tolerances							
Electrode Socket							
- Taper Angle	*						
- Depth	(in) *						
- Thread Length	(in) *						
Weight							
Total Shipping Weight	(lbs) *			Operating Weight	(lbs) *		

Date	10-Feb-05	21-Feb-05	18-Mar-05	21-Mar-06			
By	GJ	GJ	GJ	SB			
Chked	FS	FS					
Rev.	A	B	0	1			

amec

TECHNICAL DATA SHEETS

D-DS-029.1.Rev. 1

item 3: Electrode Extension Piece				Item 4: Connecting Pin (Nipple)			
Manufacturer	*			Material		Graphite	
Model/Type	*			Diameter	(in) *		
Max. Allowable Operating Temperat	(F) *			Pitch Diameter	(in) *		
Cleaning Method	*			Threads Per Inch	*		
Recommended Tightening Torque	(ft*lbs) *			Length	(in) *		
Operating Current	(Amps)	6000		Taper Angle	*		
Operating Voltage	(V)	2500		Density	(lb/ft^3) *		B
Quantity Required		5		Electrical Resistance	(ohm/in) *		
Material		Graphite		Flex Strength	(psi) *		
Thread Per Inch	*			Coefficient of Thermal Expansion			
Length	(in)	54	1	- CTE (Longitudinal) 400 C	*		
Diameter	(in)	12		- CTE (Transverse) 400 C	*		
Socket				Tolernaces			
- Diameter	(in) *			- Taper Angle	*		
- Depth	(in) *			- Depth	(in) *		
- Length	(in) *			- Thread Length	(in) *		
- Taper Angle	*						
Density	(lb/ft^3) *		B	Quantity Require:		5	
Electrical Resistance	(ohm/in) *						
Flex Strength	(psi) *			**Note: Nipples to be supplied "Pitch Plugged"**			1
Coefficient of Thermal Expansion							
- CTE (Longitudinal) 400 C	*						
- CTE (Transverse) 400 C	*						
Tolernaces							
Electrode Socket							
- Taper Angle	*						
- Depth	(in) *						
- Thread Length	(in) *						
Weight							
Total Shipping Weight	(lbs) *			Operating Weight	(lbs) *		

Comments:

1. Items marked with an * shall be filled in by VENDOR
2. See attached drawing 145579-35-D-0020 for details

Date	10-Feb-05	21-Feb-05	18-Mar-05	21-Mar-06			
By	GJ	GJ	GJ	SB			
Chked	FS	FS					
Rev.	A	B	0	1			

amec

TECHNICAL DATA SHEETS

PROJECT:	**Final DBVS Design**	**D-DS-029.1 Rev. 1**	**REV.1**
PROJECT NO.:	**145579**	**ICV Electrodes & Accessories**	
CLIENT:	**AMEC E&E - Richland, Washington**	**EQ. NO.:**	**N/A**

BIDDERS DRAWING AND DATA COMMITMENTS

Vendor shall supply all drawings, manuals and documentation in the quantities indicated. Approval drawings are due within the listed number of calendar days after issue of the Purchase Order or Letter of Intent. The dates set out for drawing and data submissions are governed by the engineering design schedule of the project. The Vendor shall supply one AutoCAD disk file and requested number of copies within the listed number of calendar days. Final drawings must be certified as correct and bear the Vendors name, equipment number and Purchase Order Number. Drawing Transmittals listing the document numbers, revisions numbers, quantities, status and document types must be included with all submissions (including electronic submittals).

SEND ALL DOCUMENTS TO:

Submit all documents via courier service
Faxed documents must be followed by the originals.
Electronic E-mail or FTP transmissions of drawings & data must be copied to Document Control
Always include a transmittal

AMEC Americas Limited
1385 Cedar Avenue
Trail, BC, Canada
V1R 4C3
Attn: Document Control
Phone: (250) 368-2400
Fax: (250) 368-2401

BIDDERS MUST PROVIDE ESTIMATED LEAD TIMES FOR APPROVAL DRAWINGS

Proposal	Bidder shall include this data for each Item			REVIEW ITEMS DUE WITHIN	VENDOR COMMITMENT (SEE NOTE 4)
	Review	Required before ordering or start of fabrication			
		Final	Required within 7 days prior to shipment and before final payn		
PROPOSAL	**REVIEW**	**FINAL**	**DESCRIPTION**	**(DAYS)**	**(DAYS)**
1			Q A program that satisfies the requirements of ASME NQA-1-1994	Bid	
			Experience list and maintainability information	N/A	
			Design, fabrication & delivery schedule	N/A	
E+3	E+3	E+6	Outline drawings and layout drawings indicating weights and dimensions	PO+10	
E+3	E+3	E+6	Technical brochures on purchased components	PO+14	
				N/A	
				N/A	
			Set of installation and maintenance manuals c/w technical literature for all equipment and devices	N/A	
			Electromagnetic interference test results	N/A	
		1	Hardware Delivery	PO+56	
			Site commissioning record & test results	N/A	

Legend:
E = Electronic Copy; PO + = Due within ? calendar days of P.O. issuance; Del-PO + = Due within ? calendar days prior to delivery; COM + = Due within ? calendar days of commissioning

THE TIMELY RECEIPT OF THE VENDOR DOCUMENTS IS CRITICAL TO THIS PROJECT
BUYER COMMITS TO A 10 WORKING DAY TURNAROUND ON REVIEW ITEMS

I agree to provide the listed documentation and data and the dates shown above.

Vendor Signature _____ Date _____

No.	AMEC Dwg. No.	REFERENCE DRAWINGS
1	F-145579-35-D-0004	ICV BOX DATA SHEET
2	F-145579-35-D-0005	ICV BOX LID ASSEMBLY
3	F-145579-34-D-0004	ANTE FLOOR – ELECTRODE CABLE CLAMP ASS'Y
4	145579-D-05-029,1	ELECTRODE DATA SHEET

GENERAL NOTES:
1. FOR "ELECTRODE" (AREA 20), THE QUANTITIES MARKED REPRESENT TOTAL FOR SUPPLY OF "1" ONLY ICV BOX LID
2. FOR "ELECTRODE STUB" (AREA 34) THE QUANTITIES MARKED REPRESENT TOTAL FOR INSTALLATION OF "2" ONLY ELECTRODE CABLE CLAMP ASSEMBLIES
3 MATERIALS: AS NOTED

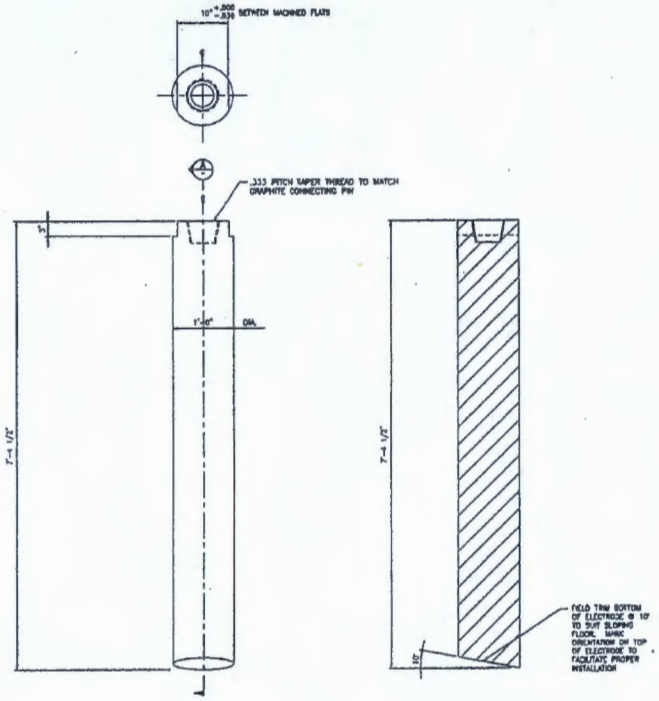

ELECTRODE – '2' REQ'D
SCALE 1 1/2"=1'-0"
MAT'L: GRAPHITE
LOCATION: SEE REF 2

SECTION A
10"=1'-0"

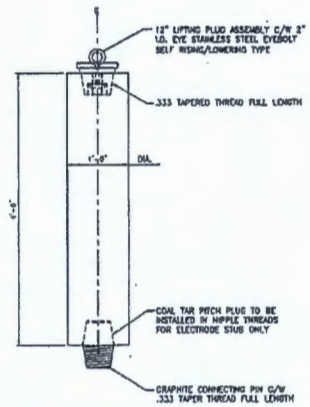

ELECTRODE STUB – '2' REQ'D
SCALE 1 1/2"=1'-0"
MAT'L: GRAPHITE AND AS NOTED
LOCATION: SEE REF 3

D	REVISED – ISSUED FOR DOE HQ APPROVAL & FINE REPORT	15 AUG 05	AM	RDP	TKS	TK		
C	REVISED – ISSUED FOR DOE HQ REVIEW AND RCE REPORT	04 APR 05	MRB		SJ	SJ	SC	
B	ISSUED FOR DOE HQ REVIEW AND FINE REPORT	03 MAR 05	MRB	AM	PM/AM	TK		
A	ISSUED FOR INTERNAL APPROVAL	08 FEB 05	MRB		PM/AM	TK		
Rev.	REVISION DESCRIPTION	Auth	Ch	Rev'd	Appd	Date		

F-145579-35-D-0020 D

amec

145579-FINAL DBVS DESIGN

U.S. DEPARTMENT OF ENERGY
Office of River Protection

BULK VITRIFICATION
ICV BOX
ELECTRODE DETAILS.

F

SCALE AS NOTED

DWG NO	TITLE	REF NUMBER	TITLE
DRAWING TRACEABILITY LIST		REFERENCES	
NEXT USED ON			

REVISIONS

145579-D-05-029.1

145579-D-DS-047.1

TECHNICAL DATA SHEET
AMEC Americas Limited

amec

The document revision number is indicated below. Please replace all revised pages of this document and destroy the superseded copies.

PROJECT:	**Final DBVS Design**	**145579-D-DS-047.1**	**REV. 0**
PROJECT NO.:	**145579**	**Ceramic Sleeve and Collar**	
CLIENT:	**AMEC E&E - Richland, Washington**	**EQUIPMENT NO.**	**N/A**

REV. NO.	ISSUED FOR	ORIGIN.	DATE	INITIAL
A	For Internal Approval	GJ	10-Feb-05	GJ
B	CH2M Hill Review	GJ	21-Feb-05	GJ
0	Bid Request	GJ	18-Mar-05	G.J.

DOCUMENT APPROVAL

CLIENT APPROVAL (AMEC RICHLAND)
Original Approvals on File

Project Manager: M Carlson (for B. Bishop)
Date: 3/21/05
Q.A. Rep.:
Date: 3/21/05

CLIENT APPROVAL (CH2M HILL)
DWS
Project Manager:
Date: 3/29/05

AMEC AMERICAS LIMITED (TRAIL)
Original Approvals on File

Project Manager: J Heim
Date: Mar 18 2005
Discipline Lead:
Date: Mar 18/05
Originator: G Jones
Date: 18/MAR/05

amec

TECHNICAL DATA SHEET

PROJECT:	**Final DBVS Design**	**145579-D-DS-047.1**	**REV. 0**
PROJECT NO.:	**145579**	**Ceramic Sleeve and Collar**	
CLIENT:	**AMEC E&E - Richland, Washington**	**EQUIPMENT NO.**	**N/A**

REFERENCE SPECIFICATION

Document No.	Specification
N/A	N/A

CONTENTS

Data Sheet ..... 1 Page

Bidders Drawing & Data Commitments Sheet ..... 1 Page

ATTACHMENTS

Drawing F-145579-35-D-0010 Rev. B ..... 1 Page
Drawing F-145579-35-D-0005 Rev. D ..... 1 Page

amec

TECHNICAL DATA SHEETS

PROJECT:	**Final DBVS Design**	**145579-D-DS-047.1**	**REV.** 0
PROJECT NO.:	**145579**	**Electrode Ceramic Sleeve and Collar**	
CLIENT:	**AMEC E&E - Richland Washington**	**EQ. NO.:** N/A	

No. Required	110	**Area**	ICV Box	35
Reference Drawing:	F-145579-35-D-0010	**Stream No.**		N/A
Reference Specification:	N/A	**Quality Assurance Level**		CQ

Operating Conditions			**Rev**				**Rev**
Location (Indoors/Outdoors)		Indoors		Environmental Conditions			
Operation (Continuous / Intermittent)		continuous	0	Working Temperature	(F)	2372	B
Days per year		365		Relative Humidity Range	(%)	0 to 100	
Hours per day		24		Availability	(%)	95	
Noise Level Allowable per 8 hr shift (dB - Lex)		85		Environment - Radioactive		Yes	
Shift Length	(hrs)	8		- Toxic		Yes	
Noise Level Allowable	(dB)	85		- Corrosive		Yes	
Site Elevation	(ft)	663		- Flammable		No	
Ceramic Information							
				Item 1: Ceramic Collar Details			
Manufacturer	*			No. of thru holes		8	
Model No.	*			Size of thru holes	(in)	9/16	
Material	*			Dimensions			
			0	- See attached drawing for dimensions			
Operating Voltage	(V)	2500					
Bulk Density	(lb/ft3) *		B	**Item 2: Ceramic Sleeve Details**			
Tensile Strength	(psi) *		B	No. of thru holes		8	
Flexural Strength	(psi) *		B	Size of thru holes	(in)	9/16	
Elastic Modulus	(psi) *		B	Dimensions			
Hardness	(psi) *			- See attached drawing for dimensions			
Porosity	(%) *						
Max. Working Temperature	(F) *						
Coefficient of Thermal Expansion	*						
Thermal Conductivity	(W/m^0K)	24	0				
Dielectric Strength	(ac-kv/mm)	9.2	0				
Dielectric Constant		9	0				
Volume Resistivity	(Ohm-cm) *						
Loss Factor	*						
Dissipation Factor	*						
Mechanical Loading Data:							
Shear load/ cap clamping bolt	(lbs)	70	0				
Tightening Torque on Bolts	(lbs. ft.)	5	0				
Force on cap due to turning moment of electrode	(lbs)	575/side	0				
Weight							
Total Shipping Weight	(lbs) *			Operating Weight	(lbs) *		

Comments:
1. Items marked with an * shall be filled in by VENDOR
2. See attached drawing 145579-35-D-0010 for details

Date	10-Feb-05	21-Feb-05	18-Mar-05				
By	GJ	GJ	GJ GJ				
Chked	FS	FS					
Rev.	A	B	0				

amec

TECHNICAL DATA SHEETS

PROJECT:	**Final DBVS Design**	**145579-D-DS-047.1**	**REV. 0**
PROJECT NO.:	**145579**	**Ceramic Sleeve and Collar**	
CLIENT:	**AMEC E&E - Richland, Washington**	**EQ. NO.:**	**N/A**

BIDDERS DRAWING AND DATA COMMITMENTS

Vendor shall supply all drawings, manuals and documentation in the quantities indicated. Approval drawings are due within the listed number of calendar days after issue of the Purchase Order or Letter of Intent. The dates set out for drawing and data submissions are governed by the engineering design schedule of the project. The Vendor shall supply one AutoCAD disk file and requested number of copies within the listed number of calendar days. Final drawings must be certified as correct and bear the Vendors name, equipment number and Purchase Order Number. Drawing Transmittals listing the document numbers, revisions numbers, quantities, status and document types must be included with all submissions (including electronic submittals).

SEND ALL DOCUMENTS TO:

Submit all documents via courier service
Faxed documents must be followed by the originals.
Electronic E-mail or FTP transmissions of drawings & data must be copied to Document Control
Always include a transmittal

AMEC Americas Limited
1385 Cedar Avenue
Trail, BC, Canada
V1R 4C3
Attn: Document Control
Phone: (250) 368-2400
Fax: (250) 368-2401

BIDDERS MUST PROVIDE ESTIMATED LEAD TIMES FOR APPROVAL DRAWINGS

Proposal	Bidder shall include this data for each item			REVIEW ITEMS DUE WITHIN	VENDOR COMMITMENT (SEE NOTE 4)
	Review	Required before ordering or start of fabrication			
		Final	Required within 7 days prior to shipment and before final payn		
PROPOSAL	**REVIEW**	**FINAL**	**DESCRIPTION**	**(DAYS)**	**(DAYS)**
1			Q A program that satisfies the requirements of ASME NQA-1-1994	Bid	
			Experience list and maintainability information	N/A	
			Design, fabrication & delivery schedule	N/A	
E+3	E+3	E+6	Outline drawings and layout drawings indicating weights and dimensions	PO+10	
			Technical brochures on purchased components	N/A	
			Calculations	N/A	
			Spare parts list	N/A	
			Set of installation and maintenance manuals c/w technical literature for all equipment and devices	N/A	
		1	Hardware Delivery	PO+70	
			Site commissioning record & test results	N/A	

[illegible]

THE TIMELY RECEIPT OF THE VENDOR DOCUMENTS IS CRITICAL TO THIS PROJECT
BUYER COMMITS TO A 10 WORKING DAY TURNAROUND ON REVIEW ITEMS

I agree to provide the listed documentation and data and the dates shown above.

Vendor Signature _____ Date _____

In making requests for transmittal of data by any electronic media, the Company receiving such data agrees that AMEC Americas Limited cannot be held responsible for errors of the data outside of or beyond the scope of our original agreement. Also, because data stored in electronic media or transmitted by electronic means can deteriorate undetected or be modified without the consultant's knowledge, the Company receiving data agrees that AMEC Americas Limited cannot be held liable for the compatibility, completeness or correctness of the data.

No.	AMEC Dwg. No.	REFERENCE DRAWINGS
1	F-145579-35-D-0004	ICV BOX DATA SHEET
2	F-145579-35-D-0005	ICV BOX LID ASSEMBLY

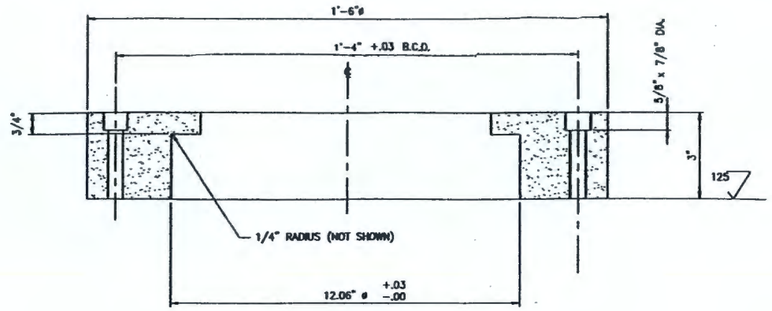

SECTION A
SCALE 6"=1'-0"

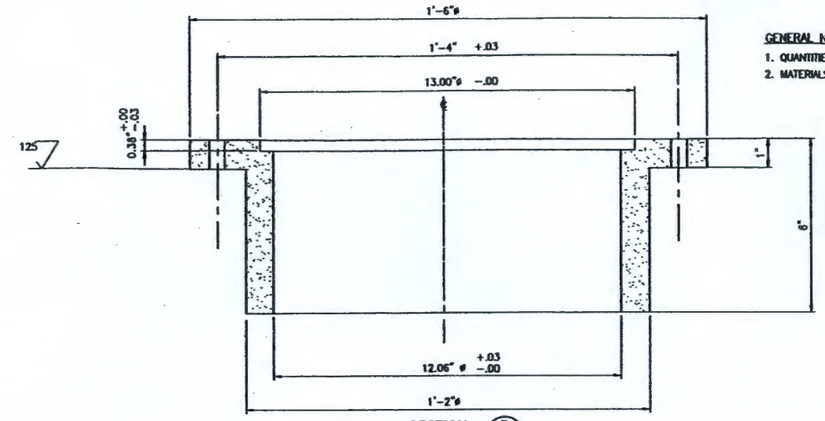

SECTION B
SCALE 6"=1'-0"

GENERAL NOTES:

1. QUANTITIES MARKED FOR ITEMS REPRESENT TOTAL FOR '1' ICV BOX LID ONLY
2. MATERIALS: TYPE OF CERAMIC TO BE RECOMMENDED BY VENDOR

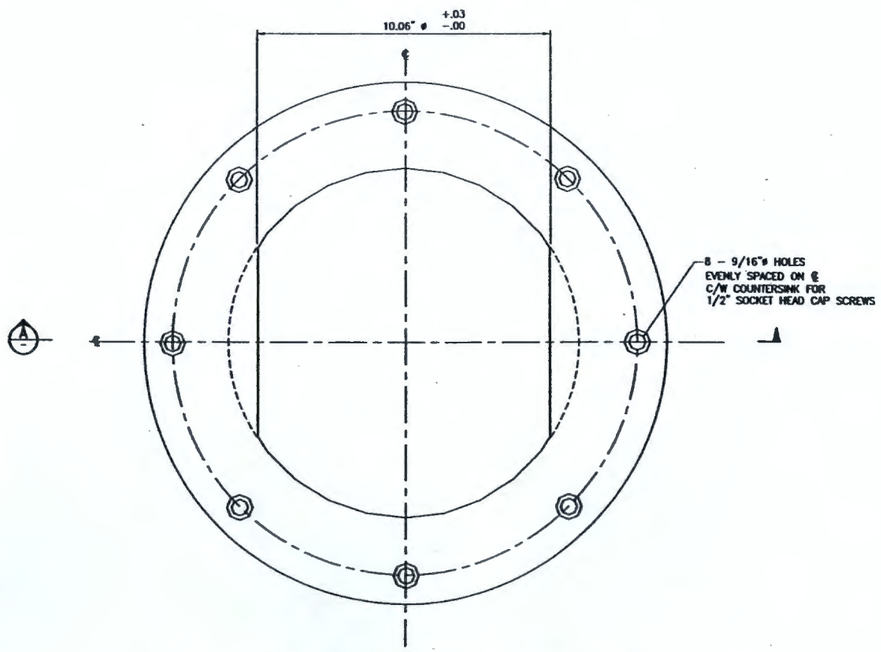

UPPER CERAMIC COLLAR - '2' REQ'D

SCALE 6" = 1'-0"
MAT'L: CERAMIC (TYPE TO BE ADVISED)
LOCATION: SEE REF 2

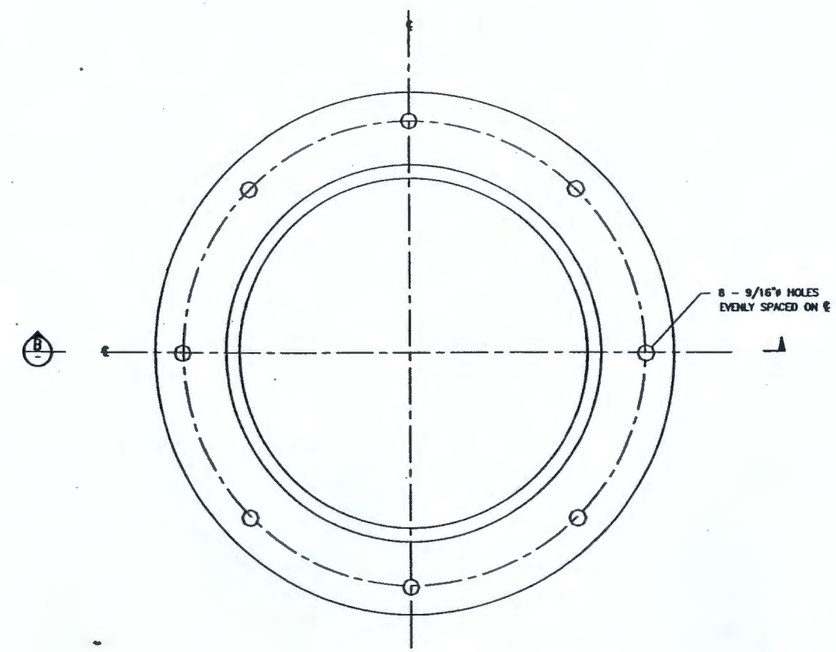

LOWER CERAMIC SLEEVE - '2' REQ'D

SCALE 6" = 1'-0"
MAT'L: CERAMIC (TYPE TO BE ADVISED)
LOCATION: SEE REF 2

Rev.	REVISION DESCRIPTION	Date	By	Chk'd	Approved Dept Mgr	Approved Proj Mgr
B	ISSUED FOR CH2M HILL REVIEW AND BOX REPORT	03 MAR 05	RRB	AA	FKS/TH	TH
A	ISSUED FOR INTERNAL APPROVAL	09 FEB 05	RRB		FKS/TH	TH

AMEC DRAWING NO: F-145579-35-D-0010 REV: B

amec

AMEC PROJECT: 145579-FINAL DBVS DESIGN

U.S. DEPARTMENT OF ENERGY
Office of River Protection

BULK VITRIFICATION
ICV BOX LID
CERAMIC DETAILS

SIZE: F SCALE: AS NOTED

NAME	DATE
DRAWN BY	
DESIGNED BY	
CHECKED BY	
DESIGN / MAT'L ENG	
ENGINEERING MANAGER	
PROJECT ENGINEER	
DESIGN AUTHORITY	

DWG NO	TITLE
DRAWING TRACEABILITY LIST	

REF NUMBER	TITLE
REFERENCES	
NEXT USED ON	

REV NO	DESCRIPTION	REV BY DATE	REV CK'D	CHANGE BY	DESIGN AUTHORITY
-					
REVISIONS					

In making requests for transmittal of data by any electronic media, the Company receiving such data agrees that AMEC Americas Limited cannot be held responsible for users of the data outside of or beyond the scope of our original agreement. Also, because data stored in electronic media or transmitted by electronic means can deteriorate undetected or be modified without the consultant's knowledge, the Company receiving data agrees that AMEC Americas Limited cannot be held liable for the compatibility, completeness or correctness of the data.

No.	AMEC Dwg. No.	REFERENCE DRAWINGS
1	F-145579-35-D-0004	ICV BOX DATA SHEET
2	F-145579-35-D-0006	ICV BOX LID STEELWORK – 1 OF 3
3	F-145579-35-D-0007	ICV BOX LID STEELWORK – 2 OF 3
4	F-145579-35-D-0009	ICV BOX LID STEELWORK – 3 OF 3
5	F-145579-35-D-0010	ICV BOX LID CERAMIC DETAILS
6	F-145579-35-D-0012	ICV BOX LID CAMERA, T/C AND GROUND ASSEMBLY
7	F-145579-35-D-0019	ICV BOX LID GASKET DETAILS
8	F-145579-35-D-0020	ICV BOX LID ELECTRODE DETAILS
9	F-145579-35-D-0021	ICV BOX BREATHER HEPA FILTER
10	F-145579-35-D-0022	ICV BOX LID HANDLING TOOL AND RADAR PLATE
11	F-145579-00-F-0018	INSTRUMENTATION LOOP SHEET

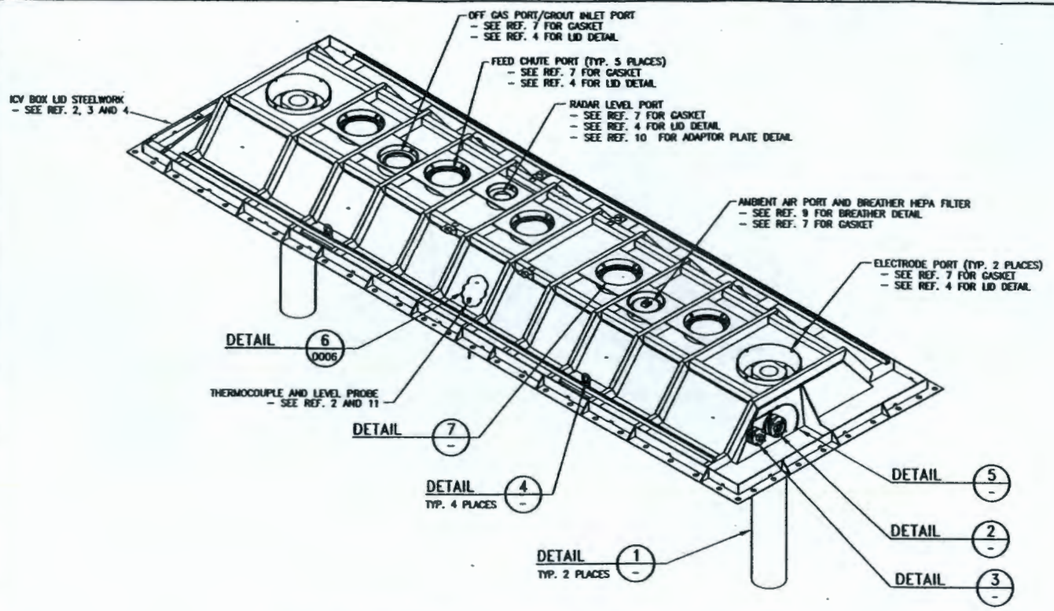

ICV BOX LID ASSEMBLY – EQUIP. #35-D52-012

LIFTING LUG
DETAIL 4 –
1 1/2" = 1'-0"

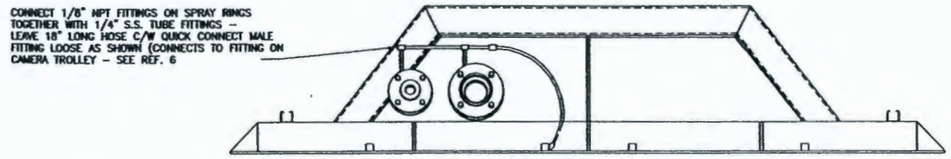

TYPICAL END CONNECTIONS
DETAIL 5 –
1 1/2" = 1'-0"

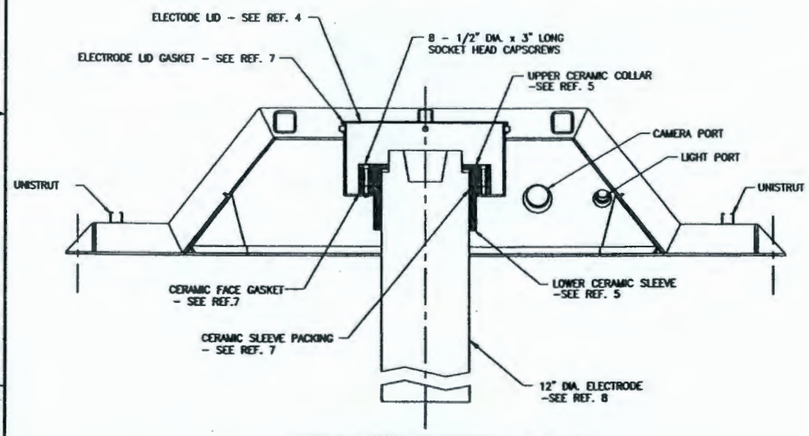

SECTION THRU ELECTRODE (C/W LID)
DETAIL 1 –
1 1/2" = 1'-0"

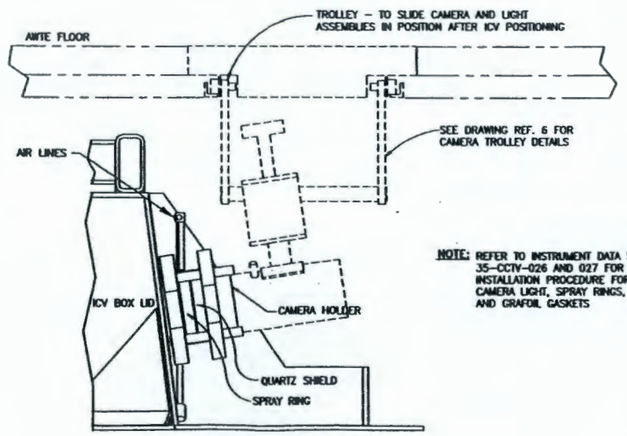

NOTE: REFER TO INSTRUMENT DATA SHEET 35-CCTV-026 AND 027 FOR SUPPLY AND INSTALLATION PROCEDURE FOR CAMERA, CAMERA LIGHT, SPRAY RINGS, HOLDERS AND GRAFOIL GASKETS

CAMERA MOUNT
DETAIL 2 –
3" = 1'-0"

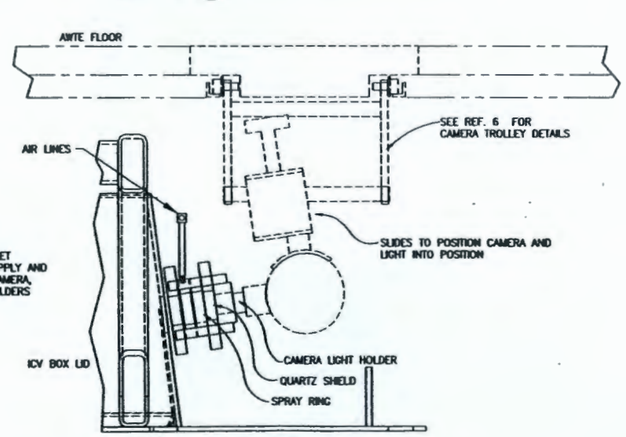

CAMERA LIGHT MOUNT
DETAIL 3 –
3" = 1'-0"

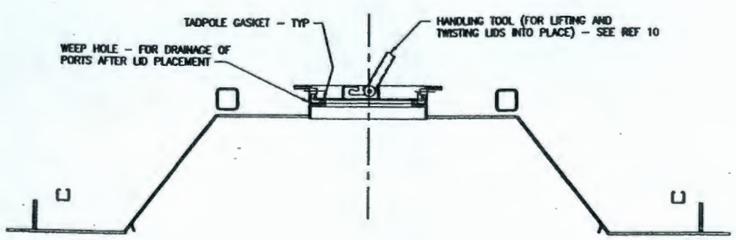

SECTION THRU FEED CHUTE (C/W LID)
DETAIL 7 –
1 1/2" = 1'-0"

GENERAL NOTES:

1. SEE REF. 5 FOR BOTH WELDING CRITERIA AND LIFTING DEVICE INFORMATION
2. OFF GAS PORT TO BE USED AS GROUT INJECTION
3. THE PORT LIDS (EXCEPT FOR BREATHER) NOT SHOWN FOR CLARITY
4. AMBIENT AIR PORT LID IS C/W HEPA FILTER ATTACHMENT – SEE REF. 9 FOR DETAIL

DWG NO	TITLE
–	–

DRAWING TRACEABILITY LIST

REF NUMBER	TITLE
–	–

REFERENCES
NEXT USED ON

REV. NO.	DATE	DESCRIPTION	PREP. BY	REVIEW BY	APPROVED BY	CHECKED BY
–						

REVISIONS

Rev.	REVISION DESCRIPTION	Date	By	Chk'd	Approved Eng Mgr	Approved Proj Mgr
D	ISSUED FOR CH2M HILL REVIEW AND BOX REPORT	03 MAR 05	RRB	AA	MS/TH	TH
C	ISSUED FOR INTERNAL APPROVAL	09 FEB 05	RRB		MS/TH	TH
B	INTERNAL ISSUED FOR INFORMATION DRAWING NUMBER REVISED, WAS F-143643-35-D-0005 sh	23 JUL 04	JDM	FWS	FWS	JDS
A	ISSUED FOR TASK 6 FINAL REPORT	13 APR 05	RRB		FWS/TH	TH

DWG DRAWING NO: F-145579-35-D-0005 REV: D

amec

PROJECT: 145579-FINAL DBVS DESIGN

NAME

DRAWN BY JDM
DESIGNED BY
REVIEWED BY
APPROVED BY
DESIGN / ENG. CHK
DESIGNATED ENGINEER
PROJECT MANAGER
DIRECT. ENGINEERING

U.S. DEPARTMENT OF ENERGY
Office of River Protection

BULK VITRIFICATION
ICV BOX LID
ASSEMBLY

SIZE F | BLDG. NO. | DESIGN NO. | DWG NO. | REV

SCALE AS SHOWN | REV | SHEET OF