START

0006145

SUPPORTING DOCUMENT

1. Page 1 of 67

2. Title	3. Number	4. Rev. No.
Engineering Study Tank 241-CX-71 Alternative Sampling Methods	WHC-SD- DD-ES-007	0

5. Key Words	6. Author
Tank Sampling	G.N. Boechler Name (Type or Print) 7/25/89 Signature W23120 Organization Code

7. Abstract

This document studies alternative methods of sampling Tank 241-CX-71. The tank is located at the Strontium Semiworks (200E Area). Sampling is required for final decommissioning disposition.

DEC 1989 RECEIVED EDMC

[Review of Supporting Documents by an Authorized Derivative Classifier is no longer required per Rev. 4, EP-1.12, dated 8/21/89, when the document will not be distributed externally from WHC.] Janie Bishop Sta. 21 9/7/1989

8. **PURPOSE AND USE OF DOCUMENT** - This document was prepared for use within Westinghouse Hanford Company and is to be used only to perform, direct, or integrate work under U.S. Department of Energy contracts. **THIS DOCUMENT IS NOT APPROVED FOR PUBLIC RELEASE UNTIL REVIEWED.** *(See MRP 1.9 and 3.5)*

PATENT STATUS - This document copy, since it is transmitted in advance of patent clearance, is made available in confidence solely for use in performance of work under contracts with the U.S. Department of Energy. This document is not to be published nor its contents otherwise disseminated or used for purposes other than specified above before patent approval for such release or use has been secured, upon request, from the U.S. Department of Energy, Patent Attorney, Richland Operations Office, Richland, WA.

9. *(Place an "X" in the box that applies)*

☐ **UNCLASSIFIED CONTROLLED NUCLEAR INFORMATION** – Not for public dissemination. Unauthorized dissemination subject to civil and criminal sanctions under Section 148 of the Atomic Energy Act of 1954, as amended *(42 USC 2168)*. Attach Blue Cover GPO 1987-792-646. *(Review by Authorized Derivative Classifier required before this box can be checked.)*

Signature _____ Date Approved _____

☐ **APPLIED TECHNOLOGY** – Any further distribution by any holder of this document or of the data therein to third parties representing foreign interests, foreign governments, foreign companies, and foreign subsidiaries or foreign divisions of United States companies shall be approved by the U.S. Department of Energy, Associate Deputy Assistant Secretary for Reactor Systems, Development and Technology. Further, foreign party release may require U. S. Department of Energy approval pursuant to Federal Regulation 10CFR 810, and/or may be subject to Section 127 of the Atomic Energy Act. *(Review by International Program Coordinator required before this box can be checked.)*

Signature _____ Date Approved _____

☐ **CLASSIFIED DOCUMENT** – *(Reference MRP 3.12.) (Review by Authorized Derivative Classifier required before this box can be checked.)*

Signature _____ Date Approved _____

☐ **NONE OF THE ABOVE** *(Review by Authorized Derivative Classifier required before this box can be checked.)*

Signature _____ Date Approved _____

10. **RELEASE STAMP**
(Does not authorize public dissemination.)

OFFICIAL RELEASE BY WHC (20)
DATE 9/7/1989
Sta. 21

11. Impact Level
4

A-6400-073 (03/89)

9111139405411

SUPPORTING DOCUMENT COVER SHEET COMPLETION INSTRUCTIONS

1. **PAGE 1 OF _____** – Enter total page count.

2. **TITLE** – Enter the title of the Supporting Document to be released.

3. **NUMBER** – Enter the unique document identification number obtained from Engineering Document Control.

4. **REV. NO.** – Enter the current revision number of the Supporting Document to be released.

5. **KEY WORDS** – Enter specific words that are input to a database that will aid in future retrieval of the document, e.g., project, task, selected words from the title, etc.

6. **AUTHOR** – Enter the printed/typed name of the Supporting Document author, his signature, and the author's organization code.

7. **ABSTRACT** – Enter a brief summary of the document content.

8. **CAVEATS** – Reminders to the user(s) and those on distribution that the Supporting Document is not approved for public release until proper reviews/approvals have been obtained.

9. **UCNI/APPLIED TECHNOLOGY/CLASSIFIED DOCUMENT/NONE OF THE ABOVE** – Review by an Authorized Derivative Classifier and/or International Program Coordinator is required before one of these boxes can be checked, prior to release of the Supporting Document.

10. **RELEASE STAMP** – The release stamp is affixed by Engineering Document Control to certify that the Supporting Document is approved for the intended use, and is accountable and retrievable. The release stamp is not an authorization for public release and does not signify that the document is approved for public dissemination.

11. **IMPACT LEVEL** – Enter the applicable Impact Level for the Supporting Document. Reference MRP 5.43 and EP-1.7.

9 1 1 1 8 9 4 0 5 1 2

ENGINEERING STUDY
TANK 241-CX-71 ALTERNATIVE SAMPLING METHODS

TABLE OF CONTENTS

		Page
1.0	INTRODUCTION	4
2.0	HISTORY OF TANK 241-CX-71	4
3.0	PHYSICAL EXISTING CONDITION	5
4.0	INTERNAL CHARACTERIZATION	7
5.0	SAMPLING CRITERIA	10
6.0	VIABLE OPTIONS FOR SAMPLING	11
7.0	KEPNER TREGOE EVALUATION	32
8.0	SUMMARY OF OPTION EVALUATION	61
9.0	DISCUSSION	62
10.0	RECOMMENDATIONS	63
11.0	RECOMMENDED ALTERNATIVE SCHEDULE	66
12.0	REFERENCES	67

9 1 1 1 3 9 4 0 5 4 3

ENGINEERING STUDY
TANK 241-CX-71 ALTERNATIVE SAMPLING METHODS

1.0 INTRODUCTION

The object of this Engineering Study is to provide Decommissioning Engineering with alternative sampling methods for Tank 241-CX-71 located at the Strontium Semiworks at the 200E Area. After the alternative sampling methods have been evaluated on an environmental, risk, reliability, and cost basis, a preferred sampling alternative shall be recommended and justified.

Specific objectives, deliverables, and engineering tasks are called out in the Work Plan in Reference 10 in response to the Memo in Reference 11. The need to sample Tank 241-CX-71 is required for a final decommissioning disposition of the tank.

2.0 HISTORY OF TANK 241-CX-71

Unfortunately, key historical records were destroyed in 1982 by Document Control Center after they were determined insignificant. However, after extensive research in correspondence, personal interviews, drawing files, HW Operations reports, and SAR the following conclusions were made.

a. The tank was used to neutralize building 201-C condensate and the coil and condenser cooling water from December 1952 through November 1956. Reference: 1,4

b. Flush wastes during decontamination went through the tank from December 1956 through June 1957. (After PUREX and before strontium recovery.) Reference: 1

c. After June 1957 the tank was no longer used. Reference: 1

d. During decontamination approximately 8.8 million gallons of waste flowed through the tank at an average of .0033 g/gal of uranium, 9.3×10^{-8} g/gal plutonium, and 1.3×10^{-4} Ci/gal of beta emitting particles. Reference: 1

e. The sources to the tank were the 201-C Hot Process Building (condensate) and drains from hot shops (two, 2-inch lines). Reference: 1,4

f. The outlet is an overflow which was originally directed to Crib 216-C-1 but was redirected to Crib 216-C-5 (one, 2-inch line). Reference: 4

g. The tank utilized crushed limestone to neutralize condensate. The limestone bed reacted with any acidic material poured through the tank. As the limestone was dissolved, new limestone was periodically added through the access header. Reference: 4

9 1 1 1 8 9 4 0 5 5 4 4

3.0 PHYSICAL EXISTING CONDITION

Since no construction drawings have been found and records of physical work on tank have been destroyed only educated assumptions as to tank condition can be made. The following assumptions have been based upon photographs, SAR description, H-2 drawings, and miscellaneous correspondence.

a. Tank is 9 feet by 9 feet circular single-shell.

b. Tank is constructed of a stainless steel material.

c. Tank is buried approximately 10 feet below grade.

*d. A 2-inch vent and a 12-inch access header extend from the top of tank to above grade.

*e. Two blanked, 2-inch SST fill lines run into access header below grade.

*f. An overflow 2-inch SST pipe runs into tank per rerouted condition (see drawing H-2-4535).

g. The tank is filled close to the top with crushed limestone at 117-175 lb/ft^3.

h. Voids in and between limestone sections are occupied by a liquid fill.

*i. The access header had a grout cap poured into it in 1986.

*j. The grout appears to have the same strength as the tested grout from 241-CX-72 (520 psi to 945 psi) and is not radioactive.

*k. The surrounding area is smearable from 300 to 500 counts.

* High confidence level

9 1 1 1 8 9 4 0 5 4 5

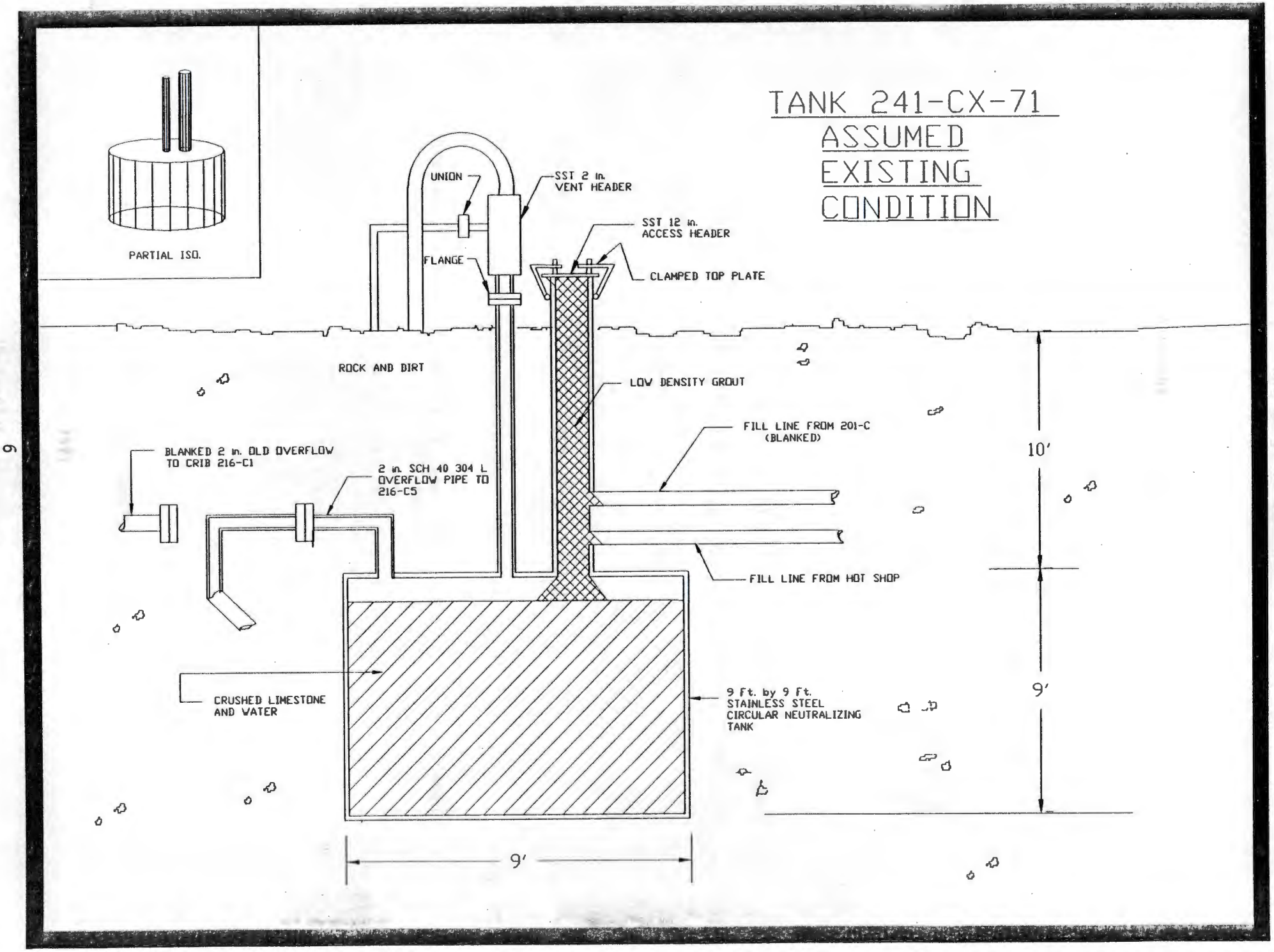
TANK 241-CX-71
ASSUMED
EXISTING
CONDITION
PARTIAL ISO.
UNION
SST 2 in.
VENT HEADER
SST 12 in.
ACCESS HEADER
FLANGE
CLAMPED TOP PLATE
ROCK AND DIRT
LOW DENSITY GROUT
FILL LINE FROM 201-C
(BLANKED)
BLANKED 2 in. OLD OVERFLOW
TO CRIB 216-C1
2 in. SCH 40 304 L
OVERFLOW PIPE TO
216-C5
10'
FILL LINE FROM HOT SHOP
CRUSHED LIMESTONE
AND WATER
9 Ft. by 9 Ft.
STAINLESS STEEL
CIRCULAR NEUTRALIZING
TANK
9'
9'

4.0 INTERNAL CHARACTERIZATION

The following is the logic and assumptions based on best available data to characterize the hazardous and radioactive content of Tank 241-CX-71.

Reference 1.
Data: Approximately 8.8 million gallons of waste at an average of.0033 g/gal uranium, 9.3×10^{-8} g/gal plutonium (assume:239), and 1.3×10^{-4} ci/gal of beta emitting particles

Reference 2.
Data: 16.2 microCi/gal, Strontium 89,90
5.9 microCi/gal, Cesium 137
pH 6.8
VIS-OTR: Clear, light brown, trace solids, 3.0 mR
DTA: No exotherms

Question: Are tank contents TRU waste?

Solution: Only consider Pu 239 for TRU characterization.

8.8 million gal x 9.3×10^{-8} g/gal = .82 grams Pu-239 in tank
.82 grams Pu x 6.2×10^{-2} Ci/g Pu = .0508 Ci Pu-239

If tank is assumed to have half water 62.4 lb/ft^3 and half limestone 117 lb/ft^3, the tank content weighs 2.32×10^7 grams.

So-> $\frac{.0508 \text{ curies Pu 239}}{2.32 \times 10^7 \text{ grams}} = 2.19 \times 10^{-9} \frac{\text{curies Pu 239}}{\text{gram}}$

TRU designation = $100 \times 10^{-9} \frac{\text{curies Pu 239}}{\text{gram}}$

Answer: Tank content is lower in Pu content than TRU designation which makes it non-TRU.

The .0508 Ci Pu-239 calculated is close to the estimate of .03 Ci from Reference 7 which reinforces this answer. However, there is References 8 and 9 which have estimated a maximum of 6 curies Pu in the tank which makes the tank contents a TRU waste. The 6 curies is a standard estimate which appears to have no technical basis, therefore, I have not based my analysis upon it.

9 1 1 1 8 9 4 0 5 4 7

Question: What is the estimated dose rate of a 2-inch core sample 5 feet long encapsulated by a 1/8-inch carbon steel sampler one centimeter away?

Solution: Only consider Sr-90 and Cs-137 for shielding (gamma, beta emitters).

The data from Reference 2 was given to Vishnu Subrahmanyam who calculated the dose rate by hand formulas.

Answer: The dose rate came out to be 1mR at one centimeter. This estimate comes very close to Reference 2 estimate of 3.0mR.

Question: Should content in tank be considered hazardous waste?

Solution: The decontamination solutions that were run through Tank 241-CX-71 in 1957 are listed in Reference 3. These solutions were assumed to have been deposited into the tank. Each solution was evaluated as being a hazardous material.

Answer: The following solutions from Reference 3 are to be considered, by themselves, hazardous waste material. However, when some chemicals combine they change into new chemicals and concentrations. A formal waste designation of the combined chemicals was not performed because of the uncertainty in the quantity and concentrations of constituents. The worst case assumed would consider any one of the listed decon chemicals unchanged in concentration and chemical make up still remaining in the tank, which makes the tank contents hazardous waste.

9111394054 8

Code	Composition (Wt.%)
PC	1-1/2% $KMnO_4$ (Permanganate) 1/2% NaOH (Caustic)
CP	5% NaOH (Caustic) 2% H_2O_2 (Peroxide)
CT	6% NaOH (Caustic) 1-1/2% Tartaric acid (Tartrate)
CTP	6% NaOH - 1-1/2% Tartaric acid 2% H_2O_2 (Caustic-Tartrate-Peroxide)
HF	5% HNO_3 = 1% NaF (Nitric-Fluoride)
N-F-FAS	5% HNO_3 - 1% NaF - 2% $Fe(NH_4)_2(SO_4)_2$ (Nitric-Fluoride-Ferrous Ammonium Sulfate)
N-FAS	5% HNO_3 - 2% $Fe(NH_4)_2(SO_4)_2$ (Nitric-Ferrous Ammonium Sulfate)
3-20	6.9% NaF - 27.7% HNO_3(3% HF-20% HNO_3)
OX	5% $H_2C_2O_4$ (Oxalic Acid)
ND	6 Molar HNO_3 - 10% Sodium Dichromate
SD	Mixture of sulfuric acid and sodium dichromate
Oakite	10-20% Oakite #31
Turco	1-14% Turco 4182A

The exact chemicals to be tested for when samples are taken shall be no less than the above hazardous waste possibilities.

5.0 SAMPLING CRITERIA

Sampling, storing, documentation, and testing of all viable alternatives shall be in accordance with applicable sections of SW 846, Vol. II and applicable DOE Orders. The sampling shall be handled and documented in accordance with an approved sampling plan, core sampling data sheets, and chain of custody forms. The samples shall be handled and tested appropriately for radioactive and hazardous waste composition per ASTM, Vol. 4.08. Since the tank is not listed in the Tri-Party Agreement (Reference 14) for final closure under either RCRA past practices or CERCLA, no specific regulatory requirements pertain to the sampling plan. However, sampling and documentation per SW-846 guidelines shall be required so that additional sampling may be precluded in the future.

The solid samples shall be taken with a mechanical sampler. The sampler shall take a core no smaller than one inch in diameter. Each core shall be no shorter than 19 inches. The total sampled material shall amount to no less than 1000 grams which should meet minimum test volumes for all required tests. Samples shall be taken in top to bottom documented segments. If liquid is encountered during sampling, a liquid sample shall be obtained by use of a liquid sampler. A minimum of two liquid samples shall be taken per sample hole.

Appropriate SW 846 constraints shall be followed to prevent cross-contamination of both solid and liquid samples.

In order to justify the final disposition of the tank some degree of error in concentration levels and inventory must be calculated. Taking a minimum of two samples meets the statistical error calculation and SW 846 requirements. Therefore, two sample holes shall be drilled in either the vertical or horizontal directions.

9 1 1 1 3 7 4 0 5 5 0

6.0 VIABLE OPTIONS FOR SAMPLING

Option 1 - Truck-mounted, remote-operated Longyear 34 (RODU) (access header)

Work Force Organization - Tank Farm Services - Jim Lee

Drill Description - Existing remote-operated Longyear 34 (H-2-91451). The RODU is the most sophisticated drill unit on site and is presently being used in single-shell tank sampling. The unit is equipped to handle highly contaminated samples from the single-shell tanks. These samples are taken with a 1-inch rotary valve sludge sampler (H-2-91685). If the 1-inch rotary valve sludge sampler is not used, the RODU is capable of using either water or air as a bit cooling fluid. A special wire line hoist contained in the shielded receiver makes wire line sampling permissible. The unit also features a shutdown function when indications show the drill has bottomed out on tank shell that could possibly be utilized.

Equipment Description - Suboption 1 - One-inch rotary sludge sampler. This sampler works best in heavy mud cake which can be highly radioactive. It is intended to be pushed through the medium or slowly rotated. If medium is too hard and heavy rotation is required, sample is of low recovery percentage. This is because sampler rotates with outer barrel, diamond bit has too large a head to dispense shavings and rotary valve does not always close. This sampler utilizes modified quadra latch wire line components, shielded receiver, and a cask removal system.

Equipment Description - Suboption 2 - Christensen 94mm Wireline. This system will adapt to the RODU with simple equipment modifications. It is very versatile for a range of applications and sample medium. It features a core system, punch system, and drill system inner barrels which are easily changed out depending upon the sample medium. This sampler could only be utilized if sample is of a low dose rate where shielding is not necessary.

Sampling Method Description - Suboption 1

a. Using 1-inch rotary valve sludge sampler.

   1) Remove upper portion of vent piping at ground level flange connection.

   2) Position remote longyear drill over access header.

   3) Install grout containment/collection facility at top of access header.

   4) Set up flighted drill string with 3-inch drag bit and drill through grout (approximately 12 feet). Hydraulic pressure should indicate when through grout. Since no water or air will be used, drilling should commence at slow pace.

   5) Set up drill string with Diamond Drill's special diamond bit matrix and 1-inch rotary valve sludge sampler.

6) Every 19 inches, or when sampler blocks off, pull inner tube to recover sampler.

7) Install a new 1-inch rotary valve sludge sampler into drill string.

8) Stop drilling when drill trips out, hydraulic pressure suddenly increases or drill string stops advancing. This should occur at approximately 9 feet.

9) Pull drill string and decontamination at 2706 T Plant.

10) Seal hole in grout with more grout pour.

Sampling Method Description - Suboption 2

b. Using Christensen 94mm Wireline

1) Remove upper portion of vent piping at ground level flange connection.

2) Position remote Longyear drill over access header.

3) Install grout containment/collection facility at top of access header.

4) Set flighted drill string with 4-inch drag bit drill system and drill through grout (approximately 12 feet). Hydraulic pressure decrease should indicate when through grout. Since no water or air will be used, drilling should commence at slow pace.

5) Set drill string with punch system, 2-foot split inner barrel, and Diamond Drill's special diamond bit matrix.

6) Every 24 inches, or when blocked, pull punch system split inner barrel and recover sample. If sample is not of good quality, change out punch system for cord system sample tube.

7) Stop drilling when drill trips out, hydraulic pressure suddenly increases or drill string stops advancing.

8) Pull drill string and decontaminate at 2706 T Plant.

9) Seal hole in grout with more grout pour.

9 1 1 1 3 9 4 0 5 5 2

Option 1

Truck Mounted Remote Operated Longyear 34(RODU) (Access Header)

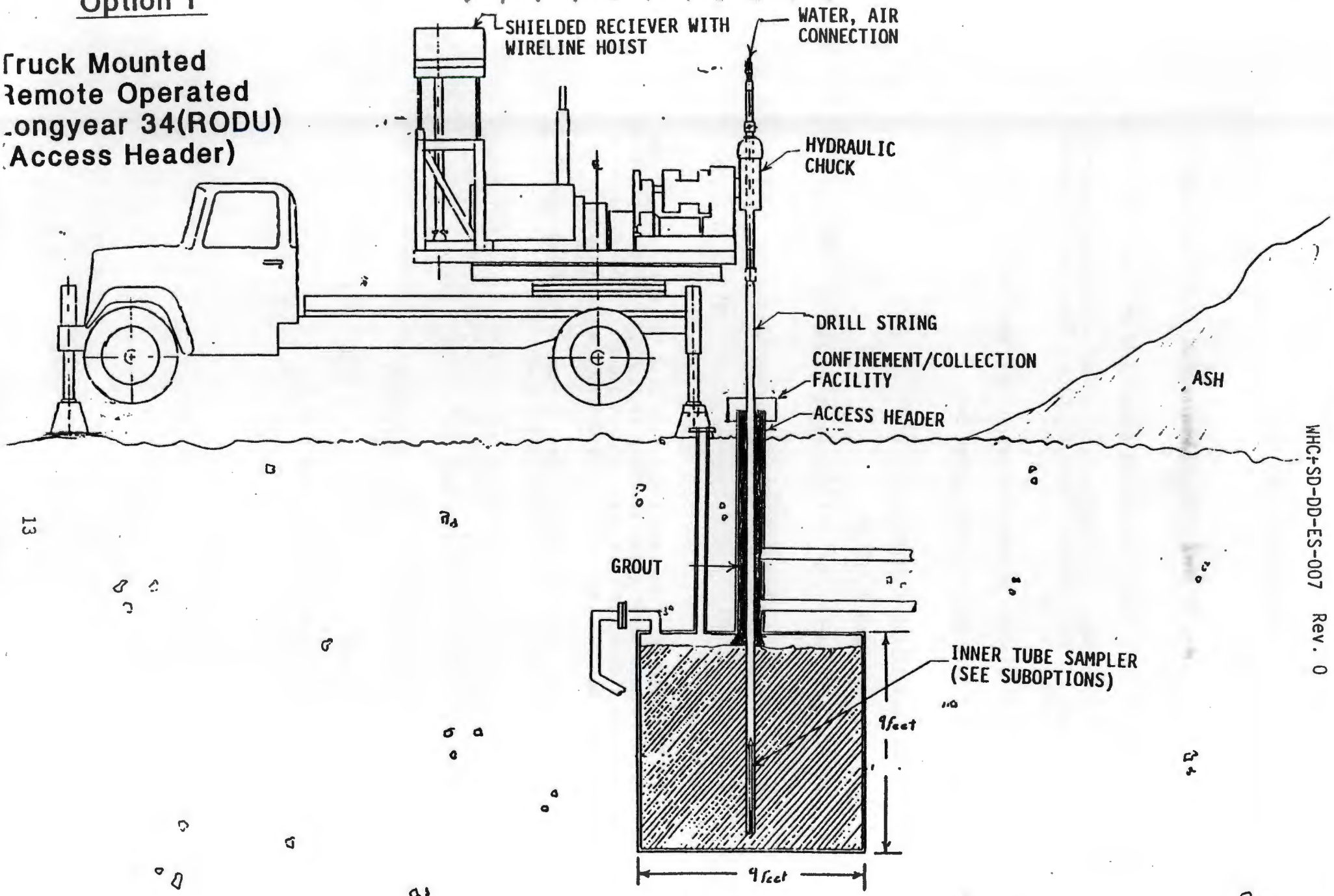

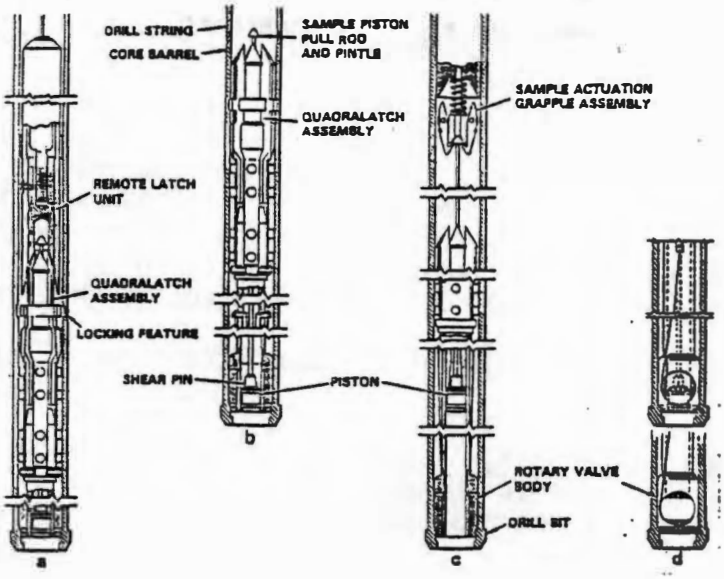

Suboption 1

One inch rotary valve sludge sampler

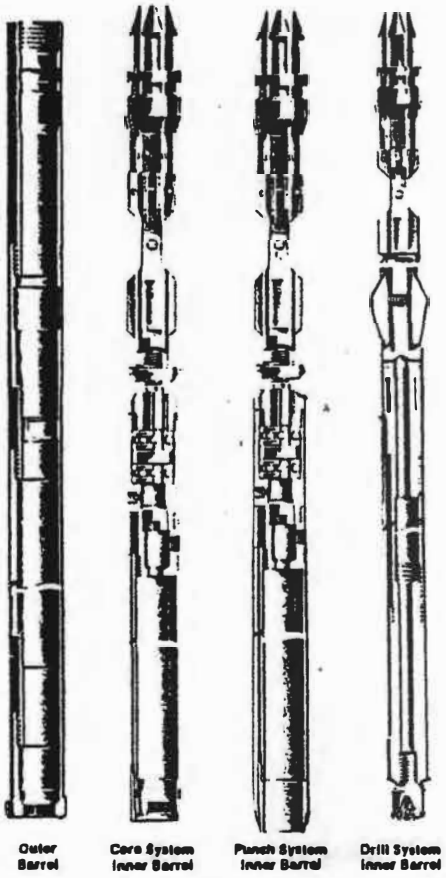

Suboption 2

Christensen 94 mm Wireline

Option 2 - Truck-mounted Longyear 44 (access header)

Work Force Organization - Environmental Field Services - Greg McLellan

Drill Description - The existing Longyear 44 is primarily used for soil and rock core sampling in a non-contaminated medium. The unit is equipped with a hydraulic chuck for rotating. It can be used with either the 1-inch rotary valve sludge sampler or any commercial wire line sampler drill string assembly. Water or air can be supplied to the bit for cooling if needed. This unit is not equipped to handle any sampling which requires radiation shielding. This unit is also nonregulated (noncontaminated).

Equipment Description - See Option 1, Suboptions 1 and 2, Equipment Descriptions

The 1-inch rotary valve sludge sampler or Christensen 94mm Wireline samplers can both be utilized with the Longyear 44. The Longyear 44 can, however, handle more versatile commercial equipment, such as longer core inner tubes and standard drill strings.

Sampling Method Description - See Option 1, Suboptions 1 and 2, Sampling Method Descriptions

The same methods are used as with remote operated Longyear 34. Again, the Longyear 44 is more versatile in commercial operations, but cannot handle highly contaminated samples.

Option 2

Truck Mounted
Longyear 44

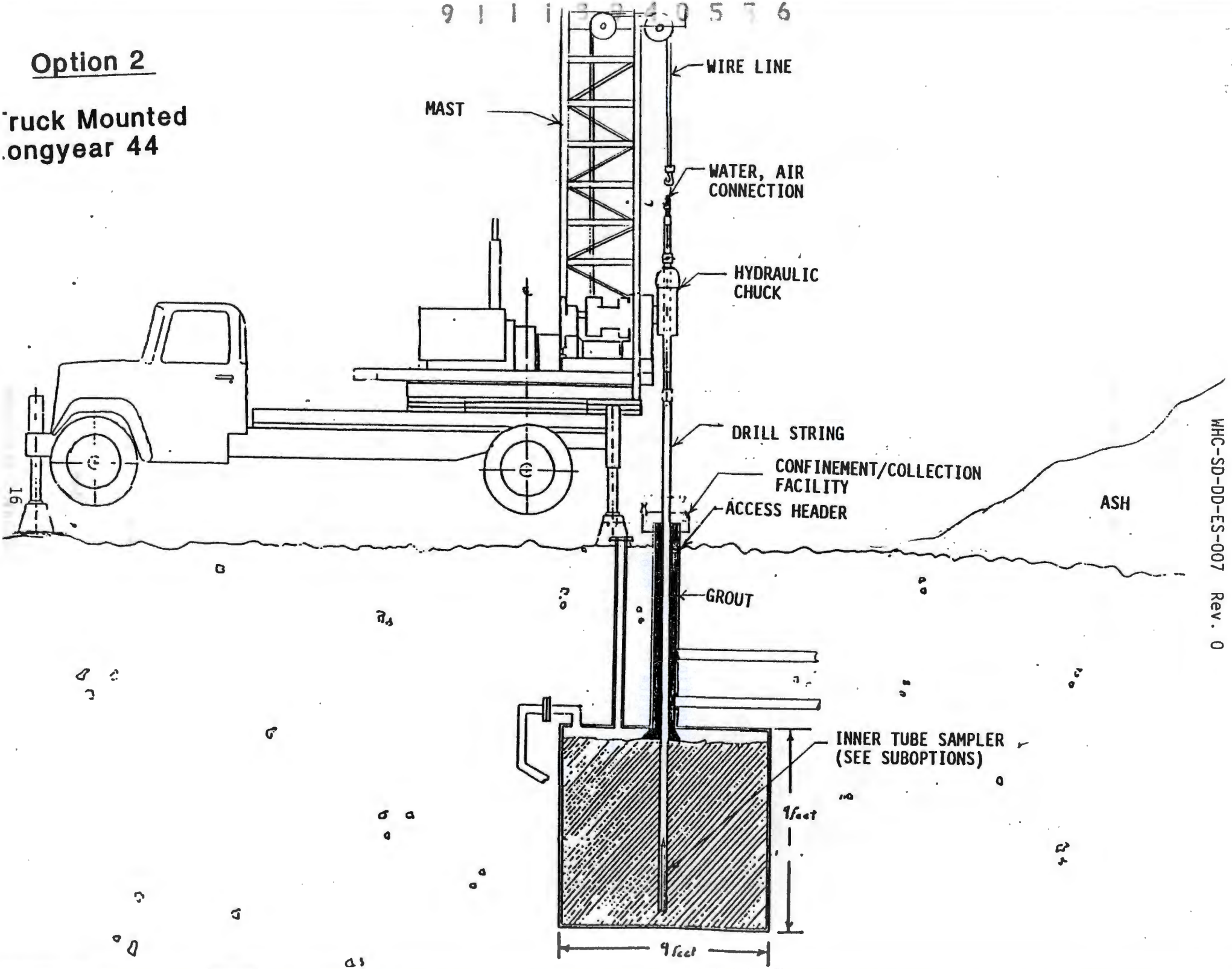

Option 3 - Truck-mounted cable tool

Work Force Organization - Environmental Characterization and Sampling - Hal Downey

Drill Description - Existing cable tool can be easily transported and mobilized with little manpower. It is best suited for soil sampling in semisolid to sticky, muddy substances. The drill does not rotate; it utilizes a drive hammer to pound the sampling tool into the ground. The sampling tool and connecting rod is hoisted to surface to recover sample. When sample is being recovered, nothing is left in hole so the formation must stand. This unit is not equipped to handle sampling which requires shielding but can drill in contaminated areas because it is regulated.

Equipment Description - Soil sampling tool should have a 3-inch heat-treated shoe to go through the grout and hard formations. It should have a sectioned split tube design 24 inches in length. The shoe should have a spring-type sample retainer designed for packed sand or gravel.

Sampling Method Description

a. Using cable tool and soil sampler

1) Remove upper portion of vent piping at ground level flange connection.

2) Excavate to bottom of tank (one side only).

3) Take NDE and physical measurements then return dirt cover.

4) Position cable tool over access header.

5) Install grout containment/collection facility at top of access header.

6) Set cable tool with heat-treated soil sampler and work through grout (approximately 12 feet).

7) Set up cable tool with 2-foot heat-treated soil sampler and sample retainer.

8) Every 24 inches, or when sampler blocks off, pull sampler and recover sample from split tube sections.

9) Stop drilling when predetermined depth has been reached. Depth should be determined no closer than six inches from the bottom of the tank.

10) Pull cable tool and decontaminate at 2706 T Plant.

11) Seal hole in grout with more grout pour.

Option 3

Truck Mounted Cable Tool

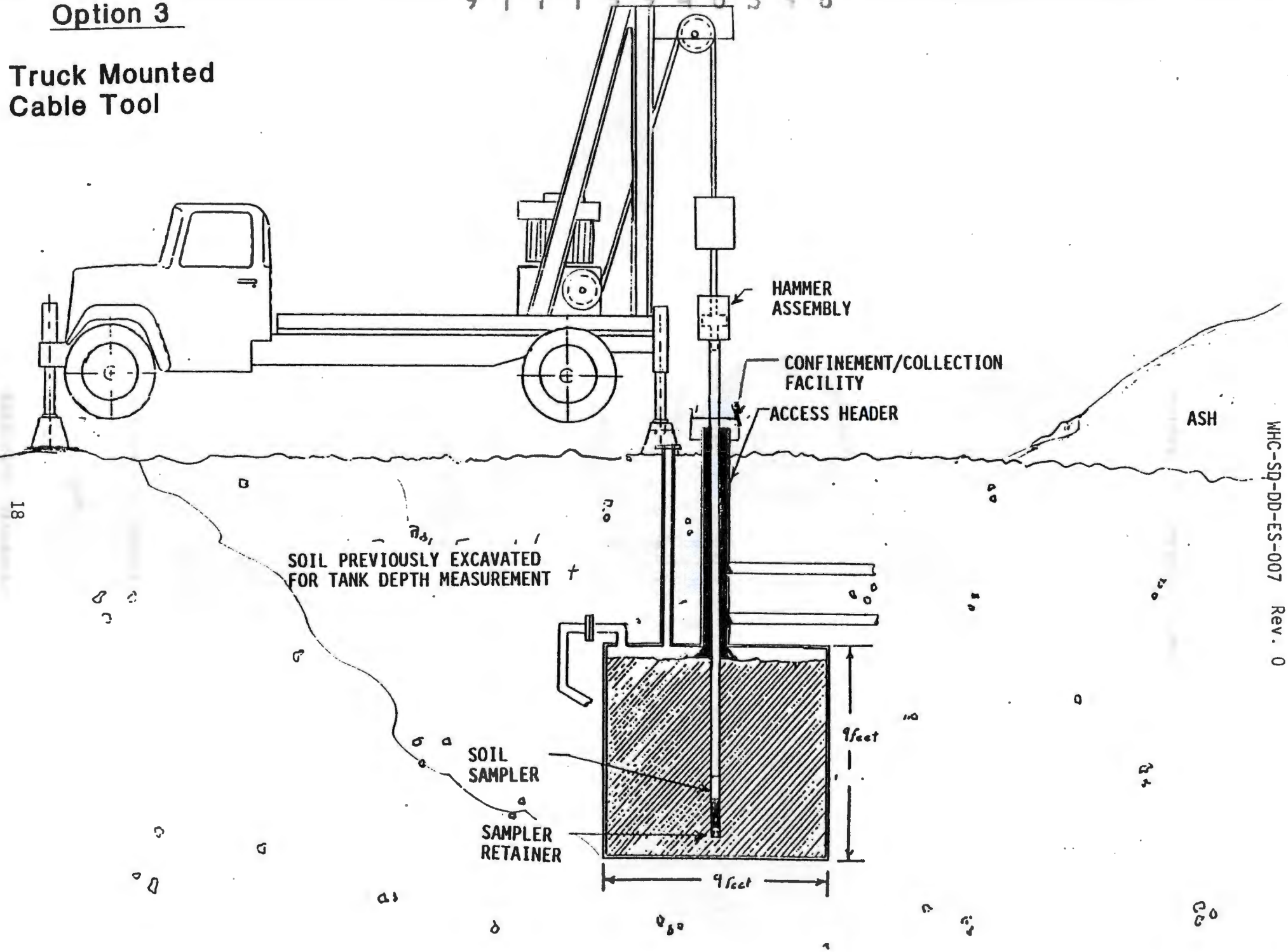

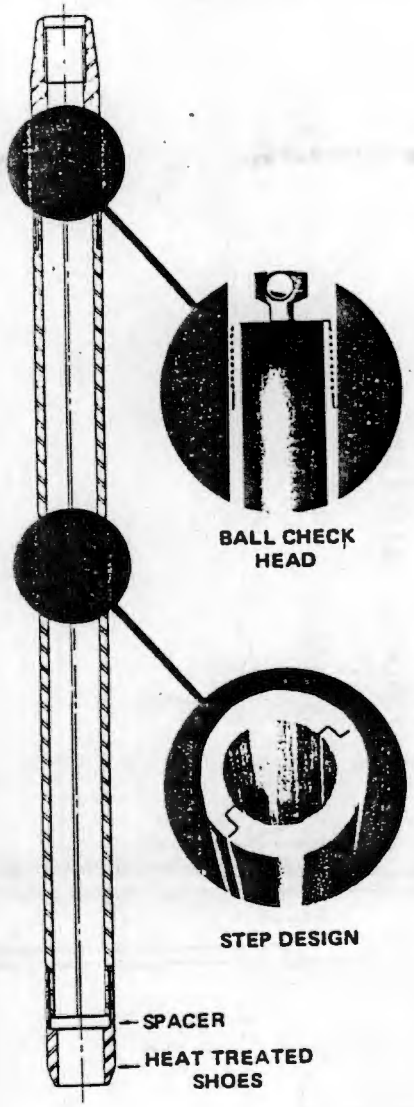

Split Tube

Soil Sampler

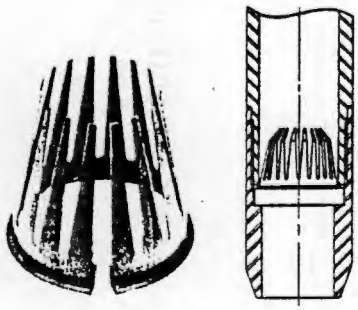

Spring Type

Sample Retainer

9 1 1 1 8 9 4 0 5 5 9

Option 4 - Hot tap for grab sample

Work Force Organization - Kaiser

Drill Description - Hot tap utilizing a shortcutt valve. This device gives you the ability to tap into a pressure system without losing fluid or pressure. You begin with a weld-o-let attached to the tank. A shortcutt valve hot tap is then attached to the weld-o-let and the tank penetration is made. The drill mechanism is retrieved and the shortcutt valve shut. A grab sample of the fluid or solid could now be taken from the penetration.

Equipment Description - Sample retrieval through the shortcutt valve could be achieved by use of a manual driver or auger sampler. The size of the sampler will depend upon the size of the hot tap and shortcutt valve.

Sampling Method Description

a. Using hot tap and auger sampler

1) Excavate approximately 20 feet of dirt to provide enough access to work on the tank's lower level.

2) Take NDE and physical measurements on as much tank that is exposed.

3) Weld a weld-o-let to predetermined locations on tank.

4) Install hot tap equipment and drill tank penetrations.

5) Retract drill mechanism and close shortcutt valve.

6) Take grab sample (liquid or solid) with hand auger or liquid container.

7) Shut shortcutt valve and remove sampling equipment.

8) Return dirt cover and document shortcutt valve installations.

9111394055 0

Option 4

Hot Tap for Grab Sample

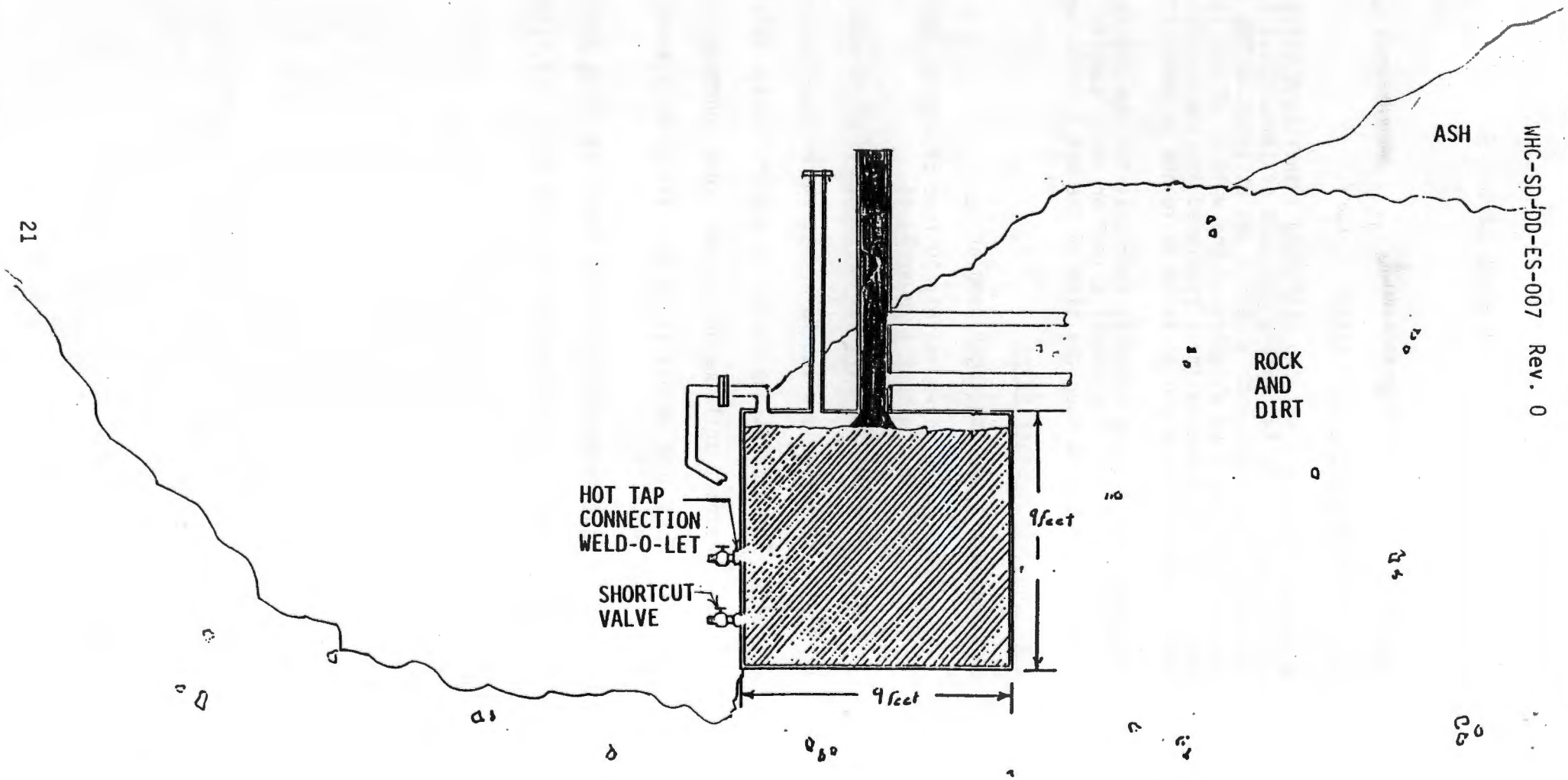

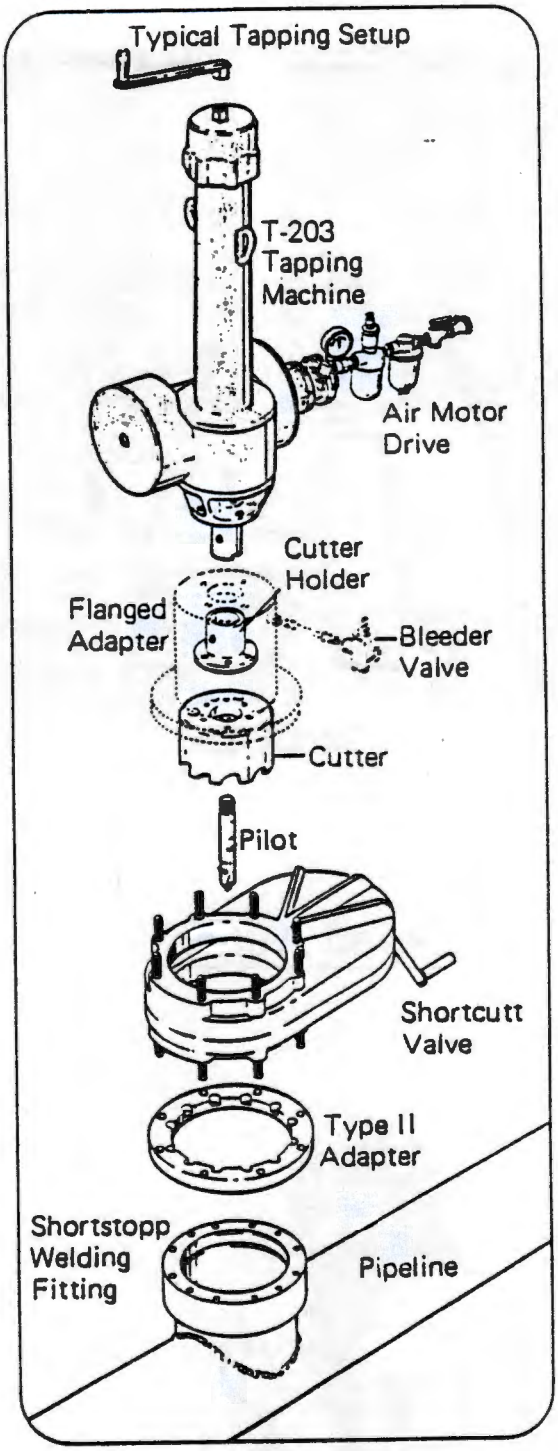

Hot Tap With

Shortcutt Valve

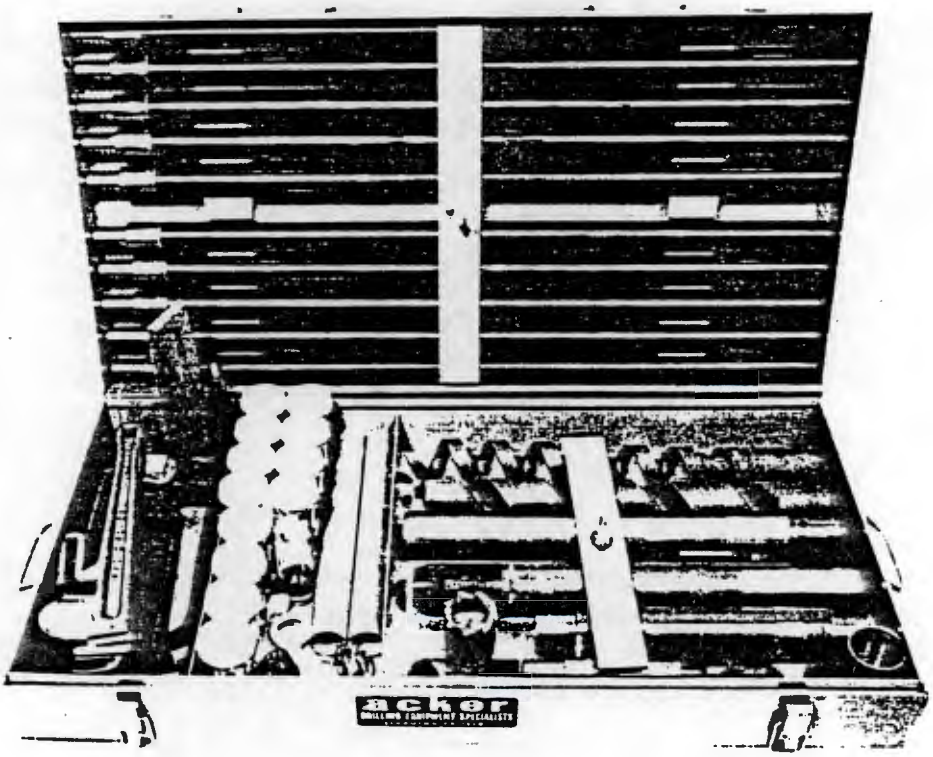

Hand Auger

Drag Bit

Option 5 - Trailer Mounted Auger

Work Force Organization - Environmental Characterization and Sampling - Hal Downey

Drill Description - The existing trailer mounted auger is primarily used for soil sampling in non-contaminated medium. The unit is equipped to rotate at a high torque under downward hydraulic force. It can also be utilized as a drive hammer for casing or drive samples. This unit is presently nonregulated (noncontaminated).

Equipment Description - Hollow auger sampler - The proposed auger bit would be 3-1/2 inches O.D. hollow auger type. The entire string with center stem and center bit is rotated to a predetermined depth. The center stem and bit is then removed and a undisturbed sample is taken.

Sampling Method Description

a. Using truck-mounted auger

1) Remove upper portion of vent piping at ground level flange connection.

2) Position auger over access header.

3) Install grout containment/collection facility at top of access header.

4) Set up auger drill string with 3-1/2-inch hollow auger with conical fingered drag bit.

5) Auger through grout (approximately 12 feet). Hydraulic pressure should indicate when through grout.

6) Pull center stem and bit.

7) Take drive sample with sectioned 2-inch split tube 24-inch in length. The shoe should have a spring type sample retainer designed for packed sand or gravel.

8) Change out conical fingered drag bit for soft rock carbon steel insert bit.

9) Reinstall center stem and bit and auger another 24 inches for continued sampling.

10) Stop drilling when sudden increase in hydraulic pressure is indicated or auger stops advancing (approximately 9 feet).

11) Pull drill string and decontaminate at 2706 T Plant.

12) Seal hole in grout with more grout pour.

9 1 1 8 9 4 0 5 5 4

Option 5

Trailer Mounted Auger

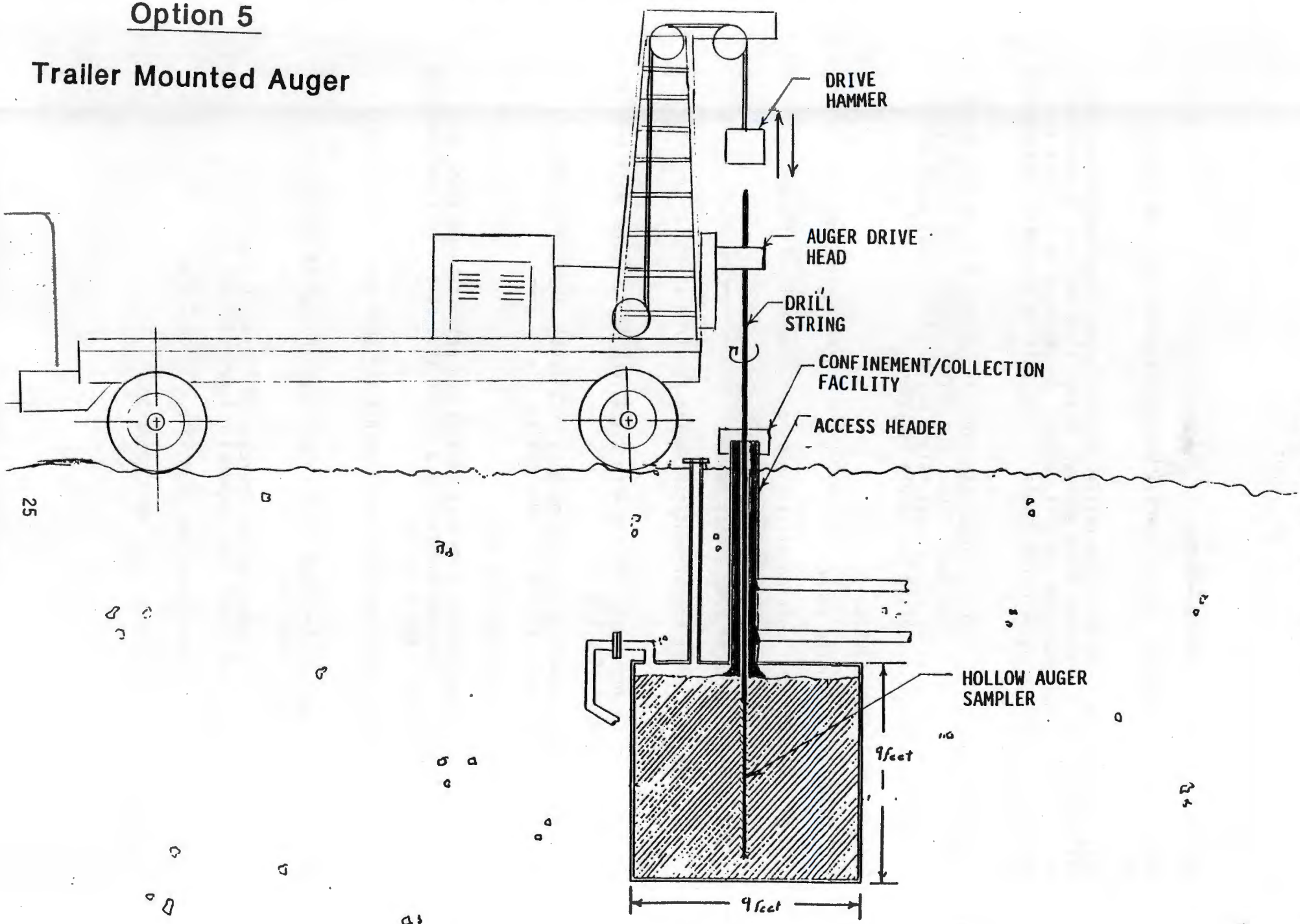

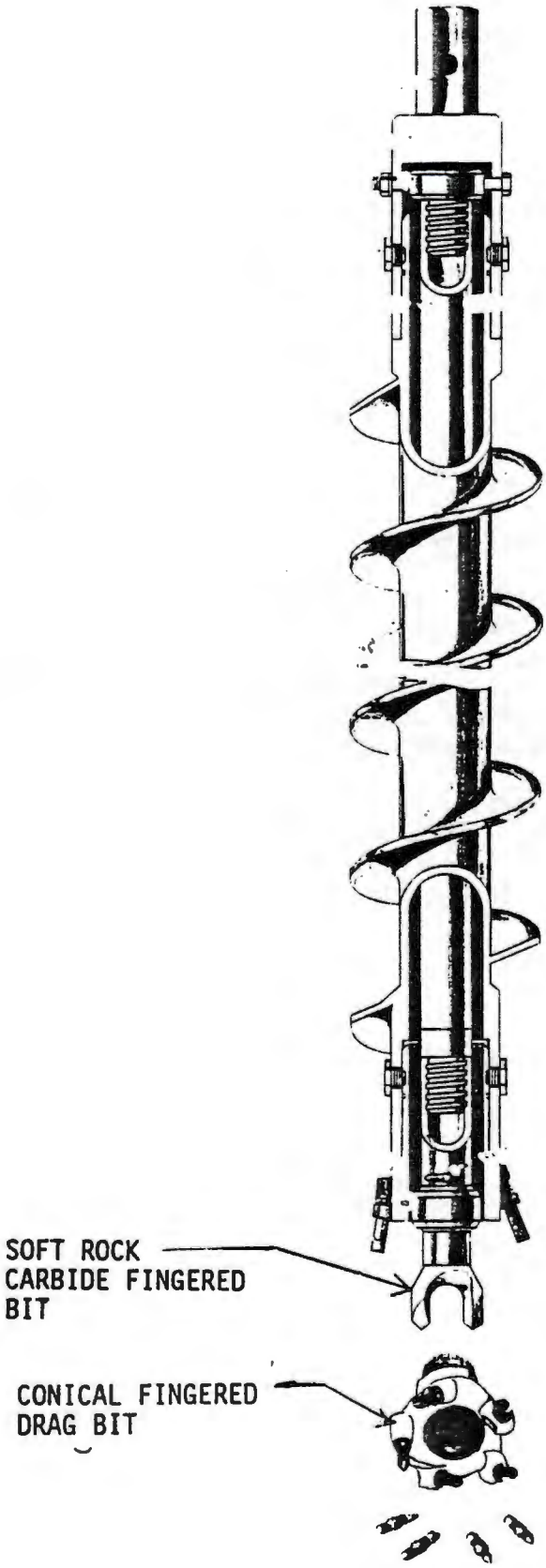

Hollow Auger Sampler

9111394056 6

Option 6 - Truck-mounted, remote-operated Longyear 34 or Longyear 44 (vent header)

Work Force Organization - Tank Farm Services - Jim Lee - Longyear 34
Environmental Field Services - Don Moak - Longyear 44

Drill Description - See Option 1, Drill Description (Longyear 34)
See Option 2, Drill Description (Longyear 44)

Equipment Description - Christensen Wireline (A series) - The small "A" series drill string and bit will narrowly fit down the 2-inch, sch 40, SST vent pipe. The inner tube sampler will be equipped with a basket retainer which will pick up a 1.32-inch core sample. The drill bit will be special made by Diamond Drill to assure the bit destructs when contact is made with the steel tank bottom.

Sample Method Description

1) Remove top portion of vent header at ground level flange.

2) Position drill over vent header.

3) Set up drill string with A Series Christensen wireline drill string and specially-made Diamond Drill bit.

4) Every 24 inches, or when sampler blocks off, pull inner tube sampler and recover sample. Longer core barrels will be used if shielding and core recovery are not problems.

5) Stop drilling when hydraulic pressure suddenly increases or drill string stops advancing. This should occur at approximately 9 feet.

6) Pull drill string and decontaminate at 2706 T Plant.

9111894057

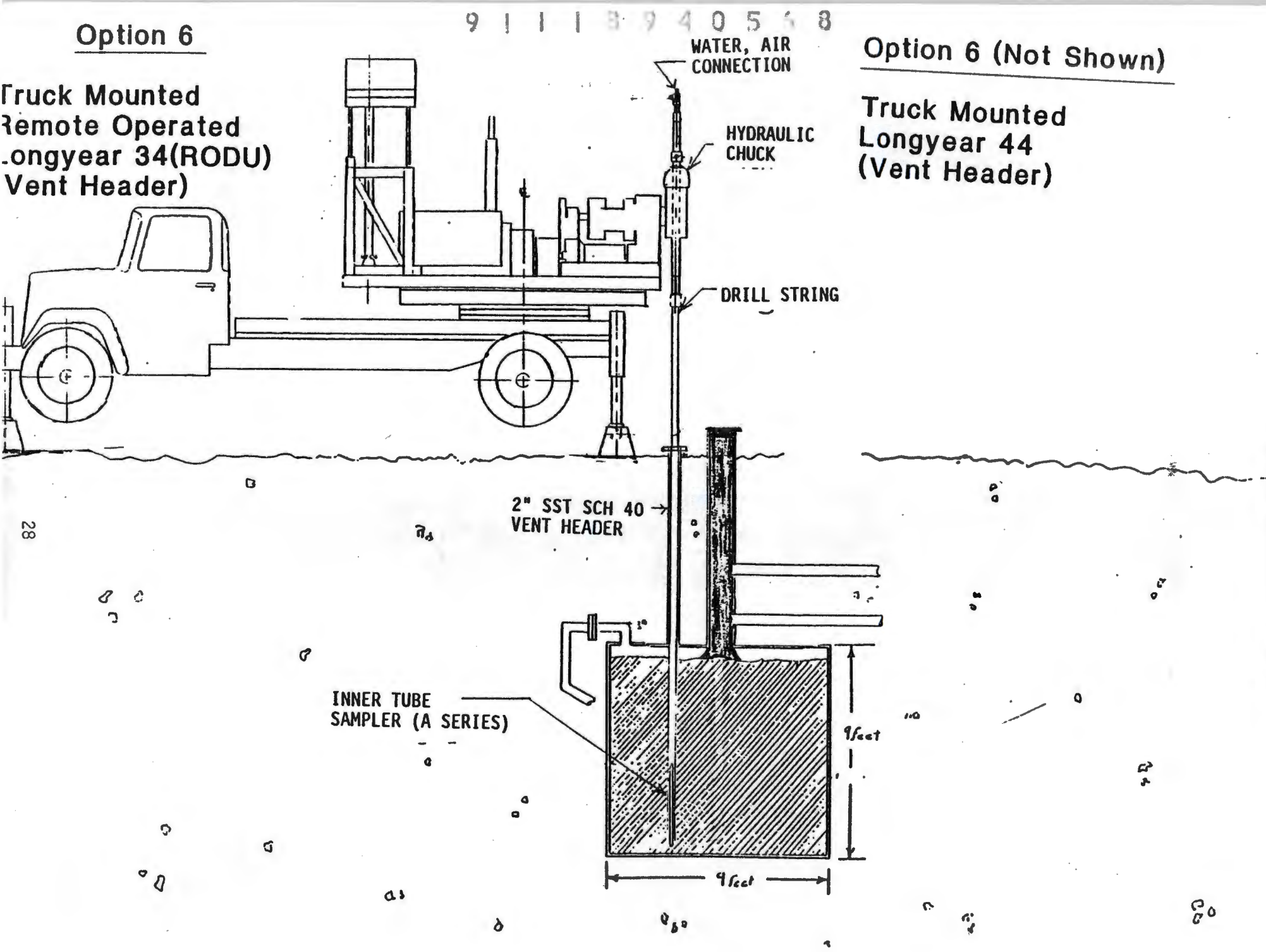
Option 6
Truck Mounted
Remote Operated
Longyear 34(RODU)
(Vent Header)
WATER, AIR
CONNECTION
HYDRAULIC
CHUCK
DRILL STRING
2" SST SCH 40
VENT HEADER
INNER TUBE
SAMPLER (A SERIES)
9 feet
9 feet
Option 6 (Not Shown)
Truck Mounted
Longyear 44
(Vent Header)

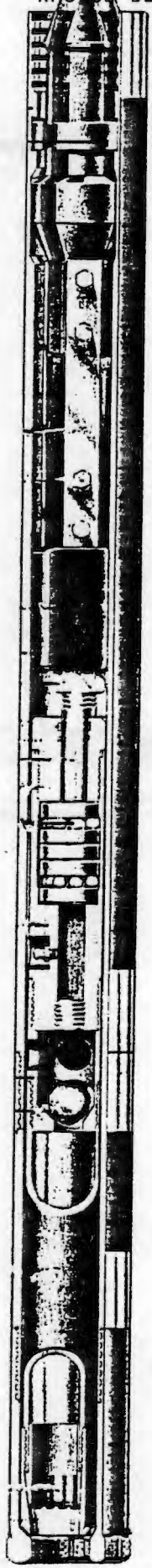

A Series Rotating
Corebarrel Wireline System
(Christensen)

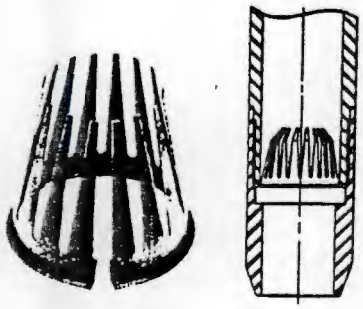

Spring Type

Sample Retainer

9 1 1 1 3 2 4 0 5 1 9

Option 7 - Supernatant Sampler

Introduction

The supernatant (liquid) sampler is not an option in itself. The sampler is adaptable to any one of the core drilling options and will be used with one if enough liquid is present in the tank. The supernatant sampler is an inexpensive liquid sampler presently in use at the 200 Areas Tank Farms. The idea is that if enough fluid exists between the crushed limestone, it will leach into the drill string when the core sampler is removed. The supernatant sampler would then be lowered down the drill string to recover a liquid sample.

Equipment Description

The current supernatant sampler is strictly used for low viscosity liquid sampling. The sampler consists of a 125-ml weighted glass bottle, a rubber cork, and waxed string. The string is first connected to the glass bottle, then to the cork top, then to the hoist or operator.

The supernatant sampler is currently being redesigned per WHC-SD-WM-WP-014. The newly designed sampler will be slightly larger and facilitate a more positive top-sealing method. However, the newly designed sampler will work on the same principle as the current sampler.

Sample Method Description

1) Measure fluid level by lowering a measuring stick down the drill string.

2) Cork bottle and lower down the drill string to a predetermined liquid depth.

3) When bottle is at sampling level, jerk on string to remove cork from bottle top.

4) When bottle is assumed full, pull bottle from hole. As the bottle is being pulled, a wash system for the string and bottle should be in effect.

5) When the bottle is at the surface, the cork will be reinstalled.

6) Repeat steps 2-5 until enough liquid constitutes a sampler.

9 1 1 1 3 9 4 0 5 7 0

OPTION 7
SUPERNATENT SAMPLER

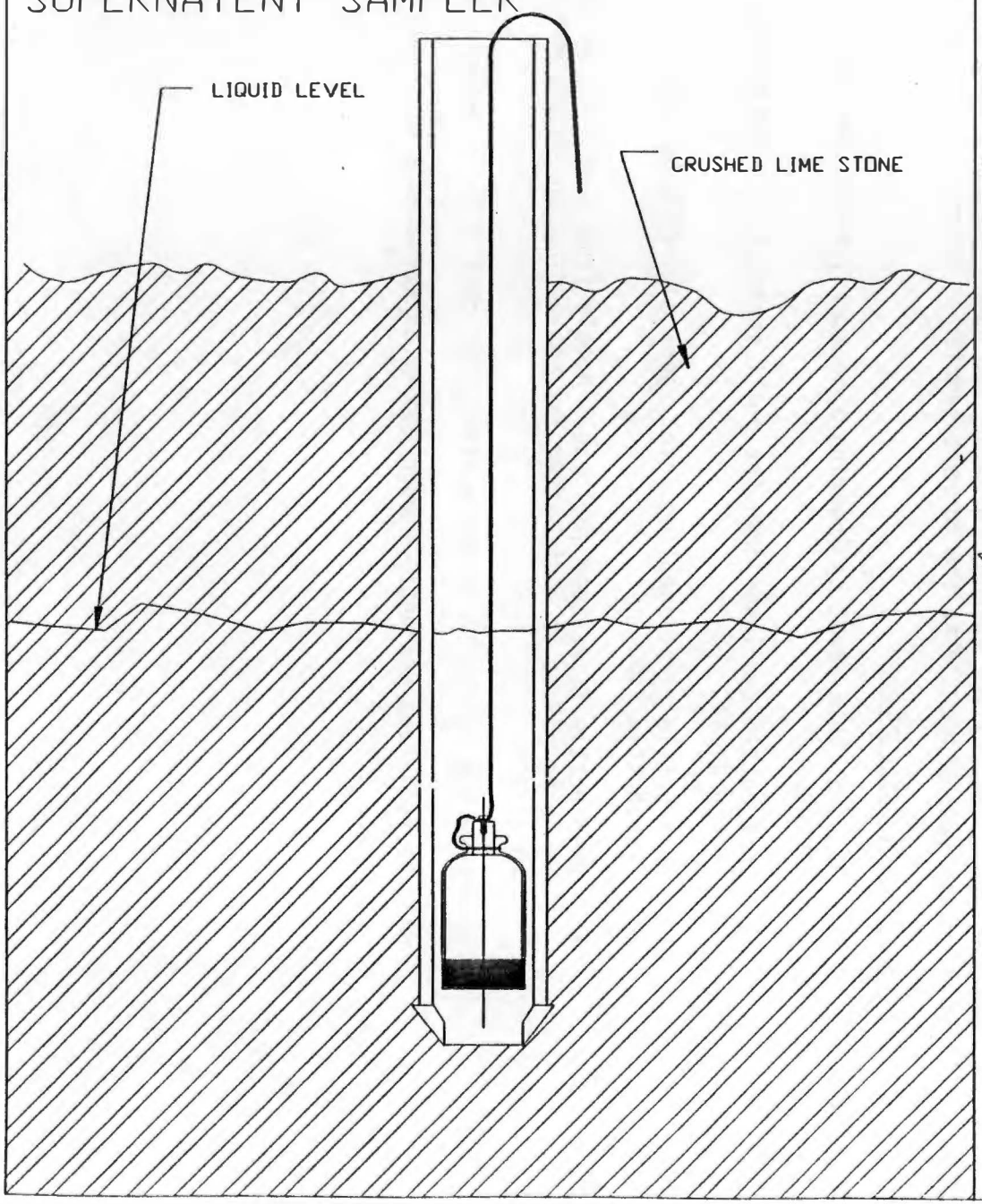

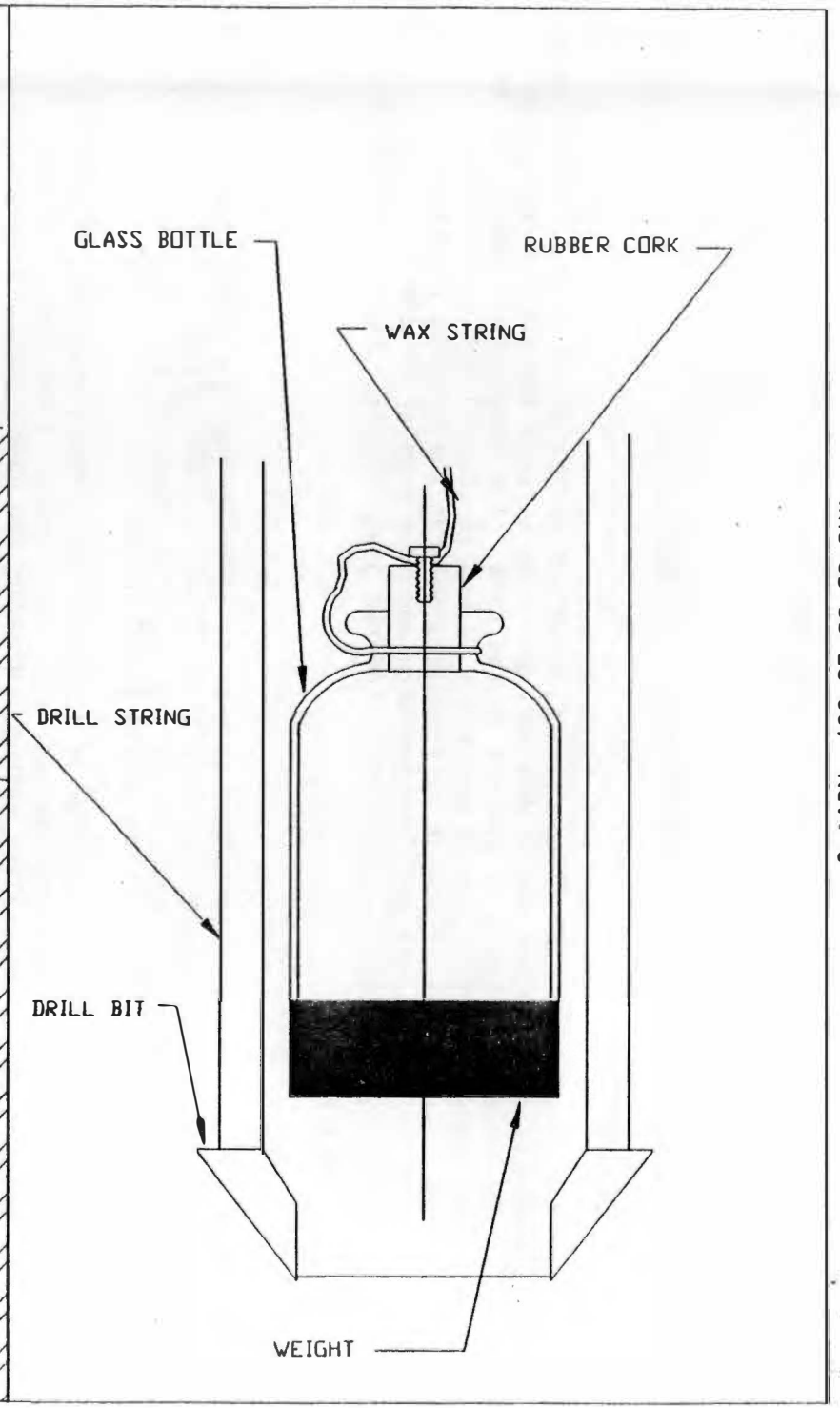

7.0 MODIFIED KEPNER TREGOE EVALUATION OF ALTERNATIVE SAMPLING OPTIONS

THIS PAGE INTENTIONALLY LEFT BLANK

9 1 1 1 3 9 4 0 5 7 2

THIS PAGE INTENTIONALLY
LEFT BLANK

Truck-Mounted
Remote-Operated
Longyear 34 (Access Header)

OPTION 1 Suboption 1

Category	Dollars	Comments	
Cost		Estimates are based on $47/hr	
Equipment Set Up	5,640	5 people at (3) 8-hr shifts, mobilization, build greenhouse	
Site Preparation	1,880	5 people at (1) 8-hr shift, removing vent header, setting up barricades	
Drilling Time	6,768	9 people at (2) 8-hr shifts, 2 RPTs, 1 operator (drill), 4 operators'support, 1 supervisor, .5 pipefitters, .5 consultants	
Sample Recovery	1,504	2 people at (2) 8-hr shifts, approximately 6 samples	
Equipment Cost	45,800	6 sludge samplers, 2 bits, drill string, grout	
Waste Disposal	1,504	2 people at (2) 8-hr shifts, grout shavings	
Equipment Teardowns	7,520	5 people at (4) 8-hr shifts, includes grout sealing of the hole	
Decon & Dispose of Equipment	3,760	2 people at (5) 8-hr shifts	74,376
		20% contingency	14,875
		Total Drill Dollars	$89,251
Document Modifications	7,520	1 man month, containment/collection facility	
Document Work Done	3,760	.5 man month, core sampling data sheet, chain of custody record	
Document Procedures	3,760	.5 man month	
Document Initiating Papers	7,520	1 man month, Engineering Spec, JSA, PRs, sample plan	22,560
		20% contingency	4,512
		Total Documentation Work	27,072
		Total Work	$116,323

Truck-Mounted
Remote-Operated
Longyear 34 (Access Header)

OPTION 1 Suboption 1

Weight	Category	Comments	1-10 Ranking	Weight x Ranking Count
	Drilling Considerations			
10	Hard Sample Recovery Confidence	The hard sample is low recovery because inner barrel rotates, bit is large, and rotary valve does not always close.	2	20
5	Versatility in Drilling Different Formations	Not very versatile because intended for specific sludge sampling.	2	10
2	Radiation Protection Potential	Very good. If sample is found to be very hot, the shielding protection would be there.	10	20
2	Liquid Sample Recovery	Very good for sludge or liquid.	10	20
		Total		70

Truck-Mounted
Remote-Operated
Longyear 34 (Access Header)

OPTION 1 Suboption 1

Weight	Category	Comments	1-10 Ranking	Weight x Ranking Count
	Critical Path Considerations			
5	Equipment Availability	Low. This drill has many jobs and is very hard to schedule.	2	10
5	New Design/Modifications	Fair. New design would include confinement/collection facility for grout shavings.	5	25
3	Procedure Changes	Good. Minimal procedure change because of existing procedures. Collection facility procedures need to be generated.	8	24
3	Training	Good. Minimal training because crew is familiar with drill techniques.	8	24
5	Documentation of Start Work	Approximately 2 months.	5	25
3	Documentation of End Work	Approximately 1 month.	5	15
		Total		123

Truck-Mounted
Remote-Operated
Longyear 34 (Access Header)

OPTION 1 Suboption 1

Weight	Category	Comments	1-10 Ranking	Weight x Ranking Count
	Risks			
15	Potential for Radiological Contamination of Personnel	Very low. If a sample is found highly contaminated, remote operation can be utilized.	8	120
5	Potential for Radiological Contamination of Equipment	Very low. The drill is presently regulated (contaminated) where potential exists.	9	45
15	Potential for Personal Injury	Very low. Crew is experienced and does not need new training.	8	120
5	Potential for Equipment Breakage	Moderate reliability in drill but sludge sampler has a failure history.	4	20
		Total		305

Truck-Mounted
Remote-Operated
Longyear 34 (Access Header)

OPTION 1 Suboption 2

Category	Dollars	Comments	
Cost		Estimates are based on $47/hr	
Equipment Set Up	6,580	5 people at (3.5) 8-hr shifts, mobilization, build greenhouse, modify drill for commercial equipment.	
Site Preparation	1,880	5 people at (1) 8-hr shift, removing vent header, setting up barricades	
Drilling Time	5,076	9 people at (1.5) 8-hr shifts, 2 RPTs, 1 operator (drill), 4 operators, 1 supervisor, .5 pipefitters, .5 consultants	
Sample Recovery	1,504	2 people at (2) 8-hr shifts, approximately 6 samples	
Equipment Cost	10,500	Complete system with 2 bits and 4 inner samplers, grout	
Waste Disposal	1,504	2 people at (2) 8-hr shifts, grout shavings, paper wraps	
Equipment Teardowns	7,520	5 people at (4) 8-hr shifts, includes grout sealing of hole	
Decon & Dispose of Equipment	3,760	2 people at (5) 8-hr shifts	38,324
		20% contingency	7,664
		Total Drill Dollars	$45,988
Document Modifications	11,280	1.5 man months, containment/collection facility. Modify drill for commercial equipment.	
Document Work Done	3,760	.5 man month, core sampling data sheet, chain of custody record	
Document Procedures	5,640	.75 man month	
Document Initiating Papers	7,520	1 man month, Engineering Spec, JSA, PRs, sample plan	28,200
		20% contingency	5,640
		Total Documentation	33,840
		Total Work	$79,828

Truck-Mounted
Remote-Operated
Longyear 34 (Access Header)

OPTION 1 Suboption 2

Weight	Category	Comments	1-10 Ranking	Weight x Ranking Count
	Drilling Considerations			
10	Hard Sample Recovery Confidence	Very good. With the versatility of changing out the inner barrel, sample recovery is assured.	9	90
5	Versatility in Drilling Different Formations	Very good. With same outer barrel, three inner barrels can be utilized.	9	45
2	Radiation Protection Potential	Fair. If sample is found too hot to manually handle, shielding can be retrofitted and installed.	7	14
2	Liquid Sample Recovery	Poor. Core sampler will only capture liquid retained by limestone pours.	2	4
		Total		153

Truck-Mounted
Remote-Operated
Longyear 34 (Access Header)

OPTION 1 Suboption 2

Weight	Category	Comments	1-10 Ranking	Weight x Ranking Count
	Critical Path Considerations			
5	Equipment Availability	Low. This drill has many jobs and is very hard to schedule. However, 94mm equipment is readily available.	2	10
5	New Design/Modifications	New design would include confinement/collection facility for grout shavings.	5	25
3	Procedure Changes	Fair. Procedure changes for 94mm system options and collection facility will have to be generated.	5	15
3	Training	Fair. Procedure changes for 94mm system will require some new training.	5	15
5	Documentation of Start Work	Approximately 2 months.	5	25
3	Documentation of End Work	Approximately 1 month.	5	15
		Total		105

Truck-Mounted
Remote-Operated
Longyear 34 (Access Header)

OPTION 1 Suboption 2

Weight	Category	Comments	1-10 Ranking	Weight x Ranking Count
	Risks			
15	Potential for Radiological Contamination of Personnel	Fair. Grout coming to surface could be contaminated.	5	75
5	Potential for Radiological Contamination of Equipment	Very low. The drill is presently regulated (contaminated) where potential exists.	9	45
15	Potential for Personal Injury	Low. Crew is experienced with equipment.	6	90
5	Potential for Equipment Breakage	Moderate reliability in drill and 94mm system.	5	25
		Total		235

Truck-Mounted
Longyear 44
Christensen 94mm Wireline

OPTION 2

Category	Dollars	Comments	
Cost		Estimates are based on $47/hr	
Equipment Set Up	4,700	5 people at (2.5) 8-hr shifts, mobilization, build greenhouse	
Site Preparation	1,880	5 people at (1) 8-hr shift, removal of vent header, setting up barricades	
Drilling Time	4,512	8 people at (1.5) 8-hr shifts, 2 RPTs, 1 operator (drill), 3 operators, 1 supervisor, .5 pipefitters, .5 consultants	
Sample Recovery	1,504	2 people at (2) 8-hr shifts, approximately 3 samples	
Equipment Cost	10,500	Complete 94mm system with 2 bits, and 4 inner samplers	
Waste Disposal	1,504	2 people at (2) 8-hr shifts, grout shavings, paper wraps	
Equipment Teardowns	6,580	5 people at (3.5) 8-hr shifts, includes grout pour to seal hole	
Decon & Dispose of Equipment	3,760	2 people at (5) 8-hr shifts	34,940
		20% contingency	6,988
		Total Drill Dollars	$41,927
Document Modifications	7,520	1 man month, containment/collection facility	
Document Work Done	3,760	.5 man month, core sampling data sheet, chain of custody record	
Document Procedures	3,760	.5 man month	
Document Initiating Papers	7,220	1 man month, Engineering Spec, JSA, PRs, sample plan	22,260
		20% contingency	4,452
		Total Documentation	26,712
		Total Work	$68,640

Truck-Mounted
Longyear 44
Christensen 94mm Wireline

OPTION 2

Weight	Category	Comments	1-10 Ranking	Weight x Ranking Count
	Drilling Considerations			
10	Hard Sample Recovery Confidence	Very good. With the versatility of changing out the inner barrel, sample recovery is assured.	9	90
5	Versatility in Drilling Different Formations	Very good. With 94mm system, three inner barrels can be used. With Longyear 44, long samplers are possible.	10	50
2	Radiation Protection Potential	Poor. If shielding becomes a necessity, a new facility would have to be designed.	4	8
2	Liquid Sample Recovery	Poor. Samplers do not facilitate liquid sampling.	2	4
		Total		152

Truck-Mounted
Longyear 44
Christensen 94mm Wireline

OPTION 2

Weight	Category	Comments	1-10 Ranking	Weight x Ranking Count
	Critical Path Considerations			
5	Equipment Availability	Good. The 94mm system is off the shelf and drill is easily scheduled.	9	45
5	New Design/Modifications	New design would include confinement/collection facility.	5	25
3	Procedure Changes	Fair. Only slight modifications to existing procedures for 94mm and collection facility.	5	15
3	Training	Good. Crew needs simple changes to normal work method.	7	21
5	Documentation of Start Work	Approximately 2 months.	5	25
3	Documentation of End Work	Approximately 1 month.	5	15
		Total		146

Truck-Mounted
Longyear 44
Christensen 94mm Wireline

OPTION 2

Weight	Category	Comments	1-10 Ranking	Weight x Ranking Count
	Risks			
15	Potential for Radiological Contamination of Personnel	Fair. If shielding is required, the risk increases.	4	60
5	Potential for Radiological Contamination of Equipment	High. Drill is presently nonregulated, clean and only used in clean areas.	3	15
15	Potential for Personal Injury	Low. Crew is experienced with equipment.	6	90
5	Potential for Equipment Breakage	Moderate reliability in drill and 94mm system.	5	25
		Total		185

Truck-Mounted
Cable Tool

OPTION 3

Category	Dollars	Comments	
Cost		Estimates are based on $47/hr	
Equipment Set Up	4,700	5 people at (2.5) 8-hr shifts, mobilization	
Site Preparation	11,032	Move 300 cu yards of contaminated soil 6 people at (4) 8-hr shifts, plus removal of vent header	
Drilling Time	6,016	8 people at (2) 8-hr shifts, 2 RPTs, 1 operator (drill), 3 operators, 1 supervisor, .5 pipefitters, .5 consultants	
Sample Recovery	1,504	2 people at (2) 8-hr shifts, approximately 6 samples	
Equipment Cost	4,000	Drive shoe and sampler 4 each, grout	
Waste Disposal	1,504	2 people at (2) 8-hr shifts, grout shavings, paper wraps	
Equipment Teardowns	6,580	5 people at (3.5) 8-hr shifts, includes grout sealing of hole	
Decon & Dispose of Equipment	3,760	2 people at (5) 8-hr shifts	39,096
		20% contingency	7,819
		Total Drill Dollars	$46,915
Document Modifications	7,520	1 man month, containment/collection facility	
Document Work Done	3,760	.5 man month, core sampling data sheet, chain of custody record	
Document Procedures	3,760	.5 man month	
Document Initiating Papers	7,520	1 man month, Engineering Spec, JSA, PRs, sample plan	22,560
		20% contingency	4,512
		Total Documentation	27,072
		Total Work	$73,987

Truck-Mounted
Cable Tool

OPTION 3

Weight	Category	Comments	1-10 Ranking	Weight x Ranking Count
	<u>Drilling Considerations</u>			
10	Hard Sample Recovery Confidence	Fair. Cable tool sample recovery is only good if sample is of soil consistency and hole stands.	5	50
5	Versatility in Drilling Different Formations	Poor. If large limestone or agriget is encountered, cable tool will not be effective.	2	10
2	Radiation Protection Potential	Poor. If shielding becomes a necessity, a new facility would have to be designed.	4	8
2	Liquid Sample Recovery	Poor. Soil samplers proposed for cable tool do not facilitate liquid sampling.	2	4
		Total		72

Truck-Mounted
Cable Tool

OPTION 3

Weight	Category	Comments	1-10 Ranking	Weight x Ranking Count
	Critical Path Considerations			
5	Equipment Availability	Good. Equipment is readily available and more than one cable tool is onsite.	9	45
5	New Design/Modifications	New design would include confinement/collection facility.	5	25
3	Procedure Changes	Good. Procedures for collection facility will have to be generated.	8	24
3	Training	Good. Crew is familiar with sampling method and drill. Collection facility procedures will need to be generated.	9	27
5	Documentation of Start Work	Approximately 2 months.	5	25
3	Documentation of End Work	Approximately 1 month.	5	15
		Total		161

Truck-Mounted
Cable Tool

OPTION 3

Weight	Category	Comments	1-10 Ranking	Weight x Ranking Count
	Risks			
15	Potential for Radiological Contamination of Personnel	High. Pulling complete rod for cable tool makes contamination more likely.	3	45
5	Potential for Radiological Contamination of Equipment	Fair. Drill is presently nonregulated (clean) so any contamination potential is a hazard.	5	25
15	Potential for Personal Injury	Low. Crew is experienced in drilling operations.	8	120
5	Potential for Equipment Breakage	Poor. Drill is dependable but possibility of over stressing access header to failure exists.	2	10
		Total		200

Hot Top for
Grab Sample

OPTION 4

Category	Dollars	Comments		
Cost		Estimates are based on $47/hr		
Equipment Set Up	1,128	3 people at (1) 8-hr shift, build greenhouse		
Site Preparation	12,032	Move 300 cu yards of contaminated soil plus vent header removal, 8 people at (4) 8-hr shifts		
Drilling Time	6,768	3 people at (6) 8-hr shifts, 3 hot taps		
Sample Recovery	1,504	2 people at (2) 8-hr shifts,		
Equipment Cost	10,000	Hot tap machine and (3) 4" valves		
Waste Disposal	N/A			
Equipment Teardowns	1,128	3 people at (1) 8-hr shift		
Decon & Dispose of Equipment	2,256	2 people at (3) 8-hr shifts		32,808
			20% contingency	6,361
			Total Drill Dollars	$39,169
Document Modifications	15,040	2 man months, hot tap ECN		
Document Work Done	3,760	.5 man month		
Document Procedures	11,280	1.5 man month, new procedures		
Document Initiating Papers	7,520	1 man month		37,600
			20% contingency	7,520
			Total Documentation	45,120
			Total Work	$84,289

Hot Tap for
Grab Sample

OPTION 4

Weight	Category	Comments	1-10 Ranking	Weight x Ranking Count
	Drilling Considerations			
10	Hard Sample Recovery Confidence	Good. Either a hand auger or drive sample will be available.	7	70
5	Versatility in Drilling Different Formations	Fair. If very hard formations are found, hand tools will be hard to make penetrations.	5	25
2	Radiation Protection Potential	Poor. All sampling will be manual and local.	1	2
2	Liquid Sample Recovery	Good. The valve could simply be cable tool do not facilitate liquid sampling.	10	20
		Total		117

Hot Tap for
Grab Sample

OPTION 4

Weight	Category	Comments	1-10 Ranking	Weight x Ranking Count
	Critical Path Considerations			
5	Equipment Availability	Good. Hot tap equipment readily available and excavation equipment easily scheduled.	9	45
5	New Design/Modifications	Fair. New hot tap modification must be documented.	5	25
3	Procedure Changes	Poor. New procedures must be developed for hot tapping and manual core sampling.	2	6
3	Training	Fair. Hot tapping and manual core sampling are not new techniques.	5	15
5	Documentation of Start Work	Poor. Due to excavation of contaminated soil, more radiological documentation will be required.	2	10
3	Documentation of End Work	Fair. Same as others.	5	15
		Total		116

Hot Tap for
Grab Sample

OPTION 4

Weight	Category	Comments	1-10 Ranking	Weight x Ranking Count
	Risks			
15	Potential for Radiological Contamination of Personnel	Poor. Since the sample will be taken horizontally and manually, extra precautions will be required.	3	45
5	Potential for Radiological Contamination of Equipment	Poor. Liquid could feed out valve around sample equipment and contaminate surroundings.	2	10
15	Potential for Personal Injury	Good. Manual sample equipment should not pose personal injury threat.	9	135
5	Potential for Equipment Breakage	Good. Hot tap and sample equipment is simple and reliable.	8	40
		Total		230

Trailer-Mounted
Auger

OPTION 5

Category	Dollars	Comments	
Cost		Estimates are based on $47/hr	
Equipment Set Up	4,700	5 people at (2.5) 8-hr shift, mobilization, build greenhouse	
Site Preparation	1,880	5 people at (1) 8-hr shift. remove vent header, set up barricades	
Drilling Time	9,024	8 people at (3) 8-hr shifts, 2 RPTs, 1 operator (drill) 3 operators, 1 supervisor, .5 pipefitters, .5 consultants	
Sample Recovery	2,256	2 people at (3) 8-hr shifts, approximately 6 samples	
Equipment Cost	7,000	Auger and sampler systems	
Waste Disposal	1,504	2 people at (2) 8-hr shifts, grout shavings, paper wraps	
Equipment Teardowns	6,580	5 people at (3.5) 8-hr shifts, includes grout sealing of hole	
Decon & Dispose of Equipment	3,760	2 people at (5) 8-hr shifts	36,704
		20% contingency	7,340
		Total Drill Dollars	$44,044
Document Modifications	7,520	1 man month, contamination/ collection facility	
Document Work Done	3,760	.5 man month, core sampling data sheet, chain of custody record	
Document Procedures	3,760	.5 man month	
Document Initiating Papers	7,520	1 man month, Engineering Spec, JSA, PRs, sample plan	22,560
		20% contingency	4,512
		Total Documentation	27,072
		Total Work	$63,776

Trailer-Mounted Auger

OPTION 5

Weight	Category	Comments	1-10 Ranking	Weight x Ranking Count
	Drilling Considerations			
10	Hard Sample Recovery Confidence	Fair. Sample recovery same as cable tool with drive shoe.	5	50
5	Versatility in Drilling Different Formations	Poor. If large limestone or agriget is encountered, auger sampler will not be effective.	2	10
2	Radiation Protection Potential	Poor. If shielding becomes necessary, a new facility would have to be designed.	4	8
2	Liquid Sample Recovery	Poor. Hollow stem auger proposed does not facilitate liquid sampling.	2	4
		Total		72

Trailer-Mounted
Auger

OPTION 5

Weight	Category	Comments	1-10 Ranking	Weight x Ranking Count
	Critical Path Considerations			
5	Equipment Availability	Good. Equipment is readily available and auger is easily scheduled.	9	45
5	New Design/Modifications	New design would include confinement/collection facility.	5	25
3	Procedure Changes	Good. Procedures for collection facility will have to be generated.	8	24
3	Training	Good. Crew familiar with sampling method.	8	24
5	Documentation of Start Work	Approximately 2 months.	5	25
3	Documentation of End Work	Approximately 1 month.	5	15
		Total		158

Trailer-Mounted Auger

OPTION 5

Weight	Category	Comments	1-10 Ranking	Weight x Ranking Count
	Risks			
15	Potential for Radiological Contamination of Personnel	Fair. Grout coming to surface is potential source of contamination.	5	75
5	Potential for Radiological Contamination of Equipment	High. Auger is presently nonregulated, clean of contamination.	2	10
15	Potential for Personal Injury	Low. Crew is familiar with equipment and drill.	8	120
5	Potential for Equipment Breakage	Fair reliability in auger and equipment.	5	25
		Total		230

Truck-Mounted
Longyear 44 (Vent Header)

OPTION 6

Category	Dollars	Comments	
Cost		Estimates are based on $47/hr	
Equipment Set Up	3,760	5 people at (2) 8-hr shift, mobilization, build greenhouse	
Site Preparation	1,880	5 people at (1) 8-hr shift. remove vent header	
Drilling Time	3,008	8 people at (1) 8-hr shift, 2 RPTs, 1 operator (drill) 3 operators, 1 supervisor, .5 pipefitters, .5 consultants	
Sample Recovery	752	2 people at (1) 8-hr shift, approximately 3 samples	
Equipment Cost	6,000	Complete A-size wireline system with 2 bits and 4 inner tubes	
Waste Disposal	752	2 people at (1) 8-hr shift, paper wraps	
Equipment Teardowns	3,760	5 people at (2) 8-hr shifts	
Decon & Dispose of Equipment	3,760	2 people at (5) 8-hr shifts	23,672
		20% contingency	4,734
		Total Drill Dollars	$28,406
Document Modifications	N/A		
Document Work Done	3,760	.5 man month, core sampling data sheet, chain of custody record	
Document Procedures	3,760	.5 man month	
Document Initiating Papers	7,220	1 man month, Engineering Spec, JSA, PRs, sample plan	14,740
		20% contingency	2,948
		Total Documentation	46,094
		Total Work	$46,094

Truck-Mounted
Longyear 44 (Vent Header)

OPTION 6

Weight	Category	Comments	1-10 Ranking	Weight x Ranking Count
	<u>Drilling Considerations</u>			
10	Hard Sample Recovery Confidence	Good. Non rotating inner barrel wireline systems work good in hard core sampling.	8	80
5	Versatility in Drilling Different Formations	Good. Bit changeouts will accommodate grout and limestone penetrations.	9	45
2	Radiation Protection Potential	Poor. If shielding becomes necessary, a new facility would have to be designed.	4	8
2	Liquid Sample Recovery	Poor. Samplers do not facilitate liquid sampling.	2	4
		Total		137

Trailer-Mounted
Longyear 44 (Vent Header)

OPTION 6

Weight	Category	Comments	1-10 Ranking	Weight x Ranking Count
	Critical Path Considerations			
5	Equipment Availability	Good. A series wireline systems are off the shelf and drill is easily scheduled.	9	45
5	New Design/Modifications	Very good. No new procedures need to be generated.	10	50
3	Procedure Changes	Very good. No new procedures need to be generated.	10	30
3	Training	Very good. Crew familiar with wireline procedures.	10	30
5	Documentation of Start Work	Good. No new design will eliminate approximately 1 man month.	7	35
3	Documentation of End Work	Approximately 1 man month.	5	15
		Total		205

Trailer-Mounted
Longyear 44 (Vent Header)

OPTION 6

Weight	Category	Comments	1-10 Ranking	Weight x Ranking Count
	Risks			
15	Potential for Radiological Contamination of Personnel	Low. No contaminated grout should come to surface.	7	105
5	Potential for Radiological Contamination of Equipment	High. Drill is presently all nonregulated, clean, and only used in clean areas.	3	15
15	Potential for Personal Injury	Low. Crew experienced with equipment.	6	90
5	Potential for Equipment Breakage	Moderate reliability in drill and wireline.	5	25
		Total		235

8.0 SUMMARY OF OPTION EVALUATION

Category	Options						
	1 suboption 1	1 suboption 2	2	3	4	5	6
	Truck-Mounted Remote-Oper. Longyear 34 (Access Hdr)	Truck-Mounted Remote-Oper. Longyear 34 (Access Hdr)	Truck-Mounted Longyear 44 Christensen 94mm Wireline	Truck-Mounted Cable Tool	Hot Tap for Grab Sample	Trailer-Mounted Auger	Truck-Mounted Longyear 44 (Vent Header)
Cost (dollars)	$116,323	$79,828	$68,640	$73,987	$84,289	$63,776	$46,094
Drilling Consider-tions (Counts)	70	153	152	72	117	72	137
Critical Path Consider-tions (Counts)	123	105	146	161	116	158	205
Risks (Counts)	305	235	185	200	230	230	235
Totals (Counts)	498	493	483	433	463	460	577

NOTE: All options are Impact Level 3

THIS PAGE INTENTIONALLY
LEFT BLANK

9.0 DISCUSSION

The evaluation of sampling alternatives was based on a modified Kepner Tregoe approach. A weighting was given to each consideration then multiplied by a ranking to give a number of counts. The counts were added to determine the superior alternative. All considerations were factored except for cost which is too difficult to weigh or rank.

As the summary sheet indicates, Option 6 (Truck-Mounted Longyear 44 Vent Header) is the superior alternative in both considerations and cost analysis. The reason for this is mainly due to the fact that the sampling is being done from the open vent header rather than the grouted access header. Eliminating the grout drilling will eliminate drilling manhours, design for the confinement/collection facility and lessen the risk of contamination spreading. Option 6 is attractive in scheduling and training considerations as well. Since no new design or drilling techniques will be implemented and the Longyear 44 drill is readily equipped and scheduled, critical path to begin drilling should just be the initial paper work. This could be a big factor if sampling on 241-CX-72 is to be done at the same time because half the mobilization dollars could then be saved. An "A" series rotating core barrel with basket retainer will give a high level of confidence for hard sample recovery. This sampler is not equipped to take liquid samples but will bring up what the limestone has retained in its pores. However, a liquid cover is not expected. The Longyear 44 is presently a noncontaminated (nonregulated) drill and with the right control should stay that way for this sampling operation.

The second choice would be Option 2 (Truck-Mounted Longyear 44 with Christensen 94mm Wireline) if all things are considered. Even though the total counts are slightly lower for Option 2 than Option 1 Suboption 1 or 2, the cost makes Option 2 the better choice. If the vent header would for some reason become inaccessible, Option 2 would become the preferred sampling alternative. It gives the best versatility in drilling and hard sample recovery confidence. The 94mm wireline system cannot be used in the vent header because of its large size.

Option 1, Suboption 1 (RODU through access header) rates high on counts because of its low risk factor. However, the cost of the sludge sampler and the low confidence in getting a hard sample makes this option undesirable.

Option 3 (Truck-Mounted Cable Tool) rates very low on counts with high cost. the low count number is a result of poor sample recovery confidence and the risk of damaging the access header when hammering grout. The high cost is a result of excavating the contaminated soil to measure tank depth.

Option 4 (Hot Tap for Grab Sample) rates high on counts but is expensive. The sampling technique requires tank penetrations and excavation of contaminated soil so hidden problems or risks might have been overlooked in this option. The high cost is a result of excavating the contaminated soil.

Option 5 (Trailer-Mounted Auger) rates fairly high in counts and low in cost. If for some reason Options 2 and 6 would be eliminated, the auger should be strongly considered.

If only liquid/sludge was the sample consistency, Option 1, Suboption 1 or Option 2, Suboption 1 would become the preferred method. Both these options utilize the 1" sludge sampler which can recover a liquid but have low recovery of solids.

Each of the options were evaluated on a cost basis for drilling one sample hole. Reference 12, as well as SW 846 and this study criteria, indicates the requirement to drill two holes to satisfy statistical error in inventory and concentration levels of the tank. Drilling two holes does not change the recommended options. It only increases the cost of each option breakdown. If Option 6 is utilized in the vent header, it will also be used in the grouted access header for the second hole. If one of the other options are utilized, two holes will be made as far apart as possible through the access header.

Documentation for each option will be similar. As a minimum, documents that will be generated are Engineering Spec, Job Safety Analysis, Sample Plan, Health and Safety Plan, Radiation Work Procedure, Radiation Zone Entry Permit, Chemical Protective Clothing form, Purchase Requisitions, Core Sampling Data Sheets, and Chain of Custody Record.

Since this study was only concerned with sampling, decommissioning considerations were not evaluated. However, Options 3 (Truck-Mounted Cable Tool) and 4 (Hot Tap) both require excavation of the tank which would be advantageous for a decommissioning disposition. Eventually verification of physical dimensions and the tanks structural integrity will be needed to evaluate tank removal options or justify leaving as is.

10.0 RECOMMENDATIONS

Although there are many uncertainties and assumptions with the evaluation of sampling alternatives, an educated recommendation can be made.

I recommend sampling 241-CX-71 first through the vent header and secondly through the access header. The equipment and method should be as described by Option 6 and utilizing the truck-mounted Longyear 44. Before sampling, as an added safeguard, I suggest sending a radiation probe down the vent header to verify the expected low radiation levels.

Set up the drill with an A Series Rotating Inner Barrel Wireline System made by Christensen. Lower the drill string down the empty vent header and take the first sample with a 24" inner sampler with basket retainer. Slowly raise the sample and have RPT determine if shielding will be required. If shielding is needed, either bring in the remote-operated Longyear 34 (RODU) which has shielding, or design and build temporary shielding. The 24" inner sampler will adapt to RODU shielding system. If shielding is not required as expected, the 24" sampler will be changed out for a 5-foot sampler and sampling can be completed with two samplers.

A second sample hole will be to satisfy the statistical error in inventory and concentration levels. The second sample hole should be made through the access header. The same A-series equipment and drill can be used to drill this hole, including the grout cap. The grout will not be tested for hazardous components but will be screened radiologically and disposed of appropriately.

When drilling both the grout and the limestone, a bevel tooth bit, specially-made by Diamond Drill Company, will be utilized. The bit has a special matrix which self-destructs when it comes in contact with steel. This will assure the tank bottom is not breached. All drilling shall be done without cooling water or air so low chuck hydraulic pressure should be used to prevent burn-in or blockage. Frequent core retrievals should also be performed to clear hole and prevent bit overheating.

If enough liquid is encountered to recover, a minimum of two liquid samples per hole will be taken. I recommend taking the liquid samples with the Supernatant Sampler down the drill string (see Option 7). If the newly designed Supernatant Sampler is developed and will adapt to the drill string, I recommend using it to sample the tank's liquid. If the tank's liquid sampling is needed before the Supernatant Samplers' development is complete, the present Supernatant Sampler is recommended. Supernatant Samplers are recognized in SW 846 Vol. II Section 9 as a weighted bottle for sampling free-flowing slurries. The Supernatant Sampler chosen must also be built to the most current specifications in ASTM D270 and E300 or otherwise justified in the sampling plan. The Composite Liquid Waste Sampler (Coliwasa) was also considered, but was not as well suited for sampling the tank. SW 846 Vol. II, as well as EMSL Vol. II categorize the Coliwasa Sampler as a sampler for drums and shallow tanks. Tank 241-CX-71 will require samples to be taken approximately 20 feet from the surface, which makes Coliwasa sampling a more difficult and expensive alternative. However, if the available Supernatant Samplers are for some reason found unsuitable, the Coliwasa Sampler would be the second choice for liquid samplers.

The sample retrieval difficulty at the surface is still unknown because of the unknown contamination levels in the limestone. As a minimum, a greenhouse should be built to examine the samples. It might be possible to bag or jar the samples at the site and reuse the inner tube samplers. The samples will be sent to 222S Lab, PNL 325 Lab or outside vendor for evaluation.

The cost estimate to drill and document the first hole through the vent header will be approximately $46,000 and an additional $23,000 to drill and document the second hole through the access header. The total for both holes will be approximately $69,000. If liquid sampling is accomplished, an estimated increase of $5,000 would be required. The $5,000 would fund the recovery of four samples. The cost estimates should not be taken as hard pricings. However, since all the estimates were done assuming similar variables, the proportional cost differences between options is valid.

General Requirements

1. Drilling shall be in accordance with the International Association of Drill Contractors Safety Manual (IADC).

2. Drilling shall be in accordance with ASTM Volume 4.08.

3. Sampling shall be in accordance with applicable sections of SW 846, Volume II and applicable DOE Orders.

4. The engineering documents shall be in accordance with Standard Engineering Practices Manual WHC-CM-6-1.

5. The sampling plan shall be in accordance with applicable sections of SW 846.

9 1 1 1 3 9 4 0 6 0 5

11.0 RECOMMENDED ALTERNATIVE SCHEDULE

SAMPLING SCHEDULE ESTIMATE

TRUCK MOUNTED LONGYEAR 44 (VENT HEADER)

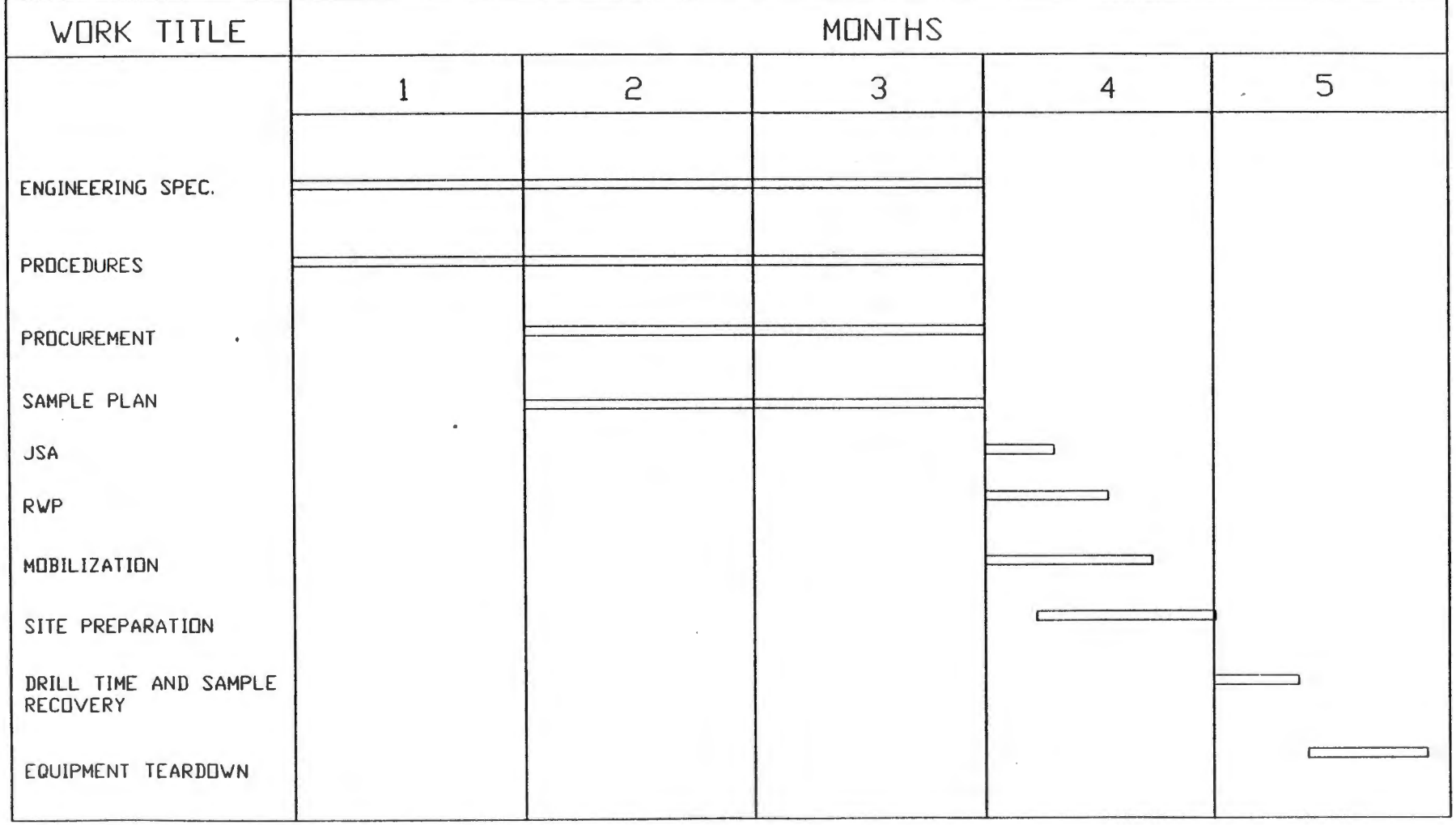

THIS PAGE INTENTIONALLY
LEFT BLANK

12.0 REFERENCES

1. Memo, Harlow to Teal, "Disposition and Isolation of Tanks 270-E1, 270-W, 241-CX-70, 241-CX-71, and 241-CX-72," July 2, 1974.

2. One page; source unknown but is assumed results of sample taken July 1, 1974 (see Reference 1).

3. HW-52860, Appendix L, Decontaminating Solutions.

4. Drawing H-2-4535, Rev. 3.

5. SD-WM-SAR-003, issued.

6. HW-72666, issued, "Hot Semiworks Strontium-90 Recovery Program."

7. D. E. Bowers, D0105ER00001, Rev. 0, issued, "Preliminary Study for Decontaminaiton, and Decommissioning of Strontium Semiworks," November 13, 1979.

8. J. M. Marzec, SD-DD-ES-003, issued, "Strontium Semiworks Decommissioning Engineering Study."

9. SD-DD-FL-001, Rev. 0, Page 67.

10. G. N. Boechler, SD-DD-WP-001, Rev. 0, "Engineering Work Plan 241-CS-71."

11. Memo, D. R. Speer to D. E. Ball, "Methods to Sample and Decommission Tank 241-CX-72 and Methods to Sample Tank 241-CX-71, "March 22, 1989.

12. Memo, L. Jensen to G. N. Boechler, "Characterization of Waste in Tank 241-CX-71," June 16, 1989.

13. Drawings H-2-4420, Rev. 2, SK-2-56955, Rev. 0, H-2-4535, Rev. 3.

14. Tri-Party Agreement, May 15, 1989.

9111394067

THIS PAGE INTENTIONALLY
LEFT BLANK