# AR TARGET SHEET

The following document was too large to scan as one unit, therefore it has been broken down into sections.

DOCUMENT # SD- HS - SAR-001

EDMC # 0035786

SECTION 2 OF 3

THIS PAGE INTENTIONALLY
LEFT BLANK

9413219.0431

PUREX FSAR

# CHAPTER 6.0 PROCESS SYSTEMS

9413219.0432

This page intentionally left blank.

CONTENTS

6.0 Process Systems . . . . . 6-1

6.1 Process Description . . . . . 6-1
6.1.1 Narrative Description . . . . . 6-1
6.1.2 Major Components . . . . . 6-8
6.1.3 Operational Control . . . . . 6-8
6.1.4 Safety Criteria and Assurance . . . . . 6-15

6.2 Process Chemistry and Physical Chemistry Principles . . . . . 6-32
6.2.1 Zirflex Process Chemistry . . . . . 6-32
6.2.2 Chemistry of Fuel Element Dissolution . . . . . 6-35
6.2.3 Solvent Extraction Process Chemistry . . . . . 6-37
6.2.4 Plutonium Nitrate Conversion/Calcination Process Chemistry . . . . . 6-37
6.2.5 Nitric Acid Recovery Process Chemistry . . . . . 6-42
6.2.6 Solvent Recovery System Process Chemistry . . . . . 6-43

6.3 Fuel Receipt and Handling . . . . . 6-44
6.3.1 Functional Description . . . . . 6-44
6.3.2 System Description . . . . . 6-46
6.3.3 Safety Criteria and Assurance . . . . . 6-53

6.4 Chemical Process Systems . . . . . 6-59
6.4.1 Fuel Decladding and Dissolution . . . . . 6-59
6.4.2 Solvent Extraction . . . . . 6-78
6.4.3 Plutonium Oxide Production . . . . . 6-127
6.4.4 Recycle and Recovery Systems . . . . . 6-149
6.4.5 Product Rework Systems . . . . . 6-167

6.5 Process Support Systems . . . . . 6-173
6.5.1 Process Instrumentation and Control Systems . . . . . 6-173
6.5.2 Nitric Acid Recovery System . . . . . 6-219
6.5.3 Building Sumps . . . . . 6-234
6.5.4 Utilities and Services . . . . . 6-241

6.6 Control Rooms . . . . . 6-248
6.6.1 Functional Description of Control Rooms . . . . . 6-248
6.6.2 Safety Criteria and Assurance for Control Rooms . . . . . 6-264

6.7 Sampling--Analytical . . . . . 6-266
6.7.1 Process Samplers . . . . . 6-266
6.7.2 Analytical Laboratory . . . . . 6-271

6.8 Uranium Product Handling System . . . . . 6-283
6.8.1 Functional Description . . . . . 6-283
6.8.2 Major Components . . . . . 6-283
6.8.3 Safety Criteria and Assurance . . . . . 6-283
6.8.4 Operational Control . . . . . 6-285

6.9 References . . . . . 6-285

FIGURES:

6-1. PUREX Process Flow Diagram . . . . . 6-3
6-2. PUREX Plant Input-Output Diagram--Standby . . . . . 6-9
6-3. PUREX Plant Input-Output Diagram--Operation . . . . . 6-10
6-4. Plutonium Polymerization at Various Plutonium and Acid Concentrations and Temperatures . . . . . 6-21
6-5. N Reactor Fuel Canisters . . . . . 6-48
6-6. K Basin Fuel Cask . . . . . 6-49
6-7. N Basin Fuel Cask . . . . . 6-50
6-8. N Reactor Cask Car . . . . . 6-51
6-9. PUREX "Low-Boy" Cask Car . . . . . 6-52
6-10. Dissolver Operation--Decladding . . . . . 6-60
6-11. Dissolver Operation--Metathesis . . . . . 6-61
6-12. Dissolver Operation--Uranium Dissolution . . . . . 6-63
6-13. Annular Dissolver . . . . . 6-65
6-14. Downdraft Condenser . . . . . 6-67
6-15. Accountability Measurement and Sampling . . . . . 6-68
6-16. Codecontamination Flowsheet . . . . . 6-79
6-17. Partitioning Flowsheet--Uranium, Plutonium, Neptunium . . 6-81
6-18. Partitioning Flowsheet--Uranium . . . . . 6-82
6-19. Final Uranium Cycle Flow Chart . . . . . 6-84
6-20. Second Plutonium Cycle Flow Chart . . . . . 6-85
6-21. Third Plutonium Cycle Flow Chart . . . . . 6-86
6-22. Hanford PUREX Pulse Column . . . . . 6-88
6-23. Standard Tank . . . . . 6-90
6-24. PUREX Concentrator . . . . . 6-92
6-25. 2AF Tank . . . . . 6-94
6-26. 3A Feed Tank . . . . . 6-95
6-27. Product Receiver Tank . . . . . 6-96
6-28. 2A Column . . . . . 6-97
6-29. 2B Column . . . . . 6-98
6-30. 3A Column . . . . . 6-99
6-31. 3B Column . . . . . 6-100
6-32. 3BP Stripper . . . . . 6-101
6-33. 3BP Concentrator . . . . . 6-102
6-34. Flow Chart--Plutonium Oxide Production Facility . . . . . 6-129
6-35. Precipitator Vessel . . . . . 6-134
6-36. Vacuum Drum Filter . . . . . 6-135
6-37. Calciner . . . . . 6-137
6-38. Product Scalper . . . . . 6-138
6-39. Plutonium Oxide Powder Blender . . . . . 6-139
6-40. Can Filler Conveyor . . . . . 6-141
6-41. Flowsheet--Backcycle Waste System . . . . . 6-150
6-42. E-H4 Sectionalized Concentrator . . . . . 6-151
6-43. Organic System Flow Chart . . . . . 6-157
6-44. Tanks (TK-G1 and TK-R1) . . . . . 6-160
6-45. Tanks (TK-G2 and TK-R2) . . . . . 6-161
6-46. Tanks (TK-G5 and TK-G7) . . . . . 6-162
6-47. TK-L11 Piping and Solution Transfer Systems . . . . . 6-170
6-48. H2 Interface Control System . . . . . 6-195
6-49. Typical Process Tank . . . . . 6-201
6-50. Detail of Jet Assembly . . . . . 6-203
6-51. Typical PUREX "A"-Type Column . . . . . 6-204

FIGURES: (Continued)

6-52. Typical PUREX Reboiler with an Original Organic Stripper Tower . . . . . 6-206
6-53. First Decontamination and Partition System--In-Line Monitors . . . . . 6-211
6-54. Second and Third Plutonium Systems--In-Line Monitors . . 6-212
6-55. Final Uranium System--In-Line Monitors . . . . . 6-213
6-56. Hydrogen-Ammonia Gas Monitor System . . . . . 6-214
6-57. Nitrite Monitor System . . . . . 6-216
6-58. Schematic of Gamma and Alpha Monitor System . . . . . 6-217
6-59. Gamma and Alpha In-Line Monitors--Sample Stations . . . . 6-218
6-60. Neutron Monitors . . . . . 6-220
6-61. Location of the 206-A and 293-A Facilities . . . . . 6-222
6-62. T-XA Tower . . . . . 6-223
6-63. T-XB Tower . . . . . 6-225
6-64. T-F5 Acid Absorber . . . . . 6-227
6-65. Fractionator Flow Schematic . . . . . 6-228
6-66. T-U6 Tower . . . . . 6-229
6-67. M and N Cell Sump Routings . . . . . 6-240
6-68. Nitric Acid System . . . . . 6-242
6-69. Organic Makeup System . . . . . 6-249
6-70. Solvent System . . . . . 6-250
6-71. Caustic System . . . . . 6-251
6-72. Floor Plan of Central Control Room . . . . . 6-254
6-73. Floor Plan of Headend Control Room . . . . . 6-256
6-74. Floor Plan of Power Control Room . . . . . 6-257
6-75. N Cell Control Rooms . . . . . 6-259
6-76. Floor Plan of Dispatcher's Office . . . . . 6-262
6-77. Type A Sampler . . . . . 6-267
6-78. Type B Sampler . . . . . 6-269
6-79. Layout--Analytical Laboratories . . . . . 6-272
6-80. 203-A Piping . . . . . 6-284

TABLES:

6-1. PUREX Plant Vessel and Sump Schedule . . . . . 6-11
6-2. Summary Description of Process Control Instruments . . . 6-16
6-3. Typical Nuclear Criticality Safety Mechanisms . . . . . 6-20
6-4. PUREX Process Vessels and Typical Limits . . . . . 6-23
6-5. Fission Product Activity of Fuels to be Processed . . . . 6-25
6-6. Fission Product Activity in Tanks TK-D3, TK-D4, and TK-D5 . . . . . 6-26
6-7. Fission Product Activity in Tanks TK-F26, TK-F15, TK-F16, and TK-F6 . . . . . 6-27
6-8. PUREX Plant Vessel Schedule--Plutonium Inventory . . . . 6-28
6-9. Potential Hazardous Energy Sources . . . . . 6-33
6-10. Chemical Reactions--Cladding Removal . . . . . 6-34
6-11. Solvent Extraction Chemistry . . . . . 6-38
6-12. Dissolver Charging--Off-Standard Conditions . . . . . 6-54
6-13. Typical Headend Equipment Description . . . . . 6-66
6-14. Decladding and Uranium Dissolution--Off-Standard Conditions . . . . . 6-70
6-15. Solvent Extraction Column Data . . . . . 6-89
6-16. Tank Descriptions . . . . . 6-91

TABLES: (Continued)

6-17. Process Hazards Analysis--Solvent Extraction . . . . . 6-103
6-18. Plutonium Cycle Vessels . . . . . 6-112
6-19. Solvent Extraction--Off-Standard Conditions . . . . . 6-115
6-20. Oxide Production Equipment . . . . . 6-131
6-21. Process Hazard Analysis--Plutonium Oxide Production . . . 6-143
6-22. Process Hazard Analysis Backcycle Waste System . . . . . 6-153
6-23. Solvent Treatment Equipment . . . . . 6-159
6-24. Process Hazard Analysis--Solvent Recovery . . . . . 6-163
6-25. Solvent Recovery--Off-Standard Conditions . . . . . 6-166
6-26. Process Hazard Analysis--Plutonium Rework and Recovery . . . . . 6-168
6-27. Process Control Instrumentation Systems . . . . . 6-174
6-28. Instrumentation Symbol Legend . . . . . 6-193
6-29. Programmer Switch Position and Contacts Activated . . . . 6-208
6-30. Process Hazard Analysis--Nitric Acid Recovery . . . . . 6-232
6-31. Acid Fractionator--Off-Standard Conditions . . . . . 6-233
6-32. Process Control Panel and Power Control Layout . . . . . 6-261
6-33. Vessels Equipped with Type A Samplers . . . . . 6-268
6-34. Vessels Equipped with Type B Samplers . . . . . 6-270
6-35. Vessels Equipped with Type C Samplers . . . . . 6-271
6-36. Laboratory Analyses--Location and Equipment . . . . . 6-277
6-37. Process Hazards Analysis--Sample-Analytical . . . . . 6-281
6-38. Process Hazard Analysis--Product Handling . . . . . 6-285

9413219.0436

# 6.0 PROCESS SYSTEMS

## 6.1 PROCESS DESCRIPTION

The processing of irradiated fuels at the Hanford Plutonium-Uranium Reduction Extraction (PUREX) Plant involves the chemical removal of the fuel cladding by the Zirflex process* and dissolution of the fuel elements in nitric acid, followed by separation, purification, and recovery of uranium and plutonium by the PUREX solvent-extraction process. The process also provides for recovery and reuse of nitric acid and of organic solvents, for recycle of waste streams, and for handling, treatment, and disposition of gaseous, liquid, and solid wastes. The major components of the PUREX process are shown in Figure 6-1.

### 6.1.1 Narrative Description

Zircaloy-clad spent fuels are charged to the plant dissolvers where the cladding is dissolved by a boiling mixture of AFAN. The AF dissolution of zirconium produces ammonia and hydrogen; however, the presence of AN in the decladding solution suppresses the formation of hydrogen. Ammonia is removed from the offgas stream by water scrubbing; the scrub liquor is then routed to the ammonia waste handling system. Dissolver offgases (DOG) are continuously sampled and analyzed by ammonia and hydrogen analyzers. Concentrations of these gases are controlled to well below the effective lower explosion limits of 6.0 vol% hydrogen and 14 vol% ammonia.

When the decladding reaction is complete, the decladding solution is cooled and, after a quiescent period to allow solids to settle, is transferred to the cladding waste receiver tank. The solution is transferred with agitation to the centrifuge feed tank, allowed to settle, then sampled and analyzed for uranium and plutonium content. After sampling, the cladding waste is centrifuged to recover residual uranium and/or plutonium present as tetrafluoride particulates. The clarified effluent is routed to an agitated tank containing excess sodium hydroxide, which permits ammonium ions to be replaced by $Na^+$ ions (a condition necessary for long-term underground tank waste storage). Ammonia liberated in this reaction is scrubbed from the offgas stream with water, and the scrub liquor is routed to F Cell for additional treatment. Residual ammonia in the offgas stream is routed to the atmosphere via a stack. The alkaline cladding waste is transferred to underground storage.

During the Zirflex decladding reaction, about 1% to 10% of the uranium metal and associated plutonium that is charged to the dissolver reacts with AF to form the relatively insoluble uranium tetrafluoride and plutonium tetrafluoride. These tetrafluoride compounds are converted to hydrous oxides (which are soluble in nitric acid) by metathesis reactions with potassium hydroxide performed in the dissolver and on the solids

*The Zirflex process refers to the dissolution of Zircaloy in a boiling solution of ammonium fluoride and ammonium nitrate (AFAN).

9413219.0438

This page intentionally left blank.

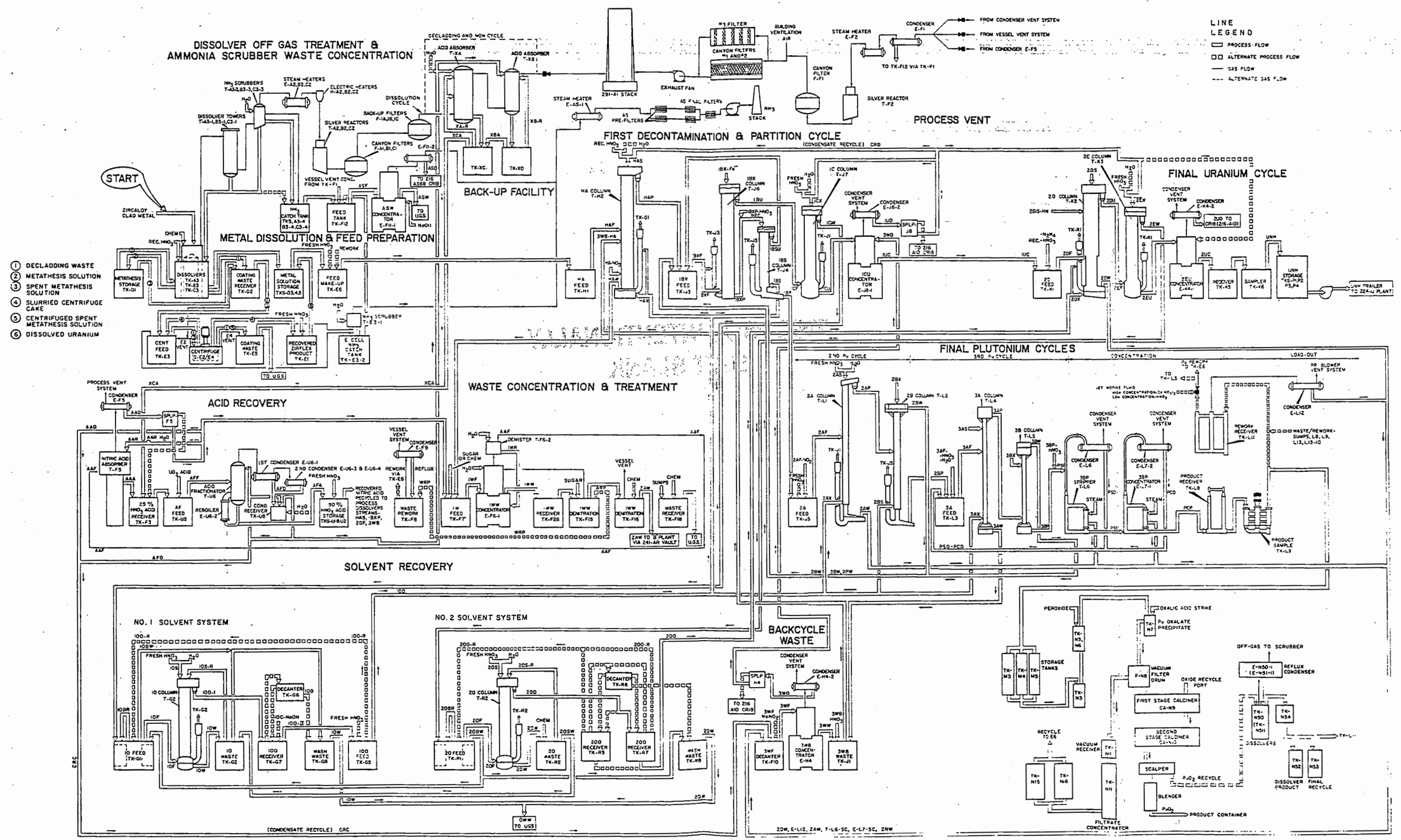


FIGURE 6-1. PUREX Process Flow Diagram.

THIS PAGE INTENTIONALLY
LEFT BLANK

This page intentionally left blank.

removed from the centrifuge. Soluble fluorides, produced during the metathesis reaction, are removed by water rinsing. Residual fluorides are complexed with aluminum nitrate nonahydrate (ANN) to minimize fluoride corrosion of stainless steel during the nitric acid dissolution of the hydrous uranium and plutonium oxides and the uranium metal charged to the dissolvers. Metathesis wastes are treated and handled via the cladding waste handling facilities.

The declad fuel elements are dissolved in 50% nitric acid (about 10.4M) to produce a solution containing uranyl and tetravalent plutonium nitrates. Dissolution of a charge of 0.947 wt% $^{235}U$ spent fuels normally requires two "cuts;" a charge of spent fuel containing up to 1.25 wt% (1.15 wt% average) $^{235}U$ (spike fuel*) is limited in size by criticality considerations to allow its dissolution in one "cut."

The dissolution reaction produces oxides of nitrogen and also releases gaseous fission products (FP) (e.g., $^{85}Kr$, $^{133}Xe$, $^{129}I$, $^{131}I$). The $^{14}C$ and a portion of the $^{3}H$ in the fuel are also released as carbon dioxide and water, respectively. The gaseous waste stream is treated via a silver reactor for removal and retention of radioactive iodine, filtered, and routed to the acid recovery system, where oxides of nitrogen are recovered as nitric acid and more radioiodine is absorbed. Offgases from the acid recovery system are continuously monitored for $^{131}I$ (process control purposes) prior to entry to the 200-ft 291-A-1 stack for discharge to the atmosphere. Continuous monitoring of the oxides of nitrogen, alpha, beta-gamma, $^{129}I$, and $^{131}I$ concentrations plus real-time measurement of the $^{85}Kr$ concentration in the 291-A-1 stack effluent are conducted. In addition, collection media samples are taken and analyzed at least quarterly for $^{14}C$, $^{3}H$, and other specific radionuclides. When dissolution is complete, the dissolver solution is cooled and transferred to storage tanks TK-D3, -D4, and -D5 for sampling, analysis, and accountability measurements. Dissolver solution from TK-D5 is pumped to TK-E6 for batch makeup of feed solution for solvent extraction processing, which is then jetted to TK-H1.

In the initial solvent extraction process step (codecontamination), feed solution is pumped from TK-H1 to the HA column, where it is contacted with the solvent [30 vol% tributyl phosphate (TBP) and 70 vol% normal paraffin hydrocarbon (NPH)] and with an aqueous solution of nitric acid. The desired products (uranium and plutonium) are extracted into the organic stream (HAP), which flows from the top of the HA column to TK-J3. The aqueous waste stream (HAW), which contains only trace quantities of the desired products and 99.99% of the FP associated with the dissolved fuel, flows from the bottom of the column and is routed to the high-level waste handling system.

---

*See Section 4.1.1 for definitions and descriptions of the N Reactor fuel assemblies.

The second solvent extraction processing step (partitioning) utilizes the 1BX, 1BS, and 1C columns. In this step, solution from TK-J3 is pumped to the 1BX column where it is countercurrently contacted with an aqueous solution of ferrous sulfamate-sulfamic acid to reduce plutonium to the +3 valence. The aqueous phase containing the reduced plutonium flows from the bottom of the 1BX column to the 1BS column, where it is contacted with organic to remove uranium impurities. The aqueous plutonium product stream from the 1BS column (1BP) is routed to TK-J5. The organic stream exiting the top of the 1BS column (1BSU), containing uranium and/or neptunium lost to the 1BXP stream plus 6% to 10% of the plutonium, is recycled to the 1BX column feed tank (TK-J3). The organic stream (1BU) from the 1BX column, containing the uranium and a trace of neptunium and plutonium, overflows from the top of the 1BX column to the bottom of the 1C column. Uranium and trace impurities are stripped from the organic by a dilute aqueous nitric acid solution in the 1C column and exit the bottom of the column as the 1CU stream. The 1CU is routed to the 1CU concentrator (E-J8-1) for volume reduction. The organic stream exiting the top of the 1C column (1CW) is routed to the solvent recovery system 1 for treatment and subsequent reuse.

In the second uranium cycle, the concentrated uranium product stream (1UC) is purified by solvent extraction and concentrated for storage and subsequent shipment to the Uranium Oxide ($UO_3$) Plant. Nitric acid and hydrazine are added to the 1UC in TK-K1 to prepare a feed solution for the 2D column. The feed is pumped to the 2D column, where it is contacted with solvent and two scrub streams. The intermediate scrub stream (2DIS) is an aqueous solution of hydroxylamine nitrate to reduce plutonium to the +3 valence. The upper scrub stream (2DS) is demineralized water to remove nitric acid and FP from the organic. The residual plutonium, neptunium, FP, most of the nitric acid and about 6% of the uranium present in the 2DF exit the bottom of the column in the aqueous waste (2DW). The 2DW stream is routed to the backcycle waste concentrator for concentration and recycle to the HA column. The organic stream (2DU) containing the purified uranium product overflows the 2D column to the 2E column, where the uranium is stripped by a dilute aqueous nitric acid solution. The aqueous uranium product solution is concentrated to about 2.0M uranium concentration [60% uranyl nitrate hexahydrate in acidic solution (UNH)], sampled, analyzed, and transferred to the 203-A tanks for storage and shipment. The organic effluent from the 2E column, devoid of uranium, is routed to the solvent recovery system 2 for treatment and reuse.

The plutonium product stream (1BP) from the 1BS column is decontaminated and purified by two cycles of solvent extraction using the 2A-2B and 3A-3B columns. The 1BP stream is collected in TK-J5, where the plutonium is oxidized to the +4 valence, which is extractable in the organic solvent, and pumped to the 2A column. The aqueous waste stream from the column (2AW), which contains a small percentage of the entering plutonium together with scrubbed and nonextracted FP, is routed to the backcycle waste concentrator for recycle to the HA column. The organic plutonium product stream (2AP) is routed to the 2B column, where it is contacted with aqueous-reducing agents (hydroxylamine nitrate and hydrazine) to convert the plutonium to the aqueous favoring +3 valence. An organic stream is added at

the bottom of the column to scrub residual uranium from the plutonium-bearing stream. The organic waste stream exiting the top of the 2B column is recycled to the 1BX feed stream; the plutonium product stream (2BP) exits the bottom of the 2B column to the 3A column feed tank (TK-L3), where nitric acid is added which oxidizes the plutonium to the +4 valence.

The 3AF feed stream is pumped from TK-L3 to the 3A column, where the plutonium is extracted into the entering 3AX organic stream and exits as the product stream (3AP). The aqueous waste stream (3AW), containing about 0.3% of the plutonium and 98% of the FP present in the feed stream, is recycled to the HA column via the backcycle waste concentrator receiver tank. The organic product stream (3AP) overflows to the 3B column, where the plutonium is stripped from the organic by the dilute aqueous nitric acid stream (3BX). The 3B column organic waste stream is routed to the 1BX feed tank for recycle to the 1BX column. Nitric acid is added to the 3B column aqueous product stream (3BP) to minimize the potential for plutonium polymer formation. Steam stripping to remove residual organic solvent and concentration prior to transfer to the PUREX plutonium oxide production facility are then performed.

In the plutonium oxide production facility, the concentrated plutonium nitrate solution is transferred to a prereduction tank where hydrogen peroxide is added to convert any plutonium +6 and +3 to the +4 valence. This solution and oxalic acid are then transferred at controlled rates to a reaction vessel where a plutonium oxalate precipitate is formed. The plutonium oxalate is filtered from solution and calcined to produce a final plutonium dioxide product. The plutonium dioxide product is blended, sampled, analyzed, weighed, canned, labeled, and reweighed prior to shipment. Waste solutions from this facility are recycled to the solvent extraction process for recovery of residual plutonium.

The 1CW and 2EW solvent waste streams are routed to solvent treatment systems 1 and 2, respectively. In these systems, the organic is contacted with aqueous solutions of sodium carbonate-potassium permanganate to remove FP and organic degradation products. The organic is then scrubbed with dilute nitric acid in the 10 column (system 1) or the 20 column (system 2) prior to return to the process. Fresh TBP and/or NPH, as required, are added to replace solvent losses.

The PUREX Plant recovers nitric acid from the metal dissolution operations, as previously stated, and also from the solvent extraction operations. Treatment of the HA column acidic high-level radioactive waste stream (HAW) for volume reduction is the major source for the acid recovered from solvent extraction. The HAW is concentrated in the E-F6 concentrator with the overheads routed to the T-F5 acid absorber. The bottoms from this concentrator (1WW) are reacted with sugar in TK-F15 to produce carbon and oxides of nitrogen which are also routed to the T-F5 acid absorber. Nitric acid recovered in the T-F5 absorber, in

the absorbers on the DOG system (T-XA, T-XB), and at the $UO_3$ Plant (about 25% of total recovered) are concentrated to about 10.4M in the T-U6 acid vacuum fractionator. The partially denitrated high-level waste stream is reacted with sodium hydroxide to an alkaline pH and transferred to the high-level waste storage tanks.

Operation of the PUREX Plant requires large quantities of process chemical solutions, steam, water, etc., which are provided by the service and utility systems discussed in Section 5.4. Such operations also generate significant volumes of liquid, gaseous, and solid wastes. Confinement and management of PUREX process wastes are discussed in Chapter 7.0. Inputs to and outputs from the PUREX Plant during standby are shown in Figure 6-2 and during operation with N Reactor fuels in Figure 6-3.

### 6.1.2 Major Components

The complex operations required in a nuclear fuels reprocessing plant result in a variety of unit operations performed with some equipment standard to chemical plants and others unique to nuclear fuels reprocessing. The corrosive and radioactive nature of the process environment requires utilization of corrosion- and radiation-resistant construction materials. Vessel geometries are standardized to the extent possible, and the majority of vessels are fabricated of Type 304L stainless steel, while a few, for even greater corrosion resistance, are of titanium or tantalum. Where needed and practicable, vessels are designed to be geometrically favorable for criticality prevention.

Table 6-1 lists the PUREX vessels by equipment piece number and by function, detailing capacity and geometry. Each important equipment piece is discussed as part of the respective process description.

### 6.1.3 Operational Control

Operational control of the processes is achieved through process sampling which is coupled with monitoring of process variables by instrument observation supplemented by alarms. Process performance is compared with historic performance data and maintained within limits imposed by formal specifications and standards. Operations are conducted according to formally issued plant operating procedures and operations safety requirements (OSR).

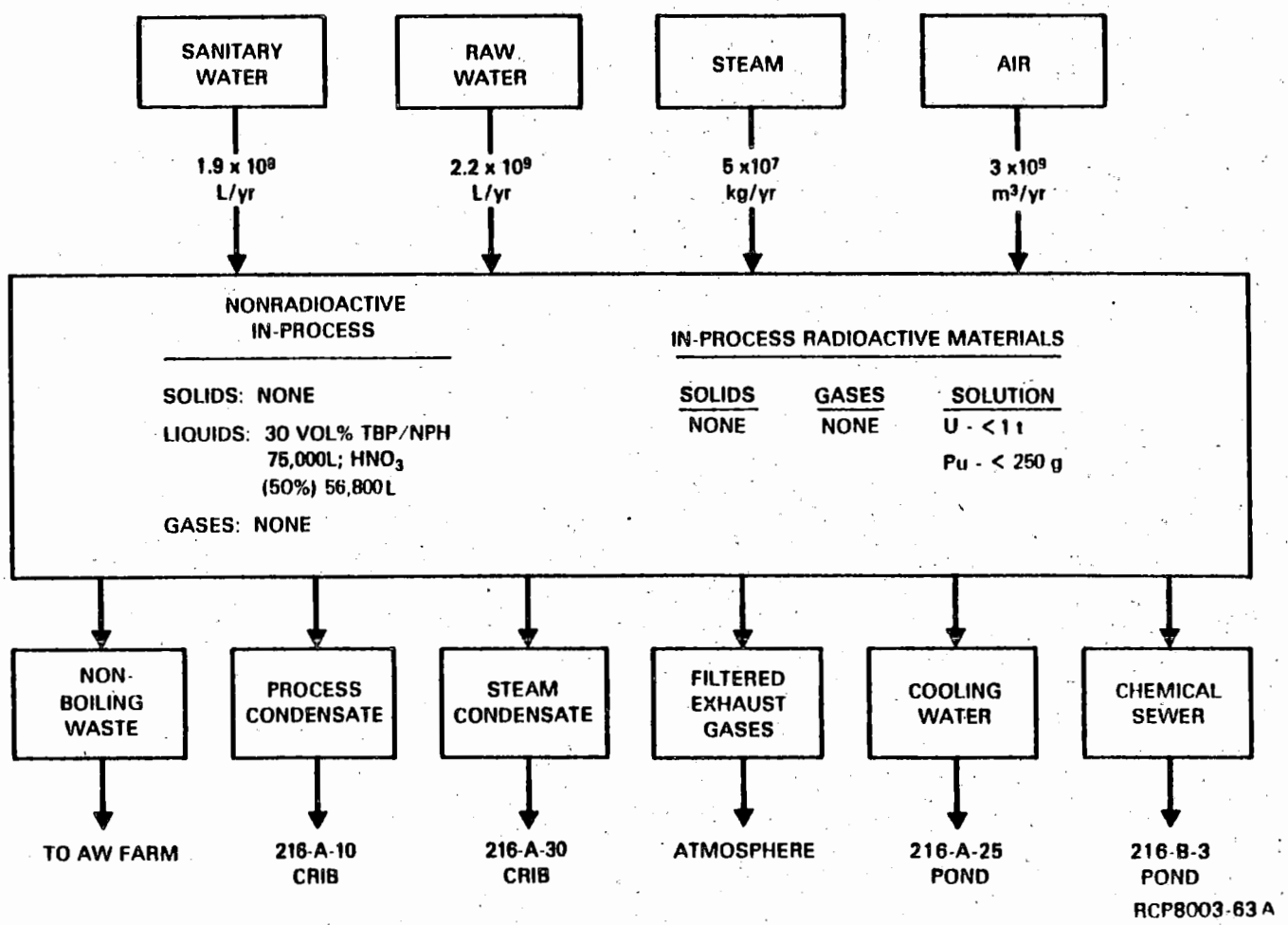


FIGURE 6-2. PUREX Plant Input-Output Diagram--Standby.

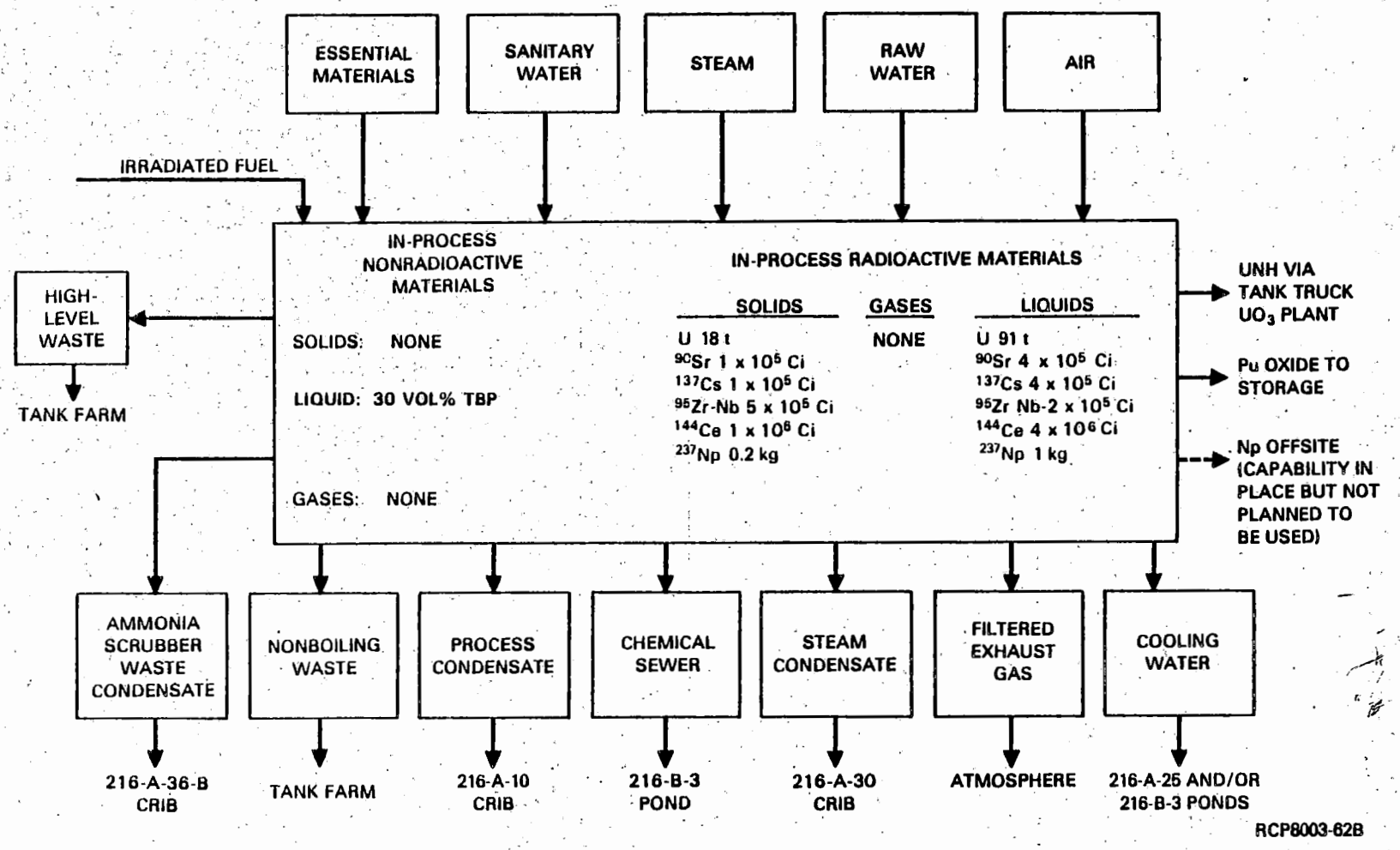


FIGURE 6-3. PUREX Plant Input-Output Diagram--Operation (N Reactor fuels).

TABLE 6-1. PUREX Plant Vessel and Sump Schedule. (Sheet 1 of 4)

| Item | Function | Nominal volume (gal) | Size |
|---|---|---|---|
| TK-A3,-B3,-C3 | Dissolver | 5,000 | 9 ft 3 in. by 4 ft 11 in. ID[a] by 14 ft |
| TK-A3-4,B3-4, C3-4 | $NH_3$ scrub waste | 2,100 | 4 ft 0 in. by 8 ft 6 in. by 10 ft |
| TK-D1 | Metathesis storage | 5,000 | 10 ft 0 in. by 9 ft 3 in. |
| TK-D2 | Coating waste | 5,000 | 10 ft 0 in. by 9 ft 3 in. |
| TK-D3,-D4 | Metal solution | 7,700 | 10 ft 6 in. by 12 ft 8 in. by 9 ft 2 in. |
| TK-D5 | Metal solution | 5,000 | 10 ft 0 in. by 9 ft 3 in. |
| TK-E1 | Centrifuge product | 1,700 | 7 ft 0 in. by 6 ft 9 in. |
| G-E2 | Coating waste centrifuge | 180 | 48 in. by 25 in. |
| TK-E3 | Centrifuge feed | 5,000 | 10 ft 0 in. by 9 ft 3 in. |
| TK-E3-2 | $NH_3$ scrub waste | 250 | 3 ft 2 in. by 4 ft 6 in. |
| G-E4 | Coating waste centrifuge | 125 | 40 in. by 25 in. |
| TK-E5 | Centrifuge waste | 5,000 | 10 ft 0 in. by 9 ft 3 in. |
| TK-E6 | HAF makeup | 5,000 | 10 ft 0 in. by 9 ft 3 in. |
| TK-F3 | Acid receiver | 5,000 | 10 ft 0 in. by 9 ft 3 in. |
| T-F5 | Acid absorber | 300 | 10 ft OD[b] by 9 ft 3 in. - 3 ft-6 in. ID by 9 ft |
| E-F6 | 1WW concentrator | 2,200 | Two 4 ft 5 in. barrels by 12 ft and one 2 ft 6 in. barrel by 12 ft |
| TK-F4 | Vessel vent condensate | 5,000 | 10 ft 0 in. by 9 ft 3 in. |
| E-F11-1 | ASW concentrator | 2,500 | Two 4 ft 5 in. barrels by 12 ft and one 2 ft 6 in. barrel by 12 ft |
| TK-F7 | 1WF | 3,800 | 6 ft 9 in. by 10 ft 6 in. by 9 ft 2 in. |
| TK-F8 | Waste rework | 5,000 | 10 ft 0 in. by 9 ft 3 in. |
| TK-F10 | 3WF decanter | 5,000 | 10 ft 0 in. by 9 ft 3 in. |
| TK-F12 | E-F11 feed | 5,000 | 10 ft 0 in. by 9 ft 3 in. |
| TK-F13 | Rework storage | 5,000 | 10 ft 0 in. by 9 ft 3 in. |
| TK-F14 | Decanter (not usable) | 400 | 4 ft 0 in. by 5 ft 0 in. |
| TK-F15 | 1WW denitration | 5,000 | 10 ft 0 in. by 9 ft 3 in. |
| TK-F16 | 1WW denitration | 5,000 | 10 ft 0 in. by 9 ft 3 in. |
| TK-F17 | Tube bundle flush | 1,200 | 4 ft 2 in. by 12 ft 0 in. |
| TK-F18 | Utility waste | 5,000 | 10 ft 0 in. by 9 ft 3 in. |
| TK-F26 | 1WW receiver | 3,600 | 6 ft 9 in. by 10 ft 6 in. by 9 ft 2 in. |
| TK-G1 | 1OF | 5,000 | 10 ft 0 in. by 9 ft 3 in. |
| T-G2 | 1O column | 2,000 | 34 in. dia by 32 ft |
| TK-G2 | 1OS | 1,900 | 7 ft 0 in. by 6 ft 9 in. |
| TK-G5 | 1OO | 15,000 | 10 ft 6 in. by 16 ft by 14 ft |
| TK-G6 | 1OD decanter | 450 | 4 ft by 5 ft |
| TK-G7 | 1OO pump tank (turbomixer not used) | 15,000 | 10 ft 6 in. by 16 ft by 14 ft |
| TK-G8 | 1OW | 5,000 | 10 ft 0 in. by 9 ft 3 in. |
| TK-H1 | HAF | 5,000 | 10 ft 0 in. by 9 ft 3 in. |
| T-H2 | HA column | 1,850 | 26 in. dia by 40 ft |
| T-H3 | HS column | 1,770 | 34 in. dia by 26 ft |
| E-H4 | 3WB concentrator | 2,700 | Two 4 ft 5 in. barrels by 12 ft and one 2 ft 67 in. barrel by 12 ft |
| TK-J1 | 3WB | 5,000 | 10 ft 0 in. by 9 ft 3 in. |
| TK-J2 | Miscellaneous storage | 1,340 | 4 ft 2 in. by 14 ft 0 in. |
| TK-J3 | IBXF | 5,000 | 10 ft 0 in. by 9 ft 3 in. |
| T-J4 | IBS column | 130 | 8 in. dia by 14 ft |
| TK-J5 | 2AF | 370 | 8 ft 6 in. OD by 8 ft 0 in. ID by 8 ft 11 in. - |
| T-J6 | IBX column | 1,600 | 32 in. dia by 33 ft |
| T-J7 | IC column | 1,770 | 34 in. dia by 26 ft |
| E-J8 | ICU concentrator | 3,700 | Two 4 ft 7 in. barrels by 10 ft and one 2 ft 6 in. barrel by 14 ft |
| TK-J21 | 2NF | 320 | 4 ft 5 in. OD by 3 ft 11 in. ID by 14 ft 8 in. |
| T-J22 | 2N column | 150 | 7 in. dia by 38 ft |
| T-J23 | 2P column | 100 | 7 in. dia by 24 ft |
| TK-K1 | 2DF | 5,000 | 10 ft 0 in. by 9 ft 3 in. |
| T-K2 | 2D column | 1,370 | 24 in. dia by 16 ft - 32 in. dia by 16 ft |
| T-K3 | 2E column | 1,770 | 34 in. dia by 26 ft |
| E-K4 | 2EU concentrator | 3,700 | Two 4 ft 7 in. barrels by 14 ft and one 2 ft 6 in. barrel by 14 ft |

9413219.0447

TABLE 6-1. PUREX Plant Vessel and Sump Schedule. (Sheet 2 of 4)

| Item | Function | Nominal volume (gal) | Size |
|---|---|---|---|
| TK-K5 | 2UC receiver | 5,000 | 10 ft 0 in. by 9 ft 3 in. |
| TK-K6 | UNH product | 5,000 | 10 ft 0 in. by 9 ft 3 in. |
| T-L1 | 2A column | 130 | 7 in dia by 40 ft |
| T-L2 | 2B column | 90 | 7 in. dia by 30 ft |
| TK-L3 | 3AF | 120 | 34 in. OD by 30 in. ID by 12 ft |
| TK-L4 | 3A column | 40 | 3-1/2 in. ID by 34 ft |
| T-L5 | 3B column | 30 | 3-1/2 in. ID by 22 ft |
| T-L6 | Product stripper | 10 | Two barrels 4 in. by 8 ft, 3 ft tower |
| E-L7-1 | Product concentrator | 10 | Two barrels 4 in. by 8 ft, 3 in. tower |
| TK-L8 | Product receiver | 10 | Two barrels 4 in. by 8 ft |
| TK-L9 | Pu product sampler | 11 | Three barrels, 5 in. dia by 38 in. |
| TK-L11 | Pu recycle | 25 | Three 4 in. dia barrels by 12 ft |
| TK-L13-10 | Pu loadout | 2.4 | 6 in. by 21 in. |
| TK-M1 | Equipment decontamination | 4,100 | 7 ft 0 in. by 14 ft 0 in. |
| TK-M2 | Equipment decontamination | 1,800 | 5 ft 0 in. by 14 ft 0 in. |
| TK-M3 | Pu nitrate solution storage | 55 | Three barrels 6 in. by 14 ft |
| TK-M4 | Pu nitrate solution storage | 55 | Three barrels 6 in. by 14 ft |
| TK-M5 | Pu nitrate solution storage | 55 | Three barrels 6 in. by 14 ft |
| TK-M6 | Pu nitrate solution storage | 55 | Three barrels 6 in. by 14 ft |
| TK-N3 | Pu nitrate feed | 3 | 6 in. by 3 ft |
| TK-N4 | $H_2O_2$ feed tank | 1 | 4 in. by 20 in. |
| TK-N5 | Prereduction tank | 8 | 6 in. by 5 ft 10 in. |
| TK-N6 | Pump tank | 4 | 6 in. by 3 ft |
| R-N7 | Precipitator | 0.8 | 5 in. by 1 ft |
| F-N8 | Vacuum drum filter | 0.3 | Half-circle pan 7 in. radius by 8-1/2 in. wide |
| CA-N9 | First-stage calciner | - | 3 in. by 5 ft |
| CA-N10 | Second-stage calciner | - | 3 in. by 5 ft |
| TK-N11 | Filtrate receiver | 6.3 | 6 in. by 5 ft |
| E-N13 | Filtrate concentrator | 7.1 | 6 in. by 11 ft 9 in. |
| TK-N15 | Filtrate holding tank | 26 | Three barrels 6 in. by 6 ft 8 in. |
| TK-N16 | Filtrate holding tank | 26 | Three barrels 6 in. by 6 ft 8 in. |
| T-N19 | Offgas scrubber | 2.6 | 6 in. by 7 ft 6 in. |
| TK-N20 | Liquid seal tank | 2.4 | 6 in. by 1 ft 7 in. |
| TK-N21 | Condensate receiver tank | 24 | Three barrels 6 in. by 6 ft 8 in. |
| TK-N22 | Condensate receiver tank | 24 | Three barrels 6 in. by 6 ft 8 in. |
| TK-N30 | Vacuum tank | 6 | 6 in. by 5 ft 6 in. |
| TK-N33 | Closed loop cooling expansion tank | 2.1 | 6 in. by 1 ft 7 in. |
| TK-N39 | Vacuum drop-out | 12.25 | 9 ft 3 in. by 6 in. |
| TK-N40 | Vacuum drop-out | 12.25 | 9 ft 3 in. by 6 in. |
| TK-N43 | Vacuum drop-out | 3.3 | 6 in. dia. by 27 in. |
| TK-Q1 | 2PN concentrator feed | 12 | 7 in. by 6 ft |
| E-Q2 | Stripper concentrator | 10 | 6 in. by 20 ft |
| TK-Q3 | 3XF feed | 110 | 3 in. annulus by 5 ft 6 in. |
| T-Q4 | 3X resin column | 16 | 6 in. by 5 ft 6 in. |
| TK-Q5 | 3XW waste | 500 | 48 in. by 5 ft |
| TK-Q6 | 3XN receiver | 25 | 18 in. by 2 in. |
| TK-Q7 | Np product loadout | 1.5 | 6 in. by 1 ft |
| TK-Q8 | Sump tank | 46 | 24 in. by 2 ft 2 in. |
| E-Q9 | Vent jet condenser | 12 | 8 in. by 5 ft 6 in. |
| TK-R1 | 20F | 5,000 | 10 ft by 9 ft 3 in. |
| T-R2 | 20 column | 2,000 | 34 in. dia by 32 ft |
| TK-R2 | 20X | 1,900 | 7 ft by 6 ft 9 in. |
| TK-R5 | Utility | 9,000 | 10 ft by 14 ft |
| TK-R6 | Utility decanter | 430 | 4 ft by 5 ft 10 in. |
| TK-R7 | 200 | 9,000 | 10 ft by 14 ft |

TABLE 6-1. PUREX Plant Vessel and Sump Schedule. (Sheet 3 of 4)

| Item | Function | Nominal volume (gal) | Size |
|---|---|---|---|
| TK-U4 | Laboratory waste | 8,000 | 10 ft by 14 ft |
| TK-U5 | Fractionator feed | 9,000 | 10 ft by 14 ft |
| T-U6 | Fractionator | 1,750 | 8 ft by 32 ft |
| TK-U8 | Condensate receiver | 1,000 | 6 ft by 5 ft |
| T-XA | Acid absorber | 450 | 6 ft by 22 ft |
| T-XB | Acid absorber | 250 | 4 ft 6 in. by 20 ft |
| TK-XC | Acid receiver | 5,000 | 9 ft 3 in. by 10 ft |
| TK-XD | Acid receiver | 2,300 | 7 ft by 8 ft |
| SA | A cell sump | 45 | 24 in. by 24 in. by 18 in. |
| SB | B cell sump | 45 | 24 in. by 24 in. by 18 in. |
| SC | C cell sump | 45 | 24 in. by 24 in. by 18 in. |
| SD | D cell sump | 45 | 24 in. by 24 in. by 18 in. |
| SE | E cell sump | 30 | 24 in. by 24 in. by 18 in. (filled with 1 in. boron raschig rings) |
| SFA | F cell sump | 45 | 24 in. by 24 in. by 18 in. |
| SFB | F cell sump | 45 | 24 in. by 24 in. by 18 in. |
| SG | G cell sump | 45 | 24 in. by 24 in. by 18 in. |
| SH | T-H2 sump | 2,600 | 9 ft 0 in. by 6 ft 9 in. by 4 ft 11 in. |
| SJ | J cell sump | 60 | 30 in. by 24 in. by 18 in. |
| SJ-2 | J cell package sump | 2,700 | 9 ft 9 in. by 8 ft 2 in. by 5 ft |
| SK | K cell sump | 60 | 30 in. by 24 in. by 18 in. |
| SLB[c] | TK-L13 sump | 1.5 | 2 ft 2 in. by 2 ft by 2 in. |
| SLD[c] | TK-L11 sump | 1 in. = 4.5 | 8 ft 2 in. by 18 in. by 1 in. (slope 1 in. in 8 ft) 1 in. overflow |
| SLE[c] | TK-L9 sump | 0 | 16 in. by 19 ft (slope 2-1/4 in. in 19 ft) |
| SLF[c] | TK-L10 sump | 0 | 16 in. by 19 ft (slope 2-1/4 in. in 19 ft) |
| SLK | TK-K6, T-L1 sump | 1 in. = 140 | 1-1/2 in. by 26 ft, then canyon floor (trough slopes from 1 to 8 in. deep) |
| SLL | T-L2, L cell package sump | 1 in. = 160 | 32 ft by 14 ft canyon floor (slope 7/8 in. in 7 ft) |
| SM | M cell sump | 45 | 24 in. by 24 in. by 18 in. |
| SN | N cell gloveboxes | 0 | N cell gloveboxes have sumps similar to SLR, SLD, SLE, and SFL in PRd room |
| SR | R cell sump | 45 | 24 in. by 24 in. by 18 in. |
| SUA | U cell sump | 45 | 24 in. by 24 in. by 18 in. |
| SUB | U cell sump | 45 | 24 in. by 24 in. by 18 in. |

[a]Inner diameter.

[b]Outer diameter.

[c]SLB, D, E, F, and SN drain to SLL via criticality drain.

[d]Product handling and removal room.

TABLE 6-1. PUREX Plant Vessel and Sump Schedule. (Sheet 4 of 4)

Notes:

All equipment has two names: flowsheet name and the equipment code and cell location. For example, the HA feed tank is a flowsheet name and TK-H1 is the code and location name for the HA feed tank, where TK stands for tank and H1 indicates it is located in the first position in H cell.

Equipment codes are as follows:

- CA - Calciner
- E - Concentrators and associated condensers
- F - Filter
- G - Centrifuge
- S - Sump
- T - Tower (used for all columns and a few other pieces of equipment that are mounted on towers)
- TK - Tank.

Cell names: A, B, C, D, E, F, G, H, J, K, L, M, N, Q, R, and U.

- A,B,C - Dissolver cells
- D - Feed accountability and storage tanks
- E - Headend centrifuge and tankage
- F - Acid recovery and waste concentration and treatment
- G - Organic recovery system 1
- H - Codecontamination column and backcycle waste concentrator E-H4
- J - Uranium-plutonium partition columns; neptunium recovery (J cell package), the 1UC uranium concentrator (E-J8), along with associated tankage and the backcycle waste tank (TK-J1), feed tank for second plutonium cycle (TK-J5)
- K - Second uranium cycle; final (2EU) uranium concentrator (E-K4-1) and associated tankage
- L - Second and third plutonium cycles and associated tankage
- M - Equipment decontamination cell and storage, plutonium nitrate storage tanks
- N - Plutonium oxide production facility
- Q - Neptunium concentrator, resin column, and loadout facilities
- R - Organic recovery system 2 (276-A)
- U - Recovered acid storage tanks, laboratory waste receivers, and acid fractionator tanks (206-A)

6.1.3.1 Instrumentation and Control Rooms. More than 4,500 instruments in the plant are used to record, control, indicate, alarm, or perform a combination of these functions. All variables of importance to the proper operation of the process, equipment, and support services are monitored. Most of the remote instrumentation (and all critical measurements, such as effluent discharges and process flows) read out in one of six control rooms: the headend control room (HCR), the central control room (CCR), the Q cell control room*, the heating, ventilating, and air conditioning control room (HVACR), and the upper and lower plutonium oxide production facility control rooms. In addition, certain instrumentation for radiation zone status, "green" fuel element monitoring, and facility physical surveillance systems (door alarms) read out in the dispatcher's office.

A general summary description of the process control instruments and monitors is presented in Table 6-2. A listing of the major process control instruments with alarms or interlocks is given in Section 6.5; safety-related instruments are also denoted. A discussion of the specific instruments which are required for the safe operation of the PUREX Plant is given in the PUREX Process Control Manual.(1)

6.1.3.2 PUREX Plant Dispatcher's Office. The PUREX dispatcher's office serves as the main focal point for information transmittal, communications, and operations control. Process sampling requirements are relayed via the dispatcher's office to the sampling personnel and the analytical laboratory, with results being reported to and documented by the dispatcher. The following records are maintained in this office: plant material balances (including feed received and stored), in-process material balances, quantity of product in storage and shipped, and quantity of waste discarded. Finally, radiation zone access controls are operated from the dispatcher's office. Attendant records are kept for all personnel entering or exiting the controlled radiation zones. This control is exercised through electricand key-operated door locks. Information about radiation zone status is obtained from zone radiation instrumentation and from periodic surveys by radiation monitoring personnel.

## 6.1.4 Safety Criteria and Assurance

6.1.4.1 Nuclear Criticality Safety. The double-contingency principle is used by Rockwell Hanford Operations (Rockwell) in those parts of the plant where heavy shielding would mitigate the personnel dose resulting from a criticality event.(2) In the absence of such shielding, the design and controls require at least three failures or errors to occur before a criticality accident is possible.(3)

The mechanisms used to prevent criticality include equipment of geometrically favorable design, nuclear blanks,** and administrative control of mass and/or concentration of plutonium.

---

*Not scheduled for use.

**Nuclear blank is a means of preventing uncontrolled reagent addition through physical separation of a header from a process vessel by removal of a section of the interconnecting piping.

TABLE 6-2. Summary Description of Process Control Instruments. (Sheet 1 of 3)

| Instrument system | Function | Description | Safety considerations |
|---|---|---|---|
| | | Process Control Instruments | |
| Flow measurement and control | Process control, criticality prevention | Several types: orifice meters, pneumatic rotameters, electronic rotameters, magnetic flowmeters, thermal flowmeters | Used to maintain flow rates within flowsheet requirements |
| WF* level, density, and pressure | Process control, criticality prevention, safety | Purged-dip tubes with pressure transmitters; ultrasonic and capacitance probes | Control liquid level and concentration of U, Pu, and/or $HNO_3$ in various vessels. Prevent overconcentration of radioactive solutions. Monitor pressure in vessels, tube bundles, etc., and leaks of radioactive solutions to sumps |
| Temperature | Process control, safety | Resistance thermometers, mercury thermometers, and thermocouples | Used to avoid overconcentration of certain process solutions |
| Column aqueous-organic interface | Process control | A float (designed to float on water and sink in organic) with a stainless steel armature connected that travels in a magnetic iron core surrounded by transmitter coils; electric impulses are sent to a controlling instrument | Used in all but the 1C and 2E columns to control the effluent aqueous or organic solutions leaving the column |
| Alarms and interlocks | Process control, criticality prevention, safety | Activated by signal from primary flow, level, temperature, radiation, etc. sensors | Alarms sound when process control settings are exceeded; interlocks are activated to shut down systems when limiting control settings are approached |
| Hand switches | Process control, criticality prevention, safety | Manually operated with one or more contacts | Start or stop systems |
| Closed loop cooling water system | Confine radioactivity | Routine sampling of primary and secondary closed loops | Minimize leakage of radioactive solutions to the environs |
| Solvent temperature control | Safety | Temperature controllers and water heating systems | Keep solvent solution temperature below flash point for those systems where water and solvent are not vaporized together |

TABLE 6-2. Summary Description of Process Control Instruments. (Sheet 2 of 3)

| Instrument system | Function | Description | Safety considerations |
|---|---|---|---|
| Steam jet control system | Confine radioactivity | Automatic air blow and associated timer that actuate when the jet switch is turned off | Prevent radioactive solution backflow into a nonradiation zone |
| Column air pulser system | Maintain column stability and efficient operation | Pulser rate and pressure controls | Prevent flooding of 3A-3B columns and possible transfer of organic to the T-L6 concentrator |
| Air sparger system | Provide mixing | Airflow measurement and control | Keep solutions adequately mixed to improve sampling and keep solids from settling to bottom of vessel, thus preventing localized hot spots |
| Air purge system to dilute $H_2$ | To reduce chance of $H_2$ explosion | Airflow measurement and control | Keep $H_2$ concentrations below the lower flammability limit |
| Air jet systems | Process sampling | Provide continuous small-flow delivery of process solutions when supplied with 90-lb/in$^2$ air pressure | Analytical results are used to assure criticality prevention |
| | | Process Control Monitors | |
| Gamma scintillation counters | In-line monitoring instruments for process control | Stream sampling system incorporating a sample cell near a sodium iodide crystal which produces light scintillations from gamma radiation | Monitor radionuclide concentrations in process and/or effluent stream |
| Ionization chambers | Process control. Approximate measurements of decontamination of the Pu- and/or U-containing streams and intensity of gamma radiation near selected equipment | Gamma radiation from sources "seen" by the instrument enters a gas-filled chamber, causing ionization | Supplementary measurement of Pu/U decontamination used to assure exposure of personnel to radiation will be low in product-handling areas |
| Alpha monitors | Process control, criticality prevention | Ce-activated surface on a glass disc. The process stream is in direct contact with the activated surface and a photomultiplier tube attached to backside of the disc receives scintillation from the activated surface | Monitors alpha content of process streams which may indicate Pu reflux, Pu recycle, or high Pu losses to waste streams |

9413219.0454

TABLE 6-2. Summary Description of Process Control Instruments. (Sheet 3 of 3)

| Instrument system | Function | Description | Safety considerations |
|---|---|---|---|
| Neutron monitors | Process control, criticality prevention | Detection system consists of one or two boron trifluoride tubes mounted in a paraffin moderator | Monitors Pu concentration in process streams which may indicate Pu reflux, Pu recycle, or high Pu loss to waste streams |
| Combustible gas analyzer ($H_2$ and $NH_3$) | Process safety | Analyzer measures total sample gas combustibility with a heated filament. $NH_3$ is separated from $H_2$ by adsorption on silica gel; $H_2$ is measured by gas combustion with a heated filament | Monitors the concentration of combustible gas in an offgas stream |
| $HNO_3$ conductivity monitors | Process control, criticality safety, and control of HAS, HAW, and 2AS acidity | Electrodeless conductivity monitor consists of an electrically nonconducting pipe upon which two toroidal transformers are placed: one electrically charged and the other a receiver. Process solution containing electrolytes flowing through the pipe forms part of the coupling electric circuit between the two transformers. The electrical output of the receiver transformer, after appropriate amplification, provides an electric signal corresponding to the solution conductivity | Control $HNO_3$ concentration in process streams. Prevents high Pu losses to HAW and 2AW waste streams |
| Photometric monitors | Process control, U and nitrite measurement | One photometer is calibrated for measuring U in the 2DW stream and another is calibrated for measuring nitrite in the 2AF stream | Prevent high Pu loss in the 2AW stream |

*Weight factor.

The choice of mechanism(s) used to prevent criticality is based upon an analysis of the worst foreseeable condition and the degree of risk to persons and property.

Criticality prevention within the PUREX Plant employs geometrically favorable dissolver vessels, plutonium solvent extraction equipment, and plutonium product vessels. Elsewhere in the process areas, administrative control of plutonium concentration and/or mass is used and depends upon solution sample analysis supported, in some cases, by continuous monitoring instrumentation. The mitigating effect of the $^{240}Pu$ isotope and the poisoning effect of nitrate ion on the maximum safe concentration or mass of plutonium have been taken into account in those systems where the respective concentrations are known. The mechanisms used for nuclear criticality prevention in the various portions of the plant are itemized in Table 6-3.

9413219.0455

6.1.4.1.1 General Precipitation Safety. PUREX criticality prevention criteria normally limit the plutonium mass to 75% of the minimum critical value (or $k_{eff}$ less than 0.95) in the worst credible configuration. This is the permitted condition for accidental precipitation in the PUREX vessels. Specific cases permit slightly higher limits, dependent upon the geometries involved.

Acid concentration, plutonium concentration, and temperature are controlled to prevent plutonium polymer from forming. For plutonium solution containing greater than 50 g Pu/L, the nitric acid concentration is held at or above 1.0M nitric acid, except when temperatures of 80°C are exceeded, then minimum acid concentration is 2.5M nitric acid. For aqueous plutonium solutions containing less than 50 g Pu/L, the acidity, temperature, and plutonium concentration are maintained at values that will prevent the formation and precipitation of plutonium polymer (Fig. 6-4). The data presented in Figure 6-4 indicate that the conditions present in the dissolver at the end of a dissolution "cut" (a $HNO_3$ concentration of about 0.5M and a temperature of about 106°C) would cause the formation of plutonium polymer. The presence of concentrated UNH (i.e., dissolver solution) however, permits an exception to Figure 6-4. A stoichiometrically neutral solution of UNH has a low pH and apparently provides sufficient hydrogen ion to prevent plutonium polymer formation at boiling temperature, even at nitric acid concentrations as low as 0.1M or 0.2M.

TABLE 6-3. Typical Nuclear Criticality Safety Mechanisms.

| Process area | Equipment design | Administrative control |
|---|---|---|
| Dissolvers | 12-in. fuel charging annulus | $^{235}U$ 1.25%, charge size, dissolver cut size, sequential programmer, mass in auxiliary vessels |
| Centrifuges | - | Mass limit |
| Solvent extraction tanks | - | Mass limit |
| Columns HA, 1BX, 1BS | - | Nuclear blanks for precipitating agents, low $HNO_3$ concentration alarm<br>$HNO_3$-HAS, Low-flow alarms HAX--IBS, concentration limit--ferrous sulfamate |
| Second and third plutonium cycles, PR[a] room vessels M[b] and N cell vessels | Geometrically favorable slabs, annuli, cylinders | - |
| Plutonium rework L11 to E6 | - | Concentration limit with or without a soluble poison |
| Canyon sumps, general | - | Concentration limit |
| L cell/PR room, N cell | - | Concentration, mass, and depth limits |

[a]Product removal.

[b]Tanks TK-M3, -M4, -M5, and -M6 are used for storing concentrated plutonium nitrate solutions.

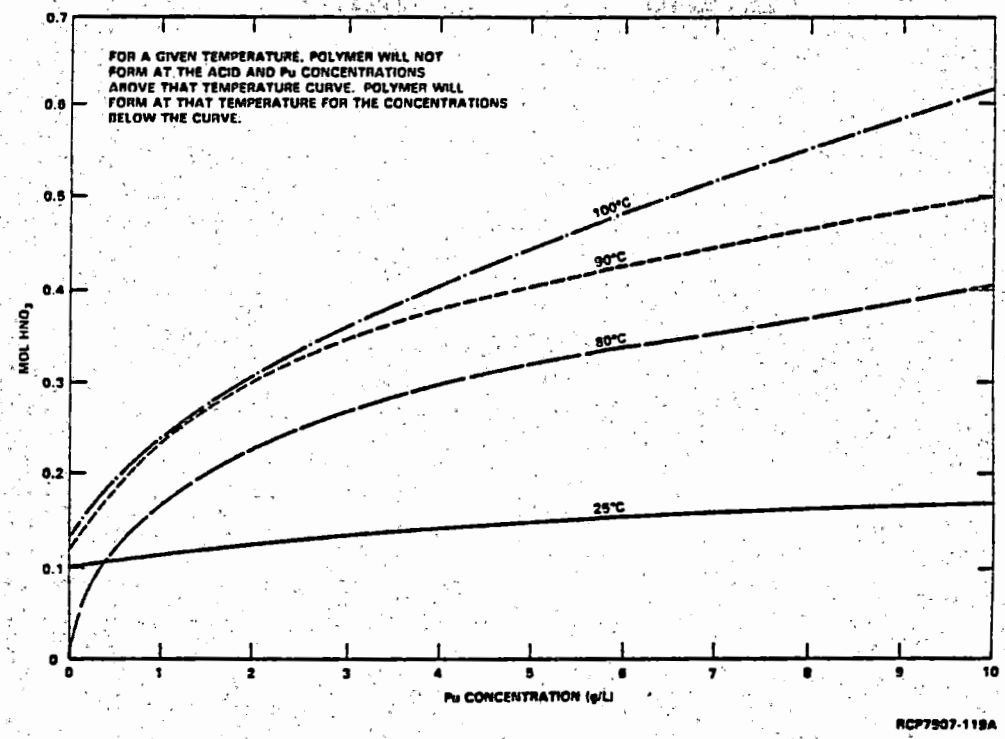


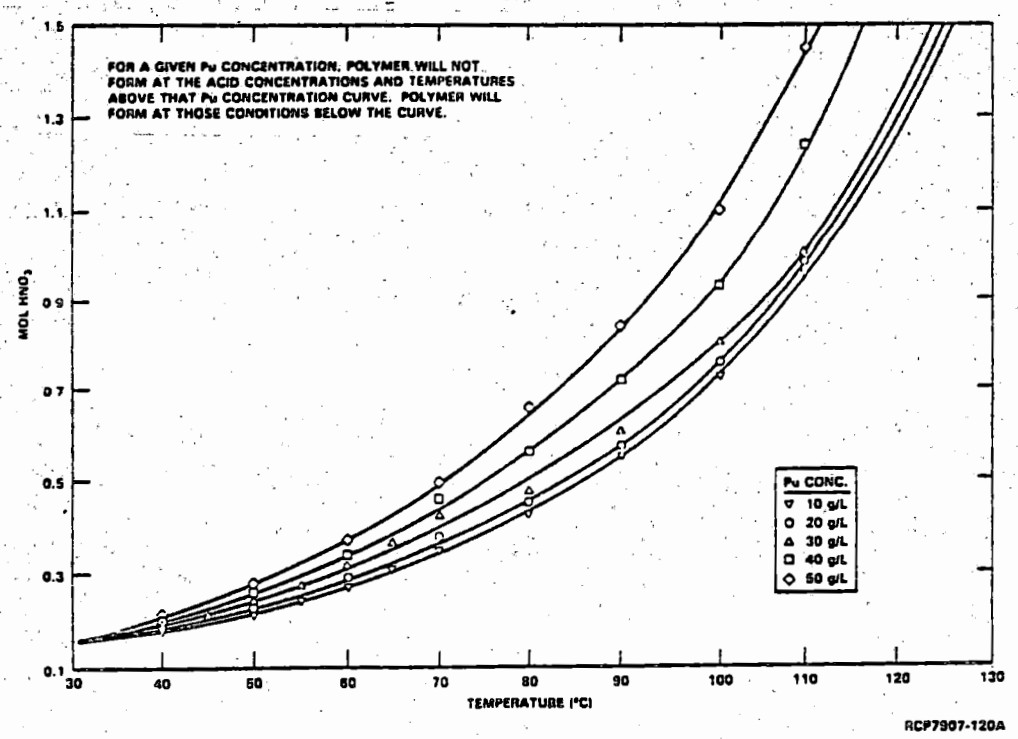


FIGURE 6-4. Plutonium Polymerization at Various Plutonium and Acid Concentrations and Temperatures.[4,5]

6.1.4.1.2 Independent Vessel Limits. In general, introduction of a specified maximum quantity of plutonium is safe within that vessel. However, lower operating limits may be imposed for specific vessels during routine operation to assure safety within downstream vessels. Typical process vessels and limits are given in Table 6-4.

The dissolvers are large, annular vessels designed to be geometrically favorable for fuels below about 1% $^{235}U$, preirradiation basis.(6) Higher enrichment fuel, such as 95-125 "spike" fuel may be charged, but more restrictive mass limits are imposed.

The limits shown in Table 6-4 for the solution storage and feed tanks (TK-D3, -D4, -D5, -E6, and -H1) are based on precipitation of plutonium containing 3 wt% of the $^{240}Pu$ isotope within the tanks. Accidentally reaching the specified limit in one of the tanks during the processing of spent fuels containing higher weight percentage of (e.g., 9 wt%) $^{240}Pu$ would not reflect a significant increase in the risk of a criticality accident. It would, however, constitute a violation of the criticality prevention specification, unless prior approval for a higher limit based on the higher weight percentage $^{240}Pu$ were obtained (see Table 6-4).

In the J cell area, the second plutonium cycle feed tank (TK-J5) has an annular shape which could permit a concentration of 40 g Pu/L. However, this tank is restricted to 6 g Pu/L because it is located over the SJ sump. A higher plutonium limit value cannot be used, because of the possibility of solution leaking undetected into the sump below. The SJ sump is not of a favorable geometric design.

Limits for the large concentrators are also established on the independent vessel basis. The old style concentrators, such as E-H4, -J8, and -K4, have flat-bottom, vertical cylinders in the tube bundle and draft tube sections; whereas the new style concentrator, E-F6, has a sloping tube bundle bottom area with resultant lower mass limits. This is because any precipitate would not settle upon the floor of the tube bundles and draft tube, but would tend to concentrate on the bottom of the central draft tube. The limit of each concentrator is dependent upon the design or function (E-F11) of the concentrator.

The vessels and arrangement of the second and third plutonium system and the plutonium oxide production facility are geometrically favorable in design for foreseeable plutonium concentration and reflection conditions.

6.1.4.1.3 Radioactive Materials Confinement. Source terms for process vessels and equipment are given in Tables 6-5 through 6-8.

TABLE 6-4. PUREX Process Vessels and Typical Limits. (Sheet 1 of 2)

| Vessel | Function | Typical plutonium[a] limit per vessel |
|---|---|---|
| TK-A3, -B3, -C3 | Dissolver | 12,000 lb U ("spike" fuel)<br>11,700 g (in solution) |
| TK-A3-4, -B3-4, -C3-4 | $NH_3$ scrubber | 500 g |
| TK-D1 | Metathesis recycle | 500 g |
| TK-D2, -E1, -E3 -E5, -G-E2, -E4 | Cladding waste handling | 500 g |
| TK-E3-2 | $NH_3$ scrubber | 500 g |
| TK-D3, -D4 | Metal solution storage | 16,500 g |
| TK-D5, -E6 | Accountability, feed makeup | 12,400 g |
| TK-F3, T-F5 | Acid receiver, absorber | 500 g |
| TK-F4 | Vessel vent condensate | 500 g |
| T-F6 | 1WW concentrator | 1,200 g |
| TK-F7 | 1WF pump tank | 12,400 g |
| TK-F8, -F13 | Waste digest/rework | 12,400 g |
| TK-F10 | 3WF pump tank | 15,000 g |
| E-F11, TK-F12 | $NH_3$ waste evaporation | 500 g |
| TK-F15, -16 | Waste treatment | 500 g |
| TK-F17 | Tube bundle flush | 500 g |
| TK-F18 | Sump waste receiver | 500 g |
| TK-F26 | 1WW receiver | 12,400 g |
| G-Cell vessels | Organic treatment | 500 g/vessel |
| TK-H1 | HAF pump tank | 12,400 g |
| T-H2 | HA column | 950 g or 6 g/L[b] |
| E-H4 | 3WB concentrator | 6,870 g |
| TK-J1 | 3WB receiver | 12,400 g |
| TK-J3 | 1BXF pump tank | 12,400 g |
| T-J4 | 1BS column | 1,200 g, 6 g/L |
| T-J6 | 1BX column | 1,320 g, 6 g/L |
| T-J7 | 1C column | 1,450 g |
| E-J8 | ICU concentrator | 7,100 g |
| TK-K1 | 2DF pump tank | 12,400 g |
| T-K2 | 2D column | 870 g |
| T-K3 | 2E column | 1,450 g |
| E-K4 | 2EU concentrator | 7,100 g |
| TK-K5, -K6 | 2UC receiver, sampler tank | 12,400 g |
| TK-J5 | 2AF pump tank | 6 g/L |
| T-L1, -L2, -L4, -L5 -L6, -L7, TK-L3, -L8 | 2nd and 3rd plutonium decontamination cycles | 450 g/L (geometrically favorable design) |
| TK-M1, -M2 | Decontamination, utility | 500 g |

TABLE 6-4. PUREX Process Vessels and Typical Limits. (Sheet 2 of 2)

| Vessel | Function | Typical plutonium[a] limit per vessel |
|---|---|---|
| TK-L9, -M3, -M4, -M5, -M6 | Product sampling, | 450 g/L (geometrically favorable design) |
| N Cell vessels | $PuO_2$ production | 450 g/L (geometrically favorable design) |
| (TK-N3, -N4, -N5, -N6, -N7, F-N8) | $PuO_2$ production | 450 g/L (1 in. of cake on drum) |
| CA-N9, -N10 blender | $PuO_2$ powder blending | 40 kg |
| TK-L11 | Waste recycle | 450 g/L |
| R Cell vessels | Solvent treatment | 500 g/vessel |
| U Cell vessels | Acid fractioner, lab waste | 500 g/vessel |
| TK-P1, -P2, -P3, -P4 | UN storage | 12,400 g |
| TK-P5, -P6 | Waste sampling, rework | 500 g |
| UN transport trailer | UN transport | 500 g |
| TK-P13, -P14, -P15 | $HNO_3$ storage | 500 g |
| Canyon sumps | Cell drainage collection and L Cell | 6 g/L (plus dept limit) |
| PR room sumps | PR room/vessel leakage and spill collection | 450 g/L (plus depth and mass limit) |
| N cell sumps | Pu conversion glovebox sumps | 450 g/L (plus depth and mass limit) |
| SG, SR, SMA, SMB, SMC, hot shop | Liquid collection | 500 g |
| <u>Miscellaneous</u> | | |
| Samples | Transfer to laboratory | 200 g (volume or concentration) |
| Waste material barrels | Scrap | 250 g |
| Burial boxes | Equipment pieces | 350 g/piece (1,000 g total) |
| HEPA[c] filter burial box | PR Room exhaust filter disposal | 200 g |

[a]Based on a $^{240}Pu$ content of 3 wt%. The limits may be increased, with appropriate approval, for fuel with greater than 3 wt% $^{240}Pu$. For example, for fuel with 12% $^{240}Pu$ content, the limits, with prior approval, for dissolvers TK-D3/-D4, -D5, -E6, -H1, and -F10 are increased to 14.2, 27, 20, and 18.2 kg, respectively.

[b]Limit may be exceeded with nuclear blanks in place to prevent the addition of precipitating agents.

[c]High efficiency particulate air.

TABLE 6-5. Fission Product Activity of Fuels to be Processed (curies per short ton).

| $^{240}Pu$ content | 12% | | | | 9% | | 6% | | | |
|---|---|---|---|---|---|---|---|---|---|---|
| Fuel | Mark IV | | Mark IA | | Mark IV | Mark IA | Mark IV | | Mark IA | |
| $^{235}U$ enrichment | 0.947% | | 1.25%-0.947% | | 0.947% | 1.25%-0.947% | 0.947% | | 1.25%-0.947% | |
| Exposure: MWd/t | 2,500 | | 3,000 | | 1,670 | 2,030 | 1,000 | | 1,000 | 1,000 |
| Cooling time | 5 yr | 180 d | 5 yr | 180 d | 5 yr | 5 yr | 5 yr | 180 d | 5 yr | 180 d |
| $^{147}Pm$ | $9.2 \times 10^3$ | $3.0 \times 10^4$ | $1.1 \times 10^4$ | $3.7 \times 10^4$ | $4.6 \times 10^3$ | $7.0 \times 10^3$ | $4.1 \times 10^3$ | $1.3 \times 10^4$ | $4.1 \times 10^3$ | $1.4 \times 10^4$ |
| $^{137}Cs$[a] | $8.7 \times 10^3$ | $9.6 \times 10^3$ | $1.0 \times 10^4$ | $1.2 \times 10^4$ | $5.0 \times 10^3$ | $6.2 \times 10^3$ | $3.5 \times 10^3$ | $3.8 \times 10^3$ | $3.4 \times 10^3$ | $3.8 \times 10^3$ |
| $^{90}Sr$[a] | $7.7 \times 10^3$ | $8.6 \times 10^3$ | $9.2 \times 10^3$ | $1.0 \times 10^4$ | $4.2 \times 10^3$ | $5.7 \times 10^3$ | $3.3 \times 10^3$ | $3.7 \times 10^3$ | $3.3 \times 10^3$ | $3.7 \times 10^3$ |
| $^{144}Ce$[a] | $2.9 \times 10^3$ | $1.6 \times 10^5$ | $3.6 \times 10^3$ | $1.9 \times 10^5$ | $1.6 \times 10^3$ | $2.3 \times 10^3$ | $1.4 \times 10^3$ | $7.5 \times 10^4$ | $1.4 \times 10^3$ | $7.6 \times 10^4$ |
| $^{106}Ru$[a] | $1.3 \times 10^3$ | $2.9 \times 10^4$ | $1.6 \times 10^3$ | $3.5 \times 10^4$ | $8.5 \times 10^2$ | $8.0 \times 10^2$ | $3.7 \times 10^2$ | $8.2 \times 10^3$ | $3.5 \times 10^2$ | $7.7 \times 10^3$ |
| $^{85}Kr$ | $7.8 \times 10^2$ | $1.1 \times 10^3$ | $9.3 \times 10^2$ | $1.3 \times 10^3$ | $4.7 \times 10^2$ | $5.8 \times 10^2$ | $3.4 \times 10^2$ | $4.5 \times 10^2$ | $3.4 \times 10^2$ | $4.5 \times 10^2$ |
| $^{134}Cs$ | $3.1 \times 10^2$ | $1.4 \times 10^3$ | $3.7 \times 10^2$ | $1.7 \times 10^3$ | $3.7 \times 10^2$ | $1.4 \times 10^2$ | $4.6 \times 10^1$ | $2.1 \times 10^2$ | $5.6 \times 10^1$ | $1.6 \times 10^2$ |
| $^{125}Sb$ | $2.0 \times 10^2$ | $6.4 \times 10^2$ | $2.5 \times 10^2$ | $7.7 \times 10^2$ | $1.8 \times 10^2$ | $1.3 \times 10^2$ | $6.8 \times 10^1$ | $2.1 \times 10^2$ | $6.7 \times 10^1$ | $2.0 \times 10^2$ |
| $^{3}H$ | $1.9 \times 10^1$ | $2.5 \times 10^1$ | $2.3 \times 10^1$ | $3.0 \times 10^1$ | $1.7 \times 10^1$ | $2.1 \times 10^1$ | b | b | b | b |
| $^{129}I$ | $2.3 \times 10^{-3}$ | $2.3 \times 10^{-3}$ | $2.8 \times 10^{-3}$ | $2.8 \times 10^{-3}$ | $1.4 \times 10^{-3}$ | $1.6 \times 10^{-3}$ | c | c | c | c |
| $^{95}Zr$ | $2.8 \times 10^{-3}$ | $1.0 \times 10^5$ | $3.4 \times 10^{-3}$ | $1.2 \times 10^5$ | $1.2 \times 10^{-3}$ | $2.6 \times 10^{-3}$ | $1.9 \times 10^{-3}$ | $6.7 \times 10^4$ | $2.0 \times 10^{-3}$ | $7.1 \times 10^4$ |
| $^{95}Nb$ | $6.1 \times 10^{-3}$ | $2.0 \times 10^5$ | $7.3 \times 10^{-3}$ | $2.3 \times 10^5$ | $1.2 \times 10^{-3}$ | $2.6 \times 10^{-3}$ | $4.0 \times 10^{-3}$ | $1.2 \times 10^5$ | $4.3 \times 10^{-3}$ | $1.3 \times 10^5$ |
| $^{91}Y$ | c | $7.2 \times 10^4$ | c | $8.6 \times 10^4$ | c | c | c | $5.2 \times 10^4$ | c | $5.6 \times 10^4$ |
| $^{89}Sr$ | c | $4.6 \times 10^4$ | c | $5.3 \times 10^4$ | c | c | c | $3.4 \times 10^4$ | c | $3.7 \times 10^4$ |
| $^{103}Ru$[a] | c | $2.1 \times 10^4$ | c | $2.6 \times 10^4$ | c | c | c | $1.4 \times 10^3$ | c | $1.5 \times 10^4$ |
| $^{141}Ce$ | c | $1.6 \times 10^4$ | c | $1.8 \times 10^4$ | c | c | c | $1.3 \times 10^3$ | c | $1.4 \times 10^4$ |
| $^{127m}Te$ | $2.7 \times 10^{-2}$ | $9.5 \times 10^2$ | $3.3 \times 10^{-2}$ | $1.1 \times 10^3$ | $1.0 \times 10^{-2}$ | $2.0 \times 10^{-2}$ | $1.2 \times 10^{-2}$ | $4.1 \times 10^2$ | $1.2 \times 10^{-2}$ | $4.1 \times 10^2$ |
| $^{129m}Te$[a] | c | $6.5 \times 10^2$ | c | $7.8 \times 10^2$ | c | c | c | $4.5 \times 10^2$ | c | $4.8 \times 10^2$ |

[a] Daughters of these isotopes are also present at the same activity level. Example: $^{90}Sr$ has a daughter ($^{90}Y$) which is present in the fuel at the same curie content as $^{90}Sr$.

[b] Not available; will be less than 9% or 12% cases.

[c] Less than $1 \times 10^{-3}$.

TABLE 6-6. Fission Product Activity in Tanks TK-D3, TK-D4, and TK-D5 (curies per gallon).

| $^{240}Pu$ content | 12% | | | | 9% | | 6% | |
|---|---|---|---|---|---|---|---|---|
| Fuel | Mark IV | | Mark IA | | Mark IV | Mark IA | Mark IV | Mark IA |
| $^{235}U$ enrichment | 0.947% | | 1.25% - 0.947% | | 0.947% | 1.25% - 0.947% | 0.947% | 1.25% - 0.947% |
| Exposure MWd/ton; MW/ton | 2,435; 11 | | 2,903; 11 | | 1,670 | 2,030 | 1,000; 10 | |
| Cooling time | 5 yr | 180 d | 5 yr | 180 d | 5 yr | 5 yr | 180 d | 180 d |
| $^{147}Pm$ | 15.9 | 51.1 | 19 | 62 | 7.8 | 12 | 22 | 23 |
| $^{137}Cs$[a] | 14.8 | 16.3 | 16 | 20 | 8.5 | 10.5 | 6.5 | 6.3 |
| $^{90}Sr$[a] | 13.1 | 14.7 | 16 | 16 | 7.1 | 9.7 | 6.3 | 5.9 |
| $^{144}Ce$[a] | 6.1 | 272 | 6.1 | 323 | 2.7 | 3.9 | 128 | 129 |
| $^{106}Ru$[a] | 2.2 | 50 | 2.7 | 60 | 1.4 | 1.4 | 14 | 13 |
| $^{85}Kr$[b] | --- | --- | --- | --- | --- | --- | --- | --- |
| $^{134}Cs$ | 0.5 | 2.4 | 0.6 | 2.8 | 0.6 | 0.2 | 0.4 | 0.3 |
| $^{125}Sb$ | 0.3 | 1.1 | 0.5 | 1.3 | 0.3 | 0.2 | 0.4 | 0.3 |
| $^{3}H$ | 0.003 | 0.004 | 0.005 | 0.006 | 0.003 | 0.003 | --- | --- |
| $^{129}I$ | $3.5 \times 10^{-6}$ | $3.5 \times 10^{-6}$ | $4.5 \times 10^{-6}$ | $4.4 \times 10^{-6}$ | $2 \times 10^{-6}$ | $2 \times 10^{-6}$ | --- | --- |
| $^{95}Zr$ | $5.8 \times 10^{-6}$ | 170 | $5.7 \times 10^{-6}$ | 204 | $2 \times 10^{-6}$ | $4 \times 10^{-6}$ | 114 | 70 |
| $^{95}Nb$ | $1.0 \times 10^{-5}$ | 340 | $1.2 \times 10^{-5}$ | 391 | $2 \times 10^{-6}$ | $4 \times 10^{-6}$ | 357 | 221 |
| $^{91}Y$ | | 122 | | 144 | | | 88 | 94 |
| $^{89}Sr$ | | 78 | | 90 | | | 58 | 63 |
| $^{103}Ru$[a] | | 36 | | 44 | | | 2.4 | 25 |
| $^{141}Ce$ | | 27 | | 31 | | | 2.2 | 24 |
| $^{127}Te$ | $4.5 \times 10^{-5}$ | 1.6 | $5.7 \times 10^{-5}$ | 1.8 | $1.7 \times 10^{-5}$ | $3.4 \times 10^{-5}$ | 0.7 | 0.7 |
| $^{129}Te$[a] | | 1.1 | | 1.4 | | | 0.8 | 0.9 |

[a]Daughters of these isotopes are also present at the same activity level. Example: $^{90}Sr$ has a daughter ($^{90}Y$) which is present in the fuel at the same curie content as $^{90}Sr$.

[b]No $^{85}Kr$ expected, as it leaves process in DOG.

TABLE 6-7. Fission Product Activity in Tanks TK-F26, TK-F15, TK-F16, and TK-F6 (curies per gallon).

| $^{240}Pu$ content | 12% | | | | 9% | | 6% | |
|---|---|---|---|---|---|---|---|---|
| Fuel | Mark IV | | Mark IA | | Mark IV | Mark IA | Mark IV | Mark IA |
| $^{235}U$ enrichment | 0.947% | | 1.25% - 0.947% | | 0.947% | 1.25% - 0.947% | 0.947% | 1.25% - 0.947% |
| Exposure MWd/ton; MW/ton | 2,435; 11 | | 2,903; 11 | | 1,670 | 2,030 | 1,000; 10 | |
| Cooling time | 5 yr | 180 d | 5 yr | 180 d | 5 yr | 5 yr | 180 d | 180 d |
| $^{147}Pm$ | 47 | 149 | 45 | 182 | 23 | 35 | 65 | 69 |
| $^{137}Cs$[a] | 43 | 48 | 40 | 60 | 25 | 31 | 19 | 19 |
| $^{90}Sr$[a] | 39 | 44 | 36 | 48 | 21 | 28 | 19 | 18 |
| $^{144}Ce$[a] | 18 | 800 | 18 | 944 | 7.9 | 11 | 375 | 377 |
| $^{106}Ru$[a] | 6.4 | 155 | 6.1 | 175 | 4.1 | 4.1 | 44 | 38 |
| $^{85}Kr$[b] | --- | --- | --- | --- | --- | --- | --- | --- |
| $^{134}Cs$ | 1.5 | 5.9 | 1.3 | 8.2 | 1.8 | 0.6 | 0.9 | 0.8 |
| $^{125}Sb$ | 0.9 | 3.2 | 1.1 | 3.7 | 0.9 | 0.6 | 1.1 | 1.0 |
| $^{3}H$ | 0.09 | 0.12 | 0.12 | 0.15 | 0.009 | 0.009 | --- | --- |
| $^{129}I$ | $9 \times 10^{-6}$ | $9 \times 10^{-6}$ | $1 \times 10^{-5}$ | $1.4 \times 10^{-5}$ | $5 \times 10^{-6}$ | $5 \times 10^{-6}$ | --- | --- |
| $^{95}Zr$ | $1 \times 10^{-5}$ | 513 | $1 \times 10^{-5}$ | 600 | $5 \times 10^{-6}$ | $1 \times 10^{-5}$ | 344 | 355 |
| $^{95}Nb$ | $3 \times 10^{-5}$ | $1 \times 10^{-3}$ | $6 \times 10^{-6}$ | $1.1 \times 10^{3}$ | $5 \times 10^{-6}$ | $1 \times 10^{-5}$ | 600 | 646 |
| $^{91}Y$ | | 356 | | 430 | | | 257 | 280 |
| $^{89}Sr$ | | 230 | | 265 | | | 170 | 185 |
| $^{103}Ru$[a] | | 105 | | 129 | | | 7.0 | 74 |
| $^{141}Ce$ | | 79 | | 90 | | | 6.4 | 70 |
| $^{127}Te$ | $1 \times 10^{-4}$ | 4.8 | $1 \times 10^{-4}$ | 5.5 | $5 \times 10^{-5}$ | $1 \times 10^{-4}$ | 2.1 | 2.1 |
| $^{129}Te$[a] | | 3.2 | | 4.0 | | | 2.2 | 2.4 |

[a]Daughters of these isotopes are also present at the same activity level. Example: $^{90}Sr$ has a daughter ($^{90}Y$) which is present in the fuel at the same curie content as $^{90}Sr$.

[b]No $^{85}Kr$ expected, as it leaves process in DOG.

TABLE 6-8. PUREX Plant Vessel Schedule--Plutonium Inventory. (Sheet 1 of 3)

| Vessel | Function | Nominal plutonium inventory (g)* |
|---|---|---|
| TK-A3, -B3, -C3 | Dissolver | 11,000 (in solution, 20,500 per charge of fuel containing 12% $^{240}Pu$) |
| TK-A3, -B3, -C3-4 | $NH_3$ scrub waste | <500 (none) |
| TK-D1 | Dissolver rinse | <500 |
| TK-D2 | Coating waste | <500 |
| TK-D3, -D4 | Metal solution | <16,000 (per vessel) |
| TK-D5 | Metal solution | <12,400 |
| TK-E1 | Centrifuge product | ~200 |
| G-E2 | Coating waste centrifuge | <500 |
| TK-E3 | Centrifuge feed | <500 |
| TK-E3-2 | $NH_3$ scrub waste | <500 |
| G-E4 | Coating waste centrifuge | <500 |
| TK-E5 | Centrifuge waste | <500 |
| TK-E6 | HAF makeup | ~12,400 |
| TK-F3 | AAA | <500 |
| T-F5 | Acid absorber | <500 |
| E-F6 | 1WW concentrator | <500 (20 to 100) |
| TK-F7 | 1WF | 1 to 75 |
| TK-F8 | Waste rework | ~1,000 |
| TK-F10 | 3WF decanter | 300 |
| E-F11 | Concentrator ($NH_3$ scrub waste) | <500 |
| TK-F12 | E-F11 Feed | 500 |
| TK-F13 | Rework storage | Solvent (near zero, rework 1,000) |
| TK-F14 | Utility | |
| TK-F15 | 1WW denitration | <500 |
| TK-F16 | 1WW denitration | <500 |
| TK-F17 | Tube bundle flush | <500 |
| TK-F18 | Utility waste | 0 to 2,000 |
| TK-F26 | 1WW receiver | <500 (approaches 1,000 on rework) |
| TK-G1 | 1OF | <500 |
| T-G2 | 1O column | <500 |
| TK-G2 | 1OS | <500 |
| TK-G5 | 1OO | <500 |
| TK-G7 | Turbomixer | <500 |
| TK-G8 | 1OW | <500 |
| TK-H1 | HAF | ~12,400 |
| T-H2 | HA column | ~600 |
| E-H4 | 3WB concentrator | ~2,000 |

TABLE 6-8. PUREX Plant Vessel Schedule--Plutonium Inventory. (Sheet 2 of 3)

| Vessel | Function | Nominal plutonium inventory (g)* |
|---|---|---|
| TK-J1 | 3WB | ~150 to 200 |
| TK-J3 | 1BXF | ~1,600 |
| TK-J5 | 2AF | ~750 to 1,000 |
| T-J6 | 1BX column | ~800 to 1,000 |
| T-J7 | 1C column | <10 |
| E-J8 | 1CU concentrator | <10 |
| T-J4 | 1BS column | ~100 |
| TK-K1 | 2DF | <10 |
| T-K2 | 2D column | <10 |
| T-K3 | 2E column | <10 |
| T-K4 | 2EU concentrator | <10 |
| TK-K5 | 2UC receiver | <10 |
| TK-K6 | UNH product | <10 |
| T-L1 | 2A column | 300 to 500 |
| T-L2 | 2B column | 300 to 500 |
| TK-L3 | 3AF | 1,800 to 2,000 |
| T-L4 | 3A column | 1,000 to 2,000 |
| T-L5 | 3B column | 2,000 to 3,000 |
| T-L6 | Product stripper | 5,000 to 7,000 |
| E-L7-1 | Product concentrator | 15,000 |
| TK-L8 | Product receiver | 15,000 |
| TK-L9 | Pu product sampler | ~15,000 |
| TK-L11 | Pu recycle | 100 to 2,000 |
| TK-L13-10 | Pu | 5,000 |
| TK-M1 | | ~0 |
| TK-M2 | | ~0 |
| TK-R1 | 20F | <500 |
| T-R2 | 20 column | <500 |
| TK-R2 | 20S | <500 |
| TK-R5 | Utility | <500 |
| TK-R7 | 20O | <500 |
| TK-R8 | 20W | <500 |
| TK-U1 | Recovered acid | ~0 |
| TK-U2 | Recovered acid | ~0 |
| TK-U3 | Laboratory waste | <500 |
| TK-U4 | Laboratory waste | <500 |
| TK-U5 | Fractionator feed | ~0 |
| T-U6 | Fractionator | ~0 |
| TK-U8 | Condensate receiver | ~0 |
| T-XA | Acid absorber | ~0 |
| T-XB | Acid absorber | ~0 |
| TK-XC | Acid absorber | ~0 |
| TK-XD | Acid receiver | ~0 |

TABLE 6-8. PUREX Plant Vessel Schedule--Plutonium Inventory. (Sheet 3 of 3)

| Vessel | Function | Nominal plutonium inventory (g)* |
|---|---|---|
| | Sumps | |
| SA | A cell | |
| SB | B cell | |
| SC | C cell | |
| SD | D cell | See appropriate vessels |
| SE | E cell | |
| SFA | F cell | |
| SFB | F cell | |
| SG | G cell | |
| SH | T-H2 | |
| SJ | J cell | |
| SJ-2 | J cell package | |
| SK | K cell | |
| SLB | TK-L13 | |
| SLD | TK-L11 | |
| SLE | TK-L9 | See appropriate vessels |
| SLF | TK-L10 | |
| SLK | TK-K6, T-L1 | |
| SLL | T-12 package | |
| SM | M cell | 0 |
| SR | R cell | 0 |
| SUA | U cell | 0 |
| SUB | U cell | 0 |

*Assuming the vessel is filled to 90% capacity with solution containing 12% $^{240}Pu$.

9413219.0466

Confinement of radioactive materials in process is accomplished through ventilation airflow barriers and structural barriers. Static pressures within building zones are controlled with respect to a common atmospheric pressure reference point to assure airflow from clean areas toward areas of increasing contamination or potential for contamination. Zone IV service areas,* which have a very low potential for airborne contamination, are maintained at a slightly positive pressure. Potentially contaminated zones are maintained at a slightly negative pressure. Radiation zones requiring personnel access are maintained at an intermediate negative pressure and the canyon cells are maintained at a slightly more negative pressure. Backflow is prevented by controlled air velocity at zone interfaces. The air from potentially contaminated and contaminated zones is filtered prior to release to remove radioactive particulates. Radioiodine is removed by reaction with silver nitrate and absorption in dilute nitric acid.

The PUREX design and operating practices include measures to preclude backflow of process solution under expected conditions to areas occupied by personnel. For example, the continuously air-purged instrument lines to process vessels present a potential contamination risk to a control room. However, for contamination to reach a control room, the process vessel would have to be pressurized, the air purge would have to be shut off, and a leak would have to exist in the instrument line. The likelihood of all these situations occurring simultaneously is low. In addition, valves at or near entry of lines to the canyon are closed prior to conducting maintenance on associated equipment, which requires the system to be opened.

With the exceptions of the purified product solutions, relatively clean solvent from the second organic system and recovered acid, process solutions are confined within vessels located in cells belowgrade in a heavily shielded canyon. Cell penetrations for services are high on the cell walls, creating a hydraulic barrier between the canyon vessels and those areas occupied by personnel. In addition, all chemical addition lines from the personnel-occupied areas are equipped with "seal pots."**

Finally, radiation zone access controls are in place for radiation zones with a potential for high personnel exposure. These controls consist of electric- or key-locked doors requiring formal authorization prior to entry. Some of these areas requiring routine access are electrically controlled from the dispatcher's office. Access doors to other potential high-radiation-field areas of nonroutine access are manually locked and the keys are controlled by supervision.

---

*See Section 4.3.2.2 for description of ventilation zones.

**"Seal pots" are small vessels with separate inlet and outlet lines arranged so that a permanent liquid seal is maintained over the inlet line. The pots are not vented back to the process cell, so a pressurization or "blowback" could force radioactive contamination into the piping in the personnel-occupied area.



9413219.0467

6.1.4.2 Chemical Safety. A summary of PUREX Plant materials with the potential for releasing significant quantities of energy is presented in Table 6-9. Safety aspects and methods adopted to assure safe operation are also included in Table 6-9. Hazardous properties of the materials are discussed in Chapter 5.0. The usage of these materials is discussed in subsequent sections of this chapter where appropriate to individual process steps.

## 6.2 PROCESS CHEMISTRY AND PHYSICAL CHEMISTRY PRINCIPLES

### 6.2.1 Zirflex Process Chemistry

Key chemical reactions in the Zirflex process are summarized in Table 6-10. The Zirflex process is a process developed especially for the decladding of Zircaloy-clad fuel elements and includes dissolution of Zircaloy cladding, centrifugation of the decladding solution, and metathesis of uranium-plutonium fluorides. The Zirflex process employs a boiling solution of AFAN to dissolve Zircaloy cladding (about 98 wt% zirconium and about 1.5 wt% tin alloy) by the reaction given in Equation 1 of Table 6-10. Also, as indicated in this equation, ammonia and hydrogen gases are given off during the decladding operation. The ammonia must be removed from the solution to prevent a decrease in the dissolution rate and in the solubility of ammonium hexafluozirconate [$(NH_4)_2ZrF_6$]. Excess ammonia in the solution combines with water to form ammonium hydroxide, raising the solution pH and lowering the boiling temperature; both consequences adversely affect the reaction rate for Equation 1, Table 6-10. Further, exceeding the solubility limit of ammonium hexafluozirconate results in precipitates forming at the reacting surfaces which protect the Zircaloy metal from attack. During the decladding step, ammonia is removed by steam sparging and routing the condensate from the dissolver downdraft condenser to the ammonia scrubber catch tank.

The hydrogen formed in the reaction plus that formed by the radiolysis of water reacts with the nitrate ion in the AFAN as shown in Equation 2, Table 6-10. The reaction, in practice, goes to about 94% completion, giving the apparent overall AFAN-zirconium reaction shown in Equation 3, Table 6-10. During boiling and cooling periods, the dissolver air bleed is operated to dilute the dissolver atmosphere to prevent accumulation of a potentially explosive mixture containing greater than 6 vol% hydrogen. The dissolver offgas is continuously monitored for ammonia and hydrogen concentrations.

TABLE 6-9. Potential Hazardous Energy Sources.

| Chemical | Origin | Potential hazard | Precautions | Limiting conditions |
|---|---|---|---|---|
| $H_2$ | Decladding operation | Explosion | Use of $NO_3^-$ to suppress formation | The lower flammability limit of $H_2$ in dry air is 4.1 vol% $H_2$ |
| | Radiolysis of water | Explosion | Dilution with air or water vapor | |
| $NH_3$ | Decladding operation | Explosion, fire | Dilution with air or water vapor | Ammonia-water-air mixtures are flammable in the range of 15 to 30 vol% |
| | | Azide formation in silver reactor | Water scrubbing to remove $NH_3$ from offgas and control of temperature | Effluent gas temperature maintained at 30°C |
| NPH | Essential material contained in plant solvent | Combustion | Limit vessel temperatures | Flash point of NPH is 80°C and for TBP is 146°C |
| Solvent aerosols | Line leak | Combustion | Turn off flow when leak detected in pressurized system | Flammable NPH concentration is 46 mg/L |
| Solvent nitration products | Solvent-nitrate reactions | Explosion | Separate aqueous from organic prior to concentration<br>Steam distill solvent from concentrator feed<br>Limit maximum concentrator temperatures by limiting the steam pressure | A reaction of explosive violence has only been observed under conditions of incipient calcination of UNH (i.e., 135°C) |
| Sugar | Essential material | Vigorous reaction with nitric acid | Sugar is added at a controlled rate only to thermally hot solutions | Minimum temperature required to assure a vigorous, spontaneous reaction is 85°C |
| Hydrazine | Essential material | Combustion | Received as a 35 wt% aqueous solution which is nonflammable<br>Stored away from oxidants and heat sources | Aqueous solutions containing 40 wt% hydrazine are nonflammable under any conditions |
| $H_2O_2$* | Essential material | Combustion, explosion and contaminants causing decomposition | Received as ≤50 wt% aqueous solution; sources of ignition eliminated; design, volume control<br>Concentration of aqueous solutions is avoided and combustible materials containing spilled $H_2O_2$ are rinsed prior to disposal | Contact of flammable materials with aqueous solutions containing >52 wt% $H_2O_2$ greatly enhances combustion potential |
| Potassium permanganate | Essential material | Explosion | Solids stored under controlled conditions<br>Used in process as dilute solution | Contact of solids with reductants and combustible materials is avoided |

*Received as ≤50 wt% solution in truck trailer lots and stored in the 293-AA storage facility; and as a 13-15 wt% solution in 55-gal drums.

TABLE 6-10. Chemical Reactions--Cladding Removal.

| Operation | Reaction | Comments |
|---|---|---|
| Declad | (1) $Zr_{(s)} + 6NH_4F_{(l)} \rightarrow$ $(NH_4)_2ZrF_{6(l)} + 4NH_{3(g)} + 2H_{2(g)} \rightarrow$ | Exothermic rate of reaction diminished by stable oxide film on zirconium. Rate of reaction decreased if $NH_3$ not removed due to formation of $NH_4OH$, hence increased pH, and precipitation of $(NH_4)_2ZrF_6$ or $(NH_4)_2ZrF_7$ complexes at reaction surfaces |
| | (2) $NH_4NO_{3(l)} + 4H_{2(g)} \rightarrow$ $2NH_{3(g)} + 3H_2O_{(l)}$ | Nitrate suppression of $H_2$ evolved in reaction (1) |
| | (3) $Zr_{(s)} + 6NH_4F_{(l)} + 0.47NH_4NO_{3(l)} \rightarrow$ $(NH_4)_2ZrF_{6(l)} + 4.94NH_{3(g)}$ $+ 0.12H_{2(g)} + 1.41H_2O_{(l)}$ | Apparent overall AFAN-Zr reaction |
| Metathesis | (4) $UF_{4(s)} + 4KOH_{(l)} \rightarrow$ $UO_2 \cdot 2H\ O_{2\ (s)} + 4KF_{(l)}$ | Full water flush required to remove water-soluble fluorides; 4-h digest at boiling required for metathesis |
| | (5) $PuF_{4(s)} + 4\ KOH_{(l)} \rightarrow$ $PuO_2 \cdot 2H_2O_{(s)} + 4KF_{(l)}$ | |

A relatively inert oxide coating on the Zircaloy is formed during reactor irradiation. Therefore, the decladding reaction is initiated by a pitting attack. Where this pitting occurs, uranium metal is exposed to AFAN for extended periods of time which allows a reaction with ammonium fluoride. High fluoride concentrations produce small quantities of uranium tetrafluoride ($UF_4$) and a more highly soluble hexavalent uranium compound ($UO_2F_2$). Problems associated with high fluoride concentrations are diminished by water dilution of the solution to a maximum dissolver volume at the end of the 6-h digestion period. The solution is then cooled to a practical minimum settling temperature of 60°C. Even these measures will not entirely prevent about a 0.1% uranium loss to the decladding waste. Similarly, some plutonium ($PuF_4$) is lost to decladding waste in this process, though the actual quantity is several orders of magnitude less than the quantity of uranium.

Following the decladding waste transfer, the uranium and plutonium fluoride precipitates left in the dissolver are converted to hydrated dioxides, which are soluble in nitric acid, to permit product recovery and to reduce fluoride corrosion during subsequent nitric acid disolution of uranium. This metathesis reaction is represented by Equation 4, Table 6-10. Thus, dissolver solids are metathesized to hydrous uranium dioxide and soluble potassium fluoride by means of the addition of 7M potassium hydroxide.

Metathesis solution is transferred, as needed, from the metathesis storage tank to a dissolver. At the end of 4 h of digestion at boiling temperature, the solution containing potassium hydroxide and potassium fluoride is returned to the metathesis storage tank. This leaves hydrated uranium and plutonium oxide solids in the dissolver. Following coating waste centrifugation, a portion of the metathesis solution is routed to the centrifuge feed tank and is used for metathesis of uranium tetrafluoride solids. Finally, about 650 gal of fresh metathesis solution are added to the metathesis storage tank for the treatment of a subsequent dissolver charge.

### 6.2.2 Chemistry of Fuel Element Dissolution

The ANN is added to the dissolver prior to initiating acid dissolution to complex any soluble fluoride present or fluoride subsequently produced by nitric acid reacting with residual fluoride compounds unaffected by the previous metathesis. Fluoride complexing reduces fluoride corrosion in the dissolver, prevents free fluoride from reaching the HA column, which would increase plutonium losses, and reduces corrosion in the E-F6 and other concentrators.

6.2.2.1 Uranium Dissolution. Uranium metal and uranium oxide are oxidized by nitric acid to uranyl nitrate [$UO_2(NO_3)_2$].

With uranium metal present, the uranium in solution is mainly in the hexavalent state, with some tetravelent uranium. As the dissolution proceeds, all the uranium is converted to the hexavalent state, with nitrogen dioxide or nitrous acid as the principal oxidizing agent.

Equation 6-1 represents the dissolution of uranium metal in nitric acid at concentrations less than 8M, while Equation 6-2 applies at nitric concentrations greater than 8M. However, neither equation expresses all of the mechanisms involved, since nitric acid is refluxed from the downdraft condenser and air is injected into the offgas stream. Under these conditions, the nitric acid consumption is reduced from between 4 and 4.5 to between 2.5 and 3 mol acid/mol uranium. The bled-in air oxidizes the nitrogen oxide in the offgas to nitrogen dioxide.

The rate of uranium dissolution increases with an increase in the initial nitric acid concentration, temperature, and surface area of the fuel elements.

- Metal

$$U + 4HNO_3 \rightarrow UO_2(NO_3)_2 + 2NO + 2H_2O \quad (6\text{-}1)$$

$$U + 4.5HNO_3 \rightarrow UO_2(NO_3)_2 + 1.55NO + 0.85NO_2 + 0.05N_2 + 2.25H_2O \quad (6\text{-}2)$$

- Oxide

$$3UO_2 + 8HNO_3 \rightarrow 3UO_2(NO_3)_2 + 2NO + 4H_2O \quad (6\text{-}3)$$

$$UO_2 + 4HNO_3 \rightarrow UO_2(NO_3)_2 + 2NO_2 + 2H_2O \quad (6\text{-}4)$$

6.2.2.2 Plutonium Dissolution. In the presence of uranium, plutonium dissolves in nitric acid to form plutonium (IV) nitrate, although a small fraction of the plutonium may be present in the solution in the (III) and (VI) valence states, mainly through the disproportionation of the plutonium (IV). The dissolution of plutonium, like that of uranium, proceeds by several competing mechanisms. The following equation is a simplified statement of the reaction by which plutonium (IV) nitrate is formed.

$$Pu + 8HNO_3 \rightarrow Pu(NO_3)_4 + 4NO_2 + 4H_2O \quad (6\text{-}5)$$

The dissolution is stopped while the solution is stoichiometrically slightly acidic in order to prevent the formation of insoluble plutonium (IV) polymer which is redissolved only with difficulty and would be lost during solvent extraction.

6.2.2.3 Other Products. The chemistry of other transuranics and nonvolatile FP is not well defined, though all form acid-soluble nitrates. The volatile FP are $^{85}Kr$, $^{33}Xe$, $^{129}I$, and $^{131}I$. The first two are inert and are entirely discharged via the offgas. The $^{14}C$ and a portion of the $^{3}H$ in the fuel are also released as carbon dioxide and water, respectively. The iodine radioisotopes are suspected of partially refluxing for a very short time in the dissolver tower during the initial part of the uranium metal dissolution, but quickly discharge to the tower offgas during the balance of the dissolution.(7-10) The iodines are then trapped in the silver reactor (see Section 7.4.2). An upgraded system has been installed to monitor for $^{129}I$.

### 6.2.3 Solvent Extraction Process Chemistry

The chemistry of solvent extraction, which is the key operation of the PUREX process, is extensively documented (Ref. 7, 8, and 11 through 17) The major chemical reactions involved in separation of uranium and plutonium from associated FP and each other, resulting in purified nitric acid solutions containing the desired products are given in Table 6-11.

The required separation and purification are accomplished by a series of extraction-stripping sequences conducted in pulse columns under controlled chemical conditions as indicated in the flowsheet.(12) Instrumentation and sample analyses are used to assure the process is conducted safely and efficiently.

### 6.2.4 Plutonium Nitrate Conversion/Calcination Process Chemistry

The major chemical adjustments and reactions in the oxalate precipitation process include $H^+$ ion adjustment, plutonium valence adjustment, oxalate strike/precipitation and calcination.

6.2.4.1 Plutonium Valence Adjustment. The plutonium in a solution of plutonium nitrate usually exists in the +IV valence state. Under certain conditions, such as are found in the 3BP concentrator, large quantities of +VI plutonium are produced. Laboratory studies show that most of the +VI decays to the +IV state after about 22 d. (The +III state does not exist in solution at H+ concentrations greater than 4M and when present does not significantly affect the precipitation process or increase waste losses.) The plutonium (VI) exists as the plutonyl ion $PuO_2^{++}$. Plutonyl oxalate is soluble in the oxalate strike solution, resulting in very high filtrate losses. It is imperative, therefore, that the plutonium (VI) be reduced to plutonium (IV) to avoid filtrate losses in the range of 4 to 5 g/L.

TABLE 6-11. Solvent Extraction Chemistry. (Sheet 1 of 2)

| Process step | Chemistry | Description |
|---|---|---|
| HA column extraction | (1) In general, $M^{+a}_{(aq)} + aNO^-_{3(aq)} + bTBP \xrightarrow{\text{high } [NO^-_3]} M(NO_3)_a \cdot bTBP$<br>Where: a = cation valence<br>b = number of TBP molecules in complex<br>(2) $UO^{+2}_{2(aq)} + 2NO^-_{3(aq)} + 2TBP_{(org)} \rightarrow UO_2(NO_3)_2 \cdot 2TBP_{(org)}$<br>(3) $Pu^{+4}_{(aq)} + 4NO^-_{3(aq)} + 2TBP_{(org)} \rightarrow Pu(NO_3)_4 \cdot 2\ TBP_{(org)}$ | Extraction is accomplished by moving the aqueous feed stream and the fresh organic stream countercurrently through the pulse column cartridge plates. An excess of nitric acid in the aqueous, supplied by the backcycle waste, acts as a driving force or "salting agent," assuring essentially complete extraction. |
| HA column scrub | $M(NO_3)_a \cdot bTBP \xrightarrow{\text{low } [NO^-_3]} M^{+a} + aNO^-_3 + bTBP$ | In the scrub section, the aqueous nitrate concentration is reduced and most of the FP previously extracted into the organic are back-extracted or stripped into the aqueous stream (the HAS). |
| 1BX column Pu partitioning | (1) $Pu(NO_3)_4 \cdot 2TBP_{(org)} \xrightarrow{\text{low } [Pu^{+4}]\ [NO^-_3]} Pu^{+4}_{(aq)} + 4NO^-_{3(aq)} + 2TBP_{(org)}$<br>(2) $Pu^{+4}_{(aq)} + Fe^{+2}_{(aq)} + (NH_2SO^-_3)_{(aq)} \xrightarrow{\text{high } [Fe^{+2}]\ [NH_2SO^-_3]} Pu^{+3} + Fe^{+3}_{(aq)} + (NH_2SO^-_3)$<br>(3) $H^+_{(aq)} + NO^-_{3(aq)} + TBP_{(org)} \rightarrow HNO_3 \cdot TBP_{(org)}$ | Partitioning is accomplished by a combination of low nitrate and Pu(IV) concentrations in the aqueous stream coupled with conversion of Pu(IV) to Pu(III) due to an excess of Fe(II). The aqueous stream is scrubbed with fresh solvent in the 1BS column to recycle stripped U along with 6 to 10% of the Pu |
| 1C column | (1) $UO_2(NO_3)_2 \cdot 2TBP_{(org)} \xrightarrow{\text{low } [NO^-_3]} UO^{+2}_{2(aq)} + 2NO^-_{3(aq)} + 2TBP_{(org)}$ | The aqueous strip has a very low nitrate concentration |
| 2AF (TK-J5) reoxidation | (1) $NH_2SO^-_3 + NO^-_2 \rightarrow N_2 + SO^{-2}_4 + H_2O$<br>(2) $6Pu^{+3} + 2NO^-_2 + 8H^+ \rightarrow 6Pu^{+4} + N_2 + 4H_2O$ | So that Pu can be reextracted, Pu(III) is oxidized to Pu(IV) with $NaNO_2$ in the second Pu cycle feed tank |
| 2A column | Extraction and scrub | Similar to HA column |

TABLE 6-11. Solvent Extraction Chemistry. (Sheet 2 of 2)

| Process step | Chemistry | Description |
|---|---|---|
| 2B column partitioning | (1) $N_2H_4 + NO_2^- + H^+ \rightarrow HN_3 + 2H_2O$<br>(2) $HN_3 + NO_2^- + H^+ \rightarrow N_2 + N_2O + H_2O$<br>(3) $N_2H_4 + 2\ NO_2^- + 2H^+ \rightarrow N_2 + N_2O + H_2O$<br>(4) $HN_3 + TBP \rightarrow HN_3 \cdot TBP$<br>(5) $2NH_3OH^+ + 4\ Pu^{+4} \rightarrow 4\ Pu^{+3} + N_2O + H_2O + 6H^+$<br>(6) $2NH_3OH^+ + 2Pu^{+4} \rightarrow 2Pu^{+3} + N_2 + 2H_2O + 4H^+$<br>(7) $UO_2^{+2}{}_{(aq)} + 2NO_{3(aq)} + 2TBP_{org)} \rightarrow UO_2(NO_3)_2 \cdot 2TBP_{(org)}$ | A reducing flowsheet is used in the 2B column to obtain additional U decontamination. Hydrazine and hydroxlyamine nitrate are in excess of stoichiometric requirements. Fresh solvent stream is introduced for added U scrubbing. Under these conditions, reactions (1) and (4) occur to the near exclusion of reactions (2) and (3) [the sum of (1) and (2)] |
| 3AF (TK-L3) reoxidation | (1) $NO_2^- + H^+ + NH_3OH^+ \rightarrow N_2O + 2H_2O$<br>(2) $N_2H_4 + 2NO_2^- + 2H^+ \rightarrow N_2 + N_2O + 3H_2O$<br>(3) $6Pu^{+3} + 2NO_2^- + 8H^+ \rightarrow 6Pu^{+4} + N_2 + 4H_2O$ | The excess hydrazine and hydroxylamine are destroyed with nitrite present in the concentrated $HNO_3$ that is added for feed adjustment, and Pu(III) is oxidized to Pu(IV) to permit extraction in the 3A column |
| 3A column | Extraction and scrub | Similar to HA, except U is not present |
| 3B column | Stripping | Similar to reaction (1) 1BX column |
| 2D column | U extraction and scrubbing | Plutonium is reduced to Pu(III), using $N_2H_4$ (in the feed) and $NH_3OH^+$ (in aqueous scrub stream). Neptunium is separated by operating with a high-U saturation (resulting in nominally 6% of the U remaining in the aqueous) |
| 2E column | U strip | Similar to 1C column |

Hydrogen peroxide oxidizes plutonium (III) and reduces plutonium (VI) to the +IV state. The oxidation-reduction reactions follow.

$$2Pu(NO_3)_3 + 2HNO_3 + H_2O_2 \rightarrow 2Pu(NO_3)_4 + 2H_2O + O_2 \qquad (6\text{-}6)$$

$$PuO_2(NO_3)_2 + 2HNO_3 + H_2O_2 \rightarrow Pu(NO_3)_4 + 2H_2O + O_2 \qquad (6\text{-}7)$$

The consumption of 2 mol of nitric acid for each mole of plutonium (VI) reduced causes an appreciable decrease in the $H^+$ concentration if considerable plutonium (VI) is present in the feed solution. Because the precipitator feed solution contains more than 4M nitric acid, the amount of plutonium (III) present is negligible. Excess hydrogen peroxide is required due to its reduction by metallic impurities in the nitrate solution. Such a reaction with iron is:

$$2H_2O_2 \xrightarrow{Fe} 2H_2O + O_2 \qquad (6\text{-}8)$$

where the metallic impurities serve as catalysts for the peroxide decomposition. The liberation of oxygen from the solution causes a considerable, but temporary, increase in the volume of the solution. The valence adjustment step must, therefore, be done in a vessel capable of handling the large volume expansion. In addition, the reaction requires a digestion time of at least 30 min, at a temperature of 50°C to 55°C for completion and decomposition of excess hydrogen peroxide.

The amount and concentration of hydrogen peroxide used for valence adjustment is dependent upon the plutonium (VI) concentration. The addition of 12% hydrogen peroxide produces less foaming than higher concentrations and adds more water to the solution, thus lowering the $H^+$ concentration. The addition of excess peroxide does not interfere with the process as long as the peroxide is allowed to decompose before the oxalate strike is made.

6.2.4.2 Oxalate Precipitation. The precipitation of plutonium (IV) oxalate from a plutonium nitrate feed solution by the addition of oxalic acid under the proper conditions takes place according to the reaction:

$$Pu(NO_3)_4 + 2H_2C_2O_4 + 6H_2O \rightarrow Pu(C_2O_4)_2\ 6H_2O + 4HNO_3 \qquad (6\text{-}9)$$

The generation of 4 mol of nitric acid plus the removal of 2 mol of oxalic acid and 6 mol of water per mole of plutonium all affect the $H^+$ concentration in the strike slurry. The effect is more pronounced when concentrated feed solutions are used.

The quantity and quality (particle size distribution, surface area, and particle structure) of the plutonium oxalate formed are determined by the following conditions in the precipitator vessel:

- $H^+$ ion concentration
- Plutonium concentration
- Oxalate-to-plutonium mole ratio
- Agitation
- Residence time
- Temperature.

The optimum $H^+$ concentration of the slurry is between 2.5M and 3.5M. At acid concentrations below 1.5M, the coprecipitation of impurities is favored, and the precipitate is too finely divided for rapid filtration. At slurry acid concentrations above 4.5M, plutonium (IV) oxalate solubility is high and the precipitate is thixotropic.

The optimum range for the free oxalic acid concentration is 0.05M to 0.15M, depending on the purity of the solution. The presence of oxalate-complexing cations in appreciable concentrations requires a large excess of oxalic acid above that required for the reaction with plutonium to produce the desired free oxalic acid concentration. An appreciable reduction of the $H^+$ concentration also results from the addition of excess oxalic acid due to dilution. The solubility of plutonium oxalate increases with increasing nitric acid concentrations above 2M and decreases with increasing oxalic acid in the slurry.

The agitation must be adequate to achieve proper mixing of the strike slurry. However, excessive stirring results in a finely divided precipitate that is difficult to filter. The best precipitations appear to occur at a temperature of 50°C to 59°C. Temperatures above 60°C produce a gummy precipitate.

6.2.4.3 Calcination and Decomposition. The important calcination parameters are the rate of temperature increase during oxalate decomposition, final temperature, and holding time. These parameters affect bulk and tap density, surface area, water content, powder fluidity, and percent loss on ignition.

As the final calcination temperature is increased to 1,000°C, the plutonium oxide bulk and tap densities increase, and the surface area decreases. For constant 30-min dwell times in the calciner, the surface area drops from 43 $m^2/g$ at 350°C to 4 $m^2/g$ at 760°C.

As the rate of temperature increase is decreased by longer holding times of several hours at selected temperatures along the heating curve, water content of plutonium oxide decreases from 1 wt% to less than 0.4 wt%. Powder fluidity improves as water content decreases.

6.2.4.4 Plutonium Oxide Powder Storage. The storage of plutonium oxide is complicated by its hygroscopic nature, helium generation by alpha decay, and radiolysis of impurities. Plutonium oxides readily adsorb moisture from the atmosphere. Weight gains of greater than 5% are observed on exposure of freshly calcined oxide to atmospheres of 75% relative humidity at 25°C for periods as short as 1 h. Noncondensible gases also are adsorbed to a lesser extent. All oxide handling must be done in a dry atmosphere in order to maintain product quality and storability.

Any adsorbed moisture on the plutonium oxide or the storage container is subject to radiolysis by alpha, gamma and neutron irradiation. The gas generated as radiolytic products are trapped inside the storage container over a period of time (determined by the moisture content and isotopic makeup of the plutonium oxide) will pressurize the container. When sufficient pressure is built up, radiation induced recombination will tend to limit the maximum pressure in the container. The container could rupture if sufficient gas is generated. The storage rack and facility would then have to be decontaminated.

Helium is one of the end products of alpha decay. However, due to the extremely small size and nonreactive nature of helium, it can diffuse through the walls of the storage container. This diffusion limits the amount of pressurization contributed by the helium.

A loss-on-ignition (LOI) analysis of the plutonium oxide product less than 1.0 wt% will allow long-term storage of the product.

## 6.2.5 Nitric Acid Recovery Process Chemistry

Nitric acid is recovered from the DOG and the solvent extraction aqueous waste stream at the PUREX Plant. Somewhat more than 80% of the nitric acid present in the aqueous waste streams from solvent extraction is reclaimed for reuse. The relatively dilute acid recovered from the above sources is concentrated in a vacuum fractionator to a uniform concentration suitable for process use.

The nitric acid vapor and a major portion of the oxides of nitrogen in the offgas from the uranium dissolution step are recovered in a finned tube, downdraft condenser. The effluent from the downdraft condenser is further treated in absorption towers to recover about 85% of the remaining oxides of nitrogen as nitric acid. The important chemical reactions involved in the absorption are thought to be:

$$2NO(g) + O_2(g) \longrightarrow 2NO_2(g)$$

$$2NO_2(g) \rightleftharpoons N_2O_4(g)$$

$$N_2O_4(g) + H_2O(L) \rightleftharpoons HNO_3(L) + HNO_2(L)$$

$$2HNO_2(L) \rightleftharpoons H_2O(L) + NO(g) + NO_2(g) \qquad (6\text{-}10)$$

Since the overall absorption reaction is:

$$1.5N_2O_4(g) + H_2O(L) \rightleftharpoons 2HNO_3(L) + NO(g) \qquad (6\text{-}11)$$

some nitrous oxide is always produced and has to be reoxidized to nitrogen dioxide.

Hydrogen peroxide reacts with nitrous acid to yield nitric acid and water by the following reaction.

$$HNO_2 + H_2O_2 \rightarrow HNO_3 + H_2O \qquad (6\text{-}12)$$

Since no oxides of nitrogen are produced by the above reaction, the amount of residual oxides of nitrogen in the effluent from the 293-A back-up facility should be significantly reduced by the addition of hydrogen peroxide to the absorber solution.

Nitric acid is recovered from the HAW by a two-step process. First, the diluted aqueous waste is fed continuously into the boiling, concentrated "bottoms" solution, which continuously overflows to produce a concentrated waste solution. The acidic vapors leaving the reboiler section of the evaporator pass through deentrainment pads and an absorber tower and are absorbed in a counter flowing aqueous solution. Nitric acid is recovered in the acid absorber at a concentration of about 15 wt%.

The concentrated waste solution is reacted with sugar to destroy the residual acid and some nitrate ion and thus, reduce the amount of caustic required for pH adjustment. The offgas from the sugar denitration reaction is routed through the acid absorber for partial (about 50%) recovery of the contained oxides of nitrogen (NO, $N_2O_3$, $NO_2$-$N_2O_4$).

### 6.2.6 Solvent Recovery System Process Chemistry

Degradation of the TBP-NPH solvent occurs primarily as a result of exposure to ionizing radiation in the presence of reactive chemicals such as nitric acid. The solvent is also degraded by exposure to nitric acid and/or high temperature. The rate of degradation is functionally related to the intensity of radiation, the nitric acid concentration, and the solution temperature. Degradation products of TBP include monophosphates, dibutylphosphates, and orthophosphoric acid. The NPH diluent degrades by nitration to form various nitrosyl and nitroso organic compounds, as well as carboxylics, aldehydes, and ketones, but the degradation is almost immeasurably slow under PUREX process conditions. Cleanup of the solvent is accomplished by alkaline and acid washes. Potassium permanganate is used in the alkaline wash to produce manganese dioxide which, as a surface-active fine precipitate, adsorbs $^{95}Zr$, $^{95}Nb$, and $^{106}Ru$.

The alkaline wash removes the TBP degradation products by converting organic acids to aqueous-soluble sodium salts. The FP are also stripped from the solvent. The acid scrub serves to neutralize any entrained carbonate, remove residual manganese dioxide fines, and acidify the solvent for reuse.

Any hydrazoic acid ($HN_3$) contained in the spent solvent is removed as sodium azide ($NaN_3$). Alkaline azides melt without decomposition and then decompose only on strong heating and generally, quietly. Sodium azide is not hazardous at the concentration expected in the PUREX Plant. Also, laboratory differential thermal analyses have shown no exothermic reactions occurring below 450°C in the postulated "worst case"* situation in which organic wash waste containing 0.1M sodium azide is mixed and heated with synthetic in-tank waste.

## 6.3 FUEL RECEIPT AND HANDLING

### 6.3.1 Functional Description

Spent fuel for a dissolver charge is loaded and shipped by UNC Nuclear Industries (UNC). Prior to a campaign, a loading summary is sent to PUREX Operations listing the fuel elements that are to be shipped to the plant during that campaign. Upon arrival, the train is admitted to the PUREX Plant exclusion area and the shipping receipts are delivered to the PUREX shift manager. These records are compared (plutonium in g/ton, $^{240}Pu$%, $^{235}U$%, U total, etc.) with the loading summary and any discrepancies are resolved with UNC management before continuing. A charge sheet specifying the rail cars and cask wells (by number) of the material to be charged is then prepared from the information on the shipping receipts and given to the crane operator. Next, three of the specified rail cars are moved into the tunnel and the car puller is attached to the northernmost end of the car closest to the door. This prevents a car from being accidentally pushed through the tunnel door during charging operations. The remaining cars, if any, are positioned outside of the tunnel. Once this is complete, the locomotive is surveyed for contamination, cleaned if necessary, and released. The operators then check the temperature of the water in the cask wells, open the well covers, and close the tunnel door. All personnel are then evacuated from the tunnel and cut area, and the dispatcher is notified that the cars are ready. The dispatcher verifies the operational steps as they occur.

While the cask cars are being prepared, the dissolver to be charged is also being readied. The cover blocks over the dissolver and the dissolver lid are removed, and the metal annulus of the dissolvers is

*Assumes use of hydrazine in all plant reductant streams, with a one-to-one conversion to hydrazoic acid.

visually inspected by the crane operator* to verify that the "heel" of undissolved fuel is acceptably small.** The lid is then replaced on the dissolver and the dissolver filled with AFAN solution. Finally, the lid is again removed from the dissolver and the dispatcher is notified that the dissolver is ready for charging. Before the charging operation can begin, the dispatcher must perform the following:

- Verify that all personnel are evacuated from the railroad tunnel and cut
- Verify that the tunnel vertical door is closed
- Verify with the headend operator which dissolver is to be charged and that the dissolver has been flushed and filled with solution
- Verify that the crane operator has removed the lid from the correct dissolver
- Obtain permission from supervision to proceed.

Once the above steps have been completed, the dispatcher notifies the crane operator that the charging operation can commence and opens the horizontal door between the canyon and the railroad tunnel.

Prior to the charging operation, the crane operator verifies that the rail cars and wells are as designated on the charge sheet. The crane operator then removes the lid from the cask of fuel to be charged, carefully places the lid on another cask (only one cask is open at a time), and inspects the fuel. If spike fuel is to be charged, the presence of the inner 94-Metal element with the outer 125-Metal element must be verified or the fuel is either returned to UNC for correction or set aside in the casks until a special handling and charging procedure can be written. If everything is found to be in order, the crane operator lifts out and charges one canister at a time to the dissolver. During removal from the cask, the fuel passes within view of the "green fuel" detector. If the detector indicates a radiation reading above a predetermined value, an alarm sounds in the crane cab and the fuel is returned to the cask for management review and appropriate action.

---

*This inspection/determination is normally performed when the dissolver is rinsed immediately after the final dissolution "cut." If a heel cut is determined to be necessary, it is performed at that time (see Section 6.3.2.1).

**The size of the undissolved "heel" of spent fuel in a dissolver that is "acceptable" for subsequent charging is dependent upon the amount of fuel to be charged, and vice versa. A typical heel of spike fuel corresponds to a single layer of fuel assemblies laying on the dissolver grate. This would correspond to about 1,500 lb of uranium, if all assemblies were completely intact. Special heel dissolution "cuts", however, have revealed the amount of uranium in the heel to be typically less than 500 lb. The assumption of a 1,500 lb heel, therefore, provides a margin of safety in establishing the charge size.



1840.6126 EM

A canister is charged to the dissolver by resting the bottom bar on a hook located on the dissolver and allowing the canister to tip and empty its contents into the dissolver. Several hooks are mounted on the dissolver and these are used alternately to provide for an even buildup of fuel in the dissolver annulus. It is important that the fuel be distributed evenly around the annulus, so that it will be covered by solution and, in the case of spike fuel, the margin of safety is increased for criticality prevention. The 94-Metal fuel is not stacked higher than the base of the deflector cone inside the dissolver. The empty fuel canisters are returned to the casks and transported to UNC for reuse.

Occasional cladding damage during the reactor discharge cycle plus subsequent fuel corrosion during reactor basin storage in open Mark 0 canisters for several years resulted in unacceptably high water contamination levels. The aged fuel has been recanned in sealed Mark I or Mark II canisters (see Section 6.3.2.1). The lids will be removed from the canisters prior to receipt at the PUREX Plant. The aged fuel may contain some broken fuel elements, but processing of this material does not present any significant processing problems (see Section 6.4.1.1).

Generally, about 3.5 cask carloads are needed to charge a dissolver and so a fourth car is brought into the tunnel after the first three have been emptied. To do this, the lids must be replaced on the casks in the tunnel and the horizontal door is closed. The operator opens the vertical door and uses the car puller to move the empty cars out far enough to attach to the new car and pull it into the tunnel. Once the new car is in the tunnel, the car puller is relocated to the north end of the new car. The lid of the new car is opened, the vertical door closed, all personnel are evacuated from the railroad cut and tunnel, and the charging operation continues to completion.

When the dissolver charging is completed, the crane operator replaces the lid and cover blocks and notifies the dispatcher. Next, the crane operator replaces all of the lids on the casks and the horizontal door is closed. The vertical door is then opened again and the lids on the cask wells are closed by the operators. The cars in the tunnel are then rearranged for the next charge.

### 6.3.2 System Description

A brief description of the fuel receiving and handling system is presented here, with emphasis on those components having safety implications. More detailed information is available in the PUREX technical manual.(17) The components are discussed in the general order in which used or encountered in the fuel receiving and handling operation.

6.3.2.1 Fuel Canisters. The Mark 0 fuel canisters (Fig. 6-5) are used for storing and handling spent fuel. These consist of two 8-in.-diameter tubes which are flared at the top and have either a grate or solid bottom. The tubes are connected by three short bars (two at the bottom and one at the top). The top bar is used for lifting the cylinder and either of the bottom bars is the dumping trunion. Two basic canister types exist: tall and short. The tall canisters are about 71 in. long and have a maximum capacity of 42 fuel assemblies. The tall canisters are used only for handling spike fuel and contain a maximum of 28 fuel assemblies. The short canisters are 28 in. long and hold 14 fuel assemblies. Short Mark 0 canisters carrying spike fuel can be identified by cylinders with octagonal tops. Mark I canisters are modified Mark 0 canisters that have a solid bottom and a removable, sealed lid.

The short Mark 0 canisters are being replaced with Mark II canisters that are of similar design with solid bottoms but have a straight top, a removable lid or cap, and hooks for use in the DCM. A nitrogen gas seal is provided and the canister is vented via gas traps on the side. The Mark II canisters used for spike fuel are identified by triangular tabs welded to each tube. The new canisters will be received at the PUREX Plant without the lid.

The double-cylinder design makes each type of canister geometrically favorable when handling the higher enriched spike fuel.

6.3.2.2 Fuel Casks. The casks are heavily shielded containers used to transport fuel canisters. These have 10-in.-thick lead walls, bottoms, and lids which are clad with heavy steel plate. The N basin casks have a steel divider inside the fuel cavity. The lid has a locking mechanism that can only be opened and closed by a crane-operated impact wrench. Tubes penetrate the walls of the cask in such a way as to allow water circulation, but do not allow radiation to "stream" out of the casks. Cooling water flows through the casks continually by thermal convection. K basin casks (Fig. 6-6) are designed to hold 3 short canisters, and N basin casks (Fig. 6-7) are designed to hold 4 tall or 12 short canisters. The K basin casks are the most commonly used.

6.3.2.3 Cask Cars. Cask cars are specially reinforced rail cars that are used to transport the casks of irradiated fuel between the reactors and the PUREX Plant. Two types of cars are available: "short" cars (Fig. 6-8) for transporting N basin casks between the reactor and the PUREX Plant, and long, "low-boy" cars (Fig. 6-9) for transporting the K basin casks between N and K basins and between the basins and the PUREX Plant. The tanks or cask wells on the cars are equipped with dial thermometers for checking the temperature of the cooling water, a device for determining if the water level is adequate, piping for adding water, and hinged lids that are opened or closed by means of a handwheel.

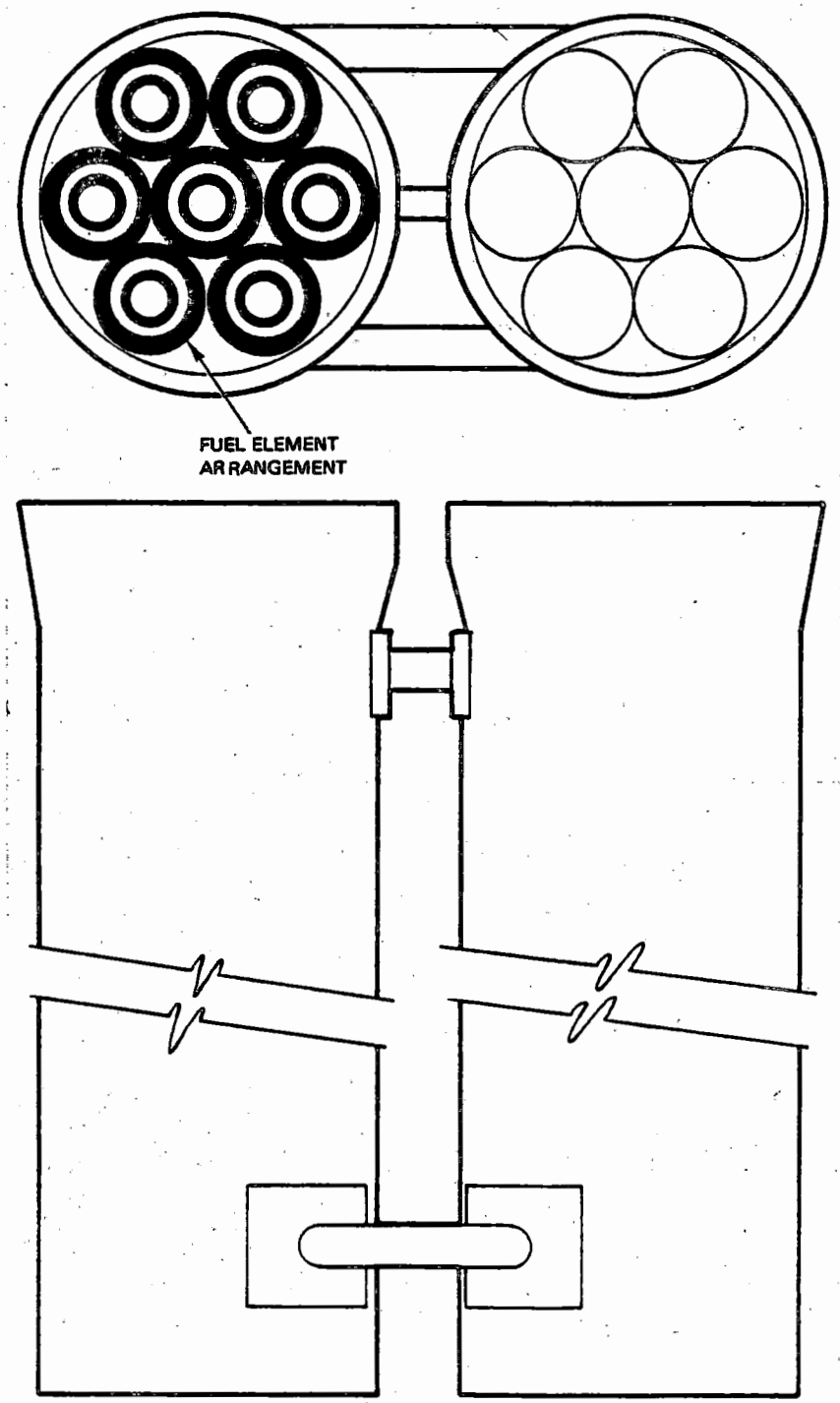


FIGURE 6-5. N Reactor Fuel Canisters.

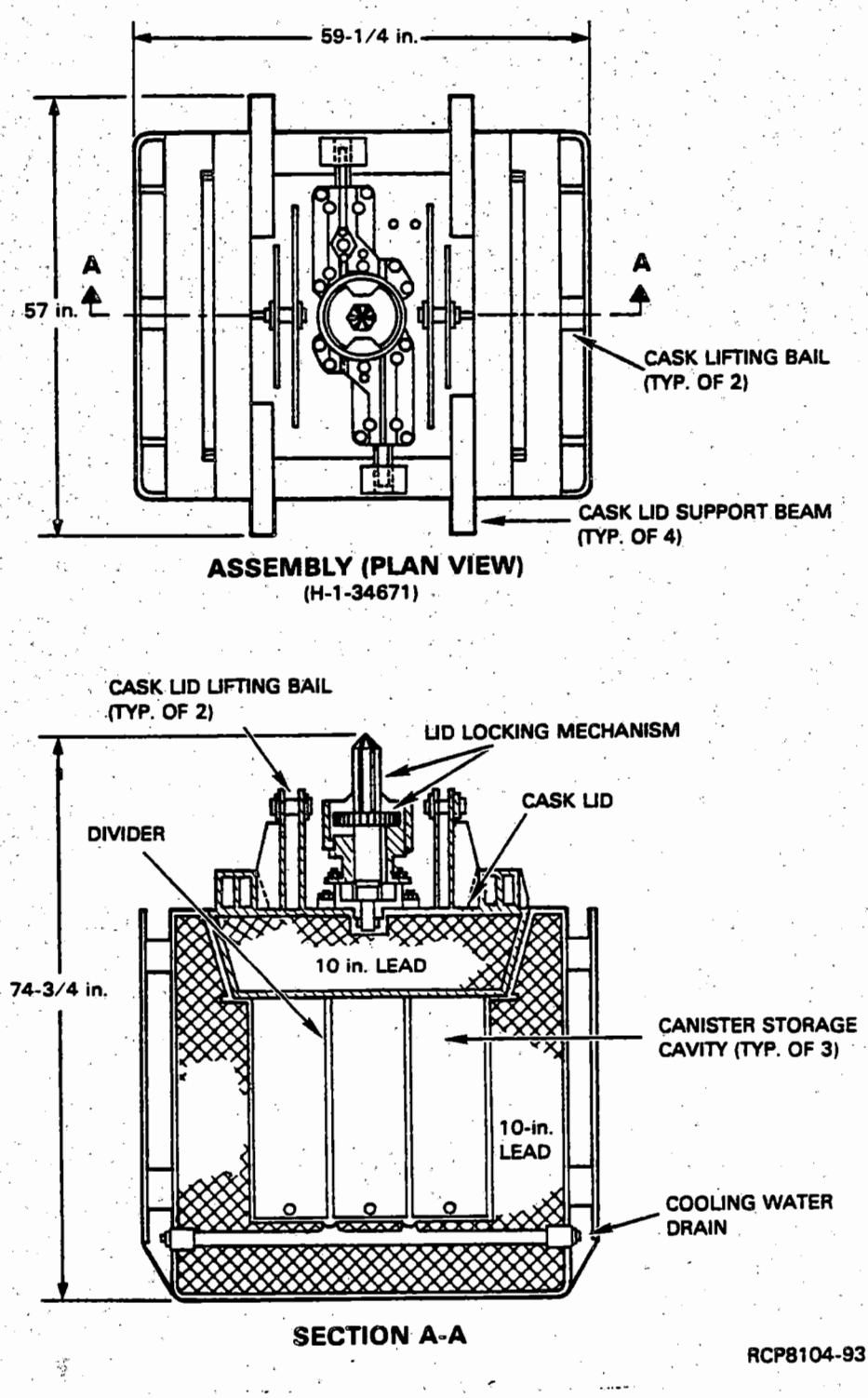


FIGURE 6-6. K Basin Fuel Cask.

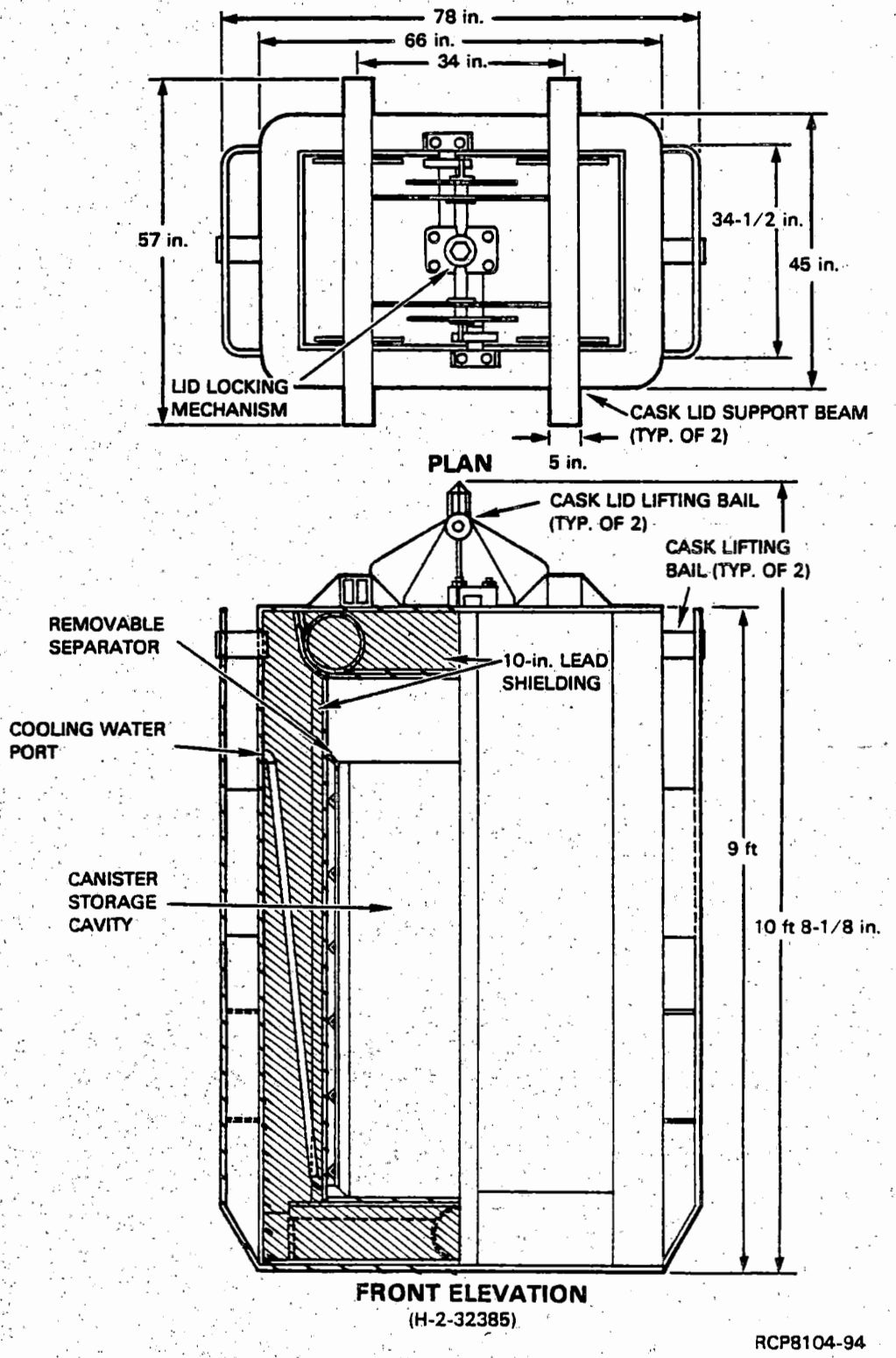


FIGURE 6-7. N Basin Fuel Cask.

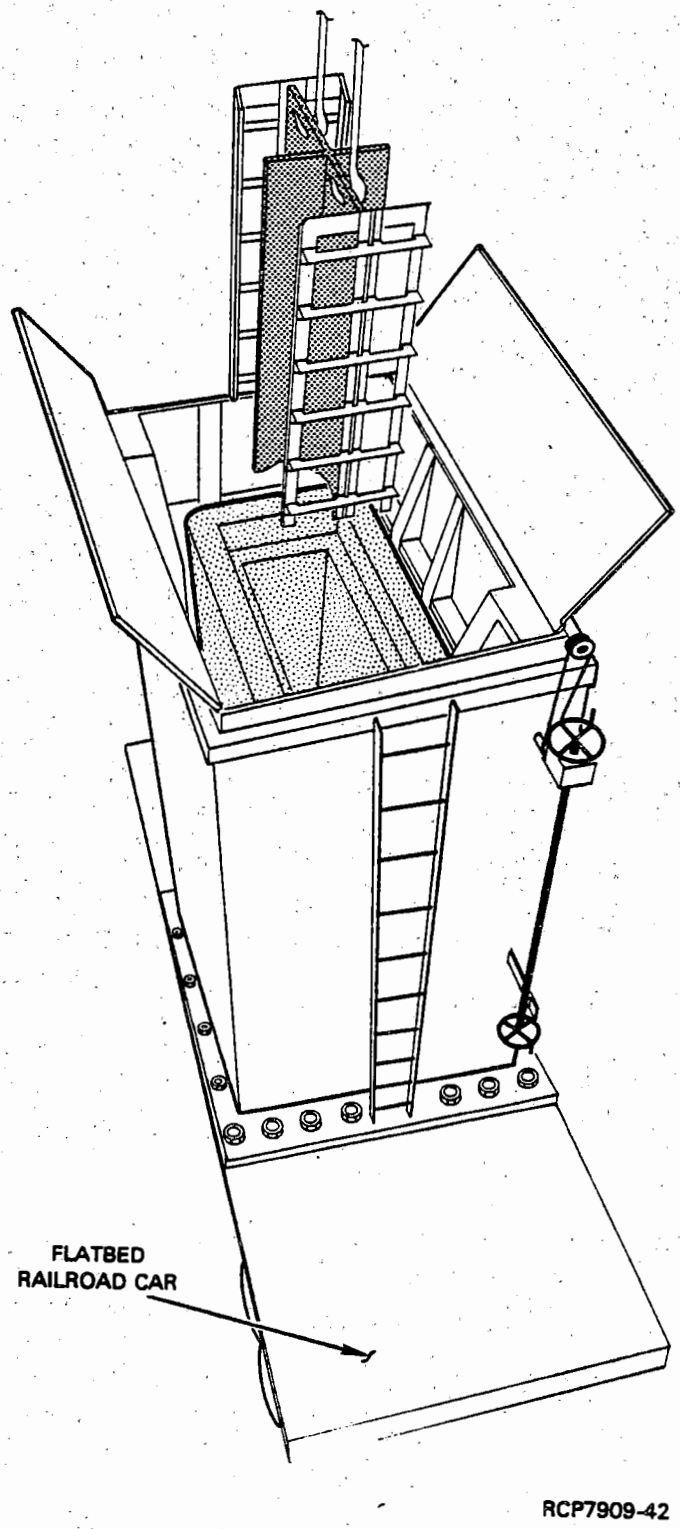


FIGURE 6-8. N Reactor Cask Car.

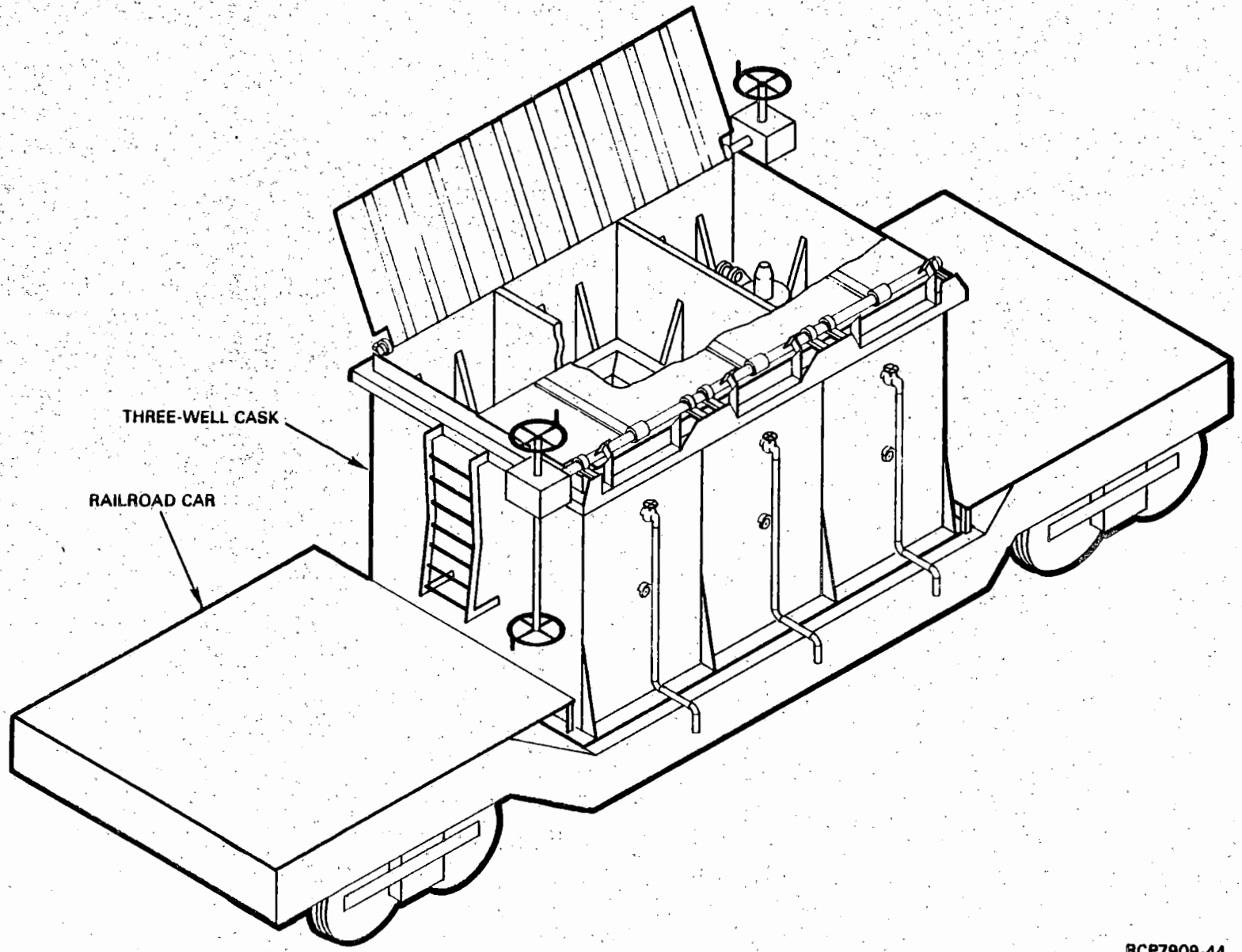


FIGURE 6-9. PUREX "Low-Boy" Cask Car.

6.3.2.4 Railroad Tunnel. The railroad tunnel is located on the east end of the PUREX building perpendicular to the building. A vertical, rolling, steel door provides access to the tunnel and a horizontal, sliding, steel door connects the tunnel with the canyon. An interlock prevents one door from opening if the other is already open. The primary function of the two doors is for ventilation control in the canyon. A secondary function of the doors is to provide tunnel access control. The vertical door controls personnel and locomotive access and the horizontal door controls access by the crane.

A mechanical, chain-pull device with a hook that can be attached to a rail car is mounted on the east wall of the tunnel. The car puller is used to position the cask cars under the horizontal door for unloading. The car puller is attached to the north end of the car nearest the door. A limit switch prevents the car puller from pushing a rail car through the vertical door.

6.3.2.5 Canyon Crane. Either of two master bridge cranes can be used to charge the dissolvers. The cranes are electrically operated and designed to protect the operator from radiation as well as airborne contaminants. The crane cab provides a filtered atmosphere and radiation shielding to the operator. It also travels behind a concrete shield wall to protect the operator from radiation. All work is done using a special, periscope-type, optic system.

6.3.2.6 Fuel Dumping Assemblies. Two types of dumping assemblies are used on the dissolvers. The assembly that is normally used (for dumping short canisters) is a stainless steel cylindrical insert with an upper lip, that extends out about 3 in. and has 4 hooklike projections equally spaced around the inside. The projections engage the lower bars connecting the two barrels of the canister as it is lowered into the dissolver. The four positions provide uniform distribution of the fuel assemblies around the dissolver annulus.

The second type of assembly (used for dumping tall canisters) consists of three vertical, stainless steel columns mounted on a base plate. The center column has a hooklike projection for engaging the lower connecting bar, or dumping trunion, between the two barrels of the canister. The two outer columns act as positioning guides for the canisters. The assembly is also provided with a semicylindrical shield to prevent spilling of the fuel outside of the dissolver. Three dumping assemblies are equally spaced around the rim of the dissolver.

### 6.3.3 Safety Criteria and Assurance

The recognized hazards attendant with the receipt and handling of irradiated N Reactor fuel are listed in Table 6-12. Formal risk assessment is presented in detail in Chapter 9.0. This portion of Chapter 6.0 addresses engineered safety features and administrative controls that are in place to mitigate identified hazards to acceptable levels of risk.

TABLE 6-12. Dissolver Charging--Off-Standard Conditions.

| Off-standard condition | Safety implications | How detected | Likely cause | Remedy |
|---|---|---|---|---|
| Charge with incomplete/spike (1.25% $^{235}U$) assemblies | Safe mass could be exceeded | 1. Cross check reactor records<br>2. Visual inspection of cask by crane operator | 1. Inaccurate reactor data<br>2. Partial assembly loaded at reactor basin<br>3. Shipment of outer spike elements only | 1. Return fuel to reactor basin if more than 2 of 14 inner tubes are missing<br>2. Reduce charge size if 1 or 2 are missing* |
| Overcharge with spike fuel | Violates one contingency of criticality prevention | Visual inspection of dissolver and car by crane operator. Fuel above liquid level, car empty when it should be half full | Failure to follow procedure | 1. Halt charging and return remaining fuel to cask car<br>2. Calculate reactivity and add "poison" if necessary |
| Spill fuel canister in canyon | Contamination problem<br>Potential fire hazard | Visual inspection of floor by crane operator | Canister insecurely hooked | 1. Halt charging<br>2. Pick up remotely with special crane tools |
| Receipt of green fuel (cooled 180 d) | Potential release of $^{131}I$ if charged and dissolved | Green fuel detector alarms | Wrong canister shipped | 1. Return fuel to reactor for additional cooling<br>2. Investigate fuel history |

*Criticality prevention in the dissolver could be compromised if sufficient incomplete assemblies were charged without a corresponding reduction in charge size.

6.3.3.1 Criticality Prevention. Nuclear criticality prevention during fuel transport is provided by a combination of engineered and administrative controls. An operator cannot load enough canisters of 94-Metal or spike fuel into the K basin casks to cause a criticality excursion. The taller N basin casks are also safe for 94-Metal fuel, but additional controls are required for spike fuel. A stainless steel, 1% boron insert in the casks provides neutron absorption and control of canister spacing. In addition, the fuel is stacked only two layers deep in the casks.

Nuclear criticality prevention in the canyon is assured, even in the event of a fuel spill, by a combination of equipment design and administrative control. Limits are established on the amount of fuel that is in transit between the cask cars and the dissolvers. No container is available that will hold more than the maximum safe amount of fuel. Storage of N Reactor fuel in the canyon is not allowed, so the problem of spilling a canister of fuel onto an existing inventory is precluded.

Nuclear criticality prevention during dissolver charging is assured by administrative controls on the fuel-charging operation. The annular dissolvers are geometrically favorable for 94-Metal fuel, provided the fuel does not extend above the base of the deflector cone. The dissolvers are not geometrically favorable for spike fuel, however, so administrative control is necessary. A mass limitation is imposed on the amount of fuel charged to the dissolver and, in addition, the fuel is required to be uniformly distributed around the dissolver annulus. This latter requirement is facilitated by the several charging positions around the annulus.

A review of the spent fuel handling operations, both at the reactor and at the PUREX Plant, indicates that overcharging of spike fuel could occur by either of the following mechanisms:

- A dissolver could be charged with three full cars, or 27 canisters, of spike fuel, rather than the normal 2.3 cars, or 21 canisters
- A dissolver could be charged with a full 32-canister batch of spike fuel under the assumption that the material was 94-Metal fuel.

The first case, charging of 27 rather than 21 canisters would result in a charge size of about 13,800 lb of spike fuel onto a "heel" of spike fuel not exceeding 1,500 lb, for a total batch size not exceeding 15,300 lb. The second case, charging of 32 canisters of spike fuel onto a "heel" of 94-Metal fuel not exceeding 1,500 lb, would result in a batch of 16,350 lb of spike fuel and 1,500 lb of 94-Metal fuel. A computer analysis was made of the spike fuel charging operation using the MONK4 Monte Carlo Code, previously validated, for the range of calculations used, by comparison with critical experiments. The computer calculations yielded $k_{eff}$ values of less than 0.95 for a 33% overcharge (16,250 lb). The calculations were made assuming a uniform optimum lattice (fuel assemblies stacked on end in the dissolver annulus). The probability of the optimum lattice arrangement occurring during the dissolver charging operation is extremely

low, as the fuel is dumped from the open top of the dissolver, striking the conical deflector and falling randomly into the dissolver annulus in a random jack-straw arrangement.

The risk associated with handling of spike fuel, while low, is measurably higher than that associated with the handling of 94-Metal fuel and, therefore, requires that the identity of the fuel be firmly established before it is charged to the dissolver. Verification of identity is ensured by administrative controls, descriptions follow.

- The irradiated fuel is segregated according to exposure, enrichment, and fuel type when it is discharged from the reactor and loaded into canisters. The canisters are identified by discharge date (or key number) and storage position.

- A bucket-loading summary is provided to PUREX management at the start of each processing campaign. This summary lists all material available for processing by key number and storage position or station number. Another record is prepared on the irradiation history of the fuels.

- When fuel is shipped to PUREX, a shipping form is completed which lists the fuel canisters by station and key number and canister position in the cask cars. Copies of the shipping form accompany the fuel shipment to PUREX and are compared against the bucket-loading summary to verify that the correct canisters have been shipped.

- After the fuel shipment has been received, a dissolver charging sheet is completed by either the shift manager or a designated alternate. This form is a list of the canisters to be charged to a dissolver, the weight of uranium in each canister, the key number of each canister, location of each canister in the casks, position of each canister in the car, and the car number. The crane operator then refers to the charging sheet when charging the dissolver.

- After the crane operator removes the lid from a shipping cask, he inspects the canisters of fuel to determine that spike fuel assemblies are complete (both the 125-Metal outer tube and the 94-Metal inner tube are present).

6.3.3.2 Fuel Radioactive Iodine Content. Radioactive iodine is relatively volatile at the temperature of the dissolution process, and an estimated 65% of the amount in the incoming fuel is discharged with the DOG. A combination of engineering and administrative controls is employed to prevent the concentration of radioiodine from exceeding the concentration guides in the gaseous effluent from the PUREX Plant. These controls are discussed in the following section.

Administrative controls are employed to ensure that the irradiated fuel is cooled sufficiently and that the discharge limits are not exceeded, even if the engineered control devices were to fail. Irradiated fuel is aged or cooled at least 180 d after discharge from the reactor to allow the radioactive $^{131}I$, with a half-life of 8.07 d, to decay the required amount. Three separate controls are applied to prevent the accidental shipping and charging of short-cooled or green fuel.

- The shipping forms are compared with the bucket loading summary when the fuel is received. If the key numbers indicate that the fuel is aged less than 180 d, the fuel is not charged.*

- The cask wells are checked for temperature and radiation level. If either is unusually high, which could indicate the presence of green fuel, the material is not charged until the question is resolved.*

- Each canister of fuel passes within view of a green fuel detector during the dissolver charging operation. Insufficiently aged fuel that may cause an iodine release problem will emit enough radioactivity to set off an alarm in the crane cab dispatcher's office and the headend control room, and the canister will be returned to its cask for shipment back to N Reactor. In the event a green fuel canister is charged to a dissolver, a large amount of radioactive iodine would be liberated during the metal dissolving step. This excess amount of iodine would be detected by the iodine monitors in the DOG line and on the main stack, and an alarm would sound in the headend control room. The dissolver in question would be immediately shut down by cooling and/or drowning the reaction, and operation of that dissolver would be suspended until the incident could be investigated and corrective action could be taken. Depending upon the amount of green fuel charged, the corrective action could vary from addition of mercuric nitrate to suppress iodine volatilization to holding the dissolver in shutdown status until the fuel is properly aged.

6.3.3.3 Radiation Protection. Radiation exposure to operating personnel is limited by both administrative and engineered controls. While the fuel is being shipped to and stored in the PUREX railroad cut, it is contained in heavily shielded shipping casks. The cask lids are designed to be removed only by a crane equipped with an electric impact wrench. This prevents an operator from accidental exposure to the fuel elements inside the cask. When the fuel arrives at the PUREX Plant, the cask wells are

*The fuel may be either returned to N Reactor or, if the deficiency is only a few days and the fuel or use of the car is not required immediately, it may be held in the rail cut at the PUREX Plant.



9413219.0493

checked for temperature and radiation level by Chemical Operators, accompanied by a Radiation Monitor. An unusually high radiation reading could indicate either inadequately aged fuel or a ruptured fuel assembly (allowing radioactive contamination to diffuse out of the cask). In any event, the problem would be evaluated and resolved by process control and operations management before any further operating action is taken.

The crane operator is prevented from removing the lids from the casks by the overhead door between the rail tunnel and the canyon. The overhead door operation is controlled by the dispatcher and the door is not opened until all personnel have been evacuated from the rail cut and tunnel and the vertical door is closed. An electric interlock prevents both doors from being open at the same time.

6.3.3.4 Metal Fire Protection. Irradiated fuel is self-heating and, in the absence of a mechanism for heat removal, 180-d-cooled fuel would self heat to about 230°C in 15 h. This occurs if a canister of fuel is lying on its side within the canyon. Combustion would not occur at this temperature even if the cladding is breached. Although it is only a remote possibility, spontaneous combustion of irradiated fuel is prevented by shipping the fuels to PUREX in water-filled cask wells. Fuel assemblies charged to a dissolver are lifted directly from these water-filled casks and dumped into the dissolver which has previously been filled with decladding solution or water. Additional administrative controls require that the fuel be kept covered at all times while in the dissolver, except for the short time that a dissolver is emptied and refilled. The minimum liquid level required to cover the fuel is established by visual inspection during the charging operation. The liquid level is then maintained above this value during subsequent processing. Temperature alarms on the dissolvers will also warn the operator of an increased risk of metal fire.

6.3.3.5 Spilled Fuel Control. Should a canister of fuel spill, charging activities are suspended until the situation is evaluated and responsive action developed by process control and operations management. The appropriate responsive action would depend on a number of considerations such as age and location of the spilled fuel and could include allowing routine charging operations to continue, postponing the recovery until an extended shutdown period.

As listed in Appendix A, Table A-7, a tall canister containing 42, N Reactor 0.94-Metal fuel elements was spilled onto the B Cell floor in December, 1969. All but 11.5 outer tubes and 22.5 inner tubes were retrieved and processed in subsequent dissolver charges. Retrieval of the remaining tubes containing about 500 lb of uranium requires removal of the dissolver. Since the fuel is not a safety hazard, it will not be recovered until the dissolver fails, the plant is shutdown, or conditions change.

## 6.4 CHEMICAL PROCESS SYSTEMS

### 6.4.1 Fuel Decladding and Dissolution

#### 6.4.1.1 Functional Description.

6.4.1.1.1 Fuel Decladding. The fuel decladding and dissolution system separates the Zircaloy cladding from the metallic uranium fuel elements by selective dissolution in a boiling AFAN solution. The Zirflex fuel decladding, shown schematically in Figure 6-10, is described earlier in this chapter and, in more detail, in References 11 and 18. Small amounts of uranium and plutonium are dissolved, along with cladding and precipitate, as tetrafluoride salts. Processing of broken or ruptured fuel elements results in increasing the quantity of tetrafluoride salts formed but does not present any particular hazard or control problem. The uranium and plutonium fluorides, being relatively dense, are easily separated from the cladding waste solution by gravity settling and centrifugation. The cladding waste solution (ammonium fluozirconate) is transferred from the dissolver (after a quiescent period to allow the uranium and plutonium fluorides to settle) into the centrifuge feed tank, agitated, allowed to settle again, then sampled and analyzed for accountability and to verify the absence of significant quantities of soluble plutonium. The sampling operation is described in Section 6.7.1. After sampling, the cladding waste solution is centrifuged (to remove residual uranium and plutonium tetrafluoride fines), made alkaline with sodium hydroxide (by a reverse strike process), and sent to the underground waste storage tanks for later concentration to a salt cake. The uranium and plutonium fines are slurried from the centrifuge back into the centrifuge product tank for subsequent metathesis treatment.

During cladding removal, the offgas from the dissolver passes through the downdraft condenser tower, the ammonia scrubber tower, heaters, a sampler and combustible gas analyzer, the silver reactor, and a packed, glass-fiber filter--all located in the process cell. The offgas is then routed through a second packed, glass-fiber filter to the base of the 291-A-1 stack. The combined gas stream is sampled, monitored continuously for radioisotope concentration, and discharged out the 291-A-1 stack to the atmosphere.

9413219.0495

9413219.0496

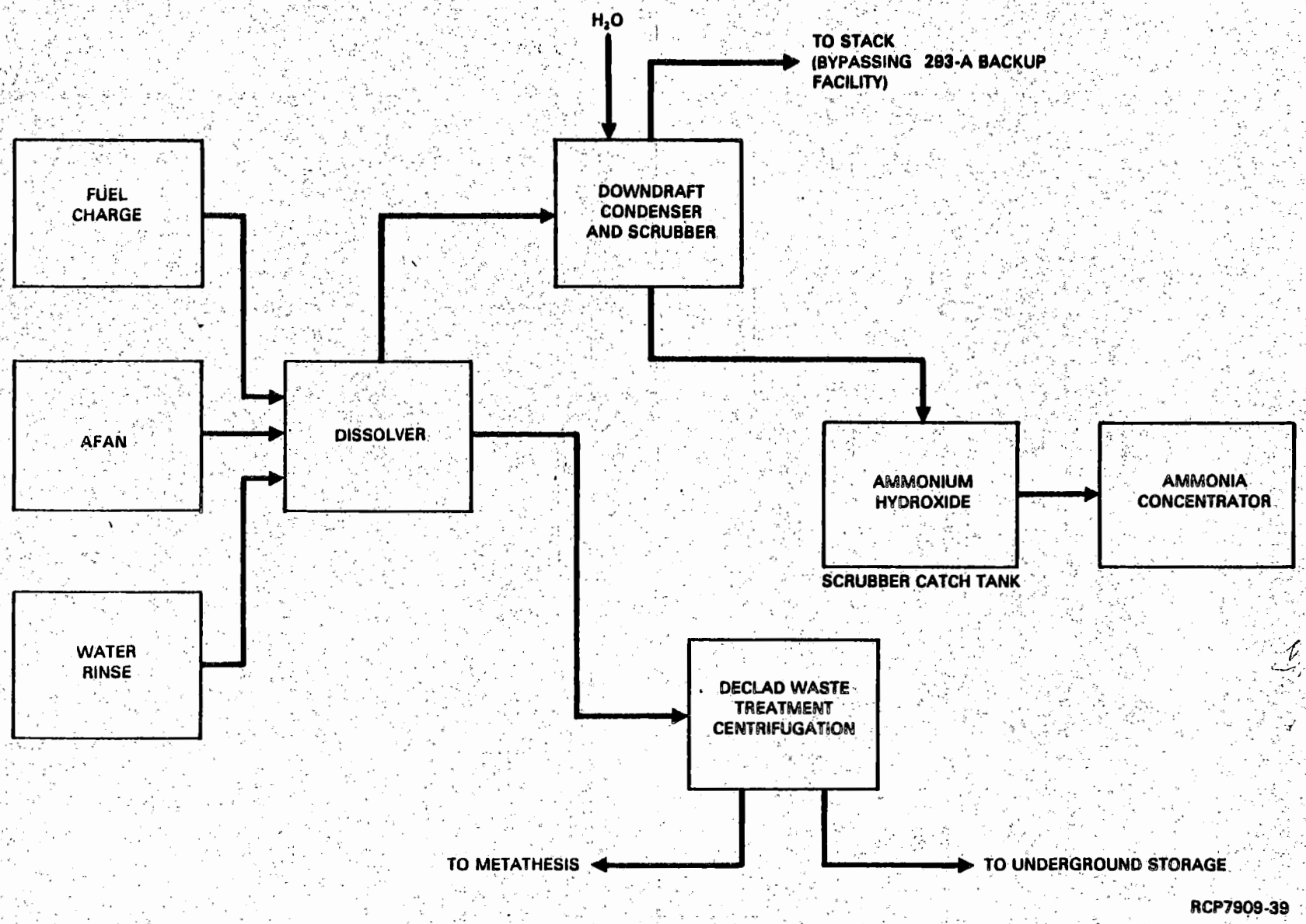


FIGURE 6-10. Dissolver Operation--Decladding.

6.4.1.1.2 Uranium and Plutonium Fluoride Metathesis. Uranium and plutonium dissolved during decladding remain, for the most part, in the dissolver as insoluble fluorides. Potassium hydroxide is used to metathesize these solids to nitric acid-soluble hydrated oxides (Fig. 6-11). The metathesis in the dissolver is performed by digestion at a boiling temperature for 4 h. When the digestion is complete, the solids are allowed to settle for 20 min, then the metathesis solution is returned to a storage tank for reuse. The uranium and plutonium oxide products of metathesis are dissolved with the fuel elements in the subsequent fuel dissolution step.

6.4.1.1.3 Cladding Waste Treatment. The function of the cladding waste treatment system, discussed in greater detail in Chapter 7.0, is to process the cladding waste for recovery of residual uranium and plutonium solids, to handle the potassium hydroxide solution used in the metathesis of uranium and plutonium fluorides, and to react the cladding waste with sodium hydroxide prior to transferring it to underground storage.

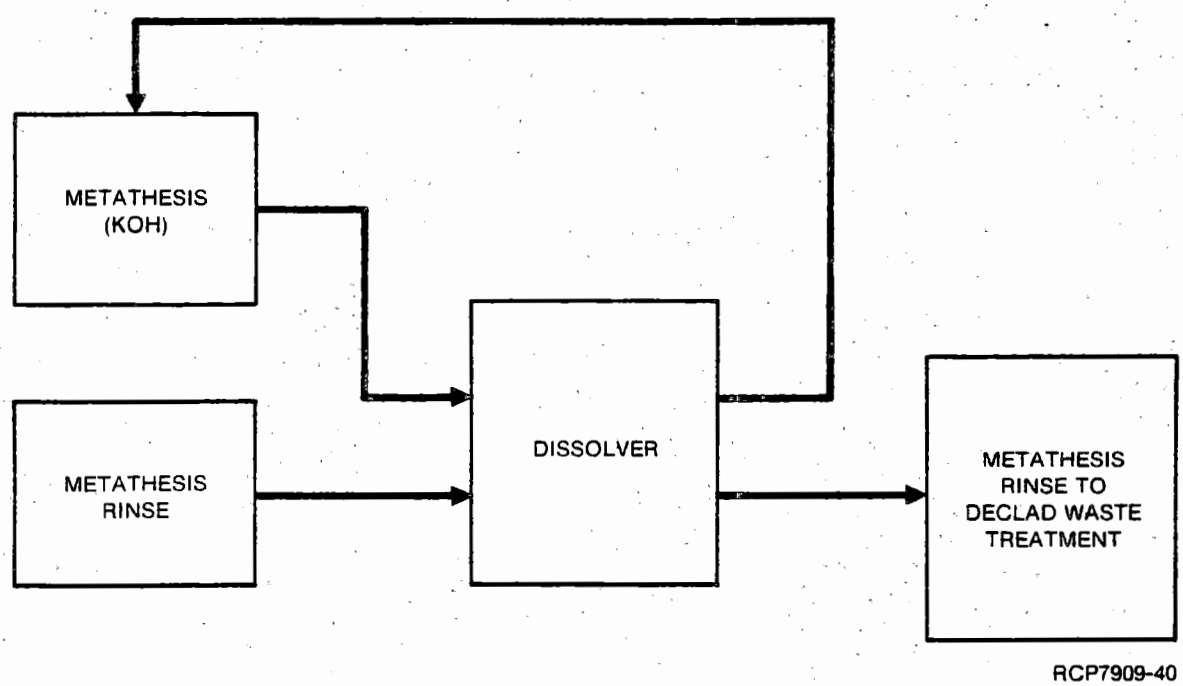


FIGURE 6-11. Dissolver Operation--Metathesis.

6.4.1.1.4 Metal Dissolution. The metal dissolution step is shown schematically in Figure 6-12. First, ANN is added to the dissolver to complex residual fluoride ion, then 10M nitric acid is added to dissolve the uranium. Either one or two dissolution steps, or cuts, are performed, depending on the amount of uranium metal in the dissolver. Initially, the acid is added as rapidly as possible to cover the fuel and maintain control of the temperature. The reaction has a tendency to proceed rapidly at the onset, due to the presence of small pieces of uranium metal and hydrated oxide, and is controlled by cooling the solution or, as a last resort, quenching the reaction by adding water. At the conclusion of the dissolution step, determined by solution specific gravity, the uranium solution is transferred to the holding tanks (TK-D3 and -D4). If 94-Metal fuel is being processed, another dissolution cut (similar to the first cut, except with less ANN) is then performed. The dissolver is then emptied as before, rinsed twice to remove residual metal solution, and inspected for heel size. If the heel (generally Zircaloy cladding) is determined to be excessive,* a heel cut is performed using decladding solution followed, if necessary, by nitric acid and the dissolver is reinspected. Finally, either water is added to cover the heel or, if charging is expected to proceed shortly, the required amount of AFAN decladding solution is added to perform the subsequent decladding step.

6.4.1.1.5 Offgas Treatment. The offgas from the dissolving step is passed through the dissolver tower, which recovers part of the oxides of nitrogen as nitric acid for recycle to the dissolver, then through in-cell steam and electrical heaters, a silver reactor (for the removal of $^{129}I$ and $^{131}I$), an in-cell glass-fiber filter, a secondary glass-fiber filter, and into the 293-A backup facility. In 293-A, most of the remaining oxides of nitrogen and residual radioiodine are removed from the offgas by solution in two acid absorbers in series. The offgas is then discharged into the main ventilation stack where it mixes with the canyon ventilation exhaust, then is continuously sampled for radioisotope concentration and exhausted to the atmosphere. The dilute nitric acid produced in the absorbers is recycled to the PUREX Plant recovered acid system, where it is concentrated and recycled to the process. The DOG treatment is discussed further in Section 7.4.2. The 293-A backup facility is discussed in Section 6.5.2.

6.4.1.1.6 Solvent Extraction Feed Sampling and Accountability. The metal solution from the dissolving step is moved batch-wise through feed storage tanks and an accountability tank. Any needed adjustments in composition or concentration are made, and rework solutions are added. The addition of rework plutonium at this stage is carefully controlled to conform with established criticality prevention requirements. The solution is transferred to the solvent extraction process feed tank. The solution at this point is an acidic, aqueous solution of about 400 g/L uranium as uranyl nitrate, containing about 0.8 g/L of plutonium and the nonvolatile FP.

*See Section 6.3.1 for basis for heel size determination.

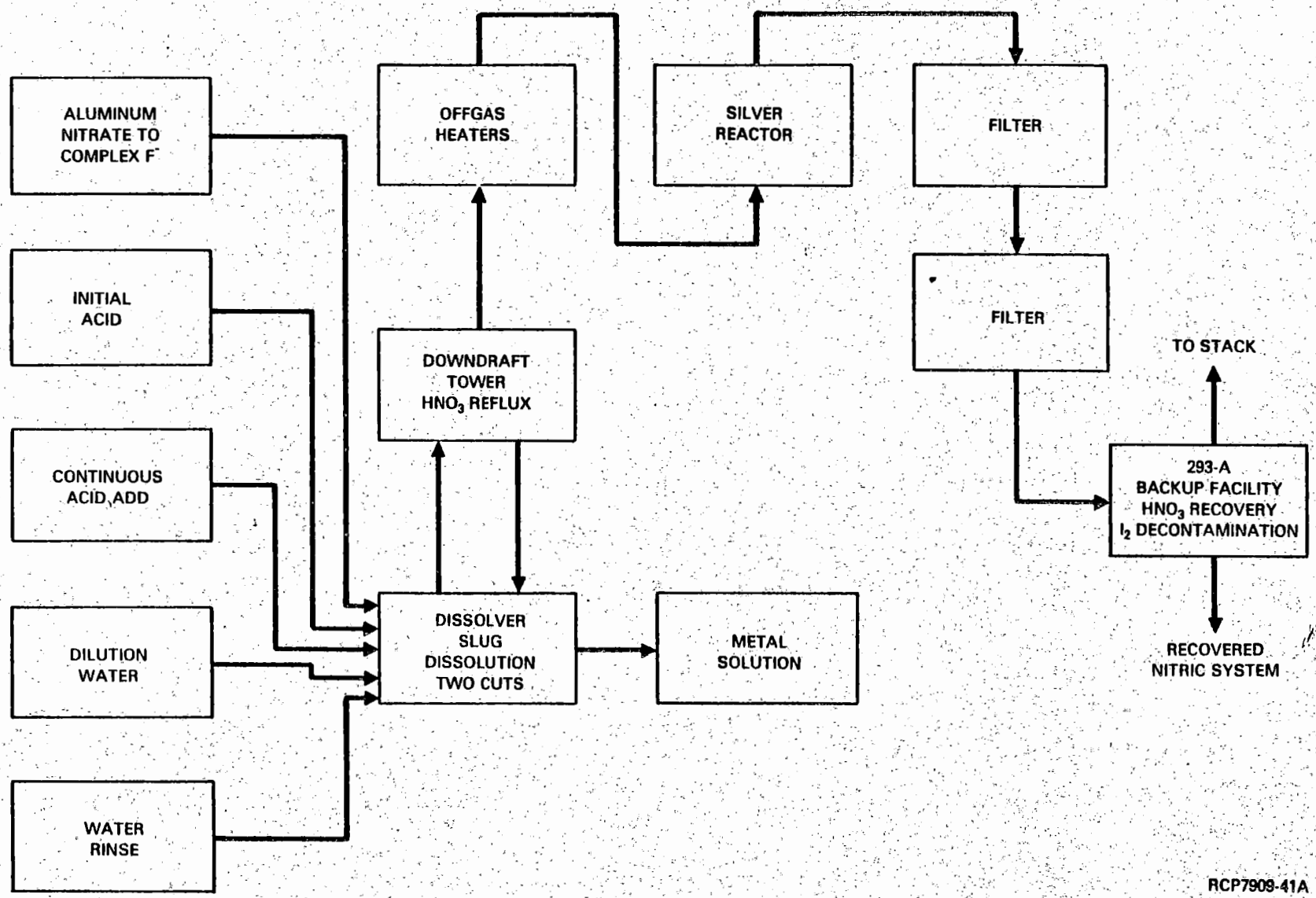


FIGURE 6-12. Dissolver Operation--Uranium Dissolution.

6.4.1.2 Major Components. The major components of the dissolver system: the dissolver vessel, the dissolver tower, and the metal solution storage tanks, are described below. The DOG system is described in Chapter 7.0.

6.4.1.2.1 Dissolver Vessels. Three similarly designed dissolvers are used at the PUREX Plant (TK-A3, TK-B3, and TK-C3). The dissolvers (Fig. 6-13) consist of two annuli separated by a slotted wall. The centers of the dissolvers are cylinders topped with a cone. The cone acts as a deflector and helps to evenly distribute the fuel elements in the dissolvers during charges. When the dissolvers are in place in the cells, the center cylinders fit over a cadmium-clad, concrete, neutron moderator. The fuel elements are charged to the inner or "metal" annulus. The bottom of this annulus is a grate which keeps the fuel about 9 in. off the bottom of the dissolver. Below the grate is a steam and air sparger. The outer or "solution" annulus contains service piping, as well as the heating and cooling coils, and another steam and air sparger. The DOG exits through a 16-in. line attached to the upper section of the dissolver. The dissolvers have lids that can be removed for charging of the fuel. A water seal around the tops of the dissolvers maintains a vent seal while the lids are in place. All dissolver parts that are in contact with process solution or offgas are stainless steel. The dimensions of the dissolvers are shown in Table 6-13.[19]

6.4.1.2.2 Dissolver Tower. The dissolver tower or downdraft condenser (Fig. 6-14) is a vertical, finned tube, counter-current, downdraft condenser. Its purpose is to absorb and return to the dissolver oxides of nitrogen that are generated during fuel dissolution, and to cool the offgas stream during fuel decladding and metathesis. This is done by condensing the water vapor in the DOG and absorbing the oxides of nitrogen in the resultant condensate. During the decladding and metathesis steps, the tower acts as an ammonia absorber by a similar mechanism. In this case, however, the absorbed ammonia is routed to a catch tank, rather than back to the dissolver.

6.4.1.2.3 Cladding Waste Treatment System. The equipment of the cladding waste treatment system, described in more detail in Chapter 7.0, consists of four standard, 5,000-gal tanks, one 1,725-gal tank, and two solid-liquid centrifuges.

6.4.1.2.4 Metal Solution Storage Tanks. The metal solution storage tanks are listed in Table 6-1. The accountability sampling and measurement tank (TK-D5) is a standard 5,000-gal tank. Special features for accurate volume measurement and sampling are shown in Figure 6-15. These features include redundant WF and SG measurement systems, and a two-stage sampler, with redundant sampling systems. The first stage consists of pumped recirculation through a sample pot.[20] Positive flow is assured by measurement of the sample pot liquid level. The second stage is a sampler similar to the ones described in Section 6.7, but without an air in-bleed which recirculates the sample through a cavetype sampler station.

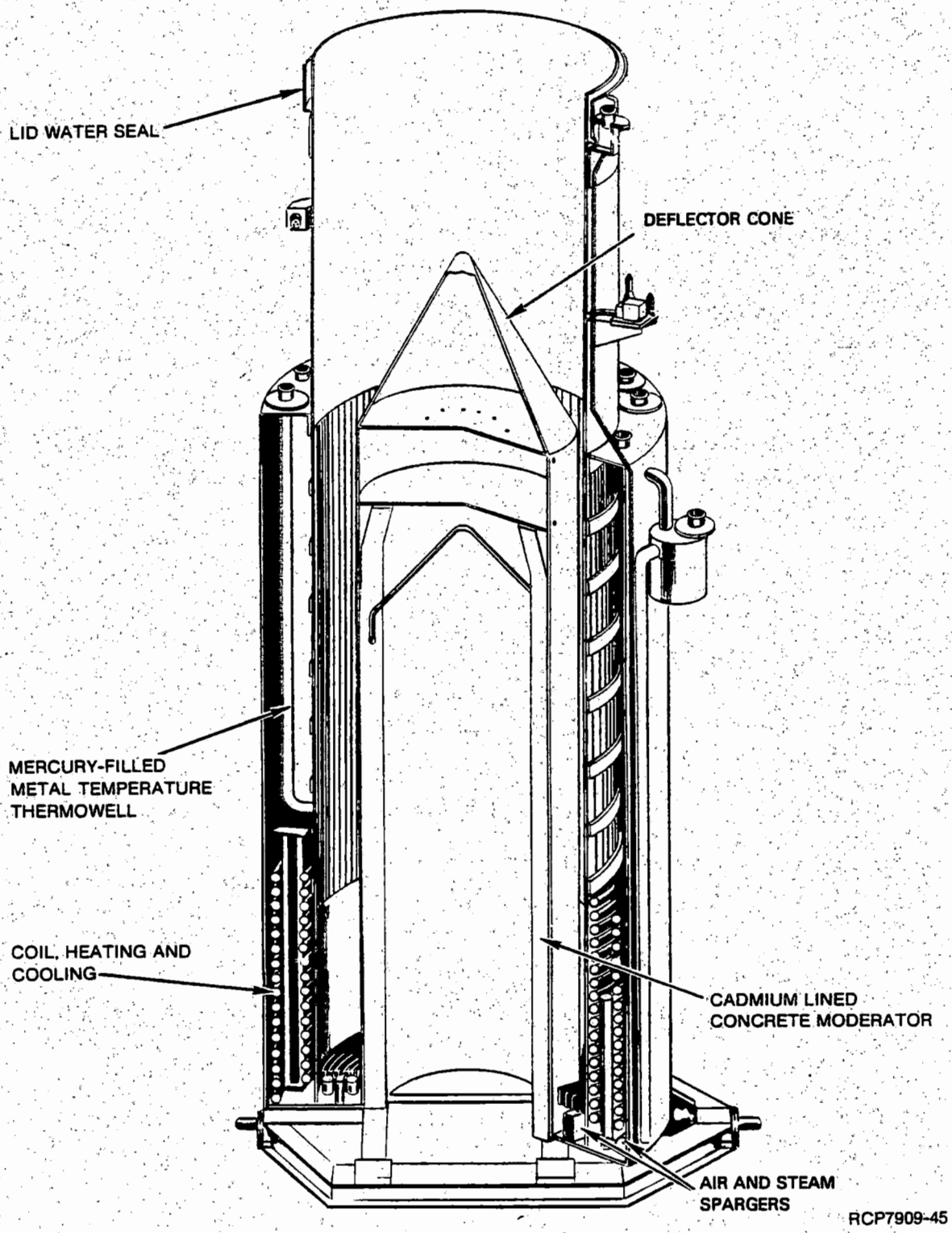


FIGURE 6-13. Annular Dissolver.

9413219.0501

TABLE 6-13. Typical Headend Equipment Description.

| Vessel | Function | Nominal capacity (gal) | Description |
|---|---|---|---|
| TK-A3[a]<br>TK-B3<br>TK-C3 | Dissolver | 5,000 | 9 ft 3 in. OD[b] by 4 ft 11 in. ID[c] by 24 ft. Inner, metal, receiving annulus is nominal 12 in. (new A3 is 11 in.). The outer solution annulus is 14 in. Both annuli contain sparge rings (with airlift circulators in old style) which are served by air and steam. Vessel fabricated of 304L stainless steel. Annular, concrete moderator 3 ft 11 in. ID, 6 in. thick with 30-mil cadmium sheet on outer surface |
| T-A3-1<br>T-B3-1<br>T-C3-1 | Dissolver tower (downdraft condenser) | - | 4 ft 4 in. OD by 23 ft 304L stainless steel (see Fig. 6-14); 1,675 $ft^2$ heat transfer area |

[a]New dissolver in A cell.
[b]Outer diameter.
[c]Inner diameter.

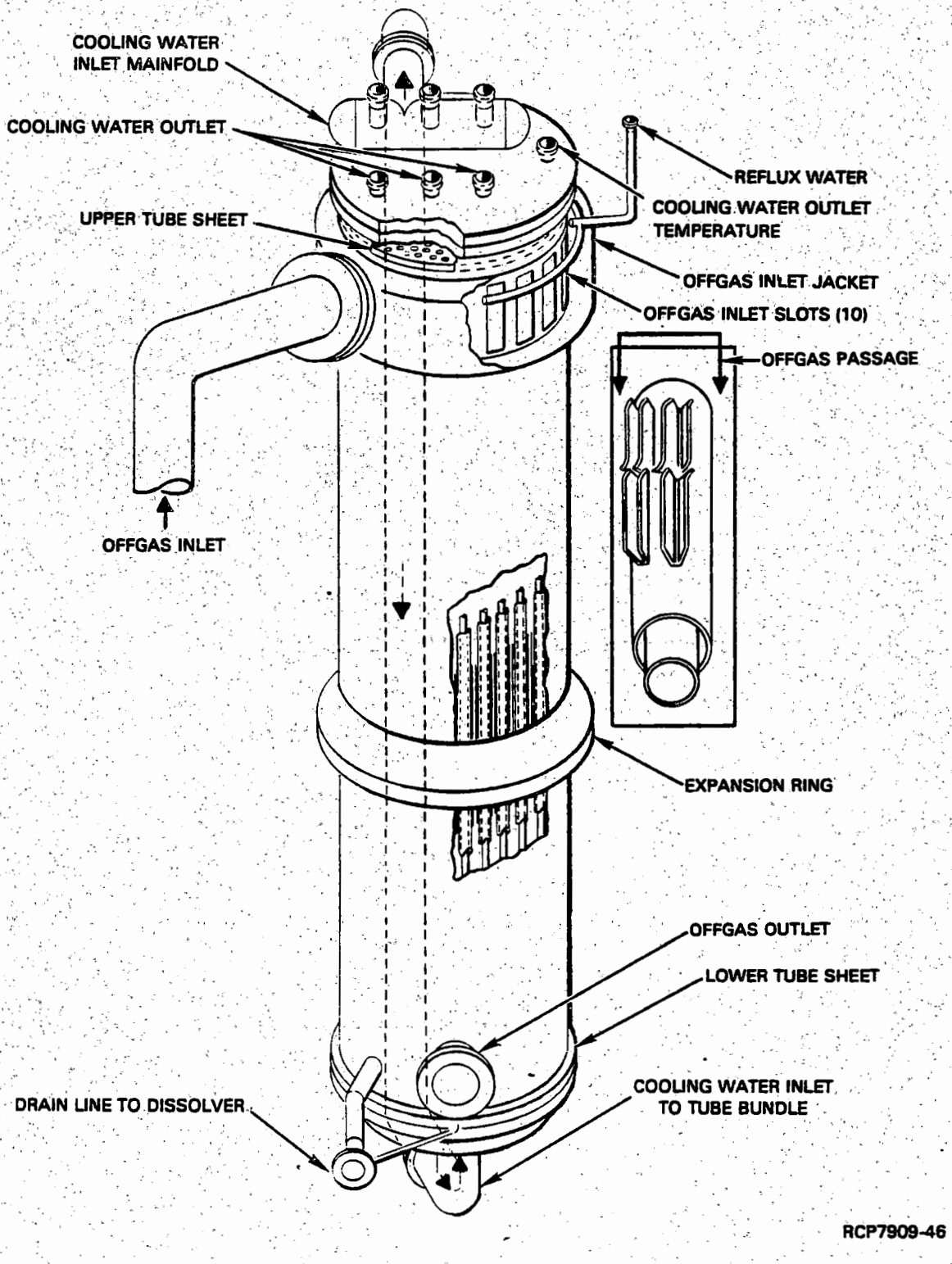


FIGURE 6-14. Downdraft Condenser (dissolver tower).

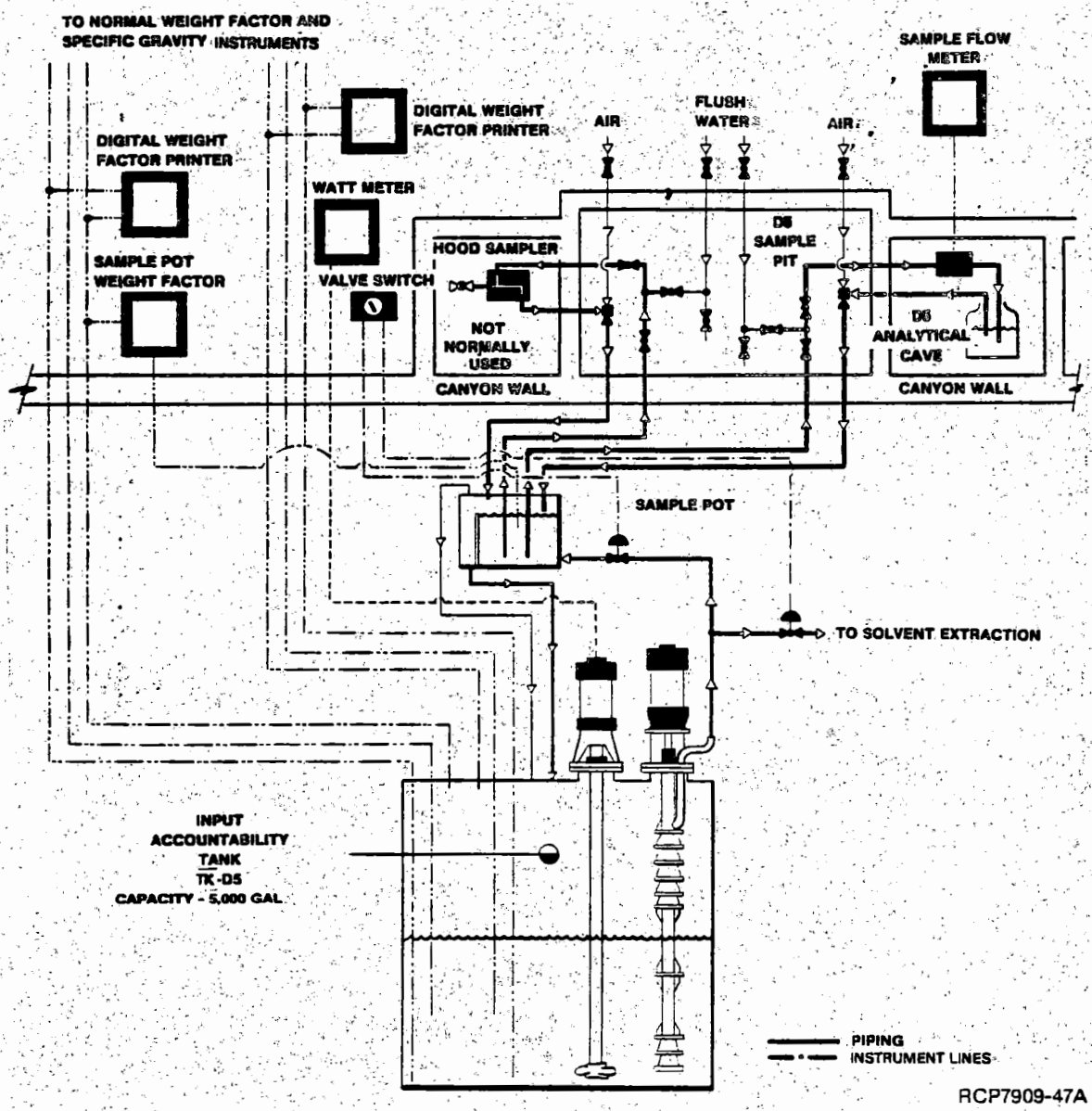


FIGURE 6-15. Accountability Measurement and Sampling.

6.4.1.2.5 Offgas Treatment. The DOG treatment system is described in Section 7.4.2.

6.4.1.3 Safety Criteria and Assurance. The recognized hazards attendant with chemically decladding the metallic fuel elements, handling the cladding waste solutions, dissolving the fuel, and handling the metal solution through sampling and accountability are listed in Table 6-14. Formal risk assessment is presented in detail in Chapter 9.0. This portion of Chapter 6.0 addresses engineered safety features and in place operational controls to mitigate identified hazards to acceptable levels of risk.

6.4.1.3.1 Nuclear Criticality Prevention.

- Dissolvers

The PUREX Plant annular dissolvers are geometrically favorable for all combinations of uranium fuel and nitrate solutions enriched to less than 0.97% $^{235}U$. The most reactive condition envisioned to occur in the dissolvers during the chemical processing steps would be the dissolution followed by selective precipitation of a major portion* of the plutonium in a charge of 94-Metal fuel.

The most reactive condition occurs with the precipitate slurry containing 20 to 30 g/L plutonium and very little $UO_2$. If uranium coprecipitates, it acts as a neutron poison and the reactivity is reduced. The plutonium in the fuel elements should not contribute to the reactivity of this precipitate because the fuel elements are elevated from the floor and have random bridging. No mechanism has been postulated which would permit the precipitate to settle on or among the elements and be at a more reactive concentration. For a criticality to take place as a result of plutonium precipitation, the following events must occur:

- The dissolution must dissolve a quantity of plutonium in excess of the limit
- The procedure is not followed and no solution is jetted out
- A precipitating agent, fluoride or hydroxide, is introduced and precipitates the plutonium, which then falls to the bottom of the dissolver.

*The actual amount of plutonium required for criticality depends on several factors, including $^{240}Pu$ content and total $NO_3$ concentration in solution.



9413219.0505

TABLE 6-14. Decladding and Uranium Dissolution -- Off-Standard Conditions. (Sheet 1 of 3)

| Off-standard condition | How detected | Likely cause | Detection of cause | Remedy |
|---|---|---|---|---|
| DOG $H_2$ concentration >2% | Readings on the $H_2$ analyzer | 1. Too rapid of reaction during decladding<br>2. Improper positioning of air bleed valve | 1. Temperature and pressure readings during heatup<br>2. Valve loading pressure on air bleed DOV[a] | 1. • Open air inbleed valve<br>• Slow reaction by decreasing steam flow through coil<br>2. Increase air bleed rate |
| Dissolver pressurized | Loss of vacuum on dissolver | 1. Too rapid of reaction during decladding<br>2. Improper positioning of air bleed valve | 1. Temperature, pressure, and $H_2$-$NH_3$ readings during heatup<br>2. Valve loading pressure on air bleed DOV | 1. Slow reaction by cutting steam to coil<br>2. Decrease air bleed rate |
| DOG $NH_3$ concentration >2% | Readings on the $NH_3$ analyzer | 1. Low water flow rate to $NH_3$ scrubber<br>2. Low cooling water flow to downdraft condenser | 1. Reading on the scrubber water supply rotameter<br>2. Cooling water<br>• Temperature readings<br>• Flowmeter reading | 1. Increase water flow rate to scrubber<br>2. Check for raw water losses<br>• Decrease steam flow to sparger and coil<br>• Increase cooling water flow to condenser |
| Excess Zircaloy heel in dissolver | Visual inspection by crane operator | 1. Insufficient AFAN, low AFAN concentration<br>2. Dilution of solution with water<br>3. Insufficient $NH_3$ stripping<br>• Low sparge rate<br>• Water addition insufficient<br>4. Shorter than required boiling time<br>5. Solution level below fuel level during decladding | 1. AFAN-check concentration which may be indicated by low dissolver WF<br>2. Dilution-dissolver SG and/or WF readings<br>3. $NH_3$<br>• Air sparge rotameter reading<br>• Water supply rotameter reading<br>4. Temperature recorder during boiling cycle<br>5. Low WF reading during heel check | 1. AFAN-check volume addition of AFAN<br>2. Dilution-increase steam flow to coil. Check downdraft condenser condensate routing<br>3. $NH_3$<br>• Increase sparge rate to proper setting<br>4. Perform extra declad<br>5. Perform extra declad |

TABLE 6-14. Decladding and Uranium Dissolution--Off-Standard Conditions. (Sheet 2 of 3)

| Off-standard condition | How detected | Likely cause | Detection of cause | Remedy |
|---|---|---|---|---|
| Dissolver declad waste lines plugged with solids | Inability to successfully transfer declad waste solution from dissolver | Overconcentration with hexafluozirconate precipitates<br>• High fluoride concentration<br>• Cooling of dissolver during reaction | No decrease in dissolver WF or increase in TK-D2 WF when transfer is attempted<br>• F analysis of declad solution<br>• Temperature instrumentation on dissolvers | Maintain constant volume in dissolver while decladding<br>• Dilute solution as reaction progresses<br>• Maintain proper reaction temperature<br>• Backflush jet to remove plug |
| Excessive product loss while decladding | Analysis of TK-D2 solution for U | 1. Oxidation of $UF_4$ to $UF_6$<br>• Excessive air sparging<br>• Holding decladding solution in dissolver without dilution or cooling<br>2. Insufficient rinsing of dissolver after last dissolution | 1. Oxidation<br>• Air sparge rotameter reading<br>• Monitor WF and temperature charts<br>2. Monitor WF chart after jetting metal solution | 1. Oxidation<br>• Check gang valves for air leakage<br>• Prompt dilution and cooling of declad waste<br>2. Rinse dissolver well<br>3. Do not sparge during declad waste transfer |
| Dissolver pressurization during initial heatup for U dissolution | Vacuum gauge on dissolver | Too rapid reaction | Increase in dissolver vessel pressure | 1. Shut off steam to dissolver coils<br>2. Turn on water to cooling coil<br>3. Add drown tank water |
| Dissolver pressurization during cut | Vacuum gauge on dissolver | Too rapid reaction | Increase in dissolver vessel pressure | 1. Decrease steam flow to dissolver<br>2. Turn cooling water onto coil<br>3. Add drown tank water |
| Excessive dissolver corrosion | Corrosion products in solvent extraction feed samples (TK-D5) | 1. Insufficient ANN added during cut<br>2. Excessive $F^-$ remaining in dissolver | TK-D5 sample analysis | 1. Adjust ANN to proper Al/F mole ratio<br>2. Review metathesis chemistry<br>3. Review decladding operations |

TABLE 6-14. Decladding and Uranium Dissolution -- Off-Standard Conditions. (Sheet 3 of 3)

| Off-standard condition | How detected | Likely cause | Detection of cause | Remedy |
|---|---|---|---|---|
| Acid deficient product solution | Product loss to the HAW due to the formation of Pu polymer | 1. Too high a terminal SG during dissolution<br>2. Nitric acid depletion of dissolver solution<br>o Low concentraion nitric acid used during cut<br>o Faulty dissolver tower operation<br>o Steam leak to dissolver solution from a sparger ring<br>o Faulty SG instrumentation in dissolver | 1. SG instrumentation out of calibration<br>2. $HNO_3$<br>o Analysis of $HNO_3$ used for cut<br>o Dissolver tower flowmeter and instrumentation<br>o Sparger gang valves leaking<br>o Comparision with SG reading in storage tank | 1. Calibrate dissolver SG instrumentation<br>2. $HNO_3$<br>o Butt $HNO_3$ into specifications<br>o Bring dissolver tower back to equilibrium<br>o Repair sparger DOV<br>o Recalibrate SG instrumentation |
| High I content in the DOG | 1. I monitor on dissolver<br>2. High I alarms, 291-A and 293-A (hours later) | 1. Processing of "green" slugs<br>2. Silver reactor breakthrough | 1. High I monitor reading on dissolver<br>2. High I alarms, 291-A and 293-A (hours later) | 1. Immediately quench dissolution by rapid cooling<br>2. Butt dissolver with mercuric nitrate ($10^{-2}$M)<br>3. Dilution of dissolver solution |

[a]Diaphragm-operated valve.

Although the plutonium in a charge of 94-Metal fuel will routinely exceed the precipitation mass limit, the plutonium in the fuel is firmly bound by the bulk uranium. Only the dissolved plutonium needs to be considered for the precipitation accident. A limit is, therefore, placed upon the dissolved plutonium. The amount of plutonium dissolved is determined by the solution SG in the dissolver, the plutonium-to-uranium ratio in the fuel, and the analyses of samples taken from the solution storage tanks.

In addition to the administrative limit on the amount of plutonium permitted in solution in the dissolver, all possible sources of precipitating agents are either eliminated by physical disrup-
ruption of the transfer line (nuclear blank) or are precluded through operating controls, such as the dissolver chemical addition and transfer control system (Section 6.5.1.3.4).

- <u>Decladding Waste Vessels (TK-D1, -D2, -E1, -E3, and -E5, and G-E2 and -E4)</u>

Five large tanks (TK-D1, -D2, -E1, -E3, and -E5) and two centrifuges (G-E2 and -E4) comprise the primary vessels of the decladding waste system. The nuclear safety of this system is dependent upon the control of dissolver operations. Decladding solutions contain ammonium fluoride and/or potassium hydroxide and attack exposed fuel metal to some extent. These solutions are also precipitating media for actinides. Typically, 5% to 10% of the dissolver fuel charge is converted into insoluble fluorides. Normally, both uranium and plutonium are present in the dissolver solids. It is remotely possible, however, for conditions to exist that could cause only the precipitation of plutonium.

Assuming a concentration of 30 g/L of plutonium under such conditions, about 800 g of plutonium in a hemispherical configuration of slurry would represent a critical mass. If, however, uranium were also present in the same ratio to plutonium as in the original fuel element, no amount could be critical.

Because plutonium may be present in higher ratios near the surface than in the remainder of the fuel element, procedural controls are employed to keep the actinide-bearing solids in the dissolver. The following controls are established:

- Maximum decladding time, to limit amount of fuel element dissolved
- Minimum settling time, to limit amount of solids suspended
- No agitation during jet out, to limit amount of solids resuspended
- Minimum temperature, to limit precipitation of zirconium solids.



9413219.0509

Most of those plutonium-bearing solids that do leave the dissolver are recovered in one of the system centrifuges (G-E2 and -E4). The uranium and plutonium are recovered by nitric acid dissolution and then sent to the metal solution storage tanks.

- Metal Solution Storage Vessel TK-D3 and TK-D4, Accountability Vessel TK-D5, and Feed Adjustment Vessel TK-E6

The four vessels, TK-D3, -D4, -D5, and -E6, have two common bases for safety: a plutonium mass limit that is safe for accidental precipitation and in-place controls to prevent accidental precipitation from occurring.

The plutonium mass limit for accidental precipitation is based upon the precipitate piling up in the most unfavorable credible geometry (piled up, as a result of agitation, around the outside perimeter of the tanks, with the pile having a 45 degree slope). The plutonium mass limits based on this rationale are in excess of 10 kg for each vessel in the absence of uranium. Uranium is normally present in a 1 lb/g of plutonium ratio and provides neutron poisoning in solution or precipitate.

Physical and/or administrative controls are in place to prevent the addition of precipitating agents to Vessels TK-D3, -D4, -D5, and -E6. Vessels TK-D5 or -E6 are not connected to process streams or lines that contain precipitating agents. Flush or utility headers that could contain such material are physically disconnected. Vessels TK-D3 and -D4 are connected to the dissolvers, which routinely contain precipitating agents (KOH, $NH_4F$-$NH_4NO_3$). The operation of the dissolvers is dependent upon administrative control of solution routings, as well as process chemistry. A key-lock selector switch, or sequential programmer, is used for each dissolver which restricts the routings possible for each phase of the dissolver process (charge, declad, rinse, metathesis, fuel dissolution). This selector switch prevents misrouting of plutonium-bearing uranyl nitrate solutions into a vessel containing decladding solution, or decladding or metathesis solution into a vessel containing plutonium solutions. The supervisory personnel control the key to this switch and must check the procedure run sheet prior to changing the selector switch location.

Besides complying with the mass limit in TK-E6, the contents must be at a safe concentration (less than 6 g/L) and a safe plutonium-to-uranium ratio (less than 45,000 g Pu/ton uranium). TK-E6 has the following operational requirements for receiving plutonium rework from TK-L11:

- A minimum volume of 2,000 gal of acidic solution is present in TK-E6 upon receipt of plutonium rework, so that even if the material being received were not properly diluted or poisoned enroute, it would be safe when received in TK-E6

- At least one agitator is operating

- Based upon an analysis of the TK-L11 solution, the material being sent is diluted or poisoned via the motive liquid jet to an always subcritical concentration ($k_{eff}$ less than 0.95).

At least two of the controls would have to fail before a criticality in TK-E6 would be possible.

Rework material from TK-L11 is diluted by a factor of at least 80 upon receipt in TK-E6 by the required 2,000-gal inventory. Even if the sample result were in error, the maximum concentration (450 g/L) would be diluted to a safe concentration upon receipt in TK-E6.

The TK-L11 liquid jet provides a minimum dilution of 2.7:1. Based upon an analysis of the TK-L11 contents, the supervisor decides whether nitric acid solution alone or nitric acid-cadmium nitrate solution shall be used as motive liquid. The supervisor may also elect to dilute high plutonium concentrations in TK-L11 before transfer and use nitric acid as motive liquid. The following controls are applied to ensure that the cadmium nitrate solution is of the proper concentration.

- Cadmium nitrate is made up according to an approved makeup procedure.

- The material is sampled and analyzed to assure the correct cadmium concentration.

- A neutron source-neutron detection pair is installed at the cadmium feed tank and interlocked with the pump to the L-11 jet.

No leaks in the TK-L11 to TK-E6 system have been known to occur. However, material being transferred is at a safe-effective concentration and the solution would be subcritical even if it were to leak into a canyon sump.

6.4.1.3.2 Personnel Exposure to Radiation. With the exception of fuel receipt (discussed earlier), all operations are conducted within the massively shielded processing areas of the PUREX Plant. Sampling and analysis of the metal solution are performed with manipulators in a shielded "cave."

6.4.1.3.3 Combustible Gases. Hydrogen-air mixtures are flammable in the range of 4.1 to 75 vol% in dry air and will explode at room temperature by any external source of ignition, such as sparks from electrical equipment, overheated bearings, or an open flame. Ammonia-water-air mixtures are flammable in the range of about 14% to 30 vol% ammonia. The effect of water vapor on the flammability of ammonia is such that, with a

rise in temperature in an ammonia-air-water system, the lower limit is raised and the upper limit is lowered to meet at about 44°C. Above this temperature, the amount of water vapor is sufficient to render all mixtures of ammonia and air nonflammable. Ammonia reacts with nitric acid or oxides of nitrogen to form ammonium nitrate, which is flammable under extreme conditions. Ammonia may react with the silver nitrate present in the DOG iodine removal equipment to form silver azide. However, silver ammoniate compounds that are intermediates in the production of silver azide readily decompose at high temperature, and are prevented from accumulating by maintaining the temperature of the silver reactor at greater than 150°C.

Hydrogen and ammonia are both formed during the decladding step. Hydrogen is generated by the reaction between fluoride and zirconium, but is largely suppressed by the presence of nitrate ion, resulting in the formation of ammonia.

The concentration of hydrogen in the DOG is maintained at a safe concentration as described in Section 6.4.1.4.1.

Hydrogen is also formed in process solutions by radiolysis of hydrogen-bearing components. Radiolytic hydrogen is diluted to safe concentrations in process vessels by a combination of air in-leakage and instrument purge air.

Ammonia is evolved from the decladding solution during dissolution of the zirconium and, also, from the reaction between hydrogen and nitrate ion. Essentially all of the ammonia is scrubbed from the DOG and the cladding waste treatment offgas in the ammonia scrubbers. The ammonia scrubber waste is then evaporated; the ammonia is evolved from the boiling solution and exits with the overhead vapors, is reabsorbed into the condensed vapor, and discharged to an underground crib.

The ammonia concentrations in the dissolver and the E cell offgas streams are measured with gas analyzers. Safety is assured by maintaining a safe concentration of water vapor in the atmosphere of the vessels containing ammonia.

6.4.1.3.4 Dissolver Corrosion. The primary confinement barriers in the PUREX Plant are the vessel walls and piping, and failure could impose a severe strain on the secondary barrier system. The most likely instance of a primary barrier failure is heating coil or tube bundle failure due to corrosion. The primary cause of corrosive coil failure in the dissolvers is the fluoride ion in the AFAN solution that is used to dissolve the zirconium cladding on the fuel assemblies. Residual fluoride is also present in the $HNO_3$ fuel dissolution solution, as discussed in Section 6.4.1.1.4. Average dissolver coil corrosion rates on the order of 15 mil/mo and 5 mil/mo, respectively, for the decladding and fuel dissolution steps are expected, based on a review of laboratory test and plant operating data.

Loss of radioactivity, in the event of a coil failure, is minimized by: an interlock system that maintains pressure on the coil at all times, periodic coil leak tests, and continuous monitoring of the effluents and automatic diversion if radioactivity is detected.

6.4.1.4 Operational Control. The standard operating procedures (SOP) for the dissolvers explicitly specify each action or operating step to be performed from the time the dissolver is charged with fuel and the lid replaced until it has been rinsed and prepared for the next charge. Supplementing the SOP are dissolver operating data sheets which must be filled out by the operator. The data sheets are, basically, check sheets with spaces for recording the time, initials of the operator performing each step, and other pertinent physical data (such as volumes transferred and temperature).

6.4.1.4.1 Fuel Decladding. Nuclear criticality prevention during the decladding operations is maintained primarily by strict supervisory control of the chemical addition and solution transfer control system (also known as the sequence control and the dissolver sequence selector). The accumulation of an unsafe mass of plutonium solids is prevented by specifying the amount of excess decladding solution to be used and the length of the digestion period, and by requiring that the solids be allowed to settle to the bottom of the dissolver before the cladding waste is transferred out of the dissolver.

Hydrogen evolution during the decladding step is suppressed by the nitrate ion present in the decladding solution: The AFAN decladding solution is procured as a stock solution; 11M in fluoride and 1M in nitrate concentration. The stock solution is sampled when received, but not used until the analyses indicate the material meets the required purchase specifications. The amounts of AFAN stock solution and dilution water required for the decladding step are specified in the procedure.

The concentration of unreacted or residual hydrogen in the DOG is continuously measured and maintained at a safe level (less than 2.0%) by adjusting the dissolver air in-bleed rate, the steam sparger rate, and, finally, the steam flow to the dissolver coil.

The ammonia concentration in the vapor space of the dissolver is above the lower flammability limit in dry air, but safety is ensured by the temperature of the solution and steam sparging, and the consequent presence of water vapor. Virtually all of the ammonia is removed from the DOG in the condenser and ammonia scrubber to reduce the concentration in the offgas to less than the lower flammability limit. The continuous ammonia analysis provides verification of proper operation of the condenser and ammonia scrubber.

6.4.1.4.2 Metathesis. Nuclear criticality prevention during this step is maintained by strict supervisory control of the dissolver sequence selector. The accumulation of an unsafe mass of plutonium solids is prevented by requiring a period of quiescence to allow the solids to settle before the metathesis solution is transferred from the dissolver.

6.4.1.4.3 Fuel Dissolution, Storage and Sampling, and Feed Preparation. The mass of plutonium dissolved in a single dissolution cut is limited. This is accomplished by operating procedure, which specifies the amount of nitric acid to be added to the dissolver and the final or end-point concentration (determined by SG measurement) of the dissolver solution. Precipitation in the dissolvers is prevented by designating a maximum end-point SG (calculated to ensure a final nitric acid concentration of at least 0.2M) and by supervisory control of solution transfers by means of the dissolver sequence selector. Adequacy of control of the uranium, plutonium, and nitric acid concentrations of the metal solution is verified by analysis of the samples taken in the accountability measurement tank (TK-D5).

Plutonium mass limits for the solution storage vessels are not exceeded if dissolver operating limits and procedures are followed. Plutonium precipitation in the solution storage, sampling, and feed preparation tanks is prevented by the use of "nuclear blanks" and the dissolver sequence selector. Restoration of a nuclear-blanked system is permitted only after review and approval by both engineering and operations management.

The procedure for transfer of plutonium rework solutions from TK-L11 in the PR room to the feed preparation tank (TK-E6) requires supervisory approval for all transfers. The supervisor must review the plutonium concentration in both TK-E6 and TK-L11, and specify the composition of the solution to be used as the motive fluid for the transfer jet. If cadmium nitrate solution is used, it must be the proper concentration or an interlock will prevent the pump from operating. If an acid solution is used, the acid addition system must be unlocked and the above interlock bypassed. These actions require management approval.

Control of the concentration of hydrogen generated by radiolysis in the solution storage tanks to a safe concentration is assured by a combination of air in-leakage and air purging through the instrument air dip tube lines.

## 6.4.2 Solvent Extraction

The detailed chemical flowsheets used for solvent extraction processing in the PUREX Plant are discussed in References 11, 12, and 15 through 17. Flow sketches are shown in Section 6.1.1. This section discusses the solvent-extraction systems.

### 6.4.2.1 Functional Description.

6.4.2.1.1 Codecontamination System. The codecontamination system separates the uranium and plutonium from the bulk of the radioactive FP, neptunium, and other contaminants (Fig. 6-16).



9413219.0514

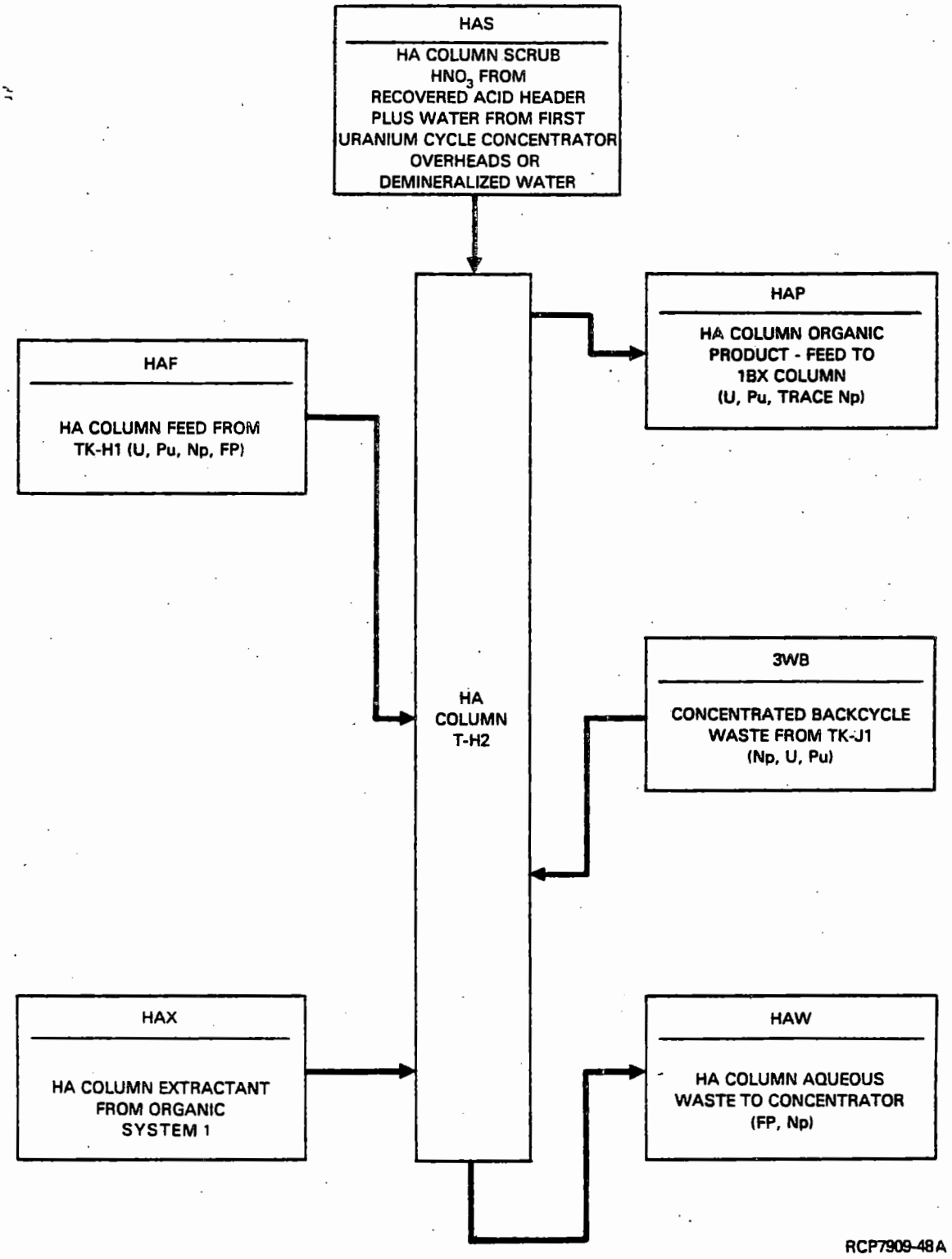


FIGURE 6-16. Codecontamination Flowsheet.

The aqueous feed solution is received in batches in the HA feed tank and, from there, is pumped continuously to the HA column. The uranium, plutonium, and a small fraction (less than 0.1%) of the FP are extracted into the countercurrently flowing organic solvent in the lower, extraction section of the HA column. Most of the extracted FP and neptunium are scrubbed back out of the organic solvent in the upper, or scrub portion of the column, and the solvent, containing the uranium and plutonium products, overflows out the top of the column to the partition column feed tank. The aqueous waste stream, containing FP, americium, neptunium, nonradioactive chemical contaminants, and a trace of the product elements, flows out of the bottom of the HA column to a receiver tank in the waste concentration and treatment system. The aqueous waste stream contains, typically, less than 0.05% of the uranium and plutonium, about 95% of the neptunium, greater than 99.99% of the nonvolatile FP and americium in the feed stream.

6.4.2.1.2 Partitioning System. The partitioning system separates plutonium from the uranium product solution. Flow sheets of the partitioning system are presented in Figures 6-17 and 6-18.

The organic product solution overflows from the HA column into the partition (1BX) column feed tank and is mixed with the organic waste streams from the second and third plutonium cycles and the 1BS column. This organic solution is pumped into the bottom of the 1BX column as the 1BXF stream where it contacts a countercurrently flowing aqueous-reducing solution containing nitric acid, ferrous sulfamate, and sulfamic acid. The plutonium is differentially back-extracted into the aqueous phase, where it is reduced to the nearly inextractable plutonium (III) valence and flows from the bottom of the column as the 1BXP product stream. This aqueous product solution enters the 1BS column, where it is scrubbed with fresh organic solvent to remove residual uranium that is carried over from the 1BX column. The scrubbed aqueous plutonium (1BP) solution is then routed to the second plutonium cycle feed (2AF) tank for additional decontamination from uranium, neptunium, and FP.

The organic solution from the 1BX column, containing uranium, some neptunium, and less than 0.5% of plutonium, overflows directly to the bottom of the 1C column. In the 1C column, the uranium, neptunium, and plutonium are back-extracted, or stripped, into a countercurrent aqueous solution. The organic raffinate from the 1C column is routed to solvent treatment system 1. The aqueous product solution enters the tower of the 1CU concentrator, where the organic is steam stripped before the aqueous is concentrated by a factor of about seven. The concentrated product (IUC) stream overflows to the final uranium cycle feed tank for final decontamination.

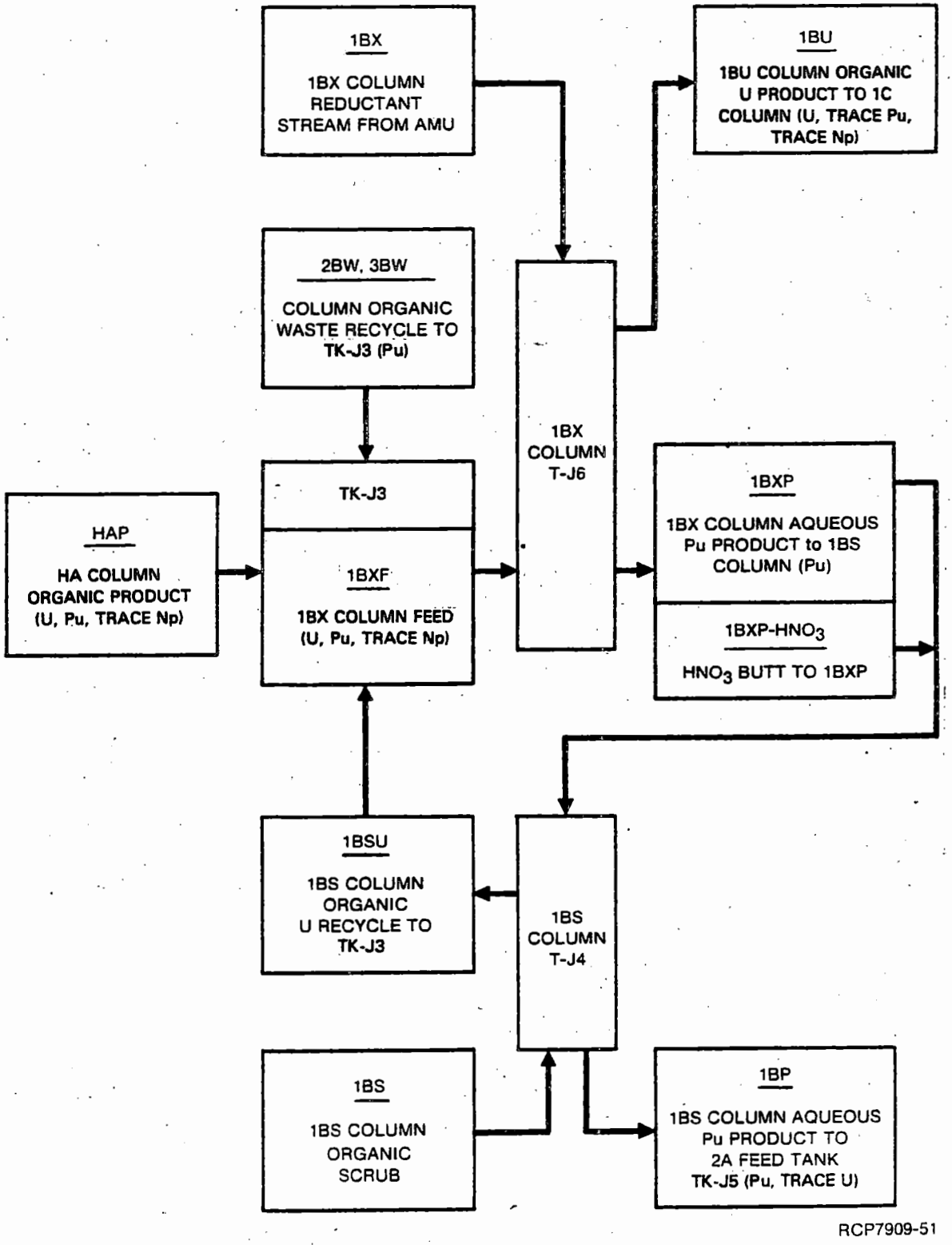


FIGURE 6-17. Partitioning Flowsheet--Uranium, Plutonium, Neptunium.

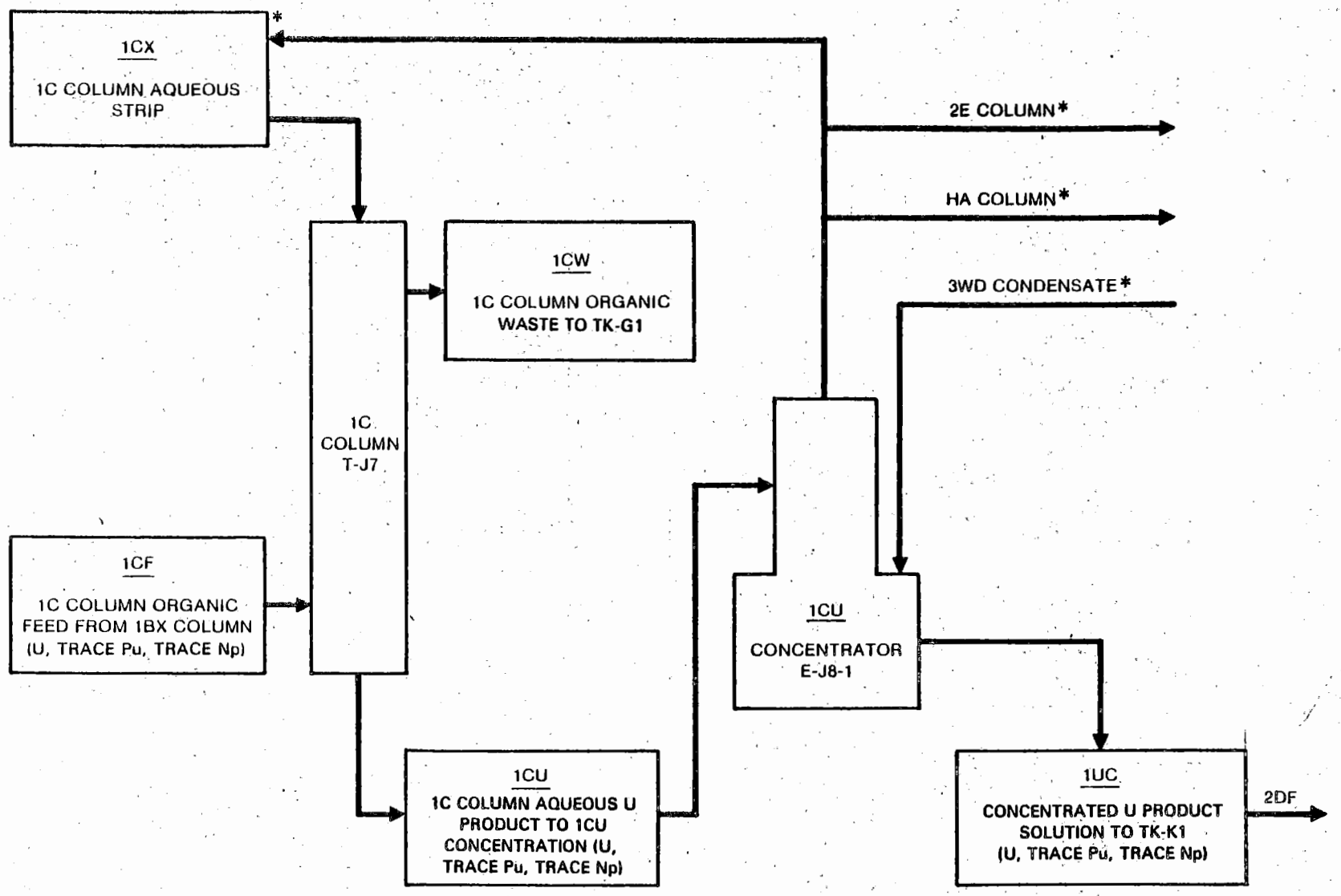


*ASSUMES SUCCESSFUL PLANT DEMONSTRATION OF PROCESS CONDENSATE RECYCLE

RCP7909-52

FIGURE 6-18. Partitioning Flowsheet--Uranium.

6.4.2.1.3 Final Uranium Decontamination System. The function and operation of the final uranium decontamination system is very similar to that of the HA and 1C columns and the 1CU concentrator. The concentrated uranium product (1CU) from the 1CU concentrator (E-J8) flows to the final uranium cycle feed tank (TK-K1), where its composition is adjusted to 2D column feed specifications. The final uranium decontamination system, shown schematically in Figure 6-19, separates the uranium from the neptunium and residual plutonium and FP. This is achieved by selectively extracting the uranium into the organic solvent (in the extraction section), then "scrubbing" the solvent with an aqueous solution of hydroxylamine nitrate reductant in the scrub section of the 2D column (T-K2). The uranium is stripped from the organic solvent in the 2E column (T-K3) and concentrated to about 60% UNH in the final uranium concentrator (E-K4). The UNH product is sampled for purity analysis, then transferred to the large tanks in the 203-A area for interim storage until it is shipped by tank truck to the $UO_3$ Plant.

The function of the 2EU concentrator is similar to the 1CU concentrator, with the exception that the process condensate is sampled and analyzed for radioisotope concentration and sent to the 216-A-10 underground crib for final disposal, instead of being recycled within the process.

The aqueous waste (2DW) stream from the 2D column contains the residual plutonium and FP and about 90% of the neptunium contained in the 2DF. The 2DW stream is routed to the backcycle waste feed tank (TK-F10) for processing (described in Section 6.4.4.1.).

6.4.2.1.4 Second and Third Plutonium Decontamination Systems. The functions of the second and third plutonium decontamination systems are to effect further decontamination of the plutonium product from residual uranium, neptunium, and FP. The aqueous plutonium (1BP) stream leaving the 1BS column is routed to the 2A feed tank (TK-J5), where it is chemically adjusted to 2A column feed specifications. In the second plutonium system (shown schematically in Fig. 6-20), the plutonium is reoxidized to the extractable (plus IV) valence in the feed tank, separated from the residual FP in the 2A column (T-L1), and separated from the residual uranium and neptunium in the 2B column (T-L2). The plutonium product (2BP) stream overflows from the 2B column to the third plutonium system feed tank (TK-L3), where it is adjusted to 3A column feed specifications.

The third plutonium system (shown schematically in Fig. 6-21) effects the final purification of plutonium from FP in a manner very similar to that employed in the second plutonium system.

The product stream from the 3B column (3BP) is line blended with fresh nitric acid to prevent plutonium polymer formation during steam stripping conducted in the 3BP stripping tower (T-L6), to remove entrained and soluble organic solvent. The partially concentrated (by a factor of about 5) 3BP is further concentrated (to about 350 g Pu/L) in the plutonium product concentrator (E-L7) and collected in the product receiver tank (TK-L8).

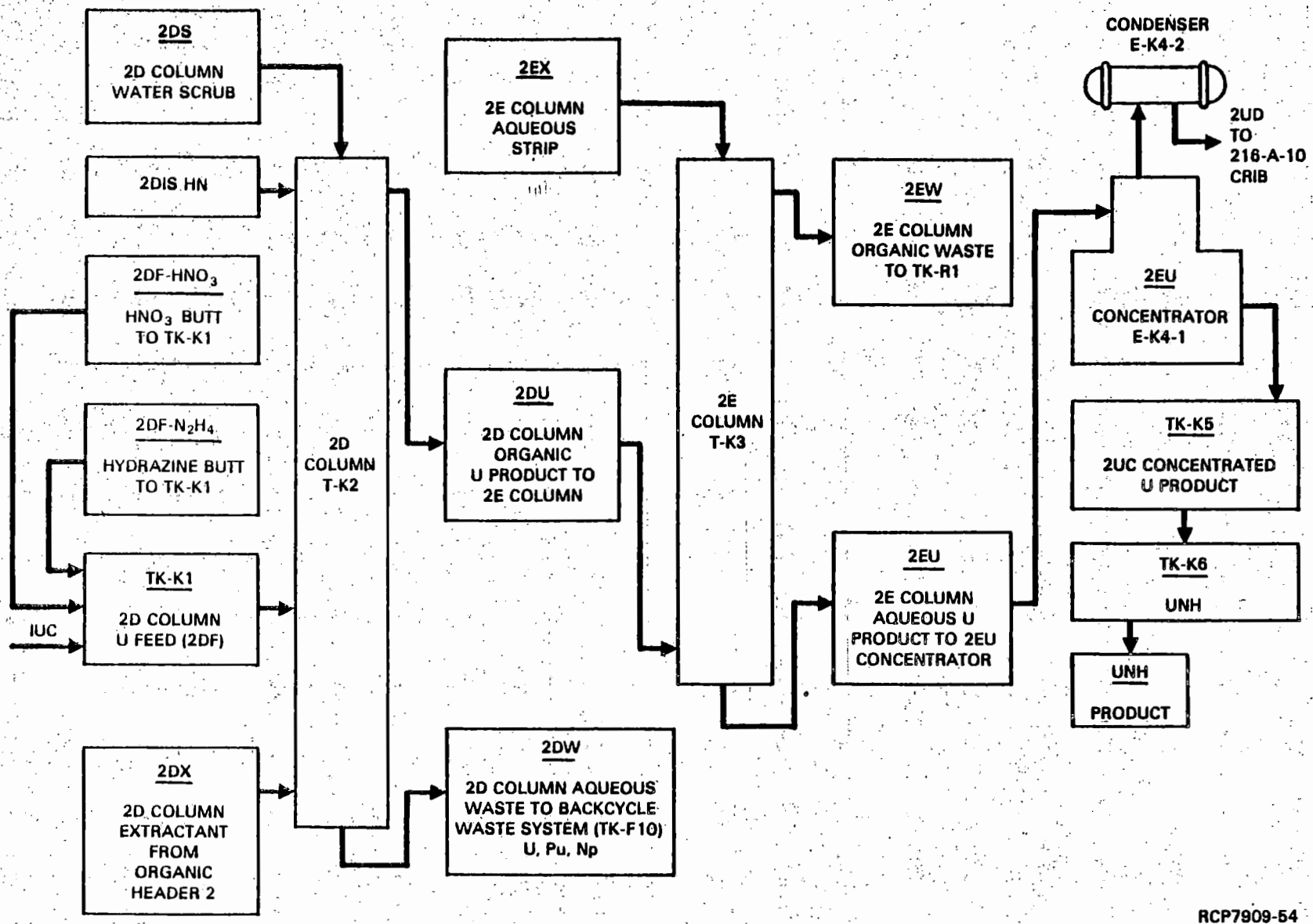


FIGURE 6-19. Final Uranium Cycle Flow Chart.

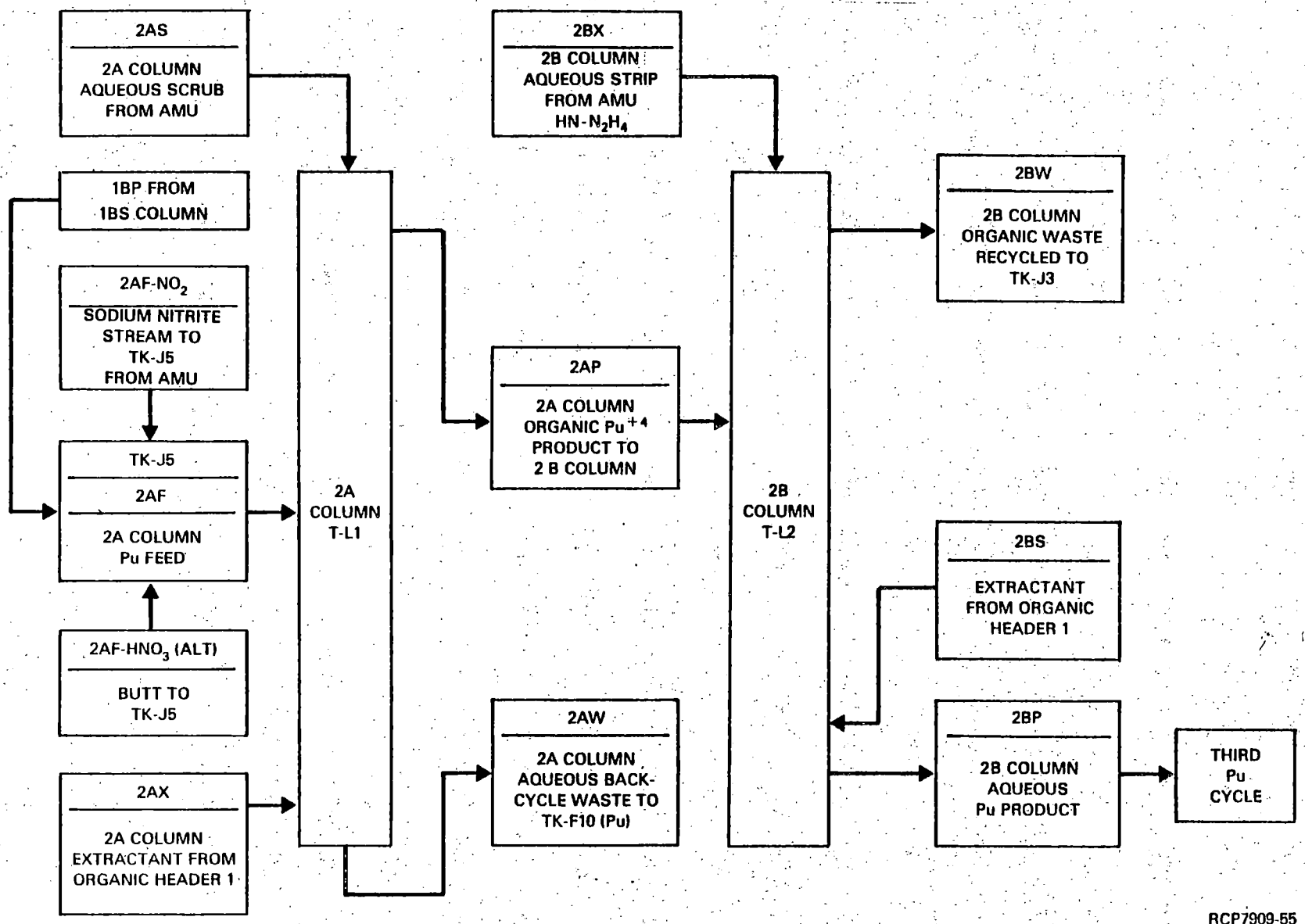


FIGURE 6-20. Second Plutonium Cycle Flow Chart.

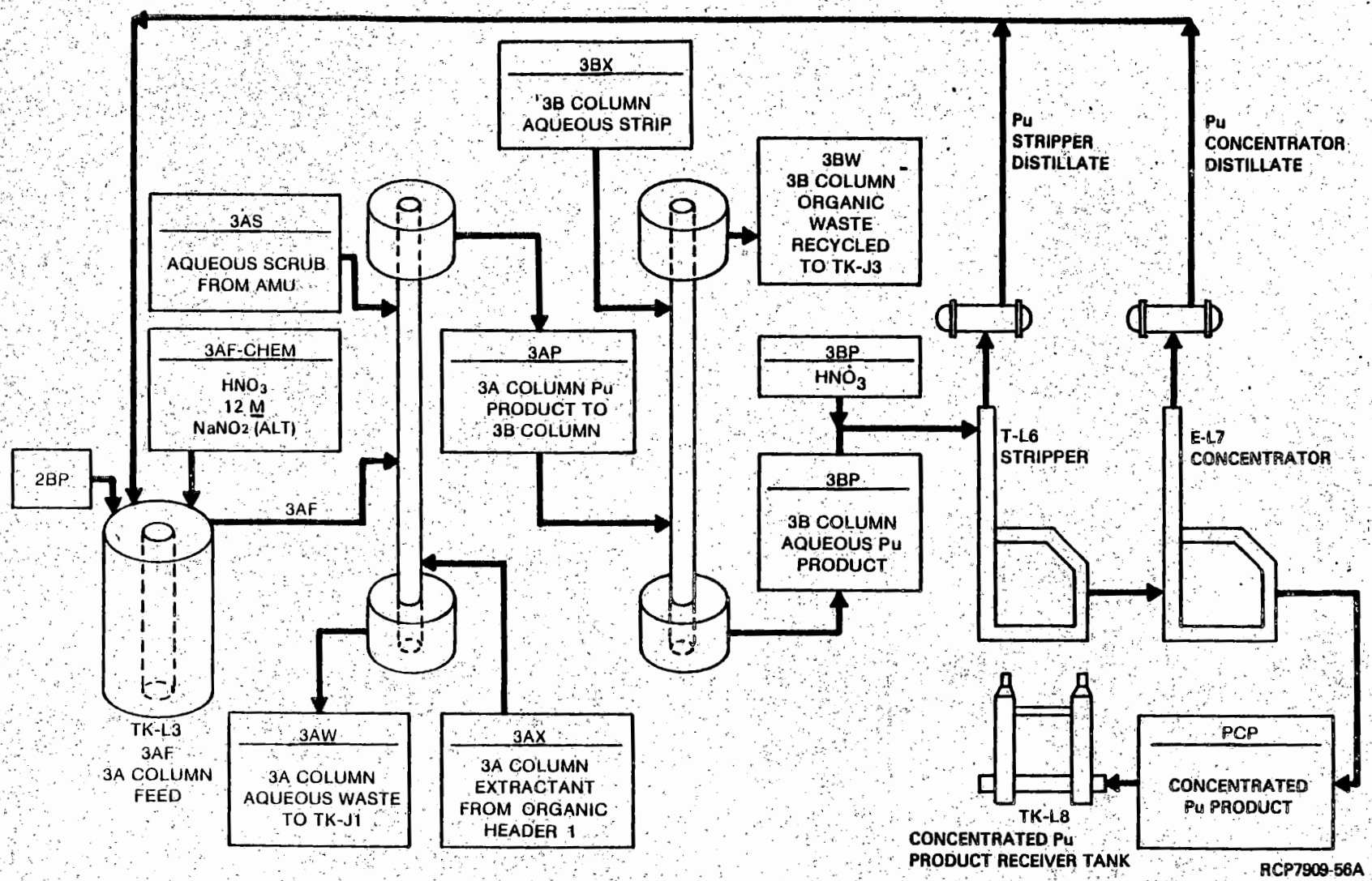


FIGURE 6-21. Third Plutonium Cycle Flow Chart.

The overhead process condensates from the stripper and concentrator, containing trace amounts of plutonium, are routed to the 3AF feed tank. The cooling water from the condensers is routed to the cooling water header.

The plutonium product solution is vacuum transferred from TK-L8 to a sample tank (TK-L9) in the PR room. It is sampled, analyzed, and transferred to storage for subsequent conversion to plutonium oxide. Flushes and out-of-specification plutonium are recycled to TK-E6 for reprocessing through the entire solvent extraction system or TK-L3 for reprocessing through the third plutonium system.

6.4.2.2 Major Components.

6.4.2.2.1 Codecontamination System. The major equipment components of the codecontamination system are the HA pulse column (T-H2) and the HA feed tank (TK-H1).

A typical Hanford PUREX pulse column, such as the HA column, is shown in Figure 6-22. All of the PUREX pulse columns are vertical stainless steel cylinders which, with the exception of the 10-pulse column, contain removable cartridges. The cartridges consist of type 304L stainless steel or fluorothene sieve plates, and type 304L stainless steel nozzle and louver plates mounted at fixed spacings on type 304L stainless steel tie rods. Enlargements at the ends of a column provide resevoirs where phase separation occurs. Pulsing of the liquid contents of all columns, except 3A and 3B which are pulsed with air, is effected by a mechanically driven, reciprocating piston acting upon a liquid-filled pipe connected to the bottom of the column. The 3A and 3B columns are air pulsed by alternate application and relief of air pressure to a liquid-filled pipe (pulse leg) connected to the bottom of the column. Individual column characteristics are given in Table 6-15.

The HA feed tank (TK-H1) is a 5,000-gal stainless steel tank (Fig. 6-23) similar in design to most of the pump and receiver tanks throughout PUREX, excluding plutonium product vessels. The dimensions, capacities, and descriptions of all of the process tanks are given in Table 6-16.

6.4.2.2.2 Partitioning System. The partitioning system is comprised of five major components: 1BXF tank, TK-J3; 1BX column, T-J6; 1BS column, T-J4; 1C column, T-J7; and 1CU concentrator, E-J8. Vessel TK-J3 is idential to TK-H1, described above and is included in Table 6-16.

The 1CU concentrator (Fig. 6-24) is a large-volume concentrator of standard design, consisting of a thermal syphon reboiler surmounted by a bubblecap stripping/deentrainment tower. The reboiler section consists of two tube bundle chambers, a stilling and overflow chamber, and a central draft tube. Solution circulates through the tube bundles from the draft tube by thermal syphon. The draft tube is equipped with baffles for deentrainment of liquid droplets from the vapor overheads. The stripping/deentrainment tower contains a deentrainment pad and seven bubblecap trays. The top tray functions as a deentrainment tray and the other six function to strip residual organic from the 1CU stream with the vapor from the reboiler.

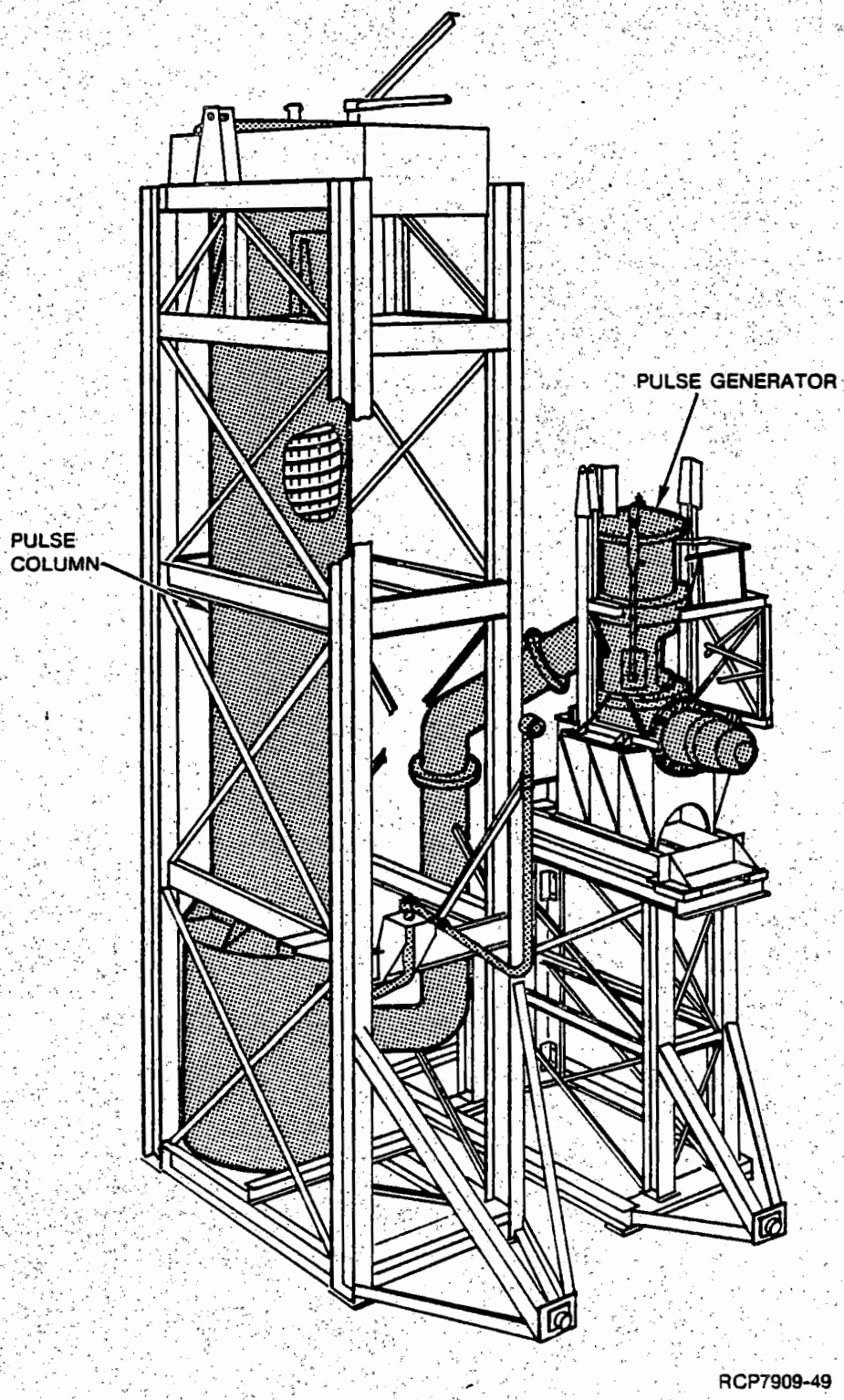


FIGURE 6-22. Hanford Purex Pulse Column.

TABLE 6-15. Solvent Extraction Column Data.

| Column | Cartridge section dimensions | | | Pulser leakage | | Disengaging sections | | |
|---|---|---|---|---|---|---|---|---|
| | Diameter (in.) | Height (ft) | Volume (gal) | Leakage rate (gal/min) | Receiver vessel | Shape | Size (in.) L by W x H or Dia by H | Volume (gal) |
| 1A (T-H2) | | | | | | | | |
| extraction | 26 | 13.2 | 365 | 0.25 to 0.5 | TK-G1 | Horizontal cylinder tank | 35.5 by 80 | 202 |
| scrub | 26 | 18.1 | 500 | | | Rectangular box | 72 by 38 by 24 | 408 |
| 1BX (T-J6) | 32 | 31 | 1,295 | 0.5 | TK-H1 | Vertical cylinder tank | 32 by ~24 | 61 |
| | | | | | | Rectangular box | 72 by 36 by 23 | 141 |
| 1C (T-J7) | 34 | 18 | 850 | 0.25 | TK-J1 | Vertical cylinder tank | 48 by 78 | 583 |
| | | | | | | Rectangular box | 72 by 38 by 24 | 91 |
| 2D (T-K2) | | | | | | | | |
| extraction | 24 | 13.9 | 325 | 0.5 | TK-R1 | Horizontal cylinder tank | 32 OD by 89 | 230 |
| scrub* | 32 | 13.2 | 550 | | | Rectangular box | 72 by 38 by 24 | 216 |
| 2E (T-K3) | 34 | 18 | 850 | 0.25 | TK-K1 | Vertical cylinder tank | 48 by 78 | 583 |
| | | | | | | Rectangular box | 72 by 8 by 24 | 90 |
| 1BS (T-J4 | 8 | 13.3 | 35 | ~0.02 | TK-J5 | Horizontal slab | 66 by 24 by 3 | 30 |
| | | | | | | Rectangular box | 36 by 18 by 24 | 42 |
| 2A (T-L1) | 7 | | | | | | | |
| extraction | | 20.9 | 42 | 0.05 | TK-J1 | Horizontal slab | 62 by 35 by 3 | 21 |
| scrub | | 9.8 | 20 | | | Annular cylinder | 25 ID by 29 OD by 14 | 18 |
| 2B (T-L2) | 7 | 23 | 46 | 0.03 | TK-J5 | Horizontal slab | 54 by 28 by 3 | 19 |
| | | | | | | Annular cylinder | 31 by 37 by 25 | 17 |
| 3A (T-L4) | 4 | | | | | | | |
| extraction | | 20.3 | 13.3 | - | - | Annular cylinder | 25 by 29 by 13 | 9.6 |
| scrub | | 12.6 | 8.2 | | | Annular cylinder | 14 by 18 by 23 | 10 |
| 3B (T-L5) | 4 | 21.5 | 14 | - | - | Annular cylinder | 14 by 18 by 13 | 5.7 |
| | | | | | | Annular cylinder | 14 by 18 by 28 | 12 |
| 2N (T-J22) | 7 | | | | | | | |
| extraction | | 20 | 40 | 0.05 | TK-F10 | Horizontal slab | 52 by 40 by 3 | 24 |
| scrub | | 11 | 22 | | | Annular cylinder | 32 by 40 by 14 | 9 |
| 2P (T-J23) | 7 | 21 | 42 | 0.03 | TK-J21 | Slab (bottom) | 58 by 21 by 3 | 14 |
| | | | | | | Annular cylinder | 32 by 40 by 14 | 9 |

*Separate cartridges in 2D column.

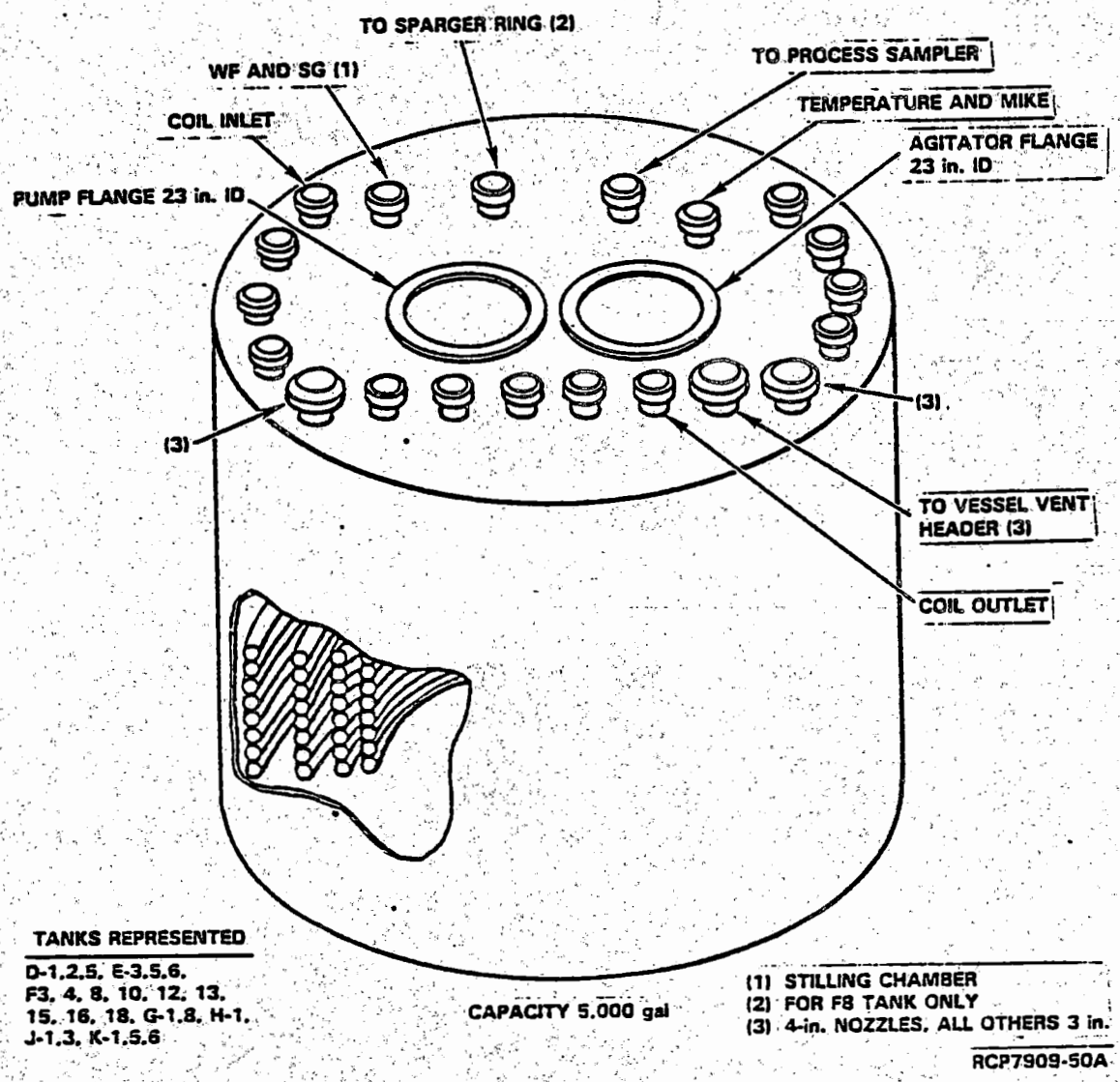


FIGURE 6-23. Standard Tank (10 ft by 9 ft 3 in.).

TABLE 6-16. Tank Descriptions.

| Vessel | Function | Capacity (gal) | Dimensions | Comments |
|---|---|---|---|---|
| TK-H1 (HAF) | HA column feed | 5,000 | 10 ft by 9 ft 3 in. | Equipped with coil, two flanges (pump and agitator) (Fig. 6-23) |
| TK-J1 (3WB) | Backcycle concentrator receiver and pump tank | 5,000 | 10 ft by 9 ft 3 in. | (Fig. 6-23) |
| TK-J3 (1BXF) | Partition column feed | 5,000 | 10 ft by 9 ft 3 in. | (Fig. 6-23) |
| TK-J5 (2AF) | Second Pu extraction feed | 370 | 8 ft 6 in. OD by 8 ft 0 in. ID | Annular tank, geometrically favorable, agitated by air sparger (Fig. 6-25) |
| TK-K1 (2DF) | Second U cycle feed | 5,000 | 10 ft by 9 ft 3 in. | (Fig. 6-23) |
| TK-K5 (2EU) | U product concentrator receiver | 5,000 | 10 ft by 9 ft 3 in. | (Fig. 6-23) |
| TK-K6 (UNH) | U product pump tank | 5,000 | 10 ft by 9 ft 3 in. | (Fig. 6-23) |
| TK-L3 (3AF) | Third Pu cycle feed | 120 | 34 in. OD by 30 in. ID by 12 ft | Annular tank, geometrically favorable, agitated by air sparger (Fig. 6-25) |
| TK-L8 (PCP) | Pu $(NO_3)_4$ product receiver concentrator | 10 | Two barrels 4 in. by 8 ft | Geometrically favorable (Fig. 6-26) |
| TK-F10 (3WF) | Backcycle collection and concentrator feed | 5,000 | 10 ft by 9 ft 3 in. | (Fig. 6-23) |

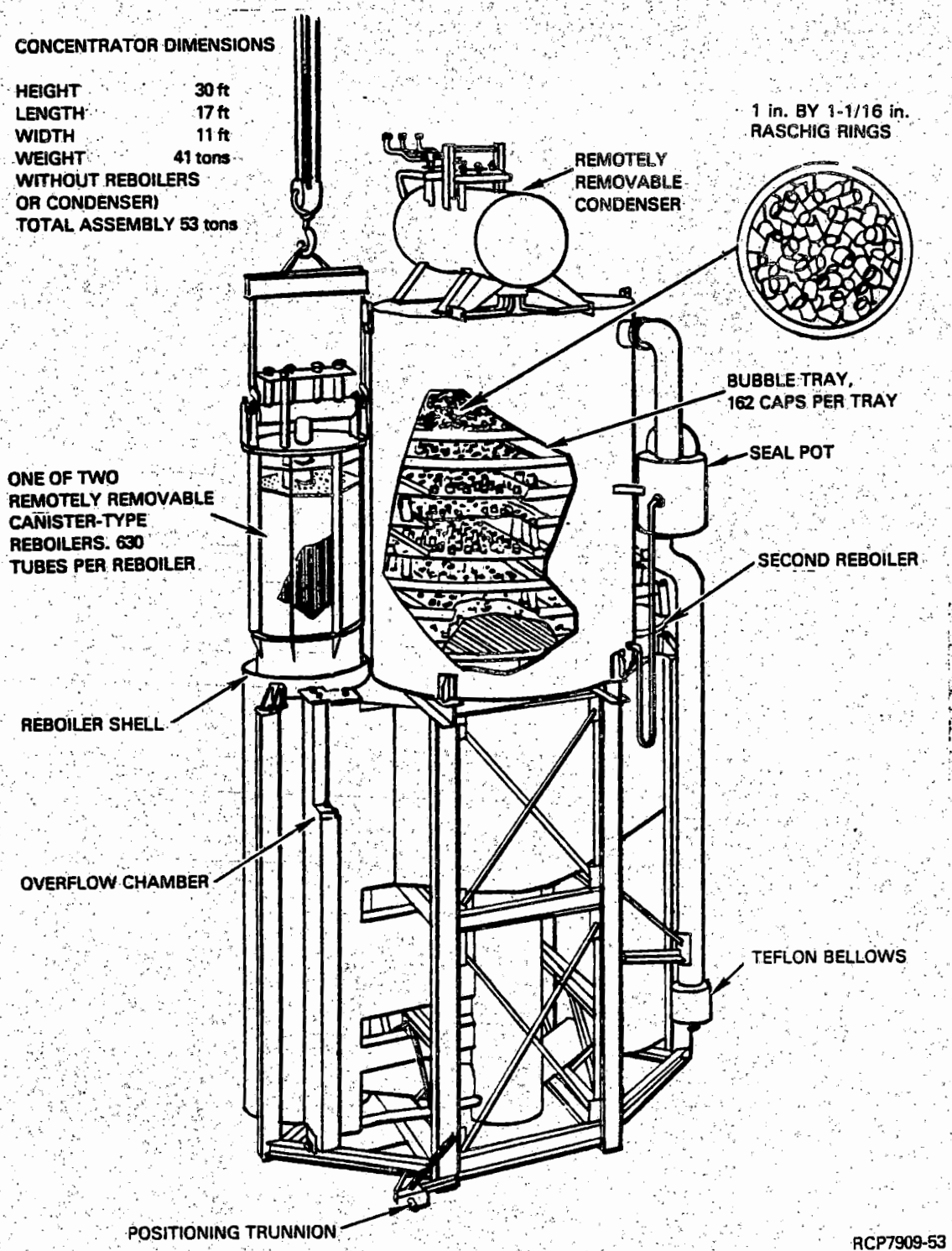


FIGURE 6-24. PUREX Concentrator (E-J8 and E-K4).

6.4.2.2.3 Final Uranium Decontamination System. The major components of the final uranium decontamination system are the 2D feed tank (TK-K1), the 2D column (T-K2), the 2E column (T-K3), the 2EU concentrator (E-K4), the uranium product (2UC), receiver tank (TK-K5), and the UNH product sample tank (TK-K6). The three tanks (TK-K1, TK-K5, and TK-K6) are standard, 5,000-gal tanks. The 2D and 2E columns are typical solvent extraction columns similar to HA and 1C columns, respectively, and the 2EU concentrator is identical in design to the 1CU concentrator.

6.4.2.2.4 Second and Third Plutonium Decontamination Systems. The major components of the second and third plutonium systems consist of TK-J5 (2A feed tank), TK-L3 (3A feed tank), and TK-L8 (nitrate product receiver tank); solvent extraction and stripping columns, T-L1 (2A) and T-L2 (2B) (second plutonium cycle), T-L4 (3A) and T-L5 (3B) (third plutonium cycle); the 3BP stripper (T-L6), and the 3BP concentrator (E-L7-1).

Vessels that handle solutions which could possibly exceed a plutonium concentration of 6 g/L are designed to be geometrically favorable, and are annular vessels (i.e., TK-J5) or small-diameter vessels (i.e., T-L1 or TK-L8). Vessels TK-J5, TK-L3, and TK-L8 are shown in Figures 6-25 through 6-27, respectively, and are described in Table 6-16.

The four pulse columns are described in Table 6-15, and shown in Figures 6-28 through 6-31. The second plutonium system columns have mechanical pulsers and a 7-in. ID. The third plutonium system columns have air pulsers and a 3.5-in. ID. Disengaging sections are of either annular or slab (beavertail type) design.

The remaining two pieces of equipment are the 3BP stripper (T-L6) and the 3BP Concentrator (E-L7-1) shown in Figures 6-32 and 6-33, respectively. Both are single-tube bundle, thermal-syphon evaporators and are designed to be geometrically favorable for a plutonium concentration of 450 g/L or less.

6.4.2.3 Safety Criteria and Assurance. This section discusses the safety aspects of the solvent extraction systems and processes. The process hazards analysis for solvent extraction is shown in Table 6-17.

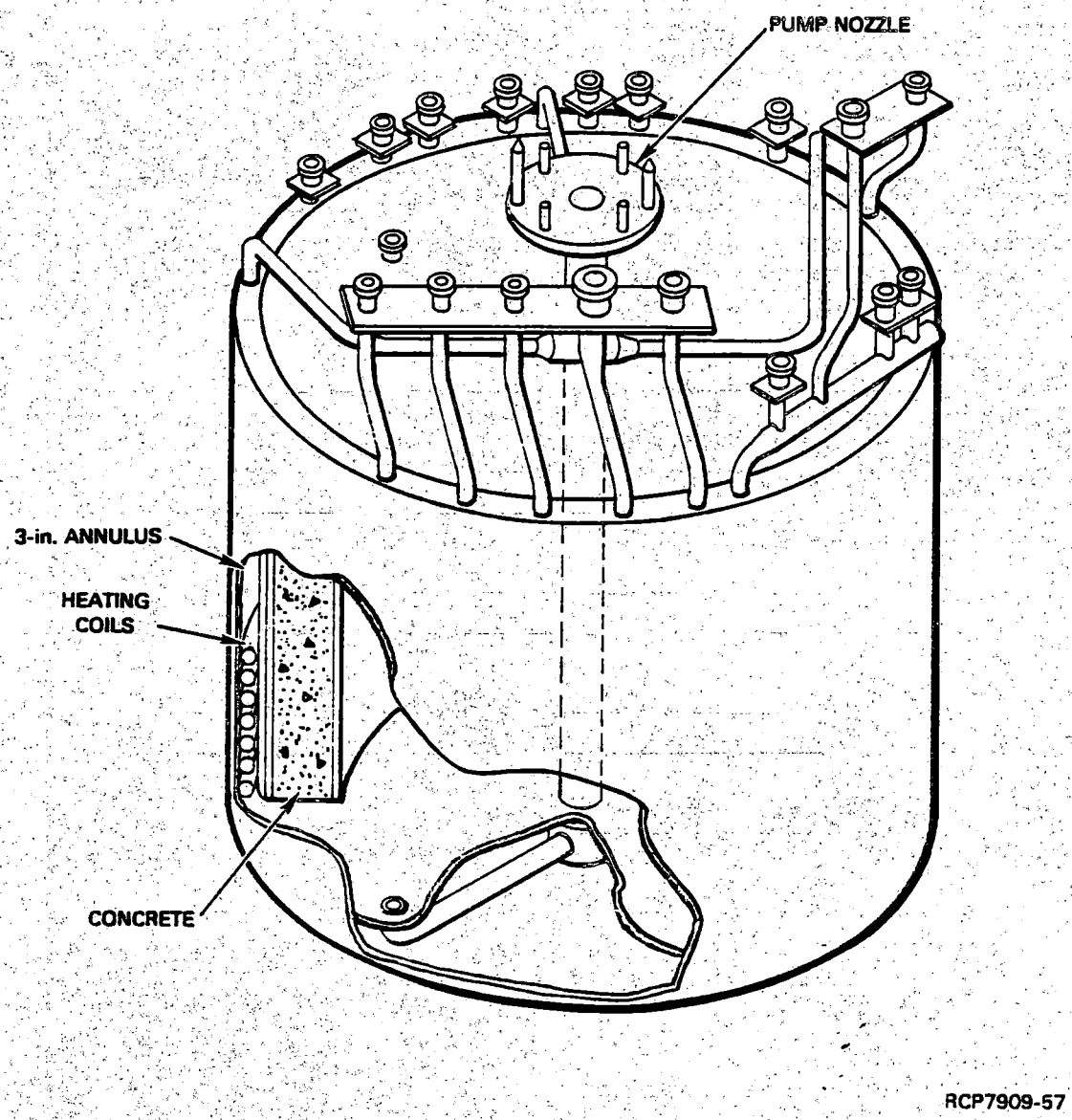


FIGURE 6-25. 2AF Tank (TK-J5).

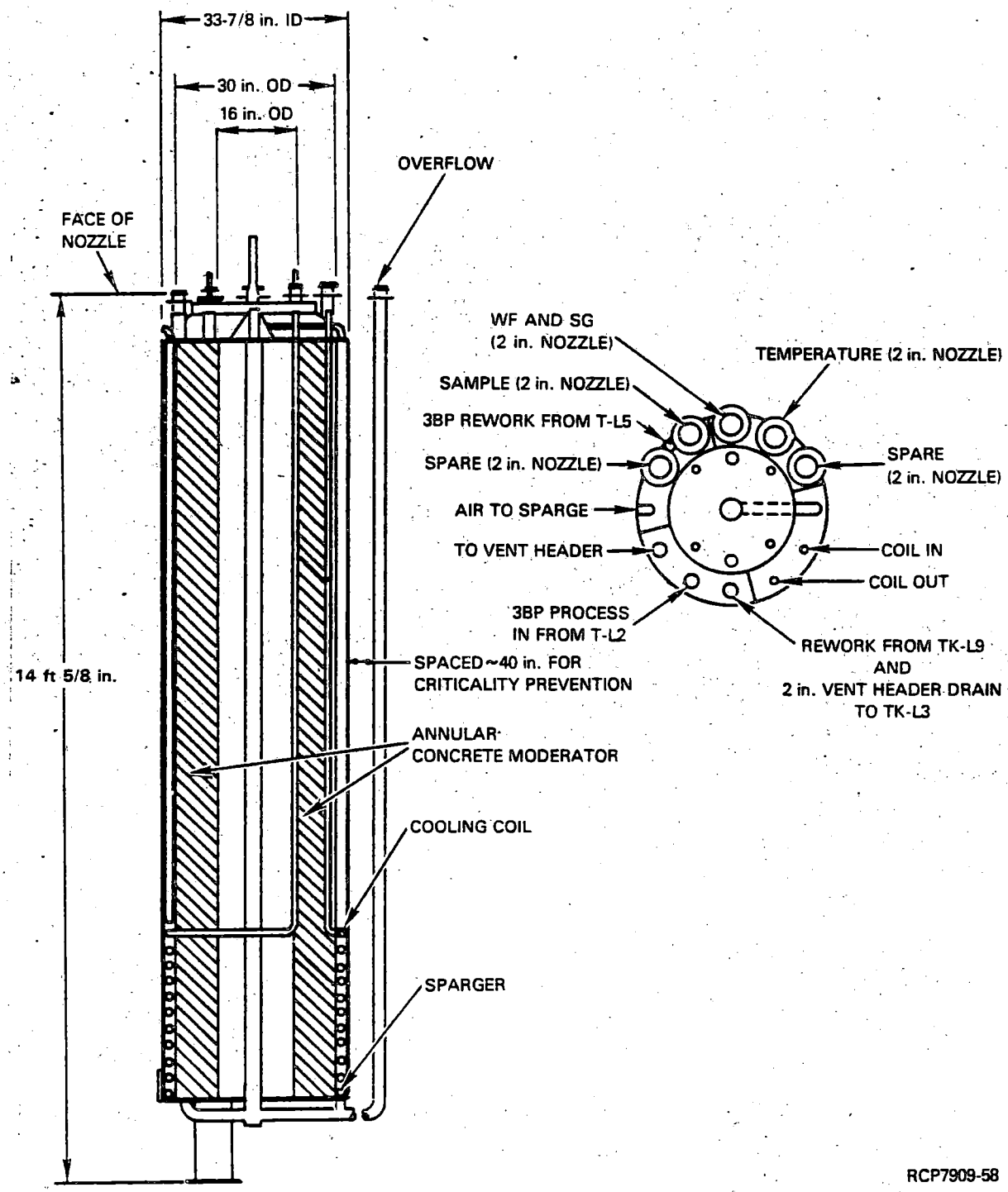


FIGURE 6-26. 3A Feed Tank (TK-L3).

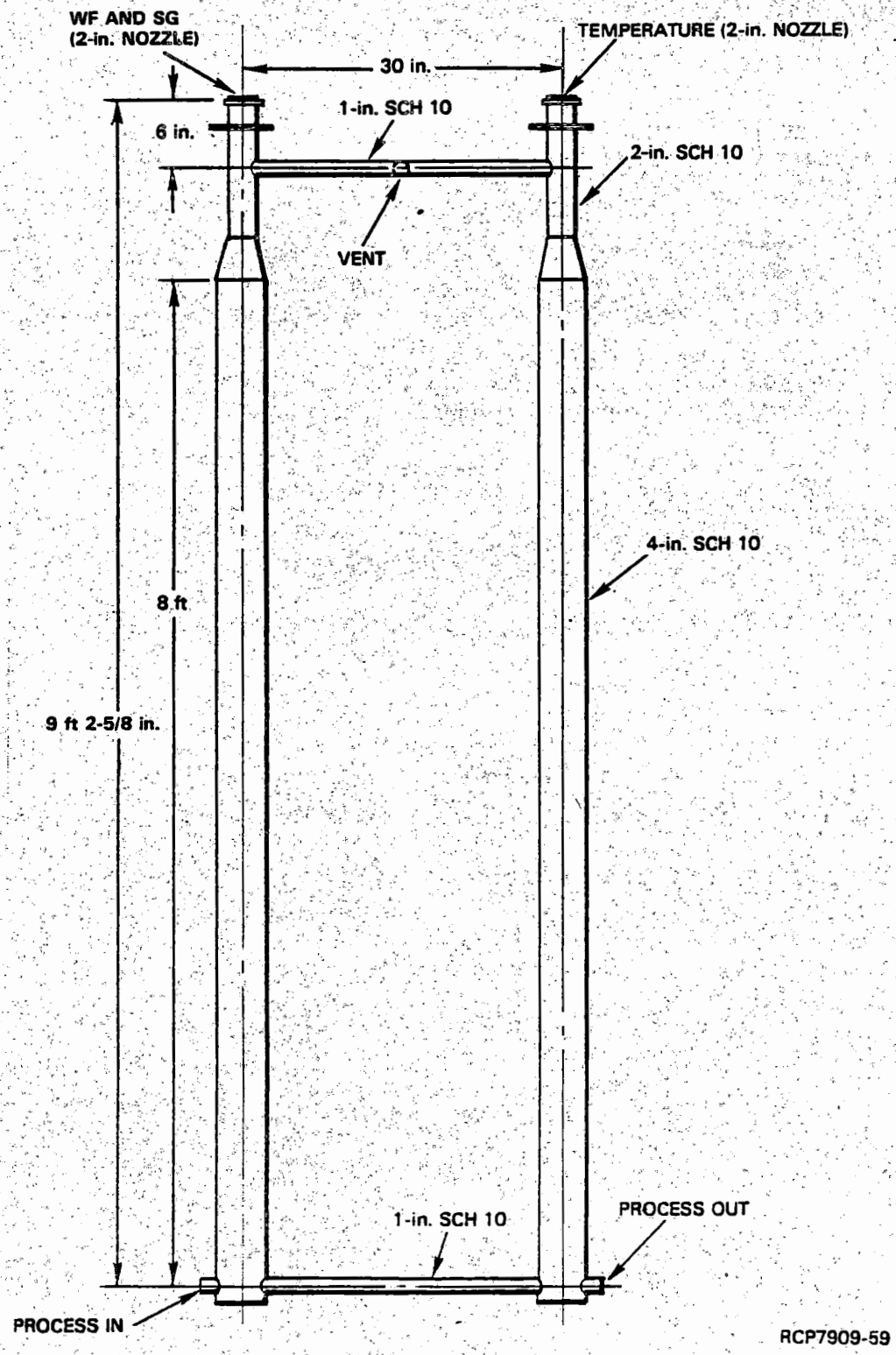


FIGURE 6-27. Product Receiver Tank (TK-L8).

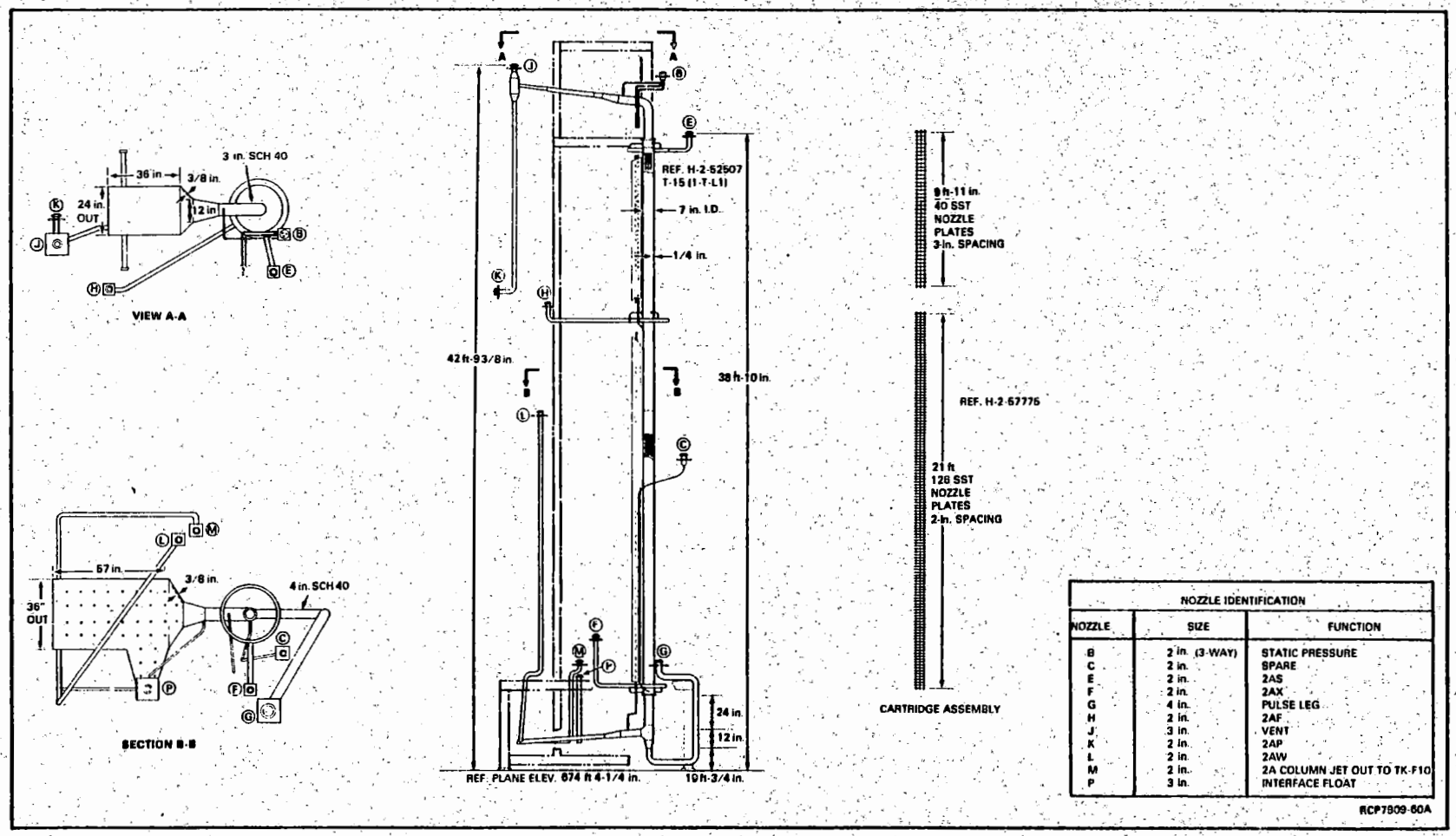


NOZZLE IDENTIFICATION

| NOZZLE | SIZE | FUNCTION |
|---|---|---|
| B | 2 in. (3-WAY) | STATIC PRESSURE |
| C | 2 in. | SPARE |
| E | 2 in. | 2AS |
| F | 2 in. | 2AX |
| G | 4 in. | PULSE LEG |
| H | 2 in. | 2AF |
| J | 3 in. | VENT |
| K | 2 in. | 2AP |
| L | 2 in. | 2AW |
| M | 2 in. | 2A COLUMN JET OUT TO TK-F10 |
| P | 3 in. | INTERFACE FLOAT |

FIGURE 6-28. 2A Column.

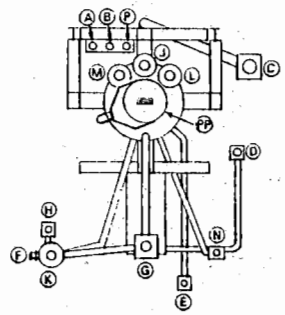


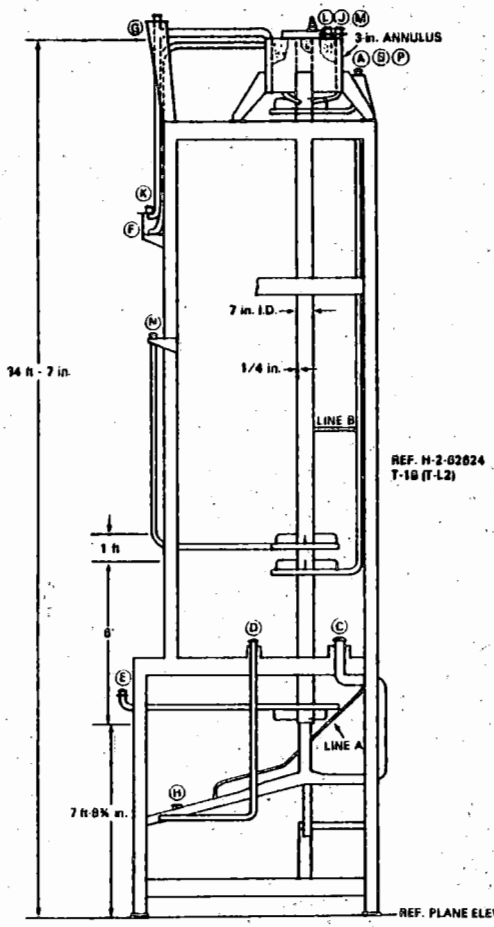


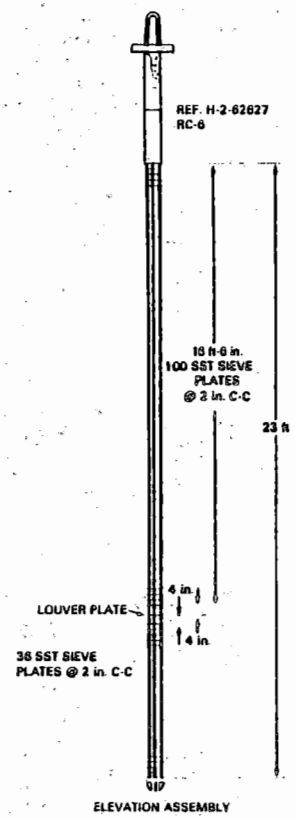


| NOZZLE IDENTIFICATION | | |
|---|---|---|
| NOZZLE | SIZE | FUNCTION |
| A | 2 in. 3 WAY | BOTTOM & MID COLUMN PRESSURE TAPS |
| B | 2 in. | 2BX TO 2B COLUMN |
| C | 4 in. | PULSE LEG |
| D | 2 in. | 2B JET OUT TO F10 |
| E | 2 in. | 2BS TO 2B COLUMN |
| F | 2 in. | 2BW TO J3 |
| G | 3 in. | VESSEL VENT |
| H | 2 in. | 2BP TO L3 |
| J | 3 in. | SPARE |
| K | 3 in. | 2BW SAMPLER |
| L | 3 in. | ORGANIC SPECIFIC GRAVITY AND TOP PRESSURE TAP |
| M | 3 in. | INTERFACE FLOAT |
| N | 2 in. | 2BF (2AP) |
| P | 2 in. | 2BS-$HNO_3$ |
| PP | 20 in. | FLANGE |

RCP7909-61A

FIGURE 6-29. 2B Column.

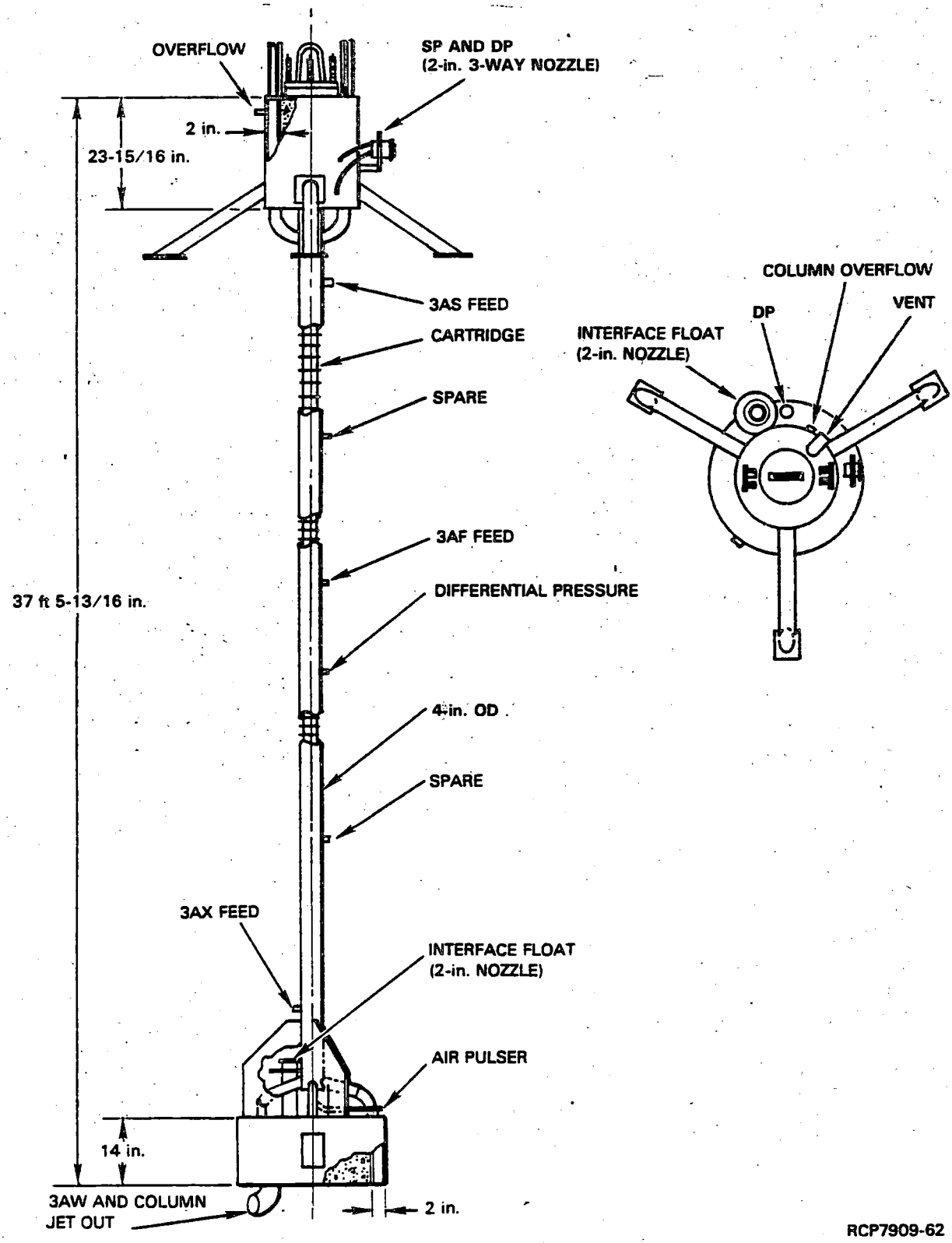


FIGURE 6-30. 3A Column (T-L4).

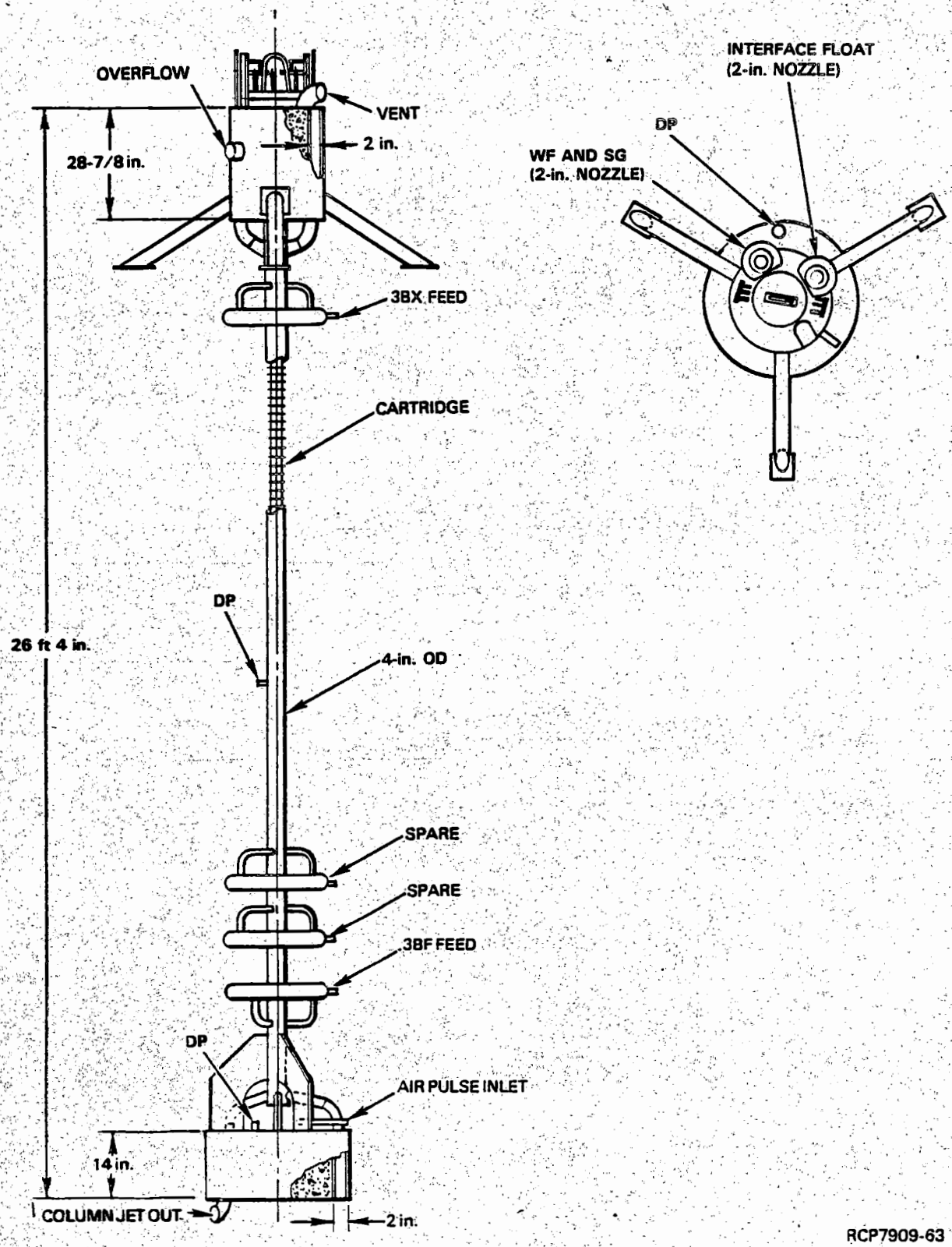


FIGURE 6-31. 3B Column (T-L5).

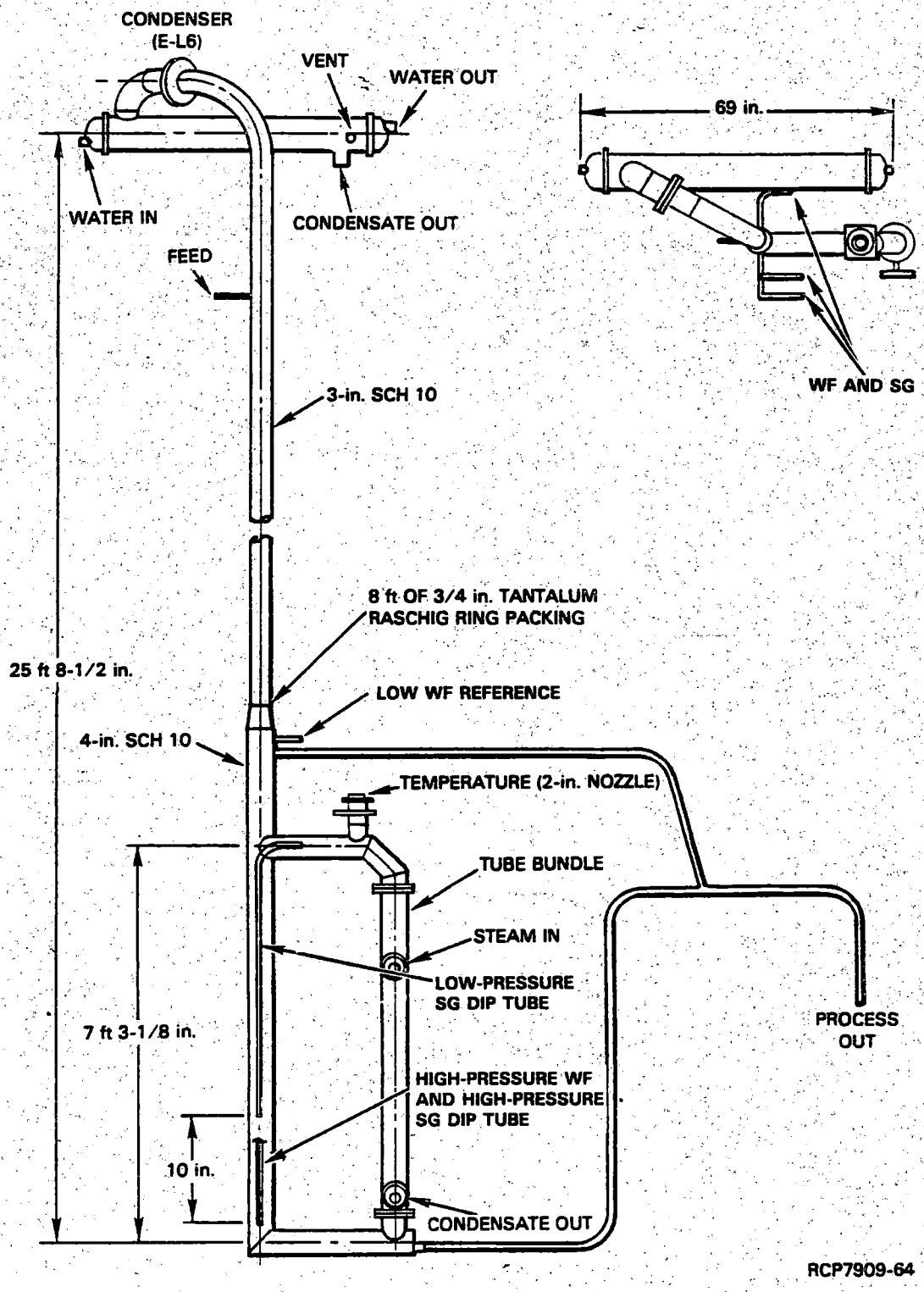


FIGURE 6-32. 3BP Stripper (T-L6).

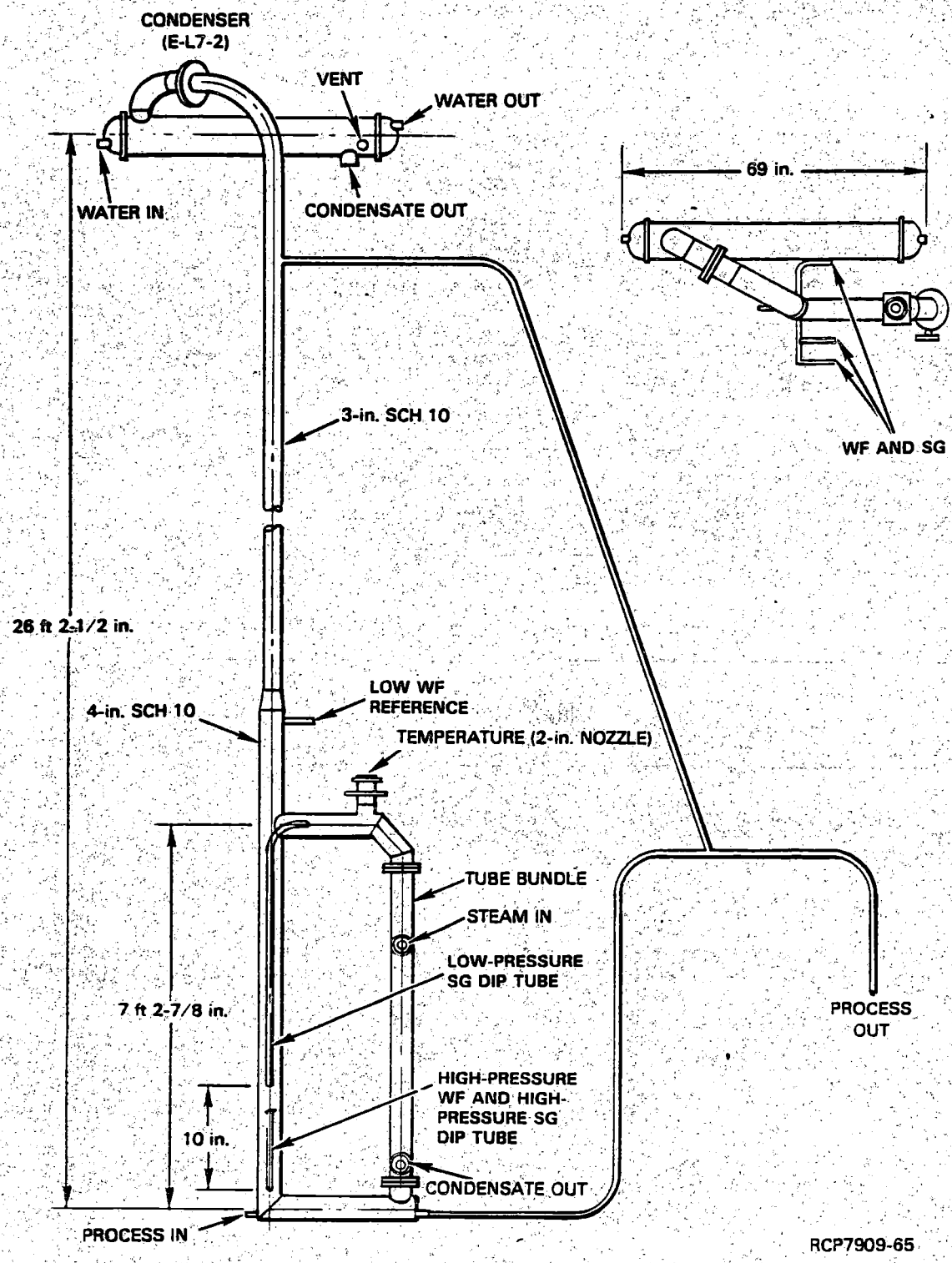


FIGURE 6-33. 3BP Concentrator (E-L7-1).

TABLE G-17. Process Hazards Analysis--Solvent Extraction. (Sheet 1 of 2)

| System or subsystem | Energy (hazard) | Unwanted energy flow (incident) | Consequence (immediate and/or secondary) | Barriers (design, administrative, safety devices, etc.) |
|---|---|---|---|---|
| Codecontamination | Pu | Sustained oversaturation | Pu to F6 | Column instruments; waste sample analysis |
| | Solvent | Leak | Fire--equipment damage, possible emission | No open ignition source; administrative procedures; light water fire suppression system |
| | Solvent | Hot vessel | Fire--equipment damage possible emission | Temperature measurement |
| | $H_2$ radiolytic | No dilution air--high FP | Explosion--equipment damage, stack emission | Purge air, low FP |
| | HA column feed | Coil leak | Radioactive contamination to environment | Sample analysis; diversion capability; administrative procedures |
| Partition | Pu | No reductant | Loss of partition | Monitors and samples |
| | Pu | Too much reductant | Increased Pu concentration | Monitors and samples |
| | J3 solvent | Leak | Fire in J3/J4/J6--equipment damage, emission | No open source of ignition; light water fire suppression system |
| | 1BXF | Coil leak | Emission | Diversion; sample analysis |
| | UNH | Tube bundle leak | Emission | Diversion; sample analysis |
| | UNH | Loss of J7 control, solvent to J8 | Red oil--potential explosion, equipment damage, emission | Interlocks, steam controls, temperature controls, administrative control of steam strip feed |
| | 1C solvent | 1CX temperature out of control | Fire--equipment damage, possible emission | Condenser subcools 1CX; temperature control; temperature monitor |
| Second Pu | Solvent | Ignition | Fire--equipment damage, possible emission | Temperature controls, no open ignition source; sprinkler system |
| | Pu | Oxidant off | Pu to backcycle | Monitor $NO_2$ oxidant; 2AW alpha monitor |
| | Pu | Leak to floor | One level of criticality prevention compromised | Geometry, sump alarm, cell inspection; administrative procedures, and double contingency principle |

TABLE 6-17. Process Hazards Analysis--Solvent Extraction. (Sheet 2 of 2)

| System or subsystem | Energy (hazard) | Unwanted energy flow (incident) | Consequence (immediate and/or secondary) | Barriers (design, administrative, safety devices, etc.) |
|---|---|---|---|---|
| Third Pu Cycle | Pu | Large sustained loss | Accumulation of Pu in backcycle | Administrative procedures and samples; alpha monitor |
| | | | Accumulation of Pu in codecontamination and partitioning cycles | Alpha and neutron monitors |
| | Pu | Low nitric to stripper | Accumulation of Pu polymer; one level of criticality prevention comprised | Geometry and low polymer density; $HNO_3$ flow control; administrative procedures; double contingency principle |
| | | | Vent system pluggage--possible blowback into pipe and operating (P&O) gallery; contamination, personnel exposure | Geometry and low polymer density; administrative procedures |
| | Pu | Degraded solvent | Accumulation, pluggage, possible red oil formation | Steam (acid) strip; administrative procedures on L6 operation |
| | Solvent | Ignition | Fire, possible emission, equipment damage | Temperature controls; no open ignition source; sprinkler system |
| Second U Cycle | Solvent | Spill or leak--ignition | Fire, equipment damage, possible emission | Temperature monitors and controls; light water fire suppression system |
| | Solvent | Red oil formation--E-K4 | Explosion, equipment damage, emission | Temperature, steam strip, and SG controls and monitors; administrative procedures |

6.4.2.3.1 Nuclear Criticality Prevention.

- HA Column

Nuclear criticality prevention in the HA column (T-H2) is based on concentration control [i.e., the plutonium concentration is maintained at an always-safe value (6 g Pu/L)]. Accidental precipitation is not foreseeable, since no precipitating agents are piped to the column, nor can a mechanism for introducing precipitating agents to the column be postulated. To assure that plutonium is always less than 6 g/L, the feed to the column must be brought in at a concentration less than that value and not permitted to concentrate in the column.

The maximum organic-phase uranium (or plutonium) concentration possible, with the solvent 100% saturated is 124 g/L. The maximum permissible plutonium concentration in solution is 6 g/L. The maximum safe plutonium-to-uranium ratio in the aqueous phase would, therefore, be equal to 6/124-6 = 0.051, provided the extractabilities of plutonium and uranium were equal (Eq. 6-5). The ratio of the distribution coefficients under the flowsheet conditions of the PUREX HA column, however, is only about 0.25. The actual maximum safe plutonium-uranium ratio in the HA column feed solution in the absence of precipitation, therefore, is on the order of 200 kg Pu/t of uranium. Even in the extremely unlikely event that the plutonium-uranium ratio were to exceed the above value, the organic flow rate would have to be less than the aqueous flow rate for plutonium to concentrate in the organic. The normal organic-to-aqueous flow rate is about 2.2 to 1. Administrative limits and controls are in place to prevent either of the above error conditions from occurring.

If the HAS acidity were to decrease significantly (more than 80%) from the flowsheet concentration, plutonium polymer could possibly form in the top of the HA column, which would result in increased HAW plutonium losses and/or plating out of polymer within the column. An in-line conductivity meter is used to continuously measure the nitric acid concentration in the HAS stream and an alarm will sound in the event the acid concentration decreases below established limits.

- 1BXF Tank

Nuclear criticality prevention in the 1BXF tank (TK-J3) is based on the prevention of precipitation. The limit, if precipitation were to occur, assumes that the precipitate would be arranged in the worst credible configuration (i.e., piled at a 45-degree slope against the bottom of the tank wall). The possibility of accumulating sufficient plutonium in TK-J3 to exceed the mass limit is extremely remote. Existing operating controls for upstream equipment and processes will prevent the mass limit in TK-J3 from being exceeded.

The selective stripping of plutonium from the organic phase in the 1BXF pump tank by an aqueous solution was considered and determined not to present a hazard, provided the aqueous solution does not contain a plutonium-reducing agent. Any other aqueous solution will also strip enough nitric acid and uranium from the organic to prevent the plutonium from reaching an unsafe concentration. An accumulation of aqueous solution in TK-J3 is undesirable from a process control standpoint, however, because of the effect "slugs" of aqueous or alternating aqueous and organic phases entering the 1BX column would have on operating control of the column. For this, as well as other process reasons, the agitator is operated whenever the 1BX column and 1BXF pump are operating.

Recycle of excessive plutonium to the 1BXF tank could, feasibly, result in the accumulation of an unsafe mass of plutonium if phase separation were to occur. However, the normal inventory of plutonium in TK-J3 is normally less than 10% of the maximum safe mass and less than 15% of the allowable mass in the tank, and 100% recycle would have to continue for more than 12 h before the allowable mass limit could be exceeded. This is not a credible event. The in-line plutonium monitors and routine process sample analyses would provide warning of a process problem long before the mass limit is exceeded. Unsafe solution concentrations in organic recycle streams are addressed later in this section.

- 1BX Column

Criticality prevention in the 32-in.-diameter 1BX column is based on administrative control of the plutonium concentration to no greater than the always-safe value of 6 g/L. Uncontrolled concentration of the plutonium in the 1BX column can occur by either precipitation and settling or by selective stripping into the aqueous phase. Precipitation is prevented by administrative controls, as discussed further in this section.

Plutonium concentration by selective stripping occurs during uranium-plutonium partitioning, as the plutonium is reduced from its readily extractable (IV) valence. This reduction can be accomplished with several agents: the reducing agent used in the 1BX column is ferrous sulfamate, with sulfamic acid added as a "holding reductant" to react with the nitrite ion present in the 1BXF solution and prevent premature oxidation of the ferrous ion. Plutonium is quantitatively reduced by ferrous sulfamate (i.e., 1 mol of ferrous ion will reduce 1 mol of plutonium). Thus, plutonium concentration in the 1BX column, in the absence of internal refluxing, can be easily controlled by regulating the ratio of 1BX flow to 1BXF flow. A minimum-flow alarm is also installed on the 1BXP flow system for redundant safety. Cessation or a reduction in 1BXP flow could cause an accumulation of plutonium in the 1BX column.



9113219.0542

Nitrite ion in the presence of nitric acid causes the near instantaneous oxidation of plutonium (III) and ferrous ion, and is used to oxidize the plutonium (III) to plutonium (IV) in the second plutonium system feed (2AF) tank. Nitrite ion readily extracts into the organic solvent and, thus, excess nitrite in the 2AF stream will be carried over into the 2B column, react with the reductants in the 2BX stream, and interfere with plutonium stripping. If the excess is great or if the reductants are absent in the 2BX, the nitrite would be recycled with the organic waste (2BW) stream back into the 1BXF tank. This mechanism is one possible cause of partition failure. The recycled nitrite would, in turn, be pumped into the bottom of the 1BX column and, if sufficient nitrite were available, destroy the sulfamate ion-holding reductant and reoxidize the plutonium, causing it to reextract into the organic solvent. The worst-envisioned reflux condition in the 1BX column would involve the complete destruction of both the ferrous sulfamate and holding reductant in the lower portion of the column. This would cause oxidation of plutonium to the extractable (plus IV) valence at the bottom of the column, thus preventing plutonium from leaving with the aqueous 1BXP stream. Concurrently, the ferrous ion entering in the 1BX stream at the top of the column would reduce the plutonium to the inextractable (plus III) valence and prevent its exiting with the (uranium-bearing) organic 1BU stream. An internal reflux of plutonium would, thus, be initiated and continued until the concentration increased sufficiently to consume all of the ferrous ion entering the column. At that point, all additional plutonium would exit with the organic 1BU stream. The ferrous ion concentration in 1BX is limited to a maximum of 0.03M to permit partition failure and plutonium loss to the organic 1BU stream before an unsafe concentration is reached in the 1BX column.

Additional control is provided by three neutron monitors mounted on the 1BX column (5, 10, and 15 ft above the bottom of the column). The plutonium concentration in the column increases gradually from the top, down to a point near the location of the lower monitor, then increases more rapidly between this point and the bottom of the column. The neutron monitors would provide a rapid indication of any change in the location of this "point of inflection" or change in the plutonium concentration gradient. The monitors are useful in detecting incipient loss of partitioning and in preventing excessive plutonium contamination in the uranium stream, but are not required for criticality prevention.

Process control, in general, and safety, indirectly, are facilitated by in-line plutonium monitors on the 1BXP, 1BP, and 1BSU streams. These monitors provide a continuous and instantaneous indication of plutonium concentration changes in the respective streams and, in conjunction with the column plutonium monitors, an indication of the amount of plutonium refluxing or recycling in the system.

- 1BS Column

The 8-in.-diameter 1BS column is geometrically favorable for plutonium solution up to 450 g/L, except for the upper disengaging section which is a box, 18 in. wide by 36 in. long by 24 in. high. The upper disengaging section is safe for solutions up to about 12 g/L. The safety of the aqueous-continuous 1BS column is based on the plutonium concentration control determined by the 1BX and 1BS column operations.

The 1BS organic stream extracts the uranium from the aqueous 1BXP and recycles the uranium and some plutonium to the 1BX feed tank (TK-J3). As was discussed previously, the plutonium present in the plus III valence will convert to plutonium plus IV if adequate holding reductant is not present. This plutonium (plus IV) will extract into the organic 1BS with the uranium and recycle to the 1BXF tank. To ensure that the plutonium could not concentrate in the upper section of the 1BS column, a 1BS/1BXP ratio of at least one is maintained. A low-flow alarm is provided for the 1BS stream.

- 1C Column

Criticality prevention in the 1C column is based on the prevention of precipitation of an unsafe mass of plutonium. The operating safety limit is 1,170 g of plutonium and is large enough that a sustained 100% "loss" to the 1BU stream could be safely tolerated in the 1C column. If a partition failure were preceded by refluxing of plutonium in the 1BX column to the maximum safe concentration, however, the safe mass limit would be exceeded in the 1C column in less than 2 min. The scenario described above would have to continue for at least 24 h, however, before a significant quantity of plutonium would be carried over with the organic. The condition would be manifested by numerous instruments, as well as sample analyses, and operating controls are established to preclude its occurrence.

A more likely cause of partition failure is the use of a batch of 1BX solution in which the reductant or holding reductant is missing. The normal plutonium inventory in the 1BX column, estimated to be of the order of 800 to 1,000 g, would not be carried over to the 1C column in a distinct "slug," but would "bleed" slowly, with the concentration in the 1BU stream increasing gradually over a period of 6 to 8 h. Ample warning of the problem would be provided by various monitors and, even in the absence of the instrument indications, it is extremely unlikely that the 1C column plutonium limit would be exceeded.

- 1CU Concentrator

The large 1CU concentrator (E-J8) with a flat bottom in the tube bundle area, as well as the center cylinder, is subcritical with accidental precipitation of at least several kilograms of plutonium.

There are no chemical addition lines installed to this concentrator, and accidental precipitation is not credible. However, plutonium polymer could form in the tower at the boiling temperatures encountered there. If the polymer were a colloidal suspension (the most likely case), it would remain with the dilute uranium solution and flow to the reboiler section of the concentrator and redissolve under conditions equivalent to greater than 6M $HNO_3$. If the plutonium polymer were to precipitate upon the horizontal surfaces of the tower, it would be subcritical for an excess of 10 kg of plutonium under conditions of a resuspension accident (during subsequent flushing). If the polymer were to plate out uniformally on all surfaces, it would be safe for much more than the 10-kg value.

To acquire 10 kg of plutonium in the 1CU tower would require a total 1BX column loss of 10 h. Routine 1BU sample analysis would have warned of the problem even if the plutonium monitors on the plutonium streams and 1BX column had not. These monitors would indicate a 1BX column reflux long before significant quantities of plutonium could reach the 1BU exit port.

The formation of plutonium polymer in the 1CU concentrator tower has not been a problem in the years of operating experience at the PUREX Plant.

- Final Uranium Cycle Vessels

Criticality prevention in the final uranium cycle vessels is based on the prevention of precipitation of an unsafe mass of plutonium. Plutonium mass limits for the vessels of the final uranium decontamination system are as follows:

- 2DF tank (TK-K1), 12,400 g
- 2D column (T-K2), 870 g
- 2E column (T-K3), 1,450 g
- 2EU concentrator (T-K4), 7,100 g
- 2UC receiver tank (TK-K5), 12,400 g
- 2UC sampler tank (TK-K6), 12,400 g

The 2DF tank normally contains very little (about 60 g) plutonium. Assuming the worst forseeable mechanism of precipitation in an agitated vessel, it would be subcritical with greater than 12 kg; no mechanism is envisioned by which plutonium would be precipitated in the tank.

The uranium product specifications delineate a maximum of 10 parts plutonium per billion parts uranium in the final product. This degree of purity cannot be achieved if the plutonium contamination in the feed to the final uranium system exceeds about 2% of that in the feed to the solvent extraction system. The final uranium decontamination system is, therefore, normally shut down before the plutonium inventory in the feed tank exceeds 500 g, and the uranium is recycled back to the feed makeup tank (TK-E6) for reprocessing through the partitioning system.

The normal plutonium inventory in the 2D column is on the order of a thousand-fold less than the maximum safe mass. The possibility of the safe mass being exceeded is not credible with the numerous monitors, analyses, and operating controls in effect upstream of the 2D column.

The 34-in.-diameter 2E column is somewhat safer than the 2D column because of the larger effective cross-sectional area of the bottom disengaging section of the 2E column. As with the 2D column, a nuclear criticality excursion in the 2E column is not considered to be credible.

The 2EU concentrator, like E-J8, is safe for kilogram quantities of plutonium based upon uniform precipitation in a safe slab. However, since no plutonium is desired in the uranium product, the second uranium cycle is normally shut down before gram quantities are introduced to the product vessels. The product tanks (TK-K5 and TK-K6) are also safe for kilogram quantities of plutonium as are the UNH solution storage tanks. However, no significant quantities of plutonium will be introduced into these tanks.

- Plutonium Decontamination System

All vessels of the plutonium decontamination system, except for the 2AF tank (TK-J5) and the disengaging sections of the 2B column (T-L2) are geometrically favorable for plutonium up to 450 g/L concentration and subcritical for plutonium precipitation to a density up to 2 g/cm$^3$ while nominally reflected. The 2A and 2B columns are the largest (7 in. diameter) and are the restrictive cases.



9413219.0546

The 2AF tank is an annular vessel. The nominal 2.75-in.-wide annular dimension has a maximum width of 3.03 in. in a limited segment. The concrete center annulus isolates the segments of annulus from each other and the central pump boot. Although the vessel is geometrically favorable for 40 g/L plutonium, provided minimum acidity requirements are met, the plutonium concentration is restricted to 6 g/L, as the tank is over the J cell sump system (see Section 6.5.3).

The other vessels in the second and third plutonium cycles are geometrically favorable and located over either the SLK sump (T-L1) or the SLL sump in the canyon, both of which are favorable for 450 g/L plutonium. The dimensions of these vessels are listed in Table 6-18.

An accident/error condition that could feasibly occur in the plutonium decontamination system involves loss of the 3BP-$HNO_3$ flow and the consequent polymerization of plutonium in the plutonium stripper (T-L6). Continued operation in this manner could result in plugging of the stripper and backup of 3BP solution and plutonium polymer into condenser E-L6-1. The 3BP nitric acid low flow alarm reduces the probability of the above condition continuing for an extended period. Reactivity calculations using the Monte Carlo neutronics computer code, KENO[21], and conservative assumptions* regarding the conditions in the stripper and condenser vessels yielded values for $k_{eff}$ of 0.93 or less. Even under the conservative conditions assumed, a single additional error or accident condition, such as water mist in the cell or a vessel failure does not result in a $k_{eff}$ in excess of 0.95.

6.4.2.3.2 Containment and Personnel Exposure. All solvent extraction operations are remotely conducted within heavily shielded cells in the 202-A PUREX Plant canyon. The likelihood of personnel exposure to radiation is very low. Provisions are made to preclude transport of radioactive solutions back up into the operating gallery to which personnel have routine access. These provisions include the elevation of the operating gallery above the process equipment, seal pots on liquid addition lines from the operating gallery to process vessels, air purging all pneumatic instrument lines from the operating gallery to the canyon vessels, and air purging steam lines to concentrator tube bundles and to steam jets whenever the steam is shut off. Despite these provisions, "suckbacks" have occurred on occasion. However, the amount of material and attendant radiation are generally low and the contamination is generally confined to the piping immediately adjacent to the canyon wall.

*A product concentration of 1,000 g/L solution plus polymer, a neutron reflection equivalent to 1 in. WG, and a total mass of 500 kg of plutonium in T-L6 and E-L7-1.

TABLE 6-18. Plutonium Cycle Vessels.

| Vessel | Location | Shape | Dimensions | As built (maximum) |
|---|---|---|---|---|
| 2AF | TK-J5 | Annular | 9-ft OD, 2-3/4-in. annulus | 3.03-in. annulus |
| 2A | T-L1 | Cylinder | 7-in. ID | |
| | Disengagers | Slab | 3-in. thick (inside) beaver-tail | |
| 2B | T-L2 | Cylinder | 7-in. ID | |
| | Top disengager | Annular | 3-in. annulus | 3.03-in. annulus |
| | Bottom disengager | Slab | 3-in. thick (inside) beaver-tail | |
| 3AF | TK-L3 | Annular | 34-in. OD, 2-in. annulus | 2.05-in. annulus |
| 3A | T-L4 | Cylinder | 4-in. OD | 3.55-in. ID |
| | Disengagers | Annular | 29-in. OD, 2-in. annulus | 2.00-in. annulus |
| | | | 18-in. OD, 2-in. annulus | 1.98-in. annulus |
| 3B | T-L5 | Cylinder | 4-in. OD | 3.55-in. ID |
| | Disengagers | Annular | 18-in., 2-in. annulus | 2.00-in. annulus |
| | | | 18-in., 2-in. annulus | 1.97-in. annulus |
| Stripper | T-L6 | Two cylinders | 4-1/2-in. OD, 30-in. centers | 4.26-in. ID |
| | | Tube bundle | 10 tubes, 3/4-in. OD | |
| Concentrator | E-L7-1 | Same as stripper without packed section | | |
| Condensers | E-L6 | Cylinder | 6 in. with 10 tubes-1 in. OD | 6.25-in. ID |
| | E-L7-2 | Same | | |
| Receiver | TK-L8 | Two cylinders | 4 1/2-in. OD, 30-in. centers | 4.26-in. ID |
| Storage | TK-L9 | Three cylinders | 5 1/2-in. OD, 24-in. centers | 5.05-in. ID |
| Rework | TK-L11 | Three cylinders | 4 1/2-in. OD, 29-in. centers | 4.03-in. ID |
| Loadout | TK-L13 | Cylinder | 5 1/2-in. OD | 5.05-in. ID |

6.4.2.3.3 Solvent Flammability and Explosion Potential. The PUREX process organic solvent consists of 30 vol% TBP in NPH diluent. The TBP is considerably less volatile (flashpoint 146°C) than NPH (flashpoint 80°C). The properties of the NPH diluent are, therefore, considered to be controlling with respect to solvent flammability.

The NPH is a mixture of five saturated, straight-chain hydrocarbons composed of 10 to 14 carbon atoms per molecule. The purchase specifications require a minimum of 99 vol% of the $C_{10}$ to $C_{14}$ constituents and a minimum flashpoint of 80°C. For kerosene-type hydrocarbons, gaseous mixtures containing 33% water vapor are not flammable under any conditions. When water vapor is present as a separate phase, dilution to greater than 33% water vapor is reached at 72°C; thus the NPH-water-air system is not flammable.

In addition to the potential for vapor flammability, consideration must be given to the potential of aerosol flammability. For kerosene-type hydrocarbons, aerosol flammability may occur at a concentration of 46 mg/L and at all process temperatures up to 90°C, at which temperature aerosol flammability is limited by lack of sufficient oxygen in the mixture.

To preclude aerosol formation, organic transfers are normally performed with pumps rather than jets. Agitated tanks, either containing organic or having the possibility of an organic addition, have interlocks to prevent operation when the liquid level is less than 6 in. above the bottom agitator blade. This control reduces the potential for spark generation resulting from a failed shaft.

Air jets are used in the PUREX tank sampling system. Studies were conducted to investigate the characteristics of solvent aerosols resulting from the sampling system. The highest concentration of aerosol obtained in these experiments approached 2.0 mg NPH/L of vapor at 60°C. The equilibrium vapor phase concentration of NPH was calculated to be 27.25 mg NPH/L at 60°C (assuming 100% NPH and an ideal gas). Therefore, total NPH concentration in a solvent tank headspace could approach 30 mg/L which is below the lower flammable limit of 46 mg/L for hydrocarbon chains $C_8$ and greater. Based on these studies, a significant safety margin exists below the flammability limit.

6.4.2.3.4 Solvent Nitration. Vigorous exothermic reactions can occur between nitric acid or heavy metal nitrates and some TBP-diluent mixtures under conditions that might arise during the concentration of waste and product solution. Violent reactions resulting in equipment damage were experienced during early developmental work and were verified in laboratory studies.[22-24]

9413219.0549

More recent laboratory work in which various diluents were studied has extended the knowledge of the nature of solvent nitration reactions.[25] While the exact reactions have not been determined, certain characteristics have been observed and the conditions under which reactions can be expected to occur have been defined, as follows.

- The explosions or rapid reactions have involved the evolution of oxides of nitrogen and the two incidents occurred only after concentration proceeded to the point of incipient calcination of the UNH (greater than 135°C).

- In each incident, solvent was present in the concentrated product and a dense, second organic phase was present in the concentrator bottoms liquid. This second organic phase, commonly called red oil, is the intermediate product of the nitration reactions and is a complex mixture of degraded organic compounds and nitrate complexes.

- In the laboratory studies, the temperature at which the reactions commenced varied (as evidenced by the evolution of oxides of nitrogen), depending on the nature of the diluent and whether or not heavy-metal nitrates were present. With a naphthenic-type diluent (such as was used during the first 10 yr of PUREX Plant operation), rapid reactions have occurred at temperatures of 135°C in the presence of heavy-metal nitrates and 150°C in the absence of heavy-metal nitrates. In more recent laboratory studies with straight-chain, saturated or NPH-type diluents (such as the NPH diluent used during the last 7 yr of plant operation), no vigorous, exothermic reactions were encountered at temperatures up to 150°C in the presence of heavy-metal nitrates.[25] These later studies did not investigate the solvent nitration reaction in the absence of heavy-metal nitrates; however, it is reasonable to assume that the relationship reported earlier (i.e. higher initiation temperatures in the absence of heavy-metal nitrates) would be equally valid with NPH-type diluents.[24]

The PUREX concentrator operation is controlled to prevent the introduction of solvent and to prevent exceeding the safety boundary (135°C for solution temperatures where heavy-metal nitrates are present and 140°C where only nitric acid is present). Concentrator feeds are either decanted from stagnant tanks or steam stripped in the concentrator tower prior to introduction into the concentrator reboiler. The steam chest temperatures are controlled by limiting the steam chest pressure, thereby limiting the temperature. Concentrator bottoms temperatures are also limited by high-temperature steam cut-off interlocks.

6.4.2.4 Operational Controls. This section discusses the operational controls that are practiced to provide assurance that the safety criteria discussed in the previous section are met. The detection, likely cause and remedy, for typical off-standard conditions for the solvent-extraction process are given in Table 6-19.

TABLE 6-19. Solvent Extraction--Off-Standard Conditions. (Sheet 1 of 9)

| Off-standard condition | How detected | Likely cause | Detection of cause | Remedy |
|---|---|---|---|---|
| High U or Pu loss to HAW | 1. By routine analysis of combined concentrated aqueous waste (TK-F15)<br>2. Specifically by analysis of HAW sample<br>3. Specifically by increase in static pressure of column (indication of high U loss)<br>4. Decrease in HAP SG | 1. Flow rates:[a]<br>a. Low HAX[a]<br>b. High HAF[a]<br>c. High HAW<br>d. Low HAS; low salting strength<br>2. Stream compositions:<br>a. Low (TBP) concentration<br>b. High U concentration in HAF<br>c. Low acid concentrations (HAS, HAF, 3WB)<br>3. Flooding of HA column<br>4. Pulse frequency or amplitude off optimum conditions:<br>a. Frequency<br>b. Air in pulse leg | 1. Rates:<br>a. Flow recorder on HAX; low HAP (organic) SG<br>b. Flow recorder on HAF (cross checked by tank volume readings of TK-H1)<br>c. Flow recorder on 3WB<br>d. Flow recorders on HAS-$H_2O$ and HAS-$HNO_3$<br>2. Stream compositions:<br>a. Instrument SG: high SG indicates high U concentration in column<br>b. Analysis of samples, $HNO_3$ monitors<br>3. Flooding:<br>a. Increase in static pressure readings<br>b. Interface variations<br>4. Pulse: frequency check | 1. Ratio: adjust flow to proper ratios<br>2. Stream compositions:<br>a. Butt into specifications<br>b. Adjust flow rates to compensate:<br>o If low TBP concentration exists, raise HAX rate<br>o If high U concentration exists, lower HAF rate or increase HAX rate<br>3. Flooding:<br>a. Adjust frequency<br>b. Decrease flow rates<br>4. Pulse: adjust frequency |
| High FP content in HAP | 1. Continuously by gamma radiation monitor on HAP stream<br>2. Periodically by analysis of HAP for gamma activity | 1. Flow rates:<br>a. Low HAS rate (low salt-strength)<br>b. Low HAF rate[b]<br>c. High HAX rate[b]<br>2. Stream compositions:<br>a. High $HNO_3$ concentration in HAS<br>b. High gamma activity in HAF (due to lack of fuel cooling time)<br>3. Flooding of HA column<br>4. Pulse frequency or amplitude off optimum conditions:<br>a. Frequency<br>b. Air in pulse leg | 1. Flow rates:<br>a. Flow recorders on HAS-$H_2O$ and HAS $HNO_3$<br>b. Flow recorder on HAF<br>c. Flow recorder on HAX<br>2. Stream compositions:<br>a. HAS continuous acidity monitor<br>b. Analyses of HAF for gamma activity<br>3. Flooding:<br>a. Increase in static-pressure readings<br>b. Interface/DP[c] variations<br>4. Pulse: frequency check | 1. Rates: adjust flows to proper values<br>2. Stream compositions:<br>a. Adjust HAS $HNO_3$ concentration<br>b. If high gamma in HAF, increase HAS flow rate<br>3. Flooding:<br>a. Adjust frequency<br>b. Decrease flow rates<br>4. Pulse: adjust frequency |

TABLE 6-19. Solvent Extraction--Off-Standard Conditions. (Sheet 2 of 9)

| Off-standard condition | How detected | Likely cause | Detection of cause | Remedy |
|---|---|---|---|---|
| High Pu loss in 1BU stream (resulting in Pu contamination in U product) | 1. Specifically by analysis of 2DF for Pu<br>2. Routinely by analysis of 1CU for Pu<br>3. 1BXP, 1BX column neutron monitors<br>4. TK-J1 neutron monitor | 1. Flow rates:<br>a. Low 1BX<br>b. High 1BXF<br>2. Stream compositions: low reducing agent concentration (1BX-$Fe^{++}$, $NH_2SO_3^-$)<br>3. Flooding of 1BX column<br>4. Low pulse frequency<br>5. High nitrite in 1BXF | 1. Rates:<br>a. Flow recorder on 1BX (cross checked by tank volume readings of TK-209 and -210)<br>b. Flow recorder on 1BXF stream<br>2. Analysis of sample from TK-209 or -210<br>3. Flooding:<br>a. Decrease in static pressure reading<br>b. Interface and/or 1BX flow variation<br>4. Pulse: frequency check<br>5. Nitrite analysis of TK-J3 | 1. Rates: adjust flows to proper values<br>2. Restore reducing agent concentration<br>3. Flooding:<br>a. Adjust frequency<br>b. Decrease flow rates<br>4. Pulse: adjust frequency<br>5. Add sulfamic acid to TK-J3 |
| High U in 1BP stream | 1. Analysis of 1BP stream for U<br>2. Very high U in 1BP may be indicated by increase in static pressure of 1BS column | 1. Flow rates:<br>a. Low 1BS rate<br>b. High 1BX rate<br>2. Stream compositions, low nitric acid concentration in 1BXP<br>3. Flooding of 1BS column<br>4. Off-standard pulse conditions:<br>a. Frequency<br>b. Air in pulse leg | 1. Rates:<br>a. Flow recorder on 1BS<br>b. Flow recorder on 1BX (cross checked by tank volume readings of TK-209 and -210)<br>2. Analysis of 1BXP<br>3. Flooding:<br>a. Decrease in static pressure readings<br>b. Interface readings and/or 1BP valve loading variations<br>4. Pulse: frequency check | 1. Rates: adjust flows to proper ratios<br>2. If $HNO_3$ concentration of 1BXP is low, increase flow rate of 1BXP-$HNO_3$ (nitric butt to 1BXP)<br>3. Flooding:<br>a. Adjust frequency<br>b. Decrease flow rates<br>4. Pulse: adjust frequency |

TABLE 6-19. Solvent Extraction--Off-Standard Conditions. (Sheet 3 of 9)

| Off-standard condition | How detected | Likely cause | Detection of cause | Remedy |
|---|---|---|---|---|
| High U loss in 1CW | 1. Specifically by 1CW analysis<br>2. By routine analysis of wash waste collected in TK-G8 | 1. Low 1CX flow[b]<br>2. Excess $HNO_3$ in 1CX<br>3. Flooding of 1C column<br>4. Off-standard pulse conditions<br>5. Low 1CX temperature | 1. Flow recorders on 1CX-$HNO_3$ and 1CX-$H_2O$<br>2. Analysis of 1CX stream<br>3. Flooding:<br>a. Decrease in static pressure reading<br>b. Interface and/or 1CU valve loading variations<br>4. Pulse: frequency check<br>5. Temperature recorder on 1CX | 1. Rates: adjust flows to proper values<br>2. Adjust $HNO_3$ in 1CX stream to proper concentrations<br>3. Flooding:<br>a. Adjust frequency<br>b. Decrease flow rates<br>4. Pulse: adjust frequency<br>5. Adjust temperature of 1CX to 50°C-60°C by adjusting temperature controller on 1CX |
| High Pu content in 1CU | Same as for high Pu in 1BU; all Pu remaining in 1BU will follow U and Np through 1C column | | | |
| High Pu recycle via 1BSU stream (or low Pu in 1BXP stream) | 1. 1BSU alpha monitor<br>2. 1BXP and 1BX column neutron monitors<br>3. Pu analysis of 1BSU sample | 1. Low 1BX flow<br>2. Low reductant concentration<br>3. Nitrite recycle | 1. 1BX flow recorder and TK-209/210 dropout rate<br>2. TK-209/210 analysis<br>3. Nitrite analysis of TK-J3 sample | 1. Adjust 1BX flow rate to proper value<br>2. Butt to proper reductant concentration<br>3. Butt TK-J3 with sulfamic acid |
| High U loss in 2DW | 1. 2DW photometer increase<br>2. Specifically by analysis of 2DW sample | 1. Flow rates:<br>a. High 2DF[a]<br>b. Low 2DX[a]<br>c. High 2DS[a]<br>d. Low 2DF-$HNO_3$<br>2. Stream compositions:<br>a. Low TBP concentration<br>b. Low acid concentration in 2DF<br>3. Flooding of 2D column<br>4. Off-standard pulse conditions | 1. Flow rates:<br>a. Flow recorder on 2DF, high SG<br>b. Flow recorder on 2DX<br>c. Flow recorder on 2DS<br>d. Flow recorder on 2DF-$HNO_3$<br>2. Stream compositions:<br>a. Instrument SG readings<br>b. Analyses of stream samples<br>3. Flooding:<br>a. Increase in static pressure readings<br>b. Interface and/or 2DW flow variations<br>4. Pulse: frequency count | 1. Rates: adjust flows to proper values<br>2. Stream compositions:<br>a. Butt into specifications<br>b. Adjust flow rates to compensate<br>(1) If TBP concentration is low, raise 2DX rate<br>(2) If high U concentration exists in the 2DF, lower 2DF rate and raise 2DX rate<br>3. Flooding:<br>a. Adjust frequency<br>b. Decrease flow rate<br>4. Pulse: adjust frequency |

TABLE 6-19. Solvent Extraction--Off-Standard Conditions. (Sheet 4 of 9)

| Off-standard condition | How detected | Likely cause | Detection of cause | Remedy |
|---|---|---|---|---|
| High Pu in 2DW | 1. Specifically by analysis of 2DW For Pu<br>2. Analysis of TK-J1 for Pu<br>3. J1 neutron monitor | 1. Defective 1BX column operation | Same as 1BX column off-standard condition | |
| High Pu in 2DU (resulting in high Pu in 2EU) | Routinely by analyses of 2EU for Pu | 1. Lack of reducing agent in 2DIS or holding reductant in 2DF<br>2. Low 2DS flow<br>3. Low 2DIS flow<br>4. High 2DX, U loss must not be less than 5%<br>5. Inefficient 1BX column operation | 1. Analysis of 2DIS for HN and 2DF for $N_2H_4$, flow recorder on 2DF-$N_2H_4$<br>2. Flow recorder on 2DS<br>3. Flow recorder on 2DIS<br>4. a. Flow recorder on 2DX<br>b. Static pressure in column<br>5. Same as 1BX column off-standard condition | 1. Adjust reducing agent concentration (HN) in the 2DIS or 2DF-$N_2H_4$ flow rate<br>2. Adjust 2DS flow rate<br>3. Adjust 2DIS flow rate<br>4. Adjust 2DX flow rate |
| High FP content in 2DU (resulting in high FP content in 2EU) | 1. Continuously by 2EU gamma monitor and Beckman readings near 1CU concentrator<br>2. Specifically by analysis of 2EU for gamma activity | 1. Faulty codecontamination cycle performance<br>2. 2DW loss too low | Same as codecontamination cycle, off-standard condition<br>2. 2DW photometer | 2. Adjust 2DX rate |
| High U in 2EW | 1. By routine analyses of 2EW<br>2. By routine analyses of wash collection in TK-R8<br>3. Decrease in static pressure of 2E column | 1. Low 2EX rate[b]<br>2. Excess $HNO_3$ in 2EX<br>3. Flooding of 2E column<br>4. Pulse frequency or amplitude off-standard conditions<br>5. Low temperature 2EX | 1. Flow recorders on 2EX-$HNO_3$ and $H_2O$<br>2. Analysis of 2EX stream<br>3. Flooding:<br>a. Decrease in the column static pressure reading<br>b. Interface and/or 2EU flow variations<br>4. Pulse: frequency count<br>5. Temperature recorder for 2EX | 1. Adjust 2EX flow rate $H_2O$-acid<br>2. Adjust relative flow rates on 2EX to obtain correct acid concentration<br>3. Flooding:<br>a. Adjust frequency<br>b. Decrease flow rates<br>4. Pulse: adjust frequency<br>5. Adjust temperature of 2EX to 50°C |
| Fouling of concentrator tubes | Partial loss in evaporator capacity | Reduced heat transfer coefficient due to scale formation in concentrator tube bundles | Increased steam pressure required to maintain given product composition | Shut down concentrator for scale-dissolving nitric acid flush |

TABLE 6-19. Solvent Extraction--Off-Standard Conditions. (Sheet 5 of 9)

| Off-standard condition | How detected | Likely cause | Detection of cause | Remedy |
|---|---|---|---|---|
| Failure of concentrator feed supply | 1. Decrease in WF coupled with increase in SG | 1. Failure of concentrator feed jets (from 2E column)<br>2. Process upset or shutdown | Same as "how detected" | Shut off steam until feed can be restored |
| Overconcentration of UNH | 1. Increasing reading on concentrator temperature recorder<br>2. Increase in concentrator SG<br>3. Decrease in concentrator WF | 1. Reduction in feed flow rate without corresponding reduction in steam flow<br>2. Excessive steam flow | 1. Malfunction of concentrator feed jets from 2E column<br>2. High steam flow readings | 1. Increase feed rate to concentrator by increasing the flow rate of 2EU<br>2. Decrease the steam flow to concentrator<br>3. Add water to concentrator (if feed rate is very low)<br>4. If tubes become scaled, clean as outlined above |
| Excessive U losses in the process condensate | 1. High DP across concentrator tower<br>2. Process condensate samples | 1. Concentrator operating at excessive boilup rate<br>2. Partial plugging of deentrainment tower<br>3. Bubble-cap trays partially plugged | Same as "How detected" | 1. High boilup rate:<br>a. Reduce boilup rate by decreasing steam flow<br>b. Decrease feed flow rate (2EU)<br>2. Same as above<br>3. Shut down concentrator for flush (as above) |
| Insufficient solvent removal in the steam stripping operation | 1. Analysis of 2UD concentrator condensate (normally not sampled)<br>2. High phosphorus content in product<br>3. Visual inspection of 2UC samples from TK-K5 for organic | 1. Excessive organic in concentrator<br>a. Flooding of 2E column<br>b. Excessive organic entrainment in 2EU steam<br>2. Reduced steam flow to concentrator, resulting in abnormal reboiler operation<br>a. Automatic shutdown due to overconcentration<br>b. Mechanical failure of steam system<br>3. Use of alternate feed entry on fourth tray provides too few stages for TBP removal | 1. Excess organic<br>a. See solvent extraction off-standard conditions<br>b. Analysis of 2EU stream<br>2. Reboiler steam flow recorder | 1. Correct solvent extraction off-standard conditions<br>2. Reduction in steam flow; shut down feed stream<br>3. Return feed entry point to second tray |

NOTE: Above information pertains specifically to 2EU concentrator (E-K4). This information is generally applicable to 1CU concentrator (E-J8) by replacing "2E" by "1C."

TABLE 6-19. Solvent Extraction--Off-Standard Conditions. (Sheet 6 of 9)

| Off-standard condition | How detected | Likely cause | Detection of cause | Remedy |
|---|---|---|---|---|
| High Pu in 2AW | 1. 2AW monitor readings<br>2. Analyses of 2AW for Pu<br>3. TK-J1 neutron monitor<br>4. Analyses of concentrated aqueous wastes (TK-J1) for Pu | 1. Flow rates:<br>a. Low 2AX[a]<br>b. High 2AF and/or 2AS[a]<br>2. Stream compositions:<br>a. Low TBP concentration<br>b. Low acid concentration in 2AF and/or 2AS<br>c. Failure to oxidize all of the Pu to tetravalent state<br>3. Flooding of 2A column<br>4. Off-standard pulse conditions | 1. Rates:<br>a. Flow recorder on 2AX<br>b. Flow recorder on 2AF and/or 2AS<br>2. Steam compositions:<br>a. Instrument SG readings or analysis<br>b. Analysis of 2AF for $HNO_3$ and/or 2AS-$HNO_3$ monitor<br>c. Low 2AF-$NO_2^-$ monitor readings or analysis of 2AW or 2AF for Pu(III)<br>3. Flooding:<br>a. Increase in static pressure readings<br>b. Interface and/or 2AW valve loading variations<br>4. Pulse: frequency count | 1. Rates: adjust to proper values<br>2. Stream compositions:<br>a. Butt 2AX and/or 2AF into specifications<br>b. Adjust flow rate to compensate<br>• If low TBP concentration exists, raise 2AX rate<br>• If low $HNO_3$ concentration exists, lower 2AF rate or increase 2AX rate<br>c. Adjust sodium nitrite addition rate to TK-J5 to proper value<br>3. Flooding:<br>a. Adjust frequency<br>b. Decrease flow rates<br>4. Pulse: adjust frequency |
| High FP content in 2AP (resulting in high FP content in 2BP) | 1. 2BP gamma monitor<br>2. By routine analysis of 2BP for gamma activity | 1. Flow rates:<br>a. Low 2AS<br>b. High 2AX (resulting in higher FP/Pu ratio in product)<br>2. Stream compositions:<br>a. Low $HNO_3$ in 2AF (primarily Ru)<br>b. High gamma activity in 2AF (due to lack of fuel cooling time or faulty partition cycle operation)<br>3. Flooding of 2A column<br>4. Off-standard pulse conditions | 1. Rates:<br>a. Flow recorder on 2AS<br>b. Flow recorder on 2AX<br>2. Stream compositions:<br>a. Analysis of 2AF for $HNO_3$<br>b. Analysis of 2AF for gamma activity<br>3. Flooding:<br>a. Increase in static pressure readings<br>b. Interface and/or 2AW valve loading variation<br>4. Pulse: frequency count | 1. Rates: adjust to proper values<br>2. Stream compositions:<br>a. Butt 2AF into specification<br>b. Correct operating conditions in preceding cycles<br>3. Flooding:<br>a. Adjust frequency<br>b. Decrease flow rates<br>4. Pulse: adjust frequency |
| High U content in 2AP (resulting in high U content in 2BP) | By routine analysis of 2BP for U | Faulty 1BX and/or 1BS column operation | Same as partition cycle off-standard condition | |

TABLE 6-19. Solvent Extraction--Off-Standard Conditions. (Sheet 7 of 9)

| Off-standard condition | How detected | Likely cause | Detection of cause | Remedy |
|---|---|---|---|---|
| High Pu loss to 2BW | 1. 2BP alpha monitor and/or 3AF alpha monitor<br>2. Routine analysis of the 2BW for Pu<br>3. Material balance around cycle | 1. Flow rates: high 2BS or low 2BX (2BP) rate (low aqueous to organic flow ratio)<br>2. Excess $HNO_3$ or no reductant in 2BX<br>3. Flooding of 2B column<br>4. Off-standard pulse conditions | 1. Flow recorder on 2BS, 2BX, and/or 2BP streams<br>2. Analysis of 2BX stream<br>3. Flooding:<br>a. Static pressure decrease<br>b. Interface and/or 2BX flow variations<br>4. Pulse: frequency count | 1. Adjust flow rates<br>2. Butt 2BX into specifications<br>3. Flooding:<br>a. Adjust frequency<br>b. Decrease flow rates<br>4. Pulse: adjust frequency |
| High Pu in 3AW | 1. 3AW alpha monitor<br>2. Analysis of the 3AW for Pu | 1. Flow rates:<br>a. Low 3AX[a]<br>b. High 3AF and/or 3AS[a]<br>2. Stream compositions:<br>a. Low acid concentration in the 3AF<br>b. Failure to oxidize all Pu to tetravalent state<br>3. Flooding of 3A column<br>4. Off-standard pulse conditions | 1. Rates:<br>a. Flow recorder on 3AX<br>b. Flow recorder on 3AF and/or 3AS<br>2. Stream compositions:<br>a. Analysis of 3AF for $HNO_3$<br>b. Analysis of 3AW for Pu(III)<br>3. Flooding:<br>a. Static pressure increase<br>b. Interface and/or 3AW valve loading variations<br>4. Pulse:<br>a. Termination of static pressure reading fluctuation<br>b. Air pulser exhaust valve inspection<br>c. Frequency count<br>d. Pressure reading | 1. Rates: adjust to proper valves<br>2. Steam compositions:<br>a. Adjust 3AF into specifications with $HNO_3$<br>b. If low $HNO_3$ concentration exists in 3AF, lower 3AF rate or increase 3AX rate<br>c. Add $NaNO_2$ to TK-L3<br>3. Flooding:<br>a. Adjust frequency<br>b. Decrease flow rates<br>4. Pulse:<br>a. For no apparent pulse shut down for maintenance<br>b. Adjust frequency<br>c. Adjust air pressure to pulser |

TABLE 6-19. Solvent Extraction--Off-Standard Conditions. (Sheet 8 of 9)

| Off-standard condition | How detected | Likely cause | Detection of cause | Remedy |
|---|---|---|---|---|
| High FP content in 3AP (resulting in high FP content in 3BP) | Analysis of 3BP for gamma activity | 1. Flow rates:<br>a. Low 3AS<br>b. High 3AX (resulting in higher FP/Pu ratio in product)<br>2. Stream compositions:<br>a. Low $HNO_3$ in 3AF<br>b. High gamma activity in 3AF (due to lack of fuel cooling time, faulty decontamination and/or partition and/or 2nd Pu cycle operation)<br>3. Flooding of 3A column<br>4. Off-standard pulse conditions | 1. Rates:<br>a. Flow recorder on 3AS<br>a. Flow recorder on 3AX<br>2. Stream compositions:<br>a. Analysis of 3AF for $HNO_3$<br>b. Analysis of the 3AF for gamma activity<br>3. Flooding:<br>a. Increase in static pressure<br>b. Interface and/or 3AW valve loading variations<br>4. Pulse: same as above | 1. Rates: adjust to proper ratios<br>2. Stream compositions:<br>a. Butt 3AF into specifications<br>b. Correct operation conditions in preceding cycles<br>3. Flooding:<br>a. Adjust frequency<br>b. Decrease flow rates<br>4. Pulse: same as above |
| High U content in 3AP (resulting in high U content in 3BP) | Analysis of 3BP for U | 1. Faulty 1BX and/or 1BS column operation<br>2. Faulty 2BX column operation and/or 2BS low | Same as 1BX column off-standard condition<br>Same as second Pu cycle off-standard condition | |
| High Pu loss to 3BW | 1. Analysis of 3BW for Pu<br>2. Material balance around cycle | 1. Flow rates: low 3BX (3BP) rate (low aqueous to organic flow rate)<br>2. Excess $HNO_3$ in 3BX<br>3. Flooding of the 3BP column<br>4. Off-standard pulse conditions | 1. Flow recorder on 3BX and/or 3BP streams<br>2. Analysis of 3BX stream<br>3. Flooding:<br>a. Static pressure decrease<br>b. Interface and/or 3BX variations<br>4. Pulse: same as above | 1. Adjust flow rates<br>2. Butt 3BX into specifications<br>3. Flooding:<br>a. Adjust frequency<br>b. Decrease flow rates<br>4. Pulse: same as above |
| Overconcentraton in the stripper or concentrator | 1. Increasing concentrator bottoms temperature<br>2. Increase in concentrate SG coupled with reduced accumulation rate in receiver<br>3. Increase in the concentrate WF at overflow volume<br>4. Sudden decrease in concentrate WF | 1. Low-feed-flow rates (PSF or PSC)<br>2. High-steam-flow rate | 1. Upset in solvent extraction system<br>2. Steam flow instrumentation | 1. Increase feed flow rate<br>2. Reduce steam flow rate to concentrator<br>3. Dilute concentrator contents with nitric acid |

TABLE 6-19. Solvent Extraction--Off-Standard Conditions. (Sheet 9 of 9)

| Off-standard condition | How detected | Likely cause | Detection of cause | Remedy |
|---|---|---|---|---|
| Inadequate removal of solvent by steam-stripping operation (T-L6) | Analysis of final Pu product for phosphorus | 1. Abnormal amounts of solvent enter the stripper through the 3BP<br>a. Emulsification<br>b. Flooding of 3B column<br>2. Reduced steam flow to the stripper, resulting in abnormal reboiler operation | See final Pu cycle off-standard condition<br>2. Steam flow instrumentation | 2 Increase steam flow |
| High U or FP contamination of Pu product | Analysis of Pu sampler tanks | 1. Malfunction of partition cycle<br>2. Flooding or malfunction of Pu cycle columns<br>3. 1BS or 2BS flow may be low U; 2AS or 3AS flow may be low (FP) | For extraction column malfunctions, see partition cycle, Pu cycle off-standard conditions | Route off-specification prod from TK-L9 to HAF makeup tan (TK-E6) via vacuum transfer tank (TK-L11) |
| Stripper packing plugged | High DP across packed section | 1. Solids deposited on packing<br>2. Flooding of packed section<br>3. Low $HNO_3$ added to 3BP | Increase in stripper DP readings | 1. Wash down packing with HN solution<br>2. Boil 57% $HNO_3$ in stripper for an hour or more<br>3. Subsequently adjust 3BP-$HNO_3$ |

[a]High aqueous to organic flow ratio.

[b]Low aqueous to organic flow ratio.

[c]Differential pressure.

6.4.2.4.1 Codecontamination System. The HA column decontamination performance is determined by the uranium concentration in the organic solvent and by the ratio of the aqueous scrub stream (HAS) flow to the organic product stream (HAP) flow. The nitric acid concentrations of the aqueous scrub (HAS) and aqueous waste (HAW) streams are monitored by in-line monitors and confirmed periodically by chemical analysis. The transient product losses are measured by waste stream samples. The cumulative product loss is measured by batch sampling of concentrated waste. The uranium concentration in the organic solvent is indicated by the organic SG, measured in the top disengaging section of the column, and by the column static pressure. The desired uranium concentration in the organic, or saturation, is maintained by adjusting the HAF flow rate. Other instrumentation routinely used for maintaining operating control of the HA column includes the HAP-gamma monitor, and the extraction and scrub section DP recorders. The uranium and radionuclide concentration in the HAP are confirmed by analysis of periodic samples.

Criticality prevention is ensured by maintaining an organic solvent to aqueous feed flow ratio of at least 1.0, and the nitric acid concentration of the HAS at least equal to 0.5M. In addition, safety in the high-level waste concentration and treatment system is enhanced by maintaining the plutonium loss to the HAW as low as possible. Plutonium losses to the HAW are, typically, less than 0.1%, a factor of 100 lower than the value which, if sustained, would cause a safety problem in the waste system.

Other operating safety concerns in the codecontamination system involve solvent flammability. The risk of a solvent fire is kept acceptably low by maintaining the temperatures of all process streams below the minimum flashpoint of the diluent (80°C). The safety margin of the temperature limits is determined by the type of control used. Positive control of the temperature of the HAX is maintained in the solvent feed tank. An upper limit on the HAS temperature is maintained by means of a temperature control on the demineralized water storage tank. The temperature of the condensate recycle stream, which replaces demineralized water in the HAS stream during normal operation, is also controlled. The HAF is cooled to 50°C after transfer from the feed makeup tank (TK-E6) and maintained at that temperature with cooling-water flow to compensate for radiogenic heat.

6.4.2.4.2 Partitioning System. Performance of the uranium-plutonium partition step is controlled by providing sufficient reductant and holding time to ensure complete reduction of the plutonium. In practice, an approximate 400% excess 1BX flow over the stoichiometric requirement is maintained. The concentration of reductant is limited to less than 0.03M to prevent the plutonium concentration from exceeding the always-safe concentration of 6 g/L in the column. Three neutron monitors are arranged vertically, 5 ft apart, on the lower portion of the 1BX column to monitor the plutonium profile, In addition, a neutron monitor is used to detect changes in the plutonium product stream (1BXP) leaving the column.

Each 1BX makeup batch is sampled and analyzed, and the ferrous reductant concentration is ascertained to be within the control limit prior to usage. The reductant flow rate is measured and compared to makeup tank dropout rate at the 1BX column panel board.

The product (1BXP) stream from the 1BX column is contacted with clean organic in the 1BS column at a minimum organic-to-aqueous flow ratio of 1.0 to remove uranium. A neutron monitor on the 1BXP stream and alpha monitors on the 1BP and 1BSU streams allow timely detection of significant plutonium recycle via the 1BSU stream or loss of partitioning.

The uranium strip column is operated at the minimum aqueous-to-organic flow ratio consistent with undetectable loss. Waste losses via the solvent are determined by sample analyses. The uranium concentration in the 1CU stream is controlled by maintaining the desired SG.

Other operating safety concerns in the partition system are related to solvent flammability and nitration. The risk of a solvent fire is kept acceptably low by maintaining the temperatures of all process streams below the flashpoint of the diluent, as discussed in Section 6.4.1.3. Positive control is maintained of the temperature of the 1BXF in TK-J3, the 1BS in the organic solvent feed tank (TK-G5), and the 1CX (recycled condensate) stream. The 1BX temperature is ambient, with the upper limit defined by the temperature control on the demineralized water storage tank. Solvent nitration and its attendant explosion hazard are prevented by engineered and administrative controls on concentrator operation. The concentrator must be boiling before the 1CU product solution is routed to it, and high-temperature and high-pressure steam cutoffs and pressure relief valves are on the steam supplies to the tube bundles.

6.4.2.4.3 Final Uranium System. Operating performance of the 2D column is controlled in a manner to obtain a uranium product of the highest possible purity. Plutonium is removed by adding a holding reductant (hydrazine) to the 2DF stream and a plutonium reductant (hydroxylamine nitrate) to the 2DIS stream; the plutonium then leaves the column with the aqueous waste stream. Neptunium is separated from the uranium by maintaining a near 100% uranium saturation in the organic solvent and forcing the less extractable neptunium to remain in the aqueous phase, along with about 5% of the uranium. The uranium "loss" is continuously monitored with an in-line photometer and measured by analysis of periodic samples.

Operating control of the 2E column is primarily concerned with maintaining an undetectable uranium loss to the organic waste (2EW) stream, with a minimum excess strip (2EX) flow. Uranium loss to the 2EW is measured by analysis of periodic samples of the stream.

Operating safety in the final uranium decontamination system is concerned primarily with solvent flammability and nitration. The risk of a solvent fire is kept acceptably low by maintaining the temperatures of all process streams below the flashpoint of the diluent (as discussed previously in this section). Positive control is maintained by the temperature of the 2DF solution in TK-K1, the 2DX in the solvent feed tank, and the 2EX (recycled condensate) stream. An upper limit on the 2DS temperature is maintained by means of a temperature control on the demineralized water storage tank.



9413219.0561

Solvent nitration and its attendant explosion hazard are prevented by engineering and administrative controls on concentrator operation. The concentrator must be boiling before 2EU product solution is routed to it, and high-temperature steam cutoffs and pressure relief valves are on the steam supplies to the tube bundles.

6.4.2.4.4 Second and Third Plutonium Cycles. Chemical adjustment of the plutonium product from the partioning system to 2A column feed specifications in TK-J5 involves the oxidation of plutonium to the extractable (plus IV) valence and, optionally, the addition of nitric acid.* The oxidation is accomplished by the addition of sodium nitrite ($NaNO_2$) in sufficient quantity to react with all of the residual holding reductant plus the plutonium reductant and plutonium in solution. Insufficient nitrite would result in incomplete oxidation of the plutonium and high plutonium loss to the 2AW stream, while a large excess would enter the 2B column and upset plutonium stripping, since nitrite ion is readily extractable into the organic solvent.

The amount of nitrite added to the 2AF tank is controlled by chemical analysis of the sodium nitrite stock solution and automatic flow control of the 2AF-$NO_2$ addition stream, backed up by head tank drop-out readings, a nitrite monitor on the 2AF stream, and analysis of periodic samples of the 2AF stream. The nitric acid concentration in the 2AF is controlled by automatic flow control of the 1BXP-$HNO_3$ (or 2AF-$HNO_3$, if this alternate addition is used) and monitored by the periodic 2AF sample analyses.

Control of the 2A column operation is directed primarily at maintaining a low, but measurable plutonium loss to the 2AW stream. A slight loss is desirable for maximum decontamination effectiveness, but must be maintained at a low value (typically, slightly less than 1%) and under control to prevent the accumulation of an unsafe mass in the backcycle waste system. The 2AW plutonium concentration is continuously monitored with the 2AW, alpha-scintillation, in-line monitor, backed up by periodic 2AW sample analyses.

The 2B column utilizes a stripping (2BX) solution consisting of a mixture of hydrazine and hydroxylamine nitrate in dilute nitric acid to reduce plutonium to the relatively inextractable (plus III) valence. The presence of the reductant increases the stripping effectiveness and allows the use of the organic scrub (2BS) stream to extract residual uranium from the aqueous plutonium stream. Absence of or inadequate reductant would result in high plutonium loss to the organic waste (2BW) stream. Control is effected by chemical analysis of each batch of 2BX solution, backed up by continuous monitoring of the 2BP stream.

The 2BP stream is adjusted to 3A column feed specifications by the addition of fresh nitric acid to the 3AF tank. In addition to providing salting strength to ensure complete extraction of plutonium into the

*The required nitric acid is normally added to the 1BXP stream.



9413219.0562

organic, the nitric acid oxidizes the plutonium to the extractable (plus IV) valence and destroys residual hydroxylamine nitrate. The nitric acid addition is continuous, controlled with an automatic flow-control system, and the concentration is monitored by periodic sample analyses. The plutonium concentration in the aqueous waste (3AW) stream is measured continuously with an in-line alpha monitor and periodically by sample analysis, and controlled at a low value (typically, less than 0.3% of the plutonium in the 3AF) by adjusting the 3AX flow. The plutonium concentration in the organic waste (3BW) stream from the 3B column is determined by periodic sample analyses and controlled at a low level (equivalent to about 0.1% loss) by adjustment of the 3BX flow.

The aqueous product stream (3BP) is sampled periodically for plutonium analysis and continuously adjusted with nitric acid to prevent the formation of plutonium polymer in the 3BP stripping tower (T-L6) and the concentrator (E-L7). Sufficient acid must be added to compensate for acid removed during steam stripping in addition to preventing polymer formation during the concentration step. Solvent nitration is prevented by removing entrained and soluble organic in the product stripper and by operating the stripper and concentrator at safe temperatures (as discussed in Section 6.4.2.3.4).

The 3BP is concentrated by a factor of about five in the stripper to ensure complete stripping of the organic. Further concentration, as required, is achieved in the plutonium concentrator (E-L7). The degree of concentration in each vessel is controlled by maintaining a preset bottom liquid SG. This operating control is backed up by monitoring the product accumulation in TK-L8 and, subsequently, by sample analysis of the final product. Concentrator liquid levels are maintained through use of a vented seal loop. The overhead condensates from the stripper and concentrator are combined and recycled to the 3AF tank. The condensate is sampled and analyzed routinely. The concentrator bottoms liquid continuously overflows to the product receiver tank (TK-L8). The concentrated plutonium product is then batch transferred to TK-L9 for sampling prior to conversion to plutonium dioxide (see Section 6.4.3).

### 6.4.3 Plutonium Oxide Production

Concentrated plutonium nitrate product solution from the third plutonium decontamination system is converted to plutonium oxide in the plutonium oxide production facility, described in Section 5.2.2.1.3. This section describes the process, major equipment pieces, and controls required to ensure safe operation of the facility.

6.4.3.1 Functional Description. Plutonium nitrate product solution is batch transferred from the product receiver (TK-L8) in L cell to the product sample tank (TK-L9). Five batches (about 32 L each) from TK-L9 are blended in one of the product storage tanks (TK-M3, -M4, -M5 or -M6) and accountability and product characterization samples are taken. After the samples are analyzed, the solution is adjusted, if necessary, to a nitric acid concentration of 7M to 8M and the plutonium nitrate is ready for use as feed to the oxide production process.

The conversion of plutonium nitrate to the dioxide can be accomplished by either of two methods (Fig. 6-34) direct denitration/calcination or oxalate precipitation followed by calcination. The direct denitration process will not be used and is not discussed further. In the oxalate precipitation process, nominal 12-L batches of plutonium nitrate are transferred to the feed tank (TK-N3) and fed to the prereduction tank (TK-N5), where 14% hydrogen peroxide is added to convert the plutonium to plutonium IV. The plutonium IV nitrate feeds through TK-N6 into the precipitator (TK-N7). Oxalic acid is also added to the precipitator at a controlled rate and plutonium oxalate precipitates. The precipitator is designed to provide an average residence time of 12 to 15 min. The slurry overflows into the vacuum drum filter pan; the plutonium oxalate collects on the filter cloth and the filtrate is pulled through the filter by vacuum to the filtrate receiver. The plutonium oxalate cake is scraped off the rotating drum filter and falls into the feed chute of the first stage calciner.

In the first stage calciner (CA-N9), the interstitial liquid is first evaporated, then the plutonium oxalate is slowly converted to plutonium dioxide as it is moved along the calciner trough by the action of the conveyor shaft, exiting at a temperature of about 350°C. Final calcination and drying to greater than 99% of absolute dryness (less than 1.0 wt% loss on ignition) is accomplished in the second stage calciner (CA-N10) at a temperature of about 550°C.

The plutonium dioxide powder drops from the second stage calciner, through a rotary scalper screen and into the blender. After less than 40 kg of plutonium oxide have accumulated in the blender, it is moved to the blender rotation stand. The plutonium oxide powder is blended to a physically uniform consistency by the tumbling action of the blender, sampled, packaged (about 1.5 kg/container). The final package consists of a tared slip lid can (reweighed after filling) with the lid taped on in a heat sealed plastic envelope that is inside a second can sealed with a commercial canning machine and placed in a third can sealed with another commercial canning machine. The final package is weighed, surveyed for surface contamination, labeled and removed from the glovebox for placement in a shipping container. The air in the calciner, blender, and packaging gloveboxes is maintained free of moisture (dewpoint less than -25°C) to ensure that the plutonium oxide is kept absolutely dry until it is sealed in the final container. A safety analysis of the blender operation indicated that it can be operated safely under all conditions.[26]

Filtrate from the vacuum drum filter is treated, prior to return to the solvent extraction system, to remove incompatible chemicals and plutonium solids. The treatment consists of concentration/digestion to destroy the oxalate ion and reduce the volume, followed by filtration to ensure the absence of plutonium solids. The heat exchanger and condenser condensates plus the dilute acid from the offgas scrubber are normally routed to the solvent extraction backcycle waste system without treatment.

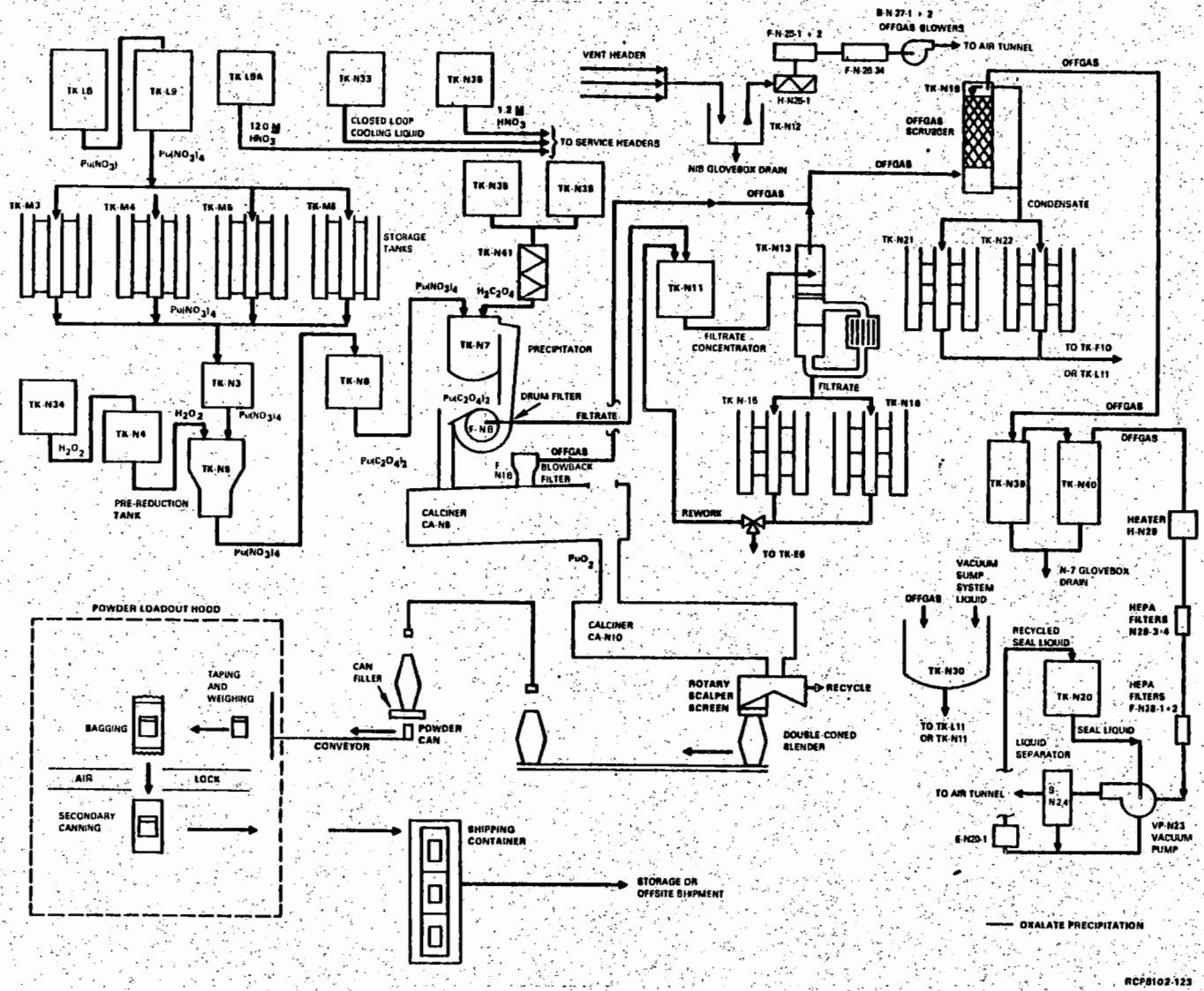


FIGURE 6-34. Flow Chart--Plutonium Oxide Production Facility.

The vessel vent and vacuum system provides ventilation to the "wet" process vessels* to prevent acid fumes from escaping into the glovebox atmosphere; and vacuum for transferring solution between vessels and filtering the plutonium oxalate. The noncondensable offgases are heated, filtered through two stages of HEPA filters, and discharged into the canyon ventilation exhaust.

6.4.3.2 Major Components. The major components of the plutonium oxide production facility are listed in Table 6-20, and include plutonium nitrate storage and feed tanks, oxalate precipitation and filtration vessels, calciners, oxide powder handling equipment, filtrate and condensate treatment vessels, and oxide dissolution and rework vessels. All vessels, except the vacuum drum filter, are of geometrically favorable design. All process solution tanks in the M cell enclosure and N cell are fabricated from 6-in. Schedule 80 stainless steel pipe. The tanks are of either single-barrel or multiple-barrel design, with smaller interconnecting crossover lines on the multiple-barrel tanks.

9413219.0566

The following descriptions are limited to those equipment components that have unique duties or features, or do not fit the preceding general description.

- Precipitator Vessel (TK-N7)

  The precipitator vessel, shown in Figure 6-35, is fabricated of polypropylene and is about 5 1/2 in. in diameter by 11 5/8 in. high. The vessel has a rounded bottom to prevent solids deposition, and is equipped with an agitator and center-mounted baffle to ensure good mixing of the plutonium nitrate and oxalic acid. The vessel is also equipped with an integral overflow line through which the slurry drops vertically to the vacuum drum filter.

- Vacuum Drum Filter (F-N8)

  The vacuum drum filter, shown in Figure 6-36, consists of the following components: a semicylindrical filter pan that holds about 1 L of slurry and is equipped with an overflow line and catch tank; a rotating drum covered with a polypropylene filter cloth and to which vacuum can be applied; an air sparger for slurry agitation;** air for filter blowback; an adjustable "doctor" blade for controlled removal of the cake; appropriate support framework; and a vertical chute through which the cake particles fall into the first stage calciner. The drum is constructed of 304 L stainless steel with a polyethylene core.

*Those process vessels that contain aqueous solutions.

**A variable speed mechanical agitator will be available as a backup.

TABLE 6-20. Oxide Production Equipment. (Sheet 1 of 3)

| Vessel | Size Ht (cm), Vol (L) | Services | Feed sources | Discharge to |
|---|---|---|---|---|
| | | **$Pu(NO_3)_4$ Feed Handling** | | |
| TK-L9 (product sampling tank) | 97, 40 | Agitator, sampling, vacuum | TK-L8 (product)<br>TK-L9-A ($HNO_3$ flush)<br>TK-M3, -M4, -M5, -M6 (rework) | TK-M3, -M4, -M5, -M6<br>TK-L3, -L11, -L13-10 |
| TK-M3, -M4, -M5, -M6 (storage tanks) | 416, 214 | Sampling vacuum | TK-L9 (product)<br>Service header ($HNO_3$) | TK-N3 (product) |
| TK-N3 (pump tank) | 90, 14 | Air sparger | TK-M3, -M4, -M5, M6 (product)<br>Service header ($HNO_3$) | TK-N5, (product)<br>TK-M3, -M4, -M5, -M6 (overflow) |
| TK-N6 (feed tank) | 100, 16 | None | TK-N5 (product) | TK-N7 (product) |
| | | **Oxalate Precipitation/Filtration** | | |
| TK-N5 (pre-reduction tank) | 230, 33 | Heating jacket, sampler, recirculation | TK-N3 (product)<br>TK-N6 (recirculation)<br>TK-N4 ($H_2O_2$) | TK-N6 (product)<br>P-N5-1 (recirculation)<br>(Steam condensate routed to TK-F10) |
| TK-N7 (precipitator) | 35, 3 | Agitator | TK-N6 (product)<br>TK-N35, -N36 (oxalic)<br>Service header ($HNO_3$) | F-N8 (oxalate slurry) |
| F-N8 (vacuum drum filter) | 36 dia. by 20 wide | Air (for filter blow-back and sparger), vacuum | TK-N7 (product slurry)<br>Service header ($HNO_3$) | TK-N11 (filtrate)<br>CA-N9 (filter cake) [slurry overflow (overflow vessel integral with filter)] |
| TK-N41 (oxalic acid heater) | 46, 3 | Vent, electric bayonet heaters | P-N35/36-1 (oxalic acid) | TK-N7 |
| | | **Calcination** | | |
| CA-N9 (first stage calciner | 7.6 dia. by 168 long | Electric heaters, screw, vent | F-N8 (filter cake)<br>Instrument air header (Air for filter blow-back) recycle $PuO_2$ | CA-N10 ($PuO_2$)<br>F-N18 (offgas) |

TABLE 6-20. Oxide Production Equipment. (Sheet 2 of 3)

| Vessel | Size Ht (cm), Vol (L) | Services | Feed sources | Discharge to |
|---|---|---|---|---|
| | | Calcination (Continued) | | |
| CA-N10 (second stage calciner) | 7.6 diam by 168 long | Electric heaters, screw | CA-N9 [instrument air header (bleed air)] | Screen and blender |
| | | Filtrate and Condensate Treatment | | |
| TK-N11 (filtrate receiver) | 155, 28 | Air sparger | F-N8 (filtrate)<br>TK-N30 (sump waste)<br>TK-N15, -N16 (filtrate rework)<br>TK-N21, -N22 (condensate rework)<br>Service header ($HNO_3$) | TK-N13 |
| TK-N13 (filtrate concentrator) | 226 (tower), 38<br>131 (reboiler), 32 | Steam-heated jacket and shell and tube reboiler, packed upper section | TK-N11 | TK-N15, -N16 (concentrated filtrate)<br>TK-N19 [offgas (TK-N30 is vacuum tank)] |
| TK-N15, -N16 (filtrate holding tanks) | 191, 85 | Recirculation, steam jacketed center section, sampler | TK-N13 (concentrated filtrate) | TK-L11, -E6 (oxalate-free filtrate)<br>TK-N11 (oxalate-bearing filtrate)<br>E-N-15, -16-1 (offgas) |
| F-N18 (calciner offgas) | 30, 4 | Air blowback | CA-N9 (offgas)<br>Instrument air header (air for filter blowback) | TK-N19 (offgas)<br>CA-N9 (powder) |
| TK-N19 (offgas scrubber) | 228, 10 | Packed upper section, demister, recirculation of $HNO_3$ scrub liquor, vacuum | F-N18 (calciner offgas)<br>TK-N13 (concentrator offgas)<br>TK-N21, -N22 (condensate receiver offgas)<br>E-N-15-1, -16-1 (filtrate receiver offgas)<br>Service header ($HNO_3$)<br>TK-N19 (scrubber condensate) | TK-N39 (offgas)<br>TK-N21, -N22 (overflow)<br>TK-N15, -N16 (overflow) |
| TK-N21, -N22 [condensate receivers (3-barrel tanks)] | 205, 105 | Chemical addition, sampler | | TK-F10 (condensate)<br>TK-N19 (offgas)<br>TK-L11 (Pu bearing condensate)<br>TK-N11 (oxalate bearing) |

TABLE 6-20. Oxide Production Equipment. (Sheet 3 of 3)

| Vessel | Size Ht (cm), Vol (L) | Services | Feed sources | Discharge to |
|---|---|---|---|---|
| **Vessel Vent and Vacuum System** | | | | |
| TK-N12 (vent seal pot) | 30, 2 | Chemical addition | Vent header, vent from TK-N5, -N11 | GB-N1-B overflow |
| TK-N20 (seal liquid surge tank) | 50, 8 | None | TK-N38 ($HNO_3$); S-N24 (recycled seal liquid) | P-N20-1 (seal liquid to VP-N23; B-N27-1, -2; (vent) TK-N30 (drain for seal liquid) |
| S-N24 (vapor-liquid separator) | 53, 5 | None | VP-N23 | TK-N20 (seal liquid)<br>B-N27-1, -2 (offgas) |
| TK-N30 (vacuum tank) | 144, 24 | Chemical addition<br>Air sparger | Sumps N1A, -N2B, -N2C -N3 (waste); TK-N20, P-N32-1, cooling liquid) | TK-N39 (gas)<br>TK-L11 (liquor waste)<br>TK-N11 (liquor Waste) |
| **Oxide Rework Facility** | | | | |
| TK-N50, -N51 (dissolvers) | 91, 16.5 | Steam heat coil air sparger, vacuum transfer line, condensers | NaF and scrap powder; $HNO_3$ service header | TK-N54 (rework transfer)<br>TK-N19 (via condensers E-N50, -N51) |
| TK-N52 (rework receiver) | 152, 85 | Vacuum, air sparger | TK-N54; VT-N57; ANN header | TK-N53 (rework storage) (via F-N52, -N53-1,2) |
| TK-N53 (rework storage | 278, 90 (2bbl) | Pump for circulation, sampling, filtration, vacuum | TK-N52; ANN header; 1.2M $HNO_3$ header | TK-L11, P-N52, -N53-1 (for recirculation) |
| TK-N54 (rework transfer) | 76, 13.8 | Sparger, vacuum | TK-N50, -N51 | TK-N52 via F-N52-1<br>TK-N51 (rework) |
| VT-N57 (vacuum trap) | 76, 4.5 | Vacuum | (vacuum for TK-N52 and TK-N54) | TK-N52 via F-N52-1 offgas to TK-N30 |
| F-N52, -N53-1<br>F-N52, -N53-2 (product filters) | 1 Filters | TK-N52<br>TK-N53 | TK-N53 | |
| F-N52-1 | 10 Pan Filter | | TK-N54, VT-N57 | TK-N-52 |

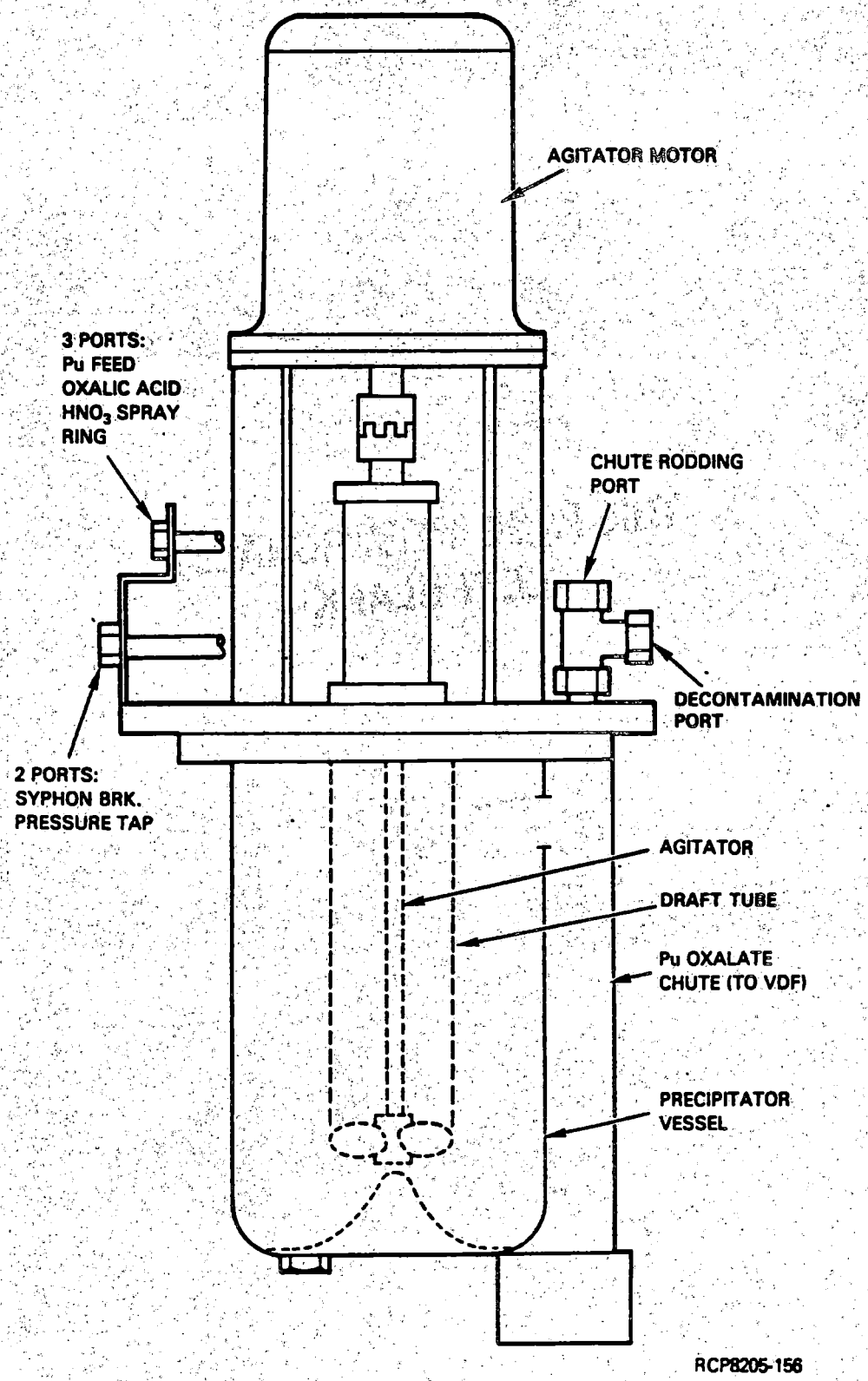


FIGURE 6-35. Precipitator Vessel.

THIS PAGE INTENTIONALLY
LEFT BLANK

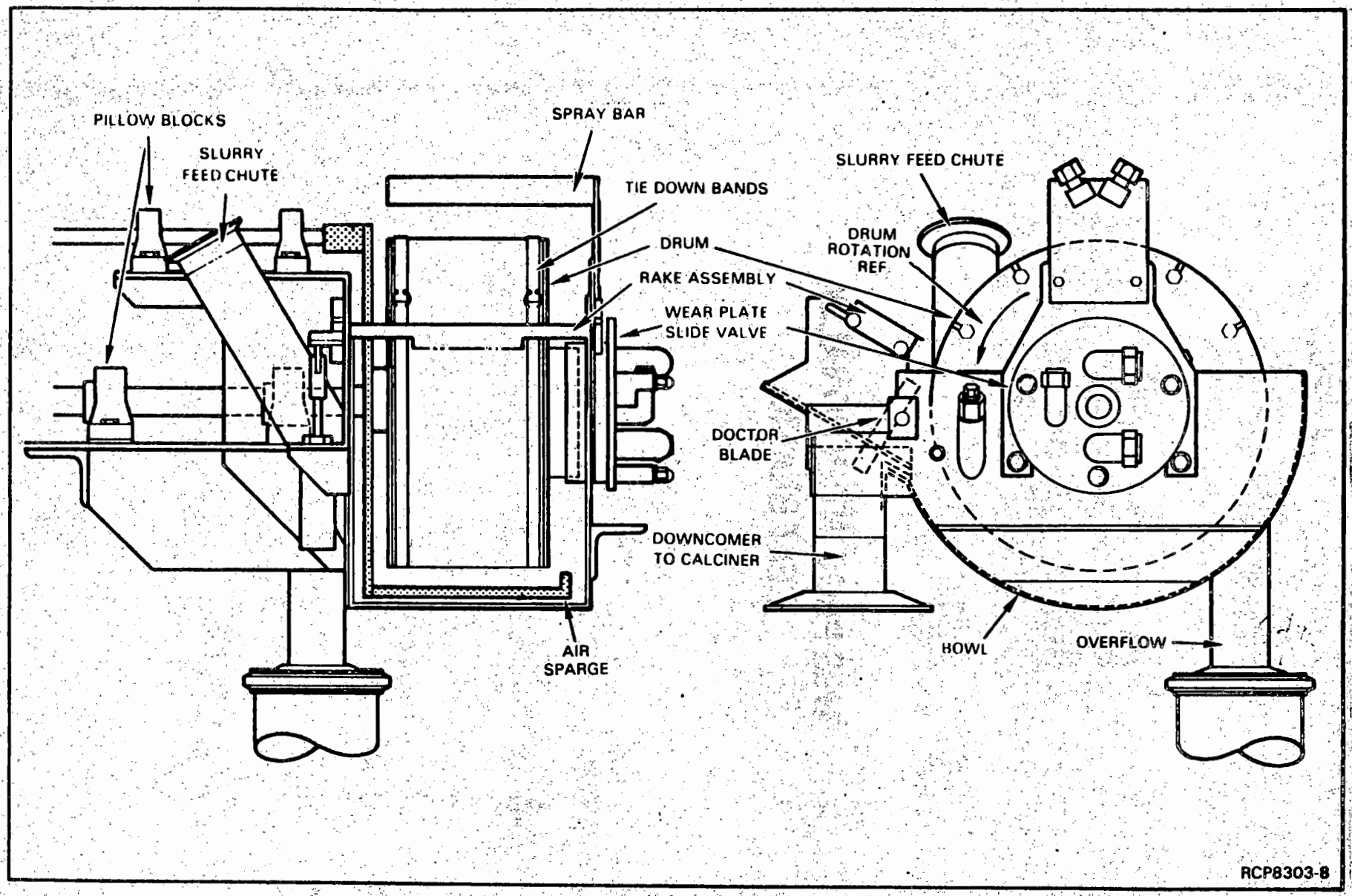


FIGURE 6-36. Vacuum Drum Filter.

THIS PAGE INTENTIONALLY
LEFT BLANK

- First Stage Calciner (CA-N9)

The first-stage calciner, shown with the insulating sheath in Figure 6-37, consists of a covered, heated trough, 3 in. in diameter by 66 in. long, with an axially mounted ribbon flight* screw conveyor; the trough, cover, and conveyor screw are titanium. The insulation around the calciner is clad in stainless steel to prevent absorption of plutonium solution or deposition of powder in the event of a leak in the trough. The calciner is equipped with a multiple-bayonet-type porous metal filter mounted near the inlet to catch any powder entrained with the offgases. An air bleed stream enters near the center of the calciner. A recycle port near the powder exit is used to recycle incompletely calcined oxide from the rotary scalper screen and the blender.

- Second-Stage Calciner (CA-N10)

The second-stage calciner is similar in size to the first-stage unit. However, the major components of this calciner are stainless steel, the screw conveyor is a solid-flight type, and it has no separate offgas line. The air bleed stream for the calciner enters at the product end.

- Product Scalper (Plutonium Oxide Screen)

The product scalper, shown in Figure 6-38, is constructed of 304L stainless steel. Powder is discharged from the second-stage calciner onto the enclosed, vibrating product scalper screen. Small particles fall through the screen into the blender, while larger particles are forced over a partition into a rework holding container.

- Double-Cone Blender

The blender, shown in Figure 6-39, contains an internal spacer consisting of a cylindrical center section with cones at each end. The spacer is filled with boron carbide, a neutron poison. The stainless steel blender housing surrounds the spacer; the powder mixing occurs in the annulus between the housing and the spacer. Mixing vanes are attached to the internal spacer to assist in blending. Slide valves are mounted at each end, which are designed to mate with similar fixed valves at the product scalper screen discharge and the can filling machine. The powder annulus is filled with less than 40 kg of plutonium oxide. Two blenders are used during routine operations: one is in position under the scalper discharge, and one in the blending or the can filling position.

---

*The ribbon flight conveyor consists of a narrow spiral rod or "ribbon" supported about 1/2 in. away from the shaft by gussets at 90-degree intervals of arc.



9413219.0572

THIS PAGE INTENTIONALLY
LEFT BLANK

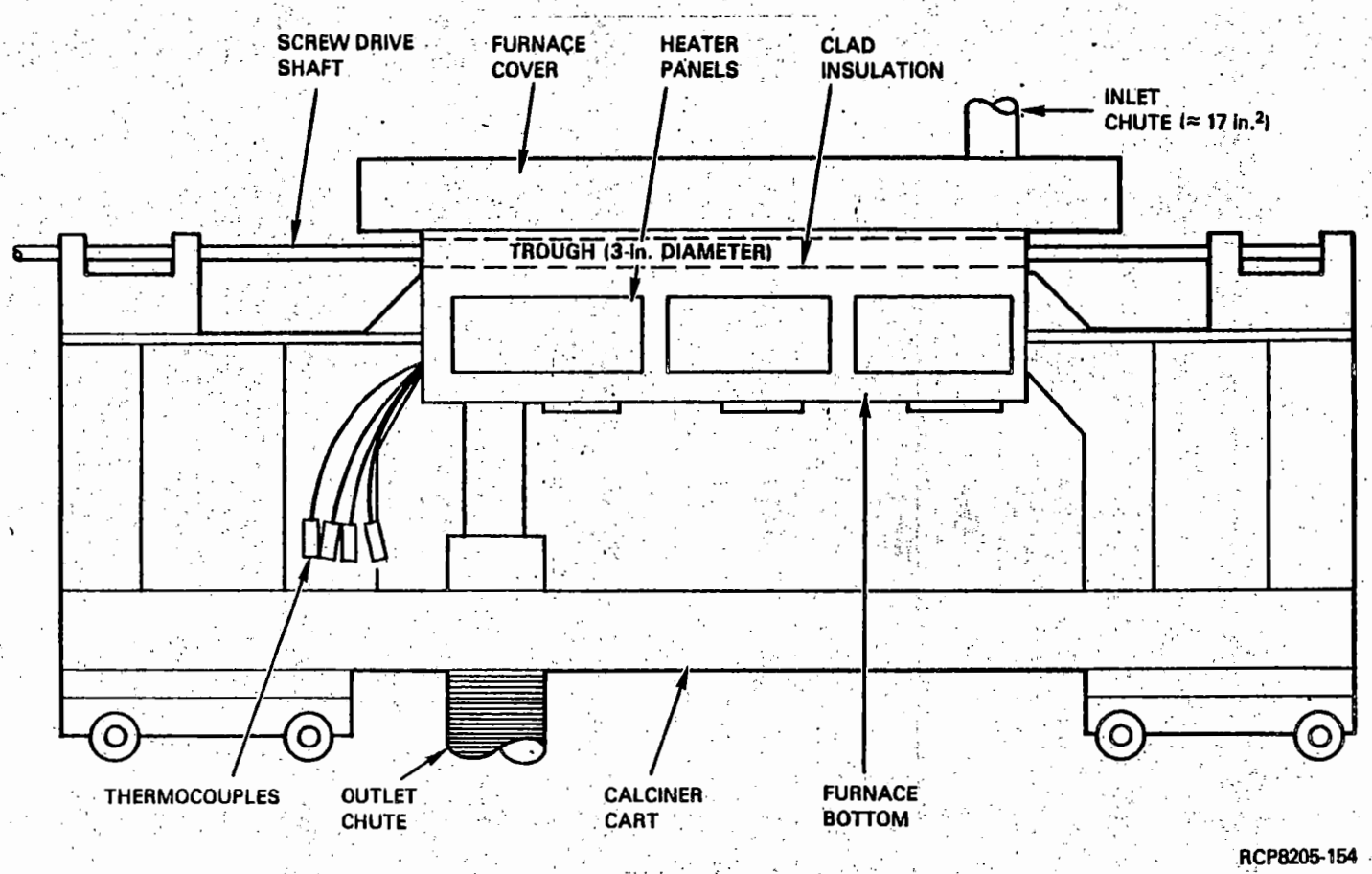


FIGURE 6-37. Calciner (typical).

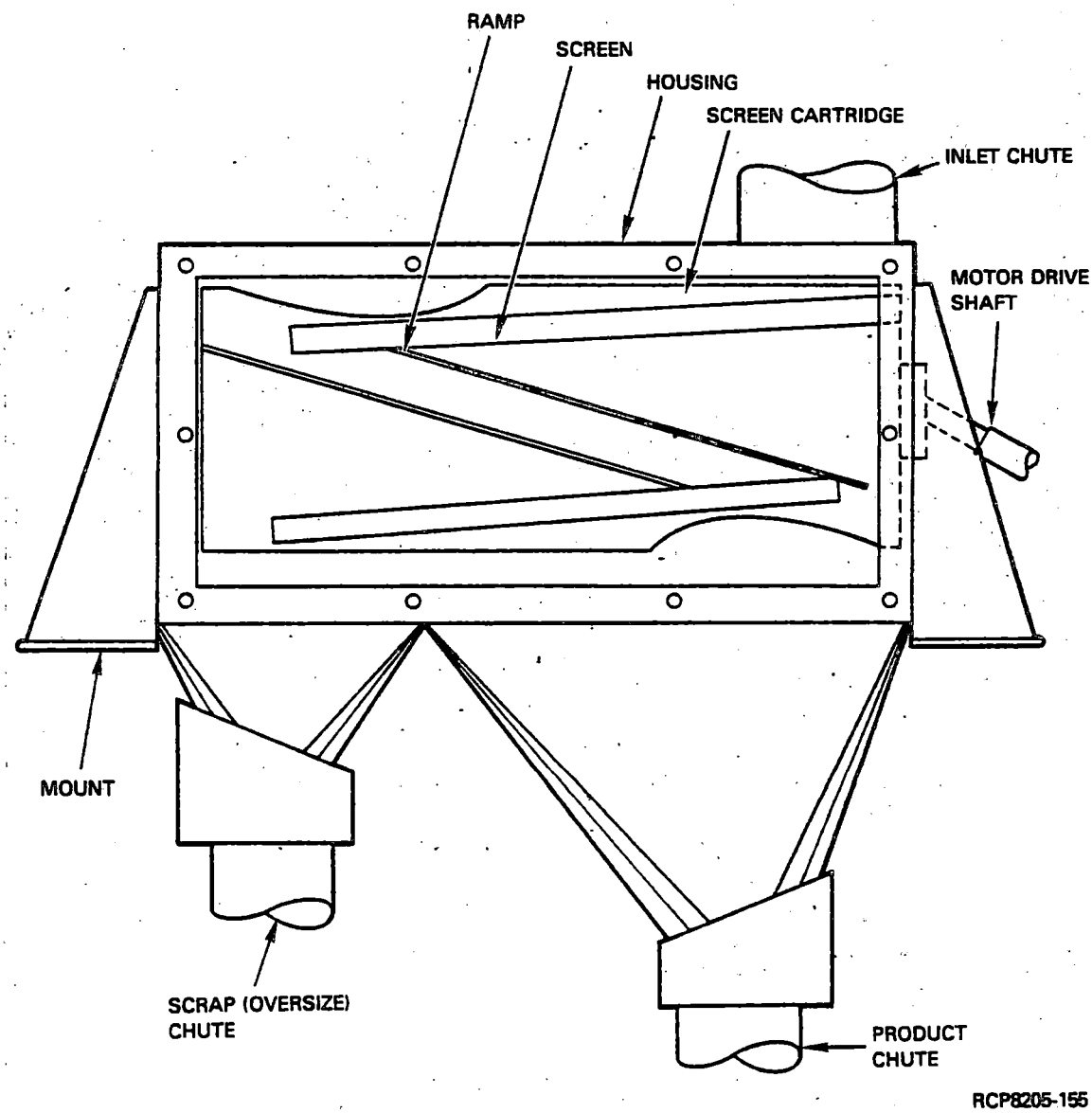


FIGURE 6-38. Product Scalper.

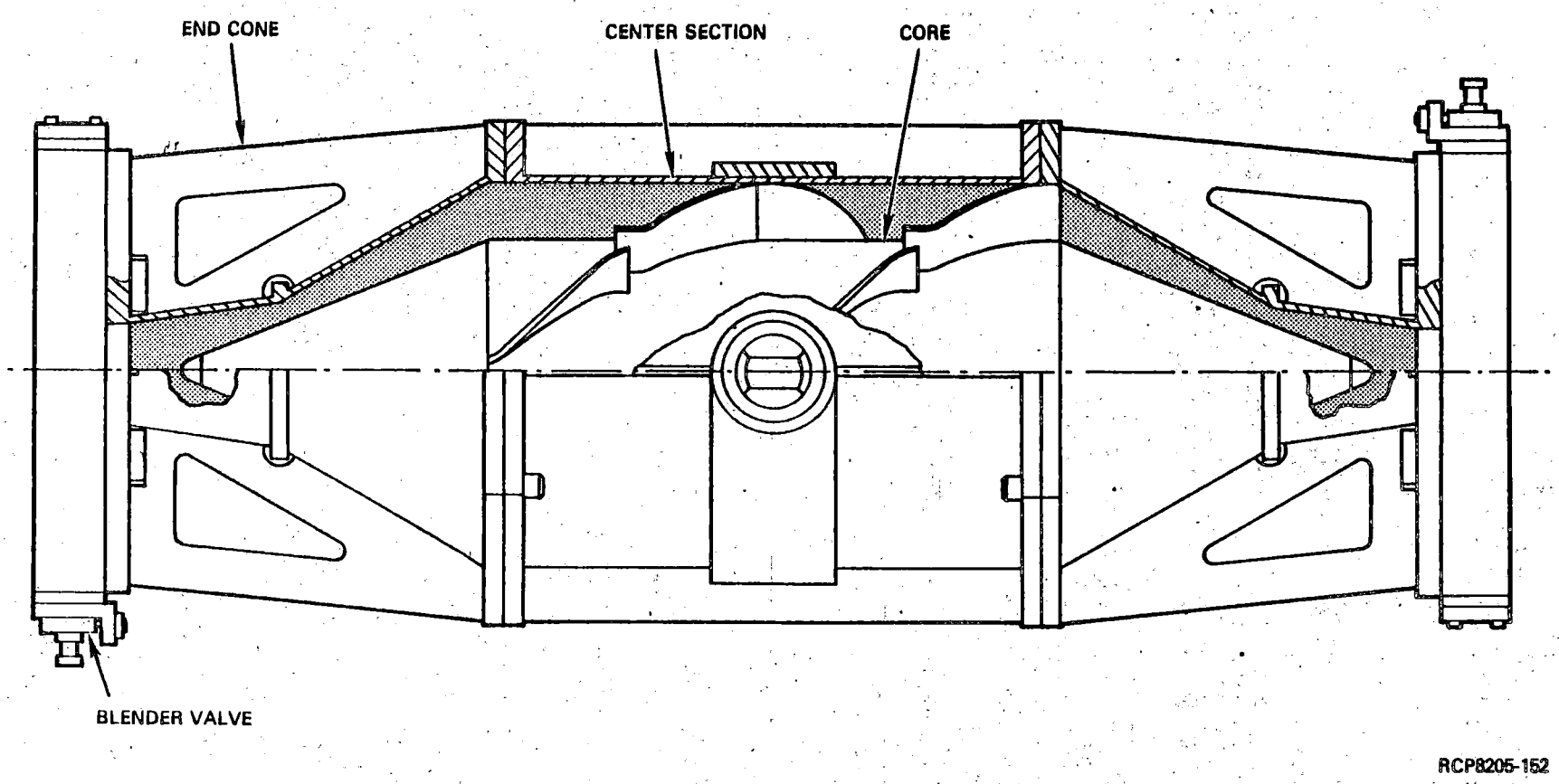


FIGURE 6-39. Plutonium Oxide Powder Blender.

- Can Filler-Conveyor

The can filler-conveyor, shown in Figure 6-40, is a mechanical device for transferring the plutonium oxide powder from the blender into small (3 1/2-in. in dia. by 5 3/4-in.-high) tinned cans with slip-on lids, installing the lids on the cans, and transporting the cans into the final loadout glovebox. The device essentially consists of a slide valve, a chevron valve, a can holder and lifting mechanism, an electromagnetic vibrator drive, a velocity transducer, a can lid removal/installation mechanism, and a screw-drive conveyor mechanism. The entire unit is designed to be remotely operated, thus minimizing operator exposure to radiation. This device has been designed so that all areas where powder accumulation could occur are geometrically favorable.

- Filtrate Concentrator (TK-N13)

The filtrate concentrator is an 11-ft. 10-in.-high by 6-in.-diameter stainless steel tower with a 3-ft.-high by 4-in.-diameter titanium reboiler section at the bottom. The top 69 in. of the tower contains 1/2-in. Raschig ring packing for liquid deentrainment.

- Offgas Scrubber (TK-N19)

The offgas scrubber is a 90-in.-high tower with the upper 50 in. section containing 5/8-in. pall rings (about 38 in.) and a mist eliminator (5-1/2 in.). The tower is equipped with a recirculation system to scrub the gases with dilute nitric acid.

- Filtrate Receiver (TK-N11) and Vent Seal Pot (TK-N12)

The filtrate receiver tank, TK-N11, and the vent seal pot, TK-N12, are Pyrex glass pipe with stainless steel end flanges. Vessel TK-N11 is 60 in. long with a 6-in. inside diameter and TK-N12 is 12 in. long with a 3-in. inside diameter. The Pyrex glass pipe has a 0.328-in. wall thickness and is protected from striking objects by a number of stainless steel rods which extend the length of the tanks and hold the end flanges tightly in place.

- Demisters

Demisters (D-N50-1, -N51-1, -N52-1, and -N54-1) located in the rework glovebox N-6, are also connected to the offgas scrubber. These demisters are constructed of Kynar* plastic pipe with packing and replacement capability.

*Pennwalt Corporation trade name for polyvinylidene fluoride plastic resin.



9413219.0576

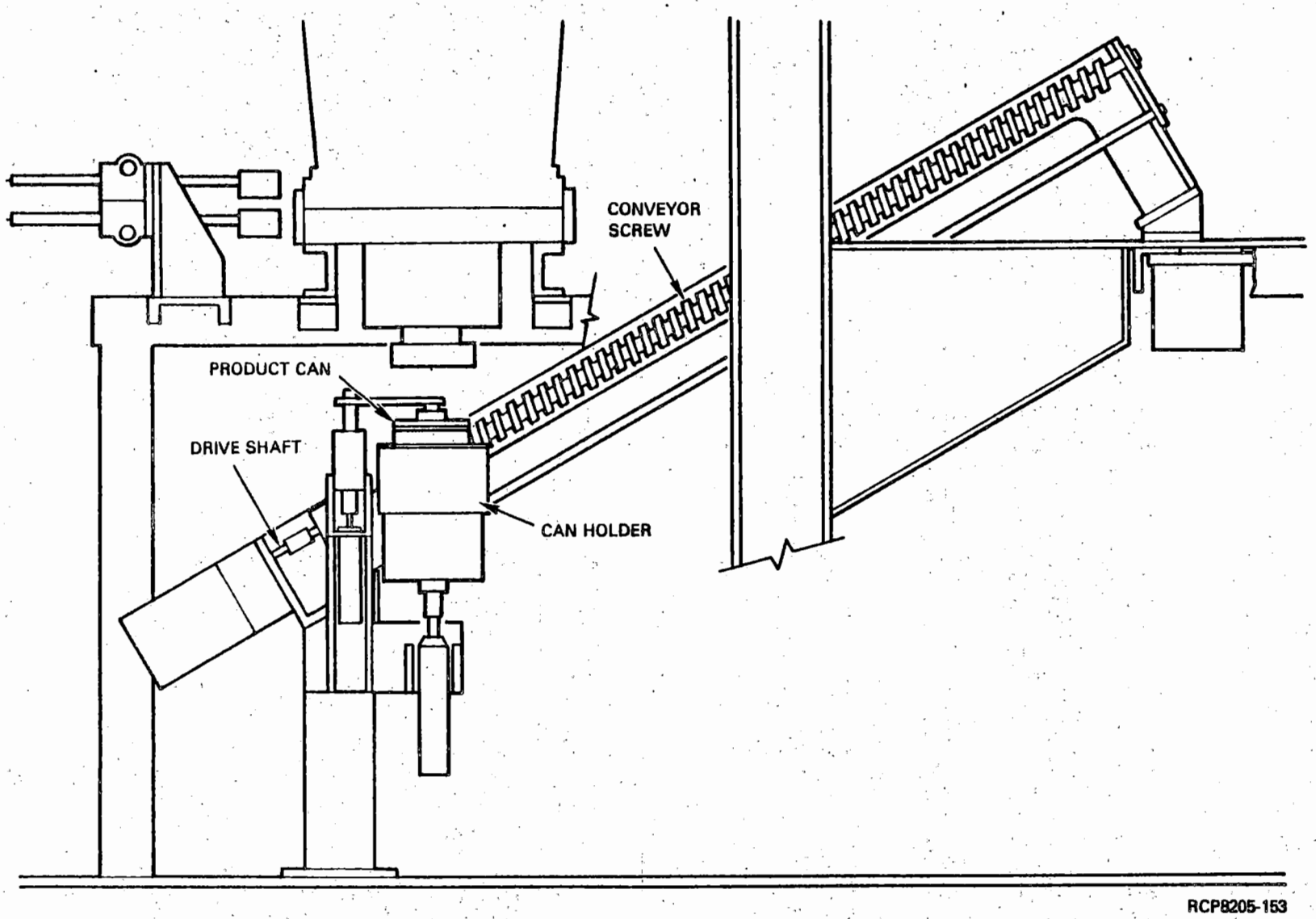


FIGURE 6-40. Can Filler Conveyor.

- Plutonium Rework

  Out-of-specification plutonium materials from N cell will be dissolved in a rework glovebox. The rework glovebox is discussed in Section 6.4.5.3.

- Gloveboxes

  All process vessels, except TK-M3, -M4, -M5, -M6, -N15, -N16, -N21, -N22, -N39, -N40, and N-53* are located inside one of the vessel gloveboxes. Each glovebox is designed so that the largest tank in the glovebox, full of plutonium solution, could empty to the floor and the liquid level would still be too shallow to cause a nuclear criticality accident. The "wet" gloveboxes** are equipped with overflows that drain to L cell via a common criticality drain. All gloveboxes are shielded, as necessary, to prevent excessive exposure to operating personnel.

6.4.3.3 Safety Criteria and Assurance. This section discusses the safety aspects and engineered safety features of the plutonium oxide production facility. The recognized process hazards associated with the conversion of plutonium nitrate solution to plutonium dioxide powder, the subsequent packaging of the product powder, and the handling of waste and recycle solids, liquids and gases are listed in Table 6-21.

6.4.3.3.1 Nuclear Criticality Prevention. The accumulation of fissile material is restricted by vessel and equipment geometry, process conditions, and operating controls to ensure that at least three unlikely, independent, and concurrent errors (or contingencies) are required before a nuclear criticality incident is possible within any glovebox or the M cell feed storage area.

The highest acceptable value of $k_{eff}$ (after considering the two worst combinations of contingencies) is less than 0.95 for calculated values and 0.98 when it is possible to make a direct comparison with experimental data for a closely similar system.

- Feed for Oxide Conversion

  The plutonium concentration in the feed is limited to a maximum of 450 g/L by SG control in concentrator E-L7-1 and product buildup rate in TK-L8 with verification by analysis of a sample from the product sample tank (TK-L9). Due to the low-steam pressure used for concentration in E-L7-1 and the physical characteristics of high-concentration plutonium solution (i.e., boiling point and viscosity), it is very unlikely that the 450 g/L limit will be exceeded.

---

*Vessels TK-M3, -M4, -M5, and -M6 are located in the M cell enclosure. Vessels TK-N15, -N16, -N21, -N22, -N39, -N40, and -N53 are located in the pipe chase between the PR room and N cell.

**Those gloveboxes in which vessels containing aqueous solutions are located.

TABLE 6-21. Process Hazard Analysis--Plutonium Oxide Production. (Sheet 1 of 2)

| System or subsystem | Energy (hazard) | Unwanted energy flow (incident) | Consequence (immediate and/or secondary) | Barriers (design, administrative, safety devices, etc.) |
|---|---|---|---|---|
| Product | Loss on ignition above 1.0% | High moisture in product powder | If canned, cans could pressurize and spread contamination | Each blender batch is sampled for loss on ignition before can loading; scalper screen removes oversize, undried chunks of product; calciner temperatures and screw screw speeds continuously monitored; dry air used in gloveboxes |
| Feed | Organic | Ignition in calciner | Calciner pressurization; Pu spread within hood | $Pu(NO_3)_4$ is steam stripped in T-L6 to remove organic prior to transfer to M cell storage vessels; M cell vessels are emptied each batch to prevent accumulation; phosphorous analysis and visual examination of feed samples; calciner run negative to glovebox; electrical heater maintenance |
| | Pu concentration above 450 g/L | System design exceeded | One level of criticality prevention compromised | Feed sampled; vessel SG continuously monitored |
| Dry air gloveboxes | Moist air | Moisture in $PuO_2$ product | Calcined product will absorb moisture; could cause can pressurization and spread contamination | Air continuously monitored for dewpoint; dual air dryers; product contained in equipment; loss on ignition sample taken from blender before loadout; pressure in dry gloveboxes higher than in wet gloveboxes |
| | Pu buildup in gloveboxes | System design exceeded | One level of criticality prevention compromised | Continuing inventory of Pu content; housekeeping inspection |
| | Pu exceeds 3 g/cm$^3$ in solid form | System design exceeded | One level of criticality prevention compromised | No equipment capable of producing solids of this high density |

TABLE 6-21. Process Hazard Analysis--Plutonium Oxide Production. (Sheet 2 of 2)

| System or subsystem | Energy (hazard) | Unwanted energy flow (incident) | Consequence (immediate and/or secondary) | Barriers (design, administrative, safety devices, etc.) |
|---|---|---|---|---|
| N cell aqueous waste recycle | Oxalate ion in solution | Pu precipitation in non-geometrically favorable PUREX vessels | One level of criticality prevention compromised | Oxalate is killed by heating in $HNO_3$ in TK-N13, TK-N15, and TK-N16; waste streams are small in volume and are sampled for $Pu(C_2O_4)_2$ before routing back to nongeometrically favorable PUREX vessels |
| | Pu concentration 6 g/L | Transfer to nongeometrically favorable PUREX vessels and sumps | One level of criticality prevention compromised | Waste streams are small in volume and are sampled for Pu concentration before routing to nongeometrically favorable PUREX vessels; vacuum drum filtrate visually observed for color and solids; change indicating high Pu waste loss |
| Vessels and piping | Pu | Pu polymerization caused by too-low acidity | One level of criticality prevention compromised | Closed loop cooling liquid is 1.2M $HNO_3$; process condensate 1M $HNO_3$; water add to vessels excluded; solutions are diluted with 1.2M $HNO_3$ |
| | Rapid $H_2O_2$ reaction in TK-N5 | Pressurize TK-N5 | Moisture into vessel vent heater; solution forced up WF and SG dip tubes | Vessel oversized to allow for foam expansion; $H_2O_2$ timed incremental add system; vessel vent header will drain solution to overflow seal pot TK-N12 |
| | Excessive air sparge of vessel for solution mixing | Solution into vessel vent or vacuum system | Solution in vessel vent or vacuum system; one level of criticality prevention compromised | Air sparge rate controlled; vessel vent header drains solution to overflow seal pot (TK-N12); TK-39 and TK-40 are in the vacuum system to catch and detect solution in vacuum system |
| | Overfilling a vessel with solution | Solution into vessel vent or vacuum system | Moisture in vessel vent or vacuum system filters; one level of criticality prevention compromised | Vessels have high-level alarms; vessel vent header drains solution to overflow seal pot TK-N12; TK-39 and TK-40 are in the vacuum system to catch and detect solution in the vacuum system |

- Vessel, Equipment, and Glovebox Design

Considering a maximum of 450 g/L plutonium and interactions between vessels, equipment (except the vacuum drum filter, the vessel vent filters, and the vacuum header filters), piping, and vessels are geometrically favorable by design. Protective systems and administrative controls have been designed for each of these filters to ensure safe operation.

The vacuum drum filter is safe during normal operation; however, malfunction of the doctor blade and/or accumulation of plutonium oxalate on top of the calciner or buildup of a filter cake on the drum in excess of 1 in. must be avoided. The adjustable doctor blade is designed to maintain the filter cake at a less than 1-in. depth at maximum adjustment. Administrative controls limit the accumulation of plutonium oxalate outside of the drum filter and calciner chute. Visual inspections are made to monitor doctor blade operation and excess plutonium oxalate accumulation around the doctor blade and chute to calciner area. Visual inspection is performed by closed-circuit television, by optical viewing systems from the upper control room, and/or by periodic walk-through inspections in the glovebox room. The overflow of slurry from the filter pan will be detected by a conductivity probe in the overflow catch tank, which will activate an alarm in the control room.

The vessel vent filters and vacuum header filters are safe for all dry powder loadings. Liquid must be excluded from the filters to maintain a $k_{eff}$ of less than 0.95 at all powder loadings. A vessel vent filter protective system containing the S-N42 cyclone separator is designed to drain the vessel vent header to an overflow seal pot (TK-N12) in the event liquid enters the vessel vent header from any vessel. The protective system for the vacuum header filters consists of a knockout pot (TK-N43) and two large receiver vessels in series (TK-N39 and -N40) which are operated empty to provide surge capacity for any liquid entering the vacuum header. Independent instrumentation and alarms are provided on each of the vessels to warn of an off-standard condition.

Glovebox floors are geometrically favorable by design due to the overflow drain system that limits the liquid depth by draining excess solution to the large L cell floor area. All glovebox sumps and the M cell sump are small (for early liquid detection) and all sumps are geometrically favorable by design. These sumps are equipped with conductivity probes for leak detection and alarm.

6.4.3.3.2 Containment. Primary containment of plutonium solutions and powders is provided by the vessels. With the exception of the precipitator and the vacuum drum filter, all tanks are closed and maintained at a negative pressure relative to the glovebox atmosphere by the vessel vent or the vacuum system. Each M cell tank has all-welded construction. The first flanges in the system are at the plutonium feed pumps in glovebox N7.



9413219.0591

Air supplied to gloveboxes from the glovebox room is filtered by one stage of HEPA filtration at the glovebox wall as a precaution against an air flow reversal. The gloveboxes are maintained at a negative pressure relative to the glovebox room which, in turn, is negative relative to the control room. This DP system assures that airflow is from the least contaminated to the most contaminated area and prevents airborne contamination from reaching operating personnel and relatively clean areas via the heating, ventilating, and air conditioning system. Each of the gloveboxes is sealed to prevent liquid or powder leakage to the room. The gloveboxes are steel with glass windows. Gloveports are located at convenient places on the walls. The ventilation system is designed so that the airflow through an open gloveport will exceed a velocity of 125 ft/min through the opening. Gloves or port covers will normally be in place at all times. Removable panels or bag-out ports are provided on each glovebox to facilitate the removal and replacement of equipment.

6.4.3.3.3 Personnel Exposure and Contamination. Personnel exposure is kept to a minimum by a combination of shielding and practical remote operation of the equipment. Shielding walls and shielding viewing windows are provided for the control room. The glovebox walls are shielded in those areas where significant quantities of plutonium are located, and shielding panels can be moved into place in front of the powder loadout and calciner gloveboxes when access to the gloveports is not required. In addition, leaded gloves are used as required to reduce the exposure to the hands and arms when it is necessary to work directly in the glovebox.

The plutonium oxide system can be operated remotely (from the N cell control or glovebox room) up to and including the powder container filling operation. The final packaging and transfer of product or off-specification material out of the glovebox is performed manually.

The major cause of personnel contamination in the plutonium oxide production facility is expected to be from rupture of the gloves in the gloveboxes as a result of abrasion, cutting, or puncturing. The gloves could be cut or punctured by sharp instruments or tools or by handling pieces of glass from a broken vessel. Deterioration due to aging is prevented by a program to replace gloves after a specified time. Protective steel and frames or screens around the glass vessels minimize injury to operators from broken glass.

6.4.3.4 Operational Control. Plutonium nitrate solution from the third plutonium cycle is transferred to TK-L9 and then to -M3, -M4, -M5, or -M6. Normally, accountability and characterization samples are taken from one of the M cell tanks. Samples can also be taken from TK-L9 for preliminary characterization for process control, and will probably be done during startups or other nonsteady-state operation. Small batches of the nitrate are transferred through TK-N3 to TK-N5. Hydrogen peroxide is also added in excess to convert plutonium to the plus IV valence state. Nearly two-thirds of TK-N5 is provided as head space for the foam that may form with the peroxide addition. The bottom section is heated, and the adjusted nitrate is pumped through TK-N6 and into the precipitator at the controlled rate. A proportional stream controller is used to accurately

meter in the proper amount of oxalic acid to the precipitator. Particle size of the oxalate precipitate is controlled by feed rate, solution strengths, residence time in the precipitator, and temperature.

The oxalate slurry overflows to the vacuum drum filter where it is collected as a cake on the filter cloth. The cake thickness is controlled by an adjustable doctor blade. The cake drops through a chute into the calciners for conversion to oxide and drying. Dusting is minimized by using a vacuum to draw the offgas from the first-stage calciner through bayonet-type filter elements. Powder drops from the second-stage calciner into the rotary scalper screen, in which oversize particles are separated for recycle.

The screened oxide falls into a double-cone blender, which when full, moves along a screw conveyor to a hoist and is then lifted to a blending station. The blender is rotated for a preset time to give a uniform powder and is then carried to the can filling station. One powder can is partially filled for a sample. Product characterization tests are run to determine if the powder meets applicable product specifications. One of the first tests performed is LOI, a moisture content test. If the LOI is not in specification, the powder is recycled back to the recycle port at the discharge end of the first-stage calciner to complete the calcination process. When LOI is within specification limits, the powder is loaded out into 1.5-kg, slip-lid, powder cans. The lid is placed on the can and the can is passed on a conveyor into the powder load-out glovebox. The lid is taped on and the can is weighed and placed into a plastic bag which is heat sealed on both ends. The bagged can is placed in two additional cans, each of which are crimp sealed with a commercial can sealer. The can is surveyed for plutonium contamination, labeled, and passed through an air lock and into a shipping container. The containers are shipped from the PUREX Plant for onsite storage.

Filtrate from the vacuum drum filter containing about 3M nitric acid and about 0.1M oxalate is concentrated to destroy oxalate, which is not compatible with the rest of the PUREX process. (The hot concentrated nitric acid environment destroys the oxalate ion.) Controls automatically adjust the steam flow to the concentrator to give the desired SG in the concentrate. The concentrated filtrate is sampled from the holding tanks and either recycled to the solvent extraction feed makeup tank or transferred back to the filtrate receiver tanks for further treatment.

Condensate collected from the scrubber in TK-N21 or TK-N22 is recycled to solvent-extraction backcycle waste system. Final offgases are routed to the PUREX air tunnel and main canyon exhaust filters.

No liquid waste streams are released to the environment directly from the plutonium oxide production facility. Liquid waste is routed into PUREX waste processing facilities for further treatment or recovery of plutonium and nitric acid.

Considerable instrumentation is provided with alarms and/or interlocks for safety and process control as discussed in Section 6.5.1. Nearly every

tank is equipped with high-WF alarms and SG recorders. Leak detection, temperature, and pressure instruments have been provided where required. Items critical to safety and/or the process have alarms as well as indicators.

An extensive series of interlocks has been employed to ensure safe operation of the oxide production line. Typically, high WF on plutonium tanks will automatically result in the shutoff of feed into the tank by shutting off feed pumps and/or closing valves. This interlock system prevents loss of product and provides some protection against contamination and radiation exposure. Most tanks using pumps for transfer of solution to the next tank (such as TK-M3, -M4, -M5, -M6 and -N6) have low-WF interlocks to automatically shut off the pump, preventing serious overheating problems. Automatic valves, generally opened by the interlock system when a pump is started, prevent a pump from running dry. The oxalic acid and plutonium nitrate streams to the TK-N7 precipitator are interlocked to turn off below a minimum calciner screw speed, below a minimum vacuum drum filter rotation speed, below a minimum WF in the plutonium nitrate or oxalate acid feed tank, above a maximum pressure in the TK-N7 precipitator vessel, and above a maximum WF in the filtrate receiver tank.

Many tanks have acid lines entering at a funnel and are interlocked to close the acid valve at the service header when the funnel valve is closed. When the vacuum drum filter overflows, the drum stops or the calciner screw stops, and all feed to the precipitator and the vacuum drum filter also stops to prevent plutonium solutions from accumulating on the glovebox floor.

In the powder loadout areas, additional interlocks have been provided to prevent loss of product and reduce personnel exposure. The blenders can only be moved when both slide valves are closed. Each step of the can-filling operation can be performed only in the proper sequence and only after the previous step has been completed. In addition, each step must be individually actuated by the operator to ensure operator attention to the loadout process.

Controls for a safe sequential shutdown are also provided. Three master switches (in the N cell control room, the PUREX dispatcher's office, and the guard house) actuate shutdown of the plutonium oxide production facility process equipment listed below:

- M cell plutonium nitrate feed pumps
- Plutonium nitrate and oxalic acid metering pumps
- Oxalic acid heater
- Vacuum drum filter drive motor
- Calciner heaters
- Calciner offgas filter heater

- Blender and hoist equipment
- Can filling machine
- Heat sealer
- Filtrate concentrator feed pump, TK-N11
- Concentrated filtrate pump, TK-N15 and TK-N16
- Condensate pumps, TK-N21 and TK-N22
- Vacuum cleaning system.

Power remains on to equipment required for radiation monitoring [continuous air monitor (CAM), etc.], ventilation, fire protection, environmental, and process equipment monitoring and protection.

Personnel contamination is kept at an acceptably low frequency by operational and administrative control relating to replacement of gloves, housekeeping in the gloveboxes, and training of personnel in glovebox operating and maintenance techniques.

9413219.0585

### 6.4.4 Recycle and Recovery Systems

#### 6.4.4.1 Backcycle Waste System.

6.4.4.1.1 Functional Description. The aqueous waste streams from the second and third plutonium cycle extraction columns and the final uranium extraction column are collected and concentrated in the backcycle waste system for recycle to the codecontamination (HA) column to minimize actual, unrecoverable loss of uranium, plutonium, and nitric acid from the system. Most of this deliberate "loss" to the backcycle system results from favoring product decontamination over low losses. A small amount of neptunium will reflux in the backcycle waste system. This flow chart is shown in Figure 6-41.

Additionally, the backcycle waste concentrator (E-H4) serves as part of the PUREX condensate recycle system. A portion of the process condensates from the T-F5 acid absorber and the T-U6 acid fractionator, the steam condensates from the T-L6 plutonium product stripper and the E-L7 plutonium concentrator and N cell, and the process condensates from the E-L12 vessel vent condenser and TK-N19 offgas scrubber are all routed to TK-F10 for evaporation in the E-H4 concentrator. The E-H4 process condensate may be routed to the E-J8 concentrator for an additional evaporation.

6.4.4.1.2 Major Components. The system consists of two standard, 5,000-gal tanks and a sectionalized (second generation) concentrator. The E-H4 sectionalized concentrator (Fig. 6-42) differs from the original design (as described in Section 6.4.2.2 for E-J8 and E-K4) in that the tower is a separable unit and the reboiler has a smaller liquid capacity. Concentrator performance is identical due to the use of identical tube bundles.

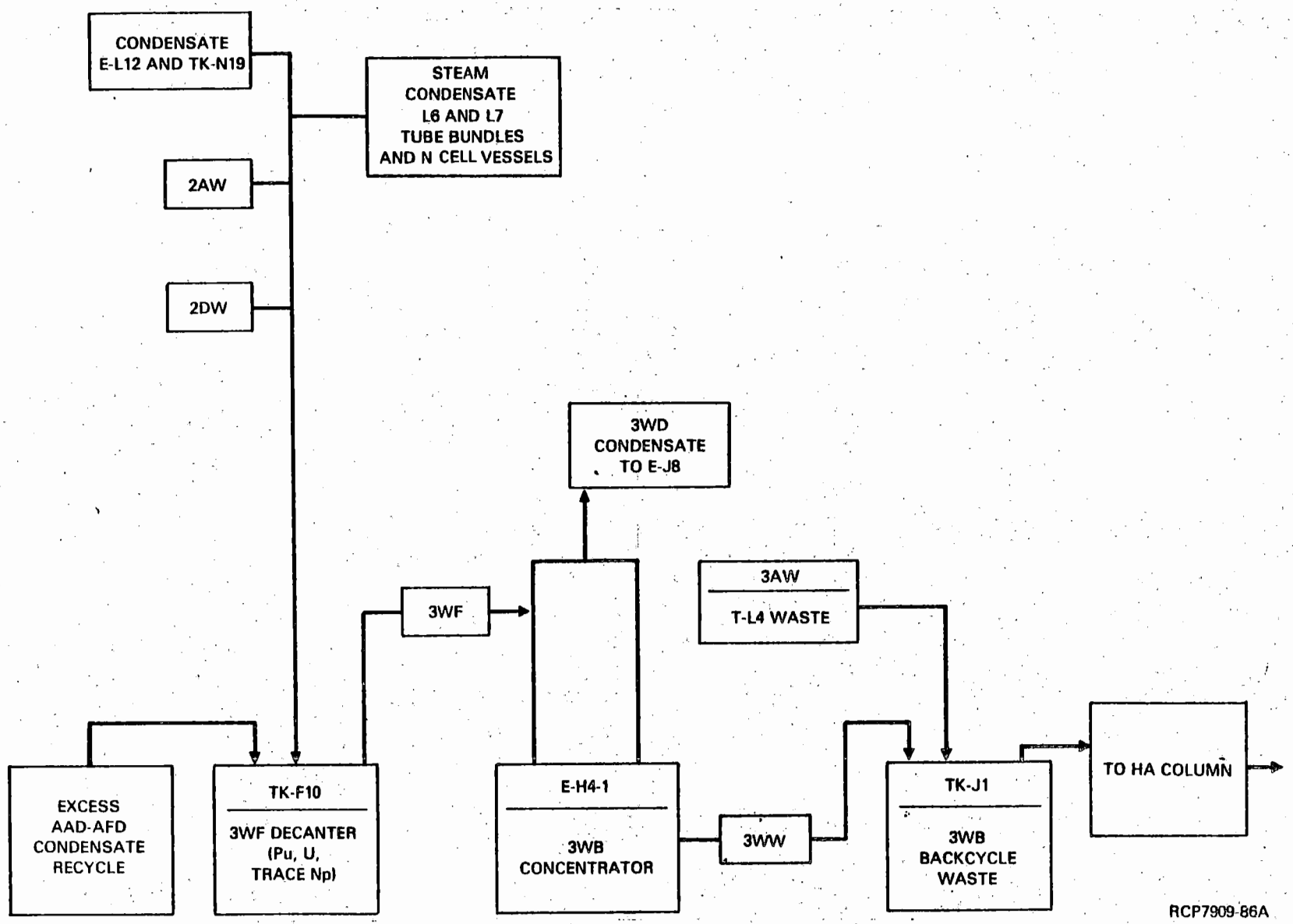


FIGURE 6-41. Flowsheet--Backcycle Waste System.

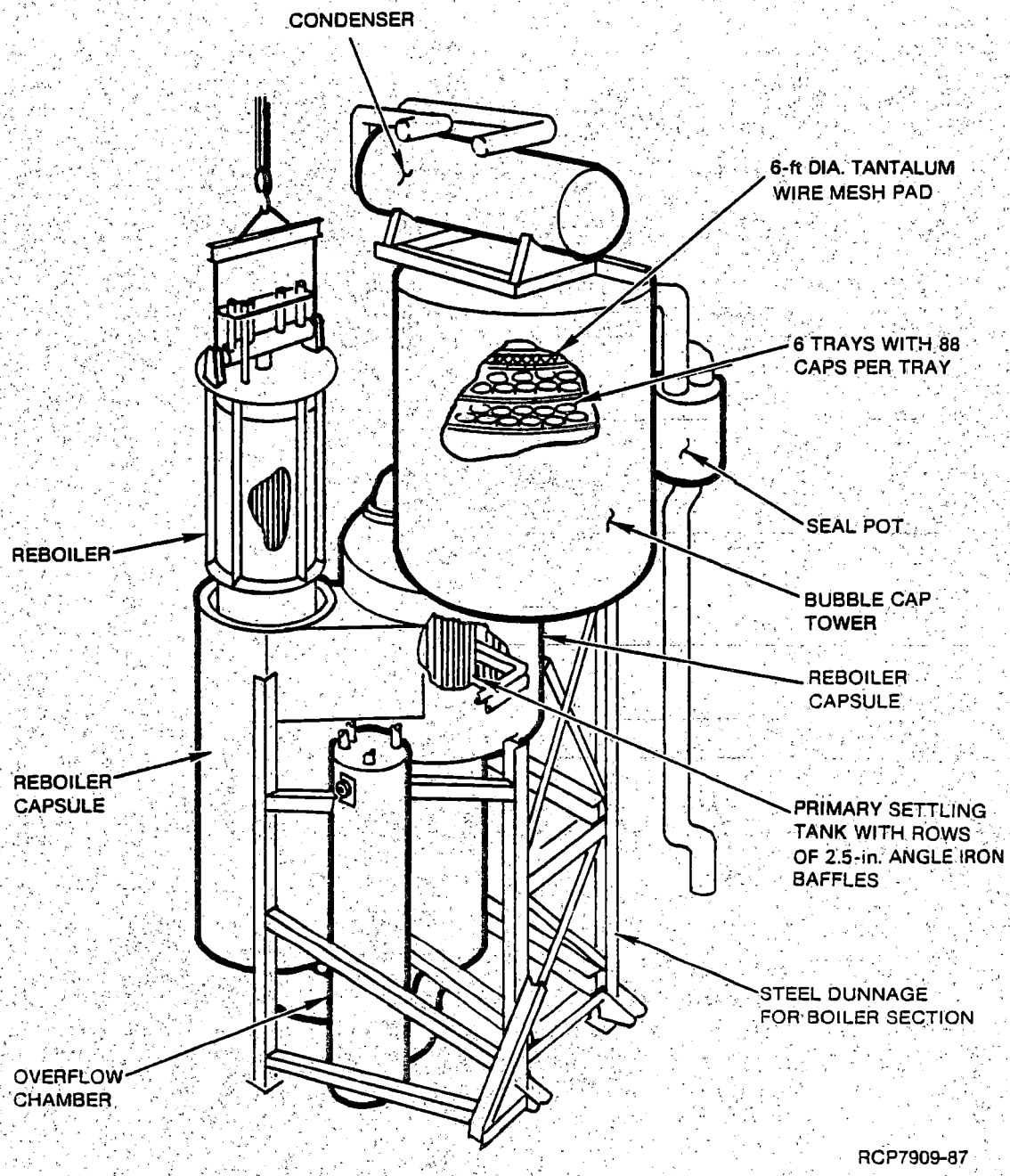


FIGURE 6-42. E-H4 Sectionalized Concentrator.

The reboiler section consists of four chambers: two tube bundle chambers; a 6-ft-OD by 6-ft-high primary settling chamber with a 30-in.-OD downcomer extending from the bottom; and a 20-in.-OD by 12-ft 10-in.-high over-flow chamber. The settling chamber is equipped with primary and secondary baffle arrangements for gross deentrainment of liquid from the overhead vapors. This reboiler section differs from the sectionalized concentrator basic design (F6, F11 configuration), in that the tube bundle capsules have been extended down to the base of the downcomer and stilling chambers. This alteration was required to increase the floor area, and thus increase the fissile material mass limit for uniform precipitation.

The tower used is designed to steam strip solvent from the incoming feed by countercurrent flow of liquid and vapor through bubble cap trays. Six trays are provided and all operate wet. Above the trays, the vapor passes through an 8-in.-thick tantalum wire-mesh deentrainment pad.

6.4.4.1.3 Safety Criteria and Assurance. The hazard analysis for the backcycle waste system is summarized in Table 6-22.

- Nuclear Criticality Prevention

The plutonium mass limits for the TK-F10 backcycle feed tank, E-H4 backcycle concentrator, and the TK-J1 backcycle concentrate receiver tank are based upon a precipitate being formed in the most unfavorable configuration in these tanks.

The backcycle waste system receives waste from the second and third plutonium cycles and the final uranium cycle, as well as steam and process condensate from N cell. Currently, the 2AW goes to TK-F10 and the 3AW goes to TK-J1. These two streams are sampled routinely and each has an in-line alpha monitor to warn of unusually high column plutonium losses. Vessel TK-F10 is also sampled periodically, but stream analyses and in-line monitoring provide the primary nuclear criticality prevention information.

Vessel TK-F10 functions as a decant tank with the agitator off and locked out. Under a typical flowsheet condition of 0.018M UNH and 1.8M $HNO_3$ in the aqueous phase of TK-F10, assuming organic to be present, the plutonium distribution coefficient is 6 to 8. As a worst-case condition, a large part of the plutonium throughput could be lost to the 2AW for a period of time because of loss of nitrite flow to the 2AF tank or column upsets. A complete plutonium loss via the 2AW would result in a plutonium concentration of 0.15 g/L in the aqueous phase and 1.2 g/L in the organic phase in TK-F10 after reaching equilibrium. Both phases would be well within the 6 g/L safe concentration. A complete 2AW plutonium loss could not exceed the mass limit for TK-F10 unless there were 3,000 gal of organic in the vessel (which would still be at a safe concentration). It would take 20 h for the mass limit to be exceeded and a criticality would still not occur unless a precipitating agent was also added.



9413219.0588

TABLE 6-22. Process Hazard Analysis Backcycle Waste System.

| Energy (hazard) | Unwanted energy flow (incident) | Consequence (immediate and/or secondary) | Barriers (design, administrative, safety devices, etc.) |
|---|---|---|---|
| Pu | High Pu losses in second or third cycles | One level of criticality prevention compromised | Procedures; administrative control; monitors; samples |
| Solvent | Red oil in E-H4 | Explosion--equipment loss | Monitors for temperature; steam pressure and SG; samples; feed is decanted |
| Radionuclides | Corrosion from $HNO_3$ | Tube bundle leak releasing radioactivity to the steam condensate | Leak test tube bundles every shutdown; maintain pressure (either steam or air on tube bundles at all times) |

Because of the limited size of the E-H4 concentrator, a total 2AW loss would not result in the E-H4 mass limit being reached until the 2AW loss had been recycled through the solvent extraction system and had come through a second time. Even if the mass limit were reached, the vessel is safe as long as the material is not precipitated. The backcycle concentrator operates under highacid conditions routinely. For a caustic precipitating agent to be added in large enough quantities to reduce E-H4 acidity from 8M to less than 0.5M, about 11,000 lb of nitric acid would have to be neutralized.

During this period, the 2AW stream monitor would indicate high losses, both the 2BP and 3AF stream monitors would indicate reduced plutonium throughput, and the TK-J1 neutron monitor would indicate an excessive plutonium concentration and concentration increase. Ample time is available to identify and correct the off-standard condition or to shut the system down before the TK-F10 or E-H4 plutonium concentration limit is reached. The periodic samples of 2AW, 2BP, 3AF, TK-F10, and TK-J1 would confirm the monitors.

The worst-case situation for the TK-J1 tank would be a 3AW plutonium loss (a total 2AW loss has a similar effect on TK-J1, but is not as fast or as direct). Under flowsheet conditions with 0.071M UNH and 7.7M $HNO_3$ in the aqueous phase of TK-J1, the plutonium extraction coefficient is about 1, so significant plutonium cannot accumulate in an organic phase should one be present. The mass limit could not be reached in TK-J1 until the 3AW loss had been recycled through the solvent extraction system and had come back again. Even if the mass limit were reached, the tank would be safe as long as the contents were not precipitated.

During this period, the 3AW stream would indicate high losses and the TK-J1 neutron monitor would indicate an increasing plutonium concentration. Ample time for corrective action would be available before the TK-J1 limit was reached. The periodic samples of 3AW and TK-J1 would confirm the monitors.

- Nitrated Solvent (Red Oil)

The formation and exothermic reaction of red oil was discussed in Section 6.4.2.3.4. Prevention of red oil formation in the backcycle waste concentrator consists of precluding the introduction of solvent to the concentrator bottoms and preventing, through equipment design features, the attainment of process conditions which would result in violent exothermic reactions. As discussed, feed to the concentrator is decanted from an unagitated vessel (TK-F10). Instrumentation permits detection and control of the solvent-aqueous interface in the feed tank. The feed stream to the concentrator is passed countercurrent to the overhead vapors on bubble cap trays to steam strip any entrained organic into the overhead vapors. Since the steam-to-feed ratio must be controlled to ensure steam stripping, the concentrator



9413219.0590

must be started with a seal pot water addition to attain equilibrium rates before 3WF is started to the E-H4 concentrator. The concentrator control systems (as discussed in Section 6.5.1.3.3) are designed to preclude attainment of the high bottoms liquid temperature necessary for a violent reaction. The concentrator is equipped with a water-filled seal pot to ensure adequate venting and, hence, preclude excessive pressurization.

- Corrosion

The failure of tube bundles or heating coils due to corrosion and the potential hazard thereof was discussed in Section 6.4.1.3.4. The primary causes of corrosion in the backcycle waste concentratrator (E-H4) are high temperature, high nitric acid concentration, and the presence of ferric, sulfate and fluoride ions. Ferric and sulfate ions are present in relatively constant ratio and have a mutually inhibiting* effect on corrosion of stainless steel, provided the ratio is not changed greatly. Uncomplexed or "free" fluoride ion, even at a concentration as low as 0.01M in boiling 8.0M nitric acid, increases the corrosion rate of 304L stainless steel severalfold. Complexing of the fluoride ion with aluminum at an aluminum/fluorine mole ratio of 1.0, however, reduces the corrosion rate to about twice that obtained in the absence of fluoride. With an aluminum/fluoride mole ratio of 3.0 (as required by the flowsheet) the corrosion rate is essentially the same as that obtained in the absence of fluoride.

The engineering and administrative controls that are used to minimize the consequences of a tube bundle failure are discussed in Sections 6.4.1.3.4 and 7.5.3.5.

6.4.4.1.4 Operational Control Systems. The system is maintained at dynamic equilibrium by adjusting flow rates and the boil-off rate to maintain constant tank inventories. The steam supplies to the E-H4 concentrator are adjusted to maintain the proper nitric acid concentration in TK-J1.

The feed tank (TK-F10) is periodically sampled as a backup check on plutonium recycle. Due to the possible presence of organic, TK-F10 is operated without agitation so that the concentrator feed is decanted. Further, TK-F10 is equipped with organic-aqueous interface measurement dip tubes so that the presence and amount of organic can be determined. Periodically, the organic is transferred to TK-F13 for batch solvent treatment and subsequent reuse in solvent system 1. The concentrator operation is controlled to provide a constant bottoms SG. This is cross checked against the solution SG in the bottoms receiver tank (TK-J1). The SG is set to provide a

*Either ion by itself would substantially increase the corrosion rate, but when both the ions are present, the effect is small.

bottoms nitric acid concentration of 8.0M to 8.4M, and this is routinely checked against TK-J1 sample results. Since the 3WB represents the major source of nitric acid in the HA column, it is possible to augment the backcycle waste acid with PUREX-recovered nitric acid.

6.4.4.2 Solvent Treatment.

6.4.4.2.1 Functional Description. Contaminated and degraded solvent from the solvent extraction cycles is washed with a dilute sodium carbonate-potassium permanganate solution and then scrubbed with dilute nitric acid for removal of contaminants and solvent degradation products prior to reuse in the solvent extraction system. There are two systems: (1) the number 1 or the G cell solvent treatment system receives, recovers, and supplies solvent for the codecontamination, partition, and plutonium cycles; (2) the number 2 or R cell solvent treatment system services only the second uranium cycle, to minimize contamination of uranium product by plutonium and FP impurities. The organic system flow chart is shown in Figure 6-43.

The sodium carbonate-potassium permanganate wash of the solvent takes place in the semibatch wash tanks (TK-G1 in system 1 and TK-R1 in system 2). The aqueous wash solution is recirculated from the bottom of TK-G1 or TK-R1 by a pump and discharged into the packed section cocurrently with the incoming contaminated solvent. The mixing of the two streams in the packed outer annulus removes the bulk of the contaminants from the organic stream. The washed organic phase is pumped to the acid scrub column from above the aqueous-organic interface. The interface level is controlled to ensure that the basic aqueous solution is not pumped to the acid scrub column with the organic.

Recycle of the aqueous wash solution normally continues for 8 to 24 h. Spent wash solution is periodically replaced.

The organic stream is pumped from the wash tank to the bottom of the acid scrub column, T-G2 or T-R2, where it is countercurrently scrubbed with nitric acid to remove entrained carbonates and manganese dioxide, clarify the solvent, and slightly acidify it for reuse. The aqueous phase flows to TK-G2 or TK-R2, where it is recirculated to the scrub column. Depleted acid scrub solution is transferred from TK-R2 to TK-G2 (for use in system 1) and then to TK-G8 for disposal. Fresh nitric acid may be added directly to either scrub column.

The scrubbed organic from the column flows to storage (TK-G5 or TK-R7) where it is returned to process. Vessels TK-G7 and TK-R5 may be used for additional solvent storage.

Fresh solvent makeup is normally added to TK-R1 from the solvent blend tank, TK-RI-A.

The TK-F13 may be used occasionally for preliminary treatment of spilled solvent collected from sumps or potentially poor quality organic from various feed and storage tanks such as TK-F10.

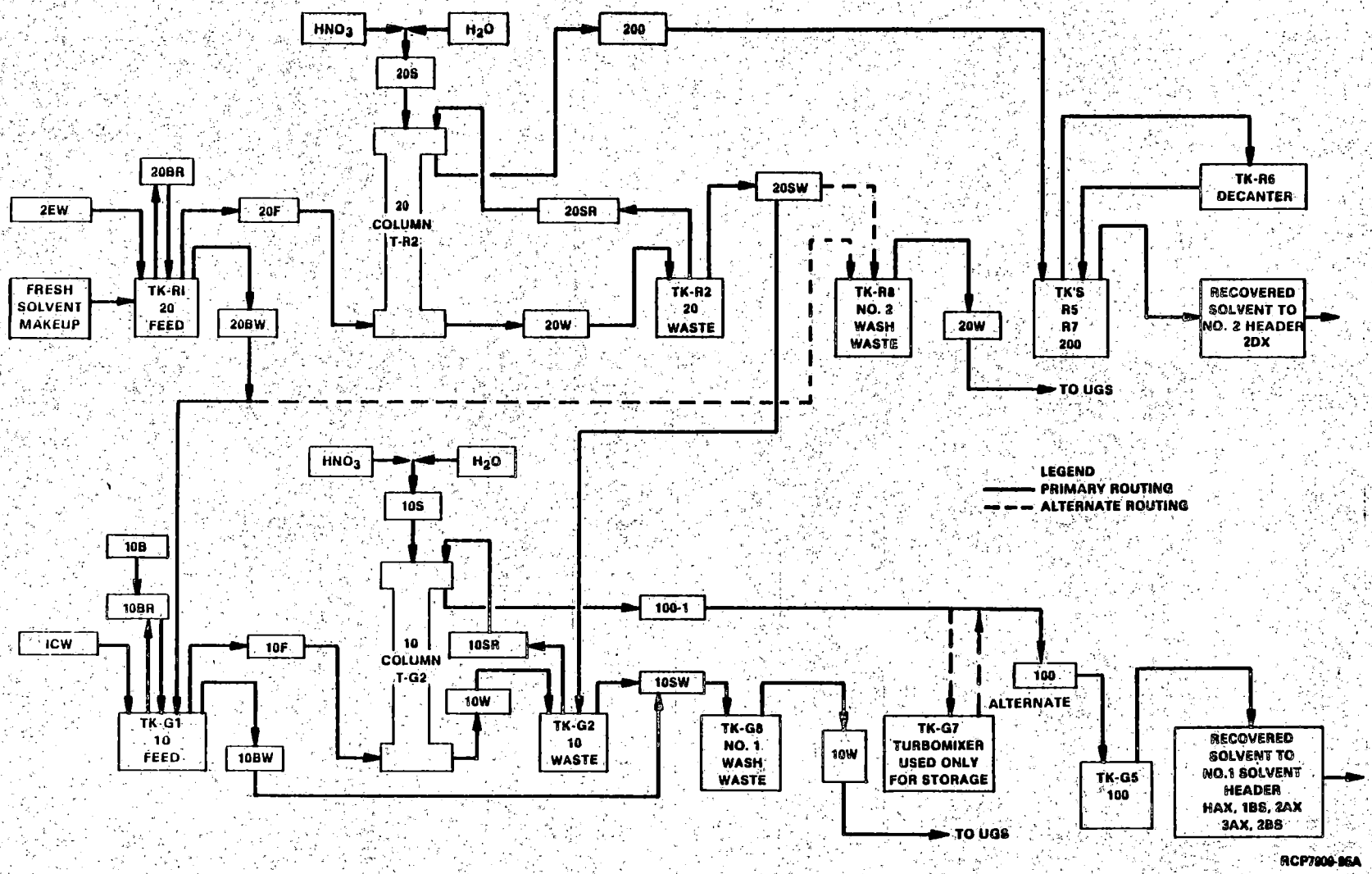


FIGURE 6-43. Organic System Flow Chart.

6.4.4.2.2 Major Components. Pertinent physical data for the equipment comprising the two solvent treatment cycles are given in Table 6-23.

- Organic Contactor Tanks (TK-G1 and TK-R1)

  The 5,000-gal 10F and 20F tanks (TK-G1 and TK-R1, respectively, shown in Fig. 6-44) are the feed tanks for the 10 and 20 columns, but are also designed to function as cocurrent, continuous contactors for treating the organic streams. Each tank has a 10-ft OD and is 9 ft 3 in. high with a shell, coil, and heads (except for nozzles) similar to the standard 5,000-gal tanks. A central cylindrical chimney (4-ft 7.75-in. ID) leaves an annular space 2 ft 8 in. wide within the tank. A packing support grate located in the annulus, 2 ft 9 in. above the tank bottom, supports a 4-ft depth of 1-in. stainless steel Raschig rings. Organic-phase and aqueous-phase distributors are located above the packing to provide concurrent flow downward through the packing and into the disengaging space below the packing support. The lower portion of the cylindrical chimney is perforated to allow liquid passage to the central space where organic and aqueous pumps are located.

- 10 and 20 Pulse Columns (T-G2 and T-R2)

  Pertinent information regarding the two acid scrub pulse columns is given in Tables 6-15 and 6-23.

- 10S and 20S Pump Tanks (TK-G2 and TK-R2)

  The acid scrub (10S and 20S) recycle pump tanks are 1,700-gal-capacity tanks with similar services and identical in dimensions to the E cell centrifuge product tank (see Tables 6-1 and 6-23 and Fig. 6-45).

- Recovered Solvent Storage/Feed Tanks (TK-G5, and -G7)

  The recovered solvent storage/feed tanks are large (14,000 gal) oval-shaped tanks with three agitator openings and two pump openings in the top (see Table 6-23 and Fig. 6-46).

6.4.4.2.3 Safety Criteria and Assurance. The process hazard analysis for solvent treatment is given in Table 6-24.

- Nuclear Criticality Prevention

  The use of precipitating agents and alkaline conditions in the solvent treatment system require a conservative limit of 500 g of plutonium (minimum critical mass under ideal conditions) for individual vessels. The probability of plutonium accumulation in the solvent treatment system is very low, because organic waste steams from plutonium systems are recycled to the 1BXF tank (TK-J3). The solvent treatment systems receive spent solvent only from 1C and 2E uranium stripping columns, and the two spent solvent effluent streams are sampled and analyzed to detect any plutonium present.

TABLE 6-23. Solvent Treatment Equipment.

| Vessel | Function | Capacity (gal) | Dimensions | Comments |
|---|---|---|---|---|
| TK-F13 | Batch solvent recovery | 5,000 | 10 ft by 9 ft 3 in. | |
| TK-G1 (10F) | Number 1 solvent collection and wash | 5,000 | 10 ft by 9 ft 3 in. | Annular packed section for solvent recirculation and washing (Fig. 6-44) |
| T-G2 | Acid scrub column | 2,000 | 34 in. by 32 ft | |
| TK-G2 (10W) | Aqueous waste and acid recycle | 1,725 | 7 ft by 6 ft 9 in. | (Fig. 6-45) |
| TK-G5 (100) | Clean solvent receiver and pump tank | 15,000 | 10 ft 6 in. by 16 ft by 14 ft | (Fig. 6-46) |
| TK-G7 (100) | Solvent pump tank | 15,000 | 10 ft 6 in. by 16 ft by 14 ft | (Fig. 6-46) |
| TK-G8 (10W) | Aqueous waste | 5,000 | 10 ft by 9 ft 3 in. | |
| TK-R1 | Number 2 solvent collection and wash tank | 5,000 | 10 ft by 9 ft 3 in. | Same as TK-G1 |
| T-R2 | Acid scrub column | 2,000 | 34 in. by 32 ft | |
| TK-R2 | Aqueous waste and acid recycle | 1,725 | 7 ft by 6 ft 9 in. | (Fig. 6-45) |
| TK-R5 (200) | Clean solvent collection and pump tank | 9,000 | 10 ft by 14 ft | Contains agitator and coil for heating or cooling |
| TK-R7 (200) | Clean solvent collection and pump tank | 9,000 | 10 ft by 14 ft | Same as TK-R5 |
| TK-R8 (20W) | Aqueous waste | 5,000 | 10 ft by 9 ft 3 in. | |

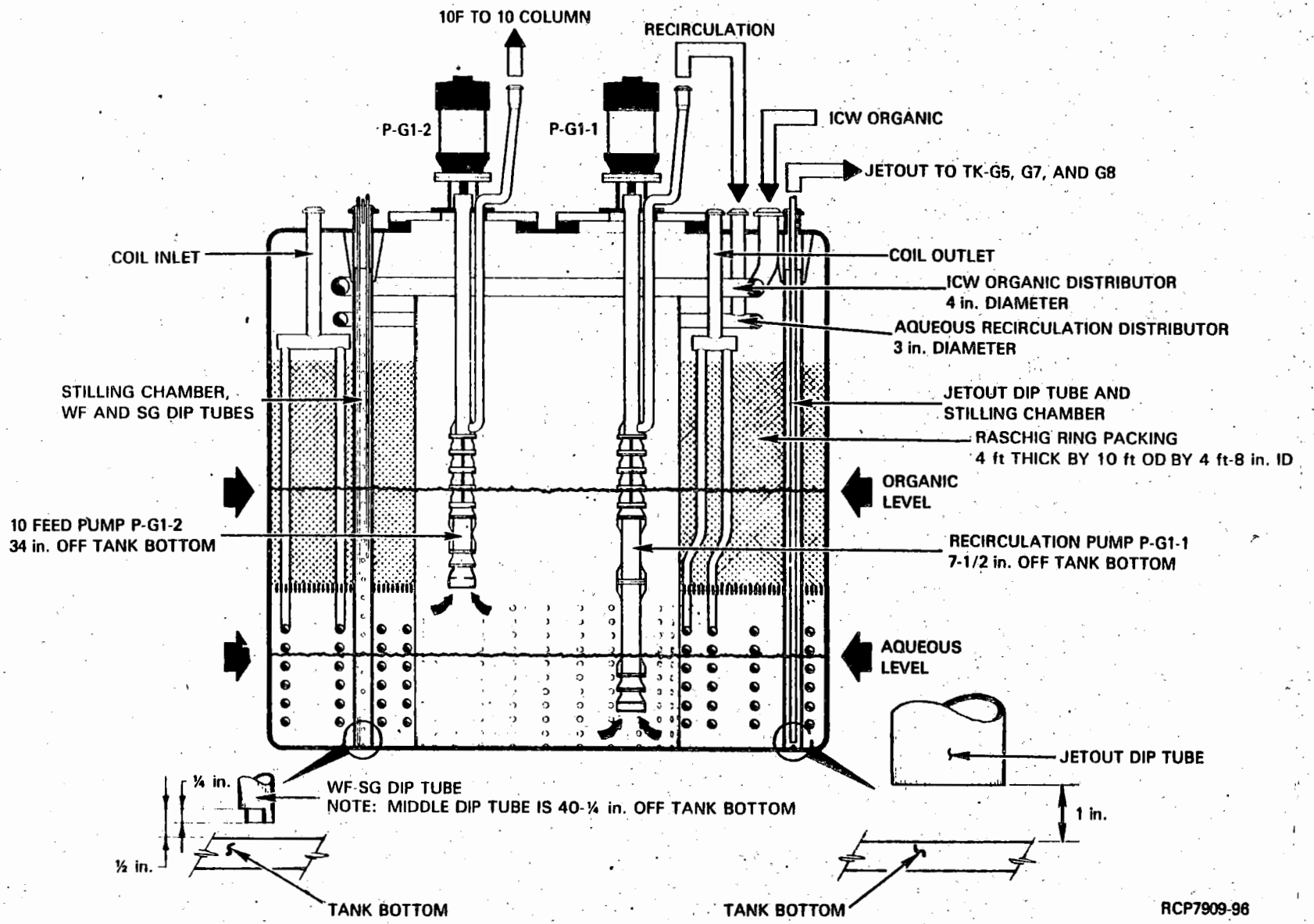


FIGURE 6-44. Tanks (TK-G1 and TK-R1).

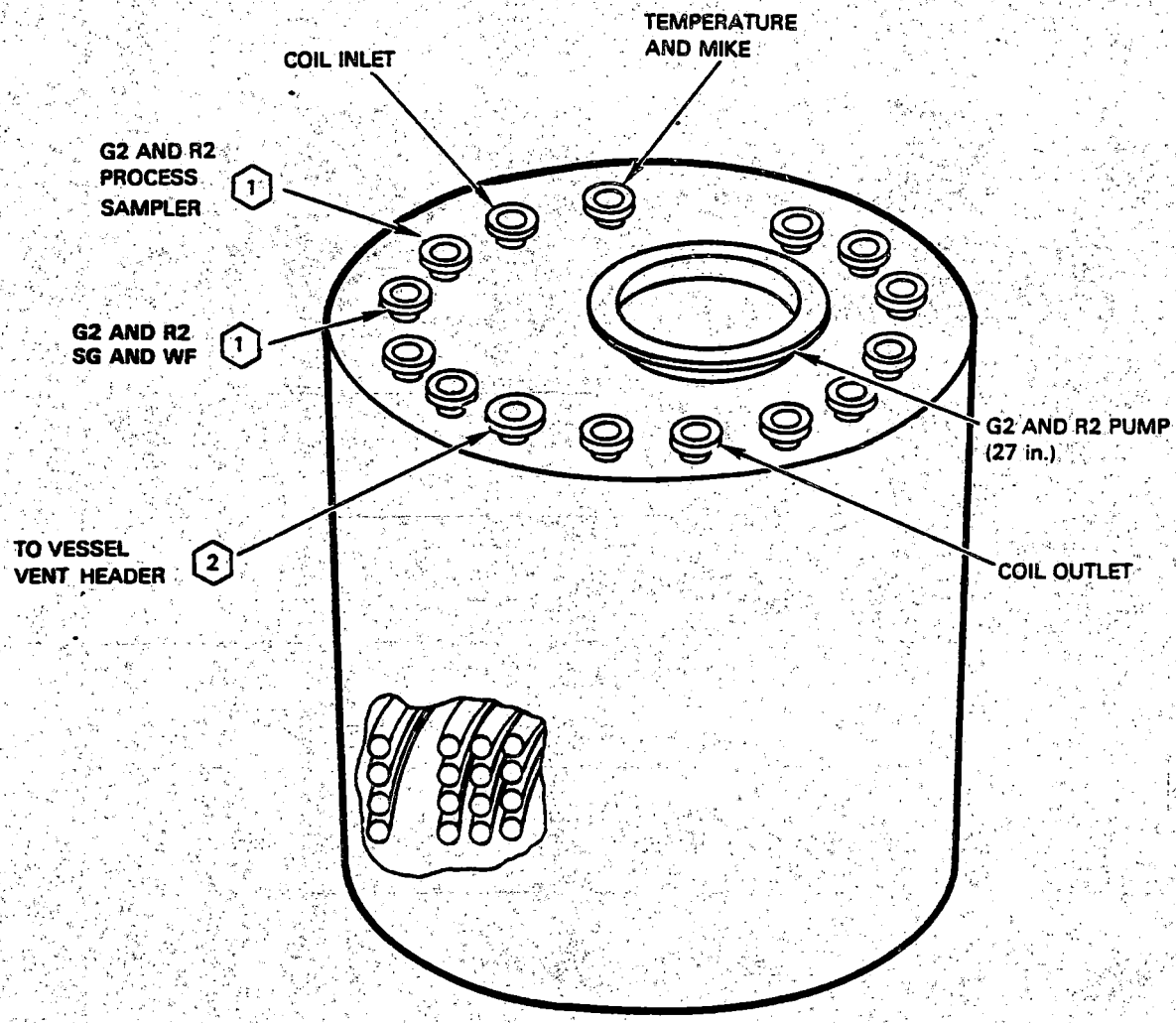


SS TYPE 304-L

1 STILLING CHAMBER

2 4-in. NOZZLE (OTHER NOZZLES, EXCEPT FOR PUMP, ARE 3 in.)

RCP7909-98

FIGURE 6-45. Tank (TK-G2 and TK-R2).

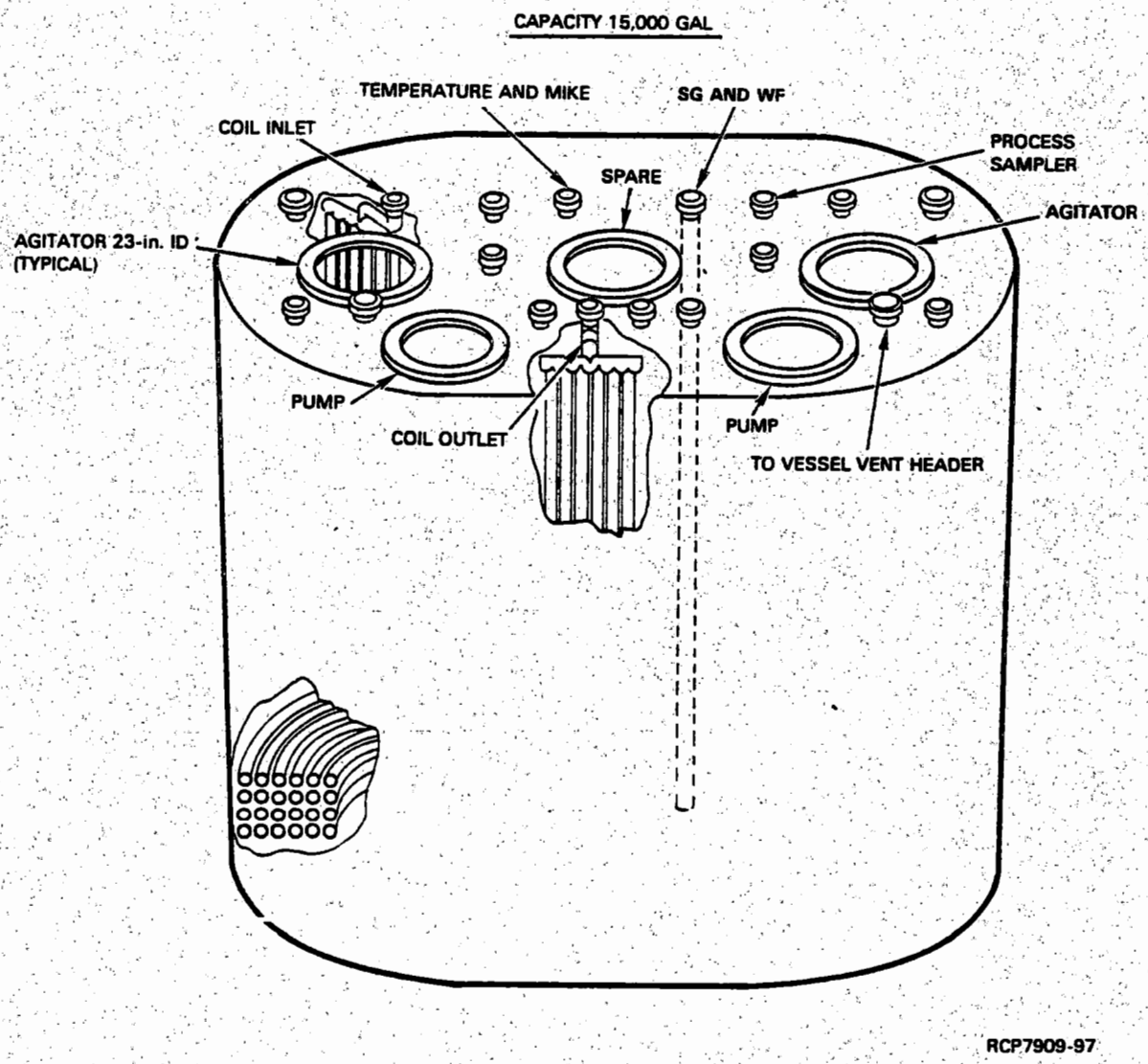


FIGURE 6-46. Tank (TK-G5 and TK-G7).

9413219.0598

TABLE 6-24. Process Hazard Analysis--Solvent Recovery.

| System or subsystem | Event (hazard) | Unwanted energy flow (incident) | Consequence (immediate) and/or secondary) | Barriers (design administrative, safety deices, etc.) |
|---|---|---|---|---|
| Solvent recovery G cell | Solvent and diluent | Ignition | Fire; loss or deterioration of solvent inventory; pluggage of main exhaust filter by soot; ignition of filter with release of FP inventory to environs; or loss of vessel vent system filter | Mist prevention: agitators submerged; pumps for transfer of organic solutions<br>Ignition: minimize sources; no solvent inventory on cell floor; vessel temperatures controlled<br>Fire-foam system with heat/temperature sensors |
| R cell | Solvent and diluent | Ignition | Fire; loss or deterioration of solvent inventory; pluggage of R cell room exhaust--loss of filter with release of FP to environs or loss of vessel vent system filter | Same as for G cell |
| G and R cells | Pu | Pu precipitates in Gl or Rl | Potential criticality | Pu waste organic recycled to J3; J6 and K2 partitioning absolute; J7 and K3 scrubbing to prevent Pu carry-over |

The distribution coefficient for plutonium is at least fivefold less than that of uranium at the chemical conditions of the uranium stripping columns. Moreover, the ratios of plutonium to uranium in the aqueous phases of these columns are of the order of one in ten thousand under the worst credible operating conditions, short of a partition failure. Thus, the chance of measurable (gram) quantities of plutonium entering the solvent treatment systems without detection are very remote. The accumulation of hazardous quantities of plutonium solids in either system over an extended time period is not credible, as any solids formed would be extremely fine and would be carried out with the organic/wash waste (OWW) solution. There was no evidence of the above phenomenon occuring during the previous 16 yr of plant operation, in spite of extended periods of abnormally high uranium losses from the uranium stripping columns.

Nuclear criticality prevention considerations would normally limit TK-F13 to about 14 kg of plutonium. However, the solvent wash solution would normally precipitate any plutonium present. Therefore, a product strip is performed with dilute nitric acid. Sample analyses are required before proceeding with carbonate-permanganate washing to assure that the plutonium inventory in TK-F13 is less than 500 g.

- Solvent Fire

The lower flammable limit for dry diluent is 80°C. For kerosene-type hydrocarbons, gaseous mixtures containing greater than 33% water vapor are not flammable under any conditions. When water vapor is present as a separate phase, dilution to 33% water vapor is reached at 72°C; thus, the NPH- water-air system is not flammable.*

Steam is not applied to a tank coil unless the liquid level is above the top of the coil to prevent excessive heating of the vapor phase. In many cases the tank solution temperature and the steam supply to the coil are also interlocked to avoid overheating.

Pumps or agitators are shut down if overheating is suspected. Agitator impellers in organic-containing tanks are electrically interlocked to prevent operation unless the bottom blade is submerged greater than 6 in. to minimize the potential for spark generation resulting from a shaft failure. In-cell electrical equipment design meets code requirements for service in a hazardous environment.

---

*The flash point of 30 vol% TBP in NPH is increased about 7°C over the flash point of NPH. Thus, when water is present as a separate phase, the vapors in the three-component system (water, NPH-30% TBP, air) are also nonflammable at atmospheric pressure.

The organic-containing cells are equipped with dual heat detectors and an automatically actuated fire-foam system.

6.4.4.2.4 Operational Control. The organic treatment systems are operated to maintain essentially constant organic inventories in the various tanks. The wash solution is added fresh to TK-R1. The solution is subsequently decanted to TK-G1 for reuse and eventually discarded to the OWW receiver (TK-G8) and then to undergound storage tanks. Fresh solvent may be added to either system via TK-R1A to adjust plant solvent inventories, compensating for solvent loss. Off-standard process conditions in the solvent treatment systems are summarized in Table 6-25.

Effectiveness of solvent cleanup is determined by the extent of alkaline scrub depletion and the degree and duration of contacting in the solvent contactor. The controlling parameters are solution temperature in the contactors and frequency of scrub solution replacement. Scrub carbonate depletion is primarily a function of the amount of nitric acid in the contaminated solvent.

Solution temperature in the contactor tanks is maintained at 50°C for effective washing and to improve phase disengagement and, thus, reduce aqueous entrainment into the pulse column.

The quality of the treated solvent is determined by sample analyses. Specific concerns are FP content and degree of plutonium retention after stripping with dilute nitric acid. The plutonium retention is a qualitative indication of the degree of solvent degradation, in that the mono- and dibutyl-phosphates are stronger plutonium complexants than TBP.

The analyses most commonly employed to establish solvent quality are total gamma, percent TBP, disengaging time, and plutonium retention. The latter is the primary indicator of solvent quality.

Batch treatment in TK-F13 consists of a weak nitric acid strip to remove any product, followed by a sodium carbonate-potassium permanganate wash.

Nitric acid is added to the tank, mixed, then settled, and sampled. The aqueous phase is routed to either TK-F8 for further treatment or to TK-G8 for disposal.

Upon confirmation that TK-F13 contains less than 500 g of plutonium, sodium carbonate and potassium permanganate are added to the organic in TK-F13, mixed, and then settled. The washed organic is decanted to TK-G1 for reprocessing, and the aqueous waste is transferred to TK-G8 for disposal.

TABLE 6-25. Solvent Recovery--Off Standard Conditions.

| Off-standard condition | How detected | Likely cause | Detection of cause | Remedy |
|---|---|---|---|---|
| Low quality of recovered solvent | Analysis of solvent: total gamma; % TBP; disengaging time; Pu retention; under special circumstances, U transfer, % solids, % aqueous phase, U or Pu content, DBP content, spectrographic analysis | Maloperation of the solvent wash columns--flooding; maloperation of the batch contactors; emulsification; defective scrub solution | Flooding: increase in column static pressure; falling/fluctuating interface; abnormal effluent flow rates<br>Analysis of TK-G1/R1 solution (pH)<br>Emulsification: flooding entrainment (analysis)<br>Defective scrub solution $HNO_3$ analysis of TK-G2/R2 solutions | Flooding: reduce frequency of pulse; decrease flow rates<br>Analysis of TK-G1/R1 solution: decrease contact time; increase $Na_2CO_3$ concentration<br>Emulsification: replace wash solution; increase column temperature; replace $HNO_3$ recycle stream; increase scrub solution $HNO_3$ concentration |
| High U losses to solvent waste streams | 1CW/2EW waste loss and solvent wash waste sample | Formation of U-DBP complexes | Test for U distribution; Pu retention analysis of 100/200; analysis of solvent waste streams | Change $HNO_3$ solution in 10/20 column; if product decontamination is impaired, replace scrub solution |
| High FP contamination in recovered solvent | Analysis of G5/R7 | Low carbonate concentration in TK-G1/R1; extraction or entrainment of FP in solvent extraction system; flooding in 10/20 columns; low $HNO_3$ in 10SR/20SR streams | Low carbonate: pH analysis of TK-G1/R1 sample,<br>Gamma analysis of 1CW/2EW<br>See off-standard conditions above | Low carbonate: replace 10B/20B; replace or repair valve/pump as required |
| Crosscontamination of Pu with U in solvent extraction system | U analysis of washed solvent | Incomplete U removal from solvent during washing | U analysis of TK-G5/R7 | See off-standard condition, low quality of recovered solvent |
| Plugging of TK-G1/R1 packing | Solvent quality determination; calibration of tank, indicating solids displacement; small amount of solvent removed greatly decreases tank WF, indicating solids displacement | Solids in batch contact tank displace solution and interfere with flow of solvent and scrub | Same as "How detected" | Shut down and perform an $H_2C_2O_4$-$HNO_3$ flush; flush and dissolve solids until tank calibration returns to normal |

### 6.4.5 Product Rework Systems

This section covers rework via solvent extraction processing of product materials that do not, for one reason or another, meet the various purity specifications. Product recovery from waste is also discussed. The process hazard analysis is given in Table 6-26.

#### 6.4.5.1 Uranium Product.

6.4.5.1.1 Functional Description. Uranium may be reworked to lower the feed plutonium-to-uranium ratio in TK-E6 for nuclear criticality prevention or to further purify the uranium product. Three options are available for dealing with uranium that is out of specification in terms of FP levels or other contaminants. The first is recycling to the 2DF tank for another pass through the second uranium cycle. The second option is to return the batch of solution to TK-E6 for recycling through both uranium solvent extraction cycles. The third option is to blend the material with sufficient high-purity product to enable meeting the product purity requirements. Uranium recycled to lower plutonium-to-uranium ratio of feed is added to TK-E6.

6.4.5.1.2 Major Components. Recycle capability exists for transferferring UNH from the 203-A facility to the PUREX solvent extraction processes. Jumper changes in K cell permit rerouting from the 203-A facility into the 2DF tank (TK-K1) or into the HAF makeup tank (TK-E6). If processing conditions require, jumper changes can be made to permit recycle from the product tank (TK-K6) to either TK-E6 or TK-K1.

6.4.5.1.3 Safety Criteria and Assurance. Uranium solution recycled to lower the plutonium-to-uranium ratio is of known uranium concentration (by sample analysis). Blending and volume measurement is made in the receiver tank (TK-E6). The resultant mixture is sampled to assure that the desired uranium-to-plutonium ratio is attained prior to use as a solvent extraction feed.

Compared to the upstream process systems in PUREX, the 203-A facility operations are relatively simple. The UNH and recovered acid handled in this facility are sufficiently decontaminated to permit contact operation of the equipment. However, both streams are corrosive and mildly radioactive.

6.4.5.1.4 Operational Control. The UNH product from the second uranium cycle is batch transferred to TK-K6 for sampling and volume measurements. If the UNH meets product specifications, the batch is transferred to a product storage tank in the 203-A area. Accountability is based on the TK-K6 volume measurements and uranium concentration.

TABLE 6-26. Process Hazard Analysis--Plutonium Rework and Recovery.

| System or subsystem | Energy (hazard) | Unwanted energy flow (incident) | Consequence (immediate and/or secondary) | Barriers (design administrative, safety devices, etc.) |
|---|---|---|---|---|
| Pu rework | Pu (high concentration) | No Cd addition during L11 transfer and leak in cell or trench piping | Potential criticality in cell sump | Sump alarm; Cd alarm administrative controls |
| | | Insufficient $HNO_3$ in E6, causing Pu polymer formation and precipitation | Potential criticality in F6 or F15 | SG interlock; agitator interlocks; administrative controls; nuclear blanks; sample results |
| | Pu from sample container | Spill: contact, ingestion | Individual(s) contaminated, PR Room contaminated | Protective apparel; equipment design |
| Waste recovery | Radionuclides | Aerosol from F8 | Stack emission | Vacuum or vessel concentration rate |
| | Solvent in F8 | Red oil in F8 | Explosion, equipment damage, stack emission | Control temperature |

Occasionally, it is necessary to recycle uranium from a 203-A storage tank to dilute the plutonium concentration in the HAF feed makeup tank (TK-E6). The UNH is transferred to TK-E6 before introduction of the plutonium-bearing solution and the resulting mixture is sampled after makeup. Since the uranium recycle is external to the PUREX Plant, there is impact an overall uranium accountability.

6.4.5.2 Plutonium Nitrate Rework System.

6.4.5.2.1 Functional Description. Plutonium nitrate solutions that fail to meet product specifications may be recycled to the third plutonium cycle feed tank (TK-L3) or recycled to TK-E6. In the former case, a direct route from TK-L9 to TK-L3 is in place. Recycle to TK-E6 is via TK-L11.

6.4.5.2.2 Major Components. The plutonium nitrate product sample tank (TK-L9) is a 10-1/2-gal tank constructed of three 5-in.-diameter, vertical cylinders connected together at the top and bottom by crossover pipes. The vessel and all valving and sampling equipment are located in a glovebox in the PR room.

The plutonium solution transfer systems are shown in Figure 6-47. Vessel TK-L11 has two jet transfer systems. The first is a steam jet used to evacuate L11 for vacuum transfer operations. Steam from the jet is condensed in the E-L12 condenser above E-L11 and routed to TK-F10. The second jet is used for liquid transfers to TK-E6. The jet motive fluid can be either dilute nitric acid (from the 3AS makeup tank 211) or cadmium nitrate-nitric acid solution from TK-151 in AMU. Both fluids are supplied by a high-head centrifugal pump in AMU.

6.4.5.2.3 Safety Criteria and Assurance--Nuclear Criticality Prevention. The considerations involved in making a TK-L11 to TK-E6 transfer are discussed in Section 6.4.1.3.1. Vessel TK-L11 is safe on the basis of favorable geometry. Vessel TK-E6 must be operating with sufficient solution present and agitation so that, even if concentrated plutonium solution (up to 450 g/L of plutonium) were sent without poison, it would be safe upon receipt. In addition, all material sent from TK-L11 must be dilute, poisoned, or diluted and poisoned to the extent that its reactivity or equivalent reactivity is less than 6 g/L of plutonium. Both systems would have to fail before there would be a problem in TK-E6.

6.4.5.2.4 Operational Control. The plutonium concentration of solutions scheduled for rework must be known so that the solutions can be diluted and "poisoned" sufficiently to ensure criticality prevention in the event of a leak into nongeometrically favorable sumps. Sample analyses are, therefore, required for both the recycle and receiver solutions. The volume of solution transferred to TK-L11 for rework must be controlled so that the solution can be diluted, if required.

9413219.0605

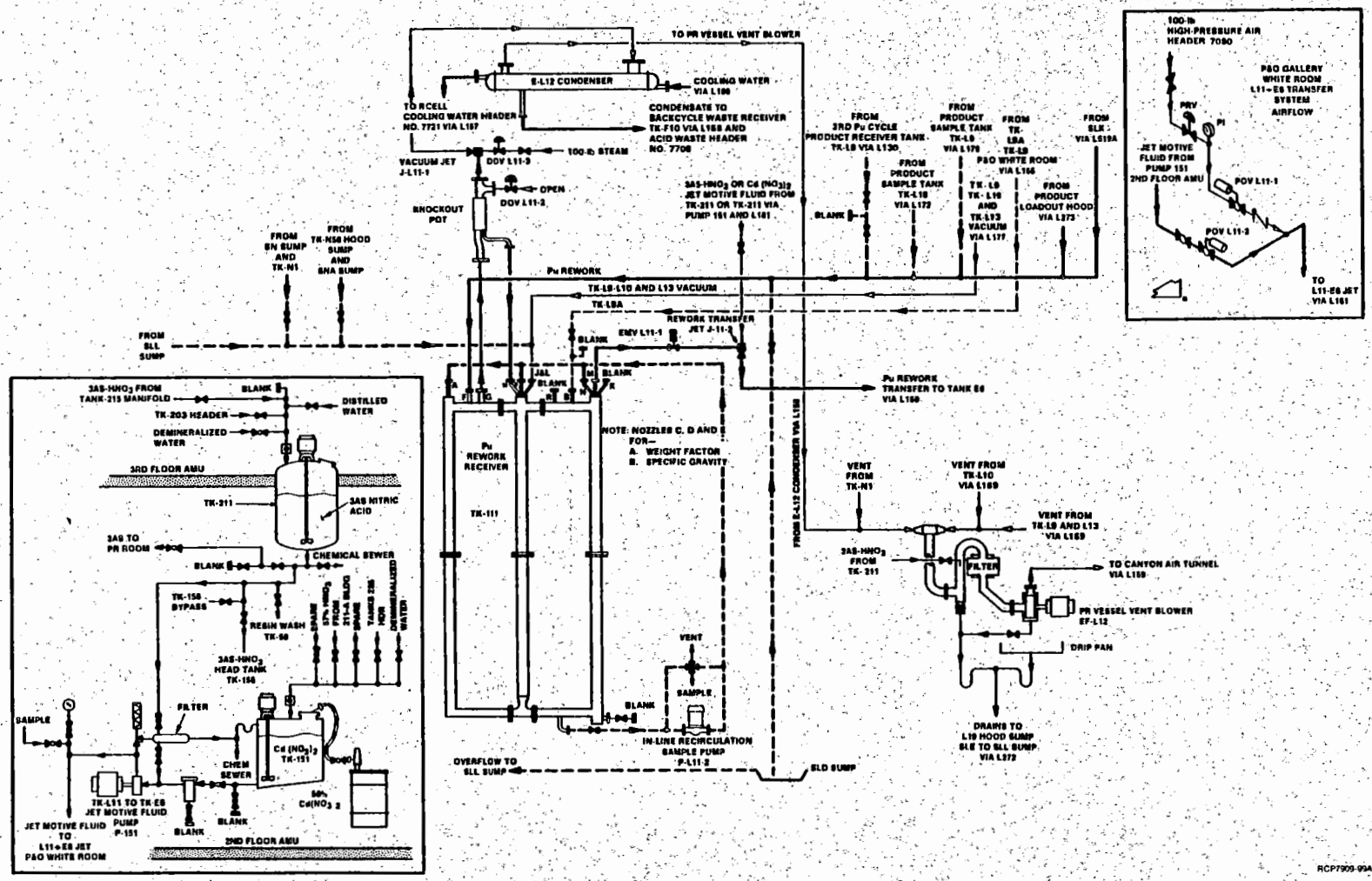


FIGURE 6-47. TK-L11 Piping and Solution Transfer Systems.

Preparation and use of the proper motive fluid for the transfer jet is controlled administratively and using the cadmium monitor on the makeup tank, if cadmium nitrate solution is used.

The equipment in the PR room is geometrically favorable for 450 g/L of plutonium. The major potential hazard in the PR room are the sumps discussed in Section 6.5.3.

Miscellaneous plutonium-bearing solutions (flush solutions, sump solution, and off-standard product solution) are transferred from TK-L11 to the first cycle feed makeup tank (TK-E6) for rework through solvent extraction. These solutions typically range from less than 1 to about 350 g/L plutonium concentration.

Direct transfer of the more concentrated solutions into the geometrically unfavorable TK-E6 could cause a nuclear criticality excursion if a single error or equipment malfunction were to occur. It is, therefore, necessary that the rework solution be diluted to or poisoned to the equivalent of an always-safe concentration prior to leaving the geometrically favorable equipment.

The choice of motive fluid for TK-L11 to TK-E6 transfers is determined by plutonium concentration obtained from sample analysis. Cadmium nitrate, a soluble neutron poison, is added to the jet motive fluid for reworking more concentrated plutonium solutions. Controls on motive fluid plus plutonium concentration also ensure a safe concentration in the sump in the event of a line leak.

The transfer pump for motive fluid is interlocked to the two agitators in TK-E6 to preclude plutonium transfers into an insufficiently agitated solution. In addition, the liquid level measurement of solution in TK-E6 is interlocked to the agitators. Consequently, at low solution level, transfers are prevented.

Finally, those transfers requiring the use of cadmium nitrate are interlocked to a neutron detector which measures the cadmium concentration in the AMU tank. If the solution is below a set concentration of cadmium, the interlock prevents actuation of the pump.

6.4.5.3 Plutonium Oxide Rework Facility.

6.4.5.3.1 Functional Description. The function of the plutonium oxide rework facility, located in N cell, is to dissolve out-of-specification plutonium oxide, plutonium oxalate spilled from the vacuum drum filter, glovebox sweepings, and other miscellaneous solid scrap material.

The material to be processed is dissolved in a boiling mixture of nitric acid and sodium fluoride (or straight nitric acid) in a circulating batch dissolver. Following dissolution, aluminum nitrate is added to complex the fluoride ion, the solution is filtered successively through two

separate filters, sampled, then transferred to TK-L11 in the PR room for rework through the solvent extraction system. The facility is designed to process about 3 kg/d.

6.4.5.3.2 Major Components. The plutonium oxide rework facility is comprised of two dissolvers and offgas condensers, filters, transfer and receiver tanks, a vacuum trap, a transfer pump, and a sampler in the N6 glovebox in N cell. In addition, a two-barrel rework solution storage tank, TK-N53, is located in the pipe chase adjacent to N cell.

The dissolver vessels (TK-N50, -N51) are fabricated from 6-in-ID Pyrex glass pipe with Kynar* plastic lids. The dissolver vessels are equipped with axial draft tubes and air supply lines for airlift circulation and agitation of the contents, and replaceable steam coils.

The system has three filters, one rated at 5μ and two at 1μ. The first (5μ) filter is located in the transfer line between the rework transfer tank, TK-N54, and the rework receiver tank, TK-N52. The second and third (1μ) filters are in parallel, located between the transfer pump and the rework storage tank, TK-N53.

The sampler, basically a three-way valve with a connection to take a sample bottle, is located in the line between the circulation pump and the rework storage tank.

The rework receiver tank, rework transfer tank and vacuum trap, TK-N52, -N54 and VT-N57, respectively, are fabricated from 6-in.-ID Pyrex glass pipe with Kynar plastic end flanges. Each glass vessel in the rework facility has a metal screen around it, thus reducing the potential hazard to the operators from breakage.

The rework storage tank, TK-N53, is a two-barrel vessel fabricated from 6-in. Schedule 80, stainless steel pipe.

6.4.5.3.3 Safety Criteria and Assurance. The plutonium oxide rework facility occupies a glovebox in N cell immediately adjacent to the oxide production gloveboxes; the general criteria and engineered features described for this facility (Section 6.4.3.3) also apply to the rework facility. A potential hazard resulting from processing plutonium solutions from the rework facility that cannot be eliminated completedly by engineered features is the transfer and gradual accumulation of plutonium solids in a nongeometrically favorable vessel in the solvent extraction or waste treatment system. However, in-line filters along with analysis of samples does provide the means to minimize solids transfers. Also, neutron monitors are placed near the bottom of TK-E6 and TK-F7 to warn of solids accumulation.

---

*Pennwalt Corporation trade name for polyvinylidene fluoride plastic resin.

6.4.5.3.4 Operational Control The plutonium oxide rework process is, basically, a single-step, batch process, and requires direct operational control. The area of primary concern, other than personnel radiation and contamination safety, is prevention of solids recycle to the solvent-extraction system. The combination of procedural control, verification by sample analyses, and backup detection of accumulation downstream will reduce the risk of accumulation to an acceptable level.

## 6.5 PROCESS SUPPORT SYSTEMS

### 6.5.1 Process Instrumentation and Control Systems

6.5.1.1 General Considerations. Most of the process systems in PUREX must be remotely controlled because radiation shielding separates operating personnel from process equipment. Instrumentation is used to measure and automatically control process flows. Some of the parameters measured are DP (including tank liquid level and solution SG), temperature, radiation levels, electric motor amperage, and speed.

With respect to safety, there are three levels of instrumentation systems. The highest level of safety is provided by instrumentation, coupled with shutdown interlocks that automatically interrupt the operation if the measured parameter exceeds preset safety operating limits. The second level of instrumentation provides automatic control of the parameter of interest within specified limits. The third and most common level of instrumentation is measurement of a parameter with direct or remote readout of the value. Audible and visual alarms may be associated with any of the three systems. Table 6-27 lists typical ranges or settings for the process control instrumentation systems provided with shutdown interlocks and alarms. Systems required to assure safety are denoted. Redundancy and independence are provided in the design of critical control instrumentation systems to minimize the probability of single failures resulting in loss of the protection system. The OSRs (see Chapter 11.0) define the conditions, safe boundaries and bases, and management control required to assure safe operation at the PUREX Facility.

The most common instrument system used consists of the following: a sensing element located in the process cell; a transmitter, generally located in the P&O gallery; and an indicator or recorder, located in one of the five control rooms. For critical functions in which alarms are necessary, alarm switches are connected either directly to the transmitter or to the indicator or recorder in a control room. The control rooms are designated as headend, central, power, N cell, and Q cell, each containing one or more graphic panel displays. The control rooms are further addressed in Section 6.6.

Instruments are designated according to function and associated process component. The meaning of various symbols found in figures throughout Section 6.5 is given in Table 6-28.

TABLE 6-27. Process Control Instrumentation Systems. (Sheet 1 of 19)

| Instrument | Function | Typical range or setting |
|---|---|---|
| | A, B, and C cells | |
| Cask well thermometer | Detect abnormal temperature | 5°C to 65°C |
| DP across offgas filter[a] | Low DP cuts off electric heaters | 0.3 in. WG |
| Low steam pressure switch on offgas manifold 293-A building | Low pressure turns off steam and turns on air to offgas jets | 85 lb/in.$^2$ g |
| Temperature of heated DOG | High- and low-temperature alarms and control of electrical heaters | 93°C<br>177°C<br>204°C |
| Dissolver WF | WF recorder<br>High WF alarm<br>Low WF alarm | 0 to 270 in. WG<br>167 in. WG<br>6 in. WG |
| Steam flow to dissolver coil | Indicator-controller<br>Low-pressure switch turns off steam and $H_2O$, turns on air to TK-A3 coil | 0 to 7,000 lb/h<br>5 lb/in.$^2$ g |
| Dissolver SG | SG in dissolver<br>High SG alarm[b,c]<br>Low SG alarm[d] | 1.0 to 2.0<br>1.4<br>1.03 |
| Dissolver vacuum | Alarms on low vacuum and turns off air-bleed-in valve | 2 in. WG |
| Dissolver temperature | Temperature recorder<br>High-temperature alarm[c] | 0°C to 200°C<br>125°C |
| Cell temperature | Temperature recorder<br>High-temperature alarm | 0°C to 125°C<br>75°C |
| Dissolver seal pot | WF<br>High WF alarm | 0 to 20 in. WG<br>9 in. WG |
| Dissolver lid seal pot | WF<br>Low WF alarm | 0 to 10 in. WG<br>2.5 in. WG |
| Programmer selector switch[c] (see 6.5.1.3.4 for description) | Controls allowable; chemical additions and transfers per flow sheet sequence | 6 positions |
| Cell sump WF | WF recorder<br>High WF alarm | 0 to 30 in. WG<br>15 in. WG |

TABLE 6-27. Process Control Instrumentation Systems. (Sheet 2 of 19)

| Instrument | Function | Typical range or setting |
|---|---|---|
| | A, B, and C cells (cont.) | |
| $NH_3$ scrubber waste catch tank | WF recorder | 0 to 120 in. WG |
| | High WF alarm | 65 in. WG |
| | High WF jets out tank | 48 in. WG |
| | Low WF stops jet out of tank | 12 in. WG |
| | D cell | |
| TK-D1 WF | WF recorder | 0 to 140 in. WG |
| | High WF alarm | 87 in. WG |
| | Low WF alarm | 35 in. WG |
| TK-D2 WF | WF recorder | 0 to 170 in. WG |
| | High WF alarm | 95 in. WG |
| | Low WF alarm | 15 in. WG |
| | Low WF turns off agitator | 11 in. WG |
| TK-D3 WF | WF recorder | 0 to 200 in. WG |
| | High WF alarm | 167 in. WG |
| | Low WF alarm | 32 in. WG |
| | Low WF turns off agitator | 32 in. WG |
| TK-D4 WF | WF recorder | 0 to 200 in. WG |
| | High WF alarm | 167 in. WG |
| | Low WF alarm | 32 in. WG |
| | Low WF turns off agitator | 32 in. WG |
| | Low WF shuts off jet pump from TK-D4 to TK-D5 | 5 in. WG |
| TK-D4 SG | High SG alarm | 1.72 |
| TK-D5 WF | WF recorder | 0 to 200 in. WG |
| | High WF alarm | 130 in. WG |
| | Low WF alarm | 32 in. WG |
| | Low WF turns off agitator | 32 in. WG |
| | Low WF shuts off electric pump | 5 in. WG |
| TK-D5 SG | SG recorder | 1.3 to 1.8 |
| | High SG alarm | 1.72 |
| Sump D cell WF | WF indicator | 0 to 30 in. WG |
| | High WF alarm | 15 in. WG |
| Temperature | Cell temperature--multipoint recorder | 0°C to 125°C |
| | Cell temperature alarm | 75°C |

TABLE 6-27. Process Control Instrumentation Systems. (Sheet 3 of 19)

| Instrument | Function | Typical range or setting |
|---|---|---|
| | E cell | |
| TK-E1 WF | WF recorder | 0 to 100 in. WG |
| | High WF alarm | 70 in. WG |
| | Low WF alarm | 38 in. WG |
| | Low WF shuts off agitator | 10 in. WG |
| TK-E3 jet pressure | Alarm and shutdown of jet pump J-E3-7 | 60 $lb/in^2$ g |
| TK-E3 SG | SG recorder | 1.0 to 1.5 |
| | Alarms on high SG | TBD[e] |
| TK-E3 WF | WF Recorder | 0 to 200 in. WG |
| | High WF alarm | 148 in. WG |
| | Low WF alarm | 53 in. WG |
| TK-E3-2 WF (catch tank) | WF recorder | 0 to 60 in. WG |
| | High WF alarm | 40 in. WG |
| | Low WF alarm | 5 in. WG |
| | Starts jet pump-out on high WF | 40 in. WG |
| | Stops jet pump-out on low WF | 5 in. WG |
| TK-G-E4 | Thermoguard for centrifuge alarms when motor gets hot | TBD[e] |
| TK-E5 WF | Recorder | 0 to 200 in. WG |
| | High WF alarm | 144 in. WG |
| | Low WF alarm | 32 in. WG |
| | Low WF shuts off agitator | TBD[e] |
| TK-E5 SG | SG recorder | 1.0 to 2.0 in. |
| TK-E5 temperature[c] | Low-temperature alarm | 45°C |
| TK-E6 WF | WF recorder | 0 to 200 in. WG |
| | High WF alarm | 148 in. WG |
| | Low WF alarm | 32 in. WG |
| | Low WF alarm shuts off agitator 1 | 33 in. WG |
| | Low WF alarm shuts off agitator 2 | 33 in. WG |
| TK-E6 agitator monitors[c] | Agitators must be operating before PU recycle pump can be started | NA |
| TK-E6 neutron | Criticality prevention | |
| Sump E cell WF | WF indicator | 0 to 30 in. WG |
| | High WF alarm | 15 in. WG |

TABLE 6-27. Process Control Instrumentation Systems. (Sheet 4 of 19)

| Instrument | Function | Typical range or setting |
|---|---|---|
| | TK-151 $Cd(NO_3)_2$ makeup tank | |
| TK-151 WF | WF recorder | 0 to 100 in. WG |
| | High WF alarm | 35 in. WG |
| | Low WF alarm sounds and turns off pumps | 12 in. WG |
| Cadmium monitor[c] | Low concentration alarms and turns off Pu recycle pump | 35% on 50 counts range |
| | F cell | |
| TK-F1 WF | WF recorder | 0 to 150 in. WG |
| | High WF alarm | 96 in. WG |
| | Low WF alarm | 10 in. WG |
| TK-F2 vapor temperature | Vent header temperature recorder | 0°C to 200°C |
| | Alarms on low temperature | 150°C |
| TK-F3 WF | WF recorder | 0 to 160 in. WG |
| | High WF alarm | 116 in. WG |
| | Low WF alarm | 47 in. WG |
| | Low WF shuts off agitator | 35 in. WG |
| | Low WF shuts off pump | 6 in. WG |
| TK-F5 WF | WF recorder | 0 to 180 in. WG |
| | High WF alarm | 143 in. WG |
| | Low WF alarm | 114 in. WG |
| E-F6 temperature | Temperature recorder | 0°C to 150°C |
| | High temperature alarm | 120°C |
| | High temperature steam shutoff | 125°C |
| RTB[f] steam pressure | High pressure turns off steam to RTB[c] | 39 lb/in.$^2$ g |
| | Low pressure closes condensate valve | 15 lb/in.$^2$ g |
| LTB[g] steam pressure | High pressure turns off steam to LTB[c] | 39 lb/in.$^2$ g |
| | Low pressure closes condensate valve | 15 lb/in.$^2$ g |
| E-F6 WF | WF recorder | 0 to 200 in. WG |
| | High WF alarm | 175 in. WG |
| | Low WF alarm | 146 in. WG |
| | Low WF shuts off steam and alarms | 66 in. WG |

TABLE 6-27. Process Control Instrumentation Systems. (Sheet 5 of 19)

| Instrument | Function | Typical range or setting |
|---|---|---|
| | F cell (cont.) | |
| Sump (FA) WF | WF recorder<br>High WF alarm | 0 to 30 in. WG<br>15 in. WG |
| TK-F7 WF | High WF alarm<br>Low WF alarm<br>Low WF shuts off pump | 95 in. WG<br>45 in. WG<br>10 in. WG |
| TK-F7 neutron | Criticality prevention | TBD[e] |
| TK-F8 temperature | Temperature recorder<br>High temperature alarm<br>High temperature steam cutoff | 0°C to 150°C<br>120°C<br>125°C |
| TK-F8 WF | WF recorder<br>High WF alarm<br>Low WF alarm<br>Low WF shuts off steam | 0 to 170 in. WG<br>104 in. WG<br>35 in. WG<br>30 in. WG |
| TK-F8 inlet steam pressure | High pressure alarm switch<br>Low pressure alarm switch<br>High pressure shuts off steam[c] | 29 lb/in.$^2$ g<br>5 lb/in.$^2$ g<br>29 lb/in.$^2$ g |
| TK-F10 WF | WF recorder<br>High WF alarm<br>Low WF alarm<br>Low WF shuts off agitator<br>Low WF shuts off feed pump to backcycle concentrator | 0 to 150 in. WG<br>93 in. WG<br>20 in. WG<br>34 in. WG<br>15 in. WG |
| E-F11 steam pressure | High pressure steam shutoff to RTB[c]<br>Low pressure closes condensate valve<br>High pressure steam shutoff and alarm to LTB[c]<br>Low pressure steam closes condensate valve | 39 lb/in.$^2$ g<br>15 lb/in.$^2$ g<br>39 lb/in.$^2$ g<br>15 lb/in.$^2$ g |
| E-F11 temperature | Temperature recorder<br>High temperature alarms and cuts off steam | 0°C to 150°C<br>137°C |
| E-F11 WF | WF recorder<br>High WF alarm<br>Low WF alarm<br>Low WF steam cutoff | 0 to 225 in. WG<br>175 in. WG<br>146 in. WG<br>66 in. WG |

TABLE 6-27. Process Control Instrumentation Systems. (Sheet 6 of 19)

| Instrument | Function | Typical range or setting |
|---|---|---|
| | F cell (cont.) | |
| TK-F12 WF | WF recorder | 0 to 150 in. WG |
| | High WF alarm | 95 in. WG |
| | Low WF alarm | 45 in. WG |
| | Low WF shuts off agitator | 32 in. WG |
| TK-F13 WF | WF recorder | 0 to 170 in. WG |
| | High WF alarm | 74 in. WG |
| | Low WF alarm | 50 in. WG |
| | Low WF shuts off agitator | 38 in. WG |
| | Low WF shuts off pump | 10 in. WG |
| TK-F15 temperature | Tank solution temperature recorder-controller | 0°C to 120°C |
| | Low temperature turns off raw water to tank coil | 93°C |
| | Low temperature closes off sugar solution | 93°C |
| TK-F15 WF | WF recorder | 0 to 150 in. WG |
| | High WF alarm | 107 in. WG |
| | Low WF alarm | 45 in. WG |
| | Low WF shuts off agitator | 5 in. WG |
| F15 seal pot | WF recorder | 0 to 30 in. WG |
| | Low WF alarm | 16 in. WG |
| TK-F16 WF | WF recorder | 0 to 170 in. WG |
| | High WF alarm | 96 in. WG |
| | Low WF alarm | 7 in. WG |
| | Low WF shuts off agitator | 5 in. WG |
| TK-F16 vessel pressure | Vessel pressure recorder | -5 to +5 in. WG |
| | Low pressure alarm | 0 in. WG |
| Sump (FB) WF | WF recorder | 0 to 30 in. WG |
| | High WF alarm | 15 in. WG |
| TK-F18 WF | WF recorder | 0 to 150 in. WG |
| | High WF alarm | 88 in. WG |
| | Low WF alarm | 10 in. WG |
| | Low WF shuts off agitator | 42 in. WG |
| TK-F26 WF | WF recorder | 0 to 150 in. WG |
| | High WF alarm | 107 in. WG |
| | Low WF alarm | 45 in. WG |
| | Low WF shuts off agitator | 34 in. WG |

TABLE 6-27. Process Control Instrumentation Systems. (Sheet 7 of 19)

| Instrument | Function | Typical range or setting |
|---|---|---|
| | G cell | |
| TK-G1 WF | WF recorder | 0 to 120 in. WG |
| | High WF alarm | 71 in. WG |
| | Low WF alarm | 19 in. WG |
| | Low WF shuts off recirculation pump | 12 in. WG |
| | Low WF shuts off pump flow to 10 column | 39 in. WG |
| TK-G1 temperature | Tank solution temperature recorder | 0°C to 100°C |
| | High temperature alarm shuts off steam to coil[c] | 60°C |
| Column T-G2 pressure | High pressure aqueous alarm | 7.5 in. WG |
| TK-G2 WF | WF recorder | 0 to 100 in. WG |
| | High WF alarm | 71-in. WG |
| | Low WF recorder | 22 in. WG |
| | Low WF shuts off pump | 8 in. WG |
| TK-G2 temperature | High alarm shuts off steam to coil[c] | 0 to 100°C<br>60°C |
| Sump G Cell WF | WF recorder | 0 to 30 in. WG |
| | High WF alarm | 12 in. WG |
| TK-G5 WF | WF recorder | 0 to 200 in. WG |
| | High WF alarm | 111 in. WG |
| | Low WF alarm | 40 in. WG |
| | Low WF cuts off agitator | 28 in. WG |
| | Low WF cuts off pumps | 8 in. WG |
| TK-G5 temperature | High alarm[c] | 60°C |
| TK-G7 WF | WF recorder | 0 to 50 in. WG |
| | High WF alarm | 45 in. WG |
| | Low WF alarm | 15 in. WG |
| | Low WF shuts off turbomixer and pump | 30 in. WG |
| | Low WF shuts off two pumps and agitator | 6 in. WG |
| TK-G7 temperature | High alarm | 60°C |
| TK-G8 WF | WF recorder | 0 to 150 in. WG |
| | Low WF alarm | 42 in. WG |
| | Low WF shuts off agitator | 30 in. WG |
| | Organic detector | 3 in. WG |
| TK-G8 temperature | High alarm | 60°C |

TABLE 6-27. Process Control Instrumentation Systems. (Sheet 8 of 19)

| Instrument | Function | Typical range or setting |
|---|---|---|
| | H cell | |
| TK-H1 WF | WF recorder | 0 to 200 in. WG |
| | High WF alarm | 135 in. WG |
| | Low WF alarm | 25 in. WG |
| | Low WF turns off agitator | 28 in. WG |
| | Low WF turns off pump | 10 in. WG |
| TK-H1 temperature | High alarm | 60°C |
| Sump H cell WF | High WF alarm | 5 in. WG |
| T-H2 column | HAS-$H_2O$ flow recorder-controller and high flow alarm | 0 to 15 gal/min<br>5 lb/in.$^2$ g<br>(2.5 gal/min) |
| | HAS conductivity recorder and low acid alarm | 0.6 to 1.5 lb/gal<br>(0.85 lb/gal) |
| | HAX organic flow recorder-controller and low flow alarm | 0 to 120 gal/min<br>(12 gal/min) |
| E-H4-1 water temperature | Low-temperature switch shuts off TK-F10 pump | 40°C |
| Steam pressure to RTB | High pressure turns off steam to both tube bundles, also alarms[c] | 29 lb/in.$^2$ g |
| | Low-steam pressure closes RTB condensate valve | 15 lb/in.$^2$ g |
| | Low-pressure alarm | 12.5 lb/in.$^2$ g |
| Steam pressure to LTB | Low-steam pressure shuts condensate valve to LTB | 15 lb/in.$^2$ g |
| Temperature--LTB | High-temperature alarm | 120.5°C |
| | High temperature cuts off steam, both bundles[c] | 125°C |
| E-H4 WF | WF recorder | 0 to 250 in. WG |
| | High WF alarm | 200 in. WG |
| | Low WF alarm | 160 in. WG |
| | Low WF steam cutoff | 80 in. WG |
| | J cell | |
| TK-J1 WF | WF recorder | 0 to 200 in. WG |
| | High WF alarm | 127 in. WG |
| | Low WF alarm | 51 in. WG |
| | Low WF shuts off pump | 11 in. WG |
| | Low WF shuts off agitator | 5 in. WG |

TABLE 6-27. Process Control Instrumentation Systems. (Sheet 9 of 19)

| Instrument | Function | Typical range or setting |
|---|---|---|
| | J cell (cont.) | |
| TK-J1 temperature | High alarm | 60°C |
| TK-J1 neutron | Criticality prevention | TBD[e] |
| TK-J3 temperature | High alarm[c] | 60°C |
| TK-J3 WF | WF recorder<br>High WF alarm<br>Low WF alarm<br>Low WF cuts off agitator<br>Low WF cuts off pump | 0 to 120 in. WG<br>83 in. WG<br>36 in. WG<br>24 in. WG<br>8 in. WG |
| TK-J3 tank pressure (vacuum) | Low vacuum alarm | -1 in. WG |
| T-J4 1BS flow | Low-flow alarm[c] | TBD |
| TK-J5 WF | WF recorder<br>High WF alarm<br>Low WF alarm<br>Low WF pump cutoff | 0 to 150 in. WG<br>86 in. WG<br>30 in. WG<br>5 in. WG |
| TK-J5 temperature | High alarm | 60°C |
| T-J6 neutron (3 locations) | Criticality prevention | |
| T-J7 ICX temperature | High alarm closes ICX valve | 60°C |
| EJ8-1 steam pressure to RTB | High-pressure alarm<br>High pressure shuts off steam[c]<br>Low pressure closes condensate valve | 29 lb/in.$^2$ g<br>29 lb/in.$^2$ g<br>15 lb/in.$^2$ g |
| EJ8-1 steam pressure to LTB | High-pressure alarm<br>High pressure shuts off steam[c]<br>Low pressure closes condensate valve | 29 lb/in.$^2$ g<br>29 lb/in.$^2$ g<br>15 lb/in.$^2$ g |
| EJ8-1 WF | WF recorder<br>High WF alarm (total tank)<br>Low WF alarm (total tank)<br>Low WF steam cutoff | 0 to 250 in. WG<br>227 in. WG<br>155 in. WG<br>76 in. WG |
| E-J8-1 temperature | High-temperature alarm<br>High temperature shuts off steam[c] | 120.5°C<br>125°C |

9413219.0618

TABLE 6-27. Process Control Instrumentation Systems. (Sheet 10 of 19)

| Instrument | Function | Typical range or setting |
|---|---|---|
| | J cell (cont.) | |
| EJ8-1 SG | High SG alarm | 1.78 |
| EJ8-2 temperature | High alarm interlock opens cooling water valves | 60°C |
| SPLP-J8 (condensate sample tank) | WF recorder | 0 to 50 in. WG |
| | Low WF pump out cutoff and alarm | 10 in. WG |
| Sump J Cell WF | WF recorder | 0 to 60 in. WG |
| Sump (J2) WF | High WF alarm | 12 in. WG |
| | K cell | |
| TK-K1 WF | WF recorder | 0 to 200 in. WG |
| | High WF alarm | 125 in. WG |
| | Low WF alarm | 51 in. WG |
| | Low WF agitator cutoff | 39 in. WG |
| | Low WF pump cutoff | 12 in. WG |
| TK-K1 temperature | High alarm[c] | 60°C |
| T-K2 pulse generator | Pulser alarm (motor) | NA |
| | Pulser alarm (alternator) | NA |
| T-K3 temperature (2EX high temperature) | Steam cutoff to spray | 60°C |
| E-K4-1 steam inlet pressure | High-pressure alarms and closes steam valves[c] | 29 lb/in.$^2$ g |
| | Low pressure closes condensate drain LTB | 15 lb/in.$^2$ g |
| | Low pressure closes condensate drain RTB | 15 lb/in.$^2$ g |
| E-K4-1 WF | WF recorder | 0 to 250 in. WG |
| | High WF alarm | 240 in. WG |
| | Low WF alarm | 188 in. WG |
| | Low WF turns off steam | 76 in. WG |
| E-K4-1 SG | High SG alarm | 1.72 |
| E-K4-1 temperature | High-temperature alarm | 120.5°C |
| | High temperature shuts off steam[c] | 125°C |

TABLE 6-27. Process Control Instrumentation Systems. (Sheet 11 of 19)

| Instrument | Function | Typical range or setting |
|---|---|---|
| | K cell (cont.) | |
| TK-K5 WF | WF recorder<br>Low WF shuts off agitator<br>Low WF alarms<br>High WF alarms | 0 to 200 in. WG<br>32 in. WG<br>54 in. WG<br>135 in. WG |
| TK-K6 WF | WF recorder<br>High WF alarm<br>Low WF alarm<br>Low WF shuts off agitator<br>Low WF shuts off pump | 0 to 200 in. WG<br>150 in. WG<br>16 in. WG<br>42 in. WG<br>12 in. WG |
| Sump K cell WF | High WF alarm | 10 in. WG |
| | L cell | |
| Sump (SLK) WF | High WF alarm | 1-1/2 in. WG |
| L cell DP | DP recorder<br>Low-DP alarm | -2 to +2 in. WG<br>0.1 in. WG |
| Sump (SLL) WF (2) | High WF alarm | 7 3/8 in. WG and 1/2 in. WG |
| T-L1 pulse generator | Motor alarm | NA |
| T-L2 pulse generator | Motor alarm | NA |
| 2BP alpha monitor | High-alpha alarm<br>Low-alpha alarm | 15 g/L<br>4 g/L |
| TK-L3 WF | WF recorder<br>High WF alarm<br>Low WF alarm<br>Low WF cuts off pump | 0 to 170 in. WG<br>134 in. WG<br>3 in. WG<br>3 in. WG |
| TK-L3 temperature | High alarm | 60°C |
| SPL-3AF liquid level | Liquid level alarm | 2 in. WG |
| SPLP-L4 3AW alpha monitor | High-alpha alarm<br>Low-alpha alarm | 0.1 g/gal<br>0.01 g/gal |
| 3AF-$HNO_3$ | Flow recorder-controller<br>Low-flow alarm | <br>0.1 gal/min |
| PSF $HNO_3$ monitor | Conductivity recorder and low acid alarm | 0.6M to 1.6M (1.0M) |
| T-L6 evaporator tube bundle pressure | High-pressure alarm<br>High pressure cuts off steam<br>Low-pressure alarm | 29 lb/in.$^2$ g<br>29 lb/in.$^2$ g<br>5 lb/in.$^2$ g |

TABLE 6-27. Process Control Instrumentation Systems. (Sheet 12 of 19)

| Instrument | Function | Typical range or setting |
|---|---|---|
| | L cell (cont.) | |
| T-L6 WF | WF recorder<br>Low WF alarm<br>Low WF shuts off steam and air | 0 to 140 in. WG<br>17 in. WG<br>17 in. WG |
| T-L6 process temperature | High temperature shuts off steam valve[c]<br>High-temperature alarm | 123°C<br>119°C |
| T-L6 SG | High SG alarm<br>High SG shuts off steam | 1.35<br>1.35 |
| E-L7 WF | WF recorder<br>Low WF alarm<br>Low WF shuts off steam | 0 to 140 in. WG<br>17 in. WG<br>17 in. WG |
| E-L7 steam pressure | High steam pressure shuts off steam<br>High steam pressure alarm<br>Low steam pressure alarm | 29 lb/in.$^2$ g<br>29 lb/in.$^2$ g<br>5 lb/in.$^2$ g |
| E-L7 process temperature | High-temperature alarm<br>High temperature shuts off steam[c] | 123°C<br>127°C |
| E-L7 SG | High SG alarm<br>High SG shuts off steam | 1.68<br>1.68 |
| TK-L8-PCP WF | WF recorder<br>High WF alarm | 0 to 180 in. WG<br>137 in. WG |
| L cell fire alarm[c] | Alarms fire in cell | |
| | PR room | |
| TK-L11 WF | WF recorder<br>High WF alarm | 0 to 200 in. WG<br>106 in. WG |
| Sump (SLD) WF | High WF alarm | 1 in. WG |
| | M cell | |
| TK-M1 (decontamination cell tank) | WF indicator<br>High WF alarm<br>Low WF alarm | 0 to 326 in. WG<br>137 in. WG<br>50 in. WG |
| Sump (SMA) WF | WF recorder<br>High WF alarm | 0 to 30 in. WG<br>6 in. WG |

TABLE 6-27. Process Control Instrumentation Systems. (Sheet 13 of 19)

| Instrument | Function | Typical range or setting |
|---|---|---|
| | M cell (cont.) | |
| TK-M2 | WF recorder<br>High WF alarm<br>Low WF alarm | 0 to 30 in. WG<br>137 in. WG<br>50 in. WG |
| Sump (SMB) WF | WF recorder<br>Low WF alarm | 0 to 30 in. WG<br>6 in. WG |
| | N cell | |
| TK-L9 WF | WF recorder<br>High WF alarm | 0 to 70 in. WG<br>50 in. WG |
| TK-M3 WF, TK-M4 WF, TK-M5 WF, and TK-M6 WF | WF recorder<br>High WF alarm<br>Low WF shuts pump to TK-N3 | 0 to 300 in. WG<br>256 in. WG<br>42 in. WG |
| Sump (SMC) capacidance probe | Liquid alarm | Positive conductivity |
| TK-N3 WF | WF recorder/alarm<br>High WF closes discharge valves on P-M3, -M4, -M5, and -M6-1 | 0 to 60 in. WG<br>48 in. WG |
| TK-N6 WF | WF recorder/alarm<br>Low WF shuts down metering pumps P-N35/-N36-1 | 0 to 70 in. WG<br>9 in. WG |
| TK-N5 WF | WF recorder/alarm; low WF shuts off recirculation pump P-N5-1 | 0 to 100 in. WG<br>10 in. WG |
| TK-N7 temperature | Temperature indicator controller/alarm | 0°C to 150°C<br>60°C |
| TK-N7 pressure | Pressure indicator/alarm; high pressure shuts off $H_2C_2O_4$ and $Pu(NO_3)_4$ feed pumps | 0 to 30 in. WG<br>3 in. WG |
| F-N8 liquid level | Liquid-level alarm | 2.25 in. WG |

TABLE 6-27. Process Control Instrumentation Systems. (Sheet 14 of 19)

| Instrument | Function | Typical range or setting |
|---|---|---|
| | N cell (cont.) | |
| F-N8 overflow vessel | Liquid-level alarm - liquid in overflow vessel shuts off feed pumps to TK-N7 | 1.0 in. WG |
| CA-N9 temperature | Temperature recorder-controller/alarm (6 nearest points) | 0°C to 600°C<br>425°C (high)<br>375°C (low) |
| CA-N9 screw speed | Screw speed indicator/controller/alarm | 0.1 to 200 rpm<br>1.5 rpm (low)/2.5 rpm (high) |
| CA-N10 temperature | Temperature recorder-controller/alarm | 0°C to 600°C<br>525°C (high)<br>475°C (low) |
| CA-N10 screw speed | Screw speed indicator/controller alarm | 0.1 to 200 rpm<br>3.5 rpm (low)/4.5 rpm (high) |
| TK-N11 WF | WF recorder/alarm (low WF shuts down the N13 concentrator feed pump); high WF shuts $H_2C_2O_4$ and $Pu(NO_3)_4$ feed pumps to TK-N7 | 0 to 100 in. WG<br>10 in. WG (low)<br>58 in. WG (high) |
| TK-N13 WF | WF recorder<br>High alarm<br>Low alarm | 0 to 50 in. WG<br>40 in. WG<br>8.5 in. WG |
| TK-N15/-N16 WF | WF indicator/recorder/alarm (low WF on tank in service shuts down circulation pump) | 0 to 100 in. WG<br>13 in. WG |
| F-N18 pressure | Pressure recorder/alarm | 0.5 to 1.5 in. WG<br>0.2 in. WG |
| TK-N19 WF | WF recorder/alarm | 0 to 50 in. WG<br>4 in. WG |
| TK-N21, -N22 WF | WF indicator/recorder/alarm | 0 to 100 in. WG<br>72 in. WG (high)<br>12 in. WG (low) |
| TK-N20 liquid level | Liquid-level alarm | 14 in. WG |
| TK-N39, -N40 WF | WF recorder/alarm | 0 to 200 in. WG<br>101 in. WG |

TABLE 6-27. Process Control Instrumentation Systems. (Sheet 15 of 19)

| Instrument | Function | Typical range or setting |
|---|---|---|
| | N cell (cont.) | |
| TK-N30 WF | WF recorder/alarm (high WF in TK-N30 actuates MOV to bypass vacuum header and transfer to vent header) | 0 to 100 in. WG<br>49 in. WG |
| Glovebox floor liquid detectors | Liquid detectors/alarm | Positive conductivity |
| | R cell | |
| TK-R1 WF | WF recorder<br>High WF alarm<br>Low WF alarm<br>Low WF shuts off recirculation pump<br>Low WF shuts off pump flow to 20 column | 0 to 120 in. WG<br>69 in. WG<br>18 in. WG<br>6 in. WG<br>39 in. WG |
| TK-R1 temperature | High alarm shuts off steam to coil | 0°C to 100°C<br>60°C |
| TK-R2 WF organic detection | WF recorder<br>Organic detection alarm (level at 72 in.)<br>Low WF alarm<br>Low WF shuts off pump | 0 to 100 in. WG<br>3 in. WG<br>20 in. WG<br>8 in. WG |
| TK-R2 temperature | High alarm shuts off steam to coil | 0°C to 100°C<br>60°C |
| T-R2 pulse generator | Motor alarm | NA |
| TK-R5 WF | WF recorder<br>High WF alarm<br>Low WF alarm<br>Low WF shuts off agitator<br>Low-pump pressure causes automatic decanter pump switching | 0 to 200 in. WG<br>131 in. WG<br>69 in. WG<br>37 in. WG<br>25 lb/in.$^2$ g |
| TK-R5 temperature | High alarm | 60°C |
| TK-R7 WF | WF recorder<br>High WF alarm<br>Low WF alarm<br>Low WF shuts off agitator | 0 to 200 in. WG<br>131 in. WG<br>59 in. WG<br>47 in. WG |

TABLE 6-27. Process Control Instrumentation Systems. (Sheet 16 of 19)

| Instrument | Function | Typical range or setting |
|---|---|---|
| | R cell (cont.) | |
| TK-R7 temperature | High alarm turns off steam to coil | 60°C |
| TK-R8 WF organic detection | WF recorder | 0 to 150 in. WG |
| | Organic detection alarm (level at 87 in.) | 3 in. WG |
| | Low WF alarm shuts off steam | 40 in. WG |
| | Low WF shuts off agitator | 28 in. WG |
| TK-R8 temperature | High alarm | 0 to 100°C<br>60°C |
| R cell sump WF | High WF alarm | 12 in. WG |
| | U cell | |
| TK-U1 WF | WF recorder | 0 to 250 in. WG |
| | Low WF turns off agitator | 29 in. WG |
| | Low WF turns off pump | 9 in. WG |
| | High WF alarm | 175 in. WG |
| | Low WF alarm | 29 in. WG |
| TK-U2 WF | WF recorder | 0 to 250 in. WG |
| | High WF alarm | 175 in. WG |
| | Low WF alarm | 29 in. WG |
| | Low WF turns off agitator | 29 in. WG |
| | Low WF turns off pump | 9 in. WG |
| TK-U1 and TK-U2 pump pressure | Low-pump pressure switches pump automatically | 40 $lb/in.^2$ g |
| TK-U3 WF | WF recorder | 0 to 250 in. WG |
| | High WF alarm | 138 in. WG |
| | Low WF alarm | 25 in. WG |
| | Low WF turns off agitator | 80 in. WG |
| TK-U4 WF | WF recorder | 0 to 250 in. WG |
| | High WF alarm | 138 in. WG |
| | Low WF alarm | 25 in. WG |
| | Low WF shuts off agitator | 80 in. WG |
| TK-U5 WF | WF recorder | 0 to 200 in. WG |
| | High WF alarm | 150 in. WG |
| | Low WF alarm | 30 in. WG |
| | Low WF turns off agitator | 30 in. WG |
| | Low WF turns off feed flow pump 1 | 30 in. WG |
| | Low WF turns off feed flow pump 2 | 30 in. WG |

TABLE 6-27. Process Control Instrumentation Systems. (Sheet 17 of 19)

| Instrument | Function | Typical range or setting |
|---|---|---|
| | U cell (cont.) | |
| TK-U6 WF | WF recorder<br>High WF alarm<br>Low WF alarm | 0 to 150 in. WG<br>130 in. WG<br>95 in. WG |
| U cell sumps WF | High WF alarm, sump SA<br>High WF alarm, sump SB | 4 in. WG<br>4 in. WG |
| | Headend control room | |
| 293-A radiation | High alarm[c] | 5 fold-over background |
| A, B, and C cell iodine monitor | High alarm | |
| A, B, and C cell coil monitor | High alarm | |
| $NH_3/H_2$ monitors dissolvers | High ammonia alarm[c]<br>High hydrogen alarm[c] | 2.0 vol%<br>2.0 vol% |
| E cell $NH_3$ monitor | High ammonia alarm[c] | 2.0 vol% |
| XB temperature | High alarm | 40°C |
| XA flow rate | Recorder-controller<br>Low-flow alarm | 0 to 305 gal/min<br>152.5 gal/min |
| Sump (SX) WF | WF indicator<br>High alarm | 0 to 50 in. WG<br>37 in. WG |
| XC WF | WF recorder<br>High alarm<br>Low alarm | 0 to 160 in. WG<br>95 in. WG<br>25 in. WG |
| XD WF | WF recorder<br>High WF alarm<br>Low WF alarm<br>Low WF pump cutoff | 0 to 120 in. WG<br>48 in. WG<br>31 in. WG<br>12 in. WG |
| XB acid flow | Low alarm | 25 gal/min |
| | Alarms in dispatcher's office--radiation | |
| Green fuel detector[c] | Detect short-cooled fuel | Ratio of two gamma peaks: $^{95}Zr/^{95}Nb$ to $^{140}La$ is >20 (nominal) for properly aged fuel. |

TABLE 6-27. Process Control Instrumentation Systems. (Sheet 18 of 19)

| Instrument | Function | Typical range or setting |
|---|---|---|
| Alarms in dispatcher's office--radiation (cont.) | | |
| High radiation; area personnel monitors RE chambers[c]) | Detect high radiation in personnel occupied areas | 5-foldover background |
| High-steam condensate radiation (RA-SC-1) | Detect high radiation in steam condensate | 5-foldover background |
| High-radiation condensate catch tank caisson (RA-SC-2B) | Detect high radiation in steam condensate | 5-foldover background |
| Radiation monitor failure, 201 pump pit[c] | Detect failure of cooling water monitor | 5-foldover background |
| Radiation monitor failure, steam condensate pit | Detect failure of steam condensate monitor | 5-foldover background |
| East sample gallery air contamination | Detect high radiation on the east sample gallery air sampler | 4 times Table II/h |
| Beta-gamma stack gas monitor | Detect high radiation in canyon ventilation exhaust | 5,000-foldover Table II concentration |
| Stack gas iodine monitor[c] | Detect high $^{131}I$ in canyon ventilation exhaust | 5,000-foldover Table II concentration |
| Criticality alarms, 10 each[c] | Detect nuclear criticality accident | |
| Alarms in Dispatcher's Office--Fire[c] | | |
| F cell (east and west) | Fire detection | |
| G cell | Fire detection | |
| H-J cell | Fire detection | |
| K cell | Fire detection | |
| L cell | Fire detection | |
| P&O gallery | Fire detection | |
| 276-A (R cell) | Fire detection | |

TABLE 6-27. Process Control Instrumentation Systems. (Sheet 19 of 19)

| Instrument | Function | Typical range or setting |
|---|---|---|
| Other alarms and recorders | | |
| Breathing air low pressures[c] | | |
| Vacuum air sampling pump failure | Alarm failure | 10 in. mercury vacuum |
| Hot-bearing alarm on 291-A exhaust | | |
| Criticality recorders N cell[c] | Record radiation from a nuclear criticality accident | |
| Criticality recorders PR room[c] | Record radiation from a nuclear criticality accident | |
| Criticality recorders Q cell[c] | Record radiation from a nuclear criticality accident | |
| Personnel monitors[c] | Record radiation readings of personnel monitors | |

[a]Differential pressure.

[b]Prevents the addition of $NaNO_3$, AFAN, or ANN via nozzle G6.

[c]System required to assure safe conditions.

[d]Prevents the addition of NaOH or KOH via nozzle G7.

[e]Range or setting to be determined prior to PUREX "hot" startup.

[f]Right tube bundle.

[g]Left tube bundle.

## TABLE 6-28. Instrumentation Symbol Legend.

### Instrumentation symbol legend

| Symbol | Process variable 1st letter | Instrumentation function 2nd and 3rd letters |
|---|---|---|
| A | Ampere | Alarm |
| AMP | | Amplifier |
| AN | | Analyzer |
| B | Batch | |
| C | Conductivity | Controller |
| CO | Corrosion | |
| CVT | Converter | |
| D | Differential | |
| E | Electric | Element |
| F | Flow | |
| I | | Indicator |
| IF | Interface | |
| J | Jet | |
| KK | Fire-Eye | |
| L | Liquid | Level |
| M | Manual | Meter |
| MK | Microphone | |
| P | Pressure | Pressure |
| PB | | Pushbutton |
| pH | Acidity | |
| PU | Pulser | |
| Q | | Integrator |
| R | Radiation | Recorder |
| S | Speed-selector | Switch |
| SG | Specific gravity | |
| SPK | Speaker | |
| SP | | Setpoint |
| T | Temperature | Transmitter |
| V | Valve | Valve |
| VIB | Vibration | |
| W | Wobble | |
| WF | Weight factor | |
| X | | Reversing |
| K | Relay | |
| Z | Pneumatic relay | |

### Line designations

- E - Vent
- P - Process
- MW - Demineralized water
- RW - Raw water
- SPL - Sampler
- S - Steam
- UD - Utility drain
- XY - Instrument Electrical
- X - Electrical
- YA - Instrument
- Process and Service Line
- Main process stream
- Instrument air lines
- Capillary tubing
- Electrical leads

### Equipment symbols

- A - Agitator
- E - Heater, condenser, or concentrator
- F - Filter
- G - Centrifuge
- H - Heater
- JGV - Jet gang valve
- PG - Pulse generator
- PM - Pulse motor
- P - Pump
- SPLP - Sampler pot
- TK - Tank
- T - Tower (column)

### Miscellaneous

- ASP - Automatic setpoint adjustment
- DM - Displacement meter
- DOV - Diaphragm-operated valve
- CRM - count rate meter
- LS - Limit switch
- MCC - Motor control center
- POV - Piston-operated valve
- PRV - Pressure-reducing valve
- RO - Restricting orifice
- SRV - Safety relief valve
- SNC - Scintillation counter
- TRV - Temperature-regulating valve
- (S) - 25 lb/in.$^2$g steam purge
- (A) - 20 lb/in.$^2$g instrument air
- 30 lb/in.$^2$g air purge rotameter
- Panel mounted
- Local mounted
- (SP) - Seal pot
- (FM) - Magnetic flow meter
- Nuclear safety panel mounted
- Diaphragm-operated valve
- Globe valve
- Ball valve
- Gate valve
- Jet
- Strainer

6.5.1.2 Process Control Instrumentation.

6.5.1.2.1 Purge-Type Instrumentation. Based on nuclear fuels reprocessing experience, air-purged dip tubes used to measure pressure or DP are simple, reasonably accurate, and reliable. Purge-type systems are used to measure WF, which converts to liquid level with application of a SG value, also determined by purge-type instrumentation.

Other applications include DP across extraction column sections or interface determination by DP across the disengaging area of a two-phase system.

Orifice meter DP and flow determination also require DP measurements, although the sensing lines may not be air-purged.

On the control side of a system, such as regulating flows of solution or gas, pneumatic pressure is generally used. The pressure may be on, off, or variable for variable flow. Typical applications are to position DOV, piston-operated valves (POV), and piston-operated dampers in the ventilation systems.

The extent of pneumatic instrument and control applications is indicated by the 150 mi of instrument tubing in the building. The generic control systems in Section 6.5.1.3 illustrate several examples. A primary design concern is precluding reverse flow of radioactivity into the sensing lines, particularly since most of the purge meters are located in the control rooms. This is accomplished by maintaining a higher (relative to process conditions) pressure to the purge meter and a constant displacement flow through the sensing line (see Section 6.1.4.1.3).

6.5.1.2.2 Float-Type Interface Sensors. The majority of pulse columns use a float to locate the position of the two-phase interface in the respective column disengaging section. An interface float is a cylinder about 2 in. in diameter and 5 to 12 in. long. The float is weighted so as to "just float" on typical column aqueous and "just sink" in typical column organic, thus floating at the organic-aqueous interface. An armature is connected to the float and travels in a stainless steel sleeve surrounded by a transmitter coil. The receiver and transmitter coils are interconnected with precision range resistors to form two parallel circuits. The result is an impedance bridge capable of detecting small changes in position of the float transmitter armature. When the transmitter and receiver armatures are in corresponding positions in the coils, the impedance in each of the two circuits is about equal and no current flows. However, as soon as the transmitter armature moves in response to a change in the interface level, the impedance of the transmitter coils changes, causing a small flow of current. The electronic amplifier detects the magnitude and phase relationship of this current, amplifies it, and uses it to bring the impedance bridge back into balance. The recording pen, indicating pointer, and controller are actuated by the receiver. The controller will signal a flow control valve to change the plug position in order to restore the interface position. The device is commonly used and detailed descriptions are available.[7,8] An interface control system that uses a float sensor is described in Section 6.5.1.3.2 and illustrated in Figure 6-48.

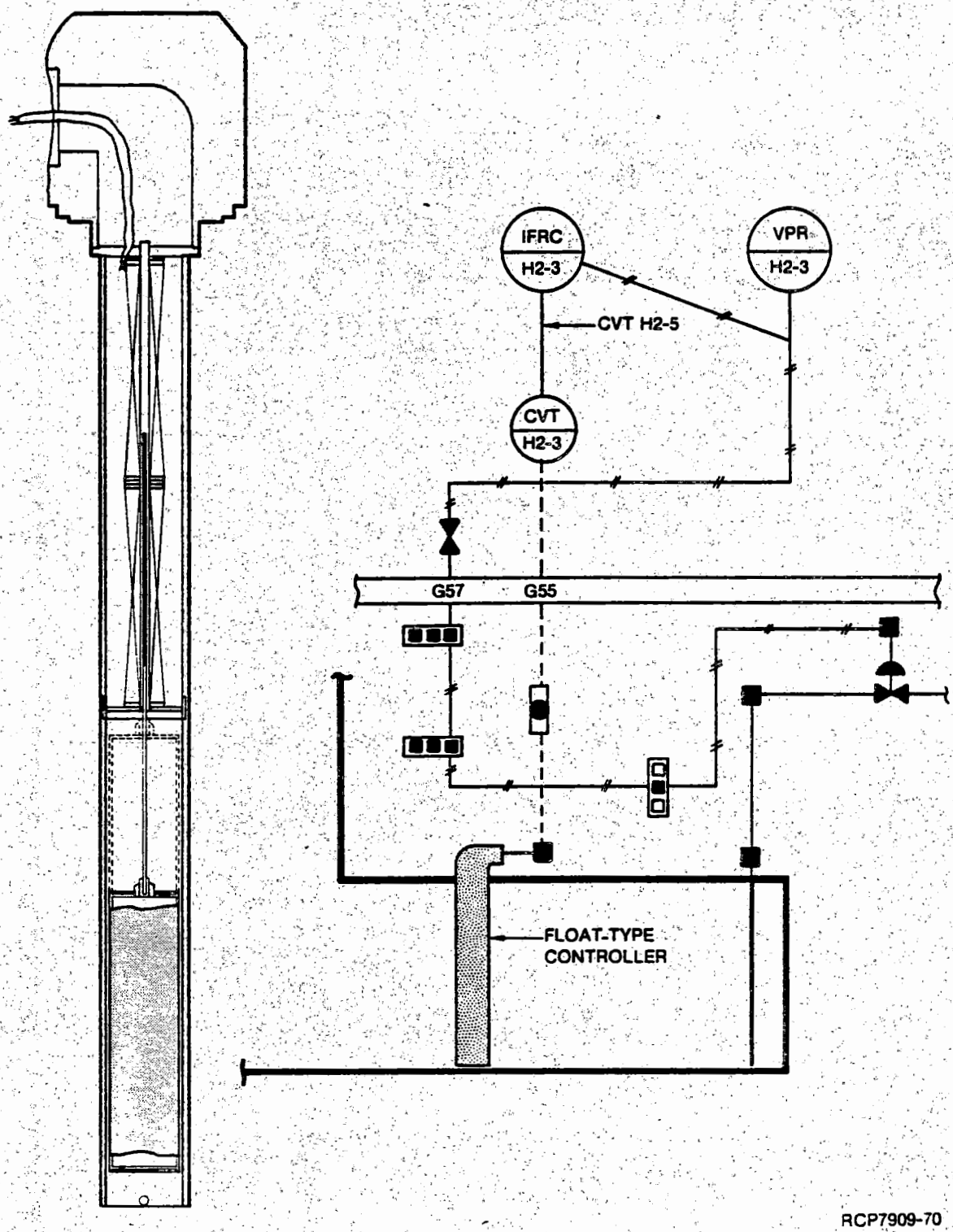


FIGURE 6-48. H2 Interface Control System.

6.5.1.2.3 Temperature Sensors. There are three types of temperature measuring sensors used in the PUREX Plant: resistance thermometers, mercury thermometers, and thermocouples; descriptions follow.

- Resistance Thermometers

  Resistance elements are used for temperature measurements in hot zones and in cold applications in which a record is needed. Resistance elements make use of the variation with temperature in the electrical resistance of a coil of nickel or platinum wire, comprising the resistance element, which is wound on an insulator and encased by a thin, protective, stainless steel tube. For canyon applications, this sensing element is installed in a stainless steel well fabricated of 1/2-in. pipe mounted in a jumper assembly. When automatic temperature control is desired, the resistance element is connected electrically to an electric-to-pneumatic converter. The converter sends an air signal to a steam-flow recorder-controller or directly to a DOV in a cooling water line.

- Mercury Thermometers

  Mercury thermometers with dial indicators are used for temperature measurements on "cold" process streams and vessels in which no record is required. Mercury-filled capillary tubing thermometers function on the expansion of mercury and the coefficient of expansion of the confining system. The sensing well is connected by a small-diameter, flexible, armored, stainless steel capillary to a Bourdon-tube pressure gauge calibrated for temperature readings. All linkages are of stainless steel.

- Thermocouples

  Thermocouples generate electrical potentials that are proportional to the difference between the temperature at the hot junctions in the temperature probes, and the temperatures at the cold or reference junctions where thermocouple material wires are connected to copper wires.

  The electrical signals from both thermocouples and resistance-type instruments can be converted to pneumatic signals when necessary. This conversion requires a wheatstone bridge as part of the component interface. Detailed descriptions exist.[7,17] Examples are presented in Section 6.5.1.3.

6.5.1.2.4 Flow Measurement. There are several types of flow metering devices in use at PUREX. These are selected for specific applications by consideration of the material to be measured and the range of flow rates expected.

- Orifice Meters

Orifice meters are used to monitor the flow of steam, air, and water services. Orifice meters operate on the principle of a constant area flow restriction with variable head pressure drop across the restriction. A DP transmitter, connected to the orifice pressure taps, converts the DP across the orifice plate due to fluid flow to an air pressure signal proportional to the fluid flow. The air pressure signal is transmitted to either a pressure gauge, an indicator-controller, an indicator-integrator, or a recorder-controller located on the graphic panel.

- Pneumatic Rotameters

A pneumatic, transmitting rotameter is used to measure the flow rate of cold process streams when the maximum flow rate is greater than 0.2 gal/min. The instrument can be located in the P&O gallery. As the rotameter float responds to variations in flow, it moves in a cast armature that contains two magnets. These magnets actuate two external magnets, which mechanically operate a pneumatic transmitter to give an air signal proportional to float position.

- Electronic Rotameters

The specially designed, all stainless steel rotameter is used to measure the flow of many radioactive streams within the PUREX canyon and sample gallery. The stream being measured passes upward through a vertical, truncated, conical, metering tube with the maximum diameter at the top. The position of the float inside the tubes is altered by changes in the flow rate of the stream. An armature, consisting of a vertical stainless steel tube, the lower half of which is filled with a soft iron core, is attached to the bottom of the float. As the flow rate increases, the float and armature rise, generating a signal in the inductance coil.

A transmitter, consisting of two inductance coils around a stainless steel flow pipe, is attached to the bottom of the metering tube. Movement of the soft iron core of the armature changes the inductance of the two coils. These changes are transmitted as an electrical signal proportional to the flow rate. The changes are transmitted to an electric-to-pneumatic converter located in the central control room. The converter changes the electrical output of the rotameter to a proportional air signal, which is transmitted to a recorder-controller located on the graphic panel in the control room. The recorder-controller sends an air signal to a DOV, usually installed in the same process line as the rotameter. The air signal positions the valve plug to produce the desired flow rate.

- Magnetic Flow Meter

The magnetic flow meter is used extensively in the PUREX Plant. Its principle of operation is based on the electrical conductivity of the liquid stream being metered. As the conductive stream passes through the magnetic field established within the flow meter tube, it responds like a conductor in an electrical generator (i.e., voltage is created in the fluid stream perpendicular to the flow direction). The voltage is reversed through two properly placed metal electrodes on the inner wall of the flow meter. The rest of the inner wall is an electrical insulator. The greater the flow rate is, the higher will be the generated voltage. The magnetic flow meter has a number of advantages: no flow restrictions in the meter, linear flow measurement, easy range change, and wide range capability for a volume flow meter (liquid density does not affect measurement). Magnetic flow meters are being used more widely in the PUREX Plant, particularly in process locations where rotameter-float plugging has been a problem.

- Thermal Flow Meters

In a few cases in which very small flows are to be monitored, thermal flow meters are in service. These meters measure the temperature of the incoming stream, add heat to the fluid at a constant rate, and measure the temperature of the exit stream. Flow rate is sensed as the temperature differential between the inlet and outlet stream. This electronic signal is converted to a pneumatic signal, which is used to both operate control valves and drive the pen on a flow rate chart recorder.

6.5.1.2.5 Radiation Sensors. The presence of radioactivity in the process streams requires that essentially all operations be conducted in heavily shielded areas. Monitoring process conditions depend to a large degree upon characterization of the types and energies of radiation emitted by the process materials. These emissions may be gamma, alpha, or neutron radiations.

- Gamma Scintillation Counters

Scintillation counters are used as in-line monitoring instruments* for gamma activity. A stream sampling system incorporates a sample cell positioned near a sodium iodide crystal. The gamma rays from the sample interact with the sodium iodide crystal to produce light scintillations. These, in turn, initiate electrical pulses from a photoelectric tube. The pulses are amplified to give a reading proportional to the energy of the gamma rays being detected. The monitoring system measures the counting rate per unit volume of solution. In-line gamma monitors are of value in determining product quality in solvent extraction cycles. Gamma monitor systems are also used in determining stack gas activity and plutonium content of solid waste. Applications are discussed in Section 6.5.1.4.4.



9413219.0634

- Ionization Chambers

Radiation instruments, using ionization chambers, are used for supplementary, approximate measurements of decontamination of the plutoniumand/or uranium-containing streams. Radiation instruments provide an indication of the intensity of gamma radiation near selected equipment pieces. Ionization chambers are employed on the dissolvers, uranium concentrators, acid concentrators, waste neutralizer, plutonium product receiver, plutonium sampler tanks, and the centrifuges. Gamma radiation from sources within range of the instrument enters an air-filled chamber, causing ionization of the air. The measured conductivity is proportional to the gamma energy absorbed by the air. The chamber is a 5-in.-diameter, 18 3/4-in. long plastic cylinder. Beta particles do not penetrate the plastic, and no "windows" for beta entry are provided, so that only gamma radiation is sensed. An aquadag (graphite suspension) coating on the inside of the cylinder wall is the positive electrode. The negative electrode is a 1/2-in. aluminum rod axial.

There are about 50 ionization chambers located in strategic building sites that are frequently or occasionally entered by personnel. In this application, they are designated "RE chambers" or "HM chambers." The chambers are read out through Keithley pico-ammeters. The systems are equipped with alarms to warn personnel of problem areas. Most of the Keithley racks are located in the P&O gallery, and most of the recorders are in the dispatcher's office. Associated with, but different from, the RE chambers are three pico-ammeters. The chambers for these units are located in Q cell, N cell, and the PR room. Recorders for these are in the dispatcher's office. The chambers are located in areas where criticality potential exists, and are capable of automatically recording radiation levels from 0.001 to 1,000 R/h, should such an excursion ever be encountered.

- Alpha Monitors

The alpha detection system consists of a cerium-activated, 1-mil surface on a 1/4-in.-thick, glass disc. The process stream is in direct contact with the activated surface, and a photomultiplier tube optically coupled to the backside of the disc senses scintillations from the activated surface. This system provides a measurement range of about $1 \times 10^{-4}$ Pu g/L to 30 g/L. Applications are discussed in Section 6.5.1.4.4.

---

*In-line monitors are detectors or sensing probes placed in or adjacent to a process stream that measure a chemical or radiochemical property of the stream. Detailed descriptions of the in-line monitors used in the PUREX Plant are presented in Reference 7.

- Neutron Monitors

Plutonium concentrations of certain streams are measured by neutron monitors located on the outside of a vessel or pipeline. The detection system consists of one or two boron trifluoride-filled tubes mounted in a paraffin moderator. The range of measurement for this system is about $1 \times 10^{-2}$ Pu g/L to 10 g/L.

Another use of the neutron monitor is measurement of the concentration of cadmium nitrate in the head tank. A neutron source and a boron trifluoride tube are installed at the bottom of the tank. As the cadmium concentration increases, more neutrons are absorbed and fewer are detected by the boron trifluoride tube. This count, therefore, relates inversely to cadmium concentration. Applications are discussed in Section 6.5.1.4.5.

6.5.1.3 Process Control Systems.

6.5.1.3.1 Typical Process Tank. Figure 6-49 is a diagram showing the measurement and control systems for a typical process tank. Basic parameters of concern are temperature, solution liquid level, SG, and radiation. The example chosen has an associated neutron monitor, which is typical for selected process vessels. Neutron monitors are discussed in more detail in Section 6.5.1.4.

The temperature, SG, and radiation (neutron) are recorded. The weight of the solution is measured as a WF (Section 6.5.1.2.1) and recorded along with the SG of the solution. These data can be used to calculate the liquid level. High and low WF alarm points are set, with the alarm consisting of a panel light and annunciator.

The vessel is equipped with a pump and agitator. The current drawn by the respective electric motor is indicated on a panel-mounted ammeter.

- Solution Temperature Control

This particular vessel requires heating, as well as cooling, capability. Consequently, solution temperature is manually controlled by the operator, who, upon visually noting the recorded temperature, selects either steam or cooling water. Actuation of a valve from the control room places cooling water on the coil. Use of coil steam requires manual valve operation in the P&O gallery. To preclude a suck-back resulting from steam collapse in the coil if it should leak, an automatic air purge of the coil following the use of steam is performed. An interlock actuates a timed air purge whenever the steam is shut off.

9413219.0637

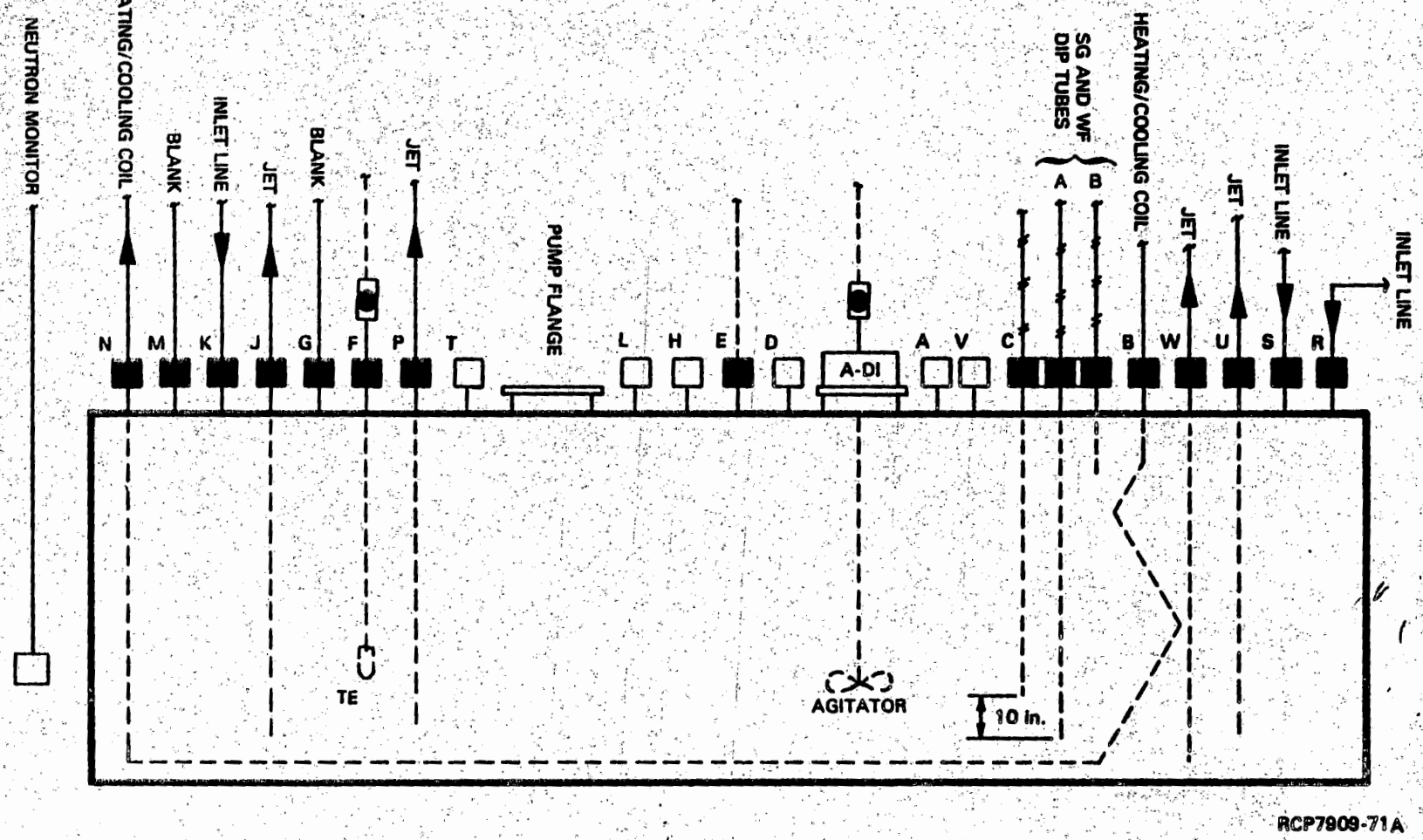


FIGURE 6-49. Typical Process Tank.

- Solution Pumping and Agitation

  Both the pump and agitator are electrically interlocked to the low-level WF alarm, so that each is shut off when the liquid falls below the preselected level. Agitators can only be operated when the bottom blade is submerged 6 in. or more to protect the agitator and to reduce organic aerosol formation where solvent may be present. The pump low-level cutoff is set to preclude pump cavitation that would shorten its operating life.

- Solution Jet Transfer

  Bulk solution transfers between vessels, in which flow-rate control is not important, are usually accomplished by steam jet to avoid excessive wear on the much more expensive pumps. A typical electric switch-type jet operatingand control-schematic is shown in Figure 6-50. Important features are the electric valves, which, when actuated, position the DOV, and the automatic-timed air purges, which are actuated when the jet switch is turned off. The air-purge duration is established for the volume of the process piping to be air purged. A typical control and operating schematic for a pneumatic jet switch is also shown in Figure 6-50. In some instances, a valve may be interposed in the pneumatic signal line to the steam control DOV to permit varying the steam pressure and flow at the panel board.

  Actuation of the switch puts steam to the jet and pressurizes a small air reservoir. When the jet is shut off, the air reservoir maintains a loading pressure on the air supply DOV, which allows an air purge of the jet and process piping. The air bleed-off rate from the reservoir is controlled by an orifice. By altering the size of the reservoir or of the orifice, the air-purge duration may be changed.

6.5.1.3.2 Typical Pulse Column. A typical PUREX "A"-type column with control instrumentation is shown in Figure 6-51. Primary instrument control parameters are stream flow rates and pulser rate. Key system measurements are interface location, organic SG, column section DP, and static pressure, in order of decreasing importance. Certain columns have instruments measuring product quality and waste loss. Specific radiation monitors, in-line and otherwise, and certain one-of-a-kind continuous analyzers are discussed in Section 6.5.1.4.

9413219.0638

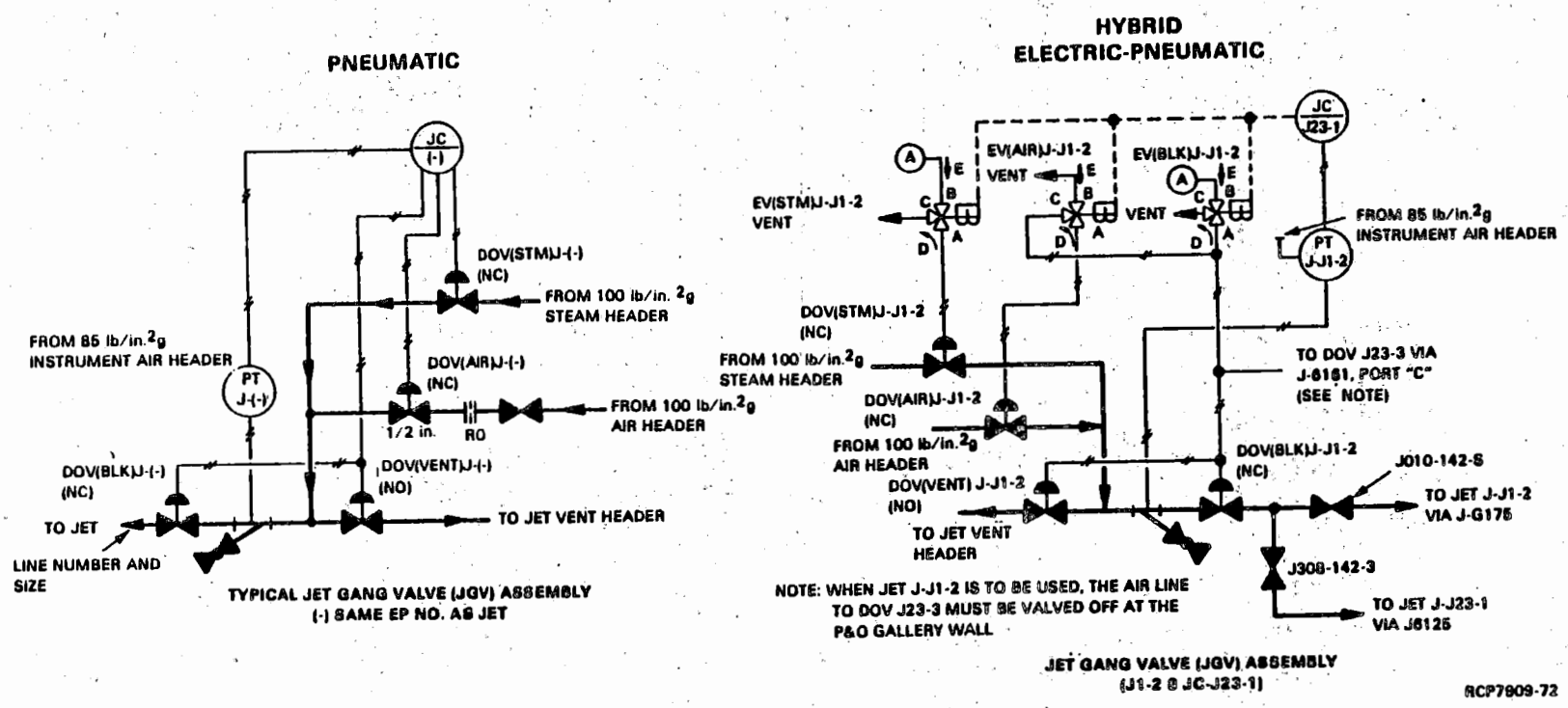


FIGURE 6-50. Detail of Jet Assembly.

9413219.0640

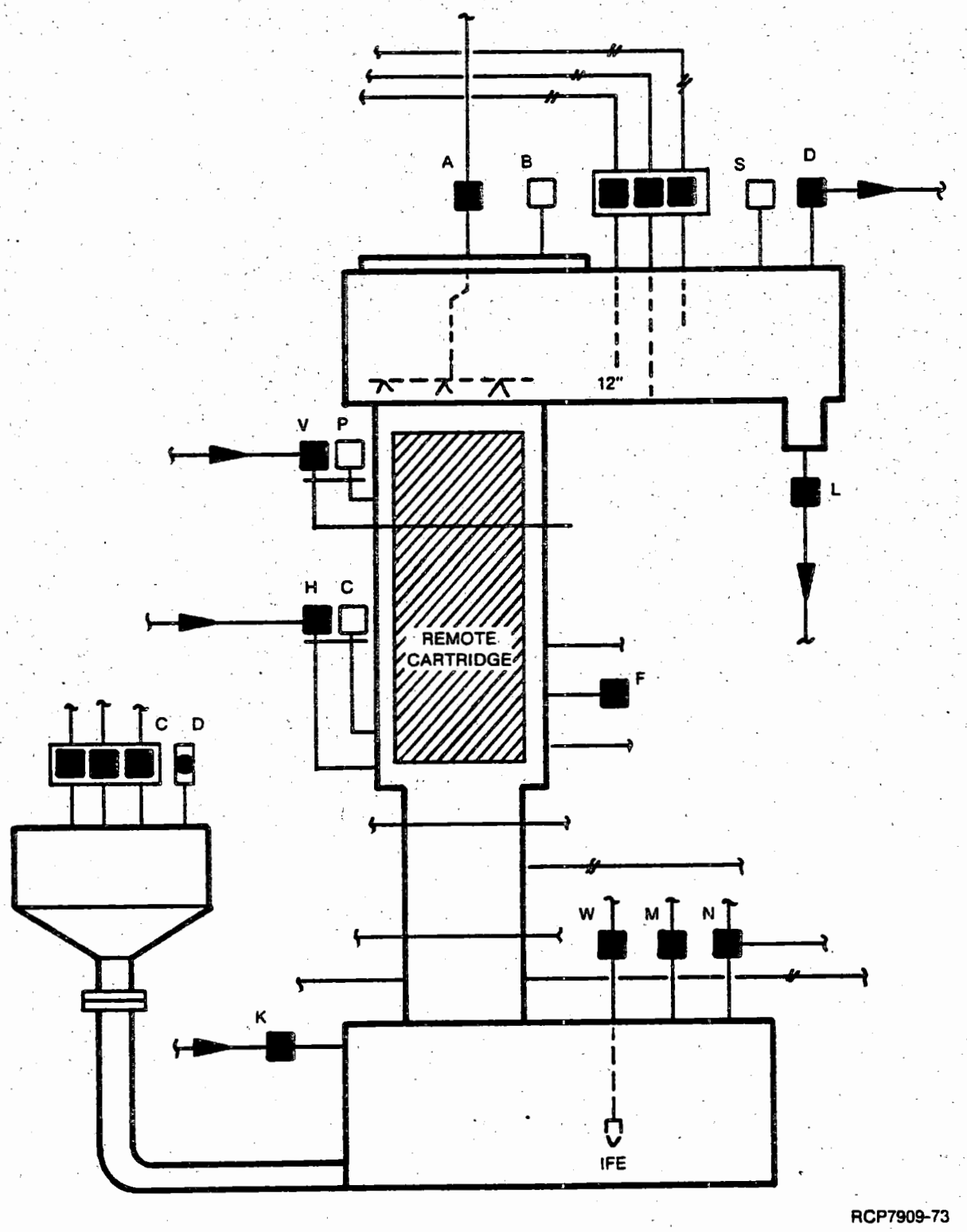


FIGURE 6-51. Typical PUREX "A"-Type Column.

Streams into a column are generally pumped or flow by gravity (either from head tanks, in the case of cold chemicals, or from hydraulic or cascade arrangement, where a stream exiting the top of one column feeds into a second column). Exiting streams either flow to the next process vessel by gravity or are jetted using a variable flow steam-motivated jet. The aqueous bottoms stream flow rate is controlled by the interface measurement system, which in turn feeds back to adjust the position of the DOV in the aqueous stream line. Flow meters were discussed in Section 6.5.1.2.4.

Interface measurement devices may be either purged dip tube or float type (Section 6.5.1.2). These are located in a disengaging section of the columns (see Table 6-15); the readings are not greatly affected by the action of the pulsers.

Pulsing action has more of an effect on column static and DP readings. The cyclic action from column pulsing can be effectively damped out; however, the absolute reading is also affected by pulse frequency. Still, these instruments do indicate trends and provide a qualitative indication of the degree of dispersed phase holdup, and, in conjunction with the solvent SG measured in the top disengaging section, also give some indication of the degree of solvent saturation. This is primarily true for columns containing uranium.

6.5.1.3.3 Typical Concentrator. Typical control systems for a PUREX thermal syphon reboiler with an organic stripping tower are shown in Figure 6-52. Although the plutonium stripper and concentrator differ in equipment size and configuration, basic process control instrumentation and parameters measured remain the same.

Concentrator bottoms solution level is measured by a standard purge-type WF. Redundant measurements are made: the total liquid level and an intermediate measurement. Temperature and SG instrumentation is similar to those previously discussed.

- Steam Pressure Control

  The steam supply to each tube bundle is controlled within a specific pressure range (see Table 6-27). The lower pressure limit is set to preclude radioactive liquid being drawn into the steam chest via a leak, and the upper limit is set to prevent possible red oil detonation. When the chest pressure drops below the reset limit, an electrical interlock is actuated which closes the steam supply valve and opens an air supply valve, pressurizing the tube bundle with air. Another interlock produces the same result if the high steam pressure limit is exceeded. This latter interlock is redundant to the pressure throttling valve, which is preset so that the steam pressure to the tube bundle is always less than the limit, and is redundant to the steam supply pressure vent valve, which is also preset to "blow" if the pressure exceeds the limit.

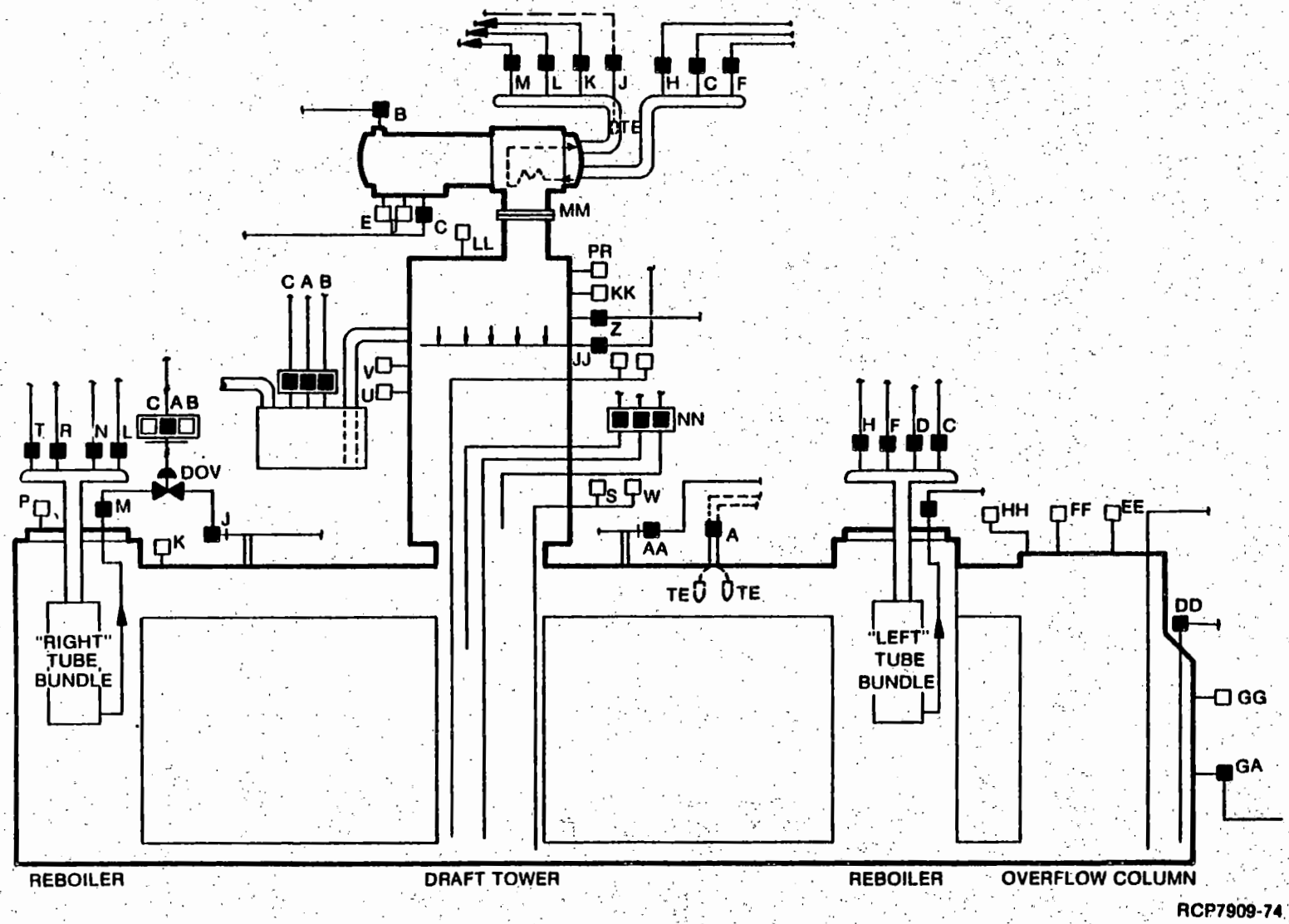


FIGURE 6-52. Typical PUREX Reboiler with an Original Organic Stripper Tower.

- Liquid Level Control

  Both high and low liquid levels in the concentrator actuate respective alarms. The low-level alarm actuates an interlock, shutting off the steam supply to both tube bundles and turns on the air supply to maintain tube bundle pressure. The high liquid level alarm alerts the operator to the possibility of the solution reaching the offgas deentraining baffles and, hence, decreasing deentrainment effectiveness.

- High-Temperature Alarm

  The temperature measurement and steam control systems are interlocked so that at a preset, high-temperature limit an alarm is actuated, the steam supply to the tube bundles is shut off, and the tube bundles are pressurized with air.

- Specific Gravity

  The concentrator is instrumented to permit automatic steam control by the SG controller output signal. The SG controller may be operated in either the automatic or manual mode.

6.5.1.3.4 Typical Dissolver Control System (Typical of Three). The basic dissolver operating parameters, solution temperature, liquid level and density, and vapor space pressure (slightly negative) are all measured, recorded, and have associated alarms. Alarms are panel-mounted lights with associated annunciation. Alarm levels are established by engineering review and require formal documentation for setpoint changes.

The steam flow control system for the dissolver coil is similar to that discussed for concentrators. When activated, the low-coil-pressure interlock shuts off the steam flow and turns on the coil air supply.

The dissolver programmer is a protective, management-controlled, interlocking, key-actuated switch system that restricts transfers and additions of materials to the dissolver system.

The six locking positions of the switch, and a list of the 12 contacts that will be actuated by each switch position, are listed in Table 6-29.

The first position is for dissolving of zirconium cladding. In the first position, contacts 1 and 10 will be activated. Contact 1 allows the addition of AFAN to the dissolver. Contact 10 allows the jetting of decladding solution from the dissolver to TK-D2.

TABLE 6-29. Programmer Switch Position and Contacts Activated.

| Sequence | SS-C3-40 position | Programmer switch SS-C-40 section | | | | | | | | | | | |
|---|---|---|---|---|---|---|---|---|---|---|---|---|---|
| | | 1 | 2 | 3 | 4 | 5 | 6 | 7 | 8 | 9 | 10 | 11 | 12 |
| Zr declad | 1 | * | | | | | | | | | * | | |
| Metathesis | 2 | | | | | | * | * | * | | * | | |
| U dissolution of Zr clad | 3 | | * | | * | | | | | * | | | |
| Al declad | 4 | | | * | | * | | | | | * | | |
| U dissolution of Al clad | 5 | | | | * | | | * | * | * | | | |
| Off | 6 | | | | | | | | | | | | |

*Indicates section contact closed.

The second position of the programmer is for metathesis, and contacts 6, 7, 8, and 10 will be activated. Contact 6 allows the addition of potassium hydroxide to the dissolver. Contact 7 allows the activation of the jet for transferring the dissolver solution to TK-D1. Contact 8 allows the activation of jet J-D1-2, which allows jetting from TK-D1 back to the dissolver. Contact 10 allows the jetting of the solution in the dissolver to TK-D2.

The third position of the programmer switch is for uranium dissolution of zirconium-clad fuel. The contacts activated in this case are 2, 4, and 9. Contact 2 allows the addition of ANN to the dissolver. Contact 4 allows the addition of $HNO_3$ to the dissolver system. Contact 9 allows the jetting of the solution in the dissolver to the metal solution tank by jet J-C3-3 if the SG is greater than or equal to 1.4 or if the WF is less than or equal to 19 in. WG for the solution.

The fourth position of the programmer switch is for aluminum decladding. The contacts activated are 3, 5, and 10. Contact 3 allows the addition of sodium nitrate to the dissolver system. Contact 5 allows the addition of sodium hydroxide. Contact 10 allows the jetting of decladding solution from the dissolver to tank TK-D2.

The fifth active position of the programmer was, and could be, used for uranium dissolution of aluminum-clad fuel. In this case, the contacts activated are 4, 7, 8, and 9. Contact 4 allows addition of nitric acid to the dissolver system. Contact 7 allows the jetting of solution from dissolver to TK-D1 by jet J-C3-1. Contact 8 allows the jetting of solution from tank TK-D1 to the dissolver system. Contact 9 allows the jetting of dissolver solution to metal solution tank by Jet J-C3-3.

The final position (6) is the off position of the switch with no contacts activated.

The programmer switch activates electrical contacts in a wiring circuit, controlling chemical addition valves and jet transfer switches so that only the additions and transfers appropriate for the one particular dissolving step can be done. Administrative controls require that the supervisor or specialist examine the run sheet and recording charts on the board to be sure that the next step is ready to begin before unlocking and repositioning the switch. The dissolver operator still has to activate the jet switch or chemical addition valve switch (another electrical contact) at the appropriate time in the dissolving cycle. Failure of the programmer (which has never been a problem) would mean that the dissolver operator could not make an appropriate addition or transfer (or could make an inappropriate addition or transfer, but the operator would not attempt it except by error).

The programmer system has an important effect on criticality prevention. The occurrence of a criticality requires that: (1) the dissolution must proceed too far, and (2) precipitating agents such as fluoride and hydroxide must be introduced. The programmer system prevents the second error from happening.

This programmer, in conjunction with the proper procedural steps, also reduces the risk of accumulating plutonium in the first decladding waste tank. It also restricts the mixing of incompatible chemicals in the dissolver. The consequences of such an occurrence include precipitation, possible line plugging, excessive corrosion to the dissolvers, and/or dispersion of materials within the cell from an overly vigorous chemical reaction.

6.5.1.4 Process Monitors. Monitors are installed in key locations in the process to supplement process sample laboratory analyses. The monitors provide instantaneous readout of specific process parameters, permitting rapid process control response during transient conditions, such as start-ups and shutdowns, as well as rapid application of corrective actions to abnormal conditions.

Monitors, for the most part, are installed at the process sampling stations located in the sample gallery. A few monitors, such as the neutron sensors, are installed in the remote process cells. Most of the electronic components (with the exception of the preamplifiers) for the monitors are located in the in-line monitor room, which is a contamination-free, air-conditioned room located in the service portion of 202-A on the same level as the sample gallery. The preamplifiers are located as close to the sensors as possible.

The output from the monitors is printed on stripchart recorders in the control room. High-level alarms, both audible and visual, are provided.

Sensing heads and sample cells in contact with process solutions are fabricated of materials easily decontaminated to preclude buildup of residual background activity. Where necessary, special electrical cables have been installed to minimize interference with electrical signals.

System monitoring is schematically shown in Figures 6-53 through 6-55.

6.5.1.4.1 Hydrogen and Ammonia Monitors. Hydrogen and ammonia concentrations in each DOG stream are monitored by Beckman Model 7C Thermal Conductivity Analyzers and Beckman Model 865 Non-Dispersive Infrared Analyzers, respectively. Each analyzer is contained in an explosion-proof housing. These systems are shown in Figure 6-56.

The thermal conductivity analyzer uses an internal regulated power source to heat sample and reference (nitrogen gas) temperature-sensitive resistive filaments which are electrically connected as legs of a Wheatstone bridge. The bridge is balanced initially with a standard gas sample. Thereafter, a signal is generated and recorded that is proportional to the hydrogen content of the sample gas.(8)

The infrared analyzer also contains nitrogen gas as a reference non-absorbing background gas. Infrared beams are passed through both the reference cell and the sample cell where the amount of radiation absorbed is proportional to the ammonia concentration. The detector converts the resulting energy difference between the cells to a capacitance charge equivalent to the ammonia concentration that is amplified, indicated on a meter, and used to drive a monitor.(9)

Normal operation requires periodic calibration using standard gas samples.

The analyzers are used only during decladding and are shut off during the other dissolver operations. Should the hydrogen system remain operating during acid dissolution, the corrosive oxides of nitrogen would eventually destroy the heated filaments in the analyzer cells.

6.5.1.4.2 Nitric Acid Conductivity Monitors. Both electrodeless conductivity monitors and probe-type monitors are used to measure nitric acid concentrations of certain process streams.(27) The probe-type conductivity monitor is common technology. The electrodeless conductivity monitor consists of an electrically nonconducting pipe upon which two toroidal transformers are placed. One transformer is electrically charged, the other is a receiver. Process solution, containing electrolytes, flowing through the pipe forms part of the coupling electrical circuit between the two transformers. Variation in the electrolyte concentration causes a variation in the induced voltage of the receiver transformer. The electrical output of the receiver transformer, after appropriate amplification, provides an electrical signal corresponding to the solution conductivity.

Conductivity monitor signals are recorded, with calibration being done from laboratory analysis of process samples.



9913219.0646

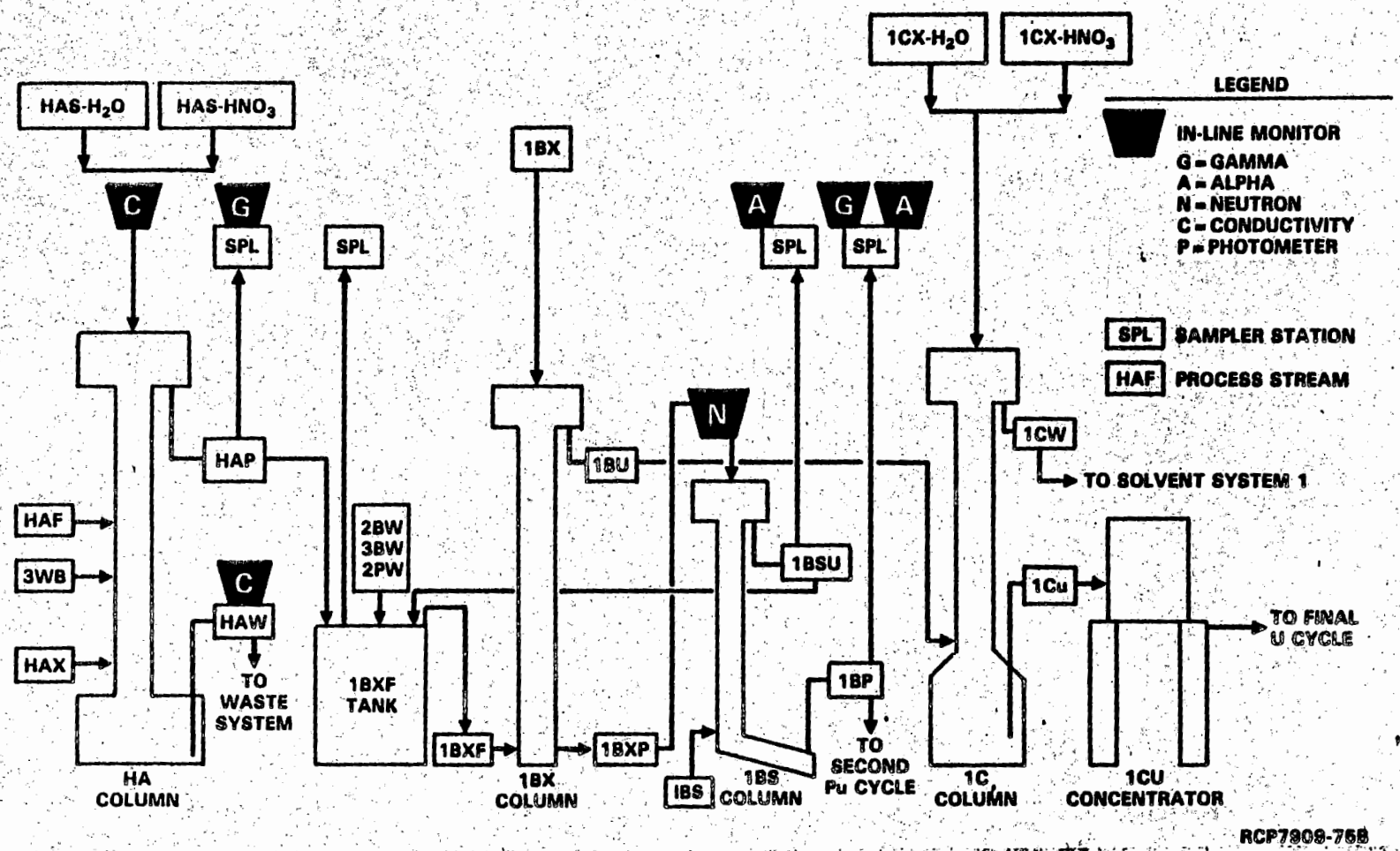


FIGURE 6-53. First Decontamination and Partition System--In-Line Monitors.

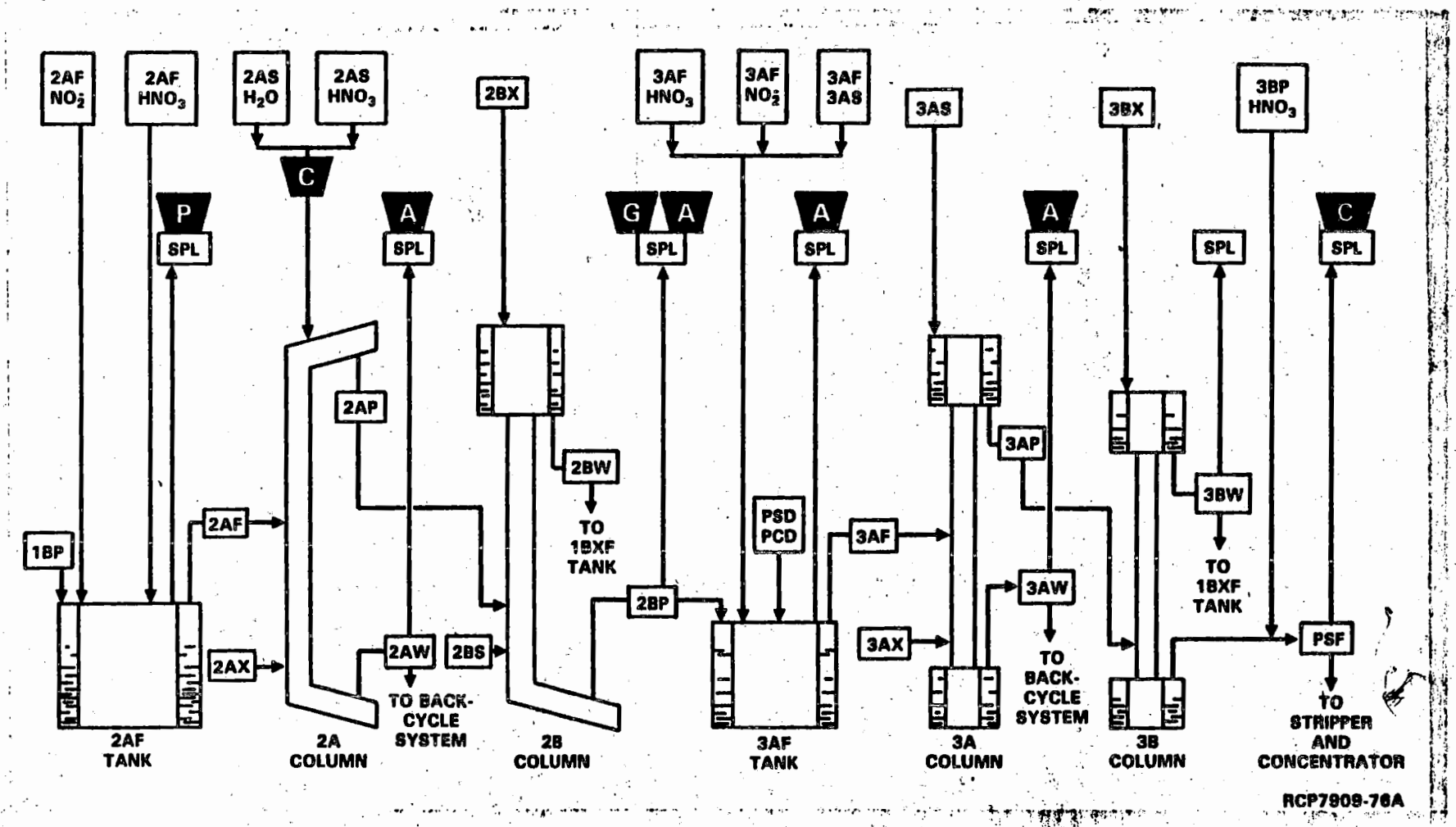


FIGURE 6-54. Second and Third Plutonium Systems--In-Line Monitors.

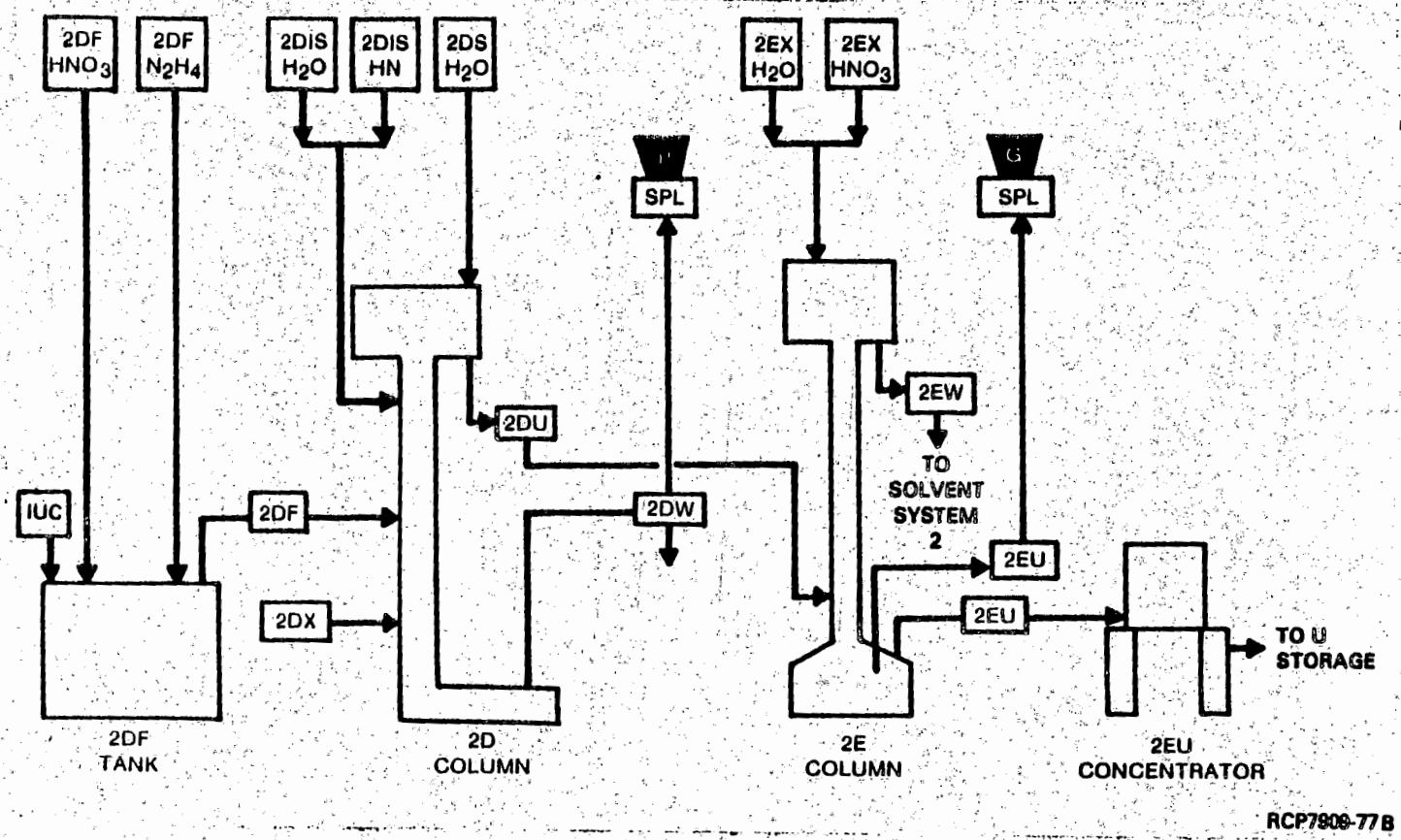


FIGURE 6-55. Final Uranium System--In-Line Monitors.

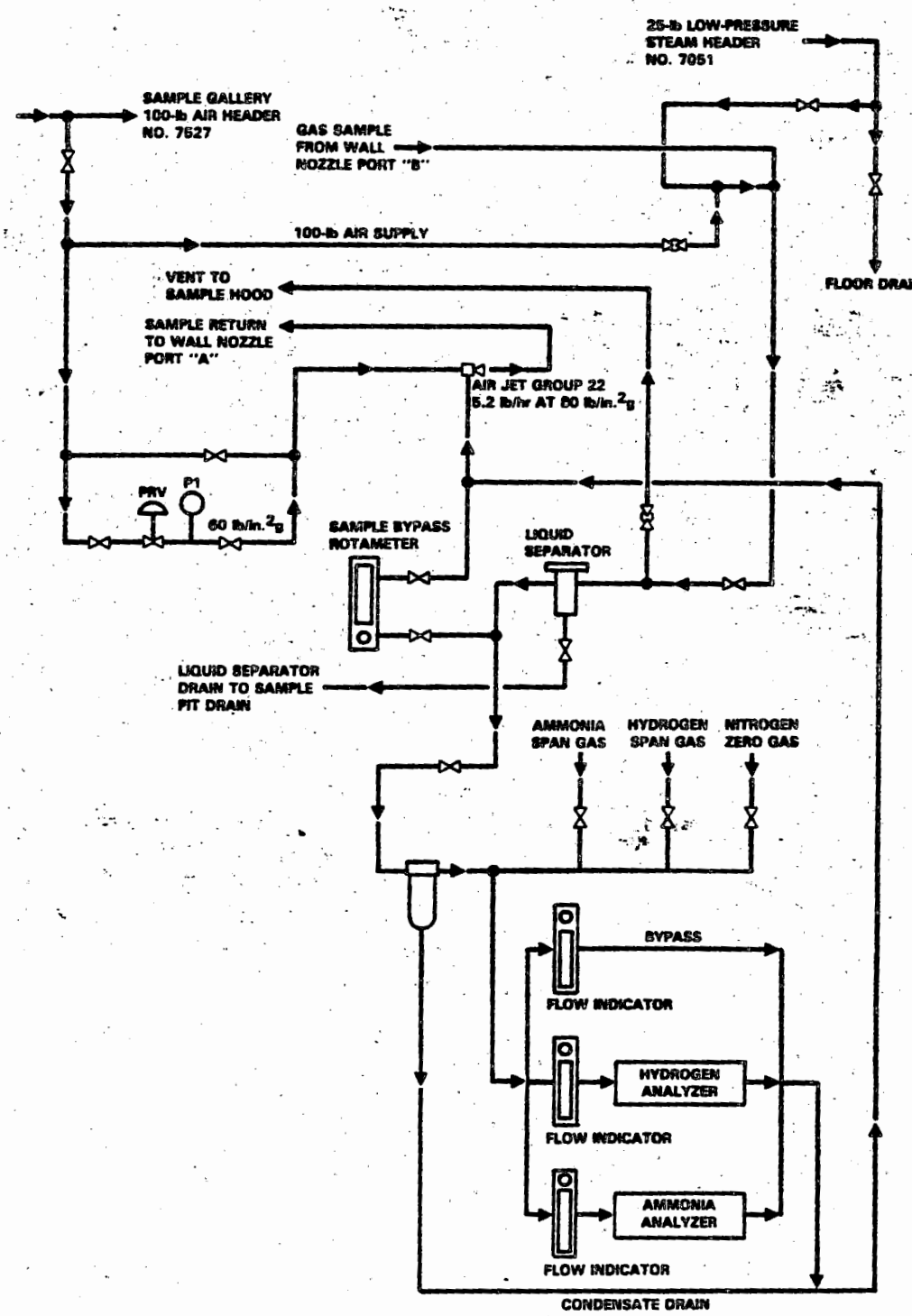


FIGURE 6-56. Hydrogen-Ammonia Gas Monitor System.

6.5.1.4.3 Photometric Monitors. A photometer measures the uranium concentration in the aqueous waste stream (2DW) from the second uranium cycle extraction column. This, in conjunction with periodic sampling of the process stream, permits close control of the uranium recycle to the codecontamination and partitioning cycle via the backcycle waste, as well as close control of the high uranium saturation in the extraction column. The photometer is calibrated to zero by using a filter to give a light wavelength not absorbed by the uranium present in the stream. Monitor range checks are made by routine comparison with laboratory analysis of process solution.

Total solution nitrite in the plutonium oxidation tank (the 2AF or TK-J5) is measured indirectly by measuring light absorption attributable to the nitrogen dioxide component of air in equilibrium with a solution containing nitric acid and sodium nitrite. The system is further described in Reference 27 and illustrated in Figure 6-57. Calibration is maintained by measurement of air and by comparing monitor results with laboratory sample analysis.

6.5.1.4.4 In-line Radiation Monitors. A typical in-line gamma and alpha monitor installation is shown in Figures 6-58 and 6-59 (schematic and detail, respectively). Gamma monitors for process solution streams are designed to measure relative $^{95}$Zr-Nb and $^{106}$Ru-Rh concentrations in process streams and, hence, to permit a semiquantitative assessment of FP decontamination throughout the process. The monitors are particularly critical for control during transient conditions such as startup or shutdown due to the time lag associated with sampling and laboratory analytical work. A monitor consists of a thallium-activated, sodium iodide crystal coupled to a photomultiplier tube. The sensor is mounted in a sample cell contained in a lead chamber for shielding. The device counts all gamma energies above 0.45 MeV. This permits discriminating against $^{239}$Pu.

Gamma monitors with single-channel analyzers are used to monitor $^{131}$I in DOG. The analyzer is set to measure 0.344 to 0.384 MeV, which centers the $^{131}$I gamma emission of 0.364 MeV.

A gamma monitor with single-channel analyzer is used to measure the neptunium in the effluent from the neptunium anion exchange column (inactive). The analyzer is set to scan the 0 to 0.5 MeV range. This monitor permits close control of the neptunium elution, particularly in distinguishing between the high-impurity forecut and the pure product and, hence, enabling the operator to properly switch the effluent flow to the product receiver tank.

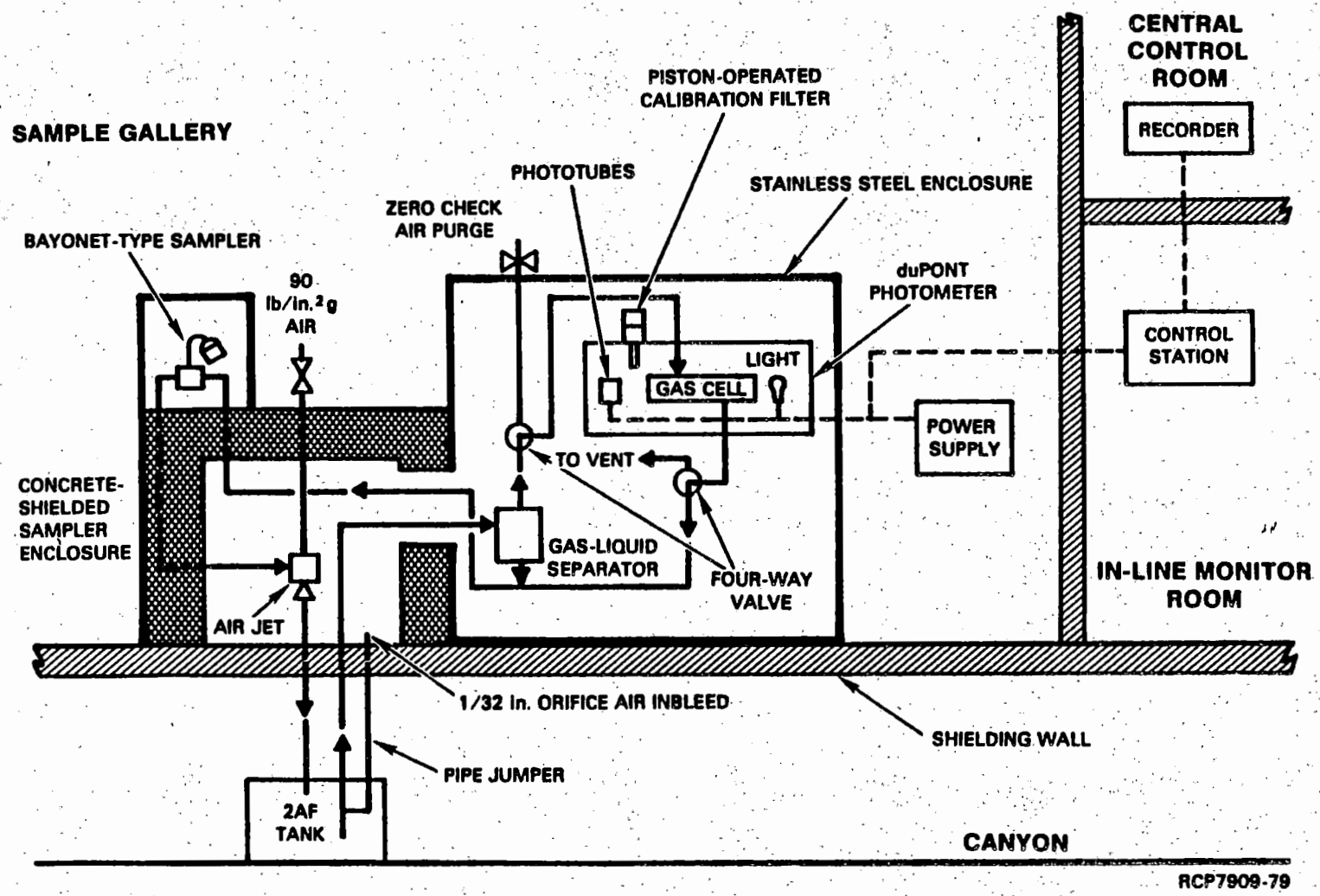


FIGURE 6-57. Nitrite Monitor System.

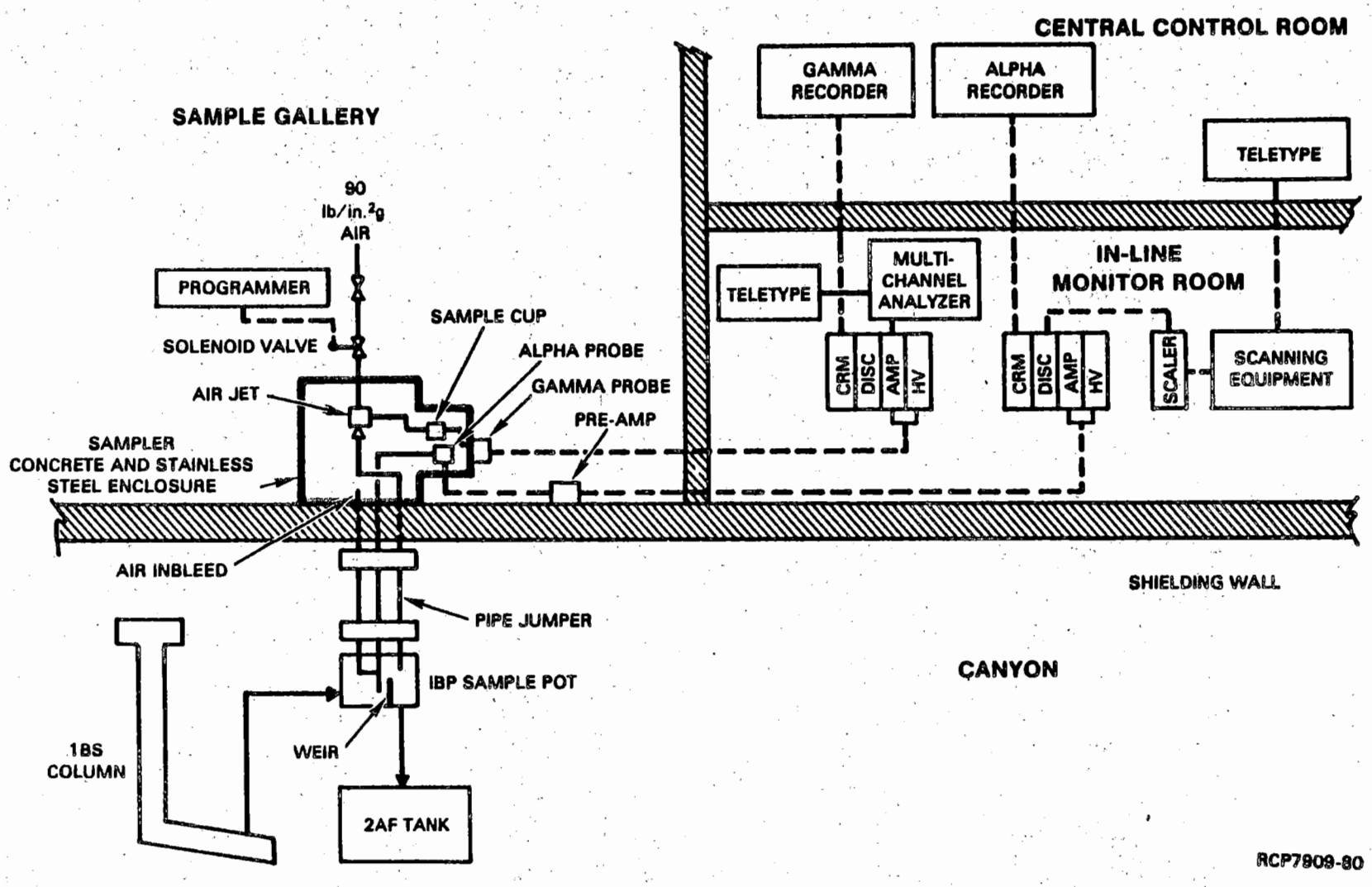


FIGURE 6-58. Schematic of Gamma and Alpha Monitor System.

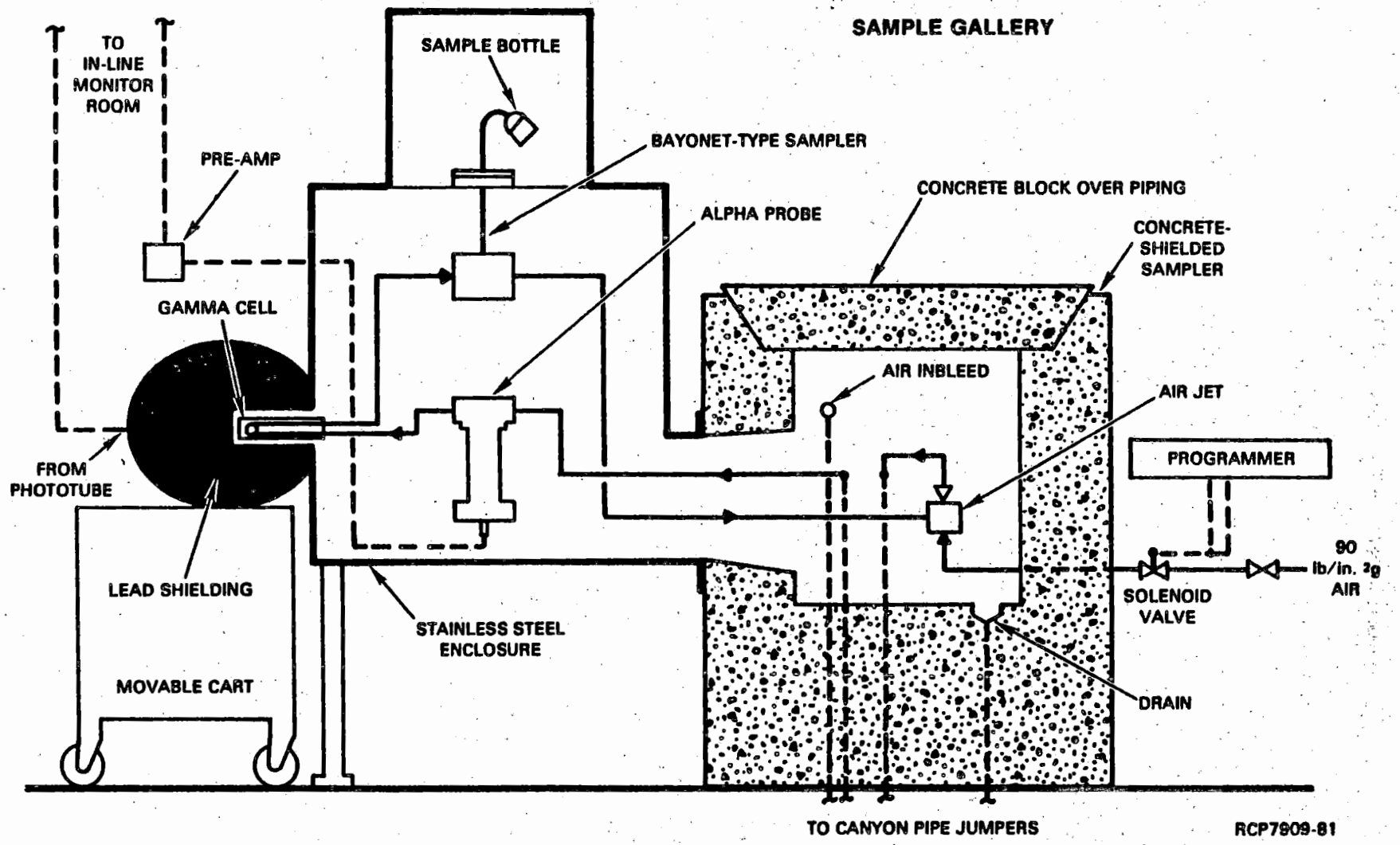


FIGURE 6-59. Gamma and Alpha In-Line Monitors--Sample Stations.

Alpha monitors are used to measure plutonium concentrations in several process streams. Each consists of a cell enclosing a scintillator. The scintillator is a glass disc with a cerium-activated surface. The glass crystal is in contact with the process solution. The alpha monitors are used to control plutonium recycle to the backcycle waste system via aqueous waste streams from the second and third plutonium purification cycles. The alpha monitors are also used to monitor plutonium product stream concentrations in the plutonium purification cycles. The calibration of the monitors is based upon laboratory results of the current onstream samples. Fuel is processed in distinct campaigns. All fuel processed in a particular campaign is of similar exposure. Upon starting a new campaign, it is necessary to use anticipated monitor calibrations (based upon past campaigns of similar fuels) until laboratory data from current samples can be obtained.

9413219.0655

6.5.1.4.5 Neutron Monitors. Three neutron detector probes are mounted vertically 5 ft apart on the bottom section of the uranium-plutonium partitioning column (1BX, T-J6 column) (Fig. 6-60). This installation provides a continuous, instantaneous indication of the plutonium profile, allowing prompt response to loss of partitioning or plutonium recycle within the column. A fourth detector probe continuously monitors the plutonium concentration in the 1BXP stream. Neutron monitors (one each) are also mounted on the HAF makeup tank (TK-E6), the 1WF tank (TK-F7), the 1BXF tank (TK-J3), and the backcycle waste concentrate receiver tank (TK-J1) to monitor the plutonium content of these vessels. A neutron source and monitor are also mounted on the cadmium nitrate makeup tank (TK-151) to monitor the cadmium nitrate concentration in the solution used as the motive fluid for jetting highly concentrated plutonium rework solutions to TK-E6.

## 6.5.2 Nitric Acid Recovery System

6.5.2.1 Functional Description. Nitric acid recovery at the PUREX Plant is accomplished in three separate and distinct facilities which together comprise the acid recovery system. Dilute nitric acid is recovered from the DOG in the 293-A backup facility and from the high-level waste in the waste treatment system, and these dilute acid solutions are combined and concentrated to about 50 wt% in the vacuum acid fractionator (206-A).

The oxides of nitrogen generated during uranium fuel dissolution and not absorbed in the downdraft condensers are recovered as dilute nitric acid in the backup facility absorption towers. This dilute acid is transferred batchwise to the acid accumulator vessel in the waste treatment system.

Nitric acid is recovered from the solvent-extraction waste by evaporation and denitration, followed by absorption of the nitric acid vapors and oxides of nitrogen from the offgases.

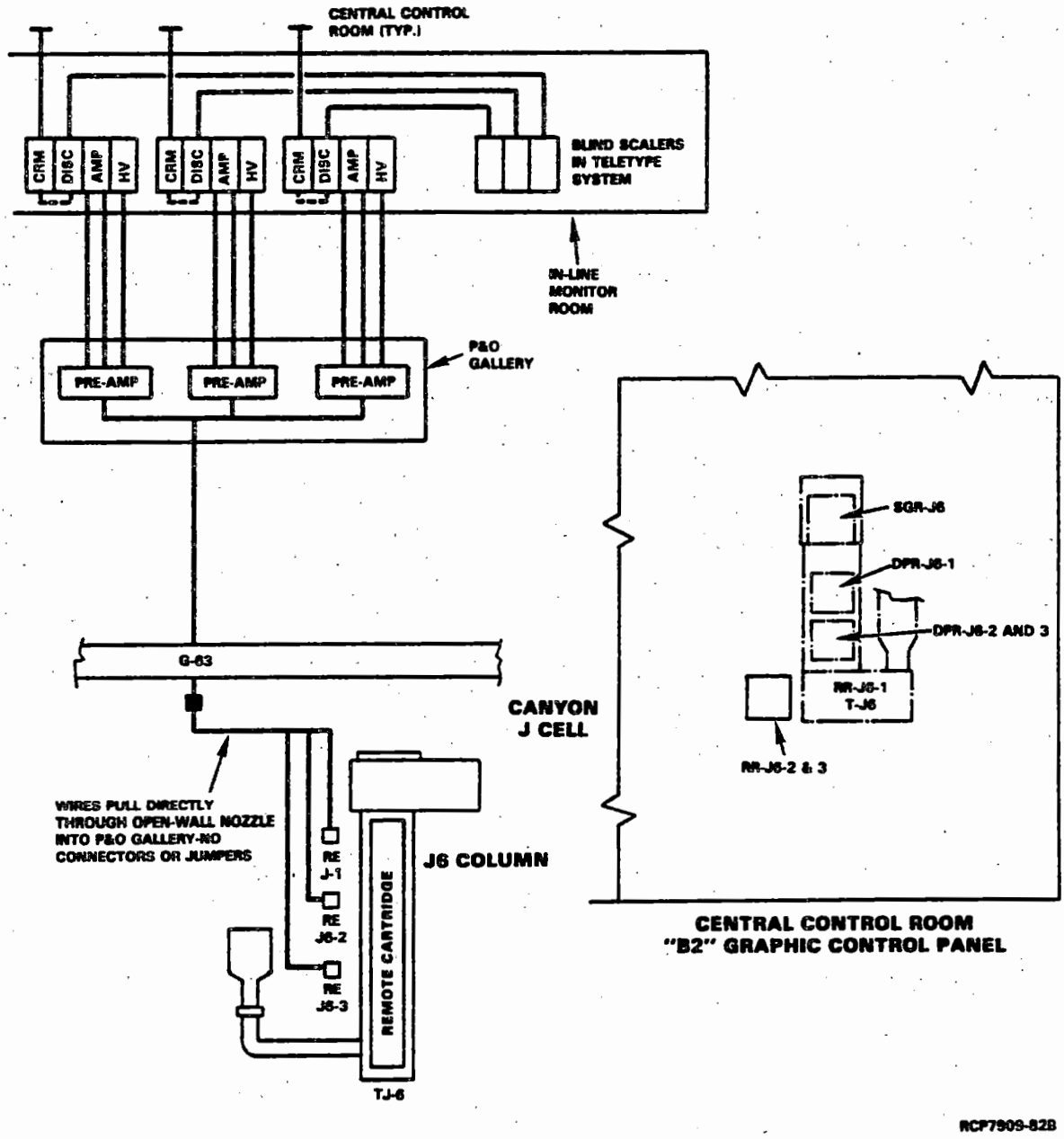


FIGURE 6-60. Neutron Monitors (J6).

Acid is removed from high-level waste by continuous evaporation in the E-F6 concentrator. Feed solution (1WF) is continuously fed to the concentrator, while vapor (AAF) is continuously removed, and liquid (1WW) overflows from the concentrator at a constant rate to produce an acceptable high-level waste concentration. The vapor exiting the concentrator (AAF) passes upward through deentrainment pads, then to the acid absorber (T-F5).

In the acid absorber (T-F5), nitric acid is recovered at a concentration of about 15 wt% by an absorption (enriching) process involving countercurrent contact of the vapors with a reflux stream of water.

The concentrator bottoms stream (1WW) is reacted with sugar to destroy the residual nitric acid and some of the nitrate ion in solution and, thus, reduce the amount of caustic required for pH adjustment. The offgases from the sugar denitration reaction are also routed to the acid absorber, where about 50% of the contained oxides of nitrogen are recovered as nitric acid.

The dilute acid recovered from the waste treatment process is combined with the dilute acid from the backup facility and transferred to the vacuum fractionator facility in 206-A for final concentration to about 50 wt%.

9413219.0657

6.5.2.2 Major Components.

- Dissolver $NO_x$ Recovery Facility

The DOG treatment facility, 293-A or backup facility, is a reinforced concrete structure south of the east portion of the 202-A canyon, as shown in Figure 6-61. The structure houses two absorber columns in cells above grade and two pump tanks in cells below grade. In addition, there is a below-grade room containing valving and piping associated with routing dissolver gas through the two absorber columns and for bypassing the absorbers.

The room also contains the steam jets used to maintain vent vacuum on the respective dissolver. The 293-A facility has its own control room, which serves primarily to house instrument signal transmitters. Instrumentation recorders and other readout instrumentation are located in the headend control room.

Two absorbers (T-XA and T-XB) for recovering nitric acid are located in the 293-A building. The XA absorber, shown in Figure 6-62, is a 6-ft-diameter by 22-ft-high column containing eight trays. Each of the top five trays holds thirty-three 6-in. bubble-caps, while the bottom three trays contain twenty-seven 6-in. bubble-caps. Bubble-caps are constructed from 6-in.-OD caps with serrated edges set over 4-in.-OD by 2-3/4-in.-high risers. Each tray also has an overflow weir 2-3/4 in. high.

9413219.0659

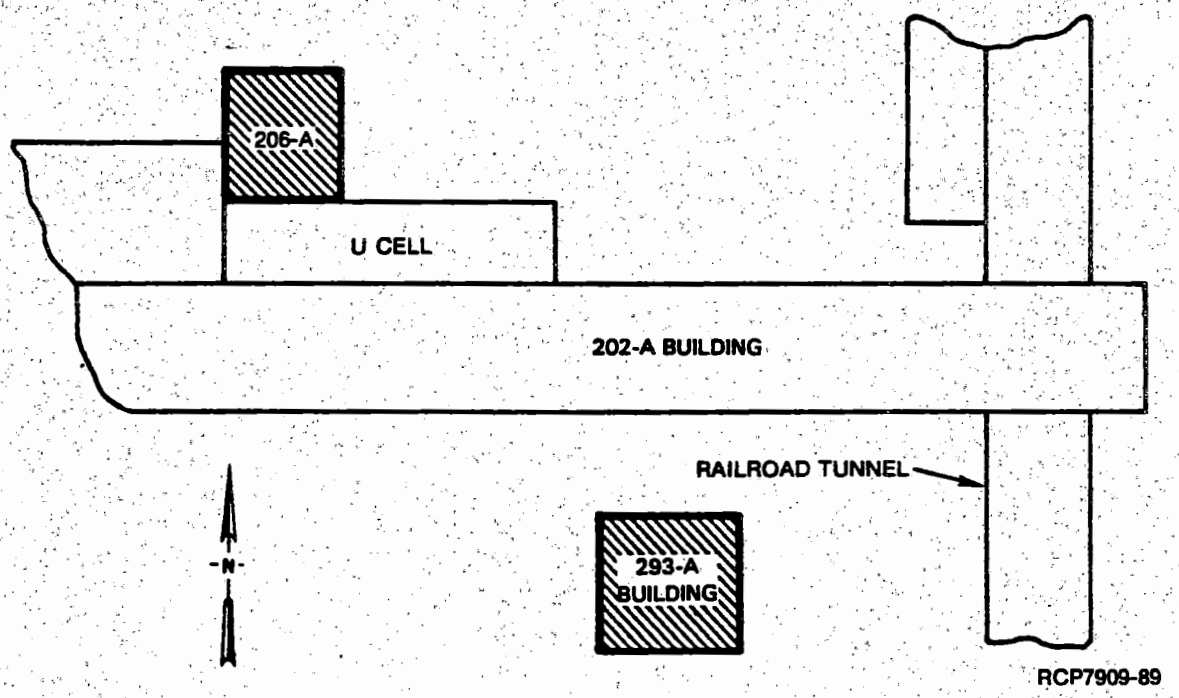


FIGURE 6-61. Location of the 206-A and 293-A Facilities.

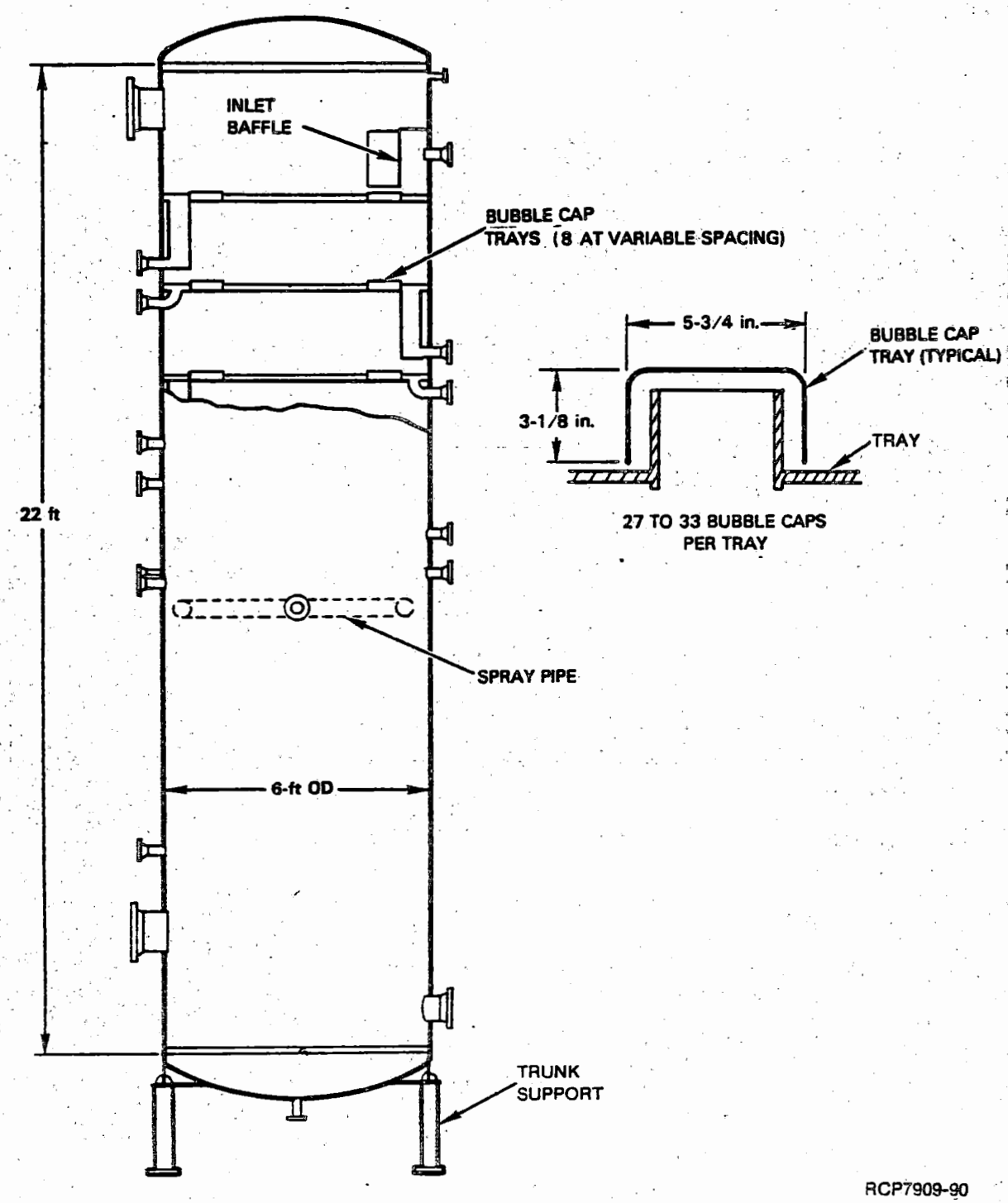


FIGURE 6-62. T-XA Tower.

The XB absorber, as shown in Figure 6-63, is a 4-ft 6-in.-OD by 20-ft-high column with eight trays spaced 2 ft apart. Each tray contains twenty-two 6-in. bubble-caps set on a 4-in.-OD vapor riser, and a 1-1/2-in.-high overflow weir. The XB column is a simple counter-flow absorber with liquid entering at the top and gas at the bottom.

The XA and XB acid absorbers are fabricated from Type 304L, stainless steel and designed for contact maintenance. The design data* used to construct the XA and XB columns follow:

- Design pressures, full of liquid and 1/2 lb/in.$^2$ g vacuum
- Design temperature, 150°F
- SG of contents, 1.2
- Corrosion allowance, 0.06 in.
- Specification, HWS-5776, Revision I.

Tanks XC and XD are 5,000-gal and 3,000-gal capacity, respectively. Each is equipped with two pumps and liquid-level, SG, and temperature instrumentation. Tank XD is equipped with a cooling coil, but the contents of the XC tank are cooled chiefly by the reflux flow heat exchanger before entering the tank.

In the towers, the oxides of nitrogen are contacted with recycled 12 wt% nitric acid and water solution to produce nitric acid. Water is added to the columns at a rate which maintains the acid concentration at about 12 wt%. Hydrogen peroxide is added to oxidize nitrous acid to nitric acid. Solution from the towers are collected in individual tanks, from which the bulk of the solution is recycled back to each tower. The recycled solution provides the cooling capacity necessary to maintain the optimum absorption capacity. One heat exchanger is used to cool the liquid recycled to tray 3 on the XA column and another heat exchanger is used for interstage cooling of the liquid on the top four trays of the XA tower.

Liquid is taken from a plate, cooled, and routed to the next lower plate. Liquid feed points are located at the top of the XA column and between trays three and four. Gas is fed to the bottom of the XA column, exits from the top, and is then routed to the bottom of the XB absorber.

*Drawing H-2-57002.



9113219.0660

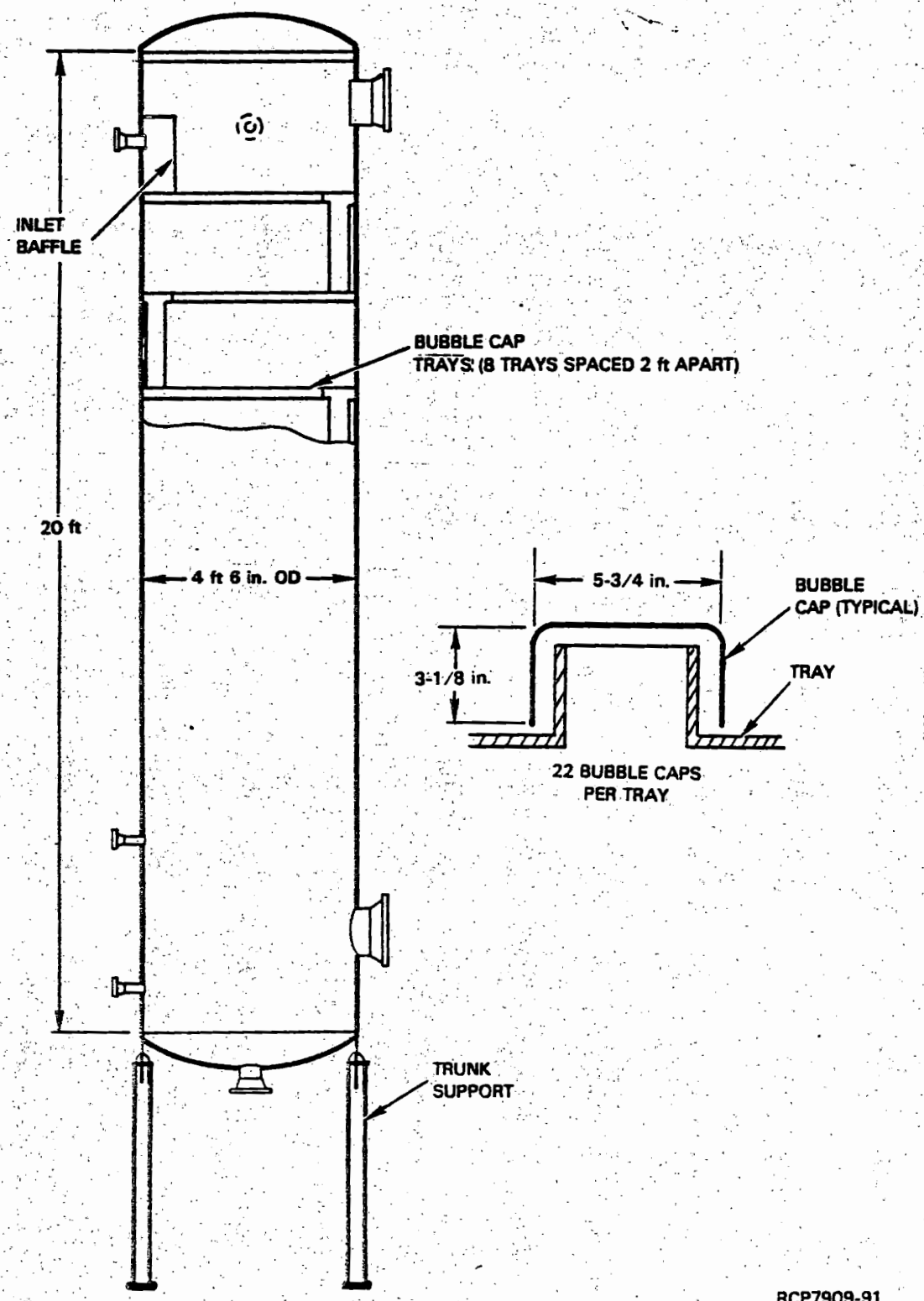


FIGURE 6-63. T-XB Tower.

A liquid bleed stream from the XA acid receiving tank (TK-XC) is sent via TK-F3 and TK-U5 to a vacuum fractionator where the acid is concentrated from 12 wt% to about 50 wt%. Liquid from the XB receiving tank (TK-XD) is sent to the XA receiving tank.

The gas stream leaving the XB tower is sent to the 291-A stack where it mixes with the PUREX building ventilation air and the process ventilation gases before exiting the stack. The oxides of nitrogen emissions will be reduced below the concentration levels permitted by the EPA.[28]

The oxides of nitrogen absorber effluent is not to exceed 2 vol% (dry basis) or 1,160 kg/d of oxides of nitrogen.

The PUREX main stack (291-A-1) is not to exceed 2,250 kg/d or 424 ton/yr of oxides of nitrogen.

- T-F5, Acid Absorber

The acid distilled from the high-level waste and the oxides of nitrogen produced by sugar denitration of the high-level waste are recovered in the T-F5 atmospheric absorber tower (Fig. 6-64).

The absorber is a 20-ft-high tower divided into two sections. The 3-ft 6-in.-diameter lower section, formerly used for fractionation, contains eight trays spaced 12 in. apart. Each tray holds fifty-nine 3-in.-OD bubble-caps set over 2-in.-OD by 2 9/16-in.-high vapor risers, and overflow weirs 1 1/2 in. high.

The upper absorption section of the tower increases in diameter to 10 ft and contains seven trays spaced 12 in. apart. Each tray in the upper section is constructed with 156 5-in.-OD bubble-caps set over 3 1/2-in.-OD by 2 1/4-in.-high vapor risers, and overflow weirs 1 3/4 in. high. Vapor from the waste concentrator enters T-F5 via a 16-in.-diameter line at the bottom of the upper tower section (between trays eight and nine). Absorption water, recycled from the absorber condenser (E-F5), enters the absorber through a nozzle in the top of the tower. Vapor from the absorber leaves the top of the tower through a 16-in.-diameter line.

All parts, excluding external supports, are fabricated of Type 304L, stainless steel.

- Vacuum Fractionator

The fractionator is located in the 206-A structure attached to the north side of the east end of the 202-A building (see Fig. 6-61). The concentrated nitric acid receiver-pump tanks are located in the nearby, below-grade, U cell.

A flow schematic of the vacuum fractionator and associated equipment is shown in Figure 6-65; the acid fractionator (T-U6) is shown in Figure 6-66.



9413219.0662

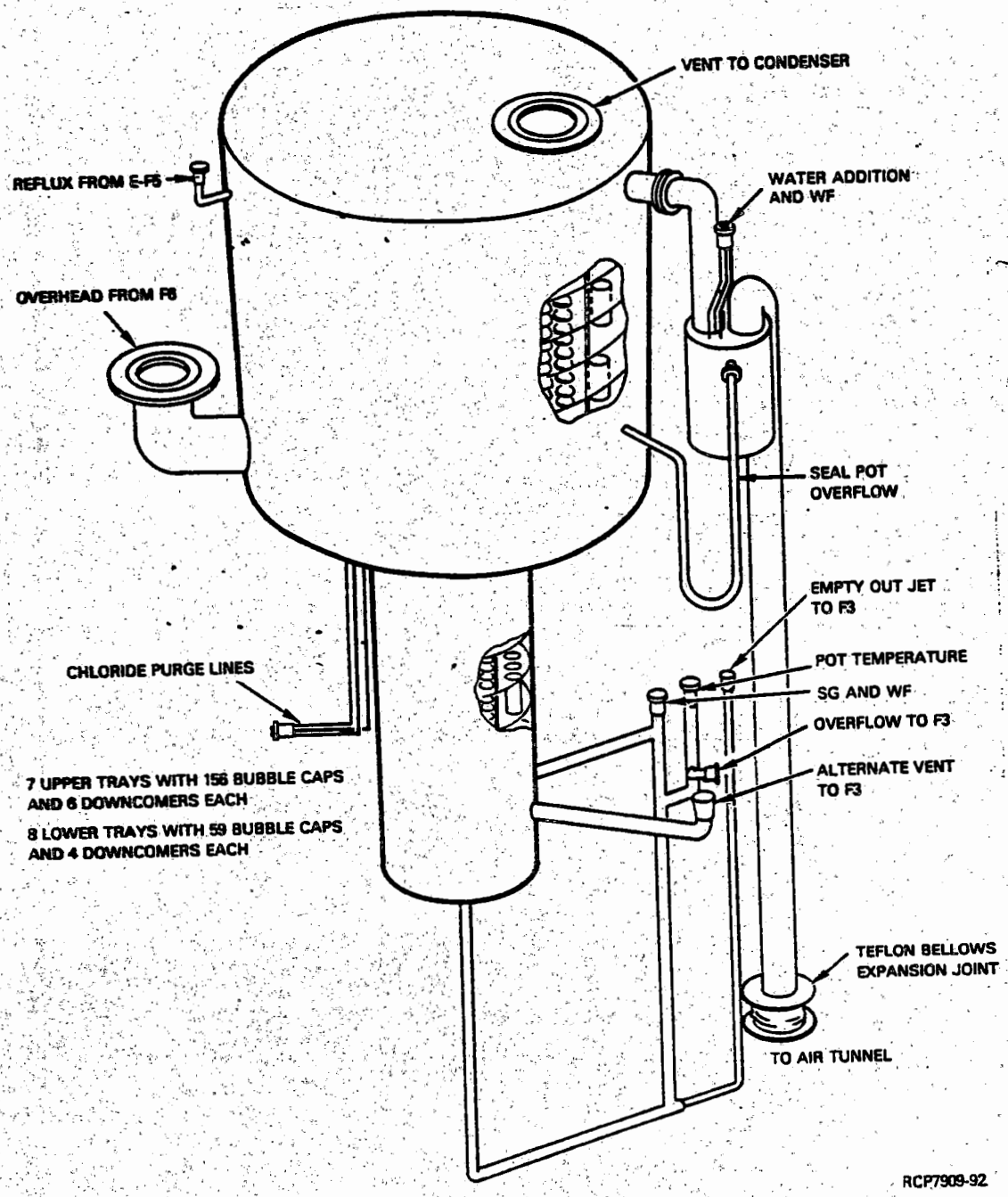


FIGURE 6-64. T-F5 Acid Absorber.

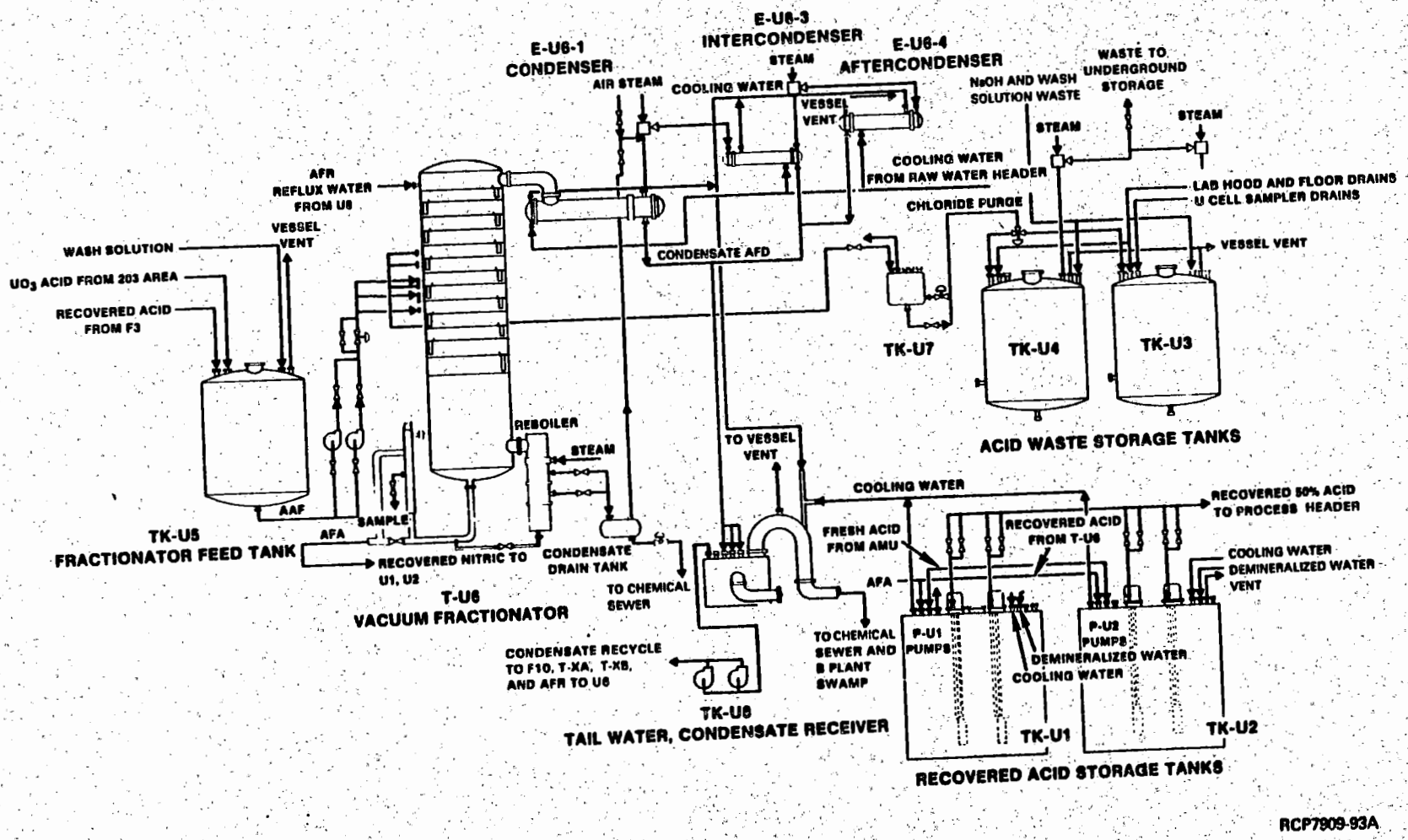


FIGURE 6-65. Fractionator Flow Schematic.

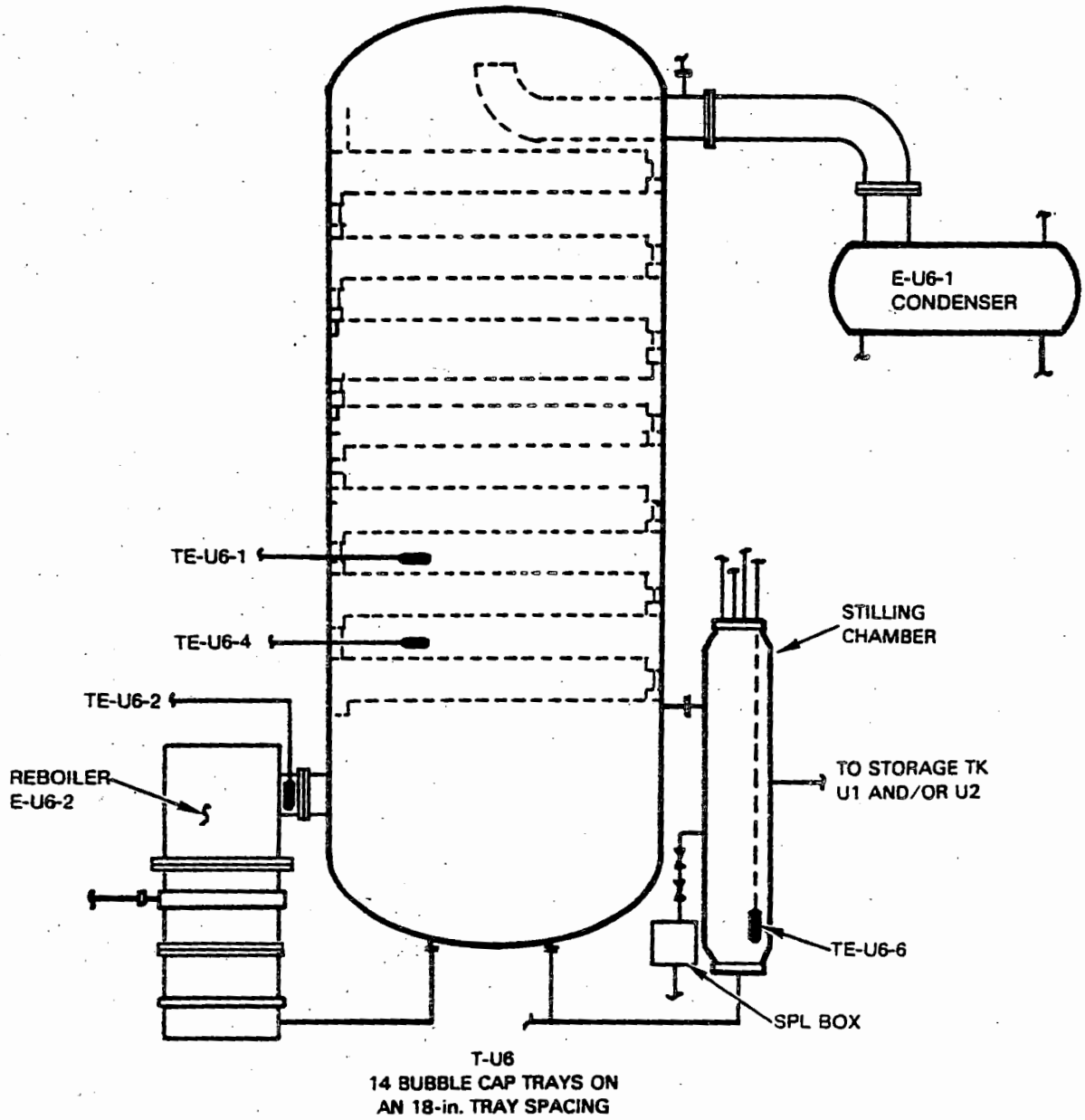


FIGURE 6-66. T-U6 Tower.

The vacuum fractionator consists of an insulated tower, 8-ft-OD and about 35 ft high, fabricated from 3/8-in.-thick plate. The tower is enclosed by dished heads and contains 14 trays spaced 18 in. apart. Each tray has 86 bubble-caps located on an 8-in. equilateral triangular pitch. The bubble-caps are 6 3/4-in.-OD surmounting 4 3/4-in.-OD risers.

The contact maintained fractionator was fabricated from Type 304L, stainless steel. The design data used in the construction of the unit follow:

- Design pressure, full vacuum
- Operating pressure, 100 mm mercury
- DP, 30 to 35 in. WG
- Design temperature, 205°F
- Operating temperature, 125°F (top) and 170°F (bottom)
- Reboiler heat transfer coefficient, 218 Btu/hr-ft$^2$ -°F
- Corrosion allowance, 0.06 in. (all surfaces).

Liquid feed from TK-U5 enters the tower through one of three lines which feed trays 8, 9, and 10, respectively. Liquid leaves the tower via one of two nozzles at the bottom, such that a portion of the liquid turns to the reboiler and the remainder goes to the product tank (TK-U1 or TK-U2).

The reboiler, shown in Figure 6-66, is a vertical, 42-in.-ID, cylindrical vessel. Condensing steam on the outside of 558 1 1/4-in.-OD tubes on a 1 9/16-in. equilateral triangular pitch supplies the heat for fractionation.

Vapor from the reboiler enters the fractionator through a 24-in.-diameter nozzle at the bottom, and vapor leaves the tower to condenser E-U6-1 passing first through a demister and then through a 24-in.-diameter nozzle at the top.

Four drain lines for purging chloride-bearing nitric acid from the fractionator are located under trays 6 to 9, respectively, and exit through the side of the tower. The vacuum fractionator (T-U6) has three condensers (E-U6-1, E-U6-3, and E-U6-4) to handle the offgas. Condenser E-U6-1, in addition to handling offgases, is used for evacuating T-U6 to about 100 mm mercury. This lowers the required temperature and minimizes corrosion of the T-U6 vessel. The three condensers are connected in series with E-U6-1 attached to T-U6 and followed successively by E-U6-3 and E-U6-4. Overhead vapor from the vacuum fractionator is condensed in E-U6-1, while steam from the two-stage jet-vacuum system for the fractionator is condensed in E-U6-3 and E-U6-4.



9913219.0666

Condenser E-U6-1 (see Fig. 6-66) is about 19 ft long and 42 in. in diameter. Fractionator overheads enter the condenser through a 24-in. nozzle near the end of the shell. Inside the shell, the vapors contact a tube bundle containing 1,246 horizontal tubes 3/4 in. in diameter, which carry cooling water. The water makes six passes before it discharges to the cooling water header.

6.5.2.3 Safety Criteria and Assurance. There are no special personnel, process, or criticality hazards associated with operation of the dissolver oxides of nitrogen recovery facility, acid absorbers, vacuum fractionator, or other U cell equipment, with the exception of the laboratory waste receiver tanks (TK-U3 and -U4) and the handling of hydrogen peroxide. The fissile content of the process samples handled in the laboratory during the time required to accumulate a batch of waste in the U3/U4 tanks would not normally exceed the vessel mass limit of 500 g of plutonium. In addition, however, administrative controls restrict the type of waste discharged to those tanks. Chemical hazards of hydrogen peroxide are discussed in Section 5.3.3.3. Adequate protective clothing, handling precautions, and procedures are available to assure safe handling of this material.

As discussed in Section 7.5.1.3.4, the high-level waste sugar denitration process could possibly produce a violent reaction. This reaction could result in pressurization of the vessel or exceed the capacity of the offgas nitric acid scrubbing system.

To prevent uncontrollable evolution of gases, electrical interlocks are used. These interlocks prevent the addition of sugar to the waste denitration tank if the solution temperature is low (92°C) or if the tank is pressurized. Sugar is not added until the plutonium content is determined through sample analysis and found to be less than 500 g.

The process hazard analysis for nitric acid recovery is given in Table 6-30.

6.5.2.4 Operational Control Systems--Recovered Nitric Acid System. The recovered nitric acid concentration is maintained at about 50%. Adjustments are made, as necessary, on the vacuum fractionator operation to assure proper concentration.

Recovered nitric acid is recycled to process dissolvers and streams: HA column scrub (HAS), 1BX column plutonium product (1BXP), 2D column feed (2DF) and concentrated backcycle waste (3WB). The primary limitations on use of recovered nitric acid result from either FP or chemical contaminants. This effectively precludes its use in the third plutonium system and in the cold chemical makeup areas. A summary of the off-standard operating conditions is presented in Table 6-31.

TABLE 6-30. Process Hazard Analysis--Nitric Acid Recovery.

| System or subsystem | Energy (hazard) | Unwanted energy flow (incident) | Consequence (immediate and/or secondary | Barriers (design, administrative, safety devices, etc.) |
|---|---|---|---|---|
| $HNO_3$ recovery | | | | |
| General | F ion ($F^-$) | No ANN to T-F5 | U6 corrosion; equipment damage<br>Activity release to sewer | F analysis of U1 and U2 |
| | $HNO_3$ | Corrosion, ingestion, contact | Equipment failures; personnel injury | 57 wt%; acid suits |
| 293-A dissolving | $NO_x$, $I_2$ | Absorbers offgas emission | Emission from stack | Visual appearance of plume; standard operating procedures |
| | $HNO_3$ | Corrosion, ingestion, contact | Equipment damage; personnel injury | Administrative procedures; acid suits |
| | $H_2O_2$ | Ingestion, contact | Personnel injury | Administrative procedures; acid suits |
| 293-A decladding | $NH_3$ | Bypass valves fail | Ammonia nitrate formed in recovered acid; filter plugging | Vacuum gauge on 293-A; $NH_3$ scrubber |
| Sugar denitration | Vigorous exothermic reaction | Uncontrolled reaction | Pressurization of TK-F15 | Administrative procedures; waste at reaction temperatures before starting; low temperature interlock; controlled addition rate |

TABLE 6-31. Acid Fractionator--Off-Standard Conditions.

| Off-standard condition | How detected | Likely cause | Detection of cause | Remedy |
|---|---|---|---|---|
| Excessive DP | DP instrument readings | Vapor velocity too high | Same as "How detected" | Reduce steam flow to reboiler; reduce feed and reflux addition rate |
| Excessive pressure in tower (unable to maintain 100 mm Hg absolute pressure) | Column vacuum (pressure) instrumentation | Loss of cooling water flow to surface condenser; failure of jet ejector system; above-normal air bleed rate; inadequate steam supply | Flow meter on cooling water stream; sudden change in vacuum or inability to initially draw vacuum; air bleed valve loading pressure; inability to maintain steam flow to reboiler and vacuum simultaneously | Restore cooling water flow to condenser; shut down for maintenance; adjust to proper setting; increase total steam supply to fractionator building |
| Excessive acid in distillate (overheads) | Analysis of the distillate for $HNO_3$ | Low reflux flow rate (AFR); high $HNO_3$ in bottoms | Flow meter on AFR stream; excess steam flow | Increase AFR to proper flow rate; decrease steam flow |
| Low acid concentration in product (bottoms) | SG reading of stilling chamber; analysis of TK-U1 or TK-U2 | Control system failure; feed rate too high (AFF); steam flow rate too low; high reflux-to-feed ratio | Failure of involved instruments; AFF flow meter; reboiler steam flow meter; AFR and AFF flow meters | Repair instruments; decrease feed (AFF) rate; increase steam flow to reboiler; decrease reflux (AFR) rate |
| Excessive corrosion | Corrosion products in TK-U1/U2 samples | Fractionator operating at a higher pressure than normal | Column vacuum instrumentation | Increase vacuum to proper setting |
| $Cl^-$ accumulation (not likely to occur) | Analysis of material on $Cl^-$ purge plates | See "Excessive corrosion" | Same as "How detected" | Purge affected plates |

### 6.5.3 Building Sumps

This section covers building sumps which collect leakage, spillage, and spray water or acid.

6.5.3.1 Major Components. There are four types of process sumps: general canyon sumps, deep sumps (SH and SJ2), plutonium cycle sumps (SLK and SLL), and glovebox sumps.

The general canyon sumps are pits in the cell floors, 24 in. by 24 in. by 18 in. deep. The cell floors slope to the center of the cell to an 8-in.-wide trough which slopes to a second trough; the second trough is perpendicular to the center trough, is 8 in. wide, and drains to the cell sump. The SJ and SK sumps are filled with acid-resistant grout to reduce the depth to 8 in.

The deep sumps (SH and SJ2) are pits in the cell floors, nominally 8 ft by 10 ft by 5 ft deep, installed after the completion of the building construction to accommodate longer solvent extraction columns in the H2 and J2 locations. The deep sumps are separated from the cell floor by a 6-in.-high concrete curb.

The plutonium cycle sumps (SLK and SLL) are in the center of L cell and are separated by the partition wall between the T-L2 and T-L3 positions. The SLK sump is a narrow, 1 1/2-in.-wide trough running longitudinally down the center of the cell, sloped toward the partition. The trough in the SLL sump is filled with stainless steel rods, except for a short length to accommodate WF and solution transfer dip tubes, so that the sump is basically the sloping floor.

The glovebox sumps in the PR room, N cell, and Q cell are the floors of the gloveboxes. The L9, L10, and L11 gloveboxes in the PR room are equipped with drain lines extending into L cell. The plutonium solution loadout head tank (L13) glovebox drains to the SLL sump. The loadout hood sump is equipped with a vacuum transfer line to TK-L11. The loadout hood also has criticality drain to the PR room floor. The N cell solution glovebox sumps are equipped with vacuum transfer lines to TK-L11 and common drains to the SLL sump. The dry gloveboxes are not equipped with drains.

6.5.3.2 Nuclear Criticality Prevention. The safety of the general canyon floor and/or sumps is assured by restricting the mass and concentration of fissile material in the vessels above each sump and by restricting the depth of solution on the canyon floor whenever necessary.

In all cases involving the general sumps, the plutonium concentration above these sumps is limited to an effective concentration of less than 6 g/L. Rework plutonium solution may be sent to TK-E6 at concentrations greater than 6 g/L; however, the plutonium solution must be poisoned with cadmium nitrate so that the equivalent reactivity is less than 6 g plutonium/L. In addition, the material is immediately diluted to less than 6 g plutonium/L upon receipt in TK-E6.

For solutions with a potential plutonium concentration between 3.6 and 6.0 g/L, the solution depth is restricted to 12.6 in. above the sump trough. If a single vessel were to leak solution to the floor and the plutonium precipitated, no criticality would occur. Vessels TK-D3 and -D4 have the largest finite plutonium mass limit of the PUREX vessels (16.5 kg) for material with 3% $^{240}Pu$. If solution in TK-D3/D4 at a concentration of 6 g/L leaked into either a dry sump or a pool 12.6 in. deep and precipitated, it would still be safe as shown in the following.

- TK-D3 Contents Leak into a Dry Sump

  A mass of 16.5 kg of plutonium at a concentration of 6 g/L (the maximum allowable concentration in the tank) is contained in a volume of 730 gal. This would fill the 18-in.-deep SD sump and would cover the D cell floor 0.75 in. deep (18.75 in. total) up the wall. If a precipitating agent were added, this would not cause a criticality, because a 24-in.-square, concrete reflected box requires the equivalent of at least 21 in. of 6 g plutonium/L solution (6.4 in. of 20 g plutonium/L after precipitation). If D3 contained material with 12% $^{240}Pu$ with 3.7M nitric acid, permitting 26.9 kg plutonium to be present, and a similar scenario is considered, the system would be no more reactive. Although the 1,190 gal of 6 g plutonium/L solution would be deeper (about 19.7 in. total), the corresponding critical depth is equivalent to 27 in. of 6 g plutonium/L solution (8.1 in. of 20 g plutonium/L after precipitation).

- TK-D3 Contents Leak into a Pool of Identical Density Solution

  In this case, the TK-D3 solution theoretically remains together as a smaller pool of 6 g/L plutonium solution (spreading and dilution makes it safer). An infinite system with concrete below and water on top requires only 16.8 in. of 6 g/L plutonium (versus about 21.0 in. for the 24-in.-square sump) for criticality to occur upon precipitation. A safe solution depth (75% minimum critical) of 12.6 in. is imposed to protect the facility from this error.

  For the 3.7 g plutonium/L solution, the 75% minimum critical depth, subsequently precipitated to the optimum concentration, is 26 1/4 in. The canyon cells overflow to the adjacent air tunnel at 3/8 in. above the canyon trough (Drawing H-2-58965).

  To exceed this volume in the canyon for any extended period would require an excess of 190,000 gal of solution. Therefore, if no vessel in a cell has greater than 3.7 g/L plutonium concentration, the solution depth restriction is, effectively, removed for that cell. Other than L cell, only J and K cells could have greater than 3.6 g/L. This condition could occur only for abnormal 1BX operation.

If a plutonium-bearing solution leaks from the canyon vessels, the plutonium will normally be retained in solution because of the nitric acid present. However, the acid is gradually neutralized by the alkali present in the structural concrete; therefore, plutonium-bearing solution should not be left indefinitely on the floor.

The PUREX procedures require sump transfers to TK-F18 as soon as practicable. However, each sump transfer to TK-F18 requires foreknowledge of TK-F18 contents (Pu and $HNO_3$ compositions) and analysis after each transfer for safety and accountability. Accordingly, occasions have existed in which solutions remained above the collection sump level for hours. If such a solution is subsequently found to contain significant plutonium, flushing of the floor must be considered. (Conditions of acidity, plutonium valence state/polymer presence, uranium concentration, and canyon location would be weighed during this flushing evaluation.) There is no restriction on the use of water for firefighting for the cells serviced by the general sumps.

9413219.0672

- Deep Sumps (SH and SJ2)

Two 8-ft by 10-ft by 5-ft-deep sumps were constructed to accommomodate the HA and 1A columns (the 1A column was eventually removed and the neptunium solvent extraction package placed over the sump). The SH sump is stainless steel lined with grout filling between the liner and the concrete floor of the cell. The deep sumps are jetted out automatically to the adjacent canyon floor.

Criticality prevention in the deep sumps is dependent upon the vessels above. The HA column contains dilute plutonium mixed with uranium. Leakage of column contents, slowly or not, would not present any criticality hazard because of the presence of uranium with the plutonium and/or the finite plutonium inventory in the column.

The neptunium recovery package (inactive), above the SJ2 sump may also contain a limited mass of plutonium, since it collects neptunium and separates it from any plutonium in the backcycle waste on a continuous basis using a chemical reductant.

Since only about one-third of the 3WB stream flow is routinely routed to the neptunium package, the unusual presence of a significant plutonium concentration entering the package would be observed in J1 sample analyses and acted upon before an unsafe plutonium mass had accumulated in the package. (The neptunium package itself is geometrically favorable, but is restricted to 6 g/L plutonium concentration for sump safety.) There is no restriction on the use of water for firefighting for those cells with deep sumps.

- Plutonium Cycle Sumps (SLK and SLL)

There are three control limits for the SLK or SLL sumps: (1) the maximum concentration of plutonium is limited to 450 g/L; (2) the maximum total mass in any single vessel and the sump below it is limited to 50 kg; and (3) the maximum liquid depth at the edge of the trough is limited to 1 in. when the plutonium concentration is greater than 6 g/L in either a vessel or sump.

When the solution concentrations in the vessels and sump are less than 6 g plutonium/L (based upon sample analyses and no subsequent plutonium addition), the depth is limited by criticality prevention requirements to 12.6 in. The SLK and SLL sumps are connected via the air tunnel at 1 1/4 in. above the lip of the trough of the sump, and the SLL sumps back up into the PR room at 8 7/8 in. above the lip of the trough. This imposes some physical limitation upon sump level, other than criticality. The SLL sump receives process solution not only from the vessels above it, but also from the PR room and N cell gloveboxes. In the case of fire in the cells serviced by the sumps, the quantity of water is restricted, so that the maximum combined volume in sumps SLK and SLL is limited to 5,000 gal (6 in. above the lip of the trough).

- PR Room Sumps

There are three limits for the PR room sumps: (1) the maximum concentration of plutonium is limited to 450 g/L; (2) the combined volume of the SLD sump and TK-L11 above it shall not exceed a safe volume; and (3) the drain or overflow line from the PR room sumps to the canyon must be maintained in freeflowing condition. There are three failures that must occur before a criticality is possible: (1) the sump drain or overflow line would have to be plugged; (2) the combined volume of the sump and associated vessel would have to exceed the safe limit;* and (3) the contents of the vessel would have to drain onto the floor.

The L9, L10, and L13 glovebox sumps (SLF, SLE, and SLB) drain directly to the SLL sump. The TK-L11 hood sump (SLD) must fill to 1 in. prior to overflowing to SLL. This SLD sump, therefore, could collect minor vessel leakage for direct transfer to TK-L11 rather than having to go to SLL and then back to TK-L11. The drain or overflow lines are checked periodically by adding acid to each in the PR room and observing an increase in the SLL WF. A plugged drain or overflow line is an error condition, and personnel do not knowingly add material to the tanks under these conditions.

*The "safe volume" is specified in the criticality prevention specifications.



9413219.0673

The L9 and L10 hood sumps (SLF and SLE) are 19 ft long and 18 in. wide, with a slope of 1 in./8 ft. The safe volume for the sump and associated vessel contents in each hood is 27.7 gal, equivalent to a depth of 2.74 in. at the deepest part of the sump. The maximum volume for TK-L9 is 11 gal and for TK-L10 is 14 gal.

The SLD sump beneath TK-L11 is 98 in. long and 18 in. wide, with a slope of 1 in./8 ft. The safe volume for the sump and associated vessel contents is 25 gal (equivalent to a depth of 3.76 in. in the deepest part of the sump). If the maximum operating volume (18.75 gal) of 450 g plutonium/L solution in TK-L11 were introduced into the SLD sump which had solution already up to the overflow depth (about 1 in.), and if the overflow drain were plugged, the system would still be subcritical ($k_{eff}$ less than 0.95). Administrative controls are in place to operate with the sump below the overflow depth. A solution depth monitor activates alarms in the PR room and the dispatcher's office prior to the overflow depth being reached.

The loadout tank (TK-L13) is in a glovebox that has a sump (SLB) which drains to the canyon sump (SLL) via the same header as the L9 and L10 glovebox sumps. Were the drain to be plugged, the maximum volume which could be added to the SLB sump would be equivalent to TK-L13 volume (2.35 gal). The SLB sump, 2 ft-2 in. by 2 ft, slopes two ways to the drain. The 2.35 gal would be contained in about 1.4 in. of depth, which is well below the maximum safe slab thickness.

As mentioned, the loadout hood, which holds the product container, has a sump similar to SLB; however, the solution entering the sump must be vacuum transferred to TK-L11 rather than draining to SLL, as does SLB. The safety of the sump is comparable to an SLB sump with no drain. The maximum volume of process solution which could be added at one time is 2.35 gal; this would result in a noncritical, 1.4-in. depth. Were additional solution to be added (e.g., an open acid flush line), the solution would overflow at a height of 1-1/2 in. via a 1-in.-diameter side port to a drip pan beneath the hood. The maximum depth of solution in the drip pan prior to overflow would be 2 in. (subcritical or 450 g/L of plutonium).

The use of water for firefighting in the PR room hoods (L9, L11, and L13-10) is restricted, so that not more than 20 gal may be on the floor of the hood.

- M Cell Sump

Tanks TK-M3 through TK-M6, each with a capacity of 210L, are located in the M cell enclosure and are used for storing plutonium nitrate solution. The floor beneath the tanks is lined with stainless steel, which extends 8 in. up the walls. The sump is a 3 in. Schedule 40 stainless steel pipe cap, and contains two liquid level detectors. Sump contents are returned to TK-N30 via vacuum transfer.

- N Cell Sump

The wet processing gloveboxes in N cell are provided with 3-in. Schedule 40 stainless steel pipe cap sumps. Each sump is provided with a single level detector. Sump contents, except those from sumps S-N6, S-N53 and S-N-1C (located in the pipe chase) are returned to TK-N30 via vacuum transfer.

Contents of sumps S-N6 and S-N53 are vacuum transferred to TK-N54 in the N6 glovebox for reprocessing in the oxide rework facility.

Vessels TK-N15, -N16, -N21, and -N22 are filtrate and condensate collection tanks, located in the pipe chase. The plutonium content of these tanks is low, and the probability of leakage is slight, since the tanks are of welded stainless steel construction. The sump return line from S-N1C runs to the N7 glovebox, where it may be connected to the S-N7 sump return line for vacuum transfer to TK-N30.

In the event of a major spill, the N cell wet process gloveboxes are interconnected to an overflow system which returns the contents to the SLL sump.

The M and N cell sump routings are shown on Figure 6-67.

6.5.3.3 Operational Control. All of the cell sumps, except SLL and SLK, are jetted to the waste receiver (TK-F18), where the solution is sampled. If it is low in plutonium and uranium product content, the solution is made alkaline and sent to the underground waste tanks. If the liquid contains organic, it is sent to TK-F13, where the solution is washed. The aqueous phase is routed to either TK-F8 or TK-F18, depending upon the uranium and/or plutonium content, and the organic phase is slowly bled into the organic solvent wash tank (TK-G1).

Aqueous material which cannot be discarded to waste is recovered by either transferring it directly to TK-F8 or by transferring it to TK-F13, where the aqueous material is held and subsequently transferred to TK-F8. The solution in TK-F8 is digested at boiling temperature in 2.0M to 4.0M nitric acid for about 21 d, and is then processed by adding small quantities to feed material batches in TK-E6.

The SLK and SLL sump solutions are normally transferred to the geometrically favorable TK-L11. Also, a routing exists to jet from SLK sump to TK-F18. During a flushing operation, if the sump is low in plutonium content (much less than 6 g Pu/L) as measured by a previous TK-L11 sample, the SLK sump contents can be transferred to TK-F18. A routing also exists to transfer the SLL sump to the SLK sump for transfer to TK-F18.

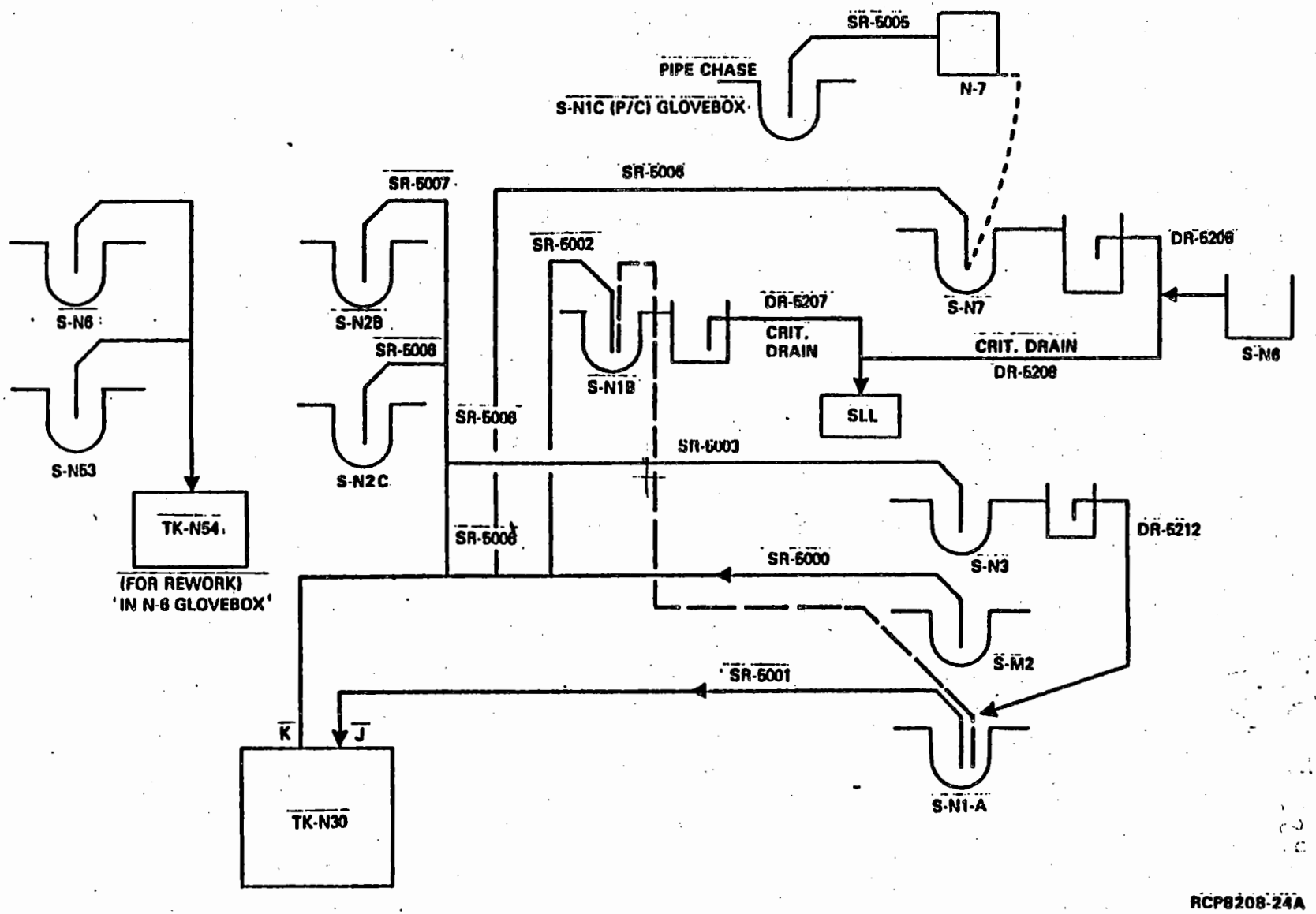


FIGURE 6-67. M and N Cell Sump Routings.

Operational control of the glovebox and hood sumps in the PR room and N cell is comprised of the following elements:

- The liquid levels in the PR room loadout hood and the wet* glovebox sumps in N cell are monitored closely and liquid removed to prevent exceeding the depth limits and/or overflow of plutonium solutions to personnel occupied areas. Monitoring of the SLD (TK-L11) sump is a precautionary measure to prevent exceeding the depth limit in the event the drain to SLL becomes plugged.

- Good housekeeping is practiced in all gloveboxes to maintain the sumps free of solid material that could accumulate plutonium or restrict the drains.

- The combined volume of solution in TK-L11 and the SLD sump is maintained at less than 25 gal.

9413219.0677

### 6.5.4 Utilities and Services

The utilities and services for the PUREX Plant, both externally supplied and internally generated and including the PUREX demineralized and distilled water systems, are discussed in Section 5.4. The process cells are served by drop legs in the P&O gallery from the compressed air, steam, and water headers (discussed previously). Electrical services are routed from motor control centers in the P&O gallery to wall nozzles.

6.5.4.1 Nitric Acid. Fresh nitric acid is received by tank truck and stored in the 211-A tanks. Continuous service is provided for in-line blending via a P&O gallery header from a head tank (TK-222) in the AMU area. A second header supplies intermittent flow for large batch transfers of fresh nitric acid from the 211-A tanks by pumps in the 211-A building.

The PUREX recovered nitric acid is continuously supplied to various cells via an acid header located in the sample gallery. Recovered nitric acid can be replaced with fresh nitric acid by means of interconnections at the various points of supply to process equipment.

Nitric acid recovered at the $UO_3$ Plant is received at PUREX via tank truck and stored in tanks located in the 203-A facility. This acid is blended with the more dilute acid recovered from the backup facility and the waste concentration step and then concentrated to 10.4M (50 wt%) in the acid fractionator. In addition, the $UO_3$ acid can be used directly in the process via a separate header system in the P&O gallery. Fresh nitric acid may be added directly to the recovered nitric acid storage tanks to maintain acid inventory.

A schematic of the three acid systems is given in Figure 6-68.

---

*Those gloveboxes which contain process solutions.

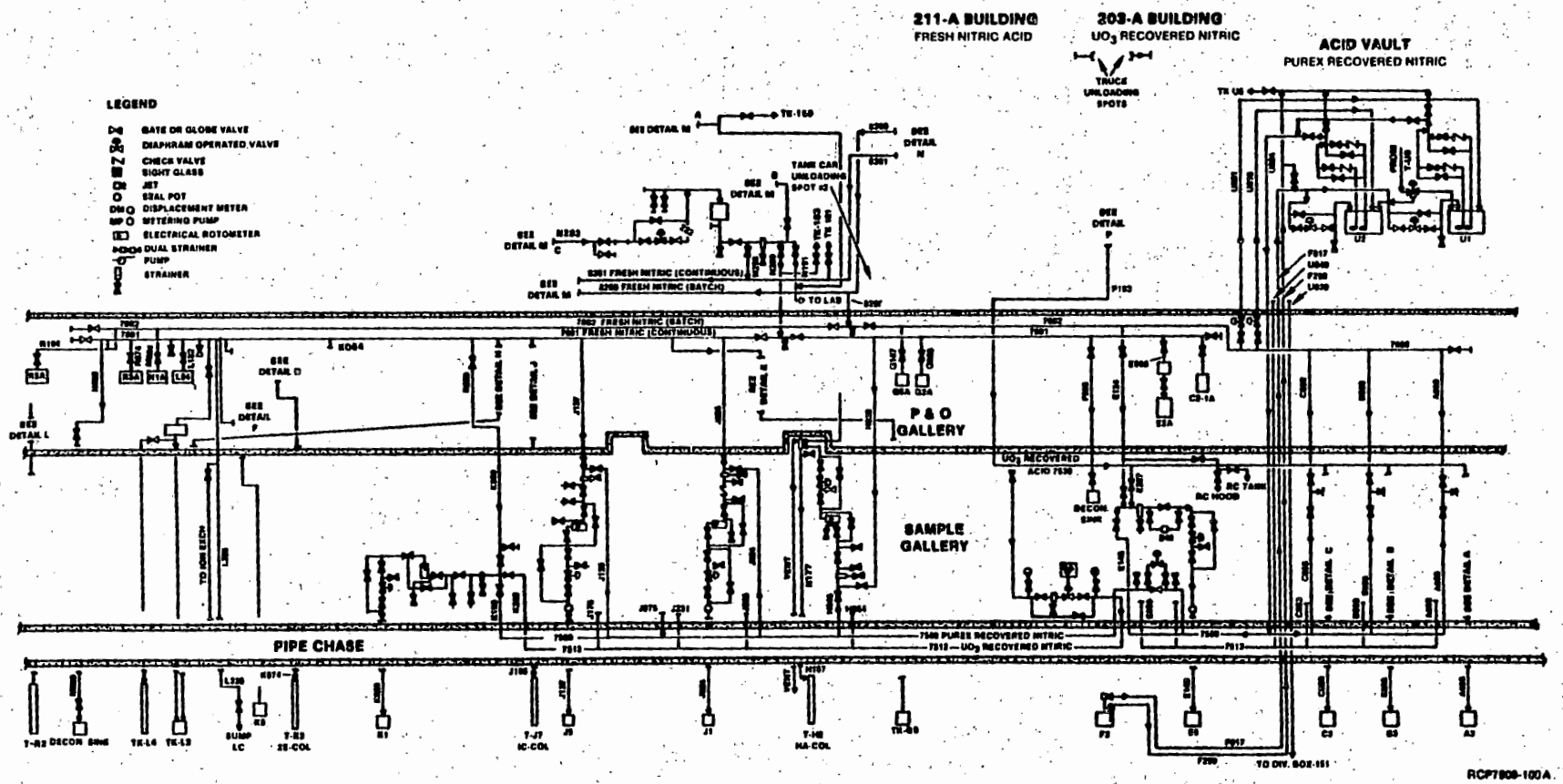


FIGURE 6-68. Nitric Acid System. (Sheet 1 of 6)

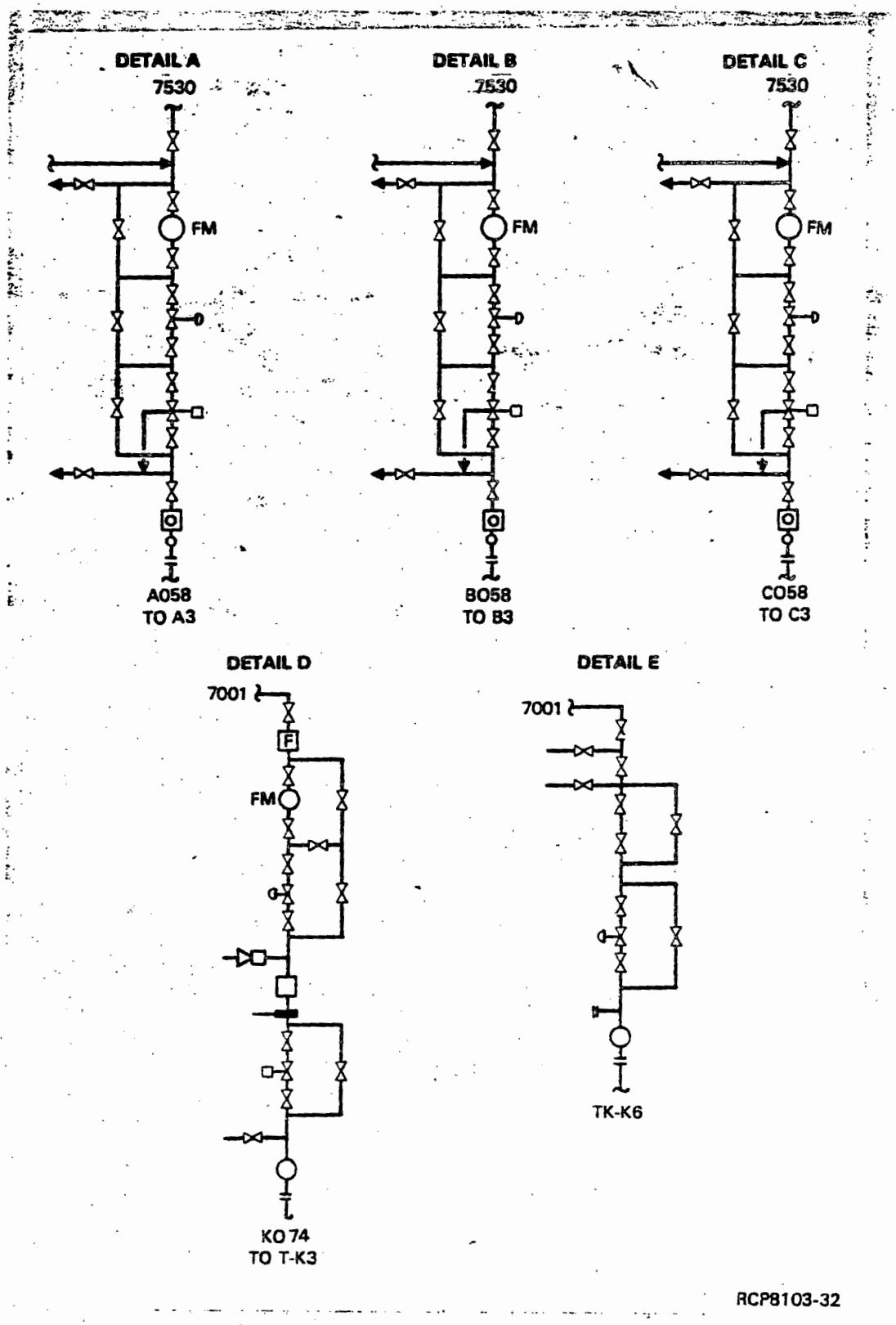


FIGURE 6-68. Nitric Acid System. (Sheet 2 of 6)

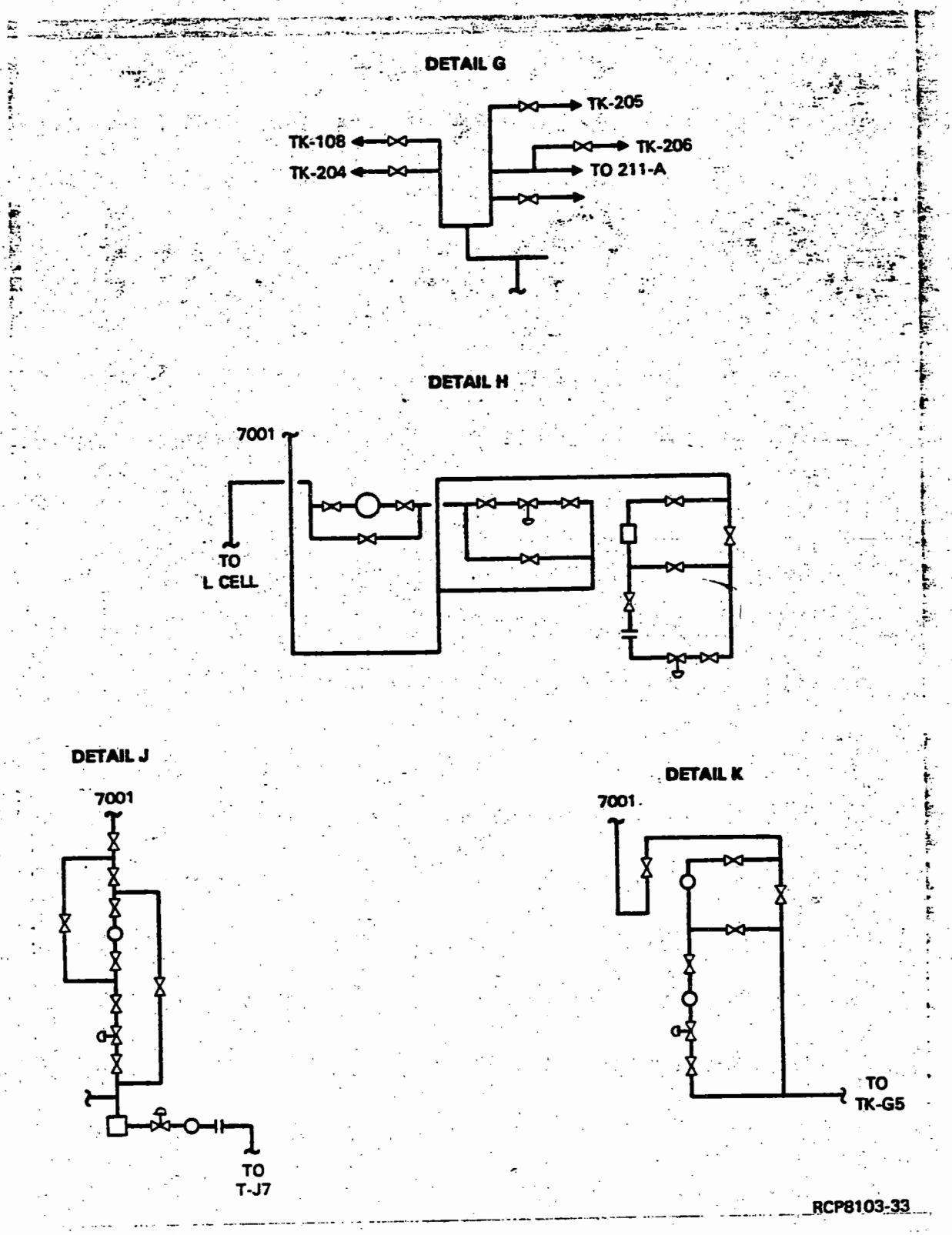


FIGURE 6-68. Nitric Acid System. (Sheet 3 of 6)

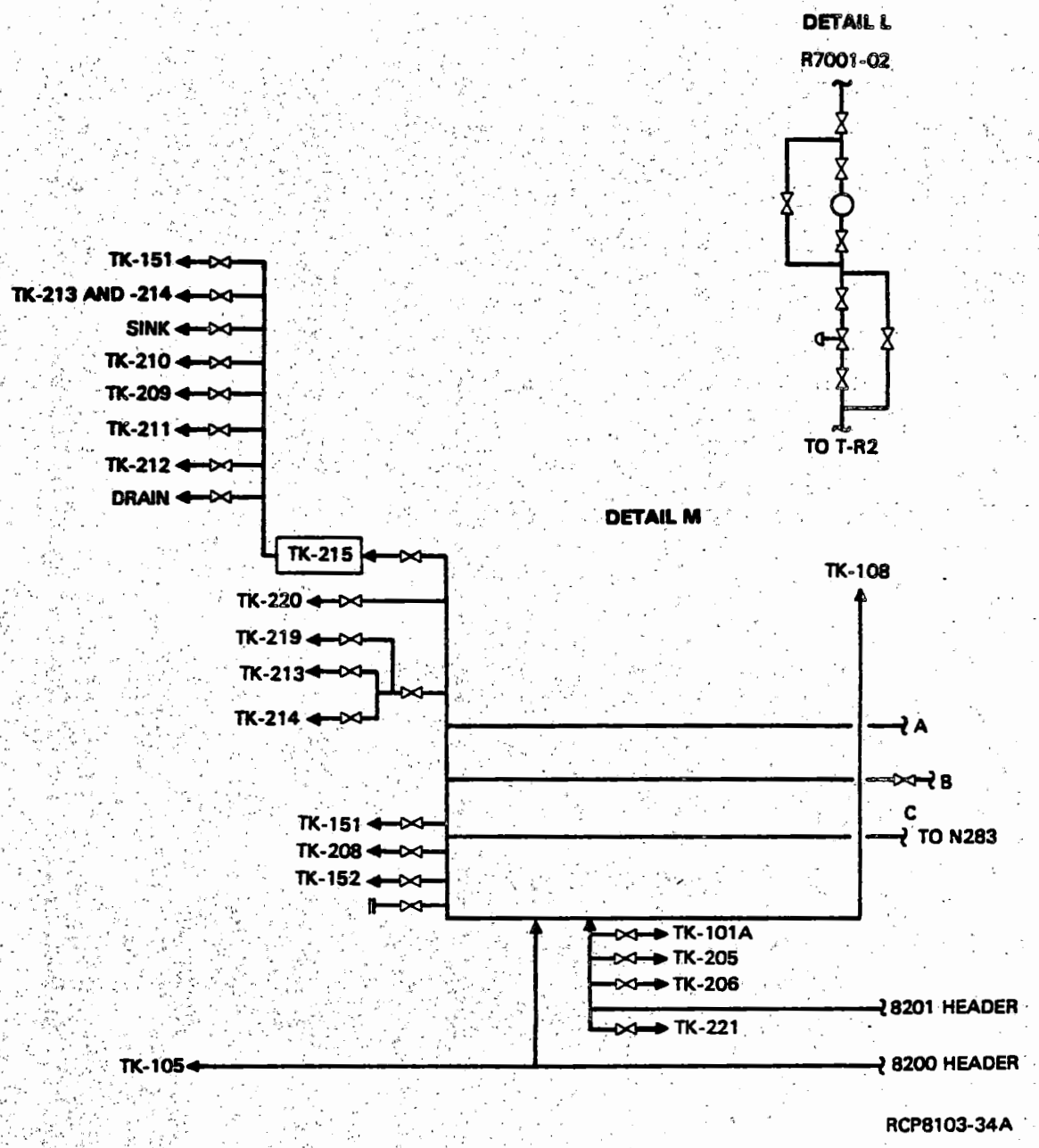


FIGURE 6-68. Nitric Acid System. (Sheet 4 of 6)

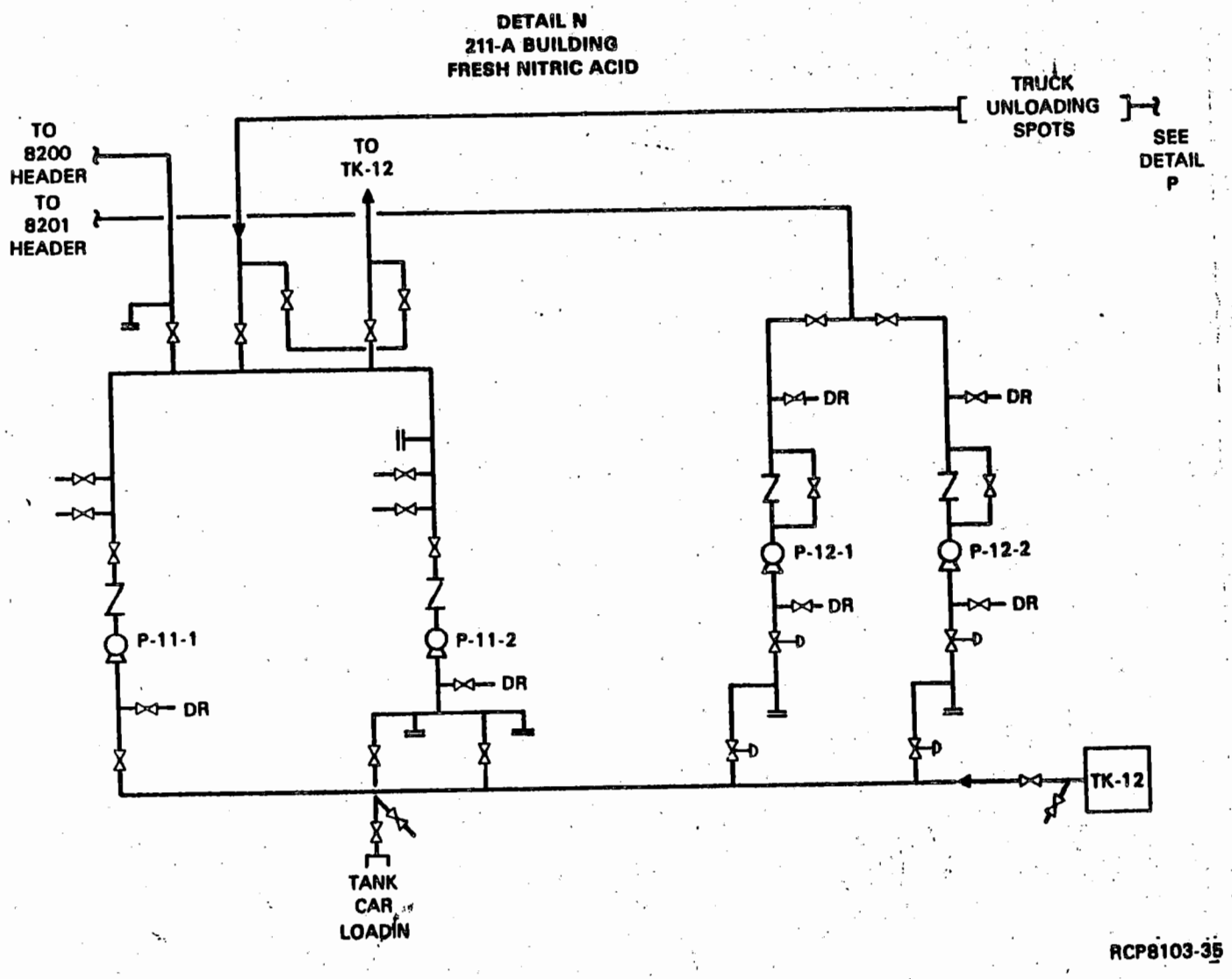


FIGURE 6-68. Nitric Acid System. (Sheet 5 of 6)

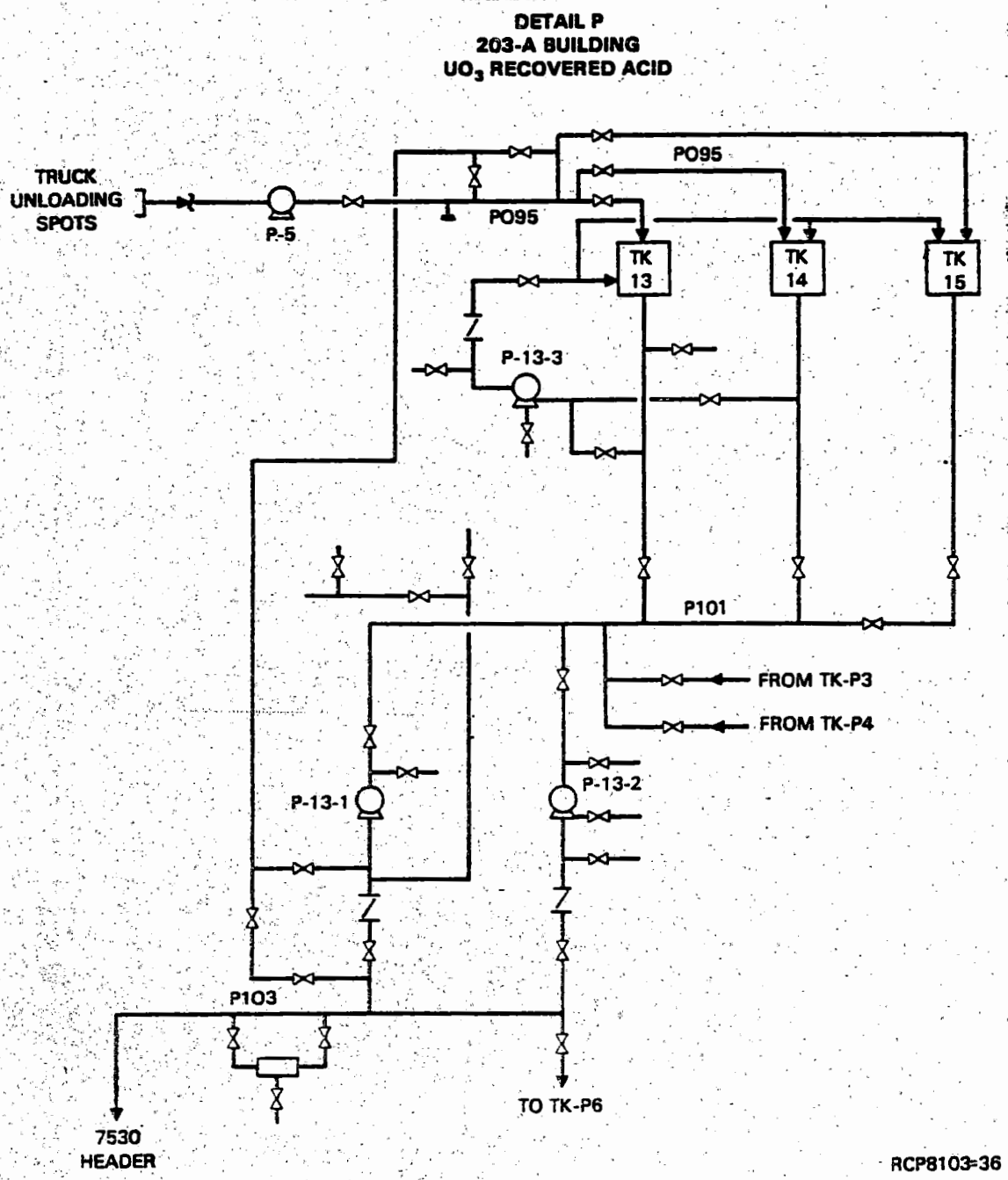


FIGURE 6-68. Nitric Acid System. (Sheet 6 of 6)

6.5.4.2 Solvent Supply System. Fresh diluent (NPH) and solvent (TBP) are received by tank car and unloaded into receiver storage tanks in the 211-A area. Organic additions to the process are by batch makeups in TK-R1A, located in the P&O gallery. Additions to both G and R cells may then be accomplished by appropriate valving of headers from TK-R1A (Fig. 6-69 and 6-70).

6.5.4.3 50 wt% Caustic. Caustic is used primarily to convert waste solutions to the alkaline state. Caustic is also used, in conjunction with other chemicals, as a decontaminant. The 50 wt% caustic is received by railroad tank car and stored in 211-A tanks. The distribution system, shown in Figure 6-71, services the entire process system and AMU area.

## 6.6 CONTROL ROOMS

### 6.6.1 Functional Description of Control Rooms

The processing and support or auxiliary operations at the PUREX Plant are largely conducted from five localized control areas: (1) central control room, (2) headend control room, (3) power control room, (4) N cell control rooms (upper and lower), and (5) Q cell control room (inactive). The dispatcher's office serves as a focal point for information transmittal in the plant.

The five control rooms contain graphic panel boards. These panels aid in quick appraisal of process conditions by displaying the various pieces of operating equipment with interconnecting flow lines in the correct, relative positions. The control instrumentation is graphically represented at the point where the corresponding control of the process is actually effected.

The control rooms provide for centralized control of the diverse plant operations. The headend control room is used for fuel dissolution, feed preparation, acid recovery, and other related batch operations. The solvent extraction and most continuous chemical processing operations are controlled from the central control room. The control rooms for N and Q cells provide protected, centralized control of the plutonium conversion and the neptunium purification facilities, respectively. These two control rooms are located below grade near the actual operation. The power control room provides control of the basic utilities for the plant such as ventilation, water, steam, and compressed air.

9413219.0694

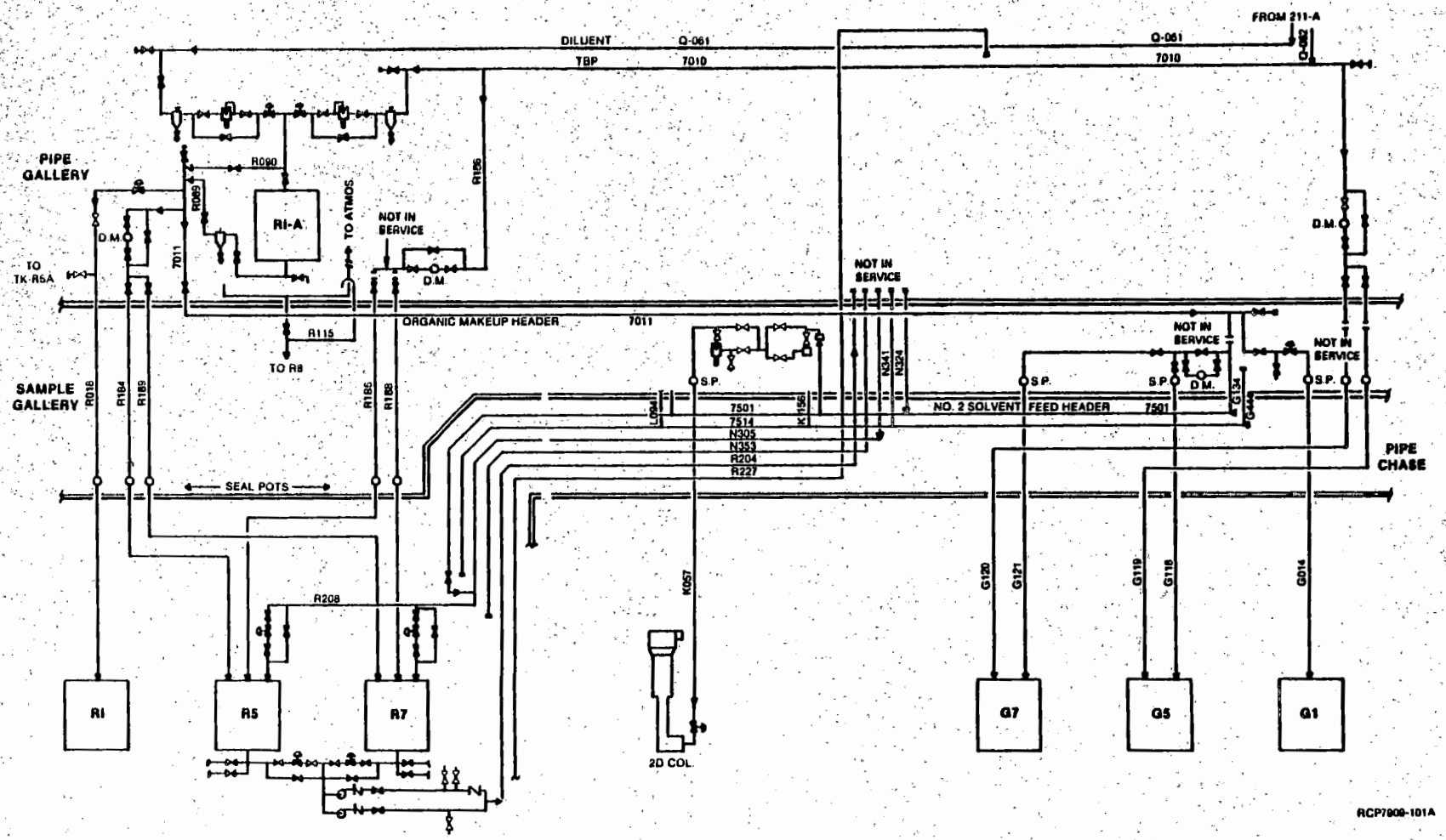


FIGURE 6-69. Organic Makeup System.

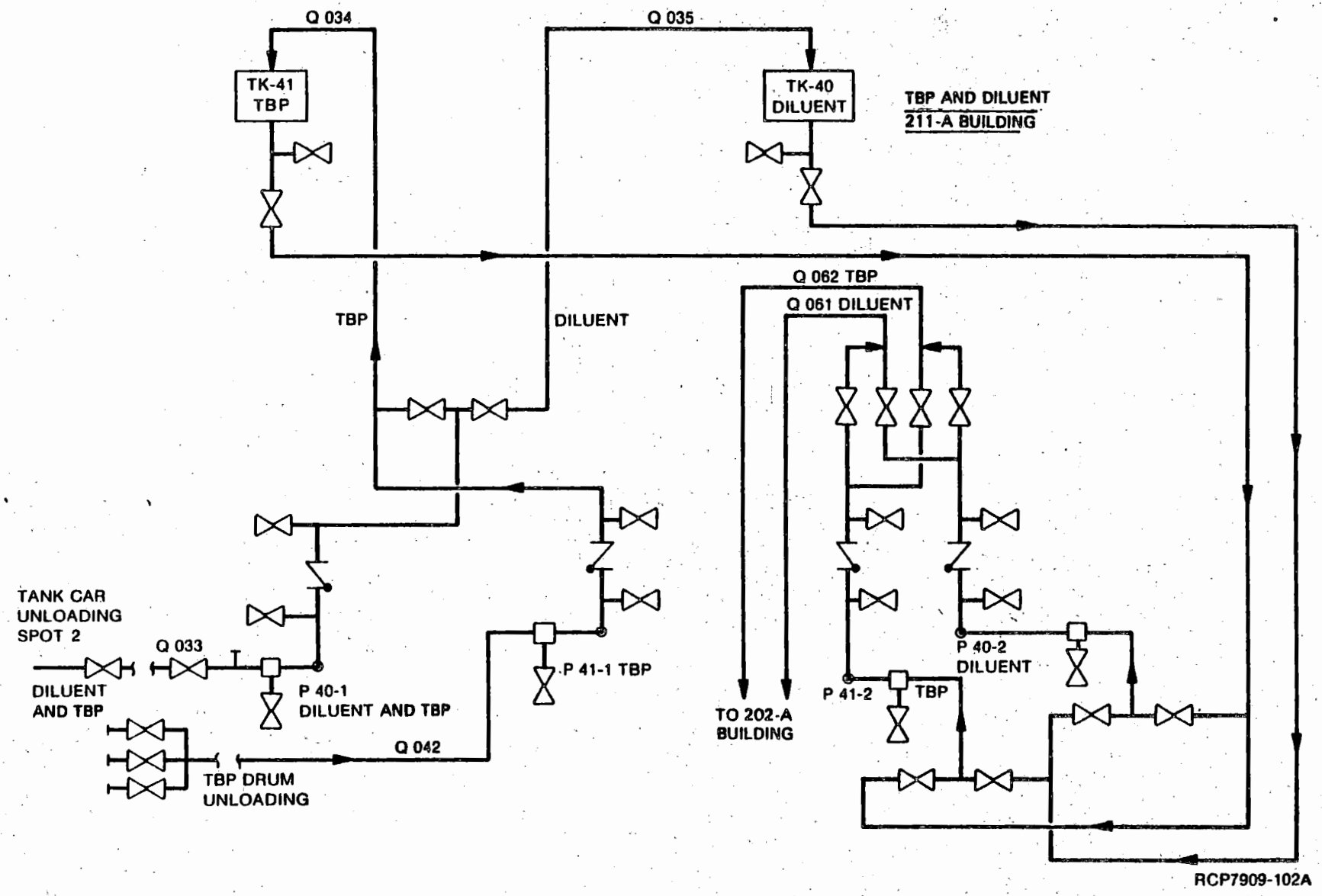


FIGURE 6-70. Solvent System.

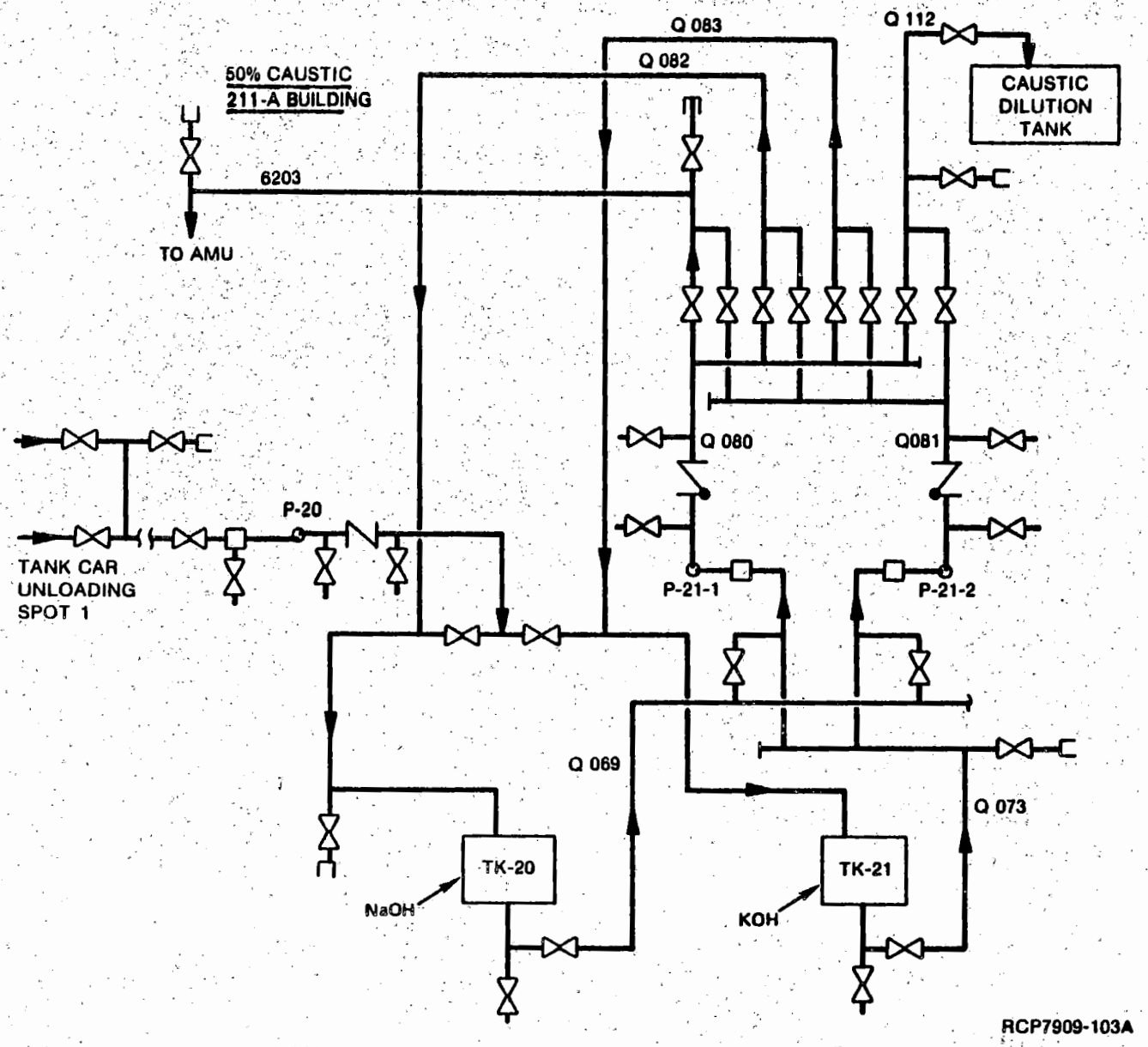


FIGURE 6-71. Caustic System. (Sheet 1 of 2)

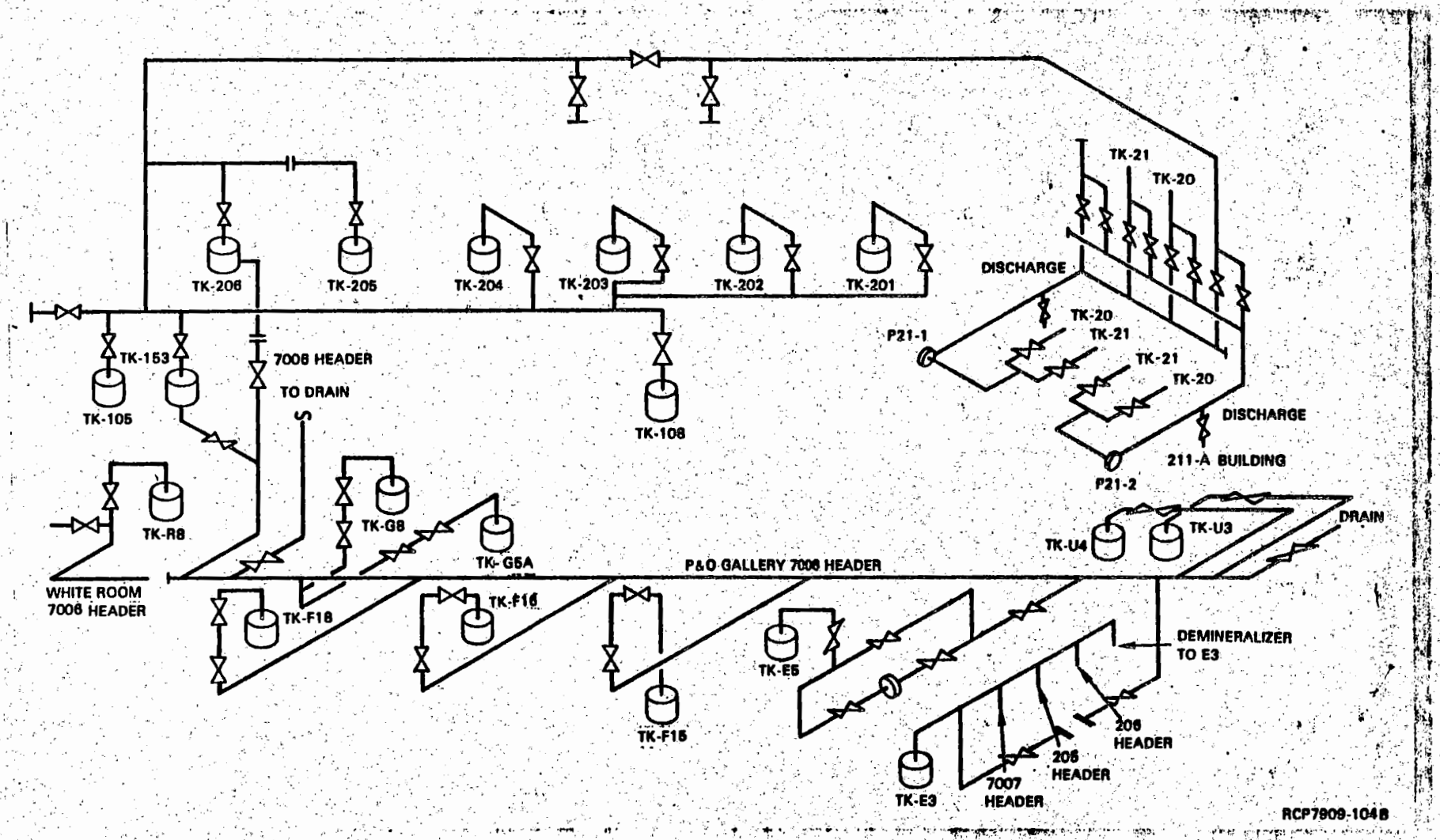


FIGURE 6-71. Caustic System. (Sheet 2 of 2)

6.6.1.1 Central Control Room. The general layout of the central control room, containing 17 graphic panels, is shown in Figure 6-72. Schematics of the process streams involved are shown on each panel. These panels provide data transmittal and control instrumentation for the following plant systems:

| Panel Board Number | Systems |
|---|---|
| B-1 | First decontamination cycle |
| B-1 | Backcycle waste concentrator (E-H4) |
| B-2 | |
| B-2 | Partition cycle |
| B-3 | |
| B-4 | |
| B-4 | Second plutonium cycle |
| B-5 | Third plutonium cycle |
| B-6 | Final uranium cycle |
| B-7 | |
| B-7 | Backcycle waste (TK-F10) |
| B-7 | Waste concentration and treatment |
| B-8 | |
| B-9 | |
| B-10 | |
| B-11 | Organic system 1 |
| B-11 | Ammonia offgas system |
| B-12 | Fire protection fire-foam |
| B-12 | Organic solvent system 1 |
| B-13 | Organic system 2 |
| B-14 | Effluent monitoring |
| B-14 | |
| B-15 | Organic system 2 |
| B-15 | Process/condenser vent system |
| B-16 | Auxiliary panel board (sump level, fire-eyes in cells) |
| B-16 | Continuous air monitor |
| B-17 | Second neptunium cycle |

9013219.0699

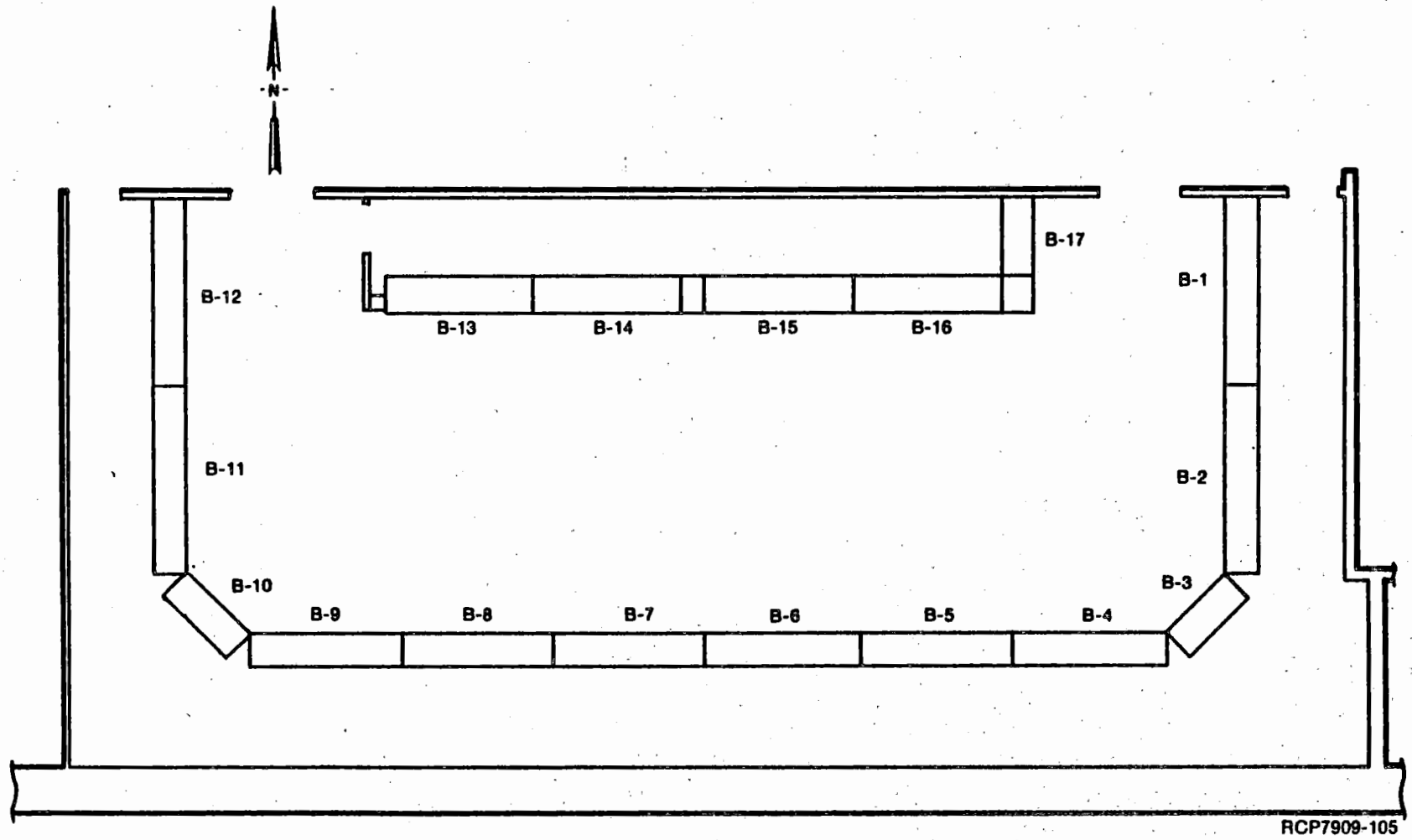


FIGURE 6-72. Floor Plan of Central Control Room.

6.6.1.2 Headend Control Room. The general layout of this control room, containing 10 graphic panels, is shown in Figure 6-73. These panels provide data transmittal and control instrumentation for the following plant systems:

| Panel Board Number | Systems |
|---|---|
| A-1 | Backup facility |
| A-2 | A dissolver |
| A-3 | Metal solution |
| A-3 | B dissolver |
| A-4 | Metal solution (D4) |
| A-4 | C dissolver |
| A-5 | Metal solution (D5), accountability point |
| A-5 | Declad waste |
| A-6 | |
| A-7 | |
| A-7 | HA feed preparation tank |
| A-8 | Acid fractionator |
| A-9 | Waste concentration and treatment (TK-F18, TK-F8) |
| A-9 | Acid storage (TK-U1, TK-U2) |
| A-10 | Laboratory waste |
| A-10 | Sumps |

6.6.1.3 Power Control Room. The power control room, having seven graphic panels (Fig. 6-74), contains controls for the building ventilation systems and instruments for utility metering.

Graphic panel boards are provided for each of the four ventilation systems. Instrumentation for the ventilation and utility systems in this control room is located as follows:

| Panel Board Number | System |
|---|---|
| H-1 | Laboratory ventilation system |
| H-2 | Laboratory ventilation system<br>Steam pressure recorder, canyon air dewpoint, and temperature recorder<br>Trouble lights for following systems:<br>Demineralizer<br>High-cooling water temperature for compressors 1, 2, and 3<br>Low-level alarm still-storage tank<br>Refrigerant compressors K1-2-1 and K1-2-2<br>Loss of airflow to counting room |

9413219.0692

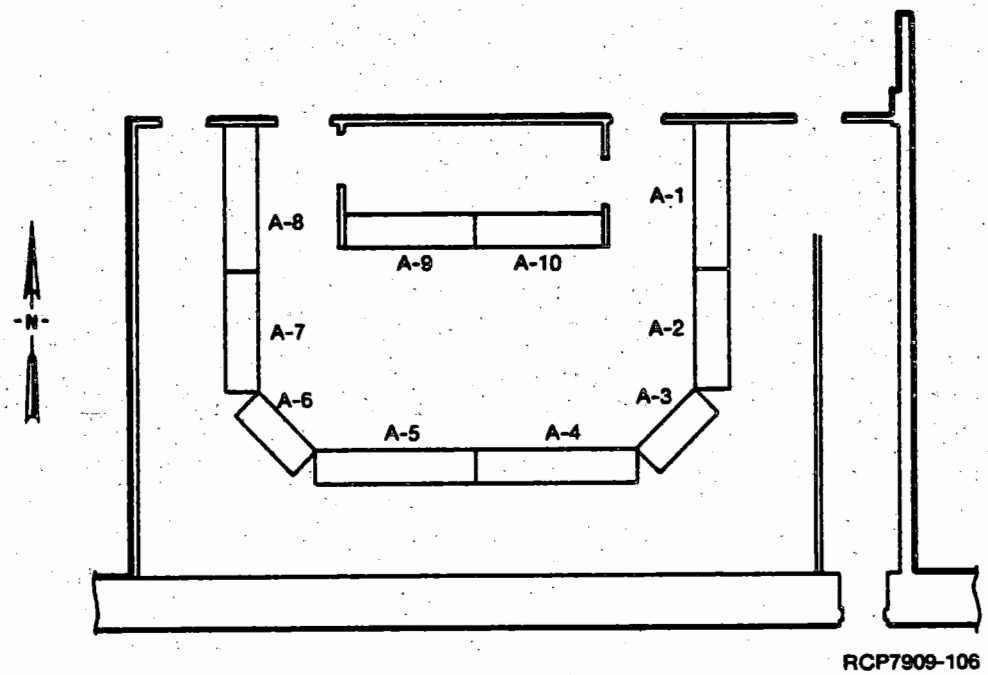


FIGURE 6-73. Floor Plan of Headend Control Room.

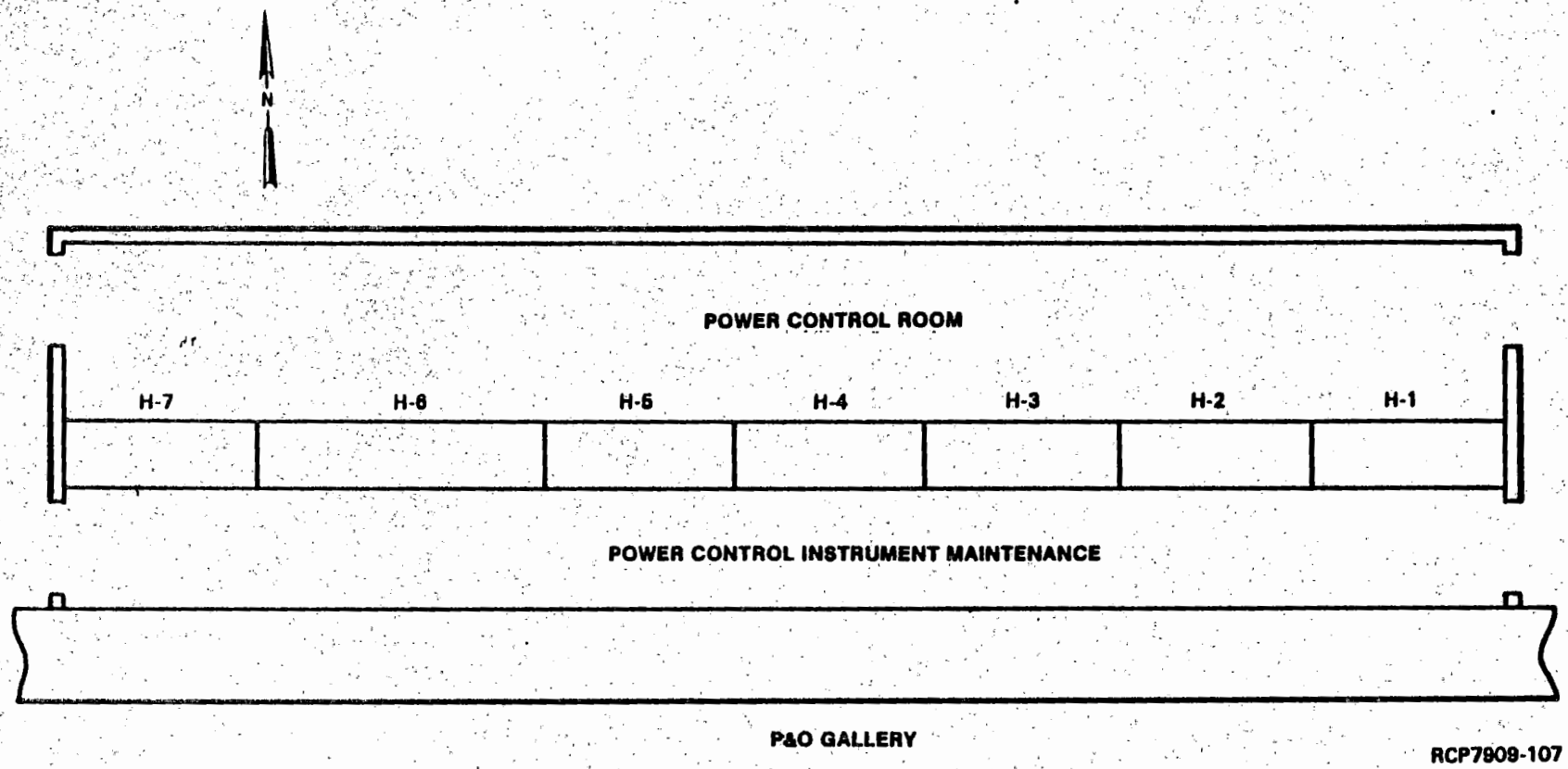


FIGURE 6-74. Floor Plan of Power Control Room.

| Panel Board Number | System |
|---|---|
| H-2 | Canyon and process cells ventilation system<br>Raw water pressure gauge<br>Sanitary water pressure gauge<br>Steam, high-pressure header, pressure gauge |
| H-4 | Canyon and process cell ventilation system<br>Steam pressure gauges and low-pressure alarms for low-, medium-, and high-pressure steam headers<br>Process air pressure gauge and low-pressure alarm<br>Breathing air pressure gauge and low-pressure alarm<br>Instrument air pressure gauge and low-pressure alarm<br>Bearing temperature of exhaust fans |
| H-5 | Sample gallery ventilation system<br>Low-pressure raw water alarm and pressure gauge<br>Low-pressure sanitary water alarm and pressure gauge<br>Low-pressure sample vacuum (vacuum) alarm and pressure gauge |
| H-6 | Service ventilation system |
| H-7 | Sanitary water flow recorder for east and west headers<br>Instrument and process airflow recorder<br>Steam flow, east, west, and blower room<br>Raw water flow, east and west headers<br>Process air compressor status lights |

6.6.1.4 N Cell Control Rooms. The N cell processing operations are controlled remotely by means of instrumentation in the shielded control rooms located one above the other, along the north wall of N cell. The general layouts of the N cell control rooms are shown in Figure 6-75. Shielding windows are installed in the south wall of the lower control room and the south and east walls of the upper control room. Shielding provided by the control room walls and viewing windows, in conjunction with the glovebox shielding panels, is sufficient to reduce exposure to less than 1/2 mr/h to personnel in the control room. Contamination control in the control rooms is facilitated by supplying all ventilation air for the glovebox room from the PR corridor via the control rooms and by air locks at the doors between the glovebox room and the control rooms.

The upper control room contains the controls and instrumentation for the plutonium conversion operations and the standby power panel for N cell. Since most of the routine processing operations are controlled from this control room, it is continuously occupied whenever the plutonium oxide production facility is operating.

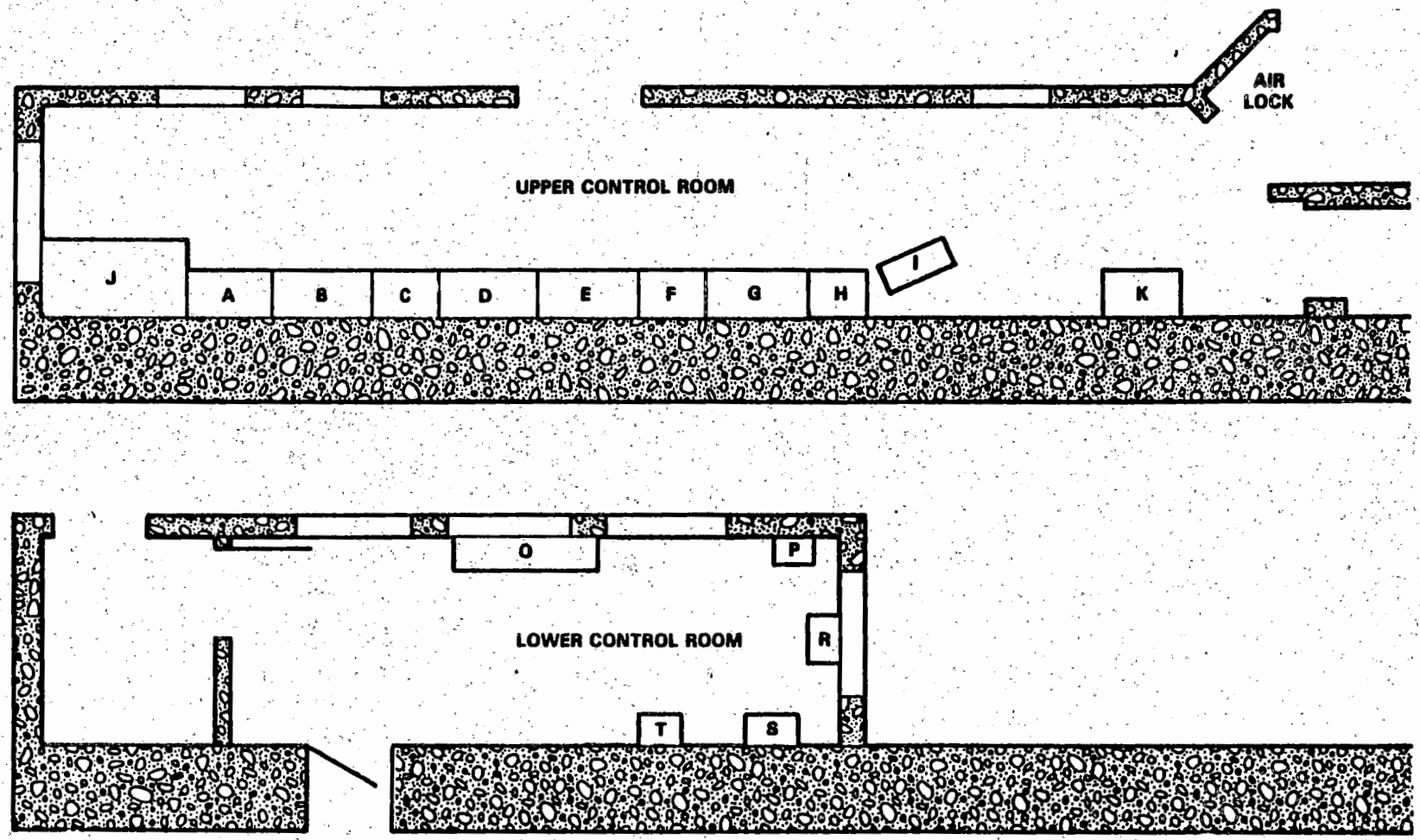


RCP8206-1A

FIGURE 6-75. N Cell Control Rooms

The lower control room contains the controls and instrumentation for the plutonium oxide rework operations and the HVAC and normal power control panels.

The layout of the process control panels and power controls for the N cell operations is listed in Table 6-32.

6.6.1.5 Q Cell Control Room. The Q cell control room and its relative location with respect to the rest of Q cell is shown in Figure 5-12. This control room, used to control the neptunium purification system, is not in beneficial use.

6.6.1.6 Dispatcher's Office. The dispatcher's office serves as the main communication and personnel movement control center within the plant. Figure 6-76 shows the general floor plan for this room.

The plant dispatcher's office provides the following services:

- Recipient of all safety/environmental alarms where further immediate action is necessary
- Logging and controlling access to many controlled high-risk radiation zones
- Sampling interface with laboratory via computer terminal for analytical requests and results
- Communication access to the plant via call bell, paging, two-way radio, evacuation alarms, etc.
- Secondary control for radio-controlled locomotive in railroad tunnel.

Alarms located in area R-1 (see Fig. 6-76) are for the following systems:

- High- and low-level alarm drain tank, filter 2, main ventilation system
- Green fuel alarm
- Controlled door status-indicating lights
- CAM high-radiaton alarms for offices, services and laboratory areas, P&O and sample galleries, and N cell
- Sample building radiation monitors, high-radiation alarms
- Cell fire alarms
- Hot-bearing temperature alarm for main exhaust fans

TABLE 6-32. Process Control Panel and Power Control Layout.

| Panel board number | System |
|---|---|
| | Upper control room |
| A | Oxalate precipitation |
| B | Precipitation, calcination |
| C | $Pu(NO_3)_4$ feed and prereduction |
| D | $Pu(NO_3)_4$ sampling/storage |
| E | Filtrate and condensate treatment, vacuum |
| F | Filtrate and condensate treatment and storage |
| G | Filtrate and condensate treatment, vacuum, vent |
| H | HVAC panel |
| I | Radiation and CAM panel |
| J | Powder system panel |
| K | Proportional (flow controller cabinet) |
| | Lower control room |
| O | Rework panel (ANN-K) |
| P | Blender valve cleaning controls |
| R | Product loadout microcontroller |
| S | Product loadout motor starter panel |
| T | Product loadout controls (CL-PL) |

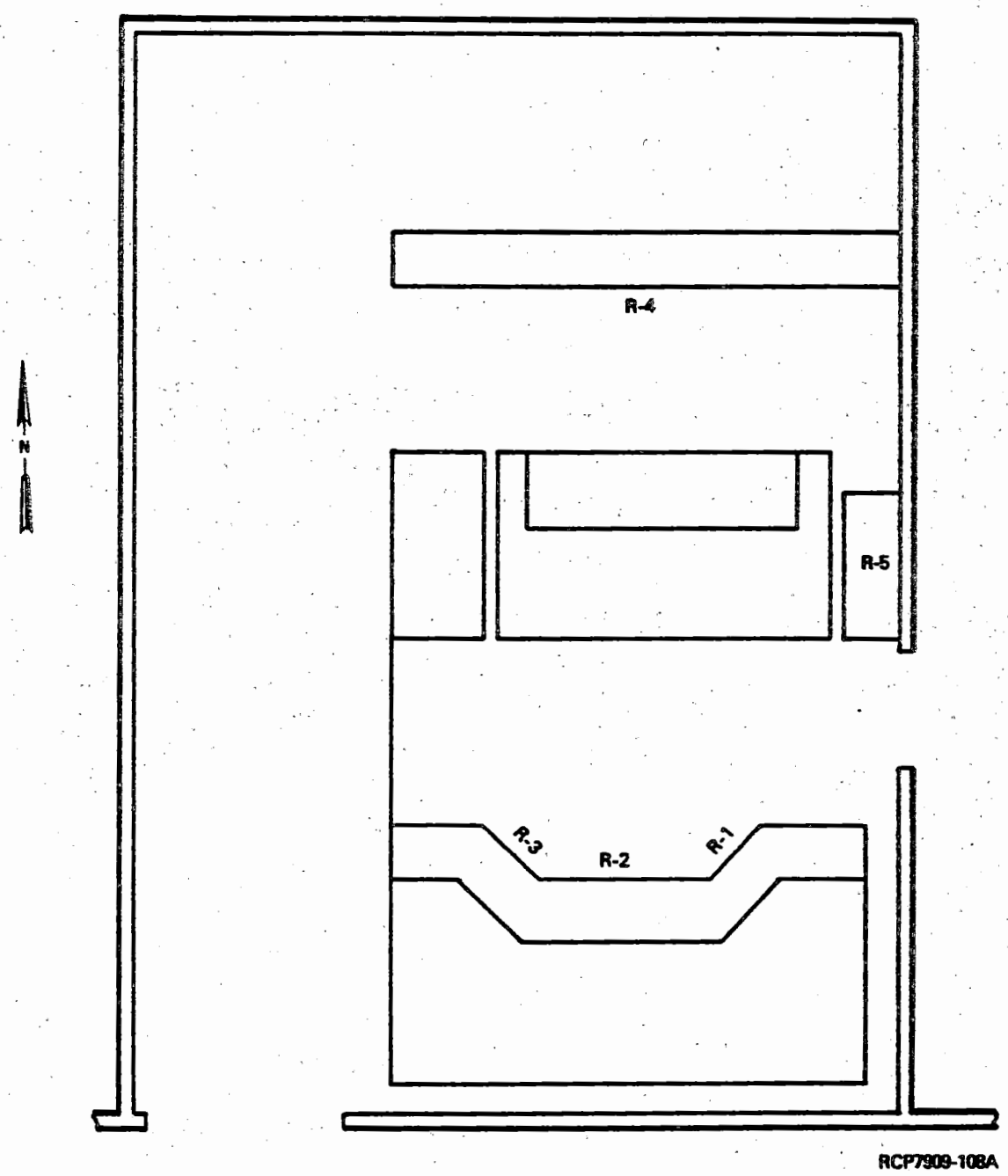


FIGURE 6-76. Floor Plan of Dispatcher's Office.

- 244 AR vault alarm
- Loss of air-sampling vacuum.

Alarms indicated in area R-2 (see Fig. 6-76) give indication for the following systems:

- Failure of steam condensate pumps
- Overflow of steam condensate catch tank
- L-11 sump alarm
- All liquid and gaseous effluent alarms, indicating high radiation, system failure, and diversion status
- High-sump levels for the ammonia scrubber, chemical sewer, and process condensate caissons
- High-WF in TK-P6
- Criticality alarms.

Log records are kept for all personnel entering controlled high-risk radiation zones. Control is exercised through electrical and key-operated door locks from the dispatcher's office. Information about radiation zone status is obtained from zone radiation instrumentation and from periodic surveys by Radiation Monitoring personnel. The lower level of area R-2 (see Fig. 6-76) is used for control of workers in the restricted areas of the plant. Examples of some of these systems follow:

- Electric lock control of the outer railroad cut pedestrian gate, which is also padlocked by Security
- Electric lock control of the railroad gate, which is also padlocked by Security
- Electric lock control of the inner railroad cut pedestrian gate
- Electric interlock control of the railroad tunnel door
- Electric lock control of the railroad tunnel pedestrian door
- Electric interlock control of the horizontal tunnel ventilation control door.

This control panel has indicator lights for the position of gates, tunnel doors, and other entrances to controlled areas. There is a closed-circuit television in area R-3 (see Fig. 6-76) for the PR dock, and for the railroad cut, giving a view of these particular areas in the dispatcher's office.

Area R-3 of the dispatcher's office also contains the call bell system and private automatic exchange (PAX) crash alarm system. The secondary control panel for the radio-controlled locomotive in the storage tunnel is in area R-5.

The dispatcher is responsible for scheduling sampling activites with the sample team and transmitting analytical sample requests to the laboratory.

In the case of a nuclear excursion in the process cells, the radiation recorders located in area R4 of the dispatcher's office will give an alarm, location of the accident, the intensity of the radiation field, and the duration of the occurrence. The emergency procedures for this event, as well as evacuation, fire, and explosion, are described in the emergency procedure manual.(29)

9413219.0700

### 6.6.2 Safety Criteria and Assurance for Control Rooms

6.6.2.1 Industrial and Radiation Safety. Personnel safety in the control rooms is maintained by administrative controls and requirements, such as general safety rules, SOP, and standard industrial practices. Protection against airborne contamination is discussed in Chapters 4.0 and 5.0. Protection of personnel against exposure to radiation is discussed in Chapters 4.0 and 8.0.

6.6.2.2 Fire Protection. The fire hazard associated with the control rooms is low because of the low inventory of materials that would support combustion. The combustibles consist of the insulation on the electrical wiring, small amounts in the furniture, and the small amount of paper present in the form of procedures, records, and necessary reference material. Fire protection in those areas that are either continuously or frequently (several times per shift) occupied by operating personnel (i.e., headend control room, central control room, power control room, and dispatcher's office) is based upon detection by the occupying personnel and notification of the Fire Department by manual activation of a fire alarm switch. Fire protection in those areas (i.e., N and Q cells) that may not be continuously occupied (e.g., during nonoperating or shutdown periods) is provided by an automatic sprinkler system. Section 5.4.8.6 contains additional discussion of fire protection systems.

Control rooms and operating areas are not generally evacuated in the event of a fire in a distant or remote area, unless the fire threatens the safety of the operating personnel. Thus, fires occurring in the processing areas (in the absence of a concurrent earthquake) would not interrupt or disturb the operating activities in the control rooms because of existing physical barriers.

Fires that occur in the control rooms could affect operations of other areas of the plant and the affected systems would then need to be controlled or, more probably, shut down from another location. The instrument and equipment systems used in controlling the process are designed to be

"fail safe" (i.e., loss of an essential service such as air or electricity would cause the system to shut down in a safe manner). In addition, a number of the processes can be controlled or safely shut down from the P&O gallery. Since the five control room areas are in different sections of the building (see Fig. 5-14 and Ref. 5-16) a fire in any one would not normally cause disruption of the others. This separation would allow important shutdown operations to be implemented in the other locations.

6.6.2.3 Protection from Natural Forces. The headend control room, central control room, power control room, and dispatcher's office are located in the 202-A annex. This structure would likely be severely damaged if natural forces (see Section 4.2) of the magnitude defined by current criteria were to occur. Containment, however, is not expected to be compromised, and access to the P&O gallery would be possible, allowing safe shutdown from that location. The instruments and equipment are designed to fail in a safe manner, as described previously, so little or no effort should be necessary to shut down the system safely. The N and Q cell control rooms are located in the 202-A building itself, and are as resistant to natural forces as the processing areas and systems serviced. Shutdown of processing activities in N and Q cells could be accomplished safely and without difficulty in the event of a natural forces occurrence of the worst credible magnitude.

6.6.2.4 Criticality Prevention. Nuclear criticality excursions are possible in the radioactive processing areas, including N and Q cells. These areas are all distantly located from the control rooms and dispatcher's office in the 202-A annex, and personnel in these control areas would be protected by the shielding, containment, and confinement barriers described in Chapters 4.0 and 5.0. Emergency response procedures will be followed to evacuate personnel from the 202-A building and annex in the event of a criticality excursion. Key operating and Radiation Monitoring personnel could safely effect a safe shutdown of the process (at the direction of the emergency director) from the control rooms in the annex.(31)

The N and Q cell control rooms are located adjacent to those respective processing areas, so are more vulnerable to a nuclear criticality excursion in those areas. The control rooms are shielded from the respective work areas in accordance with the design criteria in Chapter 4.0 for continuous occupancy. This shielding is inadequate to protect personnel for continuous occupancy during a criticality excursion, but would provide sufficient protection for rapid and orderly evacuation. The plutonium conversion system is provided with capability for remote safe shutdown of equipment.(32)

## 6.7 SAMPLING--ANALYTICAL

### 6.7.1 Process Samplers

Three types of facilities for obtaining process samples are located in the PUREX sample gallery. The three types differ in piping design and shielding requirements. All three use an air jet to provide vacuum to lift the process solution to a sample cup. The solution is circulated through the sample cup back to the orginating process vessel. To overcome the high lift requirement, an orificed air bleed into the sample suction leg provides an airlift effect from the tank to the sample station.

The type "A" sampler is shown in Figure 6-77. Highly radioactive solutions from containers, such as metal solution storage tanks, dissolvers, and high-level waste vessels, are sampled by means of the PUREX A sampler (or Hanford remote pipette). The remote pipette is filled and discharged hydraulically by an operator protected from direct radiation by a shielding barricade. A measured, small volume of sample is discharged into a small bottle containing a measured amount of dilution solution in a shield carrier. Sampling stations equipped with an A-type sampler are provided to sample the vessels listed in Table 6-33. In addition, nine of these stations have a secondary circulation cup and riser assembly for obtaining samples from the cell sump.

The "B"-type sampler (shown in Fig. 6-78) is used on moderately radioactive samples. These samples are taken by means of the capillary tube and bottle sampler, which holds about 5 mL of solution. The vessels or streams listed in Table 6-34 are sampled with a B sampler.

Ten sampling stations, as shown in Table 6-34, are provided with inline equipment (one photometer, a nitrite monitor, and eight scintillation meters). Some in-line equipment is run continuously, some only at the time of sampling. Three sample stations provide a second riser for sampling a cell sump. A sump sample is taken in the same manner as a standard sample, except that the sump sampling valves are used.

The C-type sampler is used for very low-level radioactive solutions and uranium product. It is similar in piping to the B-type, but is housed in a sheetmetal enclosure. The vessels listed in Table 6-35 have C-type samplers.

The PUREX headend accountability measurement system at the D5 position has, in addition to an A-type sampler, a shielded facility, or hot cell, for taking and analyzing bulk samples of dissolver solution from TK-D5. This facility is a heavily shielded cubicle located in the PUREX sample gallery, between the D4 and D5 sample hoods. It is about 5 ft high by 6 ft wide by 5 ft deep (inside dimensions), and is equipped with manipulators and about 6 in. of lead shielding on the front wall. The side walls butt directly against the concrete of the sampling stations. There is a hinged access door (about 1 $ft^2$) and a leaded glass viewing window (about 4 ft wide by 2 ft high by 6 in. deep) on the front of the cave. All existing utility penetrations are located at the rear of the cave, and interior lighting is at the top.

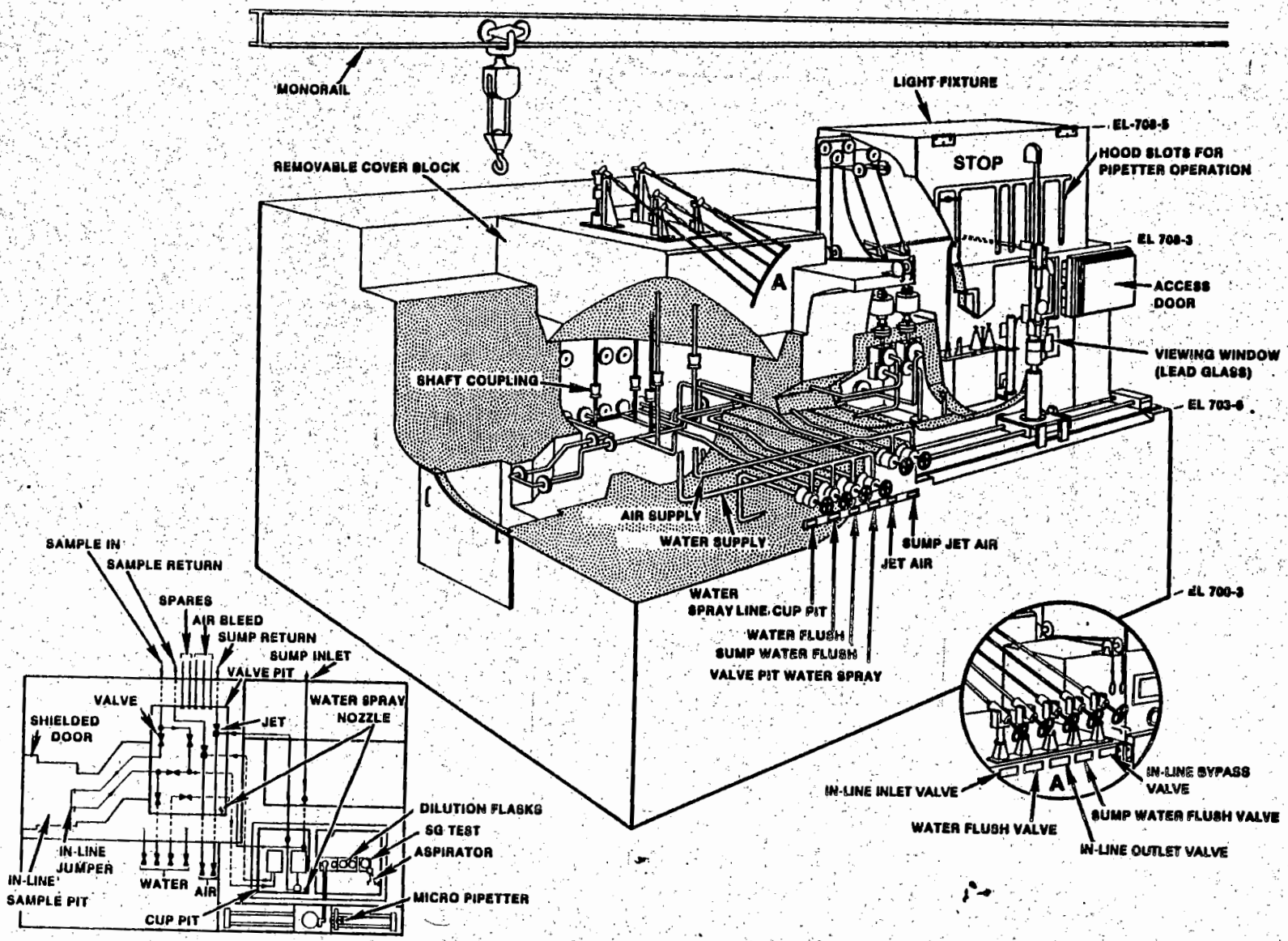


FIGURE 6-77. Type A Sampler.

TABLE 6-33. Vessels Equipped with Type A Samplers.

| Vessel | Sump |
|---|---|
| TK-A3 dissolver | SA |
| TK-B3 dissolver | SB |
| TK-C3 dissolver | SC |
| TK-D2 coating waste receiver | |
| TK-D3 metal storage | |
| TK-D4 metal storage | |
| TK-D5 metal storage (cave) | |
| TK-E1 centrifuge slurry tank | |
| TK-E3 centrifuge feed tank | |
| TK-E5 coating waste tank | SE |
| TK-E6 HAF makeup | |
| TK-F8 waste rework | |
| TK-F10 3WF tank | |
| TK-F13 utility tank | |
| TK-F15 1WW denitration tank | |
| TK-F16 1WW denitration tank | SFB |
| TK-F18 cell drainage collector | |
| TK-F26 1WW receiver tank | SFA |
| TK-G2 1OW tank | SG |
| TK-G8 organic wash waste | |
| TK-H1 HAF tank | |
| T-H2 HA column waste | |

9413219.0704

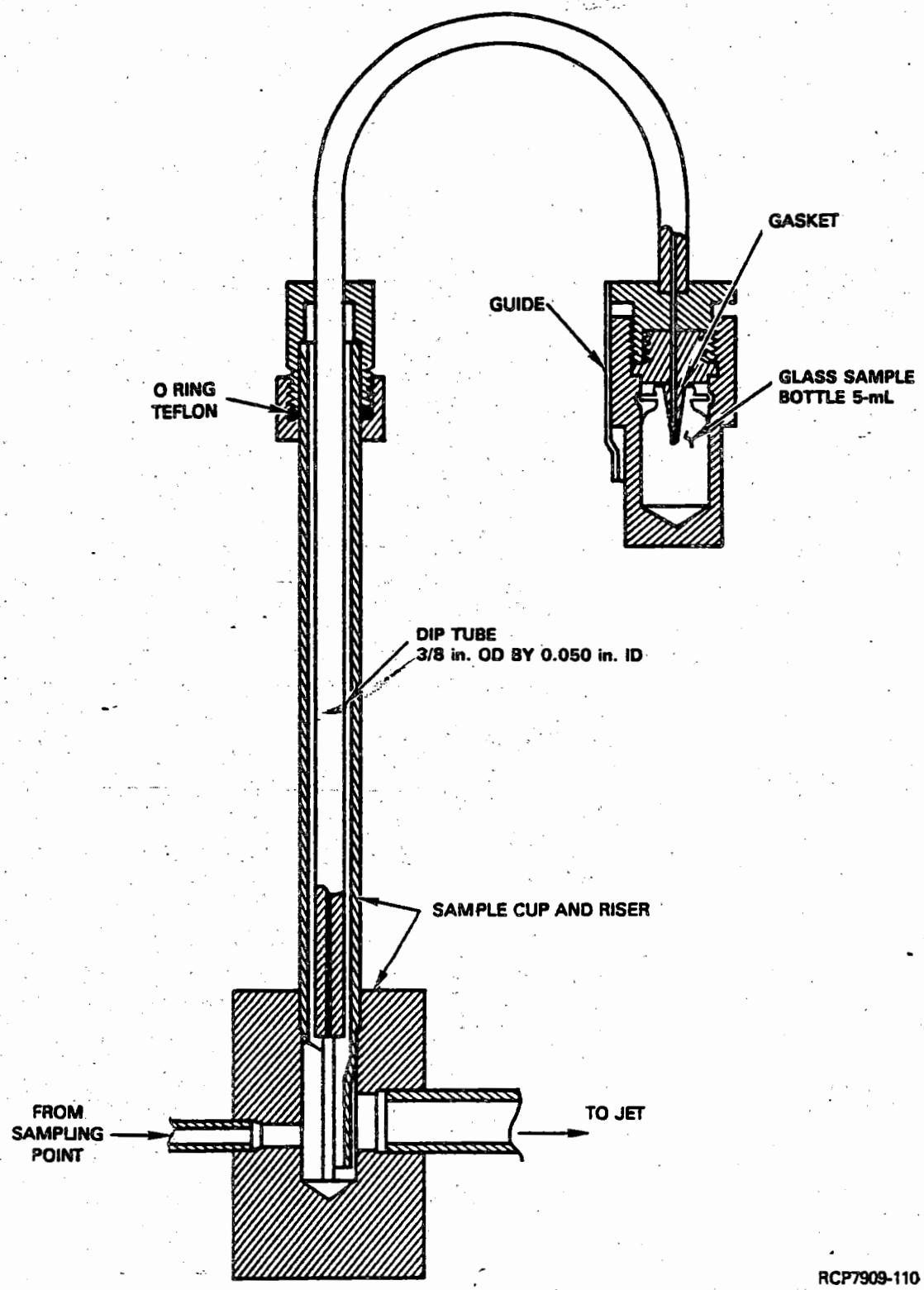


FIGURE 6-78. Type B Sampler.

TABLE 6-34. Vessels Equipped with Type B Samplers.

| Sampler | Vessel/stream |
|---|---|
| F3 | TK-F3 $HNO_3$ receiver/AAA |
| F5 | E-F5 condenser/AAD |
| G1 | TK-G1 10F tank |
| G5 | TK-G5 100 tank |
| G7* | TK-G7 100 storage |
| H3 | T-H2 column/HAP |
| H4 | E-H42 condenser/3WD |
| J1 | TK-J1 3WB |
| J2 | Np storage |
| J3* | 1BXF tank |
| J4* | 1BSU stream |
| J5A* | 1BP stream |
| J5B | 2AF tank |
| J7 | T-J7 1C column/1CW |
| J8 | T-J7 1CU |
| J21 | TK-J21 2NF |
| J22 | T-J22 2NW |
| J23-1 | T-J23 2PN, sump SJ |
| J23-2 | T-J23 2PW |
| K1* | TK-K1 2DF tank |
| K2 | T-K2 2D column/2DW, sump SK |
| K3* | T-K3 2E column/2EW |
| K4 | T-K3 2E column/2EU |
| K5* | TK-K5 2EU receiver |
| L1 | T-L1 2A column/2AW, sump SLK |
| L2A* | T-L2 2B column/2BW |
| L2B* | T-L1 2B column/2BP |
| L3 | TK-L3 3AF tank |
| L4* | T-L4 3A column/3AW |
| L5A | T-L5 3B column/3BW |
| L5B | TK-L5 3B column/3BP |
| L6 | Condenser/PSD |
| L7 | Condenser/PCD |
| M1 | TK-M1 decontamination tank |
| Q3 | TK-Q3 makeup and feed tank/3NC, 3XF |
| Q4 | T-Q4 3X (ion exchange) column/3XW |
| Q5 | TK-Q5 wash waste/3XW |
| Q6 | TK-Q6 neptunium product tank |
| Q8 | TK-Q8 sump waste |

*Equipped with an in-line monitor.

9413219.0706

TABLE 6-35. Vessels Equipped with Type C Samplers.

| Sampler | Vessel/stream |
|---|---|
| J8B | E-J8-2/1UD |
| K6 | TK-K6/UNH product |
| R1 | TK-R1/20F |
| R2 | TK-R2/20S |
| R5 | TK-R5/20O |
| R7 | TK-R7/20O |
| R8 | TK-R8/20W |
| U1 | TK-U1/recovered $HNO_3$ |
| U2 | TK-U2/recovered $HNO_3$ |
| U3 | TK-U3/laboratory waste |
| U4 | TK-U4/laboratory waste |
| U7 | TK-U7 T-U6 purge |
| U8 | TK-U8/AFD |
| 216-A-TK2 | Catch tank for stack drainage |

Solution is pumped from TK-D5 into a smaller sample tank located above TK-D5 in the cell. The solution overflows back into TK-D5, circulating through the sample tank for about 15 min to ensure that the solutions in the two tanks are of the same, uniform consistency. A small stream is then circulated through a sample bottle in the cave by means of an air jet in the cave. After a circulation period of 10 to 20 min, the bottle is removed and capped. Aliquots of the sample are used for process control, as well as accountability input measurements.

### 6.7.2 Analytical Laboratory

The PUREX analytical laboratory is located near the east end and on the north side of the 202-A building. The analytical laboratory consists of seven laboratory rooms, a counting room, and offices arranged as shown on the floor plan (Fig. 6-79). The laboratory supports the PUREX process on a 24 h/d, 7 d/wk ABCD shift basis.

When the PUREX process is operating, the laboratory sample workload is about 3,000 samples per month, with a total of about 10,000 assays per month not counting standards, referees, or reruns.[27,30] Most process

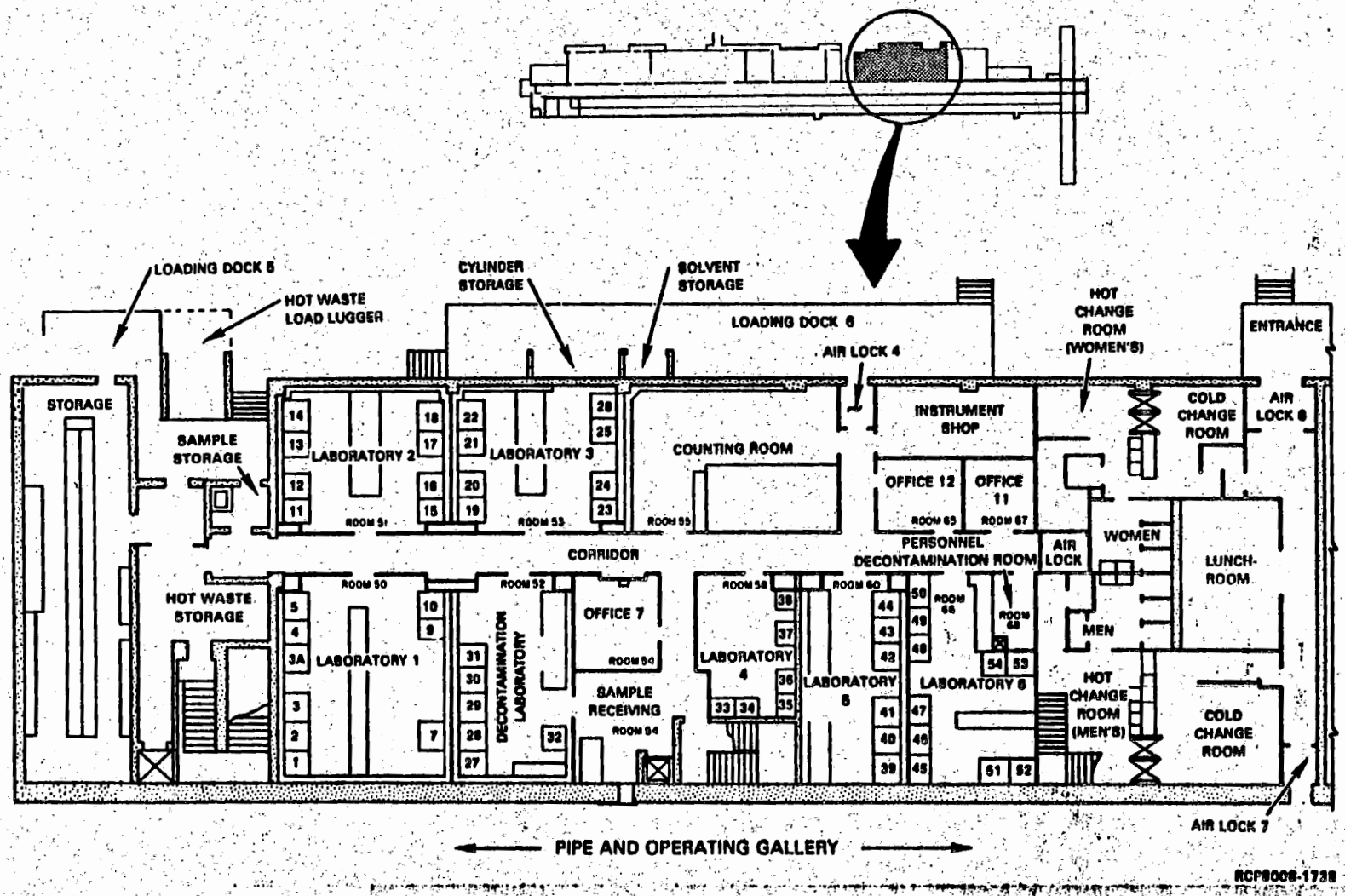


FIGURE 6-79. Layout--Analytical Laboratories.

control samples for PUREX are liquid. A relatively small number are solid (i.e., the particulate air samples, samples of solid absorption media, and the plutonium product oxide or oxalate samples*). The types of analyses performed on liquid samples include special nuclear material contents, FP content, various impurity determinations, chemical makeup analyses and SG, visual appearance, and measurements of various process control parameters, such as acidity, nitrite and fluoride.

The analytical measurement accuracy is determined by analysis of a minimum number of standards-simulating process solutions. Random selections of process samples are independently remeasured to determine the analytical measurement precision. Monthly and quarterly reports are issued summarizing the statistical evaluation or the accuracy and precision estimates.

The following is a listing of the previously achieved accuracies and precisions for selected PUREX sample points. In this case, "accuracy" is the fixed error or "bias" of the method as determined by appropriate standards, and "precision" is the total random error associated with sample analysis based on the reproducibility of results of a given sample between two individuals.

| Sample Point | Determination | Accuracy | Precision |
|---|---|---|---|
| D5 | Uranium | 99.9% | ±1.0% |
| D5 | Plutonium | 100.6% | ±10.0% |
| L9 | Plutonium | 99.7% | ±1.2% |
| K6 | Uranium | 101.1% | ±1.2% |
| 1BP | Alpha total | 100.6% | ±3.0% |

These data reflect the worst-case situations. The methods for headend and product measurement of both plutonium and uranium will be changed to newer state-of-the-art techniques which should improve accuracy and precision.

The concentration of uranium and transuranic elements input to the process is measured in samples from the feed accountability tank (TK-D5). The concentrations of the solutions removed from the process are measured in samples from TK-K6 for uranium, M cell vessels TK-M3, -M4, -M5 and -M6 for plutonium, and TK-Q6 for neptunium (when required). The bulk of the waste losses of uranium and the transuranic elements is measured in samples from TK-F15, TK-D2, TK-F16, TK-F18, and TK-E5. All other output streams are sampled and measured prior to removal from process.

*Plutonium oxide and oxalate samples will not be analyzed at the PUREX laboratory. These samples will be transported to the Plutonium Finishing Plant Laboratory for analysis.

The volumes of the solutions in the tanks are determined by density and dip tube manometer measurements using a prior calibration of the tank with water. For neptunium, the weight of the solution is measured using calibrated scales.

Formal programs are in effect to ensure reliability of analytical measurements and process sampling. The difference between the beginning and ending physical inventories adjusted for all receipts and removals is calculated at the end of every campaign (about 3 mo). If this input/output inventory difference is larger than the measurement uncertainty at the 95% confidence level, an investigation is made to determine the cause of the discrepancy.

Some of the major laboratory equipment used, besides the standard hood equipment (beakers, stirrers, heat blocks, trap bottles, etc.), includes:

- Semiremote pipetter
- pH meters
- Titrators, consisting of delivery buret, electronics box, recorder, and digital readout
- Density meters
- Fluorophotometer
- Laser fluorophotometer
- Absorption spectrophotometers
- Gas-liquid chromatograph
- Dionex ion chromatograph
- Inductively coupled plasma spectrometer (ICP)
- Drying oven
- Weighing balances
- Interim sample storage vaults
- Ge(Li) gamma detectors and peripheral electronics
- Silicon alpha detectors and peripheral electronics
- Alpha proportional counters
- Low-level alpha-beta counter

- Automatic data processing equipment
- X-ray emission spectrometer (post startup).

6.7.2.1 Sample Receiving. The carriers used for sampling PUREX process samples are of three basic types: type A, "Gilmont" carrier for samples with high beta-gamma content; type B, "bayonet" bases for intermediately radioactive samples; and type C, glass and plastic bottles of various sizes (25 to 100 mL) for low-level and cold samples. In addition, the neptunium and plutonium nitrate samples are received in a 25-mL plastic bottle inside a sealed plastic bag. The sealed bag is in a 1-pt cardboard carton with the lid taped on.

The reusable Gilmont and bayonet carriers are prepared in the laboratory; appropriate dilution reagents are placed in the Gilmont vials. The carriers are then labeled, placed on a dolly, and sent downstairs on the dumbwaiter in room 54 (sample receiving on the floor plan). After sampling, the loaded dolly is sent back up on the dumbwaiter. Type B samples are loaded into special racks on the dolly to avoid tipping and spillage.

When first received, samples are surveyed for dose rate and any external contamination. If the dose rate so dictates, the sample package is transferred to a shielded carrier. Samples with high radiation are accompanied by Radiation Monitoring personnel whenever the wholebody rate could be expected to exceed 100 mr/h. Samples with any smearable contamination on the external surface of the sample container are returned to the sample gallery for decontamination.

6.7.2.2 Sample Handling. Dollies are used to transport samples and dilution vials between laboratory rooms. Absorbent, plastic-backed, laboratory paper is used on the dollies to facilitate cleanup of any spills. As stated in the previous section, racks for type B samples are used to avoid spillage. The number and placement of samples on any given dolly will be determined by the weight of sample containers, the total dose rate to the laboratory worker and also by criticality prevention considerations.

The usual precautions taken when working with hazardous chemicals are observed when working with laboratory samples. The samples are opened and analyzed in a fume hood.

High-radiation samples can be loaded into a shielded hood facility in room 50. Preliminary extractions and sample dilutions can be made on these samples inside this shielded hood using remote or semiremote tools and techniques. The prepared samples are then transferred to another appropriate hood for further treatment and analysis.

Intermediate- and low-level samples are handled in regular fume hoods with armport windows. Appropriate shielding and shielded tools are used where necessary to reduce dose rates to the hands and body.

Cold (nonradioactive) samples are handled either on the laboratory bench tops or in hoods, depending on the analysis.

6.7.2.3 Sample Disposal. Samples are vacuum transferred (slurped) in the decontamination room to either TK-F10, TK-U3, or TK-U4, depending on the sample. All samples containing any significant amount of uranium or transuranic material are transferred to TK-F10 via a dedicated line and a liquid transfer jet, while all other contaminated samples go to TK-U3/-U4. Transfer of solution from the laboratory into PUREX process vessels is coordinated with PUREX management whether or not there is significant actinide content. The solutions must be compatible with downstream processes, so the chemical composition of the aqueous solution must be known, as well as whether organic materials may be present.

Transfer of significant quantities of plutonium (greater than 15 g) into the backcycle waste system (TK-F10) is further restricted for TK-F10 criticality prevention. Prior to the transfer, PUREX management must confirm that sufficient volume and acidity exist in TK-F10 to ensure dilution and adequate acidity of the resultant solution.

9413219.0712

6.7.2.4 Waste Handling and Disposal.

6.7.2.4.1 Solid Waste. All laboratory solid waste is treated as contaminated and loaded into approved drums with plastic liners. The waste is surveyed and packaged as necessary before loading into the waste drum. Waste from high-level beta-gamma sources, such as the shielded hood facility in room 50, is loaded into a shielded transfer dolly using long tongs to reduce dose rates. The waste is stored in a drum in the cubicle marked "hot waste storage."

6.7.2.4.2 Liquid Waste. Laboratory liquid waste containing significant quantities of uranium, transuranics, or FP is vacuum transferred to TK-F10. Waste of this nature, including very small quantities of acetone (used for drying pipettes) diluted with water and acid, is accumulated in a vacuum trap bottle and transferred to TK-F10 about once a shift. The balance of the liquid laboratory waste, which contains only trace quantities of fissile material, is discarded to waste tanks (TK-U3/-U4).

6.7.2.5 Laboratory Analyses and Equipment. Table 6-36 is a current listing of the various analyses performed in the PUREX Laboratory, as well as the expected hood location and equipment used.

6.7.2.6 Laboratory Hazard Analysis. Designed safety features and administrative controls reduce the probability of serious accidents in the laboratory to the minimum practicable. Criticality prevention specifications for the laboratory include a mass limit of less than 250 g per hood; the total laboratory mass is controlled to less than 399 g of fissile material. The laboratory hazard analysis is given in Table 6-37.

TABLE 6-36. Laboratory Analyses--Location and Equipment. (Sheet 1 of 4)

| Laboratory 1--Room 50 | | |
|---|---|---|
| Hood number | Typical determination(s) | Type of samples |
| 1 | U, Np | All |
| 2 | U, Np | All |
| 3 | Free $H^+$ and $OH^-$ (titration), pH | All |
| 3A | Dilutions--miscellaneous high-level (beta-gamma) work | Dissolver solutions |
| 4 | Pu--IDMS | Dissolver solutions |
| 5 | Pu--IDMS | Dissolver solutions |
| 6,7,8 | ICP operated-general metal impurities | All |
| 9 | U | Dissolver solutions |
| 10 | Specific ion electrodes - $F^-$, $CI^-$, $Na^+$ | All |

NOTE: A list of major equipment for laboratory 1 follows:

- Acid-base titrators
- Semiremote pipetter
- pH meters
- Plutonium chemical assay
- Titrators
- SG meter
- ICP.

TABLE 6-36. Laboratory Analyses--Location and Equipment. (Sheet 2 of 4)

| Laboratory 2--Room 51 | | |
|---|---|---|
| Hood number | Typical determination(s) | Type of samples |
| 11, 12 | U by fluorophotometer | Waste, low level U |
| 13,14 | Spectrophotometric analysis for U, Fe, Ni, Al | Medium and high level U, Head end |
| 15 | Pu breakdown | L-9, M-3 |
| 16 | Density and Pu dilutions | High-level Pu |
| 17,18 | Spectrophotometric analysis, Pu | L-9, M-3 |

NOTE: (1) A list of major equipment for laboratory 2 follows:

- Two spectrophotometers
- Fluorophotometer
- Densitometer
- Analytical balance.

9413219.0719

TABLE 6-36. Laboratory Analyses--Location and Equipment. (Sheet 3 of 4)

| Laboratory 3--Room 53 | | |
|---|---|---|
| Hood number | Typical determination(s) | Type of samples |
| 23 | Np and Pu by solvent extraction/ alpha total | Process samples, except K4/K6 |
| 24 | Alpha total, total beta, gamma energy analysis mounts | Process, some product waste |
| 25 | Flaming mounts | All mounts requiring flaming |
| 26 | Np and Pu by solvent extraction/ alpha total | K4, K6 (UNH product) UNH from $UO_3$ |
| Bench top | AMU; $H^+$, $Fe^{+2}$, $OH^-$, pH, sulfamate | All cold makeups |

NOTE: A list of major equipment for laboratory 3 follows:

- Titrators
- Densitometer
- pH meters
- Dionex
- Analytical balance.

9413219.0715

TABLE 6-36. Laboratory Analyses--Location and Equipment. (Sheet 4 of 4)

| Laboratory 4--Room 58 | | |
|---|---|---|
| Hood number | Typical determination(s) | Type of samples |
| 33-34 | X-Ray analysis Spares | Uranium |
| 35 | $H^+$, OH titration (backup) | |
| 38 | Np, Pu extraction (backup) | |

| Decontamination--Room 52 | |
|---|---|
| Hood number | Major operations |
| 27-30 | Slurping samples and dilutions, cleaning sample carriers, high-level sample dilutions made in caves |
| 32 | Weighing disposition filters, sample carrer preparation; interim sample storage; contaminated equipment storage |

NOTE: Major equipment in the decontamination room consists of an analytical balance, a drying rack and a ultrasonic cleaner.

9413219.0716

TABLE 6-37. Process Hazards Analysis--Sample-Analytical. (Sheet 1 of 2)

| System or subsystem | Energy (hazard) | Unwanted energy flow (incident) | Consequence (immediate) and/or secondary) | Barriers (design, administrative safety devices, etc.) |
|---|---|---|---|---|
| | | Sample carriers | | |
| Type A gilmonts | Sample with high-level beta-gamma content | Spill--carrier is tipped and leaks sample | Room and personnel contamination; personnel exposure | Carrier design (low center of gravity reduces probability of tipping), administrative procedures; protective clothing |
| Type B bayonet | Samples with significant alpha-beta-gamma content | Spill--tipping of carrier | Room and personnel contaminated | Racks to hold bases--prevents tipping, administrative procedures |
| Type C glass bottles | Samples with significant alpha-beta-gamma content, but lower in beta-gamma than type B samples | Breakage of container (dropped on floor) | Personnel contaminated; cuts from glass; possible internal deposition | Equipment: dollies, padding, etc.; administrative procedures; protective clothing |
| Acid handling | Concentrated acids | Dropping of gallon bottle on floor resulting in breakage and spillage | Fire hazard if organics are present; acid burn to personnel: contamination spread | Training; administrative procedures; safety buckets; protective clothing |
| $Pu(NO_3)_4$ (L9 sample) (M Cell samples) | Pu (high concentration) | Spill or drop on floor | Room and personnel contaminated: possible interial deposition | Equipment design (sample carriers); Admin procedures; protective clothing<br>Handling procedures, work flow |
| D-5 pig | FP (high concentration) | Spill or drip on floor | Spread of contamination, physical injury | System design; administrative procedures; protective clothing |
| Solvent storage | Flammable solvents | Fire | Chemical exposure, fire damage | Same as above |
| Gaseous storage | Flammable gases | Fire, high pressure | Fire damage physical injury | Same as above |

TABLE 6-37. Process Hazards Analysis--Sample-Analytical. (Sheet 2 of 2)

| System or subsystem | Energy (hazard) | Unwanted energy flow (incident) | Consequence (immediate) and/or secondary) | Barriers (design, administrative safety devices, etc.) |
|---|---|---|---|---|
| Slurp hood in decontamination | Pu, and fission products high contamination | Blowback of the slurp system or spill, contact and/or ingestion | Shutdown of laboratory decontamination operation; possible evacuation of laboratory area and curtailment of some process support function, personnel exposure to contamination | System design; administrative procedures |
| Sample receiving | Pu and FP, high contamination | Transfer cart tip-over or failure | Curtailment of laboratory operation to clean up spill, personnel exposure to contamination | Cart design; administrative procedures |
| Waste drum | Acid-soaked rags discarded in waste drum with Pu and FP | Fire--Pu and FP, contamination spread | Contamination spread, inhalation of radioactive material, shutdown of laboratory, fire damage | Administrative procedures fire sprinklers |
| ICP | Plutonium, fission products contamination | Loss of ventilation by failure of ICP exhaust system and Hood Ventilation System | Personnel exposure to radiation and contamination | Shut down hood operation; evacuate premises |
| X-ray Generating Equipment *(X-ray Emission Spectrometer) | High level X-radiation from X-ray tube | Escape or loss of control of X-ray beam | Personnel exposure to X-ray radiation; burns | Build-in equipment safety locks; administrative procedures |

*Post-start-up

## 6.8 URANIUM PRODUCT HANDLING SYSTEM

### 6.8.1 Functional Description

The concentrated UNH is collected and batch-transferred from TK-K6 in the PUREX canyon to the 203-A area for storage in one of four holding tanks (TK-P1, -P2, -P3, or -P4). On occasion, uranium solution to be reworked in the PUREX process is also stored in the 203-A area. Usually, an inventory of cold or clean uranium nitrate solution is also maintained for use as startup feed solution.

The 203-A facilities include equipment for loading and unloading tank trucks, which are used to ship the uranyl nitrate to the $UO_3$ Plant (224-U).

### 6.8.2 Major Components

The 203-A facility consists of four 100,000-gal stainless steel tanks in individual concrete basins. The tanks are interconnected via piping and a pump station to permit intervessel transfers, recirculation of the content of a single tank for mixing, and loading of tank trucks (Fig. 6-80). Located in the P2 enclosure is a smaller, 15,000-gal, stainless steel tank (TK-P6) for storing and concentrating UNH solutions. TK-P6 is equipped with an offgas treatment system, consisting of a condenser, deentrainer, filter, sampler, and steam ejector. Condensate from TK-P6 concentration is collected in TK-P5, a tank also located in the P2 enclosure, from where its content is sampled and can be jetted to waste tank F18 or the chemical sewer header. All piping and tankage are fabricated of type 304L, stain- less steel.

Utilities and services for the 203-A facility are provided by the main 202-A supply systems.

### 6.8.3 Safety Criteria and Assurance

The 203-A facility is a radiation zone, and all work performed requires protective clothing as specified by radiation work procedures. In the event of gross spillage, UNH poses significant chemical hazards to personnel, but relatively negligible radiological hazard. Spillage or pipe leakage associated with a storage tank would be contained within the tank concrete enclosure. Leakage from a transfer line to or from the 202-A PUREX canyon would be contained within the concrete pipe chase. Overflow from a truck tank car during filling would be localized to the platform and collected in an internal sump from which the overflow can be routed back to the storage tanks. Table 6-38 presents the hazard analysis for uranium product handling.

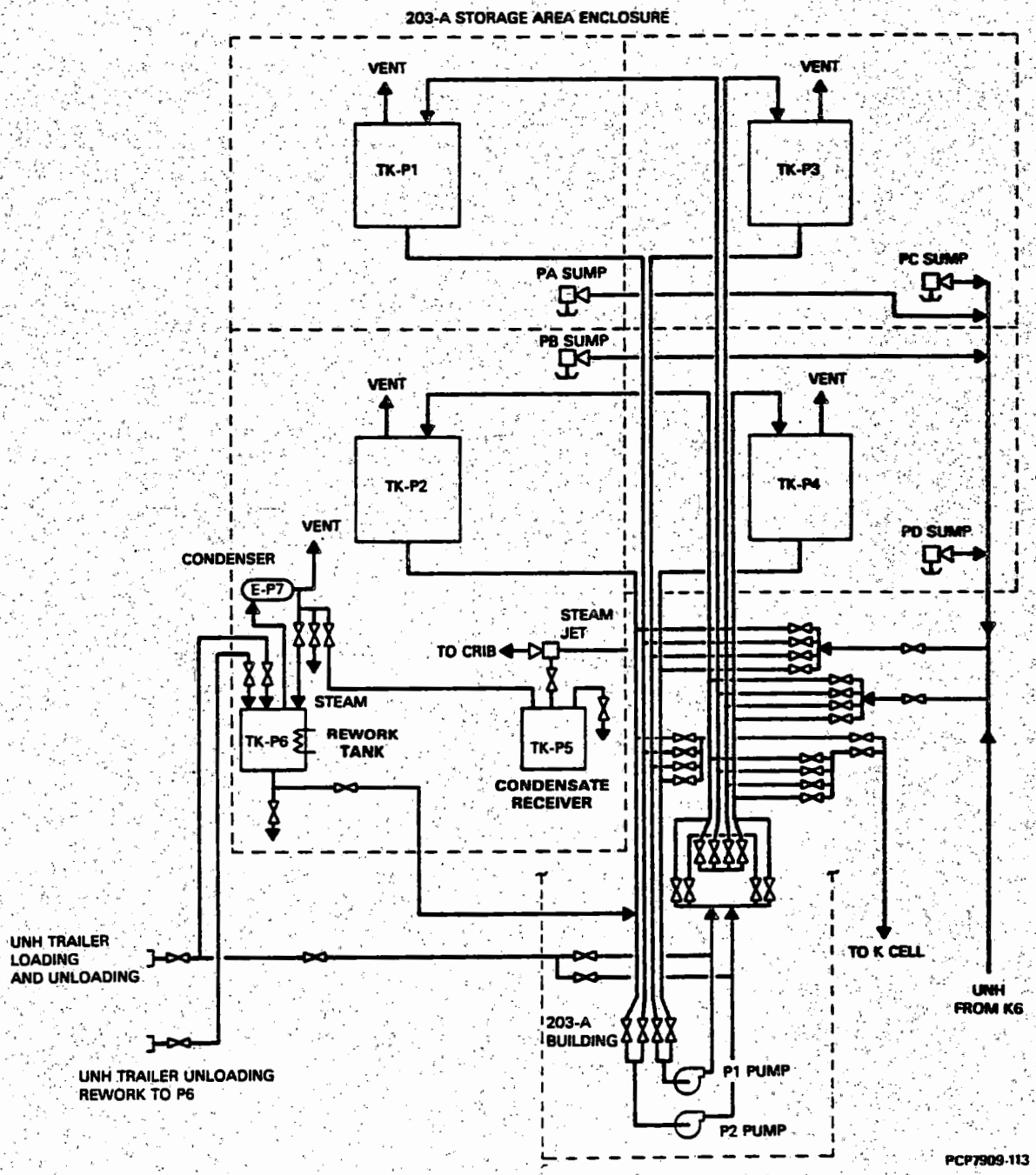


FIGURE 6-80. 203-A Piping.

TABLE 6-38. Process Hazard Analysis--Product Handling (Uranium).

| Energy (hazard) | Unwanted energy flow (incident) | Consequence (immediate and/ or secondary) | Barriers (design, administrative safety devices, etc.) |
|---|---|---|---|
| Uranium | Leak during transfer to 203-A area | Chemical hazard and possible contamination | Encasement; accountability |
| | Overflow/leak while filling tanker | Same | Sump volume measurement; visual observation |
| | Storage tank leak | Same | Parapet walls and sumps |

### 6.8.4 Operational Control

The UNH solution is measured for accountability prior to transfer from TK-K6 to a storage tank in the 203-A area. Volume and assay measurements are performed. Transfers from 203-A area P tanks to tank trucks are measured by initial-final volume difference in the shipping P tank. Accountability is determined at the receiver tank located at the $UO_3$ Plant. Accountability for transfers from the P tanks to TK-E6 is usually determined at TK-E6.

Tank coil condensates and waste solutions from the 203-A area sump are collected in the P5 tank, sampled and, depending on the radioactivity, routed to either the chemical sewer or to the 202-A building canyon for further processing.

## 6.9 REFERENCES

1. Rockwell, PUREX Process Control Manual, RHO-RE-MA-5, Rockwell Hanford Operations, Richland, Washington (June 1983).

2. DOE, Safety of Nuclear Facilities, DOE Order 5480.1A, Chapter V (August 1981) U.S. Department of Energy, Washington, D.C.

3. Rockwell, Nuclear Criticality Safety Standards, RHO-MA-136, Rockwell Hanford Operations, Richland, Washington (1981).

4. GE, Polymerization and Precipitation of Plutonium (IV) in Nitric Acid, HW-54203, General Electric, Richland, Washington (December 17, 1957).

5. ARHCO, Parameters for Plutonium Polymer Formation in Nitric Acid, ARH-SA-233, V. L. Schuelein, Atlantic Richfield Hanford Company, Richland, Washington (May 1975).

6. ARHCO, Safe U-235 Enrichments for the PUREX Facility, ARH-407, Atlantic Richfield Hanford Company, Richland, Washington (1968).

7. Reactor Handbook, Volume II, 2nd Edition, Interscience Publishers (1961).

8. Model 7C Thermal Conductivity Analyzer, Beckman Instructions 015-555636, Beckman Instruments, Inc., Fullerton, California (1978).

9. Models 864 and 865 Non-Dispersive Infrared Analyzers, Beckman Instructions 015-556872, Beckman Instruments, Inc., Fullerton, California, (1982).

10. ARHCO, Operating Experience Using Silver Reactors and Radioiodine Removal in the Hanford PUREX Plant, ARH-SA-67, Atlantic Richfield Hanford Company, Richland, Washington (1970).

11. Engineering for Nuclear Fuel Reprocessing, Gordon and Breach Publishers (1967).

12. ARHCO, PUREX Flowsheet, Reprocessing N Reactor Fuels, ARH-F-103, Atlantic Richfield Hanford Company, Richland, Washington (1976).

13. GE, The PUREX Process - A Solvent Extraction Reprocessing Method for Irradiated Uranium, HW-49483-A, General Electric Hanford Atomic Products Operation, Richland, Washington (1957).

14. ARHCO, The Kinetics and Mechanism of Plutonium (IV) Reduction by Hydroxylamine, ARH-SA-100, Atlantic Richfield Hanford Company, Richland, Washington (1971).

15. ARHCO, Neptunium-237 Production and Recovery, TID-25955, Atlantic Richfield Hanford Company, Richland, Washington (1972).

16. GE, PUREX Neptunium Recovery and Purification-Information Manual, Appendix A--Chemistry of Neptunium, HW-77678, General Electric Company, Richland, Washington (1963).

17. Rockwell, PUREX Technical Manual, RHO-MA-116, Rockwell Hanford Operations, Richland, Washington (September 1983).

18. GE, The Zirflex Process Terminal Development Report, HW-65979, General Electric Company, Richland, Washington (1960).

19. GE, Design Criteria--CGC-124 Increased Processing Flexibility--PUREX, Part I--Dissolver System Modifications, HW-80407, General Electric Company, Richland, Washington (1964).

20. ARHCO, PUREX Plant Capability for Nuclear Material Input Measurement, ARH-2225, Atlantic Richfield Hanford Company, Richland, Washington (1971).

9413219.0722

21. ORNL, KENO4, An Improved Monte Carlo Criticality Program, ORNL-4938, Oak Ridge National Laboratory, Union Carbide, Oak Ridge, Tennessee (November 1975).

22. TNX-Evaporator Incident, DP-25, E.I. duPont de Nemours and Company, Inc., Savannah River, Georgia (1953).

23. GE, Overconcentration in Initial Operation of Uranium Evaporator--321 Building, HW-29690, General Electric Hanford Atomic Products Operation, Richland, Washington (1953).

24. GE, Investigation of Explosive Characteristics of PUREX Solvent Decomposition (Red Oil), HW-27492, General Electric Hanford Atomic Products Operation, Richland, Washington (1953).

25. GE, Safety Aspects of Solvent Nitration in HTGR Fuel Reprocessing, GA-14372, R. G. Wilbourn, General Atomic Company, San Diego, California (June 1977).

26. Rockwell, Hazard Identification and Evaluation for the N Cell Blender, SD-HS-SAR-015, L. A. Stout, Rockwell Hanford Operations, Richland, Washington (April 1983).

27. ARHCO, Use of In-Line Monitors for Process Control of the Hanford PUREX Plant, ARH-SA-116, Atlantic Richfield Hanford Company, Richland, Washington (1972).

28. Prevention of Significant Deterioration Permit, PSD-X80-14, U.S. Environmental Protection Agency, Region 10, Seattle, Washington (1980).

29. Rockwell, Emergency Procedures Manual, RHO-MA-111, Rockwell Hanford Operations, Richland, Washington (1979).

30. ARHCO, PUREX Nuclear Operating Training Manual, Atlantic Richfield Hanford Company, Richland, Washington (1973).

31. Rockwell, Criticality Prevention Specifications, Uranium-Plutonium Separation at the PUREX Plant, CPS-P-465-40000, Rockwell Hanford Operations, Richland, Washington (April 21, 1983).

32. Rockwell, Criticality Prevention Specifications PUREX Plant $PuO_2$ Conversion Facility, CPS-P-465-60010 to 60170, Rockwell Hanford Operations, Richland, Washington (June 27, 1983).

9413219.0721

This page intentionally left blank.

9413219.0725

PUREX FSAR

CHAPTER 7.0 WASTE CONFINEMENT AND MANAGEMENT

9207.0726

This page intentionally left blank.

CONTENTS

7.0 Waste Confinement and Management . . . . . 7-1

7.1 Waste Management Criteria . . . . . 7-1
7.1.1 Criteria for Control of Airborne Wastes . . . . . 7-1
7.1.2 Criteria for Control of Liquid Wastes . . . . . 7-3
7.1.3 Radioactive and Nonradioactive Solid Waste Management Criteria . . . . . 7-5

7.2 Radiological Wastes . . . . . 7-7
7.2.1 Radioactive Gaseous Wastes . . . . . 7-7
7.2.2 Radioactive Liquid Wastes . . . . . 7-7
7.2.3 Radioactive Solid Wastes . . . . . 7-15

7.3 Nonradiological Wastes . . . . . 7-17
7.3.1 Nonradioactive Gaseous Effluents . . . . . 7-17
7.3.2 Nonradioactive Liquid Wastes . . . . . 7-19
7.3.3 Nonradioactive Solid Wastes . . . . . 7-21

7.4 Offgas Treatment and Ventilation . . . . . 7-21
7.4.1 Radioactive Waste Released Through Ventilation Systems . . . . . 7-21
7.4.2 Dissolver Offgas System . . . . . 7-28
7.4.3 Ammonia Offgas System . . . . . 7-36
7.4.4 Process Offgas System . . . . . 7-39
7.4.5 Plutonium Oxide Production Facility Offgas System . . . . 7-43

7.5 Liquid Waste Treatment and Retention . . . . . 7-49
7.5.1 High-Level Waste . . . . . 7-50
7.5.2 Low-Level Waste . . . . . 7-62
7.5.3 Very-Low-Activity Aqueous Waste . . . . . 7-75

7.6 Liquid Waste Solidification . . . . . 7-79

7.7 Solid Wastes . . . . . 7-79
7.7.1 Design Objectives . . . . . 7-80
7.7.2 Equipment and System Description . . . . . 7-80
7.7.3 Operating Procedures . . . . . 7-81
7.7.4 Characteristics, Concentrations, and Volume of Solid Waste . . . . . 7-83
7.7.5 Packaging . . . . . 7-83
7.7.6 Storage Facilities . . . . . 7-86

7.8 References . . . . . 7-88

FIGURES:

7-1. Estimated Average Flow Rates and Oxides of Nitrogen Concentrations for Offgases Entering the Main PUREX Stack . . . . . 7-18
7-2. Dissolver Offgas System . . . . . 7-29

FIGURES (Contd.):

7-3. Ammonia-Hydrogen Gas Analyzer Schematic . . . . . 7-33
7-4. Ammonia Offgas System . . . . . 7-37
7-5. Process Offgas System . . . . . 7-41
7-6. Plutonium Oxide Production Facility Offgas Flow Diagram . . . . . 7-45
7-7. Liquid Waste Process Flowsheet . . . . . 7-51
7-8. High-Level Waste Concentration and Treatment . . . . . 7-55
7-9. Decladding Flow Diagram . . . . . 7-63
7-10. Canyon Sumps and Miscellaneous Liquid Wastes . . . . . 7-66
7-11. Service Facilities Waste . . . . . 7-68
7-12. Organic Wash Waste . . . . . 7-69
7-13. Ammonia Scrubber Waste Treatment . . . . . 7-72
7-14. Waste Rework System . . . . . 7-72
7-15. Ammonia Scrubber Discharge Sampling, Monitoring, and Flow Totalizing System . . . . . 7-78
7-16. Burial Tunnel 2 . . . . . 7-87

TABLES:

7-1. Oxides of Nitrogen Emission Limitations . . . . . 7-2
7-2. Gaseous Wastes from PUREX . . . . . 7-8
7-3. Projected Radionuclide Release in the Gaseous Exhaust from the PUREX Plant . . . . . 7-12
7-4. High-Level and Low-Level Process Waste . . . . . 7-13
7-5. Very-Low-Activity Aqueous Waste . . . . . 7-14
7-6. Annual Radioactive Waste Discharges from the PUREX Plant to Cribs and Ponds . . . . . 7-16
7-7. Estimated Daily Duration and Percent of Total Plant Emissions for PUREX Processes Evolving Oxides of Nitrogen . . . . . 7-17
7-8. Estimated Fluctuation of Average PUREX Plant Oxides of Nitrogen Emissions . . . . . 7-19
7-9. Principal Chemicals Released to Ground Via PUREX Plant Chemical Sewer . . . . . 7-20
7-10. PUREX Effluents--Gaseous . . . . . 7-22
7-11. Dissolver Offgas System Major Components . . . . . 7-31
7-12. Summary of Potential Hazards Associated with Dissolver Offgas System . . . . . 7-34
7-13. Ammonia Offgas System Major Components . . . . . 7-38
7-14. Summary of Potential Hazards Associated with the Ammonia Offgas System . . . . . 7-40
7-15. Process Offgas System Major Components . . . . . 7-42
7-16. Summary of Potential Hazards Associated with the Process Offgas System . . . . . 7-44
7-17. Plutonium Oxide Production Facility Offgas System, Major Components . . . . . 7-47
7-18. High-Level and Low-Level PUREX Wastes . . . . . 7-52
7-19. Projected Radionuclide Concentrations in Very-Low-Activity Aqueous Waste from PUREX to Cribs and Ponds . . . 7-54
7-20. High-Level Waste Concentration and Sugar Denitration Streams . . . . . 7-56
7-21. Major Components of the High-Level Waste Treatment System . . . . . 7-58

9413219.0728

TABLES (Contd.):

7-22. Waste Concentration--Off-Standard Conditions . . . . . 7-60
7-23. Ammonia Scrubber Water and Ventilation System Steam Condensate Concentration and Disposal Streams . . . . . 7-71
7-24. PUREX Plant Effluents--Solid . . . . . 7-84
7-25. Contents of Burial Tunnel 1 . . . . . 7-84
7-26. Contents of Burial Tunnel 2 . . . . . 7-85
7-27. PUREX Equipment Storage Tunnels Inventory-September 30, 1973 . . . . . 7-85

9413219.0729

9413219.0730

This page intentionally left blank.

# 7.0 WASTE CONFINEMENT AND MANAGEMENT

This chapter is a discussion of the systems and controls for confining and managing the waste material generated as a byproduct of the Plutonium-Uranium Reduction Extraction (PUREX) Plant operations. Both radiological and nonradiological wastes in the gaseous, liquid, and solid forms are included in this discussion.

## 7.1 WASTE MANAGEMENT CRITERIA

Operation of the PUREX Plant is in compliance with national and local standards for radioactive waste management and environmental protection.(1-13) This is accomplished by the preparation of and compliance with Rockwell Hanford Operations (Rockwell) standards.(14,15) Rockwell's policy is to manage radioactive and nonradioactive waste in a manner minimizing the associated risk to man and the environment over the effective lifetime of such waste.

Chapter 4.0 (Section 4.3) of this Final Safety Analysis Report (FSAR) delineates the safety design criteria for confinement, equipment control, criticality, radiological protection, and handling and storing of radioactive waste. Section 4.3 also contains design criteria for industrial and chemical safety relative to nonradioactive hazardous wastes.

### 7.1.1 Criteria for Control of Airborne Wastes

The PUREX Plant airborne effluent wastes are discharged from exhaust ventilation stacks (see Sections 5.4, 7.2, and 7.3). These effluents contain a mixture of radioactive and nonradioactive gases, which are evaluated on separate criteria.

7.1.1.1 Standards for Control of Airborne Radioactive Wastes. The Rockwell effluent standards for permissible radioactive concentrations are those of Tables I and II of Reference 3.(14) Table I concentrations were derived from the dose standards for workers continuously exposed for a period of 40 h during a work week. Table II concentrations were derived from the dose standards for members of the general public continuously exposed for a period of 168 h a week.

- The airborne radioactive releases to the atmosphere will be limited to as low as reasonably achievable (ALARA).
- In no case will the annual average radionuclide concentrations in ground-level air at the Hanford Site boundary exceed Table II guideline values, nor will the annual average radionuclide concentrations in air at ground level within the Hanford Site boundary exceed Table I guideline values.
- The weekly average concentrations at the site boundary and within the site shall not exceed four times the Table II and Table I concentration limits, respectively.



9413219.0731

- The maximum instantaneous concentration of effluents released to the environment will not exceed 5,000 times Table II values.

7.1.1.2 Standards for Control of Nonradioactive Airborne Wastes. The only significant airborne wastes generated by the PUREX Plant are oxides of nitrogen and ammonia. Emissions of oxides of nitrogen will be controlled to limits established by the U.S. Environmental Protection Agency (EPA) as outlined in Table 7-1.(7) Ammonia has no established release limit; however, the limit set by the American Conference of Governmental Industrial Hygienists for occupational exposure(16) would apply if there were to be exposure to personnel.

TABLE 7-1. Oxides of Nitrogen Emission Limitations.(7)

| Source | Concentration dry basis (vol%) | kg/d | Mass emission rate (t/yr) |
|---|---|---|---|
| PUREX Plant $NO_x$ absorber exit | 2.0 | 1,160 | - |
| Main stack | - | 2,250 | 424 |

9413219.0732

7.1.1.3 Criteria for Sampling and Monitoring of Airborne Effluents.

7.1.1.3.1 Sampling Criteria for Radioactive Airborne Wastes. Sampling criteria for radioactive airborne wastes follow.

- Sampling systems must be provided for all airborne wastes which are normally or potentially contaminated at levels which may exceed 10% of Table II concentrations on an annual average basis.

- Sampling systems must provide representative samples to enable accurate measurements of radioactivity. A sample is considered representative if the average stream parameter being measured occurs in the sample in the same average proportion as it occurs in the environmental discharge.

- Sampling systems and the analytical laboratory must be capable of extracting and analyzing a sample at a concentration level at least as low as 10% of Table II.

7.1.1.3.2 Monitoring Criteria for Radioactive Airborne Wastes. Monitoring and alarm systems shall be provided for airborne waste systems having a potential for contaminant concentrations meeting or exceeding four times Table I values. This requirement does not apply to effluent that has no reasonable potential for exceeding the annual average concentrations outlined in Section 7.1.1.1.

Effluent streams must be monitored for each type of radiation or radionuclide that has a potential for exceeding the preceding concentrations unless unusual increases in one type of radioactivity or radionuclide are accompanied by increases in another monitored type.

7.1.1.3.3 Air Sampling and Monitoring Criteria for Nonradioactive Airborne Wastes. Stack continuous air monitors (CAM) shall be provided for nitrogen oxide and ammonia for those stacks which release these pollutants in any significant concentrations. Such monitors must meet performance criteria specified in 40 CFR 60, Appendix B[17] for those pollutants called out therein.

Nonradioactive airborne waste sampling is in accordance with EPA reference methods.[17]

## 7.1.2 Criteria for Control of Liquid Wastes

Liquid wastes generated by the PUREX Plant are both radioactive and nonradioactive. The radioactive liquid waste is classified as either high-level process waste, low-level process waste, or very-low-activity aqueous waste. Descriptions of these wastes and manner of handling follow.

- High-level process waste contains 99% of the fission products (FP) and, thus, has a high-heat generation which requires cooling and/or removal of strontium and cesium prior to long-term storage. The storage of this waste is explained in the Hanford Environmental Impact Statement.[18]

- Low-level process waste contains most of the remaining FP in a dilute form. This waste is processed by evaporation to concentrate the radioactive material which is then stored as high-level process waste.

- Very-low-activity aqueous waste contains radioactive material at a concentration near or below Table I values. This waste may be discharged to the environment for percolation into the ground or evaporation.

Nonradioactive waste must be disposed of in an environmentally acceptable manner.

7.1.2.1 Standards for Control of Radioactive Liquid Wastes. The concentration criteria listed in this section are based on annual averages.

- The principle of ALARA shall be applied to the treatment and release of all aqueous waste, including the ammonia scrubber waste and process condensate.

- Radionuclide (except $^{3}H$) concentrations in liquids discharged to ground (cribs) will not exceed Table I guideline values. Transuranic [(TRU isotopes above uranium in the periodic chart, and $^{233}U$)] nuclide concentrations in these wastes will not exceed Table II guideline values. The impact of $^{3}H$ released from PUREX upon the environment has been determined to be inconsequential.[19]

- Radionuclide concentrations in liquid discharges to open ponds or ditches will not exceed Table II guideline values.

- Diversion capability will be provided for continuous liquid discharges to open ponds and ditches (cooling water and chemical sewer). In the event of high radioactivity in one of these streams, it will be diverted to a retention basin. The diverted material would then be reprocessed for additional decontamination if required based on evaluation of sample analytical results.

- Separable liquid organic wastes containing radionuclides will not be discharged to the ground.

- Nonradioactive liquid streams shall not be added to radioactive streams for the sole purpose of compliance with concentration limits.

7.1.2.2 Standard for Control of Nonradioactive Liquid Wastes.

7.1.2.2.1 Sanitary Waste. All sanitary wastes shall be disposed of in an environmentally acceptable manner.

7.1.2.2.2 Hazardous Waste.

- The discharge of hazardous waste or hazardous substances through liquid effluent streams shall be controlled to ALARA levels.

- Concentrations of toxic and deleterious material shall be below those of public health significance or those which may cause acute or chronic toxic conditions to the biota.

- Liquid organic waste shall not be discharged to ground in a radioactively contaminated area.

7.1.2.3 Criteria for Sampling and Monitoring of Liquid Effluents.

- Record sampling systems must be provided for radioactive liquid effluents that normally or potentially exceed 10% of the concentration values in Table II on a yearly average.

- Potentially contaminated liquid discharges will be either (1) proportionally sampled and measured for flow or (2) batch accumulated, analyzed, and measured for volume prior to discharge.

- Sampling of liquid streams where required for radioactive or nonradioactive pollutants shall be performed in a manner that provides representative measurements of volume and concentration of pollutants released to the environment.

- Automatic, flow-proportional sampling shall be warranted on liquid effluent streams where the flow or the pollutant concentrations fluctuate. Dip (grab) sampling shall be acceptable in cases of a batch discharge or where the pollutant discharge is due to a nonroutine condition.

- The measurement of volume, flow rate, pollutant concentrations, etc. should be made at the point which most closely represents what is being released to the environment.

- Potentially contaminated continuous liquid discharges shall be continuously monitored and have sampling systems to assure accurate assessment of routine and nonroutine releases. These streams will have continuous flow measurement with totalizing capabilities.

- Specific nuclide analyses on radioactive-contaminated, liquid waste effluents are to be performed whenever the concentration of alpha-emitting radionuclides exceeds 10% of the Table II limit for $^{239}Pu$ or the concentration of beta-emitting radionuclides exceeds 10% of Table II limit for $^{90}Sr$. In addition, the monthly composite samples of liquid effluents to cribs, ditches, or ponds will be analyzed to determine $^{3}H$ and nitrate (nitrogen oxide) concentrations.

9413219.0735

### 7.1.3 Radioactive and Nonradioactive Solid Waste Management Criteria

Solid wastes shall be segregated according to type and stored or disposed of according to established standards. The volume of solid wastes to be disposed shall be minimized.

#### 7.1.3.1 General Requirements.

- Radioactive waste containers shall be surveyed at the facility generating the waste. Exterior surfaces of the waste package shall be free of smearable contamination or have contamination fixed with an adherent film (except for TRU wastes) or contained by additional packaging.

- An assay to determine the fissile content of the waste shall be performed on those wastes which are generated by facilities where plutonium, $^{233}U$, $^{235}U$, or other fissile material could be present in significant quantities.

- Incompatible or highly reactive materials shall not be packaged in the same waste container.

- No flammable absorbed liquids shall be disposed of in caissons.*

- Unreacted alkali metals shall not be included with solid wastes going to radioactive burial grounds.

- Radioactive solid wastes will be shipped in appropriate containers(20) that meet U.S. Department of Energy (DOE) requirements.

---

*Underground, upright, cylindrical, encased waste storage structure.

7.1.3.2 Transuranic Waste Storage.

- A special, segregated waste storage area shall be provided for all solid wastes containing or suspected of containing 10 nCi of TRU contamination per gram of solid waste, including the sorbing and packaging material. Maximum weight and package size restrictions apply; i.e., dilution with non-TRU waste is essentially ruled out.

- The TRU wastes to be stored shall be packaged according to DOE-approved methods.

- The integrity of the packing containers shall be such that the packages can be readily retrieved in an intact, contamination-free condition for 20 yr.

- Combustible and noncombustible TRU solid wastes shall be packaged and stored separately.

- Small items shall be stored on an asphalt pad or in trenches or caissons in the 200 Areas after being packaged in approved containers.

- Large items of failed equipment shall be packaged in approved containers and stored in segregated TRU trenches or the PUREX Plant burial tunnel 2.

7.1.3.3 Nontransuranic Waste Disposal. The non-TRU, solid, low-level radioactive wastes are disposed of in non-TRU 200 East and West Areas dry-waste burial trenches.

Wastes to be buried are packaged according to DOE-approved methods as specified in RHO-MA-222.[15]

7.1.3.4 Standards for Disposal of Nonradioactive Solid Wastes.

- Nonradioactive, nonhazardous wastes shall be disposed of in the central landfill.

- Disposal of wastes at the central landfill shall comply with requirements specified for landfill operations.[10]

- Radioactive waste[3] shall not be disposed of in the central landfill.

- Nonradioactive hazardous waste will be handled in accordance with DOE-RL 5480.9.[21]



9413219.0736

## 7.2 RADIOLOGICAL WASTES

### 7.2.1 Radioactive Gaseous Wastes

Table 7-2 presents the source, chemical and radiological composition, method and design for handling, and mode of disposition of all gaseous waste streams at the PUREX Plant.

The radioactivity in the primary building (canyon) gaseous exhaust stream, which includes the filtered canyon ventilation exhaust and the treated and filtered offgas from the fuel dissolution process and the vessel vent system, is expected to remain at essentially the same level as during PUREX operations in 1972.

In 1972, the plutonium concentration in the product removal (PR) room exhaust was typically $1.2 \times 10^{-11}$ μCi/mL compared with the Table I guide of $1.2 \times 10^{-12}$ μCi/mL.(3) This level was achieved with single-stage filtration. However, the addition of the plutonium oxide production facility places added burden on the PR exhaust system and requires a second stage of filtration. The second stage of filtration maintains the plutonium concentration in the PR room exhaust to less than Table II guidelines.(3)

The radionuclide concentrations in the gaseous effluents from the PUREX Plant are determined by averaging the discharges from all stacks.(14) Table 7-3 compares the discharges in 1972 with the projected gaseous discharges and the DOE concentration guides.(3) All onsite concentrations are not only below Table I values for onsite concentration, but are below the Table II offsite concentrations.(3)

In keeping with the ALARA philosophy, all concentrations are reduced to as low a value as is technically and economically feasible. The Rockwell objective is to have discharge concentrations at PUREX below the Table I values at point of discharge.(3,14) Table 7-3 indicates this objective is met with the exception of the $^{85}Kr$ discharge for which no economically practical method of collection is available for the PUREX Plant. The onsite concentration of $^{85}Kr$ is, however, less than the Table I guideline by at least three orders of magnitude.(3)

### 7.2.2 Radioactive Liquid Wastes

The radioactive liquid wastes from the PUREX process can be grouped as high-level process waste, low-level process waste, and very-low-activity aqueous waste. Table 7-4 presents the source, chemical and radiological compositions, method and design for handling, and mode of storage or disposition for each liquid-waste stream classified as highlevel or low-level. Table 7-5 presents the same information for all very-low-activity aqueous waste streams.

TABLE 7-2. Gaseous Wastes from PUREX. (Sheet 1 of 4)

| System/source | Stack | Chemical and radiological makeup | Handling/filtration |
|---|---|---|---|
| Canyon exhaust | 291-A-1 | Air contaminated with $^{3}H$, $^{14}C$, $^{85}Kr$, $^{129}I$, $^{131}I$, beta and alpha emitters<br>Small amounts of $NO_x$ and $NH_3$ resulting from process offgas system | Exhausted air passed through glass-fiber bed and finishing filter. Backup third filter system of three stages HEPA[a] filter available. Exhaust monitored continuously for $^{85}Kr$, $^{131}I$, and particulate radionuclides. Exhaust sampled for $^{3}H$, $^{14}C$, $^{129}I$, $^{131}I$, and particulate radionuclide activity (see Section 7.1.1.3.1 and 8.6.1.1.1) |
| $NH_3$ offgas system | 296-A-24 | $NH_3$ | Exhaust air filtered by two stages of HEPA filters, and sampled and monitored for particulate radionuclide activity and $NH_3$ (see Sections 7.1.1.3.1 and 8.6.1.1) |
| Burial tunnel 2 | 296-A-10 | | Exhausted air filtered by single-stage HEPA and sampled for particulate radionuclide activity (see Sections 7.1.1.3.1. and 8.6.1.1.6) |
| PR room exhaust | 296-A-1 | Air potentially contaminated with Pu | Exhausted air passed through two stages of HEPA filtration. Exhaust monitored continuously for alpha. Exhausted air sampled for particulate radionuclide activity (see Sections 7.1.1.3.1 and 8.6.1.1.2) |
| East sample gallery hood | 296-A-3 | Air potentially contaminated with beta and gamma emitters | Exhausted air passed through one stage of HEPA filtration. Exhausted air monitored continuously for beta/gamma. Exhausted air sampled for particulate radionuclide activity (see Sections 7.1.1.3.1 and 8.6.1.1.3) |

TABLE 7-2. Gaseous Wastes from PUREX. (Sheet 2 of 4)

| System/source | Stack | Chemical and radiological makeup | Handling/filtration |
|---|---|---|---|
| West sample gallery hood | 296-A-2 | Air potentially contaminated with beta, gamma, and alpha emitters | Exhausted air passed through one stage of HEPA filtration. Exhausted air monitored continuously for beta, gamma, and alpha. Exhausted air sampled for particulate radionuclide activity (see Sections 7.1.1.3.1 and 8.6.1.1.3) |
| East sample gallery | 296-A-6 | Clean air; air can be contaminated by accidental release | Exhausted air passed through one stage of HEPA filtration. Exhausted air sampled for total alpha and total beta activity (see Sections 7.1.1.3.1 and 8.6.1.1.5) |
| West sample gallery | 296-A-7 | Clean air; air can be contaminated by accidental releases | Exhausted air passed through one stage of HEPA filtration. Exhausted air sampled for total alpha and total beta activity (see Sections 7.1.1.3.1 and 8.6.1.1.5) |
| White room exhaust[b] | 296-A-8 | Clean air; air could be contaminated by accidental releases | Exhausted air passed through one stage of HEPA filtration. Exhausted air sampled for total alpha and beta activity (see Sections 7.1.1.3.1 and 8.6.1.1.6) |
| P&O[c] gallery exhaust[b] | | Clean air; air could be contaminated by accidental releases | Normally exhausted through wall ventilators (EF-3-5 through -10). These ventilators will shut down and the air will be HEPA filtered and exhausted through the 296-A-8 stack and ECMP[d] in the event of air contamination in that gallery detected by CAM |

TABLE 7-2. Gaseous Wastes from PUREX. (Sheet 3 or 4)

| System/source | Stack | Chemical and radiological makeup | Handling/filtration |
|---|---|---|---|
| Storage gallery[b] | EF-3-1 | Clean air; air could be contaminated by accidental releases | Normally exhausted through exhaust fan EF-3-1; CAM installed to detect possible off-standard conditions. Fan is manually shutdown in the event of a release. |
| East laboratory exhaust | 296-A-5A | Air potentially contaminated with beta and gamma emitters and with Pu | Exhausted air passed through one stage of HEPA filtration; continuous alpha monitoring; exhausted air sampled for total alpha and beta acivity (see Sections 7.1.1.3.1 and 8.6.1.1.4) |
| West laboratory exhaust | 296-A-5B | Air potentially contaminated with beta and gamma emitters and with Pu | Exhausted air passed through one stage of HEPA filtration; continuous alpha monitoring; exhausted air sampled for total alpha and beta activity (see Sections 7.1.1.3.1 and 8.6.1.1.4) |
| Miscellaneous | | | |
| 293-A building | 296-A-14 | Clean air; air could be contaminated by accidental releases | Exhausted air passed through one stage of HEPA filtration; exhausted air sampled for total alpha and beta activity (see Sections 7.1.1.3.1 and 8.6.1.1.6) |
| TK-P6 (203-A)(vent) | 296-A-15 | Clean air; air could be contaminated by accidental releases | Air passed through deentrainer and one stage of HEPA filtration |
| TK-216-A-2 (vent) | 296-A-16 | Clean air | Exhausted air passed through deentrainer |

TABLE 7-2. Gaseous Wastes from PUREX. (Sheet 4 of 4)

| System/source | Stack | Chemical and radiological makeup | Handling/filtration |
|---|---|---|---|
| Steam condensate pump tank | | Clean air; air could be contaminated by accidental releases | Exhausted air passed through one stage of HEPA filtration |
| TK-201 (cooling water pump tank) | | Clean air | None |
| Vacuum pump discharge | | Clean air | None |

[a]High efficiency particulate air.
[b]Ventilation system 3.
[c]Pipe and operating.
[d]East ventilation system 4.

TABLE 7-3. Projected Radionuclide Release in the Gaseous Exhaust from the PUREX Plant.

| Radionuclide | 1972 Actual[a] | Projected average annual values[b] | | | | DOE Order 5480.1, Chapter XI | |
|---|---|---|---|---|---|---|---|
| | Annual (Ci) | Annual (Ci) | Average concentration at the source (Ci/mL)[c,d] | Average concentration onsite (Ci/mL)[e] | Average concentration at the site boundary (Ci/mL)[f] | Onsite concentration guide (Ci/mL)[g] | Offiste concentration guide (Ci/mL) |
| Total (as $^{239}Pu$) | $4.3 \times 10^{-3}$ | $6.3 \times 10^{-3}$ | $1.7 \times 10^{-12}$ | $4.7 \times 10^{-17}$ | $8.9 \times 10^{-19}$ | $2 \times 10^{-12}$ | $6 \times 10^{-14}$ |
| Total (as $^{90}Sr$)[g] | $5.9 \times 10^{-1}$ | $4.6 \times 10^{-1}$ | $1.3 \times 10^{-10}$ | $5.3 \times 10^{-15}$ | $6.5 \times 10^{-17}$ | $1 \times 10^{-9}$ | $3 \times 10^{-11}$ |
| $^{129}I$ | $1.4 \times 10^{-1}$ | $4.0 \times 10^{-2}$ | $2.0 \times 10^{-11}$ | $1.5 \times 10^{-15}$ | $5.6 \times 10^{-18}$ | $8 \times 10^{-10}$ | $2 \times 10^{-11}$ |
| $^{131}I$ | $2.1 \times 10^{-1}$ | $2.9 \times 10^{-1}$ | $1.4 \times 10^{-10}$ | $1.1 \times 10^{-15}$ | $4.1 \times 10^{-17}$ | $4 \times 10^{-9}$ | $1 \times 10^{-10}$ |
| $^{85}Kr$ | $4.1 \times 10^{5}$[h] | $1.3 \times 10^{6}$ | $6.5 \times 10^{-4}$ | $2.9 \times 10^{-9}$ | $1.8 \times 10^{-10}$ | $1 \times 10^{-5}$ | $3 \times 10^{-7}$ |
| $^{3}H$ | $1.0 \times 10^{3}$[h] | $2.2 \times 10^{3}$ | $1.3 \times 10^{-6}$ | $1.1 \times 10^{-11}$ | $3.6 \times 10^{-13}$ | $5 \times 10^{-6}$ | $2 \times 10^{-7}$ |
| $^{14}C$ | $7.0 \times 10^{-1}$[h] | $6.9 \times 10^{0}$ | $3.5 \times 10^{-9}$ | $7.3 \times 10^{-16}$ | $9.9 \times 10^{-16}$ | $4 \times 10^{-6}$ | $1 \times 10^{-7}$ |

[a]1972 emissions are based on processing a total of 1,013 t of fuel, including about 525 t of 3.5% $^{240}Pu$ weapons-grade irradiated fuel.

[b]Projected emissions are based on processing 2,100 t of 12% $^{240}Pu$ irradiated fuel, 20% of which is spike fuel. The 2,100 t of fuel is the sum of six equal portions weighing 350 t each with cooling times of 1/2, 2, 3, 4 1/2, 6, and 7 1/2 yr. Processing of 6% $^{240}Pu$ irradiated fuel would result in lower emissions.

[c]These values were determined by dividing the annual curies by the total effluent volume. These numbers are statistically derived and are given for comparison purposes only.

[d]Source concentration is the quotient of the annual curie release and the combined stack ventilation flow rates from the PUREX Plant. For total alpha and total beta, a combined stack flow rate of $3.6 \times 10^{15}$ mL/yr is used. For the other isotopes, the combined stack flow of the main canyon ventilation and process offgas is used ($2.0 \times 10^{15}$ mL/yr).

[e]The maximum annual average concentration at an onsite ground location is expected to be at a point 0.5 mi from the plant in the southeast direction. The average annual dispersion factor for this location is $1.67 \times 10^{-7}$ s/m$^3$, as calculated from meteorological data collected at Hanford.

[f]The site boundary, for the purpose of calculating the maximum annual average release, is represented by the southeast sector at 15 mi from the PUREX Plant. The annual average atmospheric dilution factor has been measured as $4.5 \times 10^{-9}$ s/m$^3$ for this purpose.

[g]As particulate material.

[h]Calculated values; gas streams were not sampled and analyzed for these elements.

TABLE 7-4. High-Level and Low-Level Process Waste.

| Waste stream | Source | Measurement/handling | Disposition |
|---|---|---|---|
| | | High-Level Waste | |
| Current acid waste, PUREX acid waste, Zirflex acid waste | HA column raffinate (F cell) | Batch accumulation, sample, laboratory analysis, and volume measurement (see Section 7.5.1.3.5) | Made alkaline and sent to tank farm for temporary storage |
| | | Low-Level Waste | |
| Cladding waste | Chemical decladding of fuel | Batch accumulation, sample, laboratory analysis, and volume measurement (see Sections 7.5.2.2 and 7.5.3.3) | 242-A evaporator; tank farm for temporary storage |
| Miscellaneous canyon waste | TK-F18 (sumps, etc.) | Batch accumulation, sample, laboratory analysis, and volume measurement (see Sections 7.5.2.3 and 7.5.3.3) | 242-A evaporator; tank farm for temporary storage |
| Miscellaneous service facility waste | TK-U3-U4 (laboratory drains, 291-A, etc.) | Batch accumulation, sample, laboratory analysis, and volume measurement (see Sections 7.5.2.3 and 7.5.3.3) | 242-A evaporator; tank farm for temporary storage |
| Organic wash waste | Solvent treatment water from G and R cells | Batch accumulation, sample, laboratory analysis, and volume measurement (see Sections 7.5.2.6 and 7.5.3.6) | 242-A evaporator; tank farm for temporary storage |
| Ammonia scrubber waste | E-F11 concentrated ammonia scrub solution | Batch accumulation, sample, laboratory analysis, and volume measurement (see Sections 7.5.2.6 and 7.5.3.6) | 242-A evaporator; tank farm for temporary storage |

TABLE 7-5. Very-Low-Activity Aqueous Waste.

| Waste stream | Source | Chemical/ radiological makeup | Measurement/handling | Disposition |
|---|---|---|---|---|
| Process condensates | Process concentration condensate (E-K4), etc. | Condensed aqueous solutions; traces of FP, U, Pu, Np; also see Figure 6-10 | For monitoring, see Section 8.6.1.2.1. For handling, see Section 7.5.3.1 | Normally to 216-A-10 crib |
| Steam condensate | Process steam | Normally clean water; may be contaminated by accidental spill | For monitoring, see Section 8.6.1.2.5. For handling, see Section 7.5.3.2 | Normally to 216-A-30 crib; diversion capability to 216-A-42 retention basin |
| Ammonia scrubber waste condensate | E-F-11-2 | See Figure 6-1, ASD[a] stream | For monitoring, see Section 8.6.1.2.2. For handling, see Sections 7.5.2.6 and 7.5.3.3 | Normally to 216-A-36B crib |
| 203-A waste | UNH[b] and $UO_3$ recovered acid storage area | Normally clean water; may be contaminated by accident | Sample batch, collection tank, volume measurement (see Section 7.5.3.4) | Normally to chemical sewer waste stream and 216-B-3 pond; may be routed to PUREX for rework or disposal to underground storage tanks |
| Cooling water | Process vessel coil | Normally clean water; can be contaminated by coil leaks | Same as steam condensate | Normally to 216-A-30 crib; diversion capability to 216-A-42 retention basin |
| Cooling water | Concentrator condensers and DOG[c] condensers | Normally clean water; can become contaminated by coil leaks | For monitoring, see Section 8.6.1.2.4 for handling, see Section 7.5.3.5 | Normally to 216-A-25 pond diversion capability to 216-A-42 retention basin |
| Chemical sewer[d] | Chemical drains, P&O gallery floor drains, fractionator steam chest condensate, vacuum pump seal water | Normally waste water free of radioactivity; water can be contaminated by spills and leaks | For monitoring, see Section 8.6.1.2.3; for handling, see Section 7.5.3.6 | Normally to 216-B-3 pond via 216-A-29 ditch diversion capability to 216-A-42 retention basin |

[a]Ammonia condensate stream.

[b]Uranyl nitrate hexahydrate.

[c]Dissolver offgas.

[d]Manual diversion of some sources (e.g., P&O gallery drains); automatic diversion at ditch to 216-A-42 retention

All high- and low-level liquid wastes are held in tanks for further processing and interim storage. The very-low-activity aqueous wastes are released to the Hanford Site environment. Release is either to underground percolation cribs or surface evaporation/percolation ponds. None of the liquid releases exceed the Table II guidelines at offsite locations.(3)

Table 7-6 is a comparison of the radionuclide discharges to cribs and ponds in 1972 to 1985 projected discharges. The DOE concentration guides are also included for comparison. A significant reduction has been made in the radionuclides discharged to the cribs as a result of plant modifications which permit more liquid recycle and better pretreatment of the liquid effluents. Now, all discharges to the ponds are projected to meet Table II guidelines.(3) Discharges to cribs are also expected to meet Table I guidelines, with the exception of $^{3}H$, and will, in fact, meet Table II guidelines for most radionuclides.(3) The impact of $^{3}H$ upon the environment has been determined to be inconsequential.(19) Projected levels of $^{90}Sr$ at the source will be near the onsite release limit. However, no significant migration offsite will occur due to the properties of the Hanford soil and the long distances to the water table and to the site boundary.(18)

### 7.2.3 Radioactive Solid Wastes

There are three categories of radioactive solid waste at PUREX; descriptions follow.

- Low-Level

  Solid, low-level wastes consist primarily of failed or unusable tools, cleaning rags, plastics, failed laboratory equipment, failed air filters contaminated with low levels of beta or gamma activity. Solid low-level waste is produced in all radiation areas of the plant. In 1972, about 450 $m^3$ of low-level waste from the PUREX Plant were buried in the 200 East Area industrial burial ground. The annual volume is expected to be 800 $m^3$ following startup.

- Transuranic

  Solid, transuranic (TRU) wastes contain, or are suspected to contain, 10 nCi or more of TRU nuclides per gram of waste. Solid, TRU waste is produced in the product loadout areas such as the PR room and Q and N cells. In 1972, about 190 $m^3$ of TRU waste were transferred from the PUREX Plant to retrievable storage. Future TRU waste volumes are projected to be 420 $m^3$ annually. The increase will be due to doubling the annual uranium processing rate and operating the plutonium oxide production facility. In addition, approximately 160 $m^3$/yr of failed equipment is projected to be placed into burial boxes and sent to TRU storage.

## TABLE 7-6. Annual Radioactive Waste Discharges from the PUREX Plant to Cribs and Ponds.

| Radionuclides | DOE Order 5480.1, Chapter XI | | 1972 Actual[a] | | 1985 Projected[b] | |
|---|---|---|---|---|---|---|
| | Offsite concentration guide (μCi/mL) | Onsite concentration guide (μCi/mL) | Average concentration[c] at the source (μCi/mL) | Annual curies | Average concentration[c] at the source (μCi/mL) | Annual curies |
| **Discharges to Cribs** | | | | | | |
| $^{239}Pu$ | $5 \times 10^{-6}$ | $1 \times 10^{-4}$ | $1.9 \times 10^{-5}$ | 4.3[d] | $1.3 \times 10^{-6}$ | $2.7 \times 10^{-1}$ |
| $^{238}U$ | $4 \times 10^{-6}$ | $1 \times 10^{-3}$ | $6.1 \times 10^{-9}$ | $1.4 \times 10^{-3}$[d] | $6.6 \times 10^{-9}$ | $1.4 \times 10^{-3}$ |
| $^{3}H$ | $3 \times 10^{-3}$ | $1 \times 10^{-1}$ | $1.4 \times 10^{-1}$ | $7.0 \times 10^{3}$[e] | $2.0 \times 10^{-1}$ | $3.4 \times 10^{4}$[f] |
| $^{90}Sr$ | $3 \times 10^{-7}$ | $1 \times 10^{-5}$ | $6.5 \times 10^{-4}$ | $1.5 \times 10^{2}$ | $1.0 \times 10^{-5}$ | 6.0 |
| $^{137}Cs$ | $2 \times 10^{-5}$ | $4 \times 10^{-4}$ | $7.4 \times 10^{-4}$ | $1.7 \times 10^{2}$ | $8.6 \times 10^{-6}$ | 1.8 |
| $^{106}Ru$ | $1 \times 10^{-5}$ | $3 \times 10^{-4}$ | $3.5 \times 10^{-3}$ | $8.1 \times 10^{2}$ | $1.1 \times 10^{-5}$ | 2.4 |
| $^{60}Co$[f] | $3 \times 10^{-5}$ | $1 \times 10^{-3}$ | $8.3 \times 10^{-5}$ | $1.9 \times 10^{1}$[d] | $4.1 \times 10^{-7}$ | $8.4 \times 10^{-2}$ |
| **Discharges to Ponds** | | | | | | |
| $^{239}Pu$ | $5 \times 10^{-6}$ | $1 \times 10^{-4}$ | $2.6 \times 10^{-8}$ | $4.4 \times 10^{-1}$[d] | $2.9 \times 10^{-8}$ | $2.7 \times 10^{-1}$ |
| $^{238}U$ | $4 \times 10^{-6}$ | $1 \times 10^{-3}$ | $1.1 \times 10^{-9}$ | $1.9 \times 10^{-2}$[d] | $2.0 \times 10^{-9}$ | $2.0 \times 10^{-2}$ |
| $^{3}H$ | $3 \times 10^{-3}$ | $1 \times 10^{-1}$ | g | g | $7.2 \times 10^{-6}$ | $6.1 \times 10^{1}$ |
| $^{90}Sr$ | $3 \times 10^{-7}$ | $1 \times 10^{-5}$ | $1.8 \times 10^{-8}$ | 0.3[d] | $4.5 \times 10^{-8}$ | $4.3 \times 10^{-1}$ |
| $^{137}Cs$ | $2 \times 10^{-5}$ | $4 \times 10^{-4}$ | $1.1 \times 10^{-7}$ | 1.8[d] | $1.1 \times 10^{-7}$ | 1.0 |
| $^{106}Ru$ | $1 \times 10^{-5}$ | $3 \times 10^{-4}$ | $2.9 \times 10^{-7}$ | 4.9[d] | $1.2 \times 10^{-8}$ | 1.1 |
| $^{60}Co$ | $3 \times 10^{-5}$ | $1 \times 10^{-3}$ | $5.9 \times 10^{-8}$ | 1.0[d] | $5.9 \times 10^{-8}$ | $5.7 \times 10^{-1}$ |

[a]1972 emissions are based on processing a total of 1,013 t of fuel including about 525 t of 3.5% $^{240}Pu$ weapons-grade irradiated fuel.

[b]Projected discharges are based on processing 2,100t of 12 t $^{240}Pu$ irradiated fuel, 20% of which is spike fuel. The 2,100 t of fuel is the sum of six equal portions weighing 350 t each with cooling times of 1/2, 2, 3, 4 1/2, 6, and 7 1/2 yr. Processing of 6% $^{240}Pu$ irradiated fuel would result in lower discharges.

[c]These values were determined by dividing the annual curies by the total effluent volume. These numbers are statistically derived and are given for comparison purposes only.

[d]Values are the sum of 12 composite samples. The detection limit varied, depending on the sample size and counting time.

[e]Calculated from previous sample results.

[f]Estimates higher than 1972 data are based on higher exposure rates (i.e., 12% $^{240}Pu$).

[g]Not analyzed.

- Large (Canyon)

  Large solid waste items are failed canyon process equipment, which is also considered as TRU waste. An inventory of this equipment stored in tunnels on the site is shown in Section 7.7.4.

## 7.3 NONRADIOLOGICAL WASTES

### 7.3.1 Nonradioactive Gaseous Effluents

7.3.1.1 Oxides of Nitrogen Emissions. The oxides of nitrogen emissions are produced in the PUREX Plant during the following processes: uranium metal dissolution, sugar denitration of acidic wastes, and dissolution of recovered uranium (as $UO_2$). About 99% (on a mass basis) of the oxides of nitrogen prior to treatment results from the uranium metal dissolution and sugar denitration processes. The DOG system has a treatment facility. About 85% of the oxides of nitrogen evolved during the metal dissolution process is absorbed in dilute nitric acid and hydrogen peroxide as the oxides of nitrogen offgases are passed through the DOG condenser and two absorption columns. The remainder is released to the atmosphere through the 291-A-1 stack. The oxides of nitrogen from the other processes are also discharged to the atmosphere through the 291-A-1 stack.

Table 7-7 summarizes the estimated daily process duration and the amount of oxides of nitrogen after treatment attributable to each process. Using the data in Table 7-7, one can divide a typical operation day into three time periods and calculate the average oxides of nitrogen emissions for each period. The results are summarized in Figure 7-1 and Table 7-8.

TABLE 7-7. Estimated Daily Duration and Percent of Total Plant Emissions for PUREX Processes Evolving Oxides of Nitrogen.

| Process | Average daily process duration* (h) | Total daily plant emissions evolved after treatment (%) |
|---|---|---|
| U dissolution | 18 | 41 |
| Waste denitration | 24 | 56 |
| $UO_2$ dissolution | 4 | 3 |

*The uranium and uranium oxide dissolution processes are conducted simultaneously with waste denitration.

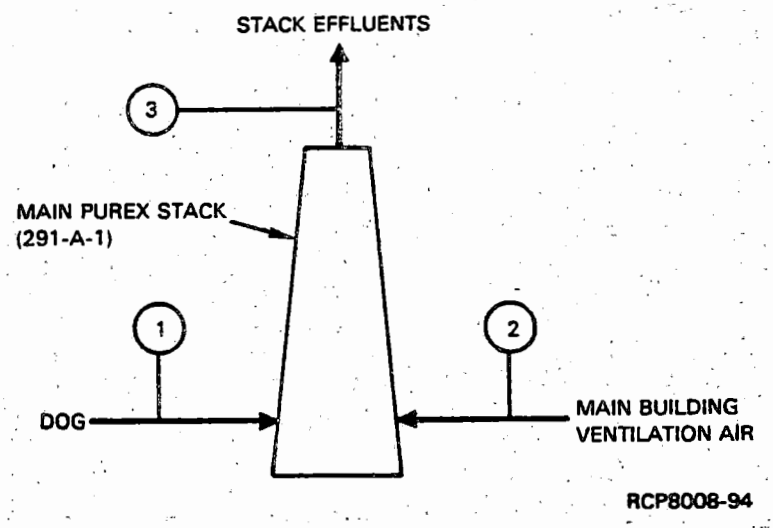


| Average daily process duration (h) | Stack reference point | Offgas properties at stack reference point | |
|---|---|---|---|
| | | Flow rate (L/s)* | $NO_x$ concentration (ppm) |
| 18 | 1 | 330 | 12,400 |
| | 2 | 56,600 | 75 |
| | 3 | 57,000 | 145 |
| 4 | 1 | 300 | 0 |
| | 2 | 56,000 | 100 |
| | 3 | 57,000 | 100 |
| 12 | 1 | 330 | 0 |
| | 2 | 56,600 | 75 |
| | 3 | 57,000 | 75 |

*Assumed offgas conditions: 40°C and 1 atmosphere. Conditions assume that DOG abatement equipment recovers an average of 85% of the entering oxides of nitrogen.

FIGURE 7-1. Estimated Average Flow Rates and Oxides of Nitrogen Concentrations for Offgases Entering the Main PUREX Plant Stack.

TABLE 7-8. Estimated Fluctuation of Average PUREX Plant Oxides of Nitrogen Emissions.

| Processes assumed[a] to generate $NO_x$ during time period | Average daily process duration (h) | Average $NO_x$ stack concentration[b] |
|---|---|---|
| UD + WD | 18 | 145 |
| WD + $UO_2$D | 4 | 100 |
| WD | 2 | 75 |
| Time weighted daily average | | 130 |

[a]UD = uranium dissolution, WD = waste denitration, $UO_2$D = $UO_2$ dissolution.

[b]Offgas compositions were estimated assuming a total gas flow rate of 57,000 L/s at 40°C and 1 atmosphere. Assume that the DOG abatement equipment recovers an average of 85% of the entering oxides of nitrogen.

Annual oxides of nitrogen emissions from PUREX are related directly to the amount of fuel processed each year. Under the assumption that the plant will process 2,100 t of U/yr the yearly oxides of nitrogen emissions (as nitrogen dioxide) will amount to 270 t. The dissolution of uranium evolves 41% of the total daily plant nitrogen oxide emissions in an 18-h period, while a majority of the remaining daily emissions evolved are distributed over a 24-h period.

The oxides of nitrogen is absorbed by two multistage bubble cap absorption columns. Hydrogen peroxide is added to enhance absorption so as to meet federal, state, and local emission standards. Continuous ambient air oxides of nitrogen monitors are located in normally occupied areas to measure oxides of nitrogen concentrations in ambient air and mounted on the 291-A-1 stack to monitor discharges to the environment.

7.3.1.2 Ammonia Emissions. The E and F cell ammonia-bearing offgas streams are combined in an exhaust system separate from canyon ventilation air and gases (Fig. 6-2 and 6-3). The ammonia offgas stream is filtered through remotely changeable filters and exhausted through a 65-ft-high stack (296-A-24). Offgases released do not exceed 25 ppm of ammonia at ground level.

7.3.2 Nonradioactive Liquid Wastes

7.3.2.1 Sanitary Wastes. Sewage is disposed of via septic tanks and sanitary tile fields. Two systems are used at the PUREX Plant. A large system consisting of a septic tank and tile field located north of the

controlled access area serves the office annex, laboratory annex, the normally noncontaminated areas of the 202-A special work permit (SWP) change rooms, and the office trailers. A smaller system located northeast of the east end of the 202-A building serves the change room for the east crane maintenance platform (ECMP). No known contamination sources are connected to the sanitary waste systems and procedures prohibit disposal of radioactive material via these systems.

7.3.2.2 Chemical Sewer. The chemical sewer is discussed in 7.5.3.6. Normally, the sewer receives an uncontaminated flow from process equipment and floor wash. A tabulation of expected chemical discharges per tonne of uranium is given in Table 7-9.

TABLE 7-9. Principal Chemicals Released to Ground Via PUREX Plant Chemical Sewer.

| Chemical | Amount (kg)[a] |
|---|---|
| $NH_4F$-$NH_4NO_3$[b] | 2.90 |
| KOH | 1.20 |
| $HNO_3$ | 3.40 |
| $Fe(SO_3NH_2)_2$ | 0.15 |
| $HSO_3NH_2$ | 0.20 |
| $C_{12}H_{22}O_{11}$ (sucrose) | 0.55 |
| NaOH | 3.20 |
| $Na_2CO_3$ | 0.10 |
| $Al(NO_3)_3$ | 2.10 |

[a]Per tonne of uranium processed assuming 1% chemical loss.
[b]Ammonium-fluoride-ammonium nitrate (AFAN).

A sampling, monitoring, flow totalizing, and diverting system is installed in the chemical sewer discharge stream in the unlikely event the chemical sewer stream becomes contaminated. If the stream should become contaminated, it will be automatically diverted to the 216-A-42 retention basin. Contaminated liquid diverted to the basin is processed through the existing cooling water effluent recycle system to yield a releasable stream.

### 7.3.3 Nonradioactive Solid Wastes

The nonradioactive waste refuse is deposited in bins to await disposal. If there is any doubt, the material is surveyed by Radiation Monitoring to ensure that it is free of radioactive material.

Ordinary trash (90% paper, 97% combustible) is collected, normally compacted by a factor of three, and buried in the central landfill.

Hazardous chemical waste is normally associated with and treated as radioactive waste. In the event that nonradiological hazardous chemical waste is generated, it is disposed in an approved hazardous chemical burial site located at the central landfills.

The PUREX Plant contribution is a small fraction of the compacted volume of 10,200 $m^3/yr$ forecast for the entire Hanford Site.

## 7.4 OFFGAS TREATMENT AND VENTILATION

The particulate radionuclides and gaseous releases to the atmosphere from the stacks are at or below the guides specified in Table I and Table II for various radionuclides, with the exception of $^3H$ and $^{85}Kr$ isotopes.(3) However, within 0.5 mi of the stacks, all radioactive concentrations in the atmosphere will be below the Table II guides.(3)

Past and anticipated gaseous releases to the atmosphere from the stacks of PUREX are summarized in Table 7-10. The values for 1972 are those for the last year the PUREX Plant was operated at capacity. The volumes of gaseous effluent anticipated to be released in the future, when the plant is fully operational, will be the same as 1972. All HEPA filters used as a means of controlling effluent releases are DOP tested before use, after each filter change, and at least annually.(14) Filters that handle high levels of radioactivity and are exposed to hostile environments are tested more frequently. The minimum standard acceptable test efficiency as indicated by the in-place DOP test method is 99.95%. Performance of the DOP testing and the obtained results are maintained and analyzed to provide continuous status to use in establishing retesting schedules. Upon completion of each DOP test, a report is issued to the Facility Manager, Quality Assurance, and the Effluent Control Unit of the Safety and Quality Assurance Function (S&QA).

### 7.4.1 Radioactive Waste Released Through Ventilation Systems

The ventilation exhaust systems provide for the discharge of all treated airborne and gaseous effluents. Since the ventilation system provides waste confinement and management, it is discussed first, followed by the discussion for the offgas treatment systems.



9413219.0751

TABLE 7-10. PUREX Effluents--Gaseous. (Sheet 1 of 3)

| Effluent stream | Stack | Yr | Vol (L) | Annual average concentration ( Ci/mL) | Ci released |
|---|---|---|---|---|---|
| Canyon exhaust | 291-A-1 | 1972 | $1.79 \times 10^{12}$ | Tβ, $2.48 \times 10^{-10}$<br>Pu, $1.73 \times 10^{-12}$ | $4.4 \times 10^{-1}$<br>$3.1 \times 10^{-3}$ |
| | | Projected* | $1.79 \times 10^{12}$ | Tβ, $6 \times 10^{-10}$<br>Pu, $4 \times 10^{-12}$ | $1.1 \times 10^{0}$<br>$7.2 \times 10^{-3}$ |
| PR room, N and Q cells | 296-A-1 | 1972 | $1.04 \times 10^{11}$ | Tβ, $3.7 \times 10^{-11}$<br>Pu, $1.15 \times 10^{-11}$ | $3.9 \times 10^{-3}$<br>$1.2 \times 10^{-3}$ |
| | | Projected* | $1.04 \times 10^{11}$ | Tβ, $1 \times 10^{-11}$<br>Pu, $1 \times 10^{-13}$ | $1.0 \times 10^{-3}$<br>$1.0 \times 10^{-5}$ |
| West sample gallery hood exhausts | 296-A-2 | 1972 | $6.43 \times 10^{10}$ | Tβ, $2.8 \times 10^{-11}$<br>Pu, $4.8 \times 10^{-13}$ | $1.8 \times 10^{-3}$<br>$3.1 \times 10^{-5}$ |
| | | Projected* | $6.43 \times 10^{10}$ | Tβ, $6 \times 10^{-11}$<br>Pu, $1 \times 10^{-13}$ | $3.8 \times 10^{-3}$<br>$6.4 \times 10^{-5}$ |
| East sample gallery hood exhaust | 296-A-3 | 1972 | $6.71 \times 10^{10}$ | Tβ, $5.66 \times 10^{-13}$<br>Pu, $4.32 \times 10^{-14}$ | $3.8 \times 10^{-5}$<br>$2.9 \times 10^{-6}$ |
| | | Projected* | $6.71 \times 10^{10}$ | Tβ, $2 \times 10^{-12}$<br>Pu, $2 \times 10^{-14}$ | $1.3 \times 10^{-4}$<br>$1.3 \times 10^{-6}$ |

TABLE 7-10. PUREX Effluents--Gaseous. (Sheet 2 of 3)

| Effluent stream | Stack | Yr | Vol (L) | Annual average concentration ( Ci/mL) | Ci released |
|---|---|---|---|---|---|
| 202-A laboratory exhaust | 296-A-5A and -5B | 1972 | $3.7 \times 10^{11}$ | Tβ, $8.37 \times 10^{-13}$<br>Pu, $4.86 \times 10^{-14}$ | $3.1 \times 10^{-4}$<br>$1.8 \times 10^{-5}$ |
| | | Projected* | $3.7 \times 10^{11}$ | Tβ, $2 \times 10^{-12}$<br>Pu, $1 \times 10^{-13}$ | $7.4 \times 10^{-4}$<br>$3.8 \times 10^{-5}$ |
| East sample gallery, U cell | 296-A-6 | 1972 | $1.94 \times 10^{11}$ | Tβ, $1.19 \times 10^{-11}$<br>Pu, $3.14 \times 10^{-14}$ | $2.3 \times 10^{-3}$<br>$6.1 \times 10^{-6}$ |
| | | Projected* | $2.23 \times 10^{11}$ | Tβ, $2 \times 10^{-12}$<br>Pu, $1 \times 10^{-13}$ | $4.4 \times 10^{-4}$<br>$2.2 \times 10^{-5}$ |
| West sample gallery, R cell | 296-A-7 | 1972 | $2.97 \times 10^{11}$ | Tβ, $4.71 \times 10^{-10}$<br>Pu, $9.76 \times 10^{-14}$ | $1.4 \times 10^{-1}$<br>$2.9 \times 10^{-5}$ |
| | | Projected* | $3.57 \times 10^{11}$ | Tβ, $2 \times 10^{-11}$<br>Pu, $1 \times 10^{-13}$ | $7.2 \times 10^{-3}$<br>$2.6 \times 10^{-5}$ |
| White room exhaust | 296-A-8 | 1972 | $2.54 \times 10^{11}$ | Tβ, $1.54 \times 10^{-12}$<br>Pu, $2.01 \times 10^{-11}$ | $3.9 \times 10^{-4}$<br>$5.1 \times 10^{-3}$ |
| | | Projected* | $2.54 \times 10^{11}$ | Tβ, $4 \times 10^{-12}$<br>Pu, $1 \times 10^{-13}$ | $1.0 \times 10^{-3}$<br>$2.6 \times 10^{-5}$ |

TABLE 7-10. PUREX Effluents--Gaseous. (Sheet 3 of 3)

| Effluent stream | Stack | Yr | Vol (L) | Annual average concentration ( Ci/mL) | Ci released |
|---|---|---|---|---|---|
| Disposal tunnel 2 | 296-A-10 | 1972 | $1.46 \times 10^{11}$ | Tβ, $2.81 \times 10^{-12}$<br>Pu, $1.92 \times 10^{-13}$ | $4.1 \times 10^{-4}$<br>$2.8 \times 10^{-5}$ |
| | | Projected* | $1.46 \times 10^{11}$ | Tβ, $6 \times 10^{-12}$<br>Pu, $4 \times 10^{-13}$ | $8.8 \times 10^{-4}$<br>$5.8 \times 10^{-5}$ |
| 293-A building exhaust | 296-A-14 | 1972 | $8.95 \times 10^{10}$ | Tβ, $3.58 \times 10^{-13}$<br>Pu, $3.13 \times 10^{-14}$ | $3.2 \times 10^{-5}$<br>$2.8 \times 10^{-6}$ |
| | | Projected* | $8.95 \times 10^{10}$ | Tβ, $1 \times 10^{-13}$<br>Pu, $8 \times 10^{-14}$ | $8.8 \times 10^{-5}$<br>$7.2 \times 10^{-6}$ |
| P&O gallery auxiliary exhaust | Normally clean air. Should exhaust become contaminated, it will be diverted through white room exhaust. | | | | |
| Ammonia offgas system | 296-A-24 | Projected* | $1.9 \times 10^{10}$ | Tβ, $3.2 \times 10^{-10}$ | $6.0 \times 10^{-3}$ |

*Projected emissions are based on processing 2,100 t of 12% $^{240}Pu$ irradiated fuel, 20% of which is spike fuel. The 2,100 t of fuel is the sum of six equal portions weighing 350 t each with cooling times of 1/2, 2, 3, 4 1/2, 6, and 7 1/2 yr. Processing of 6% $^{240}Pu$ irradiated fuel would result in lower emissions (the releases are in direct proportion to the amount of fuel reprocessed). In the case of the 291-A-1 stack, this estimate is based on the continued use of the existing, deep-bed, fiberglass filters.

7.4.1.1 Ventilation System 1. The canyon ventilation system, also known as ventilation system 1, is described in detail in Section 5.4.1. Its operating characteristics are summarized in Table 5-5. Its purpose is to route contaminated process cell air through the canyon exhaust filters. The filtered air is then discharged to the atmosphere through the 291-A-1 stack.

Filtered air from the process offgas system (Section 7.4.4) is discharged into the air duct of ventilation system 1 upstream of the canyon exhaust filters. Filtered air from the DOG system (Section 7.4.2) is discharged into the air duct of ventilation system 1 at the base of the 291-A-1 stack.

The canyon exhaust filters are permanently installed in vaults located between the 202-A building and the 291-A-1 stack. By collecting radioactive-bearing particulate matter that leaks or escapes from the process vessels, the canyon exhaust filters become contaminated. When a filter becomes inoperative, it is currently envisioned that it will be sealed and left buried in place with no attempt made to remove any of the canyon filters from the current locations.

9413219.0755

The canyon exhaust filters consist of two glass-fiber filters and one three-stage HEPA filter; all three are parallel with each other. The first glass-fiber filter (canyon filter 1) was installed when PUREX was built in 1955. As its capability to filter the required volume of air became marginal, the second glass-fiber filter (canyon filter 2) was installed parallel to the old glass-fiber filter. The HEPA filter (canyon filter 3) is new and has never been used. The third filter consists of five vertical filter stages; the first two are prefilters and the last three are HEPA filters. It was installed as a precautionary safety measure and will be used if the performance of the glass-fiber becomes marginal. The HEPA filter elements will be installed when the filter is placed in service (Section 5.4.1.1).

7.4.1.1.1 Filter Performance. The deep-bed, glass-fiber filter and the HEPA filter are dioctyl phthalate (DOP) tested at least once a year or if unexplainably high releases occur. The testing standards conform with ANSI N510 published procedures[22] and are described in RHO-CD-125.[23] In the tests performed in 1984, the efficiency of the deep-bed, glass-fiber filters was better than 99.90%.[24]

7.4.1.1.2 System Interfaces. The airflow rate in the canyon stream is considerably greater than the airflow rate in the DOG system (57,000 L/s versus 330 and 1,000 L/s). The air pressure in the plenum is kept below the air pressure in the outlets of the two offgas processing systems. The air pressure in the canyon is below the air pressure in the areas supplied by ventilation systems 2 and 3. The safety features of the power supply of ventilation system 1 are discussed in Section 5.4.1.2.5.

7.4.1.2 Ventilation System 2. Ventilation system 2 is described in detail in Section 5.4.1.2. It provides filtered air to areas of the canyon building which are periodically occupied or entered by the work force, but which are regulated because of the potential for contamination. These areas are

the sample gallery, N cell, Q cell, R cell, U cell, PR room, PR corridor, and canyon lobby. The system exhausts through five stacks (see Section 7.2 and Table 7-3).

Room air from the plutonium oxide preparation facility (N cell) passes through one stage of filtration (three parallel HEPA filters) before entering plenum 2 exhaust system (ventilation system 2). From there, the exhaust passes through an additional bank of filters and discharges to the atmosphere through exhaust stack 296-A-7.

The room air is monitored continuously by CAM. These CAM provide local and remote alarms in the control room (see Section 8.3.4).

Each glovebox exhaust has one stage of HEPA-type filtration. The air from all the glovebox exhausts is combined, monitored by a CAM with display and alarm in the control room, and passed through two parallel HEPA filters before entering the existing PR room exhaust system (ventilation system 2).

The air exhausted through the PR room stack is filtered by two sets of parallel double-stage HEPA filters, while the air exhausted through the other four stacks is filtered by single-stage HEPA filters. By collecting dust and radioactive-bearing particulate matter from the sampling stations and the product-handling areas, the HEPA filters become contaminated. When a filter fails the quality control tests (DOP efficiency), it is replaced. Once used, the HEPA filters for N cell, the glovebox ventilation system, and the PR room system are considered potentially contaminated by transuranics. Failed filters will be treated as solid, TRU-contaminated waste (see Section 7.7).

7.4.1.2.1 Radioactive Releases During Normal Operation. The radioactive concentrations of the air exhausted by three of the five ventilation system stacks are below the guides of Table II (stacks 296-A-3, -6, and -7).(3) The radioactive concentrations of stacks 296-A-1 and -2 are below Table I guidelines.(3)

7.4.1.2.2 Capacity Under Postulated Accident Condition. Two banks of double HEPA filtration on the PR room exhaust can operate independently and one branch can be used as a backup for the other. Exhausts for the PR room (296-A-1) and the west sample gallery hoods (296-A-2) are monitored continuously with alarms in the dispatcher's office. Record and CAM samplers are installed at the five stacks of ventilation system 2: 296-A-1, 296-A-2, 296-A-3, 296-A-6, and 296-A-7 (see Section 8.6.1).(25-27) The CAM provide operations with a continuous readout of stack sample radioactivity and alarms during abnormal effluent releases. The record sample provides a representative particulate sample of the effluent from which an accurate environmental discharge of radioactivity is determined. The CAM units and record samplers provide complementary data of radionuclide releases which can be used to detect and avert abnormal operating or accident conditions. Other control features of ventilation system 2 are described in Section 5.4.2.7.

7.4.1.2.3 Filter Performance. Each HEPA filtration stage is tested in place at least once a year for capability of removing 0.3-μm-dia. particles of a DOP aerosol.(14) A HEPA stage must have a removal capability of 99.95% to be acceptable.

Filters are also monitored for differential pressure (DP). A HEPA filter with a DP near the specified level in inches of water is also replaced in accordance with operating procedures.

Filters are also exchanged if the radioactive discharge concentration exceeds the limits discussed in Section 7.1.2 and if the contamination buildup results in radiation levels in excess of limits or unnecessary personnel exposures in accordance with operating procedures.

7.4.1.2.4 System Interfaces. Ventilation system 2 operates at between 0.10 and 0.35 in. water gauge (WP) (vacuum), which is a higher pressure than that of ventilation system 1. This prevents flow of airborne radioactive particulates from ventilation system 1 into ventilation system 2. This vacuum level in ventilation system 2 assures no airborne radioactivity flow from ventilation system 2 to the outside environment. To prevent interaction between ventilation systems 2 and 4, the two systems are separated by air locks.

7.4.1.3 Ventilation System 3. Ventilation system 3 is described in detail in Section 5.4.1.3. The system provides clean air to the storage areas, P&O gallery, white room, offices, control rooms, locker rooms, blower rooms, and shops. All these areas are considered clean areas where, under normal operations, no radioactivity is handled. The air from the white room is exhausted through the 296-A-8 stack, while the air from the other areas is exhausted by fans through vents.

Under normal operations, ventilation system 3 does not handle gaseous or airborne radioactive waste. If an accidental spill occurs in the P&O gallery or white room, the alarm from the CAM would automatically shut off the unfiltered P&O gallery exhaust fans, allowing the contaminated air to discharge through the HEPA-filtered 296-A-8 stack or through the ECMP to the canyon. The HEPA filter is discarded as solid, radioactive waste (see Section 7.7) when it does not meet efficiency control requirements.

7.4.1.3.1 Radioactive Releases During Normal Operation. During normal operation, the system supplies clean air to clean areas.

7.4.1.3.2 Filter Performance. The tests and standards for the HEPA filter are discussed in Section 7.4.1.2.

7.4.1.3.3 System Interfaces. Ventilation system 3 is designed to maintain a static pressure of about 0.10 in. WG above atmospheric in all areas serviced except for the P&O gallery. This area has a potential for becoming contaminated and is therefore maintained at a static pressure of about 0.1 in. below atmospheric. These pressures assure airflow in the direction of increasing potential for contamination.

7.4.1.4 Ventilation System 4. Ventilation system 4 is described in detail in Section 5.4.1.4. The system provides clean air to the laboratories. The system is completely independent of the other three systems. The air exhaust is filtered by one stage of HEPA filters and exhausted through two stacks (296-A-5A and 296-A-5B).

The HEPA filters may become contaminated by collecting dust and radioactive-bearing particulate matter from the laboratory hoods. Filters are discarded as solid radioactive waste (see Section 7.7) when efficiency control requirements are not met. The method of filter testing and test frequency evaluation is summarized in Section 7.4. Testing for open-face hood velocity is in accordance with Reference 27.

7.4.1.4.1 Radioactive Releases During Normal Operation. Past records indicate that the radioactive concentrations of the air exhausted through the 296-A-5A and 296-A-5B stacks are below the guidelines of Table II.(3)

7.4.1.4.2 Capacity Under Postulated Accident Condition. Airflow through the laboratory hoods can be controlled by opening or closing the hoods. Airflow into the hood opening at the flow rate specified provides capture velocity for airborne radioactive material under normal conditions and ensure confinement within the hood.(28) The CAM units are located outside of the hoods in the laboratory room to monitor potential releases from the hoods.(28) These CAM alarm when airborne levels of radioactivity are high enough to be detected so that immediate corrective measures can be taken. As a secondary confinement, the four accesses to the laboratory are provided with air locks for ventilation flow and contamination control (see Section 5.4.4).

7.4.1.4.3 Filter Performance. Performance tests and standards for assuring HEPA filter adequacy are discussed in Section 7.4.1.2. The CAM units are located at laboratory hood exhuast stacks (296-A-5A and 296-A-5B) to provide assurance that HEPA filters are effectively removing airborne contaminants prior to discharge to the environment. Failed filters and filters of questionable integrity will be nondestructively assayed, as detailed in Section 8.6.1.3.

## 7.4.2 Dissolver Offgas System

The DOG system removes nitric acid fumes, ammonia, radioactive isotopes of iodine ($^{131}I$ and $^{129}I$), and radioactive-bearing particulates produced in the fuel dissolution and the decladding processes. The flow- paths for the DOG system are shown in Figure 7-2. There are two flowpaths: one for the offgas from the fuel dissolution process and the other for the decladding process (which are identical, except the decladding process off-gas is not treated in the acid absorbers). There are three identical DOG systems (one for each dissolver tank). Each DOG system consists of a down-draft condenser tower, ammonia scrubber, ammonia catch tank, steam heater, electrical heater, silver reactor, and two glass-fiber filters in series.



9413219.0758

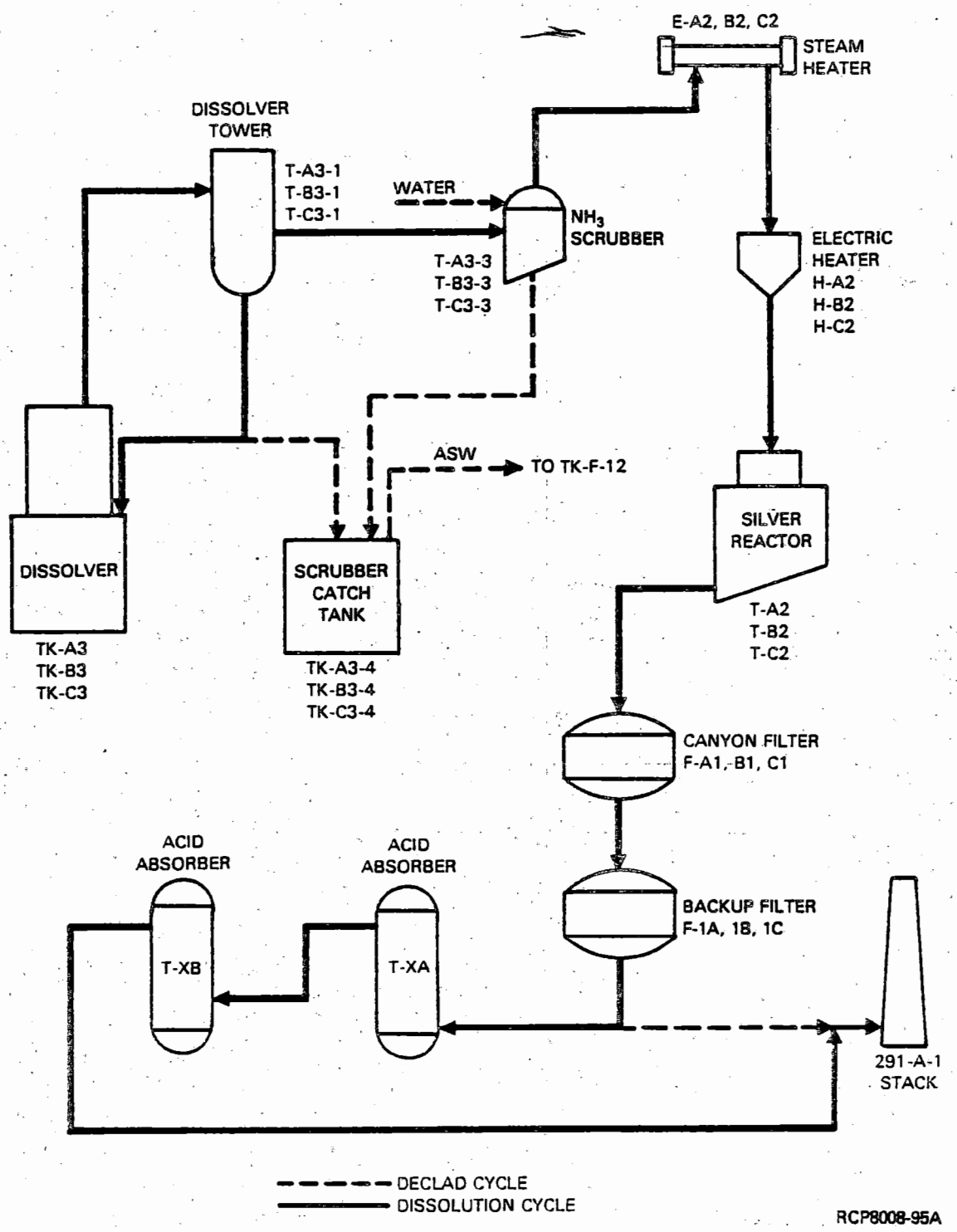


FIGURE 7-2. Dissolver Offgas System.

7.4.2.1 Functional Design. During the fuel dissolution process, the DOG pass first through the dissolver downdraft tower, which condenses moisture and recovers part of the nitrogen oxides as nitric acid. The nitric acid is recycled to the dissolver. After passing through the ammonia scrubber, the offgases pass through the steam heater, electric heater, and silver reactor for removal of radioactive iodine isotopes ($^{129}I$ and $^{131}I$). The offgases then pass through the two glass-fiber filters which remove radioactive-bearing particles. The filtered offgases are routed to two acid absorbers in series located in the 293-A backup facility. In 293-A, about 85% of the remaining oxides of nitrogen (see Section 7.3.1.1) and 90% of the residual iodines are removed. The offgases are then discharged into the main ventilation stack (291-A-1) and exhausted to the atmosphere.

During the cladding-removal process, the DOG first pass through the dissolver downdraft tower and the ammonia scrubber. The ammonia removed in the scrubber is collected and routed to the ammonia catch tank. The remaining offgases are then passed through the steam heater, electric heater, silver reactor, and the two glass-fiber filters where radioactive-bearing particulates are removed. The offgases are then routed to the 291-A-1 stack and exhausted to the atmosphere.

7.4.2.2 Major Components. The DOG system major components are listed in Table 7-11. The dissolver tower is a water-cooled condenser in a stainless steel, cylindrical vessel. The offgas enters the top of the tower where it is distributed for even flow downward around the shell side of the cooling water tube bundle and then leaves the tower near the bottom. As the offgas is cooled, condensation collects in the bottom of the tower which can be diverted to either the dissolver or scrubber catch tank.

The ammonia scrubber is a vertical column with deentrainment pads at either end and a 42-in. section packed with 1-in.-diameter Pall rings (process gases flow upward). Scrubber water is distributed above the packing and drains out the bottom of the tower to the ammonia scrubber catch tank, a 7,950-L tank provided with a cooling coil.

Two offgas heaters, one steam and one electric, are required to heat the process offgases to at least 196°C for desired reactions in the silver reactor. The steam heater is a finned tube heat exchanger with the steam on the tube side. The electrical heater uses calrod heating elements.

Two types of silver reactors are used. The newer design contains two packed beds of 0.5-in. ceramic saddles coated with silver nitrate. The older design, in DOG system B, has a single bed. The silver reactors are equipped with external steam coils to maintain the required temperature for the silver nitrate-iodine reaction.

The DOG filters contain four layers of glass-fiber filter media and are discussed in Section 5.3.2.2.

TABLE 7-11. Dissolver Offgas System Major Components.

| Vessel | Function | Description |
|---|---|---|
| T-A3-1<br>-B3-1<br>-C3-1 | Downdraft condenser tower | 4 ft 4 in. OD[a] by 23 ft 5 in. finned tubes 1 in. OD by 18 ft in cooling coil (drawing H-2-56989). |
| T-A3-3<br>-B3-3<br>-C3-3 | $NH_3$ scrubber | 2 ft 6 in. OD by 10 ft 3 in. 42 in. packed section, 1 in. diameter 1/16 in. wall Pall rings (stainless steel) (drawing H-2-59941). |
| TK-A3-4<br>-B3-4<br>-C3-4 | $NH_3$ scrubber catch tank | 4 ft 0 in. by 8 ft 6 in. by 10 ft, 304L stainless steel, cooling coil, 2,100-gal capacity (drawing H-2-59136). |
| E-A2<br>-B2<br>-C2 | Offgas heater (steam) | 2 ft 8 in. OD by 11 ft, 171 finned tubes, 304L stainless steel (drawing H-2-58514). |
| H-A2<br>-B2<br>-C2 | Offgas heater (electrical) | 5 ft 10 in. by 3 ft 1 in. by 1 ft containing eight Calrod heaters (drawing H-2-56676). |
| T-A2<br>-B2<br>-C2 | Silver reactor | 4 ft 6 in. OD by 13 ft 8 in. packing 1/2 in. ceramic berl saddles equipped with heating coil. A2 and C2 have two beds; B2 has one (drawing H-2-57337). |
| F-A1<br>-B1<br>-C1 | Offgas particulate filter | 9 ft OD by 8 ft 9 in., four layers of glass fiber filter media in canyon (drawing H-2-56989). |
| F-1A<br>-1B<br>-1C | Offgas particulate filter | 9 ft OD by 8 ft 9 in., four layers of glass fiber filter media located in 294-A Vault (drawing H-2-56989). |
| | Vacuum control | Stainless steel DOV.[b] A 6 in.-plug valve operates with low flows and a 6 in. butterfly valve controls at high flows. |
| T-XA | Acid absorber | 6 ft by 22 in. with eight bubble cap trays (drawing H-2-57000). |
| -XB | Acid absorber | 4 ft 6 in. by 20 ft with eight bubble cap trays (drawing H-2-57001). |

[a]Outer diameter.

[b]Diaphragm-operated valve.

7.4.2.3 Operational Control. Hydrogen and ammonia concentrations in each DOG stream are monitored by Beckman Model 7C Thermal Conductivity Analyzers and Beckman Model 865 Non-Dispersive Infrared Analyzers, respectively. Each analyzer is contained in an explosion-proof housing. These systems are shown in Figure 7-3.

The thermal conductivity analyzer uses an internal regulated power source to heat sample and reference (nitrogen gas) temperature-sensitive resistive filaments which are electrically connected as legs of a Wheatstone bridge. The bridge is balanced initially with a standard gas sample. Thereafter, a signal is generated and recorded that is proportional to the hydrogen content of the sample gas.(29)

The infrared analyzer also contains nitrogen gas as a reference non-absorbing background gas. Infrared beams are passed through both the reference cell and the sample cell where the amount of radiation absorbed is proportional to the ammonia concentration. The detector converts the resulting energy difference between the cells to a capacitance change equivalent to the ammonia concentration that is amplified, indicated on a meter, and used to drive a monitor.(30)

The hydrogen formation in the dissolver and the resulting concentration in the DOG is maintained at a very safe level (much less than 6% by volume) primarily by the presence of ammonium nitrate during decladding which favors ammonia producing reactions. The ammonia concentration is maintained at a safe level (less than 14% by volume) by controlling the tower and scrubber water flow rates and the tower vent gas temperature.

During fuel dissolution, two scintillation crystals coupled to single-channel analyzers measure and record the concentration of $^{131}I$ in the offgases entering the 293-A backup facility and the 291-A-1 stack. The single-channel analyzer windows are set to count photons with energies between 0.344 to 0.384 MeV (centers the $^{131}I$ peak at 0.364 MeV). A high alarm would indicate either irradiated fuel elements with too-short cooling times or failure of the silver reactor. If an alarm is triggered, the dissolution is terminated by cooling the dissolver.

7.4.2.4 Safety Criteria and Assurance. The potential hazards associated with the operation of the DOG system are summarized in Table 7-12. A discussion of the control of each system is presented below.

7.4.2.4.1 Combustible Gases. Hydrogen and ammonia, both combustible gases, are generated during decladding. The hydrogen and ammonia are generated in the following reaction:

$$Zr + 6\ NH_4F + 0.5\ NH_4NO_3 \rightarrow (NH_4)_2ZrF_6 + 5\ NH_3 \uparrow + 1.5\ H_2O \qquad (7\text{-}1)$$



9413219.0762

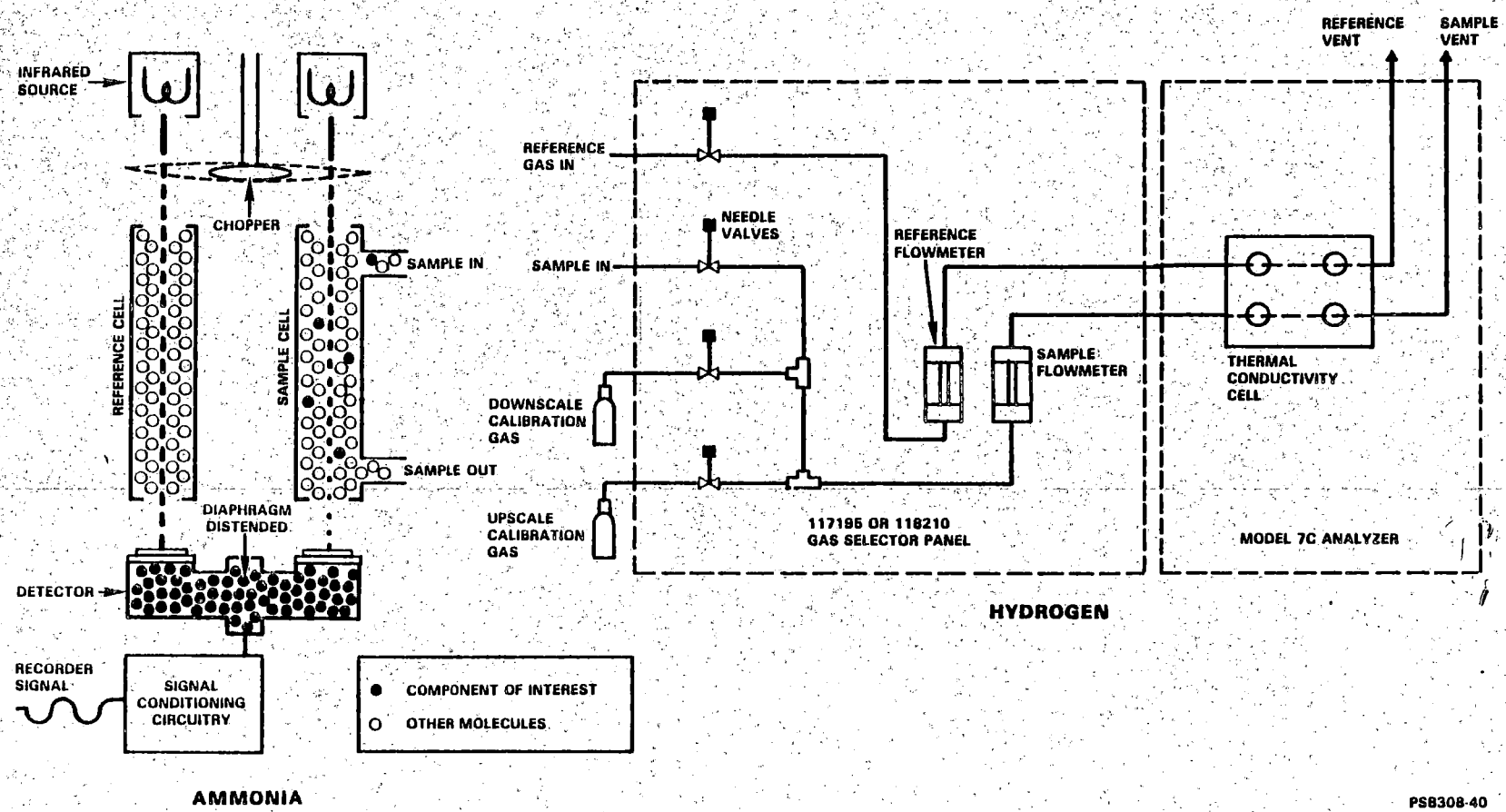


FIGURE 7-3. Ammonia-Hydrogen Gas Analyzer Schematic.

TABLE 7-12. Summary of Potential Hazards Associated with Dissolver Offgas System.

| System or subsystem | Energy (hazard) | Unwanted energy flow (incident) | Consequence (immediate and/or secondary | Barriers (design, administrative, safety devices, etc.) |
|---|---|---|---|---|
| DOG treatment | $H_2$ | 1. Nitrate omitted in $NH_4F$-$NH_4NO_3$ solution | Explosion in offgas train; most likely in heaters | 1. AFAN solution purchased to specifications |
| | | 2. No dilution air | | 2. $H_2$ monitor |
| | $NH_3$ | 1. Low cooling water flow to scrubber | 1. Explosion from high concentration leaving scrubber | 1. Low-flow alarm, $NH_3$ analyzer |
| | | 2. No dilution air | | 2. $NH_3$ analyzer |
| | | 3. Low temperature in silver reactor | 2. Explosion from high concentration leaving scrubber | 3. Reactor high- and low-temperature alarm |
| | | | 3. Explosion from $NH_3$ deposition | |
| | Silver azide | Low temperature allows formation of silver azide | Explosion in silver reactor with subsequent release of radionuclide loading on ventilation filters to environs | High-temperature operation only; no flushing with ammonium hydroxide |
| Condenser | Radionuclides in feed solution | Failure to flush tower prior to declad | Activity in scrubber waste | Administrative controls imposed by procedure |
| $NH_3$ catch tank | Pu (and U) | Criticality | FP gases to environment. Limited potential for employee exposure. | Valving program. Pu quantitiy limits |

The formation of hydrogen is limited to less than 0.1 mol/mol of Zircaloy dissolved. Without the ammonium nitrate, the reaction would be as follows:

$$Zr + 6\ NH_4F \rightarrow (NH_4)_2ZrF_6 + 2\ H_2\uparrow + 4\ NH_3\uparrow \qquad (7\text{-}2)$$

The ammonium nitrate suppresses the formation of hydrogen gas in favor of reactions which produce ammonia. The ammonia, which has an explosive range of 16% to 27% in air, is removed in the ammonia scrubber by the following reaction:

$$NH_3 + H_2O \rightarrow NH_4OH \qquad (7\text{-}3)$$

Both hydrogen and ammonia concentrations in the offgases are also reduced by dilution with a large flow of process air. The dilute ammonium hydroxide formed in the ammonia scrubber is collected in the ammonia catch tank and routed to the ammonia concentrator system.

7.4.2.4.2 Criticality Prevention. Under normal operation, the DOG contain, at most, traces of plutonium. However, excessive foaming during the fuel dissolution process could introduce aqueous solution to the off-gas system and result in plutonium reaching the scrubber solution tank. Introduction of 2,000 gal of metal solution would transfer 8 kg of plutonium (from "spike" fuel). Actually, both plutonium and uranium would be transferred, but plutonium is the element of interest in criticality calculations. The transfer of plutonium-bearing solution to the ammonia catch tank is prevented by equipment design and administrative control. The valving for the dissolver chemical additions, jetting systems, and the dissolver tower drain system are interlocked through the sequential programmer. The six-position programmer permits only those operations which are necessary for that particular portion of the dissolution cycle. A listing of the six positions and their services follow.

| Switch Position | Service |
|---|---|
| 1 | Zirconium-declad |
| 2 | Methathesis |
| 3 | Uranium-dissolution of zirconium-clad |
| 4 | Aluminum-declad |
| 5 | Uranium-dissolution of aluminum-clad |
| 6 | Off |

The selector switch is key locked and the key is controlled by supervision.

Failure of the selector switch in a shorted position is unlikely, and relays generally fail in the safe position (open). Chemical additions and solution jetting require manual operation of control instrumentation;

hence, failure of the sequence programmer by itself would not cause a misrouting. Diversion of the dissolver tower drainage to the ammonia catch tank requires manual operation of a valve switch in addition to the action of the programmer. Programmer failure could prevent opening of the dissolver tower drain to catch tank, but this failure would be of no safety consequence.

7.4.2.4.3 Silver Azide Explosion. Although the probability is very remote, silver azide explosion has been postulated for the silver reactor. Administrative procedures require that the silver reactor can only operate at high temperatures. The amount of radioactivity released in a silver reactor explosion is estimated in Section 9.3.7.

7.4.2.4.4 Release of Activity in Scrubber Waste. During the uranium metal dissolution process, volatile FP may reach the downdraft tower. If the downdraft dissolver tower is not cleaned, then the FP would be routed to the ammonia scrubber waste concentrator and result in a release to the environment from the condensate. An administrative procedure requires that the downdraft dissolver tower be flushed to the dissolver after the completion of the metal dissolving process.

9413219.0766

### 7.4.3 Ammonia Offgas System

The ammonia offgas system is designed to reduce the excessive loading of the 291-A-1 filter with ammonium nitrate, which would be formed from the ammonia reacting with the nitric acid fumes and oxides.

7.4.3.1 Functional Design. The E cell and F cell ammonia-bearing offgases are combined into a single stream with a total flow of about 14.2 $m^3$/min (see Section 6.1). The combined stream passes through a deentrainment pot, a steam heater which raises the temperature by about 60°F, through a prefilter and two HEPA filters in series, which are designed to capture 99.95% of the airborne radioactive contamination. The filter assembly has the following features: a special liquid seal to prevent gas leaks around the filters, test equipment for on-line testing of filter efficiency, and a filter bagout to keep radioactivity contained during filter changeout.(31) The ammonia offgas system is evacuated by a fan capable of exhausting 42.6 $m^3$/min at 25 in. WG vacuum. The exhaust is released to the atmosphere through a 65-ft-high stack (296-A-24). Figure 7-4 is a schematic of the system.

7.4.3.2 Major Components. The major equipment items, function, nominal capacity, and descriptions are summarized in Table 7-13.

7.4.3.3 Operational Controls. Ammonia concentrations in E and F cell offgas streams are maintained well below the flammable limit of about 14 vol% by removing the ammonia in the E cell ammonia scrubber and E-F11 condenser, respectively. The scrubber water flow and scrubber offgas temperature are controlled to achieve maximum ammonia removal. The resulting ammonia concentration is monitored by a non-dispersive infrared gas analyzer. The E-F11 condenser is operated to remove condensables and subcool the

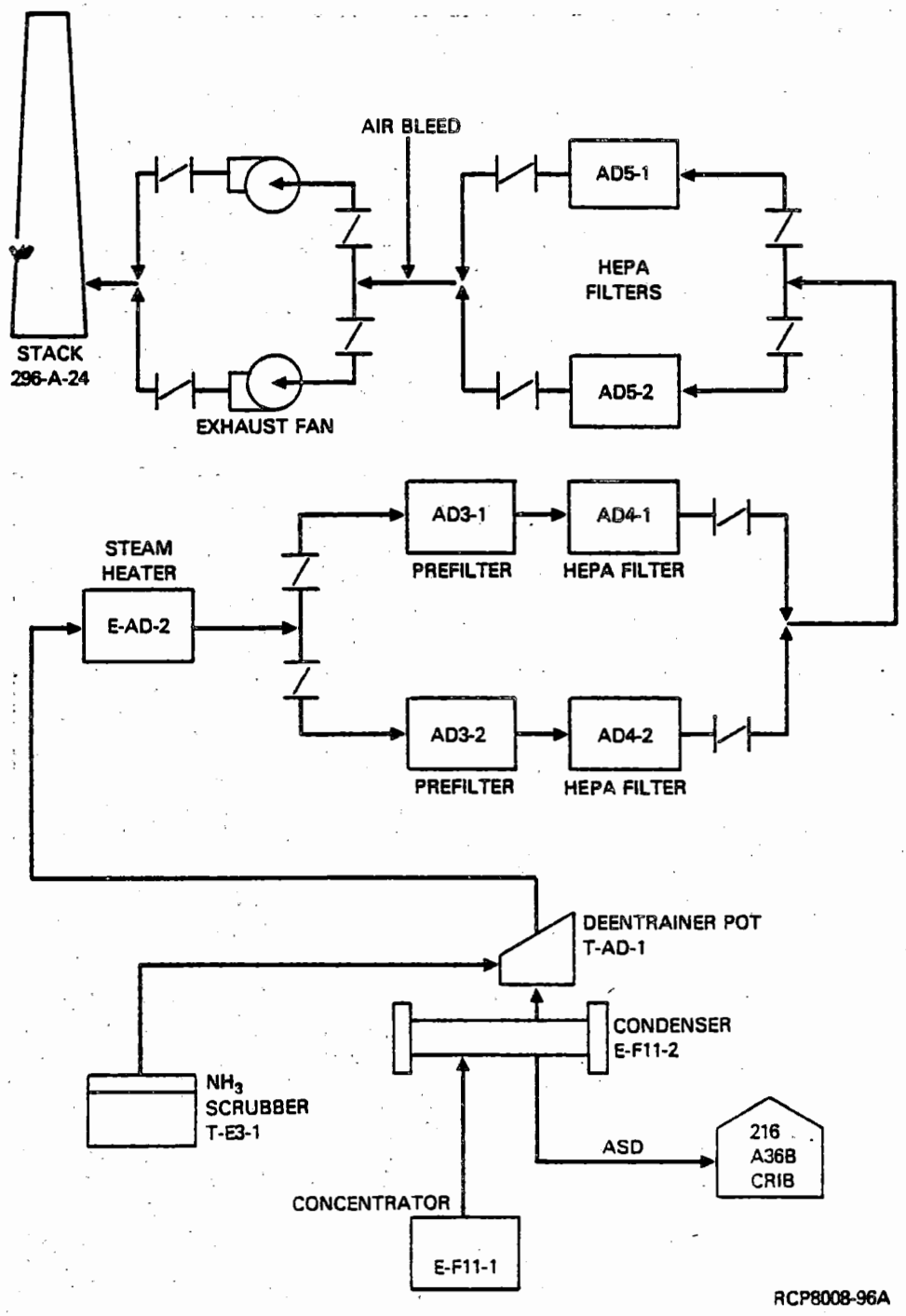


FIGURE 7-4. Ammonia Offgas System.

TABLE 7-13. Ammonia Offgas System Major Components.

| Equipment | Function | Description |
|---|---|---|
| E-F11-2 | Condenser | 40 in. OD by 10 ft 6 in. cylindrical vessel. Internally, E-F11-2 contains 1,060 horizontal tubes, 3/4 in. diameter by 10 ft long. See drawings H-2-62616 and H-2-64804. |
| T-AD-1 | Deentrainer | Deentrainer consists of a 4-in.-thick by 13.5-in.-dia. stainless steel mist eliminator pad mounted in a 12-in.-tall by 30-in.-dia. pot. See drawing H-2-65173 for construction detail. |
| E-AS-1 | Steam heater | Operates at 77°C; size is 20 in. 32 in. by 8 in.[29] Type is AEROFIN B-58 non-freeze coil. See drawing H-2-65713. |
| AD3-1<br>AD3-2 | Prefilters | Size is 24 in. by 24 in. by 11.5 in. Flow rating is 56.6 $m^3$/min. Efficiency rating is 90% ASHRAE* guide. See drawing H-2-65152. |
| AD4-1<br>AD4-2 | Primary HEPA filters | Size is 24 in. by 24 in. by 11.5 in. Flow rating is 42.5 $m^3$/min. Acceptance efficiency rating is 99.97%. The HEPA filters are installed in a Flanders bag-in/bag-out filter housing. See drawing H-2-65152. |
| AD5-1<br>AD5-2 | Secondary HEPA filters | Size is 24 in. by 24 in. by 11.5 in. Flow rating is 42.5 $m^3$/min. Acceptance efficiency rating is 99.97%. The HEPA filters are installed in a Flanders bag-in/bag-out filter housing. See drawing H-2-65152. |

*American Society of Heating, Refrigerating, and Air Conditioning Engineers.

9413219.0768

condensate which is partially recycled via spray nozzles to scrub residual ammonia. Because of its affinity for cool water, nearly all of the ammonia is absorbed in the condensate.

The system preheater on the ammonia offgas system heats the offgas to a temperature that is high enough to prevent water vapor from condensing on the HEPA filters. Should the heater fail, the HEPA filters will begin to saturate with water and plug. Breach of a filter may occur if the DP across the filter exceeds 10 in. WG. By most manufacturer specifications, HEPA filters are designed to withstand at least 10 in. WG. The following three systems exist to prevent filter failure from high DP:

- Should the DP across either bank of filters reach 3 in. WG, an alarm will sound in the central control room
- Should the DP across the last bank of filters reach 4 in. WG, the air bleed will open wide, thus lowering the system vacuum and flow through the filters
- Should the DP across the last bank of filters reach 5 in. WG, the blower fan will shut off, bringing the system to a complete shutdown.

Both the air bleed and the blower fan must be reset before the system can be restarted. Administrative controls prevent the operator from resetting the system until the cause of the shutdown has been ascertained and corrected. Failure of HEPA filters is discussed in Section 9.1.

The stack is equipped with an isokinetic sampling probe, and the exhaust will be monitored with an alpha radiation CAM, a beta-gamma radiation CAM, and an ammonia gas analyzer. The monitors will have remote alarm indication in the dispatcher's office. Control of the ammonia concentration at the stack plus air dilution after discharge assure that the threshold limit value for ammonia of 25 ppm in air at ground level is not exceeded.

7.4.3.4 Safety Criteria and Assurance. The potential hazards associated with the operation of the ammonia offgas system are summarized in Table 7-14.

### 7.4.4 Process Offgas System

The process offgas system treats the gaseous wastes from the condenser vent system, the vessel vent system, and the E-F5 condenser vent system.

7.4.4.1 Functional Design. The system is shown schematically in Figure 7-5. The offgases from the three subsystem headers enter a common manifold and, in sequence, pass through the E-F1 condenser, the E-F2 steam heater, the T-F2 silver reactor, and the F-F1 process vent filter. The offgases are then discharged through the canyon exhaust filters to the atmosphere via the 291-A-1 stack.



9413219.0769

TABLE 7-14. Summary of Potential Hazards Associated with the Ammonia Offgas System.

| System or subsystem | Energy (hazard) | Unwanted energy flow (incident) | Consequence (immediate and/or secondary) | Barriers (design, administrative, safety devices, etc.) |
|---|---|---|---|---|
| $NH_3$ offgas system | $NH_3$ | $NH_3$ explosion | Disruption of the offgas train | Dilution of offgas with air<br>Maintain $NH_3$ solution temperature $\geq 45^{o}C$ to assure sufficient water vapor to prevent an explosion.<br>Monitor $NH_3$ |
| HEPA filters | Radioactivity and toxic fumes | Release of radioactivity and toxic fumes to the environment | Exceed permissable release levels | Administrative procedures. Monitoring of effluents. Monitoring of pressure drop across filter. |
| Crib | Radioactivity | Release of radioactivity to crib | Overloaded crib could leach into groundwater. Contamination of groundwater | Monitoring of ASD Stream. Administrative procedures. Monitoring of the ground water. Diversion of ASD to other cribs. |

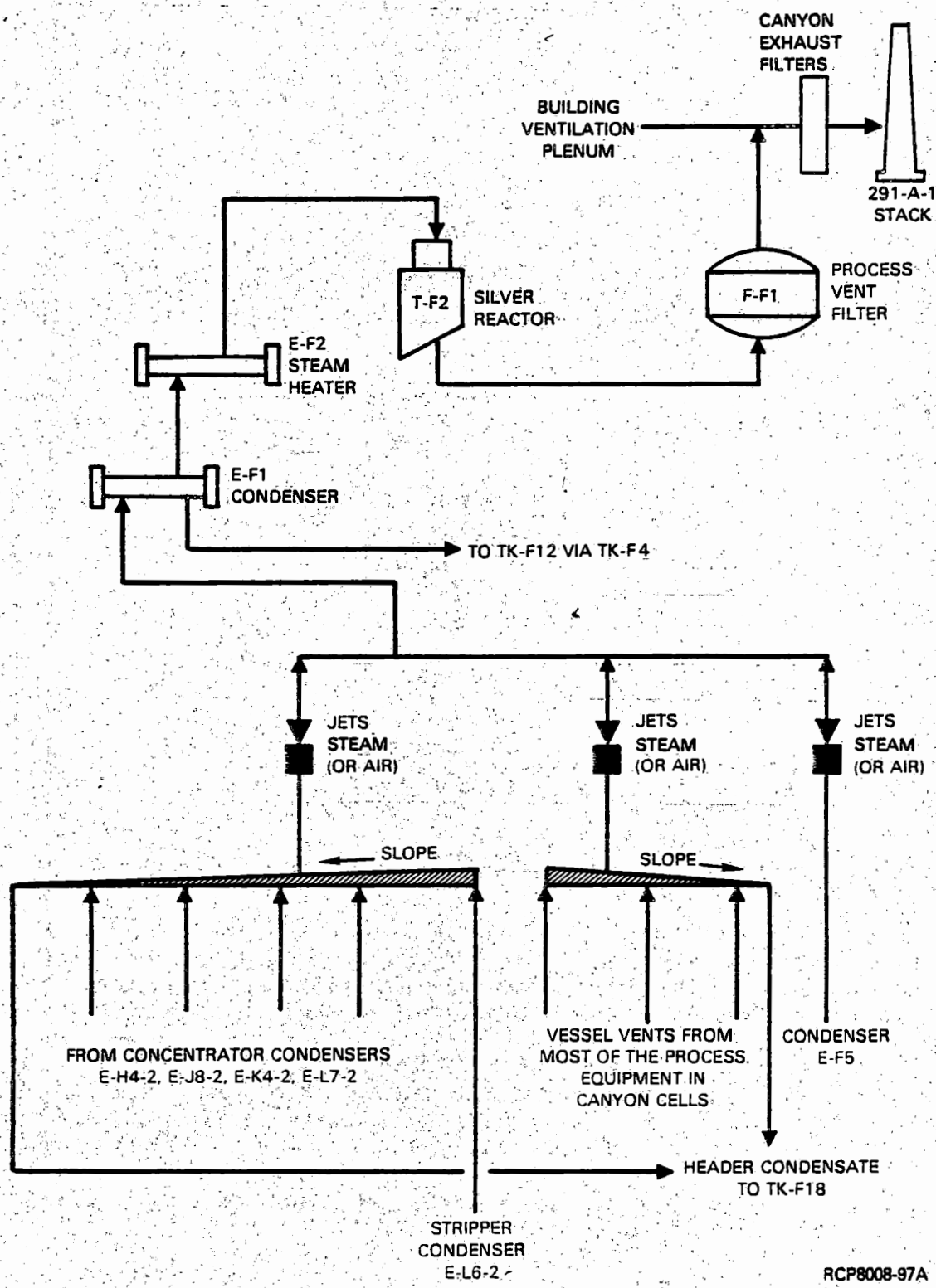


FIGURE 7-5. Process Offgas System.

The purpose of this ventilation system is to maintain a slight vacuum in the process vessels and condensers, and to remove the condensable and noncondensable gases. The E-F1 condenser removes the condensable liquids and returns the condensate to TK-F12. The E-F2 steam heater heats the off-gas stream to a safe temperature for the silver reactor. The T-F2 silver reactor removes radioactive iodine that remained in solution during the fuel dissolution process and did not escape into the DOG system. The F-F1 Filter removes radioactive-bearing particulate matter.

7.4.4.2 Major Components. The major equipment items, functions, nominal capacities, and descriptions are summarized in Table 7-15.

TABLE 7-15. Process Offgas System Major Components.

| Equipment | Function | Description |
|---|---|---|
| E-F1 | Condenser | 40 in. OD by 10 ft 6 in. cylindrical vessel. Internally, E-F1 contains 586 tubes 1 in. OD by 9 ft long. See drawing H-2-63152. |
| E-F2 | Steam heater | 2 ft 8 in. OD by 11 ft cylindrical vessel. See drawing H-2-52530. |
| T-F2 | Silver reactor | 4 ft 6 in. OD by 13 ft 8 in., packing 2 beds of 0.5-in. ceramic berl saddles equipped with external heating coil. See drawing H-2-63162. |
| F-F1 | Process vent filter | 9 ft OD by 8 ft 9 in., 4 layers of glass-fiber filter media. See drawing H-2-52527. |

7.4.4.3 Operational Control.(32) During plant operation, steam-operated jets are used to maintain a slight vacuum in the process vessels and the condensers. This vacuum assures sufficient airflow is maintained through process vessels to preclude a buildup of hydrogen formed by radiolysis. Overpressurization of process vessels due to chemical reactions is minimized by controlling reactant addition rates and/or temperatures. The resulting gaseous stream is routed to the process ventilation offgas header through the E-F1 condenser, a steam heater, a silver reactor, and an in-cell filter to the main ventilation system exhaust air tunnel. The main ventilation system exhaust fans maintain the pressure in the building ventilation plenum below the exhaust pressure of the F-F1 filter. When the plant is on standby, the vent jets are operated on air. The E-F1 condenser, the E-F2 steam heater, and the E-F11 concentrator and associated equipment are shut down.

Instrumentation automatically controls the steam supply to the jets of the condenser vent system and maintains the desired vacuum. Vacuum gauges measure the vacuum in the vessel vent headers. A temperature sensor located at the outlet of the E-F1 condenser automatically controls the flow of

cooling water. The temperature of the E-F2 steam heater is controlled by varying the supply of 185 lb/in.$^2$ steam; the temperature is maintained at 160°C during plant operation. This temperature is above the volatilization temperature of silver-ammonia compounds which could form if ammonia were inadvertently (separate system handles ammonia offgas) routed through the silver reactor at lower temperatures. These compounds are intermediates in the production of silver azide.(33,34) Jet transfer of the E-F1 condensate from receiver TK-F4 to the E-F11 concentrator feed tank (TK-F12) is controlled by weight factor. The DP are measured across the F-F1 filter, the E-F2 steam heater, and the T-F2 silver reactor. Airflow is measured between the silver reactor and the filter. The readouts and the control instrumentation for the process offgas system are located in the central control room.

7.4.4.4 Safety Criteria and Assurances. The potential hazards associated with the operation of the process offgas system are summarized in Table 7-16.

### 7.4.5 Plutonium Oxide Production Facility Offgas System

The process offgases from the plutonium oxide conversion system equipment are collected by means of a vessel offgas venting system and an offgas treatment system.(35) The offgases (after passing through HEPA filtration) are discharged into the canyon air tunnel (ventilation system 1) and through the canyon filters prior to discharge through stack 291-A-1 (Fig. 7-6).

7.4.5.1 Functional Design. The offgases from the $Pu(NO_3)_4$ storage vessels (TK-M3, -M4, -M5, and -M6), the prereduction tank (TK-N5), and feed tank (TK-N6) are collected by means of the vessel vent header. The combined flow of about 425 L/min standard at 25°C passes to cyclone separator S-N42. The cyclone separator has been installed to remove any liquid in the offgases from the M cell tanks. The gases flow from the cyclone separator to heater H-N25, through two stages of HEPA filtration, and then into the air tunnel of ventilation system 1. The vent header and S-N42 separator drain to TK-N12 (vessel vent drain tank). The offgases are heated to 100°C prior to entry into the HEPA filter F-N26 to prevent condensation of moisture and the resultant plugging of the filter.

The offgas treatment system processes the calciner (CA-N9 and -N10) offgases, filtrate concentration system (TK-N13, -N15, -N16, -N21, -N22) offgases, and vacuum tank (TK-N30) offgases. The calciner offgas from the oxalate precipitation process has a flow rate of about 99 L/min standard at 400°C and is composed of moisture, air, carbon dioxide, and plutonium oxide particulates. The calciner offgases pass through filter F-N18 to remove plutonium oxide particles. The filtered offgases are fed to a scrubber (TK-N19) along with the offgases from the filtrate condensation system.

TABLE 7-16. Summary of Potential Hazards Associated with the Process Offgas System.

| System or subsystem | Energy (hazard) | Unwanted energy flow (incident) | Consequence (immediate and/or secondary) | Barriers (design, administrative, safety devices, etc.) |
|---|---|---|---|---|
| Process off-gas vacuum | Loss of vacuum in process vessels | Leakage of radio-activity into cell and canyon | Radioactive contami-nation; high stack releases | Administrative procedures monitoring of pressure drop and temperature |
| Process off-gas vacuum | Chemical re-action in process vessel leads to pressure buildup | Leakage of radio-activity into cell and canyon | Radioactive contami-nation; high stack releases | Administrative procedures; monitoring of pressure drop and temperature |
| Silver reactor | Formation of silver azide | Temperature drops below operational values | Explosion in silver reactor; release of radioactive iodine; high stack releases | Remove ammonia gases in ammonia DOG system; no ammonia reaches process offgas system |
| | Entrained organic | Overpressurization of process vessel | Explosion, high stack release | Administrative procedures |

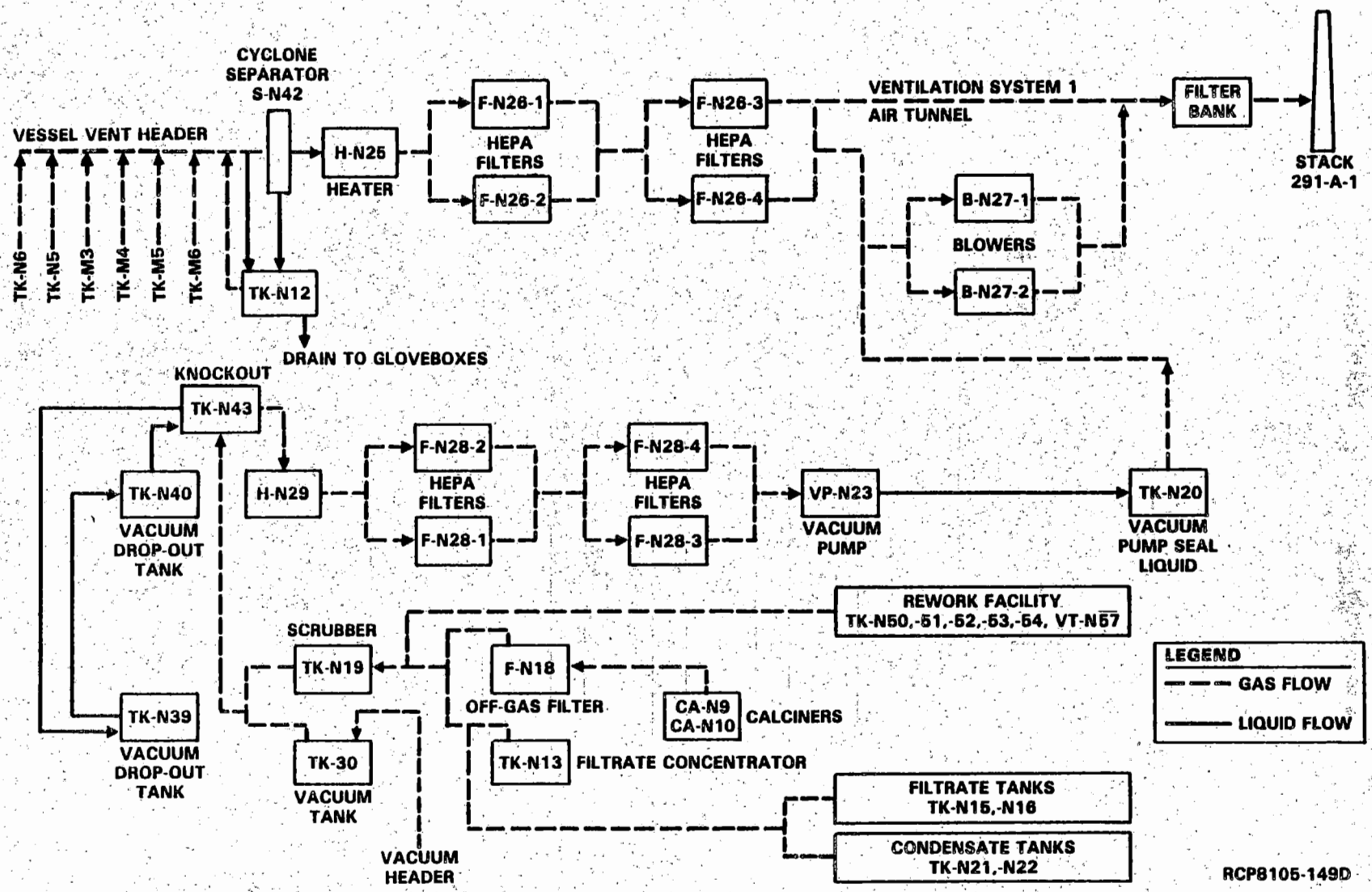


FIGURE 7-6. Plutonium Oxide Production Facility Offgas Flow Diagram.

The vessel vent gas from the oxide rework facility (TK-N50, -N51, -N52, -N54 and vacuum trap VT-57) is also routed to TK-N19 scrubber. In the scrubber, the gases are countercurrently scrubbed and cooled by a recirculating scrub liquor stream which is cooled in an external heat exchanger. Excess condensate from the scrubber is collected in the receiver tanks (TK-N21 and TK-N22) and is returned to TK-F10 in the backcycle waste system.

The offgas from the vacuum header which also serves the oxide rework facility, passes through vacuum TK-N30 and is then combined with the TK-N19 offgas. The combined offgas stream then passes through knockout tank TK-N43 which drains to TK-N39 and -N40 to remove entrained liquid. Vessel TK-N43 is equipped with an individual liquid detector to ensure no entrained liquids reach the HEPA filters and downstream vessels which are not geometrically favorable for criticality safety.

Heater H-N29 raises the temperature of the offgas, leaving TK-N43 to prevent condensation of moisture in the HEPA filters (F-N28). The offgas then goes to the suction side of the vacuum pump (VP-N23). Offgas flow to the heater is approximately 540 L/min standard.

The vacuum pump (VP-N23) also provides the vacuum required for all vacuum transfers in M and N cells. A separator/seal liquid Tank (TK-N20) allows for the entrained liquid to drop out and be recycled into the vacuum pump. The vacuum pump gaseous discharge is routed to the vessel vent blower (B-N27-1 and -2) suction for combined discharge to the ventilation system 1 air tunnel.

7.4.5.2 Major Components. The major equipment items, functions, and descriptions are shown in Table 7-17.

7.4.5.3 Operational Control. Operational control of the process offgas equipment is by panelboard-mounted instrumentation located remotely and shielded from the process. Instrumentation monitors and controls temperatures, pressures, flows, volumes, and other parameters necessary to the operation. Critical controls provide continuous recording and have limit alarms and safety interlocks, as needed, to protect equipment and personnel.

The temperature of the F-N18 calciner blowback filter is maintained at 240oC to prevent moisture condensation which would result in plugging the filter.

Differential pressure (DP) indicators are provided to monitor the pressure drop across each HEPA filter stage. Capability is provided for DOP testing of these filters in accordance with the requirements of Reference 23.

TABLE 7-17. Plutonium Oxide Production Facility Offgas System, Major Components. (Sheet 1 of 2)

| Equipment | Function | Description |
|---|---|---|
| H-N25 heater | Provides protection for HEPA against liquid condensation | |
| F-N26 filters | HEPA filtration | Two stages each with two filters in parallel; 99.95% efficient |
| F-N18 calciner offgas filter | Removes particulate from calciner offgas | Stainless steel pipe housing four 1.5-in.-dia. porous stainless steel filters; automatic filter cleaning, electric heater to avoid moisture condensation |
| TK-N19 offgas scrubber | Removes nitric acid from offgases | 6-in.-dia., schedule 80, type 304, stainless steel pipe, 7.5 ft high; two spray heads in top section; liquid reservoir in bottom; demister in outlet |
| TK-N30 vacuum tank | Vacuum header receiver tank | 6 in., schedule 80, stainless steel |
| TK-N39 vacuum drop-out tank | Permits removal of entrained liquid from offgas | 6 in., schedule 80, stainless steel |
| TK-N40 vacuum drop-out tank | Provides overflow capacity for TK-N39 | 6 in., schedule 80, stainless steel |
| TK-N12 Vent seal pot | Collects moisture from from vessel vent lines | 12 in. high by 4 in. wide; Pyrex |
| TK-N42 vessel vent separator | Separates entrained vessel vent moisture from air stream | 14 in. high by 16 in. wide; 304L stainless steel |
| TK-N43 vacuum drop-out tank | Removes entrained liquid from vacuum offgas | 6 in.; schedule 80, stainless steel pipe |
| TK-N20 | Separates liquid from vacuum pump discharge | 6 in.; schedule 80, stainless steel pipe |
| H-N29 heater | Provides protection for HEPA against liquid condensation | Stainless steel shell and tube heat exchanger; steam offgas heater |

9413219.0777

TABLE 7-17. Plutonium Oxide Production Facility Offgas System, Major Components. (Sheet 2 of 2)

| Equipment | Function | Description |
|---|---|---|
| F-N28 filter | HEPA filtration | Two stages each with two filters in parallel; 99.95% efficient |
| B-N27-1 and B-N27-2 blowers | Maintains negative pressure in process vessels | Buffalo Forge Model 2RE, 1.5 HP, 460VAC, 3 phase, 3500 rpm, capacity 60 scfm @ 140°F and 17 in. WG static pressure. |

9413219.0778

The following interlocks are provided to assure continued operation of the system, protect equipment, and prevent moisture from reaching the HEPA filters:

- Low flowrate on the discharge side of process offgas blowers B-N27-1 and -2 automatically starts the standby blower and actuates the corresponding solenoid valves.

- One of the P-N19 pumps has been changed to a P-N11 pump. This pump allows for continuous recirculation of the contents in the TK-N11 as well as providing feed to the TK-N13 concentrator and rework back to the vacuum drum filter.

- Low cooling liquid flow to vacuum pump VP-N23-1 automatically shuts off the pump.

- A high weight factor alarm on TK-N30 will actuate the MOV in the vacuum/vent line to bypass the vacuum position and open to the vent position.

- A liquid detection alarm in the vacuum line upstream of the vacuum heater, H-N29-1, automatically shuts off the vacuum pump, VP-N23-1.

7.4.5.4 Safety Criteria and Assurance. The primary safety concern in the operation of the plutonium oxide production facility process offgas system is the potential for criticality in the HEPA filters. Although the vessel vent filters and vacuum header filters are safe for all dry powder loadings, liquid must be excluded from the filters to maintain a $K_{eff}$ below 0.95 at all powder loadings. A vessel vent filter protective system is designed to drain the vessel vent header to an overflow seal pot (TK-N12) in the event liquid enters the vessel vent header from any vessel. The protective system for the vacuum header filters consists of two large vacuum dropout vessels in series, TK-N39 and -N40, which will be operated empty and act as surge capacity for any liquid entering the vacuum header. Independent instrumentation and alarms are provided on each of the two vessels to warn of an off-standard condition.

## 7.5 LIQUID WASTE TREATMENT AND RETENTION

There are three groups of liquid waste in PUREX: high-level process waste, low-level process wastes, and very-low-activity aqueous waste. The high-level and low-level process wastes result directly from the processing of spent fuel elements. High-level wastes are produced in the recycle operations of the solvent extraction process. These high-density wastes contain the bulk (99%) of the FP which generate sufficient heat to cause self-boiling while in storage. The low-level waste contains the remaining 1% of FP in a very dilute form so that additional cooling is not required. Both high-level and low-level wastes are made alkaline prior to transfer to underground storage tanks. The various sources of high-level and low-level process waste have been tabulated in Table 7-4.



9413219.0779

The very-low-activity aqueous wastes are secondary streams whose normal activity level is below that of Table I so that they may be discharged to evaporation cribs or ponds.(3) These include cooling water, chemical sewer waste, and various steam and process condensates. The sources of very-low-activity aqueous waste have been tabulated in Table 7-5.

Figure 7-7 is a simplified flow schematic of the liquid waste processing and disposition. A more detailed characterization of the high-level and low-level liquid process wastes is given Table 7-18. The flow and projected radionuclide concentrations in each of the very-low-activity aqueous waste streams is given in Table 7-19.

9413219.0780

### 7.5.1 High-Level Waste

The high-level liquid waste from the HA column contains over 99% of the FP and is collected in F cell. The waste is sugar denitrated, made alkaline and periodically jetted in batches to the 241-AY tank farm for storage as boiling waste in double-shell tanks or to the 241-AW tank farm for storage in nonboiling double-shell waste tanks. After the heat content is decreased sufficiently by radioactive decay of FP, the waste may be transferred to the 242-A evaporator for further concentration. The resulting slurry is routed to double-shell tanks for storage.

7.5.1.1 Design Objectives. High-level waste is to be stored temporarily at the PUREX Plant and the tank farm in liquid forms until an acceptable solidification process is identified. All pipelines through which the high-level process waste flows are stainless steel. Underground piping is contained within a concrete encasement. Methods of heat removal from vessels and piping containing high-level waste have been included in the design.

7.5.1.2 Equipment and Systems Description. The process flow diagram (Fig. 7-8) indicates equipment and primary process routes for the system. The functions, typical compositions, and flow rates of the high-level waste concentration streams are summarized in Table 7-20.

The HAW waste is collected in the high-level waste concentrator feed tank (TK-F7). It is then diluted with 1WF dilution water (recycled condensate from the E-F5 condenser) to improve the nitric acid recovery from the high-level waste. A very low flow of sugar solution is continuously added to TK-F7 to prevent ruthenium volatilization. The sugar reacts with nitric acid to form nitrite, which prevents ruthenium oxidation to volatile ruthenium oxide. The emerging stream from TK-F7 is called the 1WF stream and is pumped to the high-level waste concentrator (E-F6). The concentrator is generally operated at full capacity, so the volume of dilution water added varies with the HAW flow rate.

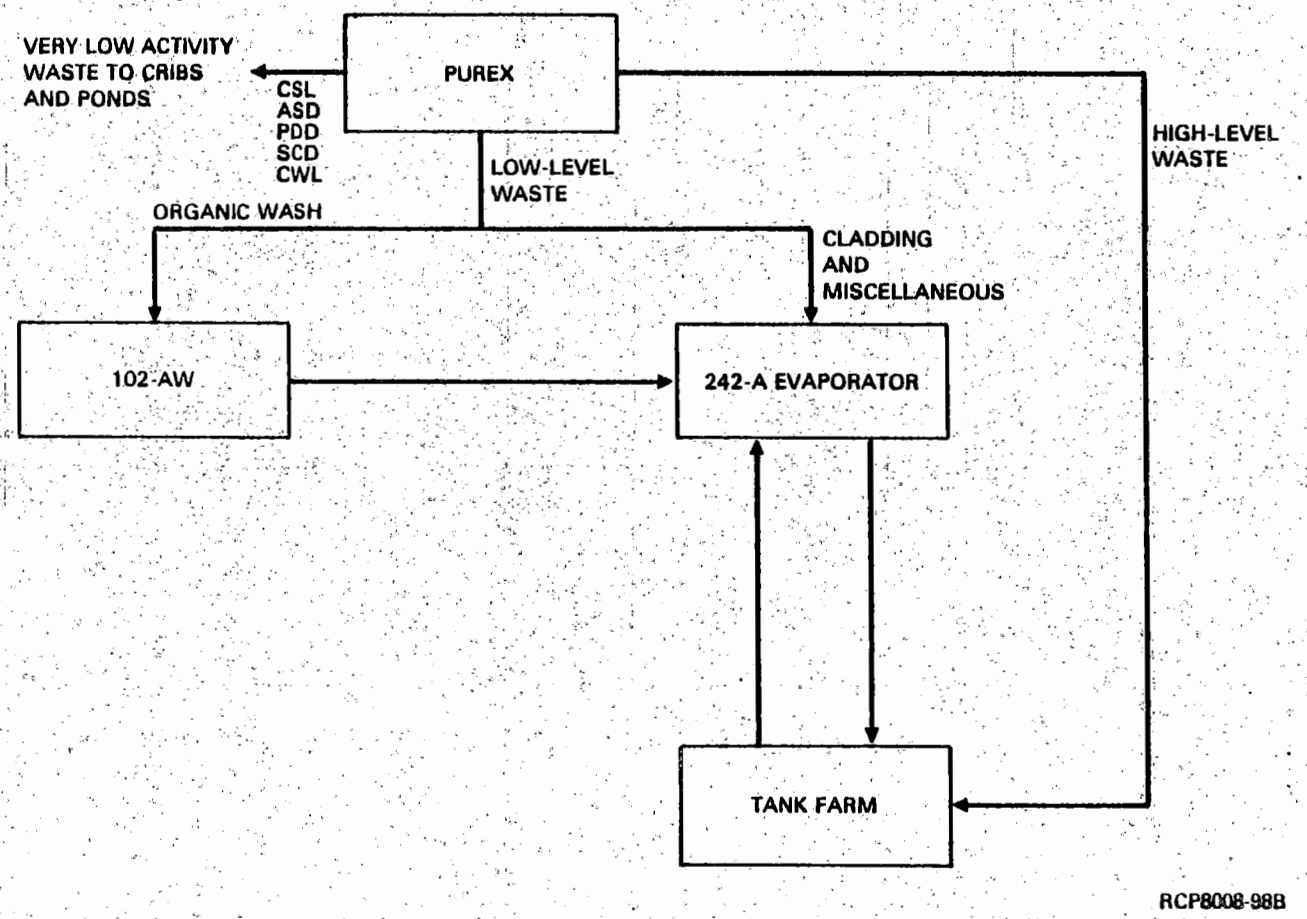


FIGURE 7-7. Liquid Waste Process Flowsheet.

TABLE 7-18. High-Level and Low-Level PUREX Wastes. (Sheet 1 of 2)

| | Type | Vol[a] (L) | Concentrations | |
|---|---|---|---|---|
| | | High-Level | | |
| ZNW | Zirflex neutralized (alkaline) waste | 865 | U | $1 \times 10^{-4}$ M |
| | | | Pu | $3.6 \times 10^{-4}$ g/L |
| | | | $OH^-$ | 1.0M |
| | | | Al | 0.66M |
| | | | $F^-$ | 0.14M |
| | | Low-Level | | |
| Cladding waste | Alkaline decladding waste and rinse | 1,787 | $ZrO_2 \cdot 2H_2O$ | 0.34M |
| | | | NaF | 2.45M |
| | | | $NaNO_3$ | 0.08M |
| | | | U | $4.8 \times 10^{-1}$ g/L |
| | | | Pu | $7.9 \times 10^{-4}$ g/L |
| | | | NaOH | 0.13M |
| | Alkaline decladding waste dissolver rinses and metathesis rinses | 1,400 | $ZrO_2 \cdot 2H_2O$ | 0.11M |
| | | | NaF | 0.8M |
| | | | $NaNO_3$ | 0.02M |
| | | | KF | 0.004M |
| | | | NaOH | 0.5M |
| | | | U | $1.2 \times 10^{-1}$ g/L |
| | | | Pu | $1.0 \times 10^{-3}$ g/L |
| | Water rinses | 625 | | |
| | Centrifuged spent metathesis solution | 464 | KOH | 2.6M |
| | | | KF | 1.5M |
| | | | U | $1.2 \times 10^{-2}$ g/L |
| | | | Pu | $1.0 \times 10^{-4}$ g/L |
| Miscellaneous canyon waste | Sump wastes, etc. | 280[b] | U | 4.0 g/L[b] |
| | | | Pu | $2 \times 10^{-3}$ g/L[b] |

TABLE 7-18. High-Level and Low-Level PUREX Wastes. (Sheet 2 of 2)

| | Type | Vol[a] (L) | Concentrations | |
|---|---|---|---|---|
| Low-Level (Continued) | | | | |
| Organic waste | Waste, solvent treatment System 1 | 560 | $NaNO_3$ | 0.04M |
| | | | $Na_2CO_3$ | 0.13M |
| | | | $MnO_2$ | 0.004M |
| | | | U | $3 \times 10^{-4}$M |
| $NH_3$ | $NH_3$ scrubber bottoms | 95[b] | NaOH | 0.4M[b] |
| | | | $NaNO_3$ | 0.1M[b] |

[a]Per tonne of uranium.
[b]Estimated.

9413219.0783

TABLE 7-19. Projected Radionuclide Concentrations in Very-Low-Activity Aqueous Waste from PUREX to Cribs and Ponds (μCi/mL).

| Radionuclides | Cribs | | | Ponds | | DOE Order 5480.1 Chapter XI[3] | |
|---|---|---|---|---|---|---|---|
| | Process condensate | Steam condensate | $NH_3$ scrubber condensate | Cooling water | Chemical sewer | Offsite concentration guide | Onsite concentration guide |
| $^{239}Pu$ | $1.5 \times 10^{-6}$ | $5.8 \times 10^{-7}$ | $4.5 \times 10^{-7}$ | $1.4 \times 10^{-8}$ | $6.6 \times 10^{-9}$ | $5 \times 10^{-6}$ | $1 \times 10^{-4}$ |
| $^{238}U$ | $1.0 \times 10^{-8}$ | $2.7 \times 10^{-9}$ | $4.5 \times 10^{-9}$ | $7.2 \times 10^{-11}$ | $2.6 \times 10^{-10}$ | $4 \times 10^{-6}$ | $1 \times 10^{-3}$ |
| $^{3}H$ | $2.2 \times 10^{0}$ | $8.3 \times 10^{-6}$ | $1.3 \times 10^{-2}$ | $2.8 \times 10^{-6}$ | $7.1 \times 10^{-6}$ | $3 \times 10^{-3}$ | $1 \times 10^{-1}$ |
| $^{90}Sr$ | $2.1 \times 10^{-6}$ | $1.0 \times 10^{-5}$ | $1.0 \times 10^{-5}$ | $2.0 \times 10^{-8}$ | $2.2 \times 10^{-8}$ | $3 \times 10^{-7}$ | $1 \times 10^{-5}$ |
| $^{137}Cs$ | $2.1 \times 10^{-6}$ | $4.9 \times 10^{-6}$ | $4.0 \times 10^{-7}$ | $1.8 \times 10^{-7}$ | $3.3 \times 10^{-8}$ | $2 \times 10^{-5}$ | $4 \times 10^{-4}$ |
| $^{106}Ru$ | $2.3 \times 10^{-6}$ | $1.6 \times 10^{-6}$ | $6.4 \times 10^{-5}$ | $1.6 \times 10^{-8}$ | $8.8 \times 10^{-10}$ | $1 \times 10^{-5}$ | $3 \times 10^{-4}$ |
| $^{60}Co$ | $2.1 \times 10^{-7}$ | $1.9 \times 10^{-7}$ | $8.2 \times 10^{-7}$ | $3.7 \times 10^{-8}$ | $1.0 \times 10^{-8}$ | $3 \times 10^{-5}$ | $1 \times 10^{-3}$ |
| Annual volume (L) | $8.7 \times 10^{6}$ | $1.8 \times 10^{8}$ | $2.2 \times 10^{7}$ | $9.8 \times 10^{9}$ | $9.1 \times 10^{8}$ | - | - |

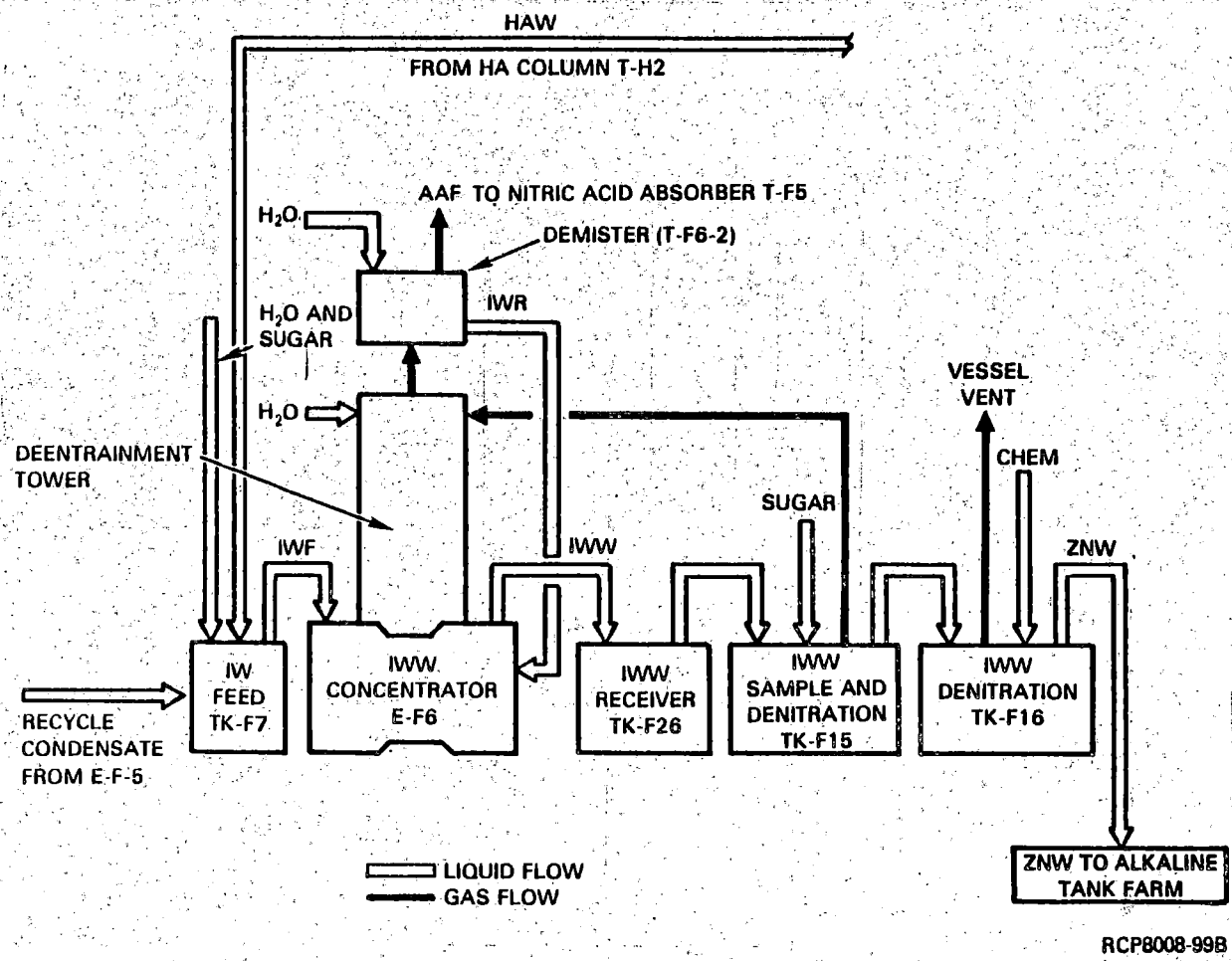


FIGURE 7-8. High-Level Waste Concentration and Treatment.

TABLE 7-20. High-Level Waste Concentration and Sugar Denitration Streams.

| Stream | Composition | Function | Flow* (L/min) |
|---|---|---|---|
| HAW | U - $1.4 \times 10^{-5}$M<br>$HNO_3$ - 3.0M<br>Al - 0.09M<br>$F^-$ - 0.02M<br>Pu - $4.7 \times 10^{-5}$g/L | HA column waste stream | 40.1 |
| 1WF-$H_2O$ | $HNO_3$ - 0.1M<br>AAD, recycled E-F5 condensate | Demineralized $H_2O$ alternate added to dilute HAW in TK-F7 to allow more efficient concentrator operation and acid recovery | 64.7 |
| 1WF-sugar | Sugar - 0.7M<br>NaOH - 0.005M | Feed treatment in TK-F7 to suppress Ru volatilization from acid waste. NaOH added to prevent mold | .35 |
| 1WF | U - $5.3 \times 10^{-6}$M<br>$HNO_3$ - 1.2M<br>Al - 0.03M<br>$F^-$ - 0.008M<br>Pu - $1.8 \times 10^{-5}$g/L | Feed to E-F6 waste concentrator | 105.2 |
| 1WW | U - $1 \times 10^{-4}$M<br>$HNO_3$ - 2.8M<br>Al - 0.68M<br>$F^-$ - 0.14M<br>Pu - $3.7 \times 10^{-4}$g/L | Concentrated waste overflow from concentrator | 4.3 |
| Denitration sugar | Sugar - 0.7M<br>NaOH - 0.005M | Denitrate 1WW | 1.1 |
| ZAW | FP - 800 Ci/L<br>U - $1 \times 10^{-4}$M<br>$HNO_3$ - 0.0M<br>Al - 0.68M<br>$F^-$ - 0.14M<br>Pu - $3.7 \times 10^{-4}$g/L | Sugar-treated Zirflex acid waste which is then reacted with caustic | 4.3 |

*Based on PUREX processing rate of 10 t of uranium a day.



9413219.0786

The vapors (water and nitric acid) from the boiling waste are passed through a mist eliminator in the deentrainment tower and another mist eliminator (T-F6-2) before going to the nitric acid recovery equipment. The offgas stream (AAF) is fed to the nitric acid recovery system (see Section 6.2). The condensate (1WR) formed in the second mist eliminator is returned to the solution section of the concentrator.

The combination of the deentrainment tower and the second mist eliminator effectively decontaminates the offgas stream from FP. A small flow of scrub water is added to both the tower and deentrainer during waste concentration to aid the deentrainment/decontamination process. The scrub water returns to the concentrator with the condensate as additional dilution water.

Liquid holdup in the waste concentrator is about 8,300 L, with an average residence time of about 26 h at an 318 L/h concentrate removal rate. The concentrated high-level waste (1WW) overflows continuously to a waste-receiver tank (TK-F26). In this tank, the 1WW is cooled and moved batchwise to the 1WW sample and denitration tank (TK-F15).

A second denitration tank (TK-F16) is available for further digestion if necessary. The waste is made alkaline and routed to the tank farm. The amount of 19M sodium hydroxide added is calculated to result in a 1M sodium hydroxide concentration in the alkaline waste. The calculation is based on a mole ratio of $OH^-$ to aluminum, iron, copper, $H^+$ and $F^-$ of 4, 3, 3, 1, and 1, respectively, as being required for neutralization, and assumes the liquid volumes are additive.

To ensure adequate FP decontamination of the concentrator overheads, the deentrainer spray water and sugar flows to TK-F7 are maintained at specified rate sheet values. Also, "surging" the concentrator by too rapid a change in the boil-off rate must be avoided.

The capacity of the various vessels is shown in Table 7-21.

7.5.1.3 Operating Procedures.

7.5.1.3.1 Waste Concentration Startup and Shutdown. Prestartup and startup procedures exist for F cell to establish the necessary conditions for startup of the E-F6-1 waste concentrator. Prior to startup of the waste concentrator, checks are made to ensure that the condenser vent system is operating properly, and that there is no organic in TK-F7. Failure to have the condenser vent system operating when starting up the E-F6-1 concentrator would result in pressurization of E-F6-1. If any organic is left in TK-F7, it could be carried as feed to the E-F6-1 concentrator and be converted to potentially explosive compounds. The liquid level is maintained greater than 22 in. (weight factor greater than 15% of chart) to ensure that organic is not pumped to E-F6.

TABLE 7-21. Major Components of the High-Level Waste Treatment System.

| Vessel | Function | Capacity (L) | Comments |
|---|---|---|---|
| TK-F7/ TK-26 | 1W feed tank<br>1WW receiver tank | 15,100<br>15,100 | TK-F7/F26 are side by side; each is equipped with a cooling coil; see drawing H-2-59976 |
| E-F6 | 1WW concentrator | 9,085 | Sectionalized concentrator; acid deentrainment tower with mist eliminator; see drawing H-2-58101 |
| T-F6-1 | Mist eliminator | - | Wire mesh deentrainment filter |
| TK-F15 | Sample and denitration tank | 18,900 | 10 ft by 9 ft 3 in.; see drawing H-2-52521 |
| TK-F16 | Denitration ZAW hold tank | 18,900 | 10 ft by 9 ft 3 in. |

The T-F5 acid absorber condensate recycle pump is activated and the T-F5 absorber operation is established as the concentrator is started. The 1WF sugar addition is started simultaneously with the receipt of HAW in TK-F7. Once E-F6 is started, the waste concentrator-acid absorber system is brought up to normal operating rates.

The sequence of the concentrator startup follows.

1. The concentrator is prepared for operation by checking the auxiliary systems; water is added to the deentrainment pad spray and the seal pot.

2. If necessary, the concentrator is filled with water via the seal pot.

3. The steam is valved into the tube bundles.

4. The liquid in the concentrator is simmered with demineralized water; an addition from TK-F7 to maintain concentrator liquid level until TK-F7 is receiving HAW.

The liquid level in TK-F7 is allowed to build up to working level as the 1WF flow is started, with a corresponding increase in concentrator steam flow. The E-F6 specific gravity is also allowed to increase before beginning concentrate overflow to TK-F26. When normal operating flows are attained, efficient operation of the concentrator requires a vacuum of between 2 and 5 in. WG. Operating adjustments, if necessary, consist of reductions or increases of the T-F5/E-F6-1 vent vacuum or reductions in the steam flow to the tube bundles.

The concentrator is shut down by slowly introducing air to the tube bundles, raising the bundle pressure until the automatic high-pressure steam cutoff is activated. The steam DOV are closed and 5 to 10 min later the condensate DOV are closed. The air pressure is then reduced to 10 lb/in.$^2$ g. The concentrator is then cooled by opening the condensate DOV and slowly turning on the cooling water to the tube bundle to avoid exceeding a bundle pressure of 39 lb/in.$^2$ g which would open the steam pop-off valve. When the concentrator is cool, the water is turned off and then blown out of the tube bundles with 30-lb/in.$^2$ g air for 10 to 15 min. The air is returned to 10 lb/in.$^2$ g, which is maintained throughout the shutdown. Water sprays to the deentrainment pads are discontinued when E-F6 is cooled.

7.5.1.3.2 Detection and Remedy of Off-Standard Conditions. A summary of waste concentration process control off-standard conditions is given in Table 7-22. Typical problems which may be encountered while operating E-F6 and appropriate remedial actions are provided.

For efficient acid recovery, the concentrator specific gravity is held constant at the rate sheet value, and the vessel vacuum is controlled between 2 and 5 in. WG.

To avoid the formation of excess solids in the IWW (and to avoid plugging lines during subsequent transfers), the concentrate specific gravity must not exceed the rate sheet value (normally equivalent to 1.24 at 25°C, and the E-F6 to TK-26 overflow rate must be maintained at or near the rate sheet value (normally 4.3 L/min) by adjusting the IWF flow.

To ensure adequate FP decontamination of the concentrator overheads, the deentrainer spray water and sugar flows to TK-F7 are maintained at specified rate sheet values. Also, "surging" the concentrator by too rapid a change in the boil-off rate must be avoided.

7.5.1.3.3 High-Level Waste Concentration Process Safety and Criticality Prevention. Process safety in the waste concentrator operation is nearly the same as for other PUREX Plant concentrator systems. As in the rest of the plant, the potential exists for pressurizing vessels and developing leaks in concentrator tube bundles and process vessel coils. Any of these events could result in release of radioactive material to the environs. There is also the danger of explosive chemical reactions which can damage process equipment and result in release of radioactive materials outside the canyon. A major concern is improper valving, such as failing to air blow a jet following a solution transfer, which could cause a suckback from the vessel to the P&O gallery.

TABLE 7-22. Waste Concentration--Off-Standard Conditions.

| Off-standard condition | How detected | Likely cause | Detection of cause | Remedy |
|---|---|---|---|---|
| Overconcentration of waste in E-F6 | Increase in concentrator boiling point; increase in concentrator specific gravity | Decreasing feed flow (IWF) without a compensating reduction of steam flow | Flow meters on IWF and steam flow to concentrator reboiler | Establish correct ratio between feed rate and concentrate removal by adjusting steam flow and IWF flow |
| Failure of concentrator (E-F6) feed supply | Gradual decrease in product removal rate; decreasing feed flow rate (IWF) | Failure of pump between TK-F7 and E-F6 | See "How detected" | Restore feed pump to service |
| Excessive entrainment in F-F6-1 tower | High tower DP reading; analysis of recovered acid (TK-F3) for gamma activity | Excessively high boil-up rate | High tower DP reading | Decrease boil-up rate by decreasing steam flow to concentrator reboiler |
| Excessive Ru volatilization in E-F6 | Analysis of recovered $HNO_3$ for Ru | High $HNO_3$ concentration in E-F6 bottoms; low sugar flow to TK-F7 | Analysis of recovered $HNO_3$ for HNO; flow meter on sugar addition line | Dilute feed with demineralized water; increase sugar flow to TK-F7 |
| High tower DP (E-F6) | Tower DP readings | Vapor velocity too high (most likely to occur during startup) | Tower DP readings | Decrease rate of steam flow to the concentrator reboiler |
| Excessive organic in feed to E-F6 | Readings on TK-F7 organic detector | Entrainment of organic in HAW system from solvent extraction system | Routine TK-F7 organic checks | Jet organic to TK-F13; correct HA column operation |
| Excessive corrosion in absorber | Analysis of recovered acid; decrease in ANN addition rate | Decrease in ANN addition rate causing F corrosion | See "How detected" | Increase ANN addition rate |
| Pressurization of E-F6 | Fluctuating overflow rate; fluctuating WF readings | Foaming due to high sugar addition rate to TK-F7 | Flow meter on TK-F7 sugar addition line | Decrease sugar addition rate to TK-F7 |
| No overflow from E-F6 | Increase in concentrate specific gravity; fluctuating E-F6 weight factor; no increase in F-26 weight factor | Low feed rate to IWF; overconcentration due to high steam flow | Flow meter on IWF; flow meter on steam | Increase IWF flow rate; decrease steam flow |
| High temperature in concentrator | Temperature recorder on concentrator bottoms | High steam pressure in coils of concentrator reboiler | Steam pressure instrumentation | Decrease steam pressure/flow |
| | | Overconcentration or insufficient acid boiloff | High concentrator bottoms temperature and normal steam pressure instrumentation | |
| Pressurization of TK-F15 during sugar denitration | Pressure readings on TK-F15 | Rate of sugar solution addition too fast; sugar added to TK-F15 when tank temperature 85°C* (tank accumulates unreacted sugar) then tank heated above 90°C; antifoam not added | Flow recorder on sugar addition line; temperature recorder on TK-F15 | Slow rate of sugar addition; stop if necessary; add antifoam |

*85°C is the approximate reaction initiation temperature.[30] An interlock prevents sugar addition below 93°C.

Various methods are used to monitor the process and prevent these occurrences. Instrumentation is installed to monitor and control vessel pressure. Tube bundles and coils are constantly pressurized to assure any leakage is into the process rather than from the process to the environs. The liquid level in the unagitated TK-F7 is controlled to assure gross quantities of organic are not introduced to the concentrator, which is controlled at a safe temperature. Steam flow to the concentrator tube bundles is automatically shut off and air is turned on if the steam pressure or concentrator temperature exceeds a preset limit. Valving sequences are specified in operating procedures.

When adjusting the concentrator vacuum, pressurization of the concentrator is avoided by making small (3% of chart) adjustments in the controller setpoint for the T-F5/E-F6 vent vacuum and by allowing adequate time between adjustments for the vent system readings to stabilize.

In the concentrator, introduction of organic solvent would create a potentially explosive, complex mixture of tributylphosphate (TBP) (and diluent) degradation compounds and nitric acid, that can explode at temperatures in excess of 150°C. The maximum permissible E-F6 concentrator temperature is higher than in the product and backcycle waste concentrators, where high concentrations of uranium, plutonium, or neptunium are present. To prevent such conditions, the following controls exist:

- TK-F7 is checked for organic before startup, at shutdown, and whenever the HA column operation is upset. The concentrator is brought up to boiling with nitric acid before introducing fresh feed

- The maximum steam pressure to the concentrator tube bundles is 39 lb/in.$^2$ g (the pressure at which the steam pop-off valves are set)

- Should the steam temperature exceed 140°C, the steam is automatically shut off.

Nuclear criticality prevention in the waste concentration vessels is provided by administrative controls (HAW sample).(37)

7.5.1.3.4 Sugar Denitration Process. Sugar denitration of 1WW is carried out to increase the acid recovery from the 1WW stream, thereby decreasing the quantity of sodium hydroxide required in subsequent processes to neutralize the acid waste. This reduction in sodium hydroxide usage also reduces the waste volume which must be stored in the underground waste tanks.

The process is a batch treatment wherein 7,500 to 11,300 L of acid waste are heated to 95°C to 100°C in TK-F15. A 22 wt% sucrose solution is added for 12 h at a controlled rate of 115 to 160 kg of solution an hour (based on 1WW volume and nitric acid concentration). Addition of sucrose solution is continued until sufficient sugar has been added to decrease the nitric acid concentration to less than 1M. A digestion period of 12 h is required after addition is completed.

The primary system controls are the solution temperature and the vessel vacuum. An interlock ensures that the temperature is 93°C before introduction of any sugar, and that it is maintained above 93°C to prevent accumulation of unreacted sugar. Further, the tank contents are maintained under vacuum to ensure removal of reaction gases. Vacuum in TK-F15 is controlled by a combination of the E-F6 vacuum, the activation of a booster jet when necessary, and the temperature control of the sugar denitration reaction rate.(36) If normal vacuum supplied by E-F6 is insufficient to maintain the TK-F15 vacuum per a pressure recorder-controller setpoint, a pressure alarm activates a booster jet and the pressure recorder-controller adjusts the steam supply to the jet. If the booster jet cannot maintain the desired vacuum, the temperature controller for TK-F15 must be manually lowered to reduce the offgas rate.

Pressurization of E-F6 as a result of high sugar denitration rates in TK-F15 is not physically possible. The offgas line from TK-F15 to E-F6 is too restrictive to allow gas flow rates sufficient to pressurize the concentrator, even when the TK-F15 vacuum booster jet is operating. A seal pot (20 in.) is installed on TK-F15 to prevent gross over-pressurization of that vessel.

9413219.0792

7.5.1.3.5 Waste Accountability Measurement. The high-level waste transferred from the PUREX Plant to the tank farm is sampled for final accountability measurement of any uranium, plutonium, or neptunium associated with the waste batch. Any waste batch containing above-standard amounts of uranium, or plutonium, is identified and recycled for reprocessing (as described in Section 7.5.2.7) prior to final accountability sampling.

### 7.5.2 Low-Level Waste

7.5.2.1 Design Objectives. Low-level liquid waste systems are designed to contain the waste until it can be safely discharged. All ground discharged streams must either be proportionally sampled and measured for flow or batch accumulated, sampled, and measured for volume. In addition, continuously discharged streams must be monitored and continuous surface discharges must have diversion capability to a contained system.

7.5.2.2 Cladding Waste. Wastes resulting from cladding dissolution operation contain uranium and plutonium, in both solution and solid form, as the flouride salts. The solid fluorides are removed by centrifugation and the cladding waste is sent to underground storage.

7.5.2.2.1 Decladding Waste System Description. The decladding flow diagram (Fig. 7-9) shows the decladding streams and the major components of the metal dissolution and feed preparation system.

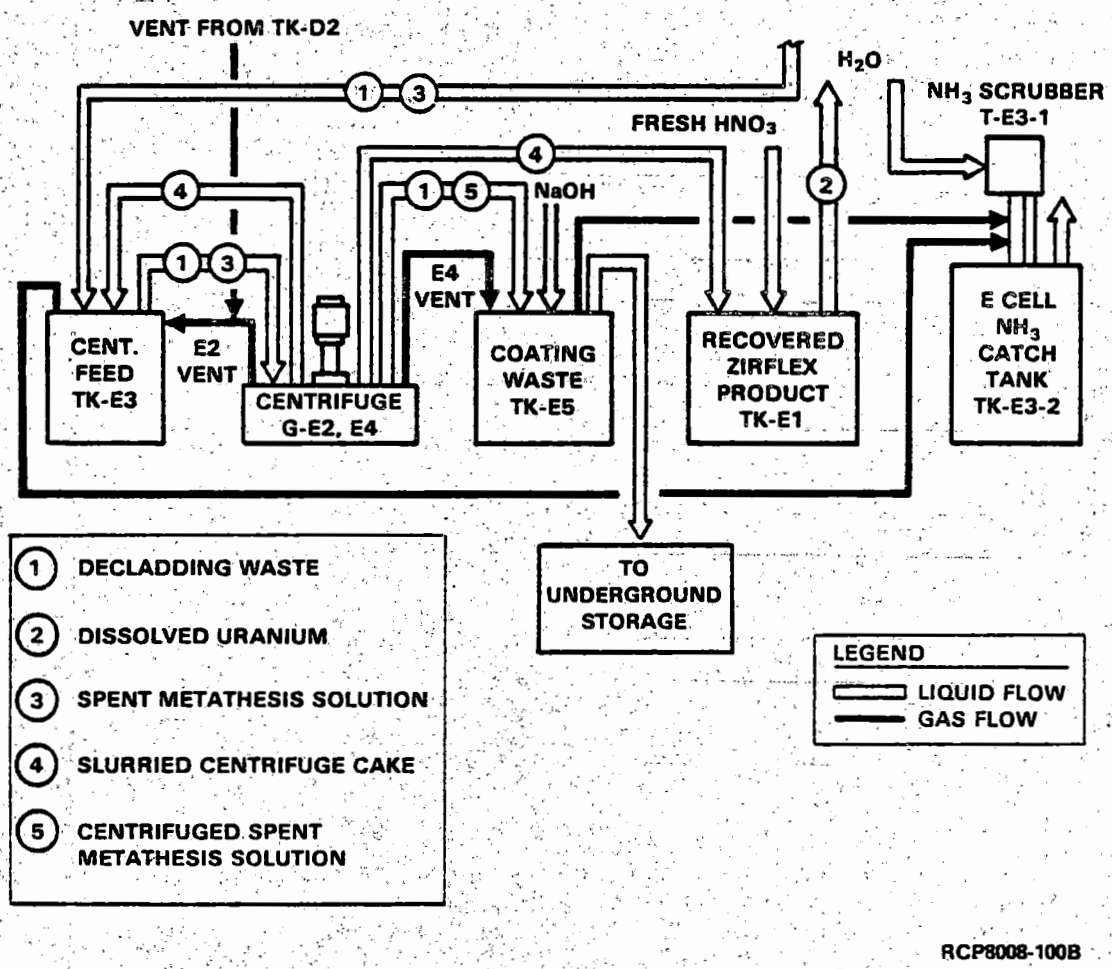


FIGURE 7-9. Decladding Flow Diagram.

All decladding waste batches are processed for uranium and plutonium recovery by centrifugation. The solution that remains following centrifugation of the cladding waste is made alkaline by "reverse strike" with caustic solution and transferred to underground storage tanks. Reverse strike alkalinization consists of transferring the acidic decladding waste into the alkalinization and transfer tank, which contains a 50% sodium hydroxide solution.

7.5.2.2.2 Operating Procedures. Decladding solution waste containing ammonium fluozirconate and unconsumed Zirflex dissolvent is jetted, after settling, from the dissolver to TK-D2. It is then transferred to TK-E3 which feeds the G-E2/E4 centrifuge, the overflow of which is collected in TK-E5. Prior to receiving the centrifuge overflow, sodium hydroxide is added to TK-E5 so that the reaction with the decladding solution drives off the ammonia. Centrifuge solids are returned to TK-E3, where any uranium fluoride and plutonium fluoride is metathesized to hydrated oxides, which are then slurried again to the centrifuge. The solids resulting from the second centrifugation are routed with ANN and nitric acid solution to TK-E1 for dissolution with nitric acid. Spent metathesis solutions and all decladding rinse solutions also leave the 202-A building via the decladding waste system. Because it is possible for plutonium to accumulate in the cladding waste system, the following criticality prevention limits have been adopted for TK-E1, E3, E5, and the G-E2/E4 centrifuges:(37,38)

- When the preceding vessels are used for Zirflex processing, the maximum allowable mass of plutonium received from any vessel shall be limited to 500 g
- When used for storage of nitrate solutions:
  - The maximum allowable mass of plutonium in G-E2 and G-E4 shall be 500 g each
  - The maximum allowable plutonium mass in the other vessels of the centrifuge system shall be in accordance with the following:

| Tank | Plutonium (g) |
|---|---|
| TK-E1 | 7,200 |
| TK-E3 | 12,400 |
| TK-E5 | 12,400 |

- The nitric acid concentration shall be greater than 0.5M whenever the plutonium mass exceeds 500 g

- Prior to the introduction of solutions containing greater than 500 g of plutonium to any tank included in the tabulation above, the steam supply lines to the following jet transfer systems shall be nuclear blanked: TK-E3 to G-E2 and TK-E3 to G-E4.

- When used for purposes other than defined above without specific, prior approval by the Manager, Criticality Engineering and Analysis, the mass of plutonium in each of the above vessels shall be less than 500 g.

The criticality prevention limits are verified by sampling and analyzing the contents of all tanks.

7.5.2.3 Canyon Sumps and Miscellaneous Wastes. The sources of these wastes are shown in Figure 7-10. The most significant volume is from the sump jet out header.

7.5.2.3.1 System Description. The piping drains all of the waste into TK-F18, a 18,900-L tank equipped with cooling coils, agitator, and liquid-level specific gravity and temperature instrumentation.

7.5.2.3.2 Operating Procedures. The batchwise operation begins with accumulation of an inventory and measurement of product, pH, $^{137}Cs$ content, etc. The contents of the waste receiver tank (TK-F18) are maintained acidic during the accumulation period to minimize the potential for accidental precipitation of plutonium, which could result from the introduction of sump solutions of unknown composition. The contents are sampled after each addition of sump solution or concentrated ammonia scrubber waste, which is handled as a separate waste batch. When a waste batch is accumulated, the contents are analyzed for plutonium, $^{137}Cs$, $H^+$, and/or pH, following which the contents are either made basic and sent to underground storage or jetted to the waste rework tank (TK-F8) (see Section 7.5.2.7), depending on the amount of plutonium in the liquid and the waste source. "Light water" used in the fire prevention system has been shown to be detrimental to the PUREX process because it causes excessive foaming during concentration. The light water collected in TK-F18 as a result of testing the fire prevention system is made basic and sent to underground storage where adequate dilution is provided to minimize problems during further processing. Because it is possible for plutonium to accumulate in TK-F18, the following two criticality prevention limits have been established:(37,38)

- For acidic solutions, the maximum allowable amount of plutonium is 12,400 g

- In solution neutralized for disposal, the plutonium mass is limited to less than 500 g.



9413219.0795

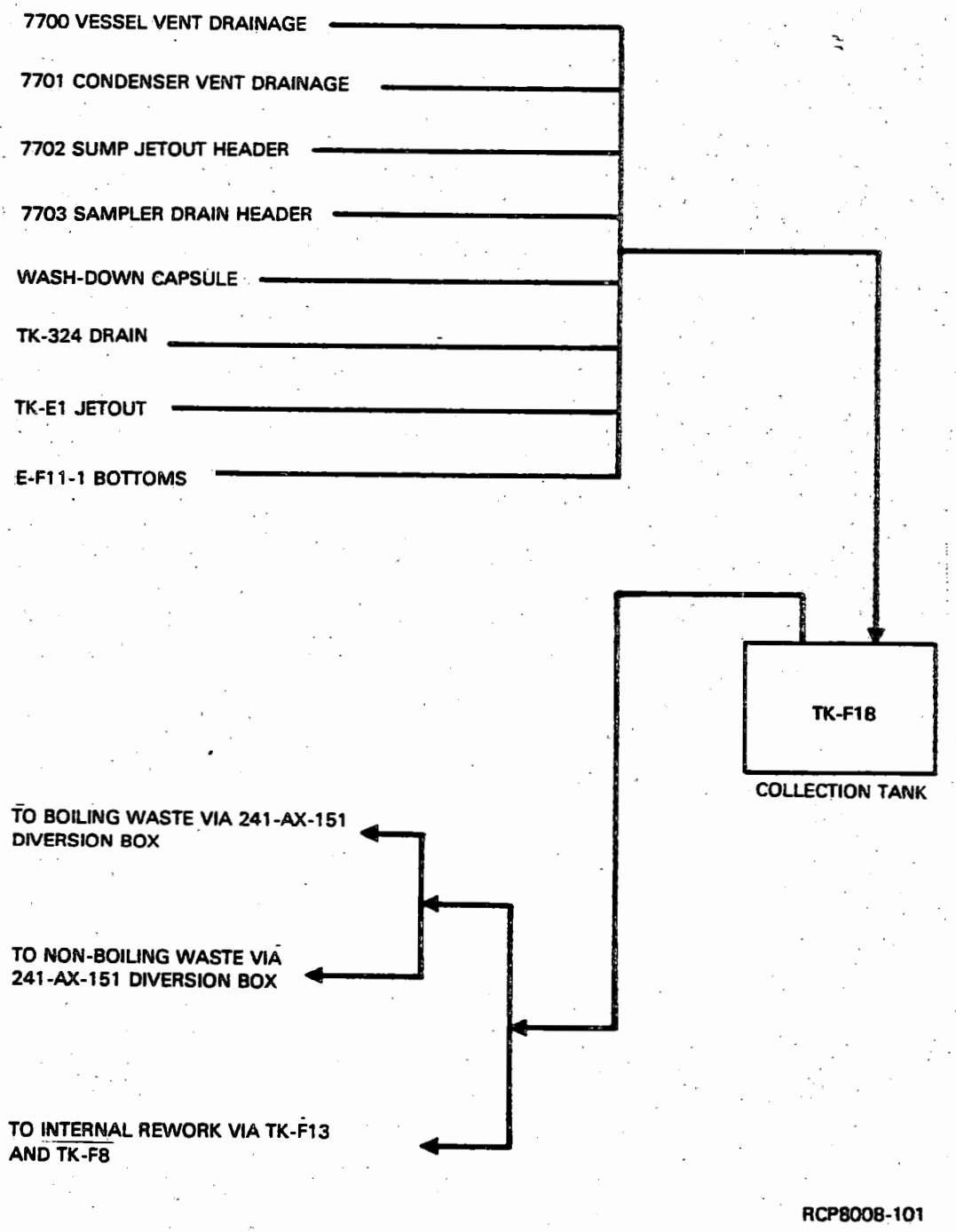


FIGURE 7-10. Canyon Sumps and Miscellaneous Liquid Wastes.

9413219.0796

7.5.2.4 Miscellaneous Service Facilities Waste. The sources of these wastes are shown in Figure 7-11. The waste from the stack is from the periodic wash down of the stack.

7.5.2.4.1 System Description. Liquid wastes from the 291 area (stack condensate, main filter drainage, cooler water, sump accumulations from the 293-A building, etc.) are collected in 216-A TK-2 and routinely jetted to TK-U3 for disposal to underground storage tanks. Miscellaneous laboratory wastes and 206-A sump wastes are also routed to either TK-U3 or TK-U4 for disposal. Tanks TK-U3 and TK-U4 are 31,225-L, cylindrical tanks, 10 ft in diameter, and 14 ft high (drawing H-2-54171). The 216-A TK-2 is a 9,500-L, cylindrical tank, 8 ft in diameter and 7 ft high.

7.5.2.4.2 Operating Procedures. When a batch is accumulated in TK-U3 or -U4, the waste is diverted to the empty tank and the batch is sampled for uranium, plutonium, $H^+$, and/or pH analysis. The contents are either made basic and sent to underground storage or jetted to the waste rework tank (TK-F8), depending on the amount of plutonium in the liquid and the waste source. Because it is possible for plutonium to accumulate in TK-U3 and -U4, a criticality prevention limit of no more than 500 g in each tank has been established.

7.5.2.5 Organic Wash Waste. The organic wash waste system is shown in Figure 7-12. Periodically, the aqueous alkaline-permanganate wash solution in TK-G1 or -R1 of solvent treatment systems 1 and 2 must be changed out because of reduced pH, accumulated FP, accumulated plutonium and uranium, and the presence of organic impurities which reduce the effectiveness of the wash solution. In G cell, about three-fourths of the depleted scrub solution is then jetted to TK-G8, where it is batch transferred to the tank farm for processing in the 242-A evaporator. In R cell, about three-fourths of the aqueous wash in TK-R1 is then jetted to TK-G1 to be reused as a wash in solvent system 1, or can be jetted to TK-R8 for disposal to the tank farm. Vessels TK-G8 and -R8 are standard, PUREX Plant, 18,900-L tanks (drawing H-2-52521).

When a batch of organic wash waste is accumulated in either TK-G8 or -R8, it is sampled and analyzed for plutonium content, $H^+$, and/or pH analysis. On occasion, it may be necessary to neutralize the batch with caustic to assure pH greater than 9.0 prior to transfer. Accountability records are kept on volumes and product quantities transferred to underground storage.

A small inventory of solvent in either tank is normal and results from solvent entrainment in solutions transferred into the waste receiver tank. Waste transfers to underground storage are automatically cut off by a low specific-gravity electrical interlock when the solution specific gravity above the transfer jet suction is less than the value of water, so that the tanks are never jetted dry.

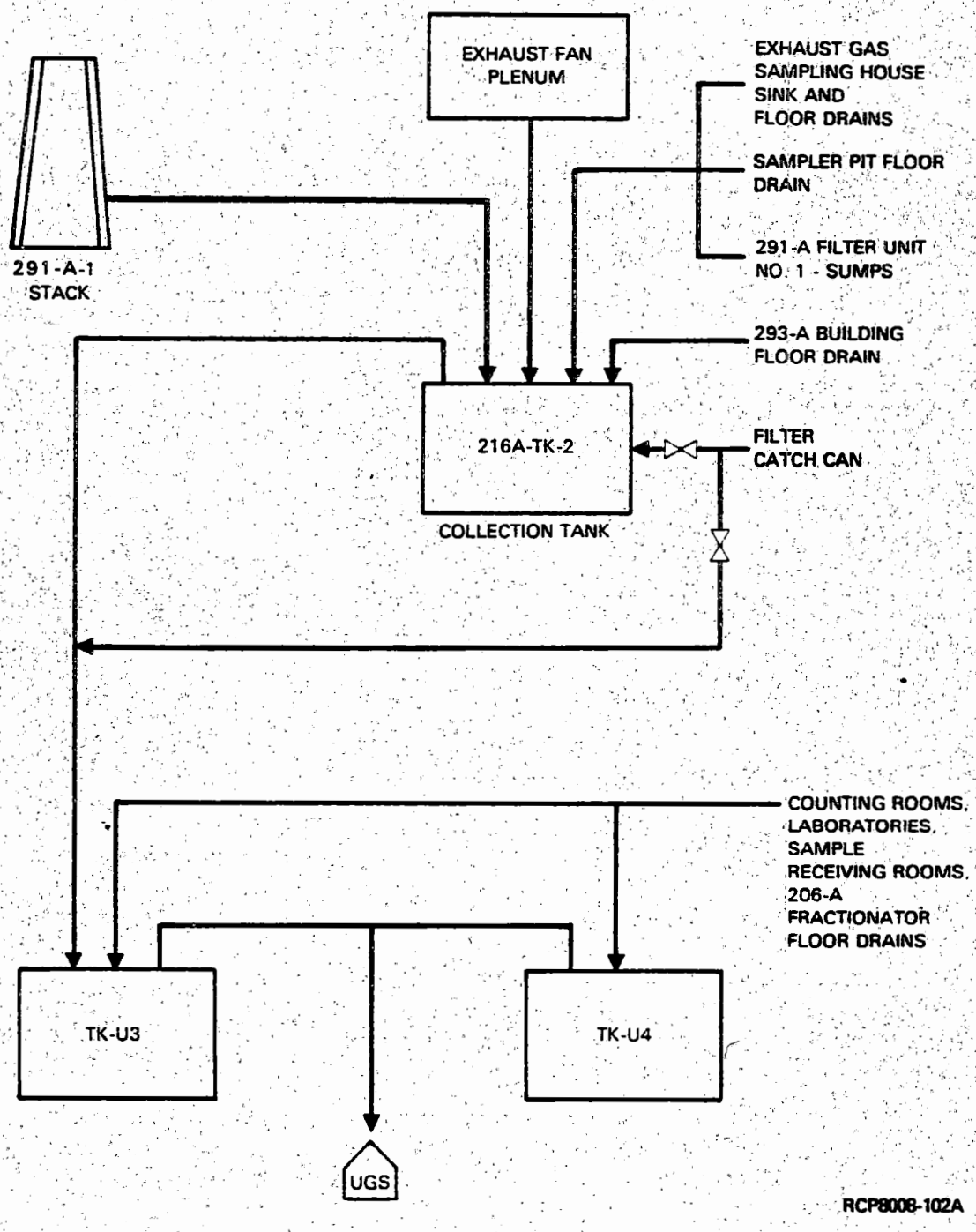


FIGURE 7-11. Service Facilities Waste.

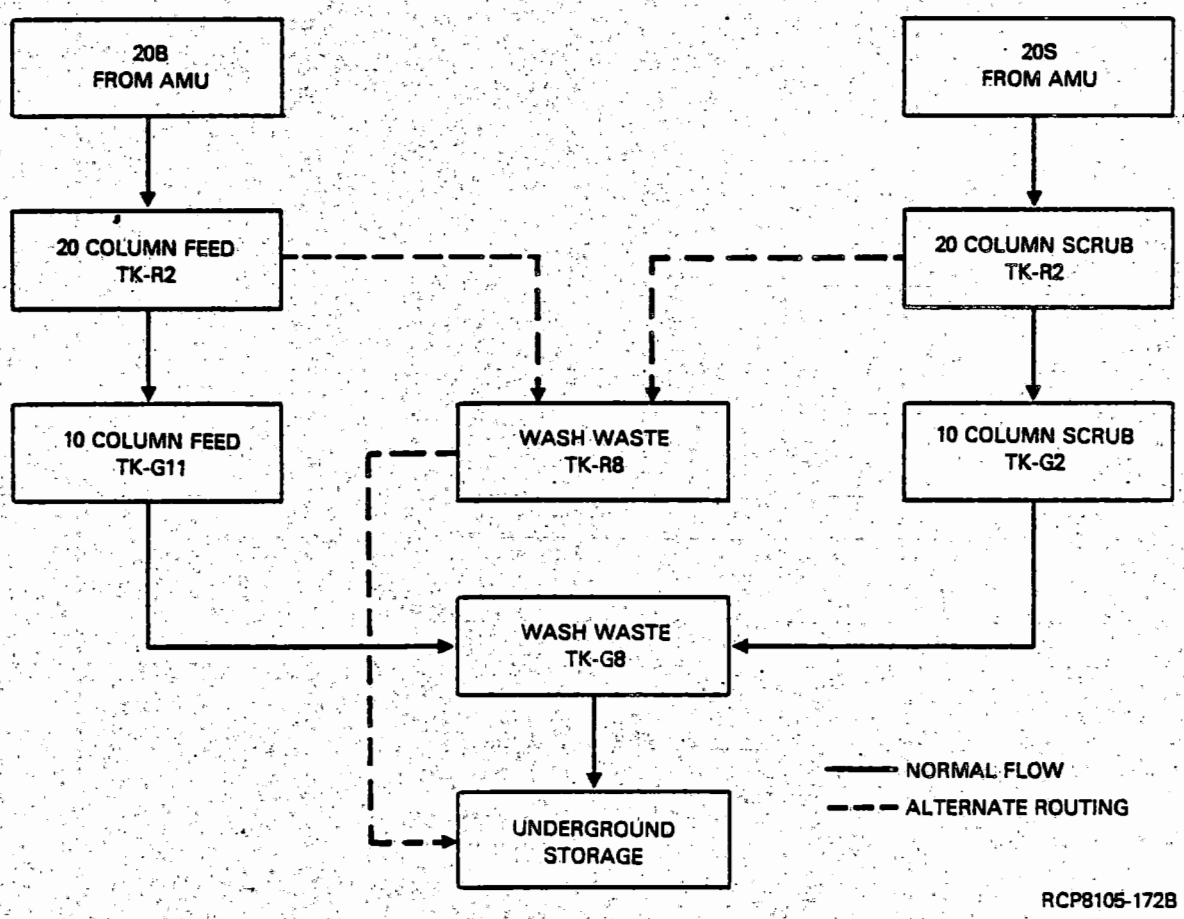


FIGURE 7-12. Organic Wash Waste.

Because it is possible for plutonium to accumulate in TK-G8 and -R8, the following criticality prevention limits have been established:(37,38)

- The plutonium mass shall be limited to 500 g in each tank
- For solutions which are to be sent to underground storage, the plutonium concentration shall be limited to less than 0.013 g/L.

7.5.2.6 Ammonia Scrubber Waste. The ASW concentration system evaporates waste from the three dissolver ammonia scrubbers and the E cell scrubber. Average stream compositions for this system based on a processing rate of 10 t of 0.947% $^{235}U$-enriched uranium per day are listed in Table 7-23. The system consists of three tanks and the offgas system already described in Section 7.4.3. The three tanks are the concentrator feed tank (TK-F12, standard, PUREX Plant, 18,900-L tank, drawing H-2-52521), the concentrator (E-F11-1, drawings H-2-64663, H-2-66047, H-2-58100, H-2-58755, and H-2-64705), and the waste transfer tank (TK-F18, standard, PUREX, 18,900-L tank, drawing H-2-52521). The three tanks, as well as the offgas system, are shown in Figure 7-13. The ammonia condensate stream (ASD), which originates from the condenser (E-F11-2), is discussed in Section 7.5.3.3.

Although the concentrator and condenser can be operated continuously at boil-off rates of about 200 L/min, the processing rates vary throughout the dissolver and the decladding waste treatment cycles.

The radioactivity of the condensate is monitored and allowed to increase to a predetermined level before shutdown, cooling, and jetting the bottoms to the waste transfer tank. The $^{90}Sr$ concentration in the condensate is the criterion for dumping the concentrator.

The condenser is operated to liquify the vapor and sub-cool the condensate. A portion of the condensate is routed through spray nozzles back to the condenser to scrub residual ammonia from the vapor stream. Up to 57 L/min of the condensate can be recirculated this way. Because of its affinity for cold water, nearly all of the ammonia is absorbed in the subcooled condensate. Because it is possible for plutonium to accumulate in TK-F12 and in the E-F11-1 concentrator, criticality limits have been established.(38) Compliance with the limits are verified by sampling and analyzing the contents of TK-F12 and concentrator E-F11-1.

7.5.2.7 Waste Handling Rework. Plutonium or uranium waste solutions which are generated in solvent extraction processing and which require rework for recovery of product materials must undergo extensive pretreatment before return to the process. The waste rework tank (TK-F8) and condenser (E-F9), shown in Figure 7-14, are used to hydrolyze organics in the waste by boiling the material in reflux for about 3 wk. Dilute waste may also be concentrated in this tank in preparation for product recovery. During concentration, the E-F9 condensate is routed to the 1WF tank, TK-F7. After processing, the liquid is introduced in small quantities to the PUREX Plant solvent extraction feed tanks.

TABLE 7-23. Ammonia Scrubber water and Ventilation System Steam Condensate Concentration and Disposal Streams.(25)

| Stream | Composition | Function | Volume or flow[a] |
|---|---|---|---|
| Decladding condensate and spent $NH_3$ scrub water from dissolver cells | $NH_4OH$ - 0.58M<br>$^{106}Ru$-Rh - $1.5 \times 10^4$ Ci/L | Feed to concentrator | 67,000 L |
| Metathesis spent ammonia scrub water | $NH_4OH$ - Trace | Feed to concentrator | 10,200 L |
| E cell spent $NH_3$ scrub water | $NH_4OH$ - 0.41M<br>$^{106}Ru$-Rh - 250 Ci/L | Feed to concentrator | 70,800 L |
| PUREX vessel and condenser vent jet steam condensate | $H_2O$<br>$HNO_3$ - Trace | Feed to concentrator | 81,700 L |
| NaOH add | NaOH - 19M | Prevent formation of $NH_4NO_3$ from reaction of $NH_4OH$ with trace quantities of $HNO_3$ in jet condensates | 4.2 L |
| ASD condensate | $NH_4OH$ - 0.3M<br>$^{106}Ru$-Rh[b] - 0.064 Ci/L | Route condensate with most of $NH_3$ to 216-A-36-B underground disposal trench or crib | 230,000 L |
| Condenser offgas | $NH_3$ - 1%<br>$H_2O$ - 4%<br>Air - 95% | Route offgas to $NH_3$ stack | 130 $ft^3$/min at 35°C |
| ASW | $^{106}Ru$-Rh - 61 Ci/d | Route concentrated waste to underground storage tank | 6,800 L batch as required |

[a]For processing of 10 t per day of 0.947% $U^{235}$-enriched Mark IV U fuel from N Reactor.

[b]$^{106}Ru$-Rh value based on processing 180-d cooled fuel. Value is 1.9 Ci/L for 5-yr cooled fuel.

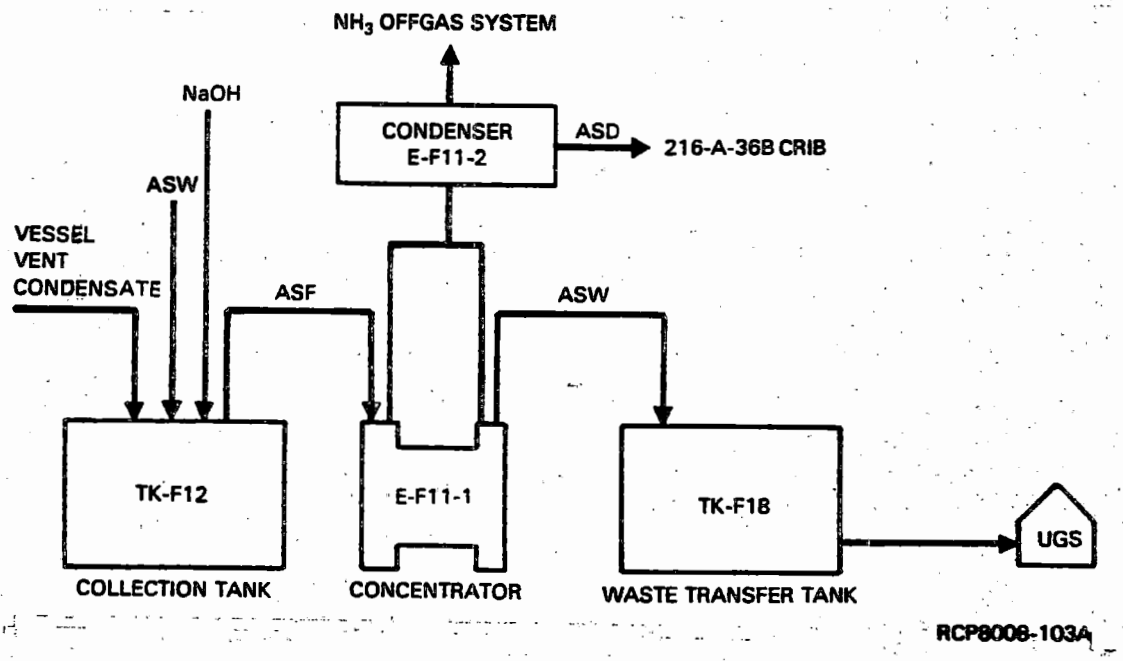


FIGURE 7-13. Ammonia Scrubber Waste Treatment (see Fig. 7-4).

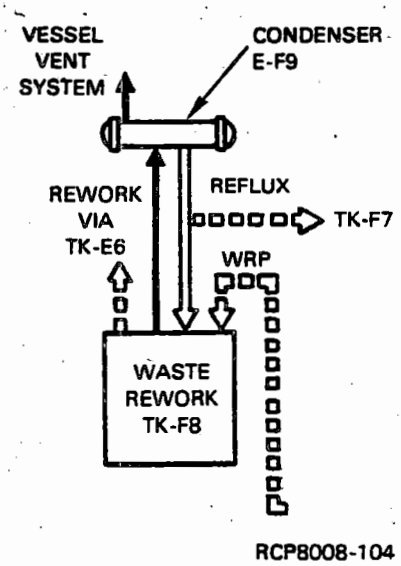


FIGURE 7-14. Waste Rework System.

Organic that accumulates in various feed and storage tanks, such as TK-F10 in the backcycle waste system, is decanted and routed to TK-F13 for recovery. The organic recovery is accomplished by first removing any product with a 3% nitric acid strip solution, which is intimately mixed with the organic, then settled, sampled for product analyses, and routed to either TK-F10 in the backcycle waste system or to TK-G8 for disposal, depending on product content. The organic is then washed in TK-F13 with sodium carbonate-potassium permanganate solution. The washed organic is decanted to TK-G1 for reprocessing, and the aqueous waste is jetted to the wash waste tank (TK G-8).

7.5.2.7.1 Waste Rework Operating Procedures. The following is a general outline of the TK-F8 rework operation.

1. Prior to rework through TK-F8, the material is sampled and analyzed for uranium, plutonium, neptunium, and nitric acid.

2. The E-F9 condensate is routed for total reflux, and the waste is transferred from TK-F18 or -F13 to -F8 without agitation to avoid transferring organic.

3. The nitric acid concentration of the waste is adjusted to 2M.

4. Water to the TK-F8 coil is turned off, and steam is introduced to heat the waste to boiling.

5. To hydrolyze organic degradation products, the E-F9 condenser is left in the reflux mode during boiling, and the waste is refluxed for a period of about 3 wk.

6. If the waste is to be concentrated, the TK-F8 condensed overheads are routed from F9 to F7.

7. Liquid concentration is terminated at the desired specific gravity.

8. The tank contents are cooled at the end of the concentration or reflux by slowly turning the steam off and adding cooling water to the coil; the agitator is turned on to assist cooling.

7.5.2.7.2 Waste Rework Process Safety and Criticality Prevention. The TK-F8 solution must be maintained at a temperature less than 134°C to prevent the formation of red oil. For criticality prevention, the specific gravity of the rework solution must be maintained at less than 1.30 at 110°C to prevent the formation of precipitates.

The temperature of the organic recovery tank (TK-F13) is maintained below 65°C, while solvent is present to decrease the potential for an organic fire or explosion.

9413219.0803

In TK-F8 and F13, the maximum allowable plutonium mass in acid solution is 12,400 g, unless a caustic carbonate-permanganate wash for organic recovery is to be carried out. Since this wash may precipitate fissionable material, this step is undertaken only if the mass of plutonium in TK-F13 is known to be less than 500 g.[37,38]

7.5.2.8 Plutonium Oxide Production Facility. All liquid waste resulting from the processing of plutonium nitrate into plutonium oxide is recycled back to the PUREX process.

The acidic filtrate from the vacuum drum filter is added to boiling 8M $HNO_3$ in the filtrate concentrator to decompose oxalate ion. The filtrate itself is also concentrated in the process. The concentrate overflows to the TK-N15 or -N16 holding tanks. The collected filtrate is heated in the holding tank for several hours to ensure complete decomposition of the oxalic acid. The treated filtrate is then batch transferred to TK-E6 in the metal dissolution and feed preparation system.

Condensates from the offgas scrubber are collected in receiver tanks and transferred to TK-F10, which is the feed tank to the backcycle waste system.

Cooling of vessels and equipment is accomplished by a primary, closed loop, cooling system. The primary coolant is 1.2M $HNO_3$. The primary coolant transfers heat through a heat exchanger to a secondary cooling water system. The primary coolant is sampled periodically to make sure that it is not contaminated. If contaminated, the acidified primary coolant is cycled back to the PUREX process. Cooling water from the secondary system is discharged to the cooling water system (see Section 7.5.3.5). The DP between shell and tube in the heat exchangers are controlled on the secondary cooling water system so that, in case of a heat exchanger failure, leakage is toward the process.

All vessels and equipment within the gloveboxes are designed to be geometrically favorable (wet or dry) by individual dimensions and spacing between other vessels and equipment, except the vessel vent and vacuum vent system filters. Hydraulic drain systems, system capacity, and liquid detection instrumentation are provided to ensure no liquid will reach these filters. The filters are geometrically favorable for plutonium oxide powder loading.

All wet gloveboxes are provided with overflow piping to the L cell floor. The L cell floor is not geometrically safe for criticality prevention. Accumulation of water at this location is minimized by administrative control of the depth of liquid in SLL sump (removal by vacuum jet).

### 7.5.3 Very-Low-Activity Aqueous Waste

Although actually classified as low-level wastes, the activity of several aqueous waste streams is normally below Table II guidelines.[3] The amounts of these wastes are summarized in Table 7-19. Because of the large volume of liquid and its low activity, these wastes are not normally treated, but discharged directly into cribs or ponds in the vicinity of the 202-A building (see Fig. 1-3). All of these liquid waste streams are representatively sampled to accurately determine environmental discharge and monitored for stream radioactivity to quickly identify and correct any abnormality that may occur or initiate stream diversion to the 216-A-42 retention basin or initiate stream shutdown.

Typically, a crib consists of a perforated pipe laid at a slight slope on a bed of coarse rock covered with layers of gravel and sand. This bed is covered with paper or plastic sheeting to prevent silt from seeping into and plugging the gravel bed. The upper portion of the crib is backfilled to grade with dirt. The distributor pipe is vented to the surface through a riser pipe in the end of the distributor. Liquid waste entering the distributor pipe leaks out through the perforations and disperses throughout the porous bed. A percolation rate of 200 gal/day/ft$^2$ of crib is estimated for this disposal method.

In the event radioactivity is detected in the normally uncontaminated streams, they will be automatically diverted to the 216-A-42 retention basin or they will be shut down. This basin originally had a 36-mil reinforced Hypalon liner; however, the liner was damaged by exposure to the sun and cleanup operations conducted to remove sand, tumbleweeds, and other blown-in materials. As a result, the 216-A-42 retention basin will be lined with concrete prior to plant startup. The basin is approximately 410 ft long and divided into three sections by two 6-ft-high weirs that run across the basin. The basin is 30 ft wide at the bottom and about 72 ft wide at the discharge. The sides are sloped at an angle of 26.56° (rise to run ratio if 0.5). The depth of the basin to the discharge pipe varies from 11 to 12 ft. The capacity of the basin is approximately $5.7 \times 10^6$ L.

7.5.3.1 Process Condensate. Process condensate from the final uranium cycle (and occasionally from concentrators E-J8-1 and E-H4-1) is sampled, monitored for radioactivity (alarm sounds if preset limits are exceeded), and discharged through an 8-in.-diameter, stainless steel pipe in the 216-A-10 crib located south of the west end of the 202-A building. Details of the sampling and monitoring system are presented in Section 8.6.1.2.1. The distributor pipe, which is 222 ft long, is buried 30 ft below grade. The crib runs north and south and is V-shaped in cross section.

The equipment used to monitor the stream includes a magnetic flow meter with a flow integrator-totalizer, proportional sampler, and gamma monitor with alarm and verification sampler. An alarm sounds in the dispatcher's office if the radionuclide concentration of the process condensate exceeds the Table II guide of $2 \times 10^{-5}$ µCi/mL for soluble $^{137}Cs$.[3]

The process condensate stream is not equipped with automatic diversion. During alarm conditions, this stream will be shut down to effectively control any release to the 216-A-10 crib.

Three condensate streams (AAD, 3WD, and 1UD) which previously discharged directly to the 216-A-10 crib are now scheduled to be recycled. The AAD stream is recycled at startup. The 3WD stream and the 1UD stream are to be recycled as soon as equilibrium is attained and as soon as it is practical in accordance with the process test plan.(4) When these changes are fully implemented the quantity of radionuclides released in the process condensate are, except for tritium, reduced by about a factor of 100. The 2UD stream, with a flow rate of 7.6 to 11.4 million L/yr, contains up to 19,000 Ci of tritium, but less than 0.5 Ci of combined FP and TRU radionuclides. Except for the tritium concentration, the radionuclide content of the 2UD stream meets Table II guidelines.(3) The radionuclide (except tritium) content of the 1UD stream, which is discharged continuously until initiation of recycle and later (assuming successful demonstration) for periods of 8 to 16 h during startups and shutdowns, also meets Table II values when averaged over a consecutive 12-mo period.(13) The total volume and radionuclide content of the 1UD stream are about 5% to 10% those of the 2UD.

7.5.3.2 Steam Condensate. The steam condensate stream consists of condensate from concentrator tube bundles, cooling water from vessel coils, (TK-A3, -B3, -C3, -E1, -E6, -F8, -F15, -F16, -H1, and -J5) and the slug storage basin overflow and jetout. The steam condensate stream from PUREX Plant is routed through a catch tank before final disposal to the 216-A-30 crib. The steam condensate stream is monitored and sampled for radioactivity. Details of the sampling, monitoring and flow totalizing systems are contained in Section 8.6.1.2.5.

The in-line monitoring system monitors the stream for gamma and alpha radionuclide concentrations ($^{137}Cs$ and $^{239}Pu$, respectively). If concentrations exceed the discharge limits (Section 7.1.2.1), an alarm is sounded in the dispatcher's office, a verification sample is collected, and the stream is automatically diverted to the 216-A-42 retention basin.

A crib (216-A-30) for disposal of steam condensate is located about 0.25 mi east of the 202-A building. The crib contains two distributor pipes arranged so that either or both ends of the crib can be used. One pipe made of 15-in.-diameter, perforated, corrugated, galvanized steel extends for 700 ft along the center of the crib. Another 16-in. steel pipe parallels the first pipe for 700 ft, then angles across to the center line of the crib and extends another 700 ft down the center of the crib.

For the final 700 ft, this pipe is made of corrugated, 15-in.-diameter steel, and is perforated for water drainage. Because of the uneven surface of the crib, the pipes are buried beneath about 4 to 18 ft of fill.

There is residual contamination in the 8824 header from previous tube bundle or cooling coil leaks; however, the most contaminated portion of the header is bypassed and data obtained during 1979 operability tests indicate Table II guidelines will be met.(3)

7.5.3.3 Ammonia Waste Condensate. The ASD comes from the E-F11 condenser and the condensate is discharged to the 216-A-36B crib. The ASD stream is equipped with a flow proportional sampler, inline radiation monitor, and flow measuring/totalizer (Fig. 7-15).

The condensate is lower in radionuclide content by a factor of $10^3$ for plutonium and up to $10^4$ for specific FP than the untreated ammonia scrubber wastes formerly routed to the 216-A-36B crib. The ASD volume ranges from 15.1 to 22.7 million liters annually, and contains less than 300 Ci of tritium and less than 5 Ci of combined FP and transuranic nuclides. Radionuclide (except $^3H$) concentrations in this stream are expected to be below Table II values when averaged over any consecutive 12-mo period.(3)

If the radioactive concentration exceeds the Table II guidelines for $^{137}Cs$, an alarm is activated in the dispatcher's office and a verification sample is taken automatically for laboratory analysis.(3) The ASD stream is not equipped with automatic diversion. During alarm conditions, the ASD stream is shut down to effectively control any release to the 216-A-36B crib.

7.5.3.4 203-A Waste. A tank, TK-P5, is installed to collect sump waste, P tank heating coil condensate, overflow from TK-15 ($UO_3$ Plant recovered acid storage), cooling water, and steam condensate from TK-P6 via separate headers. The collection tank inlet and outlet valves are closed when TK-P5 is filled. The waste is sampled and routed to chemical sewer waste stream or returned for rework, depending upon analytical results.

7.5.3.5 Cooling Water. The cooling water stream is equipped with proportional sampler, in-line radioactivity monitor and flow measurement/totalizer. Details of the sampling, monitors, and flow totalizing system are contained in Section 8.6.1.2.4.

Cooling water discharged from concentrator condensers, low-risk vessel cooling coils, and DOG condenser tube bundles is collected in header 8823. This header, located on the south side of the PUREX building, drains to the 201 pump pit where stream sampling and monitoring for radionuclide content are performed. The pit also contains a weir with an integrator-totalizer for flow measurement. The cooling water flows from the 201 pump pit through a diversion box with capability for automatic emergency diversion to a retention basin (216-A-42), which has a capacity of $5.7 \times 10^6$ L. The stream then flows to a second diversion box where flow can be directed either to ponds 216-A-25 or 216-B-3.

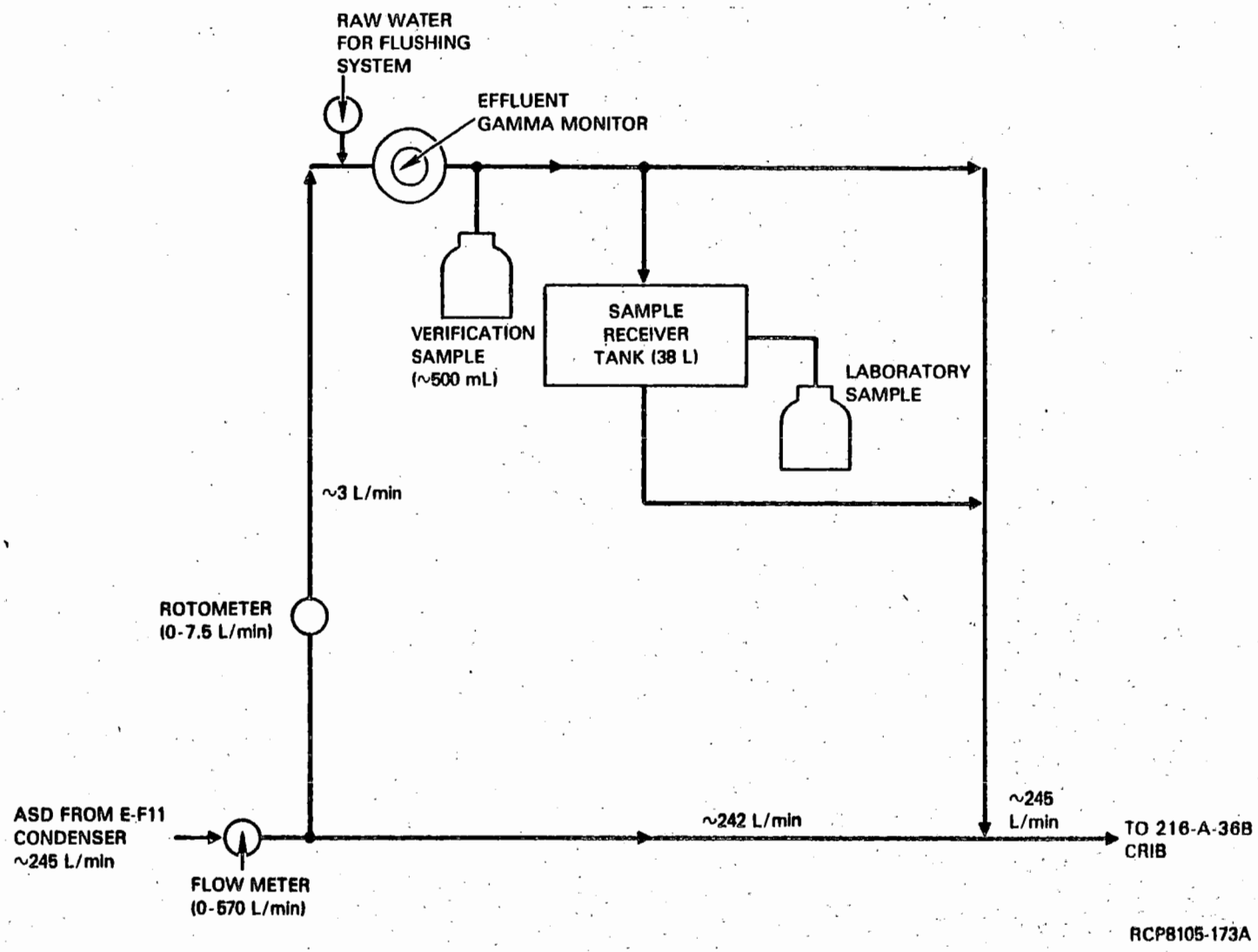


FIGURE 7-15. Ammonia Scrubber Discharge Sampling, Monitoring, and Flow Totalizing System.

The in-line monitor continuously monitors the stream for gamma radionuclide concentration ($^{137}Cs$). If the concentration exceeds the discharge limit (Section 7.1.2.1), an alarm is sounded in the dispatcher's office, a verification sample is collected, and the stream is automatically diverted to the 216-A-42 retention basin.

The radionuclide content of this stream routinely meets Table II guidelines.(3) However, if diversion of the stream to 216-A-42 is necessary, a process shutdown is initiated immediately as the retention basin is filled in 3 to 4 h at normal process flow rates. The liquid in the retention basin is sampled, analyzed, and then pumped to the pond or back into the 202-A building for evaporation as dictated by the radionuclide concentration.

7.5.3.6 Chemical Sewer. The chemical sewer system collects aqueous makeup waste, noncontaminated floor drains and vessel coil waste, overflow from TK-U8, water demineralizer regeneration wastes, and vacuum fractionator and nonprocess steam condensate. These streams are collected in header 8819, located on the north side of the PUREX building, and normally drain to the 216-B-3 pond via the 216-A-29 ditch. The radionuclide content of this stream routinely meets Table II guidelines.(3) The stream is sampled using a proportional sampler and continuously monitored to determine if the concentration of $^{137}Cs$ exceeds the discharge limits of Section 7.1.2.1. If this level is exceeded, the stream is automatically diverted to the 216-A-42 retention basin. From the basin the flow will be processed through the recycle system. An alarm is also set off in the dispatcher's office when the concentration limits are exceeded. A sample is automatically taken to verify the activity level. Details of the sampling, monitoring, and flow totalizing system are contained in Section 8.6.1.2.3.

## 7.6 LIQUID WASTE SOLIDIFICATION

Liquid waste is not solidified at the PUREX Plant. As mentioned in Section 7.5, the liquid waste that contains 99% of the FP is made alkaline with sodium hydroxide and routed to tanks for storage. This storage method is considered temporary. A final disposition method that involves solidification and underground storage is currently being developed.

## 7.7 SOLID WASTES

Solid wastes generated at the PUREX Plant can be classified into three categories: nonradioactive wastes, non-TRU, and TRU wastes, which includes large, canyon solid waste items.

Solid, nonradioactive wastes are waste material, equipment, or property which do not exceed surface contamination limits and soil standard limits.(14,15)

Solid, low-level wastes have greater than 200 disintegrations/min beta-gamma contamination per 15.5 in.$^2$ and less than 20,000 disintegrations/ min alpha per 15.5 in.$^2$. Solid, low-level wastes consist primarily of failed or unusable tools, cleaning rags, plastics, and laboratory equipment contaminated above control limits.(14)

Solid, TRU wastes contain, or are suspected to contain, greater than 10 nCi of TRU nuclides per gram of waste (nominally 20,000 disintegrations min per 15.5 in.$^2$). The TRU radionuclides are alpha-emitting nuclides with a half-life greater than 100 yr (also including $^{233}U$ and daughter products).

### 7.7.1 Design Objectives(15)

All solid waste originating from PUREX will be packaged for onsite storage/disposal.

Nonradioactive waste is packaged for nonretrievable, long-term disposal in the Hanford Site central sanitary landfill.

Solid, low-level, radioactive waste will be packaged in an approved disposal container for nonretrievable, long-term disposal in designated areas.

Solid, TRU wastes are packaged in drums and placed in 20-yr retrievable storage areas in the 200 West Area.

Failed process equipment that is too large, too bulky, and too radioactive to be removed from the plant will be placed on railroad flatcars and moved into the PUREX equipment burial tunnel for storage.

Large waste items which can be removed from the plant will be placed in approved storage/disposal containers and shipped to the 200 Areas burial ground. Smaller process equipment items or other highly radioactive, solid, canyon wastes are collected in a large, carbon steel container. When full, the container is placed in a concrete container with a lid and buried in a 200 Areas burial ground.

### 7.7.2 Equipment and System Description

Solid, nonradioactive wastes are collected in trash cans, plastic bags, cardboard boxes, etc., which are emptied into dumpsters. The waste is compacted to about one-third the original volume by the trash truck which delivers the waste to the central landfill.

Solid, low-level radioactive wastes of small bulk are collected and placed in fiberboard boxes or drums before burial. Fiberboard boxes are restricted to a maximum gross weight of 29 kg of dry waste. Drums (55 gal) are used for packaging, shipment, and burial of solid, low-level waste. Two types of drums are used which meet the requirements of the U.S. Department of Transportation.(39,40) Drums will be labeled in accordance with Rockwell requirements.(15)

The TRU waste of small bulk and relatively low levels of activity are packaged in 55-gal drums. The TRU wastes are segregated by waste classification and shipped to a TRU storage facility.(15) The following is a list of these facilities:

- TRU caisson
- TRU asphalt pad and dry waste trench
- TRU industrial and special waste trench.

All shipments of TRU waste in drums will be appropriately labeled.(20)

Large, radioactive waste items from the canyon are packaged in burial boxes of precast, reinforced, concrete slabs with a concrete slab lid held in place by its own weight. A steel liner box may be inserted, depending on the nature of the waste to be packaged. Box configurations vary, depending on the waste being packaged, but the most commonly used size has a void volume of about 50 $m^3$.

Failed equipment to be discarded is thoroughly flushed to remove fissile material. The piece of process equipment is determined to be essentially free of plutonium (less than 15 g) by successive flush-sample analyses.

### 7.7.3 Operating Procedures

7.7.3.1 Monitoring of Solid Waste. Solid waste effluents (excluding those that are highly radioactive and that are handled remotely) are monitored with beta-gamma and alpha instruments to determine radiation levels. The plutonium content of TRU drums is determined prior to shipment. The nondestructive assay system is described in Section 8.6.1.3.

7.7.3.2 Solid Waste Disposal Process Safety and Criticality Prevention. The safety precautions listed below are observed when handling radioactive solid wastes:(15)

- Only the waste type specified is placed into a particular container
- Materials soaked with acid or oxidizing agent are thoroughly rinsed several times, wrung dry, and placed in a plastic bag, which is closed with tape prior to disposal

- Incompatible materials (oxidizing and reducing agents) are not placed in the same containers
- Each container is lined with plastic to protect against corrosive wastes
- No free liquids or sorbed organic liquids are allowed in solid waste containers. Sufficient absorbent is placed within the container to absorb spillage of residual, free liquid
- Items with contamination which could easily become airborne are contained within a package before being placed in a waste container
- Operators wear a full-face mask while compacting radioactive waste
- Waste drums are limited to a 500-mrem/h (non-TRU) and a 200-mrem/h (TRU) dose rate at contact
- Waste containers are stored away from heat sources
- Portable fire extinguishers or installed sprinkling systems are available in waste carton storage and loading areas.

The following criticality prevention specifications apply to TRU waste containers:[37,38]

- Miscellaneous Scrap Wastes
  - No waste containers containing greater than 200 g of plutonium shall be transported to the 20-yr retrievable storage sites.[15]
  - Wastes which contain only small quantities of plutonium (such as wiping rags used for decontamination, rubber gloves, and nonabsorbent materials) shall be handled, stored, and transported in a container limited as follows:

| Container | Mass limit | Array limit L x W x H |
|---|---|---|
| 30-gal drum | 100 g | ∞ x ∞ x 3 |
| | 250 g | ∞ x ∞ x 1 |
| 55-gal drum | 200 g | ∞ x ∞ x 2 |
| | 250 g | ∞ x ∞ x 1 |

Normally TRU waste is sent to the 20-yr retrievable storage sites, using only 55-gal drums with a 200-g limit are used.

- Miscellaneous Failed Equipment (Burial Boxes)

  - Any hydrogenous material (other than the hydrogenous material used in the construction of the equipment) shall be physically segregated from the equipment pieces and shall contain less than 15 g of fissile material.

  - Only those materials known to contain less than 15 g of plutonium shall be added to burial boxes that contain failed tube bundles which may contain plutonium.

  - The total plutonium content of a burial box shall be less than 1,000 g per box with individual equipment less than 350 g.(15)

- Burial Tunnel

  - The total plutonium content of equipment placed on a railcar to enter the burial tunnel shall be restricted to 1,000 g, the same limit imposed upon a burial box.

7.7.3.3 Administrative Procedures. The specifications for handling and packing of solid waste are contained in Reference 15. Two teams, the Packaging and Shipping Team and the Solid Waste Storage Team, provide assistance and guidance on administrative procedures for solid waste. The Rockwell Packaging and Shipping Safety Committee reviews all package applications for storage or disposal of radioactive solid waste. Based on this review, they then make a formal recommendation for approval or disapproval to the Packaging and Shipping approval authority who is also the Director of Research and Engineering.

### 7.7.4 Characteristics, Concentrations, and Volume of Solid Waste

Table 7-24 summarizes sources, quantities, and disposition of solid waste. Tables 7-25 and 7-26 give the current equipment inventories of burial tunnels 1 and 2 respectively. Table 7-27 presents the radioactivity inventory in the two tunnels as of September 30, 1973.(18)

### 7.7.5 Packaging

Because of the high radiation levels, the packaging of failed process equipment from the canyon is done remotely using the canyon cranes. The failed processing equipment is transported from the canyon to the railroad tunnel where it is placed on flatcars or inside precast concrete boxes, depending on the type of disposal. Flatcars are pushed into the burial tunnel by a small, remotely operated locomotive known as the "donkey."

Low-level radioactive waste is packed in approved drums and fiberboard boxes by chemical operators assisted by Radiation Monitors.

TABLE 7-24. PUREX Plant Effluents--Solids.

| Source | Type | Volume ($m^3$) | Total curies |
|---|---|---|---|
| 1972--Operating | | | |
| 202-A building | Industrial | 354 | 30,600 |
| | TRU | 98 | 19.75 |
| | Non-TRU | 51 | 0.35 |
| 202-A laboratory | Industrial | - | - |
| | TRU | 92 | 145.2 |
| | Non-TRU | 47 | 18.2 |
| 1976--Standby | | | |
| 202-A building | Industrial | - | - |
| | TRU | - | - |
| | Non-TRU | 11 | 0.9 |
| 202-A laboratory | Industrial | - | - |
| | TRU | 0.6 | 0.003 |
| | Non-TRU | 4 | - |

TABLE 7-25. Contents of Burial Tunnel 1.

| Storage date | Item |
|---|---|
| June 1960 | HA column and miscellaneous box |
| July 1960 | E-F11 concentrator |
| December 1960 | Miscellaneous jumpers, two tube bundles, and an E4 centrifuge |
| January 1961 | E-H4 concentrator |
| April 1961 | E-F6 concentrator |
| February 1962 | E-F11 concentrator |
| January 1965 | E-F6 concentrator |



9413219.0814

TABLE 7-26. Contents of Burial Tunnel 2.

| Storage date | Item |
|---|---|
| December 12, 1967 | 1-E-F6 concentrator pushed to end of tunnel on flatcar |
| March 26, 1969 | 5-E-F6 concentrator pushed to position 2 on flatcar |
| March 19, 1970 | 6-E-F6 concentrator pushed to position 3 on flatcar |
| December 30, 1970 | L cell package on flatcar; container is shown in drawing H-2-66012 |
| February 26, 1971 | F2 silver reactor, F6 demister, vessel vent line, steel catwalks, and guard rails |
| December 12, 1971 | A3-1 tower, scrubber, vapor line, A3 pot lid |
| December 22, 1971 | A3 dissolver (car was shortened about 9 ft) |
| August 29, 1972 | A1W1 fuel ends in standard liner box and new production reactor fuel-handling equipment used with suspected canisters. High radioactivity from the liner box; estimated 17,500 Ci |
| August 30, 1972 | C3 annular dissolver (car was shortened about 9 ft) |

9413219.0815

TABLE 7-27. PUREX Equipment Storage Tunnels Inventory[a]--September 30, 1973.

| | Tunnel 1 | Tunnel 2 | Total[b] |
|---|---|---|---|
| Volume ($m^3$) | 565 | 565 | 1,130 |
| Total MFP (Ci)[c] | 6,000 | 20,000 | 26,000 |
| $^{90}Sr$ (Ci) | 1,000 | 40 | 1,000 |
| $^{106}Ru$ (Ci) | 1 | 7 | 8 |
| $^{137}Cs$ (Ci) | 1,000 | 40 | 1,000 |
| $^{60}Co$ (Ci) | - | 20,000 | 20,000 |
| $^{239}Pu$ (g) | - | 500 | 500 |

[a]The estimated inventories (or concentrations) of radionuclides are reported to one significant figure to reflect the uncertainty in the data.

[b]Totals do not necessarily equal the sum of individual contributions because of rounding of the data.

[c]Curies shown are decayed to September 30, 1973.

### 7.7.6 Storage Facilities

7.7.6.1 PUREX Burial Tunnels. Burial tunnels 1 and 2 are shown in the plot plan in Figure 5-3. Only tunnel 2 is currently in use. Tunnel 1 was filled to capacity in 1964 and closed at that time.

Burial tunnel 1 is made from 12-in. by 14-in. creosote-treated Douglas Fir timbers placed side by side and is 19 ft wide by 22 ft high. The entire tunnel is covered with mineral roofing, a layer of tar, and 8 ft of dirt fill. Burial tunnel 1 is 350 ft long. An analysis of the structural integrity of the timbers performed in 1980 found the strength of the beams to be within the standards for new wood.(41) A 1973 study conducted by a U.S. Department of the Interior representative concluded that the danger of an explosion in the tunnel does not exist and the possibility of fire is extremely remote.(42) However, an effort was later made to create an inert atmosphere by isolating the tunnel and filling it with carbon dioxide. This effort was unsuccessful due to diffusion of carbon dioxide through the gravel bed. No additional action is judged to be required.

A cross section of burial tunnel 2 is shown in Figure 7-16. The roof is made of 34-ft-diameter, corrugated steel. The overall tunnel height is 25 ft. Cement arches were placed at regular intervals along the tunnel roof to add strength, and the entire tunnel is covered with 8 ft of dirt fill. Burial tunnel 2 is 1,680 ft long.

Both tunnels have water-filled doors that serve as radiation shields. These doors can be drained and raised to allow access to the tunnels. Also, both tunnels slope downward toward the south to prevent flatcars from accidentally rolling out of the tunnels. The maximum capacity of burial tunnels 1 and 2 is 8 and 35 burial cars, respectively.

Burial tunnel 2 is equipped with a ventilation exhaust fan, an exhaust filter, and a vent stack. The air drawn through burial tunnel 2 is exhausted through a single-stage HEPA filter. Exhaust air samples are taken weekly. Analyses of the samples show that Table I guides are met, but that Table II guides for alpha emitters (if all are assumed to be soluble plutonium) are occasionally exceeded at the point of discharge.(3) The duct for burial tunnel 1 is blanked. The door from the railroad tunnel is sealed so that the air in the tunnel is stagnant.

7.7.6.2 Transuranic Storage. Solid TRU waste is generated in the hot shop, L cell, M cell, N cell, PR room, and Q cell. It is collected in 55-gal drums and every attempt is made to separate combustible and noncombustible materials. The drums are stored within the PUREX Plant controlled area while awaiting shipment to retrievable storage.

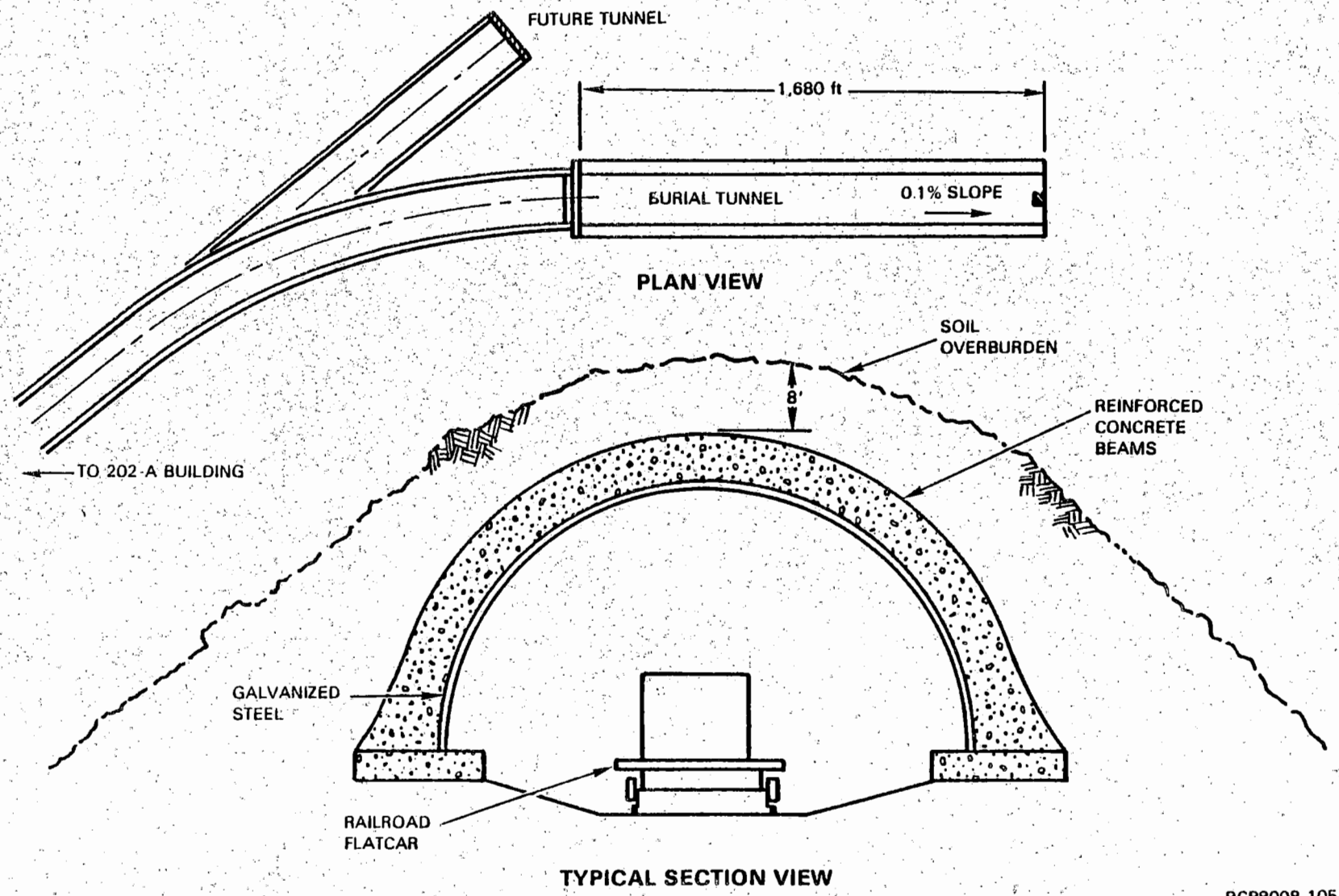


FIGURE 7-16. Burial Tunnel 2 (216-E-15).

## 7.8 REFERENCES

1. DOE-RL, "Radioactive Waste Management," Chapter XI, DOE-RL 5820.2, U.S. Department of Energy - Richland Operations Office, Richland, Washington, (July 1979).

2. DOE, Environmental Protection, Safety and Health Protection, Information Reporting Requirements, DOE Order 5484.1., U.S. Department of Energy, Washington, D.C., (February 1980).

3. DOE, "Requirements for Radiation Protection," Chapter XI, DOE Order 5480.1, U.S. Department of Energy, Washington, D.C., (April 1981).

4. Rockwell, Process Condensate Recycle Test Plan, SD-RE-PTP-008, D. W. Reberger and R. C. Roal, Rockwell Hanford Operations, Richland, Washington (March 16, 1983).

5. DOE-RL, Radioactive Waste Management, DOE-RL Order 5820.2. U.S. Department of Energy - Richland Operations Office, Richland, Washington (July 1979).

6. Federal Clean Air Act, Public Law 95-95 (1974).

7. ERDA, Approval of Application to Construct, PSD-X80-14, U.S. Environmental Protection Agency, Washington, D.C. (1980).

8. Water Pollution Control Act, Public Law 92-500 (October 1972).

9. Federal Water Pollution Control Act Amendment of 1972, Section 402, National Pollutant Discharge Elimination System.

10. CFR, Guidelines for Land Disposal of Solid Wastes, 40 CFR 241, Code of Federal Regulations, Washington, D.C.

11. CFR, Emission Standards for Hazardous Air Pollutants, 40 CFR 61, Code of Federal Regulations, Washington, D.C.

12. CFR, National Ambient Air Quality Standards, 40 CFR 50, Code of Federal Regulations, Washington, D.C.

13. Washington State Water Pollution Control Act, revised Code of Washington 90-48 (1979).

14. Rockwell, Environmental Protection Manual, RHO-MA-139, Rockwell Hanford Operations, Richland, Washington (June 1981).

15. Rockwell, Hanford Radioactive Solid Waste Packaging, Storage and Disposal Requirements, RHO-MA-222, Rockwell Hanford Operations, Richland, Washington (1980).

16. ACGIH, Threshold Limit Values for Chemical Substances, American Conference of Governmental Industrial Hygienists (October 1980).

17. CFR, Standards of Performance for New Stationary Sources, 40 CFR 60, Code of Federal Regulations, Washington, D.C.

18. ERDA, Final Environmental Statement, Waste Management Operations, Hanford Reservation, ERDA-1538, U.S. Energy Research and Development Administration, Washington, D.C. (December 1975).

19. DOE, Operation of PUREX and Uranium Oxide Plant Facilities, Draft Environmental Impact Statement, U.S. Department of Energy - Richland Operations Office, Richland, Washington (May 1982).

20. Rockwell, Hazardous Material Packaging, Shipping, and Transportation Manual, RHO-MA-201, Rockwell Hanford Operations, Richland, Washington (May 1982).

21. DOE-RL, Hazardous Waste Management for Richland Operations, DOE-RL 5480.9, U.S. Department of Energy - Richland Operations Office, Richland, Washington (1982).

22. ANSI, Testing of Nuclear Air Cleaning Systems, American National Standard N510, National Bureau of Standards (1980).

23. Rockwell, Standard for the In-Place Efficiency Testing of Gaseous Effluent HEPA Filter Systems, RHO-CD-125, Rockwell Hanford Operations, Richland, Washington (1977).

24. R. L. Walser to W. Prosk, Internal Letter 65490-84-222, "PUREX FSAR Revision - No. 1 and No. 2 Filter Efficiencies," Rockwell Hanford Operations, Richland, Washington (April 12, 1984).

25. Rockwell, Conceptual Design Report, PUREX - PR Room Stack (296-A-1) Sampling, Monitoring, and Flow Totalizing, Project B-191, RHO-CD-532, Rockwell Hanford Operations, Richland, Washington (1979).

26. Rockwell, Design Criteria - East and West Sample Gallery Hood Exhaust Stacks (296-A-3, 296-A-2) Sampling and Monitoring System, RHO-CD-1031, Rockwell Hanford Operations, Richland, Washington (1981).

27. Rockwell, Use of Radioactive Materials in Open Face Hoods, Gloveboxes, and Other Ventilated Work Spaces, SD-HS-TI-002, Rockwell Hanford Operations, Richland, Washington (1983).

28. Rockwell, Radiological Standards and Operational Controls, RHO-MA-220, Rev 1, Rockwell Hanford Operations, Richland, Washington (February 1983).

29. Model 7C Thermal Conductivity Analyzer, Beckman Instructions 015-555636, Beckman Instruments, Inc., Fullerton, California, (1978).

30. Models 864 and 865 Non-Dispersive Infrared Analyzers, Beckman Instructions 015-556872, Beckman Instruments, Inc., Fullerton, California (1982).

31. ARHCO, Functional Design Criteria - PUREX Ammonia Offgas System, ARH-CD-724, REV, Atlantic Richfield Hanford Company, Richland, Washington (1972).

32. Rockwell, PUREX Technical Manual, RHO-MA-116, Rockwell Hanford Operations, Richland, Washington (September 1983).

33. GE, Chemistry of the Silver Reactor Part B, Reactions with Ammonia Gas, HW-42408, General Electric Company, Richland, Washington (March 1956).

34. GE, Investigation Report PUREX Plant Silver Reactor Incident, HW-55223, General Electric Company, Richland, Washington (February 1958).

35. Vitro, Title I Design Report, PUREX Oxide Conversion Facility, VITRO-R-578, Vitro Engineering Corporation, Richland, Washington (1981).

36. GE, Denitration of PUREX Wastes with Sugar, HW-76973-Rev, General Electric Company, Richland, Washington (April 1963).

37. Rockwell, Criticality Prevention Specifications, Uranium-Plutonium Separation at the PUREX Plant, CPS-P-465-40000, Rockwell Hanford Operations, Richland, Washington (April 21, 1983).

38. Rockwell, Criticality Prevention Specifications PUREX Plant $PuO_2$ Conversion Facility, CPS-P-465-60010 to 60170, Rockwell Hanford Operations, Richland, Washington (June 27, 1983).

39. CFR, Specification 17H, Steel Drums, 49 CFR 178.118, Code of Federal Regulations, Washington, D.C. (1978).

40. CFR, Specification 17C, Steel Drums, 49 CFR 178.115, Code of Federal Regulations, Washington, D.C. (1978).

41. Rockwell, Structural Evaluation of the PUREX No. 1 Burial Tunnel, RHO-CD-1076, Rockwell Hanford Operations, Richland, Washington (1980).

42. Fire and Explosion Hazard Evaluation - Waste Storage Facility - AEC Hanford Operations - Richland, Washington, United States Department of Interior, Mining Enforcement and Safety Administration, Health and Safety Technical Support (July 10-12, 1973).

9413219.0820

9413210.0821

PUREX FSAR

# CHAPTER 8.0 RADIATION PROTECTION

9413219.0822

This page intentionally left blank.

CONTENTS

8.0 Radiation Protection . . . . . 8-1

8.1 Occupational Radiation Exposures . . . . . 8-1
8.1.1 Policy Considerations . . . . . 8-1
8.1.2 Design Considerations . . . . . 8-2
8.1.3 Operational Considerations . . . . . 8-5

8.2 Radiation Sources . . . . . 8-6
8.2.1 Contained Radiation Sources . . . . . 8-7
8.2.2 Airborne Radioactive Material Sources . . . . . 8-9
8.2.3 Radiation Control Program . . . . . 8-10

8.3 Radiation Protection Design Features . . . . . 8-10
8.3.1 Facility Design Features . . . . . 8-10
8.3.2 Shielding . . . . . 8-14
8.3.3 Ventilation . . . . . 8-36
8.3.4 Area Radiation, Airborne Radioactivity and Criticality Monitoring Instrumentation . . . . . 8-42

8.4 Estimated Man-Rem Onsite Dose Assessment . . . . . 8-55
8.4.1 PUREX Staffing . . . . . 8-56
8.4.2 Dosimetry Data . . . . . 8-56
8.4.3 Estimated Man-Rem Onsite Dose for the First Operating Year . . . . . 8-59

8.5 Health Physics Program . . . . . 8-59
8.5.1 Organization . . . . . 8-59
8.5.2 Equipment, Instrumentation, and Facilities . . . . . 8-64
8.5.3 Procedures . . . . . 8-70

8.6 Projected Man-Rem Offsite Dose Assessment . . . . . 8-78
8.6.1 Effluent and Environmental Monitoring Program . . . . . 8-78
8.6.2 Analysis of Multiple Contribution . . . . . 8-101
8.6.3 Estimated Offsite Exposure . . . . . 8-103
8.6.4 Liquid Release . . . . . 8-106

8.7 References . . . . . 8-108

FIGURES:

8-1. Locations of Airborne Radioactivity and Area Radiation Protection Technologists . . . . . 8-15
8-2. Radiation Survey and Instrument Locations in the Plutonium Oxide Areas . . . . . 8-17
8-3. Q Cell Radiation Monitoring and Instrument Locations . . 8-19
8-4. Product Removal Room Radiation Monitoring and Instrument Locations . . . . . 8-20
8-5. Railroad Tunnel Samples . . . . . 8-21
8-6. R Cell Radiation Instruments . . . . . 8-22
8-7. U Cell Radiation Monitoring Locations and Instruments . . 8-23



9413219.0823

FIGURES: (Continued)

8-8. East Crane Maintenance Platform Radiation Monitoring Locations and Instruments . . . . . 8-24
8-9. West Crane Maintenance Platform Radiation Monitoring Locations and Instruments . . . . . 8-25
8-10. PUREX Building Radiation and Clean Areas . . . . . 8-27
8-11. Radiation Areas Surrounding the PUREX Building . . . . . 8-29
8-12. PUREX Laboratory Radiation Monitoring Locations and Instruments . . . . . 8-31
8-13. Ventilation Flow Diagram and Pressure Map . . . . . 8-37
8-14. Criticality Alarm Detector Layout for the PUREX Plutonium Oxide Production Facility . . . . . 8-43
8-15. Criticality Alarm Horns, Alarms, and Dosimeter Locations at the PUREX Plant . . . . . 8-47
8-16. Hanford Criticality Dosimeter . . . . . 8-54
8-17. Health Physics Organization . . . . . 8-61
8-18. PUREX Main Stack Gaseous Effluent Monitoring System . . . 8-81
8-19. PUREX Product Removal Room Stack Gaseous and Effluent Monitoring System . . . . . 8-84
8-20. Simplified Schematic Diagram of the PUREX Plant Liquid Effluents . . . . . 8-87
8-21. Process Condensate Sampling, Monitoring, and Totalizing System Facility . . . . . 8-89
8-22. Ammonia Scrubber Sampling, Monitoring, and Totalizing System . . . . . 8-91
8-23. Diversion System to 216-A-42 Retention Basin . . . . . 8-93
8-24. Comparative Doses Received from Various Radiation Sources . . . . . 8-104
8-25. Computer Programs for Calculating Public Doses from Routine Airborne Releases of Radionuclides . . . . . 8-108

TABLES:

8-1. Occupational Exposure Limits and Controls . . . . . 8-7
8-2. Approximate Compositions of Typical Plutonium Products from N Reactor . . . . . 8-8
8-3. Radioactivity of Plutonium . . . . . 8-9
8-4. Design Basis Radiation Source Strengths . . . . . 8-34
8-5. Maximum Gamma Radiation Intensities through 6 ft Shielding Walls . . . . . 8-35
8-6. Maximum Radiation Intensities of Plutonium Nitrate Through Tank and Glovebox Shielding . . . . . 8-35
8-7. Maximum Radiation Intensities of Plutonium Oxide through Glovebox and Benelex Shielding . . . . . 8-36
8-8. Dosimetry Data for Employees . . . . . 8-57
8-9. Dosimetry Data Plutonium Processing Subsection for Employees with Suffixes 6920, 6922, 6923 . . . . . 8-58
8-10. Dosimetry Data for Chemical Operators in Z Plant . . . . 8-59
8-11. Estimated Man-Rem Dose for 1985 . . . . . 8-60
8-12. Portable Radiation Detection and Measurement Instruments . . . . . 8-65

TABLES: (Continued)

8-13. Thermoluminescent Dosimeter Filter System--Physical Characteristics . . . . . 8-67
8-14. Guide Limits for Field Conditions . . . . . 8-77
8-15. Respiratory Protection Devices Required for Given Concentrations of Airborne Radioactivity . . . . . 8-78
8-16. Designation and Function of PUREX Stacks . . . . . 8-79
8-17. PUREX Main Stack Monitoring and Alarming Capabilities . . 8-83
8-18. Radioactive Isotopes for Which Liquid Discharge Streams are Analyzed During Standby Periods . . . . . 8-88
8-19. Radionuclide Composition of Hanford Effluents for Calendar Year 1978 . . . . . 8-99
8-20. Dose to the Maximum Individual from Effluents Released During 1978 . . . . . 8-100
8-21. Dose to the Population from Liquid Effluents Released During 1978 . . . . . 8-101
8-22. Dose to the Population from Airborne Effluents Released During 1978 . . . . . 8-101
8-23. Ambient Radiation Dose for Hanford Site--January through December 1974 . . . . . 8-102
8-24. Computer Programs Used to Calculate Potential Radiation Doses from Effluents Released at PUREX . . . . 8-104
8-25. Radiation Doses from Routine Releases from the PUREX Plant for an Annual Fuel Reprocessing Rate of 2,100 t to the Maximum Individual and to the Surrounding Population . . . . . 8-107

9413219.0825

9413219.0826

This page intentionally left blank.

# 8.0 RADIATION PROTECTION

This chapter describes the Rockwell Hanford Operations (Rockwell) radiation protection program, which functions to minimize the exposure of individuals and the environment to radiation, considering all potential sources of radiation and radioactive material.

## 8.1 OCCUPATIONAL RADIATION EXPOSURES

### 8.1.1 Policy Considerations

In support of radiation protection, Rockwell management has developed a policy which ensures occupational and population exposures from Rockwell activites will be as low as reasonably achievable (ALARA).(1) The policy is implemented by an ALARA program(2) and Radiological Standards and Controls(12) that covers all phases of plant activities (plant design, operating techniques and procedures, radiation surveillance and control programs, training, decontamination and decommissioning, and emergency warning and response programs) in accordance with U.S. Department of Energy (DOE) orders:

- DOE Order 5480.1A, Chapter XI, "Requirements for Radiation Protection"(3)
- DOE Order 5484.1, Chapter I, "Notification of Occurrences"(4)
- DOE Order 5484.1, Chapter II, "Investigation Requirements(5)
- DOE Order 5484.1, Chapter III,, "Effluent and Environmental Monitoring Program Requirements."(6)

Additional guidance is provided in DOE/EV/1830-T5, A Guide to Reducing Radiation Exposure to As Low As Reasonably Achievable.(7)

The ALARA program requires the health physics program for each facility to be formalized and improved to meet the requirements of the ALARA program. The health physics program provides detailed discussion on training, emergency response, and facility design (facility design considerations are discussed in Section 8.1.2).

The Director of Plant Operations is the highest ranking person in management responsible for the implementation of and compliance with the ALARA program. The responsibility to develop and perform this program is assigned to personnel under the supervision of the Manager, Radiological Protection (health physics aspects of the ALARA program are discussed in Section 8.5).

Under this program, each operating facility that potentially could expose personnel to radiation shall maintain exposure reduction goals on a job basis. The Plutonium-Uranium Reduction Extraction (PUREX)/Uranium Oxide ($UO_3$) Plant ALARA plan states these annual goals.[8]

### 8.1.2 Design Considerations

At the time of its construction, PUREX Plant was a third-generation plant. Its design was based on the experience gained in the operation of T and B Plants, the first irradiated fuel processing plants built during World War II, and in the operation of the Reduction Oxidation (REDOX) Plant, a second-generation processing plant designed around solvent extraction. The experience indicated that a major portion of the occupational radiation dose was received during maintenance, equipment burial, process sampling, and process sample analysis; therefore, special attention was given in the PUREX Plant design to the foregoing activities. The shielding design criteria for the PUREX Plant were so conservative that the radiation fields in operational areas are below the currently accepted standards given in Reference 3. Specific examples of design features that limit occupational exposure and reduce radioactive effluents follow.

- Reduction of the volume of radioactive material in the samples taken and delivered to the laboratory for analysis by providing, at the sample stations, facilities for accurately and remotely pipetting high-level, small-volume samples from the process tank to dilution vials contained in shielded sample carriers.

- Reduction of the concentration of airborne radioactive materials associated with process sampling by providing increased exhaust ventilation and contamination control at the process sample stations.

- Reduction of airborne radioactive contamination of the canyon remote operation and maintenance cranes by providing increased canyon ventilation; improved control of cell exhaust volumes; thermal updraft prevention by insulation of high-temperature, in-cell equipment; and an air lock for moving material in or out of the canyon via the plant railroad.

- Improvement of overall process cell and plant radioactive contamination control by providing an improved process vessel and condenser vent system of larger capacity.

- Reduction of employee occupational radiation exposure outside the plant by providing sufficient shielding in the canyon roof to prevent excessive sky shine.

- Reduction of employee occupational radiation exposure by providing adequate shielded storage space in the canyon for all highly contaminated solvent used in the process.

9413219.0820

- Improvement of overall radiation exposure control by isolating most direct-connection process sensing lines from the centralized control rooms.

- Reduction of the emission of radioactive particulate material from the canyon exhaust ventilation stack by providing an improved, highly efficient, fibrous glass-bed particulate filter.

- Improvement of radioactive exposure and contamination control during replacement of major process equipment by providing a shielded, failed-equipment storage tunnel as an integral part of the facility; in-cell equipment wash-down sprays; and separate decontamination and repair facilities.

All radiation protection systems, administrative procedures, and protective hardware have been reviewed and upgraded to assure that exposure of personnel and the public during normal plant operations is maintained within the guidelines listed in Section 8.1.1. Projects and equipment which provide safe operations are listed below:

- PUREX Plant plutonium oxide production facility

- Product removal (PR) room upgrade

- Closed-circuit television (CCTV) system

- Continuous air monitor (CAM) placement and installation

- Primary stack system

- Criticality alarm system

- Record air sampler placement and installation

- PR room stack system

- Exhaust sampling/monitoring system

- Process condensate system

- Ammonia scrubber waste system

- Chemical sewer system

- Steam condensate samples.

9413219.0829

Under the ALARA program, new facility design projects have included adequate protection from direct and scattered radiation and airborne sources. Methods of radiation protection considered in facility design follow:

1. Permanent or temporary shielding
2. Confinement system design (see Section 4.1)
3. Equipment design to minimize surface contamination
4. Area radiation zones and occupancy contamination
5. Fixed or portable monitoring and alarm systems
6. Criticality safety system (see Section 4.2)
7. Interlocks
8. Physical barriers
9. Maintenance design considerations
10. Decontamination systems.

The design of the new PUREX Plant plutonium oxide production facility is based on experience gained in the operation of the remote mechanical A (RMA) oxide line in Z Plant, where plutonium oxide production from plutonium nitrate was carried out in the past. In that facility, a major portion of the occupational radiation dose was received during product packaging and loadout, vacuum drum filter operation, and maintenance. Special attention is given to those particular activities in the PUREX production facility (see Chapter 4.0 for design criteria).

Examples of design improvements resulting from RMA oxide line experience include the following.

- Introduction of semiremote operation of the product blending and packaging systems. Shielding is provided to minimize personnel exposure to ionizing radiation.
- The vacuum drum filter is designed to allow remote positioning of the doctor blade.
- An equipment maintenance glovebox is provided to allow most maintenance and decontamination to be performed under shielded, controlled conditions.
- Gamma and neutron shielding is provided around the gloveboxes. Consideration was included in the design of all equipment to minimize exposure during both operation and maintenance.

9413219.0830

The PUREX Plant building was constructed and operated prior to the current regulations on decommissioning. However, several Hanford Site facilities have been decommissioned in a relatively easy manner using the low-level and retrievable waste sites at the Hanford Site.

### 8.1.3 Operational Considerations

8.1.3.1 Manuals and Standards. Radiochemical processing has been carried out at Hanford for over 35 yr. This long experience has produced detailed, written radiation work procedures (RWP) and protection standards that comply with the guidelines of Reference 2 for maintaining radiation exposures ALARA. The procedures and standards are documented in the following manuals.

- Environmental Protection Manual(9)

  This manual details the standards for controlling the release of radioactive and nonradioactive materials into the air, water, and soils; the environmental surveillance program; and the effluent sampling and monitoring program.

- Radiation Monitoring Manual of Standard Practices(10)

  This manual is a documented collection of methods, routine practices, controls, exposure guides, supporting data, and other information developed to serve as a guide to Radiation Monitoring personnel in performing and maintaining a uniform and sound radiation control program. The technical bases of the limits and procedures contained in the manual stem principally from authoritative bodies such as the National Council on Radiation Protection and Measurements, the now defunct Federal Radiation Council, and the International Commission on Radiological Protection. In addition, requirements of DOE and other federal regulations have been included where appropriate.

- Radiation Work Permits(11)

  This manual sets up regulations and practices for radiological protection in various phases of work in radiation zones. Radiation work permits for the PUREX Plant are contained in this manual.

- Radiological Controls(12)

  This manual details the radiation protection standards and controls in effect at Rockwell.

- Health Physics Procedures(13)

  This manual contains specific procedures followed by Radiological Engineering personnel and includes instrument calibration, supplemental dosimetry, etc.

In addition to the preceding manuals, there is constant updating of existing procedures and initiation of new procedures when necessary. These procedures are known as standard operating procedures (SOP) and plant operating procedures (POP) and are developed to assure that operators can complete all assignments concerned with the collection, containment, storage, and transport of radioactive materials without undue risks of personnel exposure or release of contaminants to the environment. The Operating Documents Group of the Process Engineering Department of the Research and Engineering Function keeps the SOP and POP up to date (see Section 10.4.1).

8.1.3.2 Occupational Exposure Controls. To maintain personnel radiation exposures ALARA, Rockwell has adopted radiation control levels that are lower than DOE limits. Rockwell radiation control levels, along with the limits of DOE, are presented in Table 8-1. Rockwell annual and quarterly control levels can be exceeded only after obtaining a written approval from the Manager, Radiological Protection. Exposures above control levels without prior written approval are considered as radiation occurrences and an evaluation of the event is necessary. When the exposure status of an employee becomes uncertain or an exposure control level is likely to have been exceeded, that individual is restricted from entering posted radiological areas until the exposure has been determined. Radiation surveys of all radiation and contaminated areas are conducted on a scheduled basis i.e., daily, weekly, monthly etc., depending upon the frequency of use and hazard potential. During plant startups surveys are conducted more frequently.

Operational considerations which reduce personnel exposure to ALARA were reflected in the original design and have continued with all the current design changes. As stated in Section 8.1.2, the PUREX Plant was built with the benefit of operating experience of older facilities. The current design changes upgrading structures, systems, or machinery necessary to reduce exposure to ALARA have been made from the experience gained from operating the PUREX Plant.

If design changes are necessary after PUREX becomes operational or if certain reasonable changes will reduce occupational exposure, a Change Engineering Order (CEO) will be issued. These changes can be implemented any time during the operating period of the plant when appropriate.

## 8.2 RADIATION SOURCES

The sources of radiation used as bases for radiation protection design are described in this section. Solid waste generated in the normal operations are not considered a radioactive source for shielding design. These wastes are packaged in containers approved for waste storage or disposal and under procedures which assures protection of the workers. For contaminated equipment, the packaging and disposal is designed for each specific case.

TABLE 8-1. Occupational Exposure Limits and Controls.[a]

| Organ | DOE limits (rem) | | Rockwell control levels (rem) | | |
|---|---|---|---|---|---|
| | Annual | Quarter | Annual | Quarter | Week |
| Whole body (head and trunk, gonads, lens of eye, red bone marrow, blood-forming organs) | 5 | 3 | 3 | 1.25 | 0.3 |
| Skin (except hands and forearms) | 15 | 5 | 9 | 3 | 0.9 |
| Other organs (except bone) | 15 | 5 | 7.5 | - | - |
| Bone | 30 | 10 | 15 | - | - |
| Forearms | 30 | 10 | 15 | 5 | - |
| Hands | 75 | 25 | 15 | 5 | 1.5[b] |
| Feet | 75 | 25 | 15 | 5 | 1.5[c] |

[a]As measured by a Hanford multipurpose dosimeter and a finger ring dosimeter.

[b]As measured by: (1) finger rings worn with TLD chip oriented toward the source, or (2) an open-window CP and timekeeping.

[c]As measured by a closed-window CP and timekeeping.

### 8.2.1 Contained Radiation Sources

For shielding design, radioactive sources are classified in three categories: fuel elements, process streams, and plutonium product.

8.2.1.1 Fuel Elements. The N Reactor fuel elements are described in Section 4.1.1. The geometry, weight, chemical makeup, and fission product (FP) inventory are also presented in Figure 4-2 and Tables 4-1 through 4-4.

8.2.1.2 Process Streams. The volume and geometry of the PUREX Plant chemical processing vessels are described in Table 6-1. The FP activity in the most radioactive tanks is also presented in Table 6-7. Liquid wastes are considered as process streams and are included in the shielding design.

8.2.1.3 Plutonium Product. Plutonium oxide (the final product) will be produced and packaged (about 1.5 kg of plutonium per can) in N cell. Review of operating experience at Z Plant, the facility where this operation was previously conducted, reveals the neutron dose rate from a 1.5-kg mass of plutonium to be, typically, in the range of 40 to 100 mrem/h. Similar dose rates are expected from product handling in the plutonium oxide production facility. The isotopic composition and activity of the various types of plutonium products are shown in Tables 8-2 and 8-3.

TABLE 8-2. Approximate Compositions of Typical Plutonium Products from N Reactor.[a]

| Isotope | Concentration (wt%)[b] | | |
|---|---|---|---|
| | 6 | 9 | 12 |
| $^{238}Pu$ | 0.01 | 0.03 | 0.1 |
| $^{239}Pu$ | 93.2 | 89.3 | 85.0 |
| $^{240}Pu$ | 6.0 | 9.0 | 12.0 |
| $^{241}Pu$[c] | 0.76 | 1.62 | 2.6 |
| $^{242}Pu$ | 0.03 | 0.10 | 0.2 |
| $^{241}Am$[d] | 0.01 | 0.02 | 0.05 |

[a]Totals do not add to 100% due to rounding.

[b]The headings 6, 9, and 12 designate products by nominal $^{240}Pu$ concentration.

[c]A beta emitter; all other isotopes are alpha emitters.

[d]Typical values--$^{241}Am$ forms from decay of $^{241}Pu$; therefore, varies depending upon the age since separation and purification.



9413219.0834

TABLE 8-3. Radioactivity of Plutonium.

| $^{240}Pu$ composition (%) | Calculated neutron emission rate (n/s-g) | Activity (Ci/g) |
|---|---|---|
| 6 | $5.6 \times 10^3$ | 0.94 |
| 9 | $8.6 \times 10^3$ | 1.88 |
| 12 | $1.2 \times 10^4$ | 3.00 |

### 8.2.2 Airborne Radioactive Material Sources

Radioactive gases generated inside the process vessel streams are removed by offgas systems described in Sections 6.3.1.5 and 7.4. Under normal operating conditions, the pressure in the process stream vessels is negative with respect to ambient air pressure in the process cells, minimizing out-leakage. Tritium ($^3H$), $^{14}C$ as part of carbon dioxide, and $^{85}Kr$ are not removed by the offgas systems and are eventually transferred to the canyon ventilation system for discharge to the atmosphere. The amounts of $^3H$ and $^{85}Kr$ (as well as other radionuclides) discharged to the atmosphere are estimated in Section 8.6.3.1. The evaluation and control of potential airborne radioactivity concentration is discussed in Section 8.5.3.7.

During maintenance work on the process lines and vessels, some holdup radioactive liquid often leaks to the floor of the canyon cell and collects in the sumps. Airborne radioactivity in the canyon area is the result of resuspension of some of this radioactivity. An estimate of the resuspended activity in the canyon is difficult, because of the presence of the large airflow and pressure gradient of the ventilation system. The ventilation system is operated continuously.

The sampling stations have exhaust ventilation systems designed such that radioactive gases cannot leak into the sample gallery. In the sample gallery and in the laboratory, any quantity of airborne radioactivity would most probably be produced from a spill. Some airborne radioactivity in the canyon area results from the resuspension of fractional amounts of spills and leaks. Other sources of canyon radioactivity are also present in the course of normal operations. Normal maintenance activities involving the hot shop and decontamination cell at the PUREX Plant can also constitute a continuous source of airborne radioactivity. Finally, two activities involving the PUREX Plant railroad tunnel could potentially contribute to airborne canyon radioactivity. The first activity involves the off-loading of a fuel element during the charging process. The second involves the loading out of contaminated equipment during which some surface contamination on the equipment may become airborne.

### 3.2.3 Radiation Control Program

A routine radiation control program is defined(10) and established to maintain a current radiological status of conditions both inside and outside of radiation zones.

This routine control program consists of several survey frequency categories, i.e., shiftwise, daily, weekly, quarterly, monthly, semi-annually, and annually. These categories can be further subdivided, depending upon the information desired. The frequency of the routine surveys is based on the evaluated probability and degree of potential for off-standard conditions of the location being surveyed.

The obtained status information makes it possible to recognize off-standard conditions and initiate corrective action, and provides a method of determining long range trends in radiological evaluations.

9113219.0836

## 8.3 RADIATION PROTECTION DESIGN FEATURES

### 8.3.1 Facility Design Features

Radiation exposures from contained sources of radiation are controlled through extensive use of two basic strategies, often referred to as "distance" and "shielding". Traffic to certain radiation areas is controlled through doors equipped with electric locks operated from a central location known as the dispatcher's office. Airborne radioactivity is controlled by a ventilation system which ensures that each occupied room has numerous air changes per hour (see Section 8.3.3) and that the flow of air is from uncontaminated areas to contaminated areas. Air from normally contaminated areas is filtered before discharge to the atmosphere.

In the PUREX Plant, the chemical processing operations are performed remotely (i.e., utilizing distance and/or shielding to keep the radiation exposure of personnel as low as practicable). The chemical processing equipment and process solutions are located in a heavily shielded area, described in Sections 4.3 and 5.2. Process equipment is generally operated to failure, decontaminated in place or in M cell, and replaced remotely, using one of the shielded, overhead bridge cranes in the canyon (see Section 5.3.4). Traffic control to radiation areas where plutonium is handled is improved with the addition of a new CCTV surveillance system. The systems for monitoring gaseous and liquid effluents have been upgraded to the latest standards (see Section 8.6.1). Monitoring of airborne radioactivity has been upgraded with the use of new CAM units. A new criticality alarm system complying with DOE Order 5480.1, Chapter V, except for DOE-approved logic deviation, has been installed in the PUREX Plant (see Sections 8.3.4.2 and 5.4.7.1.7).(14) New analytical equipment that will allow more accurate monitoring of exposures has been installed in the laboratory.

8.3.1.1 The Dispatcher's Office. The continuously manned PUREX Plant dispatcher's office is located across the hall from the central control room. The dispatcher controls access to radiation areas with a potential for high personnel exposure. For each electrically controlled door, the dispatcher's desk has two visual indicators that show if the door is open or closed, and a toggle switch that is used to exercise remote control. Currently, there are 23 doors which can be controlled electrically from the dispatcher's desk. All electrically controlled door locations are linked to the dispatcher's office by phone. The dispatcher documents the traffic in and out of radiation areas in the "door control personnel log." The dispatcher's desk has 23 additional visual indicators for doors that can be opened by keys. These indicators show if the doors are open or closed. There are two alarm boards with 40 visual indicators on the dispatcher's desk. Of this number, 18 are fire alarms; the remainder are linked to the criticality detection system and to radiation monitoring systems.

8.3.1.2 Fuel Receiving Area. The railroad tunnel is described in Section 5.2.2.5. The railroad tunnel is designated as a Radiation Area--Surface Contamination (radiation workers could receive from 1 to 100 mrems/h) and beyond a yellow line in the tunnel, workers must wear masks because of the potential for airborne radioactivity. Traffic in and out of the area is controlled and documented by the dispatcher. The cask cars, casks, and canisters used to ship the fuel elements from the N Reactor area to the PUREX Plant are described in Section 6.3.2.1, 6.3.2.2, and 6.3.2.3. Unloading of the fuel element canisters is performed remotely from the canyon crane as described in Sections 6.3.1 and 6.3.3.2. Radiation workers enter the tunnel after unloading and survey the railroad cars for contamination. The entrance to the tunnel is a roll-up door, which functions as an air lock. Shielding of the entrance is accomplished by mounds of earth which are stacked in a northerly direction. Inside the tunnel, the walls and roof are 4-ft-thick concrete. Once inside the canyon proper, the ceiling of the tunnel has a horizontal sliding door (interlocked with the roll-up tunnel entrance door) through which the fuel canisters are lifted and brought to the dissolver.

8.3.1.3 Fuel Handling. The unloading of fuel elements is performed remotely from the canyon crane, described in Section 6.3.2.5. A storage basin, described in Section 5.2.2.6, is located east of the railroad tunnel. The storage basin is part of the canyon, which is designated as a Restricted Access Area. The concrete walls of the basin are 4 ft thick. The storage basin was built to store the type of fuel elements used prior to the introduction of the N Reactor type. Modification of the fuel-handling equipment would be necessary before N Reactor fuel elements could be safely stored in the basin. There are no plans to use the basin for N Reactor fuel storage at this time.

8.3.1.4 Remote Process Cells. The processing systems are located in the remote process cells, described in Section 5.2.2.1. Removal and replacement of process equipment is performed remotely with the canyon crane. Under normal working conditions, the remote process cells are covered with 3-ft-thick cover blocks which form the deck of the canyon. When covered, the exposure rate on the deck of the canyon is about 100 mR/h (above F cell,

the radiation field approaches 5 R/h). A door, controlled by the dispatcher, allows access to the canyon. The deck of the canyon is designated as a Restricted Access Area. The north wall of the process cells is 4-ft-thick concrete at the height of the pipe and operating (P&O) gallery and 6.0-ft-thick concrete below. The west end wall of the canyon is 2 ft thick, while the east end wall, which is also the wall of the railroad tunnel, is 4 ft thick.

8.3.1.5 Process Offgas Treatment. The process offgas treatment systems are described in Section 7.4. All the first-stage removal components of the three offgas process systems [dissolver offgas (DOG), ammonia offgas, and process offgas] are located in the remote process cells, described in Section 5.2.2.1. All maintenance work on these components of the process offgas treatment system is done with mechanical tools remotely controlled from the canyon crane cab.

8.3.1.6 Service Galleries and Hot Pipe Trench. The crane cab gallery is shielded by a parapet from direct radiation from the floor of the canyon or from remote process cells when uncovered. The parapet is 1.5 ft thick. The north wall of the canyon is 4 ft thick. The floor of the crane cab gallery is 2 ft thick. Periscope and CCTV are used to perform work. The crane cab gallery is designated as both Radiation Area--Airborne Radioactivity. Traffic in and out of the crane cab gallery is controlled by the dispatcher. On the other side of the canyon (the south side) the hot pipe trench (described in Section 5.2.2.2) runs parallel to the process cells. Maintenance work on piping in the hot pipe trench is done with mechanical tools remotely controlled from the canyon crane cab. Under normal operations, the hot pipe trench is covered with 2.5-ft-thick cover blocks which form the deck of the canyon. As mentioned in Section 8.3.1.4, the cover blocks are designed so that the exposure rate on the deck of the canyon is about 100 mR/h. The north wall of the hot pipe trench is 2.5 ft thick, while the south wall, also known as the south canyon wall, is 5.5 ft thick below the canyon deck and 4 ft thick between the canyon deck and the remote crane level.

The P&O gallery, located directly below the crane cab gallery, extends the full length of the building. It is designated as a clean area (radiation level is at background and does not require any protective clothing). However, sites with nonremovable contamination are cordoned off and designated as Radiation Area--Surface Contamination. The west end of the P&O gallery, the white room, is separated by a wall and designated as a Radiation Area--Surface Contamination. Entrance to the white room is through a check station.

The sample gallery, which is below the P&O gallery, also extends the full length of the building, with the exception that it terminates at the railway tunnel on the east. It is designated as a Radiation Area--Surface Contamination. When the PUREX Plant is operating, some of the "A" sampling stations (see Fig. 6-77) are designated as High Radiation Areas. The sample gallery is bordered on the south by the 6-ft-thick process cell wall and on the north by the 3-ft-thick north canyon building wall. The ceiling of the sample gallery is 1.5 ft thick. The floor is also 1.5 ft thick. Traffic in and out of the sample gallery is through check stations.



9413219.0838

The storage gallery, which is below the sample gallery, extends the full length of the building and terminates at the railway tunnel on the east. Normally considered a clean area, the storage gallery has been contaminated due to leaks through the building expansion joints. Some minor contamination may also occur in the future.

8.3.1.7 Waste Treatment and Storage. The treatment of the high-level liquid waste is discussed in Section 7.5. The high-level liquid waste is transferred first to vessels in F cell, where it is made alkaline, and then to the 241-AY or 241-AZ tank farm. All maintenance work is done with tools remotely controlled from shielded areas.

Other-than-high-level liquid waste is also routed to vessels in the remote process cells and then to the tank farm as feed for the 242-A evaporator (see Table 7-4).* All maintenance work on this stream is done with tools remotely controlled from shielded areas.

The disposal of solid waste is described in Section 7.7.** Highly radioactive equipment is moved from the canyon to the railroad tunnel, loaded on flatbed cars, and disposed of in PUREX burial tunnel 2 (see Fig. 7-24). The loading process is remotely controlled from the canyon crane. Less contaminated process equipment and miscellaneous canyon waste are also transferred to the railroad tunnel and loaded into large boxes of precast, reinforced concrete and transferred to approved burial sites. Again, all the work is remotely controlled from the canyon crane.

8.3.1.8 Product Loadout and Storage. The uranium product solution, [2M $UO_2(NO_3)2$] in dilute nitric acid, is pumped from the sample tank in the process cell to one of four 378,500-L storage tanks located in the 203 area about 100 m north of the 202-A building for interim storage. The product solution is loaded into tank trucks at the 203 area for transport to the $UO_3$ Plant. The entire 203 area is a radiation area. However, the radioactivity of the uranium product from N Reactor fuels was typically less than that of aged natural uranium, and the radiation dose at the surface of a tank full of product solution was typically less than 10 mrem/h. Comparable radiation doses are expected for this area during future operations.

As the base case, plutonium nitrate product solution from solvent extraction is sampled and transferred to N cell for conversion to plutonium oxide, sampling, packaging and loadout. The solution may be loaded out in the PR room (see Figure 5-10 for layout) for shipment to other facilities. The PR room, N cell, and Q cell are designated as Radiation Area--Surface Contamination. The solution storage facility is located in an enclosed area in M cell, which is a Radiation Area--Airborne Activity. Most access doors to radiation areas are equipped with electric locks, which are operated by switches in the dispatcher's office (see Section 8.3.1.1).

---

*The disposal of liquid waste from the laboratory is described in Section 6.7.2.4.2.

**The disposal of solid waste from the laboratory is described in Section 6.7.2.4.1.

Normally, only those access doors to high radiation areas are locked and controlled by the dispatcher; however, any or all of the normally unlocked doors can be locked and controlled in the event of an accident.

Additional access control to the PR corridor, PR room, M cell enclosure, and N cell is provided, for safeguards purposes, by vault-type doors equipped with combination locks and detector-alarm systems to indicate when a door is opened. The door alarm system is monitored by Security personnel.

A safety analysis indicated that none of the safeguards and security features would obstruct emergency access and egress from the PUREX building or N cell.(15)

8.3.1.9 Location of Airborne Radioactivity and Area Radiation Protection Technologists. Figures 8-1 through 8-9 show the location of stationary radiation monitors, portable survey instruments, air samplers, Scott air packs, and step-off pads in the building. Rockwell standards for installation and procedures for location and calibration of instruments are described in References 10 through 19. Figure 10 presents the radiation and clean areas in the PUREX building. In locations where there is a high potential for surface contamination, a maximum concentration control effort is always appropriate. The N cell area is such an area and although it is normally free of surface contamination, it is treated as a surface contamination area. Figure 8-11 shows the radiation areas surrounding the PUREX building.

8.3.1.10 Laboratories. The PUREX analytical laboratory is described in Section 6.7.2, and a layout of the facility is shown in Figure 6-79. Traffic to the laboratory is controlled through check stations and air locks. The laboratory is designated as a Radiation Area--Surface Contamination. Some hoods are designated as High Radiation Areas. An important protection feature of the laboratory is the high-volume change of air per hour for each room. The laboratory hazards analysis is described in Section 6.7.2.6, while the movement and handling of radioactive samples are described in Section 6.7.2. Figure 8-12 presents the portable and stationary monitoring and detection instruments within the laboratories.

### 8.3.2 Shielding

8.3.2.1 Early Shielding Calculation. The original calculations for the shielding requirements of PUREX are well documented in the PUREX Technical Manual.(16) The bases for the design of the shielding follow.

- PUREX Plant shielding has been designed to reduce radiation intensities to a maximum of 1.0 mR/h in controlled zones, 0.1 mR/h in uncontrolled zones, and 0.01 mR/h in radiation counting equipment zones.

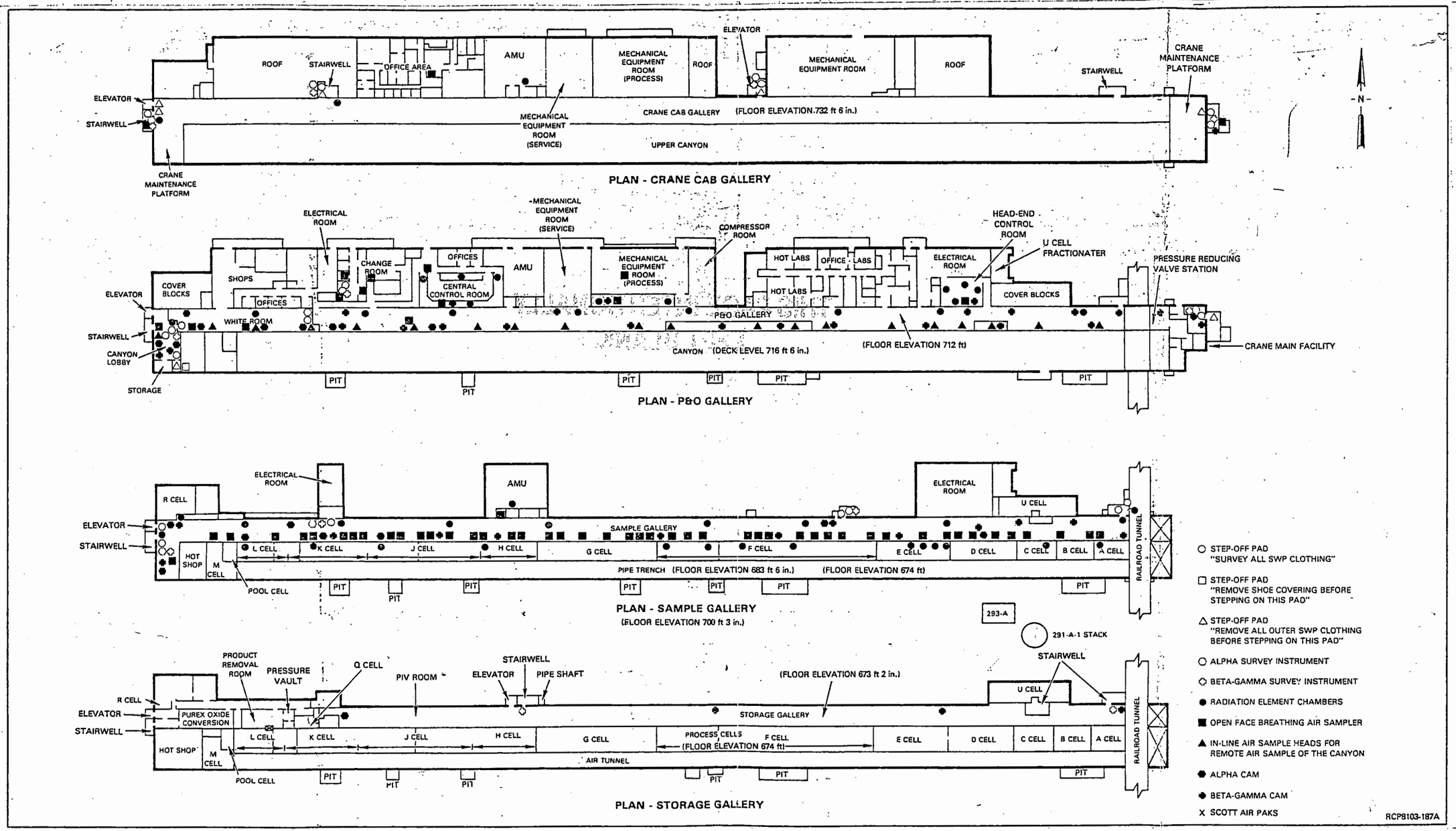


FIGURE 8-1. Locations of Airborne Radioactivity and Area Radiation Monitors.

THIS PAGE INTENTIONALLY
LEFT BLANK

This page intentionally left blank.

THIS PAGE INTENTIONALLY
LEFT BLANK

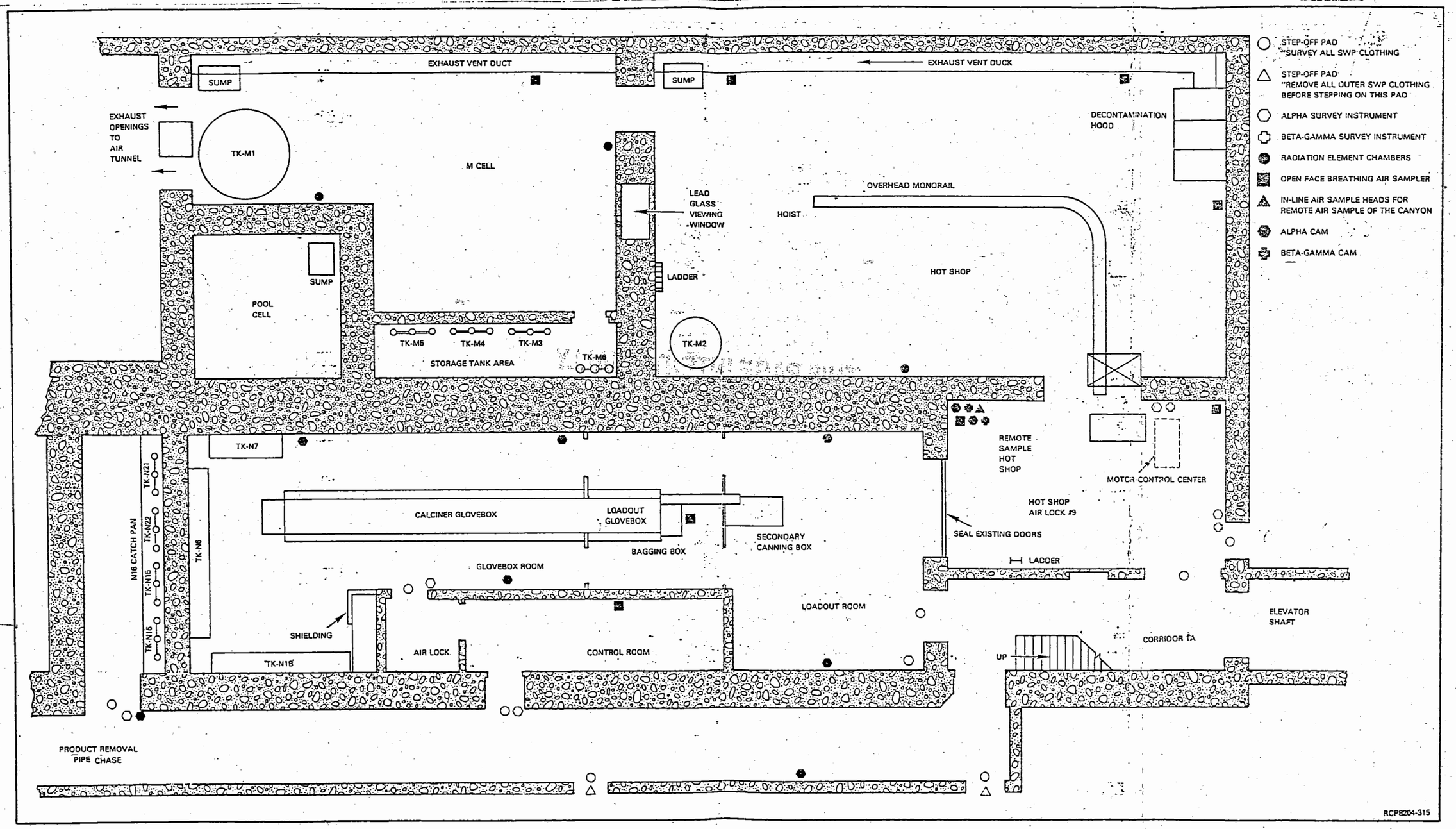


FIGURE 8-2. Radiation Survey and Instrument Locations in the Plutonium Oxide Areas.

THIS PAGE INTENTIONALLY
LEFT BLANK

This page intentionally left blank.

THIS PAGE INTENTIONALLY
LEFT BLANK

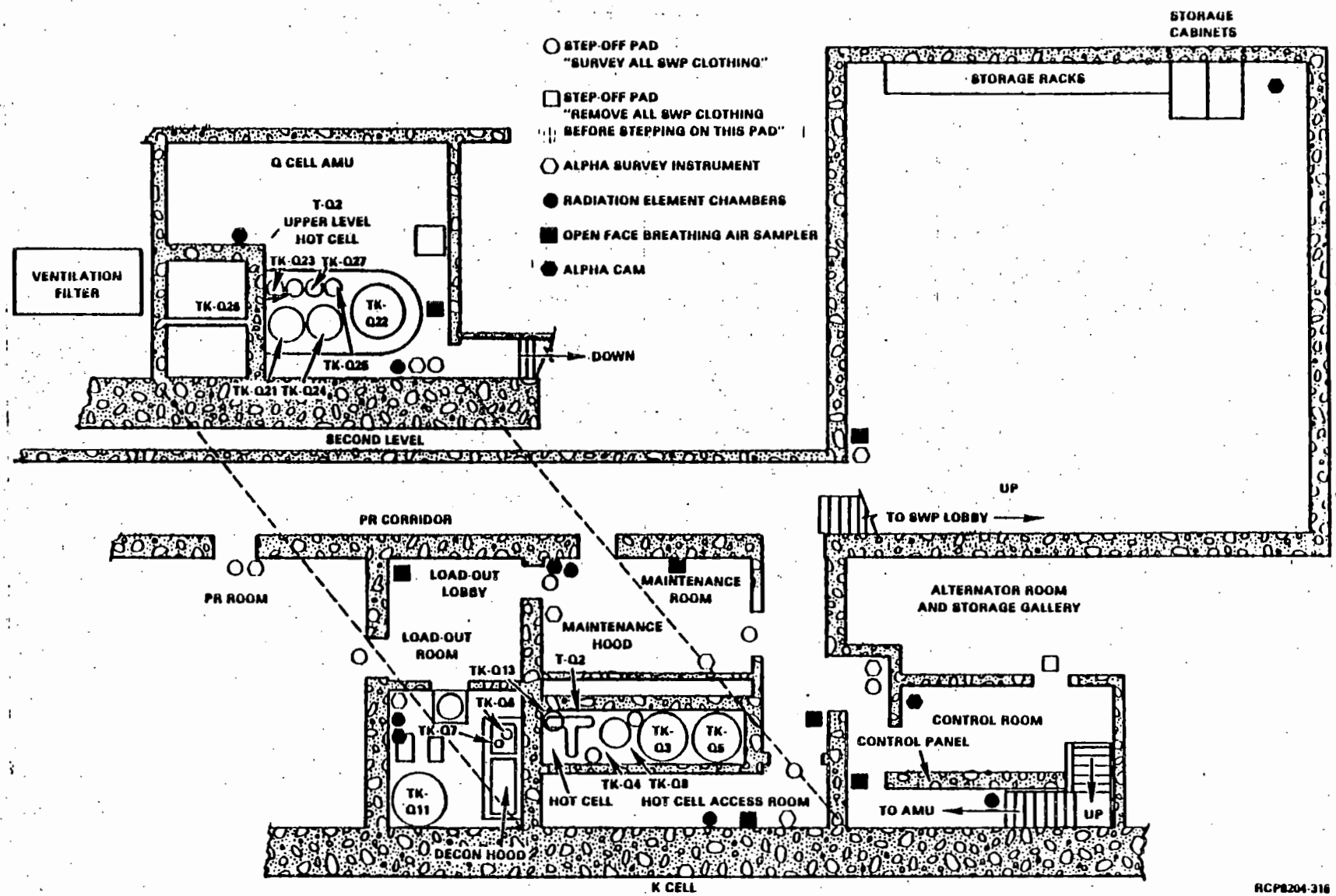


FIGURE 8-3. Q Cell Radiation Monitoring and Instrument Locations.

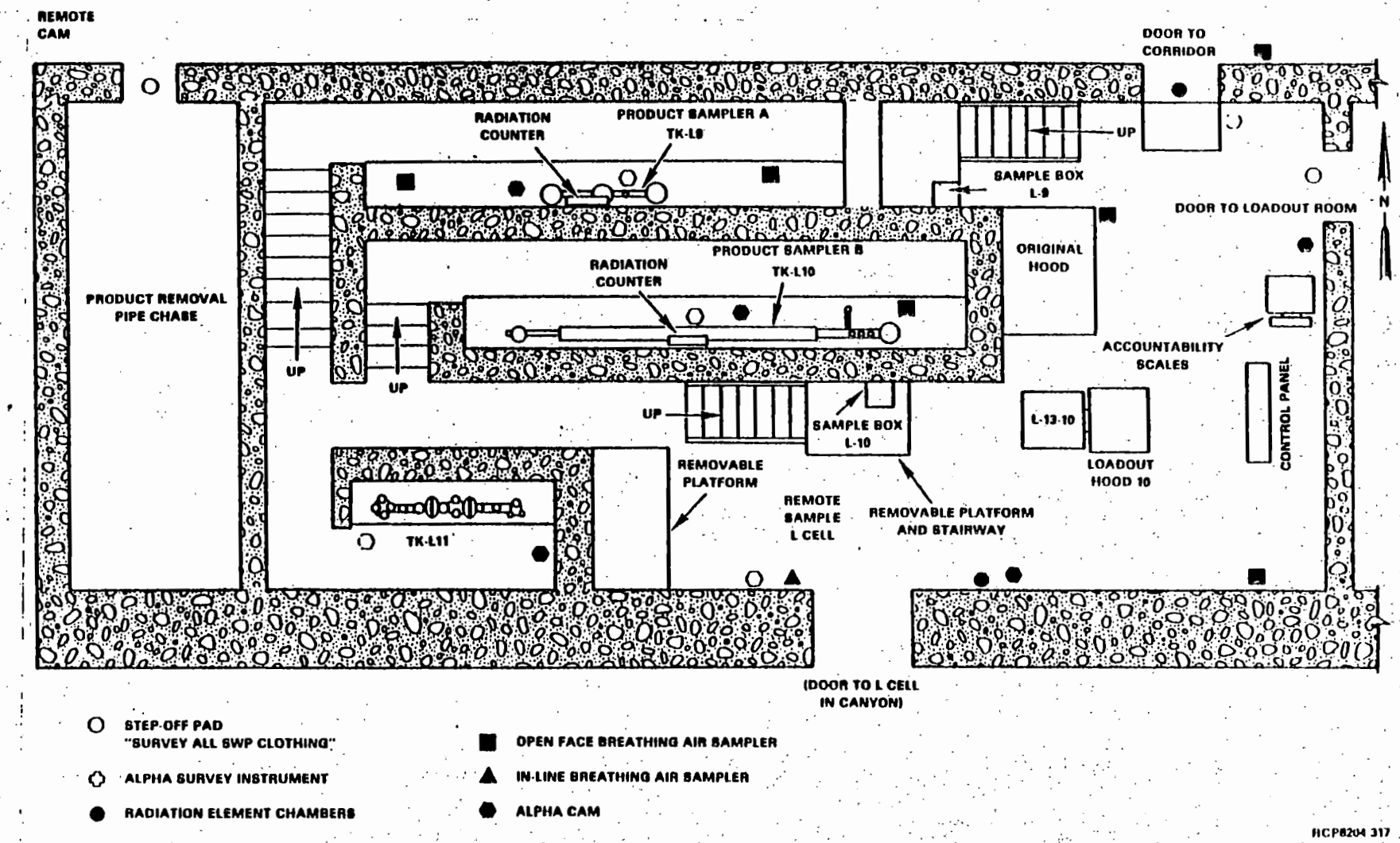


FIGURE 8-4. Product Removal Room Radiation Monitoring and Instrument Locations.

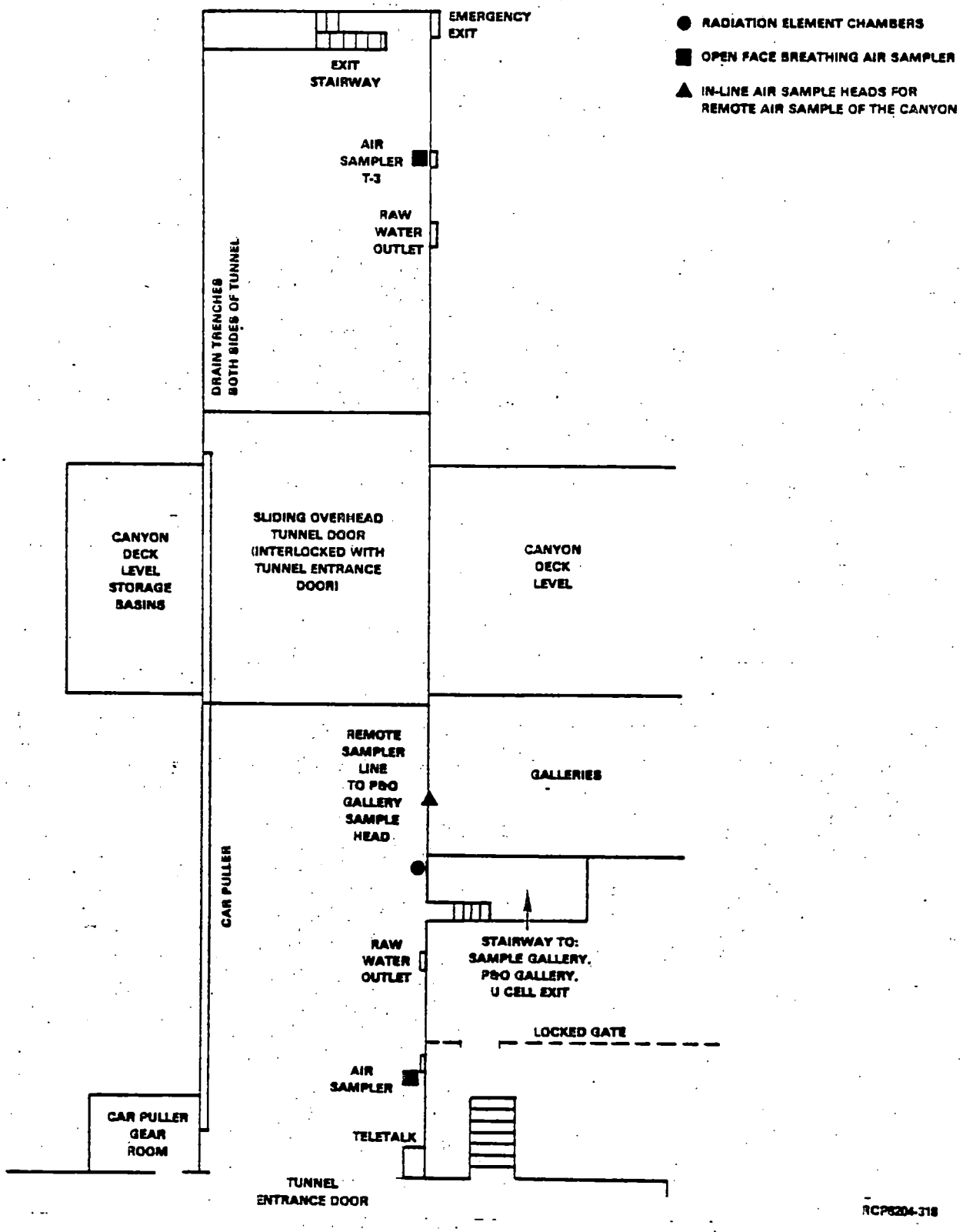


FIGURE 8-5. Railroad Tunnel Samples.

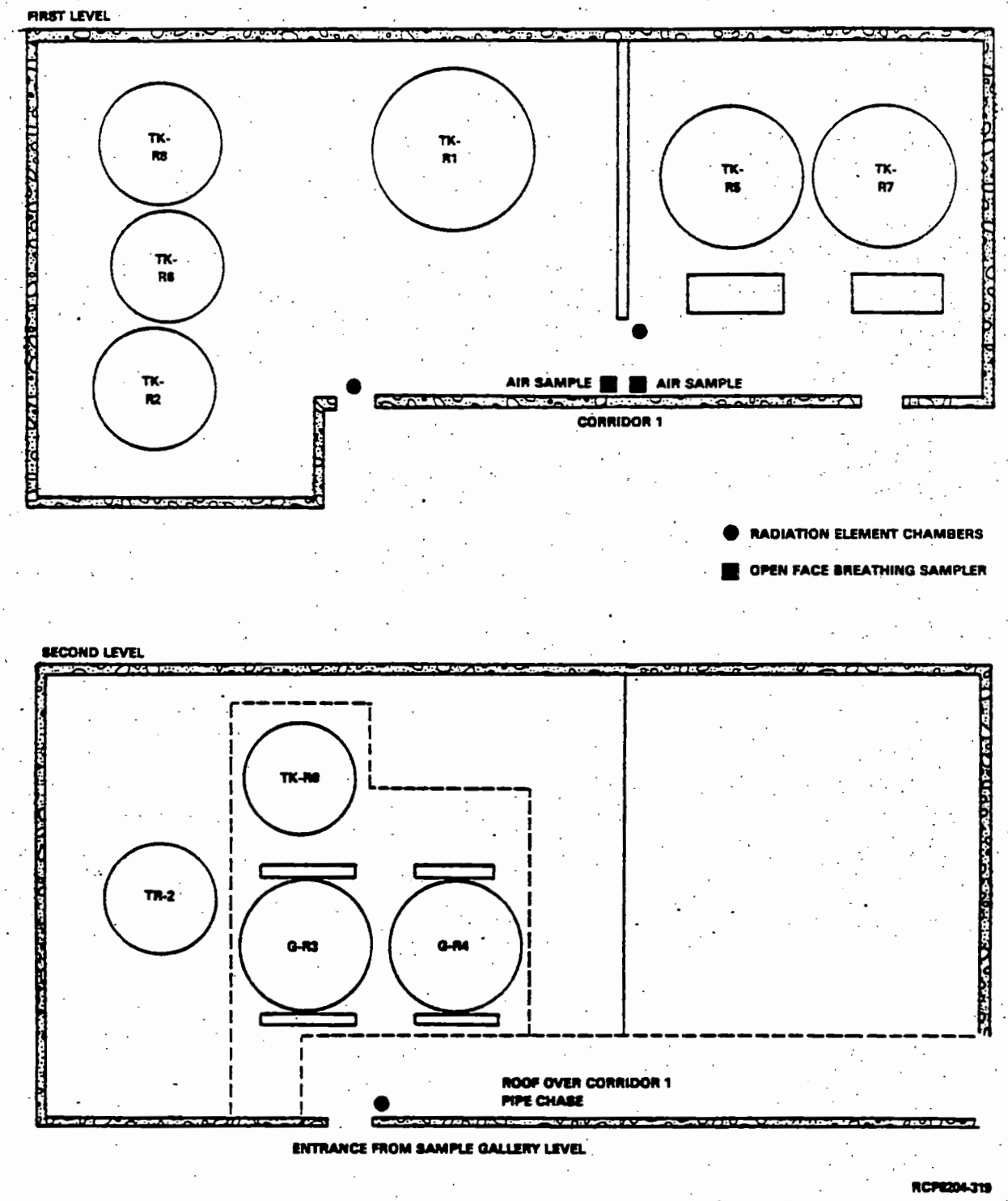


FIGURE 8-6. R Cell Radiation Instruments.

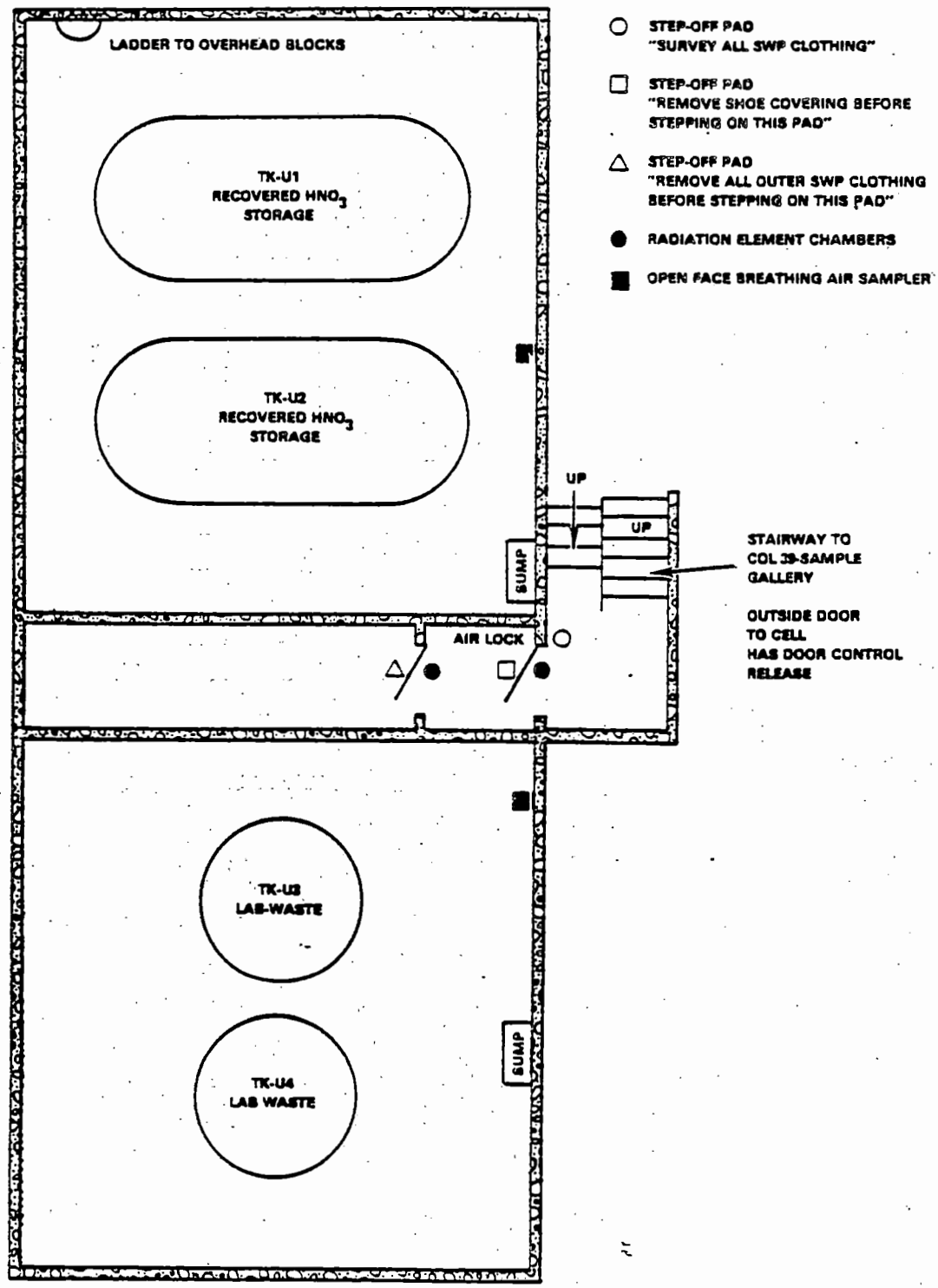


FIGURE 8-7. U Cell Radiation Monitoring Locations and Instruments.

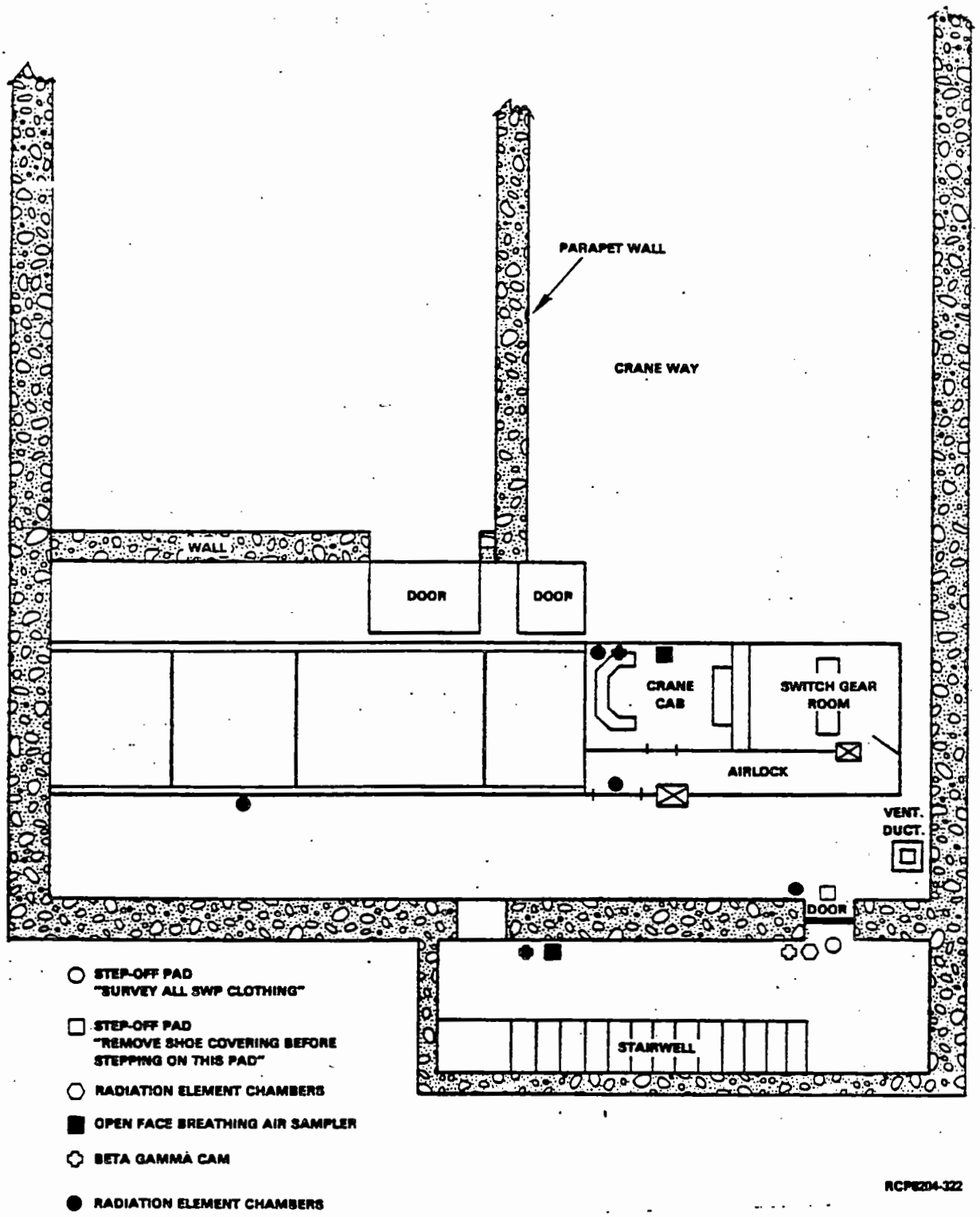


FIGURE 8-8. East Crane Maintenance Platform Radiation Monitoring Locations and Instruments.

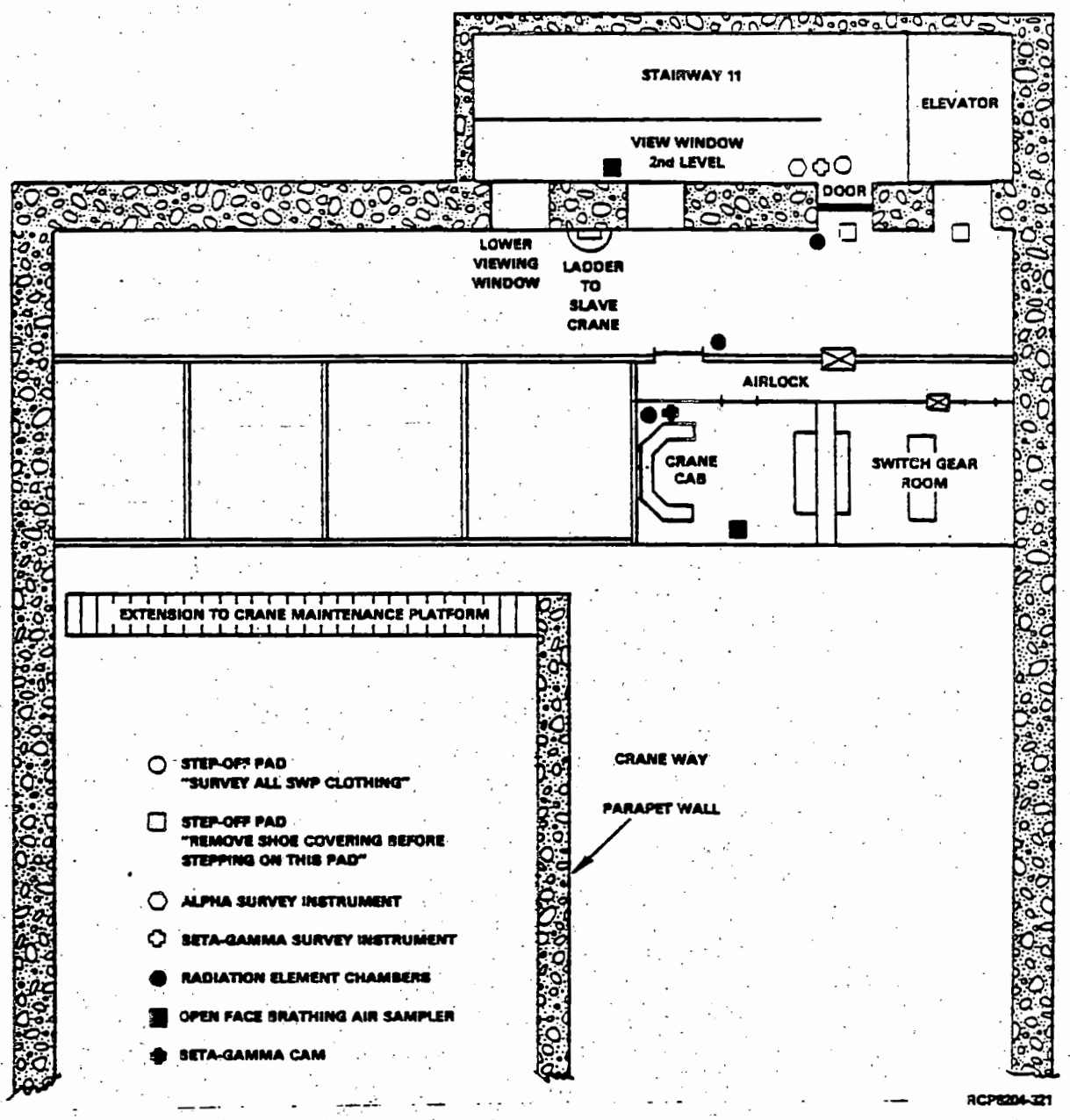


FIGURE 8-9. West Crane Maintenance Platform Radiation Monitoring Locations and Instruments.

9413219.0852

This page intentionally left blank.

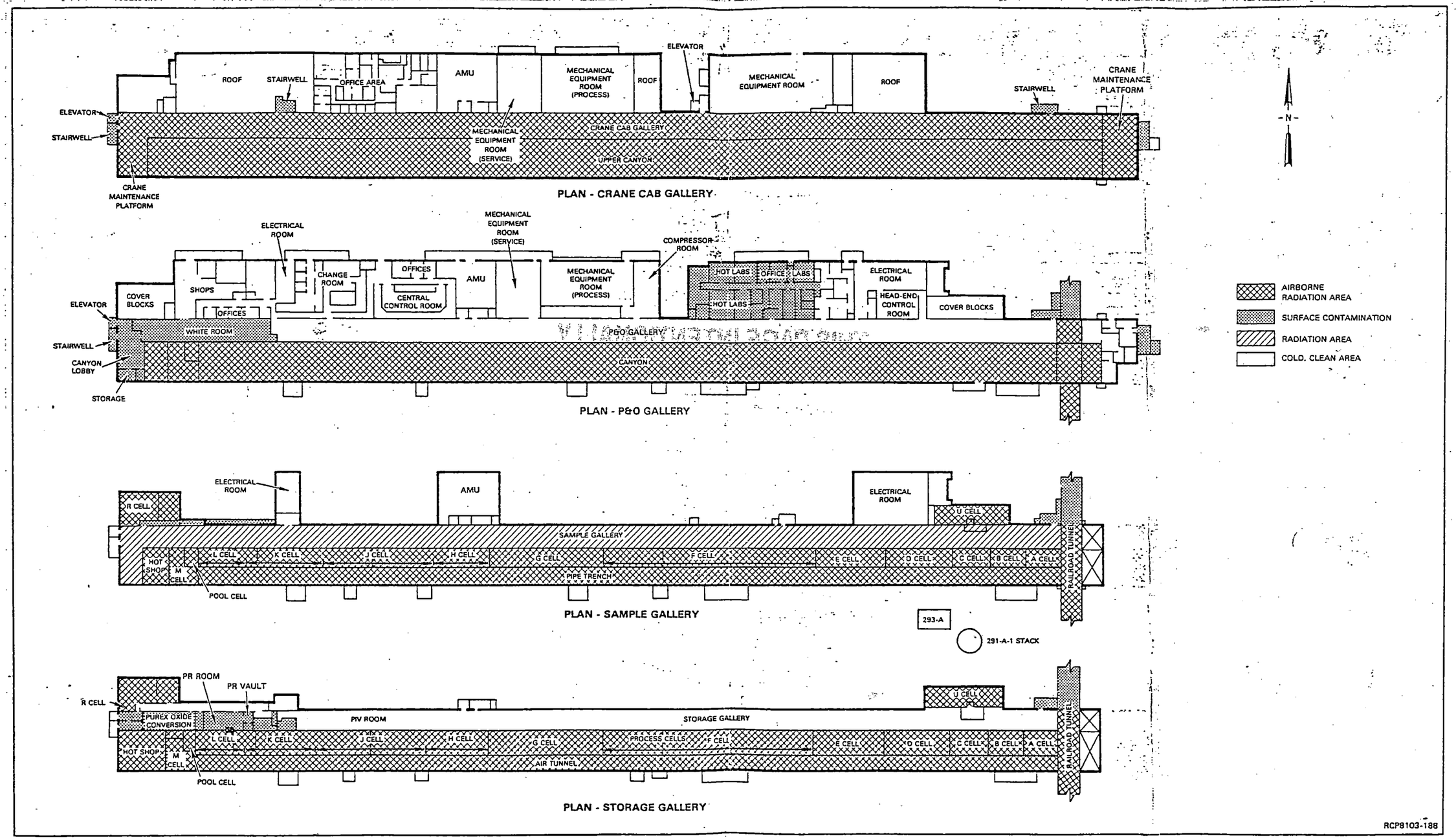


FIGURE 8-10. PUREX Building Radiation and Clean Areas.

THIS PAGE INTENTIONALLY
LEFT BLANK

This page intentionally left blank.

THIS PAGE INTENTIONALLY
LEFT BLANK

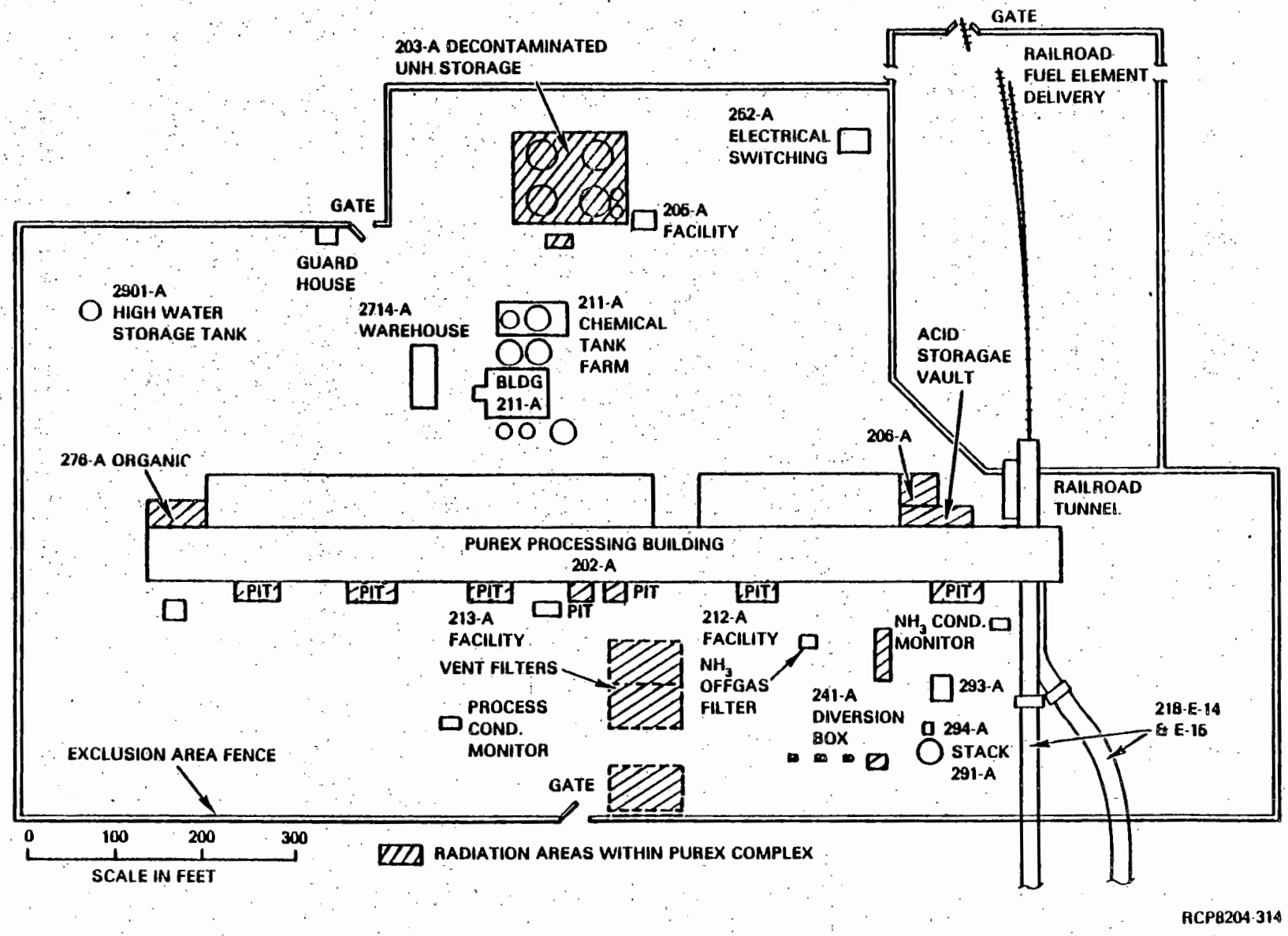


FIGURE 8-11. Radiation Areas Surrounding the PUREX Building.

9410219.0856

This page intentionally left blank.

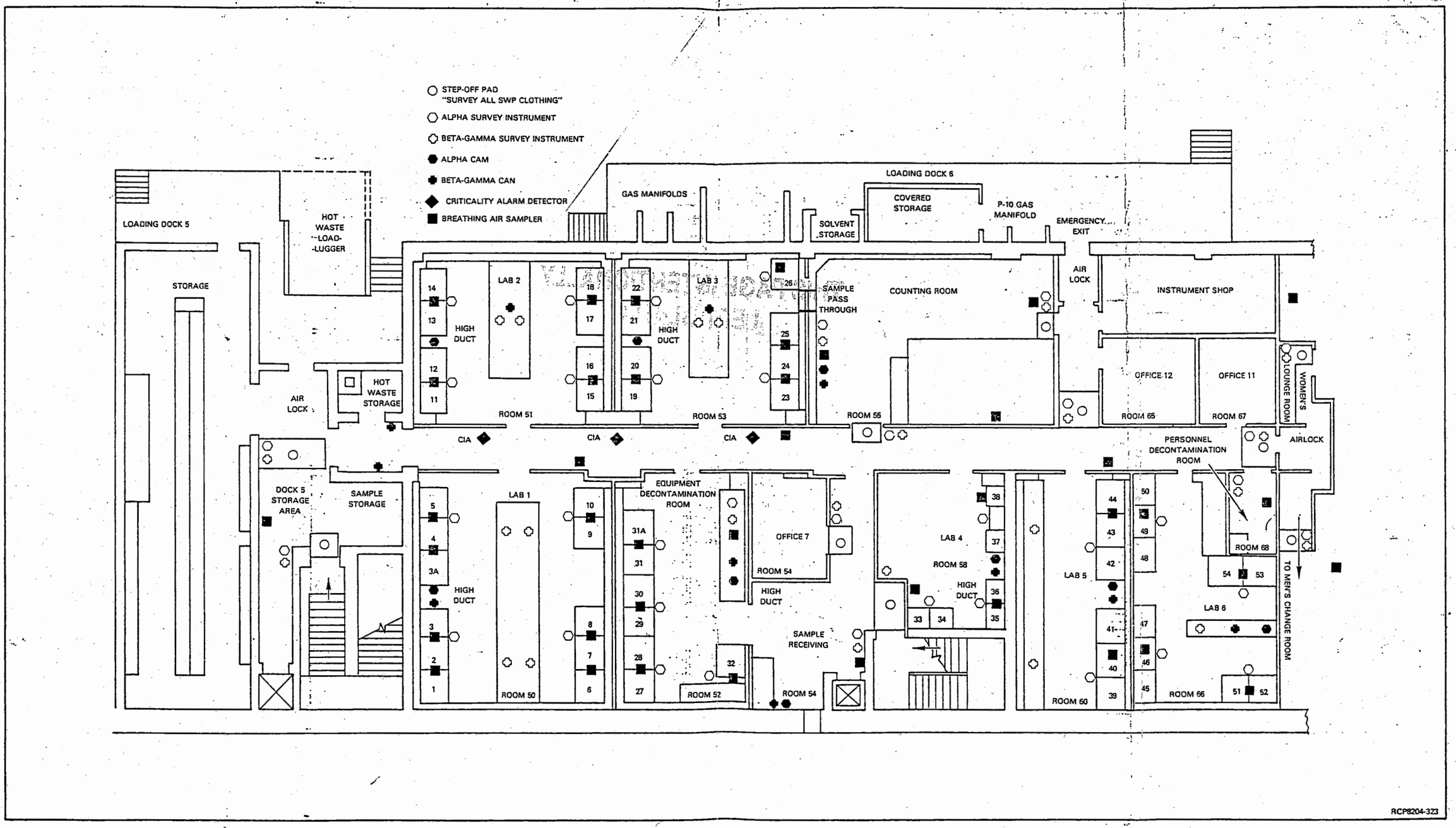


FIGURE 8-12. PUREX Laboratory Radiation Monitoring Locations and Instruments.

THIS PAGE INTENTIONALLY
LEFT BLANK

9413219.0859

This page intentionally left blank.

THIS PAGE INTENTIONALLY
LEFT BLANK

- The principal shielding elements in the 202-A building are concrete walls and roof. For economy of design and construction, the thickness of any continuous wall is constant. The thickness is that required to give protection from the radiation source of maximum intensity shielded by the wall.

- The canyon roof is 1 ft thick and reduces the radiation level resulting from sky shine to a maximum of 1.0 mR/h at ground level.

- Concrete cover blocks from the process cells, the "hot" pipe trench, the decontamination cell, and the pool cell are designed to limit the radiation level on the canyon deck to 100 mR/h. Thus, in the absence of any radioactive materials above the deck level, access to the canyon is permitted if the covers are in place.

- The concrete sidewalls of the railroad tunnel, within the canyon area, are 4 ft thick. The sidewalls limit the radiation level on the tunnel floor to 12 mR/h when cell covers are in place. The 8 ft water depth over the loaded slug buckets in the storage basin reduces the radiation level at the surface to 100 mR/h.

- In the PUREX Plant, piping through concrete shields is run with an offset bend of at least five diameters in the shield. Likewise, radiation could escape through the resulting crack if the joint between a cell cover block and a cell wall were a straight line. In the PUREX Plant, radiation through such a joint is attenuated by maintaining close clearances and fabricating steps in the joint such that no straight-line crack passes more than one-third of the distance through the shield.

  For openings such as doorways, labyrinths are frequently constructed in the shielding material to attenuate radiation. A labyrinth provides a path through the shield, which includes sufficient right-angle turns to scatter any radiation entering the opening to below accetable exposure limits level. In addition, the labyrinth is constructed with walls of a thickness sufficient to cause any straight-line radiation to pass through the normal shield thickness.

8.3.2.2 Shielding of Fuel Element. The cask cars, casks, and canisters used to ship the fuel elements from N Reactor to the PUREX Plant are described in Section 6.3.2. Dose rate analysis at maximum contact point (at the side of the car) follows for Mark IV and IA fuels after 180 d of cooling.

| Source | mR/h |
|---|---|
| Mark IV | 40 |
| Mark IA | 80 |

Personnel exposure from the casks is minimal due to POP and administrative controls.



9413219.0859

8.3.2.3 Shielding of Process Streams. See Figure 1-4 for a cross-sectional view of the canyon. There are no galleries or rooms on the south side of the canyon building that have personnel access. The outside of the building on the south side has 5.5 ft of concrete shielding from the hot pipe trench and a total of 8 ft of concrete shielding from the process vessels. The galleries adjacent to the process cells on the north are shielded by at least 6.0 ft of concrete. The galleries can be considered occupied areas. The original shielding calculation for the north walls was done under the assumption that the processed fuel had been exposed to 600 MWd/ton for 40 d and cooled for 90 d. Table 8-4 lists the results of the original shielding calculations for the hottest process vessels. The tabulated values are for points which are 8 ft from the equipment piece, in the case of tanks, or 12 ft from the equipment piece, in the case of columns. Each of these dimensions about equals the effective distance from the radiation source to the outside of the shielding wall. Therefore, the attenuation factor for that source is only that required of the mass of the shield and is not a function of distance (maximum permissible radiation intensity is 0.1 mR/h).

9413219.0860

TABLE 8-4. Design Basis Radiation Source Strengths.

| Source | Approximate[a] intensity, R/h | Approximate attenuation factor required[b] |
|---|---|---|
| 1WW receiver (TK-F26) | 45,000 | $5 \times 10^8$ |
| HAF tank (TK-H1) | 7,200 | $8 \times 10^7$ |
| HA column (T-H2) | 2,700 | $3 \times 10^7$ |
| 1BXF pump gank (TK-J3) | 0.02 | $2 \times 10^2$ |
| 2UC receiver (TK-K5) | 0.0007 | 7 |

[a]Fuel exposure of 600 MWd/ton over 40 d and cooled for 90 d.

[b]Attenuation factor required to reduce maximum radiation intensity to 0.1 mR/h.

Because of the different types of fuel elements, radiation intensities through the concrete wall have been recalculated using the ISOSHLD code with the RIBD code as a subroutine. The ISOSHLD code is a general-purpose shielding analysis code. The RIBD code is used to calculate the FP inventory. The calculations were done for a load of Mark IV and Mark 1A fuel irradiated to 4,000 MWd/ton at 13.2 MW/ton and 15.7 MW/ton, respectively. The calculations were done for the 6-ft concrete wall. The results, presented in Table 8-5, indicate that the north wall of the process cells provides adequate shielding to the personnel in the galleries.

The roof of the canyon is 1 ft thick. It shields against sky shine resulting from the process stream. The thickness was calculated to reduce the radiation level resulting from sky shine to a maximum of 1 mR/h at ground level.

TABLE 8-5. Maximum Gamma Radiation Intensities through 6 ft Shielding Walls (mR/h).*

| Source | 45-d cooling | 180-d cooling | 1-yr cooling | 2-yr cooling | 4-yr cooling |
|---|---|---|---|---|---|
| 1WW receiver (TK-F15) | $1.0 \times 10^{-1}$ | $8.4 \times 10^{-3}$ | $5.x \times 10^{-3}$ | $2.3 \times 10^{-3}$ | $4.0 \times 10^{-4}$ |
| 1WW receiver (TK-F26) | $7.9 \times 10^{-2}$ | $6.9 \times 10^{-3}$ | $4.3 \times 10^{-3}$ | $1.8 \times 10^{-3}$ | $3.2 \times 10^{-4}$ |
| HAF tank (TK-H1) | $2.9 \times 10^{-2}$ | $2.5 \times 10^{-3}$ | $1.6 \times 10^{-3}$ | $6.5 \times 10^{-4}$ | $1.2 \times 10^{-4}$ |
| HA column | $9.4 \times 10^{-5}$ | $8.0 \times 10^{-5}$ | $5.1 \times 10^{-5}$ | $2.2 \times 10^{-5}$ | $3.9 \times 10^{-6}$ |
| 1BXF pump tank (TK-J3) | $2.7 \times 10^{-6}$ | $2.3 \times 10^{-7}$ | $1.5 \times 10^{-7}$ | $6.2 \times 10^{-8}$ | $1.1 \times 10^{-8}$ |
| 2EU receiver (TK-K5) | $3.3 \times 10^{-9}$ | $2.8 \times 10^{-10}$ | $1.8 \times 10^{-10}$ | $7.5 \times 10^{-11}$ | $1.3 \times 10^{-11}$ |

*Fuel exposure of 4,000 MWd/ton for Mark IV and Mark IA fuel irradiated at 13.2 MW/ton and 15.7 MW/ton, respectively.

8.3.2.4 Shielding of Plutonium Product. The plutonium oxide production facility in N cell will utilize a combination of fixed and movable shielding on the gloveboxes and shielding walls and windows around the control room. The shielding has been designed to reduce exposure of personnel to ionizing (particularly neutron) radiation to such a level that the workers will not receive doses in excess of 1 rem/yr. Tables 8-6 and 8-7 show the results of the shielding analysis for plutonium nitrate and plutonium oxide.

TABLE 8-6. Maximum Radiation[a] Intensities of Plutonium Nitrate Through Tank and Glovebox Shielding (100-d cooling).[b](20)

| Source (tank) | mrem/h |
|---|---|
| N3 | 18 |
| N5 | 18 |
| N6 | 18 |

[a]Design basis is 12% $^{240}Pu$ and 1.7% $^{241}Pu$.

[b]A 1-in. Benelex is used for the aqueous glovebox.

TABLE 8-7. Maximum Radiation[a] Intensities of Plutonium Oxide through Glovebox and Benelex Shielding (100-d cooling).[b](20)

| Source (glovebox) | mR/h |
|---|---|
| Reprocessing | 18 |
| Calciner (blender)[c] | 18 |

[a]Design basis is 12% $^{240}Pu$ and 1.7% $^{241}Pu$.

[b]A 2-in. Benelex is used for the shielding analysis for the reprocessing glovebox and a 1-in. Benelex is used for the calciner glovebox.

[c]Blender is used here for the analysis since it contains largest amount of $PuO_2$ (40 kg).

9413219.0862

### 8.3.3 Ventilation

8.3.3.1 Maintain Internal Exposure to As Low As Practicable. The ventilation systems are designed to ensure that normal working areas will be free of potentially contaminated air from special hazard zones. The four ventilation systems are described in Section 5.4.1. A schematic diagram of the 202-A building ventilation system is shown in Figure 8-13 (a detailed description of ventilation system 2, branch 3, which serves N cell is in Section 5.4.1.3). This is possible because of the following design features.

- There are four ventilation systems. Flow between the systems occurs only at doors or air locks. Some cross-flow can occur in elevator and dumbwaiter shafts but the quantity is small. All penetrations between ventilation zones are required to be sealed for contamination control as well as ventilation control. Differential pressure (DP) between systems is set such that flow is always from lower to higher potential for contamination.

- The ventilation system of the PUREX plutonium oxide production facility is a branch of ventilation system 2. However, the entrance to the working area is through an air lock and the exhausts of the facility are passed through separate high efficiency particulate air (HEPA) filters before being mixed with the exhaust of ventilation system 2. Also, the ventilation

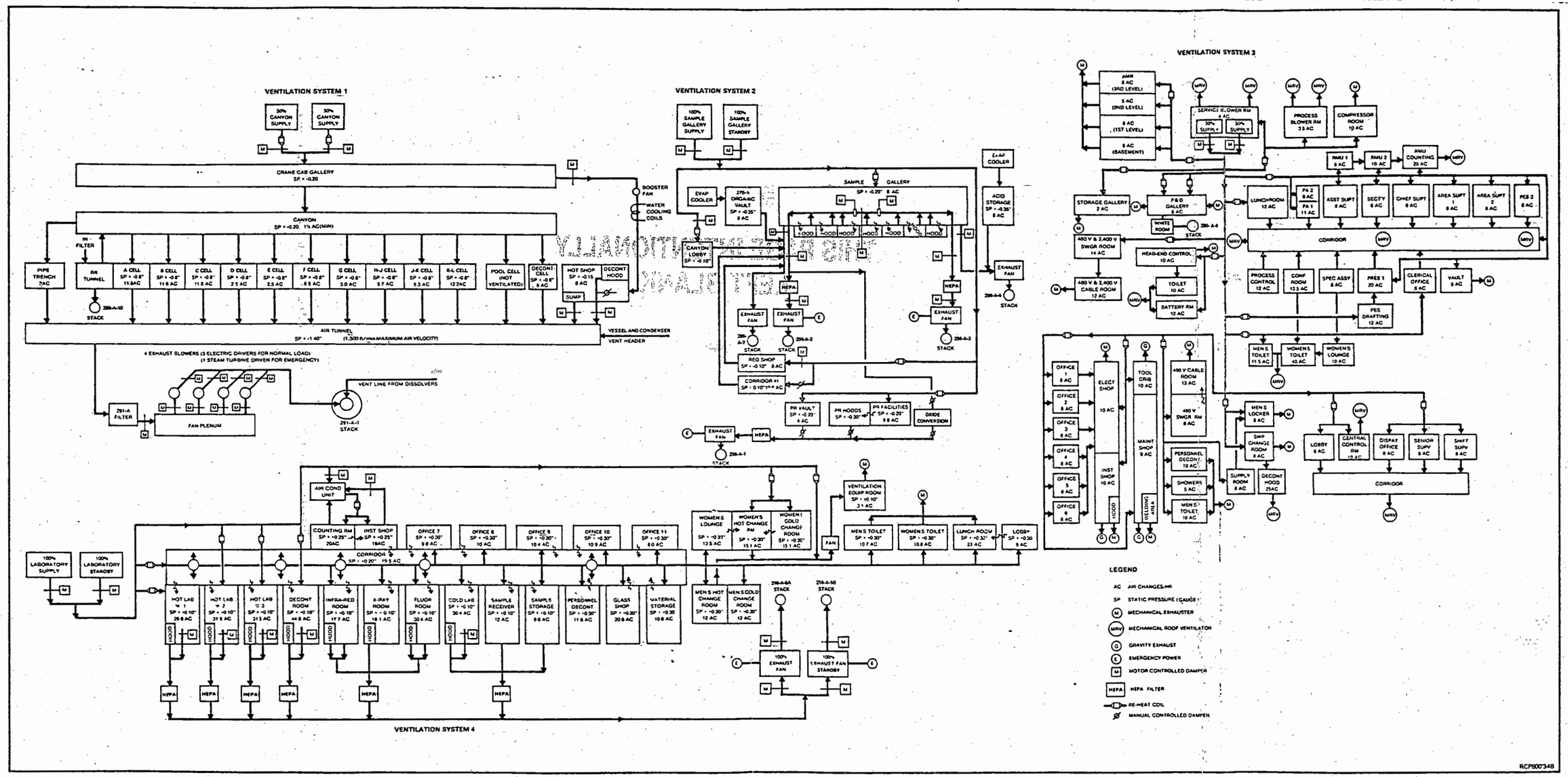


FIGURE 8-13. Ventilation Flow Diagram and Pressure Map.

THIS PAGE INTENTIONALLY
LEFT BLANK

9413219.0864

This page intentionally left blank.

THIS PAGE INTENTIONALLY
LEFT BLANK

system of this facility has been broken down into two branches: one for the working area and the other for the gloveboxes. The DP prevents airflow from the gloveboxes to the working area and single-stage HEPA filters protect against contamination in the event backflow were to occur.

- The inlet and outlet of the process ventilation system are in line with the prevailing wind direction. The outlet is downwind from the inlet.

- Filtered gaseous effluents from the process vessel and cells are discharged from the 291-A-1 stack at a height of 200 ft and in concentrations near the values given in Reference 3. The distance between the stack and the building ventilation inlet is about 425 ft. Under fumigation conditions, the atmospheric dispersion factor, X/Q, is 1.0 x 10-3 s/m3.(17) Since the flow rate is close to 60 $m^3/s$, the minimum dilution factor under fumigation conditions is at least 20. Even under this unlikely atmospheric condition, the concentration at the inlet due to exhausted radioactivity would be close to or less than the guidelines of Reference 3.

- In all four ventilation systems, airflow is always from clean to contaminated areas.

- With one exception, all four systems are designed to have once-through flow; recirculation of air is provided in the laboratory counting room for energy conservation purposes.

- Normal working areas have more than three air changes per hour, but specific areas where radionuclides may be present may have up to 45 air changes per hour (see Fig. 8-13).

8.3.3.2 Prevent Spread of Radioactivity in Normal Plant Operation. With the above exception, all ventilation systems are designed to have once-through flow only. Recirculation is avoided. Direction of flow is maintained by static pressure controls. The process vessel, the biggest source of gaseous radioactivity, is contained in an area that is negative in pressure relative to the normal working areas. The sampler and hoods in the sample gallery, potential sources of gaseous radioactivity for the working areas, have independent exhaust systems (see Section 5.4.1.2.1). All air from radioactive areas (see Fig. 8-10) is passed through filters before release to the atmosphere.

8.3.3.3 Minimize Spread of Radioactivity during Abnormal Operation or Under Accident Conditions. The design features of ventilation system 1 make operation possible during the abnormal conditions detailed in Section 5.4.1.1.5. Pressure-sensing instrumentation, in conjunction with a backup, steam-driven fan, maintains a static pressure gradient within the system under abnormal operating conditions. During loss of offsite electrical power, the backup, steam-driven fan would maintain a slightly negative pressure in the process cells and in the canyon sufficient to ensure any gaseous effluent passes through the deep-bed filters.



9413219.0965

The design features of ventilation system 2 that make it possible to operate under abnormal operating conditions are detailed in Section 5.4.1.2.4. Each working area receives ventilation air from the supply fans and discharges this air through the ventilation system plenum. The system is so designed that no working area is downstream from another working area where airborne radioactivity is possible. The sampler and hoods of the areas serviced by ventilation system 2 are designed so that there is always a barrier between the radioactive material and both the personnel and the work area.

Ventilation system 3 ventilates the PUREX annex, P&O gallery, and storage gallery. These areas do not contain radiological hazards during normal operation. However, the P&O gallery and the storage gallery have both experienced contamination from past abnormal events. A system of damper control and increased exhaust capacity has been provided at the west end of the P&O gallery (white room) which will exhaust P&O gallery ventilation through HEPA filters upon a signal from area CAM units monitoring the exhausters on the north wall (the white room exhaust is continuously vented through HEPA filters). The potential contamination in the storage gallery is a slow migration of contaminated liquid from a process cell whose sump had been allowed to overflow. No special provisions in the ventilation system are required because of the low potential for significant airborne contamination, and adequate time for discovery and corrective action.

The design features of ventilation system 4 that make it possible to operate under abnormal conditions are detailed in Section 5.4.1.4.4. Static pressure zones are maintained so that air always flows from clean to contaminated areas. Pressure-sensing devices activate standby power supplies that maintain the static pressure gradient.

8.3.3.4 Control Contamination between Areas. The ventilation system consists of four components which provide control within each area and between areas (see drawing H-2-74353 for air lock locations). The maintenance of static pressure gradient also prevents flow of gaseous radioactivity from contaminated to clean areas. Cross-flow between areas is possible through doors. Where there is a substantial pressure gradient, or a need to isolate one area from another for contamination control, the door is replaced by an air lock. Air locks are used as a neutral control area between ventilation zones for the purpose of maintaining ventilation balance when traversing between such zones. Doors are always kept closed when not used to ensure proper ventilation flow.

8.3.3.5 Control Air Contamination When Personnel Access Doors or Cell Coverblocks are Opened. Whenever a cover block is removed from one of the remote process cells in the canyon, the system is designed so that an additional 1,133 $m^3$/min of air will be exhausted through that particular cell. The static pressure gradient for ventilation system 1 (see Table 5.5) can be maintained at an acceptable level with up to three cover blocks removed from process cells.

9413219.0866

Access to the cranes and the crane maintenance facilities is through air locks and doors electrically controlled from the dispatcher's office.

The samplers and hoods in the sample gallery are designed so that there is always an airflow from the working area into the sample station or hood. This airflow is a barrier to contamination from the sample station or hood.

Access to the laboratory (ventilation system 4) is through air locks and check stations.

8.3.3.6 Interface with Process Offgases. Most process offgases discharge into ventilation system 1 in the air tunnel between the canyon and the filters for ventilation system 1. The pressure in the tunnel is kept below the pressure in the process cells and the canyon. The DOG are treated prior to discharge to the main stack. The ammonia offgas is treated in a separate system (291-AD).

8.3.3.7 Limit the Spread of Radioactivity within the Ventilation System. The four-component ventilation system is an important feature that contributes to limiting the spread of radioactivity within the ventilation system (Section 5.4.1). For ventilation systems 2 and 4, the distance between the working area where there is the possibility of radioactive releases and the HEPA filters is short. Redundant HEPA filters have been installed in Q cell to prevent spread of radioactivity (Section 5.4.1.2.1). In the event that the glass-fiber filters in ventilation system 1 become clogged, it is possible to reroute the exhaust airflow through a standby unit consisting of two banks of forefilters and three banks of HEPA afterfilters (Sections 5.4.1.1.1 and 7.4.1.1). The exhaust from the PR room, Q cell, and the N cell gloveboxes also has two HEPA filtration branches in parallel, so that one can be operated independently of the other (Section 5.4.1.2.1). Each branch has two stages of HEPA filtration.

8.3.3.8 Provide for Power Outages. The distribution of electrical power and the system for preventing power outages have been described in Section 5.4.2. The features of ventilation system 1 that cope with power outages are described in Section 5.4.1.1.5. Ventilation system 2 is connected to the standby power system. Ventilation system 3 is connected to the standby power and stack 296-A8 is continuously monitored. Ventilation system 4 is connected to the standby power supply.

8.3.3.9 Limit Radioactivity in the Stack Effluent. Air from potentially contaminated or contaminated areas is exhausted through HEPA filters or glass-fiber filters. With the exceptions that all the P&O gallery air is only filtered upon CAM alarm and the storage gallery air is not filtered (as discussed in Section 8.3.3.3), all filter systems have an in-place particulate removal efficiency test before initial startup, after each filter change, and annually thereafter. Stacks 296-A-6, -7, -10 and -14 are sampled on a weekly basis.

### 8.3.4 Area Radiation, Airborne Radioactivity and Criticality Monitoring Instrumentation

The locations of all devices monitoring radioactivity in the PUREX Plant are shown in Figures 8-1, 8-14, and 8-15. The movement, transportation, and storage of all special nuclear material is limited to areas covered by these monitors. There will be administrative procedures to prevent significant quantities of fissile material from being transported to nondesignated areas.

The five monitoring devices are alpha and beta/gamma CAM, criticality monitors, criticality dosimeters, gamma radiation monitors, and record air samplers. All monitoring devices, with the exception of the criticality dosimeter, require electrical power supplied from the PUREX alternating current (a.c.), 60-Hz line voltage. The power supply for the instruments is connected to the standby power supply, discussed in Section 5.4.2.2.

8.3.4.1 Alpha and Beta/Gamma Continuous Air Monitors. The CAMs currently installed in the PUREX Plant consist of commercially available detectors. Vacuum supply for CAMs is maintained by a central vacuum system or portable vacuum pumps. These CAM units will be installed according to standards.(17-19) A summary of these criteria follows.

- A CAM and a passive air sampler are installed at each exhaust point in work areas with a potential for airborne radioactivity. Additionally one "breathing zone" air sampler for each 20 $ft^2$ of open-face hoods or gloveboxes is installed.

- A vacuum system provides: 0.06 $m^3$/min for each CAM, 0.04 $m^3$/min for each air sampler, an additional 15% for a reserve capacity, and two pumps of full capacity to permit uninterrupted air sampling while one pump is being repaired or serviced. The units have the following characteristics:

  - Detector

    Alpha radiation CAM (has a single-channel pulse height analyzer); silicon-diffused junction type (cleanable) with 0.75 $in.^2$ area; beta/gamma radiation CAM; pancake-type Geiger tube with an active diameter of about 1.7 in. and a density thickness of 0.2 to 0.3 mg/$in.^2$

  - Filter

    The 47-mm round filter is continuously monitored by the detector

  - Radon/Thoron Background

    Alpha radiation CAM have a subtraction circuit to eliminate interference from radon/thoron background

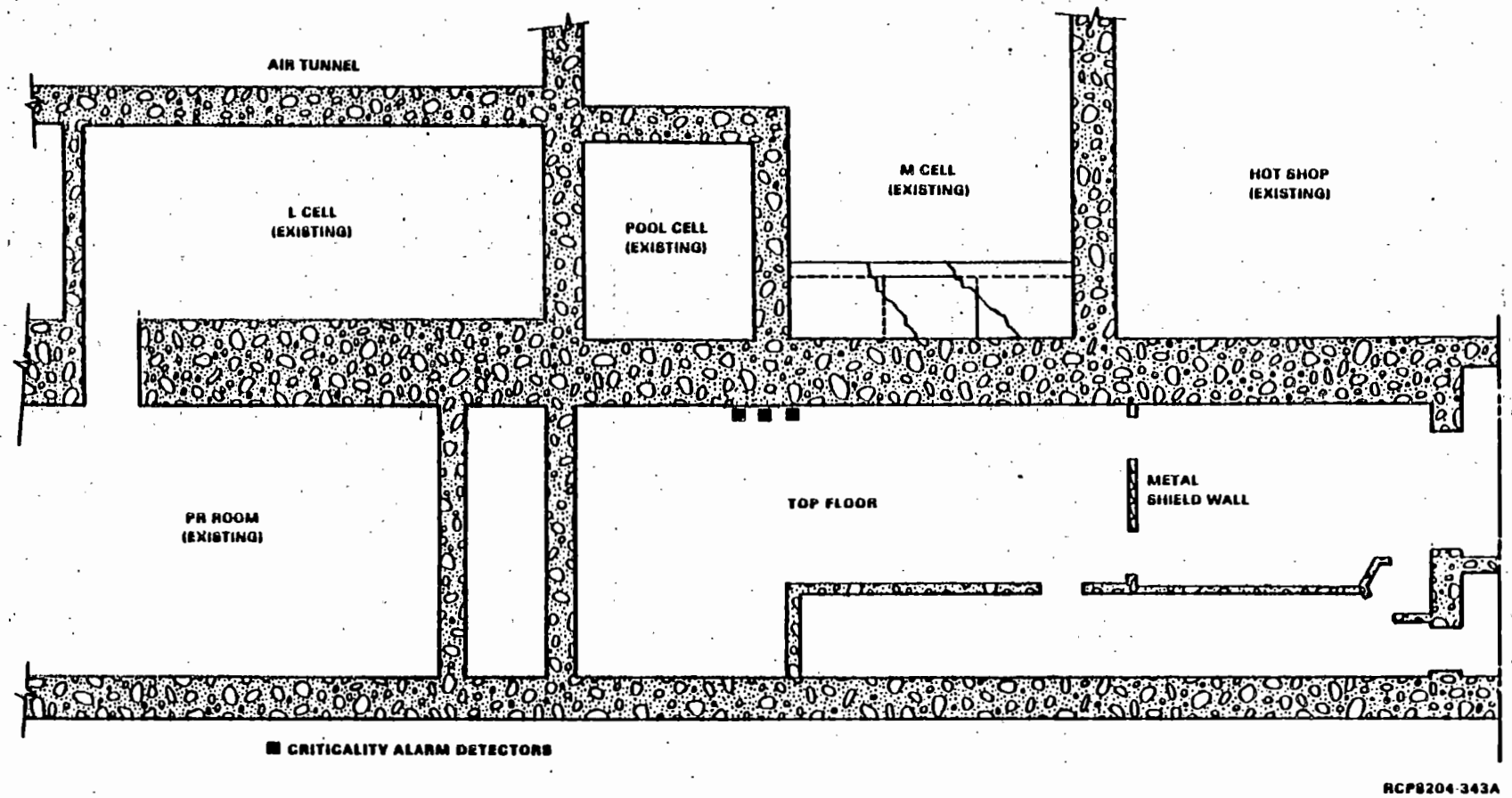


FIGURE 8-14. Criticality Alarm Detector Layout for the PUREX Plutonium Oxide Production Facility. (Sheet 1 of 2)

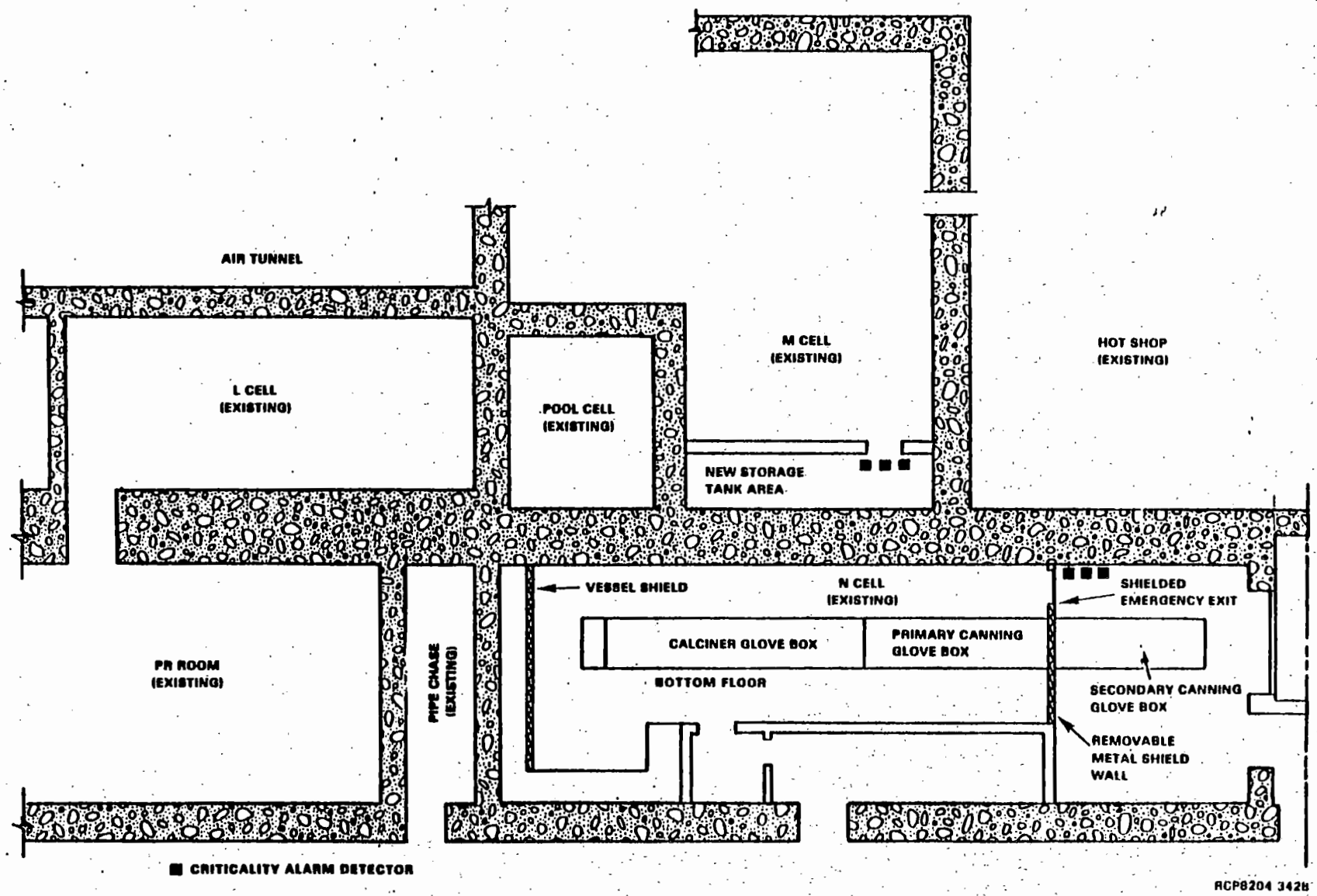


FIGURE 8-14. Criticality Alarm Detector Layout for the PUREX Plutonium Oxide Production Facility. (Sheet 2 of 2)

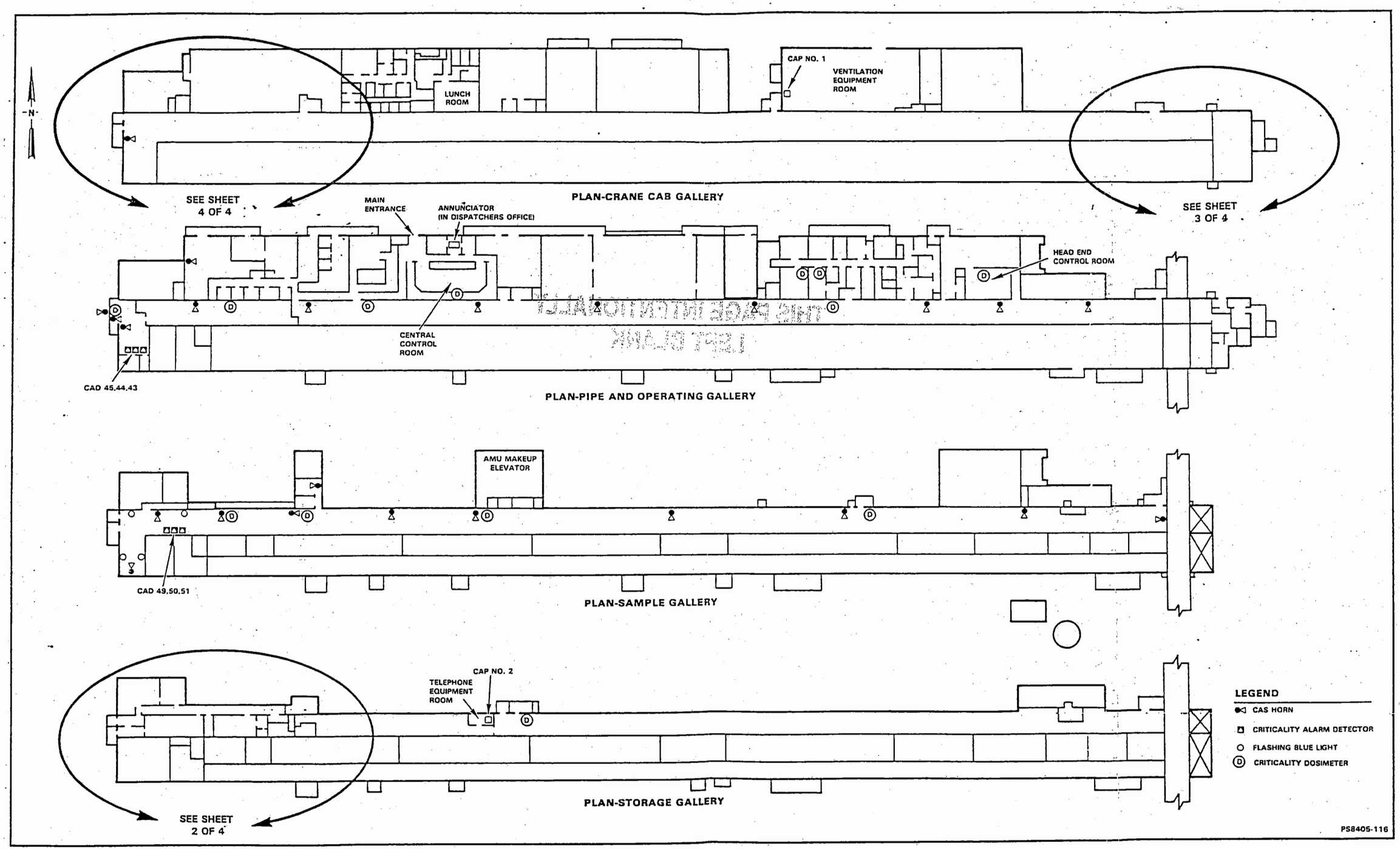


FIGURE 8-15. Criticality Alarm Horns, Alarms, and Dosimeter Locations at the PUREX Plant. (Sheet 1 of 4)

THIS PAGE INTENTIONALLY
LEFT BLANK

9413219.0872

This page intentionally left blank.

THIS PAGE INTENTIONALLY
LEFT BLANK

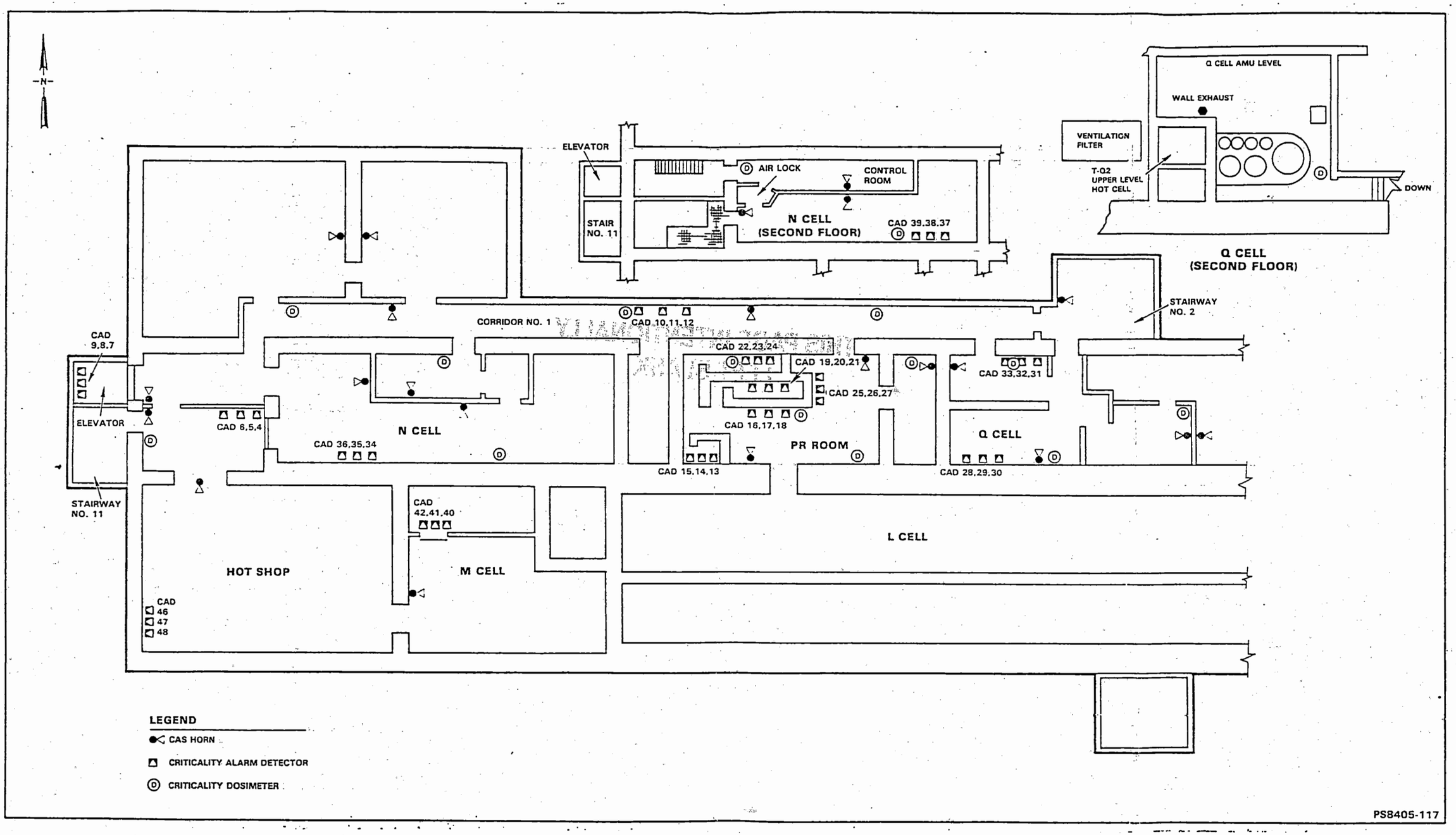


FIGURE 8-15. Criticality Alarm Horns, Alarms, and Dosimeter Locations at the PUREX Plant. (Sheet 2 of 4)

THIS PAGE INTENTIONALLY
LEFT BLANK

9413219.0874

This page intentionally left blank.

THIS PAGE INTENTIONALLY
LEFT BLANK

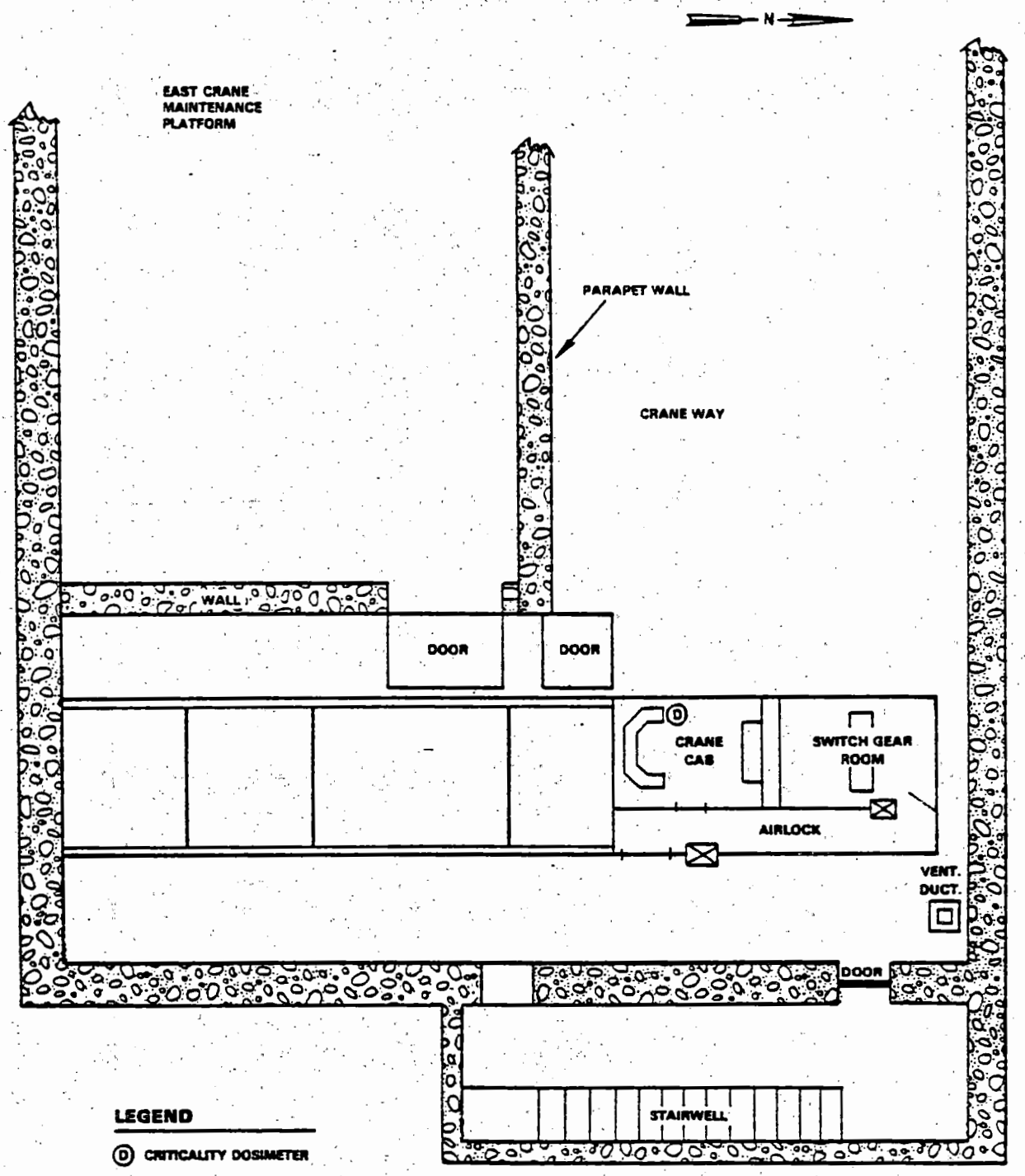


FIGURE 8-15. Criticality Alarm Horns, Alarms, and Dosimeter Locations at the PUREX Plant. (Sheet 3 of 4)

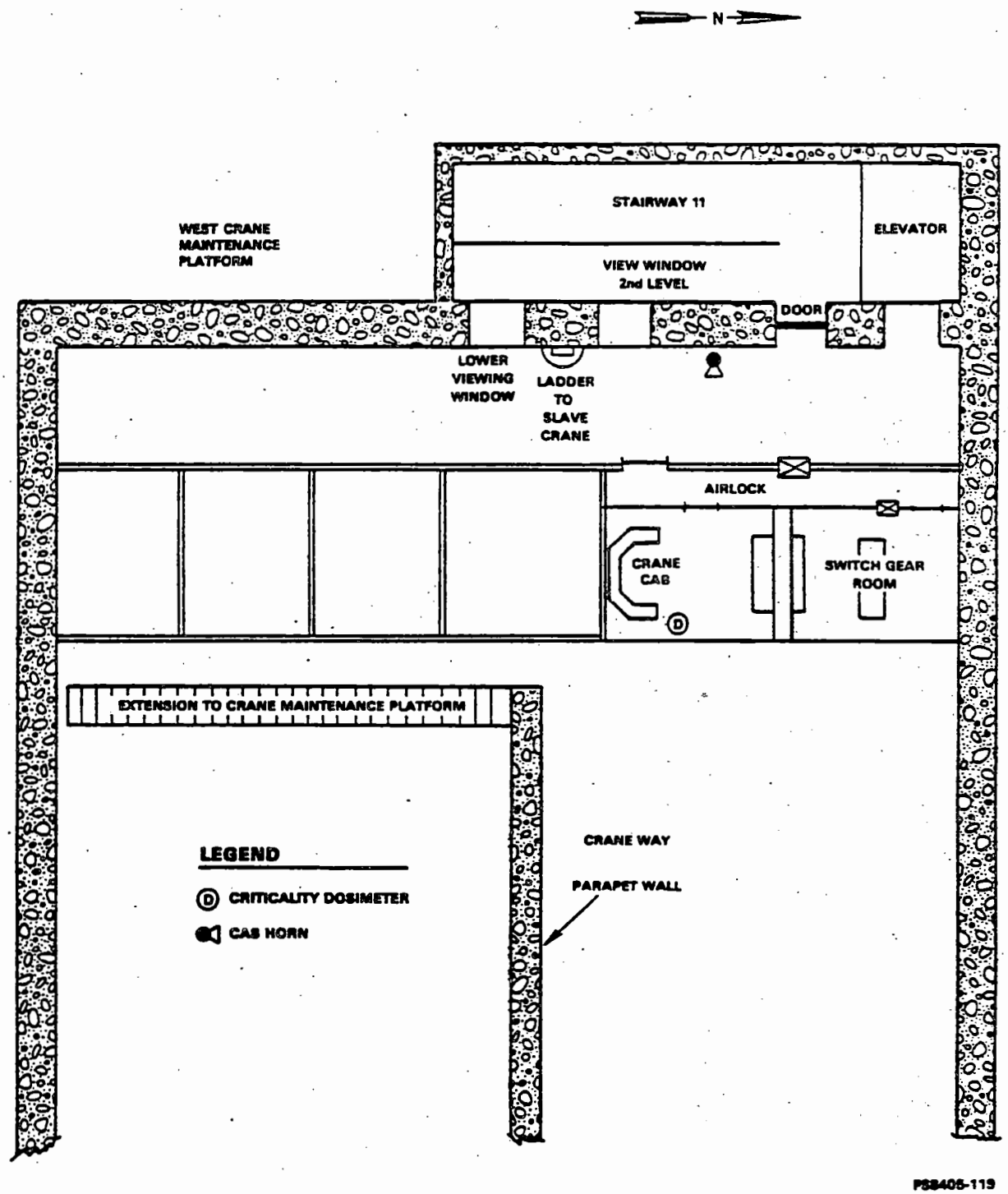


FIGURE 8-15. Criticality Alarm Horns, Alarms, and Dosimeter Locations at the PUREX Plant. (Sheet 4 of 4)

- Counting Efficiency

  Alpha radiation CAM; about 10% for pulse height analyzer setting used; usually 4.65 to 5.65 MeV for alpha from plutonium

- Readout

  Logarithmic readout of count rate from 1 to 10,000 counts/min on front panel strip-chart recorder

- Alarm

  Alarm point adjustable from 0 to 100% of full scale; a red, alarm, rotating beacon light and a bell are provided

- Failure Alarm

  Indicates absence of signal from detector

- Rotameter

  Dwyer type; measures airflow; airflow will be set at 2 standard $ft^3$/min

- Background Detector

  Beta/gamma radiation CAM units will have a second detector located inside a shield to detect gamma background for background subtraction

- Power Requirement

  117 V a.c., 60 Hz.

Before installation, the instruments were calibrated by Pacific Northwest Laboratory (PNL) and Rockwell instrumentation personnel. After installation, Radiation Monitoring will determine alarm settings and perform monthly source checks.

8.3.4.2 Criticality Alarm System. Criticality detectors and support equipment in the PUREX Plant comprise the criticality detection and alarm system. The system generally meets the requirements of Reference 14. The detectors are installed in all areas where the possibility of a criticality has been postulated except within shielded process cells.

The system includes 48 gamma radiation sensitive criticality alarm detectors (CAD), 48 criticality alarm detector modules (CADM), one criticality alarm relay module (CARM), one audible signal generator (ASG),



9413219.0877

46 evacuation signal horns, a storage battery and battery chargers, an annunciator system, and associated control circuitry. The system is described in Reference 21.

The CADs are located in sets of three each, so that three detectors are available to detect any criticality. The criteria for placement are found in Reference 22. The analyses conducted to determine adequacy of placement are documented in References 23 through 26. Placement of the detectors in the plutonium oxide production facility is illustrated in Figure 8-14. The placement of the detectors in Q cell, PR room, corridors 1 and 1-A, elevator shaft, hot shop, M cell, sample gallery, and P&O gallery is illustrated in Figure 8-15.

A CAD, as purchased from Nuclear Measurements Corporation, includes the following in a sealed, dust-and rain-tight cylindrical case:

- Organic, gamma sensitive scintillator
- Multiplier photo-tube
- Photo-tube current sensing circuitry coupled to a variable high-voltage supply
- A light source, brightness controlled from an associated CADM, for artificial background and testing purposes.

The circuitry is all solid state. The photo-tube high voltage reduces as the radiation intensity increases. The circuitry responds to millisecond radiation transients. Full output signal is maintained for extremely high radiation levels, e.g. 10,000 R/h.

The detectors are cabled to associated CADMs. These, along with the CALMs CARM, ASG, and other circuitry are located in an instrument cabinet in the PIV room in the storage gallery.

The CADMs associated with the detectors are also purchased from Nuclear Measurement Corp. They are packaged in double-width NIM modules.(27) These modules plug into bins in the instrument cabinet. The CADs and CADMs are purchased in accordance with specifications.(28) The CADMs have the following features:

- A front panel meter with a logarithmic range from 1.0 to 1,000 mR/h
- A high alarm relay which is energized in normal operating condition. It de-energizes when the detector is in a radiation field above the normal set point of 100 mR/h, causing an alarm signal output
- A failure alarm relay that is energized in normal operating condition with artificial background. It de-energizes when the meter reading drops below the failure trip setting, which will

occur for most causes of detector or module failure. This causes a failure signal output

- Calibration and alarm set point adjustment
- An artificial background control that controls the light source in the detector. This maintains a nominal reading on the meter above the failure trip setting
- Status indicating lamps.

The CADMs connect through operate-inhibit switches to CALMs. The CALMs provide logic circuitry so that two CADMs must be in alarm condition to initiate an evacuation signal alarm output. This feature reduces the probability of false alarms. The CALMs provide an alert output signal, however, for one CADM in alarm condition. The signals from the CALMs go through CARM. An evacuation signal output turns on an ASG, which generates an audio signal that is distributed to the alarm horns. This audio signal generates an "AH-OO-GAH" sound, which is the distinctive evacuation alarm sound. Personnel hearing that sound are required to evacuate the building immediately. The CALMs, CARM, and ASG are packaged in NIM modules which plug into a bin in the instrument cabinet. The alarm horns are located as shown in Figure 8-15. These horns are located in the portions of the building that require evacuation in event of criticality.

The entire system operates from a 24-V storage battery that is kept charged continuously by a battery charger from 115-V, 60-Hz power. The battery and charger are located alongside the instrument cabinet.

The following alarm signals are annunciated at the dispatcher's office:

- Evacuation signal (two or more CADMs in alarm condition)
- Alert (single CADM in alarm condition)
- Failure
- Loss of AC power and battery charger failure
- Inhibit (one or more detectors out of service for calibration or maintenance).

There are established procedures for action to be taken whenever any of these signals occur.

8.3.4.3 Criticality Dosimeter. The Hanford criticality dosimeter (Fig. 8-16) is used in the PUREX Plant to measure the neutron dose and spectral distribution from a criticality incident.(29) The ability to measure gamma dose is also provided by the use of lithium fluoride TLD in addition to the criticality dosimeters. Figure 8-15 provides the location of the dosimeters in the PUREX Plant.

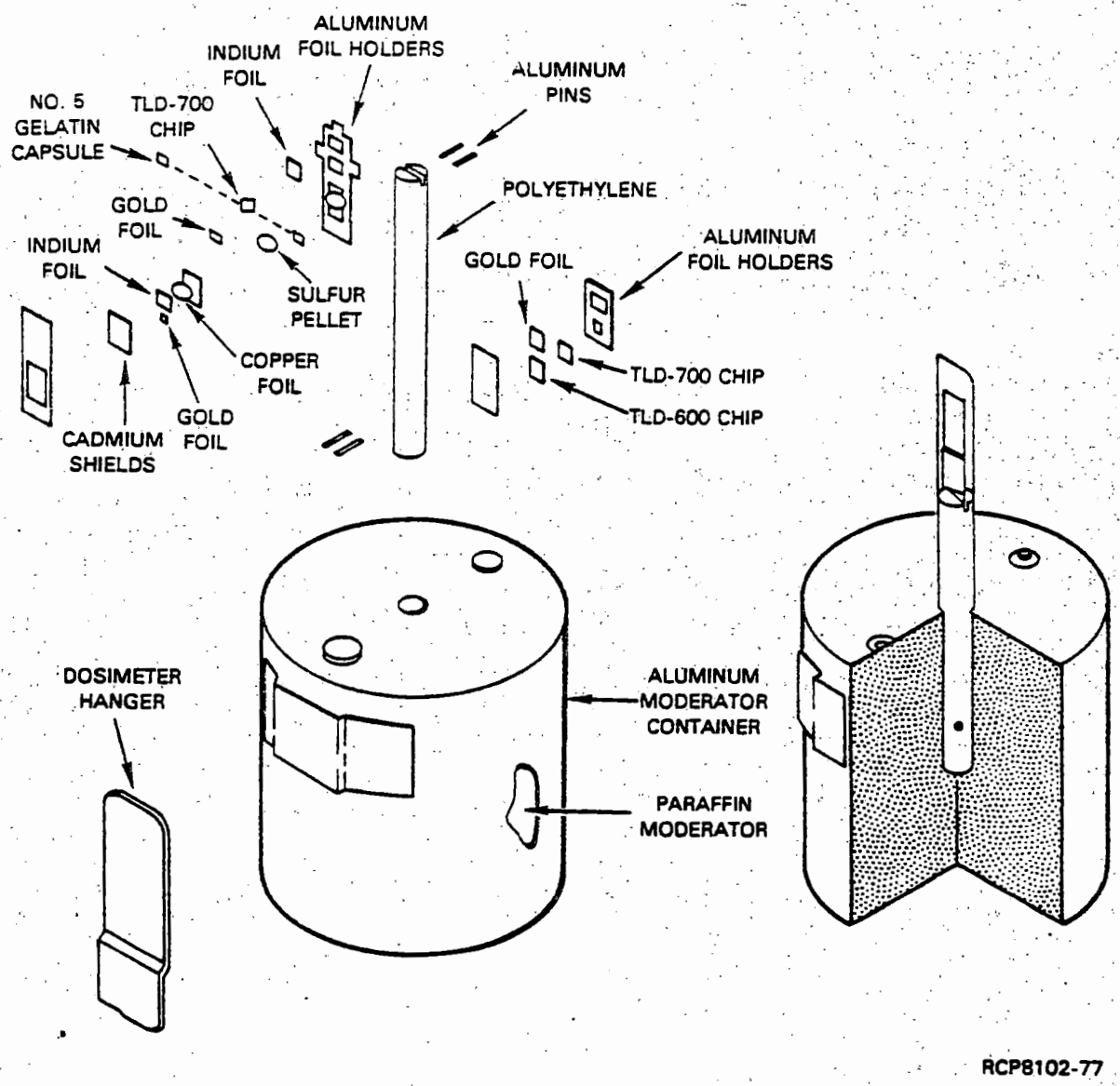


FIGURE 8-16. Hanford Criticality Dosimeter.

The neutron dose estimation is arrived at by activation analysis of gold and indium foil from the center of a paraffin moderator in the dosimeter. The uncertainty in the dose estimate for both gamma and neutron is 15% of the typically expected dose for a criticality incident.(30)

Located outside the moderator are five elements: indium, gold, copper, sulfur, and cadmium which, when subjected to neutron radiation, become radioactive by various neutron-induced processes. Analysis of the induced radioactivity of the elements results in a division of the neutron spectrum into five energy groups. Should an accident occur, the activation analysis would be performed by PNL.

The criteria for placement of the dosimeters are found in Reference 31.

8.3.4.4 Gamma Radiation Monitor. Large, cylindrical, air ionization chambers, about 24 in. long and 5 in. in diameter are located in fixed positions on the walls of the PUREX Plant. The devices, also known as radiation energy chambers, provide continuous radiation detection in work areas and are equipped with audible alarms that alert personnel to off normal conditions. The radiation energy chambers have been in operation since the PUREX Plant started reprocessing fuel in 1956. The recorders (necessary to record measurements) and amplifiers have been replaced for all chambers. The radiation energy chambers are described in Reference 9. Each chamber has an amplifier and a recorder. The recorders are located in the dispatcher's office. The chambers can be operated in three ranges: 3 mR/h, 30 mR/h, and 300 mR/h. For locations where virtually zero levels of radiation are anticipated, the chamber settings are operated on the lowest possible setting. The chambers are shown in Figure 8-16.

8.3.4.5 Record Air Sampler. Record air samplers are connected to the central vacuum system. The flow through the filter paper is routinely checked by Radiation Monitoring.(11) The filters are changed weekly and sent to the 222-S laboratory. The filters are counted for total alpha and total beta radiation. The results are documented and logged in a computer data bank; these printouts are used for review and evaluation. In addition to the record air samplers, there are additional air samplers that are routinely counted. All sampled locations are shown in Figures 8-1 through 8-9.

## 8.4 ESTIMATED MAN-REM ONSITE DOSE ASSESSMENT

The man-rem onsite dose assessment is based on past experience rather than on estimated occupancy factors and calculated radiation levels.

### 8.4.1 PUREX Staffing

The projected staffing when PUREX becomes operational is detailed in Chapter 10.0. The following summary of that data will be used for onsite dose assessment. The radiation zones these personnel will be routinely entering or occupying are described in Section 8.3.

| | |
|---|---|
| Production Operation | 166 |
| Process Engineering | 85 |
| Maintenance | 62 |
| Laboratory Personnel | 65 |
| Radiation Protection Technologists | 38* |
| Total | 416 |

### 8.4.2 Dosimetry Data

Exposure records for Radiation Protection Technologists (RPT), PUREX Plant radiation workers (laboratory, operations, and maintenance), and Z Plant workers for the years 1967 through 1972 were obtained from PNL and Rockwell radiation records. The mean skin dose and the mean whole body dose were calculated for each sample, which includes both supervisory and working personnel. Tables 8-8 and 8-9 present the mean skin dose, the range of the skin dose (highest and lowest value in the sample), the mean whole body dose, the range of the whole body dose (highest and lowest value in the sample), the collective skin dose, and the collective whole body dose of the various samples. The tables also include the standard deviation of the mean for the mean skin dose and the mean whole body dose. (All RPTs working in the 200 Areas are denoted with suffix 6740. The RPTs of PUREX were not a separate group and were often rotated to other locations.)

Dosimetry data for personnel involved with the new plutonium oxide production facility are expected to be similar to past data obtained from similar operations at Z Plant. The radiation records for 1967, 1968, and 1969 list chemical operators and power operators at Z Plant under the suffix 6920. The exposure records for 1969 through 1972 separate these two groups, giving suffix 6922 to chemical operators and suffix 6923 to power operators. This breakdown of the data shows that the chemical operators received the high exposure. Table 8-10 shows that the chemical operators received substantial neutron doses. The new gloveboxes to be installed will be shielded to reduce the PUREX radiation workers' average exposure. plutonium oxide production facility workers are not expected to receive greater than 0.9 rem/yr, average dose.

*Includes five Safety and Quality Assurance Engineers.

TABLE 8-8. Dosimetry Data for Employees.

| Location | Year | Number of employees | Mean skin dose ± σ* (rem) | Range of skin dose (rem) | Mean whole body dose ± σ* (rem) | Range of whole body dose (rem) | Collective skin dose (man-rem) | Collective whole body dose (man-rem) |
|---|---|---|---|---|---|---|---|---|
| PUREX analytical laboratory subsection (suffix 6720) | 1967 | 40 | 1.21 ± 0.15 | 3.6 - 0.1 | 0.82 ± 0.08 | 1.9 - 0.1 | 48.3 | 32.7 |
| | 1968 | 46 | 1.78 ± 0.16 | 3.7 - 0.1 | 1.19 ± 0.11 | 2.7 - 0.0 | 81.7 | 54.9 |
| | 1969 | 44 | 1.58 ± 0.18 | 5.1 - 0.1 | 0.86 ± 0.11 | 2.7 - 0.0 | 69.3 | 37.7 |
| | 1970 | 45 | 0.78 ± 0.09 | 2.3 - 0.0 | 0.40 ± 0.04 | 1.2 - 0.0 | 35.2 | 17.8 |
| | 1971 | 72 | 2.10 ± 0.19 | 8.8 - 0.0 | 1.05 ± 0.09 | 2.9 - 0.0 | 151.5 | 75.8 |
| | 1972 | 53 | 1.33 ± 0.09 | 2.9 - 0.1 | 1.10 ± 0.08 | 2.6 - 0.1 | 70.6 | 58.1 |
| Radiation Monitoring subsection (suffix 6740) | 1967 | 79 | 1.91 ± 0.17 | 7.1 - 0.0 | 1.01 ± 0.07 | 2.6 - 0.0 | 150.7 | 79.9 |
| | 1968 | 69 | 1.93 ± 0.13 | 4.7 - 0.1 | 0.99 ± 0.05 | 2.0 - 0.0 | 133.5 | 68.3 |
| | 1969 | 69 | 1.98 ± 0.13 | 4.6 - 0.0 | 1.03 ± 0.07 | 2.5 - 0.0 | 136.4 | 71.1 |
| | 1970 | 72 | 1.75 ± 0.11 | 3.8 - 0.0 | 0.90 ± 0.06 | 3.4 - 0.0 | 126.2 | 64.9 |
| | 1971 | 77 | 1.77 ± 0.11 | 4.5 - 0.1 | 0.97 ± 0.06 | 3.1 - 0.0 | 136.4 | 74.8 |
| | 1972 | 67 | 1.55 ± 0.09 | 3.5 - 0.1 | 1.26 ± 0.08 | 2.9 - 0.1 | 103.8 | 84.4 |
| PUREX Operations subsection (suffix 6820) | 1967 | 109 | 0.61 ± 0.07 | 5.3 - 0.0 | 0.32 ± 0.02 | 1.4 - 0.0 | 66.6 | 34.9 |
| | 1968 | 109 | 1.02 ± 0.07 | 3.5 - 0.1 | 0.31 ± 0.03 | 1.0 - 0.0 | 111.1 | 34.3 |
| | 1969 | 108 | 0.75 ± 0.06 | 3.1 - 0.0 | 0.24 ± 0.03 | 1.8 - 0.0 | 80.9 | 25.6 |
| | 1970 | 114 | 0.55 ± 0.05 | 2.6 - 0.0 | 0.23 ± 0.02 | 1.3 - 0.0 | 62.4 | 26.1 |
| | 1971 | 103 | 0.57 ± 0.04 | 1.9 - 0.0 | 0.23 ± 0.02 | 1.1 - 0.0 | 58.9 | 23.6 |
| | 1972 | 36 | 0.52 ± 0.06 | 1.2 - 0.1 | 0.36 ± 0.04 | 0.9 - 0.0 | 18.8 | 13.1 |
| Maintenance subsection (suffix 6850) | 1967 | 56 | 1.15 ± 0.16 | 5.0 - 0.0 | 0.35 ± 0.04 | 1.1 - 0.0 | 65.8 | 19.5 |
| | 1968 | 55 | 0.95 ± 0.11 | 3.6 - 0.1 | 0.25 ± 0.03 | 1.2 - 0.0 | 52.1 | 13.9 |
| | 1969 | 53 | 0.78 ± 0.11 | 3.2 - 0.0 | 0.20 ± 0.03 | 0.7 - 0.0 | 41.5 | 10.8 |
| | 1970 | 58 | 0.56 ± 0.09 | 3.5 - 0.0 | 0.24 ± 0.04 | 1.4 - 0.0 | 32.5 | 13.8 |
| | 1971 | 78 | 0.73 ± 0.07 | 2.4 - 0.0 | 0.42 ± 0.05 | 2.0 - 0.0 | 56.8 | 32.5 |
| | 1972 | 63 | 1.00 ± 0.12 | 2.4 - 0.0 | 0.73 ± 0.07 | 2.3 - 0.0 | 62.9 | 46.2 |

σ* = standard deviation of mean.

TABLE 8-9. Dosimetry Data Plutonium Processing Subsection for Employees with Suffixes 6920, 6922, 6923.

| Year | Suffix | Number of employees | Mean skin dose $\pm \sigma$[a] (rem) | Range of skin dose (rem) | Mean whole body dose $\pm \sigma$[a] (rem) | Range of whole body dose (rem) | Collective skin dose (man-rem) | Collective whole body dose (man-rem) |
|---|---|---|---|---|---|---|---|---|
| 1967 | 6920 | 41 | 1.59 ± 0.20 | 3.8 - 0.0 | 1.34 ± 0.17 | 3.0 - 0.0 | 65.2 | 54.8 |
| 1968 | 6920 | 44 | 1.69 ± 0.23 | 3.9 - 0.0 | 1.36 ± 0.18 | 3.2 - 0.0 | 74.4 | 60.0 |
| 1969 | 6920 | 43 | 1.55 ± 0.20 | 3.5 - 0.0 | 1.16 ± 0.16 | 2.7 - 0.0 | 66.7 | 49.8 |
| 1970 | 692[b] | 39 | 1.62 ± 0.20 | 3.3 - 0.0 | 1.38 ± 0.17 | 2.8 - 0.0 | 63.2 | 53.8 |
| | 6922 | 26 | 2.30 ± 0.17 | 3.3 - 0.1 | 1.95 ± 0.15 | 2.8 - 0.0 | 59.8 | 50.6 |
| | 6923 | 13 | 0.26 ± 0.15 | 1.9 - 0.0 | 0.25 ± 0.14 | 1.7 - 0.0 | 3.4 | 3.2 |
| 1971 | 692[b] | 38 | 1.89 ± 0.25 | 4.4 - 0.1 | 1.69 ± 0.23 | 4.1 - 0.1 | 71.7 | 64.1 |
| | 6922 | 24 | 2.75 ± 0.25 | 4.4 - 0.3 | 2.45 ± 0.22 | 4.1 - 0.3 | 65.9 | 58.7 |
| | 6923 | 14 | 0.41 ± 0.23 | 3.4 - 0.1 | 0.38 ± 0.21 | 3.1 - 0.1 | 5.8 | 5.3 |
| 1972 | 692[b] | 23 | 1.89 ± 0.40 | 4.8 - 0.1 | 1.69 ± 0.36 | 4.3 - 0.1 | 43.5 | 38.9 |
| | 6922 | 11 | 3.52 ± 0.45 | 4.8 - 0.2 | 3.12 ± 0.40 | 4.3 - 0.2 | 38.7 | 34.3 |
| | 6923 | 12 | 0.40 ± 0.19 | 2.4 - 0.1 | 0.38 ± 0.17 | 2.2 - 0.1 | 4.8 | 4.6 |

[a] $\sigma$= standard deviation of mean.

[b] Average of employees with suffixes 6922 and 6923.

TABLE 8-10. Dosimetry Data for Chemical Operators in Z Plant.

| Year | Average whole body dose (rem) | Average penetrating gamma dose (rem) | Average neutron dose (rem) |
|---|---|---|---|
| 1970 | 1.95 ± 0.15 | 1.69 ± 0.12 | 0.27 ± 0.04 |
| 1971 | 2.45 ± 0.22 | 1.94 ± 0.16 | 0.50 ± 0.08 |
| 1972 | 3.12 ± 0.40 | 1.15 ± 0.16 | 1.97 ± 0.25 |

### 8.4.3 Estimated Man-Rem Onsite Dose for the First Operating Year

The following assumptions are made for estimating the man-rem onsite dose for the first year of operation.

- The exposure data for the year 1969 are considered to be most representative for the initial startup year.*
- The 24 workers from Production Operations are expected to be assigned to plutonium oxide production in N cell.
- The gloveboxes in N cell will be shielded, and the plutonium oxide line workers are not expected to receive a whole body dose in excess of 0.9 rem/yr.
- The Process Engineers will not receive a significant whole body dose since they work in offices.

Using these assumptions, the data presented in Table 8-11 was obtained.

## 8.5 HEALTH PHYSICS PROGRAM

### 8.5.1 Organization

The organization of the Health Physics Program for the PUREX Plant is illustrated in Figure 8-17. A discussion of the responsibilities of the various components follows.

8.5.1.1 Manager, Radiation Monitoring--PUREX Plant. The day-to-day radiation health and safety tasks in the PUREX Plant are supervised by the day shift unit manager, plus the four shift unit managers of Radiation Monitoring, PUREX Plant. The minimum qualifications for these five positions are an engineering or science degree or equivalent combination of education and experience plus five years of experience in radiation monitoring.

*Records from 1969 reflect the use of film badges. Records are now based upon thermoluminescent dosimeters which are more accurate in reflecting neutron doses.



9413219.0085

TABLE 8-11. Estimated Man-Rem Dose for 1985.

| Group | Number of employees | Average individual skin dose (rem) | Average individual whole body dose (rem) | Collective skin dose (man-rem) | Collective whole body dose (man-rem) |
|---|---|---|---|---|---|
| Production Operation | 142 | 0.75 | 0.24 | 106.5 | 34.1 |
| Plutonium oxide line | 24 | 0.90 | 0.90 | 21.6 | 21.6 |
| Maintenance | 62 | 0.78 | 0.20 | 48.3 | 12.4 |
| Laboratory personnel | 65 | 1.58 | 0.86 | 102.7 | 55.9 |
| Radiation Monitoring | 38 | 1.98 | 1.03 | 75.2 | 39.1 |
| Process Engineering | 85 | - | - | - | - |
| Total | 416 | | | 354.3 | 163.1 |

8.5.1.2 Radiation Protection Technologists. The number of RPTs reporting to the Manager, Radiation Monitoring, PUREX Plant, is adjusted periodically to reflect the changes in plant status. When the PUREX Plant is operating, 32 RPTs will report to that work location.

The RPTs will work on-shift with at least one RPT always present in the plant. The RPTs have the following specific responsibilities:

- Provide radiation monitoring services
- Perform area, equipment, personnel, and visitor contamination surveys
- Document every radiation monitoring service performed
- Assure that radiation and air monitoring instruments and systems are functioning properly
- Assure that controlled areas are properly posted and that proper access restrictions are displayed
- Collect air samples within the plant
- Collect environmental radiation data around the plant
- Administer the use of protective clothing and special protection equipment



9413219.0886

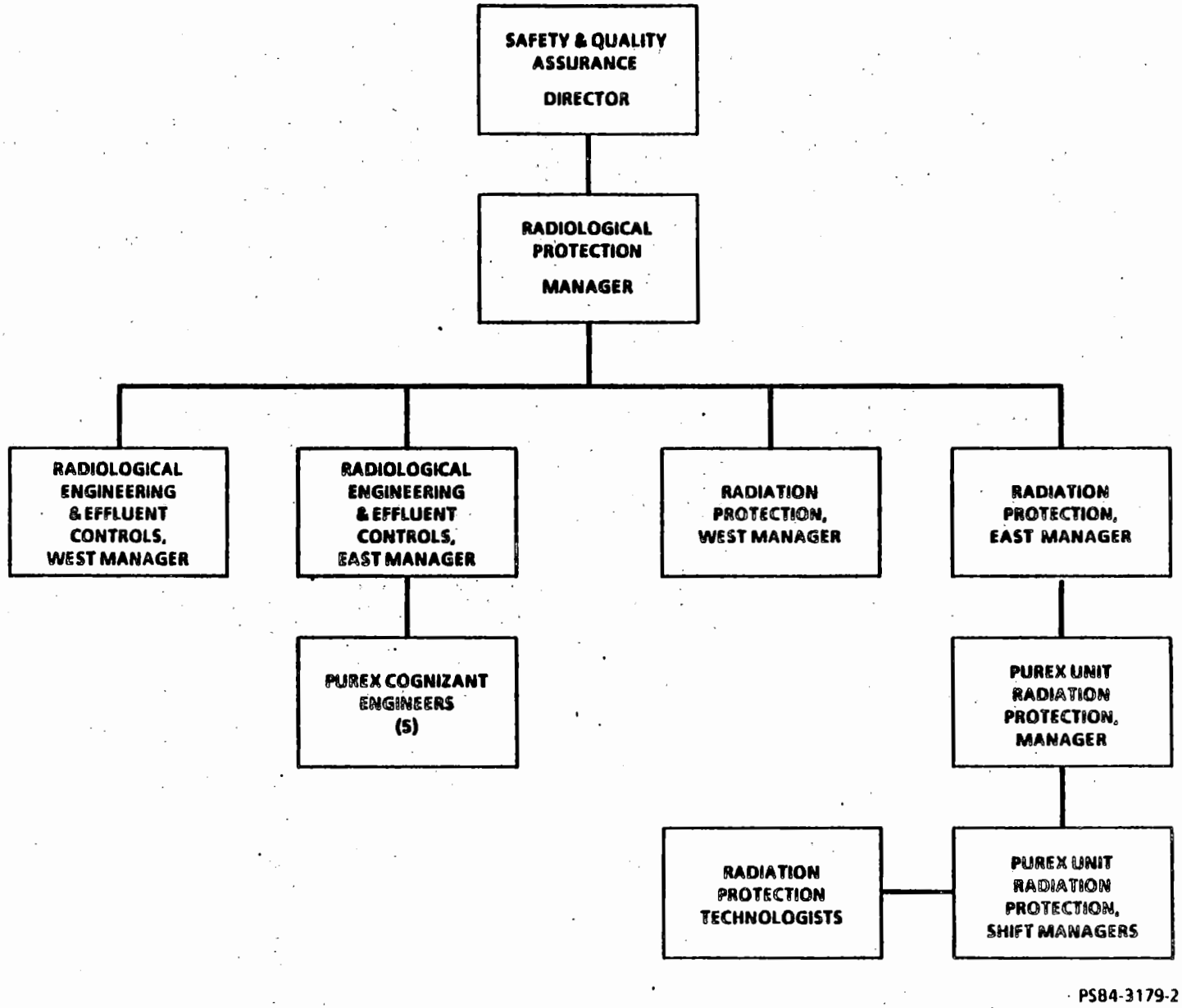


FIGURE 8-17. Health Physics Organization.

- Enforce and report violations of health physics and radiological safety procedures

- Respond to emergencies that may have radiological implications.

8.5.1.3 Manager, Radiation Monitoring. Two managers supervise all of the radiation monitoring activities of Rockwell: Manager, East Area Radiation Monitoring and Manager, West Area Radiation Monitoring, which collectively direct the activities of a combined staff of about 132 RPTs, 7 unit managers, 4 shift managers, 1 health physicist, 5 training personnel, and 1 analyst. Minimum qualifications for this position are an engineering or science degree, 10 yr of experience in radiation protection, and 2 yr as a supervisor in radiation protection.

The Unit Manager, Radiation Monitoring, PUREX Plant, reports to the Manager, East Area Radiation Monitoring. The following are the specific responsibilities of the Manager, Radiation Monitoring:

- Administer the radiation monitoring program, which includes plant surveillance, and direct the activities of the radiation monitoring supervisors

- Implement a radiation protection program in accordance with criteria provided by the Radiological Engineering organization. The radiation protection program includes air sampling monitoring, contamination surveys, personnel dosimetry, and record maintenance

- Provide health physics reviews of proposed operational changes and modifications

- Prepare radiation work procedures

- Assist in preparation of reports to Rockwell management and DOE.

8.5.1.4 Manager, Radiological Engineering. Two managers and their staff of engineers/scientists provide radiological guidance for all operations in the 200 Areas. The managers and their staff are also responsible for the solution of new radiation protection problems. Minimum qualifications for these positions are an engineering or science degree and 10 yr of experience in related industries, with at least 5 yr experience in radiological engineering and radiation protection. The Managers, Radiological Engineering have a staff of radiological engineers who audit the conformance of all activities in Rockwell with the standards documented in Reference 12, which includes ALARA concepts of exposure control. The responsibilities are summarized as follows:

- Provide technical bases, criteria, and methods related to health physics

- Provide radiological information and special services to other groups in the company

- Provide radiation worker training

- Provide a cognizant radiological engineer for operating facilities
- Provide total health physics support
- Administer the personnel dosimetry program
- Prepare reports to Rockwell management and DOE
- Provide necessary input prior to the approval to exceed routine personnel exposure limits
- Establish personnel bioassay and in vivo counting schedules
- Establish frequency in sampling
- Provide health physics reviews of process and operational changes and modifications
- Audit radiation practices for compliance with DOE operational requirements, technical specifications, and Rockwell criteria
- Assist in emergency planning
- Conduct formal incident investigations
- Develop new radiation protection programs or change existing programs as part of the general ALARA program.

8.5.1.5 Cognizant Radiological Engineer and Health Physicist. The cognizant radiological engineer reports to the Manager, Radiological Engineering. The minimum qualifications for this position are an engineering or science degree or equivalent experience (preferably a master's or doctor of philosophy) with 4 yr of experience (health physics, radiation protection, or related fields). Responsibilities follow:

- Act as a member of the Emergency Response Team for the facility in case of an occurrence
- Provide complete health physics support to operations and program management as required
- Formulate the ALARA program and ensure its integration into the everyday work situation
- Provide input to the facility ALARA team and ALARA program
- Coordinate with the program representative for the facility.

8.5.1.6 Manager, Radiological Protection. The Manager, Radiological Protection is responsible for the administration of all the 200 Areas radiation safety programs, which include health physics and radiation monitoring. Minimum qualifications for the Manager, Radiological

Protection position are an engineering or science degree with 10 yr experience in nuclear engineering, nuclear safety, and/or radiation protection. Four group managers report to the Manager, Radiological Protection: the East and the West Radiological Engineering Groups and the East and West Radiation Protection Groups.

8.5.1.7 Manager, Criticality Engineering and Analysis. The Manager, Criticality Engineering and Analysis and his staff of scientists and engineers provide information and guidance necessary to maintain safe conditions in the 200 Areas, where fissile material has a probability of aggregating. This group reports directly to the Manager, Safety Integration, in the S&QA Function. Minimum qualifications for this position are an engineering or science degree and 10 yr of experience in related industries with at least 5 yr of experience in criticality engineering and radiation protection. Definitions of responsibilities follow:

- Analyze new systems or components and reanalyze old systems or components to meet changing radiation and criticality requirements
- Establish an overall program for nuclear criticality safety that will make the probability of a criticality accident extremely unlikely
- Define, interpret, and manage the overall program for nuclear criticality safety, including action to ensure uniform application, and prepare, issue, and maintain the nuclear safety standards. Perform criticality analysis of facilities and operations, and prepare criticality prevention specifications. Conduct inspections of the operating and technical organizations as to their adherence to these specifications and other requirements
- Provide criticality and safety training for personnel involved with fissile material.

8.5.1.8 Director, Safety and Quality Assurance. The Director, S&QA, supervises and directs all Rockwell safety programs and reports to the Vice President and General Manager. Minimum qualifications include 10 yr of experience in nuclear engineering, nuclear safety, and/or health and industrial safety with a strong regulatory background.

8.5.2 Equipment, Instrumentation, and Facilities

8.5.2.1 Portable Surveillance Instruments. Portable radiation monitoring and surveying instruments are provided to all Hanford contractors, including Rockwell, from a central Hanford instrument pool operated for DOE by PNL. Table 8-12 lists the portable radiation monitoring equipment available from the central pool. The instruments are described in detail in References 10 and 32. Both documents are available to RPTs in the Radiation Monitoring office.



9413219.0890

TABLE 8-12. Portable Radiation Detection and Measurement Instruments.

| Type of instrument | Type of detector | Radiation(s) detected | Instrument range | Accuracy |
|---|---|---|---|---|
| CP | Air ion chamber | $\beta, \gamma$ | 0-5 rad/h | +10% to -5% |
| Extended CP | Air ion chamber | $\beta, \gamma$ | 0-5 rad/h | |
| Bumble Bee | Air ion chamber | $\alpha, \beta, \gamma$ | 0-5 rad/h<br>0-5 x $10^6$ dpm[a] | +10% to -5% |
| Black Widow | Air ion chamber | $\alpha, \beta, \gamma$ | 0-5 rad/h<br>0-5 x $10^6$ dpm | +10% to -5% |
| HPC | Thimble-type air ion chamber | $\gamma$ | 0-10,000 R/h<br>0-5,000 rad/h | +10% to -5% |
| TPC | Thimble-type air ion chamber | $\gamma$ | 0-500 rad/h | +10% to -5% |
| LPC | Thimble-type air ion chamber | $\gamma$ | 0-50 rad/h | +10% to -5% |
| Snoopy | $BF_3$ proportional counter surrounded by moderator | n | 0-2,000 mrem/h | $\pm 25$ |
| EGM | Geiger-Mueller | $\beta, \gamma$ | 0-100,000 c/m[b] | |
| Lundlum model 177 and 177-8 | Geiger-Mueller | $\beta, \gamma$ | 0-500,000 c/m | |
| PAM | ZnS scintillator | $\alpha$ | 0-100,000 c/m | |
| PAC-6 | Air proportional | $\alpha$ | 0-100,000 c/m | |
| Weyco (Hanford Poppy) | Air proportional | $\alpha$ | 0-500,000 c/m | |

[a]Disintegrations per minute.
[b]Counts per minute.

8.5.2.2 Laboratory Counting Equipment. All radioactive samples (air sample filter paper and water samples) collected by Radiation Monitoring in the PUREX Plant are transported to the 222-S counting room. This counting laboratory is operated by Quality Assurance and does all the laboratory counting for Radiation Monitoring. The laboratory has two, multichannel analyzers: one with an NaI (Tl) crystal and the other with a Ge(Li) detector, a 2-$\pi$ alpha-beta proportional counter, and an alpha spectrometer.

8.5.2.3 Semi-Portable Air Samplers. Stationery, airborne, radioactivity sampling instrumentation has been described in Section 8.3.4. Radiation Monitoring uses portable and semi-portable air samplers. Both units operate on a.c. line voltage, have a flow meter, and accept a standard 47-mm (Gelman) acropore filter. Portable and semiportable air samplers are used to sample the air in "green houses" (plastic tents around contaminated working areas) and areas where building samplers are not available. Procedures for handling the air samples and for working the instruments are detailed in Reference 10.

8.5.2.4 Portable Exhausters. Portable 1,000 $ft^3$/min exhausters used to ventilate greenhouses are also available. These portable exhausters contain HEPA filters that are dioctyl phthalate (DOP) tested and capable of CAM hookups.

8.5.2.5 Personnel Dosimetry Monitoring Instruments. Two dosimetry programs have been established at Rockwell to monitor personnel exposure: (1) the major program uses TLD and (2) the supplementary program entails the use of gamma self-reading pencil dosimeters. The use and wearing of dosimeters are detailed in Reference 10.

Three types of TLD are used by Rockwell personnel: the Hanford basic dosimeter, the Hanford multipurpose dosimeter, and extremity dosimeter; descriptions follow.

- Hanford Basic Dosimeter

  The basic dosimeter is equipped with a lithium fluoride chip and is to be worn only by those personnel who are not radiation workers. The badge is often referred to as an "annual badge" because it is normally processed (read out) once a year to determine the accumulated dose. The TLD chip is affixed in a plastic card that is 3 by 1.5 by 0.04 in. The dosimeter and the security credential are worn together in a clear plastic envelope, which is equipped with a metal fastener (clip) to be worn by employees.

- Hanford Multipurpose Dosimeter

  This dosimeter is worn by employees who enter posted radiation areas. It is exchanged and processed monthly or quarterly. The dosimeter consists of three parts: the dosimeter holder, the dosimeter card, and the security credential. The holder is made of plastic. It is designed to hold the dosimeter card, the Hanford security credential, and appropriate filters (shields) for the TLD chips in the dosimeter card. The holder measures 3.2 by 1.8 by 0.24 in. and weighs 22.5 g. The holder contains five types of shields, one of which is an open window (Table 8-13). When the dosimeter card is inserted into the holder, a snug friction fit is obtained and each TLD chip is centered between the appropriate filter. The dosimeter card has the same dimensions as the Hanford basic dosimeter card, but it holds five TLD chips instead of one. Chips 1 and 2 serve as a

two-element, photon-beta dosimeter with the response of the 2nd position as the dose due to penetrating radiation. Chips 3 and 4 are for the determination of neutron doses. Chip 5 is for the determination of high energy photons. The cards are processed by United States Testing Company, Inc. Records are kept by PNL and Radiological Engineering, and PNL maintains a record center of all radiation exposures received by Hanford Site employees. The security credential is to be considered a part of the total dosimeter unit and fits the front of the card holder.

TABLE 8-13. Thermoluminescent Dosimeter Filter System--Physical Characteristics.

| Filter | Shield | Diameter (in.) | Thickness (in.) | Total ($mg/in^2$) | TLD between shield |
|---|---|---|---|---|---|
| 1 | Open window | 0.37 | 0.0 | 0 | 7-LIF |
| | Teflon TFE tape | | $2.0 \times 10^{-3}$ | 1.9 | |
| 2 | Cycolac | 0.50 | $3.5 \times 10^{-2}$ | 14.4 | 7-LIF |
| | Aluminum | | $2.5 \times 10^{-2}$ | 26.8 | |
| | Mylar | | $2.8 \times 10^{-3}$ | 1.1 | |
| | Teflon TFE tape | | $2.0 \times 10^{-3}$ | 1.9 | |
| 3 | Cycolac | 0.50 | $2.0 \times 10^{-2}$ | 8.2 | 6-LIF |
| | Tin | | $4.0 \times 10^{-2}$ | 116.3 | |
| | Mylar | | $2.8 \times 10^{-3}$ | 1.1 | |
| | Teflon TFE tape | | $2.0 \times 10^{-3}$ | 1.9 | |
| 4 | Cycolac | 0.50 | $2.0 \times 10^{-2}$ | 8.2 | 6-LIF |
| | Tin | | $2.0 \times 10^{-2}$ | 38.1 | |
| | Cadmium | | $2.0 \times 10^{-2}$ | 68.2 | |
| | Mylar | | $2.8 \times 10^{-3}$ | 1.1 | |
| | Teflon TFE tape | | $2.0 \times 10^{-3}$ | 1.9 | |
| 5 | Cycolac | 0.50 | $2.0 \times 10^{-2}$ | 8.2 | 7-LIF |
| | Tin | | $4.0 \times 10^{-2}$ | 116.3 | |
| | Mylar | | $2.8 \times 10^{-3}$ | 1.1 | |
| | Teflon TFE tape | | $2.0 \times 10^{-3}$ | 1.9 | |

- Extremity Dosimeter

For exposure evaluation of the extremities, TLD dosimeters called "finger rings" are in routine use. In addition, wrist dosimeters are available from United States Testing Company, Inc. for isolated usage or special studies. The finger ring is made of plastic and it carries one 7-lithium fluoride TLD chip. The TLD chip is also processed by United States Testing Company, Inc. and records are kept by Radiological Engineering.

For the supplementary program, self-reading pencil dosimeters are often worn by RPTs and radiation workers along with, but never instead of, the TLD. The two types of "pencils" in common use at the PUREX Plant are the Stephen Ltd. of Slurry, England, and the gamma and X-ray Dosimeter 883 of the Dosimeter Corporation of America, Cincinnati, Ohio. Most pencils have a range of 0 to 0.5 R. High-range pencils (0 to 10 R, 0 to 50 R, and 0 to 600 R) are also available. All radiation monitoring offices have at least one self-reading dosimeter charger.

8.5.2.6 Personnel Survey Instruments. Two semiportable rate meters are available at the PUREX Plant for the monitoring of shoes and clothing. The Weyco is a solid-state rate meter for use with an air proportional probe. The unit, known as the "Hanford Poppy" or "Poppy", is a.c. or battery powered and maintained by the PUREX Plant's instrument department. The Ludlum 177 and Ludlum 177-8 are also a.c. line-powered or battery powered rate meters for use with a Geiger-Mueller probe. Both units are placed at the exits from radiation areas in the plant. Currently there are 32 Weycos and 30 Ludlums in use at the plant.

Four hand counters for alpha and beta radiation are located near the building exits or lunchrooms; the units allow a final check of personnel before leaving or eating.

8.5.2.7 Instrument Storage, Calibration, and Maintenance. All portable surveillance instruments except the Weyco-type personnel survey meters are maintained and repaired by the central Hanford instrument pool and calibrated by PNL. Calibration procedures used by PNL are contained in Reference 10. The CP and XCP are calibrated to a standard radium gamma-ray source. The electronic package of the EGM, PAC-6 and PAM are calibrated with an electronic pulse generator. The HPC, LPC, and TPC are calibrated to a standard radium source and 1.5 MeV Van de Graaff accelerator. The PAM and PAC-6 are checked with a $^{230}Th$ source. The probe is also tested for light leaks and for response to beta or gamma radiation. The Snoopy is calibrated to a plutonium-beryllium neutron source. The instruments are calibrated on a frequency determined by their type and use. The CP are returned to PNL for calibration every 3 wk, EGM every 5 wk, and the other instruments as called for by the instrument calibration procedures. Instrument exchanges take place at least once a week. The instruments are placed in an instrument exchange box for pickup and delivery by a courier. Radiation Monitoring keeps an instrument log on instruments delivered and returned. The exchange program is detailed in Reference 10.

Area monitors, Weyco survey instruments, and CAM units are checked by Instrument Maintenance and source checked monthly by Radiation Monitoring. The check consists of a built in operability test which verifies that the equipment is working properly, and of checking out the detectors with calibrated sources. The source checks are done monthly. All alpha monitoring devices have sources on the instrument and can be source checked before any survey. Sources for checking portable, beta monitoring equipment are located near the entrances and exits of radiation areas.

When not in use, portable radiation monitoring instruments are kept in an instrument cabinet in the SWP lobby. Portable airborne radioactive sampling instruments and self-reading pencil dosimeters are kept in the Radiation Monitoring office. Manuals and data logging books are also kept in the Radiation Monitoring office.

8.5.2.8 Protective Clothing. Protective clothing in use at the PUREX Plant includes coveralls, coats, laboratory coats, head covers, shoe covers, boots, rubber overshoes, rubber gloves, and plastic suits. Clothing is readily available in the four SWP rooms. Clothing is decontaminated, cleaned, and sanitized by the Protective Equipment Decontamination Department located in the 200 West Area.

8.5.2.9 Health Physics Facility. The health physics facility consists of the Radiation Monitoring and Radiological Engineering offices, the SWP room and associated locker rooms, the showers, and the three personnel decontamination rooms. The Radiation Monitoring office is adjacent to the SWP lobby. It serves as a focal point for all RPTs in the PUREX Plant. The Radiological Engineering office is located in building MO-405. The location of the other facilities is shown in Figure 8-1.

8.5.2.10 Respiratory Protection Equipment. Supplies of the following types of respiratory protection equipment are provided within the plant as required in Reference 12.

- Full-Face Mask Mechanical Filter Respirators

  These devices are used in routine maintenance and operation tasks. Although the majority of the full-face masks are stored in the SWP rooms, individual units are available throughout the plant at locations of potential need. The filters on these masks are tested by the Hanford Environmental Health Foundation (HEHF) upon initial receipt and are checked again whenever the mask is sent to the mask-cleaning station operated by Rockwell in the 200 West Area.

- Full-Face Mask Constant-Flow-Supplied Respirators

  These units are in areas where there is substantial contamination and where the full-face mask mechanical respirator is deemed inadequate. A central breathing air distribution system

9413219.0896

is provided througnout the plant for these respirators (see Section 5.4.3.1 for details). Quick-disconnect outlets are strategically located in all areas (except clean areas). The associated compressor and other system components meet appropriate industrial standards.(33) The compressor is serviced by normal and standby electrical power.

- Self-Contained Breathing Apparatus (trade name Scott Pack)

  Eight units are contained in lockers in a corridor between the P&O gallery and the men's locker room, two are contained in the lab corridor, and two outside the headend control room. The units are used in accident conditions or in areas where the full-face mask, constant-flow-supplied respirator cannot be used.

Respiratory protection equipment decontamination, cleaning, sanitizing, and repair are performed by the Protective Equipment Decontamination Department in the 200 West Area.

A mask-fit test facility for determining an individual's mask size is provided in the respiratory protection equipment care facility of HEHF and in the 200 West Area. All personnel are required to have a valid mask fit prior to use of any respirators. Personnel must also attend the Respirator Training Course every 2 yr.

8.5.2.11 Radiation Monitoring/Personnel Decontamination Stations. There are three radiation monitoring/personnel decontamination (RM/PD) stations in the PUREX Plant: one station is located close to the west-end SWP lobby, another is next to the east change room, and the third is in the laboratory. All three stations are equipped and supplied in accordance with the requirements of Reference 10 to provide initial skin decontamination services. For example, the west-end station (commonly referred to as the "PD room".) has a shower, sinks, nasal irrigaton equipment, and all the necessary supplies for skin decontamination. A new smear counter and multichannel analyzer for the detection of alpha and beta radiation will be located in the Radiation Monitoring office.

### 8.5.3 Procedures

8.5.3.1 Method, Frequencies, and Procedures for Conducting Radiation Surveys. The standards for conducting radiation surveys at Rockwell are detailed in Reference 12, while the methods and procedures used by Radiation Monitoring for implementing the standards are detailed in Reference 10. Reference 10 describes the steps to be taken, the instrument to be used, the documents to be filled out, and the purpose of the following surveys: contamination surveys, personnel contamination surveys, routine control program, and air sampling. The manual contains illustrations and descriptions of the radiation survey forms and records used at Rockwell. Routine control programs for the PUREX Plant are further detailed in a log book kept in the Radiation Monitoring office. These forms contain information on the area to be surveyed, the frequency of



9413219.0896

the survey, the steps to be taken, the measurements to be performed, and the amount of documentation necessary. Currently, the log book for routine control procedures lists 16 weekly procedures, 13 monthly procedures, 11 quarterly procedures, and 9 annual procedures. A chart describing 50 daily routine control procedures is kept separately.

Health physics procedures, detailed in Reference 11, are used by Radiological Engineering for special and routine tasks. Health physics procedures for audits and inspections assure compliance with radiological controls, RWP, and ALARA practices. Health physics procedures developed specifically for the ALARA program assures that each radiation job is performed using ALARA practices.

8.5.3.2 Physical and Administrative Measures for Controlling Access and Stay Time for Radiation Areas. Physical and administrative measures (described in detail in Reference 12) have been developed to control the following radiological areas (Fig. 8-10 presents radiation areas in the plant).

- Radiation Area

  An area where an individual could receive an exposure between 1 and 100 mrem in any 1 h.

- Radiation Area--Surface Contamination

  An area in which the surface contamination may exceed 200 disintegrations/min/100 $cm^2$ (20 counts/min/100 $cm^2$) for alpha radiation and 2,000 disintegrations/min/100 $cm^2$ (200 counts/min/100 $cm^2$) for beta-gamma radiation.

- Radiation Area--Airborne Radioactivity

  An area where radioactive air concentrations exist which, if averaged over a normal work week, would exceed 25% of the concentrations specified in Table I of Reference 3.

- High Radiation Area

  An area where an individual could receive an exposure in excess of 100 mrem (but less than 5 rem) in any 1 h.

- Radioactive Material Area

  An area or enclosure where radioactive material is present in a form such that no protective clothing is required.

- Restricted Access Area

  An area that requires special safety prevention when entering an area where an individual could receive in excess of 5 rem/h.

The boundaries of the above radiation areas, if not a permanent wall or fence, are clearly indicated by rope or chain. Unattended High Radiation and Restricted Access Areas have boundaries which limit the entry of personnel, except at the planned entrance which is locked or guarded at all times (the doors are locked to entry, but not to exit, to prevent an individual from being locked inside these areas). The locked areas are controlled by the dispatcher, who logs all personnel entry and activates the electrically locked doors. Radiation areas can only be entered when accompanied by an RPT, except when entering personnel have been qualified in advance to carry out self-survey and self-monitoring as described in Reference 13.

Administrative measures for controlling access and stay time for the radiation areas described above are performed by posting and procedures. Radiation areas are marked with signs indicating the radiation condition stated above. Radiation symbols used on the signs conform with the American National Standards Institute.(34) Radiation work procedures and operating procedures (in compliance with References 3, 10, 11, and 13) describe in detail the monitoring procedures that must be followed upon entering the area, the radiological conditions of the area, and the protective apparel that must be worn upon entering the area.

Outdoor sites surrounding the plant also follow the physical and administrative requirement stated above to control access and stay time in radiation areas. The following sites are identified with appropriate postings and barriers:

- Underground radioactive waste storage tanks and diversion boxes
- Burial trenches, cribs, and ponds
- Underground pipelines
- Permanent, stabilized burial plots
- Roads and other paved areas covering radioactive contamination.

8.5.3.3 Bases and Methods for Monitoring and Controlling Personnel, Equipment, and Surface Contamination. Standards for controlling personnel, equipment, and surface contaminations are spelled out in Reference 12. The specific procedures and the instruments used by Radiation Monitoring for controlling personnel, equipment, and surface contamination are described in Reference 10. Smearable or "removable" contamination is not significant if the amount of contamination which can be removed by wiping a surface with an absorbent material, as measured on the wiping material, is less than 200 disintegrations/min/100 $cm^2$ for beta-gamma radiation and 20 disintegrations/min/100 $cm^2$ for alpha radiation. The surveying for contamination is the responsibility of Radiation Monitoring. When a contaminated area has been identified, Radiation Monitoring must post the area, set up a survey station (step-off pads), and must set up a schedule for routine surveys until the area has been decontaminated. Protective clothing must be worn when entering a contaminated area. Entry into

surface contamination areas in which the removable contamination level exceeds 40,000 disintegrations/min/100 $cm^2$ alpha or 400,000 disintegrations/min/ 100 $cm^2$ beta-gamma is allowed only for surveillance or decontamination when wearing appropriate clothing and/or masks. The Manager, Radiological Protection may approve an exception only as delineated in Reference 12.

8.5.3.4 Radiation Protection Training Program. The description of the radiation protection training program for Rockwell employees is contained in Reference 12. All new employees are given a radiological orientation that has the following objectives:

- Recognize and know the meaning of radiation warning signs and emergency signals
- Contact Radiation Monitoring when confronted with radiological problems and questions
- Understand that as long as radiological control procedures and limits are followed, harmful effects on personnel or on the environment from radioactivity at Hanford will be minimized.

All female employees are given instructions on the possible risks to children of women who are exposed to radiation during pregnancy. The instruction is both oral and written, and the individual is required to acknowledge that the instructions have been received.

Radiation workers receive training that covers the following subjects:

- The reason for minimizing exposure and the methods an individual may use to maintain exposure ALARA
- The requirements for entry into a posted radiological area or an area which is barricaded due to its potential radiological hazard
- The limits for whole body-penetrating radiation
- The significance of "stay time"
- The seriousness of violating instructions on radiation warning signs and unauthorized passage through barricades
- The potential sources of radiation associated with work performed by the individual's trade
- The location where personal and supplementary dosimeters should be placed on an individual's body
- The biological risks of radiation exposure to the unborn child
- The methods by which contamination is controlled during work with radioactive materials



9413219.0899

- The methods for preventing contamination of personnel and how contamination is detected on personnel
- What radioactive contamination is, and how it is removed from items and personnel
- The procedures for transferring material from contaminated areas
- How individual workers can reduce the amount of radioactive liquid and solid waste generated during routine work
- The need for consulting Radiation Monitoring personnel when confronted with radiological problems or questions
- The procedures to be followed after a spill of material (liquid or solid) which is, or may be, radioactive
- The procedure to be followed when notified that airborne radioactivity is above the limits
- The action to be taken if an individual discovers his pencil dosimeter is off-scale
- The need for accurate exposure records and other radiological safety records
- The controversy over the effects of low-level exposure to radiation.

An additional requirement for becoming a radiation worker is the demonstration of the following practical factors to the satisfaction of a designated instructor:

- The ability to read the commonly used self-reading dosimeters
- The proper procedure for putting on and removing protective clothing and respiratory protection devices
- The proper procedures for entering and leaving a contaminated area, including the proper self-survey technique.

8.5.3.5 Methods and Procedures for Personnel Monitoring for Normal Operations and Criticality Accident. General Rockwell policies for monitoring personnel are contained in Reference 1, while the methods and procedures are described in Reference 13. The Hanford multipurpose TLD and the Hanford basic TLD are the principal devices for measuring personnel radiation exposures. All exposures indicated by a multipurpose TLD are assumed to have been received by the individual unless it is demonstrated that the readings are erroneous. If a dosimeter is lost or if it is proven that the exposures are erroneous, an estimate of the dose received by the individual during the period in question is made by Radiological Engineering. Extremity dosimeters are required in situations where the dose rates to the hand exceed five times the whole body dose rates or where



9413219.0900

the anticipated monthly dose could exceed 1 rem. The exposures as measured by the multipurpose and basic dosimeters are the bases of the legal record of an employee's exposures. Any deliberate action by an employee which invalidates the dosimetry measurements is cause for disciplinary action. Records are kept by Radiological Engineering and by PNL.

Any individual requiring access to a posted radiological area who is not qualified as a radiation worker must be escorted by a qualified radiation worker while in the posted radiological area. Also, unqualified individuals are not permitted to handle, process, or work with radioactive materials. Visitors requiring entries to posted radiological areas are issued temporary multipurpose dosimeters and are escorted by qualified personnel equipped with portable survey instruments if necessary. Employees are restricted from further work in radiation areas if it is determined that the employee has or will receive a radiation dose, either external or internal, in excess of the standards in Reference 2. The restriction can only be lifted by the Manager, Radiological Protection.

An employee who has exceeded the Rockwell controls shown in Table 8-1 will not be permitted to work in a radiation area unless approved by the Manager, Radiological Protection. If approval is made, the work of the employee is limited such that additional exposure for the appropriate period is as low as practical and does not exceed the limits of Reference 3. An employee's work in a radiation area is limited if he has an internal deposition that has or will deliver a dose to a critical organ in excess of 50% of the applicable standard of Reference 3. The work of the employee is limited such that additional exposure for the appropriate period is as low as practical and does not exceed the limits of Reference 3.

Female employees who are radiation workers and are pregnant or plan to become pregnant have several options, all of which are designed to keep the dose to the fetus during the gestation period to less than 0.5 rem.[13]

Methods and procedures for monitoring criticality accidents are described in Reference 21. Dose estimates are based on the personnel dosimeter, the fixed station dosimeter, analysis of biological samples, and "quick sort" techniques.

8.5.3.6 Criteria for Performing Whole Body Counting and Bioassay. Radiological Engineering is responsible for maintaining the internal dosimetry program. Bioassays in case of accidents will be specified by the Radiological Engineering Manager. The standards are contained in Reference 13, but because Radiation Monitors are often involved, the program is described in detail in Reference 10. The program for bioassay dose measurement is mainly based on urinalysis; feces and/or blood samples are analyzed as necessary. A whole-body monitoring facility is operated by PNL for all Hanford contractors at HEHF. Employees who are defined as radiation

workers and who work with radioactive material are scheduled for a bioassay/in vivo evaluation at least once every year. An employee is placed on a more frequent program if Radiological Engineering deems it necessary. Counting of bioassays is done by United States Testing Company, Inc.

Rules for bioassays in case of accidents follow.(11)

- Immediate contact with the appropriate HEHF physician is required in order to consider immediate medical action for contamination which exceeds the following levels:

| Contamination | Disintegrations/min |
|---|---|
| Facial | 40,000, Pu |
| Nasal | 10,000, Pu |
| Wound (in or around skin break) | 2,000, Pu<br>(40,000, beta-gamma) |

- An in vivo count and a urinalysis shall be required for each individual with nasal or mouth smears which exceed 100 disintegrations/min alpha or 500 disintegrations/min beta-gamma.

- An in vivo count and a urinalysis shall be required for each individual with any detectable radioactivity on nasal or mouth smears if the individual has either: (1) facial contamination exceeding 2,000 disintegrations/min alpha or 10,000 disintegrations/min beta-gamma or (2) skin or clothing contamination exceeding 40,000 disintegrations/min alpha or 200,000 disintegrations/min beta-gamma.

- An in vivo count and a urinalysis shall be required for each individual with facial contamination exceeding 4,000 disintegrations/min alpha or 20,000 disintegrations/min beta-gamma.

When an internal deposition is detected, Radiological Engineering determines the dose commitment of the individual and Radiological Protection personnel determine if medical assistance is required from HEHF.

8.5.3.7 Evaluation and Control of Potential Airborne Radioactivity Concentration. The standards for dealing with airborne radioactivity are detailed in Reference 12. Continuous monitoring and sampling for airborne particulate radioactivity is required in areas where personnel have a high potential for exposure to airborne activity due to radiological conditions of the area or specific operations being conducted in the area. Radiological Engineering determines the need for continuous air monitoring. All CAM air monitors must have visual and audible alarms.

Respiratory protection equipment is required in the following circumstances (detailed discussion is in Reference 12):

- When airborne radioactivity concentrations exceed the limits specified in Tables 8-14 and 8-15 or when, in the judgment of Radiation Monitoring, conditions are such that the limits in these tables may be exceeded

- When uncontained, loose contamination on surfaces readily accessible to personnel exceeds 2,000 disintegrations/min/100 $cm^2$ alpha or 20,000 disintegrations/min/100 $cm^2$ beta-gamma activity

- During operations on contaminated surfaces which may cause or have been known to cause airborne radioactivity such as grinding, welding and flame-cutting, steam-cleaning, sandblasting, or burning

- When an individual is exposed to airborne radioacticity in concentrations which, if averaged over a normal work week, would exceed 25% of the limits in Table 8-15 [integrated exposure of 10 maximum permissible concentration (MPC) h in a 7-d period]

- In any area posted as an airborne radioactivity area

- During operation where a potential of airborne radioactivity is present.

TABLE 8-14. Guide Limits for Field Conditions

| Type of radioactivity | Concentration guide ($\mu Ci/cm^3$ of air) |
|---|---|
| Alpha emitters | $2 \times 10^{-12}$ |
| Beta-gamma emitters | $1 \times 10^{-9}$ |

TABLE 8-15. Respiratory Protection Devices Required for Given Concentrations of Airborne Radioactivity.

| Type of radioactivity | Type of respiratory protection device required | Concentration guide limit in $\mu Ci/cm^3$ of air |
|---|---|---|
| Pu | None required | Up to $2 \times 10^{-12}$ |
| | Full-face respirator (filtered) | $2 \times 10^{-12}$ to $1 \times 10^{-10}$ |
| | Powered Air Purifying Respirator (PAPR) | $1 \times 10^{-10}$ to $1 \times 10^{-9}$ |
| | Supplied air respirator | Greater than $1 \times 10^{-9}$ |
| FP | None required | Up to $1 \times 10^{-9}$ |
| | Full-face respirator (filtered) | $1 \times 10^{-9}$ to $5 \times 10^{-8}$ |
| | PAPR | $5 \times 10^{-8}$ to $2 \times 10^{-7}$ |
| | Supplied air respirator | Greater than $2 \times 10^{-7}$ |
| I | None required | Up to $8 \times 10^{-10}$ |
| | Full-face respirator (charcoal filtered) | $8 \times 10^{-10}$ to $1 \times 10^{-9}$ |
| | Supplied air respirator | Greater than $1 \times 10^{-9}$ |
| Noble gas | Controls to be specified by Radiological Engineering | No limit specified (controlled by external exposure) |

## 8.6 PROJECTED MAN-REM OFFSITE DOSE ASSESSMENT

### 8.6.1 Effluent and Environmental Monitoring Program

8.6.1.1 Gaseous Effluent Monitoring. The PUREX Plant ventilation and exhaust system has been described in Sections 5.1, 5.4, 7.2, and 7.4. These four ventilation systems discharge through 10 stacks. An eleventh stack discharges the air from the 293-A building; a twelfth stack discharges air from the ammonia offgas system (see Section 7.4.3). There are numerous roof exhausters that discharge noncontaminated air from service areas. Table 8-16 summarizes the designation and function of the 12 plant stacks. The sampling and monitoring systems of the 12 stacks have already been mentioned in Table 7-2 and the control standards are discussed in Section 7.1.1.1.

TABLE 8-16. Designation and Function of PUREX Stacks.

| Stack | Stream designation | Plant code | Data processing code | Function |
|---|---|---|---|---|
| 291-A-1 | EC | 291-A | 552 | Air from 291-A filters, includes canyon ventilation air, vessel, and condenser vents, treated DOG |
| 296-A-1 | EP | E-1 | 541 | Filtered air from N cell, Q cell, and PR room |
| 296-A-2 | EHW | E-2 | 542 | Hood exhaust from west sample gallery |
| 296-A-3 | EHE | E-3 | 543 | Hood exhaust from east sample gallery |
| 296-A-5A, and -5B | ELE & ELW | E-5-A | 545 | Filtered air from 202-A laboratory hoods and gloveboxes, west duct, single stack servicing two systems |
| 296-A-6 | EGE | E-6 | 547 | Filtered air from east sample gallery and U cell |
| 296-A-7 | EGW | E-7 | 548 | Filtered air from west sample gallery and R cell |
| 296-A-8 | EW | E-8 | 549 | Filtered air from west end of P&O gallery (white room) |
| 296-A-10 | ET | BT-2 | 550 | Filtered air from burial tunnel 2 |
| 296-A-14 | EB | E-4 | 544 | Filtered air from 293-A building |
| 296-A-24 | - | - | 539 | Filtered air from ammonia offgas system |

9413219.0905

8.6.1.1.1 PUREX Primary Stack (291-A-1). A new sampling, monitoring, and flow totalizing system has been installed that complies with existing ANSI standards.(17) The new system is described in References 32, 35, and 36 and illustrated in Figure 8-18.

The record sampling system withdraws a sample based on stack flow to maintain near isokinetic conditions. The system has three legs: a record filter leg, spare leg, and bypass leg. The samples from the record sampler are counted in the 222-S laboratory, and the official air released activity concentration from the 291-A-1 stack is based on these counts. The record leg contains a 47 mm filter holder, a charcoal filter holder, vacuum gauges, a rotometer, gas flow totalizer, an air operated control valve, and a differential pressure cell with signal transmitter and its own motor air pumps (P-V18-3-5). The bypass leg and the spare leg each have an air operated control valve and differential pressure cell. The spare leg was equipped in August 1984 with a 4-in.-filter holder and gas flow totalizer. This was done to see if the 4-in. filter is less susceptible to the plugging problems associated with ammonia nitrate than is the 47-mm filter. All three legs of the record sampling system exhaust to the record system vacuum pump (P-V18-5).

The monitoring system withdraws a sample from the stack based on the setting of automatic and manual controllers. The primary monitor is the interim monitor. Two auxiliary CAMs, a NOx monitor and a $^{3}H/^{14}C$ sampling system, also withdraw their samples from this line. The interim monitor was installed to measure alpha particulate ($^{239}Pu$), beta-gamma particulate ($^{90}Sr$), gamma gas ($^{131}I$), and beta gas ($^{85}Kr$). It provides level readings locally and in the central control room. High-level alarms are displayed on the dispatcher's panel for the alpha particulate, beta-gamma particulate, and gamma gas detectors. Two auxiliary CAMs, an alpha 5-A and an AMS-3 beta-gamma are provided as the backup for the interim monitor. They read out locally and in the central control room and alarm both locally and on the dispatcher's panel. A beta-gamma AMS-3 CAM and an alpha 5-A CAM are located in the 292-A stack building for backup monitoring capability, should either of the auxiliary stack CAMs fail. Emergency power is provided for the record sampling system and for the alpha and beta-gamma stack CAMs.

A sampling system for the monitoring of $^{3}H$ and $^{14}C$ also takes its suction from the monitoring line. This system provides no direct readout. In this system, an air sample is pulled through a silica gel adsorbent column and a molecular sieve adsorbent column. The air stream passes through a heated catalytic oxidizer before the adsorbent columns. The adsorbent columns are returned to the laboratory for analysis. The system is capable of measuring $^{3}H$ and $^{14}C$ at concentrations on the order of $1.0 \times 10^{-6}$ pCi/cm$^{3}$ of air.

A flow totalizing probe is mounted at the 74-ft level of the 291-A-1 stack. The flow totalizing probe monitors the total airflow through the main stack. The airflow rate is displayed on an analog recorder in the central control room. The flow rate is integrated in time, and a total flow digital signal will also be displayed in the central control room. A "low stack flow" audiovisual alarm is located in the central control room and will alarm when the stack flow rate is sensed to be below 1,980 m$^{3}$/min.



9413219.0906

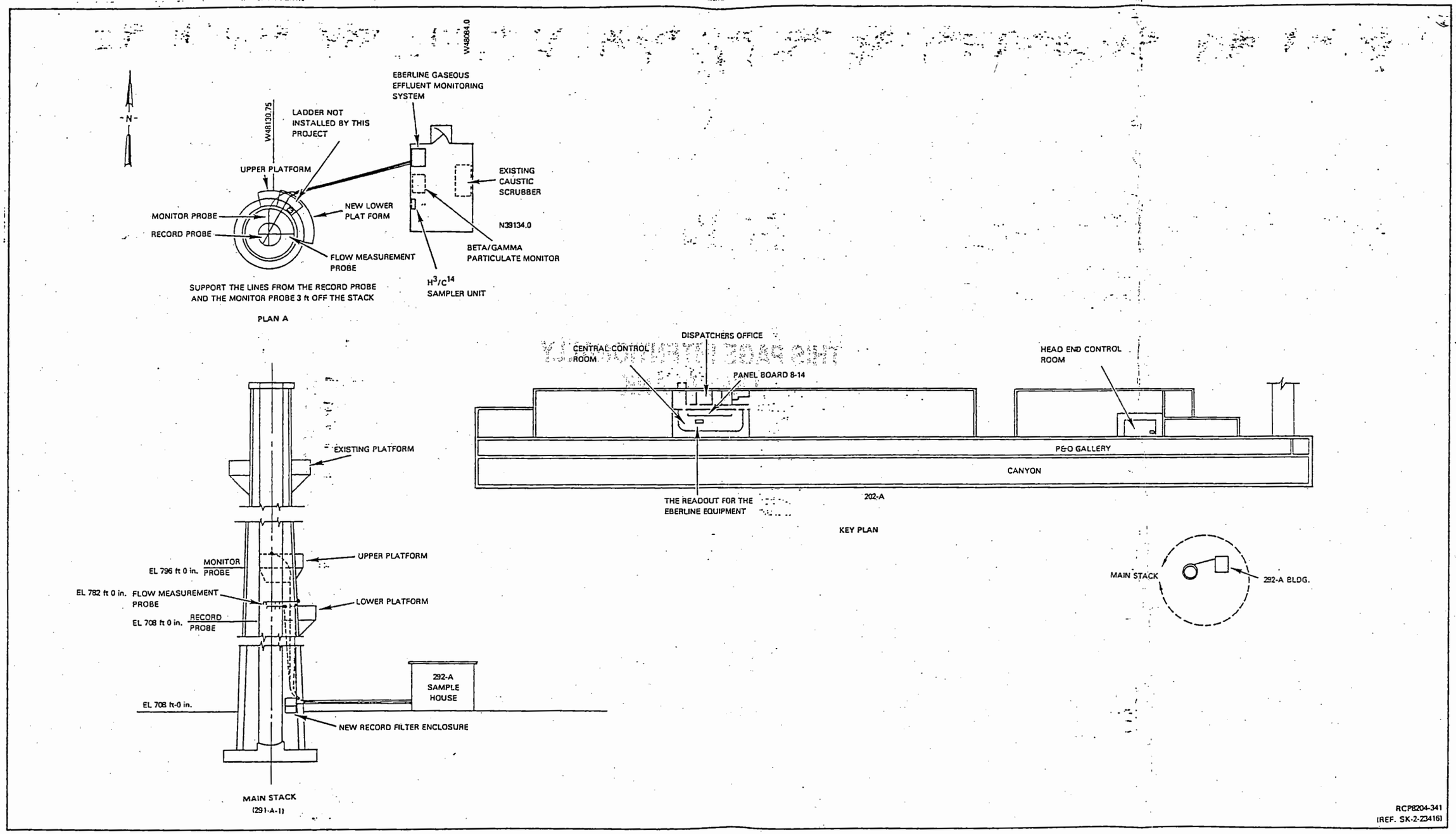


FIGURE 8-18. PUREX Main Stack Gaseous Effluent Monitoring System.

THIS PAGE INTENTIONALLY
LEFT BLANK

This page intentionally left blank.

THIS PAGE INTENTIONALLY
LEFT BLANK

All the monitoring equipment is located in the 292-A building (see Fig. 8-18). The replacement of 292-A building by a new building is projected. The monitoring instruments in the 292-A building will be transferred to the new building. This new stack monitoring facility will not introduce additional operating hazards.(38)

TABLE 8-17. PUREX Main Stack Monitoring and Alarming Capabilities.

| Parameter | Alarm destination | Set point | Equivalent concentration |
|---|---|---|---|
| | For the interim monitor | | |
| Alpha | RA-V19-5-1 | 180 cpm | 5 x Table I[a] |
| Beta, particulate | RA-V19-6-1 | 420 cps | Table I[a] |
| $^{131}I$ | RA-V19-8-1 | 3,700 cps | Table I[a] |
| $^{85}Kr$ | No alarm[b] | No alarm[b] | No alarm[b] |
| | For the auxiliary continous air monitors | | |
| Alpha | Aux (291-A) RA-V19-10-1 | 200 cpm | 5 x Table I[c,d] |
| Beta-gamma | Aux (292-A) RA-V19-11-1 | 40,000 cpm | Table I[c,d] |

NOTES: [a]Values based on 24-h collection time.
[b]Capability for alarming the channels labeled as "no alarm" shall be supplied.
[c]Values based on 168-h collection time.
[d]Table I refers to Appendix I of RHO-MA-139.

8.6.1.1.2 Product Removal Room Stack (296-A-1). A sampling, monitoring, and flow totalizing system has been installed. The system, which complies with existing ANSI standards,(17) is described in Reference 39. The location of the new components is illustrated in Figure 8-19. An isokinetic record sample probe is mounted at the 46-ft level of the 296-A-1 stack, and the air it samples is fed to a 1.7-in.-diameter membranous filter. The stream is monitored also for flow rate, and an audiovisual alarm system is located in the dispatcher's office and will alarm when the flow rate is low. An isokinetic monitor sample probe is mounted at the 50-ft level of the 296-A-1 stack. Air sampled by the monitor sampler is fed to an alpha particulate ($^{239}Pu$) CAM with a 1.7-in.-diameter membranous filter. The analogue signal from the CAM unit is displayed in the central control room, while the audiovisual alarm is located in the dispatcher's office. The instrument has a sensitivity of $9.0 \times 10^{-13}$ µCi/mL in 4 h for $^{239}Pu$ when the flow rate is 2 standard $ft^3$/min. The alarm will be initially set at $1.0 \times 10^{-12}$ µCi/mL.

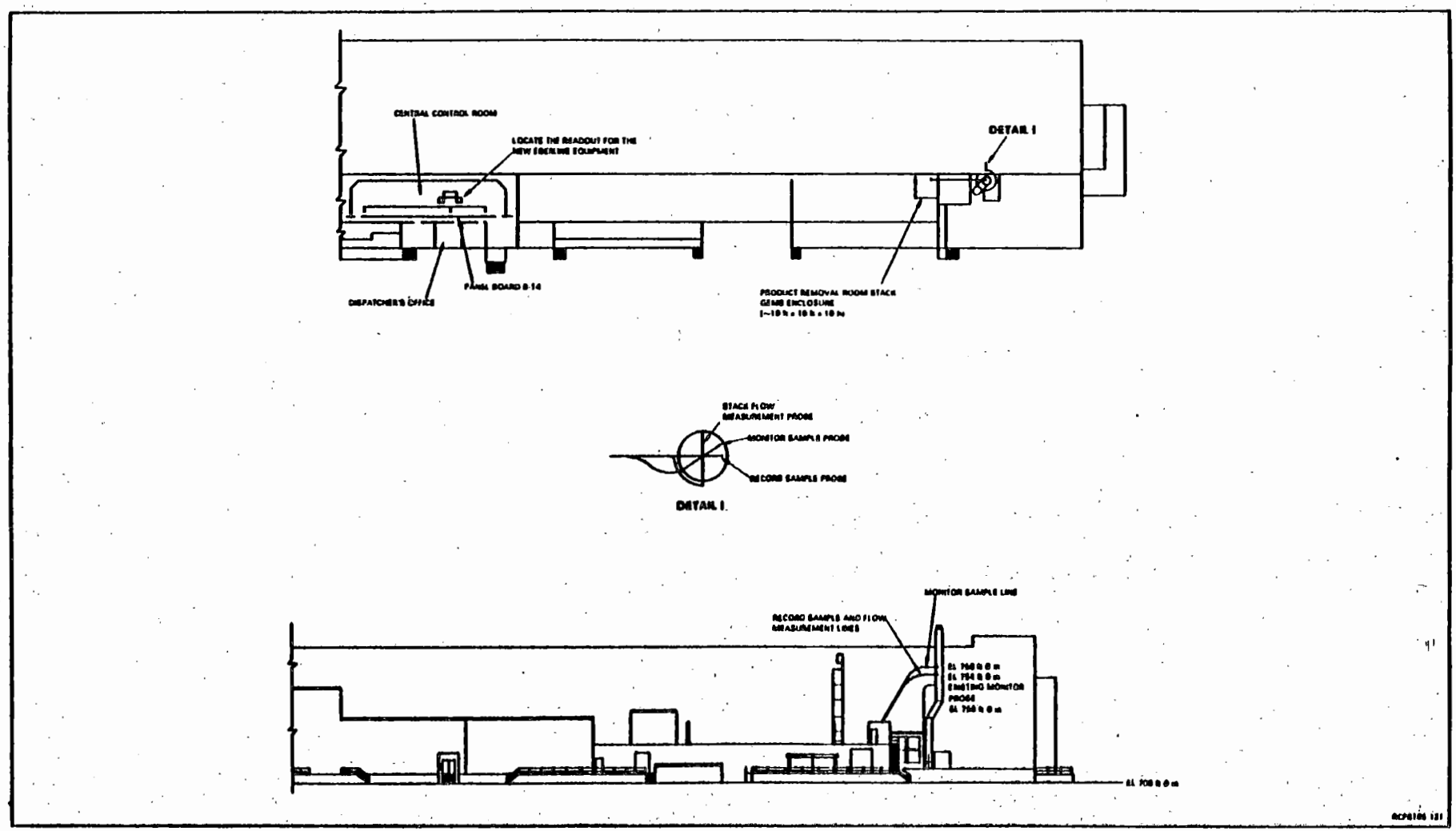


FIGURE 8-19. PUREX Product Removal Room Stack Gaseous Effluent Monitoring System.

A flow totalizing probe is mounted at the 49-ft level of the 296-A-1 stack. The probe is used to monitor the total airflow rate in the 296-A-1 stack. The flow rate as well as the total flow (digital signal) is displayed in the central control room. A "low stack flow" audiovisual alarm is provided in the central control room and will alarm when the stack flow rate is sensed to be below 4,000 standard $ft^3/min$.

8.6.1.1.3 East and West Sample Gallery Hoods. These stacks currently have 1.7-in.-diameter record samplers that are changed each week and counted in the 222-S laboratory for total alpha and total beta radiation. The official air release concentrations for the 296-A-2 and 296-A-3 stacks are based on these counts. Isokinetic monitor sample probes have been added to these stacks. The monitor sample stream from the 296-A-3 stream is fed to a beta-gamma CAM, while the 296-A-2 stream is split into two streams which are fed to an alpha and a beta-gamma CAM.

8.6.1.1.4 East and West Laboratory Exhaust. The 296-A-5A and 296-A-5B stacks have record sample probes. The stream is fed to a 1.7-in.-diameter membranous filter that is changed each week and counted in the 222-S laboratory for total alpha and total beta radiation. The official air release concentrations for the stacks are based on these counts. Monitor sample probes have been added to these stacks. The monitor sample stream is fed to CAM for alpha and gamma radiation monitoring.

8.6.1.1.5 East and West Sample Gallery. The 296-A-6 and 296-A-7 stacks have record sample probes. The streams are fed to 1.9-in.-diameter, round filters which are changed each week and counted in the 222-S laboratory. The official air release concentrations for these two stacks are based on these counts.

8.6.1.1.6 Pipe and Operating Gallery, Burial Tunnel 2, and 293-A Building. The 296-A-8, 296-A-10, and 296-A-14 stacks have record sample probes. The 296-A-8 system has been upgraded to include isokinetic sample probes. The streams are fed to 1.9-in.-diameter, round filters which are changed each week and counted in the 222-S laboratory for total alpha and total beta radiation. The official air release concentrations for these stacks are based on these counts.

8.6.1.2 Liquid Effluent Monitoring. The PUREX Plant liquid effluent system has been described in Sections 7.2 and 7.5. Essentially, the liquid effluent system consists of the following five streams:

- Process condensate (PDD)
- Ammonia scrubber waste condensate (ASD)
- Chemical sewer (CSL)
- Cooling water (CWL)
- Steam condensate (SCD).

The principal sources of the liquid effluent system and the points of discharge from the PUREX building are shown in Figure 8-20. The high-level waste stream, also shown in Figure 8-20, is not classified as a liquid effluent stream, as it is contained for further processing and not released to the environment. As is the case for the monitoring of the gaseous effluent streams, numerous changes are being made or are being planned for the monitoring of the liquid effluent streams. The following discussion describes the existing sampling and monitoring system of the liquid effluents and the new ones to be installed before startup.

8.6.1.2.1 Process Condensate Stream. The PDD stream is proportionally sampled with respect to flow rate. Samples are collected and composited over a 2-wk period and analyzed in the 222-S laboratory. During standby periods the discharge site is monitored for the radionuclides listed in Table 8-18. During operating periods the stream samples are analyzed for the radionuclides listed in Section 7.1.2.1.

A sampling, monitoring, and flow totalizing system is installed. The system is described in Reference 40 and illustrated in Figure 8-21. The stream is proportionally sampled with respect to flow rate and the samples are collected in a stainless steel vessel. Before transfer to the stainless steel vessel, the samples are analyzed for radioactivity by a system of radiation monitoring equipment and instruments with the following capabilities:

- Gamma-sensitive monitor
- Sensitivity $4 \times 10^{-7}$ µCi/mL $^{137}Cs$
- Continuous fluid monitoring
- Operate from 120 V a.c. ±10% power supply
- Remotely actuated check source
- Operate in a background of 0.5 mR/h ± 100%
- Alarm trip level corresponding to $2 \times 10^{-5}$ µCi/mL $^{137}Cs$
- Ambient air temperature range 50°F to 90°F
- Fluid temperature range 60°F to 170°F.

The detecting system consists of a NaI(Tl) crystal coupled to a single-channel analyzer. If the monitoring system detects a released concentration in excess of the limit of $2.0 \times 10^{-5}$ µCi/mL for $^{137}Cs$, a high radiation alarm is activated and a verification sample is automatically collected for laboratory analysis. The system is constructed so that about once every shift the radiation monitoring instrument is automatically flushed with sanitary water, and a check source is automatically activated.

In addition, total flow on the stream is monitored with a magnetic flow meter.

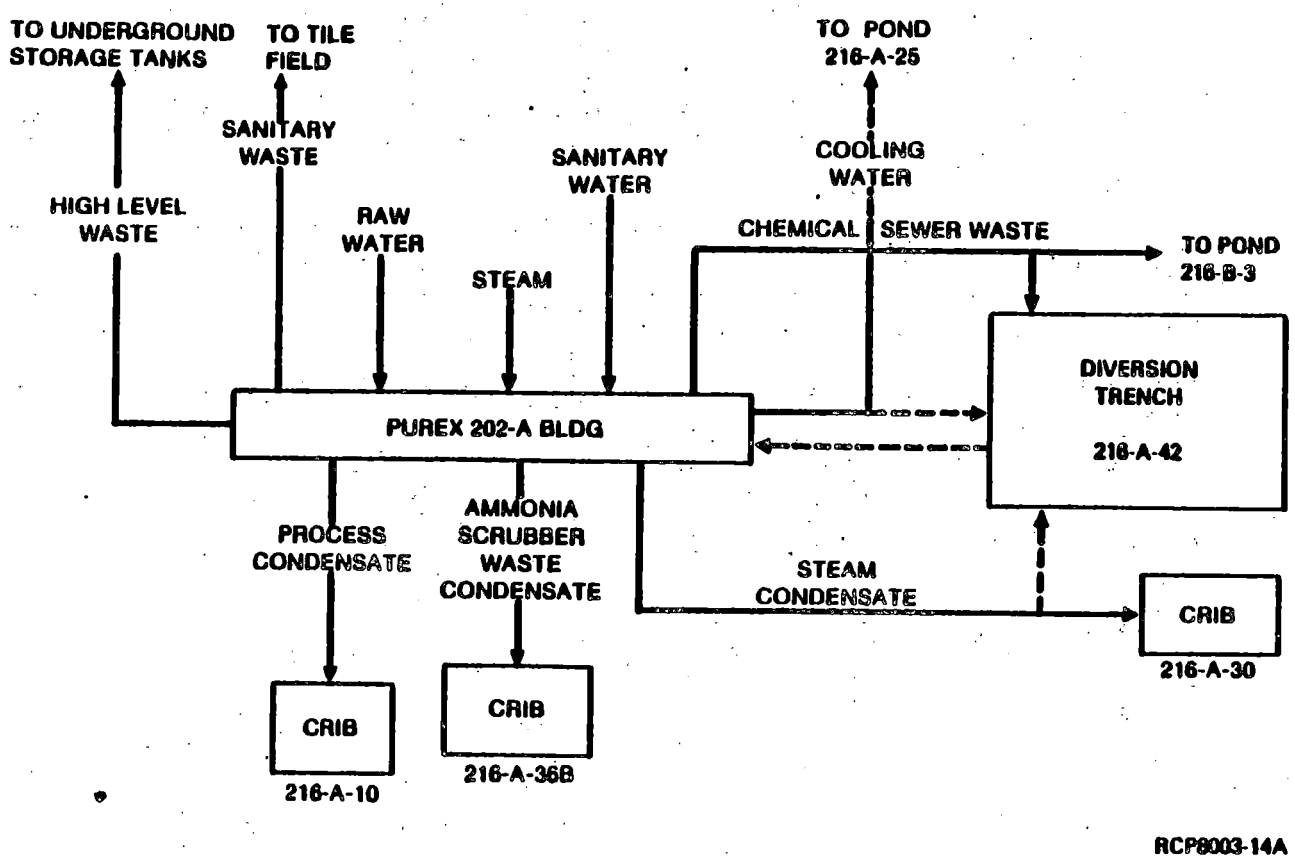


FIGURE 8-20. Simplified Schematic Diagram of the PUREX Plant Liquid Effluents.

TABLE 8-18. Radioactive Isotopes for Which Liquid Discharge Streams are Analyzed During Standby Periods.

| Radioactivity | Discharge stream | | | | |
|---|---|---|---|---|---|
| | 216-A-10 | 216-A-36B | 216-A-30 | 216-A-25 | 216-B-3 |
| Total volume | X | X | X | X | X |
| Pu | X | X | X | X | X |
| Total beta | X | X | X | X | X |
| $^{90}Sr$ | X | X | X | X | X |
| $^{106}Ru$ | X | X | X | X | X |
| $^{137}Cs$ | X | X | X | X | X |
| $^{144}Ce$ | | | X | X | X |
| $^{60}Co$ | X | X | X | X | X |
| $^{238}U$ | X | X | X | X | X |
| $^{3}H$ | | | | X | X |

8.6.1.2.2 Ammonia Scrubber Discharge Stream. The stream is analyzed for radionuclides in accordance with Rockwell's environmental protection manual.(9) A sampling, monitoring, and flow totalizing system has been installed. The system is described in Reference 41 and illustrated in Figure 8-22. The system is identical to the one for the PCD stream. If the monitoring system detects a released concentration in excess of the limit of 2.0 x $10^{-5}$ µCi/mL for $^{137}Cs$, a high radiation alarm is activated in the dispatcher's office and a verification sample is automatically collected for laboratory analysis. The system has the same calibration facilities as the PDD monitoring system. Total flow of the stream is measured with a magnetic flow meter.

8.6.1.2.3 Chemical Sewer Stream. The stream is also analyzed for radionuclides in accordance with Rockwell's environmental protection manual.(9) Normally the sewer receives an uncontaminated flow from process equipment and floor wash. However, it is possible that an accident, operational upset, or sudden leakage in the contaminated process circuit might cause a contaminated flow to drain into the sewer. A sampling, monitoring, and flow totalizing system similar to those installed in the PDD and ASD streams is installed; diversion capability to the 216-A-42 basin is provided (Fig. 8-23).(42)

8.6.1.2.4 Cooling Water Stream. A sampling, monitoring, and flow totalizing system similar to the PDD and ASD streams is installed on the cooling water stream. Diversion capability to the 216-A-42 basin is provided.



9413219.0914

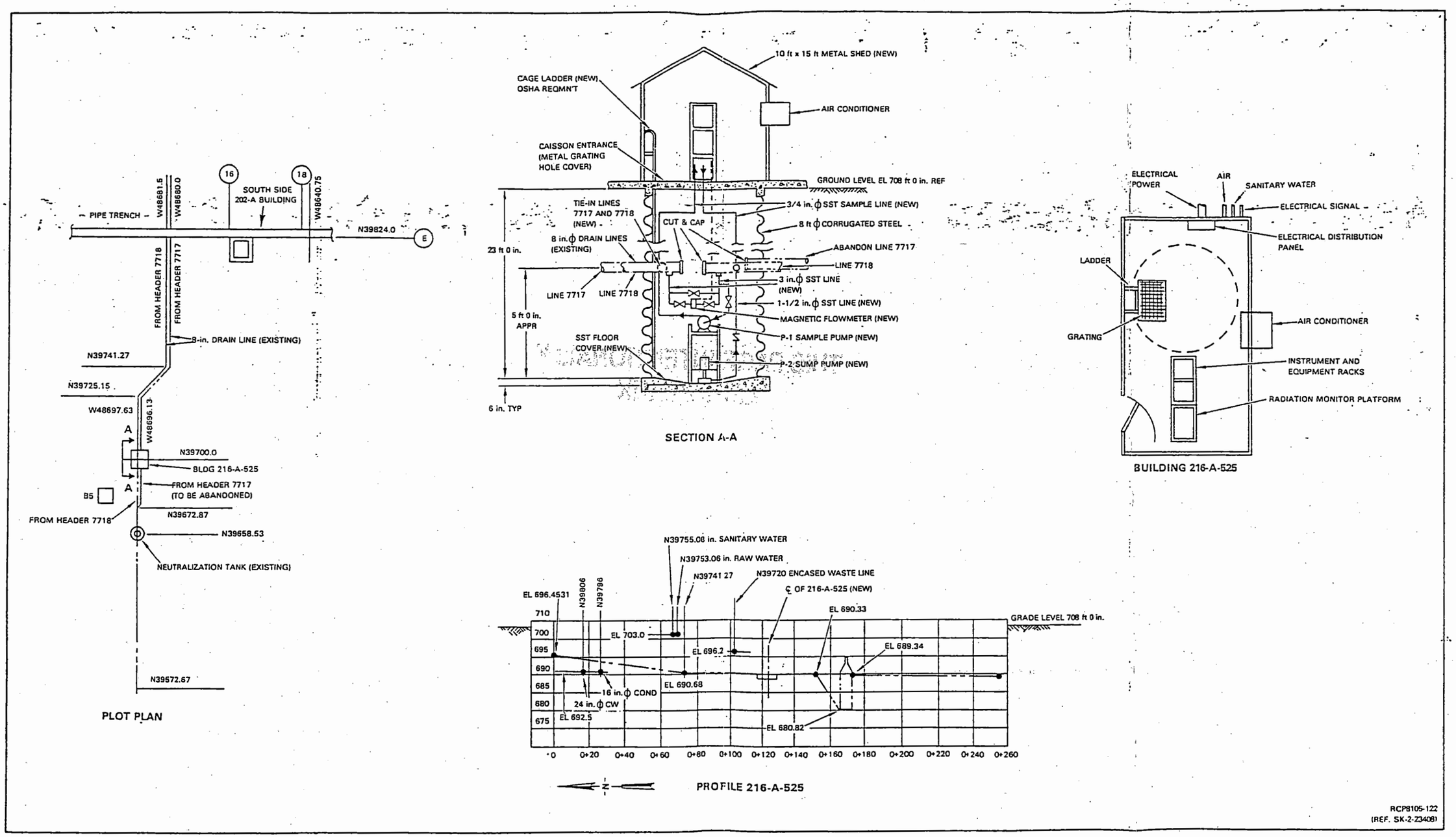


FIGURE 8-21. Process Condensate Sampling, Monitoring, and Totalizing System Facility.

THIS PAGE INTENTIONALLY
LEFT BLANK

This page intentionally left blank.

THIS PAGE INTENTIONALLY
LEFT BLANK

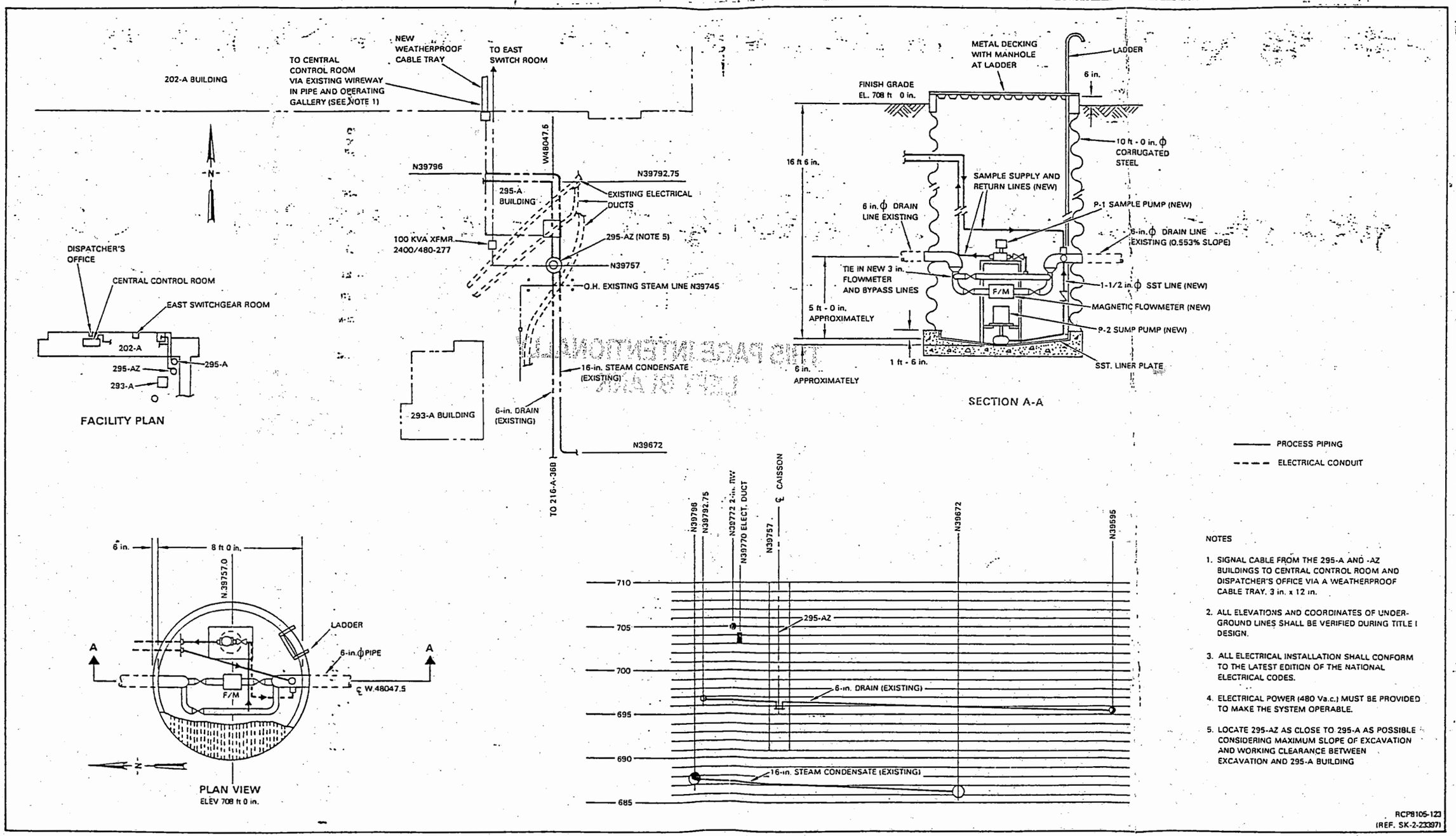


FIGURE 8-22. Ammonia Scrubber Sampling, Monitoring, and Totalizing System.

THIS PAGE INTENTIONALLY
LEFT BLANK

This page intentionally left blank.

THIS PAGE INTENTIONALLY
LEFT BLANK

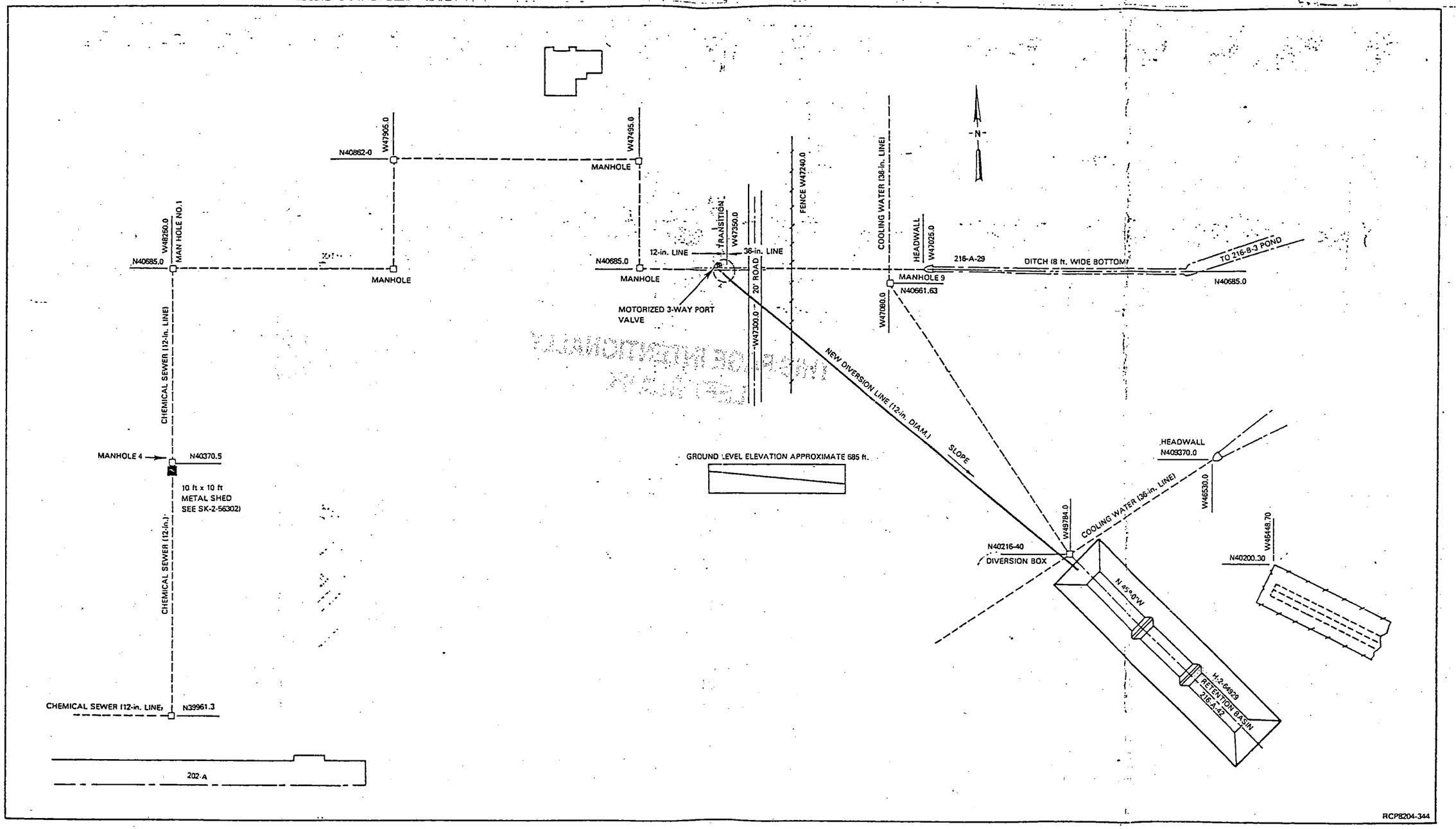


FIGURE 8-23. Diversion System to 216-A-42 Retention Basin.

THIS PAGE INTENTIONALLY
LEFT BLANK

This page intentionally left blank.

THIS PAGE INTENTIONALLY
LEFT BLANK

8.6.1.2.5 Steam Condensate Stream. The SCD stream is proportionally sampled with respect to flow rate. Before being transferred to a container, the samples are monitored by a NaI(Tl) scintillator for $^{137}Cs$. The scintillator is connected to a rate meter, which triggers an alarm in the dispatcher's office if the released concentration for $^{137}Cs$ exceeds $2.0 \times 10^{-5}$ µCi/mL. If an alarm is triggered, the stream can be diverted to a retention basin. The composited liquid samples are collected every 2 wk and analyzed in the 222-S laboratory. During standby the discharge site is analyzed for the radionuclides listed in Table 8-18. When the plant is operating, the stream samples will be analyzed for radionuclides in accordance with Rockwell's environmental protection manual.(9)

8.6.1.3 Solid Radioactive Waste Monitoring. The packaging, storage, and ultimate disposition of all solid radioactive waste are detailed in Section 7.7.

All solid waste materials that are potentially contaminated with radioactive materials are surveyed to estimate both the radioactive material and the special nuclear material content prior to interim storage. The amount of nonfissionable radioactive material is estimated by Radiation Monitoring, using the portable equipment described in Section 8.5.2.1. After packaging, the radiation levels at the surface and at 1 m from the surface on the individual waste packages are measured and documented. Prior to interarea shipments of waste packages, the contamination levels on the exterior surface of the package are measured and documented. These measurements are performed by Radiation Monitoring, using the portable equipment described in Section 8.5.2.1.

Solid waste containing special nuclear material will be packaged in 30- or 55-gal drums. The special nuclear material content is determined by nondestructive assay. The nondestructive assay system is installed in the canyon lobby at the west end of the PUREX Plant. The system consists of a Ge(Li) detector coupled to a multichannel analyzer. The analyzer is set up to count photons of 414 KeV energy. This peak corresponds to the primary gamma ray emitted by $^{239}Pu$. The system is capable of detecting 1 g of plutonium.

8.6.1.4 Environmental Monitoring. Rockwell is responsible for carrying out an environmental monitoring program inside the 200 Areas of the Hanford Site. The PNL is responsible for carrying out an environmental monitoring program for the surroundings of the 200 Areas of the Hanford Site. Rockwell is responsible for the monitoring program inside the site. The standards and procedures of the Rockwell environmental monitoring program are described in detail in Reference 9. The following is a summary of this program.

Water samples are collected each week from 11 sampling points near ponds and ditches in the 200 Areas. The samples are composited and analyzed monthly in the 222-S laboratory. Two types of water samples are collected: grab samples are collected by bailing 1,100 mL of the pond and ditch liquid into a sample bottle and automatic samples are obtained by drawing 50-mL samples every 3 h from a delivery line controlled by an

automatic sampler. The grab and automatic samples are delivered weekly to the 222-S laboratory, where acid is added to the sample bottles and are stored until composited and analyzed for gamma emitters, $^{90}Sr$, plutonium isotopes, $^{241}Am$, and uranium.

Air samples are collected weekly from 21 sampling sites inside the 200 Areas. Two methods are used to obtain air samples. Continuous air samples are obtained by drawing air through a 1.9-in.-diameter or 4-in.-diameter open-face filter. The samplers are operated by a 1/4-hp pump calibrated to pull 57 L/min of air. A rotameter or magnehelic gauge are used to control the sample flow. The samples are changed weekly and the filters are delivered to the 222-S laboratory for gross alpha and beta analysis. After counting, the samples are stored until the end of the calendar quarter, at which time composites are delivered to the United States Testing Company, Inc. for gamma, $^{90}Sr$, plutonium-isotopic, $^{241}Am$, and uranium analyses. In emergencies and planned operations not covered by effluent control systems, grab samples are collected with portable air pumps. Emergency air samples are collected when range fires threaten radiation areas and when uncontrolled releases have occurred. Grab samples are also collected to monitor tank farm activities, burial ground work, and controlled burning of vegetation. A 115-V, portable air pump operated by a 5-kW generator is available for air sampling. The sampler is available at an accessible location 24 hr/d. The generator is available only during normal working hours. Arrangements are made through the emergency officer to obtain access to the generator when emergencies occur during off-shift hours, weekends, or holidays. Radiation Monitoring has several pickup-truck mounted generators available to shift personnel for emergency monitoring needs. The field position of the sampler is determined by Environmental Analysis Monitoring and Radiation Monitoring based on meteorological conditions and terrain features. The samples are delivered to the 222-S laboratory for gross alpha and beta counts. The data are evaluated by Environmental Protection.

A grid system of 81 points, known as the 200 Areas 81 Grid System, has been established in the 200 Areas for the monitoring of radiation levels, soil samples, vegetation samples, and feces samples. Radiation levels are measured monthly at 91 sites (200 Areas 81 Grid System plus liquid sampling sites) using TLD. In addition, nine TLD packages are used to correct the measurements for background radiation. These are tested, packaged, read, and calibrated by PNL. Each dosimeter capsule contains three CaF:Mn TLD chips (Harshaw TLD-400). The capsule is opaque to light and lined with 2 mil of lead and 10 mil of tantalum. There are two capsules for each field location and these are exchanged each month. When used, the capsules are suspended in weatherproof, plastic vials 3.3 ft aboveground. Nine background capsules are carried with the field dosimeters during the exchange and then placed in a shielded container. The background capsules are read with the field capsules. The average dose on the background capsules is an estimate of the dose to the TLD from field handling and transporting. The background dose is subtracted from each field dosimeter.

Soil samples, vegetation samples, and animal feces samples are collected annually from the 200 Areas 81 Grid System. If found contaminated, samples are delivered to United States Testing Company, Inc. or the 222-S laboratory for gamma emitters, $^{90}Sr$, and plutonium analyses.

Aquatic vegetation and mud samples are collected annually at 15 sites from the banks and shorelines of the 200 Areas ponds and ditches. The samples are delivered to the 222-S laboratory for gamma emitter, $^{90}Sr$, plutonium isotopic, $^{241}Am$, and uranium analyses. Routine radiological surveys are performed on the surface of the 200 Areas roads and firebreaks. Geiger-Mueller tubes connected to a rate meter. When activity is detected, the vehicle is stopped and a detailed survey is made with a hand-held detector. The boundary of the contamination is marked and recorded on a map. Radiation Monitoring and Operations management are notified so the posting and cleanup activities can be initiated.

Radiological surveys of radiation areas, ground plots, shorelines, and banks of ponds and ditches are conducted annually at 57 sites. Standard, portable, survey meters are used for beta-gamma surveys. A special zinc sulfide scintillator probe with an internal preamplifier is used with a rate meter for alpha surveys. Data obtained in these surveys are compared with data from previous surveys to detect changes. Recommendations for corrective actions are made to Operations when necessary. Data analysis is performed in accordance with the following published techniques.

- United States Testing Company, Inc.

  Performs analyses of soil, vegetation, feces, and air samples from the grid system and other selected sample sites. Analyses are performed according to techniques described in the current edition of the following manuals:

  - HASL-300 Procedures Manual[43]
  - Measurement of Radionuclides in the Environment, Sampling and Analysis of Plutonium in Soil[44]
  - Environmental Radiation Measurements.[45]

- Rockwell

  The 222-S analytical laboratory performs analyses of air filter samples and the sediment, water, and aquatic vegetation samples from the liquid disposal sites. Analyses are performed according to techniques described in the current edition of the following manuals:

  - HASL-300 Procedures Manual[43]
  - ASTM Standards, Water[46]

- Standard Methods for the Examination of Water and Waste Water(47)

- EPA Methods for Chemical Analysis of Water and Wastes.(48)

- Pacific Northwest Laboratory Physical Science

The Technical Analysis section at PNL performs chemical and radionuclide analyses on groundwater well samples. Analyses are performed according to techniques described in the current edition of the following manuals:

- ASTM Standards, Water(46)

- Standard Methods for Examination of Water and Waste Water(47)

- HASL-300 Procedures Manual.(43)

- EPA Methods for Chemical Analysis of Water and Waste Water(47)

- Pacific Northwest Laboratory Radiation Standards and Engineering

The Calibration Laboratory at PNL reads, tests, calibrates, and packs the TLDs in accordance with:

- Performance Testing, and Procedural Specifications for Thermo-luminescence Dosimetry: Environmental Applications(49)

- The Hanford Environmental $CaF_2$: Mn Thermoluminescence Dosimetry.(50)

Data collected from environmental monitoring are stored in a computer data base system. Current and historical data can be recalled to be reviewed, to determine and follow trends, and to perform statistical analysis of the data. Trends are reported in weekly, monthly, and quarterly Environmental Protection reports. A similar data system is maintained by PNL for their environmental monitoring program of the Hanford Site, which includes the surroundings of the 200 Areas.

### 8.6.2 Analysis of Multiple Contribution

The radiological impact of all Hanford operations on the surrounding population is continuously monitored by PNL. The monitoring program is carried out in accordance with Reference 5 and the results are published annually in environmental surveillance reports. Table 8-19 lists the composition of Hanford effluents reported for calendar year 1978. The data were used to calculate the annual dose for the maximum individual, the 50-yr dose commitment for the maximum individual, the dose to the population from liquid effluents, and the dose to the population from airborne effluents. The data are presented in Tables 8-20 through 8-23.

TABLE 8-19. Radionuclide Composition of Hanford Effluents for Calendar Year 1978.

| Radionuclide | Half-life | Effluent (Ci) | | | |
|---|---|---|---|---|---|
| | | Liquid to river | Gaseous | | |
| | | | 100 Area | 200 Areas | 300 Area |
| $^{3}H$ (HTO) | 12.3 yr | 330 | 31 | - | 0.046 |
| $^{24}Na$ | 15 h | - | 0.20 | - | - |
| $^{32}P$ | 14.3 d | 0.03 | - | - | - |
| $^{41}Ar$ | 1.8 h | - | $1.1 \times 10^{5}$ | - | - |
| $^{51}Cr$ | 27.8 d | 0.14 | 0.046 | - | - |
| $^{54}Mn$ | 303 d | 0.18 | 0.021 | - | - |
| $^{56}Mn$ | 2.6 h | 1.2 | 3.8 | - | - |
| $^{59}Fe$ | 46 d | 0.11 | 0.022 | - | - |
| $^{58}Co$ | 71 d | 0.032 | 0.019 | - | - |
| $^{60}Co$ | 5.3 yr | 0.96 | 0.038 | - | $14.7 \times 10^{-5}$[a] |
| $^{65}Zn$ | 245 d | - | 0.012 | - | - |
| $^{76}As$ | 26.4 h | - | 6.7 | - | - |
| $^{82}Br$ | 35 h | - | 0.013 | - | - |
| $^{85m}Kr$ | 4.4 h | - | 510 | - | - |
| $^{85}Kr$ | 10.8 h | - | - | - | 440 |
| $^{87}Kr$ | 76 min | - | 1540 | - | - |
| $^{88}Kr$-Rb | 2.8 hr | - | 1180 | - | - |
| $^{89}Sr$ | 52.7 d | 0.40 | 0.021 | - | - |
| $^{90}Sr$ | 27.7 yr | 1.3 | $7.2 \times 10^{-4}$ | 0.23[b] | $1.1 \times 10^{-4}$[b] |
| $^{91}Sr$ | 9.7 h | - | 0.95 | - | - |
| $^{95}Zr$ | 65.5 d | 0.11 | 0.0078 | - | - |
| $^{95}Nb$ | 35 d | 0.16 | 0.0073 | - | - |
| $^{97}Zr$-Nb | 17 h | - | 0.011 | - | - |
| $^{99m}Mo$-Tc | 66.7 h | 2.6 | 1.0 | - | - |
| $^{103}Ru$ | 39.5 h | 0.38 | 0.017 | - | - |
| $^{106}Ru$ | 368 d | 0.57 | 0.060 | - | - |
| $^{122}Sb$ | 2.8 d | - | 0.0054 | - | - |
| $^{124}Sb$ | 60.4 d | 0.062 | 0.003 | - | - |
| $^{125}Sb$ | 2.7 yr | 0.17 | $3.0 \times 10^{-4}$ | - | - |
| $^{132}Te$ | 77.7 h | - | 0.025 | - | - |
| $^{129}I$ | $1.7 \times 10^{7}$ yr | $8.2 \times 10^{-6}$ | - | - | $5.8 \times 10^{-4}$ |
| $^{131}I$ | 8.1 d | 4.8 | 0.47 | - | $3.5 \times 10^{-4}$ |
| $^{132}I$ | 2.3 h | - | 6.2 | - | - |
| $^{133}I$ | 20.3 h | 0.95 | 3.1 | - | - |
| $^{135}I$ | 6.7 h | - | 6.2 | - | - |
| $^{133}Xe$ | 5.3 d | - | 91 | - | - |
| $^{133m}Xe$ | 2.3 d | 5.7 | 1.6 | - | - |
| $^{135}Xe$ | 9.1 h | - | 2120 | - | - |
| $^{138}Xe$ | 17.5 min | - | 5040 | - | - |
| $^{134}Cs$ | 2.1 yr | - | $9.8 \times 10^{-4}$ | - | - |
| $^{137}Cs$ | 30.0 yr | 0.031 | 0.0023 | - | - |
| $^{140}Ba$ | 12.8 d | 0.38 | 0.19 | - | - |
| $^{140}La$ | 40.2 h | 4.0 | 1.1 | - | - |
| $^{141}Ce$ | 32.5 d | 0.035 | 0.0074 | - | - |
| $^{144}Ce$-Pr | 284 d | 0.15 | 0.057 | - | - |
| $^{147}Nd$ | 11.1 d | 0.17 | 0.077 | - | - |
| $^{153}Sm$ | 46.8 h | - | 0.028 | - | - |
| $^{154}Eu$ | 16 yr | - | 0.032 | - | - |
| $^{155}Eu$ | 1.8 yr | - | 0.071 | - | - |
| $^{187}W$ | 23.9 h | - | 0.34 | - | - |
| $^{220}Rn$ | - | - | - | - | 0.009 |
| U-Nat. | $4.4 \times 10^{9}$ yr | - | - | - | $7.2 \times 10^{-6}$ |
| $^{239}Np$ | 2.3 d | - | 0.015 | - | - |
| $^{238}Pu$ | 86.4 yr | $1.3 \times 10^{-4}$ | $3.6 \times 10^{-7}$ | - | - |
| $^{239}Pu$ | $2.44 \times 10^{4}$ yr | 0.085 | $2.2 \times 10^{-6}$ | 0.0025[c] | $2.8 \times 10^{-5}$[c] |

[a]Actually reported as mixed activation products. Cobalt-60 was assumed for simplicity and was used in dose calculations.

[b]Actually reported as mixed fission products. Strontium-90 was assumed for simplicity and was used in dose calculations.

[c]Actually reported as gross alpha. Plutonium-239 was assumed for simplicity and was used in dose calculations.

-- Radionuclide not reported in effluent.

TABLE 8-20. Dose to the Maximum Individual from Effluents Released During 1978.

| Environmental pathway | Dose (mrem)[a] | | | | | |
|---|---|---|---|---|---|---|
| | Skin | Whole body | GI[b] | Thyroid | Bone | Lung |
| **First-year dose** | | | | | | |
| Airborne[c] | 0.11 | 0.08 | 0.01 | 0.15 | 0.01 | 0.01 |
| Drinking water | - | 0.01 | 0.01 | 0.05 | 0.01 | 0.01 |
| Irrigated foodstuffs | 0.01 | 0.01 | 0.01 | 0.16 | 0.01 | 0.01 |
| Aquatic recreation[d] | 0.01 | 0.01 | 0.01 | 0.05 | 0.01 | 0.01 |
| **50-yr commitment** | | | | | | |
| Airborne[c] | 0.11 | 0.08 | 0.01 | 0.22 | 0.01 | 0.01 |
| Drinking water | - | 0.01 | 0.01 | 0.05 | 0.01 | 0.01 |
| Irrigated foodstuffs | 0.01 | 0.04 | 0.01 | 0.16 | 0.14 | 0.01 |
| Aquatic recreation[d] | 0.01 | 0.02 | 0.01 | 0.05 | 0.06 | 0.01 |

[a]The doses shown are not strictly additive. The dose received is dependent on the location and assumed living habits of the hypothetical maximum individual. The location of the maximum individual is different for each pathway shown; in some cases, these locations are separated by many miles (see text).

[b]Gastrointestinal tract (lower large intestine).

[c]Includes dose contributions from inhalation, submersion, ingestion of foodstuffs contaminated by airborne deposition, and exposure to ground contamination.

[d]Includes consumption of fish from the Columbia River.

TABLE 8-23. Ambient Radiation Dose for Hanford Site--January through December 1974.[a](33)

| Location | Number of measurements[b] | Dose (mrem/yr)[c] | | |
|---|---|---|---|---|
| | | Maximum | Minimum | Average |
| **Perimeter community dose** | | | | |
| Eltopia | 11 | 69 | 55 | 62 ± 9 |
| Pasco | 14 | 80 | 66 | 73 ± 9 |
| Richland | 27 | 80 | 55 | 66 ± 14 |
| Vernita | 15 | 116 | 69 | 84 ± 22 |
| Benton City | 13 | 66 | 55 | 62 ± 9 |
| Othello | 14 | 73 | 55 | 62 ± 9 |
| Connell | 14 | 73 | 55 | 66 ± 11 |
| Berg Ranch | 14 | 95 | 69 | 80 ± 15 |
| Wahluke | 14 | 84 | 66 | 77 ± 12 |
| Cooke Brothers | 14 | 77 | 55 | 69 ± 13 |
| Ringold | 11 | 69 | 55 | 69 ± 17 |
| Baxter Substation | 13 | 77 | 44 | 66 ± 18 |
| Byers Landing | 14 | 88 | 69 | 77 ± 11 |
| Average ±2 sample standard deviations | | | | 70 ± 15 |
| **Distant community dose** | | | | |
| Ellensburg | 10 | 66 | 44 | 51 ± 13 |
| Walla Walla | 13 | 80 | 62 | 73 ± 10 |
| Sunnyside | 14 | 69 | 55 | 66 ± 9 |
| McNary | 14 | 80 | 62 | 73 ± 11 |
| Moses Lake | 14 | 73 | 58 | 66 ± 7 |
| Washtucna | 14 | 84 | 58 | 69 ± 13 |
| Average ±2 sample standard deviations | | | | 66 ± 16 |

[a]Total background dose from external irradiation would include in an additional dose from the neutron component of cosmic radiation. This is estimated to be equivalent to 6 mrem/yr at the elevation of the Hanford region from EPA publication ORP/SID 72-1.

[b]Dosimeters are generally deployed on a 2-wk or 4-wk interval. This practice results in about 26 or 13 separate measurements at each location. There is some variability because of scheduling and year-to-year overlap.

[c]Monthly or biweekly measurements converted to equivalent annual dose. Average ±2 sample standard deviations calculated for each location.



9413219.0927

TABLE 8-21. Dose to the Population from Liquid Effluents Released During 1978.

| Exposure mode | Population affected | Population dose (man-rem) | | | |
|---|---|---|---|---|---|
| | | Whole body | GI[a] | Thyroid | Bone |
| **First-year dose** | | | | | |
| Drinking water | 50,000 | 0.01 | 0.01 | 1.40 | 0.02 |
| Fish | b | 0.01 | 0.01 | 0.02 | 0.01 |
| Aquatic recreation | 125,000 | 0.01 | 0.01 | 0.01 | 0.01 |
| Irrigated foodstuffs | 2,000 | 0.01 | 0.01 | 0.16 | 0.01 |
| **50-yr commitment** | | | | | |
| Drinking water | 50,000 | 0.06 | 0.01 | 1.50 | 0.22 |
| Fish | b | 0.01 | 0.01 | 0.02 | 0.02 |
| Aquatic recreation | 125,000 | 0.01 | 0.01 | 0.01 | 0.01 |
| Irrigated foodstuffs | 2,000 | 0.04 | 0.01 | 0.16 | 0.14 |

[a]Gastrointestinal tract (lower large intestine).

[b]The population dose is based on consumption of 15,000 kg of fish during 1978. The population dose would be numerically the same regardless of the number of people eating the fish.

TABLE 8-22. Dose to the Population from Airborne Effluents Released During 1978.

| Effluent release | 80-km population | Population dose (man-rem) | | | | |
|---|---|---|---|---|---|---|
| | | Whole body | GI* | Thyroid | Bone | Lung |
| **First-year dose** | | | | | | |
| 100-N Area | 236,000 | 1.5 | 1.5 | 3.1 | 1.5 | 1.7 |
| 200 Areas | 258,000 | 0.01 | 0.01 | 0.01 | 0.01 | 0.02 |
| 300 Area | 171,000 | 0.01 | 0.01 | 0.25 | 0.01 | 0.10 |
| **50-yr commitment** | | | | | | |
| 100-N Area | 236,000 | 1.5 | 1.5 | 3.2 | 1.5 | 1.7 |
| 200 Areas | 258,000 | 0.06 | 0.01 | 0.01 | 0.28 | 0.06 |
| 300 Area | 171,000 | 0.01 | 0.01 | 0.41 | 0.03 | 0.11 |

*Gastrointestinal tract (lower large intestine).

The calculation for annual dose to the maximum individual and the 50-yr dose commitment for the maximum individual includes: (1) exposure to airborne radionuclides at a location 1 mi east of the 300 Area, (2) intake of drinking water obtained from the Columbia River at Richland, (3) consumption of foodstuffs irrigated with Columbia River water at Riverview, and (4) aquatic recreation along the Hanford reach of the Columbia River. The doses are calculated using the DACRIN and FOOD codes and radioactive pathways that apply to the Hanford Site and its surroundings. The doses shown in these tables are not additive, since it is not possible for a single individual to be exposed to all sources at the same time.

Four new nuclear reactor facilities are being completed on the Hanford Site. One facility is the Fast Flux Test Facility, a sodium-cooled fast breeder reactor. The other three facilities are light-water power reactors. Radioactive effluents from these facilities will probably be comparable to those from N Reactor, which essentially make up the releases from the 100 Area.

Measured background radiation doses for communities surrounding the Hanford Site are presented in Table 8-24. Figure 8-24 illustrates the doses due to effluents from the Hanford Site with doses from other sources of radiation.

9413219.0929

### 8.6.3 Estimated Offsite Exposure

The site location and site description are given in detail in Section 3.1. There are no residential sites closer than about 12 mi to the PUREX Facility and the closest significant population center is the city of Richland, located about 18 mi to the southeast. Figure 3-6 portrays the estimated geographic distribution of the 1980 population within an 50-mi radius of the Hanford Meteorological Station which is located 3 mi to the west-northwest of the PUREX Plant.

State Highway 240 runs through the Hanford Site and passes within 5 mi of the PUREX Plant. The potential for public exposure on this highway is taken into consideration for analyses of hypothetical accidents, but it would not be appropriate or realistic to use the highway location for the purpose of predicting continuous exposure to the general population. The section chosen for predicting the maximum exposure to an individual is Ringold, about 15 mi east-southeast of the PUREX Plant.

8.6.3.1 Identification of Sources. The projected radioactive gaseous effluents from plant operation are given in Table 7-3. These releases are based on processing annually 2,100 t of N Reactor fuel irradiated to 12% $^{240}Pu$. The fuel is composed of 80% Mark IV fuel elements and 20% Mark IA (spike) fuel elements. The decay history of the fuel is assumed to be one-sixth (350 t) 180-d cooled, one-sixth 2-yr cooled, and one-sixth 3-yr cooled. The remainder of the fuel is cooled for a period longer than 3 yr. If 6% $^{240}Pu$ irradiated fuel is processed, then the radioactive effluent will be about one-half those released for the 12% $^{240}Pu$ fuel.

TABLE 8-24. Computer Programs Used to Calculate Potential Radiation Doses from Effluents Released at PUREX.

| Program | Type of Dose |
|---|---|
| KRONIC | 1-yr air submersion dose from chronic releases, individual and collective |
| HADOC | 1-yr individual and collective air submersion and inhalation dose commitments from acute releases (semi-infinite cloud model for external doses) |
| DACRIN | Individual and collective inhalation doses from chronic or acute releases, 1-yr doses, dose commitments, and accumulated doses |
| PABLM | Individual and collective doses from contaminated farm products, from either air deposition or irrigation, 1-yr dose, and dose commitment |
| | Individual and collective doses from contaminated water and aquatic foods and aquatic recreation, 1-yr dose, and dose commitment |

9413219.0930

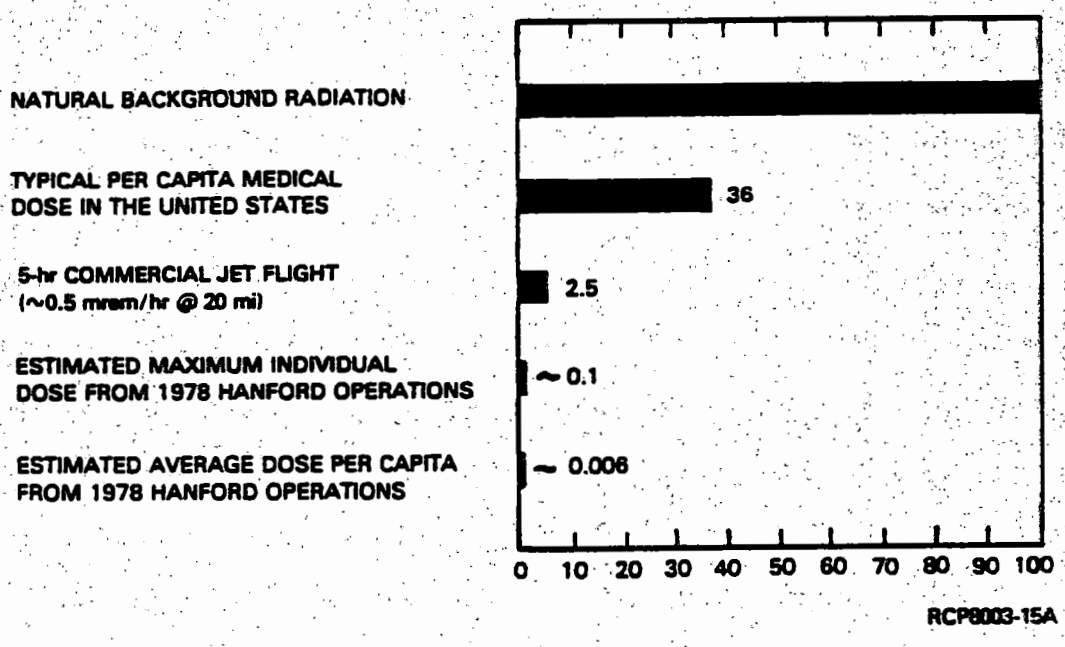


FIGURE 8-24. Comparative Doses Received (mrem) from Various Radiation Sources.[45]

Greater than 90% of the radionuclides released in the gaseous effluent will be emitted from the main stack at the PUREX Plant. The estimates for total alpha, total beta, and $^{131}I$ are based on measurements made while reprocessing fuel at the plant in 1972, but include the effect of planned improvements at the plant which will further reduce the quantity of radionuclides released to the environment. The estimated release rates for the gaseous and volatile radionuclides are based on calculations of the total quantity of such radionuclides in the fuel and the partitioning expected in the process equipment. For example, all of the $^{85}Kr$ is released, since capture and disposal are not practical at the plant. The release of $^{129}I$ is assumed to occur in the same percentage as $^{131}I$ which has been measured. Approximately 15% of the tritium in the fuel is assumed to be entrained in the gaseous effluent for the purpose of calculating offsite exposure, although it is judged that this is conservatively high and that greater than 95% of tritium exits in aqueous waste streams. The total amount of $^{14}C$ in the fuel is not well known and, in fact, is a strong function of the quantity of nitrogen trapped in the fuel during manufacture. It is assumed that all of the $^{14}C$ is released to the environment as carbon dioxide in the gaseous effluent.

The radionuclides listed in Table 7-3 are the source terms for the offsite exposure calculations. A detailed breakdown of the specific nuclides that constitute the total alpha and total beta (as particulates) categories is not available. Therefore, these radionuclide groups are represented by $^{239}Pu$ and $^{90}Sr$, respectively.

8.6.3.2 Analysis of Effects and Consequences. A large data base and a sophisticated "pathways" model have been developed for performing the offsite exposure calculations in support of the numerous programs at the Hanford Site involving radioactive material. The data base includes dietary and recreational preferences and habits in the general population, as well as agricultural practices in the general region. The standard Hanford terrestrial pathway data are given in the 1979 annual reports(51,52) on environmental surveillance and environmental status of the Hanford Site.

Meteorological data have been collected at the Hanford Meteorological Station for the past 30 yr. Values of $\chi/Q'$ in $s/m^3$ are available in Hanford annual reports for the 200-ft-release height. Taking prevailing winds, distance to site boundary, and dietary habits of the population into consideration, it has been determined that the maximally exposed individual is a person who lives on a farm in the Ringold area and who supports himself and his family with a large garden and farm-animal products. The $\chi/Q'$ values at Ringold from chronic releases are $7.4 \times 10^{-8}$ $s/m^3$ for ground level and $4.5 \times 10^{-9}$ $s/m^3$ for elevated releases. Standardized input for Hanford environmental impact statements is summarized in a recent report.(53)

The computer programs used to calculate potential radiation doses from atmospheric releases at the plant are summarized in Table 8-25 and their interrelationship in performing dose predictions for a maximally exposed individual and to the regional population due to a chronic atmospheric release is shown in Figure 8-25. The programs KRONIC[54] and DACRIN[55,56] take information about meteorology and population distribution and calculate air submersion and inhalation doses, respectively, for a given release term. A population-weighted value of the annual average air concentration per unit release of radionuclides (-/Q') calculated as a byproduct of KRONIC is used by the program PABLM[57] along with information on crops grown locally to calculate an accumulated dose from terrestrial pathways.

The radiation doses predicted as a result of routine releases from the PUREX Plant when it begins reprocessing fuel are given in Table 8-25. The predicted doses are for the maximum individual and for the general population living within a 50-mi radius area of the PUREX Plant. Each group is broken down further into three categories:

- The dose from 1 yr of release with 1 yr of accumulation
- The dose from 1 yr of release, but with a 70-yr accumulation period
- The dose from 10 yr of release with a 70-yr accumulation period.

The doses are shown separately, according to the pathway of exposure (air submersion, inhalation, ground deposition, and ingestion) and organ of the body. The designation "all" implies that all organs of the body receive the same dose as the total body. The sum of the total body doses for all pathways of exposure to the maximum individual as a result of 10 yr of plant operation and 70 yr of accumulation is 0.4 mrem. This is negligible in comparison with an expected dose of about 7,000 mrem due to natural background radiation which the same individual will receive over a 70-yr period.

### 8.6.4 Liquid Release

The information identified by Nuclear Regulatory Guide 3.26 for inclusion in this section has been described in other sections of this Final Safety Analysis Report. Criteria and improvements for the liquid effluent streams are discussed in Section 7.1. Details of the treatment systems for the various streams are given in Section 7.5. Section 8.6.2 describes the results of the surveillance program upon which the offsite population exposure calculations are based.

9413219.0932

TABLE 8-25. Radiation Doses from Routine Releases from the PUREX Plant for an Annual Fuel Reprocessing Rate of 2,100 t to the Maximum Individual and to the Surrounding Population.

| Pathway and organ | Maximum individual dose (rem) | | | Population dose (man-rem)[d] | | |
|---|---|---|---|---|---|---|
| | 1-yr release/[a] 1-yr accumulation | 1-yr release/[b] 70-yr accumulation | 16-yr release/[c] 70-yr accumulation | 1-yr release/ 1-yr accumulation | 1-yr release/ 70-yr accumulation | 16-yr release/ 70-yr accumulation |
| **Air submersion** | | | | | | |
| All organs | $1.3 \times 10^{-5}$ | $1.3 \times 10^{-5}$ | $2.1 \times 10^{-4}$ | $1.5 \times 10^{0}$ | $1.5 \times 10^{0}$ | $2.4 \times 10^{1}$ |
| **Inhalation** | | | | | | |
| Total body | $2.0 \times 10^{-7}$ | $1.2 \times 10^{-6}$ | $1.9 \times 10^{-5}$ | $3.2 \times 10^{-2}$ | $2.0 \times 10^{-1}$ | $3.0 \times 10^{0}$ |
| Bone | $5.4 \times 10^{-7}$ | $1.7 \times 10^{-5}$ | $2.7 \times 10^{-4}$ | $8.6 \times 10^{-2}$ | $2.8 \times 10^{0}$ | $4.3 \times 10^{1}$ |
| Lung | $8.5 \times 10^{-7}$ | $3.3 \times 10^{-6}$ | $5.3 \times 10^{-5}$ | $1.4 \times 10^{-1}$ | $5.3 \times 10^{-1}$ | $8.5 \times 10^{0}$ |
| Thyroid | $6.0 \times 10^{-7}$ | $6.8 \times 10^{-7}$ | $1.1 \times 10^{-5}$ | $9.6 \times 10^{-2}$ | $1.1 \times 10^{-1}$ | $1.7 \times 10^{0}$ |
| GI-LLI | $8.3 \times 10^{-9}$ | $8.4 \times 10^{-9}$ | $1.3 \times 10^{-7}$ | $1.3 \times 10^{-3}$ | $1.3 \times 10^{-3}$ | $2.1 \times 10^{-2}$ |
| **Ground deposition** | | | | | | |
| All organs | $3.6 \times 10^{-9}$ | $3.6 \times 10^{-9}$ | $3.6 \times 10^{-6}$ | $3.8 \times 10^{-4}$ | $3.8 \times 10^{-4}$ | $3.8 \times 10^{-1}$ |
| **Ingestion** | | | | | | |
| Total body | $2.4 \times 10^{-6}$ | $5.6 \times 10^{-6}$ | $6.8 \times 10^{-4}$ | $8.7 \times 10^{-1}$ | $4.0 \times 10^{-1}$ | $4.1 \times 10^{1}$ |
| Bone | $2.6 \times 10^{-6}$ | $1.5 \times 10^{-5}$ | $2.4 \times 10^{-3}$ | $2.0 \times 10^{-1}$ | $1.0 \times 10^{0}$ | $1.5 \times 10^{2}$ |
| Lung | $2.2 \times 10^{-6}$ | $2.2 \times 10^{-6}$ | $3.6 \times 10^{-5}$ | $1.6 \times 10^{-1}$ | $1.6 \times 10^{-1}$ | $2.6 \times 10^{0}$ |
| Thyroid | $3.9 \times 10^{-5}$ | $5.0 \times 10^{-5}$ | $1.8 \times 10^{-3}$ | $3.6 \times 10^{0}$ | $4.8 \times 10^{0}$ | $1.5 \times 10^{2}$ |
| GI-LLI | $2.4 \times 10^{-6}$ | $2.5 \times 10^{-6}$ | $8.9 \times 10^{-5}$ | $1.8 \times 10^{-1}$ | $1.8 \times 10^{-1}$ | $5.8 \times 10^{0}$ |
| **Total from all pathways** | | | | | | |
| Total body | $1.6 \times 10^{-5}$ | $2.0 \times 10^{-5}$ | $9.1 \times 10^{-4}$ | $1.7 \times 10^{0}$ | $2.1 \times 10^{0}$ | $6.8 \times 10^{1}$ |
| Bone | $1.6 \times 10^{-5}$ | $4.5 \times 10^{-5}$ | $2.9 \times 10^{-3}$ | $1.8 \times 10^{0}$ | $5.3 \times 10^{0}$ | $2.2 \times 10^{2}$ |
| Lung | $1.6 \times 10^{-5}$ | $1.9 \times 10^{-5}$ | $3.0 \times 10^{-4}$ | $1.8 \times 10^{0}$ | $2.2 \times 10^{0}$ | $3.5 \times 10^{0}$ |
| Thyroid | $5.3 \times 10^{-5}$ | $6.4 \times 10^{-5}$ | $2.0 \times 10^{-3}$ | $5.2 \times 10^{0}$ | $6.4 \times 10^{0}$ | $1.8 \times 10^{2}$ |
| GI-LLI | $1.5 \times 10^{-5}$ | $1.6 \times 10^{-5}$ | $3.0 \times 10^{-4}$ | $1.7 \times 10^{0}$ | $1.7 \times 10^{0}$ | $3.0 \times 10^{1}$ |

[a]A 1-yr release/1-yr accumulation is the dose received in the first year from exposure in that year.
[b]A 1-yr release/70-yr accumulation is the dose received over a 70-yr lifetime from exposure in the first year. For external exposure, it is equal to the 1-yr release/1-yr accumulation dose.
[c]A 16-yr release/70-yr accumulation is the total dose accrued over a lifetime of continuous exposure to residual radiation both during and after the 16 yr of PUREX Plant operation.
[d]The population dose is for an estimated population (1990) of 417,000. All local population doses in this FSAR are based on this population distribution within a 80-km (50-mi) radius from the Hanford Meteorological Station located at about the center of the Hanford Site. It is equal to the 1-yr release/1-yr accumulation.

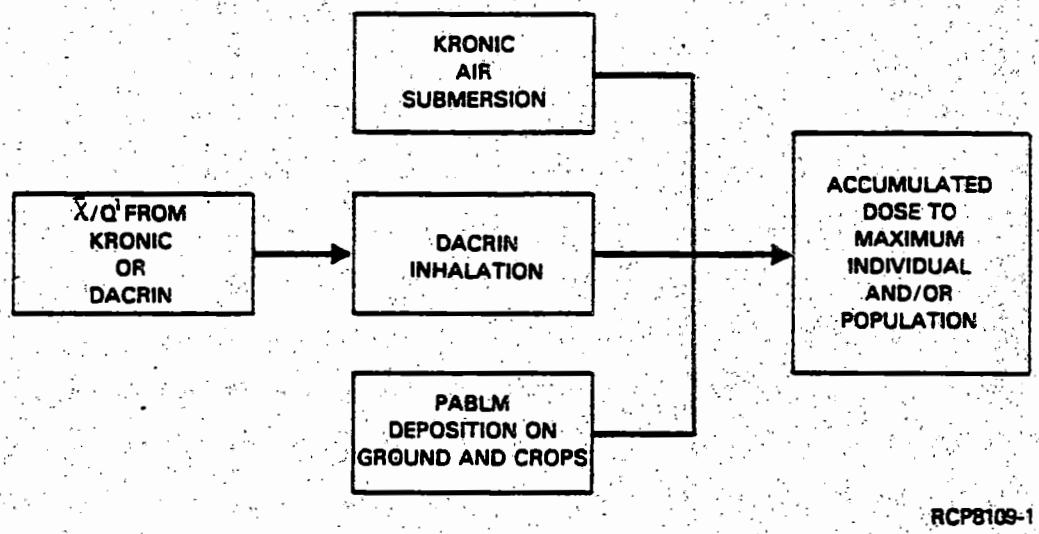


FIGURE 8-25. Computer Programs for Calculating Public Doses from Routine Airborne Releases of Radionuclides.

## 8.7 REFERENCES

1. Rockwell, Rockwell Policies Manual, RHO-MA-100, Rockwell Hanford Operations, Richland, Washington (July 1977).

2. Rockwell, ALARA Program, RHO-MA-278, Rockwell Hanford Operations, Richland, Washington (September 1980).

3. DOE, Standards and Requirements for Radiation Protection, DOE Order 5480.1A, Chapter XI, U.S Department of Energy, Washington D.C. (April 1981).

4 DOE, Notification of Occurrences, DOE Order 5484.1, Chapter I, U.S. Department of Energy, Washington D.C. (February 1981).

5. DOE, Investigation Requirements, DOE Order 5484.1, Chapter II, U.S. Department of Energy, Washington D.C. (February 1981).

6. DOE, Effluent and Environmental Monitoring Program Requirements, DOE Order 5485.1, Chapter III, U.S. Department of Energy, Washington D.C. (February 1981).

7. DOE, A Guide to Reducing Radiation Exposure to As Low As Reasonably Achievable, DOE/EV/1830-15, U.S. Department of Energy, Washington D.C.

8. Rockwell, Facility ALARA Plan for PUREX/$UO_3$, RHO-LD-199, Rockwell Hanford Operations, Richland, Washington (September 1981).

9. Rockwell, Environmental Protection Standards, RHO-MA-139, Rockwell Hanford Operations, Richland, Washington (January 1978).

10. Rockwell, Radiation Monitoring Manual of Standard Procedures, RHO-MA-145, Rockwell Hanford Operations, Richland, Washington (April 1979).

11. Rockwell, Radiation Work Procedures, RHO-MA-172, Rockwell Hanford Operations, Richland, Washington (January 1979).

12. Rockwell, Radiological Standards and Operational Controls, RHO-MA-220, REV 1, Rockwell Hanford Operations, Richland, Washington (February 1983).

13. Rockwell, Health Physics Procedure, Rockwell Hanford Operations, Richland, Washington (1982).

14. DOE, Nuclear Criticality Safety, DOE Order 5480.1A, Chapter V, U.S. Department of Energy, Washington D.C. (April 1981).

15. L. A. Stout, Effects of Safeguards and Security Features on Egress from the PUREX Building and N Cell, SD-HS-SAR-014, Rockwell Hanford Operations, Richland, Washington (April 1983).

16. Rockwell, PUREX Technical Manual, RHO-MA-116, Rockwell Hanford Operations, Richland, Washington (September 1983).

17. ANSI, Guide to Sampling Airborne Radioactive Materials in Nuclear Facilities, ANSI N-13.1, American National Standards Institute (1969).

18. ERDA, Occupational Safety and Health Protection, ERDA Manual, Chapter 0560, Energy Research and Development Administration (January 1977).

19. PNL, A Guide to Good Practices at Plutonium Facilities, BNWL-2086, Battelle Pacific Northwest Laboratories, Richland, Washington (September 1977).

20. Rockwell, Occupational Dose from Work in the PUREX Oxide Conversion Facility with Pu from 12.2% NPR and PWR Fuels, SD-CP-DCR-002, Rockwell Hanford Operations, Richland, Washington (December 1981).

21. Rockwell, Nuclear Criticality Alarm Manual, RHO-MA-281, Rockwell Hanford Operations, Richland, Washington (1984).

22. Rockwell, Nuclear Criticality Safety Standards, RHO-MA-136, Rockwell Hanford Operations, Richland, Washington (November 16, 1981).

23. D. A. Marsh to A. R. Hawkins, "Criticality Alarm System (CAS) Analysis for PUREX," Internal Letter 72320-82-454 Rockwell Hanford Operations, Richland, Washington (November 18, 1982).

24. D. A. Marsh to L. Wilson, "PUREX Criticality Alarm System (CAS)," Internal Letter 72320-83-050, Rockwell Hanford Operations, Richland, Washington (February 10, 1983).

25. D. A. Marsh to D. R. Speer, "M-Cell Criticality Alarm System Placement in PUREX," Internal Letter 72320-83-WV-085 Rockwell Hanford Operations, Richland, Washington (June 29, 1983).

26. D. A. Marsh to R. A. Kulick, "Criticality Alarm System Set Number 9 Relocation," Internal Letter 72320-83-WV-240, Rockwell Hanford Operations, Richland, Washington (September 23, 1983).

27. NBS, Standard Nuclear Instrument Module, TID-20893 REV 3, National Bureau of Standards, Washington, D.C. (1969).

28. Rockwell, Procurement Specification for Nuclear Criticality Monitor, HWS-10054, Rockwell Hanford Operations, Richland, Washington (October 1977).

29. GE, Hanford Critical Dosimeter, HW-71710 REV, General Electric Company, Hanford Atomic Products Operations, Richland, Washington (October 14, 1964).

30. PNL, Hanford Criticality Radiation Dosimeter, PNL-2276, Pacific Northwest Laboratory, Richland, Washington (November 1977).

31. PNL, Location of Criticality Alarms and Dosimeters at Hanford, BNWL-MA-583, Battelle Pacific Northwest Laboratories, Richland, Washington (August 1976).

32. PNL, Calibrations Procedures Manual, PNL-MA-563, Pacific Northwest Laboratory, Richland, Washington.

33. Standard Specification for Breathing Air Systems, HPS-156-M (1979).

34. ANSI, American National Standard Radiation Symbol, ANSI N2.1-1969, American National Standards Institute.

35. Rockwell, Conceptual Design Report PUREX Primary Stack (291-A-1) Sampling, Monitoring and Flow Totalizing Project B-189, RHO-CD-530, Rockwell Hanford Operations, Richland, Washington (January 2, 1979).

36. Rockwell, Functional Design Criteria PUREX Primary Stack (291-A-1) Sampling, Monitoring and Flow Totalizing (Project B-189), RHO-CD-238, Rockwell Hanford Operations, Richland, Washington (July 21, 1978).

37. NRC, An Atmospheric Tritium and Carbon-14 Monitoring System, NUREG/CR-0386, U.S. Nuclear Regulatory Commission, Washington, D.C. (September 1978).

38. W. Prosk to M. P. Allison, "292-A Building Upgrade (Project B295e)," Internal Letter, WP-72950-84-004, Rockwell Hanford Operations, Richland, Washington (April 23, 1984).

39. Rockwell, Conceptual Design Report PUREX PR Room Stack (296-A-1) Sampling, Monitoring, and Flow Totalizing Project B-191, RHO-CD-532, Rockwell Hanford Operations, Richland, Washington (January 19, 1979).

40. Rockwell, Conceptual Design Report, Improved PUREX Plant Process Condensate Sampling, Monitoring, and Flow Totalizing System, Project B-203, RHO-CD-433, Rockwell Hanford Operations, Richland, Washington (August 31, 1978).

41. Rockwell, Conceptual Design Report - Ammonia Scrubber Discharge Sampling, Monitoring, and Flow Totalizing System, Project B-188, RHO-CD-431, Rockwell Hanford Operations, Richland, Washington (December 11, 1978).

42. Rockwell, Functional Design Criteria - Chemical Sewer Sampling, Monitoring, Flow Totalizing and Diverting System PUREX Plant, Project B-190, RHO-CD-320, Rockwell Hanford Operations, Richland, Washington (June 1979).

43. HASL-300 Procedures Manual, Environmental Measurements Laboratory.

44. NRC, Measurement of Radionuclides in the Environment, Sampling and Analysis of Plutonium in Soil, Nuclear Regulatory Guide 4.5, U.S. Nuclear Regulatory Commission, Washington, D.C.

45. Environmental Radiation Measurements, National Council on Radiation Protection and Measurements Report No. 50.

46. ASTM, Annual Book of ASTM Standards, Part 31, Water, American Society for Testing Materials, Philadelphia, Pennsylvania (issued annually).

47. Standard Methods for the Examination of Water and Waste Water, American Public Health Association, American Water Work Association, and Water Pollution Control Federation, 14 ed. (1975).

48. EPA, EPA Methods for Chemical Analysis of Water and Wastes, U.S. Environmental Protection Agency, Washington, D.C.

49. ANSI, Performance Testing, and Procedural Specifications for Thermoluminescence Dosimetry: Environmental Applications, ANSI-N545-1975, American National Standards Institute.

50. PNL, The Hanford Environmental $CaF_2$: Mn Thermoluminescence Dosimetry, PNL-2489, Pacific Northwest Laboratory, Richland, Washington.

51. PNL, Environmental Surveillance at Hanford for CY-1979, PNL-3283, Pacific Northwest Laboratory, Richland, Washington (1980).

52. PNL, Environmental Status of the Hanford Site for CY-1979, PNL-3284, Pacific Northwest Laboratory, Richland, Washington (1980).

53. PNL, Standardized Input for the Hanford Environmental Impact Statements, Part I, PNL-3509, Pacific Northwest Laboratory, Richland, Washington (1981).

54. PNL, KRONIC, A Computer Program for Calculating Annual Average External Doses from Chronic Atmospheric Releases of Radionuclides, BNWL-B-264, Pacific Northwest Laboratory, Richland, Washington (1973).

55. PNL, DACRIN, A Computer Program for Calculating Organ Dose from Acute or Chronic Radionuclide Inhalation, BNWL-B-389, Pacific Northwest Laboratory, Richland, Washington (1974).

56. PNL, DACRIN, A Computer Program for Calculating Organ Dose from Acute or Chronic Radionuclide Inhalation: Modification for Gastro-Intestinal Dose, BNWL-B-389 Supplement, Pacific Northwest Laboratory, Richland, Washington (1975)

57. PNL, PABLM, A Computer Program to Calculate Accumulated Radiation Doses from Radionuclides in the Environment, PNL-3209, Pacific Northwest Laboratory, Richland, Washington (1980).

9413219.0938