U.S. Department of Energy
Office of River Protection
P.O. Box 450, MSIN H6-60
Richland, Washington 99352

0077220

08-ESQ-085

MAY 09 2008

Mr. John Martell, Manager
Radioactive Air Emissions Section
Washington State
Department of Health
P.O. Box 47827
Olympia, Washington 98504

RECEIVED
MAY 13 2008
EDMC

Dear Mr. Martell:

REQUEST FOR APPROVAL OF MODIFICATION TO THE NOTICE OF CONSTRUCTION AND APPROVAL ORDER FOR THE 296-A-42 EXHAUSTER OPERATION AND AMENDMENT TO HANFORD SITE AIR OPERATING PERMIT (AOP) FOR EMISSION UNIT 200E P-296A042

The U.S. Department of Energy, Office of River Protection requests approval of the attached "Radioactive Air Emissions Notice of Construction Application for Operation of the 296-A-42 Exhauster," (Attachment 1) and "Hanford Site Air Operating Permit, Notification of Off-Permit Change Permit Number: 00-05-006 Renewal 1," (Attachment 2). This modification is being submitted, in accordance with Washington Administrative Code 173-246-247 "Washington Administrative Code 246-247, Radiation Protection – Air Emissions" as amended, and the AOP.

The attachments include a request for an increase in the Annual Possession Quantity (APQ) currently listed in the AOP for the 241-AY and 241-AZ Tank Farms, to accommodate ongoing single-shell tank waste transfers, and a construction activity for the removal and/or discontinued use of the High-Efficiency Gas Adsorber (HEGA) filter.

The increase in the potential unabated dose to the Maximally Exposed Individual resulting from the increase in APQ is estimated at 2.18E+03 mrem/yr. The increase in the abated dose is approximately 1.18E+00 mrem/yr. Discontinued use of a HEGA filter will not cause an increase in emissions.

If you have any questions, please contact me, or your staff may contact Dennis W. Bowser, Environmental Division, (509) 373-2566.

Sincerely,

Shirley J. Olinger, Manager
Office of River Protection

ESQ:DWB

Attachments: (2)

cc: See page 2

cc w/attachs:
L. L. Penn, CH2M HILL
O. S. Wang, Ecology
N. A. Homan, FHI
J. Schmidt, WDOH Richland Office
Administrative Record
BNI Correspondence
CH2M HILL Correspondence
Environmental Portal, LMSI

cc w/o attachs:
C. J. Kemp, CH2M HILL
P. C. Miller, CH2M HILL
M. S. Spears, CH2M HILL
J. Cox, CTUIR
S. Harris, CTUIR
B. Becker-Khaleel, Ecology
S. L. Dahl, Ecology
J. L. Hensley, Ecology
J. A. Bates, FHI
G. Bohnee, NPT
K. Niles, Oregon Energy
M. F. Jarvis, RL
R. Jim, YN

Attachment 1
08-ESQ-085

Radioactive Air Emissions Notice of Construction Application
for Operation of the 296-A-42 Exhauster

RADIOACTIVE AIR EMISSIONS NOTICE OF CONSTRUCTION APPLICATION FOR OPERATION OF THE 296-A-42 EXHAUSTER

Prepared by
L. L. Penn

Date Published
April 2008

CH2MHILL
Hanford Group, Inc.

P.O. Box 1500
Richland, Washington

Contractor for the U. S. Department of Energy
Office of River Protection under Contract DE-AC27-99RL14047

TRADEMARK DISCLAIMER. Reference herein to any specific commercial product, process, or service by trade name, trademark, manufacturer, or otherwise does not necessarily constitute or imply its endorsement, recommendation or favoring by the United States Government or any agency thereof or its contractors or subcontractors.

Printed in the United States of America. To obtain copies of this document, contact Document Control Services P.O. Box 950, Mailstop H6-08, Richland, WA 99352, Phone (509) 372-2420; Fax (509) 376-4989

EXECUTIVE SUMMARY

This document serves as a Notice of Construction (NOC) pursuant to the requirements of *Washington Administrative Code* (WAC) 246-247-060, "Applications, registration and licensing," and as a request for approval to modify pursuant to Title 40, *Code of Federal Regulations* (CFR) Section 61.07, "Application for approval of construction or modification" (10 CFR 61.07), for the operation of the 296-A-42 exhauster in support of each of the following tanks: 241-AZ-101, 241-AZ-102, 241-AY-101, and 241-AY-102. It consolidates and supersedes two existing NOCs, *Installation and Operation of a Waste Retrieval System in Tanks 241-AZ-101, 241-AZ-102, 241-AY-101*, and *241-AY-102*, and *Ventilation Upgrades 241-AY and 241-AZ.* It accommodates the need to increase the annual possession quantity during retrieval and allows for the removal and/or discontinuation of the use of the high-efficiency gas adsorber filter currently installed on the ventilation system. Generally, it includes removal of existing equipment, installation of new equipment, and construction of new ancillary equipment and buildings.

An NOC for the upgrade of this ventilation system was submitted and approved in 1998. The installation and operation of mixer pumps in the 241-AZ-101 tank were permitted previously and approved by the Washington State Department of Health (WDOH) on July 1, 1998, through the issuance of letter AIR-98-708, "Approval of Radioactive Air Emissions NOC for Ventilation Upgrades for 241-AY and 241-AZ Tank Farms." This was later revised and a second NOC was submitted to include the installation and operation of waste retrieval equipment in tanks 241-AZ-101, 241-AZ-102, 241-AY-101, and 241-AY-102. At that time the estimates were based on the latest CAP-88 values published in DOE/RL-2006-29, "*Calculating Potential-to-Emit Releases and Doses.*" Approval for installation and operation of the waste retrieval systems in these tanks was granted by WDOH on May 9, 2002, through issuance of letter AIR-02-503 and again in August 2005 through issuance of letter AIR-05-708.

Previously, the total unabated dose estimate was 3.57E+03 mrem/yr and the abated dose estimate was 2.10E+00 mrem/yr. The proposed emission estimates derived in this document result in an unabated dose of 3.42E-02 mrem due to pipe cutting activities, 8.28E-04 mrem for pit entry activities, 3.18E-01 mrem for equipment removal, 3.22E-02 mrem for excavation by hand, and 1.39E-01 mrem from excavation by the guzzler. Potential emissions from operation of the 296-A-42 exhauster, including use of mixer pumps, resulted in 5.75E+03 mrem. This represents a total potential dose of 5.75E+03 mrem/yr and an abated dose of 3.28E+00 to the offsite receptor (Ringold).

The estimated increase in the potential unabated dose to the maximally exposed individual resulting from this revision is 2.18E+03 mrem per year. The increase in the abated dose is approximately 1.18E+00 mrem/yr.

The total effective dose equivalent from all calendar year 2006 Hanford Site air emissions (point sources and diffuse and fugitive sources) was 0.1 mrem (DOE/RL-2007-01). The emissions resulting from the activities covered by this NOC, in conjunction with other operations on the Hanford Site, will not exceed the National Emission Standard of 10 mrem per year (40 CFR 61, Subpart H, "National Emission Standards for Emissions of Radionuclides Other than Radon from Department of Energy Facilities").

Table of Contents

LIST OF TERMS v
METRIC CONVERSION CHART vii
1.0 LOCATION 1
2.0 RESPONSIBLE MANAGER 1
3.0 PROPOSED ACTIONS 1
4.0 STATE ENVIRONMENTAL POLICY ACT 2
5.0 PROCESS DESCRIPTION 2
5.1 CONSTRUCTION ACTIVITIES 5
5.1.1 Soil Excavation 5
5.1.2 Pipe Cutting and Welding 6
5.1.3 Pit Work 6
5.1.4 Removal of In-Tank Equipment 7
5.1.5 In-Tank Equipment Installation 7
5.2 WASTE STAGING AND RETRIEVAL PROCESS OVERVIEW 7
6.0 PROPOSED CONTROLS 8
6.1 CONTROLS UTILIZED DURING CONSTRUCTION ACTIVITIES 8
6.1.1 Soil Excavation 8
6.1.2 Pipe Cutting and Welding 8
6.1.3 Pit Work 9
6.1.4 Removal and Installation of In-Tank Equipment 9
6.2 TANK VENTILATION AND EMISSIONS CONTROL SYSTEM 9
7.0 DRAWINGS OF CONTROLS 10
8.0 RADIONUCLIDES OF CONCERN 12
8.1 POTENTIAL TO EMIT FOR SOIL EXCAVATION ACTIVITIES 12
8.2 POTENTIAL TO EMIT FOR PIPE CUTTING ACTIVITIES 12
8.3 POTENTIAL TO EMIT FOR PIT WORK AND IN-TANK EQUIPMENT INSTALLATION AND REMOVAL ACTIVITIES 12
8.4 POTENTIAL TO EMIT FOR MIXER PUMP EMISSIONS 12
9.0 MONITORING 12
9.1 MONITORING DURING CONSTRUCTION ACTIVITIES 13
9.2 MONITORING DURING OPERATIONS 13
10.0 ANNUAL POSSESSION QUANTITY 14
11.0 PHYSICAL FORM 14
12.0 RELEASE FORM 14
13.0 RELEASE RATES 14
13.1 SOIL EXCAVATION 15
13.1.1 Manual Excavation 15
13.1.2 Regulated Guzzler Excavation 17
13.2 PIPE CUTTING AND WELDING 17
13.3 PIT WORK AND REMOVAL OF IN-TANK EQUIPMENT 18
13.4 POTENTIAL UNABATED EMISSIONS DURING MIXER PUMP OPERATIONS 19
13.5 POTENTIAL ABATED EMISSIONS DURING MIXER PUMP OPERATIONS 19
14.0 LOCATION OF MAXIMALLY EXPOSED INDIVIDUAL 19
15.0 TOTAL EFFECTIVE DOSE EQUIVALENT TO THE MAXIMALLY EXPOSED INDIVIDUAL 20

16.0 COST FACTOR IF NO ANALYSIS 21
17.0 DURATION OR LIFETIME 21
18.0 STANDARDS 21
18.1 AMERICAN SOCIETY OF MECHANICAL ENGINEERS (ASME) AG-1 22
18.2 ASME N509 22
18.3 ASME N510 23
18.4 ANSI/ASME NQA-1 23
18.5 40 CFR 60, APPENDIX A 23
18.6 AMERICAN NATIONAL STANDARDS INSTITUTE (ANSI) N13.1 23
19.0 REFERENCES 24

APPENDIXES

APPENDIX A. 241-AY TANK FARM IODINE EMISSIONS DATA 27
APPENDIX B. 241-AY/AZ TANK FARM RADIONUCLIDE INVENTORY DATA 28
APPENDIX C. POTENTIAL UNABATED EMISSIONS AND DOSE FOR SOIL EXCAVATION IN AY AND AZ FARMS 30
APPENDIX D. POTENTIAL UNABATED EMISSIONS AND DOSE FOR PIPE CUTTING ACTIVITIES ASSOCIATED WITH AY and AZ FARM 32
APPENDIX E: POTENTIAL UNABATED EMISSIONS AND DOSE FOR EQUIPMENT INSTALLATION REMOVAL ACTIVITIES ASSOCIATED WITH AY AND AZ FARM 38
APPENDIX F. POTENTIAL UNABATED EMISSIONS FOR PIT ENTRY ACTIVITIES IN AY AND AZ FARMS 44
APPENDIX G. POTENTIAL UNABATED AND ABATED EMISSIONS AND DOSE FOR ALL TANKS VENTING THROUGH 296-A-42 INCLUSIVE OF MIXER PUMP OPERATIONS 46

List of Figures

Figure 1. 296-A-42 Ventilation System. 11

List of Tables

Table 1. Full Tank Annual Possession Quantity 16
Table 2. Summary of TEDE to the MEI. 20
Table 3. Comparison of Change in TEDE to the Offsite MEI 20

LIST OF TERMS

Abbreviations and Acronyms

ABCASH	automated bar coding of air samples at Hanford
ALARA	as low as reasonably achievable
ALARACT	as low as reasonably achievable control technology
ANSI	American National Standards Institute
APQ	annual possession quantity
ASME	American Society of Mechanical Engineers
BARCT	best available radionuclide control technology
CAM	continuous air monitor
CFR	*Code of Federal Regulations*
EDE	estimated dose equivalent
EDP	electronic data processing
EPA	U.S. Environmental Protection Agency
HEGA	high-efficiency gas adsorber
HEPA	high-efficiency particulate air
ICRP	International Commission on Radiological Protection
MEI	maximally exposed individual
MPR	maximum public receptor
NOC	Notice of Construction
PCM	periodic confirmatory monitoring
PTE	potential-to-emit
QA	quality assurance
RPP	River Protection Project
RWP	Radiological Work Permit
TEDE	total effective dose equivalent
TWINS	Tank Waste Inventory Network System
WAC	*Washington Administrative Code*
WDOH	Washington State Department of Health

Units

Ci	curie
cm^2	square centimeter
cpm	counts per minute
dpm	disintegrations per minute
ft	feet
ft^3	cubic feet
gal	gallon
hr	hour
in.	inch
lb	pounds
m	meter
µCi	microcurie
mrem	millirem

mrem/Ci	millirem per curie
m^3	cubic meters
m^3/sec	cubic meters per second
m^2	square meter
sec	second
yd^3	square yards

METRIC CONVERSION CHART

Into metric units			Out of metric units		
If you know	Multiply by	To get	If you know	Multiply by	To get
Length			**Length**		
Inches	25.40	Millimeters	Millimeters	0.0393	Inches
Inches	2.54	Centimeters	Centimeters	0.393	Inches
Feet	0.3048	Meters	Meters	3.2808	Feet
Yards	0.914	Meters	Meters	1.09	Yards
Miles	1.609	Kilometers	Kilometers	0.62	Miles
Area			**Area**		
Square inches	6.4516	Square centimeters	Square centimeters	0.155	Square inches
Square feet	0.092	Square meters	Square meters	10.7639	Square feet
Square yards	0.836	Square meters	Square meters	1.20	Square yards
Square miles	2.59	Square kilometers	Square kilometers	0.39	Square miles
Acres	0.404	Hectares	Hectares	2.471	Acres
Mass (weight)			**Mass (weight)**		
Ounces	28.35	Grams	Grams	0.0352	Ounces
Pounds	0.453	Kilograms	Kilograms	2.2046	Pounds
Short ton	0.907	Metric ton	Metric ton	1.10	Short ton
Volume			**Volume**		
Fluid ounces	29.57	Milliliters	Milliliters	0.03	Fluid ounces
Quarts	0.95	Liters	Liters	1.057	Quarts
Gallons	3.79	Liters	Liters	0.26	Gallons
Cubic feet	0.03	cubic meters	Cubic meters	35.3147	Cubic feet
Cubic yards	0.76456	Cubic meters	Cubic meters	1.308	Cubic yards
Temperature			**Temperature**		
Fahrenheit	Subtract 32 then multiply by 5/9ths	Celsius	Celsius	Multiply by 9/5ths, then add 32	Fahrenheit
Force/Pressure			**Force/Pressure**		
Pounds per square inch	6.895	Kilopascals	Kilopascals	1.4504×10^{-1}	Pounds per square inch

Source: *Engineering Unit Conversions*, M. R. Lindeburg, PE, Second Ed., 1990, Professional Publications, Inc., Belmont, California.

1.0 LOCATION

Regulatory Citation: "Name and address of the facility, location (latitude and longitude) of the emission unit(s)."

U.S. Department of Energy, Office of River Protection
Hanford Site,
200 East Area Tank Farms
Richland, Washington 99352

The 241-AY and 241-AZ Tank Farms are located south of AN Tank Farm in the 200 East Area, at the corner of Canton Avenue and Seventh Street. The geodetic coordinates for these tank farms are as follows:

Latitude: 46° 33' 18" N
Longitude: 119° 31' 01" W

The exhauster that ventilates these tanks is assigned stack number 296-A-42 and is listed in 00-05-006, the *Hanford Site Air Operating Permit* under number 200E P-296A042-001.

2.0 RESPONSIBLE MANAGER

Regulatory Citation: "Name, title, address, and phone number of responsible manager."

Shirley J. Olinger, Manager
U.S. Department of Energy, Office of River Protection
P.O. Box 550
Richland, Washington 99352
(509) 372-3062

3.0 PROPOSED ACTIONS

Regulatory Citation: "Identify the type of proposed action for which this application is submitted:

a. Construction of new emission unit(s)
b. Modification of existing emission unit(s); identify whether this is a significant modification – significant means the potential-to-emit airborne radioactivity at a rate that could increase the TEDE to the MEI by at least 1.0 mrem/yr as a result of the proposed modification
c. Modification of existing unit(s), unregistered."

The activities proposed by this Notice of Construction (NOC) are to install, remove, and operate waste retrieval systems (mixer pumps, transfer pumps, and other required equipment) in tanks 241-AZ-101, 241-AZ-102, 241-AY-101, and 241-AY-102. The high-efficiency gas adsorber

(HEGA) filters may be removed from the ventilation system. Emissions from these tanks are ventilated through exhauster 296-A-42. The mixer pumps will operate in a batch mode as needed. The waste capacity of the tanks will not be altered, but as retrieval progresses, the source term will increase until the tanks are filled, currently planned for 1,000,000 gallons per tank. The maximum tank capacity of 1,001,000 gal will be used to determine a bounding annual possession quantity (APQ) and total effective dose equivalent (TEDE) to the maximally exposed individual (MEI). Fugitive emissions will be created during excavation activities, pipe cutting, removing and installation of in-tank equipment, and while performing work in open pits.

As a result of the proposed increase in APQ, the potential-to-emit (PTE) airborne radioactivity could increase the TEDE to the MEI by 2.18 E+03 mrem/yr, which represents a significant modification to an existing emission unit.

4.0 STATE ENVIRONMENTAL POLICY ACT

Regulatory Citation: "If the project is subject to the requirements of the State Environmental Policy Act (SEPA) contained in chapter 197-11 WAC, provide the name of the lead agency, lead agency contact person, and their phone number."

In accordance with WAC 197-11, the WDOH has identified and adopted the following *National Environmental Policy Act* documentation as being appropriate for this proposal after independent review. This document meets the agencies' review needs for the current proposal.

- DOE/EIS-0212, "Final Environmental Impact Statement, Safe Interim Storage; Hanford's Tank Waste."
- 60 FR 61687, "Record of Decision; Safe Interim Storage of Hanford Tank Wastes, Hanford Site, Richland, WA."
- DOE/EIS-0189, "Tank Waste Remediation System, Hanford Site, Richland, Washington, Final Environmental Impact Statement."
- 62 FR 8693, "Record of Decision for the Tank Waste Remediation System, Hanford Site, Richland, WA."

5.0 PROCESS DESCRIPTION

Regulatory Citation: "Describe the chemical and physical processes upstream of the emission unit(s)."

The 241-AY-101, 241-AY-102, 241-AZ-101, and 241-AZ-102 tanks are double-shell tanks. The inner shell is constructed from heat-treated, stress-relieved steel. The outer shell is constructed of non-stress-relieved steel. The two shells are separated by a 2.5-ft annulus and contained inside a concrete shell. The tanks have a usable waste volume of approximately 1,001,000 gal.

The 241 AY and 241 AZ tanks are part of a *Resource Conservation and Recovery Act* treatment, storage, and/or disposal unit. The tanks contain mixed waste in the form of liquids or contained solids (suspended or settled). The contents in each of the four tanks may be mixed periodically to control gas entrapment in the settled solids, to control temperature, for chemical treatment to control corrosion, or for waste retrieval. Contained solids will be mobilized, as required, as part of this process by hydraulic action of the mixer pumps or by use of air-lift circulators in each of the tanks. During such activities, as well as during storage, the ventilation system maintains the vapor space in each tank below atmospheric pressure.

Airflow (Section 7.0) is from the tank to a glycol-cooled recirculation system and to a common header. The common header is the point in the overall system at which ventilation flow is provided to the emissions control system. Also, a portion of each tank's exhaust can be recirculated to assist in maintaining temperature.

The recirculation system cools, condenses, removes vapor and some entrained particulates, further removes moisture via a separator, and returns a portion of the cooled vapor to the tank. This provides cooling for the tank while reducing air emissions. Nominal flow rates in the recirculation system vary from zero m^3/sec (bypassed) to 0.25 m^3/sec per tank, at standard temperature and pressure conditions. At the higher flow rate, approximately 0.05 m^3/sec is provided to the emission control system with the remainder to the tank. Similar airflow from the other three tanks is combined in the common ventilation header connecting the discharges of the other recirculation coolant systems. The combined flow is discharged to the emissions control system (see Section 7.0). The recirculation system is considered part of the process because the collected material is returned to the tank.

When mixer pumps are operating in a tank, the 0.25 m^3/sec drawn from this tank may not be recirculated but may be combined with the flow from the other tanks for a total discharge to the emissions control system flow range of 0.4 to 0.5 m^3/sec. Numerous other combinations of discharge flow rates are possible but the combined annual average discharge flow rate to the emissions control system will not be greater than 0.5 m^3/sec. During system upset conditions, such as an automatic shutdown of one exhaust train and start of the opposite train, discharge flow rates could reach 0.6 m^3/sec for several seconds.

The portion of the stream discharged to atmosphere will flow through a condenser, high-efficiency mist eliminator, heater, and two high-efficiency particulate air (HEPA) filters in series. For purposes of calculating abated emissions, only the HEPA filter control efficiencies are used.

The central pump pits on the 241-AY and 241-AZ Tank Farm tanks are approximately 14 ft long x 10 ft wide x 10 ft depth (outside dimensions). Sluice pits and annulus pump pits are somewhat smaller with outside dimensions of 7 ft x 7 ft x 10 ft deep and 5 ft x 5 ft x 10 ft deep.

With the previous NOC revision, modifications to all four tanks and associated equipment were permitted to allow for installation of waste retrieval systems and equipment, through issuance of letter AIR-05-708, including the following major components.

New In-Tank Equipment

- Two mixer pumps each in tanks 241-AZ-102, 241-AY-101, and 241-AY-102 for mobilizing the settled solids. Two mixer pumps were installed in tank 241-AZ-101 and permitted previously by WDOH through issuance of AIR-98-708. All of the pumps will be capable of pumping waste through each of two horizontally opposed discharge nozzles.

- A riser extension/spray wash system on top of each of the risers used for mixer pumps. The spray wash system will be used for future decontamination of the mixer pumps if they are removed from the tank.

- One transfer pump in each tank for the transfer of waste.

- New temperature probes for each tank.

- New decant pumps in the AY tanks and associated transfer piping; to include a one-time use hose-in-hose transfer line approximately 40 ft in length.

Ancillary Equipment and Buildings

- Electrical power and instrument cables and other utility tie-ins and/or upgrades (e.g., sanitary and raw water, and telecommunications).

- Tie-in to the existing dilution and caustic supply system to bring waste properties into compliance with the feed specifications and to flush and preheat transfer lines. The dilution system will have the capacity of providing approximately 140 gal/minute of pH-adjusted water.

- Pit cover blocks.

- Water/diluent piping to and from the process pits.

- Process jumpers.

- Miscellaneous concrete pads for electrical and mechanical equipment.

- Chain-link fencing and gates.

Removal, Repair, Decontamination, and Demolition of Existing Equipment

- Removal/repair of transfer and/or mixer pumps, as necessary, during the life of the facility.

- Removal and disposal of several thermocouple probes/instrument trees.

- Removal and disposal of several existing pumps and other miscellaneous equipment (e.g., slurry distributers and process jumpers).

- Additionally, this revision includes removal of HEGA filters.

5.1 CONSTRUCTION ACTIVITIES

Construction activities with the PTE could include soil excavation, work in pump pits, pipe cutting, and removal and installation of in-tank equipment. Some of these activities are described in, and will be done in accordance with, an applicable tank farm as low as reasonably achievable control technology (ALARACT) demonstration (HNF-4327, *Control of Airborne Radioactive Emissions for Frequently Performed TWRS Work Activities (ALARACT Demonstrations*). The specific activities and corresponding ALARACT demonstration are called out as applicable in Sections 5.1.1 through 5.1.5.

If needed or chosen for use during these activities, the regulated guzzler, a portable/temporary radioactive air emission unit, and a HEPA filtered vacuum radioactive air emission unit may be used in accordance with the latest revisions of the NOC [EPA 1998 letter, "Approval of Short Form Radioactive Air Emissions Notice of Construction (NOC) for Guzzler Excavation and Backfilling Activities in Support of 200 East Area A Farm Complex"; DOE/RL-96-75, "Radioactive Air Emissions Notice of Construction Portable/Temporary Radioactive Air Emission Units"; and DOE/RL-97-50, "Radioactive Air Emissions Notice of Construction for HEPA Filtered Vacuum Radioactive Air Emission Units," respectively].

Because of the possibility of encountering previously undetected subsurface contamination, all work will be performed in accordance with appropriate radiological controls and the River Protection Project (RPP) as low as reasonably achievable (ALARA) program. These requirements are carried out through work packages and associated Radiological Work Permits (RWP).

5.1.1 Soil Excavation

Soil will be excavated inside and outside the 241-AZ and 241-AY Tank Farms for the dilution piping that will tie-in to the existing AN Tank Farm caustic supply system and to remove soil in preparation for mixer pump foundations and miscellaneous equipment support structures, to remove soil around pits in preparation of core drilling, and for placement of control building foundations (as required). A total of approximately 6000 yd^3 per farm could be excavated. Backfill will be made with the original removed soil or noncontaminated controlled density fill (sand, water, and a small amount of cement).

Soil excavation activities inside the tank farm fence will be performed in accordance with ALARACT Demonstration 5, *TWRS ALARACT Demonstration for Soil Excavation (Using Hand Tools)* (HNF-4327). If contamination is discovered outside the tank farm fence, ALARACT 5 will be followed. Clean soil piles could be moved from one place to another within the tank farm with heavy equipment (backhoe, front-end loader, etc.). Soil excavation outside the tank farm fence in noncontaminated soil also could be performed with heavy equipment. The

regulated guzzler also could be used as described in the NOC for use in the 241-A Tank Farm Complex (EPA 1998 letter).

5.1.2 Pipe Cutting and Welding

Any required cuts of contaminated piping will be made inside a glove bag using appropriate equipment such as a sawzall or tri-tool. To perform a cut without a glove bag, the piping will be surveyed/smeared to verify removable contamination levels are equal to or less than 10,000 disintegrations per minute (dpm) per 100 cm^2 beta gamma and 200 dpm/100 cm^2 alpha.

Welding may be necessary to join various pieces of equipment. If this is necessary, welding will commence once removable contamination levels in the weld area are reduced to ALARA. The goal will be to achieve 1000 dpm/100 cm^2 beta gamma and 20 dpm/100 cm^2 alpha or less, but might not always be attainable.

If needed or chosen for use during these activities, a portable/temporary radioactive air emission unit and a HEPA filtered vacuum radioactive air emission unit could be used in accordance with the latest revisions of the NOCs (DOE/RL-96-75 and DOE/RL-97-50, respectively).

5.1.3 Pit Work

Work to be performed in pits may include replacing existing sets of cover blocks with newly designed cover blocks, core drilling (equivalent of one hundred 14-in. diameter holes for AZ Farm and ten 14-in. diameter holes for AY Farm), installing new nozzles, and removing existing jumpers.

Pit access and work will be performed in accordance with ALARACT Demonstrations 6 and 14, *TWRS ALARACT Demonstration for Pit Access,* and *TWRS ALARACT Demonstration for Pit Work* (HNF-4327). Activities not covered in these ALARACTs are described in the following.

If needed or chosen for use during these activities, a portable/temporary radioactive air emission unit and HEPA filtered vacuum radioactive air emission unit could be used in accordance with the latest revisions of their NOCs (DOE/RL-96-75 and DOE/RL-97-50, respectively).

At the start of the pit work, the cover blocks will be lifted off and radiologically surveyed to determine an appropriate disposal method. New cover blocks will be installed when all work in the pits is completed.

Core drilling may be performed and will occur below grade level on the outside of the pit. The hole will be drilled from the outside to the inside, with the temporary pit cover in place. Nozzle installation generally will proceed immediately after the hole is completed. If immediate nozzle installation is not possible, the hole will be temporarily sealed with a plug, tape, or equivalent device until the nozzle can be installed.

Installation of new nozzles in existing pits will take place in an open pit. All parts of the nozzle will be assembled ahead of time and will be lowered into position as a single unit. The piping in the back of the nozzle will be threaded through the hole (from the inside of the pit to the outside)

and pulled tight into place from the outside of the pit. Grout will be used to secure and seal the nozzle into place. The front opening of the nozzle, inside the pit, will be fitted with a temporary cap/seal until a jumper is connected to the nozzle. Once the nozzle(s) is/are installed, the temporary pit cover will be replaced until other work inside the pit requires pit cover removal.

5.1.4 Removal of In-Tank Equipment

Various in-tank equipment will be removed from the tanks to make room for the waste retrieval equipment, or to be replaced with equivalent equipment built to withstand the mixer pump jet forces. Removed long-length equipment will either be packaged in long-length contaminated equipment disposal containers or size reduced for disposal in accordance with ALARACT Demonstration 15, T*ank Farm ALARACT Demonstration for Size Reduction of Waste Equipment for Disposal*. Equipment removal will be performed in accordance with ALARACT Demonstration 13, *TWRS ALARACT Demonstration for Installation, Operation, and Removal of Tank Equipment*. Activities not covered in this ALARACT are described in the following.

If needed or chosen for use during these activities, a portable/temporary radioactive air emission unit, and a HEPA filtered vacuum radioactive air emission unit may be used in accordance with the latest revisions of their NOCs (DOE/RL-96-75 and DOE/RL-97-50, respectively).

Decontamination of removed equipment is not anticipated. The fewer decontamination activities undertaken, the less exposure possibilities there are to the worker and the environment. Contingency decontamination plans, however, are in place if needed. The most likely equipment to be decontaminated would be sections of the flexible receiver. Equipment removal will be performed in accordance with TWRS ALARACT Demonstration 13, *Installation, Operation, and Removal of Tank Equipment*.

5.1.5 In-Tank Equipment Installation

Equipment installation will be performed in accordance with TWRS ALARACT Demonstration 13, *Installation, Operation, and Removal of Tank Equipment*.

5.2 WASTE STAGING AND RETRIEVAL PROCESS OVERVIEW

Mixer pumps will be operated to maintain waste uniformity during staging and to mix the waste for a period before and during transfer. As required by operational directives, mixer pumps will be operated until waste samples verify that adequate mixing has been achieved. Waste samples will be collected in accordance with TWRS ALARACT Demonstration 7, *Tank Waste Grab Sampling*. If dilution/conditioning is needed, the pH and temperature of the diluents will be adjusted by means of a caustic supply system. Once the waste is verified acceptable, the transfer lines will be preheated/flushed with water, and the waste transfer to the treatment facility will follow. After the transfer, the lines will be flushed again with water.

6.0 PROPOSED CONTROLS

Regulatory Citation: "Describe the existing and proposed (as applicable) abatement technology. Describe the basis for the use of the proposed system. Include expected efficiency of each control device, and the annual average volumetric flow rate(s) in meters^3/sec for the emission unit(s)."

Controls, proposed for the various emission sources, are addressed in Sections 6.1 and 6.2.

6.1 CONTROLS UTILIZED DURING CONSTRUCTION ACTIVITIES

Emission controls used during the construction activities are administrative, based on ALARA principles, and consist of ALARA techniques. They are discussed in Sections 6.1.1 through 6.1.4 with respect to their associated activities, as described in Section 5.0.

6.1.1 Soil Excavation

Soil excavation activities will be performed in accordance with ALARACT Demonstration 5, *TWRS ALARACT Demonstration for Soil Excavation (Using Hand Tools)*, and will follow the radiological controls specified in that ALARACT.

If the regulated guzzler is used to excavate soil, radiological and administrative controls as described in the NOC for use in the A Tank Farm Complex (EPA 1998 letter) will be followed. Description of the emissions control technology for the regulated guzzler is provided in that NOC.

6.1.2 Pipe Cutting and Welding

Pipe cutting will be performed in a glove bag if the levels of removable contamination in the cut and weld area are greater than 10,000 dpm/100 cm^2 beta gamma and 200 dpm/100 cm^2 alpha. Health physics technician coverage will be provided. Although the key measure relied on to control air emissions during cutting will be the glove bag, measures such as expandable foam or fixatives might be applied on or around a pipe cut as an additional measure to help fix contamination. The decision to use expandable foam or fixatives will be made on a case-by-case basis after excavation exposes the pipe to be cut. When used, the expandable foam will help fix any contamination to the pipe wall in the area of the cut and will help prevent migration of contamination present in the pipe upstream or downstream of the cut.

If any welding is necessary to join pieces of equipment, welding will commence once removable contamination levels in the cut and weld area are reduced to ALARA. The goal will be to achieve 1000 dpm/100 cm^2 beta gamma and 20 dpm/100 cm^2 alpha or less, but may not always be attainable.

Work in glove bags will not be performed if sustained wind speeds are greater than 30 miles per hour.

If a portable/temporary radioactive air emission unit or a HEPA filtered vacuum radioactive air emission unit is used during the pipe cutting activities, controls as described in the NOCs (DOE/RL-96-75 and DOE/RL-97-50) will be followed.

6.1.3 Pit Work

Pit access and work will be performed in accordance with ALARACT Demonstrations 6 and 14, *TWRS ALARACT Demonstration for Pit Access* and *TWRS ALARACT Demonstration for Pit Work*, and will follow the radiological controls specified in those ALARACTs. Controls not covered in these ALARACTs are described in the following.

- All pit work will be performed in an appropriately configured confinement structure, as required by the applicable work package and its associated RWP, to maximize ALARA for contamination migration while allowing entry to perform the work. Health physics technician coverage will be provided during all pit work.

- If a portable/temporary radioactive air emission unit or a HEPA filtered vacuum radioactive air emission unit is used during the pit work activities, controls as described in the NOCs (DOE/RL-96-75 and DOE/RL-97-50) will be followed. Descriptions of the emissions control technology for these units are provided in the NOCs.

6.1.4 Removal and Installation of In-Tank Equipment

Equipment removal and installation activities will be performed in accordance with ALARACT Demonstration 13, *TWRS ALARACT Demonstration for Installation, Operation, and Removal of Tank Equipment*, and will follow the radiological controls specified in that ALARACT.

Removed long-length equipment will either be packaged in long-length contaminated equipment disposal containers or size reduced for disposal in accordance with ALARACT Demonstration 15, T*ank Farm ALARACT Demonstration for Size Reduction of Waste Equipment for Disposal.*

If a portable/temporary radioactive air emission unit or a HEPA filtered vacuum radioactive air emission unit is used during the removal or installation of in-tank equipment activities, controls as described in the NOCs (DOE/RL-96-75 and DOE/RL-97-50) will be followed. Descriptions of the emissions control technology for those units are provided in the NOCs.

6.2 TANK VENTILATION AND EMISSIONS CONTROL SYSTEM

The existing ventilation and emissions control systems for the 241-AY/AZ Tank Farm will be used during the mixing and transferring of waste in the AY and AZ tanks. The tank farm exhaust system provides ventilation for all AZ and AY tank primary vapor spaces. The system removes heat, water vapor, and particulates, and maintains a negative pressure on the tanks. The emission point is the 296-A-42 Stack.

Inlet air for the AZ and AY tanks is provided through the inlet air filters. Air is exhausted from each tank independently through 10.5-in.-diameter exhaust ducts. The ducts connect to a

55-ft-high stack (16.76 m). The exhaust station consists of two filtration subsystems and the stack. Either subsystem can collectively ventilate all the tanks together at a maximum flow rate of approximately 1000 ft^3/minute (approximately 0.42 m^3/sec). Only one system operates at a time, while the other remains in standby as a backup. A schematic of the 241-AZ/AY Tank Farm exhaust system is shown in Section 7.0.

Each filtration subsystem consists of a condenser, high-efficiency mist eliminator, heater, and two HEPA filters in series. Each HEPA filter is rated for 1000 ft^3/minute and is equipped with fluid seals. The HEPAs are individually tested annually (in accordance with ASME N510, *Testing of Nuclear Air Treatment System*) to a minimum efficiency of 99.95% for the removal of particulates with a median diameter of 0.3 microns.

The only modification that will be made to the existing ventilation or emissions control systems under this NOC is the removal of the HEGA filter and/or discontinuation of its use. At one time, in 1998, a HEGA filter was installed between the two HEPA filters as part of an upgrade program for the 296-A-42 ventilation system. It was installed to control potential Iodine emissions.

Operating experience and sampling results since that time have demonstrated that iodine emissions are negligible. Appendix A presents the results of Iodine sampling performed before and after installation of the HEGA filter. Prior to 1998 the stack identification for the original AY/AZ ventilation system was 296-A-17. The Iodine sample results drawn before the HEGA filter was installed can be seen as results for 296-A-17 in the table in Appendix A. The results associated with 296-A-42 indicate samples drawn after installation of the HEGA filter. All values fell within a range of 10E-15 to 10E-11, with no change due the the presence of the HEGA filter.

The HEGA was not designed to effectively mitigate other emissions such as organics and ammonia. Utilization of the HEGA generates mixed waste, and maintenance of this system is not considered ALARA. Therefore, the existing carbon beds may be removed from the housing allowing air to be drawn directly through the second HEPA in the series.

7.0 DRAWINGS OF CONTROLS

Regulatory Citation: "Provide conceptual drawings showing all applicable control technology components from the point of entry of radionuclides into the vapor space to release to the environment."

Figure 1 is a schematic of the 296-A-42 tank ventilation system.

Figure 1. 296-A-42 Ventilation System.

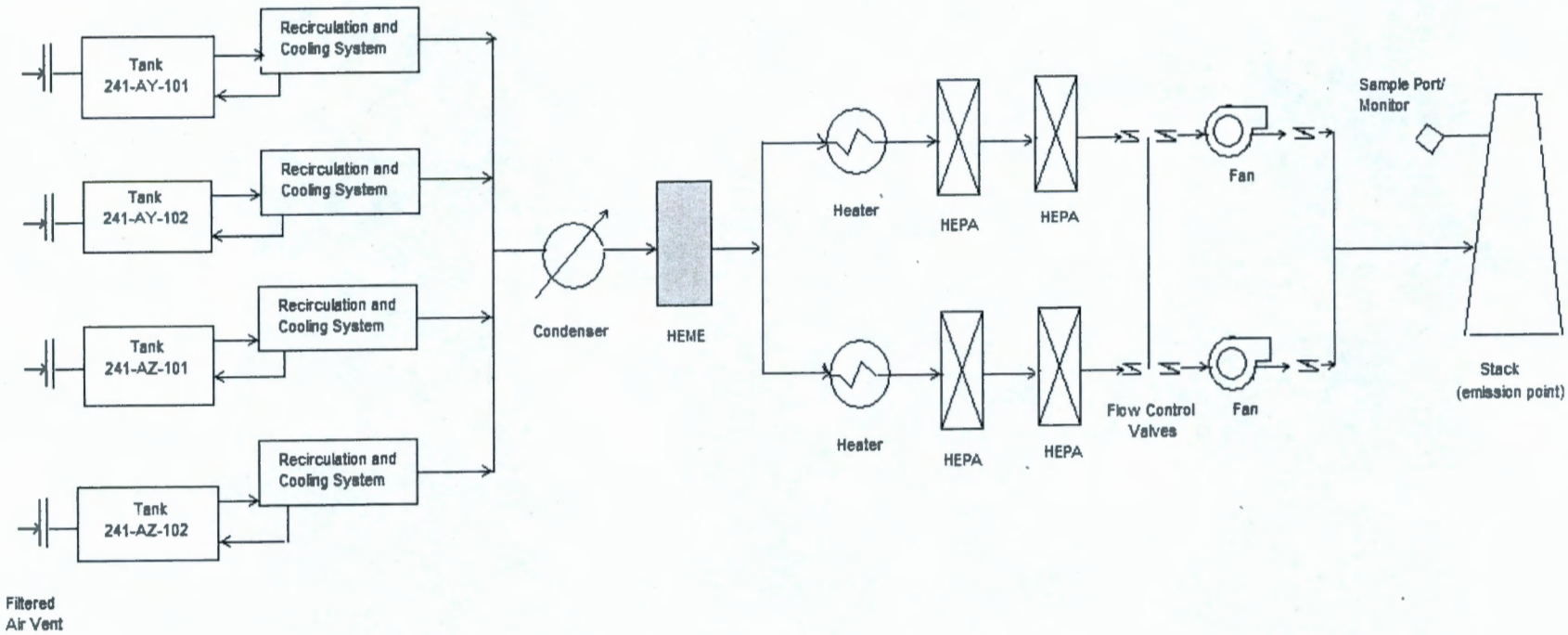

HEME = High-efficiency mist eliminator
HEPA = High-efficiency particulate air filter

8.0 RADIONUCLIDES OF CONCERN

Regulatory Citation: "Identify each radionuclide that could contribute greater than ten percent of the potential–to-emit TEDE to the MEI, or greater than 0.1 mrem/yr potential–to-emit TEDE to the MEI."

Radionuclides of concern are listed in Appendixes B, C, D, E, F, and G. For each activity where individual radionuclides could be identified and with the potential to emit discussed in Sections 8.2 through 8.4, the estimated percentage dose contribution of the TEDE to the MEI was calculated for each isotope. The radionuclides of concern are ^{90}Sr, ^{243}Am, and ^{137}Cs.

8.1 POTENTIAL TO EMIT FOR SOIL EXCAVATION ACTIVITIES

The PTE derivations for manual soil excavation and the use of the guzzler are contained in Appendix C.

8.2 POTENTIAL TO EMIT FOR PIPE CUTTING ACTIVITIES

The PTE derivations for pipe cutting activities are contained in Appendix D.

8.3 POTENTIAL TO EMIT FOR PIT WORK AND IN-TANK EQUIPMENT INSTALLATION AND REMOVAL ACTIVITIES

Appendix E contains tables identifying in-tank equipment removal activities for each tank and a combined PTE for the areas covered by this NOC.

Appendix F contains the tables that derive the PTE for pit work.

8.4 POTENTIAL TO EMIT FOR MIXER PUMP EMISSIONS

Appendix G contains a table that derives the PTE for all tanks exhausting through the 296-A-42 emission unit, inclusive of the mixer pump operations.

9.0 MONITORING

Regulatory Citation: "Describe the effluent monitoring system for the proposed control system. Describe each piece of monitoring equipment and its monitoring capability, including detection limits, for each radionuclide that could contribute greater than ten percent of the potential-to-emit TEDE to the MEI, or greater than 0.1 mrem/yr potential-to-emit TEDE to the MEI, or greater than twenty-five percent of the TEDE to the MEI, after controls. Describe the method with detail sufficient to demonstrate compliance with the applicable requirements."

Monitoring for each of the proposed activities is discussed in the Sections 9.1 and 9.2.

9.1 MONITORING DURING CONSTRUCTION ACTIVITIES

During soil excavation activities, periodic confirmatory monitoring (PCM) as described in ALARACT 5, will verify low emissions. If the regulated guzzler is used, PCM will be performed as required by the guzzler NOC.

During pipe cutting activities surface contamination surveys, as described in Section 6.1.2, will constitute the PCM to verify low emissions. If a portable/temporary radioactive air emission unit or a HEPA filtered vacuum radioactive air emission unit is used, PCM will be performed as required by these NOCs.

During pit work activities, PCM as described in ALARACT 14 will verify low emissions. If a portable/temporary radioactive air emission unit or a HEPA filtered vacuum radioactive air emission unit is used, PCM will be performed as required by these NOCs.

During in-tank equipment removal and installation activities surface contamination surveys, as described in ALARACT Demonstration 13, *TWRS ALARACT Demonstration for Installation, Operation and Removal of Tank Equipment* (HNF-4327) will constitute the PCM to verify low emissions. If a portable/temporary radioactive air emission unit or a HEPA filtered vacuum radioactive air emission unit is used, PCM will be performed as required by these NOCs.

9.2 MONITORING DURING OPERATIONS

Continuous monitoring will be obtained through use of the 241-AZ/AY Tank Farms existing sampling and monitoring system (296-A-42 stack). Samples will be collected approximately every 2 weeks and will include representative operation of the waste retrieval systems. The samples will be analyzed, at a minimum, for ^{90}Sr, ^{137}Cs, and ^{241}Am, each of which constitutes 10%, or more, of the EDE. While in operation, the 296-A-42 record sampler instrumentation will be calibrated annually in accordance with approved procedures, and system inspections will be performed daily to ensure instrumentation is operating within specified parameters.

The sampling and monitoring system consists of a continuous sampling record sampler and a continuous air monitor (CAM). The system collects samples at a variable flow rate, depending upon the stack effluent velocity. The system has been designed to match air velocities entering the sample probe with that of the duct in which it is installed. For example for stack flow rates of 400 and 1000 ft^3/minute, the sampling system will collect samples at 0.7 and 1.7 ft^3/minute, respectively. In this way, the design complies with those requirements specified in ANSI N13.1-1969, *Guide to Sampling Airborne Radioactive Materials in Nuclear Facilities*. There are two sample probes (one for the CAM, one for the sampler) located in the exhaust duct in compliance with the 40 CFR 60 Appendix A, *Guide to Sampling Airborne Radioactive Materials in Nuclear Facilities*, Method 1A requirement. The probe nozzles are configured in accordance with ANSI N13.1-1969. The sample flow totaling instruments are well within the ±2.0% accuracy described by Method 2A. The record sampler's collection efficiency during normal operations ranges between 55% (for stack flows of 1000 ft^3/minute) and 63% (for stack flows of 400 ft^3/minute) for penetration of 10-micron particles (from *Deposition 4.0* calculations). In addition, stack flow totalizers are installed that have been certified accurate to the requirements of 40 CFR 52, Appendix E.

10.0 ANNUAL POSSESSION QUANTITY

Regulatory Citation: "Indicate the annual possession quantity for each radionuclide."

The maximum annual possession quantity (APQ) associated with this NOC is listed in Table 1. A bounding APQ was determined by considering the source term as recorded in Tank Waste Information Network System (TWINS) as of December 2007 and extrapolated to a full-tank condition (1,001,000 gal). Appendix B contains details of the derivation showing current source terms of individual tanks and projected full tank source terms.

11.0 PHYSICAL FORM

Regulatory Citation: "Indicate the physical form of each radionuclide in inventory: Solid, particulate solids, liquid, or gas."

The physical form of each radionuclide of concern in the inventory is either liquid or particulate.

12.0 RELEASE FORM

Regulatory Citation: "Indicate the release form of each radionuclide in inventory: Particulate solids, vapor, or gas. Give the chemical form and ICRP 30 solubility class, if known."

The release form of each radionuclide of concern in the inventory is listed in Table 1.

13.0 RELEASE RATES

Regulatory Citation: "a. New emission unit(s): Give predicted release rates without any emission control equipment (the potential-to-emit) and with the proposed control equipment using the efficiencies described in subsection 6 of this section.
b. Modified emission unit(s): Give predicted release rates without any emissions control equipment (the potential-to-emit) and with the existing and proposed control equipment using the efficiencies described in subsection 6 of this section. Provide the latest year's emission data or emissions estimates.
In all cases, indicate whether the emission unit is operating in a batch or continuous mode."

Construction activities will continue for several years; however, for conservatism in the emissions estimate and flexibility to adapt to schedule changes, the unabated emissions are assumed to be released over a 1-year period. Potential unabated emissions from the following general categories of construction activities are discussed in Sections 13.1 through 13.5 and calculated in Appendixes C, D, E, F, and G.

13.1 SOIL EXCAVATION

Manual excavation and regulated guzzler excavation emissions are discussed in Sections 13.1.1 and 13.1.2.

13.1.1 Manual Excavation

Unabated emissions for manual soil excavation activities were determined by assuming the entire volume of soil excavated (6000 yd^3) was at the same contamination concentration, and the 40 CFR 61 Appendix D, "Required Emission Inventory Information," release factor for particulates was applied to the total volume.

Table 1. Full Tank Annual Possession Quantity.

241-AY/AZ Tank Farm Radionuclide Annual Possession Quantity Data taken from TWINS Database during December 2007					
Radionuclide	Radionuclide Symbol	Physical State	Total APQ in AY Tanks (Ci)	Total APQ in AZ Tanks (Ci)	Total AY/AZ APQ (Ci)
Tritium	^{3}H	Gaseous	3.2E+01	1.9E+02	2.2E+02
Carbon-14	^{14}C	Gaseous	1.1E+01	1.2E+01	2.2E+01
Nickel-59	^{59}Ni	Particulate	6.6E+01	3.8E+01	1.0E+02
Cobalt-60	^{60}Co	Particulate	6.5E+02	1.8E+03	2.4E+03
Nickel-63	^{63}Ni	Particulate	6.1E+03	3.6E+03	9.8E+03
Selenium-79	^{79}Se	Particulate	1.9E+00	6.2E+00	8.1E+00
Strontium-90	^{90}Sr	Particulate	7.2E+06	1.1E+07	1.8E+07
Yttrium-90	^{90}Y	Particulate	7.2E+06	1.1E+07	1.8E+07
Niobium-93 metastable	^{93m}Nb	Particulate	2.0E+02	2.2E+02	4.2E+02
Zirconium-93	^{93}Zr	Particulate	3.4E+02	3.6E+02	7.0E+02
Technetium-99	^{99}Tc	Particulate	2.4E+02	2.2E+03	2.4E+03
Ruthenium-106	^{106}Ru	Particulate	3.8E-02	1.9E+02	1.9E+02
Cadmium-113 metastable	^{113m}Cd	Particulate	1.1E+02	9.4E+02	1.0E+03
Antimony-125	^{125}Sb	Particulate	3.6E+02	1.0E+04	1.1E+04
Tin-126	^{126}Sn	Particulate	2.0E+01	1.4E+01	3.4E+01
Iodine-129	^{129}I	Particulate	7.5E-01	5.2E-01	1.3E+00
Cesium-134	^{134}Cs	Particulate	4.4E+01	2.8E+03	2.9E+03
Cesium-137	^{137}Cs	Particulate	8.4E+05	1.0E+07	1.1E+07
Barium-137 metastable	^{137m}Ba	Particulate	7.9E+05	9.5E+06	1.0E+07
Samarium-151	^{151}Sm	Particulate	4.0E+05	3.9E+05	7.9E+05
Europium-152	^{152}Eu	Particulate	5.2E+02	3.1E+02	8.3E+02
Europium-154	^{154}Eu	Particulate	1.4E+04	2.2E+04	3.6E+04
Europium-155	^{155}Eu	Particulate	5.6E+03	2.8E+04	3.4E+04
Radium-226	^{226}Ra	Particulate	2.0E-04	5.2E-04	7.2E-04
Actinium-227	^{227}Ac	Particulate	1.3E-02	3.1E-03	1.6E-02
Radium-228	^{228}Ra	Particulate	1.5E-01	1.0E-02	1.6E-01
Thorium-229	^{229}Th	Particulate	6.6E-04	4.2E-06	6.7E-04
Protactinium-231	^{231}Pa	Particulate	1.3E-01	8.0E-03	1.4E-01
Thorium-232	^{232}Th	Particulate	1.3E-01	3.2E-02	1.6E-01
Uranium-232	^{232}U	Particulate	8.2E-03	9.3E-03	1.7E-02
Uranium-233	^{233}U	Particulate	3.9E-01	5.0E-01	8.9E-01
Uranium-234	^{234}U	Particulate	1.1E+00	4.3E+00	5.4E+00
Uranium-235	^{235}U	Particulate	4.5E-02	1.7E-01	2.2E-01
Uranium-236	^{236}U	Particulate	3.5E-02	3.7E-01	4.0E-01
Neptunium-237	^{237}Np	Particulate	7.9E+00	3.7E+01	4.5E+01
Plutonium-238	^{238}Pu	Particulate	1.4E+02	3.5E+02	4.8E+02
Uranium-238	^{238}U	Particulate	9.9E-01	3.2E+00	4.2E+00
Plutonium-239	^{239}Pu	Particulate	2.5E+03	2.8E+03	5.3E+03
Plutonium-240	^{240}Pu	Particulate	6.5E+02	7.7E+02	1.4E+03
Americium-241	^{241}Am	Particulate	2.2E+04	6.1E+04	8.2E+04
Plutonium-241	^{241}Pu	Particulate	6.4E+03	1.8E+04	2.4E+04
Curium-242	^{242}Cm	Particulate	3.0E+01	4.0E+01	7.0E+01
Plutonium-242	^{242}Pu	Particulate	6.4E-02	9.0E-02	1.5E-01
Americium-243	^{243}Am	Particulate	1.8E+01	2.1E+01	3.9E+01
Curium-243	^{243}Cm	Particulate	4.6E+00	4.3E+00	8.9E+00
Curium-244	^{244}Cm	Particulate	1.1E+02	9.8E+01	2.1E+02

To determine a PTE if contamination is encountered as monitored by standard radiological field instrumentation, the administrative limit of 100,000 dpm/100 cm^2 beta/gamma correlates to 10,000 cpm per probe area was used in the calculations. For alpha, the administrative limit of 35 dpm/100 cm^2 above background correlates to 5 cpm; however, 10 cpm was used in the calculations to account for variations in obtaining background readings. To determine the total possession quantity, the conversion factor (refer to second column in Appendix C) was multiplied by the total mass of soil to be excavated, by the maximum survey reading for alpha emitters, and the maximum survey reading for beta/gamma emitters. The average soil density was assumed to be 2640 lb/yd^3. The beta-gamma contributing radionuclide was assumed to be ^{90}Sr and the alpha contributing radionuclide was assumed to be ^{241}Am. The potential unabated emissions from manual soil excavation activities are shown in Appendix C.

13.1.2 Regulated Guzzler Excavation

Unabated emissions for soil excavation with the regulated guzzler are included by reference from EPA. It is not known at this time if, or how much, soil will be excavated by the regulated guzzler. Therefore, the entire soil volume (700 ft^3) that could be used without exceeding permitted limits for the guzzler was used to determine the potential emissions per farm.

The potential annual abated emissions during guzzler operation is 6.96E-05 mrem/yr (unabated dose, 1.39E-01 mrem/yr divided by 2000). The abated emissions were calculated from the unabated guzzler emissions and the decontamination factor for a single HEPA filter with a minimum efficiency of 99.95% for alpha/beta particles with a median diameter of 0.3 microns.

The potential unabated and abated emissions from regulated guzzler excavation activities are also shown in Appendix C.

13.2 PIPE CUTTING AND WELDING

To determine the unabated emissions from pipe cutting activities, it was assumed that a section of the pipe to be cut was full of the average farm waste (AZ Farm waste for the pipes used in AZ Farm and AY Farm waste for the pipes used in AY Farm), and the 40 CFR 61 Appendix D release factor of 1.0E-03 for particulates was applied to that volume of pipe (using the pipe volume is conservative with respect to the volume of the cut). For AZ Farm, the pipe volume was derived from a 2-ft section of a 2-in. Schedule 40 pipe (representing any needed cuts on a 2-in. pipe) and a 2-ft section of an 8-in. Schedule 40 pipe (representing any needed cuts on an 8-in. pipe). For AY Farm, the pipe volume was derived from a 2-ft section of a 3-in. pipe and a 2-ft section of a 6-in. pipe. A total of four pipe cuts for each size pipe was figured sufficient in AY Farm.

The pipe volume was multiplied by the average tank inventory (AZ tank inventory for the pipes used in AZ Farm and AY tank inventory for the pipes used in AY Farm) and then multiplied by the 1.0 E-03 release factor for particulates. The potential unabated emissions from pipe cutting activities are shown in Appendix D.

The potential unabated emissions associated with welding activities were considered and are shown in the following calculation. For calculation purposes, it was assumed that contamination levels of 10,000 dpm/100 cm^2 beta/gamma and 200 dpm/100 cm^2 alpha were used to calculate

potential emissions. It was also conservatively assumed that an entire 1 m^2 area of contamination was released. The calculation assumes a release fraction of 1. The potential emissions assume beta contamination is from ^{90}Sr, alpha contamination is from ^{241}Am, and gamma contamination is from ^{137}Cs. As shown by the calculation, the potential emissions associated with welding (2.75E-07 mrem/year for offsite) are insignificant when compared to the potential emissions associated with pipe cutting (3.42E-02 for AZ Farm and AY Farm).

Offsite

Beta = (10,000 dpm/100 cm^2)(1Ci/2.22E+12 dpm)(10,000 cm^2)(release fraction of 1/yr)(1.1E-01 mrem/Ci) = 4.95E-08

Alpha = (200 dpm/100 cm^2)(1Ci/2.22E+12 dpm)(10,000 cm^2)(release fraction of 1/yr)(1.3E+01 mrem/Ci) = 1.17E-07

Gamma = (10,000 dpm/100 cm^2)(1Ci/2.22E+12 dpm)(10,000 cm^2)(release fraction of 1/yr)(2.4E-01 mrem/Ci) = 1.08E-07

Total = 2.75E-07

Onsite

Beta = (10,000 dpm/100 cm^2)(1Ci/2.22E+12 dpm)(10,000 cm^2)(release fraction of 1/yr)(9.5E-03 mrem/Ci) = 4.28E-09

Alpha = (200 dpm/100 cm^2)(1Ci/2.22E+12 dpm)(10,000cm^2)(release fraction of 1/yr)(1.5E+01 mrem/Ci) = 1.35E-07

Gamma = (10,000 dpm/100 cm^2)(1Ci/2.22E+12dpm)(10,000 cm^2)(release fraction of 1/yr)(2.7E-01 mrem/Ci) = 1.22E-07

Total = 2.61E-07

13.3 PIT WORK AND REMOVAL OF IN-TANK EQUIPMENT

The unabated emission estimates for pit work are based on smearable contamination data from the pits and the 40 CFR 61 Appendix D release factor for particulates. The entire surface area from the walls and floors of the pit, and the enclosed equipment, was assumed to be uniformly contaminated at the highest smearable readings for beta/gamma (1,000,000 dpm/100 cm^2) and alpha (700,000 dpm/100 cm^2) that could be read on portable instruments. The beta-gamma contributing radionuclide was assumed to be ^{90}Sr and the alpha contributing radionuclide was assumed to be ^{241}Am. The potential unabated emissions from pit work activities are shown in Appendix F.

The unabated emissions estimate for the removal of in-tank equipment was determined by assuming a 0.16-cm layer of the applicable tank inventory being uniformly distributed across the surface area of the equipment and applying the 40 CFR 61 Appendix D release factor for particulates to the total volume contained over that surface area. That equipment includes

removal of existing mixer pumps, transfer pumps, thermocouple probes, and multi-function instrument trees. For AZ Farm, the biggest equipment from each tank (one mixer pump and one transfer pump for each tank) was chosen to represent the total unabated emissions for all removals and relocations in any given year. For AY Farm, emissions were estimated for removal of eight instrument probes and three pumps per tank per year. Free liquids are not expected to be held up in this equipment because the equipment is designed as self-draining. The small amount of liquid (less than one liter) that may be trapped behind a transfer pump impeller will be immobilized in the absorbent mat secured inside the flex receiver bag and will not be released by the grouting process. The potential unabated emissions from in-tank equipment removals are shown in Appendix E.

13.4 POTENTIAL UNABATED EMISSIONS DURING MIXER PUMP OPERATIONS

Original emissions from mixer pump operations were estimated based on the maximum envelope tank inventory presented in Section 7.0 and a measured partition fraction (1.02 E-09) representative of particulates generated in a double-shell tank during the operation of two airlift circulators for 1 hr (RHO-RE-SA-216P, *Characterization of Airborne Radionuclide Particulates in Ventilated Liquid Waste Tanks*).

Emissions are estimated in this revision using a release fraction of 1 for gases and 1E-03 for particulates. The potential annual unabated emissions during mixer pump operations in the 241-AZ-102, 241-AY-101, and 241-AY-102 tanks are shown in Appendix F.

13.5 POTENTIAL ABATED EMISSIONS DURING MIXER PUMP OPERATIONS

The potential annual abated emissions during mixer pump operations also are shown in Appendix F. The abated emissions were calculated from the unabated emissions using a decontamination factor for a single HEPA filter with a minimum efficiency of 99.95%. For constituents released in a vapor phase (H-3 and C-14) no credit was taken for decontamination.

14.0 LOCATION OF MAXIMALLY EXPOSED INDIVIDUAL

Regulatory Citation: "Identify the MEI by distances and direction from the emission unit(s). The MEI is determined by considering distance, windrose data, presence of vegetable gardens, and meat or milk producing animals at unrestricted areas surrounding the emission unit."

For emission estimates associated with AZ and AY Farm, the MEI is determined using CAP-88 dispersion factors which were derived for use on the Hanford Site and published in DOE/RL-2006-29, *Calculating Potential-to-Emit Radiological Releases and Doses*. Values used are shown in Table 4-9 of DOE/RL-2006-29 for 200 East Area with effective release height <40 m. Table 4-9 gives values in two separate columns for an offsite maximum public receptor (MPR) and an onsite MPR. Values from both columns were compared to determine the maximum dose. The results showed that the maximum dose occurred to the offsite MPR. Table 4-2 of DOE/RL-2006-29 states that the offsite MPR for the 200 East Area is 20,200 m in the east-southeast direction. This location is just east of the Columbia River at Ringold.

15.0 TOTAL EFFECTIVE DOSE EQUIVALENT TO THE MAXIMALLY EXPOSED INDIVIDUAL

Regulatory Citation: "Calculate the TEDE to the MEI using an approved procedure (see WAC 246-247-085). For each radionuclide identified in subsection 8 of this section, determine the TEDE to the MEI for existing and proposed emission controls, and without any emission controls (the potential-to-emit) using release rates from subsection 13 of this section. Provide all input data used in the calculations."

This section discusses the TEDE to the offsite MEI resulting from the unabated and abated emission estimates for operating mixer pumps in tanks 241-AZ-102, 241-AY-101, and 241-AY-102 and from unabated emissions from the construction activities. Results of the evaluation showed that the nearest public receptor was in Ringold.

The unabated offsite dose from the construction activities are contained within Appendixes C, D, E, and F. The potential unabated offsite dose from operation of the 296-A-42 emission unit, including the mixer pumps, is in Appendix G. Again, abated emissions for the mixer pump operation and guzzler activities were calculated from the unabated emissions and the decontamination factor for a single HEPA filter with a minimum efficiency of 99.95%.

A summary of the estimated AY/AZ Farm TEDE to the MEI is provided in Table 2.

Table 2. Summary of TEDE to the MEI.

	Unabated mrem/yr		Abated mrem/yr	
NOC summary	Offsite MEI	Onsite MEI	Offsite MEI	Onsite MEI
Mixer pump operation	5.75E+03	4.45E+03	2.92E+00	2.23E+00
Hand excavation	3.22E-02	8.29E-02	1.61E-02	1.56E-02
Guzzler excavation	1.39E-01	1.35E-01	6.96E-05	6.73E-05
Pipe cuts	3.42E-02	2.59E-02	3.36E-02	2.46E-02
Equipment Removal	3.18E-01	2.35E-01	3.11E-01	2.21E-01
Pit entries	8.28E-04	9.45E-04	8.28E-04	9.45E-04
Total	5.75E+03	4.45E+03	3.28E+00	2.49E+00

A comparison of the estimates previously permitted through, issuance of AIR-05-708, and current estimates, due to increasing APQ, is presented in Table 3.

Table 3. Comparison of Change in TEDE to the Offsite MEI.

	Unabated		Abated	
	Previous OffSite MEI	Current OffSite MEI	Previous OffSite MEI	Current OffSite MEI
Mixer Pump Emissions	3.57E+03	5.75E+03	1.80E+00	2.92E+00
Hand Excavation	3.22E-02	3.22E-02	3.22E-02	1.61E-02
Guzzler Excavation	6.96E-02	1.39E-01	3.48E-05	6.96E-05
Pipe Cuts	2.20E-02	3.42E-02	2.20E-02	3.36E-02
Equipment Removal	2.11E-01	3.18E-01	2.11E-01	3.11E-01
Pit Entries	8.28E-04	8.28E-04	8.28E-04	8.28E-04
Total	3.57E+03	5.75E+03	2.10E+00	3.28E+00

The TEDE for all 2006 Hanford Site air emissions (point sources, diffuse and fugitive sources, and radon and thoron) was 0.1 mrem (DOE/RL-2007-01, *Radionuclide Air Emissions Report for the Hanford Site, Calendar Year 2006*). The emissions resulting from the operation of 296-A-42 and construction activities in the AY and AZ farms, in conjunction with other operations at the Hanford Site, will not result in a violation of the National Emission Standard of 10 mrem/year.

16.0 COST FACTOR IF NO ANALYSIS

Regulatory Citation: "Provide cost factors for construction, operating, and maintenance of the proposed control technology components and system, if a BARCT or ALARACT demonstration is not submitted with the NOC."

It is proposed that the HEPA filtration system, as described in Section 8.0, be approved as BARCT for operation of mixer pumps in this application. The WDOH has provided guidance in the past that HEPA filtration be considered best available radionuclide control technology (BARCT) for particulate emissions. Particulate emissions comprise almost 100% of the TEDE from proposed activities. As such, cost factors for construction, operation, and maintenance of the control technology components and system have not been provided.

17.0 DURATION OR LIFETIME

Regulatory Citation: "Provide an estimate of the lifetime for the facility process with the emission rates provided in this application."

This system is expected to continue operating until the completion of waste retrieval and processing, which is currently scheduled for 2049.

18.0 STANDARDS

Regulatory Citation: "Indicate which of the following control technology standards have been considered and will be complied with in the design and operation of the emission unit(s) described in this application:....
ASME AG-1, ASME N509, ASME N510, ASME NQA-1, 40 CFR 60, Appendix A Methods 1, 1A, 2, 2A, 2C, 2D, 4, 5, and 17, and ANSI N13.1"

The standards discussion applies only to the emissions associated with operation of mixer pumps in the AZ and AY tanks, which ventilate through the 296-A-42 stack. Activities such as soil excavation, pipe cutting, pit work, and removal and installation of in-tank equipment do not require compliance with the standards discussed unless a portable/temporary radioactive air emission unit is used. If a portable/temporary radioactive air emission unit is used, use will comply with the standards as discussed in the most recently approved NOC (DOE/RL-96-75).

Operating the mixer pumps, in a batch mode, in the AZ and AY tanks has a PTE greater than 0.1 mrem/year TEDE to the MEI. Therefore, the design must meet, as applicable and to the

extent justified by a cost/benefit evaluation, the technology standards listed under *Washington Administrative Code* (WAC) 246-247-110(18), "Appendix A—Application information requirements." Sections 18.1 through 18.6 discuss compliance with major sections of these standards and provides justification to support adequacy of the design for sections of these standards that are not met.

The following control technologies standards were considered.

18.1 AMERICAN SOCIETY OF MECHANICAL ENGINEERS (ASME) AG-1

This ASME AG-1 equipment specific code consists of five primary sections, which are applicable to this unit. The applicable sections are fans (Section BA), ductwork (Section SA), HEPA filters (Section FC), dampers (Section DA) and Quality Assurance (QA) (Section AA).

The fan section of AG-1 (Section BA) covers the construction and testing requirements for fans. This fan meets the applicable criteria identified in AG-1

The next applicable requirement is the ductwork section of AG-1 (Section SA). As was the case for the fan, this section identifies several requirements for ductwork. This includes acceptable material, fabrication, and testing criteria. The ductwork used is metal and meets the applicable criteria identified in ASME AG-1.

The HEPA filter section of AG-1 (Section FC) is also applicable in this instance. The filters meet the applicable sections of AG-1.

The dampers installed on the exhauster do meet the applicable AG-1 criteria. This includes design, construction and testing. The manufacturer performs a generic leak test on the butterfly valves prior to shipping.

The quality assurance section of AG-1 relies on ASME NQA-1, *Quality Assurance Requirements for Nuclear Facility Applications*. The general QA criteria are located in Section AA. Specific component/system criteria are located in each section throughout AG-1. It can be shown the overall system meets the applicable quality assurance criteria.

AG-1 contains several other sections, however they do not apply to this system. The filter housing section is discussed below in the ASME N509 Section.

18.2 ASME N509

This standard deals with the individual components and how they relate to the overall system. The primary section of N509 that will be discussed is the filter housing section and heater section.

The filter housings for the exhauster are compliant with the applicable sections of the N509 criteria, with the exception of doors and windows. This includes design of housing, mounting frames, materials, and testing.

The heater used in this exhauster meets the N509 criteria. The reason for the heater is to assure

the relative humidity of the air stream is below 70%, reducing the opportunity for condensation in the filter housing.

18.3 ASME N510

This standard pertains to the testing of nuclear air cleaning systems. The first requirement identified in N510 is to perform a pressure decay test. This is to ensure there are no infiltration or outward leak paths from the system. This is a standard test for the filter housings at the housing manufacturer's facility.

This system meets the leak test criteria identified in N510. Test sections and manifolds are located in the exhaust train to allow for proper independent testing of both HEPA filters on both trains.

18.4 ANSI/ASME NQA-1

Quality assurance is addressed by HNF-MP-599, latest revision, "Quality Assurance Program Description" (Chapter 2.0, Section 3.3, and Chapter 7.0, Section 3.2), and by HNF-0528, "National Emission Standards for Hazardous Air Pollutants (NESHAP) Quality Assurance Project Plan for Radioactive Airborne Emissions" (Sections 2.0, 3.0, and 5.0), as a compatible alternative to NQA-1.

18.5 40 CFR 60, APPENDIX A

Method 2C (Determination of Stack Gas Velocity and Volumetric Flow Rate in Small Stacks or Ducts Standard Pitot Tube) as identified in Appendix A of 40 CFR 60 is used.

18.6 AMERICAN NATIONAL STANDARDS INSTITUTE (ANSI) N13.1

The sampling probe assembly is located in the horizontal ventilation ductwork just prior to entering the stack.

The 296-A-42 system has two individual withdrawal probes, each with two separate withdrawal points. The number of withdrawal points on each probe is two, as recommended by ANSI for a 10-in.-diameter duct. Two separate probes were used so that in addition to record sample collection, collection for a continuous air monitor could be accommodated as well.

Each probe's withdrawal points are spaced within the cross-sectional area of the duct on radii of 4.33 and 2.5 in. from the center of the duct. The radius of the first annular area is 3.68 in. from the center. This places the withdrawal points of each of the probes in the correct annular areas as specified in ANSI.

The following are at the 296-A-42 system probe location:

- Two particulate probes, each with two withdrawal nozzles. Each nozzle is sharpened to a knife edge. Minimal flow disturbances should result from these nozzle tips. The nozzle lengths are nearly an entire duct diameter (8.5 in. from the probe nozzle inlets to the centerline of the probe manifolds).

- Two air volume traverse probes, which are located just behind the plane of the sampler probe nozzle inlets. One traverse tube measures total pressure and the other measures static pressure. Each traverse probe contains four individual flow-sensing points (spaced in equal annular areas) which are designed to provide accurate measurements for multi-directional flows up to 30 degrees pitch and yaw from straight. Both traverse probes are used together to determine stack air velocities.

- A thermal probe is located 2.5 in. behind and between the traverse tubes. This thermal probe measures the stack air temperature. The signals from the thermal probe are used together with stack air velocity signals to determine mass flow. Mass flow is required to determine annual emissions.

This placement of the subject instrumentation at the location in question allows the air velocity to be determined in real time at the sampling probe withdrawal points so that the sample probe velocities can be maintained isokinetic in accordance with the ANSI standard requirements.

A 40 CFR 52, Appendix E, "Performance Specifications and Specifications of Test Procedures for Monitoring System for Effluent Stream Gas Volumetric Flow Rate," test was completed for the 296-A-42 system on April 7, 1997. This method was cited as a means to demonstrate compliance in an EPA 1993 letter, "Response for Clarification of Compliance Order and Information Request1092-01-23-113/114." This method is also cited for conformance "as applicable" in WAC 246-247-075(2), "Monitoring, testing, and quality assurance." This test resulted in a relative accuracy of 5.7%, which surpassed the Appendix E passing criteria of less than 10%.

The entire 296-A-42 stack sampling system was approved by WDOH on February 13, 1998, as an alternative sampling system. Collection efficiencies for 10-micron-sized particles are estimated to be between 55 to 63%. Compliance with ANSI N13.1-1999 standards was accomplished by meeting the requirements of Table 5, "Summary of maintenance, calibration, and field check requirements," identified in Section 7.0 *Quality assurance and quality control.*

19.0 REFERENCES

00-05-006, 2001, *Hanford Air Operating Permit*, Washington State Department of Ecology, Olympia, Washington.

40 CFR Part 52, Appendix E, "Performance Specifications and Specifications of Test Procedures for Monitoring System for Effluent Stream Gas Volumetric Flow Rate," *Code of Federal Regulations*, as amended.

40 CFR 60 Appendix A, "Guide to Sampling Airborne Radioactive Materials in Nuclear Facilities," *Code of Federal Regulations*, as amended.

40 CFR 61.07, "Application for approval of construction or modification," *Code of Federal Regulations*, as amended.

40 CFR 61, Appendix D, "Required Emission Inventory Information," *Code of Federal Regulations*, as amended.

40 CFR 61, Subpart H, "National Emission Standards for Emissions of Radionuclides other than Radon from Department of Energy Facilities," *Code of Federal Regulations*, as amended.

60 FR 61687, 1995, "Record of Decision; Safe Interim Storage of Hanford Tank Waste, Hanford Site, Richland, WA," *Federal Register*, Vol. 60, pp. 61687-61692 (December 1).

62 FR 8693, 1997, "Record of Decision for the Tank Waste Remediation System, Hanford Site, Richland, WA," *Federal Register*, Vol. 62, pp. 8693-8704 (February 26).

AIR 98-207, 1998, no title (letter from A. W. Conklin, to, J. E. Rasmussen, DOE-RL February 13), Washington State Department of Health, Olympia, Washington.

AIR 98-708, 1998, "Approval of Radioactive Air Emissions NOC for Ventilation Upgrades for 241-AY and 241-AZ Tank Farms" (letter from A. W. Conklin to J. E. Rasmussen, DOE-RL, July 10), Washington State Department of Health, Olympia, Washington.

AIR 02-503, 2002, no title, (letter from A. W. Conklin to, J. B. Hebdon and J. E. Rasmussen, DOE-RL, May 9), Washington State Department of Health, Olympia, Washington.

AIR 05-708, 2005, "Approval of Radioactive Air Emissions NOC for Installation and operation of a Waste Retrieval System in Tanks 241-AZ-101, 241-AZ-102, 241-AY-101 and 241-AY-102" (letter from A. W. Conklin to J. E. Rasmussen, DOE-RL, August 25), Washington State Department of Health, Olympia, Washington.

ANSI N13.1, 1969, *Guide to Sampling Airborne Radioactive Materials in Nuclear Facilities*, American National Standards Institute, New York, New York.

ANSI N510, *Testing of Nuclear Air Treatment Systems*, American National Standards Institute, New York, New York.

DOE/EIS-0189, 1996, *Tank Waste Remediation System, Hanford Site, Richland Washington, Final Environmental Impact Statement*, U.S. Department of Energy, Washington, D.C.

DOE/EIS-0212, 1995, *Final Environmental Impact Statement, Safe Interim Storage of Hanford's Tank Waste*, U.S. Department of Energy, Washington, D.C.

DOE/RL-96-75, 1996, *Radioactive Air Emissions Notice of Construction Portable/Temporary Radioactive Air Emission Units,* U.S. Department of Energy, Richland Operations Office, Richland, Washington.

DOE/RL-97-50, 2002, *Radioactive Air Emissions Notice of Construction for HEPA Filtered Vacuum Radioactive Air Emission Units*, Rev. 2, U.S. Department of Energy, Richland Operations Office, Richland, Washington.

DOE/RL-2006-29, *Calculating Potential-to-Emit Radiological Releases and Doses*, latest revision, U.S. Department of Energy, Richland Operations Office, Richland, Washington.

DOE/RL-2007-01, 2007, *Radionuclide Air Emissions Report for the Hanford Site, Calendar Year 2006*), Rev. 0, DOE/RL-2007-01, *Radionuclide Air Emissions Report for the Hanford Site, Calendar Year 2006*)

EPA Letter, 1993, "Response for Clarification of Compliance Order and Information Request1092-01-23-113/114" (letter from J. Leitch to J. D. Bauer, DOE-RL, April 11), U.S. Environmental Protection Agency, Region 10, Seattle, Washington.

EPA Letter, 1998, "Approval of Short Form Radioactive Air Emissions Notice of Construction (NOC) for Guzzler Excavation and Backfilling Activities in Support of 200 East Area A Farm Complex" (letter from A. J. Frankel to J. E. Rasmussen, DOE-RL, March 11), U.S. Environmental Protection Agency, Region 10, Seattle, Washington.

HNF-0528, *National Emission Standards for Hazardous Air Pollutants (NESHAP) Quality Assurance Plan for Radioactive Airborne Emissions,* latest revision, Fluor Hanford, Richland, Washington.

HNF-2418, 1998, *Soil Contamination Standards for Protection of Personnel,* Fluor Daniel Northwest, Richland, Washington.

HNF-4327, *Control of Radioactive Emissions for Frequently Performed TWRS Work Activities (ALARACT Demonstrations)*, latest revision, CH2M HILL Hanford Group, Inc., Richland, Washington.

HNF-MP-599, 2007, *Quality Assurance Program Description*, Rev. 19, Fluor Hanford, Inc., Richland, Washington.

NQA-1, 2000, *Quality Assurance Requirements for Nuclear Facility Applications*, American Society of Mechanical Engineers, New York, New York.

RHO-RE-SA-216P, 1987, *Characterization of Airborne Radionuclide Particulates in Ventilated Liquid Waste Tanks*, Rockwell Hanford Operations, Richland, Washington.

WAC 246-247-075, 0, "Monitoring, testing and quality assurance," *Washington Administrative Code*, as amended.

WAC 246-247-110(18), "Appendix A—Application information requirements," *Washington Administrative Code*, as amended.

APPENDIX A. 241-AY TANK FARM IODINE EMISSIONS DATA

ABCASH Iodine Emissions - 1994-2007

Stack	EDP Code	Sample Number	Sample Collection Period (Date and Time) On	Sample Collection Period (Date and Time) Off	Radionuclide, Calculated Concentration, and Analytical Uncertainty: Volume ft^3	^{129}I (µCi/ml)	% Uncert
296-A-17	E026	S173111	12/13/95 09:32	12/20/95 13:28	17690.3	3.2E-13	60.0
296-A-17	E026	S172018	12/21/95 17:26	12/28/95 09:13	17119.7	1.3E-13	320.0
296-A-17	E026	S143080	12/20/95 13:31	01/03/96 14:36	33514.6	3.4E-13	90.0
296-A-17	E026	S186835	05/01/96 09:38	05/07/96 14:52	14346.1	3.4E-12	25.0
296-A-17	E026	S194321	07/12/96 13:33	07/23/96 13:31	22669.7	9.3E-12	13.5
296-A-17	E026	S203640	10/25/96 14:09	11/01/96 08:36	6141.1	4.1E-12	32.4
296-A-17	E026	S213613	02/11/97 11:28	02/18/97 13:56	17316.9	7.7E-14	490.0
296-A-17	E026	S220099	05/06/97 13:53	05/13/97 10:24	10390.9	7.9E-12	20.0
296-A-17	E026	S232072	09/02/97 09:52	09/09/97 09:30	22750.0	3.4E-13	83.7
296-A-17	E026	S242116	12/02/97 11:06	12/09/97 11:04	12202.7	6.0E-12	21.4
296-A-17	E026	S248898	02/10/98 10:29	02/17/98 13:34	14418.6	2.5E-12	29.2
296-A-17	E027	S143081	12/28/95 09:18	01/03/96 14:39	15340.0	-2.5E-13	170.0
296-A-17	E027	S186836	05/01/96 09:39	05/07/96 14:53	14348.8	-2.2E-13	210.0
296-A-17	E027	S194322	07/12/96 13:34	07/23/96 13:32	22669.7	1.2E-12	39.0
296-A-17	E027	S203641	10/25/96 14:10	11/01/96 08:37	6141.1	4.4E-14	1000.0
296-A-17	E027	S213614	02/11/97 11:28	02/18/97 13:57	17319.7	2.0E-13	209.0
296-A-17	E027	S220100	05/06/97 13:54	05/13/97 10:25	10390.9	1.4E-12	81.3
296-A-17	E027	S232073	09/02/97 09:52	09/09/97 09:31	22753.2	1.1E-11	13.0
296-A-17	E027	S242117	12/02/97 11:06	12/09/97 11:05	12202.7	1.4E-12	26.1
296-A-17	E027	S248899	02/10/98 10:30	02/17/98 13:35	14418.6	-2.0E-13	212.0
296-A-42	E152	S258566	05/11/98 14:54	05/29/98 13:45	36295.0	9.3E-14	173.0
296-A-42	E152	S329790	01/26/00 11:07	02/16/00 09:09	53305.8	1.3E-12	20.3
296-A-42	E152	S339066	04/25/00 13:35	05/11/00 10:24	40112.0	4.0E-12	14.6
296-A-42	E152	S351644	08/13/00 09:05	08/30/00 10:36	41882.0	5.4E-12	12.9
296-A-42	E152	S357009	10/25/00 09:14	11/02/00 14:26	20938.7	5.3E-12	15.1
296-A-42	E152	S367778	01/25/01 08:31	02/14/01 13:36	48265.0	3.8E-13	54.9
296-A-42	E152	S379203	06/11/01 11:21	06/26/01 09:06	29734.0	2.9E-13	68.4
296-A-42	E152	S385142	09/12/01 09:53	09/27/01 09:10	29657.0	1.5E-12	27.8
296-A-42	E152	S397678	11/07/01 10:16	11/19/01 10:23	24570.0	9.5E-13	58.5
296-A-42	E152	S413538	02/12/02 13:43	02/26/02 21:27	29844.0	-2.8E-13	100.0
296-A-42	E152	S424958	05/08/02 10:03	05/21/02 13:01	26881.0	-3.0E-13	100.0
296-A-42	E152	S438173	08/12/02 10:31	09/11/02 13:27	56184.0	-2.1E-14	587.0
296-A-42	E152	S429364	10/24/02 12:53	11/11/02 10:47	37134.0	1.2E-13	172.0
296-A-42	E152	S460506	02/26/03 10:08	03/12/03 09:36	27359.8	-3.9E-14	630.0
296-A-42	E152	S569221	05/27/03 00:00	06/10/03 00:00	29150.0	3.0E-13	85.2
296-A-42	E152	S578970	08/13/03 12:37	08/25/03 10:23	25989.0	8.8E-14	305.0
296-A-42	E152	S594442	12/08/03 09:54	01/27/04 08:38	104113.0	8.4E-14	81.1
296-A-42	E152	s601753	03/03/04 18:41	03/17/04 12:44	9927.0	-5.5E-13	128.0
296-A-42	E152	S613711	08/21/04 15:05	09/03/04 00:35	26323.8	-1.8E-13	160.0
296-A-42	E152	S625348	09/17/04 01:34	10/12/04 01:14	58975.0	7.1E-13	26.6
296-A-42	E152	s631848	11/24/04 02:14	12/08/04 10:14	33263.0	1.4E-12	27.3
296-A-42	E152	s640203	02/03/05 09:49	03/09/05 12:36	77021.0	-3.6E-14	252.0
296-A-42	E152	S648616	03/30/05 09:42	06/09/05 11:10	149775.0	8.3E-15	559.0
296-A-42	E152	s660595	08/29/05 08:55	09/13/05 13:07	34780.0	-2.0E-13	100.0
296-A-42	E152	s662470	10/12/05 13:58	11/17/05 08:48	29922.0	-2.1E-13	117.0
296-A-42	E152	S679007	02/23/06 10:02	03/14/06 10:02	42464.0	-6.3E-14	260.0
296-A-42	E152	S682526	07/05/06 09:04	07/19/06 14:18	32300.0	-2.9E-13	100.0
296-A-42	E152	S695972	08/29/06 12:59	09/12/06 18:21	32335.0	-2.4E-13	100.0
296-A-42	E152	S701513	10/10/06 09:39	10/30/06 10:49	45847.0	4.6E-14	339.0
296-A-42	E152	S711837	01/17/07 08:45	02/02/07 14:38	36287.0	2.0E-15	1000.0
296-A-42	E152	S721382	04/11/07 13:04	04/26/07 11:06	33365.0	1.5E-13	147.0
							100.0

APPENDIX B. 241-AY/AZ TANK FARM RADIONUCLIDE INVENTORY DATA

Radionuclide Symbol	AY-101 Inventory 12/2007 (Ci)	AY-102 Inventory 12/2007 (Ci)	AZ-101 Inventory 12/2007 (Ci)	AZ-102 Inventory 12/2007 (Ci)	Total 2007 Inventory (Ci)	AY-101 max Inventory (Ci)	AY-102 max Inventory (Ci)	AZ-101 max Inventory (Ci)	AZ-102 max Inventory (Ci)	Total Maximum APQ
Adjustment Factor (AJ) for Maximum Inventory						**1,001,000 /871,750**	**1,001,000 /981,750**	**1,001,000 /836,000**	**1,001,000 /940,500**	
Formulas	B	C	D	E	F=B+C+D+E	G=AJ*B	H=AJ*C	I=AJ*D	J=AJ*E	K=G+H+I+J
3H	1.41E+01	1.51E+01	5.39E+01	1.15E+02	1.98E+02	1.6E+01	1.5E+01	6.5E+01	1.2E+02	2.2E+02
14C	8.38E+00	9.18E-01	6.60E+00	3.57E+00	1.95E+01	9.6E+00	9.4E-01	7.9E+00	3.8E+00	2.2E+01
59Ni	3.58E+01	2.48E+01	2.13E+01	1.20E+01	9.39E+01	4.1E+01	2.5E+01	2.6E+01	1.3E+01	1.0E+02
60Co	4.98E+02	7.89E+01	7.79E+02	7.83E+02	2.14E+03	5.7E+02	8.0E+01	9.3E+02	8.3E+02	2.4E+03
63Ni	3.34E+03	2.25E+03	2.02E+03	1.14E+03	8.75E+03	3.8E+03	2.3E+03	2.4E+03	1.2E+03	9.8E+03
79Se	1.25E+00	4.30E-01	3.68E+00	1.73E+00	7.09E+00	1.4E+00	4.4E-01	4.4E+00	1.8E+00	8.1E+00
90Sr	2.13E+06	4.63E+06	5.52E+06	3.92E+06	1.62E+07	2.4E+06	4.7E+06	6.6E+06	4.2E+06	1.8E+07
90Y	2.13E+06	4.63E+06	5.52E+06	3.92E+06	1.62E+07	2.4E+06	4.7E+06	6.6E+06	4.2E+06	1.8E+07
93mNb	1.37E+02	4.59E+01	1.25E+02	6.63E+01	3.74E+02	1.6E+02	4.7E+01	1.5E+02	7.1E+01	4.2E+02
93Zr	2.46E+02	5.55E+01	2.02E+02	1.13E+02	6.17E+02	2.8E+02	5.7E+01	2.4E+02	1.2E+02	7.0E+02
99Tc	4.85E+01	1.82E+02	1.11E+03	7.85E+02	2.13E+03	5.6E+01	1.9E+02	1.3E+03	8.4E+02	2.4E+03
106Ru	3.27E-02	6.00E-04	7.99E+01	9.19E+01	1.72E+02	3.8E-02	6.1E-04	9.6E+01	9.8E+01	1.9E+02
113mCd	5.01E+01	4.92E+01	5.21E+02	2.99E+02	9.19E+02	5.8E+01	5.0E+01	6.2E+02	3.2E+02	1.0E+03
125Sb	2.84E+02	3.36E+01	4.82E+03	4.14E+03	9.28E+03	3.3E+02	3.4E+01	5.8E+03	4.4E+03	1.1E+04
126Sn	3.17E+00	1.62E+01	9.12E+00	2.92E+00	3.14E+01	3.6E+00	1.7E+01	1.1E+01	3.1E+00	3.4E+01
129I	2.23E-01	4.86E-01	3.93E-01	4.92E-02	1.15E+00	2.6E-01	5.0E-01	4.7E-01	5.2E-02	1.3E+00
134Cs	1.43E+00	4.12E+01	1.49E+03	9.94E+02	2.53E+03	1.6E+00	4.2E+01	1.8E+03	1.1E+03	2.9E+03
137Cs	1.36E+05	6.68E+05	5.31E+06	3.50E+06	9.61E+06	1.6E+05	6.8E+05	6.4E+06	3.7E+06	1.1E+07
137mBa	1.28E+05	6.31E+05	5.01E+06	3.30E+06	9.07E+06	1.5E+05	6.4E+05	6.0E+06	3.5E+06	1.0E+07
151Sm	2.77E+05	8.11E+04	1.31E+05	2.17E+05	7.06E+05	3.2E+05	8.3E+04	1.6E+05	2.3E+05	7.9E+05
152Eu	3.98E+02	6.43E+01	1.57E+02	1.11E+02	7.30E+02	4.6E+02	6.6E+01	1.9E+02	1.2E+02	8.3E+02
154Eu	6.17E+03	6.50E+03	1.08E+04	8.73E+03	3.22E+04	7.1E+03	6.6E+03	1.3E+04	9.3E+03	3.6E+04
155Eu	2.52E+03	2.62E+03	1.22E+04	1.27E+04	3.00E+04	2.9E+03	2.7E+03	1.5E+04	1.4E+04	3.4E+04
226Ra	9.77E-05	8.93E-05	3.00E-04	1.52E-04	6.39E-04	1.1E-04	9.1E-05	3.6E-04	1.6E-04	7.2E-04
227Ac	3.27E-03	9.16E-03	1.78E-03	9.16E-04	1.51E-02	3.8E-03	9.3E-03	2.1E-03	9.7E-04	1.6E-02

APPENDIX B. 241-AY/AZ TANK FARM RADIONUCLIDE INVENTORY DATA

Radionuclide Symbol	AY-101 Inventory 12/2007 (Ci)	AY-102 Inventory 12/2007 (Ci)	AZ-101 Inventory 12/2007 (Ci)	AZ-102 Inventory 12/2007 (Ci)	Total 2007 Inventory (Ci)	AY-101 max Inventory (Ci)	AY-102 max Inventory (Ci)	AZ-101 max Inventory (Ci)	AZ-102 max Inventory (Ci)	Total Maximum APQ
Adjustment Factor (AJ) for Maximum Inventory						1,001,000 /871,750	1,001,000 /981,750	1,001,000 /836,000	1,001,000 /940,500	
Formulas	B	C	D	E	F=B+C+D+E	G=AJ*B	H=AJ*C	I=AJ*D	J=AJ*E	K=G+H+I+J
228Ra	8.82E-02	4.31E-02	2.74E-03	6.62E-03	1.41E-01	1.0E-01	4.4E-02	3.3E-03	7.0E-03	1.6E-01
229Th	5.44E-04	3.72E-05	2.50E-06	1.13E-06	5.85E-04	6.2E-04	3.8E-05	3.0E-06	1.2E-06	6.7E-04
231Pa	2.80E-02	9.54E-02	4.68E-03	2.25E-03	1.30E-01	3.2E-02	9.7E-02	5.6E-03	2.4E-03	1.4E-01
232Th	6.45E-02	5.28E-02	8.17E-03	2.06E-02	1.46E-01	7.4E-02	5.4E-02	9.8E-03	2.2E-02	1.6E-01
232U	4.79E-03	2.68E-03	2.68E-03	5.68E-03	1.58E-02	5.5E-03	2.7E-03	3.2E-03	6.0E-03	1.7E-02
233U	1.66E-01	1.96E-01	1.50E-01	3.03E-01	8.15E-01	1.9E-01	2.0E-01	1.8E-01	3.2E-01	8.9E-01
234U	2.92E-01	7.22E-01	7.82E-01	3.18E+00	4.98E+00	3.4E-01	7.4E-01	9.4E-01	3.4E+00	5.4E+00
235U	1.24E-02	3.02E-02	2.96E-02	1.28E-01	2.00E-01	1.4E-02	3.1E-02	3.5E-02	1.4E-01	2.2E-01
236U	1.05E-02	2.27E-02	7.16E-02	2.66E-01	3.71E-01	1.2E-02	2.3E-02	8.6E-02	2.8E-01	4.0E-01
237Np	3.50E+00	3.83E+00	1.36E+01	1.93E+01	4.02E+01	4.0E+00	3.9E+00	1.6E+01	2.1E+01	4.5E+01
238Pu	6.53E+01	6.14E+01	1.15E+02	1.97E+02	4.39E+02	7.5E+01	6.3E+01	1.4E+02	2.1E+02	4.8E+02
238U	2.54E-01	6.81E-01	5.52E-01	2.37E+00	3.86E+00	2.9E-01	6.9E-01	6.6E-01	2.5E+00	4.2E+00
239Pu	7.70E+02	1.60E+03	1.18E+03	1.33E+03	4.88E+03	8.8E+02	1.6E+03	1.4E+03	1.4E+03	5.3E+03
240Pu	2.36E+02	3.69E+02	3.32E+02	3.51E+02	1.29E+03	2.7E+02	3.8E+02	4.0E+02	3.7E+02	1.4E+03
241Am	1.44E+04	4.97E+03	2.56E+04	2.84E+04	7.34E+04	1.7E+04	5.1E+03	3.1E+04	3.0E+04	8.2E+04
241Pu	3.27E+03	2.61E+03	8.19E+03	7.34E+03	2.14E+04	3.8E+03	2.7E+03	9.8E+03	7.8E+03	2.4E+04
242Cm	2.15E+01	5.61E+00	1.12E+01	2.48E+01	6.31E+01	2.5E+01	5.7E+00	1.3E+01	2.6E+01	7.0E+01
242Pu	3.36E-02	2.47E-02	4.18E-02	3.79E-02	1.38E-01	3.9E-02	2.5E-02	5.0E-02	4.0E-02	1.5E-01
243Am	1.30E+01	2.72E+00	9.41E+00	9.39E+00	3.45E+01	1.5E+01	2.8E+00	1.1E+01	1.0E+01	3.9E+01
243Cm	2.12E+00	2.12E+00	1.04E+00	2.86E+00	8.14E+00	2.4E+00	2.2E+00	1.2E+00	3.0E+00	8.9E+00
244Cm	4.96E+01	5.02E+01	2.42E+01	6.50E+01	1.89E+02	5.7E+01	5.1E+01	2.9E+01	6.9E+01	2.1E+02

APPENDIX C. POTENTIAL UNABATED EMISSIONS AND DOSE FOR SOIL EXCAVATION IN AY AND AZ FARMS

Potential Unabated Emissions and Dose from Soil Excavation Activities in AY Farm

Hand Digging Soil Excavation Activities							
Maximum Soil Excavated (Y)	6,000	yd^3					
Maximum Soil Excavated (F)	162,000	ft^3					
Soil Density (SD)	98	lbs/ft^3					
Total Soil Mass (SM = SD*F*453.59)	7.20E+09	grams					
Maximum beta/gamma reading (MB)	10,000	cpm					
Maximum alpha reading (MA)	10	cpm					
Release Fraction (RF)	1.0E-03			**CAP-88 East Area**		**Unabated Emissions**	
Assumed Isotope	**Conversion Factor***	**Total Possession Quantity**	**Unabated Release**	**Offsite MPR**	**Onsite MPR**	**Offsite MPR**	**Onsite MPR**
	(pCi/gram)/cpm	Ci	Ci	mrem/Ci		mrem/yr	
	A	B=A*SM*MA(MB)/(1E+12)	C=B*RF	D	E	F=C*D	G=C*E
beta/gamma: Sr-90	0.35	2.55E+01	2.55E-02	1.10E-01	9.50E-03	2.81E-03	2.42E-04
alpha: Am-241	14.2	1.02E+00	1.02E-03	1.30E+01	1.50E+01	1.33E-02	1.53E-02
Total		2.65E+01	2.65E-02			1.61E-02	1.56E-02
Guzzler Soil Excavation Activities							
Maximum Soil Excavated (F)	700	ft^3					
Soil Density (SD)	98	lbs/ft^3					
Total Soil Mass (SM = SD*F*453.59)	3.11E+07	grams					
Maximum beta/gamma reading (MB)	10,000	cpm					
Maximum alpha reading (MA)	10	cpm					
Release Fraction (RF)	1.0E+00			**CAP-88 East Area**		**Unabated Emissions**	
Assumed Isotope	**Conversion Factor***	**Total Possession Quantity**	**Unabated Release**	**Offsite MPR**	**Onsite MPR**	**Offsite MPR**	**Onsite MPR**
	(pCi/gram)/cpm	Ci	Ci	mrem/Ci		mrem/yr	
	A	B=A*SM*MA(MB)/(1E+12)	C=B*RF	D	E	F=C*D	G=C*E
beta/gamma: Sr-90	0.35	1.10E-01	1.10E-01	1.10E-01	9.50E-03	1.21E-02	1.05E-03
alpha: Am-241	14.2	4.42E-03	4.42E-03	1.30E+01	1.50E+01	5.74E-02	6.63E-02
Total		1.15E-01	1.15E-01			6.96E-02	6.73E-02

** From Table 4 of HNF-2418*

APPENDIX C. POTENTIAL UNABATED EMISSIONS AND DOSE FOR SOIL EXCAVATION in AY AND AZ FARMS

Potential Unabated Emissions and Dose from Soil Excavation Activities in AZ Farm

Hand Digging Soil Excavation Activities

	yd^3	ft^3					
Maximum Soil Excavated (F)	6,000	162,000	Soil Density (SD)	98	lbs/ft^3		
Total Soil Mass (SM = SD*F*453.59)	7.20E+09	grams					
Maximum beta/gamma reading (MB)	10,000	cpm	Release Fraction (RF)		1.0E-03		
Maximum alpha reading (MA)	10	cpm		**CAP-88 East Area**		**Unabated Emissions**	
Assumed Isotope	**Conversion Factor***	**Total Possession Quantity**	**Unabated Release**	**Offsite MPR**	**Onsite MPR**	**Offsite MPR**	**Onsite MPR**
	(pCi/gram)/cpm	Ci	Ci	mrem/Ci		mrem/yr	
	A	B=A*SM*MA(MB)/(1E+12)	C=B*RF	D	E	F=C*D	G=C*E
beta/gamma: Sr-90	0.35	2.55E+01	2.55E-02	1.10E-01	9.50E-03	2.81E-03	2.42E-04
alpha: Am-241	14.2	1.02E+00	1.02E-03	1.30E+01	1.50E+01	1.33E-02	1.53E-02
Total		2.65E+01	2.65E-02			1.61E-02	1.56E-02

*Footnote *: from Table 4 of HNF-2418*

Guzzler Soil Excavation Activities

Maximum Soil Excavated (F)	700	ft^3	Soil Density (SD)	98	lbs/ft^3		
Total Soil Mass (SM = SD*F*453.59)	3.11E+07	grams					
Maximum beta/gamma reading (MB)	10,000	cpm	Release Fraction (RF)		1.0E+00		
Maximum alpha reading (MA)	10	cpm		**CAP-88 East Area**		**Unabated Emissions**	
Assumed Isotope	**Conversion Factor***	**Total Possession Quantity**	**Unabated Release**	**Offsite MPR**	**Onsite MPR**	**Offsite MPR**	**Onsite MPR**
	(pCi/gram)/cpm	Ci	Ci	mrem/Ci		mrem/yr	
	A	B=A*SM*MA(MB)/(1E+12)	C=B*RF	D	E	F=C*D	G=C*E
beta/gamma: Sr-90	0.35	1.10E-01	1.10E-01	1.10E-01	9.50E-03	1.21E-02	1.05E-03
alpha: Am-241	14.2	4.42E-03	4.42E-03	1.30E+01	1.50E+01	5.74E-02	6.63E-02
Total		1.15E-01	1.15E-01			6.96E-02	6.73E-02

** From Table 4 of HNF-2418*

APPENDIX D. POTENTIAL UNABATED EMISSIONS AND DOSE FOR PIPE CUTTING ACTIVITIES ASSOCIATED WITH AY AND AZ FARM

Potential Unabated Emissions and Dose for Pipe Cutting Activities in AY Farm				
Hanford Site Area	200-East			
3 inch pipe	3	inch		
6 inch pipe	6	inch		
3 inch pipe volume V3 = (3/2)^2*3.14159*24/231	0.73	gallons	(2 linear feet per pipe size)	
6 inch pipe volume V6 = (6/2)^2*3.14159*24/231	2.94	gallons	(2 linear feet per pipe size)	
Total Volume in Pipes VP = V3*4 +V6*4	**14.69**	gallons		
Total Tank Volume (TV)	2,000,000	gallons		
Release Fraction (RF)	1.0E-03			

Potential Unabated Emissions and Dose for Pipe Cutting Activities in AY Farm									
					CAP-88 East Area		Unabated Emissions		% Unabated Emissions
Analyte	**Sum of AY101 and AY102 Inventory**	**Tank Concentration**	**Pipe Inventory**	**Released**	**Offsite MPR**	**Onsite MPR**	**Offsite MPR**	**Onsite MPR**	**Offsite MPR**
	Ci	Ci/gal	Ci	Ci/yr	mrem/Ci		mrem/yr		
	A	B=A/TV	C=B*VP	D=C*RF	E	F	G=D*E	H=D*F	I=G/SumG
3H	3.2E+01	1.58E-05	2.32E-04	2.32E-07	2.50E-05	7.10E-06	5.80E-12	1.65E-12	0.00%
14C	1.1E+01	5.28E-06	7.75E-05	7.75E-08	1.90E-03	1.80E-04	1.47E-10	1.40E-11	0.00%
59Ni	6.6E+01	3.32E-05	4.88E-04	4.88E-07	3.10E-04	2.90E-04	1.51E-10	1.41E-10	0.00%
60Co	6.5E+02	3.26E-04	4.79E-03	4.79E-06	2.50E-01	3.00E-01	1.20E-06	1.44E-06	0.01%
63Ni	6.1E+03	3.06E-03	4.50E-02	4.50E-05	2.60E-04	6.90E-05	1.17E-08	3.11E-09	0.00%
79Se	1.9E+00	9.37E-07	1.38E-05	1.38E-08	1.30E-01	1.50E-01	1.79E-09	2.06E-09	0.00%
90Sr	7.2E+06	3.58E+00	5.26E+01	5.26E-02	1.10E-01	9.50E-03	5.79E-03	5.00E-04	60.41%
90Y	7.2E+06	3.58E+00	5.26E+01	5.26E-02	3.40E-04	2.60E-04	1.79E-05	1.37E-05	0.19%
93mNb	2.0E+02	1.02E-04	1.50E-03	1.50E-06	2.10E-03	1.20E-03	3.15E-09	1.80E-09	0.00%
93Zr	3.4E+02	1.70E-04	2.49E-03	2.49E-06	1.30E-03	1.30E-03	3.24E-09	3.24E-09	0.00%
99Tc	2.4E+02	1.21E-04	1.77E-03	1.77E-06	2.30E-02	1.40E-03	4.08E-08	2.48E-09	0.00%

APPENDIX D. POTENTIAL UNABATED EMISSIONS AND DOSE FOR PIPE CUTTING ACTIVITIES ASSOCIATED WITH AY AND AZ FARM

Potential Unabated Emissions and Dose for Pipe Cutting Activities in AY Farm

Analyte	Sum of AY101 and AY102 Inventory	Tank Concentration	Pipe Inventory	Released	CAP-88 East Area		Unabated Emissions		% Unabated Emissions
					Offsite MPR	Onsite MPR	Offsite MPR	Onsite MPR	Offsite MPR
	Ci	Ci/gal	Ci	Ci/yr	mrem/Ci		mrem/yr		
	A	B=A/TV	C=B*VP	D=C*RF	E	F	G=D*E	H=D*F	I=G/SumG
106Ru	3.8E-02	1.91E-08	2.80E-07	2.80E-10	2.00E-02	1.90E-02	5.60E-12	5.32E-12	0.00%
113mCd	1.1E+02	5.38E-05	7.91E-04	7.91E-07	1.30E-01	1.50E-01	1.03E-07	1.19E-07	0.00%
125Sb	3.6E+02	1.80E-04	2.65E-03	2.65E-06	2.60E-02	3.30E-02	6.88E-08	8.73E-08	0.00%
126Sn	2.0E+01	1.01E-05	1.48E-04	1.48E-07	4.70E-02	4.10E-02	6.96E-09	6.07E-09	0.00%
129I	7.5E-01	3.76E-07	5.52E-06	5.52E-09	2.00E-01	2.20E-02	1.10E-09	1.21E-10	0.00%
134Cs	4.4E+01	2.18E-05	3.21E-04	3.21E-07	1.00E-01	4.70E-02	3.21E-08	1.51E-08	0.00%
137Cs	8.4E+05	4.19E-01	6.15E+00	6.15E-03	2.40E-01	2.70E-01	1.48E-03	1.66E-03	15.40%
137mBa	7.9E+05	3.95E-01	5.80E+00	5.80E-03	5.30E-13	1.00E-11	3.08E-15	5.80E-14	0.00%
151Sm	4.0E+05	2.00E-01	2.94E+00	2.94E-03	7.50E-04	8.40E-04	2.21E-06	2.47E-06	0.02%
152Eu	5.2E+02	2.61E-04	3.84E-03	3.84E-06	2.40E-01	3.10E-01	9.21E-07	1.19E-06	0.01%
154Eu	1.4E+04	6.86E-03	1.01E-01	1.01E-04	2.00E-01	2.50E-01	2.01E-05	2.52E-05	0.21%
155Eu	5.6E+03	2.78E-03	4.09E-02	4.09E-05	8.00E-03	9.80E-03	3.27E-07	4.01E-07	0.00%
226Ra	2.0E-04	1.02E-10	1.49E-09	1.49E-12	4.60E-01	2.50E-01	6.87E-13	3.73E-13	0.00%
227Ac	1.3E-02	6.55E-09	9.62E-08	9.62E-11	1.50E+01	1.80E+01	1.44E-09	1.73E-09	0.00%
228Ra	1.5E-01	7.26E-08	1.07E-06	1.07E-09	1.90E-01	7.00E-02	2.03E-10	7.47E-11	0.00%
229Th	6.6E-04	3.31E-10	4.87E-09	4.87E-12	1.60E+01	2.00E+01	7.79E-11	9.73E-11	0.00%
231Pa	1.3E-01	6.47E-08	9.50E-07	9.50E-10	1.20E+01	1.40E+01	1.14E-08	1.33E-08	0.00%
232Th	1.3E-01	6.39E-08	9.39E-07	9.39E-10	*8.00E+00*	*1.00E+01*	7.51E-09	9.39E-09	0.00%
232U	8.2E-03	4.12E-09	6.05E-08	6.05E-11	1.10E+01	1.30E+01	6.65E-10	7.86E-10	0.00%
233U	3.9E-01	1.95E-07	2.87E-06	2.87E-09	3.10E+00	3.70E+00	8.89E-09	1.06E-08	0.00%
234U	1.1E+00	5.36E-07	7.87E-06	7.87E-09	3.10E+00	3.70E+00	2.44E-08	2.91E-08	0.00%
235U	4.5E-02	2.25E-08	3.31E-07	3.31E-10	3.00E+00	3.50E+00	9.92E-10	1.16E-09	0.00%
236U	3.5E-02	1.76E-08	2.59E-07	2.59E-10	2.90E+00	3.50E+00	7.50E-10	9.05E-10	0.00%
237Np	7.9E+00	3.96E-06	5.82E-05	5.82E-08	1.20E+01	1.40E+01	6.98E-07	8.15E-07	0.01%
238Pu	1.4E+02	6.88E-05	1.01E-03	1.01E-06	7.60E+00	8.90E+00	7.68E-06	8.99E-06	0.08%
238U	9.9E-01	4.93E-07	7.24E-06	7.24E-09	2.80E+00	3.30E+00	2.03E-08	2.39E-08	0.00%
239Pu	2.5E+03	1.26E-03	1.85E-02	1.85E-05	8.20E+00	9.50E+00	1.51E-04	1.76E-04	1.58%

APPENDIX D. POTENTIAL UNABATED EMISSIONS AND DOSE FOR PIPE CUTTING ACTIVITIES ASSOCIATED WITH AY AND AZ FARM

Potential Unabated Emissions and Dose for Pipe Cutting Activities in AY Farm

Analyte	Sum of AY101 and AY102 Inventory	Tank Concentration	Pipe Inventory	Released	CAP-88 East Area		Unabated Emissions		% Unabated Emissions
					Offsite MPR	Onsite MPR	Offsite MPR	Onsite MPR	Offsite MPR
	Ci	Ci/gal	Ci	Ci/yr	mrem/Ci		mrem/yr		
	A	B=A/TV	C=B*VP	D=C*RF	E	F	G=D*E	H=D*F	I=G/SumG
240Pu	6.5E+02	3.24E-04	4.75E-03	4.75E-06	8.20E+00	9.50E+00	3.90E-05	4.52E-05	0.41%
241Am	2.2E+04	1.08E-02	1.59E-01	1.59E-04	1.30E+01	1.50E+01	2.06E-03	2.38E-03	21.52%
241Pu	6.4E+03	3.21E-03	4.71E-02	4.71E-05	1.30E-01	1.50E-01	6.13E-06	7.07E-06	0.06%
242Cm	3.0E+01	1.52E-05	2.23E-04	2.23E-07	4.10E-01	5.00E-01	9.16E-08	1.12E-07	0.00%
242Pu	6.4E-02	3.19E-08	4.68E-07	4.68E-10	7.80E+00	9.10E+00	3.65E-09	4.26E-09	0.00%
243Am	1.8E+01	8.85E-06	1.30E-04	1.30E-07	1.30E+01	1.50E+01	1.69E-06	1.95E-06	0.02%
243Cm	4.6E+00	2.30E-06	3.38E-05	3.38E-08	8.50E+00	1.00E+01	2.87E-07	3.38E-07	0.00%
244Cm	1.1E+02	5.41E-05	7.94E-04	7.94E-07	6.70E+00	8.00E+00	5.32E-06	6.35E-06	0.06%
						Sum	**9.58E-03**	**4.83E-03**	**100.00%**

APPENDIX D. POTENTIAL UNABATED EMISSIONS AND DOSE FOR PIPE CUTTING ACTIVITIES ASSOCIATED WITH AY AND AZ FARM

Potential Unabated Emissions and Dose for Pipe Cutting Activities in AZ Farm			
2 inch pipe	2	inch	
8 inch pipe	8	inch	
2 inch pipe volume [V2 = (2/2)^2*3.14159*24/231]	0.33	gallons	(2 linear feet per pipe size)
8 inch pipe volume [V8 = (8/2)^2*3.14159*24/231]	5.22	gallons	(2 linear feet per pipe size)
Total Volume in Pipes [VP = V2 +V8]	**5.55**	gallons	
Total Tank Volume (TV)	1,000,000	gallons	
Release Fraction (RF)	1.0E-03		

Potential Unabated Emissions and Dose for Pipe Cutting Activities in AZ Farm									
					CAP-88		Unabated Emissions		% Unabated Emissions
Analyte	**Total Curie in AZ101 and AZ102**	**Tank Concentration**	**Pipe Inventory**	**Released**	**Offsite MPR**	**Onsite MPR**	**Offsite MPR**	**Onsite MPR**	**Offsite MPR**
	Ci	Ci/gal	Ci	Ci/yr	mrem/Ci		mrem/yr		
	A	B=A/TV	C=B*VP	D=C*RF	E	F	G=D*E	H=D*F	I=G/SumG
3H	1.9E+02	1.87E-04	1.04E-03	1.04E-06	2.50E-05	7.10E-06	2.59E-11	7.36E-12	0.00%
14C	1.2E+01	1.17E-05	6.49E-05	6.49E-08	1.90E-03	1.80E-04	1.23E-10	1.17E-11	0.00%
59Ni	3.8E+01	3.83E-05	2.12E-04	2.12E-07	3.10E-04	2.90E-04	6.58E-11	6.16E-11	0.00%
60Co	1.8E+03	1.77E-03	9.80E-03	9.80E-06	2.50E-01	3.00E-01	2.45E-06	2.94E-06	0.01%
63Ni	3.6E+03	3.63E-03	2.02E-02	2.02E-05	2.60E-04	6.90E-05	5.24E-09	1.39E-09	0.00%
79Se	6.2E+00	6.25E-06	3.47E-05	3.47E-08	1.30E-01	1.50E-01	4.51E-09	5.20E-09	0.00%
90Sr	1.1E+07	1.08E+01	5.98E+01	5.98E-02	1.10E-01	9.50E-03	6.58E-03	5.68E-04	26.69%
90Y	1.1E+07	1.08E+01	5.98E+01	5.98E-02	3.40E-04	2.60E-04	2.03E-05	1.56E-05	0.08%
93mNb	2.2E+02	2.20E-04	1.22E-03	1.22E-06	2.10E-03	1.20E-03	2.57E-09	1.47E-09	0.00%
93Zr	3.6E+02	3.62E-04	2.01E-03	2.01E-06	1.30E-03	1.30E-03	2.61E-09	2.61E-09	0.00%
99Tc	2.2E+03	2.16E-03	1.20E-02	1.20E-05	2.30E-02	1.40E-03	2.76E-07	1.68E-08	0.00%
106Ru	1.9E+02	1.93E-04	1.07E-03	1.07E-06	2.00E-02	1.90E-02	2.15E-08	2.04E-08	0.00%
113mCd	9.4E+02	9.42E-04	5.23E-03	5.23E-06	1.30E-01	1.50E-01	6.80E-07	7.84E-07	0.00%
125Sb	1.0E+04	1.02E-02	5.65E-02	5.65E-05	2.60E-02	3.30E-02	1.47E-06	1.86E-06	0.01%
126Sn	1.4E+01	1.40E-05	7.78E-05	7.78E-08	4.70E-02	4.10E-02	3.66E-09	3.19E-09	0.00%
129I	5.2E-01	5.23E-07	2.90E-06	2.90E-09	2.00E-01	2.20E-02	5.80E-10	6.38E-11	0.00%

APPENDIX D. POTENTIAL UNABATED EMISSIONS AND DOSE FOR PIPE CUTTING ACTIVITIES ASSOCIATED WITH AY AND AZ FARM

Potential Unabated Emissions and Dose for Pipe Cutting Activities in AZ Farm									
	Total Curie in AZ101 and AZ102	Tank Concentration	Pipe Inventory	Released	CAP-88		Unabated Emissions		% Unabated Emissions
Analyte					Offsite MPR	Onsite MPR	Offsite MPR	Onsite MPR	Offsite MPR
	Ci	Ci/gal	Ci	Ci/yr	mrem/Ci		mrem/yr		
	A	B=A/TV	C=B*VP	D=C*RF	E	F	G=D*E	H=D*F	I=G/SumG
134Cs	2.8E+03	2.84E-03	1.58E-02	1.58E-05	1.00E-01	4.70E-02	1.58E-06	7.41E-07	0.01%
137Cs	1.0E+07	1.01E+01	5.59E+01	5.59E-02	2.40E-01	2.70E-01	1.34E-02	1.51E-02	54.47%
137mBa	9.5E+06	9.51E+00	5.28E+01	5.28E-02	5.30E-13	1.00E-11	2.80E-14	5.28E-13	0.00%
151Sm	3.9E+05	3.88E-01	2.15E+00	2.15E-03	7.50E-04	8.40E-04	1.61E-06	1.81E-06	0.01%
152Eu	3.1E+02	3.06E-04	1.70E-03	1.70E-06	2.40E-01	3.10E-01	4.08E-07	5.27E-07	0.00%
154Eu	2.2E+04	2.22E-02	1.23E-01	1.23E-04	2.00E-01	2.50E-01	2.47E-05	3.08E-05	0.10%
155Eu	2.8E+04	2.81E-02	1.56E-01	1.56E-04	8.00E-03	9.80E-03	1.25E-06	1.53E-06	0.01%
226Ra	5.2E-04	5.21E-10	2.89E-09	2.89E-12	4.60E-01	2.50E-01	1.33E-12	7.23E-13	0.00%
227Ac	3.1E-03	3.11E-09	1.72E-08	1.72E-11	1.50E+01	1.80E+01	2.59E-10	3.10E-10	0.00%
228Ra	1.0E-02	1.03E-08	5.73E-08	5.73E-11	1.90E-01	7.00E-02	1.09E-11	4.01E-12	0.00%
229Th	4.2E-06	4.20E-12	2.33E-11	2.33E-14	1.60E+01	2.00E+01	3.73E-13	4.66E-13	0.00%
231Pa	8.0E-03	8.00E-09	4.44E-08	4.44E-11	1.20E+01	1.40E+01	5.33E-10	6.21E-10	0.00%
232Th	3.2E-02	3.17E-08	1.76E-07	1.76E-10	*8.00E+00*	*1.00E+01*	1.41E-09	1.76E-09	0.00%
232U	9.3E-03	9.25E-09	5.14E-08	5.14E-11	1.10E+01	1.30E+01	5.65E-10	6.68E-10	0.00%
233U	5.0E-01	5.02E-07	2.79E-06	2.79E-09	3.10E+00	3.70E+00	8.64E-09	1.03E-08	0.00%
234U	4.3E+00	4.32E-06	2.40E-05	2.40E-08	3.10E+00	3.70E+00	7.43E-08	8.87E-08	0.00%
235U	1.7E-01	1.72E-07	9.53E-07	9.53E-10	3.00E+00	3.50E+00	2.86E-09	3.33E-09	0.00%
236U	3.7E-01	3.69E-07	2.05E-06	2.05E-09	2.90E+00	3.50E+00	5.94E-09	7.16E-09	0.00%
237Np	3.7E+01	3.68E-05	2.04E-04	2.04E-07	1.20E+01	1.40E+01	2.45E-06	2.86E-06	0.01%
238Pu	3.5E+02	3.47E-04	1.93E-03	1.93E-06	7.60E+00	8.90E+00	1.46E-05	1.72E-05	0.06%
238U	3.2E+00	3.18E-06	1.77E-05	1.77E-08	2.80E+00	3.30E+00	4.95E-08	5.83E-08	0.00%
239Pu	2.8E+03	2.83E-03	1.57E-02	1.57E-05	8.20E+00	9.50E+00	1.29E-04	1.49E-04	0.52%
240Pu	7.7E+02	7.71E-04	4.28E-03	4.28E-06	8.20E+00	9.50E+00	3.51E-05	4.06E-05	0.14%
241Am	6.1E+04	6.09E-02	3.38E-01	3.38E-04	1.30E+01	1.50E+01	4.39E-03	5.07E-03	17.81%
241Pu	1.8E+04	1.76E-02	9.78E-02	9.78E-05	1.30E-01	1.50E-01	1.27E-05	1.47E-05	0.05%
242Cm	4.0E+01	3.98E-05	2.21E-04	2.21E-07	4.10E-01	5.00E-01	9.06E-08	1.10E-07	0.00%
242Pu	9.0E-02	9.04E-08	5.02E-07	5.02E-10	7.80E+00	9.10E+00	3.91E-09	4.56E-09	0.00%

APPENDIX D. POTENTIAL UNABATED EMISSIONS AND DOSE FOR PIPE CUTTING ACTIVITIES ASSOCIATED WITH AY AND AZ FARM

Potential Unabated Emissions and Dose for Pipe Cutting Activities in AZ Farm									
					CAP-88		Unabated Emissions		% Unabated Emissions
Analyte	Total Curie in AZ101 and AZ102	Tank Concentration	Pipe Inventory	Released	Offsite MPR	Onsite MPR	Offsite MPR	Onsite MPR	Offsite MPR
	Ci	Ci/gal	Ci	Ci/yr	mrem/Ci		mrem/yr		
	A	B=A/TV	C=B*VP	D=C*RF	E	F	G=D*E	H=D*F	I=G/SumG
243Am	2.1E+01	2.13E-05	1.18E-04	1.18E-07	1.30E+01	1.50E+01	1.53E-06	1.77E-06	0.01%
243Cm	4.3E+00	4.29E-06	2.38E-05	2.38E-08	8.50E+00	1.00E+01	2.02E-07	2.38E-07	0.00%
244Cm	9.8E+01	9.82E-05	5.45E-04	5.45E-07	6.70E+00	8.00E+00	3.65E-06	4.36E-06	0.01%
						Sum	**2.47E-02**	**2.10E-02**	**100.00%**

APPENDIX E: POTENTIAL UNABATED EMISSIONS AND DOSE FOR EQUIPMENT INSTALLATION REMOVAL ACTIVITIES ASSOCIATED WITH AY AND AZ FARM

Potential Unabated Emissions and Dose for Equipment Removal Activities in AY Farm

		R_1 (in)	R_2 (in)	A_1 (in^2)	A_2 (in^2)	Vw (gal)
#	Equipment removal from each tank					
4	Profile thermocouple probe	2	2.06	12.6	13.4	1.26
3	Sludge thermocouple probe	2				
1	Multi-function instrument tree	2				
8	**Total for probe removals**					10
1	75-hp pump in pit 02B	17	17.06	907.9	914.7	10.59
1	Transfer pump in pit 02D	17				
1	Suction/booster pump in pit 02E	17				
3	**Total for pump removals**					32
	Total for equipment removal					**42**

Waste Layer Thickness (T)	0.063	inch
Equipment Length (L)	363	inches
R_1 & R_2 are radii; $R_2 = R_1 + T$		
Areas are A_1 & $A_2 = 3.14159 * R^2$		
$Vw = ((A_2 - A_1) * L)/231$		
Waste Volume on Equipment (Vw)	42	gallons
Total Number of Tanks (N)	2	
Total Waste Volume (Vtw=Vw*N)	84	gallons
AY Tank Farm Total Volume (Vtf)	1,036,000	gallons
Release Fraction (RF)	1.0E-03	

HNF-EP-0182, Rev 193

APPENDIX E: POTENTIAL UNABATED EMISSIONS AND DOSE FOR EQUIPMENT INSTALLATION REMOVAL ACTIVITIES ASSOCIATED WITH AY and AZ FARM

Potential Unabated Emissions and Dose for Equipment Removal Activities in AY Farm									
					CAP-88		Unabated Emissions		% Unabated Emissions
Analyte	Sum of AY101 and AY102 Inventory (Ci)	Average Concentration (Ci/gal)	Inventory on Equipment (Ci)	Released (Ci)	Offsite MPR mrem/Ci	Onsite MPR mrem/Ci	Offsite MPR mrem/yr	Onsite MPR mrem/yr	Offsite MPR
	C	D=C/Vtf)	E=D*Vtw	F=E*RF	G	H	I=F*G	J=F*H	K=I/SumI
3H	3.2E+01	3.05E-05	2.55E-03	2.55E-06	2.50E-05	7.10E-06	6.39E-11	1.81E-11	0.00%
14C	1.1E+01	1.02E-05	8.54E-04	8.54E-07	1.90E-03	1.80E-04	1.62E-09	1.54E-10	0.00%
59Ni	6.6E+01	6.41E-05	5.37E-03	5.37E-06	3.10E-04	2.90E-04	1.66E-09	1.56E-09	0.00%
60Co	6.5E+02	6.30E-04	5.28E-02	5.28E-05	2.50E-01	3.00E-01	1.32E-05	1.58E-05	0.01%
63Ni	6.1E+03	5.92E-03	4.96E-01	4.96E-04	2.60E-04	6.90E-05	1.29E-07	3.42E-08	0.00%
79Se	1.9E+00	1.81E-06	1.52E-04	1.52E-07	1.30E-01	1.50E-01	1.97E-08	2.27E-08	0.00%
90Sr	7.2E+06	6.92E+00	5.80E+02	5.80E-01	1.10E-01	9.50E-03	6.38E-02	5.51E-03	60.41%
90Y	7.2E+06	6.92E+00	5.80E+02	5.80E-01	3.40E-04	2.60E-04	1.97E-04	1.51E-04	0.19%
93mNb	2.0E+02	1.97E-04	1.65E-02	1.65E-05	2.10E-03	1.20E-03	3.47E-08	1.98E-08	0.00%
93Zr	3.4E+02	3.27E-04	2.74E-02	2.74E-05	1.30E-03	1.30E-03	3.56E-08	3.56E-08	0.00%
99Tc	2.4E+02	2.33E-04	1.95E-02	1.95E-05	2.30E-02	1.40E-03	4.49E-07	2.73E-08	0.00%
106Ru	3.8E-02	3.68E-08	3.09E-06	3.09E-09	2.00E-02	1.90E-02	6.17E-11	5.86E-11	0.00%
113mCd	1.1E+02	1.04E-04	8.71E-03	8.71E-06	1.30E-01	1.50E-01	1.13E-06	1.31E-06	0.00%
125Sb	3.6E+02	3.48E-04	2.91E-02	2.91E-05	2.60E-02	3.30E-02	7.58E-07	9.62E-07	0.00%
126Sn	2.0E+01	1.95E-05	1.63E-03	1.63E-06	4.70E-02	4.10E-02	7.66E-08	6.68E-08	0.00%
129I	7.5E-01	7.25E-07	6.08E-05	6.08E-08	2.00E-01	2.20E-02	1.22E-08	1.34E-09	0.00%
134Cs	4.4E+01	4.21E-05	3.53E-03	3.53E-06	1.00E-01	4.70E-02	3.53E-07	1.66E-07	0.00%
137Cs	8.4E+05	8.08E-01	6.77E+01	6.77E-02	2.40E-01	2.70E-01	1.63E-02	1.83E-02	15.40%
137mBa	7.9E+05	7.63E-01	6.39E+01	6.39E-02	5.30E-13	1.00E-11	3.39E-14	6.39E-13	0.00%
151Sm	4.0E+05	3.87E-01	3.24E+01	3.24E-02	7.50E-04	8.40E-04	2.43E-05	2.72E-05	0.02%
152Eu	5.2E+02	5.04E-04	4.23E-02	4.23E-05	2.40E-01	3.10E-01	1.01E-05	1.31E-05	0.01%
154Eu	1.4E+04	1.32E-02	1.11E+00	1.11E-03	2.00E-01	2.50E-01	2.22E-04	2.77E-04	0.21%
155Eu	5.6E+03	5.37E-03	4.50E-01	4.50E-04	8.00E-03	9.80E-03	3.60E-06	4.41E-06	0.00%

APPENDIX E. POTENTIAL UNABATED EMISSIONS AND DOSE FOR EQUIPMENT INSTALLATION REMOVAL ACTIVITIES ASSOCIATED WITH AY AND AZ FARM

Potential Unabated Emissions and Dose for Equipment Removal Activities in AY Farm									
					CAP-88		Unabated Emissions		% Unabated Emissions
Analyte	Sum of AY101 and AY102 Inventory (Ci)	Average Concentration (Ci/gal)	Inventory on Equipment (Ci)	Released (Ci)	Offsite MPR mrem/Ci	Onsite MPR mrem/Ci	Offsite MPR mrem/yr	Onsite MPR mrem/yr	Offsite MPR
	C	D=C/Vtf)	E=D*Vtw	F=E*RF	G	H	I=F*G	J=F*H	K=I/SumI
226Ra	2.0E-04	1.96E-10	1.64E-08	1.64E-11	4.60E-01	2.50E-01	7.56E-12	4.11E-12	0.00%
227Ac	1.3E-02	1.26E-08	1.06E-06	1.06E-09	1.50E+01	1.80E+01	1.59E-08	1.91E-08	0.00%
228Ra	1.5E-01	1.40E-07	1.17E-05	1.17E-08	1.90E-01	7.00E-02	2.23E-09	8.22E-10	0.00%
229Th	6.6E-04	6.40E-10	5.36E-08	5.36E-11	1.60E+01	2.00E+01	8.57E-10	1.07E-09	0.00%
231Pa	1.3E-01	1.25E-07	1.05E-05	1.05E-08	1.20E+01	1.40E+01	1.26E-07	1.47E-07	0.00%
232Th	1.3E-01	1.23E-07	1.03E-05	1.03E-08	*8.00E+00*	*1.00E+01*	8.27E-08	1.03E-07	0.00%
232U	8.2E-03	7.95E-09	6.66E-07	6.66E-10	1.10E+01	1.30E+01	7.32E-09	8.66E-09	0.00%
233U	3.9E-01	3.77E-07	3.16E-05	3.16E-08	3.10E+00	3.70E+00	9.79E-08	1.17E-07	0.00%
234U	1.1E+00	1.03E-06	8.67E-05	8.67E-08	3.10E+00	3.70E+00	2.69E-07	3.21E-07	0.00%
235U	4.5E-02	4.35E-08	3.64E-06	3.64E-09	3.00E+00	3.50E+00	1.09E-08	1.27E-08	0.00%
236U	3.5E-02	3.40E-08	2.85E-06	2.85E-09	2.90E+00	3.50E+00	8.26E-09	9.96E-09	0.00%
237Np	7.9E+00	7.65E-06	6.41E-04	6.41E-07	1.20E+01	1.40E+01	7.69E-06	8.97E-06	0.01%
238Pu	1.4E+02	1.33E-04	1.11E-02	1.11E-05	7.60E+00	8.90E+00	8.46E-05	9.90E-05	0.08%
238U	9.9E-01	9.52E-07	7.97E-05	7.97E-08	2.80E+00	3.30E+00	2.23E-07	2.63E-07	0.00%
239Pu	2.5E+03	2.43E-03	2.03E-01	2.03E-04	8.20E+00	9.50E+00	1.67E-03	1.93E-03	1.58%
240Pu	6.5E+02	6.25E-04	5.23E-02	5.23E-05	8.20E+00	9.50E+00	4.29E-04	4.97E-04	0.41%
241Am	2.2E+04	2.09E-02	1.75E+00	1.75E-03	1.30E+01	1.50E+01	2.27E-02	2.62E-02	21.52%
241Pu	6.4E+03	6.19E-03	5.19E-01	5.19E-04	1.30E-01	1.50E-01	6.75E-05	7.78E-05	0.06%
242Cm	3.0E+01	2.94E-05	2.46E-03	2.46E-06	4.10E-01	5.00E-01	1.01E-06	1.23E-06	0.00%
242Pu	6.4E-02	6.16E-08	5.16E-06	5.16E-09	7.80E+00	9.10E+00	4.02E-08	4.69E-08	0.00%
243Am	1.8E+01	1.71E-05	1.43E-03	1.43E-06	1.30E+01	1.50E+01	1.86E-05	2.15E-05	0.02%
243Cm	4.6E+00	4.44E-06	3.72E-04	3.72E-07	8.50E+00	1.00E+01	3.16E-06	3.72E-06	0.00%
244Cm	1.1E+02	1.04E-04	8.75E-03	8.75E-06	6.70E+00	8.00E+00	5.86E-05	7.00E-05	0.06%
						Total	**1.06E-01**	**5.32E-02**	**1.00E+00**

APPENDIX E. POTENTIAL UNABATED EMISSIONS AND DOSE FOR EQUIPMENT INSTALLATION REMOVAL ACTIVITIES ASSOCIATED WITH AY AND AZ FARM

Potential Unabated Emissions and Dose for Equipment Removal Activities in AZ Farm					
Mixer Pump Surface Area	500	ft^2			
Transfer Pump Surface Area	44	ft^2			
Total Contaminate Surface Area	544	ft^2			
Waste Layer Thickness (T)	0.063	inch			
Waste Volume on Equipment (Vw)	21.20	gallons			
Total Number of Tanks (N)	2				
Total Waste Volume (Vtw=Vw*N)	42.392	gallons			
AY Tank Farm Total Volume (Vtf)	885,500	gallons	HNF-EP-0182, Rev 137		
Release Fraction (RF)	1.0E-03				

Potential Unabated Emissions and Dose for Equipment Removal Activities in AZ Farm									
					CAP-88		Unabated Emissions		% Unabated Emissions
Analyte	Total Curie in AZ101 and AZ102	Average Concentration (Ci/gal)	Inventory on Equipment (Ci)	Released (Ci)	Offsite MPR mrem/Ci	Onsite MPR mrem/Ci	Offsite MPR mrem/yr	Onsite MPR mrem/yr	Offsite MPR
	C	D=C/Vtf)	E=D*Vtw	F=E*RF	G	H	I=F*G	J=F*H	K=I/SumI
3H	1.9E+02	2.11E-04	8.95E-03	8.95E-06	2.50E-05	7.10E-06	2.24E-10	6.35E-11	0.00%
14C	1.2E+01	1.32E-05	5.60E-04	5.60E-07	1.90E-03	1.80E-04	1.06E-09	1.01E-10	0.00%
59Ni	3.8E+01	4.32E-05	1.83E-03	1.83E-06	3.10E-04	2.90E-04	5.68E-10	5.31E-10	0.00%
60Co	1.8E+03	1.99E-03	8.46E-02	8.46E-05	2.50E-01	3.00E-01	2.11E-05	2.54E-05	0.01%
63Ni	3.6E+03	4.10E-03	1.74E-01	1.74E-04	2.60E-04	6.90E-05	4.52E-08	1.20E-08	0.00%
79Se	6.2E+00	7.06E-06	2.99E-04	2.99E-07	1.30E-01	1.50E-01	3.89E-08	4.49E-08	0.00%
90Sr	1.1E+07	1.22E+01	5.16E+02	5.16E-01	1.10E-01	9.50E-03	5.68E-02	4.90E-03	26.69%
90Y	1.1E+07	1.22E+01	5.16E+02	5.16E-01	3.40E-04	2.60E-04	1.75E-04	1.34E-04	0.08%
93mNb	2.2E+02	2.49E-04	1.05E-02	1.05E-05	2.10E-03	1.20E-03	2.21E-08	1.27E-08	0.00%
93Zr	3.6E+02	4.09E-04	1.73E-02	1.73E-05	1.30E-03	1.30E-03	2.25E-08	2.25E-08	0.00%
99Tc	2.2E+03	2.44E-03	1.04E-01	1.04E-04	2.30E-02	1.40E-03	2.38E-06	1.45E-07	0.00%
106Ru	1.9E+02	2.18E-04	9.26E-03	9.26E-06	2.00E-02	1.90E-02	1.85E-07	1.76E-07	0.00%
113mCd	9.4E+02	1.06E-03	4.51E-02	4.51E-05	1.30E-01	1.50E-01	5.86E-06	6.76E-06	0.00%
125Sb	1.0E+04	1.15E-02	4.87E-01	4.87E-04	2.60E-02	3.30E-02	1.27E-05	1.61E-05	0.01%

APPENDIX E. POTENTIAL UNABATED EMISSIONS AND DOSE FOR EQUIPMENT INSTALLATION REMOVAL ACTIVITIES ASSOCIATED WITH AY AND AZ FARM

Potential Unabated Emissions and Dose for Equipment Removal Activities in AZ Farm									
					CAP-88		Unabated Emissions		% Unabated Emissions
Analyte	Total Curie in AZ101 and AZ102	Average Concentration (Ci/gal)	Inventory on Equipment (Ci)	Released (Ci)	Offsite MPR mrem/Ci	Onsite MPR mrem/Ci	Offsite MPR mrem/yr	Onsite MPR mrem/yr	Offsite MPR
	C	D=C/Vtf)	E=D*Vtw	F=E*RF	G	H	I=F*G	J=F*H	K=I/SumI
126Sn	1.4E+01	1.58E-05	6.72E-04	6.72E-07	4.70E-02	4.10E-02	3.16E-08	2.75E-08	0.00%
129I	5.2E-01	5.91E-07	2.50E-05	2.50E-08	2.00E-01	2.20E-02	5.01E-09	5.51E-10	0.00%
134Cs	2.8E+03	3.21E-03	1.36E-01	1.36E-04	1.00E-01	4.70E-02	1.36E-05	6.39E-06	0.01%
137Cs	1.0E+07	1.14E+01	4.83E+02	4.83E-01	2.40E-01	2.70E-01	1.16E-01	1.30E-01	54.47%
137mBa	9.5E+06	1.07E+01	4.55E+02	4.55E-01	5.30E-13	1.00E-11	2.41E-13	4.55E-12	0.00%
151Sm	3.9E+05	4.38E-01	1.86E+01	1.86E-02	7.50E-04	8.40E-04	1.39E-05	1.56E-05	0.01%
152Eu	3.1E+02	3.46E-04	1.47E-02	1.47E-05	2.40E-01	3.10E-01	3.52E-06	4.54E-06	0.00%
154Eu	2.2E+04	2.51E-02	1.06E+00	1.06E-03	2.00E-01	2.50E-01	2.13E-04	2.66E-04	0.10%
155Eu	2.8E+04	3.18E-02	1.35E+00	1.35E-03	8.00E-03	9.80E-03	1.08E-05	1.32E-05	0.01%
226Ra	5.2E-04	5.88E-10	2.49E-08	2.49E-11	4.60E-01	2.50E-01	1.15E-11	6.24E-12	0.00%
227Ac	3.1E-03	3.51E-09	1.49E-07	1.49E-10	1.50E+01	1.80E+01	2.23E-09	2.68E-09	0.00%
228Ra	1.0E-02	1.17E-08	4.94E-07	4.94E-10	1.90E-01	7.00E-02	9.39E-11	3.46E-11	0.00%
229Th	4.2E-06	4.74E-12	2.01E-10	2.01E-13	1.60E+01	2.00E+01	3.21E-12	4.02E-12	0.00%
231Pa	8.0E-03	9.03E-09	3.83E-07	3.83E-10	1.20E+01	1.40E+01	4.59E-09	5.36E-09	0.00%
232Th	3.2E-02	3.58E-08	1.52E-06	1.52E-09	*8.00E+00*	*1.00E+01*	1.21E-08	1.52E-08	0.00%
232U	9.3E-03	1.05E-08	4.43E-07	4.43E-10	1.10E+01	1.30E+01	4.87E-09	5.76E-09	0.00%
233U	5.0E-01	5.67E-07	2.40E-05	2.40E-08	3.10E+00	3.70E+00	7.45E-08	8.89E-08	0.00%
234U	4.3E+00	4.88E-06	2.07E-04	2.07E-07	3.10E+00	3.70E+00	6.41E-07	7.65E-07	0.00%
235U	1.7E-01	1.94E-07	8.22E-06	8.22E-09	3.00E+00	3.50E+00	2.47E-08	2.88E-08	0.00%
236U	3.7E-01	4.17E-07	1.77E-05	1.77E-08	2.90E+00	3.50E+00	5.12E-08	6.18E-08	0.00%
237Np	3.7E+01	4.16E-05	1.76E-03	1.76E-06	1.20E+01	1.40E+01	2.12E-05	2.47E-05	0.01%
238Pu	3.5E+02	3.92E-04	1.66E-02	1.66E-05	7.60E+00	8.90E+00	1.26E-04	1.48E-04	0.06%
238U	3.2E+00	3.60E-06	1.52E-04	1.52E-07	2.80E+00	3.30E+00	4.27E-07	5.03E-07	0.00%
239Pu	2.8E+03	3.19E-03	1.35E-01	1.35E-04	8.20E+00	9.50E+00	1.11E-03	1.29E-03	0.52%
240Pu	7.7E+02	8.71E-04	3.69E-02	3.69E-05	8.20E+00	9.50E+00	3.03E-04	3.51E-04	0.14%
241Am	6.1E+04	6.88E-02	2.91E+00	2.91E-03	1.30E+01	1.50E+01	3.79E-02	4.37E-02	17.81%
241Pu	1.8E+04	1.99E-02	8.43E-01	8.43E-04	1.30E-01	1.50E-01	1.10E-04	1.27E-04	0.05%
242Cm	4.0E+01	4.50E-05	1.91E-03	1.91E-06	4.10E-01	5.00E-01	7.81E-07	9.53E-07	0.00%

APPENDIX E. POTENTIAL UNABATED EMISSIONS AND DOSE FOR EQUIPMENT INSTALLATION REMOVAL ACTIVITIES ASSOCIATED WITH AY AND AZ FARM

Potential Unabated Emissions and Dose for Equipment Removal Activities in AZ Farm									
					CAP-88		Unabated Emissions		% Unabated Emissions
Analyte	Total Curie in AZ101 and AZ102	Average Concentration (Ci/gal)	Inventory on Equipment (Ci)	Released (Ci)	Offsite MPR mrem/Ci	Onsite MPR mrem/Ci	Offsite MPR mrem/yr	Onsite MPR mrem/yr	Offsite MPR
	C	D=C/Vtf)	E=D*Vtw	F=E*RF	G	H	I=F*G	J=F*H	K=I/SumI
242Pu	9.0E-02	1.02E-07	4.33E-06	4.33E-09	7.80E+00	9.10E+00	3.38E-08	3.94E-08	0.00%
243Am	2.1E+01	2.40E-05	1.02E-03	1.02E-06	1.30E+01	1.50E+01	1.32E-05	1.53E-05	0.01%
243Cm	4.3E+00	4.84E-06	2.05E-04	2.05E-07	8.50E+00	1.00E+01	1.75E-06	2.05E-06	0.00%
244Cm	9.8E+01	1.11E-04	4.70E-03	4.70E-06	6.70E+00	8.00E+00	3.15E-05	3.76E-05	0.01%
						Total	**2.13E-01**	**1.81E-01**	**1.00E+00**

APPENDIX F. POTENTIAL UNABATED EMISSIONS FOR PIT ENTRY ACTIVITIES IN AY AND AZ FARMS

Potential Unabated Emissions and Dose for Pit Entry Activities in AY Farm						
	length (L-ft)	width (W -ft)	depth (D -ft)			
Tank Pit Work Dimensions	12	8	8			
Pit Surface Area (Psa=2*L*W+2*W*D+2*L*D)	512	ft^2				
Total AY-101 & AY-102 Pit Surface (A = 10*Psa)	5,120	ft^2				
Core Drilling (equivalent surface area of 10, 14 inch diameter cuts) (B=10*3.14159*(14/12/2)^2)	10.7	ft^2				
Number of Pit Entries (N)	2					
Total Pit Surface Area (Pt=N*A+B)	10,251	ft^2				
Total Pit Surface Area (Ptm=Pt*(12*2.54)^2)	9.52E+06	cm^2				
Curies - definition (Df)	2.22E+12	dpm/curie				
Average Surface Contamination (beta/gamma) (Rcbd)	1,000,000	dpm/($100cm^2$)				
Rad Concentration (beta/gamma) (Rcbc=Rcbd/Df)	4.50E-07	curies/(100cm2)				
Average Surface Contamination (alpha) (Rcad)	700,000	dpm/($100cm^2$)				
Rad Concentration (alpha) (Rcac=Rcad/Df)	3.15E-07	curies/(100cm2)				
Release Fraction (RF)	1.0E-03		**CAP-88 East Area**		**Unabated Emissions**	
			Offsite MPR	**Onsite MPR**	**Offsite MPR**	**Onsite MPR**
Assumed Isotope	Total Possession Quantity (Ci)	Unabated Release (Ci)	mrem/Ci		mrem/yr	
	TPQ=eq	UR=TPQ*RF	F	G	H=UR*F	I=UR*G
beta/gamma: Sr-90	4.29E-02	4.29E-05	1.10E-01	9.50E-03	4.72E-06	4.08E-07
alpha: Am-241	3.00E-02	3.00E-05	1.30E+01	1.50E+01	3.90E-04	4.50E-04
Total	7.29E-02	7.29E-05			3.95E-04	4.51E-04
*eq = Rcbc(Rcac)*Ptm/100*						

APPENDIX F. POTENTIAL UNABATED EMISSIONS FOR PIT ENTRY ACTIVITIES IN AY AND AZ FARMS

Potential Unabated Emissions and Dose for Pit Entry Activities in AZ Farm						
AZ-101 Pump Pit (A)	508	ft^2				
AZ-102 Pump Pit (B)	508	ft^2				
Core Drilling (equivalent surface area of 100, 14 inch diameter cuts) (C=100*3.14159*(14/12/2)^2)	106.9	ft^2				
Number of Pit Entries (N)	10					
Total Pit Surface Area (Pt=N*(A+B+C)	11,229	ft^2				
Total Pit Surface Area (Ptm=Pt*(12*2.54)^2)	1.04E+07	cm^2				
Curies - definition (Df)	2.22E+12	dpm/curie				
Average Surface Contamination (beta/gamma) (Rcbd)	1,000,000	dpm/($100cm^2$)				
Rad Concentration (beta/gamma) (Rcbc=Rcbd/Df)	4.50E-07	curies/(100cm2)				
Average Surface Contamination (alpha) (Rcad)	700,000	dpm/($100cm^2$)				
Rad Concentration (alpha) (Rcac=Rcad/Df)	3.2E-07	curies/(100cm2)				
Release Fraction (RF)	1.0E-03		**CAP-88 East Area**		**Unabated Emissions**	
			Offsite MPR	**Onsite MPR**	**Offsite MPR**	**Onsite MPR**
Assumed Isotope	Total Possession Quantity (Ci)	Unabated Release (Ci)	mrem/Ci		mrem/yr	
	TPQ=eq	UR=TPQ*RF	F	G	H=UR*F	I=UR*G
beta/gamma: Sr-90	4.70E-02	4.70E-05	1.10E-01	9.50E-03	5.17E-06	4.46E-07
alpha: Am-241	3.29E-02	3.29E-05	1.30E+01	1.50E+01	4.28E-04	4.93E-04
Total	7.99E-02	7.99E-05			4.33E-04	4.94E-04
*eq = Rcbc(Rcac)*Ptm/100*						

APPENDIX G. POTENTIAL UNABATED AND ABATED EMISSIONS AND DOSE FOR ALL TANKS VENTING THROUGH 296-A-42 INCLUSIVE OF MIXER PUMP OPERATIONS

Potential Unabated and Abated Emissions for the 296-A-42 Emission Unit

								CAP-88		Unabated Emissions		Abated Emissions		% Unabated Emissions	% Abated Emissions
								East Area							
Analyte	AY-101 Inventory (Ci)	AY-102 Inventory (Ci)	AZ-101 Inventory (Ci)	AZ-102 Inventory (Ci)	Total Farm Inventory Ci)	Release Fraction	Released (Ci/yr)	Offsite MPR	Onsite MPR	Offsite MPR	Onsite MPR	Offsite MPR	Onsite MPR	Offsite MPR	
								mrem/Ci		mrem/yr		mrem/yr			
	B	C	D	E	F=B+C+D+E	RF	H=F*RF	I	J	K=H*I	L=H*J	M=K/2000 except for 3H and 14C	N=L/2000 except for 3H and 14C	O=100* K/SumK	P=100* M/SumM
3H	1.6E+01	1.5E+01	6.5E+01	1.2E+02	2.2E+02	1.00E+00	2.19E+02	2.50E-05	7.10E-06	5.46E-03	1.55E-03	5.46E-03	1.55E-03	0.00%	0.19%
14C	9.6E+00	9.4E-01	7.9E+00	3.8E+00	2.2E+01	1.00E+00	2.23E+01	1.90E-03	1.80E-04	4.23E-02	4.01E-03	4.23E-02	4.01E-03	0.00%	1.45%
59Ni	4.1E+01	2.5E+01	2.6E+01	1.3E+01	1.0E+02	1.00E-03	1.05E-01	3.10E-04	2.90E-04	3.24E-05	3.04E-05	1.62E-08	1.52E-08	0.00%	0.00%
60Co	5.7E+02	8.0E+01	9.3E+02	8.3E+02	2.4E+03	1.00E-03	2.42E+00	2.50E-01	3.00E-01	6.05E-01	7.26E-01	3.02E-04	3.63E-04	0.01%	0.01%
63Ni	3.8E+03	2.3E+03	2.4E+03	1.2E+03	9.8E+03	1.00E-03	9.76E+00	2.60E-04	6.90E-05	2.54E-03	6.74E-04	1.27E-06	3.37E-07	0.00%	0.00%
79Se	1.4E+00	4.4E-01	4.4E+00	1.8E+00	8.1E+00	1.00E-03	8.12E-03	1.30E-01	1.50E-01	1.06E-03	1.22E-03	5.28E-07	6.09E-07	0.00%	0.00%
90Sr	2.4E+06	4.7E+06	6.6E+06	4.2E+06	1.8E+07	1.00E-03	1.79E+04	1.10E-01	9.50E-03	1.97E+03	1.71E+02	9.87E-01	8.53E-02	34.35%	33.79%
90Y	2.4E+06	4.7E+06	6.6E+06	4.2E+06	1.8E+07	1.00E-03	1.79E+04	3.40E-04	2.60E-04	6.10E+00	4.67E+00	3.05E-03	2.33E-03	0.11%	0.10%
93mNb	1.6E+02	4.7E+01	1.5E+02	7.1E+01	4.2E+02	1.00E-03	4.24E-01	2.10E-03	1.20E-03	8.91E-04	5.09E-04	4.46E-07	2.55E-07	0.00%	0.00%
93Zr	2.8E+02	5.7E+01	2.4E+02	1.2E+02	7.0E+02	1.00E-03	7.01E-01	1.30E-03	1.30E-03	9.12E-04	9.12E-04	4.56E-07	4.56E-07	0.00%	0.00%
99Tc	5.6E+01	1.9E+02	1.3E+03	8.4E+02	2.4E+03	1.00E-03	2.41E+00	2.30E-02	1.40E-03	5.53E-02	3.37E-03	2.77E-05	1.68E-06	0.00%	0.00%
106Ru	3.8E-02	6.1E-04	9.6E+01	9.8E+01	1.9E+02	1.00E-03	1.94E-01	2.00E-02	1.90E-02	3.87E-03	3.68E-03	1.94E-06	1.84E-06	0.00%	0.00%
113mCd	5.8E+01	5.0E+01	6.2E+02	3.2E+02	1.0E+03	1.00E-03	1.05E+00	1.30E-01	1.50E-01	1.36E-01	1.57E-01	6.82E-05	7.87E-05	0.00%	0.00%
125Sb	3.3E+02	3.4E+01	5.8E+03	4.4E+03	1.1E+04	1.00E-03	1.05E+01	2.60E-02	3.30E-02	2.74E-01	3.48E-01	1.37E-04	1.74E-04	0.00%	0.00%
126Sn	3.6E+00	1.7E+01	1.1E+01	3.1E+00	3.4E+01	1.00E-03	3.42E-02	4.70E-02	4.10E-02	1.61E-03	1.40E-03	8.03E-07	7.01E-07	0.00%	0.00%
129I	2.6E-01	5.0E-01	4.7E-01	5.2E-02	1.3E+00	1.00E-03	1.27E-03	2.00E-01	2.20E-02	2.55E-04	2.80E-05	1.27E-07	1.40E-08	0.00%	0.00%
134Cs	1.6E+00	4.2E+01	1.8E+03	1.1E+03	2.9E+03	1.00E-03	2.89E+00	1.00E-01	4.70E-02	2.89E-01	1.36E-01	1.44E-04	6.78E-05	0.01%	0.00%
137Cs	1.6E+05	6.8E+05	6.4E+06	3.7E+06	1.1E+07	1.00E-03	1.09E+04	2.40E-01	2.70E-01	2.62E+03	2.95E+03	1.31E+00	1.47E+00	45.60%	44.85%
137mBa	1.5E+05	6.4E+05	6.0E+06	3.5E+06	1.0E+07	1.00E-03	1.03E+04	5.30E-13	1.00E-11	5.46E-09	1.03E-07	2.73E-12	5.15E-11	0.00%	0.00%
151Sm	3.2E+05	8.3E+04	1.6E+05	2.3E+05	7.9E+05	1.00E-03	7.89E+02	7.50E-04	8.40E-04	5.91E-01	6.62E-01	2.96E-04	3.31E-04	0.01%	0.01%
152Eu	4.6E+02	6.6E+01	1.9E+02	1.2E+02	8.3E+02	1.00E-03	8.29E-01	2.40E-01	3.10E-01	1.99E-01	2.57E-01	9.94E-05	1.28E-04	0.00%	0.00%
154Eu	7.1E+03	6.6E+03	1.3E+04	9.3E+03	3.6E+04	1.00E-03	3.59E+01	2.00E-01	2.50E-01	7.19E+00	8.98E+00	3.59E-03	4.49E-03	0.13%	0.12%
155Eu	2.9E+03	2.7E+03	1.5E+04	1.4E+04	3.4E+04	1.00E-03	3.37E+01	8.00E-03	9.80E-03	2.70E-01	3.30E-01	1.35E-04	1.65E-04	0.00%	0.00%
226Ra	1.1E-04	9.1E-05	3.6E-04	1.6E-04	7.2E-04	1.00E-03	7.24E-07	4.60E-01	2.50E-01	3.33E-07	1.81E-07	1.67E-10	9.05E-11	0.00%	0.00%
227Ac	3.8E-03	9.3E-03	2.1E-03	9.7E-04	1.6E-02	1.00E-03	1.62E-05	1.50E+01	1.80E+01	2.43E-04	2.92E-04	1.22E-07	1.46E-07	0.00%	0.00%
228Ra	1.0E-01	4.4E-02	3.3E-03	7.0E-03	1.6E-01	1.00E-03	1.56E-04	1.90E-01	7.00E-02	2.96E-05	1.09E-05	1.48E-08	5.44E-09	0.00%	0.00%
229Th	6.2E-04	3.8E-05	3.0E-06	1.2E-06	6.7E-04	1.00E-03	6.67E-07	1.60E+01	2.00E+01	1.07E-05	1.33E-05	5.33E-09	6.67E-09	0.00%	0.00%
231Pa	3.2E-02	9.7E-02	5.6E-03	2.4E-03	1.4E-01	1.00E-03	1.37E-04	1.20E+01	1.40E+01	1.65E-03	1.92E-03	8.25E-07	9.62E-07	0.00%	0.00%
232Th	7.4E-02	5.4E-02	9.8E-03	2.2E-02	1.6E-01	1.00E-03	1.60E-04	*8.00E+00*	*1.00E+01*	1.28E-03	1.60E-03	6.38E-07	7.98E-07	0.00%	0.00%
232U	5.5E-03	2.7E-03	3.2E-03	6.0E-03	1.7E-02	1.00E-03	1.75E-05	1.10E+01	1.30E+01	1.92E-04	2.27E-04	9.62E-08	1.14E-07	0.00%	0.00%
233U	1.9E-01	2.0E-01	1.8E-01	3.2E-01	8.9E-01	1.00E-03	8.93E-04	3.10E+00	3.70E+00	2.77E-03	3.30E-03	1.38E-06	1.65E-06	0.00%	0.00%

APPENDIX G. POTENTIAL UNABATED AND ABATED EMISSIONS AND DOSE FOR ALL TANKS VENTING THROUGH 296-A-42 INCLUSIVE OF MIXER PUMP OPERATIONS

Potential Unabated and Abated Emissions for the 296-A-42 Emission Unit

								CAP-88		Unabated Emissions		Abated Emissions		% Unabated Emissions	% Abated Emissions
								East Area							
Analyte	AY-101 Inventory (Ci)	AY-102 Inventory (Ci)	AZ-101 Inventory (Ci)	AZ-102 Inventory (Ci)	Total Farm Inventory (Ci)	Release Fraction	Released (Ci/yr)	Offsite MPR	Onsite MPR	Offsite MPR	Onsite MPR	Offsite MPR	Onsite MPR	Offsite MPR	
								mrem/Ci		mrem/yr		mrem/yr			
	B	C	D	E	F=B+C+D+E	RF	H=F*RF	I	J	K=H*I	L=H*J	M=K/2000 except for 3H and 14C	N=L/2000 except for 3H and 14C	O=100* K/SumK	P=100* M/SumM
234U	3.4E-01	7.4E-01	9.4E-01	3.4E+00	5.4E+00	1.00E-03	5.39E-03	3.10E+00	3.70E+00	1.67E-02	2.00E-02	8.36E-06	9.98E-06	0.00%	0.00%
235U	1.4E-02	3.1E-02	3.5E-02	1.4E-01	2.2E-01	1.00E-03	2.17E-04	3.00E+00	3.50E+00	6.50E-04	7.58E-04	3.25E-07	3.79E-07	0.00%	0.00%
236U	1.2E-02	2.3E-02	8.6E-02	2.8E-01	4.0E-01	1.00E-03	4.04E-04	2.90E+00	3.50E+00	1.17E-03	1.41E-03	5.86E-07	7.07E-07	0.00%	0.00%
237Np	4.0E+00	3.9E+00	1.6E+01	2.1E+01	4.5E+01	1.00E-03	4.47E-02	1.20E+01	1.40E+01	5.37E-01	6.26E-01	2.68E-04	3.13E-04	0.01%	0.01%
238Pu	7.5E+01	6.3E+01	1.4E+02	2.1E+02	4.8E+02	1.00E-03	4.85E-01	7.60E+00	8.90E+00	3.69E+00	4.32E+00	1.84E-03	2.16E-03	0.06%	0.06%
238U	2.9E-01	6.9E-01	6.6E-01	2.5E+00	4.2E+00	1.00E-03	4.17E-03	2.80E+00	3.30E+00	1.17E-02	1.38E-02	5.84E-06	6.88E-06	0.00%	0.00%
239Pu	8.8E+02	1.6E+03	1.4E+03	1.4E+03	5.3E+03	1.00E-03	5.34E+00	8.20E+00	9.50E+00	4.38E+01	5.08E+01	2.19E-02	2.54E-02	0.76%	0.75%
240Pu	2.7E+02	3.8E+02	4.0E+02	3.7E+02	1.4E+03	1.00E-03	1.42E+00	8.20E+00	9.50E+00	1.16E+01	1.35E+01	5.82E-03	6.74E-03	0.20%	0.20%
241Am	1.7E+04	5.1E+03	3.1E+04	3.0E+04	8.2E+04	1.00E-03	8.25E+01	1.30E+01	1.50E+01	1.07E+03	1.24E+03	5.36E-01	6.19E-01	18.65%	18.35%
241Pu	3.8E+03	2.7E+03	9.8E+03	7.8E+03	2.4E+04	1.00E-03	2.40E+01	1.30E-01	1.50E-01	3.12E+00	3.61E+00	1.56E-03	1.80E-03	0.05%	0.05%
242Cm	2.5E+01	5.7E+00	1.3E+01	2.6E+01	7.0E+01	1.00E-03	7.02E-02	4.10E-01	5.00E-01	2.88E-02	3.51E-02	1.44E-05	1.76E-05	0.00%	0.00%
242Pu	3.9E-02	2.5E-02	5.0E-02	4.0E-02	1.5E-01	1.00E-03	1.54E-04	7.80E+00	9.10E+00	1.20E-03	1.40E-03	6.01E-07	7.01E-07	0.00%	0.00%
243Am	1.5E+01	2.8E+00	1.1E+01	1.0E+01	3.9E+01	1.00E-03	3.90E-02	1.30E+01	1.50E+01	5.07E-01	5.84E-01	2.53E-04	2.92E-04	0.01%	0.01%
243Cm	2.4E+00	2.2E+00	1.2E+00	3.0E+00	8.9E+00	1.00E-03	8.89E-03	8.50E+00	1.00E+01	7.55E-02	8.89E-02	3.78E-05	4.44E-05	0.00%	0.00%
244Cm	5.7E+01	5.1E+01	2.9E+01	6.9E+01	2.1E+02	1.00E-03	2.06E-01	6.70E+00	8.00E+00	1.38E+00	1.65E+00	6.91E-04	8.25E-04	0.02%	0.02%
										5.75E+03	**4.45E+03**	**2.92E+00**	**2.23E+00**	**100.00%**	**100.00%**

Attachment 2
08-ESQ-085

Hanford Site Air Operating Permit Notification of Off-Permit Change
Permit Number: 00-05-006, Renewal 1

HANFORD SITE AIR OPERATING PERMIT

NOTIFICATION OF OFF-PERMIT CHANGE
Permit Number: 00-05-006 Renewal 1

This notification is provided to Washington State Department of Ecology, Washington State Department of Health, and the U.S. Environmental Protection Agency as a notice of an off-permit change described as follows.

This change is allowed pursuant to WAC 173-401-724(1), WAC 173-401-724(2), and WAC 173-401-724(6):
1. Change is not specifically addressed or prohibited by the permit terms and conditions,
2. Change does not weaken the enforceability of the existing permit conditions,
3. Change is not a Title I modification or a change subject to the acid rain requirements under Title IV of the FCAA,
4. Change meets all applicable requirements and does not violate an existing permit term or condition,
5. Change has complied with applicable preconstruction review requirements established pursuant to RCW 70.94.152.

Provide the following information pursuant to WAC-173-401-724(3):

Description of the change:	
This consolidates, revises, and supersedes the *Notice of Construction for Ventilation Upgrades for 241-AY and 241-AZ Tank Farms,* and the *Notice of Construction for Installation and Operation of a Waste Retrieval System in Tanks 241-AZ-101, 241-AZ-102, 241-AY-101 and 241-AY102.* It increases the potential Annual Possession Quantity (APQ) and associated Potential to Emit (PTE) to a full-tank inventory in anticipation of single-shell tank waste transfers, and allows for discontinuation of the use of a HEGA filter on the ventilation system. The title has been changed to *Notice of Construction Application for Operation of the 296-A-42 Exhauster* to more accurately designate the content of the document.	
Date of Change: (To be provided in the agency approval order.)	
Describe the emissions resulting from the change:	
The estimated increase in the potential unabated dose to the MEI resulting from this revision is 2.18E+03 mrem per year. The increase in the abated dose is approximately 1.18E+00 mrem/yr.	
Describe the new applicable requirements that will apply as a result of the change: (To be provided in the agency approval order.)	
For Hanford Use Only:	
AOP Change Control Number:	Date Submitted: