1218626

SGW-48612
Revision 0

BOREHOLE SUMMARY REPORT FOR THE INSTALLATION OF 70 REMEDIAL PROCESS OPTIMIZATION, PUMP-AND-TREAT EXPANSION WELLS, FOR THE 100-HR-3 OPERABLE UNIT

Document Type: TR Program/Project: S&GRP

A. M. Lantau
GRAM, Inc.

Date Published
July 2011

Prepared for the U.S. Department of Energy
Assistant Secretary for Environmental Management

Contractor for the U.S. Department of Energy
under Contract DE-AC06-08RL14788

CH2MHILL
Plateau Remediation Company

P.O. Box 1600
Richland, Washington

RECEIVED
JAN 11 2013
EDMC

Bennie Wallace 7/7/2011
Release Approval Date

100-HR-3

Approved for Public Release;
Further Dissemination Unlimited

TRADEMARK DISCLAIMER

Reference herein to any specific commercial product, process, or service by trade name, trademark, manufacturer, or otherwise, does not necessarily constitute or imply its endorsement, recommendation, or favoring by the United States Government or any agency thereof or its contractors or subcontractors.

This report has been reproduced from the best available copy.

Printed in the United States of America

Contents

1.0 Introduction 1
1.1 Purpose and Scope 1
1.2 Background 5
2.0 Well Installation 7
2.1 General Information 7
2.2 Well-Specific Information 28
3.0 Geology/Hydrogeology 61
3.1 Geology 61
3.2 Hydrogeology 63
4.0 Civil Survey 69
5.0 Waste Management 73
5.1 Vadose Zone Waste 73
5.2 Saturated Zone Waste 73
5.3 Purgewater 74
6.0 Well Acceptance 75
7.0 References 77

Figures

Figure 1 Planned and Installed Wells in the 100-D Area and Adjacent Horn 3
Figure 2. Planned and Installed Wells in the 100-H Area and Adjacent Horn. 4

Tables

Table 1. Sampling Summary: 100-D Area Wells 10
Table 2. Sampling Summary: 100-H Area Wells 17
Table 3. Geologic Summary: 100-D and 100-H Areas 64
Table 4. Survey Summary: 100-D and 100-H Areas Wells 69
Table 5 Well Acceptance Dates: 100-D and 100-H Area Wells 75

Appendices

Well Summary Sheets (Asbuilts) ..... A-i

Borehole Logs ..... B-i

Development Forms and Notes: 100-D and –H Area Wells ..... C-i

Terms

ags	above ground surface
ARRA	*American Recovery and Reinvestment Act of 2009*
bgs	below ground surface
CERCLA	*Comprehensive Environmental Response, Compensation, and Liability Act of 1980*
CHPRC	CH2M Hill Plateau Remediation Company
EPA	U.S. Environmental Protection Agency
DOE	U.S. Department of Energy
DOW	Description of Work
DQO	Data Quality Objective
Fm.	Formation (formal name)
fm.	formation (informal name)
ft	feet
HCl	hydrochloric acid
HEIS	Hanford Environmental Information System
Hg	Mercury
hp	Horse Power
IH	industrial hygiene
ID	identification
in.	inch
ISRM	*In Situ* Red-Ox Manipulation
mm	millimeter
MSW	miscellaneous solid waste
NTU	nephelometric turbidity units
OU	operable unit
ppm	parts per million
PNNL	Pacific Northwest National Laboratory
RCRA	*Resource Conservation and Recovery Act of 1976*
RCT	radiological control technician
RI/FS	Remedial Investigation/ Feasibility Study
ROD	Record of Decision
RPO	Remedial Process Optimization
RUM	Ringold Formation, Upper Mud Unit
SAP	Sampling and Analysis Plan
TD	total depth
TOC	top of casing
VOA	volatile organic analyte
VOC	volatile organic compound
WP/LIS	Waste Packaging /Labeling Instruction Sheet

METRIC CONVERSION CHART

Into Metric Units			Out of Metric Units		
If you know	*Multiply by*	*To get*	*If you know*	*Multiply by*	*To get*
Length			**Length**		
inches	25.40	millimeters	millimeters	0.0394	inches
inches	2.54	centimeters	centimeters	0.394	inches
feet	0.305	meters	meters	3.281	feet
yards	0.914	meters	meters	1.094	yards
miles (statute)	1.609	kilometers	kilometers	0.621	miles (statute)
Area			**Area**		
sq. inches	6.452	sq. centimeters	sq. centimeters	0.155	sq. inches
sq. feet	0.0929	sq. meters	sq. meters	10.764	sq. feet
sq. yards	0.836	sq. meters	sq. meters	1.196	sq. yards
sq. miles	2.591	sq. kilometers	sq. kilometers	0.386	sq. miles
acres	0.405	hectares	hectares	2.471	acres
Mass (weight)			**Mass (weight)**		
ounces (avoir)	28.349	grams	grams	0.0353	ounces (avoir)
pounds	0.454	kilograms	kilograms	2.205	pounds (avoir)
tons (short)	0.907	ton (metric)	ton (metric)	1.102	tons (short)
Volume			**Volume**		
teaspoons	5	milliliters	milliliters	0.034	ounces
tablespoons	15	milliliters	liters	2.113	pints
ounces	29.573	milliliters	liters	1.057	quarts
cups	0.24	liters	liters	0.264	gallons
pints	0.473	liters	cubic meters	35.315	cubic feet
quarts	0.946	liters	cubic meters	1.308	cubic yards
gallons	3.785	liters			
cubic feet	0.0283	cubic meters			
cubic yards	0.764	cubic meters			
Temperature			**Temperature**		
Fahrenheit	(°F-32)*5/9	Centigrade	Centigrade	(°C*9/5)+32	Fahrenheit
Radioactivity			**Radioactivity**		
picocurie	37	millibecquerel	millibecquerel	0.027	picocurie

1.0 INTRODUCTION

This borehole summary report addresses the installation of 70 resource protection groundwater extraction and injection wells in the 100-HR-3 Groundwater Operable Unit (OU) located in the north-central part of the Hanford Site, Benton County, Washington. The well field spans the 100-HR-3 Groundwater OU encompassing the 100-D and 100-H Areas and interlaying 600-Area (informally referred to as the Horn). The well field was installed to expand the size and efficiency of the 100-HR-3 Groundwater OU pump-and-treat system currently operating to remediate a hexavalent chromium plume underlying the Horn.

The pump-and-treat system expansion is part of a remedial process optimization (RPO) to meet remedial action objectives set forth in the *Record of Decision for the 100-HR-3 and 100-KR-4 Operable Units, Hanford Site, Benton County, Washington*, (EPA/ROD/R10-96-134, 1996) and milestones set forth by the *Hanford Federal Facility Agreement Consent Order* (Ecology et al. 1989)(also known as the Tri-Party Agreement). The objectives and timelines have been set forth to protect the Columbia River from contaminants by the year 2012 and to restore the aquifer by attaining target cleanup levels by the year 2020. The 100-HR-3 OU remedial efforts are pursuant of Comprehensive Environmental Response, Compensation, and Liability Act of 1980 (CERCLA) placement of the 100-HR-3 OU on the National Priorities List.

All RPO wells were drilled, completed, and developed between August 2009 and October, 2010 by Layne Christensen, Inc. under the direction of CH2M Hill Plateau Remediation Company (CHPRC) for the Department of Energy, Richland Washington.

1.1 Purpose and Scope

The purpose of this document is to compile and archive records, observations, and technical data associated with the drilling, sampling, construction, and development of 70 pump-and-treat wells. Additional information provided herein includes environmental monitoring, civil survey results, waste management, and well acceptance data. This report also summarizes sampling conducted during drilling in support of remedial investigation/ feasibility study (RI/FS) data gap closure efforts for the 100-D/H decision Unit. Borehole lithology and well construction documentation for each well is presented in the Appendices.

As part of the RPO process, multiple well-field-design scenarios were submitted to decisional parties. To facilitate timelines, the project was completed in phases. A first phase was planned based on initial modeling analyses to meet the 2012 River Protection target milestone consisting of 49 wells (SGW-40044, Rev. 0). Subsequently, additional modeling analyses were conducted to modify the well network to allow for enhanced cleanup of the aquifer inland of the river to meet the 2020 Aquifer Cleanup target milestone (SGW-40044, Rev. 1). Several additional modeling scenarios were investigated to optimize well placements across the OU to optimize cleanup of hexavalent chromium in the aquifer. In the end, the decisional parties agreed upon combining selected wells identified under the first scenario to meet 2012 with additional wells that were optimized by the fifth modeling scenario to move forward with the project in two phases. The first phase included the installation of 37 of the original 49 wells (well numbers C7083 through C7492) based on preliminary well field designs. The second phase included the instillation of 33 additional "Scenario 5" wells (well numbers C7580 through 7612) based on the fifth, of multiple, well field design alternatives that decisional parties deemed most appropriate to meet 2020 target cleanup goals.

The project was developed and carried out under CERCLA directives using a combination of baseline funding and American Recovery and Reinvestment Act (ARRA) funding. The drilling was conducted in three campaigns under DOE/RL-2009-09, Rev. 0, Rev. 1, and Rev. 2.

The well site locations are illustrated in Figures 1 and 2.

The wells were drilled, sampled, and completed in accordance with the following control documentation.

- *Description Of Work* [DOW] *for the Installation of 14 Remedial Process Optimization Wells for the 100-D Area of the 100-HR-3 Operable Unit, Fiscal Year 2009* (SGW-41535, 2009).
- *Description of Work of the Installation of 35 Remedial Process Optimization Wells in the 100-H Area for the 100-HR-3 Operable Unit, Fiscal Year 2009* (SGW-41534, 2009).
- *ARRA FY2010 Description of Work for the Installation of 18 Scenario 5 Remedial Process Optimization Wells for the 100-D Area, 100-HR-3 Operable Unit* (SGW-44089, 2010).
- *ARRA FY2010 Description of Work for the Installation of 15 Scenario 5 Remedial Process Optimization Wells for the 100-H Area, 100-HR-3 Operable Unit* (SGW-44142, 2010).
- *Sampling and Analysis Plan* [SAP] *for Installation of 100-HR-3 Groundwater Operable Unit Remedial Process Optimization Wells, Rev.1* (DOE/RL-2009-09, 2009).
- *Sampling and Analysis Plan for Installation of 100-HR-3 Groundwater Operable Unit Remedial Process Optimization Wells*, Rev.2 (DOE/RL-2009-09, 2010): for Scenario 5 wells project expansion.

The RI/FS work-scope amendment to the scope of this project is addressed in the Scenario 5 SAP (DOE/RL-2009-09, 2010) and is found in detail in the following:

- *Integrated 100 Area Remedial Investigation/ Feasibility Study Work Plan Addendum 1: 100-D/H Decision Unit* (DOE/RL-2008-46, Draft C, 2009).

Well identification and locations are shown in Figures 1 and 2. All drilling data are reported in the English units in which they were measured and to the precision originally reported. For clarity and conciseness, all wells are referred to in the text by their well identification number (e.g. C7083).

Figure 1 Planned and Installed Wells in the 100-D Area and Adjacent Horn

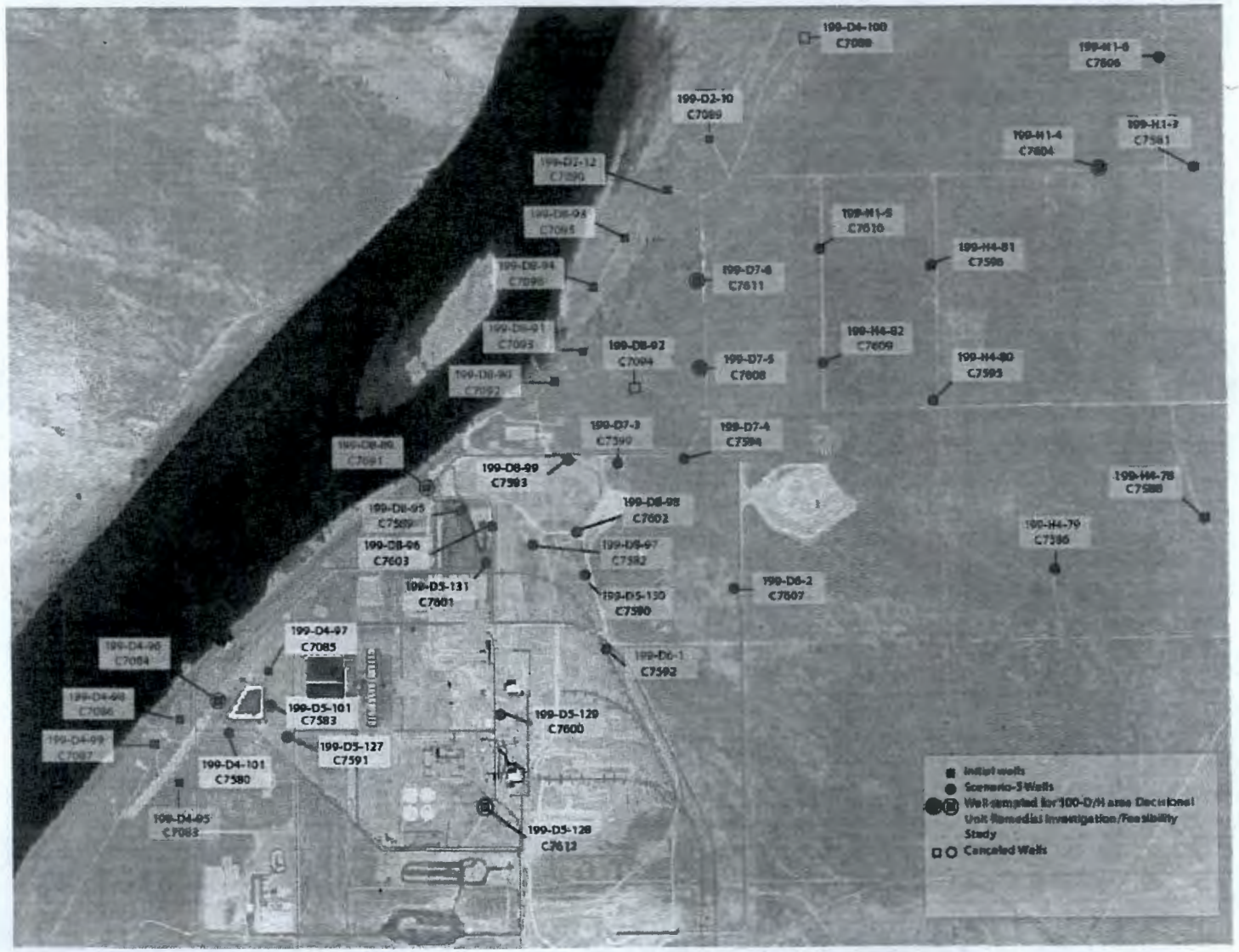

Figure 2. Planned and Installed Wells in the 100-H Area and Adjacent Horn.

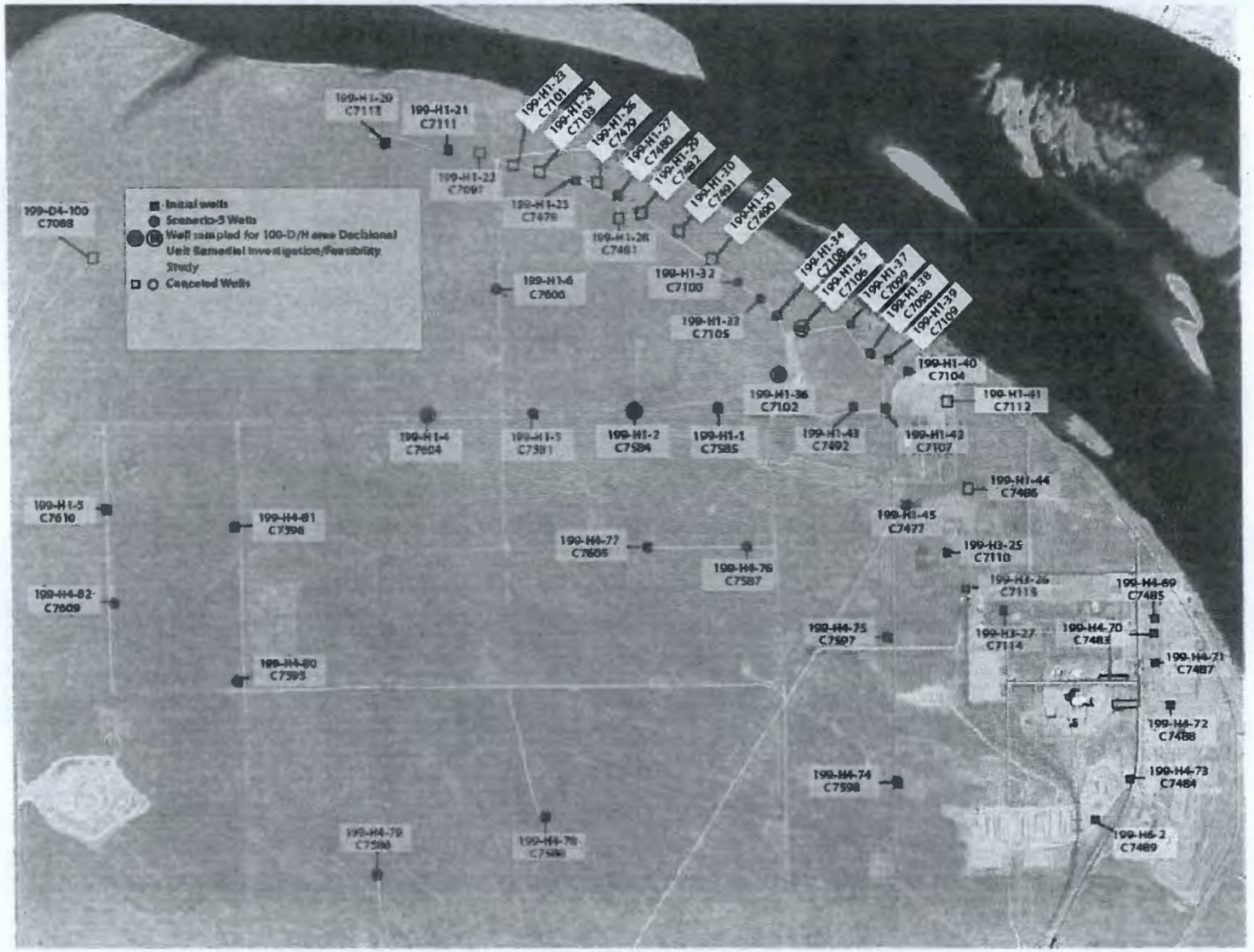

1.2 Background

The 100-HR-3 Groundwater OU includes all groundwater impacted by the operation of three plutonium-production reactors in the 100-D and 100-H Areas from 1944 through 1967, encompassing an area informally referred to as the "Horn" due to the shape formed by the Columbia River around the 100-D and 100-H Areas. The 100-D Area is located on the west side of the Horn and includes the 105-D and 105-DR Reactors and associated former support facilities. The 100-H Area is located on the east side of the Horn and includes the 100-H Reactor and its associated former support facilities. The area of the Horn between the 100-H and 100-D Areas is the 600 Area and includes former homesteaded fields and Native American heritage and cultural sites.

As discussed in SGW-38338, *Remedial Process Optimization for the 100-D Area Technical Memorandum Document:* Groundwater contamination in the 100-D and 100-H Areas is associated with the past operation of the plutonium-production reactors and supporting facilities. The groundwater contamination is a result of the intentional and unintentional, continual release of reactor cooling water containing 2mg/L hexavalent chromium to the ground via unlined retention basins as part of the coolant effluent outfall structures along the river (SGW-38338, 2008).

Contamination is also associated with a large scale infiltration test that was conducted in the 100-D Area from March through June of 1967. Approximately 12.87 billion liters (3.4 billion gallons) of reactor coolant effluent was disposed directly to the ground at the 100-D emergency trench. This test raised the unconfined aquifer an additional 0.3 to 3 m (1 to 10 ft) and most likely contributed to significant spreading and migration of hexavalent chromium from the 100-D Area eastward towards the central Horn and the 100-H Area (BNWL-CC-1352, *Ground Disposal of Reactor Coolant Effluent*).

Groundwater mounding associated with the 182-D Reservoir and associated pressurized piping may have contributed to the spatial separation of contamination in the 100-D Area into distinct northern (results of the infiltration test) and southern plumes (182-D Reservoir)(SGW-38338, 2008).

Hexavalent chromium concentrations in the 100-D Area are locally much higher than700 µg/L. This suggests that there may have been leaks or spills of the concentrated hexavalent chromium stock solutions from locations such as the 100-D-12 French Drain at the rail car unloading station where 70% stock solutions of sodium dichromate were transferred to the distribution system. Current conceptual models suggest that the vadose zone will not contain significant amounts of hexavalent chromium once vadose zone remediation is complete; operation of the pump-and-treat systems will enable us to determine if local vadose zone sources continue to feed the groundwater contamination plumes. The concentrations of hexavalent chromium may have been significantly higher during reactor operations and we are now seeing the remnants of the original plumes as relatively uncontaminated groundwater continues to flow underneath the reactor areas towards the river. However, the exact causes of the high concentrations are unknown and part of the ongoing remedial investigation for the 100-HR-3 groundwater OU [(DOE/RL-2009-09, 2010)].

Currently, the hexavalent chromium plumes in the 100-D and 100-H Areas are discharging to the Columbia River substrate and are potentially impacting the river's ecosystem. Hexavalent chromium is locally upwelling into potential salmon redds, and shoreline seeps are discharging into riparian habitat during low-river stages (SGW-38338, WCH-380). Concentrations within the river itself do not appear to be above the ambient water quality standard (10 µg/L); however locations are sampled at very low river stage where water in the hyporheic zone exceeds the ambient water quality standard.

The 100-HR-3 pump and treat system was installed in 1997 to reduce the levels of hexavalent chromium in groundwater discharging to the Columbia River [pursuant to the remedial action objectives (RAO) required by the interim remedial action Record of Decision (ROD) issued by the EPA in 1996 (EPA et al. 1996; amended 1999]. Between 2000 and 2003, the 100-HR-3 system was augmented by the phased installation of the In Situ Redox Manipulation (ISRM) treatment zone. Active treatment of the 100-D Area was further expanded in 2004 with the addition of a second pump and treat system, the DR-5 system. The DR-5 system was designed to supplement the 100-HR-3 system by capturing contamination from the southern inland portion of the northern 100-D hexavalent chromium plume.

The pump and treat systems continue to operate but are in the process of receiving upgrades to increase their capacity and area of influence through the RPO process (DOE/RL-2008-46). The primary objectives for the RPO design are to (1) prevent the discharge of hexavalent chromium to the Columbia River substrate, at concentrations exceeding those considered protective of aquatic life in the river and riverbed sediments by the year 2012, and (2) restore the aquifer by attaining target cleanup levels in the 100-HR-3 aquifer area by the year 2020 (DOE/RL-2008-46).

This report details the RPO design expansion, which added 70 additional wells to the 100-HR-3 pump-and-treat system.

2.0 WELL INSTALLATION

2.1 General Information

The following subsections summarize activities and general information common to all 70 wells. Elements common to all 70 wells will not be repeated in following sections. The wells were drilled constructed in conformance with Washington State Administrative Code, "Minimum Standards for Construction and Maintenance of Wells" (WAC-173-160). Well site activities and geologic logging was performed in accordance with CHPRC procedure GRP-EE-01-7.0, *"Geologic Logging"*.

2.1.1 Drilling

All boreholes were drilled using Foremost AP-1000 diesel-percussion-hammer drill rigs (commonly referred to as Becker Hammer rigs). The boreholes were temporarily cased using dual-wall (10-3/4-inch outer diameter, 8-inch inner diameter), carbon steel casing. Boreholes were drilled between 21 and 120 ft deep, controlled by the topographic relief of the well field and were extended five to 10 ft into a targeted confining layer.

The Becker Hammer drilling method advances boreholes by driving casing using a diesel-percussion-hammer –a piling driver adapted to the mast a drill rig- while using compressed air and water to excise sediments as they are driven into the casing. The drilling method use no rotating mechanical components down-hole and returns relatively uncrushed sediments to the surface.

Even though the Becker Hammer drill rig returns sediments to the surface almost continuously, it is unable to return coarse-grained sediments (greater than 4 mm) at the same rate that it can return fine grained sediments. This also results in an accumulation of sediment at the base of the borehole during drilling. This effect often blends previously drilled sediments with newly encountered sediments obscuring contacts and altering observed sediment compositions.

To counteract the accumulation of sediments in boreholes while drilling at the 100-HR-3 OU, boreholes were bailed at intervals between one and five feet. This method constrained the resolution of geologic logging to one to five feet. To reduce the uncertainty of depths at which sediment changes were encountered, significant changes in drill rates were noted as the drill rig encountered changes in sediment types. Observation of changes in drill rate also helped account for the lag time between encountering sediments and their arrival to the surface.

Potable water was periodically added the borehole to aid in returning sediments to the surface and to control dust. Only potable water was used during drilling. Depending on depth and formation conditions, an auxiliary air compressor was added to help lift sediments to the surface.

Occasionally while drilling through dense and consolidated sediments, casing jacks were used to back pull or "back stroke" the casing to ream the borehole to assist in advancing and removing the casing.

In accordance with WAC 173-160, tests for straightness were performed on all boreholes prior to the installation of each permanent well casing. The straightness tests were carried out by passing a 20-ft long by 6 5/8-in diameter pipe to the base of boreholes and back without binding.

2.1.2 Sampling

Soil and water samples were collected from each borehole. Soil samples were collected for geologic archiving, particle size (sieve) analysis, and physical and chemical analysis. Any soil samples not collected were reported and the reason for their deviation from the work plan was reported in subsections below. Water samples for chemical analysis were also collected at the end of final development. Any water samples not collected were reported along with the reason for their deviation from the work plan.

Sampling performed during the installation of the 70 wells is intended to support the design of the pump-and-treat system and additional sampling performed at nine of the wells is intended to support the ongoing RI/FS for the 100-D/H decisional Unit. All sampling data will support to refine the conceptual site model and will be supplemented to RI/FS work in order to continue evaluations of the fate and transport of contaminants as described in DOE/RL-2008-46, Integrated 100 Area Remedial Investigation/Feasibility Study Work Plan, Addendum 1, 2009).

The well-site geologist collected sediment samples for archive purposes. The samples were collected from the drill cuttings of each borehole. The samples were collected at 5-ft intervals and/or recognizable changes in lithology. Archive samples were placed in glass pint jars and chip trays to be archived at the Hanford Geotechnical Sampling Library located in the 400 Area.

The well-site geologist also collected grab samples for particle size distribution (sieve) analysis to support screen selection and placement. Sieve samples were collected at 5-ft intervals throughout the saturated zone of each borehole and were composited into 20-ft intervals for analysis. The sieves were run according to CHPRC procedure GRP-EE-05-1.21, *"Particle Size Distribution of Soil-Wet Sieve Analysis"* to evaluate the appropriate screen and filter pack size for the design of the well.

Trained and qualified samplers collected soil samples for laboratory chemical analyses. The depths sampled were defined in the SAPs and validated by well-site geologists. Soil samples were collected using 2.5-ft long by 4-in diameter split spoon soil samplers containing four, 6-inch long polycarbonate or stainless steel liners. After removing residual sediments from the bottom of each borehole, a split spoon soil sampler was typically driven 2.5 ft into the bottom of the clean borehole or until the sampler could not be driven (referred to as refusal). When possible, one liner was capped and sent to PNNL for air permeability analysis and a 125 mg soil sample was collected and sent to WSCF for hexavalent chrome analysis.

For Remedial Process Optimization data needs, one soil sample was to be collected from each borehole at the base of the unconfined aquifer targeting the contact between the saturated aquifer sediment and the underlying confining unit (i.e., Ringold Formation Upper Mud Unit (RUM)). Split spoon soil samplers were driven as reasonably close as possible to the base of the unconfined aquifer into the Ringold Formation Upper Mud Unit. According to the SAP (DOE/RL-2009-09, 2010) this sample was intended to test the permeability of the RUM contact and to test for the presence of hexavalent chromium contaminants that may have leached into the RUM and may be slowly leaching back into the aquifer (DOE/RL-2008-46, 2009).

For RI/FS data needs, five soil samples and multiple samples were collected Additional soil samples were to be collected from nine of the 70 project wells in support of the 100-D/H remedial investigation/feasibility study. The nine wells include the following: C7084, C7091, C7608, C7611, and C7612 from the 100-D Area and wells: C7102, C7106, C7584 and C7604 from the 100-H Area. The requirements for collection of the soil samples included the following:

- Deep vadose: Approximately 2 ft above the water table: Intended to test for residual contaminants left behind by high water that may be reintroducing to the water during periods of high water,
- Shallow aquifer: Within the top half of the aquifer: Intended to test for contaminants and sediment hydraulic properties,
- Deep aquifer: Within the lower half of the aquifer: Intended to test for contaminants and sediment hydraulic properties,
- The aquifer/RUM interface (common to all boreholes for RPO sampling needs),
- Approximately 5 ft into the RUM or at TD: Intended to test the permeability of the aquiclude and to test for the presence of contaminants within the aquiclude.

A groundwater sample for hexavalent chromium analysis was also collected at the end of well development just prior to shutting off the pump. Development and sampling were conducted using a 0.5 horsepower Grundfos submersible pump with various configurations of impellers to accommodate each wells flow capabilities.

The depths at which samples were collected typically varied slightly from the required sample depth due to conditions in the subsurface that hindered sample collection. For example, at some depth intervals the hydraulic conductivity was so low that the pump was unable to sustain flow rates needed to collect a sample. In these circumstances the technical expertise and concurrence of the project scientist or authorized delegate was solicited to determine how to approach the particular situation.

A summary of samples collected and their corresponding Hanford Environmental Information System (HEIS) tracking numbers and depths are presented in Table 1. Archive samples and sieve analysis samples are not assigned HEIS numbers and are not reported in the sampling table.

Table 1. Sampling Summary: 100-D Area Wells

Well ID	Well Name	HEIS #	Sample Type	Sample Purpose	Collection Method	Depth (ft bgs)	Recovery/Notes
				100-D Area			
C7083	199-D4-95	B22XT5	Soil	RUM Contact	Split spoon	117.5 - 119.8	100%
		B22X28, B22X29	Water	Post Development	5 hp submersible pump	Intake at 106.1	20 gpm
C7084*	199-D4-96	B22HT5	Soil	Deep Vadose	Grab	~85	0% Split spoon recovery. Collected from tailings exhaust in clean bowl.
		B22HT6	Soil	Shallow Aquifer	Split spoon	89.4 - 90.7	50%
		B22HT8	Soil	Deep Aquifer	Grab	~96	0% Split spoon recovery. Collected from tailings exhaust in clean bowl.
		B22HT7	Soil	RUM Contact	Split spoon	100.0 - 102.0	75%
		B22V0	Soil	TD	Split spoon	107.1 - 106.6	100%
		B22HD2, B22HD3	Water	Post Development	5 hp submersible pump	Intake at 97.3	70 gpm
C7085	199-D4-97	B22D11, B22D28	Soil	RUM Contact	Split spoon	105.9 - 108.4	75%
		B22D12, B22FX2, B22D29, B22FX3	Water	Post Development	5 hp submersible pump	Intake at 100.04	49.3 gmp maximum sustained flow rate
C7086	199-D4-98	B22X26	Soil	RUM Contact	Split spoon	103.0 - 105.5	100%
		B22X30, B22X31	Water	Post Development	5 hp submersible pump	Intake at 99.0	50.8 gpm

Table 1. Sampling Summary: 100-D Area Wells

Well ID	Well Name	HEIS #	Sample Type	Sample Purpose	Collection Method	Depth (ft bgs)	Recovery/Notes
				100-D Area			
C7087	199-D4-99	B22X27	Soil	RUM Contact	Split spoon	110.1 - 112.2	100%
		B22X32	Water	Post Development	5 hp submersible pump	Intake at 106.0	43 gpm maximum sustained flow rate
C7089	199-D2-10	B22Y18	Soil	RUM Contact	Split spoon	27 - 29.2	100%
		B22Y50	Water	Post Development	5 hp submersible pump	Intake at 23.74	15 gmp maximum sustained flow rate
C7090	199-D2-12	B22Y19	Soil	RUM Contact	Split spoon	28.4 - 30.5	100%
		B22Y51, B22Y34	Water	Post Development	5 hp submersible pump	Intake at 25.96	B24278
C7091*	199-D8-89	B22HX1, B22HD8, B22HD9	Soil	Deep Vadose	2 Consecutive split spoons	61.6 - 63.1	Two attempts made over the same interval. The first yielding ~50% and the second filled shoe. Both were combined to create one sample
		B22HX2	Soil	Shallow Aquifer	Split spoon	69.2 - 70.0	filled shoe only/ collect only 1 bottle from set
		B22HX3	Soil	Deep Aquifer	Split spoon	74.0 - 74.8	0%/Hard formation. Sample not collected.
		B22HX4, B22HX5	Soil	RUM Contact	Split spoon	78.8 - 81.2	100%
		B22HX6	Soil	TD	Split spoon	82.3 - 84.8	100%
		B22HD4, B22HD5	Water	Post Development	5 hp submersible pump	Intake at 76.7	19.4 gpm maximum sustained flow rate

Table 1. Sampling Summary: 100-D Area Wells

Well ID	Well Name	HEIS #	Sample Type	Sample Purpose	Collection Method	Depth (ft bgs)	Recovery/Notes
				100-D Area			
C7092	199-D8-90	B23461	Soil	RUM Contact	Split spoon	51.0 - 53.1	100%
		B23466, B23465	Water	Post Development	5 hp submersible pump	Intake at 48.4	32 gpm maximum sustained flow rate
C7093	199-D8-91	B23462	Soil	RUM Contact	Split spoon	41.2 - 43.4	100%
		B23468, B23467	Water	Post Development	5 hp submersible pump	Intake at 38.58	26.9 gpm maximum sustained flow rate
C7095	199-D8-93	B23463	Soil	RUM Contact	Split spoon	15.85 - 18.05	100%
		Not collected	Water	Post Development	5 hp submersible pump	intake at 15.0	0.5 gpm recharge rate/ Insufficient recharge rate to develope. No sample collected 12-21-09
C7096	199-D8-94	B23464	Soil	RUM Contact	Split spoon	26-3 - 28.3	100%
		B23472, B23471	Water	Post Development	5 hp submersible pump	Intake at 24.0	34 gpm maximum sustained flow rate
C7580	199-D4-101	B23PH7	Soil	RUM Contact	Split spoon	98.7 - 101.0	100%
		B23PJ7, B23PJ8	Water	Post Development	5 hp submersible pump	Intake at 85.0	10 gpm maximum sustained flow rate
C7582	199-D8-97	B23PH7	Soil	RUM Contact	Split spoon	98.7 - 101.0	100%
		B23PJ7, B23PJ8	Water	Post Development	5 hp submersible pump	Intake at 85.0	27 gpm maximum sustained flow rate

Table 1. Sampling Summary: 100-D Area Wells

Well ID	Well Name	HEIS #	Sample Type	Sample Purpose	Collection Method	Depth (ft bgs)	Recovery/Notes
				100-D Area			
C7583	199-D5-101	B24777	Soil	RUM Contact	Split spoon	108.9 - 110.9	100%
		B242C5, B242C4, B243B3	Water	Post Development	5 hp submersible pump	Intake at 105.25	75 gpm maximum sustained flow rate
C7589	199-D8-95	B23PH8	Soil	RUM Contact	Split spoon	99.0 - 101.5	100%
		B23PJ9, B23PK0	Water	Post Development	5 hp submersible pump	Intake at 94.5	33 gpm maximum sustained flow rate
C7590	199-D5-130	B23PH9, B23BX0	Soil	RUM Contact	Split spoon	96.0 - 98.4	100%
		B23PK1, B23PK2	Water	Post Development	5 hp submersible pump	Intake at 90.0	11 gpm maximum sustained flow rate
C7591	199-D5-127	B24278	Soil	RUM Contact	Split spoon	103.9 - 105.9	100%
		B242C6, B242C7, B24384, B24HF3, B24HF4, B24HF5	Water	Post Development	5 hp submersible pump	Intake at 96.0	23 gpm maximum sustained flow rate
C7592	199-D6-1	B23PT5	Soil	RUM Contact	Split spoon	101.6 - 103.6	100%
		B23PT6, B23PT7	Water	Post Development	5 hp submersible pump	Intake at 98.0	16 gpm maximum sustained flow rate

Table 1. Sampling Summary: 100-D Area Wells

Well ID	Well Name	HEIS #	Sample Type	Sample Purpose	Collection Method	Depth (ft bgs)	Recovery/Notes
				100-D Area			
C7593	199-D8-99	B23PX1	Soil	RUM Contact	Split spoon	82.0 - 84.5	100%
		B23PX5, B23PX6	Water	Post Development	5 hp submersible pump	Intake at 79.5	45 gpm maximum sustained flow rate
C7594	199-D7-4	B23R10	Soil	RUM Contact	Split spoon	75.0 - 77.5	100%
		B23R11	Water	Post Development	5 hp submersible pump	Intake at 67.25	23 gpm maximum sustained flow rate
C7599	199-D7-3	B26R23	Soil	RUM Contact	Split spoon	86.0 - 88.4	100%
		B23R29, B23R30, B23R27, B23R28	Water	Post Development	5 hp submersible pump	Intake at 80.0	53.8 gpm maximum sustained flow rate
C7600	199-D5-129	B23MT1	Soil	RUM Contact	Split spoon	105.75 - 107.75	100%
		B23MT3, B23MT4	Water	Post Development	5 hp submersible pump	Intake at 103.0	23 gpm maximum sustained flow rate
C7601	199-D5-131	B23R36	Soil	RUM Contact	Split spoon	111.0 - 113.5	100%
		B23R37, B23R38	Water	Post Development	5 hp submersible pump	Intake at 95.0	30 gpm maximum sustained flow rate

Table 1. Sampling Summary: 100-D Area Wells

Well ID	Well Name	HEIS #	Sample Type	Sample Purpose	Collection Method	Depth (ft bgs)	Recovery/Notes
				100-D Area			
C7602	199-D8-98	B23R39	Soil	RUM Contact	Split spoon	85.0 - 87.5	100%
		B23R40, B23R41	Water	Post Development	5 hp submersible pump	Intake at 82.0	27 gpm maximum sustained flow rate
C7603	199-D8-96	B23R61	Soil	RUM Contact	Split spoon	99.0 - 101.5	100%
		B23R62, B23R63	Water	Post Development	5 hp submersible pump	Intake at 89.5	38 gpm maximum sustained flow rate
C7607	199-D6-2	B23R64, B23R65	Soil	RUM Contact	Split spoon	78.0 - 80.4	100%
		B23R69, B23R68	Water	Post Development	5 hp submersible pump	Intake at 70.5	74.8 gpm maximum sustained flow rate
C7608*	199-D7-5	B23RD4	Soil	Deep Vadose	Split spoon	39.0 - 41.0	50%
		B23RD5	Soil	Shallow Aquifer	Split spoon	43.9 - 46.1	not recorded
		B23RD6	Soil	Deep Aquifer	Split spoon	48.5 - 50.7	not recorded
		B23RD7	Soil	RUM Contact	Split spoon	54.0 - 56.2	100%
		B23RD8	Soil	TD	Split spoon	61.0 - 63.5	100%
		B23XK8, B23XK7	Water	Post Development	5 hp submersible pump	Intake at 50.0	30 gpm maximum sustained flow rate

Table 1. Sampling Summary: 100-D Area Wells

Well ID	Well Name	HEIS #	Sample Type	Sample Purpose	Collection Method	Depth (ft bgs)	Recovery/Notes
				100-D Area			
C7611*	199-D7-6	B244W2	Soil	Deep Vadose	Split spoon	22.1 - 24.6	50%
		B244W3	Soil	Shallow Aquifer	Split spoon	32.9 - 35.4	15%
		B244W4	N/A	Deep Aquifer	not collected	not collected	Base of aquifer was more shallow than projected
		B23R66	Soil	RUM Contact	Split spoon	36.5 - 39.0	100%
		B244W5	Soil	TD	Split spoon	41 - 43.5	100%
		B23RD2, B23RD3	Water	Post Development	5 hp submersible pump	Intake at 35.3	80 gpm maximum sustained flow rate
C7612*	199-D5-128	B23MT7	Soil	Deep Vadose	Grab	~86	0% Split spoon recovery. Collected from tailings exhaust in clean bowl.
		B23MT8	Soil	Shallow Aquifer	Split spoon	88.0 - 90.5	100%
		B23MV2	Soil	Deep Aquifer	Split spoon	95.3 - 97.0	62%
		B23MT2	Soil	RUM Contact	Split spoon	99.0 - 101.5	100%
		B23MV3	Soil	TD	Split spoon	103.4 - 101.5	100%
		B23MT5, B23MT6	Water	Post Development	5 hp submersible pump	Intake at 95.9	44.8 gpm maximum sustained flow rate

Table 2. Sampling Summary: 100-H Area Wells

Well ID	Well Name	HEIS #	Sample Type	Sample Purpose	Collection Method	Depth (ft bgs)	Recovery/Notes
				100-H Area			
C7098	199-H1-38	B22Y05, B230T5	Soil	RUM Contact	Split spoon	43.8 - 46.4	100%
		B22Y20, B22Y37, B230T6, B230T7	Water	Post Development	5 hp submersible pump	38.05	12 gpm maximum sustained flow rate
C7099	199-H1-37	B22Y06	Soil	RUM Contact	Split spoon	44.3 - 46.4	100%
		B22Y21, B22Y38	Water	Post Development	5 hp submersible pump	Intake at 40.5	56.8 gpm maximum sustained flow rate
C7100	199-H1-32	B22Y07	Soil	RUM Contact	Split spoon	48.0 - 50.0	100%
		B22Y22, B22Y39	Water	Post Development	5 hp submersible pump	Intake at 41.95	6 gpm maximum sustained flow rate
C7102*	199-H1-36	B23506	Soil	Deep Vadose	Split spoon	29.0 - 31.5	75%
		B23507	Soil	Shallow Aquifer	Split spoon	33.8 - 36.3	25%
		B23508	Soil	Deep Aquifer	Split spoon	36.3 - 38.8	100%
		B238F8	Soil	RUM Contact	Split spoon	39.0 - 41.5	100%
		B23511, B23509	Soil	TD	Split spoon	44.0 - 46.5	100%
		B22Y23, B22Y40	Water	Post Development	5 hp submersible pump	Intake at 38.08	6.7 gpm maximum sustained flow rate

Table 2. Sampling Summary: 100-H Area Wells

Well ID	Well Name	HEIS #	Sample Type	Sample Purpose	Collection Method	Depth (ft bgs)	Recovery/Notes
				100-H Area			
C7104	199-H1-40	B22Y09	Soil	RUM Contact	Split spoon	41.4 - 43.9	100%
		B22Y24, B22Y41	Water	Post Development	5 hp submersible pump	Intake at 38.0	5.3 gpm maximum sustained flow rate
C7105	199-H1-33	B22Y10	Soil	RUM Contact	Split spoon	42.0 - 44.0	100%
		B22Y25, B22Y42	Water	Post Development	5 hp submersible pump	Intake at 38.6	30 gpm maximum sustained flow rate
C7106*	199-H1-35	B22HX7	Soil	Deep Vadose	Split spoon	30.2 - 32.7	25%
		B22FX8	Soil	Shallow Aquifer	Split spoon	32.0 - 34.5	50%
		B22HX9	Soil	Deep Aquifer	Split spoon	35.9 - 38.4	100%
		B238F7	Soil	RUM Contact	Split spoon	43.2 - 45.7	100%
		B22HY0	Soil	TD	Split spoon	45.5 - 48.0	100%
		B23502, B23503	Water	Post Development	5 hp submersible pump	Intake at 40.0	15 gpm maximum sustained flow rate
C7107	199-H1-42	B21ND3	Soil	RUM Contact	Split spoon	40.9 - 42.4	100%
		B21N97; B21N98, B21N95	Water	Post Development	5 hp submersible pump	Intake at 36.0	37.5 gpm maximum sustained flow rate

Table 2. Sampling Summary: 100-H Area Wells

Well ID	Well Name	HEIS #	Sample Type	Sample Purpose	Collection Method	Depth (ft bgs)	Recovery/Notes
				100-H Area			
C7108	199-H1-34	B22Y12	Soil	RUM Contact	Split spoon	41.7 - 43.7	100%
		B22Y27, B22Y44	Water	Post Development	5 hp submersible pump	Intake at 36.0	36 gpm maximum sustained flow rate
C7109	199-H1-39	B22Y13	Soil	RUM Contact	Split spoon	40 - 42.1	100%
		B22Y28, B22Y45	Water	Post Development	5 hp submersible pump	Intake at 38.0	4.9 gpm maximum sustained flow rate
C7110	199-H3-25	B21ND4; B21ND8, B21ND5, B21N96	Soil	RUM Contact	Split spoon	56.3 - 58.05	100%
		B21N99	Water	Post Development	5 hp submersible pump	Intake at 52.0	60.1 gpm maximum sustained flow rate
C7111	199-H1-21	B22Y13	Soil	RUM Contact	Split spoon	35.7 - 38.2	100%
		B22Y29, B22Y46	Water	Post Development	5 hp submersible pump	Intake at 30.5	80.7 gpm maximum sustained flow rate
C7113	199-H1-20	B25VR8	Soil	RUM Contact	Split spoon	54.3 - 56.8	100%
		B22Y30, B22Y47	Water	Post Development	5 hp submersible pump	Intake at 20.0	89.7 gpm maximum sustained flow rate

Table 2. Sampling Summary: 100-H Area Wells

Well ID	Well Name	HEIS #	Sample Type	Sample Purpose	Collection Method	Depth (ft bgs)	Recovery/Notes
				100-H Area			
C7114	199-H3-27	B21ND6	Soil	RUM Contact	Split spoon	58.5 - 60.5	100%
		B21NB0	Water	Post Development	5 hp submersible pump	Intake at 55.0	42.5 gpm maximum sustained flow rate
C7115	199-H3-26	B21ND7	Soil	RUM Contact	Split spoon	52.3 - 54.8	100%
		B21NB1	Water	Post Development	5 hp submersible pump	Intake at 49.5	67.3 gpm maximum sustained flow rate
C7477	199-H1-45	B21ND8	Soil	RUM Contact	Split spoon	55.88 - 60.88	100%; cap Liner 1 because all others cracked.
		B21NB2	Water	Post Development	5 hp submersible pump	Intake at 51.5	63 gpm maximum sustained flow rate
C7478	199-H1-25	B22Y16	Soil	RUM Contact	Split spoon	35.8 -38.3	100%
		B22Y48, B22Y31	Water	Post Development	5 hp submersible pump	Intake at 30.0	71 gpm maximum sustained flow rate
C7480	199-H1-27	B22Y17	Soil	RUM Contact	Split spoon	38.0 - 40.5	100%
		B22Y49, B22Y32	Water	Post Development	5 hp submersible pump	Intake at 33.0	24 gpm maximum sustained flow rate
C7483	199-H4-70	B21ND9	Soil	RUM Contact	Split spoon	57.4 - 60.1	100%
		B21NB3	Water	Post Development	5 hp submersible pump	Intake at 52.0	37.5 gpm maximum sustained flow rate

Table 2. Sampling Summary: 100-H Area Wells

Well ID	Well Name	HEIS #	Sample Type	Sample Purpose	Collection Method	Depth (ft bgs)	Recovery/Notes
				100-H Area			
C7484	199-H4-73	B21NF0	Soil	RUM Contact	Split spoon	62.9 - 64.9	80% / liners split. Collect sample from second split spoon attempt
		B21NB4	Water	Post Development	5 hp submersible pump	Intake at 63.4	37.5 gpm maximum sustained flow rate
C7485	199-H4-69	B21NF1	Soil	RUM Contact	Split spoon	59.5 - 62.0	90%
		B21NB5	Water	Post Development	5 hp submersible pump	Intake at 52.0	26.9 gpm maximum sustained flow rate
C7487	199-H4-71	B21NF2	Soil	RUM Contact	Split spoon	62.7-65.7	100%
		B21NB6	Water	Post Development	5 hp submersible pump	Intake at 52.0	23.1 gpm maximum sustained flow rate
C7488	199-H4-72	B21NF3	Soil	RUM Contact	Split spoon	57.0 - 59.5	100%
		B21NB7	Water	Post Development	5 hp submersible pump	Intake at 52.0	37.4 gpm maximum sustained flow rate
C7489	199-H6-2	B21NF4	Soil	RUM Contact	Split spoon	50.0 - 52.0	100%
		B21NB8	Water	Post Development	5 hp submersible pump	Intake at 48.5	10.4 gpm maximum sustained flow rate
C7492	199-H1-43	B21NF5	Soil	RUM Contact	Split spoon	43.0 - 45.3	100%
		B21NB9	Water	Post Development	5 hp submersible pump	Intake at 41.0	67.3 gpm maximum sustained flow rate

Table 2. Sampling Summary: 100-H Area Wells

Well ID	Well Name	HEIS #	Sample Type	Sample Purpose	Collection Method	Depth (ft bgs)	Recovery/Notes
				100-H Area			
C7581	199-H1-3	B24D84, B24PW6	Soil	RUM Contact	Split spoon	43.6-45.6	100%
		Not collected	Water	Post Development	bailed	NA	bailed until dry, 4 gpm recharge, Insufficient recharge to develop. no sample collected 9-28-10
C7584*	199-H1-2	B24DD4	Soil	Deep Vadose	Split spoon	36.2-38.7	100%
		B24DD6	Soil	Shallow Aquifer	Split spoon	38.9-41.4	100%
		B24DD8	Soil	Deep Aquifer	Split spoon	41.8-44.3	100%
		B24DB5	Soil	RUM Contact	Split spoon	46.2-48.7	100%
		B24DF0	Soil	TD	Split spoon	52.0-54.5	100%
		Not Collected	Water	Post Development	5 hp submersible pump	Intatke at 44.5	3.7 gpm. Samplers not available to sample well. Sample not collected 9-28-10.
C7585	199-H1-1	B24DB6	Soil	RUM Contact	Split spoon	33.8-35.5	100%
		Not Collected	Water	Post Development	5 hp submersible pump	Intake at 33.0	72 gpm. Samplers not available to sample well. Sample not collected 9-28-10.
C7586	199-H4-79	B24D87, B24DB7	Soil	RUM Contact	Split spoon	60.1-62.1	100% /Refusal at 62.1
		B24D55, B24D71	Water	Post Development	5 hp submersible pump	Intake at 60	44.8 gpm maximum sustained flow rate

Table 2. Sampling Summary: 100-H Area Wells

Well ID	Well Name	HEIS #	Sample Type	Sample Purpose	Collection Method	Depth (ft bgs)	Recovery/Notes
				100-H Area			
C7587	199-H4-76	B24D88	Soil	RUM Contact	Split spoon	48.3-50.1	100%
		Not Collected	Water	Post Development	5 hp submersible pump	Intake at 49	30 gpm. Samplers not available to sample well. Sample not collected 9-29-10.
C7588	199-H4-78	B24D89, B24DB9, B24DB3, B24DHF8, B24DD3	Soil	RUM Contact	Split spoon	59.5-61.5	100%
		B24D57, B24D73	Water	Post Development	5 hp submersible pump	Intake at 55	44.8 gpm maximum sustained flow rate
C7595	199-H4-80	B24D90, B24DC0	Soil	RUM Contact	Split spoon	71.0 - 73.5	100%
		B24D58, B24D74	Water	Post Development	5 hp submersible pump	Intake at 63.0	68.8 gpm maximum sustained flow rate
C7596	199-H4-81	B24DC1, B24D91	Soil	RUM Contact	Split spoon	41.4 - 43.4	100%
		B24D59, B24D75	Water	Post Development	5 hp submersible pump	Intake at 38.0	60 gpm maximum sustained flow rate

Table 2. Sampling Summary: 100-H Area Wells

Well ID	Well Name	HEIS #	Sample Type	Sample Purpose	Collection Method	Depth (ft bgs)	Recovery/Notes
				100-H Area			
C7597	199-H4-75	B24D92, B24DC2	Soil	RUM Contact	Split spoon	50.8-52.8	100%, Refusal at 52.8
		Not Collected	Water	Post Development	5 hp submersible pump	Inteke at 49.0	44.0 gpm. Samplers not available to sample well. Sample not collected 9-30-10
C7598	199-H4-74	B24D93, B24DC3	Soil	RUM Contact	Split spoon	42.0-44.0	100%, Refusal at 44.0
		Not Collected	Water	Post Development	5 hp submersible pump	Intake at 38.0	21.0 gpm. Samplers not available to sample well. Sample not collected 9-30-10
C7604*	199-H1-4	B24DD5	Soil	Deep Vadose	Split spoon	37.3-39.3	100%
		Not Collected	Soil	Shallow Aquifer	N/A	N/A	Base of aquifer was more shallow than projected
		Not Collected	Soil	Deep Aquifer	N/A	N/A	Base of aquifer was more shallow than projected
		B24D94	Soil	RUM Contact	Split spoon	41.1-43.2	100%
		B24DF1	Soil	TD	Split spoon	46.5-48.5	100%
		Not Collected	Water	Post Development	1/4 hp Submersible Pump	Intake at 41.0	inadaquate recharge for sampling 9-28-10
C7605	199-H4-77	B24D95	Soil	RUM Contact	Split spoon	44.5-47.0	100%
		Not Collected	Water	Post Development	5 hp Submersible Pump	Intake at 42.5	6 gpm. Samplers not available to sample well. Sample not collected 9-29-10

Table 2. Sampling Summary: 100-H Area Wells

Well ID	Well Name	HEIS #	Sample Type	Sample Purpose	Collection Method	Depth (ft bgs)	Recovery/Notes
				100-H Area			
C7606	199-H1-6	B24D96, B24DC6	Soil	RUM Contact	Split spoon	37.5-40	100%
		Not Collected	Water	Post Development	5 hp submersible pump	Intake at 35.5	2 gpm recharge rate. Insufficient recharge rate to develop. No sample collected 9-29-10
C7609	199-H4-82	B24DC7, B24D97	Soil	RUM Contact	Split spoon	56.2 - 58.7	70%
		B24D65, B24D81	Water	Post Development	5 hp submersible pump	Intake at 51.0	50 gpm maximum sustained flow rate
C7610	199-H1-5	B24DC8, B24D98	Soil	RUM Contact	Split spoon	44.0 - 46.5	100%
		B24D66, B24D82	Water	Post Development	5 hp submersible pump	Intake at 38.0	74 gpm maximum sustained flow rate

Notes:

* = Well sampled for 100-H/100-D Area Decisional Unit remedial investigation / feasibility study.

ft bgs = feet below ground surface

gpm = gallons per minute

ID = Identification

N/A = Not Applicable

RUM = Ringold Formation Upper Mud Unit

2.1.3 Construction

Each well is constructed using nominal 6 5/8-in diameter schedule 10 stainless steel casing of variable compositions, a continuous wrap vee-wire screen and a sump. Casing of type 304 and/or 316L is placed above the water table and casing of 316, 316L is placed below the water table. Each screen is constructed of type 316L stainless steel. The screen aperture for wells varies between 45 and 70 slot depending on its intended use and borehole lithology. Screen lengths also vary depending on aquifer thickness. The bases of the screens are generally placed within one foot of the base of the aquifer. Depending on the sediment size distribution at the bottom of the unconfined aquifer, screens are sometimes set higher to prevent sand production. Sumps are constructed of type 316, 316L stainless steel with welded end caps and vary in length between three and five feet.

Annular fill of each well consists of Colorado silica sand filter pack, a bentonite seal, bentonite annular fill and a cement surface seal. The filter pack is composed of clean Colorado silica sand placed from the base of the borehole to 5 ft above the screen. The filter pack mesh size varies based on the sediment size distribution in the aquifer. The screen slot size is then matched to the filter pack to allow no more than 10% of the filter pack to pass through the well screen. The annular plug consists of 1/4 inch bentonite pellets placed 1.5 foot thick set atop the sand pack. Bentonite granules of 8-20 mesh are placed from the top of the bentonite plug to the base of the cement seal. The surface seal is composed of a neat cement grout with no more than 3% sodium bentonite (to prevent shrinkage) and extends from the top of the bentonite annular fill to ground surface. Cement surface seals are typically 5 to 10 ft thick depending on the depth of the well. The well-site geologist monitored well completion activities to ensure that overlap was maintained between the fill materials and the temporary casing while back-pulling.

A modified well design was used for wells installed on the floodplain northeast of the 100-D Area. Due to the shallow depth to shallow depth to the water table, the surface seals extend to 4 ft bgs. Beneath the surface seal, granular bentonite forms an annular seal above approximately 1 ft of coated bentonite pellets. All other parameters are consistent with the generalized well design.

The well head of each well consists of 2 ft of permanent casing projecting above ground surface, a protective well monument, a concrete pad and four protective posts. The protective well monument is 8-inches in diameter consisting of schedule 20 and/or schedule 50 stainless steel set 3 ft above ground surface and 2 ft bgs. The concrete pad is 4-ft by 4-ft by 0.5-ft thick with schedule 10, 3-inch wire mesh reinforcement. The four protective posts are three inches in diameter of carbon steel filled with concrete and are placed one foot from each corner of the well pad. One protective post is removable to allow access to the wellhead for maintenance and sampling. The protective posts are painted a safety yellow.

Washington State Department of Ecology unique-well identification tags are permanently affixed to the outer protective casing of each well. Brass and/or bronze survey markers are anchored into the north side of each well pad bearing a Hanford well name, a Hanford well identification number and the date of completion are stamped in 3/8-in lettering.

Specific depths and construction details for each well can be found in section 2.2 "Well-Specific Information" and in Appendix A.

2.1.4 Well Development and Performance

Development took place in two stages. Initial development took place during construction and final development took place after the well had been completed. Initial development consisted of mechanical surging using a, triple-flange surge block to settle the filter pack as it was placed in the borehole and to improve the specific capacity of the well. Surging helps repair formation damage (compaction or pore space plugging) that may have occurred during drilling; restoring and improving the hydraulic conductivity of the aquifer around the well. Each well was surged using a triple-flange surge block in intervals no greater than 10 ft. In general, intervals were surged until the filter pack settled no more than 0.1 ft in 15 minutes. While surging, silt and fine-sand was drawn into the well typically filling the sump between 0.1 and 3 ft. The fines were subsequently bailed to within 0.1 ft of the bottom of the well before development pumping began.

Following well construction, each well was pumped, generally, at the maximum sustainable yield of the well using a temporary 0.5 hp submersible pump with modular bowls (impeller units) best suited for the yield of the well. The intake was set as close to the bottom of the screen as possible. To optimize the effects of development, efforts were made to achieve a drawdown that was at least 50% of the saturated thickness of the aquifer. However, in wells with extremely high well yields, this objective was neither achievable nor necessary. Wells with extremely high well yields were located in the north east section of the 100-H Area. The highest development pumping rates achieved were about 78-gal/min. Conversely, wells with extremely low well yields were pumped dry almost immediately. Wells with extremely low yields were generally located on a topographic high between the 100-H and 100-D Areas. These wells were developed using a bailer and/or a much smaller Redi-flo 3 submersible pump until clean.

Development continued until the well water was clean (less than 5 nephelometric turbidity units (NTU)'s) and when pH, conductivity, and temperature had stabilized. During development, the well-site geologist monitored drawdown using a pressure transducer and/or e-tape and took periodic water samples to test for the parameters listed above. Recovery of the water level was monitored following development (after the pump was turned off) for approximately 30 minutes or until full recovery was achieved.

Due to the influence of low river stage elevations extending into the unconfined aquifer, several wells between the 100-D and 100-H Areas were unable to be developed due to low water levels at the time of their completion.

Development summary forms and associated development notes are provided in Appendix C.

2.1.5 Environmental Monitoring

Work performed in the 100-HR-3 Operable Unit (OU) was classified as low hazard for radiological and chemical contamination. As such, field radiological surveys were conducted once daily. A radiological control technician (RCT) performed radiological surveys of the drill cuttings, soil samples, temporary casing, personal protective equipment, and commonly used surfaces and tools. The RCTs reported no sustainable measurements above background levels.

Air quality monitoring was performed at least once daily to check for volatile organic contamination in the work zone. Industrial hygiene technicians (IHT) surveyed in the workers breathing zone and at potential point sources at the wellhead, over fresh drill cuttings and over soil samples. Monitoring was conducted using a hand held photo-ionization detector. Well sites C7589, C7601 and C7603, located in the vicinity of a former coal plant in the north east corner of 100-D Area, required additional air sampling for mercury vapors. To monitor for mercury, the IHT used a hand held photo-ionization detector made specifically for detecting mercury vapors. The IHT reported no measurements above background levels throughout the project work scope.

2.2 Well-Specific Information

Information presented in this section includes summaries of well site activities and data specific to individual wells installed throughout the 100-HR-3 OU. Information common to all wells is presented in the general information section above and will not be reiterated in the following subsections. For ease of reference, wells are organized numerically by well identification number (noted in parentheses). Borehole logs, Development data, and well summary sheets are presented in Appendices A, B, and C, respectively. Sampling identification, coincident depths and relevant information is summarized in Table 1.

2.2.1 199-D4-95 (C7083)

Well 199-D4-95 (C7083) is located southeast of the centerline of the In Situ Reduction-Oxidation Manipulation (ISRM) barrier (Figure 1).

Well installation activities took place between November 9, 2009 and November 20, 2009. The borehole was drilled to a Total Depth (TD) of 121.4 ft bgs. During drilling the Ringold Formation Upper Mud Unit (RUM) was encountered at 115.5 ft bgs and static groundwater was tagged at 84.45 ft bgs.

One split spoon soil sample was collected from 117.5 to 119.8 ft bgs. Grab samples for sieve analyses were also collected from 85 to 115.5 ft bgs.

A 6-in diameter stainless steel well was installed with a 35.03–ft long, 55-slot screen placed from 79.16 to 114.19 ft bgs and a 3 ft long sump extending to 117.2 ft bgs. Annular fill consisted of 8-16 mesh Colorado Silica Sand (CSS) installed from the base of the borehole to 74.5 ft bgs, a bentonite pellet seal placed from 74.5 to 72.6 ft bgs, bentonite crumbles placed from 72.6 to 10.5 ft bgs and a neat cement surface seal poured from 10.5 to 0 ft bgs.

Well development was performed on November 20 using a 5 hp submersible pump. The well was pumped at rates varying from 19.0 to 47.8 gpm, with a maximum sustained flow rate of 47.8 gpm with 0.4 ft of drawdown after pumping for 78 minutes.

2.2.2 199-D4-96 (C7084)

Well 199-D4-96 (C7084) is located on the northwest edge of ISRM Pond, 25 ft west of well 199-D4-22 (Figure 1). Extra sampling took place at this well for RI/FS data needs according to (DOE/RL-2009-09, 2009).

Well installation activities took place between October 14, 2009 and October 28, 2009. The borehole was drilled to a TD of 106.5 ft bgs. During drilling the RUM was encountered at 99 ft bgs and water was tagged at 87.2 ft bgs.

Five required soil samples were collected from this well. The sediments at this location were very well consolidated consisting mostly of gravels that were too large to fit inside the split spoon, consequently, the deep vadose zone sample from 85 ft bgs and the deep aquifer sample from 96 ft bgs were collected from the tailings hopper after attempts to use a split spoon soil sampler failed. All other soil samples were collected using a split spoon in accordance with the SAPs. The Shallow aquifer soil sample was collected from 89.4 to 90.7 ft bgs, the RUM contact soil sample was collected from 100.0 to 102.0 ft bgs

and the sample of the total depth of the borehole was collected at 107.1 to 106.6 ft bgs. Grab samples for sieve analyses were also collected from 90 to 106 ft bgs. See Table 1.

A 6-in stainless steel well was installed with a 10.00–ft long, 70-slot screen placed 88.0 to 98.0 ft bgs and a 3 ft long sump extending to 101.0 ft bgs. Annular fill consists of 6-12 mesh CSS installed from the base of the borehole to 82.6 ft bgs, a bentonite pellet seal placed from 82.6 to 81.5 ft bgs, bentonite crumbles placed from 81.5 to 8.7 ft bgs and a neat cement surface seal poured from 8.7 to 0 ft bgs.

Well development was performed on October 28 using a 5 hp submersible pump. The well was pumped at rates varying from 10 to 17 gpm, with a maximum sustained flow rate of 15 gpm with 0.7 ft of drawdown after pumping for 60 minutes.

2.2.3 199-D4-97 (C7085)

Well 199-D4-97 (C7085) is located near the north edge of the ISRM pond (Figure 1).
Well installation activities took place between October 19, 2009 and October 27, 2009. The borehole was drilled to a TD of 111.0 ft bgs. During drilling the RUM was encountered at 104.5 ft bgs and groundwater was tagged at 86.0 ft bgs.

One split spoon soil sample was collected from 105.9 to 108.4 ft bgs. Grab samples for sieve analyses were also collected from 90 to 100 ft bgs.

A 6-in stainless steel well was installed with a 25.0–ft long, 45-slot screen placed 88.1 to 103.1 ft bgs and a 3 ft long sump extended to 106.1 ft bgs. Annular fill consists of 10-20 mesh CSS installed from the base of the borehole to 83.4 ft bgs, a bentonite pellet seal placed from 83.4 to 80.6 ft bgs, bentonite crumbles placed from 80.6 to 9.3 ft bgs and a neat cement surface seal poured from 9.3 to 0 ft bgs.

Well development was performed on December 3, 2009 using a 5 hp submersible pump. The well was pumped at rates varying from 15 to 49.8 gpm, with a maximum sustained flow rate of 49.3 gpm, with 7.6 ft of drawdown after 95 minutes of pumping.

2.2.4 199-D4-98 (C7086)

Well 199-D4-98 (C7086) is located north of ISRM wells (Figure 1).

Well installation activities took place between November 20, 2009 and December 4, 2009. The borehole was drilled to a TD of 111.0 ft bgs. During drilling the RUM was encountered at 102.8 ft bgs and the water table was tagged at 82.7 ft bgs.

One required split spoon soil sample was collected from 103.0 to 105.5 ft bgs. Grab samples for sieve analyses were also collected from 88.5 to 107 ft bgs.

A 6-in stainless steel well was installed with a 20.00–ft long, 55-slot screen placed 80.2 to 100.2 ft bgs and a 3 ft long sump extending to 103.2 ft bgs. Annular fill consists of 8-16 mesh CSS installed from the base of the borehole to 73.8 ft bgs, a bentonite pellet seal placed from 73.8 to 72.2 ft bgs, bentonite crumbles placed from 72.2 to 11.2 ft bgs and a neat cement surface seal poured from 11.2 to 0 ft bgs.

Well development was performed on December 4, 2009 using a 5 ph submersible pump. The well was pumped at rates varying from 44.88 to 50.8 gpm, with a maximum sustained flow rate of 50.8 gpm with 1.3 ft of drawdown after 71 minutes of pumping.

2.2.5 199-D4-99 (C7087)

Well 199-D4-99 (C7087) is located near the south bank of the Columbia River, north of the ISRM barrier (Figure 1).

Well installation activities took place between November 11, 2009 and November 24, 2009. The borehole was drilled to a TD of 116.2 ft bgs. During drilling the RUM was encountered at 109.5 ft bgs and static groundwater was tagged at 83.85 ft bgs.

One required split spoon soil sample was collected from 110.1 to 112.2 ft bgs. Grab samples for sieve analyses were also collected from 85 to 109 ft bgs.

A 6-in stainless steel well was installed with a 30.02–ft long, 55-slot screen placed 77.85 to 107.87 ft bgs and a 3 ft long sump extending to 110.87 ft bgs. Annular fill consists of 8-16 mesh CSS installed from the base of the borehole to 71.5 ft bgs, a bentonite pellet seal placed from 71.5 to 70.2 ft bgs, bentonite crumbles placed from 70.2 to 9.1 ft bgs and a neat cement surface seal poured from 9.1 to 0 ft bgs. A well pad, 4 protective posts and a protective monument were also installed according to the general well design.

Well development was performed on November 23 and November 24, 2009 using a 5 hp submersible pump. On November 23, 2009 and November 24, 2009 the well was pumped at rates varying between 16 and 43 gpm with a maximum sustained flow rate of 43 gpm with 11.1 ft of drawdown after 120 minutes of pumping.

2.2.6 199-D2-10 (C7089)

Well 199-D2-10 (C7089) is located on the floodplain north of the 100-D Area (Figure 1). This borehole was designated in the second revision of SAP (DOE/RL-2009-09, 2010) as requiring extra sampling for RI/FS data needs. However, this borehole had been drilled prior to its release and was sampled in accordance to the first revision of the SAP (DOE/RL-2009-09, 2009) which called for no additional RI/FS sampling. Therefore this borehole received only the standardized sampling for RPO data needs.

Well installation activities took place between December 14, 2009 and January 25, 2010. The borehole was drilled to a TD of 31.0 ft bgs. During drilling the RUM was encountered at 26.0 ft bgs and static groundwater was tagged at 10.8 ft bgs.

One required split spoon soil sample was collected from 27.0 to 92.2 ft bgs. Grab samples for sieve analyses were also collected from 10 to 29 ft bgs.

A 6-in stainless steel well was installed with a 15.00–ft long, 55-slot screen placed 9.87 to 24.87 ft bgs and a 3 ft long sump extending to 27.87 ft bgs. Annular fill consists of 8-16 mesh CSS installed from the base of the borehole to 7.5 ft bgs, a bentonite pellet seal placed from 7.5 to 7.0 ft bgs, bentonite crumbles placed from 7.0 to 4.1 ft bgs and a neat cement surface seal poured from 4.1 to 0 ft bgs.

Well development was performed on January 25, 2010 using a 5 hp submersible pump. The well was pumped at an initial pump rate of 22 gpm and was reduced to 15 gpm after two minutes. Development continued at a maximum sustained flow rate of 15 gpm with 4.2 ft of drawdown after 63 minutes of pumping.

2.2.7 199-D2-12 (C7090)

Well 199-D2-12 (C7090) is located north east of the 100-D Area on the floodplain east of the north end of D island (Figure 1).

Well installation activities took place between December 9, 2009 and December 22, 2009. The borehole was drilled to a TD of 34.0 ft bgs. During drilling the RUM was encountered at 28.2 ft bgs and static groundwater was tagged at 11.0 ft bgs.

One required split spoon soil sample was collected from 28.4 to 30.5 ft bgs. Grab samples for sieve analyses were also collected from 15 to 29 ft bgs.

A 6-in stainless steel well was installed with a 15.00–ft long, 70-slot screen placed 11.84 to 26.84 ft bgs and a 3 ft long sump extending to 29.84 ft bgs. Annular fill consists of 6-12 mesh CSS installed from the base of the borehole to 8.3 ft bgs, a bentonite pellet seal placed from 8.3 to 7.2 ft bgs, bentonite crumbles placed from 7.2 to 4.5 ft bgs and a neat cement surface seal poured from 4.5 to 0 ft bgs.

Well development was performed on December 22, 2009 using a 5 hp submersible pump. The well was pumped at rates varying from 20.9 to 68.8 gpm, with a maximum sustained flow rate of 41.0 gpm with 0.8 ft of drawdown after 75 minutes of pumping. Following sampling the flow rate was increased to 68.8 gpm for 8 minutes with a stable drawdown of 4.6 ft.

2.2.8 199-D8-89 (C7091)

Well 199-D8-89 (C7091) is located at the north edge of the 100-D Area, at the edge of the bluff above the Columbia River, along Pump House Loop Road (Figure 1). Extra sampling took place at this well for RI/FS data needs according to (DOE/RL-2009-09, 2009).

Well installation activities took place between October 21, 2009 and October 29, 2009. The borehole was drilled to a TD of 84.8ft bgs on October 22, 2009. During drilling the RUM was encountered at 78.0 ft bgs and static groundwater was tagged at 69.3 ft bgs.

Four of five required split spoon soil samples were collected during drilling. The sediments at this location were very well consolidated consisting mostly of gravels too large to fit inside the split spoon. The deep vadose zone sample was collected from two split spoon samplers driven across the same interval from 61.6 to 63.1 ft bgs in order to collect sufficient volume for sampling. The shallow aquifer sample collected from 69.2 to 70.0 ft bgs returned only enough sample volume to fill a partial bottle set. The split spoon sampler for the lower aquifer sample could only be driven from 74.0 to 74.8 ft bgs and returned no sediment. No sample was collected from this interval. The RUM contact sample was collected from 78.8 to 81.2 ft bgs and the sample for the borehole total depth was collected from 82.3 to 84.8 ft bgs. Grab samples for sieve analyses were collected from 30 to 39 ft bgs. Sampling depths and coincident notes are presented in Table 1.

A 6-in stainless steel well was constructed with a 10-ft, 70-slot continuous wire-wrap screen placed from 67.05 to 77.06 ft bgs and a 3-ft sump extending to 80.07 ft bgs. The filter pack, consisting of 6-12 mesh CSS, installed from 84.8 to 61.67, a bentonite seal placed from 61.67 to 60.2 ft bgs, bentonite crumbles placed from 60.2 to 10.25 ft bgs, and a neat cement surface seal poured from 10.25 to 0 ft bgs.

Well development was performed October 3, 2009 using a 5 hp submersible pump. The well was pumped at rates varying from 14.9 to 26.9 gpm, with a long-duration flow rate of 19.4 gpm for 56 minutes with 4.74 ft of drawdown. This flow rate was slightly higher than the sustainable capacity of the

well. The maximum sustainable capacity of this well is between 15 and 19 gpm with around 4 ft of drawdown.

2.2.9 199-D8-90 (C7092)

Well 199-D8-90 (C7092) is located at on the bluff-slope north of the 100-DX pump-and-treat transfer station (Figure 1).

Well installation activities took place between December 21, 2009 and January 28, 2010. The borehole was drilled to a TD of 56.4 ft bgs. During drilling the RUM was encountered at 78.0 ft bgs and static groundwater was tagged at 69.3 ft bgs.

One required split spoon soil sample was collected from 51.0 to 53.1 ft bgs. Grab samples for sieve analyses were collected from 30 to 54 ft bgs.

A 6-in stainless steel well was constructed with a 25.01–ft long, 55-slot screen placed 24.41 to 49.42 ft bgs and a 3 ft long sump extending to 52.45 ft bgs. Annular fill consists of 8-16 mesh CSS installed from the base of the borehole to 18.00 ft bgs, a bentonite pellet seal placed from 18.00 to 16.60 ft bgs, bentonite crumbles placed from 16.60 to 8.80 ft bgs and a neat cement surface seal poured from 8.80 to 0 ft bgs.

Well development was performed on January 26, 2010 to January 28, 2010 using a 5 hp submersible pump. On January 26, 2010 the well was pumped at rates varying from 14.9 to 15.0 gpm, with a maximum sustained flow rate of 15.0 gpm, on January 28, 2010 the well was pumped at a constant maximum sustainable rate of 32.9 gpm for 145 minutes with 14.4 ft of drawdown.

2.2.10 199-D8-91 (C7093)

Well 199-D8-91 (C7093) is located at the base of the bluff north of the 100-D Area, north east of the 100-DX pump-and-treat transfer station (Figure 1).

Well installation activities took place between December 15, 2009 and January 26, 2010. The borehole was drilled to a TD of 46.5 ft bgs. During drilling the RUM was encountered at 40.0 ft bgs and static groundwater was tagged at 22.2 ft bgs.

One required split spoon soil sample was collected from 41.2 to 43.4 ft bgs. Grab samples for sieve analyses were also collected from 35 to 44 ft bgs.

A 6-in stainless steel well was constructed with a 19.99–ft long, 70-slot screen placed 20.41 to 40.40 ft bgs and a 3 ft long sump extending to 43.44 ft bgs. Annular fill consists of 6-12 mesh CSS installed from the base of the borehole to 14.60 ft bgs, a bentonite pellet seal placed from 14.60 to 12.95 ft bgs, bentonite crumbles placed from 12.95 to 10.00 ft bgs and a neat cement surface seal poured from 10.00 to 0 ft bgs.

Well development was performed on January 26, 2010 using a 5 hp submersible pump. The well was pumped at rates varying from 25.0 to 29.9 gpm, with an average maximum sustained flow rate of 28 gpm for 65 min with 7.7 ft of drawdown.

2.2.11 199-D8-93 (C7095)

Well 199-D8-93 (C7095) is located on the floodplain north of the 100-D Area, east of the north end of D Island (Figure 1).

Well installation activities took place between December 8 and December 21, 2009. The borehole was drilled to a TD of 21.0 ft bgs. During drilling the RUM was encountered at 22.2 ft bgs and static groundwater was tagged at 9.6 ft bgs.

One required split spoon soil sample was collected from 15.9 to 18.1 ft bgs. Grab samples for sieve analyses were also collected from 10 to 21 ft bgs.

A 6-in stainless steel well was constructed with a 5.01–ft long, 70-slot screen placed 10.05 to 15.06 ft bgs and a 3 ft long sump extending to 18.06 ft bgs. Annular fill consists of 6-12 mesh CSS installed from the base of the borehole to 9.1 ft bgs, a bentonite pellet seal placed from 9.1 to 7.8 ft bgs, bentonite crumbles placed from 7.8 to 4.0 ft bgs and a neat cement surface seal poured from 4.0 to 0 ft bgs.

Well development was attempted on December 21, 2009 using a submersible pump. The well could not be developed due to low recharge rates. Upon the first attempt to develop the well, the well was pumped dry almost immediately. To try to increase well production the screen was swabbed using a dual flange surge block for 60 minutes. After swabbing, two additional attempts to develop the well were made using a 0.5 hp submersible pump to no avail. Upon the final attempt to develop, the pump was turned off and the recharge rate was carefully monitored to calculate the Recharge flow of 0.5 gpm. A sample was not able to be collected.

2.2.12 199-D8-94 (C7096)

Well 199-D8-94 (C7096) is located on the floodplain below the 100-D Area, off the toe of D Island (Figure 1).

Well installation activities took place between December 7, 2009 and December 21, 2009. The borehole was drilled to a TD of 31.3 ft bgs. During drilling the RUM was encountered at 26.3 ft bgs and static groundwater was tagged at 10.1 ft bgs.

One required split spoon soil sample was collected from 26.3 to 28.3 Grab samples for sieve analyses were also collected from 20 to 29 ft bgs.

A 6-in stainless steel well was constructed with a 15.02–ft long, 70-slot screen placed 9.99 to 25.01 ft bgs and a 3 ft long sump extending to 28.01 ft bgs. Annular fill consists of 6-12 mesh CSS installed from the base of the borehole to 8.9 ft bgs, a bentonite pellet seal placed from 8.9 to 7.8 ft bgs, bentonite crumbles placed from 7.8 to 3.9 ft bgs and a neat cement surface seal poured from 3.9 to 0 ft bgs.

Well development was performed on December 18 and December 21, 2009 using a 5 hp submersible pump to develop the well in two stages. On December 18, 2009 the lower part of the aquifer was pumped at an average maximum sustainable rate of 34 gpm for 45 minutes with 5.8 ft of drawdown, and was developed on the December 21 at rates varying from 14.2 to 50.0 gpm, with a maximum sustained flow rate of 33 gpm for 82 minutes with 5.6 ft of drawdown.

2.2.13 199-H1-38 (C7098)

Well 199-H1-38 (C7098) is located northwest of the 100-H Area by the Columbia River (Figure 2).

Well installation activities took place between May 10, 2009 and May 20, 2010. The borehole was drilled to a TD of 43.5 ft bgs. During drilling the RUM was encountered at 42 ft bgs and static groundwater was tagged at 34.2 ft bgs.

One required split spoon soil sample was from 43.8 to 46.4 ft bgs. Grab samples for sieve analyses were also collected from 35 to 47 ft bgs.

A 6-in stainless steel well was installed with a 15.01–ft long, 70-slot screen placed from 26.52 to 41.53 ft bgs and a 3 ft long extending to 44.53 ft bgs. Annular fill consists of 6-12 mesh CSS installed from the base of the borehole to 21.5 ft bgs, a bentonite pellet seal placed from 21.5 to 19.6 ft bgs, bentonite crumbles placed from 19.6 to 10.0 ft bgs and a neat cement surface seal poured from 10.0 to 0 ft bgs.

Well development was performed on May 20, 2010 using a 5 hp submersible pump. The well was pumped at a maximum sustainable rate of 12 gpm for 116 minutes with an average drawdown of 1.67 ft.

2.2.14 199-H1-37 (C7099)

Well 199-H1-37 (C7099) is located northwest of the 100-H Area by the Columbia River (Figure 2).

Well installation activities took place between May 4, 2010 and May 14, 2010. The borehole was drilled to a TD of 46.4 ft bgs. During drilling the RUM was encountered at 41 ft bgs and static groundwater was tagged at 33.2 ft bgs.

One required split spoon soil sample was collected from 44.3 to 46.4 ft bgs. Grab samples for sieve analyses were also collected from 35 to 45 ft bgs.

A 6-in stainless steel well was installed with a 15.03–ft long, 70-slot screen placed from 25.49 to 40.52 ft bgs and a 3 ft long sump extending to 43.53 ft bgs. Annular fill consists of 6-12 mesh CSS installed from the base of the borehole to 19.9 ft bgs, a bentonite pellet seal placed from 19.9 to 18.5 ft bgs, bentonite crumbles placed from 18.5 to 9.5 ft bgs and a neat cement surface seal poured from 9.5 to 0 ft bgs.

Well development was performed on May 14, 2010 using a 5 hp submersible pump. The well was pumped at rates varying from 20.9 to 56.8 gpm, with a maximum sustained flow rate of 20.9 gpm for 67 minutes with 4.64 ft of drawdown.

2.2.15 199-H1-32 (C7100)

Well 199-H1-32 (C7100) is located northwest of the 100-H Area, north east of the 100-HX pump-and-treat facility by the Columbia River (Figure 2).

Well installation activities took place between May 14, 2010 and May 21, 2010. The borehole was drilled to a TD of 51.4 ft bgs. During drilling the RUM was encountered at 43 ft bgs and static groundwater was tagged at 37.3 ft bgs.

One required split spoon soil sample was collected from the second of two attempted split spoons. The first split spoon driven from 44.0 to 46.0 ft bgs returned insufficient sample volume due to a large clast blocking the split spoon shoe. The sample was collected from the second split spoon driven from 48.0 to 50.0 ft bgs (5.0 to 7.0 ft below the RUM contact). Grab samples for sieve analysis were also collected from 36 to 43 ft bgs.

A 6-in stainless steel well was installed with a 20.00–ft long, 50-slot screen placed from 22.5 to 42.5 ft bgs and a 3 ft long sump extending to 51.4 ft bgs. Annular fill consists of 8-16 mesh CSS installed from the base of the borehole to 17.5 ft bgs, a bentonite pellet seal placed from 17.5 to 16.0 ft bgs, bentonite crumbles placed from 16.0 to 10.0 ft bgs and a neat cement surface seal poured from 10.0 to 0 ft bgs.

Well development was performed on May 21, 2010 using a 5 hp submersible pump. The well was pumped at a constant maximum sustainable rate of 6 gpm for 62 minutes with an average drawdown of 1.74 ft.

2.2.16 199-H1-36 (C7102)

Well 199-H1-36 (C7102) is located northwest of the 100-H Area, East of the 100-HX pump-and-treat facility (Figure 2). Extra sampling took place at this well for RI/FS data needs according to (DOE/RL-2009-09, 2010).

Well installation activities took place between May 7, 2010 and May 19, 2010. The borehole was drilled to a TD of 46.5 ft bgs. During drilling the RUM was encountered at 39 ft bgs and static groundwater was tagged at 31.5 ft bgs.

Five required split spoon soil samples were collected during drilling. The deep vadose zone sample was collected from 29.0 to 31.5 ft bgs. The shallow aquifer sample was collected from 33.8 to 36.3 ft bgs. The deep aquifer sample was collected in sequence with the shallow aquifer sample from 36.3 to 38.8 ft bgs. The RUM contact sample was collected from 39.0 to 41.5 ft bgs. And the sample from the total depth of the borehole was collected from 44.0 to 46.5 ft bgs. Sampling was conducted according to the project SAP. Grab samples for sieve analyses were also collected from 24 to 26 ft bgs. A summary of sampling for chemical analysis is available in Table 1.

A 6-in stainless steel well was installed with a 15.0–ft long, 70-slot screen placed from 23.00 to 38.00 ft bgs and a 3 ft long sump extending to 41.00 ft bgs. Annular fill consists of 6-12 mesh CSS installed from the base of the borehole to 18.5 ft bgs, a bentonite pellet seal placed from 18.5 to 17.0 ft bgs, bentonite crumbles placed from 17.0 to 10.0 ft bgs and a neat cement surface seal poured from 10.0 to 0 ft bgs.

Well development was performed on May 19, 2010 using a 5 hp submersible pump. The well was pumped at a constant maximum sustainable rate of 6.7 gpm for 90 minutes with an average drawdown of 1.72 ft.

2.2.17 199-H1-40 (C7104)

Well 199-H1-40 (C7104) is located North of the 100-H Area by the Columbia River (Figure 2).

Well installation activities took place between April 22, 2010 and May 18, 2010. The borehole was drilled to a TD of 44.4 ft bgs. During drilling the RUM was encountered at 38.5 ft bgs and static groundwater was tagged at 33.1 ft bgs.

One required split spoon soil sample was collected from 40.4 to 43.9 ft bgs. Grab samples for sieve analyses were also collected from 28 to 39 ft bgs.

A 6-in stainless steel well was installed with a 15.0–ft long, 70-slot screen placed from 23.00 to 38.00 ft bgs and a 3 ft long sump extending to 41.00 ft bgs. Annular fill consists of 6-12 mesh CSS installed from the base of the borehole to 18.0 ft bgs, a bentonite pellet seal placed from 18.0 to 16.5 ft bgs,

bentonite crumbles placed from 16.5 to 9.8 ft bgs and a neat cement surface seal poured from 9.8 to 0 ft bgs.

Well development was performed on May 18, 2010 using a 5 hp submersible pump. The well was pumped at a constant maximum sustainable rate of 5.3 gpm for 36 minutes and a maximum drawdown of 5.6 ft.

2.2.18 199-H1-33 (C7105)

Well 199-H1-33 (C7105) is located northwest of the H-Area by the Columbia River (Figure 2).

Well installation activities took place between May 25, 2010 and May 27, 2010. The borehole was drilled to a TD of 45.0 ft bgs. During drilling the RUM was encountered at 39 ft bgs and static groundwater was tagged at 33.4 ft bgs.

One required split spoon soil sample was collected from 42.0 to 44.0 ft bgs. Grab samples for sieve analyses were also collected from 30 to 39 ft bgs.

A 6-in stainless steel well was installed with a 15.0–ft long, 70-slot screen placed from 23.00 to 38.00 ft bgs and a 3 ft long extended to 41.00 ft bgs. Annular fill consists of 6-12 mesh CSS installed from the base of the borehole to 18.4 ft bgs, a bentonite pellet seal placed from 18.4 to 17.2 ft bgs, bentonite crumbles placed from 17.2 to 10.0 ft bgs and a neat cement surface seal poured from 10.0 to 0 ft bgs.

Well development was performed on May 27, 2010 using a 5 hp submersible pump. The well was pumped at a constant maximum sustainable rate of 30 gpm for 62 minutes with an average drawdown of 2.17 ft.

2.2.19 199-H1-35 (C7106)

Well 199-H1-35 (C7106) is located northwest of the H-Area by the Columbia River (Figure 2). Extra sampling took place at this well for RI/FS data needs according to (DOE/RL-2009-09, 2010).

Well installation activities took place between May 12, 2010 and May 24, 2010. The borehole was drilled to a TD of 46.5 ft bgs. During drilling the RUM was encountered at 41 ft bgs and static groundwater was tagged at 31.7 ft bgs.

Five required split spoon soil samples were collected during drilling. The deep vadose zone sample was collected from 30.2 to 31.7 ft bgs. The shallow aquifer sample was collected from 31.0 to 34.5 ft bgs. The deep aquifer sample was collected from 35.9 to 38.4 ft bgs. The RUM contact sample was collected from 43.2 to 45.7 ft bgs. And the sample from the total depth of the borehole was collected from 45.5 to 48.0 ft bgs. Grab samples for sieve analyses were also collected from 30 to 40 ft bgs. A summary of sampling for chemical analysis is available in Table 1.

A 6-in stainless steel well was installed with a 15.0–ft long, 70-slot screen placed from 25.5 to 40.5 ft bgs and a 3 ft long sump extending to 43.5 ft bgs. Annular fill consists of 6-12 mesh filter CSS from the base of the borehole to 25.5 ft bgs, a bentonite pellet seal placed from 25.5 to 19.0 ft bgs, bentonite crumbles placed from 19.0 to 10.0 ft bgs and a neat cement surface seal poured from 10.0 to 0 ft bgs.

Well development was performed on May 24, 2010 using a 5 hp submersible pump. The well was pumped at a constant maximum sustainable rate of 15 gpm for 67 minutes with an average drawdown of 0.41 ft.

2.2.20 199-H1-42 (C7107)

Well 199-H1-42 (C7107) is located at the northwest edge of the 100-H area along Hadley Loop Road, west of 128-H-1 Excavation (Figure 2).

Well installation activities took place between September 29, 2009 and October 2, 2009. The borehole was drilled to a TD of 44.0 ft bgs. During drilling the RUM was encountered at 41 ft bgs and static groundwater was tagged at 29.4 ft bgs.

One required split spoon soil sample was collected from 40.9 to 42.4 ft bgs. Grab samples for sieve analyses were also collected from 25 to 41 ft bgs.

A 6-in stainless steel well was installed with a 10.01–ft long, 55-slot screen placed from 28.13 to 38.14 ft bgs and a 3 ft long sump extending to 40.89 ft bgs. Annular fill consists of 6-12 mesh CSS installed from the base of the borehole to 22.5 ft bgs, a bentonite pellet seal placed from 22.5 to 20.5 ft bgs, bentonite crumbles placed from 20.5 to 8.5 ft bgs and a neat cement surface seal poured from 8.5 to 0 ft bgs.

Well development was performed on October 2 2009 using a 5 hp submersible. The well was pumped at rates varying from 14.9 to 37.5 gpm, with a maximum sustained flow rate of 37.5 gpm for 40 minutes with an average drawdown of 4.93 ft. Pumping was halted after 40 minutes due to water catch tank being full.

2.2.21 199-H1-34 (C7108)

Well 199-H1-34 (C7108) is located northwest of the 100-H Area, by the Columbia River northeast of the 100-HX pump-and-treat facility (Figure 2).

Well installation activities took place between May 4, 2010 and May 25, 2010. The borehole was drilled to a TD of 44.9 ft bgs. During drilling the RUM was encountered at 39.5 ft bgs and static groundwater was tagged at 32.0 ft bgs.

One required split spoon soil sample was collected from 41.7 to 43.7 ft bgs. Grab samples for sieve analyses were also collected from 24 to 37 ft bgs.

A 6-in stainless steel well was installed with a 15.1–ft long, 55-slot screen placed 22.5 to 37.6 ft bgs and a 3 ft long sump placed from the base of the screen to 42.6 ft bgs. Annular fill consists of 8-16 mesh CSS installed from the base of the borehole to 17.5 ft bgs, a bentonite pellet seal placed from 17.5 to 16.0 ft bgs, bentonite crumbles placed from 16.0 to 9.5 ft bgs and a neat cement surface seal poured from 9.5 to 0 ft bgs.

Well development was performed on May 25, 2010 using a 5 hp submersible pump. The well was pumped at a constant maximum sustainable rate of 36 gpm for 51 minutes with an average drawdown of 3.38 ft.

2.2.22 199-H1-39 (C7109)

Well 199-H1-39 (C7109) is located northwest of the 100-H Area by the river (Figure 2).

Well installation activities took place between April 30, 2010 and May 17, 2010. During drilling the RUM was encountered at 38 ft bgs and static groundwater was tagged at 34.8 ft bgs. The borehole was drilled to a TD of 44.0 ft bgs.

One required split spoon soil sample was collected from 40.0 to 42.1 ft bgs. Grab samples for sieve analyses were also collected from 30 to 38 ft bgs.

A 6-in stainless steel well was installed with a 15.0–ft long, 70-slot screen placed from 23.0 to 38.0 ft bgs and a 3 ft long sump extending to 41.0 ft bgs. Annular fill consists of 6-12 mesh CSS installed from the base of the borehole to 17.5 ft bgs, a bentonite pellet seal placed from 17.5 to 15.5 ft bgs, bentonite crumbles placed from 15.5 to 9.5 ft bgs and a neat cement surface seal poured from 9.5 to 0 ft bgs.

Well development was performed on May 17, 2010 using a 5 hp submersible pump. The well was pumped at rates varying from 4.4 to 5.0 gpm, with a maximum sustained flow rate of 4.9 gpm for 75 minutes with an average drawdown of 5.65 ft.

2.2.23 199-H3-25 (C7110)

Well 199-H3-25 (C7110) is located northwest of the groundwater warehouse (100-HR-3 interim pump-and-treat facility) (Figure 2).

Well installation activities took place between September 15 and September 24, 2009. The borehole was drilled to a TD of 61.3 ft bgs. During drilling the RUM was encountered at 56 ft bgs and static groundwater was tagged at 39.0 ft bgs.

One required split spoon soil sample was collected from 56.3 to 58.1 ft bgs. Grab samples for sieve analyses were also collected from 40 to 56 ft bgs.

A 6-in stainless steel well was installed with a 20.01–ft long, 70-slot screen placed from 33.70 to 53.71 ft bgs and a 3 ft long sump extending to 56.72 ft bgs. Annular fill consists of 6-12 mesh CSS installed from the base of the borehole to 28.25 ft bgs, a bentonite pellet seal placed from 28.25 to 27.1 ft bgs, bentonite crumbles placed from 27.1 to 9.3 ft bgs and a neat cement surface seal poured from 9.3 to 0 ft bgs.

Well development was performed on September 24, 2009 using a 5 hp submersible pump. The well was pumped at a maximum sustainable rate of 60.1 gpm for 46 minutes with an average drawdown of 0.03 ft.

2.2.24 199-H1-21 (C7111)

Well 199-H1-21 (C7111) is located on the Columbia River flood plain northwest of the 100-H Area (Figure 2).

The borehole was drilled to a TD of 39.8 ft bgs on May 18, 2010. During drilling the RUM was encountered at 33 ft bgs and static groundwater was tagged at 17.8 ft bgs.

One required split spoon soil sample was collected during drilling from 35.7 to 38.2 ft bgs. Grab samples for sieve analyses were also collected from 24 to 32 ft bgs.

The well was built of 6-in stainless steel with a 15 ft 55-slot continuous wire-wrap screen placed from 38.86 to 53.88 ft bgs and a 3 ft sump extending to 35.1 ft bgs. Annular fill consists of 8-16 mesh CSS installed from the base of the borehole to 12.1 ft bgs, a bentonite pellet seal placed from 12.1 to 9.7 ft bgs,

bentonite crumbles placed from 9.7 to 5.1 ft bgs and a neat cement surface seal poured from 5.1 to 0 ft bgs.

Well development was performed on June 3rd, 2010 using a 5 hp submersible pump. The well was pumped at a constant maximum sustainable rate of 80.7 gpm for 60 minutes with an average drawdown of 4.85 ft.

2.2.25 199-H1-20 (C7113)

Well 199-H1-20 (C7113) is located on the Columbia River flood plain northwest of the 100-H Area (Figure 2).

Well installation activities took place between May 19, 2010 and June 2, 2010. The borehole was drilled to a TD of 57.7 ft bgs. During drilling the RUM was encountered at 32 ft bgs and static groundwater was tagged at 22.5 ft bgs.

Two split spoon soil samples were collected from this borehole. More than one split spoon soil sample was collected from this borehole because the unique sandy composition of the RUM at this location made it difficult for the geologist to determine the RUM contact. The first split spoon sample was collected from 38 to 41 ft bgs (6 to 8 ft below the RUM contact) and the second split spoon soil sample was collected from 54.3 to 56.8 ft bgs (22.3 to 24.8 ft below the RUM contact). Grab samples for sieve analyses were also collected from 15 to 32 ft bgs.

A 6-in stainless steel well was installed with a 20.02–ft long, 70-slot screen placed from 11.42 to 31.44 ft bgs and a 3 ft long sump extending to 34.44 ft bgs. Annular fill consists of 8-16 mesh CSS installed from the base of the borehole to 41.7 ft bgs, a bentonite pellet seal placed from 41.7 to 36.7 ft bgs, annular fill consists of 6-12 mesh filter sand pack installed from 36.7 to 6.5 ft bgs, a bentonite pellet seal placed from 6.5 to 5.2 ft bgs bentonite crumbles placed from 5.2 to 4.0 ft bgs and a neat cement surface seal poured from 4.0 to 0 ft bgs.

Well development was performed on June 2, 2010 using a 5 hp submersible pump. The well was pumped at rates varying from 83.7 to 89.7 gpm, with a maximum sustained flow rate of 89.7 gpm. The pumping rate averaged 86.7 gpm for a total pumping time of 66 minutes between the two pumping intervals. Average drawdown between pumping intervals was 0.41 ft.

2.2.26 199-H3-27 (C7114)

Well 199-H3-27 (C7114) is located east of groundwater warehouse (100-HR-3 interim pump-and-treat facility) (Figure 2).

Well installation activities took place between September 17, 2009 and September 25, 2009. The borehole was drilled to a TD of 61.9 ft bgs. During drilling the RUM was encountered at 57 ft bgs and static groundwater was tagged at 44.25 ft bgs.

One required split spoon soil sample was collected from 58.5 to 60.2 ft bgs. Grab samples for sieve analyses were also collected from 40 to 57 ft bgs.

A 6-in stainless steel well was installed with a 20.02–ft long, 70-slot screen placed from 35.77 to 55.79 ft bgs and a 3 ft long sump extending to 58.79 ft bgs. Annular fill consists of 6-12 mesh CSS installed from the base of the borehole to 28.2 ft bgs, a bentonite pellet seal placed from 28.2 to 27.2 ft bgs,

bentonite crumbles placed from 27.2 to 9.5 ft bgs and a neat cement surface seal poured from 9.5 to 0 ft bgs.

Well development was performed on September 25, 2009 using a pump. The well was pumped at rates varying from 37.0 to 42.5 gpm, with a maximum sustained flow rate of 37.0 gpm for 65 minutes with an average drawdown of 9.1 ft.

2.2.27 199-H3-26 (C7115)

Well 199-H3-26 (C7115) is located in the north staging area of the groundwater warehouse (100-HR-3 interim pump-and-treat facility) (Figure 2).

Well installation activities took place between September 14, 2009 and September 22, 2009. The borehole was drilled to a TD of 56.3 ft bgs. During drilling the RUM was encountered at 51 ft bgs and static groundwater was tagged at 37.6 ft bgs.

One required split spoon soil sample was collected from 52.3 to 54.8 ft bgs. Grab samples for sieve analyses were also collected from 40 to 52 ft bgs.

A 6-in stainless steel well was installed with a 15.02–ft long, 70-slot screen placed from 34.96 to 49.98ft bgs and a 3 ft long sump extending to 52.99 ft bgs. Annular fill consists of 6-12 mesh CSS installed from the base of the borehole to 29.1 ft bgs, a bentonite pellet seal placed from 29.1 to 26.9 ft bgs, bentonite crumbles placed from 26.9 to 9.2 ft bgs and a neat cement surface seal poured from 9.2 to 0 ft bgs.

Well development was performed on September 22, 2009 using a 5 hp submersible pump rated for producing 100 gpm. The well was pumped at rates varying from 16.5 to 67.3 gpm, with a maximum sustained flow rate of 67.3 gpm with less than a foot of drawdown.

2.2.28 199-H1-45 (C7477)

Well 199-H1-45 (C7477) is located northwest of the groundwater warehouse (100-HR-3 interim pump-and-treat facility) near Hadley Loop road (Figure 2).

Well installation activities took place between September 23, 2009 and September 28, 2009. The borehole was drilled to a TD of 61.08 ft bgs. During drilling the RUM was encountered at 55.5 ft bgs and static groundwater was tagged at 39.65 ft bgs.

One required split spoon soil sample was collected from 55.9 to 60.1 ft bgs. Grab samples for sieve analyses were also collected from 40 to 56 ft bgs.

A 6-in stainless steel well was installed with a 15.02–ft long, 70-slot screen placed from 38.86 to 53.88 ft bgs and a 3 ft long sump extending to 56.88 ft bgs. Annular fill consists of 6-12 mesh CSS installed from the base of the borehole to 34.1 ft bgs, a bentonite pellet seal placed from 34.1 to 32.3 ft bgs, bentonite crumbles placed from 32.3 to 8.8 ft bgs and a neat cement surface seal poured from 8.8 to 0 ft bgs.

Well development was performed on September 28, 2009 using a 5 hp submersible pump. The well was pumped at rates varying from 17.8 to 63.0 gpm, with a maximum sustained flow rate of 63.0 gpm with less than a foot of drawdown. The Pump was shut down due to the purge tank reaching its full capacity.

2.2.29 199-H1-25 (C7478)

Well 199-H1-25 (C7478) is located northwest of the 100-HX pump-and-treat facility by the Columbia River (Figure 2).

Well installation activities took place between May 17, 2010 and May 26, 2010. The borehole was drilled to a TD of 39.5 ft bgs. During drilling the RUM was encountered at 32 ft bgs and static groundwater was tagged at 22.5 ft bgs.

One required split spoon soil sample was collected from 35.8 to 38.3 ft bgs. Grab samples for sieve analyses were also collected from 20 to 32 ft bgs.

A 6-in stainless steel well was installed with a 19.99–ft long, 70-slot screen placed from 11.56 to 31.55 ft bgs and a 3 ft long sump extending to 34.55 ft bgs. Annular fill consists of 6-12 mesh CSS installed from the base of the borehole to 6.6 ft bgs, a bentonite pellet seal placed from 6.6 to 4.9 ft bgs, bentonite crumbles placed from 4.9 to 4.0 ft bgs and a neat cement surface seal poured from 4.0 to 0 ft bgs.

Well development was performed on May 26, 2010 using a 5 hp submersible pump. The well was pumped at a maximum sustained flow rate of 71 gpm for 45 minutes with an average drawdown of 6.88 ft. Varying pump rates were due to purgewater trucks becoming full.

2.2.30 199-H1-27 (C7480)

Well 199-H1-27 (C7480) is located northwest of the 100-HX pump-and-treat facility by the Columbia River (Figure 2).

Well installation activities took place between May 14, 2010 and May 25, 2010. The borehole was drilled to a TD of 41.2 ft bgs. During drilling the RUM was encountered at 35 ft bgs and static groundwater was tagged at 23.1 ft bgs.

One required split spoon soil sample was collected from 38.0 to 40.5 ft bgs. Grab samples for sieve analyses were also collected from 30 to 38 ft bgs.

A 6-in stainless steel well was installed with a 20.0–ft long, 70-slot screen placed from 14.2 to 34.2 ft bgs and a 3 ft long sump extending to 37.2 ft bgs. Annular fill consists of 6-12 mesh CSS installed from the base of the borehole to 9.5 ft bgs, a bentonite pellet seal placed from 9.5 to 8.0 ft bgs, bentonite crumbles placed from 8.0 to 5.0 ft bgs and a neat cement surface seal poured from 5.0 to 0 ft bgs.

Well development was performed on May 25, 2010 using a 5 hp submersible pump. The well was pumped at a constant maximum sustainable rate of 24 gpm for 56 minutes with an average drawdown of 6.47 ft.

2.2.31 199-H4-70 (C7483)

Well 199-H4-70 (C7483) is located northeast of H Reactor east of H Avenue (Figure 2).

Well installation activities took place between September 3, 2009 and September 18, 2009. The borehole was drilled to a TD of 61.4 ft bgs. During drilling the RUM was encountered at 56 ft bgs and static groundwater was tagged at 46.4 ft bgs.

One required split spoon soil sample was collected from 57.4 to 60.1 ft bgs. Grab samples for sieve analyses were also collected from 45 to 55 ft bgs.

A 6-in stainless steel well was installed with a 10.0–ft long, 70-slot screen placed from 45.0 to 55.0 ft bgs and a 3 ft long sump extending to 58.0 ft bgs. Annular fill consists of 6-12 mesh CSS installed from the base of the borehole to 37.5 ft bgs, a bentonite pellet seal placed from 37.5 to 36.0 ft bgs, bentonite crumbles placed from 36.0 to 9.5 ft bgs and a neat cement surface seal poured from 9.5 to 0 ft bgs.

Well development was performed on September 18, 2009 using a 5 hp submersible pump. The well was pumped at rates varying from 11.2 to 37.5 gpm, with a maximum sustained flow rate of 26.9 gpm for 37 minutes with an average of 3.87 ft drawdown. Multiple stops and starts during development were due to issues with the hermit not recording recovery test data properly.

2.2.32 199-H4-73 (C7484)

Well 199-H4-73 (C7484) is located south of H Reactor and west of H Avenue (Figure 2).

Well installation activities took place between August 27, 2009 and September 16, 2009. The borehole was drilled to a TD of 71.0 ft bgs. During drilling the RUM was encountered at 64.5 ft bgs and static groundwater was tagged at 44.5 ft bgs.

One required split spoon soil sample was collected from 62.9 to 64.9 ft bgs. Grab samples for sieve analyses were also collected from 55 to 62 ft bgs.

A 6-in stainless steel well was installed with a 20.02–ft long, 70-slot screen placed 43.25 to 63.27 ft bgs and a 3 ft long sump placed from the base of the screen to 66.29 ft bgs. Annular fill consists of 6-12 mesh CSS installed from the base of the borehole to 37.8 ft bgs, a bentonite pellet seal placed from 37.8 to 36.33 ft bgs, bentonite crumbles placed from 36.33 to 9.0 ft bgs and a neat cement surface seal poured from 9.0 to 0 ft bgs.

Well development was performed on September 16, 2009 using a 5 hp submersible pump. The well was pumped at rates varying from 10.4 to 17.9 gpm, with a maximum sustained flow rate of 17.9 gpm for 28 minutes with an average drawdown of 0.63 ft. A summary of sampling for chemical analysis is available in Table 1.

2.2.33 199-H4-69 (C7485)

Well 199-H4-69 (C7485) is located northeast of H Reactor and east of H Avenue (Figure 2).

Well installation activities took place between September 8, 2009 and September 21, 2009. The borehole was drilled to a TD of 63.83 ft bgs. During drilling the RUM was encountered at 59 ft bgs and static groundwater was tagged at 45.95 ft bgs.
One required split spoon soil sample was collected from 59.5 to 62.0 ft bgs. Grab samples for sieve analyses were also collected from 45 to 59 ft bgs.

A 6-in stainless steel well was installed with a 10.00–ft long, 55-slot screen placed from 45.75 to 55.75 ft bgs and a 3 ft long sump extending to 58.77 ft bgs. Annular fill consists of 8-16 mesh CSS installed from the base of the borehole to 41.08 ft bgs, a bentonite pellet seal placed from 41.08 to 38.1 ft bgs, bentonite crumbles placed from 38.1 to 9.0 ft bgs and a neat cement surface seal poured from 9.0 to 0 ft bgs.

Well development was performed on September 21, 2009 using a 5 hp submersible pump. The well was pumped at a constant maximum sustainable rate of 26.9 gpm for 92 minutes with an average drawdown of 5.31 ft.

2.2.34 199-H4-71 (C7487)

Well 199-H4-71 (C7487) is located north east of H reactor on the east side of H avenue (Figure 2).

Well installation activities took place between August 28, 2009 and September 10, 2009. The borehole was drilled to a TD of 71.0 ft bgs. During drilling the RUM was encountered at 62 ft bgs and static groundwater was tagged at 47.3 ft bgs.

One required split spoon soil sample was collected from 62.7 to 65.7 ft bgs. Grab samples for sieve analyses were also collected from 50 to 62 ft bgs.

A 6-in stainless steel well was installed with a 15.03–ft long, 55-slot screen placed from 45.04 to 60.07 ft bgs and a 3 ft long sump extending to 63.09 ft bgs. Annular fill consists of 8-16 mesh CSS installed from the base of the borehole to 39.5 ft bgs, a bentonite pellet seal placed from 39.5 to 36.7 ft bgs, bentonite crumbles placed from 36.7 to 9.8 ft bgs and a neat cement surface seal poured from 9.8 to 0 ft bgs.

Well development was performed on September 17, 2009 using a 5 hp submersible pump. The well was pumped at rates varying from 16.6 to 23.1 gpm, with a maximum sustained flow rate of 23.1 gpm for 48 minutes with an average drawdown of 2.52 ft.

2.2.35 199-H4-72 (C7488)

Well 199-H4-72 (C7488) is located east of H Reactor on the east side of H Avenue (Figure 2).

Well installation activities took place between September 10, 2009 and September 17, 2009. The borehole was drilled to a TD of 61.25 ft bgs. During drilling the RUM was encountered at 56.0 ft bgs and static groundwater was tagged at 43.3 ft bgs.

One required split spoon soil sample was collected from 57.0 to 59.5 ft bgs. Grab samples for sieve analyses were also collected from 40 to 57 ft bgs.

A 6-in stainless steel well was installed with a 15.02–ft long, 70-slot screen placed from 39.98 to 55.00 ft bgs and a 3 ft long sump extending to 58.01 ft bgs. Annular fill consists of 6-12 mesh CSS installed from the base of the borehole to 35.0 ft bgs, a bentonite pellet seal placed from 35.0 to 33.5 ft bgs, bentonite crumbles placed from 33.5 to 9.5 ft bgs and a neat cement surface seal poured from 9.5 to 0 ft bgs.

Well development was performed on September 22, 2009 using a 5 hp submersible pump. The well was pumped at rates varying from 15.0 to 37.0 gpm, with a maximum sustained flow rate of 37.4 gpm for 17 minutes with an average drawdown of 8.75 ft.

2.2.36 199-H6-2 (C7489)

Well 199-H6-2 (C7489) is located southeast of H Reactor and west of H Avenue (Figure 2).

Well installation activities took place between August 25, 2009 and September 15, 2009. The borehole was drilled to a TD of 60.7 ft bgs. During drilling the RUM was encountered at 51 ft bgs and static groundwater was tagged at 43.0 ft bgs.

One required split spoon soil sample was collected from 50.0 to 52.0 ft bgs. Grab samples for sieve analyses were also collected from 40 to 51 ft bgs.

A 6-in stainless steel well was installed with a 10.0–ft long, 70-slot screen placed from 39.81 to 49.81 ft bgs and a 3 ft long sump extending to 52.83 ft bgs. Annular fill consists of 6-12 mesh CSS installed from the base of the borehole to 35.0 ft bgs, a bentonite pellet seal placed from 35.0 to 33.0 ft bgs, bentonite crumbles placed from 33.0 to 9.0 ft bgs and a neat cement surface seal poured from 9.0 to 0 ft bgs.

Well development was performed on September 15, 2009 using a 5 hp submersible pump. The well was pumped at rates varying from 5 to 10.4 gpm, with a maximum sustained flow rate of 10.4 gpm for 97 minutes with an average drawdown of 1.32 ft.

2.2.37 199-H1-43 (C7492)

Well 199-H1-43 (C7492) is located east of the 100-HX pump-and-treat facility (Figure 2).

Well installation activities took place between September 28, 2009 and October 2, 2009. The borehole was drilled to a TD of 49.0 ft bgs. During drilling the RUM was encountered at 45.0 ft bgs and static groundwater was tagged at 31.51 ft bgs.

One required split spoon soil sample was collected from 43.0 to 45.3 ft bgs. Grab samples for sieve analyses were also collected from 30 to 43 ft bgs.

A 6-in stainless steel well was installed with a 10.0–ft long, 55-slot screen placed from 32.0 to 42.0 ft bgs and a 3 ft long sump extending to 45.0 ft bgs. Annular fill consists of 6-12 mesh CSS installed from the base of the borehole to 26.9 ft bgs, a bentonite pellet seal placed from 26.9 to 25.4 ft bgs, bentonite crumbles placed from 25.4 to 10.0 ft bgs and a neat cement surface seal poured from 10.0 to 0 ft bgs.

Well development was performed on October 2, 2009 using a 5 hp submersible pump with maximum pumping capacity of 100 gpm. The well was pumped at rates varying from 16.4 to 67.3 gpm, with a maximum sustained flow rate of 16.4 gpm for 63 minutes with an average drawdown of 0.17 ft.

2.2.38 199-D4-101 (C7580)

Well 199-D4-101 (C7580) is located in the 100-D Area south of the ISRM barrier pond (Figure 1).

Well installation activities took place between February 18 and March 3, 2010. The borehole was drilled to a TD of 109.9 ft bgs. During drilling the RUM was encountered at 105 ft bgs and static groundwater was tagged at 84.0 ft bgs.

One required split spoon soil sample was collected from 98.7 to 101.0 ft bsg. Grab samples for sieve analyses were also collected from 95 to 103 ft bgs.

A 6-in stainless steel well was installed with a 20.0–ft long, 45-slot screen placed from 81.2 to 101.2 ft bgs and a 5 ft long sump extending to 106.2 ft bgs. Annular fill consists of 10-20 mesh filter sand pack installed from the bottom of the borehole to 75.3 ft bgs, a bentonite pellet seal placed from 75.3 to 74.5 ft bgs, bentonite crumbles placed from 74.5 to 10.1 ft bgs and a neat cement surface seal poured from 10.1 to 0 ft bgs.

Well development was performed on March 3, 2010 using a 5 hp submersible pump. The well was pumped at a constant and sustained rate of 10.0 gpm, with 4.2 ft of drawdown after pumping for 65 minutes.

2.2.39 199-H1-3 (C7581)

Well 199-H1-3 (C7581) is located west of the 100-HX pump-and-treat facility (Figure 1 and Figure 2).

Well activities took place between June 21, 2010 and September 13, 2010. The well was drilled to a TD of 48.5 ft bgs. During drilling the RUM was encountered at 42 ft bgs and static groundwater was tagged at 87.2 ft bgs.

One required split spoon soil sample was collected from 43.6 to 45.6 ft bgs. Grab samples for sieve analyses were also collected from 35-42 ft bgs.

A 6-in stainless steel well was installed with a 10–ft long, 70-slot screen placed from 32.2 to 42.2 ft bgs and a 5 ft long sump extending to 47.2. Annular fill consists of 6-12 mesh CSS installed from the base of the borehole to 27.3 ft bgs, a bentonite pellet seal placed from 27.3 to 25.8 ft bgs, bentonite crumbles placed from 25.8 to 9.5 ft bgs and a neat cement surface seal poured from 9.5 to 0 ft bgs.

Well development was attempted on September 28, 2010 using a 4 gal bailer. The aquifer at this location was 3 ft thick during development. The well was bailed at about 4 gpm rate until the well was bailed dry. No sample was collected due to low well yield. Development and sampling may have to take place at a later date.

2.2.40 199-D8-97 (C7582)

Well 199-D8-97 (C7582) is located Northeast of DR Reactor (Figure 1).

Well installation activities took place between March 31 and April 26, 2010. The borehole was drilled to a TD of 104.3 ft bgs. During drilling the RUM was encountered at 98 ft bgs and static groundwater was tagged at 77.5 ft bgs.

One required split spoon soil sample was collected from 98.7 to 101.0 ft bgs. Grab samples for sieve analyses were also collected from 72 to 78 ft bgs.

A 6-in stainless steel well was installed with a 30.04–ft long, 70-slot screen placed from 65.87 to 95.91 ft bgs and a 5 ft long sump extending to 100.91 ft bgs. Annular fill consists of 6-12 mesh filter sand pack installed from the bottom of the borehole to 57.4 ft bgs, a bentonite pellet seal placed from 57.4 to 55.6 ft bgs, bentonite crumbles placed from 55.6 to 10.5 ft bgs and a neat cement surface seal poured from 10.5 to 0 ft bgs.

Well development was performed on April 26, 2010 using a 5 hp submersible pump. The well was pumped at rates varying from 18.0 to 27.0 gpm, with a maximum sustained flow rate of 27.0 gpm with 7.5 ft of drawdown after pumping for 118 minutes.

2.2.41 199-D5-101 (C7583)

Well 199-D5-101 (C7583) is located East of ISRM Pond (Figure 1).
Well installation activities took place between February 25 and March 12, 2010. The borehole was drilled to a TD of 114.3 ft bgs. During drilling the RUM was encountered at 108 ft bgs and static groundwater was tagged at 85.5 ft bgs.

One required split spoon soil sample was collected from 108.9 to 110.9 ft bgs. Grab samples for sieve analyses were also collected from 85 to 109 ft bgs.

A 6-in stainless steel well was installed with a 30.01–ft long, 55-slot screen placed from 76.23 to 106.24 ft bgs and a 5 ft long sump extending to 111.24 ft bgs. Annular fill consists of 8-16 mesh filter sand pack installed from 114.0 to 70.2 ft bgs due to natural back fill, a bentonite pellet seal placed from 70.2 to 68.2 ft bgs, bentonite crumbles placed from 68.2 to 11.4 ft bgs and a neat cement surface seal poured from 11.4 to 0 ft bgs.

Well development was performed on March 12, 2010 using two different pumps. The well was first pumped with a 0.5 hp pump and was pumped at rates varying from 11.9 to 44.8 gpm, with a maximum sustained flow rate of 14.9 gpm, with 0.9 ft of drawdown after pumping for 60 minutes.. The second pump was a 5 hp pump and was pumped at a maximum sustainable rate of 75 gpm, with 3.0 ft of drawdown after pumping for 23 minutes.

2.2.42 199-H1-2 (C7584)

Well 199-H1-2 (C7584) is located north west of 100-H Reactor (Figure 2). Extra sampling took place at this well for RI/FS data needs according to (DOE/RL-2009-09, 2010).

Well activities took place between June 30, 2010 and September 28, 2010. The well was drilled to a TD of 54.5 ft bgs. During drilling the RUM was encountered at 45.6 ft bgs and static groundwater was tagged at 87.2 ft bgs.

Five required split spoon soil samples were collected from this borehole. The deep vadose zone sample was collected from 36.2 to 38.7 ft bgs. The shallow aquifer sample was collected from 38.9 to 41.4 ft bgs. The deep aquifer sample was collected from 41.4 to 44.3 ft bgs. The RUM contact sample was collected from 46.2 to 48.7 ft bgs. And the sample from the total depth of the borehole was collected from 52.0 to 54.5 ft bgs. Grab samples for sieve analyses were also collected from 30-45.6 ft bgs.

A 6-in stainless steel well was installed with a 10–ft long, 70-slot screen placed from 35.4 to 45.4 ft bgs and a 5 ft long sump extending to 50.4. Annular fill consists of 6-12 mesh CSS installed from the base of the borehole to 30.3 ft bgs, a bentonite pellet seal placed from 30.3 to 28.6 ft bgs, bentonite crumbles placed from 28.6 to 9.9 ft bgs and a neat cement surface seal poured from 9.9 to 0 ft bgs.

Well development was performed on September 28, 2010 using a 5 hp pump. The well was pumped at a maximum sustained flow rate of 3.7 gpm with a drawdown of 3.97 ft after pumping for 119 minutes. This well could not be sampled post development due to a safety hold that had been placed on all sampling at the Hanford site. No sample had been collected at the time of this writing.

2.2.43 199-H1-1 (C7585)

Well 199-H1-1 (C7585) is located north west of 100-H Reactor (Figure2).

Well activities took place between September 29, 2010 and September 28, 2010. The well was drilled to a TD of 41.1 ft bgs. During drilling the RUM was encountered at 33.8 ft bgs and static groundwater was tagged at 87.2 ft bgs.

One required split spoon soil sample was collected from 33.8 to 35.5 ft bgs. Grab samples for sieve analyses were also collected from 20-33.8 ft bgs.

A 6-in stainless steel well was installed with a 15–ft long, 70-slot screen placed from 18 to 33 ft bgs and a 5 ft long sump extending to 38. Annular fill consists of 6-12 mesh CSS installed from the base of the

borehole to 13 ft bgs, a bentonite pellet seal placed from 13 to 11.6 ft bgs, bentonite crumbles placed from 11.6 to 5.5 ft bgs and a neat cement surface seal poured from 5.5 to 0 ft bgs.

Well development was performed on September 28, 2010 using a 5 hp pump. The well was pumped at a maximum sustained flow rate of 72 gpm with a drawdown of 0.31 ft after pumping for 25 minutes. The well was pumped at a maximum sustained flow rate of 72 gpm. This well could not be sampled post development due to a safety hold that had been placed on all sampling at the Hanford site. No sample had been collected at the time of this writing.

2.2.44 199-H4-79 (C7586)

Well 199-H4-79 (C7586) is located between 100-H and 100-D Areas (Figure 2).

Well activities took place between June 24, 2010 and September 21, 2010. The well was drilled to a TD of 65 ft bgs. During drilling the RUM was encountered at 59.5 ft bgs and static groundwater was tagged at 87.2 ft bgs.

One required split spoon soil sample was collected from 60.1 to 62.1 ft bgs. Grab samples for sieve analyses were also collected from 29-59.5 ft bgs.

A 6-in stainless steel well was installed with a 20–ft long, 70-slot screen placed from 39.1 to 59.1 ft bgs and a 5 ft long sump extending to 64.1 ft bgs. Annular fill consists of 6-12 mesh CSS installed from the base of the borehole to 33.6 ft bgs, a bentonite pellet seal placed from 33.6 to 32 ft bgs, bentonite crumbles placed from 32 to 10.8 ft bgs and a neat cement surface seal poured from 10.8 to 0 ft bgs.

Well development was performed on September 21, 2010 using a 5 hp pump. The well was pumped at a maximum sustained flow rate of 44.8 gpm with 1.69 ft of drawdown after pumping for 50 minutes.

2.2.45 199-H4-76 (C7587)

Well 199-H4-76 (C7587) is located west of 100-H Area, west of Hadley Loop Road (Figure 2).

Well activities took place between June 28, 2010 and September 21, 2010. The well was drilled to a TD of 56.4 ft bgs. During drilling the RUM was encountered at 47.5 ft bgs and static groundwater was tagged at 87.2 ft bgs.

One required split spoon soil sample was collected from 48.3 to 50.1 ft bgs. Grab samples for sieve analyses were also collected from 30-47.5 ft bgs.

A 6-in stainless steel well was installed with a 10–ft long, 70-slot screen placed from 37 to 47 ft bgs and a 5 ft long sump extending to 52 ft bgs. Annular fill consists of 6-12 mesh CSS installed from the base of the borehole to 32.3 ft bgs, a bentonite pellet seal placed from 32.3 to 30.2 ft bgs, bentonite crumbles placed from 30.2 to 9.6 ft bgs and a neat cement surface seal poured from 9.6 to 0 ft bgs.

Well development was performed on September 21, 2010 using a 5 hp pump. The well was pumped at a maximum sustained flow rate of 30 gpm with a drawdown of 1.52 ft after pumping for 23 minutes. This well could not be sampled post development due to a safety hold that had been placed on all sampling at the Hanford site. No post development sample had been collected at the time of this writing.

2.2.46 199-H4-78 (C7588)

Well 199-H4-78 (C7588) is located south west of 100-H Reactor (Figure 2).

Well activities took place between June 23, 2010 and July 1, 2010. The well was drilled to a TD of 64.1 ft bgs. During drilling the RUM was encountered at 59.5 ft bgs and static groundwater was tagged at 87.2 ft bgs.

One required split spoon soil sample was collected from 59.5 to 61.5 ft bgs. Grab samples for sieve analyses were also collected from 34-59.5 ft bgs.

A 6-in stainless steel well was installed with a 20–ft long, 70-slot screen placed from 38 to 58 ft bgs and a 3 ft long sump extending to 61. Annular fill consists of 6-12 mesh CSS installed from the base of the borehole to 33.3 ft bgs, a bentonite pellet seal placed from 33.3 to 31.5 ft bgs, bentonite crumbles placed from 31.5 to 6.5 ft bgs and a neat cement surface seal poured from 6.5 to 0 ft bgs.

Well development was performed on July 21, 2010 using a 5 hp submersible pump. The well was pumped at a maximum sustained flow rate of 44.8 gpm drawing 13.2 ft with a steadily decreasing head over a 58 minute period.

2.2.47 199-D8-95 (C7589)

Well 199-D8-95 (C7589) is located north west of 105-D Reactor between Pump House Loop road and Pacific Avenue and on the north side of a fly ash disposal site (Figure 1).

Well installation activities took place between March 23 and April 29, 2010. The borehole was drilled to a TD of 104.4 ft bgs. During drilling the RUM was encountered at 97 ft bgs and static groundwater was tagged at 81.3 ft bgs.

One required split spoon soil sample was collected from 99.0 to 101.5 ft bgs. Grab samples for sieve analyses were also collected from 70 to 96 ft bgs.

A 6-in stainless steel well was installed with a 19.99–ft long, 55-slot screen placed from 74.97 to 94.96 ft bgs and a 5 ft long sump extending to 99.96 ft bgs. Annular fill consists of 8-16 mesh filter sand pack installed from the bottom of the borehole to 70.3 ft bgs, a bentonite pellet seal placed from 70.3 to 68.3 ft bgs, bentonite crumbles placed from 68.3 to 9.9 ft bgs and a neat cement surface seal poured from 9.9 to 0 ft bgs.

Well development was performed on April 29, 2010 using a 5 hp submersible pump. The well was pumped at a constant and sustained rate of 33.0 gpm, with 7.4 ft of drawdown after pumping for 60 minutes.

2.2.48 199-D5-130 (C7590)

Well 199-D5-130 (C7590) is located north east of 105-D Reactor, east of Pacific Avenue (Figure 1).

Well installation activities took place between March 10 and March 23, 2010. The borehole was drilled to a TD of 101.4 ft bgs. During drilling the RUM was encountered at 95 ft bgs and static groundwater was tagged at 81.8 ft bgs.

One required split spoon soil sample was collected from 96.0 to 98.4 ft bgs. Grab samples for sieve analyses were also collected from 80 to 96 ft bgs.

A 6-in stainless steel well was installed with a 15.02–ft long, 55-slot screen placed from 79.04 to 94.06 ft bgs and a 5 ft long sump extending to 99.05 ft bgs. Annular fill consists of 8-16 mesh filter sand pack installed from 101.2 to 74.0 ft bgs due to natural backfill, a bentonite pellet seal placed from 74.0 to 72.5 ft bgs, bentonite crumbles placed from 72.5 to 9.4 ft bgs and a neat cement surface seal poured from 9.4 to 0 ft bgs.

Well development was performed on March 23, 2010 using a 5 hp submersible pump. The well was pumped at rates varying from 11.0 to 20.0 gpm, with a maximum sustained flow rate of 20.0 gpm with 5.1 ft of drawdown after pumping for 72 minutes.

2.2.49 199-D5-127 (C7591)

Well 199-D5-127 (C7591) is located west of 105-D and -DR reactors at the intersection of Paddoe Street and D Avenue (Figure 1).

Well installation activities took place between February 2, 2009 and March 5, 2009. The borehole was drilled to a TD of 109.0 ft bgs. During drilling the RUM was encountered at 101 ft bgs and static groundwater was tagged at 85.2 ft bgs.

One required split spoon soil sample was collected from 103.9 to 105.9 ft bgs. Grab samples for sieve analyses were also collected from 85 to 100 ft bgs.

A 6-in stainless steel well was installed with a 20–ft long, 45-slot screen placed from 79.4 to 99.4 ft bgs and a 5 ft long sump extending to 104.4. Annular fill consists of 10-20 mesh CSS installed from the base of the borehole to 74.5 ft bgs, a bentonite pellet seal placed from 74.5 to 73.0 ft bgs, bentonite crumbles placed from 73.5 to 9.4 ft bgs and a neat cement surface seal poured from 9.4 to ground surface.

Well development was performed on March 5, 2010 using a 5 hp submersible pump. The well was pumped at a constant and sustained rate of 23.0 gpm with 0.4 ft of drawdown after pumping for 68 minutes.

2.2.50 199-D6-1 (C7592)

Well 199-D6-1 (C7592) is located northeast of 105-D reactor along Palouse St. (Figure 1).

Well installation activities took place between March 3, 2010 and March 11, 2010. The borehole was drilled to a TD of 107.0 ft bgs. During drilling the RUM was encountered at 101 ft bgs and static groundwater was tagged at 87.1 ft bgs.

One required split spoon soil sample was collected from 101.6 to 103.6 ft bgs. Grab samples for sieve analyses were also collected from 85 to 100 ft bgs.

A 6-in stainless steel well was installed with a 20.0–ft long, 70-slot screen placed from 80.0 to 100.0 ft bgs and a 5 ft long sump extending to 105.0 ft bgs. Annular fill consists of 6-12 mesh filter sand pack installed from the base of the borehole to 75.1 ft bgs, a bentonite pellet seal placed from 75.1 to 73.3 ft bgs, bentonite crumbles placed from 73.3 to 10.0 ft bgs and a neat cement surface seal poured from 10.0 to 0 ft bgs.

Well development was performed on March 11, 2010 using a 5 hp submersible pump. The well was pumped at a constant and sustained rate of 16.0 gpm, with 9.8 ft of drawdown after pumping for 105 minutes.

2.2.51 199-D8-99 (C7593)

Well 199-D8-99 (C7593) is located next to 105-DX Pump-and-treat transfer station along Pump House Loop Road (Figure 1).

Well installation activities took place between April 08, 2010 and April 22, 2010. The borehole was drilled to a TD of 88.9 ft bgs. During drilling the RUM was encountered at 84 ft bgs and static groundwater was tagged at 64.5 ft bgs.

One required split spoon soil sample was collected from 82.0 to 84.5 ft bgs. Grab samples for sieve analyses were also collected from 49 to 76 ft bgs.

A 6-in stainless steel well was installed with a 20.02–ft long, 70-slot screen placed from 54.94 to 74.96 ft bgs and a 3 ft long sump extending to 84.96 ft bgs. Annular fill consists of 6-12 mesh filter sand pack installed from the base of the borehole to 50.3 ft bgs, a bentonite pellet seal placed from 50.3 to 48.5 ft bgs, bentonite crumbles placed from 48.5 to 10.0 ft bgs and a neat cement surface seal poured from 10.0 to 0 ft bgs.

Well development was performed on April 22, 2010 using a 5 hp submersible pump. The well was pumped at rates varying from 27.0 to 45.0 gpm, with a maximum sustained flow rate of 32.9 gpm with 6.2 ft of drawdown after pumping for 83 minutes.

2.2.52 199-D7-4 (C7594)

Well 199-D7-4 (C7594) is located north east of the 105-D Reactor along the east-west trending portion of Pump House Loop Road (Figure 1).

Well installation activities took place between March 15 and March 22, 2010. The borehole was drilled to a TD of 77.5 ft bgs. During drilling the RUM was encountered at 74 ft bgs and static groundwater was tagged at 54.4 ft bgs.

One required split spoon soil sample was collected from 75.0 to 77.5 ft bgs. Grab samples for sieve analyses were also collected from 40 to 71 ft bgs.

A 6-in stainless steel well was installed with a 20–ft long, 70-slot screen placed from 50 to 70 ft bgs and a 5 ft long sump extending to 75 ft bgs. Natural Fill is located form the base of the borehole to 76.4 ft bgs, annular fill consists of 8-16 mesh CSS installed from 76.4 to 45.5 ft bgs, a bentonite pellet seal placed from 45.5 to 43.4 ft bgs, bentonite crumbles placed from 43.4 to 9.8 ft bgs and a neat cement surface seal poured from 9.8 to 0 ft bgs.

Well development was performed on March 22, 2010 using a 5 hp submersible pump. The well was pumped at rates varying from 14.9 to 30.0 gpm, with a maximum sustained flow rate of 27.0 gpm with 6.2 ft of drawdown after pumping for 70 minutes.

2.2.53 199-H4-80 (C7595)

Well 199-H4-80 (C7595) is located between 100-H and 100-D Areas and east of 105-DX Pump-and-treat transfer station (Figure 1).

Well installation activities took place between June 14 and June 22, 2010. The borehole was drilled to a TD of 74.3 ft bgs. During drilling the RUM was encountered at 67 ft bgs and static groundwater was tagged at 42.35 ft bgs.

One required split spoon soil sample was collected from 71.0 to 73.5 ft bgs. Grab samples for sieve analyses were also collected at approximately the top and the bottom of the aquifer.

A 6-in stainless steel well was installed with a 35.00–ft long, 55-slot screen placed from 31.2 to 66.2 ft bgs and a 3 ft long sump extending to 69.2 ft bgs. Annular fill consists of 8-16 mesh CSS installed from the base of the borehole to 26.2 ft bgs, a bentonite pellet seal placed from 26.2 to 24.4 ft bgs, bentonite crumbles placed from 24.4 to 9.0 ft bgs and a neat cement surface seal poured from 9.0 to 0 ft bgs.

Well development was performed on June 22, 2010 using a 5 hp submersible pump. The well was pumped at rates varying from 41.8 to 68.8 gpm, with a maximum sustained flow rate of 68.8 gpm with 1.27 ft of drawdown after 30 minutes.

2.2.54 199-H4-81 (C7596)

Well 199-H4-81 (C7596) is located north east of 100-D area and northwest of 100-H Area (Figure 1).

Well installation activities took place between June 14 and June 24, 2010. The borehole was drilled to a TD of 44.4 ft bgs. During drilling the RUM was encountered at 39 ft bgs and static groundwater was tagged at 24.5 ft bgs.

One required split spoon soil sample was collected from 41.4 to 43.1 ft bgs. Grab samples for sieve analyses were also collected from 24 to 36 ft bgs.

A 6-in stainless steel well was installed with a 20.01–ft long, 70-slot screen placed from 18.49 to 38.50 ft bgs and a 3 ft long sump extending to 41.50 ft bgs. Annular fill consists of 6-12 mesh CSS installed from the base of the borehole to 13.6 ft bgs, a bentonite pellet seal placed from 13.6 to 12.0 ft bgs, bentonite crumbles placed from 12.0 to 10.2 ft bgs and a neat cement surface seal poured from 10.2 to 0 ft bgs.

Well development was performed on June 24, 2010 using a 5 ph submersible pump. The well was pumped at a maximum sustainable rate of 60 gpm (two pumping sessions at 60 gpm were completed) with a drawdown of 13.05 ft after pumping for 31 minutes.

2.2.55 199-H4-75 (C7597)

Well 199-H4-75 (C7597) is located north west of 100-H Reactor along Hadley Loop Road (Figure 2). Well activities took place between June 29, 2010 and September 30, 2010. The well was drilled to a TD of 59.2 ft bgs. During drilling the RUM was encountered at 50.0 ft bgs and static groundwater was tagged at 40.6 ft bgs.

One required split spoon soil sample was collected from 50.8 to 52.8 ft bgs. Grab samples for sieve analyses were also collected from 25 to 50 ft bgs.

A 6-in stainless steel well was installed with a 15–ft long, 70-slot screen placed from 34.5 to 49.5 ft bgs and a 5 ft long sump extending to 54.5. Annular fill consists of 6-12 mesh CSS installed from the base of the borehole to 39.1 ft bgs, a bentonite pellet seal placed from 39.1 to 27.9 ft bgs, bentonite crumbles placed from 27.9 to 10 ft bgs and a neat cement surface seal poured from 10 to 0 ft bgs.

Well development was performed on September 30, 2010 using a 5 hp submersible pump. The well was pumped at a maximum sustained flow rate of 44 gpm with 3.13 ft of drawdown after pumping for 67 minutes. No post development sample was collected from this well.

2.2.56 199-H4-74 (C7598)

Well 199-H4-74 (C7598) is located south west of 100-H Reactor along Hadley Loop Road (Figure 2). Well activities took place between June 28, 2010 and September 30, 2010. The well was drilled to a TD of 46 ft bgs. During drilling the RUM was encountered at 38 ft bgs and static groundwater was tagged at 87.2 ft bgs.

One required split spoon soil sample was collected as close to the RUM contact as reasonably possible during drilling. The sample was collected from 42.0 to 44.0 ft bgs (4.0 ft within the RUM). The depth to the RUM contact was projected in the SAP to be at 51 ft bgs (13 ft deeper than where the RUM contact actually was encountered) resulting in drilling through the RUM contact. The contact was over driven because the RUM was projected to be encountered at 51 ft according to the SAP. The RUM contact at this location is sharp. Large cobbles were recorded to have been superimposed 4 ft into the RUM but may have been clasts from overlying strata that could not be cleared from the borehole due to the drilling speed. Grab samples for sieve analyses were also collected from 30-38 ft bgs.

A 6-in stainless steel well was installed with a 15–ft long, 70-slot screen placed from 23 to 38 ft bgs and a 5 ft long sump extending to 43. Annular fill consists of 6-12 mesh CSS installed from the base of the borehole to 15.5 ft bgs, a bentonite pellet seal placed from 15.5 to 16.5 ft bgs, bentonite crumbles placed from 16.5 to 5.5 ft bgs and a neat cement surface seal poured from 5.5 to 0 ft bgs.

Well development was performed on September 30, 2010 using a 5 hp submersible pump. The well was pumped at a maximum sustained flow rate of 21 gpm with a 2.37 ft of drawdown after pumping for 41 minutes. No post development sample was collected from this well.

2.2.57 199-D7-3 (C7599)

Well 199-D7-3 (C7599) is located next to 105-DX Pump-and-treat transfer station along Pump House Loop Road (Figure 1).

Well installation activities took place between April 10 and April 21, 2010. The borehole was drilled to a TD of 89.3 ft bgs. During drilling the RUM was encountered at 84.3 ft bgs and static groundwater was tagged at 60.3 ft bgs.

One required split spoon soil sample was collected from 86.0 to 88.4 ft bgs. Grab samples for sieve analyses were also collected from 65 to 75 ft bgs.

A 6-in stainless steel well was installed with a 35.01–ft long, 55-slot screen placed from 47.28 to 82.29 ft bgs and a 3 ft long sump extending to 87.29 ft bgs. Annular fill consists of 8-16 mesh CSS installed from the base of the borehole to 42.4 ft bgs, a bentonite pellet seal placed from 42.4 to 40.9 ft bgs,

bentonite crumbles placed from 40.9 to 9.5 ft bgs and a neat cement surface seal poured from 9.5 to 0 ft bgs.

Well development was performed on April 21, 2010 using a 5 hp submersible pump. The well was pumped at rates varying from 41.8 to 53.8 gpm, with a maximum sustained flow rate of 53.8 gpm with 3.7 ft of drawdown after pumping for 129 minutes.

2.2.58 199-D5-129 (C7600)

Well 199-D5-129 (C7600) is located between 105-D reactor and 105-DR reactor (Figure 1). Well installation activities took place on January 26 and February 11, 2010. During drilling the RUM was encountered at 105.5 ft bgs and static groundwater was tagged at 82.4 ft bgs. The borehole was drilled to a TD of 113.5 ft bgs.

One required split spoon soil sample was collected from 105.8 to 107.8 ft bgs. Grab samples for sieve analyses were also collected between 90 and 100 ft bgs.

A 6-in stainless steel well was installed consisting of a 25–ft long, 55-slot screen set from 78.0 to 103.0 ft bgs and a 5 ft long sump extending to 108.0 ft bgs. The annular fill was installed consisting of: 8-16 mesh CSS placed from the base of the borehole to 72.7 ft bgs, a bentonite pellet seal placed from 72.7 to 72.1 ft bgs, bentonite crumbles placed from the pellet seal to 11.1 ft bgs and a neat cement surface seal poured to ground surface.

Well development was performed on February 11, 2010 using a 5 hp submersible pump. The well was pumped at rates varying from 15.0 to 47.9 gpm, with a maximum sustained flow rate of 47.9 gpm with 1.0 ft of drawdown after pumping for 110 minutes.

2.2.59 199-D5-131 (C7601)

Well 199-D5-131 (C7601) is located north of 105-D Reactor along Pacific Avenue (Figure 1). Well installation activities took place on March 25 and April 27, 2010. During drilling the RUM was encountered at between 107 and 109 ft bgs and static groundwater was tagged at 86.5 ft bgs. The borehole was drilled to a TD of 116.0 ft bgs.

One required split spoon soil samples were collected from 111.0 to 113.5 ft bgs (4 and 6.5 ft below the upper graded contact of RUM). The RUM contact was over drilled to extract large cobbles from the borehole that would prevent returns of adequate sample volume. Grab samples for sieve analyses were also collected between 85 and 105 ft bgs.

A 6-in stainless steel well was installed consisting of a 25–ft long, 55-slot screen placed from 81.2 to 106.2 ft bgs and a 5 ft long sump extending to 111.2 ft bgs. The annular fill was installed consisting of: 8-16 mesh CSS placed from the base of the borehole to 76.2 ft bgs, a bentonite pellet seal placed from 76.2 to 74.3 ft bgs, bentonite crumbles placed from the pellet seal to 10.5 ft bgs and a neat cement surface seal poured to ground surface.

Well development was performed on April 27, 2010 using a 5 hp submersible pump. The well was pumped at rates varying from 29.0 to 30.0 gpm, with a maximum sustained flow rate of 30.0 gpm with 2.4 ft of drawdown after pumping for 101 minutes.

2.2.60 199-D8-98 (C7602)

Well 199-D8-98 (C7602) is located north east of 105-D Reactor and south east of 105-DX pump-and-treat transfer station (Figure 1).

Well installation activities took place between March 7 and March 23, 2010. During drilling the RUM was encountered at 85 ft bgs and static groundwater was tagged at 68.5 ft bgs. The borehole was drilled to a TD of 91.4 ft bgs.

One required split spoon soil samples was collected from 85.0 to 87.5 ft bgs. Grab samples for sieve analyses were also collected between 70 and 85 ft bgs.

A 6-in stainless steel well was installed consisting of a 25–ft long, 70-slot screen placed from 57.9 to 82.3 ft bgs and a 5 ft long sump extending to 88.0 ft bgs. The annular fill was installed consisting of: 6-12 mesh CSS placed from the base of the borehole to 53.4 ft bgs, a bentonite pellet seal placed from 53.4 to 51.8 ft bgs, bentonite crumbles placed from the pellet seal to 10.5 ft bgs and a neat cement surface seal poured to ground surface.

Well development was performed on April 23, 2010 using a 5 hp submersible pump. The well was pumped at rates varying from 21.0 to 27.0 gpm, with a maximum sustained flow rate of 27.0 gpm with 4.9 ft of drawdown after pumping for 100 minutes.

2.2.61 199-D8-96 (C7603)

Well 199-D8-96 (C7603) is located north of 105-D Reactor along Pacific Avenue (Figure 1).

Well installation activities took place between March 27 and April 27, 2010. During drilling the RUM was encountered at 93.4 ft bgs and static groundwater was tagged at 76.3 ft bgs. The borehole was drilled to a TD of 101.5 ft bgs.

One required split spoon soil samples was collected from 99.0 to 101.5 ft bgs. The split spoon soil sample was collected from 6.5 ft into the rum because a split spoon driven closer to the interface broke apart upon removal. Grab samples for sieve analyses were also collected between 70 and 90 ft bgs.
A 6-in stainless steel well was installed consisting of a 20–ft long, 55-slot screen placed from 70.1 to 90.1 ft bgs and a 5 ft long sump extending to 95.1 ft bgs. The annular fill was installed consisting of: 8-16 mesh CSS placed from the base of the borehole to 65.4 ft bgs, a bentonite pellet seal placed from 65.4 to 63.1 ft bgs, bentonite crumbles placed from the pellet seal to 10.4 ft bgs and a neat cement surface seal poured to ground surface.

Well development was performed on April 27, 2010 using a 5 hp submersible pump. The well was pumped at rates varying from 24.0 to 38.8 gpm, with a maximum sustained flow rate of 38.8 gpm with 11.2 ft of drawdown after pumping for 100 minutes.

2.2.62 199-H1-4 (C7604)

Well 199-H1-4 (C7604) is located west of the new 100-HX pump-and-treat plant (Figure 2). Extra sampling took place at this well for RI/FS data needs according to (DOE/RL-2009-09, 2010).

Well activities took place between June 24, 2010 and September 28, 2010. The well was drilled to a TD of 48.5 ft bgs. During drilling the RUM was encountered at 41 ft bgs and static groundwater was tagged at 87.2 ft bgs.

Three of five required split spoon soil samples were collected at this borehole. The samples intended for deep-vadose- and the deep-aquifer-sampling were not collected. The sample points were drilled past due to inaccurate projections of depth to water and depth to the RUM contact. The three remaining samples were collected according to the project SAP. The deep vadose zone sample was collected from 37.3 to 39.3 ft bgs. The shallow aquifer sample was overshot. The deep aquifer sample was also overshot. The RUM contact sample was collected from 41.1 to 43.2 ft bgs and the TD sample was collected from 46.5 to 48.5 ft bgs. Grab samples for sieve analyses were also collected from 35-41 ft bgs.

A 6-in stainless steel well was installed with a -10–ft long, 70-slot screen placed from 41.2 to 31.2 ft bgs and a 15 ft long sump extending to 46.2. Annular fill consists of 6-12 mesh CSS installed from the base of the borehole to 26.3 ft bgs, a bentonite pellet seal placed from 26.3 to 24.5 ft bgs, bentonite crumbles placed from 24.5 to 9.5 ft bgs and a neat cement surface seal poured from 9.5 to 0 ft bgs.

Well development was attempted between September 22, 2010 and September 28, 2010. Initial attempts to develop the well using a 5 hp submersible pump and then a 1/4 hp submersible pump failed due to insufficient recharge rates. A final attempt to develop the well was made using a bailer by bailing the well dry and allowing the well to recharge. The final recharge rate was calculated at 4 gpm. No post development sample was collected from this well.

2.2.63 199-H4-77 (C7605)

Well 199-H4-77 (C7605) is located north west of 100-H Reactor west of Hadley Loop Road (Figure 2).

Well activities took place between July 2, 2010 and September 29, 2010. The well was drilled to a TD of 51 ft bgs. During drilling the RUM was encountered at 42.5 ft bgs and static groundwater was tagged at 87.2 ft bgs.

One required split spoon soil sample was collected from 44.5 to 47.0 ft bgs. Grab samples for sieve analyses were also collected from 30-42.5 ft bgs.

A 6-in stainless steel well was installed with a 10–ft long, 70-slot screen placed from 32.6 to 42.6 ft bgs and a 5 ft long sump extending to 47.6. Annular fill consists of 6-12 mesh CSS installed from the base of the borehole to 27.5 ft bgs, a bentonite pellet seal placed from 27.5 to 25.9 ft bgs, bentonite crumbles placed from 25.9 to 10 ft bgs and a neat cement surface seal poured from 10 to 0 ft bgs.

Well development was performed on September 29, 2010 using a 5 hp submersible pump. The well was pumped at a maximum sustained flow rate of 6 gpm with 0.4 ft of drawdown after 32 minutes. This well could not be sampled post development due to a safety hold that had been placed on all sampling at the Hanford site. No post development sample had been collected at the time of this writing.

2.2.64 199-H1-6 (C7606)

Well 199-H1-6 (C7606) is located northwest 100-HX pump-and-treat plant (Figure 2).

Well activities took place between June 28, 2010 and September 29, 2010. The well was drilled to a TD of 47 ft bgs. During drilling the RUM was encountered at 36.5 ft bgs and static groundwater was tagged at 87.2 ft bgs.

One required split spoon soil sample was collected from 37.5 to 40.0 ft bgs. Grab samples for sieve analyses were also collected from 28-36.5 ft bgs.

A 6-in stainless steel well was installed with a 10–ft long, 45-slot screen placed from 25.9 to 35.9 ft bgs and a 5 ft long sump extending to 40.86. Annular fill consists of 10-20 mesh CSS installed from the base of the borehole to 21.3 ft bgs, a bentonite pellet seal placed from 21.3 to 19.2 ft bgs, bentonite crumbles placed from 19.2 to 10.5 ft bgs and a neat cement surface seal poured from 10.5 to ground surface.

Well development was attempted on September 29, 2010 using a 5 hp pump. The well was pumped dry and was allowed to recharge. The recharge rate was calculated at approximately 2 gpm. Development was discontinued in order to avoid damage to equipment due to overheating. Insufficient recharge rates also prohibited development. No post development sample was collected from this well as of the time of this writing.

2.2.65 199-D6-2 (7607)

Well 199-D6-2 (C7607) is located north east of 105-D Reactor along a north-south trending section of Hadley Loop Road.

Well installation activities took place between March 17 and April 20, 2010. During drilling the RUM was encountered at 73 ft bgs and static groundwater was tagged at 53 ft bgs. The borehole was drilled to a TD of 80.4 ft bgs.

One required split spoon soil samples was collected from 78.0 to 80.4 ft bgs. The sample was collected from 5.5 ft into the rum because a previous split spoon driven closer to the interface had insufficient volume returned for sampling. Grab samples for sieve analyses were also collected between 43 and 71 ft bgs.

A 6-in stainless steel well was installed consisting of a 35–ft long, 70-slot screen placed from 47 to 72 ft bgs and a 5 ft long sump extending to 77 ft bgs. The annular fill was installed consisting of: 6-12 mesh CSS placed from the base of the borehole to 42.0 ft bgs, a bentonite pellet seal placed from 42.0 to 40.1 ft bgs, bentonite crumbles placed from the pellet seal to 10.1 ft bgs and a neat cement surface seal poured to ground surface.

Well development was performed on April 20, 2010 using a 5 hp submersible pump. The well was pumped at rates varying from 29.9 to 74.8 gpm, with a maximum sustained flow rate of 74.8 gpm with 7.3 ft of drawdown after pumping for 114 minutes.

2.2.66 199-D7-5 (C7608)

Well 199-D7-5 (C7608) is located north east of 105-DX pump-and-treat transfer station, at the upper edge of a terrace along a north-south trending gravel road (Figure 1). Extra sampling took place at this well for RI/FS data needs according to (DOE/RL-2009-09, 2010).

Well installation activities took place between June 9 and June 17, 2010. During drilling the RUM was encountered at 54.0 ft bgs and static groundwater was tagged at 45.9 ft bgs. The borehole was drilled to a TD of 63.5 ft bgs.

Five required split spoon soil samples were collected from this borehole. The deep vadose zone sample was collected from 39.0 to 46.1 ft bgs. The shallow aquifer sample was collected from 43.9 to 46.1 ft bgs. The deep vadose sample interval had been drilled past due to an incorrect deep projection of the RUM contact called out in the SAP. The casing was back pulled allowing the formation to collapse to permit sampling of lower aquifer sediments. The RUM contact sample was collected from 54.0 to 56.2 ft

bgs. The TD sample was collected from 61.0 to 63.5 ft bgs. Grab samples for sieve analyses were collected between 25 and 35 ft bgs.

A 6-in stainless steel well was installed consisting of a 20–ft long, 70-slot screen placed from 33.2 to 53.2 ft bgs and a 5 ft long sump extending to 58.5 ft bgs. The annular fill was installed consisting of: 6-12 mesh CSS placed from the base of the borehole to 27.5 ft bgs, a bentonite pellet seal placed from 27.5 to 26.0 ft bgs, bentonite crumbles placed from 26.0 to 9.2 ft bgs and a neat cement surface seal poured from the top of the bentonite to ground surface.

Well development was performed on June 17, 2010 using a 5 hp submersible pump. The well was pumped at a continuously sustained rate of 30 gpm, with 5.0 ft of drawdown after pumping for 75 minutes.

2.2.67 199-H4-82 (C7609)

Well 199-H4-82 (C7609) is located west of the new 100-DX Pump-and-treat plant (Figure 2).

Well installation activities took place between June 12 and June 23, 2010. During drilling the RUM was encountered at 53.0 ft bgs and static groundwater was tagged at 40.4 ft bgs. The borehole was drilled to a TD of 59.1 ft bgs.

One required split spoon soil sample was collected from 56.2 to 58.7 ft bgs. Grab samples for sieve analyses were also collected from 50 to 54 ft bgs.

A 6-in stainless steel well was installed with a 20.02–ft long, 55-slot screen placed from 32.66 to 52.68 ft bgs and a 3 ft long sump extending to 55.68 ft bgs. Annular fill consists of 6-12 mesh CSS installed from the base of the borehole to 27.7 ft bgs, a bentonite pellet seal placed from 27.7 to 26.0 ft bgs, bentonite crumbles placed from 26.0 to 9.5 ft bgs and a neat cement surface seal poured from 9.5 to 0 ft bgs.

Well development was performed on June 23, 2010 using a 5ph submersible pump. The well was pumped at rates varying from 38.8 to 50.0 gpm, with a maximum sustained flow rate of 38.8 gpm with 4.07 ft of drawdown after pumping for 73 minutes.

2.2.68 199-H1-5 (C7610)

Well 199-H1-5 (C7610) is located north east of 105-DX pump-and-treat transfer station at the base of a terrace along a north-south trending gravel road (Figure 1).

Well installation activities took place between June 12 and June 21, 2010. During drilling the RUM was encountered at 42.5 ft bgs and static groundwater was tagged at 23.1 ft bgs. The borehole was drilled to a TD of 46.5 ft bgs.

One required split spoon soil sample was collected from 44.0 to 46.5 ft bgs. Grab samples for sieve analyses were also collected from 22 to 45 ft bgs.

A 6-in stainless steel well was installed with a 25.02–ft long, 55-slot screen placed from 16.08 to 41.10 ft bgs and a 3 ft long sump extending to 44.10 ft bgs. Annular fill consists of 8-16 mesh CSS installed from the base of the borehole to 12.0 ft bgs, a bentonite pellet seal placed from 12.0 to 10.5 ft bgs, bentonite crumbles placed from 10.5 to 5.0 ft bgs and a neat cement surface seal poured from 5.0 to 0 ft bgs.

Well development was performed on June 21, 2010 using a 5 hp submersible pump. The well was pumped at rates varying from 65.8 to 74.8 gpm, with a maximum sustained flow rate of 74.8 gpm with ft 10.2 of drawdown after pumping for 73 minutes.

2.2.69 199-D7-6 (C7611)

Well 199-D7-6 (C7611) is located north east of 105-DX pump-and-treat transfer station at the base of a terrace along a north-south trending gravel road. Extra sampling took place at this well for RI/FS data needs according to (DOE/RL-2009-09, 2010).

Well installation activities took place between June 10 and June 14, 2010. During drilling the RUM was encountered at 43.8 ft bgs and static groundwater was tagged at 25.5 ft bgs.

Four of five required split spoon soil samples were collected from this borehole. The deep vadose zone sample was collected from 22.1 to 24.6 ft bgs. The shallow aquifer sample was collected from 32.9 to 35.4 ft bgs. The sample intended for shallow aquifer sampling was not collected. The sample interval had been drilled past because the RUM contact was encountered at a more shallow depth than projected in sampling plan. The RUM contact sample was collected from 36.5 to 39.0 ft bgs. The TD sample was collected from 41.0 to 43.5 ft bgs. Grab samples for sieve analyses were collected between 25 and 35 ft bgs.

A 6-in stainless steel well was installed consisting of a 15–ft long, 70-slot screen placed from 15.4 to 35.5 ft bgs and a 5 ft long sump extended to 40.5ft bgs. The annular fill was installed consisting of: 6-12 mesh CSS placed from the base of the borehole to 11.3 ft bgs, a bentonite pellet seal placed from 11.3 to 9.4 ft bgs, bentonite crumbles placed from 9.4 to 5.9 ft bgs and a neat cement surface seal poured from 5.9 ft bgs to ground surface.

Well development was performed on June 14, 2010 using a 5 hp submersible pump. The well was pumped at rates varying from 44.8 to 80.9 gpm, with a maximum sustained flow rate of 77.7 gpm with 1.9 ft of drawdown after pumping for 253 minutes.

2.2.70 199-D5-128 (C7612)

Well 199-D5-128 (C7612) is located south-west of 105-DR reactor along Pacific Avenue (Figure 1). Extra sampling took place at this well for RI/FS data needs according to (DOE/RL-2009-09, 2010). The well was installed between January 1 and January 4, 2010 and was drilled to a total depth of 106.6 ft bgs. During drilling the RUM was encountered at 98 ft bgs and static groundwater was tagged at 81 ft bgs.

Five required soil samples were collected from this borehole. However due to oversized gravels, the deep vadose zone sample could not be collected using a split spoon and was collected as a grab sample from the drill rig cuttings exhaust from the next available depth from around 86 ft bgs. The sample was collected from below the water table and consisted of a hexavalent chromium sample only. The shallow aquifer sample was collected from 88.0 to 90.5 ft bgs. The deep aquifer sample was collected from 95.3 to 97.0 ft bgs. The RUM contact sample was collected from 99.0 to 101.5 ft bgs and the TD sample was collected from 101.5 to 103.5 ft bgs. Grab samples for sieve analyses were also collected from 86 to 95 ft bgs.

A 6-in stainless steel well was installed with a 20–ft long, 70-slot screen placed from 77.92 to 97.92 ft bgs and a 5 ft long sump extending to 102.92 ft bgs. A 6-12 mesh CSS was installed from the base of the

borehole to 72.0 ft bgs. A bentonite pellet seal was placed atop the sand from 72.0 to 73.2 ft bgs. Bentonite crumbles were placed to 10.1 ft bgs and a concrete surface seal was poured from 10.1 ft bgs to ground surface.

Well development was performed on February 10, 2010 using a 5 hp submersible pump. The well was pumped at rates varying from 20.0 to 44.8 gpm, with a maximum sustained flow rate of 44.8 gpm with 4.9 ft of drawdown after pumping for 69 minutes.

3.0 GEOLOGY/HYDROGEOLOGY

This section summarizes geologic units and their variability as encountered in the new wells installed throughout the 100-HR-3 OU. The geology encountered in the new wells is generally consistent with geologic descriptions reported in the following works.

- *100-HR-3 Remedial Process Optimization Modeling Data Package* (SGW-40781, 2009),
- *Geologic Setting of the 100-HR-3 Operable Unit, Hanford Site, South-Central Washington.* (Lindsey and Jaeger, 1993)
- *Hydrogeological Summary Report for the 600 Area Between 100-D and 100-H for the 100-HR-3,* (DOE/RL-2008-42, 2008)
- *Limited Field Investigation Report of the 100-HR-3 Operable Unit* (DOE/RL-93-43, 1994).

The geology encountered in the new wells is summarized below. Borehole logs are provided in Appendix B and a table summarizing depths and elevations of encountered geologic units is provided in Table 3.

3.1 Geology

The Horn including the 100-D and –H Areas is underlain (from oldest to youngest)by Miocene- aged basalt bedrock of the Elephant Member of the Columbia River Basalt Group with interbedded Ellensburg Formation, the Ringold Formation alluvial and lacustrine deposits of the Miocene- to Pliocene-aged Ringold Formation (Fm.), large scale glacial outwash and flood deposits of the , Pleistocene-aged Hanford formation (fm.) and Holocene-aged alluvial and eolian sediments (Lindsey, 1993 and DOE/RL-93-43). In this report the geology of the well field is only defined down to a targeted confining layer within the Ringold Fm. known as the Ringold Upper Mud (RUM) Unit.

The ground surface in the 100-HR-3 OU, according to the *Remedial Process Optimization for the 100-D Area Technical Memorandum Document* (SGW-38338, 2008), reflects the influence of the Pleistocene Missoula Floods and subsequent reestablishment and migration of the Columbia River through the Horn and the 100-H Area. Surface features that reflect the catastrophic Missoula floods in the area include giant ripple marks and gravel bars. Well-defined curvilinear channel trace features are visible on both sides of the river, indicating that the channel has repeatedly migrated across the valley floor (SGW-38338, 2008).

The ground surface of the 100-H and 100-D Areas has been extensively disturbed by construction and demolition work. The area around the 100 areas has also been disturbed by homestead agricultural tilling. Anthropogenically disturbed sediments typically extend to 15 ft to 30 ft bgs in the vicinity of the 100 areas and typically extend to 2 ft bgs around the 100 Areas. Surface sediments encountered during drilling exhibit anthropogenic influence to depths no greater than 15 ft bgs. Relatively undisturbed surface sediments typically consist of eolian silty sand to sandy silt (DOE/RL-2008-46, 2009).

The Hanford fm. directly underlies the surface material. The Hanford fm. encountered in boreholes throughout the 100-HR-3 OU principally consists of unconsolidated, poorly sorted matrix-supported to clast-supported, pebble to boulder gravel with fine- to coarse-grained quartzo-feldspathic and basalt sand. The fm. also contains interspersed, moderate- to well-sorted beds and lenses of basaltic dominated sand and nearly matrix free gravel. The Hanford fm. is mafic dominated, ranging approximately 40% to 98%

basalt with subordinate amounts of well- to sub-rounded clasts of felsic granitics, intermediate volcanics and metamorphics. Hanford fm. sediments encountered in boreholes east of the 100-D Area exhibit higher felsic compositions than sediments encountered in the 100-D Area. Sediments encountered east of the 100-D Area range between 35% and 65% felsic composition and exhibit moderately-poor to very-poor sorting. The Hanford fm. ranges from 85 ft to 0 ft thick across the 100-HR-3 OU. The fm. is thickest under the 100-D Area and thins to the north and east of the 100-D area following the break in topography around the 100-D Area. Hanford fm. disconformably overlies fluvial gravels of Unit E of the Ringold Fm. (were present) and disconformably overlies silt and clay of the Ringold Fm. Upper Mud Unit where Unit E has been eroded (DOE/RL-2008-42, 2009 and DOE/RL-93-43, 1994).

The Ringold Fm. Unit E is principally composed of matrix-supported, well rounded, gravels and sands with interspersed fine to coarse sand beds and lenses. Unit E sediments encountered in wells throughout the 100-D Area are felsic dominated. Gravels range between 75% and 98% felsic composition consisting principally of well-to very-well rounded metamorphics, intermediate volcanics and felsic volcanics with lesser sub-angular basalt. Matrix material typically consists of 75% to 98% quartz-feldspathic, mica and pyrite bearing sand. The upper portion of Unit E typically exhibits bimodal matrix material of fine- to medium-grained quartz-feldspathic sand and coarse- to very-coarse- basaltic sand. Gravels are typically well- to very-well rounded and discoidal. Unit E is poor to very well consolidated, with interspersed zones of varying degrees of carbonate cementation. Samples of a very well cemented zone of Unit E from well 199-D5-129 (C7600) located near the 105-D reactor exhibit very infriable, calcium carbonate cemented sandy matrix cementing clasts together. Unit E gravels range from 50 to 65 ft thick within the 100-D Area and are mostly removed by erosion to the east of the 100-D Area existing as erosional remnants across the horn and the 100-H Area (Lindsey and Jaeger, 1993; DOE/RL-2008-42, 2009; SGW-40781, 2009; SGW-40781, 2009).

In the 100-D Area a prominent sand bed 3 to 10 ft thick consisting of 80% to 98% quartz-feldspathic mica bearing sand was encountered within 5 ft of the top of Unit E and can be traced between many wells throughout the 100-D Area.

A 0.5 to 1.5 ft thick bed of carbonate rich gravel is present at the base of Unit E laying atop the Ringold Fm. Upper Mud Unit. The bed is composed of moderately-well to very-well sorted, very well rounded fine to medium pebbles with abundant clasts coated in calcium carbonate. Up to 1-inch sub-rounded nodules of calcium carbonate are also present within the bed. Up to 4-inch diameter clay nodules are also present within the bed at intermittent locations throughout the 100-HR-3 OU. Where identified, this bed is encountered, in sequence, underlying felsic rich gravel exceeding 80% felsic composition and overlying the RUM. This sequence may be an indicator of the presence, or partial presence, of undisturbed Ringold Fm. Where identified, this bed can be traced between many wells across the 100-D Area and may be used to identify remnants of Ringold Unit E in wells across the Horn and the 100-H Area .

The contact between Hanford fm.- and Ringold Fm.-gravels is gradational making it difficult to discern between the two formations. According to Lindsey and Jaeger (1993) several criteria are used to differentiate between the two formations. The sand fraction of Hanford gravels generally contain greater than 40% basalt and Ringold Unit E gravels contain less than 25% basalt. Hanford gravels often appear unweathered where Unit E gravels often exhibit reddish brown to yellow-red oxide rinds. Hanford gravels are also unconsolidated where Ringold sediments are generally consolidated and cemented locally. The contact encountered in many of the new wells exhibit qualities common to both formations as though they were blended together. Where the contact is thickest the lower Hanford fm. contains a sharp increase in the number of felsic clasts with sand composition gradually transitioning downward from mafic dominant to felsic dominant. The point at which whole sample compositions exceed 75% felsic composition and where the degree of carbonate cementation begins to increase is most likely

representative of undisturbed Unit E sediments. Lindsey and Jaeger (1993) interpret the blended contact as entrained Ringold Fm. sediment that has been mixed and re-deposited with younger Hanford fm. sediment. These reworked sediments are also typically assumed to be much more permeable than underlying undisturbed Ringold Fm sediments (DOE/RL-2008-42, 2009).

The Ringold Fm. Upper Mud Unit underlies the Ringold Fm. Unit E gravels (where present) and underlies Hanford fm. gravels where the Unit E gravels are absent. The RUM is principally composed of variably cemented overbank flood deposits and paleosols (Lindsey et al. 1993). RUM sediments encountered throughout the Horn consist of clay, silt and sandy silts varying in color from strong brown to light olive-brown. The surface of the RUM is essentially continuous and relatively flat lying throughout the 100-HR-3 OU(DOE/RL-2008-42, 2009). The elevation of the RUM surface appears to undulate slightly between wells with a topographic high across the north center portion of the Horn extending across the H-Area. This will be addressed in future updates to the data modeling packages for the 100-HR-3 Area. The contact of the RUM with overlying gravels is very sharp and very easily discerned; however, in many of the new boreholes, the contact of the RUM is locally gradational. Clasts encountered within the localized gradational zones are predominantly well- to sub-rounded, large cobbles predominantly of basalt and may be clasts that have settled into the mud from overlying strata. Alternatively, the RUM surface may have been locally eroded and subsequently re-deposited with, heavy saltating clasts from sediments within the erosional environment.

3.2 Hydrogeology

An in depth discussion of the hydrogeologic properties of various geologic units encountered at the 100-HR-3 OU and their significance to contaminant migration is available in the *100-HR-3 Remedial Process Optimization Modeling Data Package* (SGW-40781, 2009). Properties of the aquifer observed in the field will be summarized.

Table 3. Geologic Summary: 100-D and 100-H Areas

Identification		Vertical Survey		Depth in feet Below Ground Surface					Elevations in feet above mean sea level				
Well ID	Well Name	Ground Surface Elevation (m)	Ground Surface Elevation (ft.)	Hanford fm. Upper Contact	Ringold Fm. Unit E Upper Contact	RUM Upper Contact	Borehole Total Depth	Water Table	Hanford fm. Upper Contact	Ringold Fm. Unit E Upper Contact	RUM Upper Contact	Borehole Total Depth	Water Table
100-D Area													
C7083	199-D4-95	143.17	469.74	0.00	67.00	115.50	121.40	84.45	469.74	402.74	354.24	348.34	385.29
C7084	199-D4-96	143.89	472.10	0.00	60.00	99.00	106.50	87.20	472.10	412.10	373.10	365.60	384.90
C7085	199-D4-97	143.55	470.99	0.00	60.00	104.50	110.00	86.00	470.99	410.99	366.49	360.99	384.99
C7086	199-D4-98	142.85	468.69	3.00	59.00	102.80	111.00	82.70	465.69	409.69	365.89	357.69	385.99
C7087	199-D4-99	143.09	469.48	0.00	62.00	109.50	116.20	83.85	469.48	407.48	359.98	353.28	385.63
C7089	199-D2-10	120.14	394.18	0.00	N/A	26.00	31.00	10.77	394.18	NA	368.18	363.18	383.41
C7090	199-D2-12	120.39	395.00	0.00	N/A	28.20	34.00	11.00	395.00	NA	366.80	361.00	384.00
C7091	199-D8-5	137.87	452.35	0.00	52.00	78.00	84.80	69.25	452.35	400.35	374.35	367.55	383.10
C7092	199-D8-90	125.84	412.88	0.00	N/A	51.00	56.40	29.25	412.88	NA	361.88	356.48	383.63
C7093	199-D8-91	123.55	405.37	0.00	N/A	40.00	46.50	22.15	405.37	NA	365.37	358.87	383.22
C7095	199-D8-93	120.22	394.44	0.00	N/A	16.00	21.00	9.60	394.44	NA	378.44	373.44	384.84
C7096	199-D8-94	120.08	393.98	0.00	N/A	26.30	31.30	10.10	393.98	NA	367.68	362.68	383.88
C7580	199-D4-101	143.605	471.17	0.00	63.00	105.00	109.90	84.00	471.17	408.17	366.17	361.27	387.17
C7582	199-D8-97	140.851	462.13	0.00	58.00	98.00	104.30	77.50	462.13	404.13	364.13	357.83	384.63
C7583	199-D5-101	143.825	471.89	0.00	56.00	108.00	114.30	85.50	471.89	415.89	363.89	357.59	386.39
C7589	199-D8-95	141.805	465.26	2.00	58.00	97.00	104.40	81.30	463.26	407.26	368.26	360.86	383.96
C7590	199-D5-130	142.404	467.23	6.00	62.00	95.00	101.40	81.80	461.23	405.23	372.23	365.83	385.43

Table 3. Geologic Summary: 100-D and 100-H Areas

Identification		Vertical Survey		Depth in feet Below Ground Surface					Elevations in feet above mean sea level				
Well ID	Well Name	Ground Surface Elevation (m)	Ground Surface Elevation (ft.)	Hanford fm. Upper Contact	Ringold Fm. Unit E Upper Contact	RUM Upper Contact	Borehole Total Depth	Water Table	Hanford fm. Upper Contact	Ringold Fm. Unit E Upper Contact	RUM Upper Contact	Borehole Total Depth	Water Table
						100-D Area							
C7591	199-D5-127	143.83	471.91	0.00	65.00	106.00	109.00	85.50	471.91	406.91	365.91	362.91	386.41
C7592	199-D6-1	144.22	473.19	0.00	62.00	101.00	107.00	87.10	473.19	411.19	372.19	366.19	386.09
C7593	199-D8-99	136.544	448.00	0.00	57.00	84.00	88.90	64.50	448.00	391.00	364.00	359.10	383.50
C7594	199-D7-4	133.756	438.85	4.00	44.00	74.00	77.50	54.40	434.85	394.85	364.85	361.35	384.45
C7599	199-D7-3	135.384	444.19	0.00	61.00	84.00	89.30	60.30	444.19	383.19	360.19	354.89	383.89
C7600	199-D5-129	143.15	469.68	0.00	60.00	105.50	113.50	83.37	469.68	409.68	364.18	356.18	386.31
C7601	199-D5-131	143.752	471.65	2.00	58.00	109.00	116.40	86.10	469.65	413.65	362.65	355.25	385.55
C7602	199-D8-98	138.028	452.87	0.00	82.00	85.00	91.40	68.50	452.87	370.87	367.87	361.47	384.37
C7603	199-D8-96	140.478	460.91	0.00	50.00	93.40	101.50	76.30	460.91	410.91	367.51	359.41	384.61
C7607	199-D6-2	133.724	438.75	0.00	23.00	77.00	80.40	53.20	438.75	415.75	361.75	358.35	385.55
C7608	199-D7-5	131.425	431.21	0.00	N/A	54.00	63.50	45.60	431.21	NA	377.21	367.71	385.61
C7611	199-D7-6	125.014	410.17	13.00	30.00	36.50	43.80	24.90	397.17	380.17	373.67	366.37	385.27
C7612	199-D5-128	143	469.18	2.00	81.00	99.00	106.60	81.85	467.18	388.18	370.18	362.58	387.33
C7098	199-H1-38	126.25	414.23	0.00	N/A	42.00	47.50	33.85	414.23	NA	372.23	366.73	380.38
C7099	199-H1-37	126.047	413.56	0.00	N/A	41.00	46.40	33.20	413.56	NA	372.56	367.16	380.36
C7100	199-H1-32	127.457	418.19	0.00	N/A	43.00	51.40	37.30	418.19	NA	375.19	366.79	380.89
C7102	199-H1-36	125.456	411.62	4.00	N/A	39.00	46.50	31.50	407.62	NA	372.62	365.12	380.12

Table 3. Geologic Summary: 100-D and 100-H Areas

Identification		Vertical Survey		Depth in feet Below Ground Surface					Elevations in feet above mean sea level				
Well ID	Well Name	Ground Surface Elevation (m)	Ground Surface Elevation (ft.)	Hanford fm. Upper Contact	Ringold Fm. Unit E Upper Contact	RUM Upper Contact	Borehole Total Depth	Water Table	Hanford fm. Upper Contact	Ringold Fm. Unit E Upper Contact	RUM Upper Contact	Borehole Total Depth	Water Table
100-H Area													
C7104	199-H1-40	126.638	415.50	2.00	N/A	38.50	44.40	33.10	413.50	NA	377.00	371.10	382.40
C7105	199-H1-33	125.951	413.25	0.00	N/A	39.00	45.00	33.40	413.25	NA	374.25	368.25	379.85
C7106	199-H1-35	126.087	413.69	0.00	N/A	41.00	46.50	31.70	413.69	NA	372.69	367.19	381.99
C7107	199-H1-42	125.571	412.00	0.00	N/A	41.00	44.00	29.40	412.00	NA	371.00	368.00	382.60
C7108	199-H1-34	124.618	408.87	0.00	N/A	39.50	44.90	32.00	408.87	NA	369.37	363.97	376.87
C7109	199-H1-39	125.358	411.30	0.00	N/A	38.00	44.00	34.80	411.30	NA	373.30	367.30	376.50
C7110	199-H3-25	125.567	411.99	0.00	N/A	56.00	61.20	39.00	411.99	NA	355.99	350.79	372.99
C7111	199-H1-21	127.791	419.28	0.00	N/A	33.00	39.80	23.10	419.28	NA	386.28	379.48	396.18
C7113	199-H1-20	121.114	397.38	0.00	N/A	38.00	57.70	22.50	397.38	NA	359.38	339.68	374.88
C7114	199-H3-27	128.356	421.14	0.00	N/A	57.00	61.90	44.25	421.14	NA	364.14	359.24	376.89
C7115	199-H3-26	127.303	417.68	6.00	N/A	52.00	56.30	37.60	411.68	NA	365.68	361.38	380.08
C7477	199-H1-45	127.895	419.62	0.00	N/A	55.50	61.08	39.65	419.62	NA	364.12	358.54	379.97
C7478	199-H1-25	122.956	403.42	0.00	N/A	32.00	39.50	22.50	403.42	NA	371.42	363.92	380.92
C7480	199-H1-27	123.565	405.42	0.00	N/A	35.00	41.20	23.10	405.42	NA	370.42	364.22	382.32
C7483	199-H4-70	129.604	425.23	0.00	N/A	56.00	61.40	46.30	425.23	NA	369.23	363.83	378.93
C7484	199-H4-73	129.312	424.27	0.00	N/A	64.50	71.00	44.50	424.27	NA	359.77	353.27	379.77

Table 3. Geologic Summary: 100-D and 100-H Areas

Identification		Vertical Survey		Depth in feet Below Ground Surface					Elevations in feet above mean sea level				
Well ID	Well Name	Ground Surface Elevation (m)	Ground Surface Elevation (ft.)	Hanford fm. Upper Contact	Ringold Fm. Unit E Upper Contact	RUM Upper Contact	Borehole Total Depth	Water Table	Hanford fm. Upper Contact	Ringold Fm. Unit E Upper Contact	RUM Upper Contact	Borehole Total Depth	Water Table
100-H Area													
C7485	199-H4-69	129.385	424.51	0.00	N/A	58.00	63.83	45.95	424.51	NA	366.51	360.68	378.56
C7487	199-H4-71	129.781	425.81	0.00	N/A	62.00	71.00	47.30	425.81	NA	363.81	354.81	378.51
C7488	199-H4-72	128.391	421.25	0.00	N/A	56.00	61.25	42.30	421.25	NA	365.25	360.00	378.95
C7489	199-H6-2	129.023	423.32	0.00	N/A	51.00	60.70	43.00	423.32	NA	372.32	362.62	380.32
C7492	199-H1-43	125.348	411.27	0.00	N/A	43.00	49.00	31.51	411.27	NA	368.27	362.27	379.76
C7581	199-H1-3	128.562	421.81	0.00	N/A	42.00	48.50	40.00	421.81	NA	379.81	373.31	381.81
C7584	199-H1-2	128.128	420.39	0.00	N/A	45.60	54.50	37.40	420.39	NA	374.79	365.89	382.99
C7585	199-H1-1	123.519	405.27	0.00	N/A	33.80	41.10	22.50	405.27	NA	371.47	364.17	382.77
C7586	199-H4-79	131.302	430.80	3.00	48.00	59.50	65.00	45.40	427.80	382.80	371.30	365.80	385.40
C7587	199-H4-76	129.655	425.40	6.00	N/A	47.50	56.40	43.10	419.40	NA	377.90	369.00	382.30
C7588	199-H4-78	129.543	425.03	0.00	35.00	59.50	64.10	40.10	425.03	390.03	365.53	360.93	384.93
C7595	199-H4-80	129.343	424.37	1.50	40.00	67.00	74.30	42.35	422.87	384.37	357.37	350.07	382.02
C7596	199-H4-81	124.786	409.42	0.00	N/A	39.00	44.40	24.50	409.42	NA	370.42	365.02	384.92
C7597	199-H4-75	128.542	421.75	0.00	40.00	50.00	59.20	40.60	421.75	381.75	371.75	362.55	381.15
C7598	199-H4-74	125.355	411.29	0.00	30.00	38.00	46.00	30.50	411.29	381.29	373.29	365.29	380.79
C7604	199-H1-4	127.881	419.58	0.00	N/A	41.00	48.50	36.40	419.58	NA	378.58	371.08	383.18

Table 3. Geologic Summary: 100-D and 100-H Areas

Identification		Vertical Survey		Depth in feet Below Ground Surface					Elevations in feet above mean sea level				
Well ID	Well Name	Ground Surface Elevation (m)	Ground Surface Elevation (ft.)	Hanford fm. Upper Contact	Ringold Fm. Unit E Upper Contact	RUM Upper Contact	Borehole Total Depth	Water Table	Hanford fm. Upper Contact	Ringold Fm. Unit E Upper Contact	RUM Upper Contact	Borehole Total Depth	Water Table
100-H Area													
C7605	199-H4-77	127.894	419.62	0.00	N/A	42.50	51.00	36.70	419.62	NA	377.12	368.62	382.92
C7606	199-H1-6	125.435	411.55	0.00	N/A	36.50	47.00	28.50	411.55	NA	375.05	364.55	383.05
C7609	199-H4-82	129.602	425.22	0.00	N/A	53.00	59.10	40.40	425.22	NA	372.22	366.12	384.82
C7610	199-H1-5	123.993	406.82	3.00	25.00	42.50	46.50	23.10	403.82	381.82	364.32	360.32	383.72

Notes:

[a] North American Vertical Datum of 1988 (NAVD88) values rounded to 0.01 m.

Fm. = Formation (formal)

Fm. = formation (informal)

ft = feet

ID = Identification

M = meter

N/A = Not Applicable (not observed or reported by geologist)

RUM = Ringold Upper Mud

4.0 CIVIL SURVEY

Each well was surveyed to the brass marker set in the north side of the well pad and to the north edge of the top of the protective casing. Well locations were surveyed by a licensed or license delegate of a professional land surveyor for the State of Washington under the direction of CH2MHILL Plateau Remediation Company.

Each well location was surveyed twice: once prior to the start of drilling to mark the wells intended location, and once after all well installation activities were completed to compensate for deviations in the actual well location compared to the intended location and to record the final elevations of the well pad and protective casing.

Surveys were carried out using a Trimble[1] Global Positioning System 5800 RTK and Trimble DiNi 12 Level. Vertical measurements were recorded using North American Vertical Datum of 1988 (NAVD88) for local control monuments. Vertical measurements were reported in meters above mean sea level. Horizontal measurements were recorded using WCS83S/91: Washington State Plane coordinate system (South Zone) North American Datum of 1983 (NAD83) with the 1991 adjustment for horizontal coordinates (NAD83[91], 1991). Horizontal measurements were reported in meters east of the nearest control monument. Surveyed locations of the wells are presented in the below table.

Table 4. Survey Summary: 100-D and 100-H Areas Wells

Well ID	Well Name	Northing	Easting	Elevation	Survey Date
			100-D Area		
C7083	199-D4-95	151226.70	572612.82	143.170	11/09/2009
C7084	199-D4-96	151519.78	572777.03	143.890	2/17/2009
C7085	199-D4-97	151625.33	572906.23	143.550	4/07/2009
C7086	199-D4-98	151481.65	572574.52	142.850	11/09/2009
C7087	199-D4-99	151377.08	572527.36	143.090	11/09/2009
C7089	199-D2-10	153465.19	574470.87	120.140	12/08/2009
C7090	199-D2-12	153300.01	574343.45	120.390	12/08/2009
C7091	199-D8-89	152249.65	573478.64	137.870	10/01/2009
C7092	199-D8-90	152646.23	573948.64	125.840	12/08/2009
C7093	199-D8-91	152741.44	574036.89	123.550	12/08/2009
C7095	199-D8-93	153085.80	574148.70	120.220	12/03/2009

[1] Trimble is a registered trademark of Trimble Navigation Limited, Sunnyvale, CA

Table 4. Survey Summary: 100-D and 100-H Areas Wells

Well ID	Well Name	Northing	Easting	Elevation	Survey Date
			100-D Area		
C7096	199-D8-94	152949.53	574047.82	120.080	12/03/2009
C7580	199-D4-101	151425.94	572800.1	143.605	7/23/2010
C7582	199-D8-97	152087.42	573859.56	140.851	7/23/2010
C7583	199-D5-101	151521.52	572943.04	143.825	7/23/2010
C7589	199-D8-95	152160.61	573611.96	141.805	7/23/2010
C7590	199-D5-130	151928.51	574039.2	142.404	7/23/2010
C7591	199-D5-127	151428.31	572992.26	143.830	7/23/2010
C7592	199-D6-1	151691.71	574129.87	144.220	7/23/2010
C7593	199-D8-99	152364.37	574006.77	136.544	7/23/2010
C7594	199-D7-4	152369.64	574377.07	133.756	7/23/2010
C7599	199-D7-3	152363.41	574151.38	135.384	7/23/2010
C7600	199-D5-129	151465.13	573735.50	143.150	7/23/2010
C7601	199-D5-131	152006.75	573684.39	143.752	7/23/2010
C7602	199-D8-98	152123.02	574013.12	138.028	7/23/2010
C7603	199-D8-96	152152.24	573706.00	140.478	7/23/2010
C7607	199-D6-2	151970.2	574544.61	133.724	7/23/2010
C7608	199-D7-5	152678.72	574434.31	131.425	8/17/2010
C7611	199-D7-6	152980.43	574429.20	125.014	8/17/2010
C7612	199-D5-128	151237.35	573622.40	143.000	1/18/2010

Table 4. Survey Summary: 100-D and 100-H Areas Wells

Well ID	Well Name	Northing	Easting	Elevation	Survey Date
			100 H Area		
C7098	199-H1-38	153555.01	577161.00	126.250	8/18/2010
C7099	199-H1-37	153641.63	577106.92	126.047	8/18/2010
C7100	199-H1-32	153766.00	576767.07	127.457	8/18/2010
C7102	199-H1-36	153486.51	576885.62	125.456	8/18/2010
C7104	199-H1-40	153500.19	577279.34	126.638	8/18/2010
C7105	199-H1-33	153716.23	576833.29	125.951	8/18/2010
C7106	199-H1-35	153628.14	576958.26	126.087	8/18/2010
C7107	199-H1-42	153391.65	577127.18	125.571	11/14/2009
C7108	199-H1-34	153667.06	576883.13	124.618	8/18/2010
C7109	199-H1-39	153533.40	577223.54	125.358	8/18/2010
C7110	199-H3-25	152978.49	577410.36	125.567	11/14/2009
C7111	199-H1-21	154163.80	575896.84	127.791	9/13/2010
C7113	199-H1-20	154183.61	575706.04	121.114	9/13/2010
C7114	199-H3-27	152811.14	577567.05	128.356	11/14/2009
C7115	199-H3-26	152846.50	577440.83	127.303	11/14/2009
C7477	199-H1-45	153062.41	577240.96	127.895	11/14/2009
C7478	199-H1-25	154069.97	576279.64	122.956	9/13/2010
C7480	199-H1-27	154024.21	576403.86	123.565	9/13/2010
C7483	199-W4-70	152646.45	578003.82	129.604	11/14/2009
C7484	199-H4-73	152369.98	577940.58	129.312	11/14/2009
C7485	199-H4-69	152686.66	578014.05	129.385	11/14/2009
C7487	199-H4-71	152581.53	578010.64	129.781	11/14/2009
C7488	199-H4-72	152500.14	578036.28	128.391	11/14/2009
C7489	199-H6-2	152194.11	577886.50	129.023	11/14/2009
C7492	199-H1-43	153384.28	577213.74	125.348	11/14/2009
C7581	199-H1-3	153372.22	576163.04	128.562	11/10/2010

Table 4. Survey Summary: 100-D and 100-H Areas Wells

Well ID	Well Name	Northing	Easting	Elevation	Survey Date
			100 H Area		
C7584	199-H1-2	153378.26	576451.07	128.128	11/10/2010
C7585	199-H1-1	153384.49	576702.31	123.519	11/10/2010
C7586	199-H4-79	151989.31	575659.13	131.302	11/10/2010
C7587	199-H4-76	152976.85	576787.32	129.655	11/10/2010
C7588	199-H4-78	152166.12	576168.23	129.543	11/10/2010
C7595	199-H4-80	152568.16	575238.97	129.343	9/30/2010
C7596	199-H4-81	153035.36	575236.93	124.786	9/30/2010
C7597	199-H4-75	152704.64	577212.36	128.542	11/10/2010
C7598	199-H4-74	152268.83	577239.07	125.355	11/10/2010
C7604	199-H1-4	153366.87	575826.78	127.881	11/10/2010
C7605	199-H4-77	152975.43	576487.79	127.890	11/10/2010
C7606	199-h1-6	153745.74	576037.81	125.435	11/10/2010
C7609	199-H4-82	152677.72	574906.99	129.602	9/30/2010
C7610	199-H1-5	153090.30	574850.72	123.993	9/30/2010

Notes:
Vertical and Horizontal Surveys reported in Meters.
ID = identification

5.0 WASTE MANAGEMENT

Waste generated throughout the scope of this project was managed according to the strategy documented in the *Interim Action Waste Management Plan for the 100-HR-3 and 100-KR-4 Operable Units* (DOE/RL-97-01, 2005). All generated waste was classified as investigation derived waste. Waste streams generated throughout the installation of project wells included the following:

- Vadose zone derived waste
- Saturated zone derived waste
- Purgewater including decontamination fluids
- Miscellaneous Solid Waste (MSW) and
- Construction debris.

According to the SAP, proximal data and documents covering similar locations/materials could be used in lieu of a site-specific Waste Data Quality Objectives summary reports. Reports used in the waste DQO process are as follows:

- Data Quality Objectives Summary Report for the Wells Installation to Support the Horn Investigation at 600 Area of the 100-HR-3 Operable Unit (SGW-34174, 2007)
- Data Quality Objective Summary Report for the Characterization of FY-08 Investigation-Derived Waste Generated From the Northern Plume Chromium Investigation in the 100-D Area (SGW-37439, 2008).
- Data Quality Objective Summary Report for the Installation of Chromium Investigation Wells in the 100-D Area (WMP-32331, 2007)
- Data Quality Objective Summary Report for the Disposition of Waste from the Drilling of Fourteen Remedial Process Optimization Wells in the 100-D Area (SGW-40969, 2009)
- Data Quality Objective Summary Report for the Designation of Investigation –Derived Waste at Four FY10 Scenario-5 RPO Wells in the 100-HR-3 Operable Unit (SGW-45595, 2010)

The above documents were also used in the development of site-specific Waste Packaging/Labeling Instruction Sheets (WP/LIS) as they applied to individual wells. All waste was handled in accordance with the WP/LISs.

5.1 Vadose Zone Waste

Waste derived from above the historic high water mark is considered vadose zone material. This waste consists primarily of drill cuttings and miscellaneous solid waste (MSW). MSW was packaged separately from sediments in a drum identified specifically for MSW. Vadose zone derived waste from each well was handled in accordance with its corresponding waste DQO summary report. The fate of vadose zone derived waste is not known at the time of this writing.

5.2 Saturated Zone Waste

All drill cuttings produced from at or below the historic high water table were contained in 55-gallon drums lined with 0.6 mm liners. Free liquid from the contained saturated sediments was transferred by pumping to a purge water truck and managed as purgewater. All saturated drill cuttings will be profiled and disposed of at the Environmental Restoration Disposal Facility (ERDF) following the procedure stipulated in the WP/LIS. The fate of saturated zone derived waste was unknown at the time that this document was written.

5.3 Purgewater

All purgewater was contained on site in 55-gallon drums or was pumped directly to a purge water tank truck. All purgewater was transported to the Modular Storage Unit for disposal.

6.0 WELL ACCEPTANCE

Well acceptance represents confirmation of fulfillment of the work scope requirements and represents the contractual completion of the project, transferring well ownership from the drilling contractor to the buyer.

Final well acceptance was documented by signatures from representatives of the drilling contractor and CHRPC following a review of well-installation documents and a well-site inspection. The well inspections and well acceptance activities included representatives from Layne Christensen, Inc. and CHPRC and were completed on dates identified in the associated table below.

The acceptance of the completed wells and associated documentation was documented on the following QA Surveillance reports: QA-SGRP-SURV-10-016, QA-SRGP-SURV-10-017, QA-SGRP-SURV-10-034, QA-SGRP-SURV-11-011 and QA-SGRP-SURV-11-012.

NCR-10-SGRP-008 was issued to document the fact that the screen placement in C7084, C7085, C7090, C7101, C7477, C7483, C7485 and C7492 was not per the requirement stated in the Sampling and Analysis Plan. The placement of the screens was evaluated by the design authority and accepted as is.

Table 5 Well Acceptance Dates: 100-D and 100-H Area Wells

Well ID	Well Name	Acceptance Date	Ecology ID	Well ID	Well Name	Acceptance Date	Ecology ID
100-D Area							
C7083	199-D4-95	2/22/2010	BBJ 553	C7589	199-D8-95	5/4/2010	BBJ 569
C7084	199-D4-96	2/22/2010	ALN 548	C7590	199-D5-130	5/4/2010	BBJ 566
C7085	199-D4-97	2/22/2010	ALN 549	C7591	199-D5-127	5/4/2010	BBJ 572
C7086	199-D4-98	2/22/2010	BBJ 551	C7592	199-D6-1	5/4/2010	BBJ 567
C7087	199-D4-99	2/22/2010	BBJ 552	C7593	199-D8-99	5/4/2010	BBJ 574
C7089	199-D2-10	2/22/2010	BBJ 561	C7594	199-D7-4	5/4/2010	BBJ 563
C7090	199-D2-12	2/22/2010	BBJ 560	C7599	199-D7-3	5/4/2010	BBJ 564
C7091	199-D8-89	2/22/2010	ALN 550	C7600	199-D5-129	2/22/2010	BBJ 554
C7092	199-D8-90	2/22/2010	BBJ 556	C7601	199-D5-131	5/4/2010	BBJ 568
C7093	199-D8-91	2/22/2010	BBJ 557	C7602	199-D8-98	5/4/2010	BBJ 565
C7095	199-D8-93	2/22/2010	BBJ 559	C7603	199-D8-96	5/4/2010	BBJ 575
C7096	199-D8-94	2/22/2010	BBJ 558	C7607	199-D6-2	5/4/2010	BBJ 562
C7580	199-D4-101	5/4/2010	BBJ 571	C7608	199-D7-5	6/29/2010	BBJ 592
C7582	199-D8-97	5/4/2010	BBJ 573	C7611	199-D7-6	6/29/2010	BBJ 594
C7583	199-D5-101	5/4/2010	BBJ 570	C7612	199-D5-128	2/22/2010	BBJ 555
100-H Area							

Table 5 Well Acceptance Dates: 100-D and 100-H Area Wells

Well ID	Well Name	Acceptance Date	Ecology ID	Well ID	Well Name	Acceptance Date	Ecology ID
C7098	199-H1-38	7/1/2010	BBJ 578	C7485	199-H4-69	11/5/2009	ALN 541
C7099	199-H1-37	7/1/2010	BBJ 579	C7487	199-H4-71	11/5/2009	ALN 539
C7100	199-H1-32	7/1/2010	BBJ 584	C7488	199-H4-72	11/5/2009	ALN 538
C7102	199-H1-36	7/1/2010	BBJ 581	C7489	199-H6-2	11/5/2009	ALN 536
C7104	199-H1-40	7/1/2010	BBJ 576	C7492	199-H1-43	11/5/2009	ALN 546
C7105	199-H1-33	7/1/2010	BBJ 583	C7581	199-H1-3	10/6/2010	BBJ 258
C7106	199-H1-35	7/1/2010	BBJ 580	C7584	199-H1-2	10/6/2010	BBJ 257
C7107	199-H1-42	11/5/2009	ALN 547	C7585	199-H1-1	10/6/2010	BBJ 256
C7108	199-H1-34	7/1/2010	BBJ 582	C7586	199-H4-79	10/6/2010	BBJ 262
C7109	199-H1-39	7/1/2010	BBJ 577	C7587	199-H4-76	10/6/2010	BBJ 255
C7110	199-H3-25	11/5/2009	ALN 543	C7588	199-H4-78	10/6/2010	BBJ 261
C7111	199-H1-21	7/1/2010	BBJ 587	C7595	199-H4-80	6/29/2010	BBJ 589
C7113	199-H1-20	7/1/2010	BBJ 588	C7596	199-H4-81	6/29/2010	BBJ 590
C7114	199-H3-27	11/5/2009	ALN 542	C7597	199-H4-75	10/6/2010	BBJ 252
C7115	199-H3-26	11/5/2009	ALN 544	C7598	199-H4-74	10/6/2010	BBJ 251
C7477	199-H1-45	11/5/2009	ALN 545	C7604	199-H1-4	10/6/2010	BBJ 259
C7478	199-H1-25	7/1/2010	BBJ 586	C7605	199-H4-77	10/6/2010	BBJ 253
C7480	199-H1-27	7/1/2010	BBJ 585	C7606	199-H1-6	10/6/2010	BBJ 260
C7483	199-H4-70	11/5/2009	ALN 540	C7609	199-H4-82	6/29/2010	BBJ 591
C7484	199-H4-73	11/5/2009	ALN 537	C7610	199-H1-5	6/29/2010	BBJ 593

Notes:
ID = Identification

7.0 REFERENCES

BNWL-CC-1352, 1967,*Ground Disposal of Reactor Coolant Effluent,* Battelle Northwest, Richland Washington. Sited in SGW-44089, 2010, *ARRA FY2010 Description of Work for the Installation of 18 Scenario 5 Remedial Process Optimization Wells for the 100-D Area, 100-HR-3-3 Operable Unit,* CH2MHIll Plateau Remediation Company, Richland, Washington

Comprehensive Environmental Response, Compensation, and Liability Act of 1980, 42 U.S.C. 9601,et seq.

DOE/RL-93-43, 1994, Limited Field Investigation Report of the 100-HR-3 Operable Unit, Rev. 0, U.S. Department of Energy, Richland Operations Office, Richland, Washington.

DOE/RL-97-01, 2005, *Interim Action Waste Management Plan for the 100-HR-3 and 100-KR-4 Operable Units*, Rev. 5, U.S. Department of Energy, Richland Operations Office, Richland, Washington.

DOE/RL-2008-42, 2008, *Hydrogeological Summary Report for the 600 Area Between 100-D and 100-H for the 100-HR-3 Groundwater Operable Unit.* Rev. 0, U.S. Department of Energy, Richland Operations Office, Richland, Washington.

DOE/RL-2008-46, 2009, *Integrated 100 Area Remedial Investigation/Feasibility Study Work Plan, Addendum 1*, Draft C, U.S. Department of Energy, Richland Operations Office, Richland, Washington. Sited in DOE/RL-2009-09, 2009, *Sampling Analysis Plan for Installation of 100-HR-3 Operable Unit Remedial Process Optimization Wells*, Rev. 2, U.S. Department of Energy, Richland Operations Office, Richland, Washington.

DOE/RL-2009-09, 2009, *Sampling Analysis Plan for Installation of 100-HR-3 Operable Unit Remedial Process Optimization Wells*, Rev. 1, U.S. Department of Energy, Richland Operations Office, Richland, Washington

DOE/RL-2009-09, 2010, *Sampling Analysis Plan for Installation of 100-HR-3 Operable Unit Remedial Process Optimization Wells*, Rev. 2, U.S. Department of Energy, Richland Operations Office, Richland, Washington.

Ecology, EPA, and DOE, 1989, *Hanford Federal Facility Agreement Consent Order,* as amended, Washington State Department of Ecology, U.S. Environmental Protection Agency, and U.S. Department of Energy, Olympia, Washington, as amended.

EPA/ROD/R10-96-134, 1996, *Record of Decision for the 100-HR-3 and 100-KR-4 Operable Units, Hanford Site, Benton County, Washington*, U.S. Environmental Protection Agency, Washington, D.C.

Lindsey, K.A., Jaeger, G.K., 1993, *Geologic Setting of the 100-HR-3 Operable Unit, Hanford Site, South-Central Washington.* WHC-SD-EN-TI-132, Rev. 0, Westinghouse Hanford Company, Richland, Washington.

SGW-34174, 2007, *Data Quality Objectives Summary Report for the Wells Installation to Support the Horn Investigation at 600 Area of the 100-HR-3 Operable Unit*, Rev. 0

SGW-37439, 2008, *Data Quality Objective Summary Report for the Characterization of FY-08 Investigation-Derived Waste Generated From the Northern Plume Chromium Investigation in the 100-D Area*, Rev. 0, FLUOR Hanford, Richland, Washington

SGW-3 6749, 2008, *Borehole Summary Report for the Installation of Wells in the 600 Area Between 100-D and 100-11 for the 100-HR-3 Groundwater Operable Unit, Fiscal Year2007 and 2008, Rev. 0*, Fluor Hanford, Inc., Richland, Washington.

SGW-38338, 2008, *Remedial Process Optimization for the 100-D Area Technical Memorandum Document,* Rev. 0, FLOUR Hanford, Richland Washington

SGW-40781, 2009, *100-HR-3 Remedial Process Optimization Modeling Data Package.* Draft A, CH2MHIll Plateau Remediation Company, Richland Washington.

SGW-40969, 2009, *Data Quality Objective Summary Report for the Disposition of Waste from the Drilling of Fourteen Remedial Process Optimization Wells in the 100-D Area*, Rev. 0, CH2MHIll Plateau Remediation Company, Richland, Washington.

SGW-44089, 2010, *ARRA FY2010 Description of Work for the Installation of 18 Scenario 5 Remedial Process Optimization Wells for the 100-D Area, 100-HR-3-3 Operable Unit,* CH2MHIll Plateau Remediation Company, Richland, Washington.

SGW-44142, 2010, *ARRA FY2010 Description of Work for the Installation of 15 Scenario 5 Remedial Process Optimization Wells for the 100-H Area, 100-HR-3 Operable Unit*, CH2MHIll Plateau Remediation Company, Richland, Washington.

SGW-45595, 2010, *Data Quality Objective Summary Report for the Designation of Investigation – Derived Waste at Four FY10 Scenario-5 RPO Wells in the 100-HR-3 Operable Unit*, Rev. 0, CHPRC, Richland, Washington.

WMP-32331, 2007, *Data Quality Objective Summary Report for the Installation of Chromium Investigation Wells in the 100-D Area*, Rev. 0, FLUOR, Richland, Washington.

Appendix A

Well Summary Sheets (Asbuilts)

WELL SUMMARY SHEET

Start Date: Nov 9, 2009
Finish Date: Nov 19, 2009

Well ID: C7083	Well Name: 199-D4-95
Location: 200 m SW of ISRM pond	Project: 100-HR-3 FY09 Pump and Treat Expansion
Prepared by: L. Stratton — Date: Nov 30 2009	Reviewed by: L. D. Walker — Date: 1-12-10
Signature: [signature]	Signature: [signature]

CONSTRUCTION DATA

Description

Surface construction:
4 x 4 x 0.5 ft concrete pad with 4 protective posts and locking well monument

Neat grout cement:
0 - 10.5 ft bgs

Granular bentonite:
10.5 - 72.6 ft bgs

6-in Schedule 10, Type 304 ~~or 316~~ stainless steel riser casing: LW 1/12/10
2.0 ft ags - 79.16 ft bgs

All depths in feet above/below ground surface (ags/bgs)

Borehole drilled with 10 3/4-in/8-in dual-walled casing

No centralizers required due to dual-wall drilling method

All temporary casing removed from borehole

No horizontal scale

Diagram

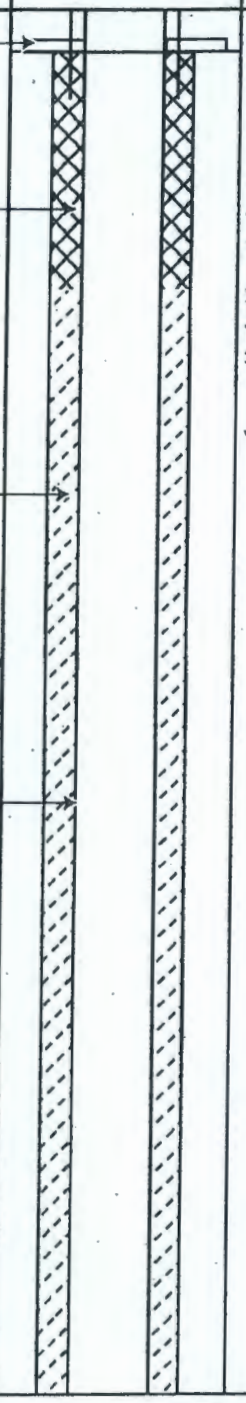

GEOLOGIC/HYDROLOGIC DATA

Depth in Feet: 0, 10, 20, 30, 40, 50

Hanford formation | Holocene sediments

Graphic Log

Lithologic Description

0 - 7: silty gravel (mG)

7 - 18: silty sandy gravel (msG)

18 - 28: sandy gravel (sG)

28 - 33 (?): gravely sand (gS)

33 - 40: sandy gravel (sG)

40 - 43: gravel (G)

43 - 55: gravely sand (gS)

55 - 60: sandy gravel (sG)

WELL SUMMARY SHEET

Start Date: Nov 9, 2009	Finish Date: Nov 19, 2009	Page 2 of 2

Well ID: C7083	Well Name: 199-D4-95
Location: 200 m SW of ISRM pond	Project: 100-HR-3 FY09 Pump and Treat Expansion
Prepared by: L. Stratton — Date: Nov 30 2009	Reviewed by: L. D. Walker — Date: 1-12-10
Signature:	Signature:

CONSTRUCTION DATA

Description

Granular bentonite:
10.5 - 72.6 ft bgs

6-in Schedule 10, Type 304 or 316 stainless steel riser casing:
2.0 ft ags - 79.16 ft bgs

Bentonite pellet seal:
72.6 - 74.5 ft bgs

Primary filter pack: Colorado silica sand, 8-16 mesh:
74.5 - 121.4 ft bgs

Depth to water: 84.45 (11/11/09)

6-in Type 316 continuous wire-wrap "V" slot screen, 0.055-in:
79.16 - 114.19 ft bgs

6-in Type 316 stainless steel sump with welded end cap:
114.19 - 117.22 ft bgs

Total Depth (TD): 121.4 ft bgs

All depths in feet above/below ground surface (ags/bgs)

Borehole drilled with 10 3/4-in/8-in dual-walled casing

No centralizers required due to dual-wall drilling method

All temporary casing removed from borehole

No horizontal scale

Diagram

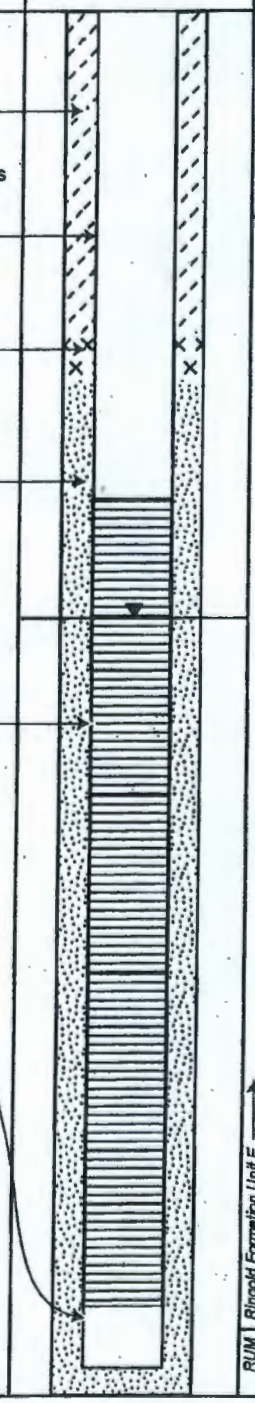

GEOLOGIC/HYDROLOGIC DATA

Depth in Feet	Graphic Log	Lithologic Description
60		55 - 60: sandy gravel (sG)
		60 - 63: gravely sand (gS)
		63 - 67: silty gravel (sG)
		67 - 74: sandy gravel fining to gravely sand (sG to gS)
70		
		74 - 76: sand (S)
		76 - 90: silty sandy gravel (msG)
80		
90		90 - 100: gravel (G)
100		100 - 105: sandy gravel (sG)
		105 - 115.5: silty sandy gravel to silty gravel (msG to mG)
110		109.5 - 113: silt (M)
		115.5 - 121.4 (TD): mud (M)
		NOTE: final 1.4 ft of borehole not depicted

Hanford formation

Ringold Formation Unit E

Ringold Formation Unit E

RUM

WELL SUMMARY SHEET

Start Date: Oct 14, 2009	Page 1 of 2
Finish Date: Oct 22, 2009	

Well ID: C7084	Well Name: 199-D4-96
Location: NW Edge of ISRM Pond, 25 ft W of 199-D4-22	Project: 100-HR-3 FY09 Pump and Treat Expansion
Prepared by: L. Stratton — Date: Nov 2 2009	Reviewed by: L. D. Walker — Date: 11-9-09
Signature:	Signature:

CONSTRUCTION DATA

Description

Surface construction:
4 x 4 x 0.5 ft concrete pad with 4 protective posts and locking well monument:
3 ft ags - 2 ft bgs

Neat grout cement:
0 - 8.7 ft bgs

Granular bentonite:
8.7 - 81.5 ft bgs

6-in Schedule 10, Type 304 stainless steel riser casing:
2.0 ft ags - 88.0 ft bgs

All depths in feet above/below ground surface (ags/bgs)

Borehole drilled with 10 3/4-in/8-in dual-walled casing

No centralizers required due to dual-wall drilling method

All temporary casing removed from borehole

No horizontal scale

Diagram

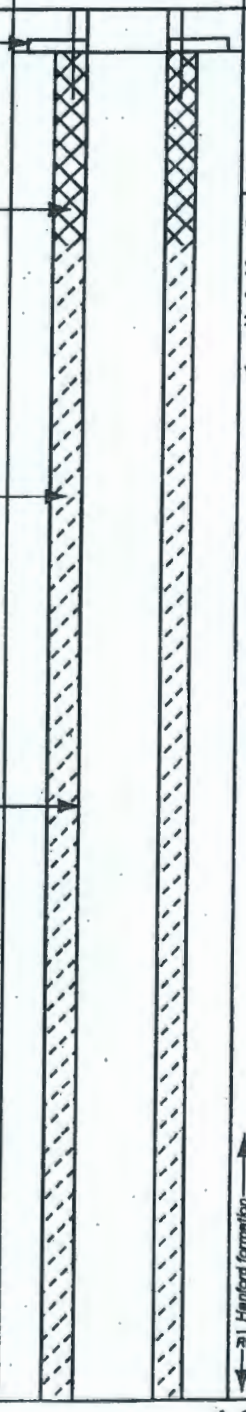

GEOLOGIC/HYDROLOGIC DATA

Depth in Feet / **Graphic Log** / **Lithologic Description**

0 - 6: slightly gravely sand (gmS)

6 - 24: silty sandy gravel (msG)

24 - 48: sand (S)

48 - 50: gravely sand (gS)

50 - 70: sandy gravel (sG)

WELL SUMMARY SHEET

Start Date: Oct 14, 2009
Finish Date: Oct 22, 2009

Well ID: C7084	Well Name: 199-D4-96
Location: NW Edge of ISRM Pond, 25 ft W of 199-D4-22	Project: 100-HR-3 FY09 Pump and Treat Expansion
Prepared by: L. Stratton — Date: Nov 2 2009	Reviewed by: L.D. Walker — Date: 11-9-09
Signature: [signature]	Signature: [signature]

CONSTRUCTION DATA

Description

Granular bentonite:
8.7 - 81.5 ft bgs

6-in Schedule 10, Type 304 stainless steel riser casing:
2.0 ft ags - 88.0 ft bgs

Bentonite pellet seal:
81.5 - 82.6 ft bgs

Depth to water: 87.2 ft bgs (10/20/09)

Filter pack: 6-12 mesh Colorado Silica Sand:
82.6 - 106.5 ft bgs

6-in Type 316 continuous wire-wrap "V" slot screen, 0.070-in:
88.0 - 98.0 ft bgs

6-in Type 316 stainless steel sump with welded end cap:
98.0 - 101.0 ft bgs

All depths in feet above/below ground surface (ags/bgs)

Borehole drilled with 10 3/4-in/8-in dual-walled casing

No centralizers required due to dual-wall drilling method

All temporary casing removed from borehole

No horizontal scale

Diagram

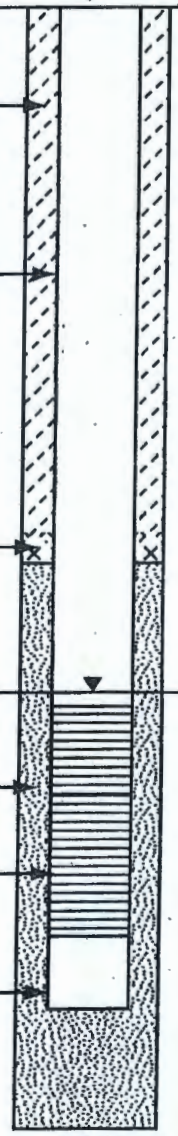

TD = 106.5 ft bgs

GEOLOGIC/HYDROLOGIC DATA

Depth in Feet / Graphic Log

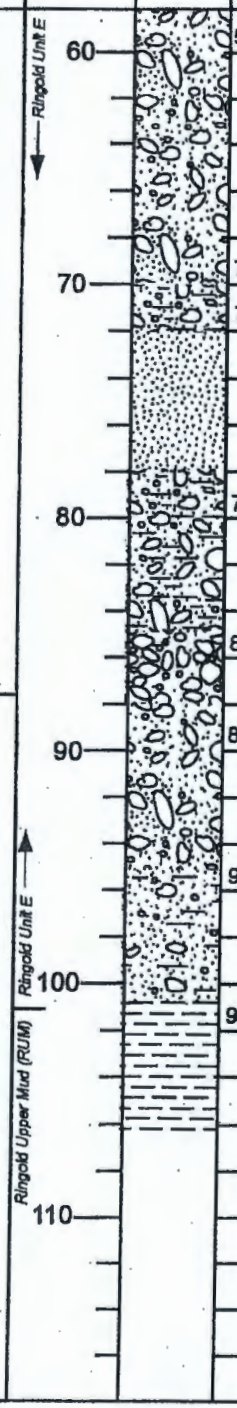

Lithologic Description

50 - 70: sandy gravel (sG)

70 - 72: silty sandy gravel (msG)

72 - 78: sand (S)

78 - 85: silty sandy gravel (msG)

85 - 88: gravel (G)

88 - 95: sandy gravel (sG)

95 - 99: gravely silty sand (gmS)

99 - 106.5: mud (M)

WELL SUMMARY SHEET

Start Date: Oct 19, 2009
Finish Date: Oct 27, 2009

Well ID: C7085	Well Name: 199-D4-97
Location: NE Corner of ISRM Pond	Project: 100-HR-3 FY09 Pump and Treat Expansion
Prepared by: L. Stratton — Date: Nov 2 2009	Reviewed by: L. D. Walker — Date: 11-10-09
Signature:	Signature:

CONSTRUCTION DATA

Description

Surface construction:
4 x 4 x 0.5 ft concrete pad with 4 protective posts and locking well monument:
3 ft ags - 2 ft bgs

Neat grout cement:
0 -9.3 ft bgs

Granular bentonite:
9.3 - 80.6 ft bgs

6-in Schedule 10, Type 304 stainless steel riser casing:
2.1 ags - 88.1 ft bgs

All depths in feet above/below ground surface (ags/bgs)

Borehole drilled with 10 3/4-in/8-in dual-walled casing

No centralizers required due to dual-wall drilling method

All temporary casing removed from borehole

No horizontal scale

Diagram

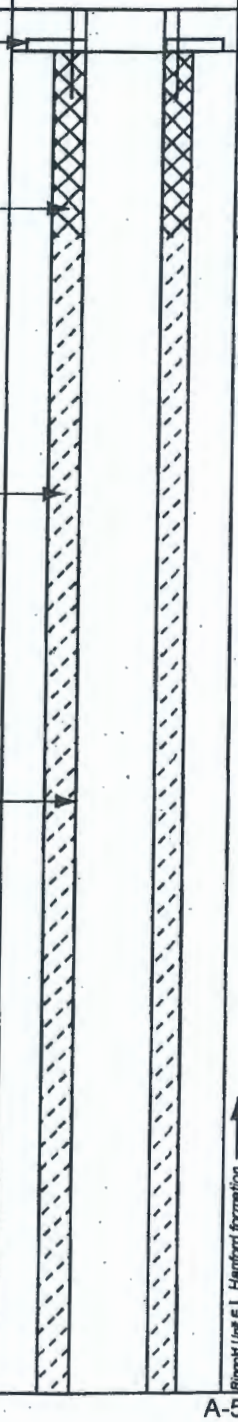

GEOLOGIC/HYDROLOGIC DATA

Depth in Feet: 0, 10, 20, 30, 40, 50

Holocene deposits

Hanford formation

Hanford formation

Ringold Unit E

Graphic Log

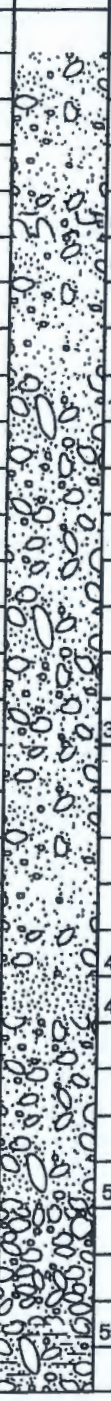

Lithologic Description

0 - 7: gravely sand (gS)

8: thin interval with ~25% cobbles

8 - 15: gravely sand (gS); color different from above

15 - 30: sandy gravel (sG)

30 - 40: gravely sand (gS)

40 - 42: sand (S)

42 - 50: sandy gravel (sG)

50 - 55: gravel (G)

55 - 67: silty sandy gravel (msG)

WELL SUMMARY SHEET

Start Date: Oct 19, 2009
Finish Date: Oct 27, 2009
Page 2 of 2

Well ID: C7085	Well Name: 199-D4-97
Location: NE Corner of ISRM Pond	Project: 100-HR-3 FY09 Pump and Treat Expansion
Prepared by: L. Stratton — Date: Nov 2 2009	Reviewed by: L.D. Walker — Date: 11-10-09
Signature: [signature]	Signature: [signature]

CONSTRUCTION DATA

Description

Granular bentonite:
9.3 - 80.6 ft bgs

6-in Schedule 10, Type 304 stainless steel riser casing:
2.1 ft ags - 88.1 ft bgs

Bentonite pellet seal:
80.6 - 83.4 ft bgs

Depth to water: 86.0 ft bgs (10/26/09)

Filter pack: 10-20 mesh Colorado Silica Sand:
83.4 - 111.0 ft bgs

6-in Type 316 continuous wire-wrap "V" slot screen, 0.045-in:
88.1 - 103.1 ft bgs

6-in Type 316 stainless steel sump with welded end cap:
103.1 - 106.1 ft bgs

All depths in feet above/below ground surface (ags/bgs)

Borehole drilled with 10 3/4-in/8-in dual-walled casing

No centralizers required due to dual-wall drilling method

All temporary casing removed from borehole

No horizontal scale

Diagram

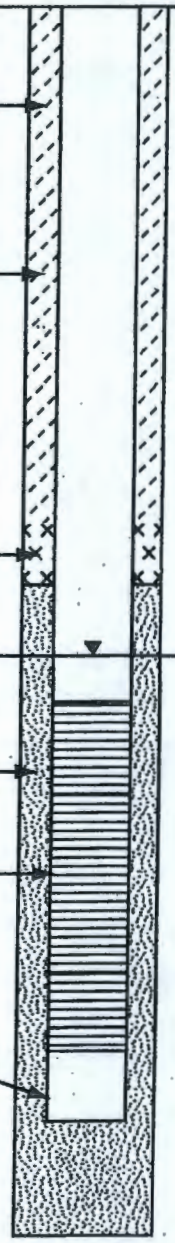

TD = 111.0 ft bgs

GEOLOGIC/HYDROLOGIC DATA

Depth in Feet

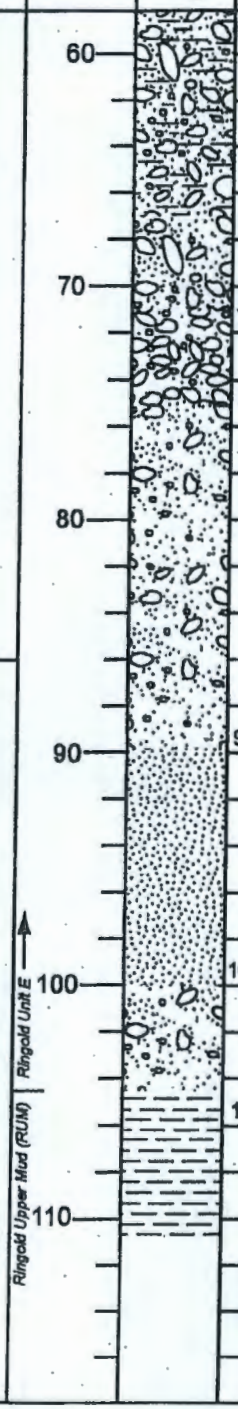

Graphic Log / Lithologic Description

55 - 67: silty sandy gravel (msG)

67 - 71: sandy gravel (sG)

71 - 75: gravel (G)

75 - 90: gravely sand (gS)

90 - 100: sand (S)

100 - 104.5: gravely sand (gS)

104.5 - 111: mud (M)

WELL SUMMARY SHEET

Start Date: Nov 20, 2009	Page 1 of 2
Finish Date: Dec 3, 2009	

Well ID: C7086		Well Name: 199-D4-98	
Location: N of ISRM wells		Project: 100-HR-3 FY09 Pump and Treat Expansion	
Prepared by: L. Stratton	Date: Dec 15 2009	Reviewed by: L.D. Walker	Date: 1-13-10
Signature:		Signature:	

CONSTRUCTION DATA

Description

Surface construction:
4 x 4 x 0.5 ft concrete pad with 4 protective posts and locking well monument:
3 ft ags - 2 ft bgs

Neat grout cement:
0 -11.2 ft bgs

Granular bentonite:
11.2 - 72.2 ft bgs

6-in Schedule 10, Type 304 stainless steel riser casing:
2.0 - 80.2 ft bgs

All depths in feet above/below ground surface (ags/bgs)

Borehole drilled with 10 3/4-in/8-in dual-walled casing

No centralizers required due to dual-wall drilling method

All temporary casing removed from borehole

No horizontal scale

Diagram

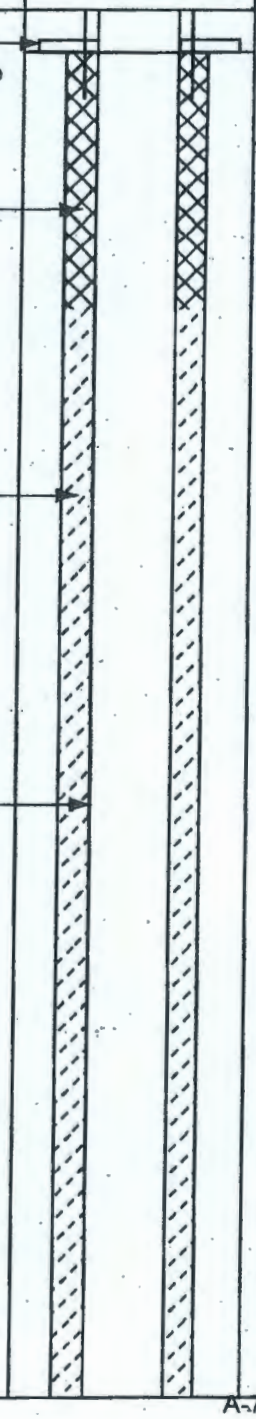

GEOLOGIC/HYDROLOGIC DATA

Depth in Feet: 0, 10, 20, 30, 40, 50

Holocene deposits

Hanford formation

Graphic Log

Lithologic Description

0 - 2: crushed gravel well pad

2 - 3: aeolian sand

3 - 24: sandy gravel (sG)

24 - 25: medium sand with sparse pebbles

25 - 35: sandy gravel (sG)

35 - 59: silty sandy gravel (msG)

WELL SUMMARY SHEET

Start Date: Nov 20, 2009	Page 2 of 2
Finish Date: Dec 3, 2009	

Well ID: C7086		Well Name: 199-D4-98	
Location: 100-D North of ISRM Wells		Project: 100-HR-3 FY09 Pump and Treat Expansion	
Prepared by: L. Stratton	Date: Dec 15 2009	Reviewed by: L.D. Walker	Date: 1-13-10
Signature:		Signature:	

CONSTRUCTION DATA

Description	Diagram
Granular bentonite: 11.2 - 72.2	
6-in Schedule 10, Type 304 stainless steel riser casing: 2.0 ft ags - 80.2 ft bgs	
Bentonite pellet seal: 72.2 - 73.8 ft bgs	
Depth to water: 82.7 (12/4/09)	
Filter pack: 8-16 mesh Colorado Silica Sand: 73.8 - 111 ft bgs	
6-in Type 316 continuous wire-wrap "V" slot screen, 0.055-in: 80.2 - 100.2 ft bgs	
6-in Type 316 stainless steel sump with welded end cap: 100.2 - 103.2 ft bgs	
All depths in feet above/below ground surface (ags/bgs)	
Borehole drilled with 10 3/4-in/8-in dual-walled casing	
No centralizers required due to dual-wall drilling method	TD = 111.0 ft bgs
All temporary casing removed from borehole	
No horizontal scale	

GEOLOGIC/HYDROLOGIC DATA

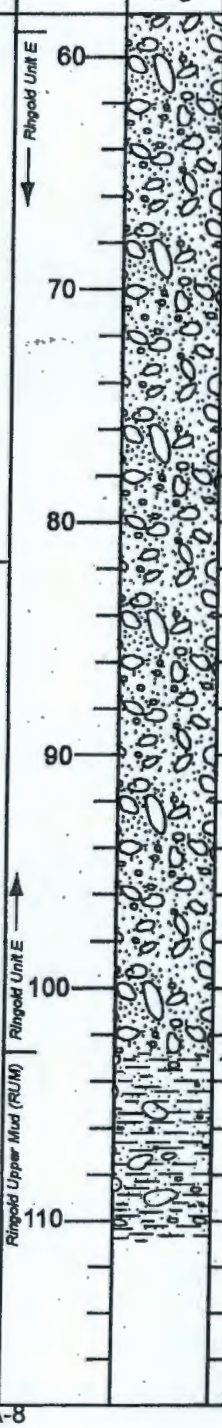

Lithologic Description
59 - 102.8: sandy gravel (sG)
102.8 - 111: gravely sandy silt (gsM)

WELL SUMMARY SHEET

Start Date: Nov 12, 2009
Finish Date: Nov 19, 2009

Well ID: C7087	Well Name: 199-D4-99
Location: S bank Columbia River, N of ISRM barrier wells	Project: 100-HR-3 FY09 Pump and Treat Expansion
Prepared by: L. Stratton — Date: Nov 24 2009	Reviewed by: L. D. Walker — Date: 1-12-10
Signature: [signature]	Signature: [signature]

CONSTRUCTION DATA

Description

Surface construction:
4 x 4 x 0.5 ft concrete pad with 4 protective posts and locking well monument

Neat grout cement:
0 - 9.1 ft bgs

Granular bentonite:
9.1 - 70.2 ft bgs

6-in Schedule 10, Type 304 ~~or 316~~ stainless steel riser casing: [initials] 1/12/10
2.2 ft ags - 77.85 ft bgs

All depths in feet above/below ground surface (ags/bgs)

Borehole drilled with 10 3/4-in/8-in dual-walled casing

No centralizers required due to dual-wall drilling method

All temporary casing removed from borehole

No horizontal scale

Diagram

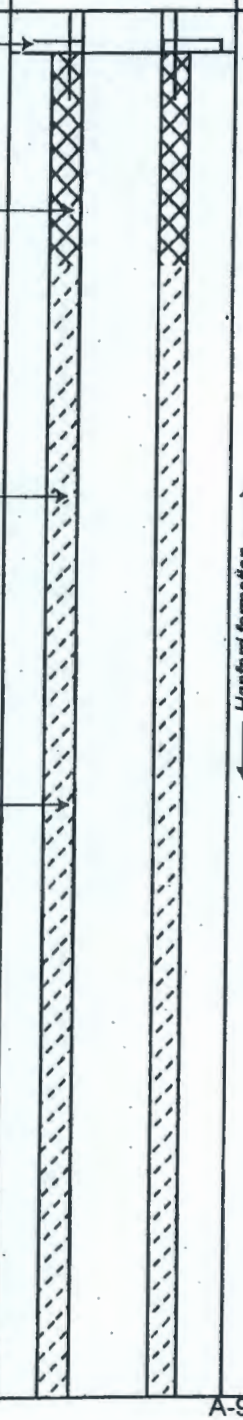

GEOLOGIC/HYDROLOGIC DATA

Depth in Feet: 0, 10, 20, 30, 40, 50

Hanford formation

Graphic Log

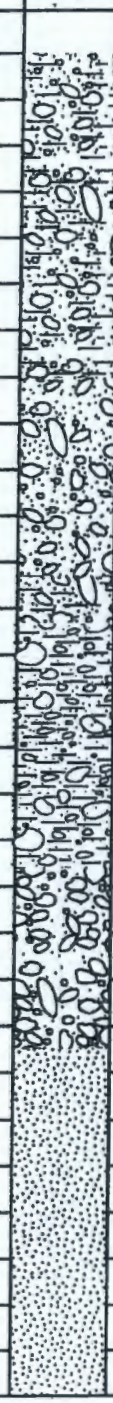

Lithologic Description

0 - 14: silty sandy gravel (msG)

14 - 23: sandy gravel (sG)

23 - 25: silty sand gravel grading to sandy gravel (msg to mg)

25 - 35: silty gravel (mG)

35 - 43: gravel (G)

43 - 60: sand (S)

WELL SUMMARY SHEET

Start Date: Nov 12, 2009
Finish Date: Nov 19, 2009

Well ID: C7087	Well Name: 199-D4-99
Location: S bank Columbia River, N of ISRM barrier wells	Project: 100-HR-3 FY09 Pump and Treat Expansion
Prepared by: L. Stratton — Date: Nov 24 2009	Reviewed by: L.D. Walker — Date: 1/12/10
Signature:	Signature:

CONSTRUCTION DATA

Description

Granular bentonite:
9.1 - 70.2 ft bgs

6-in Schedule 10, Type 304 or 316 stainless steel riser casing:
2.2 ft ags- - 77.85 ft bgs

Bentonite pellet seal:
70.2 - 71.5 ft bgs

Primary filter pack: Colorado silica sand, 8-16 mesh:
71.5 - 116.2 ft bgs

Depth to water: 83.85 bgs (11/13/09)

6-in Type 316 continuous wire-wrap "V" slot screen, 0.055-in:
77.85 - 107.87 ft bgs

6-in Type 316 stainless steel sump with welded end cap:
107.87 - 110.87 ft bgs

All depths in feet above/below ground surface (ags/bgs)

Borehole drilled with 10 3/4-in/8-in dual-walled casing

No centralizers required due to dual-well drilling method

All temporary casing removed from borehole

No horizontal scale

Diagram

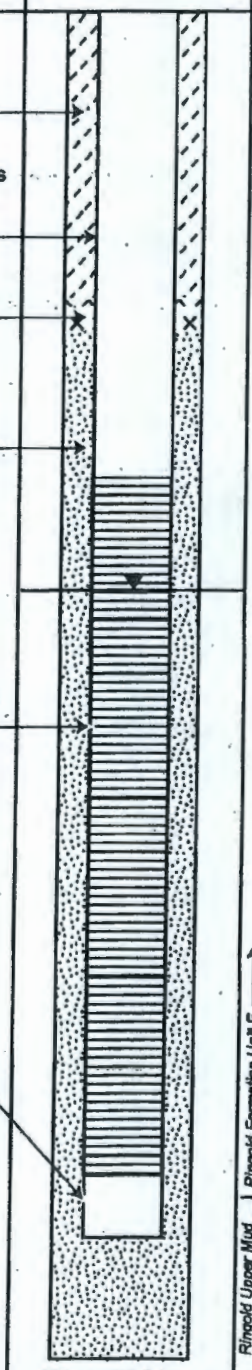

GEOLOGIC/HYDROLOGIC DATA

Depth in Feet

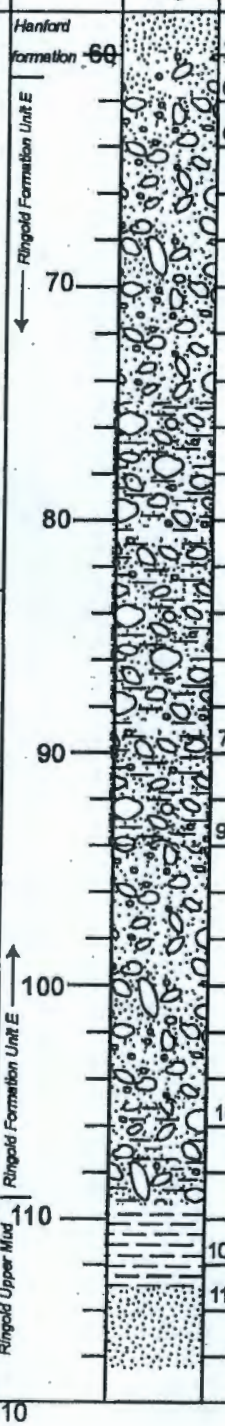

Graphic Log

Lithologic Description

43 - 60: sand (S)

60 - 62: gravely sand (gS)

62 - 75: sandy gravel (sG)

75 - 94: silty sandy gravel (msG)

94 - 105: sandy gravel (sG)

105 - 109.5: silty sandy gravel (msG)

109.5 - 113: silt (M)

113 - 116.2: cemented sand (S)

WELL SUMMARY SHEET

Start Date: Dec 14, 2009	Page 1 of 1
Finish Date: Dec 18, 2010	

Well ID: C7089		Well Name: 199-D2-10	
Location: Floodplain below 100-D		Project: 100-HR-3 FY09 Pump and Treat Expansion	
Prepared by: L. Stratton	Date: Feb 11, 2010	Reviewed by: L. D. Walker	Date: 2/25/10
Signature:		Signature:	

CONSTRUCTION DATA

Description

Surface construction:
4 x 4 x 0.5 ft concrete pad with 4 protective posts and locking well monument

Neat grout cement:
0 - 4.1 ft bgs

Granular bentonite:
4.1 - 7.0 ft bgs

Bentonite pellet seal:
7.0 - 7.5 ft bgs

6-in Schedule 10, Type 316 stainless steel riser casing:
2.00 ft ags - 9.87 ft bgs

6-in Type 316 continuous wire-wrap "V" slot screen, 0.055-in:
9.87 - 24.87 ft bgs

Filter pack: 8-16 mesh Colorado Silica Sand:
7.5 - 31.0 ft bgs

6-in Type 316 stainless steel sump with welded end cap:
24.87 - 27.87ft bgs

All depths in feet above/below ground surface (ags/bgs)

Borehole drilled with 10 3/4-in/8-in dual-walled casing

No centralizers required due to dual-wall drilling method

All temporary casing removed from borehole

No horizontal scale

Diagram

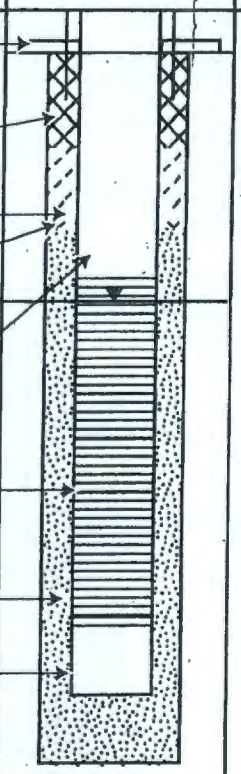

TD = 31.0 ft bgs

GEOLOGIC/HYDROLOGIC DATA

Depth in Feet / Graphic Log

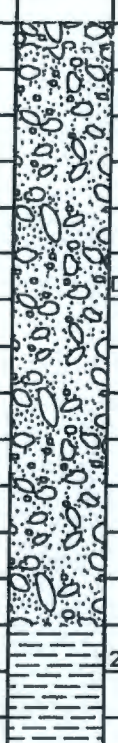

Lithologic Description

0 - 1: gravel pad

1 - 26: sandy gravel (sG)

Depth to water: 10.77 ft bgs (1/25/10)

26 - 31: Ringold Upper Mud

WELL SUMMARY SHEET

Start Date: Dec 9, 2009	Page 1 of 1
Finish Date: Dec 18, 2009	

Well ID: C7090		Well Name: 199-D2-12	
Location: Floodplain downstream of D Island		Project: 100-HR-3 FY09 Pump and Treat Expansion	
Prepared by: L. Stratton	Date: 1/5/10	Reviewed by: L. D. Walker	Date: 1-13-10
Signature:		Signature:	

CONSTRUCTION DATA

Description	Diagram
Surface construction: 4 x 4 x 0.5 ft concrete pad with 4 protective posts and locking well monument	
Neat grout cement: 0 - 4.5 ft bgs	
Granular bentonite: 4.5 - 7.2 ft bgs	
Bentonite pellet seal: 7.2 - 8.3 ft bgs	
6-in Schedule 10, Type 304 ~~or 316~~ stainless steel riser casing: 2.0 ft ags - 11.84 ft bgs	
6-in Type 316 continuous wire-wrap "V" slot screen, 0.070-in: 11.84 - 26.84 ft bgs	
Filter pack: 6-12 mesh Colorado Silica Sand: 8.3 - 34.0 ft bgs	
6-in Type 316 stainless steel sump with welded end cap: 26.84 - 29.84 ft bgs	

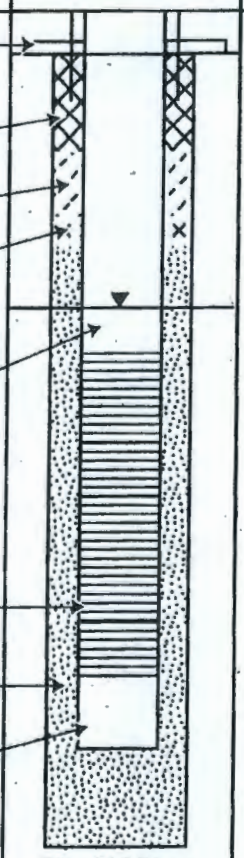

GEOLOGIC/HYDROLOGIC DATA

Depth in Feet	Graphic Log	Lithologic Description
0		0 - 2: crushed gravel well pad
		2 - 28.2: sandy gravel (sG)
10		Depth to water: 11.0 ft bgs (12/22/09)
20		
30		28.2 - 34.0: Ringold Upper Mud
40		
50		

All depths in feet above/below ground surface (ags/bgs)

Borehole drilled with 10 3/4-in/8-in dual-walled casing

No centralizers required due to dual-wall drilling method

All temporary casing removed from borehole

No horizontal scale

WELL SUMMARY SHEET

Start Date: Oct 21, 2009
Finish Date: Oct 29, 2009
Page 1 of 2

Well ID: C7091	Well Name: 199-D8-89
Location: N of 100-D Fence, W of 199-D8-5	Project: 100-HR-3 FY09 Pump and Treat Expansion
Prepared by: L. Stratton — Date: Oct 30 2009	Reviewed by: L. D. Walker — Date: 11-9-09
Signature:	Signature:

CONSTRUCTION DATA

Description

Surface construction:
4 x 4 x 0.5 ft concrete pad with 4 protective posts and locking well monument

Neat grout cement:
0 - 10.25 ft bgs

Granular bentonite:
10.25 -60.2 ft bgs

6-in Schedule 10, Type 304 or 316 stainless steel riser casing:
1.87 ags- 67.05 ft bgs

All depths in feet above/below ground surface (ags/bgs)

Borehole drilled with 10 3/4-in/8-in dual-walled casing

No centralizers required due to dual-wall drilling method

All temporary casing removed from borehole

No horizontal scale

Diagram

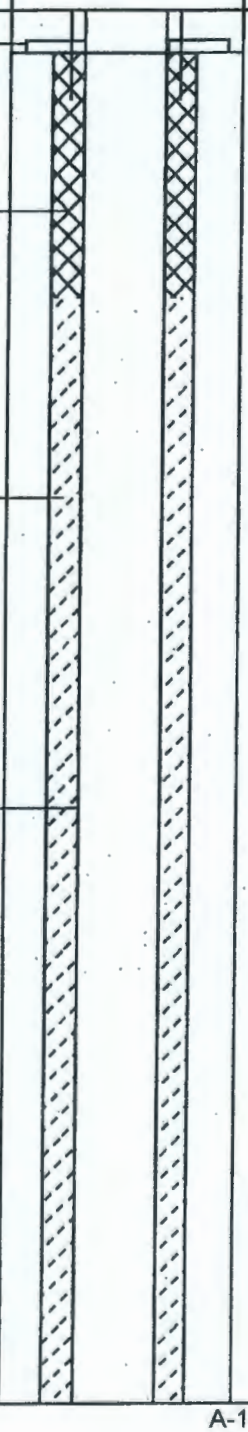

GEOLOGIC/HYDROLOGIC DATA

Depth in Feet: 0, 10, 20, 30, 40, 50

Graphic Log

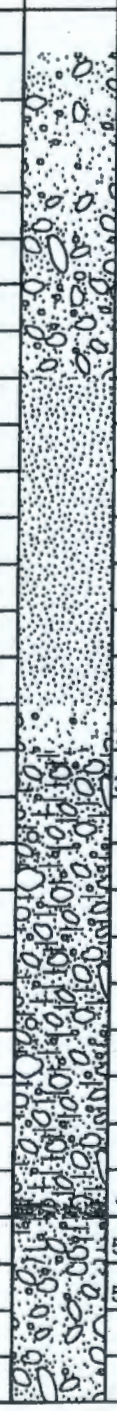

Lithologic Description

0 - 8: gravely sand (gS)

8 - 14: sandy gravel (sG)

14 - 28: sand (S)

28 - 30: gravely sand (gS)

30 - 49.5: silty sandy gravel (msG)

49.5 - 50: lens sandy gravel (sG)

50 - 52: silty sandy gravel (msG)

52 - 64: sandy gravel (sG)

WELL SUMMARY SHEET

Start Date: Oct 21, 2009
Finish Date: Oct 29, 2009

Well ID: C7091	Well Name: 199-D8-89
Location: N of 100-D Fence, W of 199-D8-5	Project: 100-HR-3 FY09 Pump and Treat Expansion
Prepared by: L. Stratton — Date: Oct 30 2009	Reviewed by: L. D. Walker — Date: 11-9-09
Signature:	Signature:

CONSTRUCTION DATA

Description

Granular bentonite:
10.25 -60.2 ft bgs

Bentonite pellet seal:
60.2 - 61.67 ft bgs

6-in Schedule 10, Type 304 or 316 stainless steel riser casing:
1.87 ags- 67.05 ft bgs

Depth to water: 69.25 ft bgs (10/26/09)

6-in Type 316 continuous wire-wrap "V" slot screen, 0.070-in:
67.05 - 77.06 ft bgs

6-in Type 316 stainless steel sump with welded end cap:
77.06 - 80.07 ft bgs

Filter pack: 6-12 mesh Colorado Silica Sand:
61.67 - 84.8 ft bgs

All depths in feet above/below ground surface (ags/bgs)

Borehole drilled with 10 3/4-in/8-in dual-walled casing

No centralizers required due to dual-wall drilling method

All temporary casing removed from borehole

No horizontal scale

Diagram

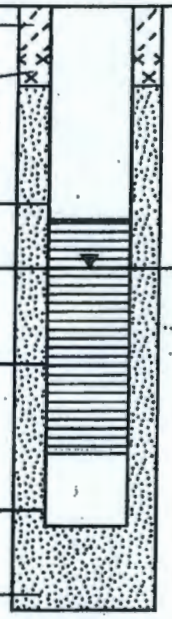

TD = 84.8 ft bgs

GEOLOGIC/HYDROLOGIC DATA

Depth in Feet: 60, 70, 80, 90, 100, 110

Graphic Log

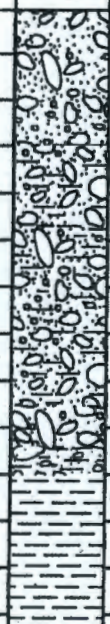

Lithologic Description

52 - 64: sandy gravel (sG)

64 - 75: silty sandy gravel (msG)

75 - 77: gravel (G)

77 - 78: silty gravel (sG)

78 - 84.8: silt (M)

WELL SUMMARY SHEET

Start Date: 12.21.9		Page 1 of 1	
Finish Date:1.28.10			
Well ID: C7092		Well Name: 199-D8-90	
Location: 100D		Project: 100 HR-3 Pump and Treat	
Prepared by: A. Pappas	Date: 2.5.10	Reviewed by: L. D. Walker	Date: 3/1/10
Signature:		Signature:	

CONSTRUCTION DATA

Description

Surface construction:
4 x 4 x 0.5 ft concrete pad with 4 protective posts and locking well monument

Neat grout cement:
0 - 8.80 ft bgs

Granular bentonite:
8.80 - 16.60 ft bgs

Bentonite pellet seal:
16.60 - 18.00 ft bgs

6-in Schedule 10, Type 316 stainless steel riser casing:
2.0 ags- 24.41 ft bgs

Depth to water: 29.25 ft bgs (1.27.10)

Filter pack: 8-16 mesh Colorado silica sand:
18.00 - 56.4 ft bgs

6-in, Type 316 stainless steel continuous wire-wrap V-slot screen, 0.055-in:
24.41 - 49.42 ft bgs

6-in Type 316 stainless steel sump with welded end cap:
49.42 - 52.45 ft bgs

All depths in feet above/below ground surface (ags/bgs)

Borehole drilled with 10 3/4-in/8-in dual-walled casing

All temporary casing removed from borehole

No horizontal scale

Diagram

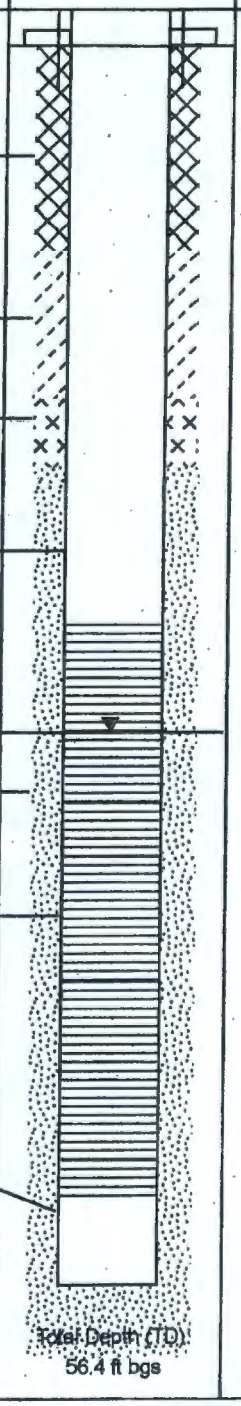

GEOLOGIC/HYDROLOGIC DATA

Depth in Feet

0
10
20
30
40
50

Graphic Log

Lithologic Description

0 - 1: Gravel (G)

1 - 20: Sandy Gravel (sG)

20 - 25: Gravel (G)

25 - 35: Sandy Gravel (sG)

35 - 51: Gravel (G)

51 - 56.4: Silt (S)

Total Depth (TD): 56.4 ft bgs

WELL SUMMARY SHEET

Start Date: 12.15.9		Page 1 of 1	
Finish Date: 1.26.10			
Well ID: C7093		Well Name: 199-D8-91	
Location: 100D		Project: 100HR3 Pump and Treat	
Prepared by: A. Pappas	Date: 2.5.10	Reviewed by: L.D. Walker	Date: 3-1-10
Signature:		Signature:	

CONSTRUCTION DATA

Description

Surface construction:
4 x 4 x 0.5 ft concrete pad with 4 protective posts and locking well monument

Neat grout cement:
0 - 10.00 ft bgs

Granular bentonite:
10.00 - 12.95 ft bgs

Bentonite pellet seal:
12.95 - 14.60 ft bgs

6-in Schedule 10, Type 316 stainless steel riser casing:
2.00 ags- 20.41 ft bgs

Depth to water: 22.15 ft bgs (1.26.10)

Filter pack: 6-12 mesh Colorado silica sand:
14.60 - 46.5 ft bgs

6-in, Type 316 stainless steel continuous wire-wrap V-slot screen, 0.070-in:
20.41 - 40.40 ft bgs

6-in Type 316 stainlese steel sump with welded end cap:
40.40 - 43.44 ft bgs

All depths in feet above/below ground surface (ags/bgs)

Borehole drilled with 10 3/4-in/8-in dual-walled casing

All temporary casing removed from borehole

No horizontal scale

Diagram

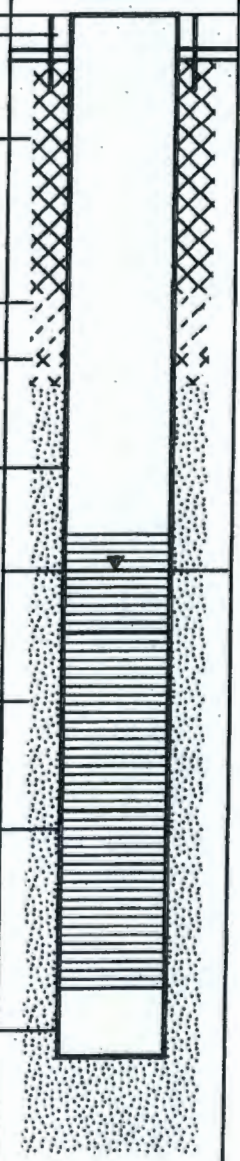

Total Depth (TD):
46.5 ft bgs

GEOLOGIC/HYDROLOGIC DATA

Depth in Feet: 0, 10, 20, 30, 40, 50

Graphic Log

Lithologic Description

0 - 1: Gravel (G) pad

1 - 6: Gravel (G)

6 - 10: Silty Sandy Gravel (msG)

10 - 25: Sandy Gravel (sG)

25 - 40: Silty Sandy Gravel (msG)

40 - 46.5: Gravely Silt (gM)

WELL SUMMARY SHEET

Start Date: Dec 8, 2009	Page 1 of 1
Finish Date: Dec 16, 2009	

Well ID: C7095	Well Name: 199-D8-93
Location: Floodplain below 100-D, downstream of D island	Project: 100-HR-3 FY09 Pump and Treat Expansion
Prepared by: L. Stratton — Date: Jan 5, 2010	Reviewed by: L. D. Walker — Date: 1-13-10
Signature:	Signature:

CONSTRUCTION DATA

Description

Surface construction:
4 x 4 x 0.5 ft concrete pad with 4 protective posts and locking well monument

Neat grout cement:
0 - 4.0 ft bgs

Granular bentonite:
4.0 - 7.8 ft bgs

Bentonite pellet seal:
7.8 - 9.1 ft bgs

6-in Schedule 10, Type 304 ~~or 316~~ stainless steel riser casing:
2.0 ft ags - 10.05 ft bgs

6-in Type 316 continuous wire-wrap "V" slot screen, 0.070-in:
10.05 - 15.06 ft bgs

Filter pack: 6-12 mesh Colorado Silica Sand:
9.1 - 21.0 ft bgs

6-in Type 316 stainless steel sump with welded end cap:
15.06 - 18.06 ft bgs

All depths in feet above/below ground surface (ags/bgs)

Borehole drilled with 10 3/4-in/8-in dual-walled casing

No centralizers required due to dual-wall drilling method

All temporary casing removed from borehole

No horizontal scale

Diagram

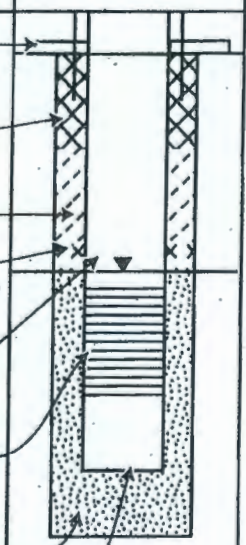

GEOLOGIC/HYDROLOGIC DATA

Depth in Feet	Graphic Log	Lithologic Description
0		0 - 1: crushed gravel well pad
		1 - 16: sandy gravel (sG)
10		Depth to water: 9.6 ft bgs (12/15/09)
		16 - 21: Ringold Upper Mud
20		
30		
40		
50		

WELL SUMMARY SHEET

Start Date: Dec 7, 2009
Finish Date: Dec 14, 2009
Page 1 of 1

Well ID: C7096	Well Name: 199-D8-94
Location: Floodplain below 100-D off toe of D Island	Project: 100-HR-3 FY09 Pump and Treat Expansion
Prepared by: L. Stratton — Date: Dec 15 2009	Reviewed by: P M GENT — Date: 05FEB10
Signature:	Signature:

CONSTRUCTION DATA

Description

Surface construction:
4 x 4 x 0.5 ft concrete pad with 4 protective posts and locking well monument

Neat grout cement:
0 - 3.9 ft bgs

Granular bentonite:
3.9 - 7.8 ft bgs

Bentonite pellet seal:
7.8 - 8.9 ft bgs

6-in Schedule 10, Type 304 ~~or 316~~ stainless steel riser casing: LW 1-13-10
2.0 ft ags - 9.99 ft bgs

6-in Type 316 continuous wire-wrap "V" slot screen, 0.070-in:
9.99 - 25.01 ft bgs

Filter pack: 6-12 mesh Colorado Silica Sand:
8.9 - 31.3 ft bgs

6-in Type 316 stainless steel sump with welded end cap:
25.01 - 28.01 ft bgs

All depths in feet above/below ground surface (ags/bgs)

Borehole drilled with 10 3/4-in/8-in dual-walled casing

No centralizers required due to dual-wall drilling method

All temporary casing removed from borehole

No horizontal scale

Diagram

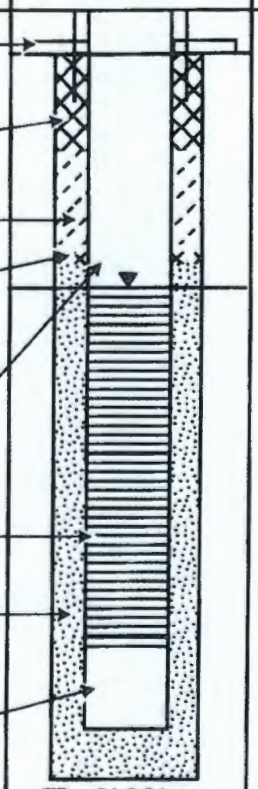

GEOLOGIC/HYDROLOGIC DATA

Depth in Feet: 0, 10, 20, 30, 40, 50

Graphic Log

Lithologic Description

0 - 1: crushed gravel well pad

1 - 26.3: sandy gravel (sG)

Depth to water: 10.1 ft bgs (12/7/09)

26.3 - ~~30.9~~ Ringold Upper Mud
31.3'
LW 1-13-10

WELL SUMMARY SHEET

Start Date: 5-10-10
Finish Date: 5-20-10
Page 1 of 1

Well ID: C7098	Well Name: 199-H1-38
Location: NW. of H-Reactor	Project: 100-HR-3 OU Pump & Treat Expansion
Prepared by: A. Lantau — Date: 6-21-10	Reviewed by: L.D. Walker — Date: 7/20/10
Signature: A. Lantau	Signature: LD Walker

CONSTRUCTION DATA

Description

Surface construction:
4 x 4 x 0.5 ft concrete pad with 4 protective posts and locking well monument

Neat grout cement:
0 - 10.0 ft bgs

6-in Schedule 10, Type 304 stainless steel riser casing:
2.0 ags- 26.52 ft bgs

Granular bentonite:
10.0 - 19.6 ft bgs

Bentonite pellet seal:
19.6 - 21.5 ft bgs

Filter pack: 6-12 mesh Colorado silica sand:
21.5 - 47.5 ft bgs

6-in, Type 316 stainless steel continuous wire-wrap V-slot screen, 0.070-in:
26.52 - 41.53 ft bgs

6-in Type 316 stainless steel sump with welded end cap:
41.53 - 44.53 ft bgs

All depths in feet above/below ground surface (ags/bgs)

Borehole drilled with 10 3/4-in/8-in dual-walled casing

All temporary casing removed from borehole

No horizontal scale

Diagram

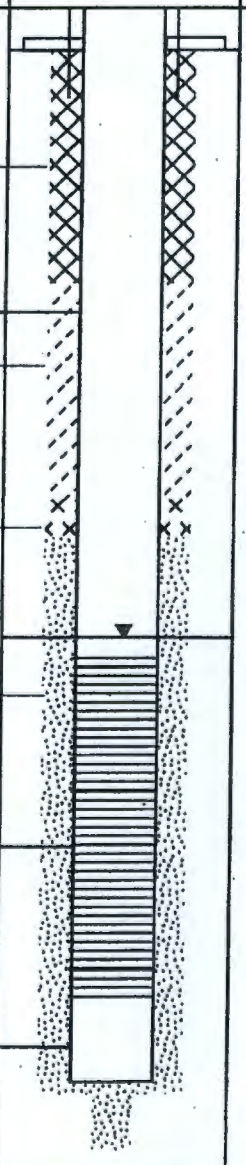

Total Depth (TD):
~~43.5~~ ft bgs
47.5

LW
7-20-10

GEOLOGIC/HYDROLOGIC DATA

Depth in Feet: 0, 10, 20, 30, 40, 50

Graphic Log

Lithologic Description

0-4: Silty Sandy Gravel

4-42: Sandy Gravel

42-47.5: Silt

WELL SUMMARY SHEET

Start Date: 5.4.10
Finish Date: 5.14.10

Page 1 of 1

Well ID: C7099	Well Name: 199-H1-37
Location: E: 577107.0 N: 153642.0	Project: 100 HR-3 RPO Wells
Prepared by: A. Pappas — Date: 6.1.10	Reviewed by: L.D. Walker — Date: 7/19/10
Signature: [signature]	Signature: [signature]

CONSTRUCTION DATA

Surface construction:
4 x 4 x 0.5 ft concrete pad with 4 protective posts and locking well monument

Neat grout cement:
0 - 9.5 ft bgs

Granular bentonite:
9.5 - 18.5 ft bgs

Bentonite pellet seal:
18.5 - 19.9 ft bgs

6-in Schedule 10, Type 304 stainless steel riser casing:
2.00 ags - 25.49 ft bgs

6-in, Type 316 stainless steel continuous wire-wrap V-slot screen, 0.070-in:
25.49 - 40.52 ft bgs

Depth to water: 33.2 ft bgs (5.14.10)

Filter pack: 6-12 mesh Colorado silica sand:
19.9 - 46.4 ft bgs

6-in Type 316 stainless steel sump with welded end cap:
40-.52 - 43.52 ft bgs

All depths in feet above/below ground surface (ags/bgs)

Borehole drilled with 10 3/4-in/8-in dual-walled casing

All temporary casing removed from borehole

No horizontal scale

Diagram

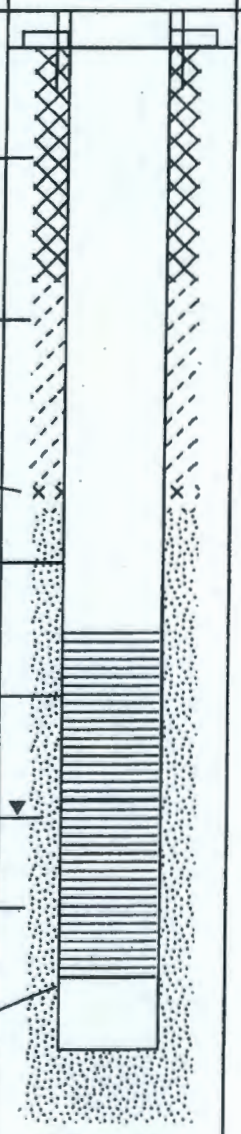

Total Depth (TD):
46.4 ft bgs

GEOLOGIC/HYDROLOGIC DATA

Depth in Feet: 0, 10, 20, 30, 40, 50

Graphic Log

Lithologic Description

0' - 7': Silty Sandy Gravel (msG)

7' - 37': Sandy Gravel (sG)

37' - 41': Gravel (G)

41' - 46.4' TD: Silt (M)

WELL SUMMARY SHEET

Start Date: 5-14-10	Page 1 of 1
Finish Date: 5-21-10	

Well ID: C7100	Well Name: 199-H1-32
Location: NW. of H-Reactor	Project: 100-HR-3 OU Pump & Treat Expansion
Prepared by: A. Lantau — Date: 6-21-10	Reviewed by: L.D. Walker — Date: 7-20-10
Signature: D Walker for A. Lantau	Signature: D Walker

CONSTRUCTION DATA

Description

Surface construction:
4 x 4 x 0.5 ft concrete pad with 4 protective posts and locking well monument

Neat grout cement:
0.0 -10.0 ft bgs

Granular bentonite:
10.0 - 16.0 ft bgs

Bentonite pellet seal:
16.0 - 17.5 ft bgs

Filter pack: 8-16 mesh Colorado silica sand:
17.5 - 51.4 ft bgs

6-in Schedule 10, Type 304 stainless steel riser casing:
2.0 ags - 22.5 ft bgs

6-in, Type 316 stainless steel continuous wire-wrap V-slot screen, 0.050-in:
22.5 - 42.5 ft bgs

6-in Type 316 stainless steel sump with welded end cap:
42.5 - 51.4 ft bgs

All depths in feet above/below ground surface (ags/bgs)

Borehole drilled with 10 3/4-in/8-in dual-walled casing

All temporary casing removed from borehole

No horizontal scale

Diagram

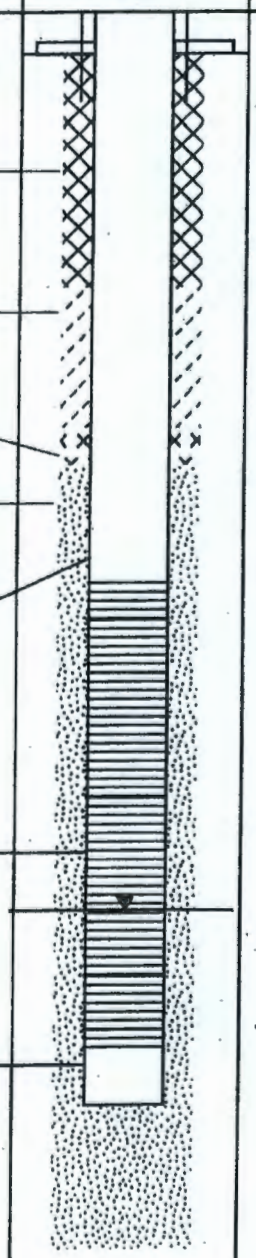

Total Depth (TD):
51.4 ft bgs

GEOLOGIC/HYDROLOGIC DATA

Depth in Feet

0, 10, 20, 30, 40, 50

Graphic Log

Lithologic Description

0 - 43: Slightly Silty Sandy Gravel

Water Level: 37.3 (5-21-10)

43 - 51.4: Silt

WELL SUMMARY SHEET

Start Date: 5.7.10	Page 1 of 1
Finish Date:5.19.10	

Well ID: C7102		Well Name: 199-H1-36	
Location: NE of H Reactor by River		Project: 100 HR-3 RPO Wells	
Prepared by: A. Pappas	Date: 6.1.10	Reviewed by: L. D. Walker	Date: 7/16/10
Signature: [signature]		Signature: [signature]	

CONSTRUCTION DATA

Description

Surface construction:
4 x 4 x 0.5 ft concrete pad with 4 protective posts and locking well monument

Neat grout cement:
0 - 10.0 ft bgs

Granular bentonite:
10.0 - 17.0 ft bgs

Bentonite pellet seal:
17.0 - 18.5 ft bgs

6-in Schedule 10, Type 304 stainless steel riser casing:
2.00 ags - 23.0 ft bgs

6-in, Type 316 stainless steel continuous wire-wrap V-slot screen, 0.070-in:
23.0 - 38.0 ft bgs

Depth to water: 31.5 ft bgs (5.19.10)

Filter pack: 6-12 mesh Colorado silica sand:
18.5 - 45.0 ft bgs

6-in Type 316 stainless steel sump with welded end cap:
38.0 - 41.0 ft bgs

Natural backfill:
45 - 46.5 ft bgs

All depths in feet above/below ground surface (ags/bgs)

Borehole drilled with 10 3/4-in/8-in dual-walled casing

All temporary casing removed from borehole

No horizontal scale

Diagram

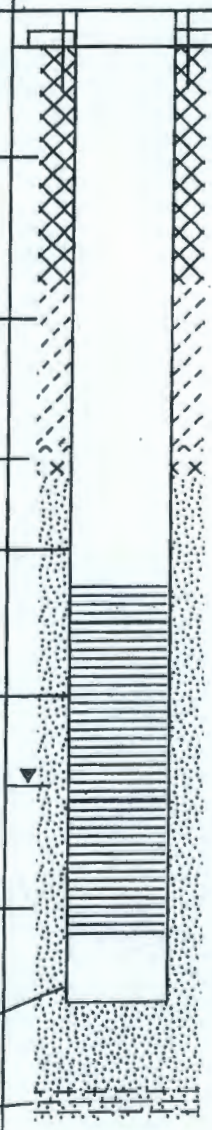

Total Depth (TD):
46.5 ft bgs

GEOLOGIC/HYDROLOGIC DATA

Depth in Feet

0, 10, 20, 30, 40, 50

Graphic Log

Lithologic Description

0' - 4': Silty Sand (mS)

4' - 20': slightly silty sandy Gravel (msG)

20' - 39': Sandy Gravel (sG)

39' - 43': Silt (M)

43' - 46.5': Sandy Silt (sM)

WELL SUMMARY SHEET

Start Date: 4.22.10		Page 1 of 1	
Finish Date:5.18.10			
Well ID: C7104		Well Name: 199-H1-40	
Location: NE of 100-H Reactor		Project: 100 HR-3 RPO Wells	
Prepared by: A. Pappas	Date: 6.1.10	Reviewed by: L. D. Walker	Date: 7/16/10
Signature:		Signature:	

CONSTRUCTION DATA

Description

Surface construction:
4 x 4 x 0.5 ft concrete pad with 4 protective posts and locking well monument

Neat grout cement:
0 - 9.8 ft bgs

Granular bentonite:
9.8 - 16.5 ft bgs

Bentonite pellet seal:
16.5 - 18.0 ft bgs

6-in Schedule 10, Type 304 stainless steel riser casing:
2.00 ags - 23.0 ft bgs

6-in, Type 316 stainless steel continuous wire-wrap V-slot screen, 0.070-in:
23.0 - 38.0 ft bgs

Depth to water: 33.1 ft bgs (5.18.10)

Filter pack: 6-12 mesh Colorado silica sand:
18.0 - 44.4 ft bgs

6-in Type 316 stainless steel sump with welded end cap:
38.0 - 41.0 ft bgs

All depths in feet above/below ground surface (ags/bgs)

Borehole drilled with 10 3/4-in/8-in dual-walled casing

All temporary casing removed from borehole

No horizontal scale

Diagram

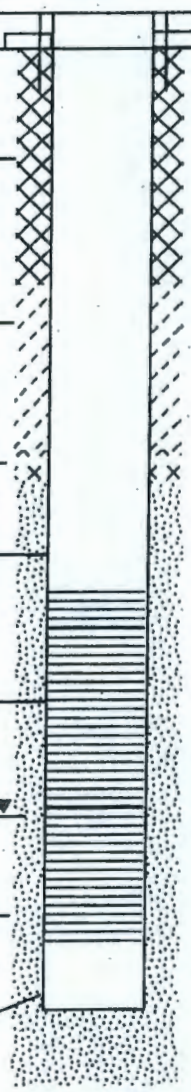

Total Depth (TD):
44.4 ft bgs

GEOLOGIC/HYDROLOGIC DATA

Depth in Feet

0, 10, 20, 30, 40, 50

Graphic Log

Lithologic Description

0' - 2': Silty Sand (mS)

2' - 16': Sandy Gravel (sG)

16' - 18': Silty Sandy Gravel (msG)

18' - 25': Sandy Gravel (sG)

25' - 38': Sandy Gravel (sG)

38' - 38.5': Gravel (G)

38.5' - 44.4' TD: Sandy Silt (sM)

WELL SUMMARY SHEET

Start Date: 5-26-10	Page 1 of 1
Finish Date: 5-25-10	

Well ID: C7105		Well Name: 199-H1-33	
Location: N.W of H-Reactor		Project: 100-HR-3 OU Pump & Treat Expansion	
Prepared by: A. Lantau	Date: 7-1-10	Reviewed by: L.D. Walker	Date: 7-19-10
Signature: L.D. Walker for A. Lantau		Signature: L.D. Walker	

CONSTRUCTION DATA

Description

Surface construction:
- 4 x 4 x 0.5 ft concrete pad
- 4 protective posts
- 8-in locking well monument with electrical access pannel.
  3.0 ft ags - 2.0 ft bgs

Permanent Well Materials:
- 6-in Casing of Schedule 10, Type 304 stainless steel:
  2.0 ft ags - 23.00 ft bgs
- 6-in Continuous wire-wrap screen of Type 316 stainless steel, 0.070-in:
  23.00 - 38.00 ft bgs
- 6-in Sump of Type 316 stainless steel with welded end cap:
  38.00 - 41.00 ft bgs

Annular Materials:
- Neat Cement Grout:
  0.0 - 10.0 ft bgs
- Granular Bentonite Fill:
  10.0 - 17.2 ft bgs
- Bentonite Pelet Annular Plug:
  17.2 - 18.4 ft bgs
- Silica Sand Filter Pack, 6-12 mesh
  18.4 - 45.0 ft bgs

Notes:
- All depths in feet above/below ground surface (ags/bgs)
- Borehole drilled with 10 3/4-in/8-in dual- walled casing
- All temporary casing removed from borehole
- No horizontal scale

Diagram

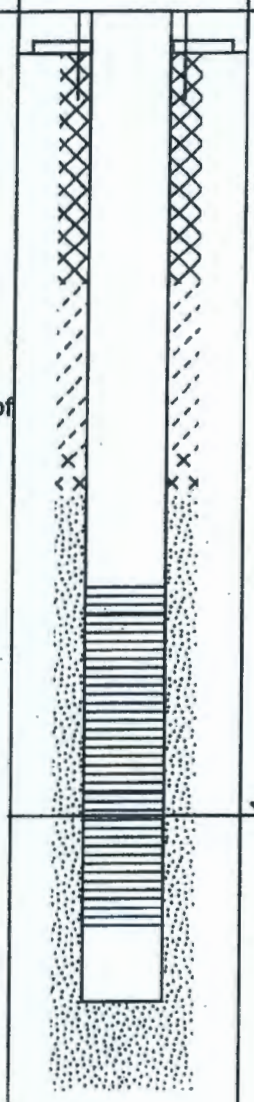

GEOLOGIC/HYDROLOGIC DATA

Depth in Feet: 0, 10, 20, 30, 40, 50

Graphic Log

Lithologic Description

0 - 13.4: Silty Sandy Gravel

13.4 - 39.0: Sandy Gravel

Water Level: 33.4 (5-13-10)

39 - 45: Silt

Total Depth (TD):
45.0 ft bgs

WELL SUMMARY SHEET

Start Date: 5-12-10	Page 1 of 1
Finish Date: 5-24-10	

Well ID: C7106		Well Name: 199-H1-35	
Location: N. 153627.6, E. 576958.6		Project: 100-HR-3 OU Pump & Treat Expansion	
Prepared by: A. Lantau	Date: 6-21-10	Reviewed by: L.D. Walker	Date: 7/20/10
Signature: Jason Lantau		Signature: LD Walker	

CONSTRUCTION DATA

Description

Surface construction:
4 x 4 x 0.5 ft concrete pad with 4 protective posts and locking well monument

Neat grout cement:
0.0 -10.0 ft bgs

Granular bentonite:
10.0 - 19.0 ft bgs

6-in Schedule 10, Type 304 stainless steel riser casing:
2.0 ags - 25.5 ft bgs

Bentonite pellet seal:
19.0 - ~~25.5~~ ft bgs
25.5

Filter pack: 6-12 mesh Colorado silica sand:
25.5 - 46.5 ft bgs

6-in, Type 316 stainless steel continuous wire-wrap V-slot screen, 0.070-in:
25.5- 40.5 ft bgs

6-in Type 316 stainless steel sump with welded end cap:
40.5 - 43.5 ft bgs

LW 7-20-10 Natural backfill 46.5 → 48.0'

All depths in feet above/below ground surface (ags/bgs)

Borehole drilled with 10 3/4-in/8-in dual-walled casing

All temporary casing removed from borehole

No horizontal scale

Diagram

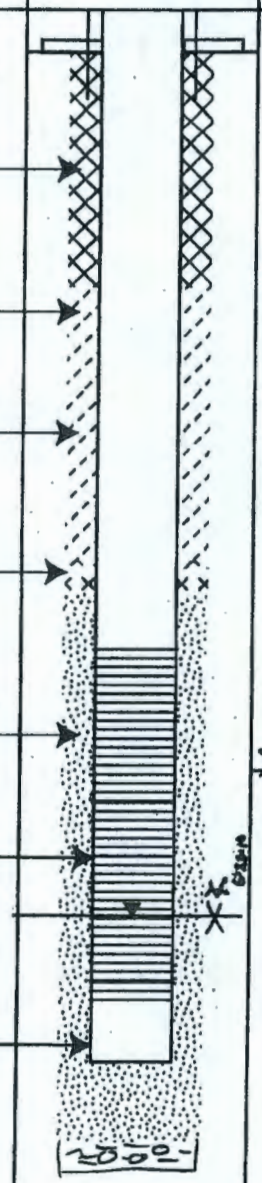

Total Depth (TD):
~~46.5~~ ft bgs
48.0
LW 7-20-10

GEOLOGIC/HYDROLOGIC DATA

Depth in Feet	Graphic Log	Lithologic Description
0		0 - 5: Silty Sandy Gravel
		5 - 41: Sandy Gravel
10		
20		
30		Water Level: 31.7 (5-12-10)
40		41-~~46.5~~: Silt 48.0' LW 7-20-10
50		

WELL SUMMARY SHEET

Start Date: Sept 29, 2009
Finish Date: Oct 1, 2009
Page 1 of 1

Well ID: C7107	Well Name: 199-H1-42
Location: 150 m West of 128-H-1 Exacavation	Project: 100-HR-3 FY09 Pump and Treat Expansion
Prepared by: L. Stratton — Date: Oct 6 2009	Reviewed by: L. D. Walker — Date: 10-20-09
Signature:	Signature:

CONSTRUCTION DATA

Description

Surface construction:
4 x 4 x 0.5 ft concrete pad with 4 protective posts and locking well monument

Neat grout cement:
0 - 8.5 ft bgs

Granular bentonite:
8.5 - 20.5 ft bgs

6-in Schedule 10, Type 304 stainless steel riser casing:
1.90 ft ags - 28.13 ft bgs

Bentonite pellet seal:
20.5 - 22.5 ft bgs

Filter pack: 6-12 mesh Colorado silica sand:
22.5 - 44.0 ft bgs

Depth to water: 29.4 ft bgs (10/1/09)

6-in, Type 316 stainless steel continuous wire-wrap V-slot screen, 0.055-in:
28.13 - 38.14 ft bgs

6-in Type 316 stainless steel sump with welded end cap:
38.14 - 40.89 ft bgs

All depths in feet above/below ground surface (ags/bgs)

Borehole drilled with 10 3/4-in/8-in dual-walled casing

All temporary casing removed from borehole

No horizontal scale

Diagram

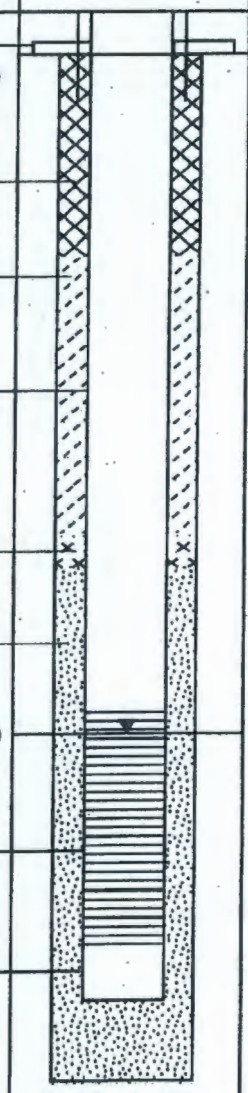

Total Depth (TD):
44.0 ft bgs

GEOLOGIC/HYDROLOGIC DATA

Depth in Feet: 0, 10, 20, 30, 40, 50

Graphic Log

Lithologic Description

0 - 8: Silty Sandy Gravel (msG)

8 - 28: Sandy Gravel (sG)

28 - 39: Silty Sandy Gravel (msG)

39- 41: Silty Gravel (sG)

41- 44 (TD): Silt (M)

WELL SUMMARY SHEET

Start Date: 5-4-10
Finish Date: 5-25-10

Page 1 of 1

Well ID: C7108	Well Name: 199-H1-34
Location: N.E of H-Reactor	Project: 100-HR-3 OU Pump & Treat Expansion
Prepared by: A. Lantau — Date: 6-22-10	Reviewed by: L.D. Walker — Date: 7-19-10
Signature: For A. Lantau	Signature:

CONSTRUCTION DATA

Surface construction:
- 4 x 4 x 0.5 ft concrete pad
- 4 protective posts
- 8-in locking well monument with electrical access pannel.

Permanent Well Materials:
- 6-in Casing of Schedule 10, Type 304 stainless steel:
  2.0 ags - 22.5 ft bgs
- 6-in Continuous wire-wrap screen of Type 316 stainless steel, 0.055-in:
  22.5 - 37.6 ft bgs
- 6-in Sump of Type 316 stainless steel with welded end cap:
  37.6 - 42.6 ft bgs

Annular Materials:
- Neat Cement Grout:
  0.0 - 9.5
- Granular Bentonite Fill:
  9.5 - 16.0
- Bentonite Pelet Annular Plug:
  16.0-17.5
- Silica Sand Filter Pack, 8-16 mesh
  17.5 - 44.9

Notes:
- All depths in feet above/below ground surface (ags/bgs)
- Borehole drilled with 10 3/4-in/8-in dual- walled casing
- All temporary casing removed from borehole
- No horizontal scale

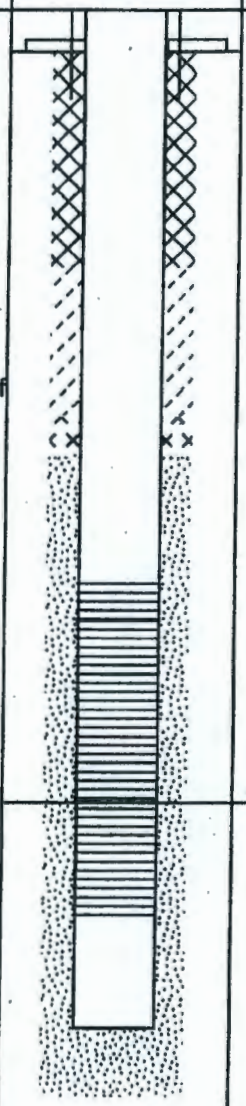

Total Depth (TD): 44.9 ft bgs

GEOLOGIC/HYDROLOGIC DATA

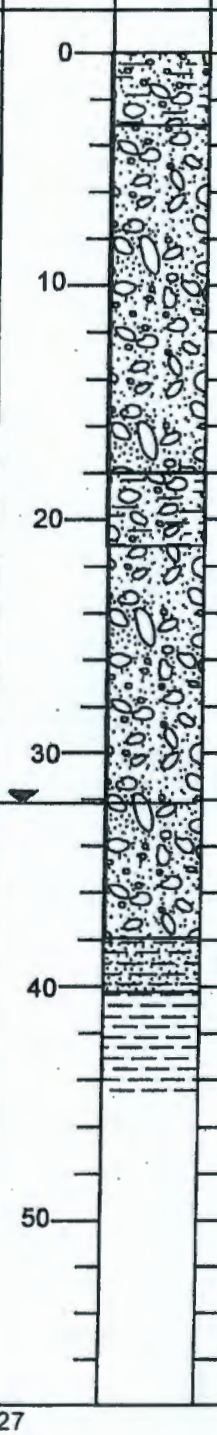

- 0 - 3: Silty pebble Gravel
- 3 - 18: Sandy Gravel
- 18 - 22: Silty Sandy Gravel
- 22 - 38: Sandy Gravel
- Water Level: 32 (5-4-10)
- 38 - 39.5: Sandy Silt
- 39.5 - 44.9: Silt

WELL SUMMARY SHEET

Start Date: 4.30.10	Page 1 of 1
Finish Date:5.17.10	

Well ID: C7109		Well Name: 199-H1-39	
Location: E: 153533.0 N: 577224.0		Project: 100 HR-3 RPO Wells	
Prepared by: A. Pappas	Date: 6.1.10	Reviewed by: L.D. Walker	Date: 7-19-10
Signature: [signature]		Signature: [signature]	

CONSTRUCTION DATA

Surface construction:
4 x 4 x 0.5 ft concrete pad with 4 protective posts and locking well monument

Neat grout cement:
0 - 9.5 ft bgs

Granular bentonite:
9.5 - 15.5 ft bgs

Bentonite pellet seal:
15.5 - 17.5 ft bgs

6-in Schedule 10, Type 304 stainless steel riser casing:
2.00 ags - 23.0 ft bgs

6-in, Type 316 stainless steel continuous wire-wrap V-slot screen, 0.055-in:
23.0 - 38.0 ft bgs

LW 7-19-10

Depth to water: ~~34.0~~ 31.8' ft bgs (5.17.10)

Filter pack: 6-12 mesh Colorado silica sand:
17.5 - 44.0 ft bgs

6-in Type 316 stainless steel sump with welded end cap:
38.0 - 41.0 ft bgs

All depths in feet above/below ground surface (ags/bgs)

Borehole drilled with 10 3/4-in/8-in dual-walled casing

All temporary casing removed from borehole

No horizontal scale

Diagram

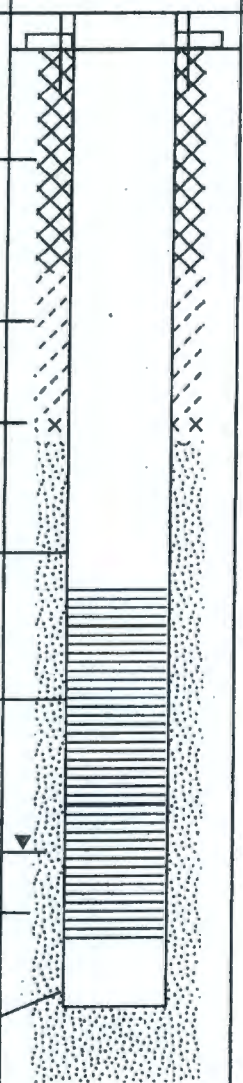

Total Depth (TD):
44.0 ft bgs

GEOLOGIC/HYDROLOGIC DATA

Depth in Feet: 0, 10, 20, 30, 40, 50

Graphic Log

Lithologic Description

0' - 5': Silty Sandy Gravel (msG)

5' - 38': Sandy Gravel (sG)

38' - 44' TD: Silt (M)

WELL SUMMARY SHEET

Start Date: 9·15·09
Finish Date: 9·22·09
Page 1 of 1

Well ID: C7110	Well Name: 199-H3-25
Location: 200 m N OF GROUNDWATER WAREHOUSE	Project: 100-HR-3 FY09 P&T EXPANSION
Prepared By: LAUREL STRATTON — Date: 9·23·09	Reviewed By: L. D. Walker — Date: 10/20/09
Signature: [signature]	Signature: [signature]

CONSTRUCTION DATA

Description

- SURFACE CONSTRUCTION: 4x4x0.5' CONCRETE PAD W/ 4 PROTECTIVE POSTS
- SURFACE SEAL: NEAT GROUT CEMENT: 0 - 9.8' bgs
- ANNULAR SEAL: GRANULAR BENTONITE: 9.3 - 27.1' bgs
- PELLET SEAL: COATED BENTONITE PELLETS: 27.1 - 28.25' bgs
- FILTER PACK: CSS, 6/12 MESH: 28.25 - 61.3' bgs

- MONUMENT: 8" STAINLESS W/ LOCKING WELL CAP: -3 to 2' bgs
- RISER: 6" SCHED. 10 TYPE 304 S.S.: -2.0 - 33.7' bgs
- SCREEN: 6" TYPE 316 S.S., CONTINUOUS WIRE-WRAP "V" SLOT, 0.070": 33.7 - 53.71' bgs
- SUMP: 6" SCHED 10 TYPE 316 S.S W/ WELDED END CAP: 53.71 - 56.72' bgs

DEPTH TO WATER: 39.00 (9·16·09)
TOTAL DEPTH: 61.3' bgs

- ALL TEMPORARY CASING REMOVED.
- BOREHOLE DRILLED WITH 10¾/8" DUAL-WALLED CASING: 0 - 61.2 ft bgs (TD).

ALL DEPTHS IN FEET BELOW GROUND SURFACE (BGS)

- NO HORIZONTAL SCALE

Diagram

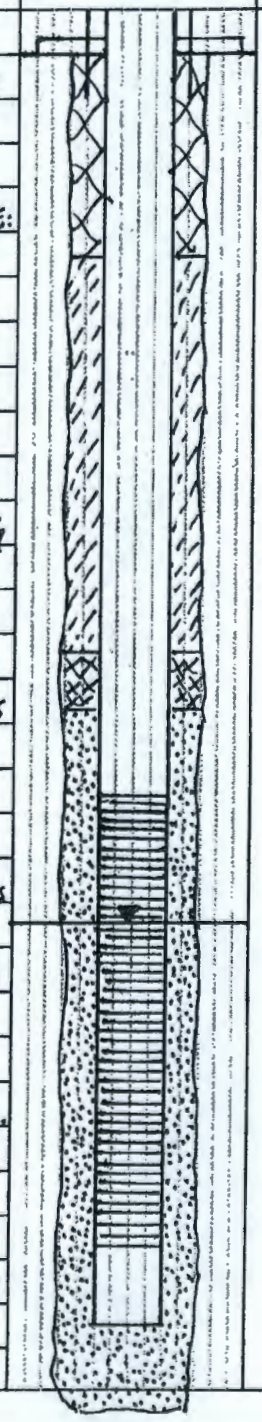

GEOLOGIC/HYDROLOGIC DATA

Depth in Feet: 0, 10, 20, 30, 40, 50

Graphic Log

Lithologic Description

0-12: SILTY SANDY GRAVEL (MSG)
12-20: SANDY GRAVEL (SG)
20-22: SILTY SANDY GRAVEL (MSG)
22-45: SANDY GRAVEL (SG)
45-55: GRAVEL (G)
55-56: SILTY GRAVEL (SG)
56-61.2 (TD): MUD (M)

A-6003-643 (03/03)

WELL SUMMARY SHEET

Start Date: 5.18.10		Page 1 of 1	
Finish Date: 6.3.10			
Well ID: C7111		Well Name: 199-H1-21	
Location: NW of 100H reactor		Project: 100-HR-3 OU Pump & Treat Expansion	
Prepared by: A. Pappas	Date: 6-29-10	Reviewed by: L. D. Walker	Date: 7/16/10
Signature: [signature]		Signature: [signature]	

CONSTRUCTION DATA

Description

Surface construction:
4 x 4 x 0.5 ft concrete pad with 4 protective posts and locking well monument

Neat grout cement:
0.0 -5.1 ft bgs

Granular bentonite:
5.1 - 9.7 ft bgs

Bentonite pellet seal:
9.7 - 12.1 ft bgs

6-in Schedule 10, Type 304 stainless steel riser casing:
2.01 ags - 17.10 ft bgs

LW 7-16-10

Filter pack: ~~6-12~~ 8-16 mesh Colorado silica sand:
12.1 - 39.6 ft bgs

6-in, Type 316 stainless steel continuous wire-wrap V-slot screen, 0.055-in:
17.10 - 32.11 ft bgs

6-in Type 316 stainless steel sump with welded end cap:
32.11 - 35.11 ft bgs

Natural Backfill:
39.6 - 39.8 ft bgs

All depths in feet above/below ground surface (ags/bgs)

Borehole drilled with 10 3/4-in/8-in dual-walled casing

All temporary casing removed from borehole

No horizontal scale

Diagram

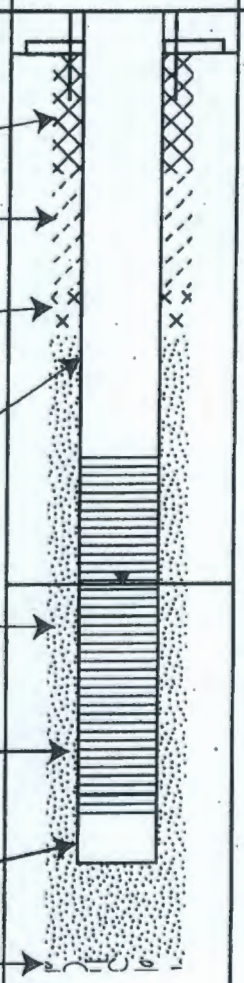

Total Depth (TD):
39.8 ft bgs

GEOLOGIC/HYDROLOGIC DATA

Depth in Feet: 0, 10, 20, 30, 40, 50

Graphic Log

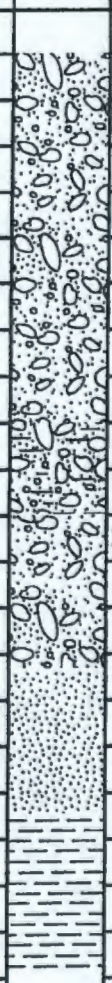

Lithologic Description

0' - 16': Sandy Gravel

16' - 20': Slightly Silty Sandy Gravel

20' - 26.5': SandyGravel

Water Level: ~~23.1' (6.10.10)~~
17.81' (6-3-10)

26.5' - 33': Sand LW 7-16-10

33' - 39.8' (TD): Silt

WELL SUMMARY SHEET

Start Date: 5-19-10	Page 1 of 1
Finish Date: 6-2-10	

Well ID: C7113		Well Name: 199-H1-20	
Location: N.W of H-Reactor		Project: 100-HR-3 OU Pump & Treat Expansion	
Prepared by: A. Lantau	Date: 6-23-10	Reviewed by: L.D. Walker	Date: 7/19/10
Signature: LDWalker for A. Lantau		Signature: LDWalker	

CONSTRUCTION DATA

Surface construction:
- 4 x 4 x 0.5 ft concrete pad
- 4 protective posts
- 8-in locking well monument with electrical access pannel.

Permanent Well Materials:
- 6-in Casing of Schedule 10, Type 304 stainless steel:
  2.0 ags - 11.42 ft bgs
- 6-in Continuous wire-wrap screen of Type 316 stainless steel, 0.070-in:
  11.42 - 31.44 ft bgs
- 6-in Sump of Type 316 stainless steel with welded end cap:
  31.44 - 34.44 ft bgs

Annular Materials:
- Neat Cement Grout:
  0.0 - 4.0
- Granular Bentonite Fill:
  4.0 - 5.2
- Bentonite Pelet Annular Plug:
  5.2 - 6.5
- Silica Sand Filter Pack, 6-12 mesh
  6.5 - 36.7
- Bentonite Pelet Annular Plug:
  36.7 - 41.7
- Decommissioning Sand: 8-16 mesh
  41.7 - 57.7

Notes:
- All depths in feet above/below ground surface (ags/bgs)
- Borehole drilled with 10 3/4-in/8-in dual- walled casing
- All temporary casing removed from borehole
- No horizontal scale

Diagram

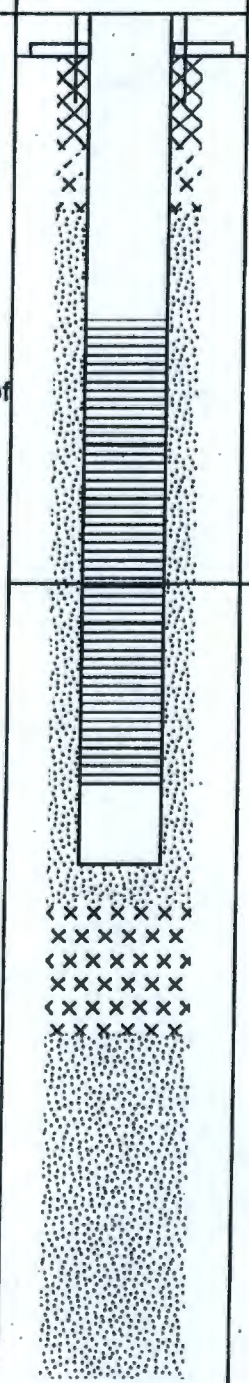

GEOLOGIC/HYDROLOGIC DATA

Depth in Feet: 0, 10, 20, 30, 40, 50

Graphic Log

Lithologic Description

- 0 - 12: Silty Sandy Gravel
- 12 - 32: Sandy gravel
- Water Level: ~~22.5 (6-17-10)~~ 14.5' bgs (6-2-10) LW 7-19-10
- 32 - 38: Silty sand
- 38 - 40: Silt
- 40 - 52: Silty Sand
- 52 - 57.7: Sandy Silt
- Total Depth (TD): 57.7 ft bgs

WELL SUMMARY SHEET

Start Date: 9·17·09
Finish Date: 9·24·09
Page 1 of 1

Well ID: C7114	Well Name: 199-H3-27
Location: E OF GROUNDWATER WAREHOUSE	Project: 100-HR-3 FY09 P&T EXPANSION
Prepared By: L. STRATTON — Date: 9·28·09	Reviewed By: L. D. Walker — Date: 10/20/09
Signature: [signature]	Signature: [signature]

CONSTRUCTION DATA

SURFACE CONSTRUCTION: 4x4x0.5' CONCRETE PAD w/ 8" LOCKING WELL MONUMENT, 2' ags - 2' bgs.

WELL CONSTRUCTION:

- RISER CASING: 6" SCHED 10 TYPE 304. 2.0' ags - 35.77' bgs
- SCREEN: 6" TYPE 316 CONTINUOUS WIRE-WRAP, V-SLOT, 0.070": 35.77 - 55.79' bgs
- SUMP W/ WELDED ENDCAP: 6" SCHED 10 TYPE 316 S.S.: 55.99 - 58.79' bgs

ANNULAR SEAL:

NEAT GROUT CEMENT: 0 - 9.5' bgs
GRANULAR BENTONITE: 9.5 - 27.2' bgs
1/4" BENTONITE PELLETS: 27.2' - 28.2' bgs
CSS (6-12 MESH): 28.2 - 61.9' bgs

TD = 61.9' bgs
DTW = 44.25 (9·25·09)

- BOREHOLE DRILLED W/ 10 3/4" / 8" DUAL-WALL TEMPORARY CASING 0-TD, ALL REMOVED.
- AGS/BGS = ABOVE/BELOW GROUND SURFACE
- NO HORIZONTAL SCALE

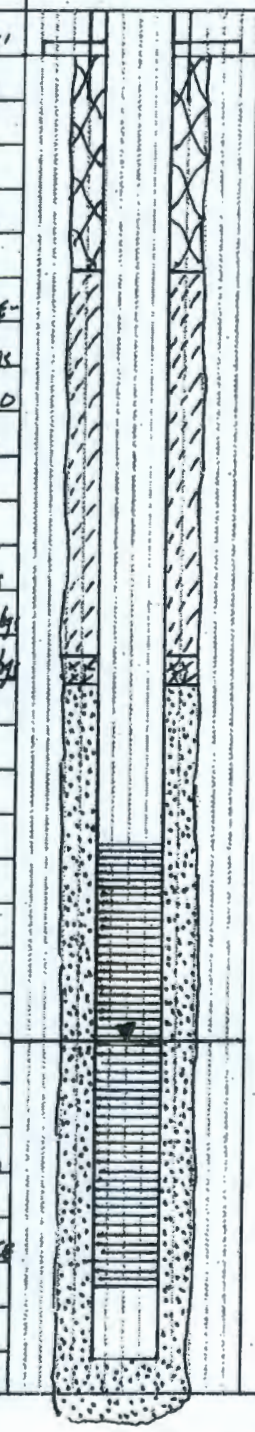

GEOLOGIC/HYDROLOGIC DATA

Depth in Feet	Lithologic Description
0	0-14: SILTY SANDY GRAVEL (msg)
14	14-40: SANDY GRAVEL (sg)
40	40-43: SILTY SANDY GRAVEL (msg)
43	43-49: SANDY GRAVEL (sg)
49	49-53: SILTY SANDY GRAVEL (msg)
53	53-57: SANDY GRAVEL (sg)
57	57-61.9: MUD (m)

A-6003-643 (03/03)

WELL SUMMARY SHEET

Start Date: 9-14-09
Finish Date: 9-21-09
Page 1 of 1

Well ID: C7115		Well Name: 199-H3-26	
Location: N of Groundwater warehouse		Project: 100-HR-3 FY09 P&T Expansion	
Prepared By: Laurel Stratton	Date: 9-23-09	Reviewed By: L. D. Walker	Date: 10/20/09
Signature: [signature]		Signature: [signature]	

CONSTRUCTION DATA

- Surface construction: 4'x4'x6" concrete pad with protective posts.
- Well monument 8" w/ locking cap, -3 to 3 ft bgs.
- Well: 6" schedule 10 type 304 blank casing, -2.0 to 34.96 ft bgs
- Screen: type 316 continuous wire-wrap, "V" slot (.070"): 34.96-49.98
- Sump w/end cap: 6" sched 10 type 316 stainless: 49.98 - 52.99 ft bgs.

- Surface seal: neat grout cement, 0-9.2 ft bgs
- Annular seal: granular bentonite, 9.2 - 26.9 ft bgs
- Pellet seal: coated bentonite pellets, 26.9 - 29.1 ft bgs
- Filter pack: Colorado Silica Sand, 6-12 mesh, 29.1 - 56.3 ft bgs.

Depth to water 37.6 (9-22-09)
Total depth: 56.3 ft bgs

- All depths in feet below ground surface (bgs)
- Borehole drilled with 10 3/4"/8" dual-wall casing: 0 - TD.
- All temporary casing removed
- No horizontal scale

GEOLOGIC/HYDROLOGIC DATA

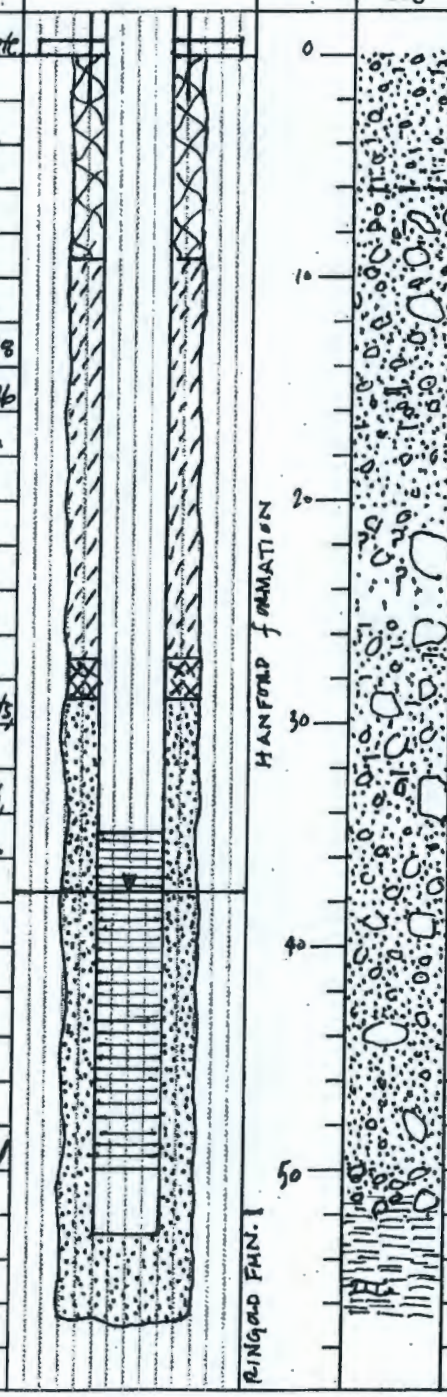

Depth in Feet	Lithologic Description
0	1-6: gravelly silty sand (gmS)
	6-15: sandy gravel (sG)
10	
	15-17: silty sandy gravel (msG)
	17-21: gravelly sand (gS)
20	21-25: very poor recovery
	25-32: silty sandy gravel (msG)
30	32-45: sandy gravel (sG)
40	
	45-50: sandy gravel / gravelly sand (sG / gS)
	50-51: sandy gravel (sG)
50	51-52: silty gravel (sG)
	52-56.3 (TD): SILT (M)

A-6003-643 (03/03)

WELL SUMMARY SHEET

Start Date: 9·23·09
Finish Date: 9·27·09
Page 1 of 1

Well ID: C7477	Well Name: 199-H1-45
Location: NW of C4110, 100-H Area	Project: 100-HR-3 FY09 PvT Expansion
Prepared By: Laurel Stratton — Date: 10·2·09	Reviewed By: L. D. Walker — Date: 10-20-09
Signature: [signature]	Signature: [signature]

CONSTRUCTION DATA

Description

SURFACE CONSTRUCTION: 4x4x0.5' Concrete pad w/ 4 protective posts. Well Monument 8" stainless steel w/ locking cap: 3' bgs - 2' bgs.
SURFACE SEAL: Neat grout cement, 0 - 8.8' bgs
ANNULAR FILL: granular bentonite, 8.8 - 32.3' bgs. 1/4" coated bentonite pellets, 32.3 - 34.1' bgs.
FILTER PACK: Colorado Silica Sand, 6/12 mesh, 34.1 - 61' bgs
PERMANENT WELL CONSTRUCTION:
6" sched. 10 type 304 liner casing, -2 - 38.86' bgs. 6" type 316 continuous wire wrap "V" slot screen, 0.070": 38.86 - 53.88' bgs. 6" type 316 ss. sump w/ endcap: 53.88 - 56.88.

Total depth: 61.08'
Depth to water: 39.65' bgs (9·28·09)

ALL DEPTHS IN FEET ABOVE/BELOW GROUND SURFACE (ags/bgs)

BOREHOLE DRILLED WITH 10 3/4"/8" DUAL-WALL TEMPORARY CASING, ALL REMOVED DURING CONSTRUCTION.

NO HORIZONTAL SCALE.

Diagram

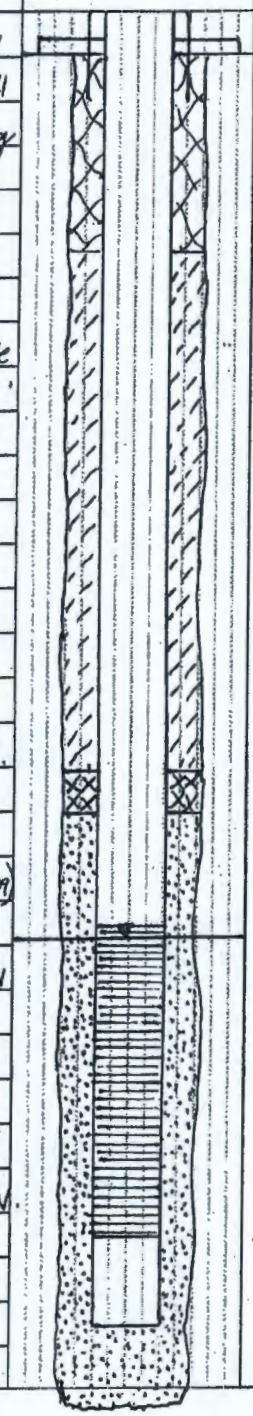

GEOLOGIC/HYDROLOGIC DATA

Depth in Feet: 0, 10, 20, 30, 40, 50

Graphic Log

Lithologic Description

0-16: SILTY SANDY GRAVEL (MSG)

16-45: SANDY GRAVEL (SG)

45-55.5: SILTY SANDY GRAVEL (MSG)

55.5-TD: SILT (M)

A-6003-643 (03/03)

WELL SUMMARY SHEET

Start Date: 5-17-10	Page 1 of 1
Finish Date: 5-26-10	

Well ID: C7478		Well Name: 199-H1-25	
Location: N.W of H-Reactor		Project: 100-HR-3 OU Pump & Treat Expansion	
Prepared by: A. Lantau	Date: 6-23-10	Reviewed by: L.D. Walker	Date: 7-19-10
Signature: [signature] for A. Lantau		Signature: [signature]	

CONSTRUCTION DATA

Surface construction:
- 4 x 4 x 0.5 ft concrete pad
- 4 protective posts
- 8-in locking well monument with electrical access pannel.

Permanent Well Materials:
- 6-in Casing of Schedule 10, Type 304 stainless steel:
  2.0 ags - 11.56 ft bgs
- 6-in Continuous wire-wrap screen of Type 316 stainless steel, 0.070-in:
  11.56 - 31.55 ft bgs
- 6-in Sump of Type 316 stainless steel with welded end cap:
  31.55 - 34.55 ft bgs

Annular Materials:
- Neat Cement Grout:
  0.0 - 4.0
- Granular Bentonite Fill:
  4.0 - 4.9
- Bentonite Pelet Annular Plug:
  4.9 - 6.6
- Silica Sand Filter Pack, 6-12 mesh
  6.6 - 39.5

Notes:
- All depths in feet above/below ground surface (ags/bgs)
- Borehole drilled with 10 3/4-in/8-in dual- walled casing
- All temporary casing removed from borehole
- No horizontal scale

Diagram

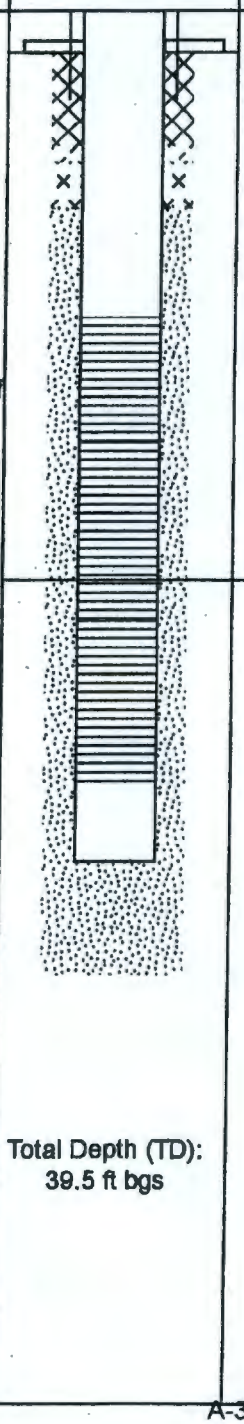

GEOLOGIC/HYDROLOGIC DATA

Depth in Feet

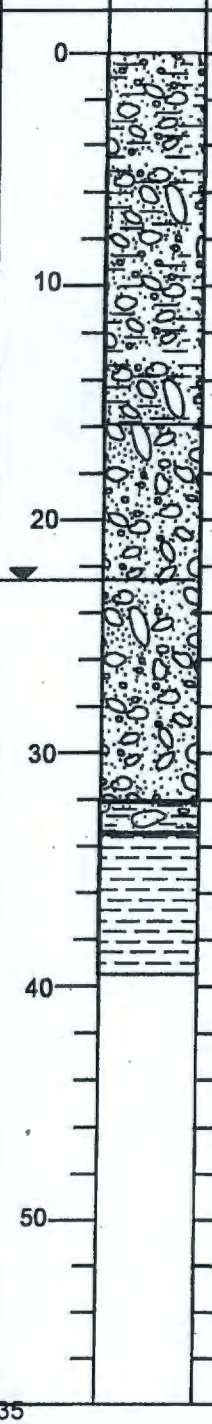

Graphic Log

Lithologic Description

- 0 - 16: Silty Sandy Gravel
- 16 - 32: Sandy gravel
- Water Level: 22.5 (5-17-10)
- 32 - 39.5: Silt

WELL SUMMARY SHEET

Start Date: 5-14-10	Page 1 of 1
Finish Date: 5-25-10	

Well ID: C7480		Well Name: 199-H1-27	
Location: N. 154023.6, E. 576403.9		Project: 100-HR-3 OU Pump & Treat Expansion	
Prepared by: A. Lantau	Date: 6-21-10	Reviewed by: L.D. Walker	Date: 7-20-10
Signature: for A. Lantau		Signature:	

CONSTRUCTION DATA

Description

Surface construction:
4 x 4 x 0.5 ft concrete pad with 4 protective posts and locking well monument

Neat grout cement:
0.0 -5.0 ft bgs

Granular bentonite:
5.0 - 8.0 ft bgs

Bentonite pellet seal:
8.0 - 9.5 ft bgs

6-in Schedule 10, Type 304 stainless steel riser casing:
2.0 ags - 14.2 ft bgs

6-in, Type 316 stainless steel continuous wire-wrap V-slot screen, 0.070-in:
14.2 - 34.2 ft bgs

6-in Type 316 stainless steel sump with welded end cap:
34.2 - 37.2 ft bgs

Filter pack: 6-12 mesh Colorado silica sand:
9.5 - 41.2 ft bgs

All depths in feet above/below ground surface (ags/bgs)

Borehole drilled with 10 3/4-in/8-in dual-walled casing

All temporary casing removed from borehole

No horizontal scale

Diagram

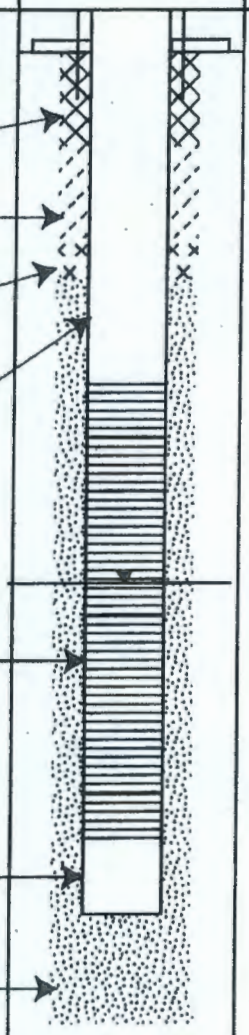

Total Depth (TD):
41.2 ft bgs

GEOLOGIC/HYDROLOGIC DATA

Depth in Feet / Graphic Log

Lithologic Description

0 - 5: Silty Sandy Gravel

5 - 35: Sandy Gravel

Water Level: 23.1 (5-14-10)

35 - 41.2: Silt

SGW-48612 REV 0

WELL SUMMARY SHEET

Start Date: 9·3·09
Finish Date: 9·11·09
Page 1 of 1

Well ID: C7483	Well Name: 199-W4-70
Location: E. of H-reactor (~500 m)	Project: 100-HR-3 Pump & Treat Expansion FY09
Prepared By: A. Lantow — Date: 9-11-09	Reviewed By: L.D. Walker — Date: 10/13/09
Signature: Aaron Lantow	Signature: LD Walker

CONSTRUCTION DATA

Description

Well Head

3.05' ags-1.95' bgs: 8" OD. Protective casing vault with weather proof electrical portal & locking cap.

Well Pad: 4'x4'x6"

Protective Posts: 3" OD C.S. 3' ags-3' bgs x 4-one removable

Well: (6")

2.05' ags-45.0' bgs: 6" Casing of S.S. Type 304L

45.0'-55.0': 70-slot continuous v-slot wire wrap of S.S. Type 316

55.0'-58.0': Sump of S.S. Type 304L

Annular Fill

Surface Seal: 0.0'-9.5' of Ashgrove Type II cement grout + 15% Bentonite

9.5'-36.0': Annular fill (upper) of #8 granular Bentonite

36.0'-37.5': Annular fill (lower) of 1/4" Bentonite pellets

37.5'-61.3': Sand Pack of 6-12 mesh silica sand

Notes: All Measurements in feet below ground surface (bgs) + feet above ground surface (ags) when applicable.

Diagram

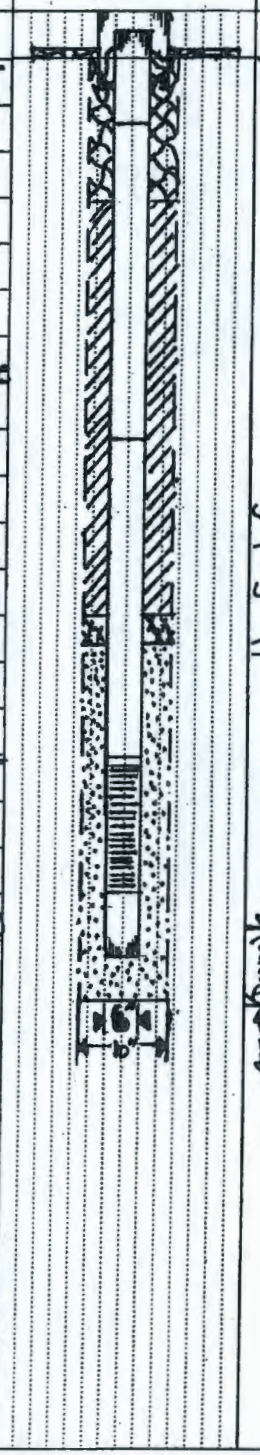

GEOLOGIC/HYDROLOGIC DATA

Depth in Feet / Graphic Log / Lithologic Description

0-15': Sandy Gravel (SG)

15'-18': Gravel (G)

18'-35': Sandy Gravel (SG)

-25': slightly silty sandy gravel ((m)SG) (thin unit.)

35'-40': silty sandy Gravel (mSG)

40'-45': Sandy Gravel (SG)

45'-48': silty sandy Gravel (mSG)

48'-55': gravelly Sand (gS)

55'-56': Gravel (G)

56'-61.4': Silt of Ringold upper mud (RUM)

DTW: 46.4' bgs. (9-11-09)

Borehole T.D. 61.4' bgs.

A 6003 843 (03/03)

WELL SUMMARY SHEET

Start Date: 8·27·09
Finish Date: 9·3·09
Page 1 of 2

Well ID: C7484	Well Name: 199-HA-73
Location: W of H AVE, 500m S of H REACTOR	Project: 100-HR-3 FY09 P&T EXPANSION
Prepared By: LAUREL STRATTON — Date: 9/15/09	Reviewed By: L. D. Walker — Date: 10/8/09
Signature: [signature]	Signature: [signature]

CONSTRUCTION DATA

Description

SURFACE CONSTRUCTION: 6" CEMENT PAD

8" PROTECTIVE CASING WITH LOCKING CAP

SURFACE SEAL: NEAT GROUT CEMENT: 0-9.0' bgs

ANNULAR SEAL: GRANULAR BENTONITE: 9.0 – 36.33' bgs

6" SCHEDULE 10, TYPE 304 STAINLESS STEEL BLANK CASING: 1.80 – 43.25' bgs

11" BOREHOLE

PELLET SEAL: 1/4" COATED BENTONITE PELLETS: 36.33 – 37.8' bgs

FILTER PACK: COLORADO SILICA SAND, 6-12 MESH: 37.8 – 71.0 (TD)' bgs

STATIC WATER (8.28.09): 44.5' bgs

6" SCHEDULE 10, TYPE 316 STAINLESS STEEL, CONTINUOUS WIRE WRAP, "V" SLOT (90) SCREEN: 43.25 – 63.27' bgs

ALL DEPTHS IN FEET BELOW GROUND SURFACE (bgs). NO HORIZONTAL SCALE. SEE NOTES, PAGE 2.

Diagram

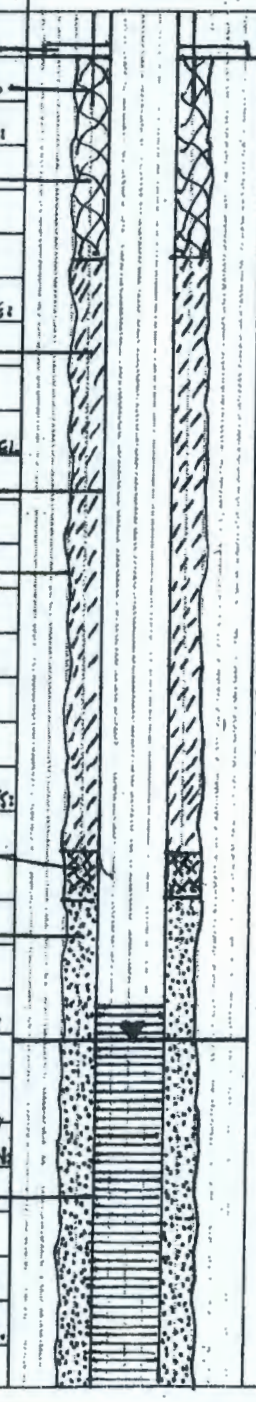

GEOLOGIC/HYDROLOGIC DATA

Depth in Feet

0, 10, 20, 30, 40, 50

HANFORD FORMATION

Graphic Log

Lithologic Description

0-~~30~~ 25: SANDY GRAVEL (SG) 9/15/09

25-35: SILTY SANDY GRAVEL (mSG)

35-53: SANDY GRAVEL (SG)

53-64.5: GRAVEL (G)

A-6003-643 (03/03)

WELL SUMMARY SHEET

Start Date: 8·27·09
Finish Date: 9·8·09
Page 2 of 2

Well ID: C7484	Well Name: 199-H4-73
Location: W OF H AVE, 500 M S OF H REACTOR	Project: 100-HR-3 FY09 P&T Expansion
Prepared By: LAUREL STRATTON — Date: 9·15·09	Reviewed By: L.D. Walker — Date: 10/8/09
Signature: [signature]	Signature: [signature]

CONSTRUCTION DATA

Description	Diagram
6" SCHEDULE 10, TYPE 316 STAINLESS STEEL CONTINUOUS WIRE WRAP, 1/8" SLOT (70) SCREEN 43.25 – 63.27' bgs	
6" SCHEDULE 10, TYPE 316 STAINLESS STEEL SUMP: 63.27 – 66.29' bgs	
FILTER PACK: COLORADO SILICA SAND, 6-12 MESH: 37.8 – 71.0 (TD)' bgs	TD = 71.0
ALL DEPTHS IN FEET BELOW GROUND SURFACE (bgs)	
BOREHOLE DRILLED WITH 10 3/4"/8" DUAL-WALL TEMPORARY CASING. ALL TEMPORARY CASING REMOVED.	
NO HORIZONTAL SCALE.	

GEOLOGIC/HYDROLOGIC DATA

Depth in Feet	Graphic Log	Lithologic Description
60		53-64.5: GRAVEL (G)
		64.5-71.0: MUD (M)
70		

LINGLE FORMATION ← → HANFORD

A-6003-643 (03/03)

WELL SUMMARY SHEET

Start Date: 9/8/09
Finish Date: 9/14/09
Page 1 of 2

Well ID: C7485	Well Name: 199-H4-69
Location: NE OF H REACTOR, E OF H AVE	Project: 100-HR-3 FY09 P&T EXPANSION
Prepared By: LAUREL STRATTON — Date: 9/14/09	Reviewed By: L.D. Walker — Date: 10/14/09
Signature: [signature]	Signature: [signature]

CONSTRUCTION DATA

Description

SURFACE CONSTRUCTION: 6" CONCRETE PAD
8" STAINLESS STEEL WELL MONUMENT
SURFACE SEAL (CEMENT): 0-9.0' bgs
6" SCHEDULE 10 TYPE 304 STAINLESS STEEL BLANK CASING: -2.0 - 45.75' bgs
ANNULAR SEAL: GRANULAR BENTONITE: 9.0 - 38.1' bgs
PELLET SEAL (1/4" COATED BENTONITE PELLETS): 38.1 - 41.08' bgs
FILTER PACK (COLORADO SILICA SAND, 8/16 MESH): 41.08 - 63.83 (TD)
6" SCHEDULE 10, TYPE 316 CONTINUOUS WIRE WRAP V-SLOT STAINLESS STEEL SCREEN (55-SLOT): 45.75 - 55.75' bgs
6" SCHEDULE 10 TYPE 316 STAINLESS STEEL SUMP: 55.75 - 58.77' bgs

Diagram

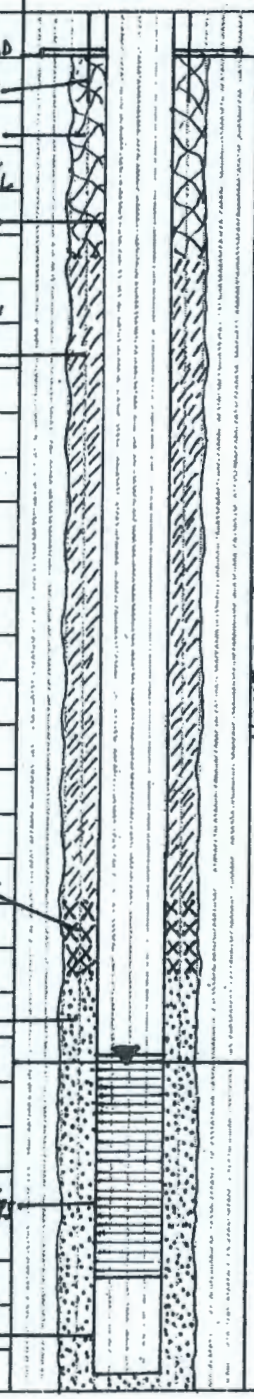

GEOLOGIC/HYDROLOGIC DATA

Depth in Feet

0, 10, 20, 30, 40, 50

Graphic Log

HANFORD FORMATION

Lithologic Description

0-5: SILTY SANDY GRAVEL (mSG)
5-27: SANDY GRAVEL (SG)
27-33: SILTY SANDY GRAVEL (mSG)
33-43: SANDY GRAVEL (SG)
43-58: SILTY SANDY GRAVEL (mSG)
DTW = 45.95 (9/9/09)

SEE NOTES PAGE 2.

A-6003-643 (03/03)

WELL SUMMARY SHEET

Start Date: 9·8·09
Finish Date: 9·14·09
Page 2 of 2

Well ID: C7485
Well Name: 199-H4-69
Location: NE OF H REACTOR, E. OF H. AVE.
Project: 100-HR-3 FY09 P&T EXPANSION
Prepared By: LAUREL STRATTON
Date: 9·14·09
Reviewed By: L.D. Walker
Date: 10/14/09
Signature: For L. Stratton 10/14/09
Signature:

CONSTRUCTION DATA

Description	Diagram
COLORADO SILICA SAND, 8/16 MESH: 41.08 - 63.83 ft bgs	TD = 63.83
ALL MEASUREMENT IN FEET BELOW GROUND SURFACE (bgs)	
BOREHOLE DRILLED WITH 10 3/4"/8" DUAL-WALL CASING: 0 - TD.	
ALL TEMPORARY CASING REMOVED.	
X-AXIS NOT TO SCALE	

GEOLOGIC/HYDROLOGIC DATA

Depth in Feet	Graphic Log	Lithologic Description
60		58-60: SILTY GRAVEL (mG)
		60-63.83: MUD (M)
		GEOLOGIC UNITS:
		0-60 (approx): Hanford formation
70		60-63: Ringold "Upper Mud" (RUM)

Hanford formation
Ringold formation

A-6003-643 (03/03)

WELL SUMMARY SHEET

Start Date: 8·28·09
Finish Date: 9.10·09
Page 1 of 2

Well ID: C7487	Well Name: 199-H4-71
Location: E OF H AVE, NE OF H REACTOR	Project: 100-HR-3 FY09 P&T EXPANSION
Prepared By: LAUREL STRATTON Date: 9.15.09	Reviewed By: L.D. Walker Date: 10/12/09
Signature:	Signature:

CONSTRUCTION DATA

Description	Diagram
SURFACE CONSTRUCTION: 6" CEMENT PAD WITH PROTECTIVE POSTS	
8" PROTECTIVE CASING WITH LOCKING CAP: 3.0' ags - 2' bgs	
SURFACE SEAL: NEAT GROUT CEMENT: 0 - 9.8' bgs	
6" SCHEDULE 10, TYPE 304 STAINLESS STEEL BLANK CASING: -2.0' - 45.04' bgs	
ANNULAR SEAL: GRANULAR BENTONITE: 9.8 - 36.7' bgs	
1/4" COATED BENTONITE PELLET SEAL: 36.7 - 39.5' bgs	
FILTER PACK: COLORADO SILICA SAND, US #6 MESH: 39.5' - 71.0' bgs (TD)	
DEPTH TO WATER: 47.3 (9.31.09)	
6" SCHEDULE 10, TYPE 316 CONTINUOUS WIRE WRAP, "V" SLOT (55) SCREEN: 45.04 - 60.07' bgs	

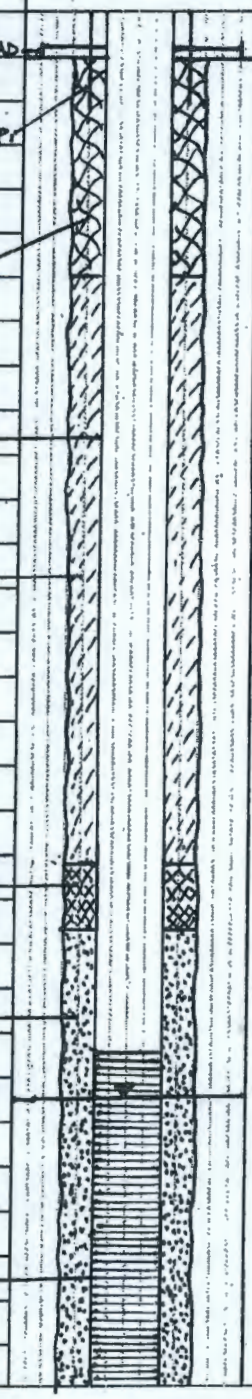

GEOLOGIC/HYDROLOGIC DATA

Depth in Feet	Graphic Log	Lithologic Description
0		0-6: GRAVEL (G)
		6-25: SANDY GRAVEL (SG)
10		
20		
		25-29: GRAVEL (G)
		29-33: SANDY GRAVEL (SG)
30		
		33-45: SANDY GRAVEL (SG)
40		
		45-49: SILTY SANDY GRAVEL (mSG)
		49-62: SANDY GRAVEL (SG)
50		

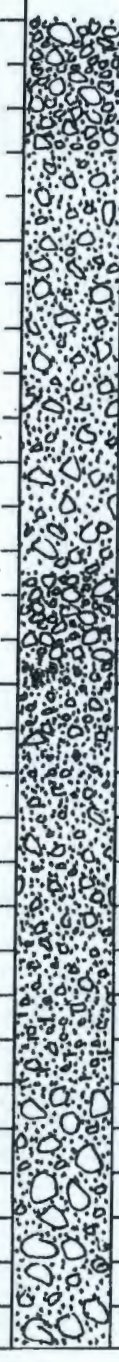

SEE NOTES PAGE 2.

A-6003-643 (03/03)

WELL SUMMARY SHEET

Start Date: 8·28·09
Finish Date: 9·10·09
Page 2 of 2

Well ID: C7487	Well Name: 199-H4-71
Location: E OF H AVE, NE OF H REACTOR	Project: 100-HR-3 FY09 PUT EXPANSION
Prepared By: LAUREL STRATTON — Date: 9·15·09	Reviewed By: L.D. Walker — Date: 10/12/09
Signature: [signature]	Signature: [signature]

CONSTRUCTION DATA

Description

6" SCHEDULE 10, TYPE 316 STAINLESS STEEL CONTINUOUS WIRE WRAP "V" SLOT (55) SCREEN 45.04 - 60.07' bgs

6" SCHEDULE 10, TYPE 316 STAINLESS STEEL SUMP: 60.07 - 63.09' bgs

FILTER PACK: COLORADO SILICA SAND, 8/16 MESH: 39.5-71.0' bgs (TD).

• ALL DEPTHS IN FEET BELOW GROUND SURFACE (bgs)

• BOREHOLE DRILLED USING 10¾"/8" DUAL-WALL TEMPORARY CASING, 0-TD.

• ALL TEMPORARY CASING REMOVED

• NO HORIZONTAL SCALE.

Diagram

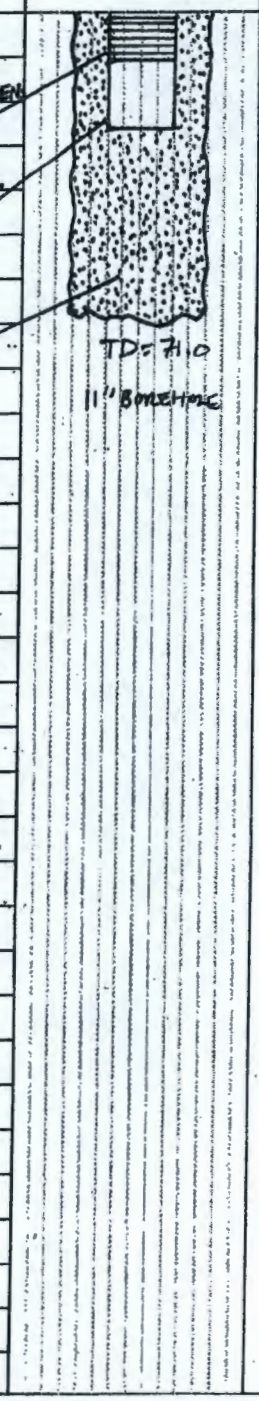

GEOLOGIC/HYDROLOGIC DATA

Depth In Feet	Graphic Log	Lithologic Description
60		49-62: SANDY GRAVEL (SG)
		62-71: MUD (M)
	RINGOLD FORMATION	
70		

A-6003-643 (03/03)

WELL SUMMARY SHEET

Start Date: 9·10·09
Finish Date: 9·14·09
Page 1 of 1

Well ID: C7488	Well Name: 199-H4-92
Location: ~500 m E of H Reactor	Project: 100-HR-3 FY09 P&T Expansion
Prepared By: Laurel Stratton — Date: 9·21·09	Reviewed By: L.D. Walker — Date: 10/20/09
Signature: [signature]	Signature: [signature]

CONSTRUCTION DATA

Description

- Surface construction 6"x4'x4' cement pad with protective posts
- Well monument w/ locking cap: 8" s.s., 3' ags - 2' bgs.
- Surface seal: neat grout cement: 0-9.5' bgs.
- Annular seal: bentonite crumbles: 9.5 – 38.5' bgs.
- Pellet seal: 1/4" bentonite coated pellets: 33.5-35.0' bgs
- Filter pack: Colorado Silica Sand, 6/12-mesh: 35.0 – 61.25' bgs (TD)

- Blank casing: 6" Schedule 10 type 304 stainless steel: 2.0 - 39.98' bgs
- Screen 6" type 316 continuous wire-wrap "V"-slot, 0.070" s.s.: 39.98-55.00' bgs.
- Sump w/ endcap: 6" sched. 10 type 316 s.s: 55.00 – 58.01' bgs.

DTW = 42.30 (9·10·09)
TD = 61.25

- No horizontal scale
- All depths in feet below ground surface (bgs).
- Borehole drilled w/ 10 3/4"/8" dual-wall temporary casing 0-TD: (All casing removed from borehole)

Diagram

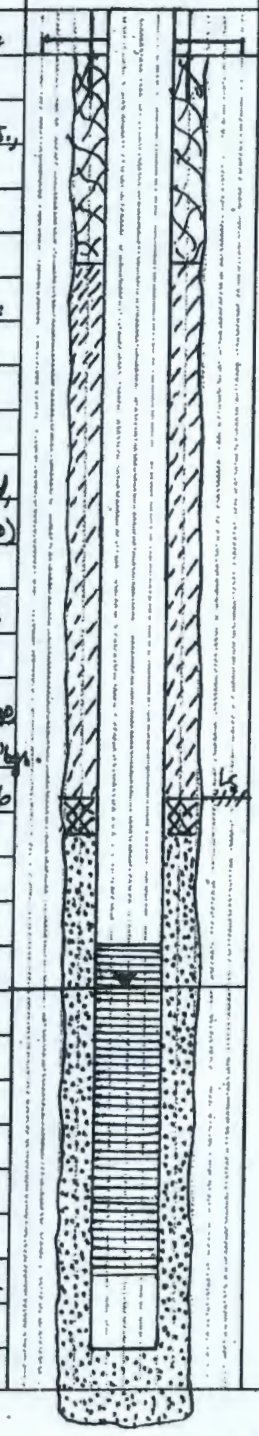

GEOLOGIC/HYDROLOGIC DATA

Depth in Feet: 0, 10, 20, 30, 40, 50

Graphic Log

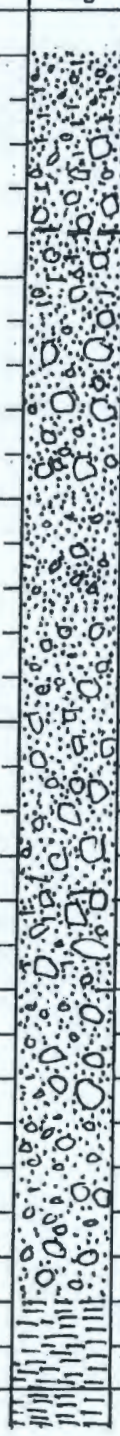

Lithologic Description

0-3: gravelly silty sand (gmS)

3-8: silty sandy gravel (mSG)

8-12: silty sandy gravel (mSG) (color change)

12-20: sandy gravel (SG)

20-25: gravelly sand (gS)

25-37: sandy gravel (SG)

37-42: silty sandy gravel (mSG)

42-56: sandy gravel (SG)

56-61.25 (TD): MUD (M).

A-6003-643 (03/03)

WELL SUMMARY SHEET

Start Date: 8·25·09
Finish Date: 9·2·09
Page 1 of 1

Well ID: C7489	Well Name: 199-H6-2
Location: W OF H AVE SE OF H REACTOR.	Project: 100-~~H6-2~~ HR3 FY09 PUT EXPANSION
Prepared By: LAUREL STRATTON Date: 9·18·09	Reviewed By: LD. Walker LC 11.18.09 Date: 10/7/09
Signature:	Signature:

CONSTRUCTION DATA

Description

- SURFACE CONSTRUCTION: 4'x4'x0.5' CEMENT PAD W/PROTECTIVE POSTS.
- 8" PROTECTIVE CASING/LOCKING MONUMENT
- SURFACE SEAL: NEAT GROUT CEMENT: 0-9.0' bgs
- ANNULAR SEAL: GRANULAR BENTONITE 9.0 - 33.0 ft bgs
- PELLET SEAL: 1/4" COATED BENTONITE PELLETS: 33.0 - 35.0 ft bgs
- FILTER PACK: COLORADO SILICA SAND, 6/12 MESH: 35.0 - 60.7' bgs (TD)
- 6" SCHEDULE 10, TYPE 304 STAINLESS STEEL BLANK CASING: -2.0 - 39.81' bgs
- 6" TYPE 316 CONTINUOUS WIRE WRAP STAINLESS STEEL "V"-SHOT 0.070" SCREEN: 39.81 - 49.81' bgs

DTW = 43.00 (8·26·09)

- 6" SCHEDULE 10, TYPE 316 STAINLESS STEEL SUMP: 49.81 - 52.83' bgs
- ALL DEPTHS IN FEET BELOW GROUND.
- BOREHOLE DRILLED WITH 10 3/4" 8" DUAL-WALL CASING, 0 - TD.
- ALL TEMPORARY CASING REMOVED
- NO HORIZONTAL SCALE

Diagram

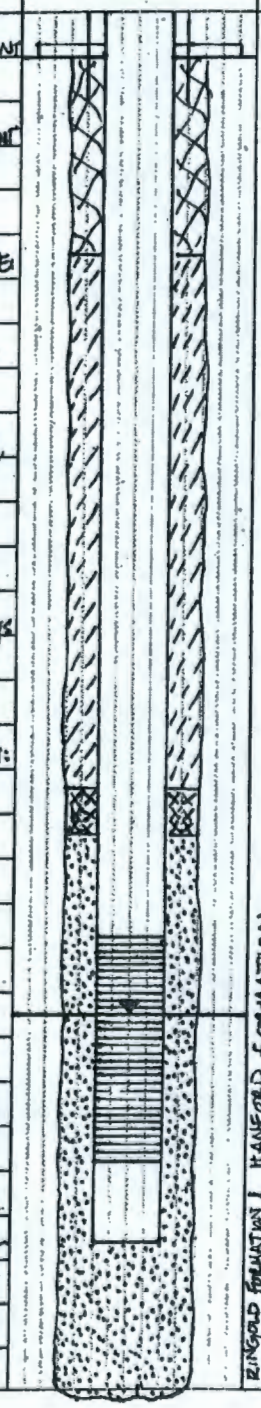

GEOLOGIC/HYDROLOGIC DATA

Depth In Feet

0, 10, 20, 30, 40, 50, 60

Graphic Log

Lithologic Description

- 0-5: SLIGHTLY GRAVELLY SAND (gmS)
- 5-20: SANDY GRAVEL (SG)
- 20-45: GRAVEL (G)
- 45-51: SANDY GRAVEL (SG)
- 51-60.7 (TD): SANDY SILT (SM)
- TD = 60.7 ft bgs

A-6003-643 (03/03)

WELL SUMMARY SHEET

Start Date: Sept 28, 2009
Finish Date: Oct 1, 2009

Page 1 of 1

Well ID: C7492	Well Name: 199-H1-43
Location: West of 128-H-1 Excavation	Project: 100-HR-3 FY09 Pump and Treat Expansion
Prepared by: L. Stratton — Date: Oct 6 2009	Reviewed by: L.D. Walker — Date: 10/20/09
Signature: [signature]	Signature: [signature]

CONSTRUCTION DATA

Description

Surface construction:
4 x 4 x 0.5 ft concrete pad with 4 protective posts and locking well monument

Neat grout cement:
0 - 10.0 ft bgs

Granular bentonite:
10.0 - 25.4 ft bgs

6-in Schedule 10, Type 304 stainless steel riser casing:
2.0 ags- 32.0 ft bgs

Bentonite pellet seal:
25.4 - 26.9 ft bgs

Filter pack: 6-12 mesh Colorado silica sand:
26.9 - 49.9 ft bgs

Depth to water: 31.51 ft bgs (9/29/09)

6-in, Type 316 stainless steel continuous wire-wrap V-slot screen, 0.055-in:
32.0 - 42.0 ft bgs

6-in Type 316 stainless steel sump with welded end cap:
42.0 - 45.0 ft bgs

All depths in feet above/below ground surface (ags/bgs)

Borehole drilled with 10 3/4-in/8-in dual-walled casing

All temporary casing removed from borehole

No horizontal scale

Diagram

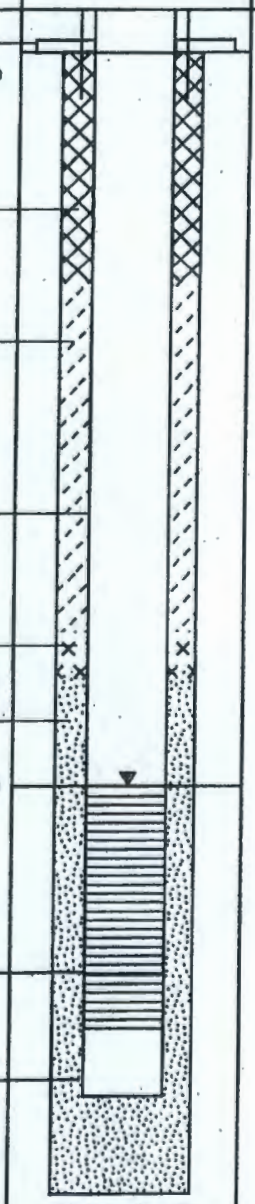

Total Depth (TD):
49.0 ft bgs

GEOLOGIC/HYDROLOGIC DATA

Depth in Feet: 0, 10, 20, 30, 40, 50

Graphic Log

Lithologic Description

0 - 20: Silty Sandy Gravel (msG)

20 - 25: Sandy Gravel (sG)

25 - 30: Silty Sandy Gravel (msG)

30 - 35: Gravel (G)

35 - 37: Sandy Gravel (sG)

37 - 43: Gravely Sand (gS)

43 - 45: Gravely Silt (gM)

45 - 49 (TD): Silt (M)

WELL SUMMARY SHEET

Start Date: 2-18-10
Finish Date: 3-3-10
Page 1 of 1

Well ID: C7580
Well Name: 199-D4-101
Location: N. 151425.7, E. 572800.3
Project: 100-NR-3 OU, Pump & Treat, Remedial Project
Prepared By: D. Lantan
Date: 3-1-10
Reviewed By: L.D. Walker
Date: 5/26/10
Signature: [illegible]
Signature: [illegible]

CONSTRUCTION DATA

Description

Well Head
Protective Monument: 8" OD, S.S. 3.0' aas, 20' bas.
Concrete Pad 4'x4'x6".

Well Matls.
-2.0'-81.2': 6", sch.10 S.S. Type 304 casing.
81.2'-101.2': 6" sch.10, S.S. screen 0.045 slot v-wire.
101.2'-106.2': 6" sch.10, S.S. Type 304 sump.

Annular Matls.
0.0'-10.1': Cement/Bentonite Seal
10.1'-74.5': Bentonite, 10-20 mesh
74.5'-75.3': Bentonite, 1/4" Pellets
75.3'-109.9': Sand, 10-20 mesh.

Notes:
All depts in ft. below ground surface (bgs.)
No Centralizers used.

Diagram

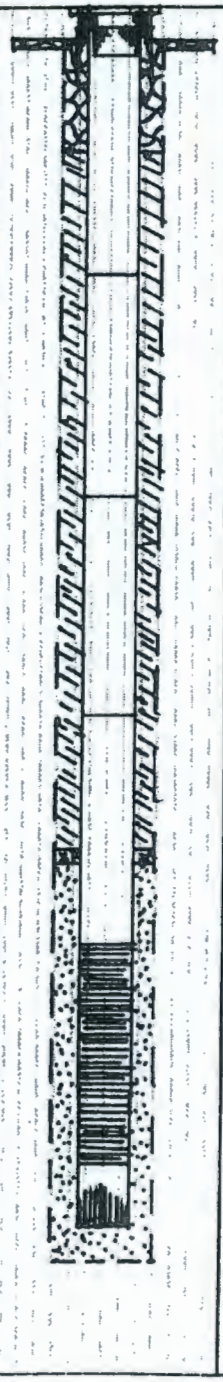

GEOLOGIC/HYDROLOGIC DATA

Depth in Feet	Graphic Log	Lithologic Description
0		0'-6': Gravelly Sand. ~~70% felsic~~ 55% mafic
		6'-22': Sandy Gravel - ~~70% felsic~~ 70% Mafic
20		22'-34': Gravelly Sand. 60% Mafic
		34'-38': Sandy Gravel
40		38'-48': Gravelly Sand. 65% felsic
		48'-54': Sandy Gravel
		54'-63': Sandy Gravel 60% Mafic
60		63-67: ~~63-85~~: Silty Sandy Gravel - 60% felsic
		67'-74': Gravelly Sand. 55% Mafic
		74'-102': Sandy Gravel 60% felsic
80		84.0': Water level
100		102'-105': Silty Gravel - 70% mafic.
	T.D.	105'-109.9': Silt 10YR6/1 Gray
		TD: 109.9'

A-6003-643 (03/03)

WELL SUMMARY SHEET

Start Date: 6-21-10	Page 1 of 1
Finish Date: 9-13-10	

Well ID: C7581		Well Name: 199-H1-3	
Location: N.W of H-Reactor		Project: 100-HR-3 OU Pump & Treat Expansion	
Prepared by: J. Johanson	Date: 9-22-10	Reviewed by: L. D. Walker	Date: 10-11-10
Signature: Julie Johanson		Signature: [illegible]	

CONSTRUCTION DATA

Description

Surface construction:
- 4 x 4 x 0.5 ft concrete pad
- 4 protective posts
- 8-in locking well monument with electrical access pannel.
  3.0 ft ags - 2.0 ft bgs

Permanent Well Materials:
- 6-in Casing of Schedule 10, Type 304 stainless steel:
  2.0 ft ags - 32.17 ft bgs
- 6-in Continuous wire-wrap screen of Type 316 stainless steel, 0.070-in:
  32.17 - 42.17 ft bgs
- 6-in Sump of Type 316 stainless steel with welded end cap:
  42.17 - 47.15 ft bgs

Annular Materials:
- Neat Cement Grout:
  0.0 - 9.5 ft bgs
- Granular Bentonite Fill:
  9.5 - 25.8 ft bgs
- Bentonite Pelet Annular Plug:
  25.8 - 27.3 ft bgs
- Silica Sand Filter Pack, 6-12 mesh
  27.3 - 48.5 ft bgs

Notes:
- All depths in feet above/below ground surface (ags/bgs)
- Borehole drilled with 10 3/4-in/8-in dual- walled casing
- All temporary casing removed from borehole
- No horizontal scale

Diagram

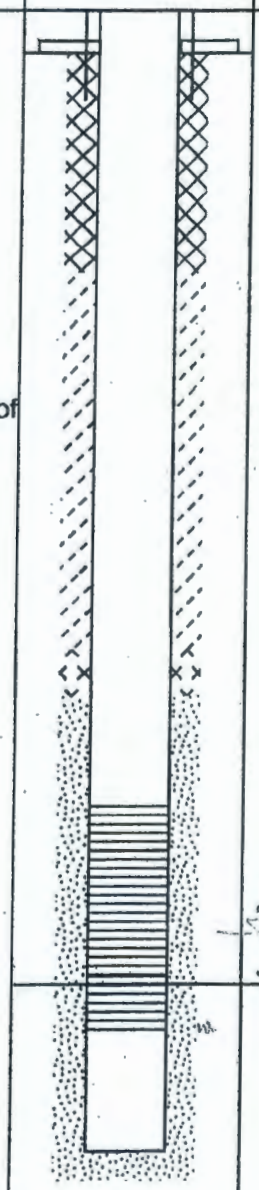

GEOLOGIC/HYDROLOGIC DATA

Depth in Feet / Graphic Log

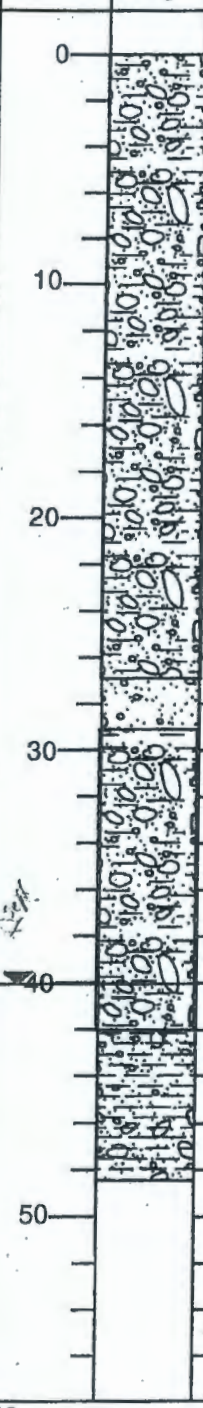

Lithologic Description

0 - 42: Silty Sandy Gravel ((m)sG)

27 - 29: Pebbley Sand (gS)

Water Level: 40 (6-21-10)

42 - 48.5: Gravely Sandy Silt (gsM)

Total Depth (TD): 48.5 ft bgs

WELL SUMMARY SHEET

Start Date: 3/31/2010
Finish Date: 4/26/2010
Page 1 of 1

Well ID: C7582	Well Name: 199-D8-97
Location: NE of DR Reactor	Project: 100-HR-3 RPO Wells
Prepared By: S. Sexton — Date: 4/29/10	Reviewed By: L.D. Walker — Date: 5/24/10
Signature: [signature]	Signature: [signature]

CONSTRUCTION DATA

Description

8" protective stainless steel monument: 2.98 ags to 2.02 bgs

6" Sch. 10 Type 304 stainless steel riser: 2.00 ags to 65.87 bgs

6" Type 316 V-Slot stainless steel screen, 0.070 slot: 65.87-95.91

6" Sch. 10 Type 304 stainless steel sump: 95.91 to 100.91 bgs

Fill Materials:
Portland Type I-II cement grout: 0 to 10.5
#8 bentonite crumbles: 10.5 to 55.6 bgs
1/4" Coated bentonite: 55.6 to 57.4 bgs
Colorado Silica Sand, 6-12 mesh: 57.4 to 104.3

ags = above ground surface
bgs = below ground surface

All temporary casing removed from borehole

Diagram

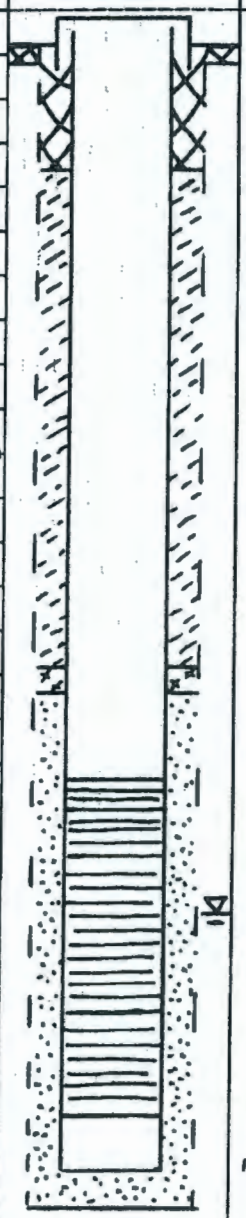

GEOLOGIC/HYDROLOGIC DATA

Depth in Feet: 0, 20, 40, 60, 80, 100

Graphic Log

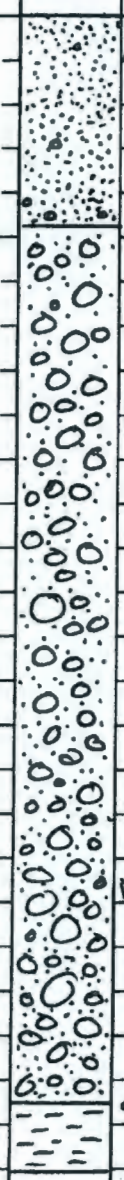

Lithologic Description

0-19: Sand (S)

19-98: sandy Gravel (GS)

DTW = 77.5 on 4/26/2010

98-104.3: Silt (M)

TD = 104.3 ft bgs on 4/5/2010

All measurements in feet.

A-6003-643 (03/03)

WELL SUMMARY SHEET

Start Date: 2.25.10	Page 1 of 2
Finish Date: 3.12.10	

Well ID: C7583		Well Name: 199-D5-101	
Location: E: 572942.78 N: 151521.9		Project: 100 HR-3 Pump and Treat	
Prepared by: A. Pappas	Date: 3.15.10	Reviewed by: L. D. Walker	Date: 5/24/10
Signature:		Signature:	

CONSTRUCTION DATA

Description	Diagram
Surface construction: 4 x 4 x 0.5 ft concrete pad with 4 protective posts and locking well monument	
Neat grout cement: 0 - 11.4 ft bgs	
6-in Schedule 10, Type 304 stainless steel riser casing: 2.00 ags- 76.23 ft bgs	
Granular bentonite: 11.40- 68.2 ft bgs	

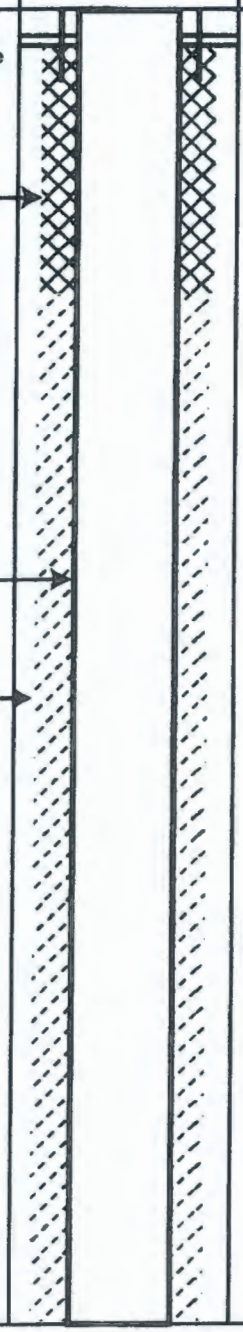

GEOLOGIC/HYDROLOGIC DATA

Depth in Feet	Graphic Log	Lithologic Description
0		0' - 8': Gravelly Sand (gS)
10		8' - 27': Sandy Gravel (sG)
20		
30		27' - 42': Gravelly Sand (gS)
40		42' - 56': Sandy Gravel (sG)
50		56' - 102': Sandy Gravel (sG)

All depths in feet above/below ground surface (ags/bgs)

Borehole drilled with 10 3/4-in/8-in dual- walled casing

All temporary casing removed from borehole

No horizontal scale

WELL SUMMARY SHEET

Start Date: 2.25.10	Page 2 of 2
Finish Date: 3.12.10	

Well ID: C7583		Well Name: 199-D5-101	
Location: E: 572942.78 N: 151521.9		Project: 100 HR-3 Pump and Treat	
Prepared by: A. Pappas	Date: 3.15.10	Reviewed by: L.O. Walker	Date: 5/24/10
Signature:		Signature:	

CONSTRUCTION DATA

Description

Granular bentonite:
11.4 - 68.2 ft bgs

6-in Schedule 10, Type 304 stainless steel riser casing:
2.00 ags- 76.23 ft bgs

Bentonite pellet seal:
68.2 - 70.2 ft bgs

Depth to water: 85.5 ft bgs (3.12.10)

Filter pack: 8-16 mesh Colorado silica sand:
70.2 - 114.0 ft bgs

6-in, Type 316 stainless steel continuous wire-wrap V-slot screen, 0.055-in:
76.23 - 106.24 ft bgs

6-in Type 316 stainless steel sump with welded end cap:
106.24 - 111.24 ft bgs

Natural backfill:
114.0 - 114.3 ft bgs

All depths in feet above/below ground surface (ags/bgs)

Borehole drilled with 10 3/4-in/8-in dual- walled casing

All temporary casing removed from borehole

No horizontal scale

Diagram

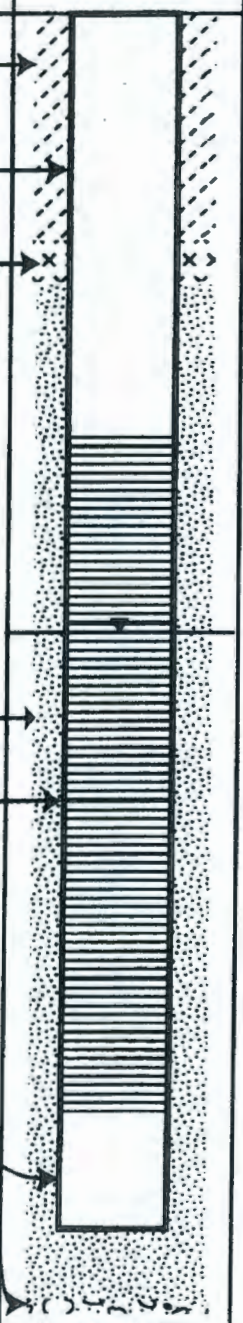

Total Depth (TD):
114.3 ft bgs

GEOLOGIC/HYDROLOGIC DATA

Depth in Feet

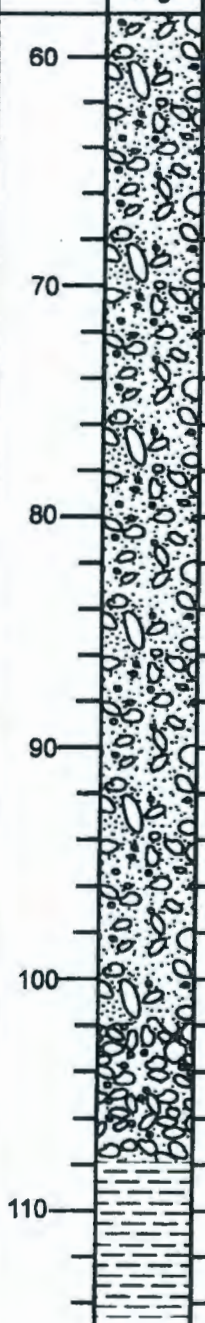

Graphic Log

Lithologic Description

56' - 102': Sandy Gravel (sG)

102' - 108': Gravel (G)

108 - 114.3' TD: Silt (M)

WELL SUMMARY SHEET

Start Date: 6-30-10		Page 1 of 1	
Finish Date: 9-14-10			
Well ID: C7584		Well Name: 199-H1-2	
Location: N.W of H-Reactor and N.E. of D-Reactor		Project: 100-HR-3 OU Pump & Treat Expansion	
Prepared by: J. Johanson / A. Lantow	Date: 9-22-10	Reviewed by: L. D. Walker	Date: 10-11-10
Signature: Aaron Lantow		Signature: LD Walker	

CONSTRUCTION DATA

Description

Surface construction:
- 4 x 4 x 0.5 ft concrete pad
- 4 protective posts
- 8-in locking well monument with electrical access pannel.
  3.0 ft ags - 2.0 ft bgs

Permanent Well Materials:
- 6-in Casing of Schedule 10, Type 304 stainless steel:
  2.0 ft ags - 35.4 ft bgs
- 6-in Continuous wire-wrap screen of Type 316 stainless steel, 0.070-in:
  35.4 - 45.4 ft bgs
- 6-in Sump of Type 316 stainless steel with welded end cap:
  45.4 - 50.4 ft bgs

Annular Materials:
- Neat Cement Grout:
  0.0 - 9.9 ft bgs
- Granular Bentonite Fill:
  9.9 - 28.6 ft bgs
- Bentonite Pelet Annular Plug:
  28.6 - 30.3 ft bgs
- Silica Sand Filter Pack, 6-12 mesh
  30.3 - 54.5 ft bgs

Notes:
- All depths in feet above/below ground surface (ags/bgs)
- Borehole drilled with 10 3/4-in/8-in dual- walled casing
- All temporary casing removed from borehole
- No horizontal scale

Diagram

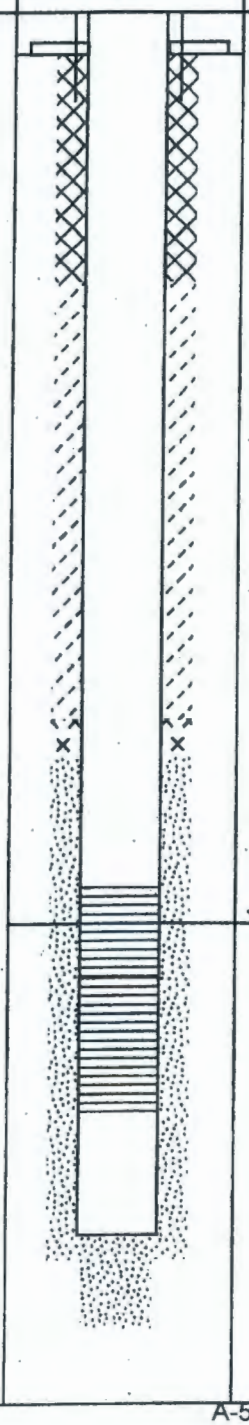

GEOLOGIC/HYDROLOGIC DATA

Depth in Feet

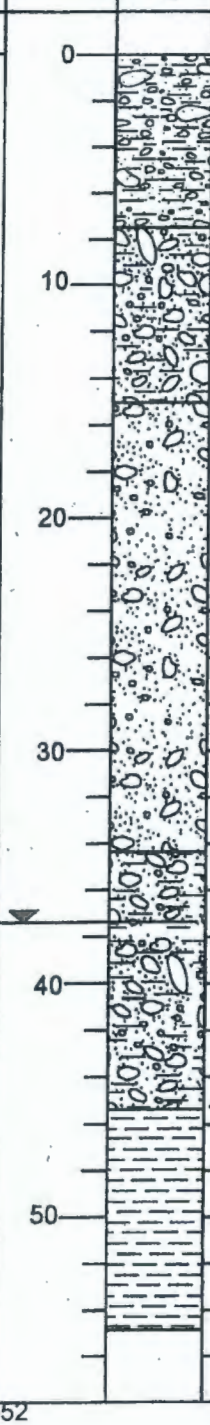

Graphic Log / Lithologic Description

0 - 7.5: Silty Gravel (mG)

7.5-15: Slightly Silty Sandy Gravel ((m)sG)

15 - 34.5: Gravely Sand (gS)

LW 10-11-10

45.6

34.5 - ~~45.0:~~ Silty Sandy Gravel (msG)

Water Level: 37.4 (6-30-10)

45.6 - 54.5: Silt (M)

Total Depth (TD):
54.5 ft bgs

7-1-10 cw 10-12-10

WELL SUMMARY SHEET

Start Date: ~~6-29-10~~
Finish Date: 9-14-10

Page 1 of 1

Well ID: C7585	Well Name: 199-H1-1
Location: N.W of H-Reactor and N.E. of D-Reactor	Project: 100-HR-3 OU Pump & Treat Expansion
Prepared by: A. Lantau — Date: 9-21-10	Reviewed by: L. D. Walker — Date: 10/12/10
Signature: Aaron Lantau / Geologist	Signature: LD Walker

CONSTRUCTION DATA

Surface construction:
- 4 x 4 x 0.5 ft concrete pad
- 4 protective posts
- 8-in locking well monument with electrical access pannel.
  3.0 ft ags - 2.0 ft bgs

Permanent Well Materials:
- 6-in Casing of Schedule 10, Type 304 stainless steel:
  2.0 ft ags - 18.0 ft bgs
- 6-in Continuous wire-wrap screen of Type 316 stainless steel, 0.070-in:
  18.0 - 33.0 ft bgs
- 6-in Sump of Type 316 stainless steel with welded end cap:
  33.0 - 38.0 ft bgs

Annular Materials:
- Neat Cement Grout:
  0.0 - 5.5 ft bgs
- Granular Bentonite Fill:
  5.5 - 11.6 ft bgs
- Bentonite Pelet Annular Plug:
  11.6 - 13.0 ft bgs
- Silica Sand Filter Pack, 6-12 mesh
  13.0 - ~~41.0~~ ft bgs
  41.1

cw 10-12-10

Notes:
- All depths in feet above/below ground surface (ags/bgs)
- Borehole drilled with 10 3/4-in/8-in dual- walled casing
- All temporary casing removed from borehole
- No horizontal scale

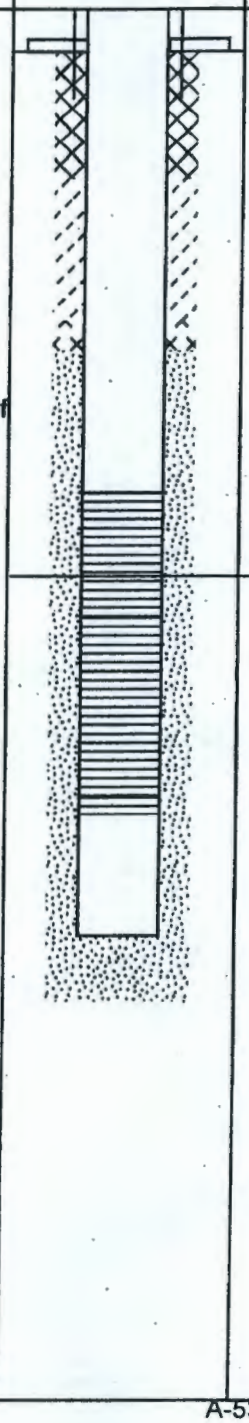

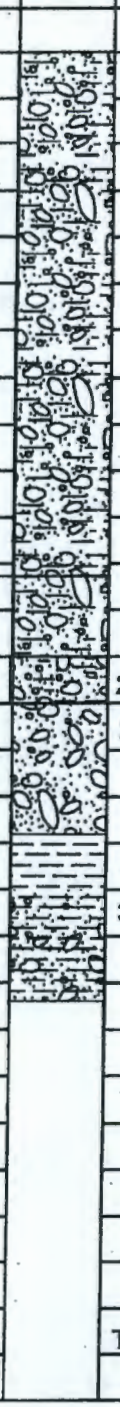

GEOLOGIC/HYDROLOGIC DATA

Depth in Feet	Lithologic Description
0	0 - 26: Silty Sandy Gravel (msG)
10	
20	Water Level: 22.5 (7-1-10)
	26-28: Slightly Silty Sandy Gravel ((m)sG)
30	28 - 33.8: Sandy Gravel (sG)
	33.8 - 36.0: Silt (M)
	36.0 - 41.1: Gravely Sandy Silt (gsM)
40	
50	
	Total Depth (TD): 41.1 ft bgs

WELL SUMMARY SHEET

Start Date: 6-24-10	Page 1 of 1
Finish Date: 9-21-10	

Well ID: C7586	Well Name: 199-H4-79
Location: Between 100 H and D Areas	Project: 100-HR-3 OU Pump & Treat Expansion
Prepared by: A. Lantau — Date: 10-4-10	Reviewed by: L. D. Walker — Date: 10-12-10
Signature: A. Lantau	Signature: LD Walker

CONSTRUCTION DATA

Surface construction:
- 4 x 4 x 0.5 ft concrete pad
- 4 protective posts
- 8-in locking well monument with electrical access pannel
  3.0 ft ags - 2.0 ft bgs

Permanent Well Materials:
- 6-in Casing of Schedule 10, Type 304 stainless steel:
  2.0 ft ags - 39.09 ft bgs
- 6-in Continuous wire-wrap screen of Type 316 stainless steel, 0.070-in:
  39.09 - 59.08 ft bgs
- 6-in Sump of Type 316 stainless steel with welded end cap:
  59.08 - 64.05 ft bgs

Annular Materials:
- Neat Cement Grout:
  0.0 - 10.8 ft bgs
- Granular Bentonite Fill:
  10.8 - 32.0 ft bgs
- Bentonite Pelet Annular Plug:
  32.0 - 33.6 ft bgs
- Silica Sand Filter Pack, 6-12 mesh
  33.6 - 65.0 ft bgs

Notes:
- All depths in feet above/below ground surface (ags/bgs)
- Borehole drilled with 10 3/4-in/8-in dual- walled casing
- All temporary casing removed from borehole
- No horizontal scale

Diagram

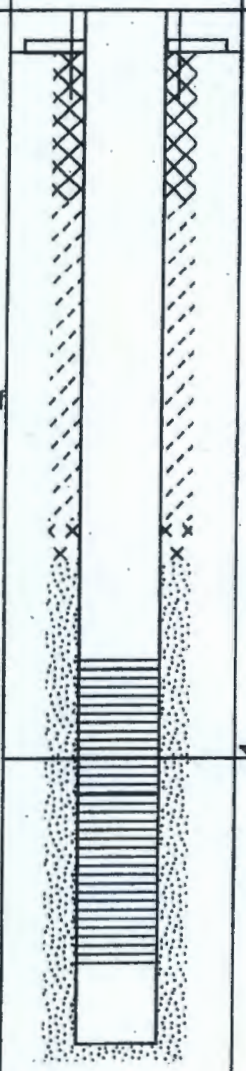

Total Depth (TD): 65.0 ft bgs

GEOLOGIC/HYDROLOGIC DATA

Depth in Feet: 0, 15, 30, 45, 60, 75

Graphic Log

Lithologic Description

- 0 - 3: Sandy Silt
- 3 - 7: Gravelly Sandy Silt
- 7 - 18: Sandy Gravel
- 18 - 31: Gravelly Sand
- 31 - 46 : Sandy Gravel
- Water Level: 45.4 (6-28-10)
- 46 -48: Gravelly Sand
- 48 - 57: Sandy Gravel
- - 53-59.5: nodules of white clay and carbonate on clasts
- 57 - 59.5: Gravelly Sand
- 59.5 - 65: Silt

WELL SUMMARY SHEET

Start Date: 6-28-10
Finish Date: 9-29-10
Page 1 of 1

Well ID: C 7587 LW 10-12-10	Well Name: 199-H4-76
Location: WEST of ~~100-AREA~~ 100 H Area	Project: 100-HR3 OU PUMP AND TREAT
Prepared by: JAMES PATTERSON Date: 9-21-10	Reviewed by: L. D. Walker Date: 10/21/10
Signature: James Patterson	Signature: [signature]

CONSTRUCTION DATA

Surface construction:
- 4 x 4 x 0.5 ft concrete pad
- 4 protective posts
- 8-in Locking well monument 3 ft ags - 2 ft bgs with electrical access pannel

Neat Cement Grout (3% bentonite) 0.0 ft bgs - 9.6 ft bgs

6-in sch 10 Type 304 Stainless Steel 2.0 ft ags - 37.0 ft bgs

Bentonite Crumbles 9.6 ft bgs - 30.2 ft bgs

Bentonite Pellets 30.2 ft bgs - 32.3

6-in v-slot Type 316-70slot Stainless Steel 37.0 ft bgs - 47.0 ft bgs

Colorado Silica 6-12 mesh 32.3 ft bgs - 56.5 ft bgs

6-in sch 10 Type 316 Stainless Steel Sump 47.0 ft ags - 52.0 ft bgs

All depths recorded in feet above/below ground surface (ags/bgs)

Borehole drilled with 10 3/4-in Dual-walled temp casing with 11 3/4-in shoe

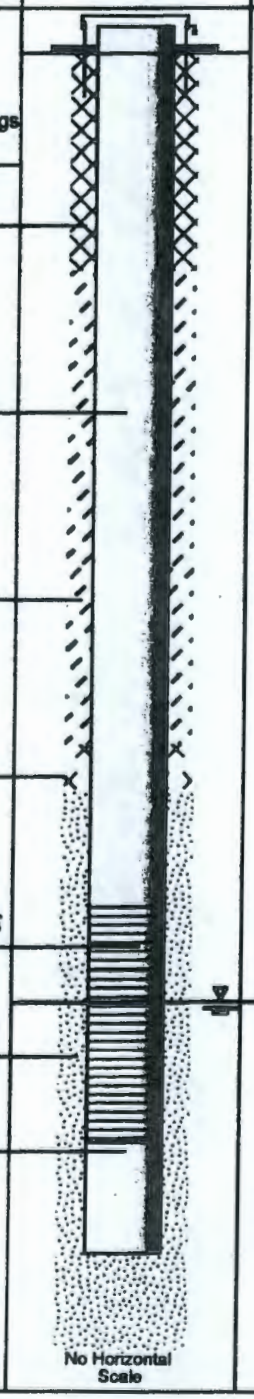

GEOLOGIC/HYDROLOGIC DATA

Depth in Feet	Lithologic Description	
0.0 - 6.0	Sandy Silt	(sM)
6.0 - 10.0	Grading to Sandy Gravel	(sG)
10.0 - 24.0	Sandy Gravel	(sG)
24.0 - 33.0	Sand	(S)
33.0 - 37.0	Sandy Gravel	(sG)
37.0 - 45.0	Gravely Sand	(gS)
	Water Level ~~41.3~~ ft bgs	(9-15-10)
	43.1 LW 10-12-10	
45.0 - 47.5	Sandy Gravel	(sG)
47.5 - 56.4	Silt	(M)

Total Depth (TD) = 56.4 ft bgs

WELL SUMMARY SHEET

Start Date: 6·23·10
Finish Date: 7·1-10
Page 1 of 1

Well ID: C7588
Well Name: 199-H4-~~76~~ 78 AB 8.16.10
Location: S.W. of 100-H Reactor
Project: 100-HR-3 ou Pump & Treat Expansion
Prepared By: A. Lantau
Date: 6·29·10
Reviewed By: L.D. Walker
Date: 10-12-10
Signature: Aaron Lanta
Signature: LD Walker

CONSTRUCTION DATA

Description	Diagram
Well Head:	
-4'x4'x6" Concrete Pad	
-8" S.S. locking Protective Monument	
+3.0' ags - 2.0' bgs.	
- 4 Protective Posts	
Permenant Well Materials:	
-6" Casing of sch 10 Type ~~316~~ 304 Stainless steel (S.S)	
2.0' ags - 38.0' bgs	
-6" Screen: 0.070" slot, wire wrap of Sch 10. Type 316 S.S.	
38.0' - 58.0' bgs	
-6" Sump: of sch 10 Type 316 S.S.	
58.0 - ~~58~~ 61.0 bgs	
AC 7-1-10	
Annular Fill Materials:	
- Cement Seal:	
0.0' - 6.5' bgs	
- Bentonite Crumbles:	
6.5' - 31.5' bgs AB 10/21/10	
- Bentonite Pellets:	
31.5' - 33.3' bgs.	
- Sand Pack/Filter Pack:	
33.3' - 64.1' bgs.	
Notes:	
• All depths in feet above/below ground surface (ags/bgs)	

GEOLOGIC/HYDROLOGIC DATA

Depth in Feet	Graphic Log	Lithologic Description
0		0'-8.5': Silty Gravel
		8.5'-19': Sandy Gravel
15		19'-25: Gravelly Sand
		25'-58.5': Sandy Gravel
30		
		Water: 40.1 (6·23·10)
45		
		•58.5': Nodules of Carbonate present
		58.5'-59: Silty Sandy Gravel
60		59.0-59.5: Gravelly Silt (clayey)
		59.5-64.1: Silt.
		TD = 64.1' bgs
75		

A-6003-643 (03/03)

WELL SUMMARY SHEET

Start Date: 3 - 23 - 2010
Finish Date: 4 - 29 - 2010
Page 1 of 1

Well ID:	C7589	Well Name:	199-D8-95
Location:	NW of DR Reactor	Project:	100-HR-3 OU P&T Remedial Process Optimization
Prepared by:	Jess Hocking — Date: 4/30/2010	Reviewed by:	L.D. Walker — Date: 5/21/10
Signature:		Signature:	

CONSTRUCTION DATA

Well Materials:

6" Type 304 Stainless Steel Sch. 10 Riser
2' ags - 74.97' bgs

6" Type 316 Stainless Steel V-wire wrap 0.055" (55-slot) Screen
74.97' bgs - 94.96' bgs

6" Type 316 Stainless Steel Sump
94.96' bgs - 99.96' bgs

ConstructionMaterials:

Portland Cement Type I - II w/5% bentonite gel
0 - 9.9' bgs

Granular Bentonite (#8 crumbles)
9.9' bgs - 68.3' bgs

Granular Bentonite (1/4" pellets)
68.3' bgs - 70.3' bgs

Colorado Silica (8/16 sand)
70.3' bgs - 104.3' bgs

Diagram

GEOLOGIC/HYDROLOGIC DATA

Depth in Feet: 0, 20, 40, 60, 80, 100

Graphic Log

Lithologic Description

- 0 - 2' Coal Slag
- 2 - 7' Sandy Gravel (sG)
- 7 - 23' Gravelly Sand (gS)
- 23 - 41' Sand (S)
- 41 - 45' Sandy Gravel (sG)
- 45 - 55' Gravel (G)
- 55 - 65' Silty Sandy Gravel (msG)
- 65 - 68' Gravelly Sand (gS)
- 68 - 80' Sandy Gravel (sG)
- 80 - 83.5' Gravel (G)
- 83.5 - 89' Sandy Gravel (sG)
- 89 - 97' Silty Sandy Gravel (msG)
- 97 - 104.4' Silt (M)

Total Depth = 104.4' bgs

Depth to Water = 81.3' bgs (4/29/2010)

WELL SUMMARY SHEET

Start Date: 3.10.10	Page 1 of 2
Finish Date: 3.23.10	

Well ID: C7590		Well Name: 199-D5-130	
Location: E: 574039.43 N: 151928.16		Project: 100 HR-3 Pump and Treat	
Prepared by: A. Pappas	Date: 5.6.10	Reviewed by: L.D. Walker	Date: 5/20/10
Signature:		Signature:	

CONSTRUCTION DATA

Description	Diagram
Surface construction: 4 x 4 x 0.5 ft concrete pad with 4 protective posts and locking well monument	
Neat grout cement: 0 - 9.4 ft bgs	
6-in Schedule 10, Type 304 stainless steel riser casing: 1.99 ags- 79.04 ft bgs	
Granular bentonite: 9.4- 72.5 ft bgs	

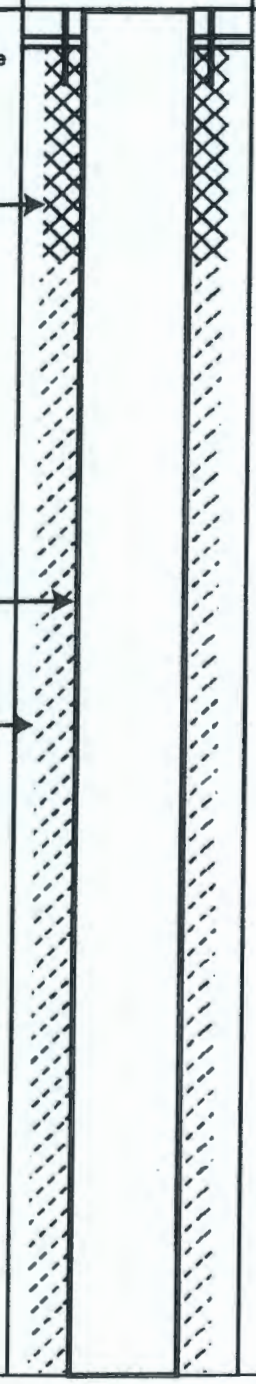

All depths in feet above/below ground surface (ags/bgs)

Borehole drilled with 10 3/4-in/8-in dual- walled casing

All temporary casing removed from borehole

No horizontal scale

GEOLOGIC/HYDROLOGIC DATA

Depth in Feet	Graphic Log	Lithologic Description
0		0' - 6': Silty Sand (mS)
		6' - 10': Gravelly Sand (gS)
10		10' - 15': Sand (S)
		15' - 20': Sandy Gravel (sG)
20		20' - 25': Sand (S)
		25' - 28': Gravelly Sand (gS)
		28' - 36': Silty Sand (mS)
30		
		36' - 44': Sandy Gravel (sG)
40		
		44' - 55': Sandy Gravel (sG)
50		
		55' - 62': Gravel (G)

WELL SUMMARY SHEET

Start Date: 3.10.10		Page 2 of 2	
Finish Date: 3.23.10			
Well ID: C7590		Well Name: 199-D5-130	
Location: E: 574039.43 N: 151928.16		Project: 100 HR-3 Pump and Treat	
Prepared by: A. Pappas	Date: 5.6.10	Reviewed by: L.D. Walker	Date: 5/20/10
Signature:		Signature:	

CONSTRUCTION DATA

Description	Diagram
Granular bentonite: 9.4 - 72.5 ft bgs	
6-in Schedule 10, Type 304 stainless steel riser casing: 1.99 ags- 79.04 ft bgs	
Bentonite pellet seal: 72.5 - 74.0 ft bgs	
Depth to water: 81.8 ft bgs (3.12.10)	
Filter pack: 8-16 mesh Colorado silica sand: 74.0 - 101.2 ft bgs	
6-in, Type 316 stainless steel continuous wire-wrap V-slot screen, 0.055-in: 79.04 - 94.06 ft bgs	
6-in Type 316 stainless steel sump with welded end cap: 94.06 - 99.05 ft bgs	
Natural backfill: 101.2 - 101.4 ft bgs	

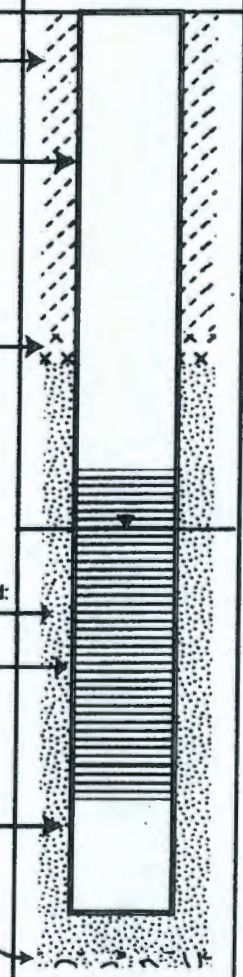

Total Depth (TD): 101.4 ft bgs

All depths in feet above/below ground surface (ags/bgs)

Borehole drilled with 10 3/4-in/8-in dual- walled casing

All temporary casing removed from borehole

No horizontal scale

GEOLOGIC/HYDROLOGIC DATA

Depth in Feet	Graphic Log	Lithologic Description
60		55' - 62': Gravel (G)
		62' - 68': Gravely Sand (gS)
70		68' - 76': Sand (S)
		76' - 95': Sandy Gravel (gS)
80		
90		
		95' - 101.4' TD: Silt (M)
100		
110		

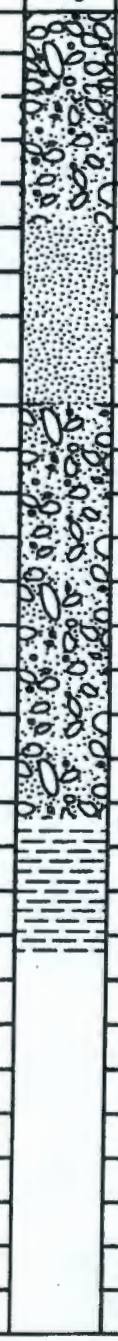

WELL SUMMARY SHEET

Start Date: 2.23.10	Page 1 of 2
Finish Date: 3.5.10	

Well ID: C7591		Well Name: 199-D5-127	
Location: E: 572992.87 N: 151428.66		Project: 100 HR-3 Pump and Treat	
Prepared by: A. Pappas	Date: 5.3.10	Reviewed by: L.D. Walker	Date: 5-20-10
Signature:		Signature:	

CONSTRUCTION DATA

Description	Diagram
Surface construction: 4 x 4 x 0.5 ft concrete pad with 4 protective posts and locking well monument	
Neat grout cement: 0 - 9.4 ft bgs	
6-in Schedule 10, Type 304 stainless steel riser casing: 2.00 ags- 79.39 ft bgs	
Granular bentonite: 9.4- 73.0 ft bgs	

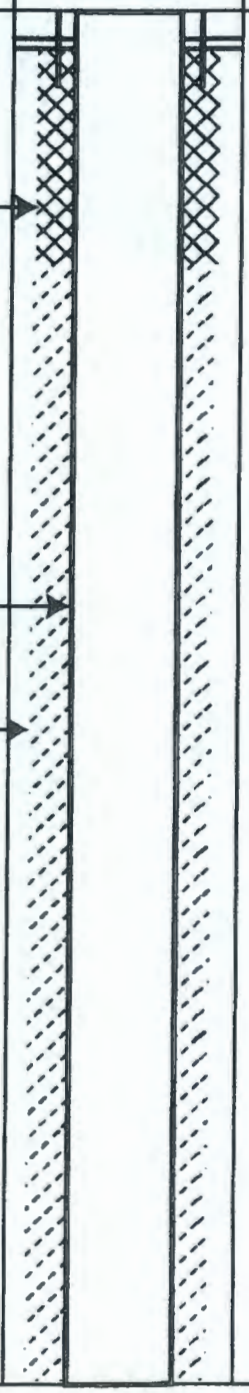

All depths in feet above/below ground surface (ags/bgs)

Borehole drilled with 10 3/4-in/8-in dual- walled casing

All temporary casing removed from borehole

No horizontal scale

GEOLOGIC/HYDROLOGIC DATA

Depth in Feet	Graphic Log	Lithologic Description
0		0' - 13': Gravelly Sand (gS)
10		
		13' - 32': Sandy Gravel (sG)
20		
30		
		32' - 52': Gravelly Sand (gS)
40		
50		
		52' - 64': Sandy Gravel (sG)

WELL SUMMARY SHEET

Start Date: 2.23.10	Page 2 of 2
Finish Date: 3.5.10	

Well ID: C7591		Well Name: 199-D5-127	
Location: E: 572992.87 N: 151428.66		Project: 100 HR-3 Pump and Treat	
Prepared by: A. Pappas	Date: 5.3.10	Reviewed by: L.D. Walker	Date: 5/20/10
Signature:		Signature:	

CONSTRUCTION DATA

Description	Diagram
Granular bentonite: 9.4 - 73.0 ft bgs	
6-in Schedule 10, Type 304 stainless steel riser casing: 2.00 ags- 79.39 ft bgs	
Bentonite pellet seal: 73.0 - 74.5 ft bgs	
Depth to water: 85.5 ft bgs (3.12.10)	
Filter pack: 10-20 mesh Colorado silica sand: 74.5 - 107.5 ft bgs	
6-in, Type 316 stainless steel continuous wire-wrap V-slot screen, 0.045-in: 79.39 - 99.38 ft bgs	
6-in Type 316 stainless steel sump with welded end cap: 99.38 - 104.39 ft bgs	
Natural backfill: 107.5 - 109.0 ft bgs	
All depths in feet above/below ground surface (ags/bgs)	Total Depth (TD): 109.0 ft bgs
Borehole drilled with 10 3/4-in/8-in dual- walled casing	
All temporary casing removed from borehole	
No horizontal scale	

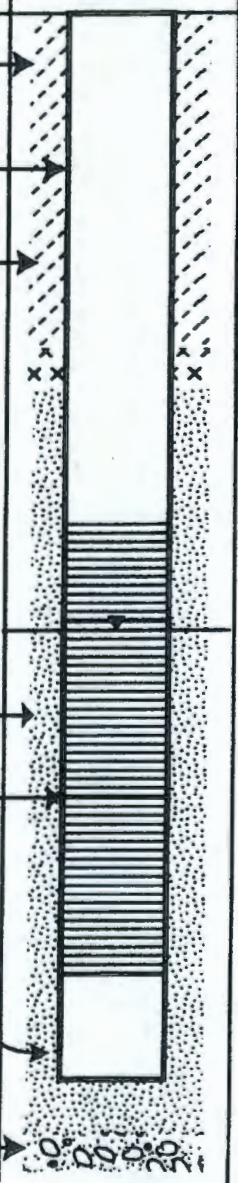

GEOLOGIC/HYDROLOGIC DATA

Depth in Feet	Graphic Log	Lithologic Description
60		52' - 64': Sandy Gravel (sG)
		64' - 101': Sandy Gravel (sG)
70		
80		
90		
100		101' - 106': Gravely Silt (gM)
		106 - 109' TD: Silt (M)
110		

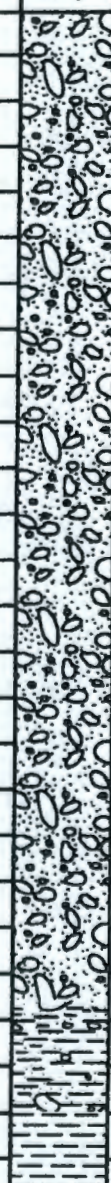

WELL SUMMARY SHEET

Start Date: 3.3.10	Page 1 of 2
Finish Date: 3.11.10	

Well ID: C7592		Well Name: 199-D6-1	
Location: E: 574129.64 N: 1516941.50		Project: 100 HR-3 Pump and Treat	
Prepared by: A. Pappas	Date: 3.15.10	Reviewed by: L. D. Walker	Date: 5-20-10
Signature:		Signature:	

CONSTRUCTION DATA

Description

Surface construction:
4 x 4 x 0.5 ft concrete pad with 4 protective posts and locking well monument

Neat grout cement:
0 - 10.0 ft bgs

Granular bentonite:
10.0 - 73.3 ft bgs

6-in Schedule 10, Type 304 stainless steel riser casing:
2.0 ags- 80.0 ft bgs

All depths in feet above/below ground surface (ags/bgs)

Borehole drilled with 10 3/4-in/8-in dual- walled casing

All temporary casing removed from borehole

No horizontal scale

Diagram

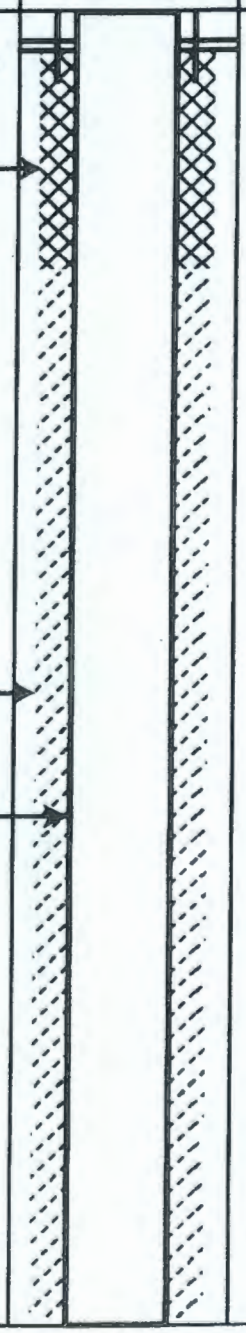

GEOLOGIC/HYDROLOGIC DATA

Depth in Feet

0
10
20
30
40
50

Graphic Log

Lithologic Description

0' - 7': Silty Sandy Gravel (msG)

7' - 23': Sandy Gravel (sG)

23' - 48': Gravelly Sand (gS)

48' - 62': Sandy Gravel (sG)

WELL SUMMARY SHEET

Start Date: 3.3.10	Finish Date: 3.11.10	Page 2 of 2

Well ID: C7592	Well Name: 199-D6-1
Location: E: 574129.64 N: 1516941.50	Project: 100 HR-3 Pump and Treat
Prepared by: A. Pappas — Date: 3.15.10	Reviewed by: L. D. Walker — Date: 5-20-10
Signature: [signature]	Signature: [signature]

CONSTRUCTION DATA

Description

6-in Schedule 10, Type 304 stainless steel riser casing:
2.0 ags- 80.0 ft bgs

Granular bentonite:
10.0 - 73.3 ft bgs

Bentonite pellet seal:
73.3 - 75.1 ft bgs

Filter pack: 6-12 mesh Colorado silica sand:
75.1 - 107 ft bgs

Depth to water: 87.1 ft bgs (3/4/09)

6-in, Type 316 stainless steel continuous wire-wrap V-slot screen, 0.070-in:
80.0 - 100.0 ft bgs

6-in Type 316 stainless steel sump with welded end cap:
100.0 - 105.0 ft bgs

All depths in feet above/below ground surface (ags/bgs)

Borehole drilled with 10 3/4-in/8-in dual- walled casing

All temporary casing removed from borehole

No horizontal scale

Diagram

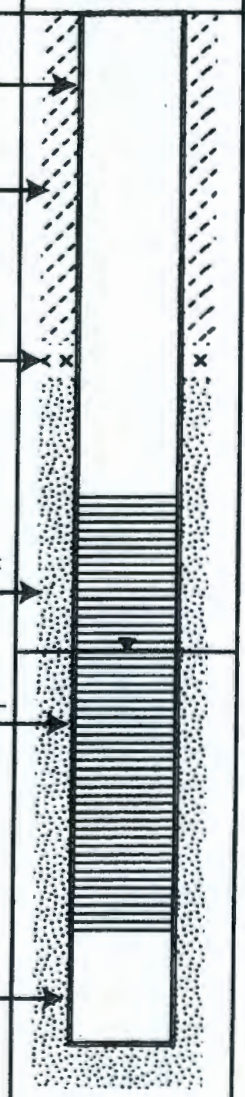

Total Depth (TD):
107.0 ft bgs

GEOLOGIC/HYDROLOGIC DATA

Depth in Feet

60
70
80
90
100
110

Graphic Log

Lithologic Description

48' - 62': Sandy Gravel (sG)

62' - 72' Gravelly Sand (gS)

72' - 97': Sandy Gravel (sG)

97' - 101': Gravel (G)

101' - 107' TD: Silt/Mud (M)

WELL SUMMARY SHEET

Start Date: 4/08/2010
Finish Date: 4/22/2010
Page 1 of 1

Well ID: C7593	Well Name: 199-D8-99
Location: 100-D	Project: 100-HR-3 RPO Wells
Prepared By: S. Sexton — Date: 4/29/10	Reviewed By: L.D. Walker — Date: 5/19/10
Signature: [signature]	Signature: [signature]

CONSTRUCTION DATA

Description

8" protective stainless steel monument: 2.99 ags to 2.01 bgs

6" Sch. 10 Type 304 stainless steel riser: 2.0 ags to 54.94 bgs

6" Type 316 V-Slot stainless steel screen, 0.070 slot: 54.94 to 74.96

6" Sump, Sch. 10 Type 304 stainless steel: 74.96 to 84.96 bgs

Fill Materials:
Portland Type I-II neat cement grout: 0 - 10.0 bgs
#8 bentonite crumbles: 10.0 to 48.5 bgs
1/4" Coated bentonite pellets: 48.5 to 50.3
Colorado Silica Sand, 10-12 mesh: 50.3 - 88.9

ags = above ground surface
bgs = below ground surface

All temporary casing removed from hole

Diagram

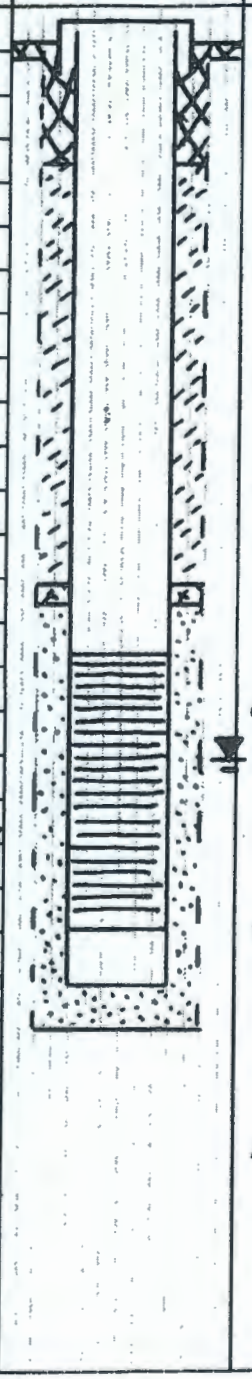

GEOLOGIC/HYDROLOGIC DATA

Depth in Feet	Graphic Log	Lithologic Description
0		0 - 32: sandy Gravel (sG)
20		
		32-43: Sand (S)
40		43-57: sandy Gravel (sG)
		57-65: gravelly Sand (gS)
60		65-81: sandy Gravel (sG)
		DTW = 64.5 ft bgs on 4/09/10
80		81-84: gravelly Silt (gM)
		84-88.9: Silt (M)
		TD = 88.9 on 4/09/2010
100		All measurements recorded in feet

A-6003-643 (03/03)

WELL SUMMARY SHEET

Start Date:	3 - 15 - 2010
Finish Date:	3 - 22 - 2010
Page	1 of 1

Well ID:	C7594	Well Name:	199-D7-4
Location:	SE of the DR Reactor	Project:	100-HR-3 OU P & T Remedial Process Optimization
Prepared by:	Jess Hocking	Reviewed by:	L.D. Walker
Date:	4 - 29 - 2010	Date:	5/19/10
Signature:		Signature:	

CONSTRUCTION DATA

Well Materials:

6" Type 304 Stainless Steel
Sch. 10 Riser
2' ags - 50' bgs

6" Type 316 Stainless Steel .070"
(70-slot) continuous wire wrap screen
50' bgs - 70' bgs

6" Type 316 Stainless Steel
Sch. 10 Sump
70' bgs - 75' bgs

Construction Materials:

Portland Cement Type I-II
0 - 9.8' bgs

Granular Bentonite (8/20 crumbles)
9.8' bgs - 43.4' bgs

Granular Bentonite (1/4" pellets)
43.4' bgs - 45.5' bgs

Colorado Silica (8/16 sand)
45.5' bgs - 76.4' bgs

Natural Fill
76.4' bgs - 77.5' bgs

Diagram

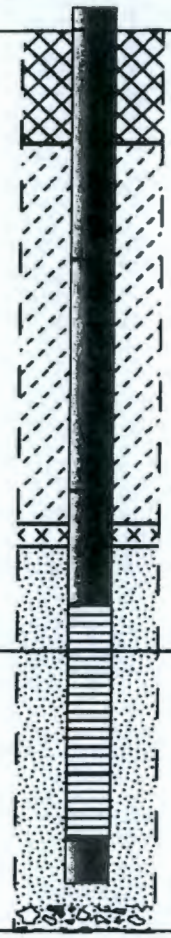

GEOLOGIC/HYDROLOGIC DATA

Depth in Feet: 0, 20, 40, 60, 80

Graphic Log

Lithologic Description

0 - 4' Silty Sand (mS)
4 - 8' Silty Sandy Gravel (msG)
8 - 17' Sandy Gravel (sG)
17 - 30' Slightly Silty Gravelly Sand [(m)gS]
30 - 34' Gravel (G)
34 - 44' SandyGravel (sG)
44 - 47' Sand (S)
47 - 49' Gravelly Sand (gS)
49 - 60' Sandy Gravel (sG)
60 - 64' Silty Sandy Gravel (msG)
64 - 71' Sandy Gravel (sG)
71 - 72' Gravelly Silt (gM)
72 - 74' Gravel (G)
74 - 77.5' Clay/Silt (M)

Total Depth = 77.5' bgs
Depth to Water = 54.4' bgs (3/22/2010)

WELL SUMMARY SHEET

Start Date: 6-14-10	Page 1 of 1
Finish Date: 6-22-10	

Well ID: C7595	Well Name: 199-H4-80
Location: E:152568.23 N:575239.41	Project: 100-HR-3 OU Pump & Treat Expansion
Prepared by: A. Pappas Date: 6-29-10	Reviewed by: L.D. Walker Date: 7/15/10
Signature: [signature]	Signature: [signature]

CONSTRUCTION DATA

Description

Surface construction:
4 x 4 x 0.5 ft concrete pad with 4 protective posts and locking well monument

Neat grout cement:
0.0 - 9.0 ft bgs

Granular bentonite:
9.0 - 24.4 ft bgs

Bentonite pellet seal:
24.4 - 26.2 ft bgs

6-in Schedule 10, Type 304 stainless steel riser casing:
2.00 ags - 31.2 ft bgs

Filter pack: 8-16 mesh Colorado silica sand:
26.2 - 74.3 ft bgs

6-in, Type 316 stainless steel continuous wire-wrap V-slot screen, 0.055-in:
31.2 - 66.2 ft bg5

6-in Type 316 stainless steel sump with welded end cap:
66.2 - 69.2 ft bgs

All depths in feet above/below ground surface (ags/bgs)

Borehole drilled with 10 3/4-in/8-in dual-walled casing

All temporary casing removed from borehole

No horizontal scale

Diagram

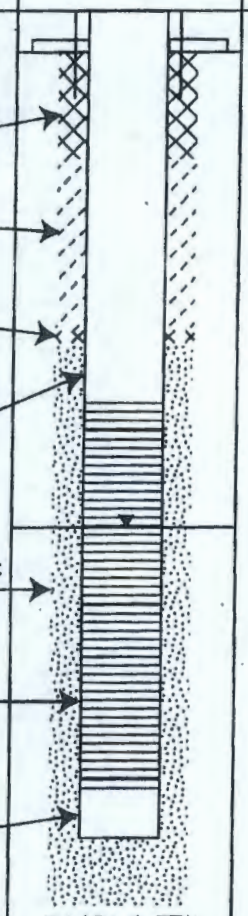

Total Depth (TD):
74.3 ft bgs

GEOLOGIC/HYDROLOGIC DATA

Depth in Feet: 0, 4, 8, 12, 16, 20, 40, 60, 80, 100

Graphic Log

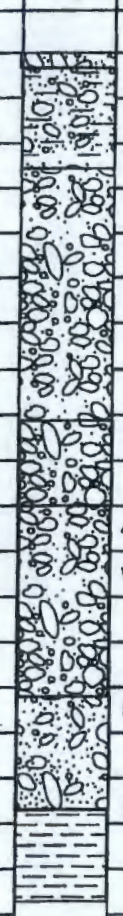

Lithologic Description

0' - 1.5': Sandy Gravel

1.5' - 10': Silty Sandy Gravel

10' - 32.5': Sandy Gravel

32.5' - 40': Gravel

40' - 57': Gravel

Water Level: 42.35' (6.22.10)

57' - 67': Sandy Gravel

67' - 74.3' (TD): Silt

WELL SUMMARY SHEET

Start Date: 6-14-10		Page 1 of 1	
Finish Date: 6-24-10			
Well ID: C7596		Well Name: 199-H4-81	
Location: NE of 100D Area		Project: 100-HR-3 OU Pump & Treat Expansion	
Prepared by: A. Pappas	Date: 6-29-10	Reviewed by: L.D. Walker	Date: 7/15/10
Signature:		Signature:	

CONSTRUCTION DATA

Description

Surface construction:
4 x 4 x 0.5 ft concrete pad with 4 protective posts and locking well monument

Neat grout cement:
0.0 - 10.2 ft bgs

Granular bentonite:
10.2 - 12.0 ft bgs

Bentonite pellet seal:
12.0 - 13.6 ft bgs

6-in Schedule 10, Type 304 stainless steel riser casing:
1.50 ags - 18.49 ft bgs

Filter pack: 6-12 mesh Colorado silica sand:
13.6 - 44.4 ft bgs

6-in, Type 316 stainless steel continuous wire-wrap V-slot screen, 0.070-in:
18.49 - 38.50 ft bgs

6-in Type 316 stainless steel sump with welded end cap:
38.50 - 41.50 ft bgs

All depths in feet above/below ground surface (ags/bgs)

Borehole drilled with 10 3/4-in/8-in dual-walled casing

All temporary casing removed from borehole

No horizontal scale

Diagram

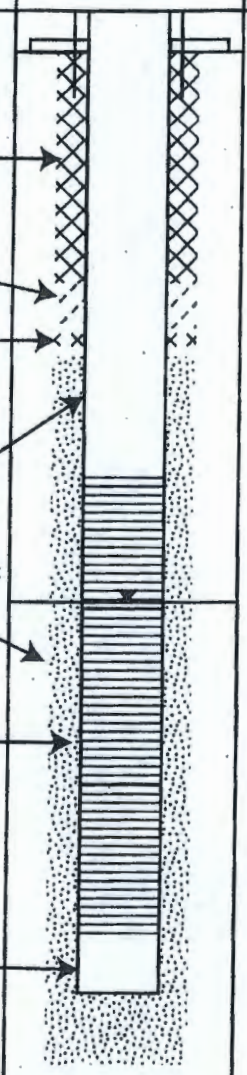

Total Depth (TD):
44.4 ft bgs

GEOLOGIC/HYDROLOGIC DATA

Depth in Feet

0, 10, 20, 30, 40, 50

Graphic Log

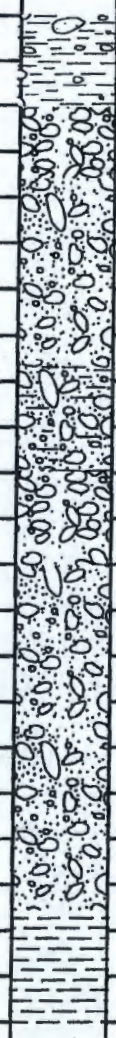

Lithologic Description

0' - 4': Gravelly Silt

4' - 7': Gravel

7' - 15': Sandy Gravel

15' - 20': Silty Sandy Gravel

20' - 24': Gravel

24' - 27': Sandy Gravel

Water Level: 24.5' (6.24.10)

27' - 39': Sandy Gravel

39' - 44.4' (TD): Silt

WELL SUMMARY SHEET

Start Date: 6-29-10
Finish Date: 9-30-10
Page 1 of 1

Well ID: C 7597	Well Name: 199-H4-75
Location: N.W. of 100-H REACTOR	Project: 100-HR3 OU PUMP AND TREAT
Prepared by: JAMES PATTERSON Date: 9-22-10	Reviewed by: L. D. Walker Date: 10-12-10
Signature: James Patterson	Signature: D Walker

CONSTRUCTION DATA

Surface construction:
- 4 x 4 x 0.5 ft concrete pad
- 4 protective posts
- 8-in Looking well monument 3 ft ags - 2 ft bgs with electrical access pannel

Neat Cement Grout (3% bentonite) 0.0 ft bgs - 10.0 ft bgs

6-in sch 10 Type 304 Stainless Steel 2.00 ft ags - 34.5 ft bgs

Bentonite Crumbles 10.0 ft bgs - 27.9 ft bgs

Bentonite Pellets 27.9 ft bgs - 29.1

6-in v-slot Type 316 - 70 slot Stainless Steel 34.5 ft bgs - 49.5 ft bgs

Colorado Silica 6-12 mesh 29.1 ft bgs - 59.2 ft bgs

6-in sch 10 Type 316 Stainless Steel 49.5 ft ags - 54.5 ft bgs

*Drilling Method: Diesel Percussion

*Borehole drilled with 10 3/4-in Dual-walled temp casing with 11 3/4-in shoe

*All depths recorded in feet above/below ground surface (ags/bgs)

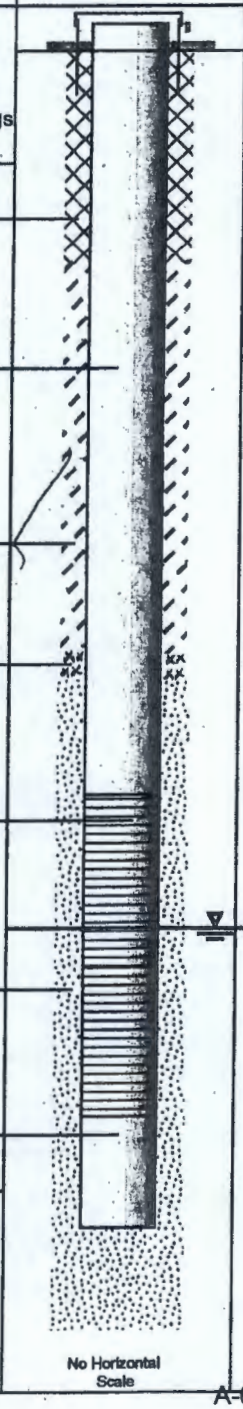

GEOLOGIC/HYDROLOGIC DATA

Depth in Feet: 0, 2, 4, 6, 8, 10, 20, 30, 40, 50, 60

Lithologic Description		
0.0 - 8.0	Silty Sandy Gravel	(msG)
8.0 - 50.0	Gravel to Sandy Gravel	(G-sG)
Water Level	40.6 ft bgs	(6-30-10)
50.0 - 51.2	Clayey Silt	(M)
51.2 - 52.8	Silt with Caliche	(cM)
52.8 - 59.2 (TD)	Clayey Silt	(M)
Total Depth = 59.2 ft bgs		

WELL SUMMARY SHEET

Start Date: 4/16/2010
Finish Date: 4/21/2010
Page 1 of 1

Well ID: C7599	Well Name: 199-D7-3
Location: 100-D	Project: 100-HR-3 RI/FS Wells
Prepared By: S. Sexton — Date: 4/28/10	Reviewed By: L.D. Walker — Date: 5/18/10
Signature: [signature]	Signature: [signature]

CONSTRUCTION DATA

Description

8" protective stainless steel monument: 3.0 ags to 2.0 bgs

6" Sch. 10 Type 304 stainless steel riser: 2.0 ags to 47.28 bgs

6" Type 316 V-Slot stainless steel screen, 0.055 slot: 47.28 to 82.29

6" sump, Sch. 10 Type 304 stainless steel: 82.29 to 87.29 bgs

Fill Materials:
Portland Type I-II cement grout: 0 - 9.5 bgs
#8 bentonite crumbles: 9.5 to 40.9 ft bgs
1/4" Coated bentonite pellets: 40.9 to 42.4 ft
Colorado silica sand, 8-16 mesh: 42.4 to 89.3

ags = above ground surface
bgs = below ground surface

All temporary casing removed from hole

Diagram

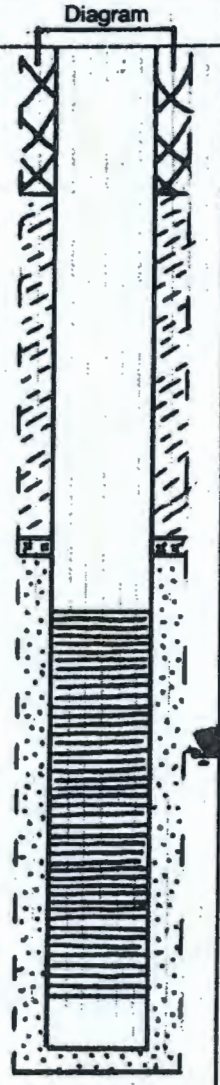

GEOLOGIC/HYDROLOGIC DATA

Depth in Feet: 0, 20, 40, 60, 80, 100

Graphic Log

Lithologic Description

0 - 26: sandy gravel (sG)

26 - 46: gravelly Sand (gS)

46 - 84: sandy gravel (sG)

DTW = 60.3 on 4/21/2010

84 - 89.3: silt (M)

TD = 89.3 ft bgs on 4/12/2010

A-6003-643 (03/03)

WELL SUMMARY SHEET

Start Date: 6-28-10
Finish Date: 9.30.10
Page 1 of 1

Well ID: C7598	Well Name: 199-H4-74
Location: W of H-Reactor	Project: 100-HR-3 OU Pump & Treat Expansion
Prepared by: J. Johanson / A. Lantow — Date: 9-21-10	Reviewed by: L.D. Walker — Date: 10-11-10
Signature: [signature]	Signature: [signature]

CONSTRUCTION DATA

Surface construction:
- 4 x 4 x 0.5 ft concrete pad
- 4 protective posts
- 8-in locking well monument with electrical access pannel.
  3.0 ft ags - 2.0 ft bgs

Permanent Well Materials:
- 6-in Casing of Schedule 10, Type 304 stainless steel:
  2.0 ft ags - 23.0 ft bgs
- 6-in Continuous wire-wrap screen of Type 316 stainless steel, 0.070-in:
  23.0 - 38.0 ft bgs
- 6-in Sump of Type 316 stainless steel with welded end cap:
  38.0 - 43.0 ft bgs

Annular Materials:
- Neat Cement Grout:
  0.0 - 5.5 ft bgs
- Granular Bentonite Fill:
  5.5 - 16.5 ft bgs
- Bentonite Pelet Annular Plug:
  16.5 - 18.5 ft bgs
- Silica Sand Filter Pack, 6-12 mesh
  18.5 - ~~41.0~~ ft bgs
  46.0'
  LW 10-11-10

Notes:
- All depths in feet above/below ground surface (ags/bgs)
- Borehole drilled with 10 3/4-in/8-in dual- walled casing
- All temporary casing removed from borehole
- No horizontal scale

Diagram

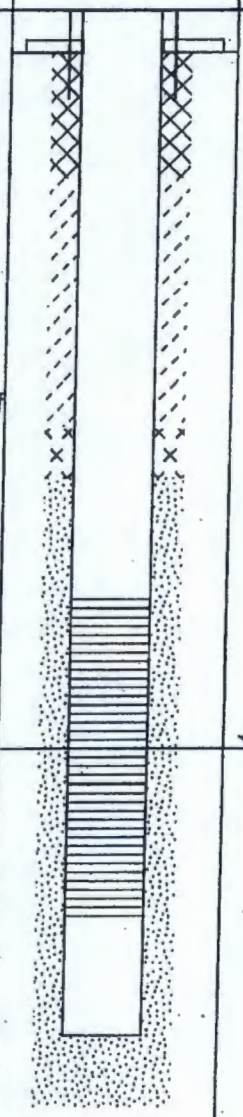

GEOLOGIC/HYDROLOGIC DATA

Depth in Feet: 0, 10, 20, 30, 40, 50

Graphic Log

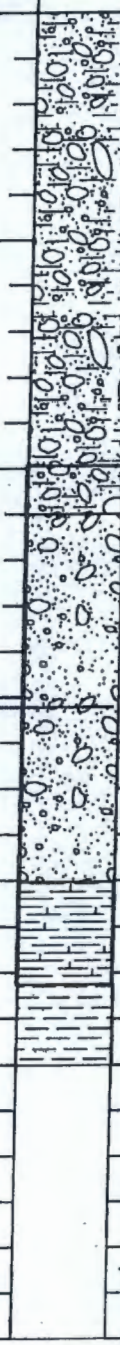

Lithologic Description

- 0 - 20: Silty Sandy Gravel (msG)
- 20-22: Slightly Silty Sandy Gravel ((m)sG)
- 22 - 38: Gravely Sand (gS)
- Water Level: 30.5 (6-29-10)
- 38-42.5: Clay (M)
- 42.5 - 46: Silt (M)
- Total Depth (TD): 46.0 ft bgs

WELL SUMMARY SHEET

Start Date: Jan 26, 2010	Page 1 of 2
Finish Date: Feb 9, 2010	

Well ID: C7600		Well Name: 199-D5-129	
Location: Between 105-D and 105-DR Reactors		Project: 100-HR-3 FY09 Pump and Treat Expansion	
Prepared by: L. Stratton	Date: Feb 17 2010	Reviewed by: L.D. Walker	Date: 2/25/10
Signature:		Signature:	

CONSTRUCTION DATA

Description

Surface construction:
4 x 4 x 0.5 ft concrete pad with 4 protective posts and locking well monument

Neat grout cement:
0 - 11.05 ft bgs

Granular bentonite:
11.05 - 72.15 ft bgs

6-in Schedule 10, Type 304/304L stainless steel riser casing:
2.02 - 78.01 ft bgs
(AGL)
2-3-10

All depths in feet above/below ground surface (ags/bgs)

Borehole drilled with 10 3/4-in/8-in dual-walled casing

No centralizers required due to dual-wall drilling method

All temporary casing removed from borehole

No horizontal scale

Diagram

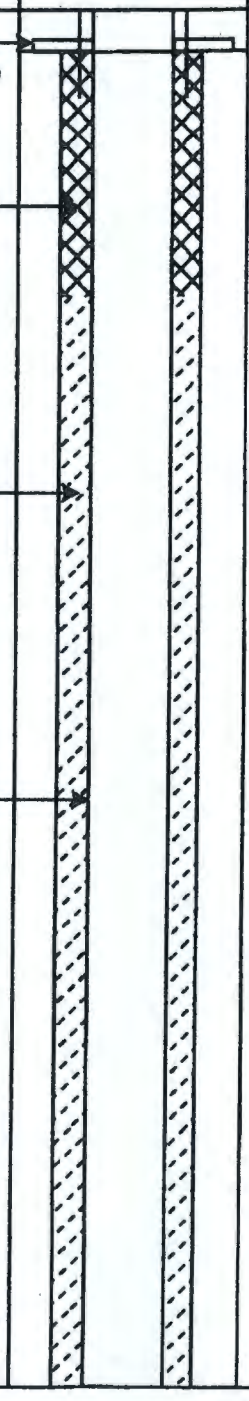

GEOLOGIC/HYDROLOGIC DATA

Depth in Feet

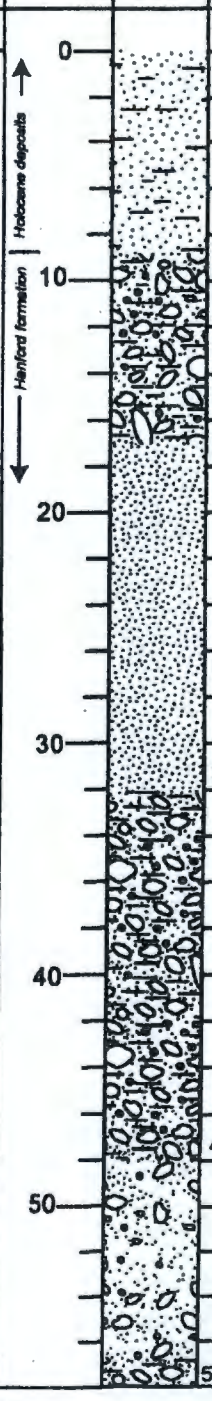

Graphic Log

Lithologic Description

0 - 9: slightly silty sand (gmS)

9 - 17: silty sandy gravel (msG)

17 - 32: sand (S)

32 - 48: silty sandy gravel (msG)

48 - 57: gravely sand (gS)

57 - 60: silty sandy gravel (msG)

WELL SUMMARY SHEET

Start Date: Jan 26, 10
Finish Date: Feb 9, 2010

Well ID: C7600	Well Name: 199-D5-129
Location: Between 105-D and 105-DR Reactors	Project: 100-HR-3 FY09 Pump and Treat Expansion
Prepared by: L. Stratton — Date: Feb 17 2010	Reviewed by: L. A. Walker — Date: 2/25/10
Signature:	Signature:

CONSTRUCTION DATA

Description

Granular bentonite:
11.05 - 72.15 ft bgs

6-in Schedule 10, Type 304/304L stainless steel riser casing:
2.02 ft ags - 78.01 ft bgs

Bentonite pellet seal:
72.15 - 72.7 bgs

Primary filter pack: Colorado silica sand, 8-16 mesh:
72.7 - 113.5 bgs

Depth to water: 83.37 (2/11/10)

6-in Type 316 continuous wire-wrap "V" slot screen, 0.055-in:
78.01 - 103.03 ft bgs

6-in Type 316 stainless steel sump with welded end cap:
103.03 - 108.03 ft bgs

All depths in feet above/below ground surface (ags/bgs)

Borehole drilled with 10 3/4-in/8-in dual-walled casing

No centralizers required due to dual-wall drilling method

All temporary casing removed from borehole

No horizontal scale

Diagram

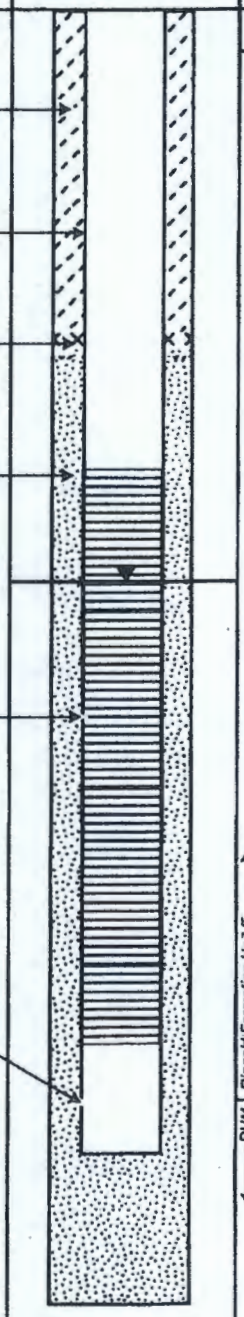

Total Depth (TD): 113.5 ft bgs

GEOLOGIC/HYDROLOGIC DATA

Depth in Feet / Graphic Log

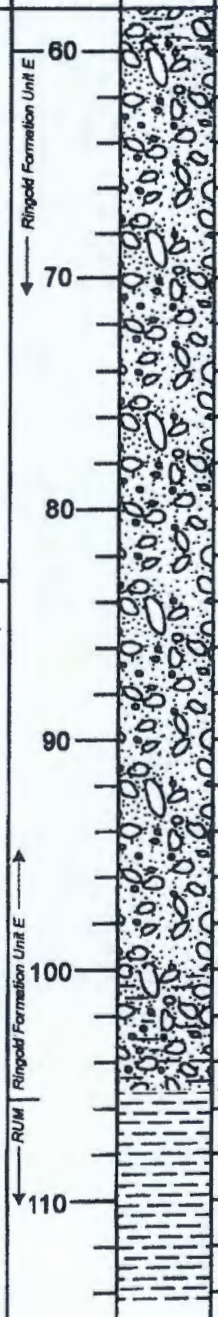

Lithologic Description

57 - 60: silty sandy gravel (msG)

60 - 100: sandy gravel (sG)

100 - 105.5: silty sandy gravel (msG)

105.5 - 113.5: Mud (M)

WELL SUMMARY SHEET

Start Date: 3.25.10	Page 1 of 1
Finish Date:4.27.10	

Well ID: C7601		Well Name: 199-D5-131	
Location: 800m North of DR Reactor		Project: 100 HR-3 RPO Wells	
Prepared by: S. Sexton	Date: 4.30.10	Reviewed by: L. D. Walker	Date: 5/18/10
Signature:		Signature:	

CONSTRUCTION DATA

Description

Surface construction:
4 x 4 x 0.5 ft concrete pad with 4 protective posts and locking well monument

Neat grout cement:
0 - 10.5 ft bgs

Granular bentonite:
10.5 - 74.3 ft bgs

6-in Schedule 10, Type 316 stainless steel riser casing:
2.00 ags - 81.18 ft bgs

Bentonite pellet seal:
74.3 - 76.2 ft bgs

Depth to water: 86.1 ft bgs (4.03.10)

Filter pack: 6-12 mesh Colorado silica sand:
76.2 - 116.4 ft bgs

6-in, Type 316 stainless steel continuous wire-wrap V-slot screen, 0.055-in:
81.18 - 106.18 ft bgs

6-in Type 316 stainless steel sump with welded end cap:
106.18 - 111.18 ft bgs

All depths in feet above/below ground surface (ags/bgs)

Borehole drilled with 10 3/4-in/8-in dual-walled casing

All temporary casing removed from borehole

No horizontal scale

Diagram

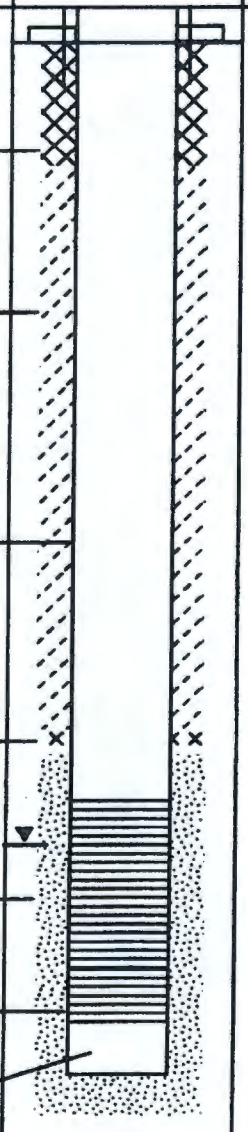

Total Depth (TD):
116.4 ft bgs

GEOLOGIC/HYDROLOGIC DATA

Depth in Feet / Graphic Log

Lithologic Description

0 - 2: gravel backfill material

2 - 8: gravelly Sand (gS)

8 - 24: sandy Gravel (sG)

24 - 33: gravelly Sand (gS)

33 - 38: Sand (S)

38 - 58: sandy Gravel (sG)

58 - 66: gravelly Sand (gS)

66 - 69: sandy Gravel (sG)

69 - 76: Sand (S)

76 - 84: gravelly Sand (gS)

84 - 93: sandy Gravel (sG)

93 - 100: Gravel (G)

100 - 106: slightly silty sandy Gravel ([m] sG)

106 - 107: sandy Gravel (sG)

107 - 109: silty Gravel (mG)

109 - 116.4: Silt (M)

Total Depth (TD): 116.4 ft bgs

WELL SUMMARY SHEET

Start Date: 4.07.10	Page 1 of 1
Finish Date:4.23.10	

Well ID: C7602		Well Name: 199-D8-98	
Location: 100D		Project: 100 HR-3 RPO Wells	
Prepared by: S. Sexton	Date: 4.30.10	Reviewed by: L.D. Walker	Date: 5-18-10
Signature:		Signature:	

CONSTRUCTION DATA

Description

Surface construction:
4 x 4 x 0.5 ft concrete pad with 4 protective posts and locking well monument

Neat grout cement:
0 - 10.5 ft bgs

Granular bentonite:
10.5 - 51.8 ft bgs

6-in Schedule 10, Type 316 stainless steel riser casing:
2.14 ags - 57.92 ft bgs

Bentonite pellet seal:
51.8 - 53.4 ft bgs

Filter pack: 6-12 mesh Colorado silica sand:
53.4 - 91.4 ft bgs

Depth to water: 68.5 ft bgs (4.23.10)

6-in, Type 316 stainless steel continuous wire-wrap V-slot screen, 0.070-in:
57.92 - 82.95 ft bgs

6-in Type 316 stainless steel sump with welded end cap:
82.95 - 87.95 ft bgs

All depths in feet above/below ground surface (ags/bgs)

Borehole drilled with 10 3/4-in/8-in dual-walled casing

All temporary casing removed from borehole

No horizontal scale

Diagram

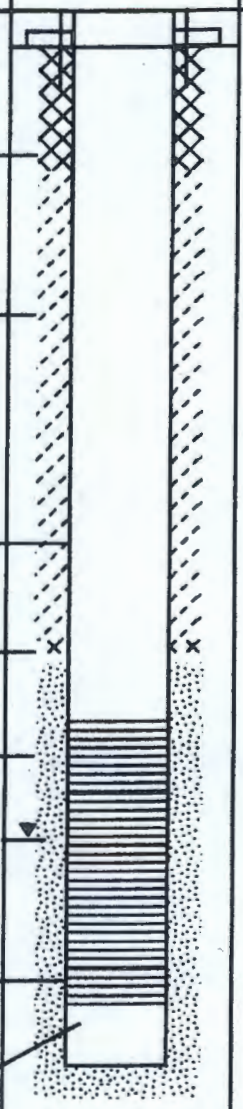

Total Depth (TD):
91.4 ft bgs

GEOLOGIC/HYDROLOGIC DATA

Depth in Feet	Graphic Log	Lithologic Description
0		0 - 19: gravelly Sand (gS)
20		19 - 27: Sand (S)
		27 - 43: sandy Gravel (sG)
40		43 - 48: silty sandy Gravel (msG)
60		48 - 85: sandy Gravel (sG)
80		85 - 91.4: Silt (S)
100		Total Depth (TD): 91.4 ft bgs

WELL SUMMARY SHEET

Start Date: 3.27.10	Page 1 of 1
Finish Date:4.27.10	

Well ID: C7603		Well Name: 199-D8-96	
Location: North of DR Reactor		Project: 100 HR-3 RPO Wells	
Prepared by: S. Sexton	Date: 4.30.10	Reviewed by: L. D. Walker	Date: 5-18-10
Signature: For S. Sexton		Signature:	

CONSTRUCTION DATA

Description

Surface construction:
4 x 4 x 0.5 ft concrete pad with 4 protective posts and locking well monument
4" dia. Protective casing

Neat grout cement:
0 - 10.4 ft bgs

Granular bentonite:
10.4 - 63.1 ft bgs

6-in Schedule 10, Type 316 stainless steel riser casing:
2.00 ags - 70.07 ft bgs

Bentonite pellet seal:
63.1 - 65.4 ft bgs

Filter pack: 8-16 mesh Colorado silica sand:
65.4 - 101.5 ft bgs

Depth to water: 76.3 ft bgs (3.29.10)

6-in, Type 316 stainless steel continuous wire-wrap V-slot screen, 0.055-in:
70.07 - 90.07 ft bgs

6-in Type 316 stainless steel sump with welded end cap:
90.07 - 95.07 ft bgs

All depths in feet above/below ground surface (ags/bgs)

Borehole drilled with 10 3/4-in/8-in dual-walled casing

All temporary casing removed from borehole

No horizontal scale

Diagram

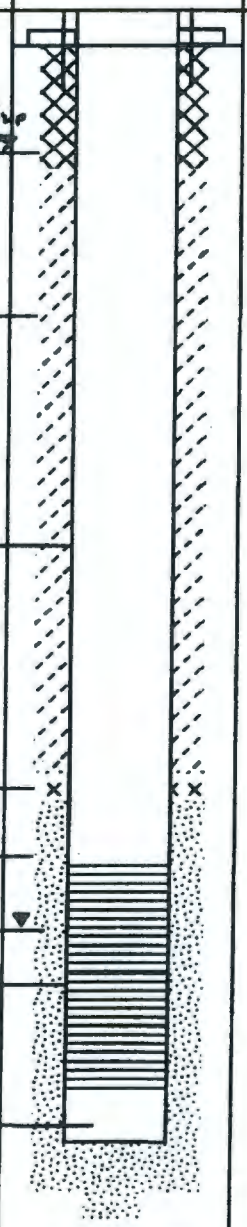

Total Depth (TD):
101.5 ft bgs

GEOLOGIC/HYDROLOGIC DATA

Depth in Feet / Graphic Log

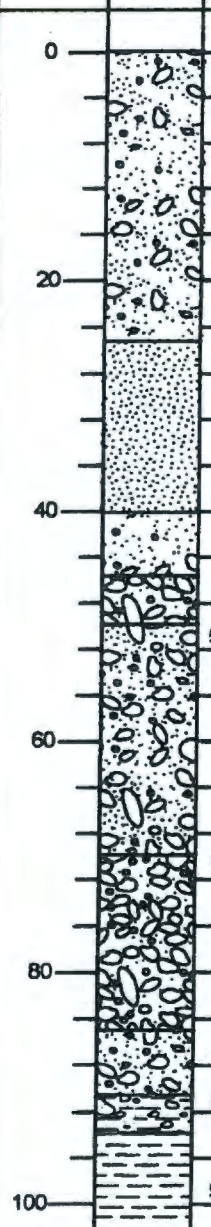

Lithologic Description

0 - 25: gravelly Sand (gS)

25 - 40: Sand (S)

40 - 45: gravelly Sand (gS)

45 - 50: Gravel (G)

50 - 70: sandy Gravel (sG)

70 - 85: Gravel (G)

85 - 91: sandy Gravel (sG)

91 - 93.4: silty Gravel (mG)

93.4 - 101.5: Silt (M)

Total Depth (TD): 101.5 ft bgs

WELL SUMMARY SHEET

Start Date:	6-24-10
Finish Date:	9-10-10
Page	1 of 1

Well ID: C7604		Well Name: 199-H1-4	
Location: N.W of H-Reactor and N.E. of D-Reactor		Project: 100-HR-3 OU Pump & Treat Expansion	
Prepared by: J. Johanson	Date: 9-21-10	Reviewed by: L.D. Walker	Date: 10-11-10
Signature: Jason Johanson		Signature: L D Walker	

CONSTRUCTION DATA

Surface construction:
- 4 x 4 x 0.5 ft concrete pad
- 4 protective posts
- 8-in locking well monument with electrical access pannel.
  3.0 ft ags - 2.0 ft bgs

Permanent Well Materials:
- 6-in Casing of Schedule 10, Type 304 Stainless Steel:
  2.0 ft ags - 31.22 ft bgs
- 6-in Continuous wire-wrap screen of Type 316 Stainless Steel, 0.070-in:
  31.22 - 41.22 ft bgs
- 6-in Sump of Sch. 10, Type 316 Stainless Steel with Welded End Cap:
  41.22 - 46.22 ft bgs

Annular Materials:
- Neat Cement Grout:
  0.0 - 9.5 ft bgs
- Granular Bentonite Fill:
  9.5 - 24.5 ft bgs
- Bentonite Pelet Annular Plug:
  24.5 - 26.3 ft bgs
- Silica Sand Filter Pack, 6-12 mesh
  26.3 - 48.5 ft bgs

Notes:
- All depths in feet above/below ground surface (ags/bgs)
- Borehole drilled with 10 3/4-in/8-in dual- walled casing
- All temporary casing removed from borehole
- No horizontal scale

Diagram

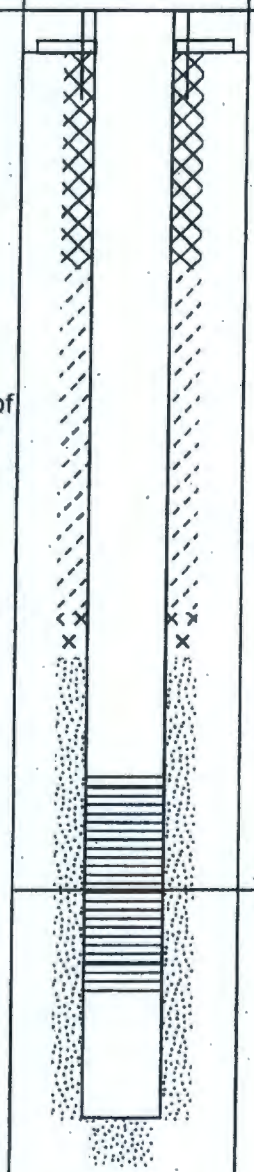

GEOLOGIC/HYDROLOGIC DATA

Depth in Feet: 0, 10, 20, 30, 40, 50

Graphic Log

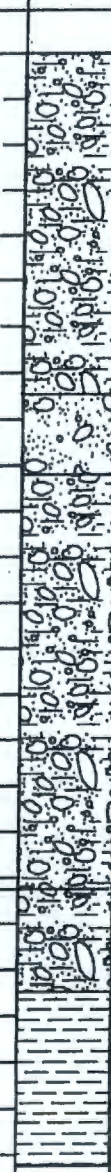

Lithologic Description

- 0 - 15: Silty Sandy Gravel (msG)
- 15 - 18.4: Gravely Sandy (gS)
- 18.4 - 41: Silty Sandy Gravel (msG)
- Water Level: 36.4 (6-24-10)
- 41 - 48.5: Silt (M)
- Total Depth (TD): 46.5 ft bgs

WELL SUMMARY SHEET

Start Date: 7-2-10
Finish Date: 9-29-10
Page 1 of 1

Well ID: C7605	Well Name: 199-H4-77
Location: N.W of H-Reactor	Project: 100-HR-3 OU Pump & Treat Expansion
Prepared by: A. Lantau — Date: 10-4-10	Reviewed by: L.D. Walker — Date: 10-11-10
Signature: Aaron Lantau	Signature: LDWalker

CONSTRUCTION DATA

Surface construction:
- 4 x 4 x 0.5 ft concrete pad
- 4 protective posts
- 8-in locking well monument with electrical access pannel.
  3.0 ft ags - 2.0 ft bgs

Permanent Well Materials:
- 6-in Casing of Sch. 10, Type 304 stainless steel:
  2.0 ft ags - 32.62 ft bgs
- 6-in Continuous wire-wrap screen of Type 316 stainless steel, 0.070-in:
  32.62 - 42.61 ft bgs
- 6-in Sump of Sch. 10, Type 316 stainless steel with welded end cap:
  42.61 - 47.58 ft bgs

Annular Materials:
- Neat Cement Grout:
  0.0 - 10.0 ft bgs
- Granular Bentonite Fill:
  10.0 - 25.9 ft bgs
- Bentonite Pelet Annular Plug:
  25.9 - 27.5 ft bgs
- Silica Sand Filter Pack, 6-12 mesh
  ~~27.8~~ 50.7 ft bgs
  27.5
  LW 10-11-10

Notes:
- All depths in feet above/below ground surface (ags/bgs)
- Borehole drilled with 10 3/4-in/8-in dual- walled casing
- All temporary casing removed from borehole
- No horizontal scale

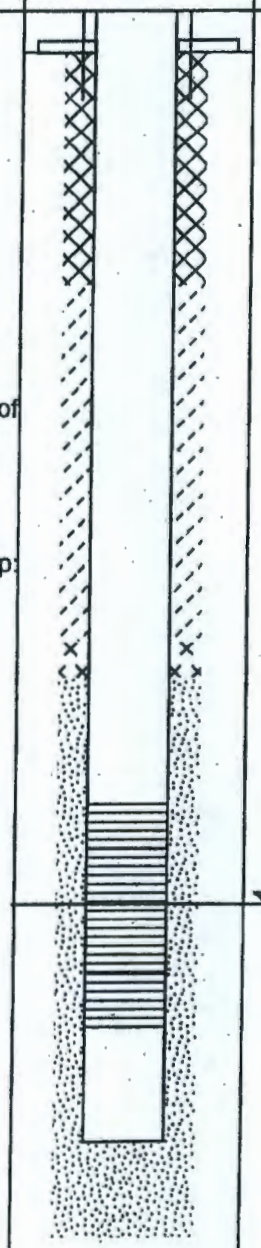

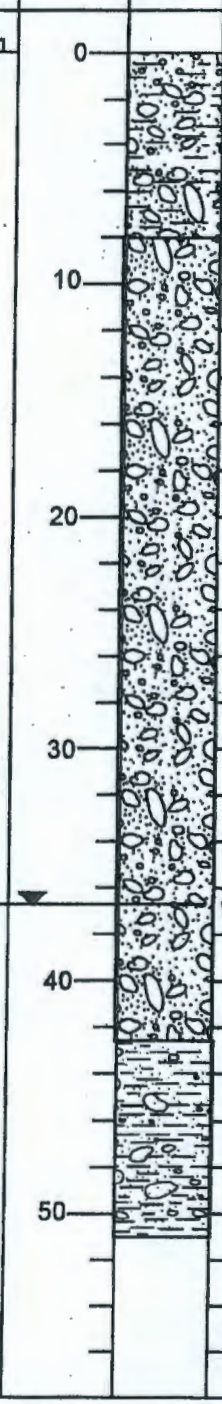

GEOLOGIC/HYDROLOGIC DATA

Graphic Log

Lithologic Description

0 - 8: Silty Sandy Gravel (msG)

8 - 42.5: Sandy Gravel (sG)

Water Level: 36.7 (7-7-10)

42.5 - ~~51.0~~: Gravely Silt (gM)
~~50.7~~ 51.0
LW 10-11-10

51.0

Total Depth (TD): ~~51~~ ft bgs
~~50.7~~

LW 10-11-10

WELL SUMMARY SHEET

Start Date: 6-28-10
Finish Date: 9-13-10
Page 1 of 1

Well ID: C 7606	Well Name: 199-H1-6
Location: N.W. of 100-H REACTOR	Project: 100-HR3 OU PUMP AND TREAT
Prepared by: JAMES PATTERSON Date: 9-21-10	Reviewed by: L.D. Walker Date: 10-11-10
Signature: James Patterson	Signature: LD Walker

CONSTRUCTION DATA

Surface construction:
- 4 x 4 x 0.5 ft concrete pad
- 4 protective posts
- 8-in Locking well monument 3 ft ags - 2 ft bgs with electrical access pannel

Neat Cement Grout (3% bentonite) 0.0 ft bgs - 10.5 ft bgs

6-in sch 10 Type 304 Stainless Steel 2.00 ft ags - 25.86 ft bgs

Bentonite Crumbles 10.5 ft bgs - 19.2 ft bgs

Bentonite Pellets 19.2 ft bgs - 21.3

6-in v-slot Type 316 - 45 slot Stainless Steel 25.86 ft bgs - 35.86 ft bgs

Colorado Silica 10-20 mesh 21.3 ft bgs - ~~45.4~~ ft bgs
47.0'
LW 10-11-10

6-in sch 10 Type 316 Stainless Steel 35.86 ft ags - 40.86ft bgs

Feet Below Ground Surface (ft bgs)

Feet Above Ground Surface (ft ags)

Borehole Drilled with 10 3/4-in Dual wall temp casing with a 11 3/4-in shoe

All temporary casing removed from hole upon completion

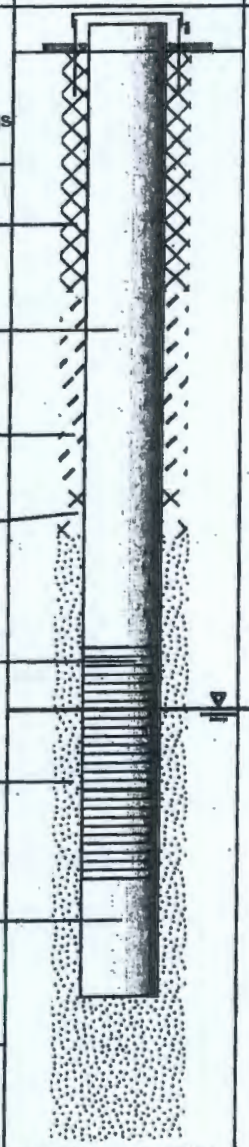

Total Depth (TD) 47.0 ft bgs

No Horizontal Scale

GEOLOGIC/HYDROLOGIC DATA

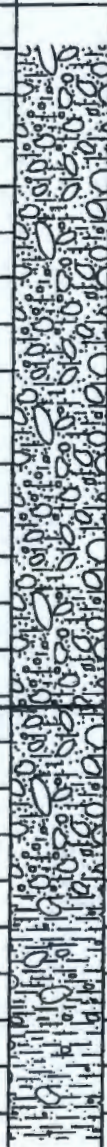

Depth in Feet	Lithologic Description
0–36.5	0.0 - 36.5 Silty Sandy Gravel (msG)
28.5	Water Level 28.5 ft bgs (6-28-10)
36.5–47.0	36.5 - 47.0 Gravely Silt (gM)

WELL SUMMARY SHEET

Start Date: 3 - 17 - 2010
Finish Date: 4 - 20 - 2010
Page 1 of 1

Well ID: C7607	Well Name: 199-D6-2
Location: NW of DR Reactor	Project: 100-HR-3 OU P&T Remedial Process Optimization
Prepared by: Jess Hocking Date: 5/3/2010	Reviewed by: L.D. Walker Date: 5-18-10
Signature:	Signature:

CONSTRUCTION DATA

Well Materials:

6" Type 304 Stainless Steel
Sch. 10 Riser
2' ags - 47' bgs

6" Type 316 Stainless Steel
V-wrap 0.070" (70-slot) Screen
47' bgs - 72.03' bgs

6" Type 316 Stainless Steel
Sump
72.03' bgs - 77.04' bgs

Construction Materials:

Portland Cement Type I - II
w/5% bentonite gel
0 - 10.1' bgs

Granular Bentonite (#8 crumbles)
10.1' bgs - 40.1' bgs

Granular Bentonite (1/4" pellets)
40.1' bgs - 42' bgs

Colorado Silica (6/12 sand)
42' bgs - ~~81.1'~~ bgs
80.4'
LWS 5-18-10

Diagram

GEOLOGIC/HYDROLOGIC DATA

Depth in Feet: 0, 20, 40, 60, 80

Graphic Log

Lithologic Description

0 - 4' Silty Sand (mS)
4 - 7' Gravelly Sand (gS)
7 - 23' Slightly Silty Sandy Gravel [(m)sG]
23 - 44' Gravelly Sand (gS)
44 - 73' Sandy Gravel (sG)
73 - 77' Gravelly Sandy Silt (gsM)
77 - 80.4' Silt (M)

Total Depth = 80.4' bgs
Depth to Water = 53.5' bgs (4/20/2010)

WELL SUMMARY SHEET

Start Date: 6-9-10	Page 1 of 1
Finish Date: 6-17-10	

Well ID: C7608	Well Name: 199-D7-5
Location: E: 574434.21 N:122678.57	Project: 100-HR-3 OU Pump & Treat Expansion
Prepared by: A. Pappas Date: 6-29-10	Reviewed by: L. D. Walker Date: 7/16/10
Signature:	Signature:

CONSTRUCTION DATA

Description

Surface construction:
4 x 4 x 0.5 ft concrete pad with 4 protective posts and locking well monument

Neat grout cement:
0.0 -9.2 ft bgs

Granular bentonite:
9.2 - 26.0 ft bgs

Bentonite pellet seal:
26.0 - 27.5 ft bgs

6-in Schedule 10, Type 304 stainless steel riser casing:
1.89 ags - 33.16 ft bgs

Filter pack: 6-12 mesh Colorado silica sand:
27.5 - 63.5 ft bgs

6-in, Type 316 stainless steel continuous wire-wrap V-slot screen, 0.070-in:
33.16 - 53.17 ft bg5

6-in Type 316 stainless steel sump with welded end cap:
53.17 - 58.51 ft bgs

All depths in feet above/below ground surface (ags/bgs)

Borehole drilled with 10 3/4-in/8-in dual-walled casing

All temporary casing removed from borehole

No horizontal scale

Diagram

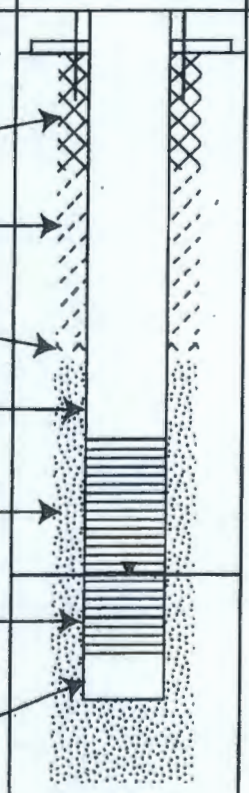

Total Depth (TD):
63.5 ft bgs

GEOLOGIC/HYDROLOGIC DATA

Depth in Feet

0
20
40
60
80
100

Graphic Log

Lithologic Description

0' - 8': Silty Sandy Gravel

8' - 29': Sandy Gravel

29' - 38': Silty Sandy Gravel

38' - 54': Sandy Gravel

Water Level: 45.6' (6.17.10)

54' - 63.5' (TD): Silt

WELL SUMMARY SHEET

Start Date: 6·12·10
Finish Date: 6·23·10
Page 1 of 2

Well ID: C7609	Well Name: 199-H4-82
Location: N.152684.44, E.574861.12, Between 100-H+100-D	Project: 100-HR-3 OU Pump & Treat Expansion
Prepared By: A. Lantow, Geologist — Date: 6·23·10	Reviewed By: L.d. Walker — Date: 7/15/10
Signature: Aaron Lanto	Signature: LD Walker

CONSTRUCTION DATA

Description

Well Head:
4'x4'x6" Reenforced Well Pad
• 8" sch 20 S.S. Protective Monument:
3.0' ags - 2.0' bgs.

Permanent Well:
• 6" sch 10, Type 316 S.S. Casing:
2.0' ags - 32.66' bgs.
• 6" sch 10S. Type 316. v-wire screen
0.070" aperature: 32.66 - 52.68
• 6" sch 10S. Type 316. Sump:
52.68 - 55.68' bgs.

Annular Materials:
• Cement + 3% bentonite Seal:
0.0 - 9.5
• Bentonite Annular fill: 8-20 mesh:
9.5 - 26.0
• Bentonite Annular Plug: ¼ pellets
26.0 - 27.7
• Silica Sand: 6-12 mesh:
59.1 - 27.7' bgs.

Notes:
• All depths measured in feet below ground surface (bgs)
• Dual Wall used for Temp. Casing. - No centralizers required.

Diagram

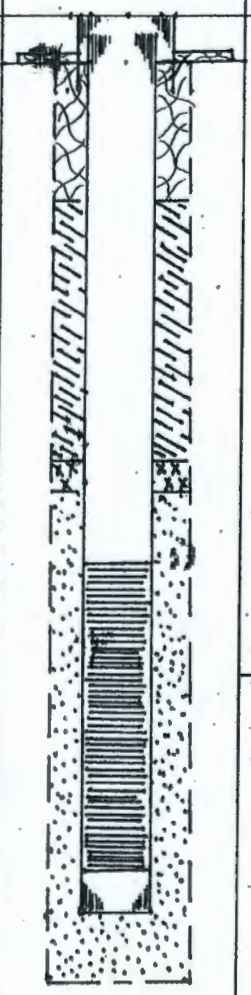

GEOLOGIC/HYDROLOGIC DATA

Depth in Feet	Graphic Log	Lithologic Description
0		0'-7': Silty Sandy Gravel
		7'-30': Sandy Gravel
15		
30		30'-53': Silty Sandy Gravel
		Water level: 40.4' (6·12·10)
45		
		53'-59.1' (TD): Silt.
60	T.D. 59.1'	
75		

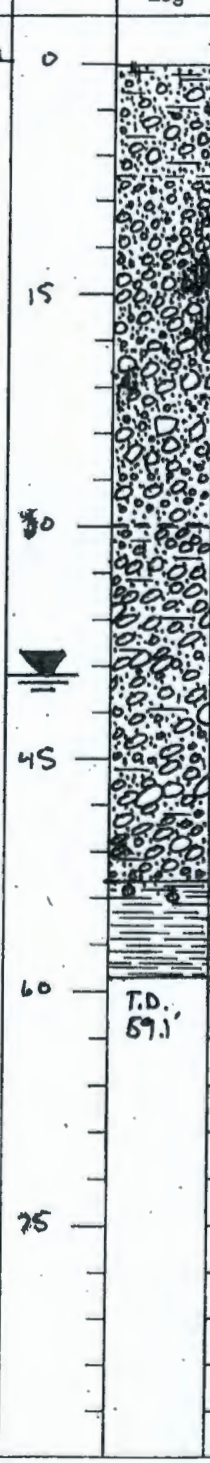

WELL SUMMARY SHEET

Start Date: 6-12-10	Page 1 of 1
Finish Date: 6-21-10	

Well ID: C7610		Well Name: 199-H1-5	
Location: NE of D Reactor		Project: 100-HR-3 OU Pump & Treat Expansion	
Prepared by: A. Pappas	Date: 6-29-10	Reviewed by: L.D. Walker	Date: 7-15-10
Signature: [signature]		Signature: [signature]	

CONSTRUCTION DATA

Description

Surface construction:
4 x 4 x 0.5 ft concrete pad with 4 protective posts and locking well monument

Neat grout cement:
0.0 -5.0 ft bgs

Granular bentonite:
5.0 - 10.5 ft bgs

Bentonite pellet seal:
10.5 - 12.0 ft bgs

6-in Schedule 10, Type 304 stainless steel riser casing:
2.00 ags - 16.08 ft bgs

Filter pack: 8-16 mesh Colorado silica sand:
12.0 - 46.5 ft bgs

6-in, Type 316 stainless steel continuous wire-wrap V-slot screen, 0.055-in:
16.08 - 41.10 ft bg5

6-in Type 316 stainless steel sump with welded end cap:
41.10 - 44.10 ft bgs

All depths in feet above/below ground surface (ags/bgs)

Borehole drilled with 10 3/4-in/8-in dual-walled casing

Diagram

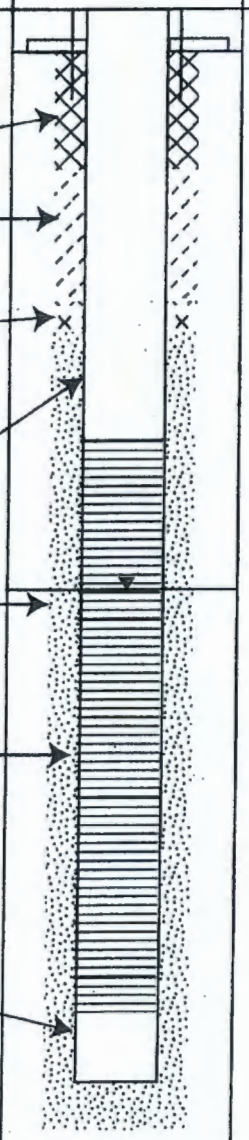

Total Depth (TD):
46.5 ft bgs

GEOLOGIC/HYDROLOGIC DATA

Depth in Feet: 0, 10, 20, 30, 40, 50

Graphic Log

Lithologic Description

0' - 3': Sandy Silt

3' - 7': Gravel

7' - 15': Sandy Gravel

15' - 25': Gravelly Sand

21.8' (6-12-10)

Water Level: ~~23.1' (6.10.10)~~ LW 7-15-10

25' - 33': Sandy Gravel

33' - 40': Gravelly Sand

40' - 42.5': Sandy Gravel

42.5' - 46.5': Silt

WELL SUMMARY SHEET

Start Date: 6-10-10	Page 1 of 1
Finish Date: 6-14-10	

Well ID: C7611		Well Name: 199-D7-6	
Location: NE of 100 D Reactor		Project: 100-HR-3 OU Pump & Treat Expansion	
Prepared by: A. Lantau	Date: 6-21-10	Reviewed by: L.D. Walker	Date: 7-16-10
Signature: for A. Lantau		Signature:	

CONSTRUCTION DATA

Description

Surface construction:
4 x 4 x 0.5 ft concrete pad with 4 protective posts and locking well monument

Neat grout cement:
0 - 5.9 ft bgs

Granular bentonite:
5.9 - 9.4 ft bgs

Bentonite pellet seal:
25.4 - 26.9 ft bgs

6-in Schedule 10, Type 304 stainless steel riser casing:
2.0 ags- 15.42 ft bgs

Filter pack: 6-12 mesh Colorado silica sand:
11.3 - 43.8 ft bgs

6-in, Type 316 stainless steel continuous wire-wrap V-slot screen, ~~0.055-in.~~ 0.070-in
15.42 - 35.5 ft bgs

6-in Type 316 stainless steel sump with welded end cap:
35.5 -40.5 ft bgs

All depths in feet above/below ground surface (ags/bgs)

Borehole drilled with 10 3/4-in/8-in dual-walled casing

All temporary casing removed from borehole

No horizontal scale

Diagram

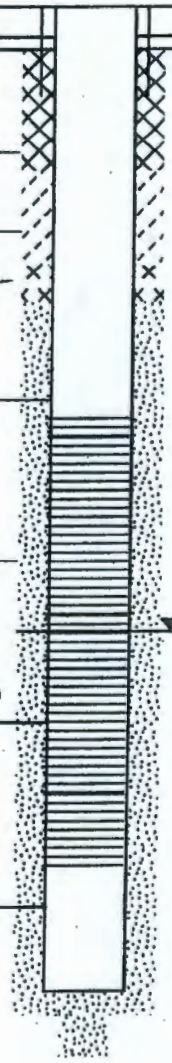

Total Depth (TD):
43.8 ft bgs

GEOLOGIC/HYDROLOGIC DATA

Depth in Feet: 0, 10, 20, 30, 40, 50

Graphic Log

Lithologic Description

0-13: Sandy Silt

13-20: Sandy Gravel

20-36: Gravel

Depth to water: 24.9 ft bgs (6-14-10)

36-36.5: Gravel with Carbonate nodules

36.5-43.8: Silt

WELL SUMMARY SHEET

Start Date: Feb 1, 2010
Finish Date: Feb 4, 2010

Well ID: C7612	Well Name: 199-D5-128
Location: SW of 105-D Reactor	Project: 100-HR-3 FY09 Pump and Treat Expansion
Prepared by: L. Stratton — Date: Feb 11 2010	Reviewed by: L. D. Walker — Date: 2/26/10
Signature:	Signature:

CONSTRUCTION DATA

Surface construction:
4 x 4 x 0.5 ft concrete pad with 4 protective posts and locking well monument

Neat grout cement:
0 - 10.1 ft bgs

Granular bentonite:
10.1 - 72.0 ft bgs

6-in Schedule 10, Type 304/304L stainless steel riser casing:
2.08 - 77.92 ft bgs
4
ags
LW
2-26-10

All depths in feet above/below ground surface (ags/bgs)

Borehole drilled with 10 3/4-in/8-in dual-walled casing

No centralizers required due to dual-wall drilling method

All temporary casing removed from borehole

No horizontal scale

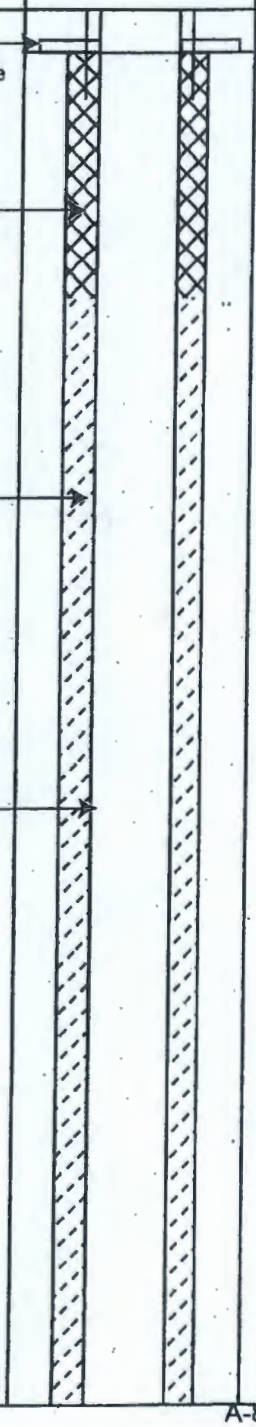

GEOLOGIC/HYDROLOGIC DATA

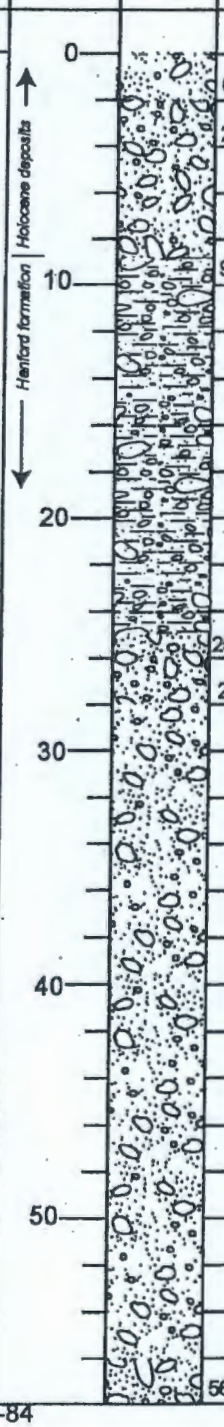

Lithologic Description

0 - 2: gravel pad

2 - 9: gravelly silty sand (gms)

9 - 25: silty gravel (mG)

25 - 28: sandy gravel (sG)

28 - 56: gravely sand (gS)

56 - 75: sandy gravel (sG)

WELL SUMMARY SHEET

Start Date: Feb 1, 2010
Finish Date: Feb 4, 2010
Page 2 of 2

Well ID: C7612	Well Name: 199-D5-128
Location: SW of 105-D Reactor	Project: 100-HR-3 FY09 Pump and Treat Expansion
Prepared by: L. Stratton — Date: Feb 11 2010	Reviewed by: L.D. Walker — Date: 2-26-10
Signature: [signature]	Signature: [signature]

CONSTRUCTION DATA

Description

Granular bentonite:
10.1 - 72.0 ft bgs

6-in Schedule 10, Type 304/304L stainless steel riser casing:
2.08 ft ags - 77.92 ft bgs

Bentonite pellet seal:
72.0 - 73.2 ft bgs

Primary filter pack: Colorado silica sand, 6-12 mesh:
73.2 - 106.6 bgs

Depth to water: 81.85 (2/1/10)

6-in Type 316 continuous wire-wrap "V" slot screen, 0.070-in:
77.92 - 97.92 ft bgs

6-in Type 316 stainless steel sump with welded end cap:
97.92 - 102.92 ft bgs

All depths in feet above/below ground surface (ags/bgs)

Borehole drilled with 10 3/4-in/8-in dual-walled casing

No centralizers required due to dual-wall drilling method

All temporary casing removed from borehole

No horizontal scale

Diagram

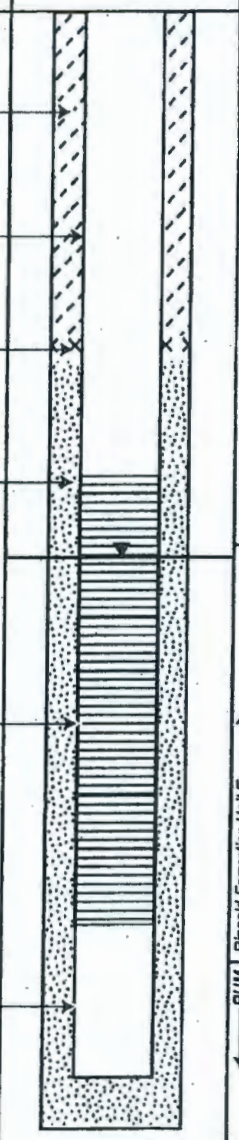

Total Depth (TD): 106.6 ft bgs

GEOLOGIC/HYDROLOGIC DATA

Depth in Feet: 60, 70, 80, 90, 100, 110

Hanford formation

Ringold Formation Unit E

RUM

Graphic Log

Lithologic Description

56 - 75: sandy gravel (sG)

75 - 81: silty sandy gravel (msG)

81 - 87: gravel (G)

87 - 90: sandy gravel (sG)

90 - 98: gravely sand (gS)

98 - 99: silty gravel (sG)

99 - 106.6: Mud

Appendix B

Borehole Logs

BOREHOLE LOG

Date: 11/9/09

Well ID: C7083	Well Name: 199-D4-95	Location: 200 m SW of 15RM Pond
Project: 100-HR-3 RPO FY09 D&T Expansion -100-D		Reference Measuring Point: Ground Surface

Depth (Ft.)	Sample Type No.	Sample Blows Recovery	Graphic Log	Sample Description: Group Name, Grain Size Distribution, Soil Classification, Color, Moisture Content, Sorting, Angularity, Mineralogy, Max Particle Size, Reaction to HCl	Comments: Depth of Casing, Drilling Method, Method of Driving Sampling Tool, Sampler Size, Water Level
0				0-7: silty gravel (MG): 30% G 40% M 30% S. Gravel VF-VC? bimodal VF, CP-VCP, 90% basalt, A-SA. Silt mod plasticity, no to wk rxn HCl, 2.5Y 4/4 olive brown. Sand C-VC, SA-SR, 60% basalt 40% other. Trace mica.	Drill method: Bucket hammer w/ 10¾"/8" dual-wall casing. Adding water.
5	archive		silt & sandy		6: stuck on rock – boulder = 8" diam, rounded.
				7-18: silty sandy gravel (MSG): 40% G, 20% M, 40% S. Gravel mod. basalt, SR-R, M-CP. Sand 75% basalt, F-VC poorly sorted, SA-SR. Silt as above. Loose.	
10	archive				
15	archive			15: avg grain size gravel ↓ to M-CP; silt ↓ to ≤15%. Dry. Basalt ↑.	
20	archive			18-28: Sandy gravel (SG): all as above but silt to 5-10%. ≥90% basalt (sand or gravel), FP prominent, SA-SR. No rxn HCl. Sand broke sorted than above: C-VC.	21: DR ↑
25	archive			25: sand to 50% or greater. Silt 5%. Gravel SR to R.	
30	archive			28-33(?): gravelly sand (gS): as above, sand to 75%.	30: isolated boulders >8" diam.
35			gravel contact uncertain	33(?)-40: sandy gravel (SG): 80% G 20% S, trace M. Gravel mod. sorted F-MP, SR-R, 70% basalt. Sand as above. No rxn HCL.	

Reported By: G. Stratton		Reviewed By: L.D. Walker	
Title: Geologist		Title: Geologist	
Signature: [signature]	Date: 11-9-09	Signature: [signature]	Date: 1-12-10

A-6003-642 (03/03)

BOREHOLE LOG

Page 2 of 4
Date: 11/9/09

Well ID: C7093 | Well Name: 199-D4-95 | Location: 200 m SW of 1SRM Pond

Project: 100-HR-3 RPO PoT Expansion - FY09, 100-D | Reference Measuring Point: Ground Surface

Depth (Ft.)	Sample Type No.	Sample Blows Recovery	Graphic Log	Sample Description: Group Name, Grain Size Distribution, Soil Classification, Color, Moisture Content, Sorting, Angularity, Mineralogy, Max Particle Size, Reaction to HCl	Comments: Depth of Casing, Drilling Method, Method of Driving Sampling Tool, Sampler Size, Water Level
40	archive			40-43: GRAVEL. 40% G, 10% S, trace M. Gravel mod sorted, A-SA, fractured. 85% basalt. silt 2.5Y 5/3 light olive brown. Poor Recovery.	Drill method: Becker hammer w/ 10 3/4" / 9" dual-wall casing. Adding water.
				43-45: gravelly sand (gS): 85% sand w/ isolated LC to boulders. 95% basalt, well sorted CS. Trace VF-FP. Dry, loose.	
45	archive				
				47-53: ~~sandy gravel. est 35%~~ gravelly sand (gS): trace M., 25% G 75% S. less basaltic than above: ~65-75%. G: VFP, LC (v. poorly sorted).	YS 11-05-09
50	archive				
				[55-60: SG] 55: gravel to 40% ∴ sandy gravel. VFP-LC avg S-LC. No rxn HCl. VFP: SA-R. Sand A-SA. trace ~~sil~~ silt gives color 2.5Y 4/1 or 4/2: ~~dark~~ gray to dark grayish brown.	
55	archive				
				[60-63: gS] 60: gravel to ≤20% ∴ gravelly sand. felsic ↑ to 20%, sorting ↓. Dry.	
60	archive				
				63-67: silty gravel (MG): 60% G 30% M 10% S. Gravel SA-R, MP, 50% basalt 50% other. Sand basaltic, as above. Silt forms matrix bound gravel, color becomes more brown with depth, 2.5Y ~~5/3~~ 5/3 lt olive brown. Mid plasticity.	67: Ringold E.
65	archive			67-71: sandy gravel (SG): 70% G 30% S trace M. Gravel FP-MP, R, 40% basalt 60% other - diverse lithologies. Sand VF: 100% qtz, 2.5Y 5/4 lt olive brown. 20% of sand C-VC, basaltic. mod. rxn HCl.	71: Drill hole ~~dry~~; ∇ @ 73'.
70	archive			70-74: gradually decreasing gravel until SAND (S) lens (≥90% S ≤ 10% G) from 74-76. Sand v. well sorted F w/ trace VF, >95% qtz/felsic. Micaceous. Mod-strong rxn HCl. Dry. 5Y 6/4 or 5/4 pale olive to olive.	
75	archive			76-90: silty sandy gravel (MG): 50% G, 30% M, 20% S. Gravel diverse lithologies, <20% basalt, SA-SR, avg MP. Sand poorly sorted F-VC, non-basaltic.	→ to pg 3

Reported By: L. Stratton | Reviewed By: L. D. Walker

Title: Geologist | Title: Geologist

Signature: [signature] Date: 11-10-09 | Signature: [signature] Date: 1-12-10

A-6003-642 (03/03)

BOREHOLE LOG

Page 3 of 4
Date: 11/10/09

Well ID: C7083 | Well Name: 199-D4-99 | Location: 200 m SW OF ISRM POND

Project: 100-HR-3 RPO PIT EXPANSION - FY09, 100-D | Reference Measuring Point: GROUND SURFACE

Depth (Ft.)	Sample Type No.	Sample Blows Recovery	Graphic Log	Sample Description: Group Name, Grain Size Distribution, Soil Classification, Color, Moisture Content, Sorting, Angularity, Mineralogy, Max Particle Size, Reaction to HCl	Comments: Depth of Casing, Drilling Method, Method of Driving Sampling Tool, Sampler Size, Water Level
80	archive			from pg 2: 76-90: msG, continued; silt as discrete clasts & as matrix. Matrix 2.5Y 5/4 H. olive brown; clasts 2.5Y 6/6 olive yellow. Low to med plasticity; ~50% show v. high dry strength; strong carbonate cementation. Calithe visible.	Drill method: Becker hammer w/ 10 3/4"/8" dual-wall casing. Adding potable water as necessary.
85	archive/ sieve	DTW= 89.45' (11.11.09)		85: msG; gravel as above; no silt clasts. Gravel ↑ to >90% (?); archive not representative due to hard drilling conditions.	C~80', casing veering slightly to the east. DR ↓ @ 86 DR stuck 10 min or more.
	sieve			~87: Sand/silt ↑ for 1-2 ft; prominent FP (fractured)	Adding abundant water
90	archive/ sieve			90-100: Gravel (G): 90% gravel 7% sand 3% silt. M-CP, SR-R, diverse non-basaltic mafics, varied colors. Sand M-VC, 20% basalt, A-SA. fractured. Saturated.	very hard drilling: backpulled & over drilled multiple times
95	archive/ sieve			95: Sand slightly finer than above; avg grain size gravel ↓: mod-well sorted FP-MP. SR. silt ↑ to 5-10%. [100-105: SG]	
				95-100: gradual transition to sandy gravel (xG) 60% G 30% S 10% M. Gravel poorly sorted, fractured, to VCP. Sand C-VC, 40% mafic. Silt 2.5Y 5/4 H olive brown. Saturated.	
100	archive/ sieve			[105-115.5 msG to mG]	
105				105: As above but M ↑ to 15% ∴ silty sandy gravel (msG). More brown than above; sand finer (VF-C).	
110	archive/ sieve			110: msG/mG: 60% G, 20% M 20% S. Gravel fractured, VFP-VCP, diverse lithologies. Sand VF-VC, 40% mafic, A-SA. Silt strong rxn HCl when dry, 2.5Y 5/3 olive brown. Med plasticity.	
115	archive/ sieve	100% split spoon 117.5-119.8		115.5: contact w/ MVD (M). 10% G 10% S, 80% M. Med plasticity. S, G as above. Saturated. Nt rxn HCl. 10YR 5/3 brown.	Split spoon HEIS #
				118: Silty sand: >80% FS, 80% qtz 20% mafic. No rxn HCl. Wet. Red staining; 10YR 4/4 or 4/6 dark yellowish brown.	

Reported By: L. Stratton | Reviewed By: L.D. Walker

Title: Geologist | Title: Geologist

Signature: [signature] | Date: 11.11.09 | Signature: [signature] | Date: 1-12-10

A-6003-642 (03/03)

BOREHOLE LOG

Page 4 of 4

Date: 11/11/09

Well ID: C7083 | Well Name: 199-D4-95 | Location: 200 m SW of 1SRM Pond

Project: 100-HR-3 RDO PoT Expansion - FY09-100-D | Reference Measuring Point: Ground Surface

Depth (Ft.)	Sample Type No.	Sample Blows Recovery	Graphic Log	Sample Description: Group Name, Grain Size Distribution, Soil Classification, Color, Moisture Content, Sorting, Angularity, Mineralogy, Max Particle Size, Reaction to HCl	Comments: Depth of Casing, Drilling Method, Method of Driving Sampling Tool, Sampler Size, Water Level
120	archive			120: cemented. No rxn HCl. More yellow than above.	Becker hammer w/10¾" 8" dual wall casing.
			TD = 121.0		
				NOT USED JS 11.11.09	

Reported By: L. Stratton | Reviewed By: L.J. Walker

Title: Geologist | Title: Geologist

Signature: [signature] | Date: 11.11.09 | Signature: [signature] | Date: 1-12-10

A-6003-642 (03/03)

BOREHOLE LOG

Page 1 of 3

Date: 10.14.09

Well ID: C7084 | Well Name: 199-D4-96 | Location: 25 ft W of 199-D4-22, NW Edge of 15RH Pond

Project: 100-HR-3 FY09 RDO PoT Expansion - 100-D Area | Reference Measuring Point: Ground Surface

Depth (Ft.)	Sample Type No.	Sample Blows Recovery	Graphic Log	Sample Description: Group Name, Grain Size Distribution, Soil Classification, Color, Moisture Content, Sorting, Angularity, Mineralogy, Max Particle Size, Reaction to HCl	Comments: Depth of Casing, Drilling Method, Method of Driving Sampling Tool, Sampler Size, Water Level
0				slightly gravely sand	Drill method Becker hammer
				0-6: ~~gravely silty sands~~: 85% sand 5% silt 10% gravel.	w/ 10 3/4"/8" dual-wall casing.
				G: VFP-MP, 80% basalt, SR-R. Sand C-VC w/ limited F-M; SA-SR, 70% basalt. Silt 10YR 4/2 brown. No rxn HCl. Dry to moist.	
5	archive				Stuck on basalt cobble @ 6'.
		cold seep		6-24: silty sandy gravel (mmG): 80% G 25% S 15% M.	Add water.
				G gravel v. poorly sorted VFP-boulder, A-SA, >85% basalt.	
				Sand C-VC, SA, 80% basalt. Silt 10YR 5/2 grayish brown. HCl	
				to strong rxn HCl.	14: DB ↑
10	archive				
15	archive			15: gravel to ≤ 80%; silt, sand t. G v. poorly sorted:	
				70% VFP, 30% CP-boulder. All else as above.	
20	archive			20: appears as 18', not 15'.	20: cobble/boulder blocking air hose: poor recovery.
				24-48: SAND (S): 100% S. Trace G. Well sorted M sand,	24-48: very high drill rate
25	archive			A-SA, 97% basalt balance qtz. Dry. No rxn HCl. V. loose:	
				drill rate very high.	
30	archive				
35	archive				

Reported By: L. Stratton		Reviewed By: L. D. Walker	
Title: Geologist		Title: Geologist	
Signature: [signature]	Date: 10.15.09	Signature: [signature]	Date: 11-9-09

A-6003-642 (03/03)

BOREHOLE LOG

Page 2 of 3
Date: 10·14·09

Well ID: C7084 | Well Name: 199-D4-96 | Location: 25 ft W of 199-D4 22, NW Edge of 16RM pond

Project: 100-HR-3 FY09 RPO P&T Expansion - 100-D Area | Reference Measuring Point: Ground Surface

Depth (Ft.)	Sample Type No.	Sample Blows Recovery	Graphic Log	Sample Description: Group Name, Grain Size Distribution, Soil Classification, Color, Moisture Content, Sorting, Angularity, Mineralogy, Max Particle Size, Reaction to HCl	Comments: Depth of Casing, Drilling Method, Method of Driving Sampling Tool, Sampler Size, Water Level
40	archive				Drill method: Becker Hammer w/ 10 3/4"/8" dual walled casing
45	archive			45: moist; gtz ↑ to 5-10%.	
				48-50: gravelly sand (gS): All as above but 15% gravel. G well sorted MP, R, 50% gtz/other.	
50	archive			50-70 silty sandy gravel (siG)	
		gradual color change		50: siG: 30% G 65% S 5% M. Gravel FF-MP, A-R avg SR, diverse lithologies, ±20% basalt. Sand M-VC, 85% basalt 15% gtz/other. More brown than above.	
55	archive				57: drill date 11/6: based on color/lithology change, appears to be Ringold E.
60	archive			60: sandy gravel (sG): 70% G 25% S 5% M. Gravel F-CP avg M, SR, 90% gtz/other - diverse lithologies. Sand v. well sorted VF, trace basalt 95% gtz. SR-R. Med to strong rxn HCl. Dry. 2.5Y 5/3 light olive brown.	adding water / Mud drilling to loosen casing 2-3 times.
65	No archive			65: sorting gravel PA: bimodal CP, FP. FP-SR, CP-SA. Sand Medium. Gtz ↑ to 510%.	65: No archive - geo mistake
70	archive			70-72: silty sandy gravel (msG): 50% G 35% S 15% M. Gravel FP-CP avg MP, fractured, diverse lithology 510% basalt. Sand, silt as 66'. Adding water. No rxn HCl.	72: DR PA
75	archive			72-78: SAND (S): 100% sand trace silt. Well sorted F-M predom. F. SA-SR. 795% gtz. 10YR 6/4 lt. yellowish brown. Dry. No rxn HCl.	
				78-85: SILTY SANDY GRAVEL (msG)	78: DR JW

Reported By: L. Stratton | Reviewed By: L. D. Walker

Title: Geologist | Title: Geologist

Signature: [signature] Date: 10·15·09 | Signature: [signature] Date: 11/9/09

A-6003-642 (03/03)

BOREHOLE LOG

Page 3 of 3

Date: 10·14·09

Well ID: C7084	Well Name: 199-D4-96	Location: 25 ft W of 199-D4-~~96~~ 28, NW Edge of ISRM Pond
Project: 100 HR-3 FY09 RPO P&T Expansion - 100-D Area		Reference Measuring Point: Ground Surface

Depth (Ft.)	Sample Type No.	Sample Blows Recovery	Graphic Log	Sample Description: Group Name, Grain Size Distribution, Soil Classification, Color, Moisture Content, Sorting, Angularity, Mineralogy, Max Particle Size, Reaction to HCl	Comments: Depth of Casing, Drilling Method, Method of Driving Sampling Tool, Sampler Size, Water Level
80	archive			80: silty sandy gravel (SmG): 50% G, 40% S, 10% M. Gravel VF-CP v poorly sorted, ≤30% basalt. Sand, silt as above.	Drill method: Becker hammer w/ 10 3/4/8" dual-wall casing
				[85-88: G]	81: No progress. Add auxilliary air compressor.
85	archive/ sieve	GRAB 85' HEIS: B22HT5		85: Gravel (G): ≥80% G, ≤10% S, ≤10% M. Gravel FP-CP avg M-C, SR-R, diverse lithologies, ~20% basalt. Sand/silt as above. No evidence of cementation in cuttings (airlifted) but drill rate very low.	85: air did not improve drill rate.
				[88-95: SG] trace to 5% silt.	DTW = 87.30' bgs 10/15/09
90	archive/ sieve	split spoon 89.4-90.7 50% recovery HEIS: B22HT6		90: sandy gravel (sG): 75% G, 25% S. Gravel F-M avg M, R, ≤20% basalt 80% other. Sand VC 95% qtz/other. Cemented.	88: Drill rate ↑
				[95-99: gmS]	
95	archive/ sieve	grab @ 96' HEIS: B22HT8		99: gravelly silty sand (gmS): 25% G 25% M 50% Sand G as above, SR but more mafic. Sand C-VC, SA-SR, 60% qtz/5% basalt/35% other. Silt 10YR 5/3 brown. Saturated.	Uncemented. 97: stuck on cobble (basalt?)
				97: G ↑ (?) [100-106.5]	97-100: poor recovery due to rock in bit. RUM contact appears to be ~99 but may be 99.5-100'.
100	archive	sieve 100.0-102.0 75% full HEIS: B22HT7		100: MUD (M): 100% M, trace G, trace M. High plasticity. No rxn HCl. 10YR 5/3 brown.	
105	archive	sieve 104.1-106.6 B22HT0 100%	TD= 106.5		

Reported By: L. Stratton	Reviewed By: L.D. Walker
Title: Geologist	Title: Geologist
Signature: [signature] Date: 10·18·09	Signature: [signature] Date: 11/9/09

A-6003-642 (03/03)

BOREHOLE LOG

Page 1 of 3

Date: 10/19/09

Well ID: C7085	Well Name: 199-D4-97	Location: NE corner ISRM Pond
Project: 100-HR-3 FY09 RPO P&T Expansion - 100-D		Reference Measuring Point: Ground Surface

Depth (Ft.)	Sample Type No.	Sample Blows Recovery	Graphic Log	Sample Description: Group Name, Grain Size Distribution, Soil Classification, Color, Moisture Content, Sorting, Angularity, Mineralogy, Max Particle Size, Reaction to HCl	Comments: Depth of Casing, Drilling Method, Method of Driving Sampling Tool, Sampler Size, Water Level
0				0 - 7 (?): ~~slightly~~ LG gravely sand (gS): 90% sand 10% gravel. Sand bimodal: VF, VC. VF: 100% gS/other, 10YR 4/3 brown, strong rxn HCl. VC: >90% basalt, Angular. Gravel as VCS. Trace FP.	Drill method: Becker hammer w/ 10¾"/8" dual-wall casing
5	archive			8 → 15': Gravelly SAND (gS)	NOTE: due to speed of drilling (drill rate very high) and/or intermittent recovery, all contacts 0-TD are approximated - geologist could only see cuttings every 5 feet.
				8: thin interval w/ ≤ 25% cobbles	
10	archive			10: gravely sand (gS) different from above. 15-20% G: MP-SC, SR, ≥50% basalt. Sand well sorted VC, A-SA, 30% basalt. No rxn HCl. Dry. 10YR 3/2 dark grayish brown.	
				15 → 30': Sandy GRAVEL (sG)	
15	archive			15: sandy gravel (SG): 60% G 35% S 5% M. Gravel VFP-SC, fractured/SR, 80% basalt 20% other (mostly mafics). Sand poorly sorted F-VC, 90% basalt. No rxn HCl.	
20				20: silt ↑ to > 5%. Sand less basaltic, better sorted (avg C-VC). Gravel ~ 50% rounded FP, 60% basalt 40% other (Mostly mafic); 50% VCP-SC, SR.	
25				25: sandy gravel as above, but gravel M-VCP, SR-R. Basalt ↑ to 80%. No rxn HCl.	
				30 → 40': Gravelly SAND (gS)	
30				30: gravely sand (gS): 15% g 85% S. Gas/odor. S: 95% basalt C-VC, Angular. No rxn HCl.	
35				35: As 30; gravel ↓ to ≥ 10%.	

Reported By: L. Stratton		Reviewed By: L. D. Walker	
Title: Geologist		Title: Geologist	
Signature: [signature]	Date: 10/19/09	Signature: [signature]	Date: 11/10/09

A-6003-642 (03/03)

BOREHOLE LOG

Page 2 of 3
Date: 10/19/09

Well ID: C7085	Well Name: 199-D4-97	Location: NE Corner 1SRM Pond
Project: 100-HR-3 FY09 RPO PET Expansion - 100 D		Reference Measuring Point: Ground Surface

Depth (Ft.)	Sample Type No.	Sample Blows Recovery	Graphic Log	Sample Description: Group Name, Grain Size Distribution, Soil Classification, Color, Moisture Content, Sorting, Angularity, Mineralogy, Max Particle Size, Reaction to HCl	Comments: Depth of Casing, Drilling Method, Method of Driving Sampling Tool, Sampler Size, Water Level
40	archive	?		40: SAND (S): 100% w/ trace gravel. 90% basalt. Well sorted: C. Trace silt. Dry. No rxn HCl. 40'→42': SAND (S)	Becker Hammer w/ 10 3/4"/8" dual wall casing. Adding abundant water 35-
				42→50': Sandy GRAVEL (sG)	
45	archive			45: Sandy gravel: 70% G & 10% M 20% S. G: v. poorly sorted VFP - boulder, R. Less basaltic: 80% or less. Sorting ↓. More brownish-tinged than above. Gravel 40% basalt 60% other.	45: gravel starts ~42?
				50→55': GRAVEL	
50	archive			50: gravel (G): 85% G 10% S 5% M. Gravel & 10% basalt, metasediments Dominant. FP - VCP, PR-R Sand as above. Silt as above.	
				55→67': Silty Sandy GRAVEL (msG)	
55	archive	?		55: silty sandy gravel. ≥10% silt ≥20% sand ≤90% gravel. Gravel FP - CP, R, diverse lithologies. Sand poorly sorted, 70% basalt, SA. Silt 2.5Y 5/3 light olive brown. No rxn HCl.	56: DR ↓↓: Approximate Ringold E contact (Unworked Ringold above?)
60	archive			60: silty sandy gravel (msG): 40% G 50% S 10% M. Gravel F-MD, R, diverse lithologies, & 10% basalt. Sand 90% qtz, VF-F. 2.5Y 6/2 grayish brown. Mod to strong RXN HCl.	
65	archive			65: qtz to 95%, ~~sand to 5%~~ LS, ≤5% basalt. Rare phlogopite. Silt ↑ to 15%. Avg grainsize gravel ↓. 67: silt to trace ∴ Sandy gravel	
				67→71': Sandy GRAVEL (sG)	
70	archive			70: Gravel (G): 85% G 5% M 10% S. Increase in gravel due to increased FP, otherwise gravel as above. Sand, silt as above.	71: DR ↑
				71'→75': GRAVEL (G)	
				75→90': gravelly SAND (gS)	
75	archive			75: sandy gravel / gravelly sand (sG/gS): 30% G 65% S 5% M. Gravel ≤10% basalt, MP, R. Sand VF - F rare M. Micaceous. 100% qtz/other. Mod to strong rxn HCl. 10YR 3/6 yellowish brown.	

Reported By: L. Stratton		Reviewed By: L. D. Walker	
Title: Geologist		Title: Geologist	
Signature: [signature]	Date: 10/19/09	Signature: [signature]	Date: 11/10/09

A-6003-642 (03/03)

BOREHOLE LOG

Page 3 of 3

Date: 10/19/09

Well ID: C7085	Well Name: 199-D4-97	Location: NE Corner 15RM Pond	
Project: 100-HR-3 FY09 RPO P&T Expansion - 100D		Reference Measuring Point: Ground Surface	

Depth (Ft.)	Sample Type No.	Sample Blows Recovery	Graphic Log	Sample Description: Group Name, Grain Size Distribution, Soil Classification, Color, Moisture Content, Sorting, Angularity, Mineralogy, Max Particle Size, Reaction to HCl	Comments: Depth of Casing, Drilling Method, Method of Driving Sampling Tool, Sampler Size, Water Level
80	archive			80: gravelly sand (gS): 25% G 75% S trace M. Gravel FP, R, diverse lithologies c 10% basalt. Sand VF-E, 100% qtz/other notably micaceous. 10YR 4/3 brown. Mud - strong rxn HCl.	Becker hammer w/ 10 3/4"/8" dual wall casing.
85	archive			85: gravel to CP.	DTW: 86.2' bgs (10/19/09)
				90→100': SAND (S)	90: Drilling dry
90	archive/ sieve			90: SAND (S) w/ some gravel. Medium-grained 95% qtz / 5% other. No silt. Does not have strong brown color as above. No rxn HCl. Dry (due to air lifting)	
95	archive/ sieve			95: sand coarse.	
					97: adding water
				100→104.5': gravelly SAND	
100	archive/ sieve			100: gravelly sand (gS): 20% G, 5% M 75% S. Sand C-VC, 20% basalt, micaceous (predom. phlogopite) Gravel VF-MP.	
				104.5'→111': Mud (M)	RUM Contact ~104.5
105	archive	split spoon 105.9-108.9 80% recovery ~40 blows		105: MUD (M): high plasticity. No rxn HCl. Moist. Alternating 1 cm layers 5Y 7/3 pale yellow, 7.5Y 6/3 light brown (both silt/clay as matrix). Prominent 'clasts' (fractured from drilling) mod to strongly cemented vitreous-appearing material, 2.5Y 8/2 pale yellow, no rxn HCl. Some 7.5 8/6 reddish yellow forming rind around above. Also 'clasts' 7.5Y 6/3 light brown showing veining w/ lighter material. Strongly cemented, lustrous surface when broken.	Split spoon HEIS# B22D11, B22D28
110	archive				
			111.0= TD		

Reported By: L. Stratton		Reviewed By: L. J. Walker	
Title: Geologist		Title: Geologist	
Signature: L. Stratton	Date: 10/20/09	Signature: LJ Walker	Date: 11/10/09

A-6003-642 (03/03)

BOREHOLE LOG

Page 1 of 3
Date: 11-20-09

Well ID: C7086 | Well Name: 199-D4-98 | Location: 100-D

Project: 100-HR-3 RPO wells | Reference Measuring Point: ground surface

Depth (Ft.)	Sample Type No.	Sample Blows Recovery	Graphic Log	Sample Description: Group Name, Grain Size Distribution, Soil Classification, Color, Moisture Content, Sorting, Angularity, Mineralogy, Max Particle Size, Reaction to HCl	Comments: Depth of Casing, Drilling Method, Method of Driving Sampling Tool, Sampler Size, Water Level
0		N/A		0-2" - crushed gravel pad	Becker hammer, 10 3/4 x 8" dual wall casing
				2-3 ft bgs - aeolian sand, sparse pebbles	
5	G.S			3-8' - sandy gravel (SG), mostly basalt, pebbles dominate (to 1/2"), sparse coarse cobbles to 7-8"	Archive samples taken every 5 ft or changes in lithology.
10	G.S			8-24' - sandy gravel, basalt = 90% of cobbles, sparse qtzite, cobbles to 2-3", well rounded, color = 10YR 3/1 - no HCl reaction - cobbles smaller (1-2") at 15', color = 10YR 3/2	
15	G.S				
20	G.S				
				24-25' - medium sand, sparse pebbles to 1", basalt dominated - SSR (gS)	
25	G.S			25-30' sandy gravel (SG) - mostly basalt, cobbles to 4", well rounded, dark medium sand, basalt dominated, no HCl rxn 2.5Y 5/1	
30	G.S			30-35' SG as above, 2.5Y 5/1, sandy gravel, basalt dominated, sparse qtzite cobbles, cobbles to ≈ 5", well-rounded, avg. size ≈ 2"	
35	G.S			35-40: silty sandy gravel (mSG) - gravel cobbles < 1", med. sand, basalt dominated color = 10R 4/1	

Reported By: Michael E. Carm | Reviewed By: L.d. Walker

Title: Senior Geologist | Title: Geologist

Signature: [signature] Date: 11-20-09 | Signature: [signature] Date: 1/13/10

A-6003-642 (03/03)

BOREHOLE LOG

Date: 11-20-9

Well ID: C7086	Well Name: 199-D4-98	Location: 100-D	
Project: 100-HR-3 RPO wells		Reference Measuring Point: ground surface	

Depth (Ft.)	Sample Type No.	Sample Blows Recovery	Graphic Log	Sample Description: Group Name, Grain Size Distribution, Soil Classification, Color, Moisture Content, Sorting, Angularity, Mineralogy, Max Particle Size, Reaction to HCl	Comments: Depth of Casing, Drilling Method, Method of Driving Sampling Tool, Sampler Size, Water Level
40	G.S	N/A		35-40: (ms G) silty sandy gravel	Becker hammer
				40-50: (ms G) silty sandy gravel, poorly sorted, cobbles to 4", basalt dominated 5YR 3/1, sand somewhat coarse 1,	10 3/4 x 8" dual wall casing
45	G.S				
				50-59': (ms G) silty sandy gravel, basalt dominated, poorly sorted, cobbles to 2.5-3", color = 2.5YR 5/1, qtzite cobbles to 1" increase from 55-59'	
50	G.S				
55	G.S				
60	G.S			59-102.8: (sG) sandy gravel of the Ringold E, cobbles to 2-3", ~50% basalt, rest = qtzite + volcanics + plutonic rx, coarse sand, salt & pepper color, >50% felsic clasts - color = 2.5Y 6/2, no HCl rxn, much slower drilling rate	
65	G.S				
70	G.S				
75	G.S				

Reported By: Michael E. Caron		Reviewed By: L.D. Walker	
Title: Senior Geologist		Title: Geologist	
Signature: [signature]	Date: 11-20-09	Signature: [signature]	Date: 1-13-10

A-6003-642 (03/03)

BOREHOLE LOG

199-D4-98

Page 3 of 3

Date: 11.23.9

Well ID: C7086	Well Name: ~~199-D4-98~~	Location: 100-D	
Project: 100-HR-3 RPD wells		Reference Measuring Point: ground surface	

Depth (Ft.)	Sample Type No.	Sample Blows Recovery	Graphic Log	Sample Description: Group Name, Grain Size Distribution, Soil Classification, Color, Moisture Content, Sorting, Angularity, Mineralogy, Max Particle Size, Reaction to HCl	Comments: Depth of Casing, Drilling Method, Method of Driving Sampling Tool, Sampler Size, Water Level
80	G.S			59-102.8' SG sandy gravel of Ringold formation E, cobbles to 2-3" ~ 95% basalt, rest = quartzite + volcanics + plutonic mix, coarse sand, salt + pepper color = 7.5 YR 6/2, no HCL reaction, increase in cobble size with depth.	Becker hammer 10 3/4" x 8" dual wall
		▼			WL = 83.5' (11/23/09) 82.7' (12/4/09)
85	G.S				
	G.S. S.A. G.S				Grab Samples for Sieve Analysis Taken in 5 ft intervals (bmt) and composited in 10 ft intervals for analysis.
90					
	G.S. S.A. G.S				
95					
	G.S. S.A. G.S				
100					
	G.S.			102.8'-111' GM Gravely sandy silt of Ringold upper mud occasional pebbles, mostly v. fine grained sands + silt grayish color = 7.5YR 6/2,	SS#1, HNF-N-411-8 Page 39 103.0-105.5 HEIS #: BZZX26
	#1				
105					
110			TD		
				TD = 111 ft. bgs	
115					

Reported By: A. Papps		Reviewed By: L.D. Walker	
Title: Field Geologist		Title: Geologist	
Signature:	Date: 11.20.9	Signature:	Date: 1-13-10

A-6003-642 (03/03)

BOREHOLE LOG

Page 1 of 3
Date: 11/12/09

Well ID: C7087 | Well Name: 199-D4-99 | Location: S bank of Columbia River, N of ISRM barrier

Project: 100-HR-3 RPO P&T Expansion - FY09 100-D | Reference Measuring Point: Ground Surface

Depth (Ft.)	Sample Type No.	Sample Blows Recovery	Graphic Log	Sample Description: Group Name, Grain Size Distribution, Soil Classification, Color, Moisture Content, Sorting, Angularity, Mineralogy, Max Particle Size, Reaction to HCl	Comments: Depth of Casing, Drilling Method, Method of Driving Sampling Tool, Sampler Size, Water Level
0				0-14: silty sandy gravel (msGr): 60% gravel 25% sand 15% silt. Gravel VFP-MP, >70% angular basaltic fine pebbles. Sand F-VC avg C, 80% basalt 20% qtz/other, A-SA. Silt 10YR 4/3 brown, moist, no to v. wk rxn HCl. Trace root bits.	Drill method Becker hammer w/ 10 3/4"/6" dual-wall casing. Adding water as necessary.
5	archive				
10	archive			10: Sand ↑ to 50% (continuous w/ above but grading finer); isolated coarse pebbles. Overall sorting ↓. CP: SR-R, 50% basalt 50% other (predom. granitic).	
				12: gravel to 1/4" or SC. Sand ↓ gravel ↑ to 50%	12: adding abundant water. 14: cobble blocking discharge hose
15	archive	poor recovery		14-23: sandy gravel (sGr): 70% G 20% S ≤10% M. Gravel A-SA, VFP-LC avg SC. Fractured. 80% basalt. Sand M-VC, 80% basalt, A. No rxn HCl.	
20	archive			20: Avg g.s. matrix ↓/ ∴ sand ↑. ≤ 5% silt / (to sGr/gS).	
25	archive			23-25: msGr w/ silt increasing to mGr. 70% gravel. 15-20% sand/silt. Gravel SR-R, F-MP, 70% basalt. Sand, silt as above. 25-35: mGr	
30	archive			30: silt 20-25%. All else as above. Sand decreasing 30-35'.	
35	archive			35-43: Gravel (G): all as above but sand ≤5%, silt ≤15%. Gravels mod. well sorted MP w/ FP & rare CP. Rounded, >70% basaltic.	36: DR ↓ 38: rock wedged in bit blocking cuttings - 38-41 not representative of max particle size.

Reported By: L. Stratton | Reviewed By: L.W. Walker

Title: Geologist | Title: Geologist

Signature: [signature] | Date: 11/15/09 | Signature: [signature] | Date: 1/12/10

A-6003-642 (03/03)

BOREHOLE LOG

Page 2 of 3

Date: 11.12.09

Well ID: C7087 | Well Name: 199-D4-99 | Location: S bank of Columbia R, N of ISRM barrier

Project: 100-HR-3 RPO P&T Expansion - FY09 (100-D) | Reference Measuring Point: Ground Surface

Depth (Ft.)	Sample Type No.	Sample Blows Recovery	Graphic Log	Sample Description: Group Name, Grain Size Distribution, Soil Classification, Color, Moisture Content, Sorting, Angularity, Mineralogy, Max Particle Size, Reaction to HCl	Comments: Depth of Casing, Drilling Method, Method of Driving Sampling Tool, Sampler Size, Water Level
40	archive			40: consistent w/ above; basalt ↑ to 80%. Silt ↓ to ≤ 10%; 90% gravel total. Limited sand VF-F.	Rotary hammer w/ 10 3/4"/8" dual wall casing. Adding water.
				43-60: Sand (S): >95% sand ≤5% gravel trace silt. Sand 85% basalt 15% qtz/other. M-C, A-SA. No rxn HCl. Gravel VFP, FP, SR, basalt. 2.5Y 2/1 black.	DR ↑↓
45	archive				
50	archive			50: 80% basalt. Sand coarser (CS). No rxn HCl. Dry. Gravel ↑ ≤ 10% (F-CP, avg MP, R). 2.5Y 3/1 v. dark gray.	
55	archive			55: As 43 but 90% basalt. Sand C.	
					60: adding water.
60	archive	color change		60-62: gravelly sand (gS): 20% gravel 5% silt 75% gravel. Sand as above but C-VC. Gravel v. poorly sorted VFP-SC, SA-SR, 70% basalt.	61: DR ↑↓ — Ringold E contact (approximate)
				62-75: sandy gravel (sG): 60% G 40% S trace M. Gravel F-MP, SR-R, diverse lithologies ≤20% basalt. Sand F-M, SA-SR, 70% qtz/other 30% basalt. Sand F-M, SA-SR, 70% qtz/other 30% basalt. Mod rxn HCl. Dry. 2.5Y 4/3 olive brown.	
65	archive				
				70: gravel g.s. ↑ to M-CP. Sand well sorted M, SR, >95% qtz/other 5% mafic. wk rxn HCl. Dry.	
70	archive				
				75-94: silty sandy gravel (msG): 70% G 15% S 15% M. Increase in gravel due to M VF-FP, R. basalt ↑ to 40%. Strongly cemented, strong rxn HCl. Cemented 'clasts' show 100% qtz VFS (micaceous) not present as matrix in cuttings (probably due to drill method).	Adding water ↑
75	archive				

Reported By: L. Stratton		Reviewed By: L.D. Walker	
Title: Geologist		Title: Geologist	
Signature: [signature]	Date: 11.'09	Signature: [signature]	Date: 1/12/10

A-6003-642 (03/03)

BOREHOLE LOG

Page 3 of 3
Date: 11-12-09

Well ID: C7887 | Well Name: 199-D4-99 | Location: S bank of Columbia R, N of ISRM wells

Project: 100-HR-3 RPO PIT Expansion - FY09 (100-D) | Reference Measuring Point: Ground Surface

Depth (Ft.)	Sample Type No.	Sample Blows Recovery	Graphic Log	Sample Description: Group Name, Grain Size Distribution, Soil Classification, Color, Moisture Content, Sorting, Angularity, Mineralogy, Max Particle Size, Reaction to HCl	Comments: Depth of Casing, Drilling Method, Method of Driving Sampling Tool, Sampler Size, Water Level
80	archive			80: basalt ↓ to 20%, sand ↑ to 25%, VF w/ trace C.S. All else as above.	Becker hammer w/ 10 3/4"/8" dual wall casing.
					85-94: v. hard drilling (5 ft/40 min); sieve analysis under-represents silt significantly.
85	archive/ sieve	over-drilled multiple times to loosen casing ↓		85: As 75; 30% basalt. Sand F-C. Strongly cemented.	
					DTW = 84.1' bgs (11-13-09)
90	archive/ sieve			90: basalt ↑ to 40%. Strongly cemented. Gravels fractured by drilling, otherwise SR-R, F-MP. Phlogopite prominent in sand.	
					94: DR↑
95	archive/ sieve			94-105: Sandy gravel (SG): 50% G, 30% sand, 10% silt. Gravel less rounded: SA-SR, to CP, basalt 40%. Sand M-C, A-SA, more mafic than above. 30% basalt. 2.5Y 5/4 lt. olive brown. Saturated. No rxn HCl (?)	
100	archive/ sieve			100: gravel rounded, MP. Sand A, C, 30% basalt. 2.5Y 4/2 dark grayish brown.	104: DR↓
					~103 (?) - 109: water from cyclone looks very silty, brown, but no evidence of RUM in cuttings - appears to be mSG.
105	archive/ sieve			105-109.5: silty sandy gravel (mSG): 50% gravel 40% sand 10% (?) silt. Gravel v. basaltic (25%), FP-VCP, fractured - SR. Sand 30% basalt 70% qtz/other, A, F-VC v. poorly sorted. 10YR 5/4 lt. olive brown.	
				108.5: fractured pebbles caliche prominent (to VFP)	
110	archive	S.S. 110.1-112.2 (refusal)		109.5: contact w/ MUD (m): 100% M. trace S. 10YR 5/4 yellowish brown. low-med plasticity, moist. No rxn HCl.	HEIS # 872X27
				113-116.2: Sand (S): 90% sand. 5% mud. Sand F, well rounded, 15% qtz, 10YR 5/4 yellowish brown to 2.5Y 5/2 lt olive brown. No rxn HCl. Wet. Mod to strongly cemented.	
115					
			116.2 = TD		

Reported By: L. Stratton | Reviewed By: L. D. Walker

Title: Geologist | Title: Geologist

Signature: [signature] | Date: 11-16-09 | Signature: [signature] | Date: 1/12/10

A-6003-642 (03/03)

BOREHOLE LOG

Page 1 of 1

Date: 12.14.9

Well ID: C7089 | Well Name: 199-D2-10 | Location: 100 D

Project: 100-HR3 Pump + Treat | Reference Measuring Point: Ground Surface

Depth (Ft.)	Sample Type No.	Sample Blows Recovery	Graphic Log	Sample Description: Group Name, Grain Size Distribution, Soil Classification, Color, Moisture Content, Sorting, Angularity, Mineralogy, Max Particle Size, Reaction to HCl	Comments: Depth of Casing, Drilling Method, Method of Driving Sampling Tool, Sampler Size, Water Level
0					Becker Hammer
				0-1' Gravel pad	10 3/4" x 8" dual wall
				1-9' Sandy Gravel (SG).	
				Coarse pebbles, rounded pebbles	Archive Sample every
				with cobbles. Majority basalt	5ft (A.S.)
				color 10YR 6/4 (Dry)	
5	A.S.				
10	A.S. S.A.			9' - 26' Sandy Gravel (SG)	
				Coarse pebbles, 5"-9" rounded	Depth to water: 10.3' bgs
				cobbles 1.5"-3". Majority of igneous. Color: 7.5YR 4/3 (Dry)	12.14.9
					Sample grab every 5ft
					after water table to
15	A.S. S.A.				Composite a 10ft interval
					sieve analysis (S.A.)
20	A.S. S.A.				
25	A.S. S.A.			26-31 Silt (M) v. fine grained to	
				Silt. Well mixed. Ringold Upper Mud	Split Spoon Sample collected
				Moist. [redacted] AP 12.14.9	from 27'-29.2'. HEIS #
				Medium plasticity	B22Y18
	S.S.				
30	A.S.		T.D.		

Reported By: A. Pappas		Reviewed By: L. A. Walker	
Title: Field Geologist		Title: Geologist	
Signature: [signature]	Date: 12.14.9	Signature: [signature]	Date: 3/25/10

A-6003-642 (03/03)

BOREHOLE LOG

Page 1 of 1
Date: 12.9.9

Well ID: C7090 | Well Name: 199-D2-12 | Location: 100-D

Project: 100 HR3 Pump + Treat | Reference Measuring Point: ground surface

Depth (Ft.)	Sample Type No.	Sample Blows Recovery	Graphic Log	Sample Description: Group Name, Grain Size Distribution, Soil Classification, Color, Moisture Content, Sorting, Angularity, Mineralogy, Max Particle Size, Reaction to HCl	Comments: Depth of Casing, Drilling Method, Method of Driving Sampling Tool, Sampler Size, Water Level
0				0-2' Gravel Pad	• Becher hammer 10 3/4" x 8 dual wall
				2-7' sandy gravel (SG) color (dry): 5YR 4/4. Mostly basalt, well rounded (.3"-.8") and small cobbles (1.5"-3")	• Archive samples every 5ft
5	G.S.				
				7'-28.2' Sandy gravel (SG) color (dry): 10YR 5/2. Mostly coarse basalt cobbles (1.5"-4") small pebbles (coarse sand) (.25"-.50") (coarse nature of auch might be due to drilling technique). increasing moisture with depth	• DTW 10.8' bgs (12.10.9) • Sieve analysis grab every 5ft for a 10' composite sample.
10	G.S.				
15	G.S. SA.				
20	G.S. SA.				
25	GB. SA.				
	G.S.			28.2-34 TD RUM, Ringold upper mud. Silty/Clay with ~~large~~ medium basalt dominate cobbles. "Gravely Silt" (gM) Cobbles become extinct at 30', and is 100% silt.	• Split spoon sample collected 28.4'-30.5' HE15# B22Y19
30	G.S.				
	G.S		TD	TD = 34.0 Ft.	

Reported By: A. Pappas		Reviewed By: L.D. Walker	
Title: Field Geologist		Title: Geologist	
Signature:	Date: 12.14.9	Signature:	Date: 1-13-10

A-6003-642 (03/03)

BOREHOLE LOG

Page 1 of 3

Date: 10/21/09

Well ID: C7091 | Well Name: 199-D8-89 | Location: N of DR Reactor, W of 199-D8-55

Project: 100-D Area 100-HR-3 FY-09 P&T Expansion (APO) | Reference Measuring Point: Ground Surface

Depth (Ft.)	Sample Type No.	Sample Blows Recovery	Graphic Log	Sample Description: Group Name, Grain Size Distribution, Soil Classification, Color, Moisture Content, Sorting, Angularity, Mineralogy, Max Particle Size, Reaction to HCl	Comments: Depth of Casing, Drilling Method, Method of Driving Sampling Tool, Sampler Size, Water Level
0				0.0'-8.0': Gravelly Sand (G.S.) 90%S, 10%G. Sand is Crs.-v.Crs. ang. grains of 100% bslt. w/ sparse G. gravel is w. rndd. crs. pebb pebble. of 90% bslt, 10% fels. composition.	Drill method: Becker hammer w/ 10 3/4"/8" dual-wall casing.
5	G.S.				5': Archive grab 5': Add water for aiding returns
				9.0'-14.0': Sandy Gravel (SG) 60%G, 40%S. Gravel: f.pbl-s.cbl. rndd. + discoidal of 100% bslt. Sand: f.-v.c. ang. sand 90% bslt. Dry	
10	G.S.			Max clast size: rndd s.cbl.	10.0': Archive Grab
15	G.S.			14.0'-15': Sand (S) 50% mafic, 50% felsic f.-c. grained v.ang.	15': Archive Grab
				15.0'-28.0': Sand (S) 90% mafic, 10% felsic ang. m.-c. Sand. loose (no cohesion)	
20	Archive				
25	Archive				
	Archive			28.0'-30': Gravelly Sand (gS) 80%S, 20%g	28: there to ≤ 5% silt.
30				Gravel: v.f.pbl.-s.cbl. of Bslt.-w. rndd.-Sub. rndd. Sand: v.f.-c. grains. ang. of 40% mafic, 60% felsic. Finest grains of felsic comp. Wk rxn HCl. 10YR 6/4 light yellowish brown.	30: Drill rate low. Adding water +++. Very poor recovery 30-35': not enough air pressure; cobbles blocking cuttings hose.
35	archive			30-41.5: silty sandy gravel. (msG): 70% M 30% G 40% S (?). Recovery very poor. Gravel VFP (R, basalt) to boulder. 60% basalt 40% other (mafic). Sand 80% basalt, VC, A. 10YR 6/3 light yellowish brown.	

Reported By: A. Lanton / L. Stratton | Reviewed By: L.A. Walker

Title: Geologist | Title: Geologist

Signature: [signature] | Date: 10/21/09 | Signature: [signature] | Date: 11/9/09

A-6003-642 (03/03)

BOREHOLE LOG

Page 2 of 3
Date: 10/22/09

Well ID: C7091 | Well Name: 199-D8-89 | Location: N of 100-D Fence, W of 199-D8-89 [illegible]

Project: 100-HR-3 FY09 RPO P&T Expansion - 100-D | Reference Measuring Point: Ground Surface 55

Depth (Ft.)	Sample Type No.	Sample Blows Recovery	Graphic Log	Sample Description (Group Name, Grain Size Distribution, Soil Classification, Color, Moisture Content, Sorting, Angularity, Mineralogy, Max Particle Size, Reaction to HCl)	Comments (Depth of Casing, Drilling Method, Method of Driving Sampling Tool, Sampler Size, Water Level)
40	archive			40: gravel VFP to VCP, silt ↓ to 15%. Basalt ↑ to 80% in gravel, 90% in sand.	Becker hammer w/ 10 3/4"/8" dual-wall casing adding water
45	archive			45: gravel finer than above: FP-MP, rare CP. Rounded. Basalt ↓ slightly.	
50	archive			[49.5-50: lense sandy gravel (SG): As above but trace silt. Sand 5% basalt 50% [illegible]/other. 50: As 45; silt ↑ to 25%, gravel coarser. ~40% basalt.	52: DR ↓: approximate Ringold E contact
		color change		52-64: sandy gravel (SG): 40% G, 55% S 5% M. Gravel F-CP avg MP, SR-R, diverse lithologies, ~10% basalt. Sand F-M, SA-SR, >90% qtz. Wk to mod rxn HCl. Dry. Brown ~ distinct change from gray shades above.	
55	archive				
60	archive			60: strong rxn HCl. Silt ↑ to 10%. Sand notably micaceous. No basalt. 62: sand ↑↑ to ≥ 70%.	64: casing stuck on rock / DR thr through 70' [Split spoon attempted twice, <50% recovery both attempts. Partial bottle sat collected HEIS# B22HV1
		S.S. 61.6-63.1 50 blows (See note at right)		64-75: silty sandy gravel (MSG): 60% G 25% S 15% M (percentages v. approximate due to poor recovery). Gravel VFP-SC, SR, many bladed clasts, diverse lithologies ≈20% basalt. Sand F-C avg M, 20% mafic (biotite-rich). Silt 2.5Y 4/2 dark grayish brown.	Note: 60-70 adding abundant water, DR very hard. Poor recovery. Overdrilled 3x. DTW = 69.25 (10.26.09)
65	archive/ sieve LS 10-21-09				
70	archive/ sieve LS 10-21-09	69.2-70' split spoon		70: silt & sand ↓↓: cuttings recovering appear to be >80% gravel, but does not appear representative of formation due to hard drilling	By 70' jacks sunk into ground ~3" due to pressure of back pulling casing to overdrive
75	archive/ sieve	split spoon attempt No recovery		75: Gravel (G): 15% sand 5% silt. All as above.	77: Sand lens? / drilling continues v. slow to 77.
				77-78: silty gravel as above & below. 78: SILT (M): 100%. Mod to high plasticity, 10YR 5/4 brown. No rxn HCl. Uniform.	

Reported By: L. Stratton | Reviewed By: L.D. Walker

Title: Geologist | Title: Geologist

Signature: [illegible] | Date: 10/28/09 | Signature: [illegible] | Date: 11/9/09

A-6003-642 (03/03)

BOREHOLE LOG

Page 3 of 3

Date: 10/23/09

Well ID: C7091 | Well Name: 199-D8-89 | Location: N of 100-D fence, W of 199-D8-5

Project: 100-HR-3 FY09 RDO PET Expansion (100-D) | Reference Measuring Point: Ground Surface

Depth (Ft.)	Sample Type No.	Sample Blows Recovery	Graphic Log	Sample Description: Group Name, Grain Size Distribution, Soil Classification, Color, Moisture Content, Sorting, Angularity, Mineralogy, Max Particle Size, Reaction to HCl	Comments: Depth of Casing, Drilling Method, Method of Driving Sampling Tool, Sampler Size, Water Level
80	archive	5.5. 93.8 - 81.2 100% / 30 blows		silt (M): 78 – 84.8. See page 2. Mud uniform throughout except @ 84, shows prominent mottling w/ shades (various) of white, no rxn to strong rxn HCl.	Becker hammer w/ 10 3/4"/ 8" casing. Adding water.
		82.3 - 84.8			Casing driven to 82.5': borehole 11" diam to 82.5, 9" to 84.8 (for split spoon)
85		5.4 - 100% 28 blows	TD = 84.8		

NOT USED
JS
10/30/09

Reported By: L. Stratton | Reviewed By: L.D. Walker

Title: Geologist | Title: Geologist

Signature: Jeff Rader | Date: 10/20/09 | Signature: [signature] | Date: 11/9/09

A-6003-642 (03/03)

BOREHOLE LOG

Page 1 of 2
Date: 12.21.9

Well ID: C7092 | Well Name: 199-D8-90 | Location: 100 D

Project: 100 HR3 Pump + Treat | Reference Measuring Point: Ground Surface

Depth (Ft.)	Sample Type No.	Sample Blows Recovery	Graphic Log	Sample Description: Group Name, Grain Size Distribution, Soil Classification, Color, Moisture Content, Sorting, Angularity, Mineralogy, Max Particle Size, Reaction to HCl	Comments: Depth of Casing, Drilling Method, Method of Driving Sampling Tool, Sampler Size, Water Level
0					Becker Hammer
				0-1' Gravel pad.	10¾" x 8" dual wall
				1'-15' Sandy Gravel (SG) well rounded	
				well sorted, pebbles (5-60mm)	
				70%, Medium sand 30%, Composition	
5				is 65% basalt. Color 10YR 4/2 -	
	G.S.			dark grayish brown (moist). no HCl rxn	Archive Samples collected
					every 5ft. (G.S.)
				occasional cobble with depth (70-90mm)	
				basalt composition 80%	
10	G.S.				
15	G.S.			15'-20' Sandy Gravel (SG) well	
				sorted, sub-angular pebbles	
				(7-40mm) + Cobbles (65-75mm) 70%	
				medium sand 15%, silt 5%. Composition	
20	G.S.			80% basalt. Color 2.5Y 4/3 - olive	
				brown (dry). no HCl rxn.	
				20'-25' Gravel (G) well sorted,	
				angular ~~gravel~~ AP(2,21) pebbles	2.5 drillers start adding water
				(5-50mm) 80%, granuls (2-4 mm) 5%,	
25	G.S.			Cobbles (65mm-70mm) 10%, v. fine sand	
				5%. 65% composition basalt.	Sieve analysis sample.
				color 7.5YR 4/2 - brown (dry). no HCl rxn	collected: every 5' - composited
				25'-35' Sandy Gravel (SG) well	into 10' sample. (started at
		▼		sorted. Subrounded pebbles (10-55mm)	30') (S.A.)
30				70%, medium sand 20%. Composition	DTW: 28.8'
	S.A. G.S.			65% basalt. Color 10YR 3/2 - very dark	
				grayish brown (moist). no HCl rxn.	
				Sand decreasing with depth	
35	S.A. G.S.			35'-51' Gravel (G) well sorted,	
				sub angular pebbles (10-60mm) 90%,	
				course sand 10%). Composition 70%	
				basalt. Color 10YR 4/1 - Dark grey. no HCl rxn. wet	

Reported By: A. Pappas		Reviewed By: L.D. Walker	
Title: Field Geologist (GRAM)		Title: Geologist	
Signature: [signature]	Date: 12.21.9	Signature: [signature]	Date: 3/1/10

A-6003-642 (03/03)

BOREHOLE LOG

Page 2 of 2
Date: 12.21.9

Well ID: C7092 | Well Name: 199-D8-90 | Location: 100D

Project: 100-HR3 Pump Test | Reference Measuring Point: Ground Surface

Depth (Ft.)	Sample Type No.	Sample Blows Recovery	Graphic Log	Sample Description: Group Name, Grain Size Distribution, Soil Classification, Color, Moisture Content, Sorting, Angularity, Mineralogy, Max Particle Size, Reaction to HCl	Comments: Depth of Casing, Drilling Method, Method of Driving Sampling Tool, Sampler Size, Water Level
40	GS. SA.			35'-51' Gravel (G) well sorted, sub angular pebbles (10-60 mm) 90%, coarse sand 10%. composition 70% basalt. Color 10YR 4/1 - Dark Gray, nonhcl rxn ~~[illegible]~~ AP 12.21.9	Becker Hammer. 10 3/4" x 8" dual wall
				at about 43' gravel (G) becomes wet.	
45	GS. SA.				
50	GS. SA.			51'-56.4' TD Silt (M) well sorted, rounded pebbles (8-10 mm) 3%, Silt ~~[illegible]~~ 97%. Color 7.5YR 5/4 - brown (wet) weak HCl rxn. weak plasticity.	AP 12.21.9
55	GS.				
	GS.		56.4' TD		
60					

Reported By: A. Pappas | Reviewed By: L.D. Walker

Title: Field Geologist (GRAM) | Title: Geologist

Signature: [illegible] | Date: 12.21.9 | Signature: [illegible] | Date: 3/1/10

A-6003-642 (03/03)

BOREHOLE LOG

Page 1 of 2
Date: 12.15.9

Well ID: 199-D8-91 | Well Name: C7093 | Location: 100D

Project: 100 HR3 Pump + Treat | Reference Measuring Point: ground surface

Depth (Ft.)	Sample Type No.	Sample Blows Recovery	Graphic Log	Sample Description: Group Name, Grain Size Distribution, Soil Classification, Color, Moisture Content, Sorting, Angularity, Mineralogy, Max Particle Size, Reaction to HCl	Comments: Depth of Casing, Drilling Method, Method of Driving Sampling Tool, Sampler Size, Water Level
					Becker Hammer
0				0-1' Gravel Pad	10 3/4" x 8" dual wall
				1'-6' Gravel (G) well rounded, well	
				sorted pebbles (10-40mm) compose	Archive Sample every
				85%, coarse sand compose 20%	5ft (GS.)
				Basaltic material, no HCl rxn	
5	GS			color 10YR 4/3 (Dry)	
				6'-10' Silty Sandy Gravel (msG) well	
				rounded well sorted, composed of	
				Medium sand 45%, pebbles (10-40mm)	
				50%, silt 5%. Igneous dominant mineralogy	
10	GS			color 10YR 2/2 (Dry) moderate HCl rxn	
				10'-25' Sandy Gravel (sG) well sorted	
				angular pebbles (10-50mm) fine sand (25%)	
				mineralogy dominantly igneous. Color: 5YR 5/1 (Dry)	
15	GS			no HCl rxn.	
				cobbles become present as	
				depth increases, (70mm-200mm) Igneous	
				composition)	
				at 19' (sG) becomes moist	
20	GS	▽			Water tagged at 20.6' bgs
					(12.16.9)
25	GS.			25-40' Silty Sandy Gravel (msG) (well)	
				(sorted), angular pebbles (20-60m) with	
				occasional cobble (80-120m) 50%, medium	
				Sand 38%, silt 12%. Mineralogy	
30	GS.			dominantly igneous. Color 10YR 4/3 (moist) brown	Archive sample collected
				no HCl rxn.	every 5' to composite
					a 10' sample (S.A.)
35	GS. SA.				

Reported By: A. Pappas | Reviewed By: L. D. Walker

Title: Field Geologist | Title: Geologist

Signature: [signature] | Date: 12.15.9 | Signature: [signature] | Date: 3-1-10

A-6003-642 (03/03)

BOREHOLE LOG

Page 2 of 2

Date: 12.16.9 / 12.17

Well ID: 699093	Well Name: 199-D8-91	Location: 100D
Project: 100-HR3 Pump + Treat		Reference Measuring Point: Ground Surface

Depth (Ft.)	Sample Type No.	Sample Blows Recovery	Graphic Log	Sample Description: Group Name, Grain Size Distribution, Soil Classification, Color, Moisture Content, Sorting, Angularity, Mineralogy, Max Particle Size, Reaction to HCl	Comments: Depth of Casing, Drilling Method, Method of Driving Sampling Tool, Sampler Size, Water Level
				25-40' Silty Sandy Gravel (GSG) page 1 description	Becker Hammer
40	GS SA.			40-46.5' TD Gravely Silt (gM) moderately	10 3/4" x 8" dual wall
				sorted (larger pebbles infrequently placed) well	
				rounded. Silt 85%, pebbles	
				(10-60mm) 13%, cobbles (70-100mm) 2%	
				mineralogy dominantly igneous, color: 10YR 5/4	
45	GS.			(wet). Moderate HCl rxn.	
			T.D.		
				TD = 46.5' bgs	
50					

Reported By: A. Pappas		Reviewed By: L.D. Walker	
Title: Field Geologist		Title: Geologist	
Signature: [illegible]	Date: 12.7.9	Signature: [illegible]	Date: 3-1-10

A-6003-642 (03/03)

BOREHOLE LOG

Page 1 of 1

Date: 12.8.9 - 12.9

Well ID: C7095	Well Name: 199-D8-93	Location: 100 D
Project: 100HR3 Pump + Treat		Reference Measuring Point: Ground Surface

Depth (Ft.)	Sample Type No.	Sample Blows Recovery	Graphic Log	Sample Description: Group Name, Grain Size Distribution, Soil Classification, Color, Moisture Content, Sorting, Angularity, Mineralogy, Max Particle Size, Reaction to HCl	Comments: Depth of Casing, Drilling Method, Method of Driving Sampling Tool, Sampler Size, Water Level
0					Becker Hammer
				0-1' Gravel pad	10 3/4" x 8" dual wall
				1'-7' Sand gravel (SGY) well	
				rounded pebbles .8" - 1" dominating	Archive sample - dry
				Color (dry) 10yr 6/4	Sft
5	95				
				7 - 16 sandy gravel S(G). well	
				rounded, well mixed, 1.5" - 3"	
				small cobbles and .3" - .7"	
10	95			pebbles color. 5yr 3/2	DTW tagged at 10.5' bgs
					12.9.9
15	95			16-21.0' Ringold upper Mud	
	95			contact - clay with weak	15.85 - 18.05 split
				plasticity.	spoon collected HRS # -
					B2463
20					
			T.D.	TD = 21.0 ft.	

Reported By: A. Pappas		Reviewed By: L.D. Walker	
Title: Geologist		Title: Geologist	
Signature: [signature]	Date: 12.9.9	Signature: [signature]	Date: 1-13-10

A-6003-642 (03/03)

BOREHOLE LOG

Page 1 of 1
Date: 12.7.9

Well ID: 199-D8-94	Well Name: C7096	Location: 100-D	
Project: 100-HR3 pump + Treat		Reference Measuring Point: Ground Surface	

Depth (Ft.)	Sample Type No.	Sample Blows Recovery	Graphic Log	Sample Description: Group Name, Grain Size Distribution, Soil Classification, Color, Moisture Content, Sorting, Angularity, Mineralogy, Max Particle Size, Reaction to HCl	Comments: Depth of Casing, Drilling Method, Method of Driving Sampling Tool, Sampler Size, Water Level
0				0-1' crushed gravel pad	Becker hammer
		N/A		1-26.3' sandy gravel (SG) pebbles	10 3/4 x 8 dual wall casing
				with cobbles, pebbles and	
				cobbles well rounded Color:	Archive samples every
				5-yr 3/2 - most likely Hanford	5 ft or lith changes
5	G.S.			formation	
10	G.S.				water table 10.1' (12.7)
15	G.S.				
20	G.S. S.A.				~~water table 21' bgs~~ AP 12.7.9
					Grab sample collected
					for Sieve Analysis
				LW 1-13-10	
25	G.S.			31.3	
	G.S.			26.3' - ~~30.9~~ D Ringold upper mud,	SS #1 - split spoon
	S.A. #1			weak plasticity. Color: 5YR 5/4	HEIS B23161
30	T.D.		TD		
				TD = ~~30.9 ft.~~ 31.3 ft.	
35				LW 1-13-10	

Reported By: A. Pappas		Reviewed By: L.D. Walker	
Title: Field Geologist		Title: Geologist	
Signature:	Date: 12.8.9	Signature:	Date: 1/13/10

A-6003-642 (03/03)

BOREHOLE LOG

Page 1 of 2

Date: 5.10.10/5.11

Well ID: C7098	Well Name: 199-H4-38	Location: N: 153582.12 E: 577159.31 (NAD 83/91)	
Project: 100 HR-3 Pump + Treat		Reference Measuring Point: ground surface (NAD 83/91)	

Depth (Ft.)	Sample Type No.	Sample Blows Recovery	Graphic Log	Sample Description: Group Name, Grain Size Distribution, Soil Classification, Color, Moisture Content, Sorting, Angularity, Mineralogy, Max Particle Size, Reaction to HCl	Comments: Depth of Casing, Drilling Method, Method of Driving Sampling Tool, Sampler Size, Water Level
					· Becker Hammer
0		N/A		0'-4' Silty Sandy Gravel (msG): 70% subrounded medium to v. coarse pebbles, 15% fine to v. fine sand, 15% silt. Color, wet, 7.5YR 3/4 (d. brown). no rxn to HCl, 50% mafic, 50% felsic moderately sorted.	· 10 3/4" x 8" dual wall (60 lb/ft) · water as needed
5	archive				archive at 5'
				4'-42 Sandy Gravel (sG): moderately sorted; 65% sub-rounded medium to v. coarse pebbles & sml cobbles (120 mm max), 30% angular medium to coarse sand, 5% silt. Color, wet, 2.5Y 4/1 (d. grey). no rxn to HCl. 60% mafic 40% felsic · at 12' pebbles & cobbles become angular	
10	archive				archive at 10'
15	archive				archive at 15'
20	archive				archive at 20'
25	archive				archive at 25'
30	archive				archive at 30'
35	archive sieve				Depth to water 34.2' bgs archive at 35' sieve at 35'

Reported By: A. Pappas		Reviewed By: L. P. Walker	
Title: Field Geologist		Title: Geologist	
Signature:	Date: 5.11.10	Signature:	Date: 7/20/10

A-6003-642 (03/03)

BOREHOLE LOG

Page 2 of 2
Date: 5.11.10

Well ID: C7098 | Well Name: 199-H1-38 | Location: ~~E~~ N 153562.12 | ~~N~~ E 577593.1

Project: 100 HR-3 Patrick | Reference Measuring Point: ground surface

Depth (Ft.)	Sample Type No.	Sample Blows Recovery	Graphic Log	Sample Description: Group Name, Grain Size Distribution, Soil Classification, Color, Moisture Content, Sorting, Angularity, Mineralogy, Max Particle Size, Reaction to HCl	Comments: Depth of Casing, Drilling Method, Method of Driving Sampling Tool, Sampler Size, Water Level
40	archive sieve	N/A		4' - 42' Sandy Gravel (sG): moderatly sorted; 65% sub-angular medium to v. coarse pebbles & sml cobbles (120 mm max); 30% angular medium to coarse sand, 5% silt. Color, wet, 2.5Y 4/1 (d. gray). no rxn to HCl. 60% mafic, 40% felsic	· Becker Hammer · 10 3/4" x 8" dual wall 50' lbs/ft · water as needed archive at 40' sieve sample at 40'
45	SS archive			42' - 45 Silt (M): poorly sorted <5% sub-rounded fine to v. coarse pebbles, 95% silt. Color, wet, 10YR 5/4 (yellowish brown). No HCl rxn. 90% mafic, 10% felsic. Weak plasticity	split spoon collected from 43.5' → 46.4' bgs - HEIS 822705 (duplicate 023 075 archive at 45'
	47.5 TD		47.5 TD	45' - 47.5 TD Silt (M): well sorted 95% silt <5% fine sand. Color, moist, 7.5YR 6/3 (light brown) Very strong HCl rxn. Very weak plasticity.	archive at 47.5' TD

Reported By: A. Pappas | Reviewed By: L.D. Walker

Title: Field Geologist | Title: Geologist

Signature: [signature] | Date: 5.11.10 | Signature: [signature] | Date: 7/20/10

A-6003-642 (03/03)

BOREHOLE LOG

Page 1 of 2

Date: 5.4.10

Well ID: C 7099	Well Name: 199 - H1 - 37	Location: E: 577107.0	N: 153642.00
Project: 100-HR-3 Pump & Treat		Reference Measuring Point: Ground Surface	

Depth (Ft.)	Sample Type No.	Sample Blows Recovery	Graphic Log	Sample Description: Group Name, Grain Size Distribution, Soil Classification, Color, Moisture Content, Sorting, Angularity, Mineralogy, Max Particle Size, Reaction to HCl	Comments: Depth of Casing, Drilling Method, Method of Driving Sampling Tool, Sampler Size, Water Level
0					Becker Hammer
				0'- 7' Silty Sandy Gravel (MSG): 60% sub rounded medium to v coarse pebbles, 30% sub-angular medium to coarse sand, 10% silt, Color, wet, 10YR 4/2 (d. grayish brown). moderatly sorted. no HCl rxn. 50% felsic, 50% mafic	10 3/4" x 8" dual wall casing; water as needed
5	archive				archive at 5'
				7' - 37' Sandy Gravel (SG): 80% sub-angular fine to v. coarse pebbles & sml cobbles (100mm max), 15% sub-angular medium to v. coarse sand, <5% silt. Color, wet, 10YR 3/2 (v. d. grayish brown). Moderatly sorted. no HCl rxn. 70% mafic, 30% felsic	
10	archive				archive at 10'
15	archive				archive at 15'
20	archive				archive at 20'
25	archive				archive at 25'
30	archive				archive at 30'
35	archive				water at 34.3' bgs; archive at 35'
				37' - 41' Gravel (G) 90% sub angular medium to v. coarse pebbles + sml cobbles	

Reported By: A. Pappas		Reviewed By: L.D. Walker	
Title: Field Geologist		Title: Geologist	
Signature:	Date: 5.4.10	Signature:	Date: 7/19/10

A-6003-642 (03/03)

BOREHOLE LOG

Page 2 of 2
Date: 5.5.10

Well ID: C7099 | Well Name: 199 - H1 - 37 | Location: E: 577104.0 N: 153642.0

Project: 100 HR-3 Pump + Treat | Reference Measuring Point: Ground Surface

Depth (Ft.)	Sample Type No.	Sample Blows Recovery	Graphic Log	Sample Description: Group Name, Grain Size Distribution, Soil Classification, Color, Moisture Content, Sorting, Angularity, Mineralogy, Max Particle Size, Reaction to HCl	Comments: Depth of Casing, Drilling Method, Method of Driving Sampling Tool, Sampler Size, Water Level
40	grab Glove			37 - 41 Gravel (G): 90% sub angular medium to v. coarse pebbles + sml cobbles (195mm max), 5% sub angular coarse sand, <5% silt. Color, wet 7.5YR 4/1. (dark gray). modrtly sorted. no HCl rxn. 65% mafic 35% felsic.	• Becker Hammer • 10¾"x8" dual wall casing • water as needed archive and sieve at 40'
45	archive	1/3		41 - 46.4' TD Silt (M): <5% sub round coarse pebbles + sml cobbles (100mm max), 95% silt. Color, wet, 2.5Y 6/4 (light yellowish brown). poorly sorted, pebbles + boulders significantly decrease with depth - none below 44' bgs.	Split spoon at 44.3' bgs to 46.4' bgs HEBA B22Y06 (5.5.10) archive at 45' archive at 46.5' TD
	archive		46.4' TD		

Reported By: A. Pappas		Reviewed By: L. D. Walker	
Title: Field Geologist		Title: Geologist	
Signature:	Date: 5.5.10	Signature:	Date: 7/19/10

A-6003-642 (03/03)

BOREHOLE LOG

Page 1 of 2
Date: 5.14.10

Well ID: C7100 | Well Name: 199-H1-32 | Location: 100-HR-3 OU, NW of H-REACTOR

Project: 100-HR-3OU Pump & treat expansion | Reference Measuring Point: Ground Surface

Depth (Ft.)	Sample Type No.	Sample Blows Recovery	Graphic Log	Sample Description: Group Name, Grain Size Distribution, Soil Classification, Color, Moisture Content, Sorting, Angularity, Mineralogy, Max Particle Size, Reaction to HCl	Comments: Depth of Casing, Drilling Method, Method of Driving Sampling Tool, Sampler Size, Water Level
0			Drill Pad gravel	0-43' bgs slightly silty sandy Gravel	Drill pad gravel
		N/A		(SG) 70% Gravel: sm pebbles to Lg cobbles	above actual
				60% Mafic/40% Felsic → subang to rnd	Formation
				25% sand v. fn to med, ~5% m	
				wet from added water, no rxn to HCl	
(5) 5 4.14.10	G.S.			10YR 9/2 v. dk grayish brn	Archive @ 5' bgs
				→ sand is salt/pepper 50/50 mafic felsic	
10	G.S.				Archive @ 10' bgs
				→ Sands + gravels are very	
15	G.S.			poorly sorted, chipped + range from well rnd to sub-angular	Archive @ 15' bgs
20	G.S.				Archive @ 20' bgs
25	G.S.				Archive @ 25' bgs
30	G.S.			@ 32' sand % increased to ~ 40% (60% Gravel 40% Sand)	Archive @ 30' bgs
35	G.S.				Archive @ 35' bgs

Reported By: J. Schilperoort | Reviewed By: L.D. Walker

Title: Geologist | Title: Geologist

Signature: Jessica Schilperoort | Date: 5.14.10 | Signature: D Walker | Date: 7/20/10

A-6003-642 (03/03)

BOREHOLE LOG

Page 2 of 2

Date: 5.14.2010

Well ID: C7100	Well Name: 199-H1-32	Location: 100-HR-3 OU, NW of H-REACTOR	
Project: 100-HR-3 Pump & Treat-expansion		Reference Measuring Point: ground surface	

Depth (Ft.)	Sample Type No.	Sample Blows Recovery	Graphic Log	Sample Description: Group Name, Grain Size Distribution, Soil Classification, Color, Moisture Content, Sorting, Angularity, Mineralogy, Max Particle Size, Reaction to HCl	Comments: Depth of Casing, Drilling Method, Method of Driving Sampling Tool, Sampler Size, Water Level
40	G.S.	N/A		0'- 43.5' SG cont'd	Archive @ 40' bgs
	G.S.				
45	NCO S.S. Soil sample			43' bgs RUM is encountered	Archive @ 43' bgs
	NCO Split Spoon sample			43'-61' bgs (RUM) gravelly silt (GM) 60% m; 40% Gravel: sm pebbles to lg cobbs throughout sample 80% mafic/20% felsic - mud has white calcic residue that rxn to HCl - damp 10YR4/3 Brown	borehole was dry no water tagged. 5.14.10
50					44'-46' NCO S.S. Soil Sample 5.14.10 HEIS# B22Y07
			TD	TD = 51.4' bgs	48'-50' NCO Split Spoon Sample 5/14/10 HEIS# B22Y07

Reported By: J. Schilperoort		Reviewed By: L.D. Walker	
Title: Geologist		Title: Geologist	
Signature: Jessica Schilperoort	Date: 5.14.10	Signature: L.D. Walker	Date: 7/20/10

A-6003-642 (03/03)

BOREHOLE LOG

Page 1 of 2

Date: 5-7-10

Well ID: C7102 | Well Name: 199-H1-36 | Location: N. 153496.75, E. 576885.17, NE. of H Reactor

Project: 100-HR-3 OU Pump + Treat Expansion + RI/FS | Reference Measuring Point: Ground Surface

Depth (Ft.)	Sample Type No.	Sample Blows Recovery	Graphic Log	Sample Description: Group Name, Grain Size Distribution, Soil Classification, Color, Moisture Content, Sorting, Angularity, Mineralogy, Max Particle Size, Reaction to HCl	Comments: Depth of Casing, Drilling Method, Method of Driving Sampling Tool, Sampler Size, Water Level
0				0-4': Silty Sand (m S) 85% S, 15% m. Eolian Dry, 10YR 4/3 brown. w/ vf-m. S. Plant matter present.	Diesel Percussion Hammer • Add Water continuously to aid trans. + Control dust.
	Archive	Full		4-20': slightly silty Sandy Gravel: 70% G, 15% S, 15% m. Poorly Srtd. v.f. pbl-blder. of 60% bslt, 40% fels. meta. w/ vf-v.c. S. clasts: sub rndd-w. rndd. Sand: ang. of 80% fels, 20% mf. Matrix color: 10YR 4/3 dark. grysh. brown. Med. rxn w/ HCl.	2-4': Archive Grab 4' Drill rate slows dramatically. 4"/min → 16"/hr: ↑ ↓
5		Periodic v. graded		Silt coating clasts.	
	Archive				8-10': Archive Grab • 9': Drill ↑ 2"/min
10					
15	Archive	Periodic v. graded		• Clasts of granit present.	14-16': Archive Grab
				• 18': Gravel fining downward. Sand ↑ to 30% S	
20	Archive			20'-39': Sandy Gravel (s G) 85% G, 15-20% S. v.w. rndd. Mod. srtd. f. pbl-sm. cbl. of 60% bslt, 40% fels. meta. w/ f-v.c. ang. S. of 80% Qtz, 20% Felsic. no rxn w/ HCl. Color 10YR 4/3 dark. grysh brown.	18-20': Archive Grab
25	Archive Sieve	Periodic v. graded		• 25': Composition transitioning to felsic domn.	24-26': Archive / Sieve Grab
				• Sm. cbl. - sparse.	
30	Split Spoon	Stuff. 75%		30' - Sandy Gravel continues. 75% felsic meta. 25% bslt. 70% G, 30% S.	• Flush w/ Water Evacuate pipe. • 27-31.5': RI/FS Split Spoon Archive + Sieve Grab. B23S06 (Deep vadose)
5-10-10		Periodic			→ 31.8': Water Table
35	Split Spoon RI/FS	MT 25%			• 33.8-36.3': RI/FS Split Spoon Shallow Aquifer Sample B23S07 Sieve / Archive Grab also.
	RI/FS Split Spoon	100%			• 36.3-38.8': RI/FS Deep Aquifer Split Spoon: B23S08

Reported By: A. Lantow | Reviewed By: L. D. Walker

Title: Geologist | Title: Geologist

Signature: Aaron Lantow | Date: 5-7-10 | Signature: [signature] | Date: 7/16/10

A-6003-642 (03/03)

BOREHOLE LOG

Page 2 of 2

Date: 5.

Well ID: C7102	Well Name: 199-H1-36	Location: N.153486.75, E.576885.12, N.E. of H-Reactor
Project: 100-HR-3 OU Pump+Treat Expansion + RI/FS		Reference Measuring Point: Ground Surface

Depth (Ft.)	Sample Type No.	Sample Blows Recovery	Graphic Log	Sample Description: Group Name, Grain Size Distribution, Soil Classification, Color, Moisture Content, Sorting, Angularity, Mineralogy, Max Particle Size, Reaction to HCl	Comments: Depth of Casing, Drilling Method, Method of Driving Sampling Tool, Sampler Size, Water Level
40	Non-RI/FS Split Spoon	100%		20-39': Sandy Gravel (sG) 70%G, 30%S, <5%M m.pbl-sgrs v.f.pbl. w.rndd. w/sgrs. L.Cbl. of 70% felsic-65% felsic meta, + fels. volcanics w/30-45% bslt. w/ M.-C. ang S. of 60% fels. Qtz/40% mafic. color: 10YR 3/4 drk. ylwsh. brwn. Saturated. No rxn w/HCl.	Diesel Percussion. 39.0'-41.5' bgs. Non RI/FS Split Spoon + Steam + Archive grab RI/FS#: B238F8
		Periodic			→ Casing to 43' bgs
45	RI/FS Split Spoon	100%		39.0'-43': Silt(M) slightly damp. no free water. w/stringers of clay + $CaCO_3$. Color: 7.5YR 4/6 strong brown. low-M. plasticity. 2mm. f. granular structure.	44-46.5': RI/FS Split Spoon for TD. in aquatard. + Archive grab. B23511, B23509 (Duplicate)
			T.D.	43-46.5' (TD): Sandy Silt (sG)(sM) 80%M, 20%S v.f. ang. fels. Sand to sgrs. m. ang. Mafic Sand w/ Carbonate rich Silt. 7.5YR 4/4 brwn. color of v. low plasticity to no plasticity. slightly moist. v. strong rxn w/HCl.	
50					
55					
60					
65					

Reported By: Aaron Lantow		Reviewed By: L.D. Walker	
Title: Geologist		Title: Geologist	
Signature: Aaron Lantow	Date: 5.	Signature: L.D. Walker	Date: 7/16/10

A-6003-642 (03/03)

BOREHOLE LOG

Page 1 of 2
Date: 4.22.10 / 5.4.10

Well ID: C7104 | Well Name: 199-H1-40 | Location: N.153499.32, E.577279.43, N.W. of H Reactor

Project: 100-HR-3 OU Pump+Treat Remedial Process Optimization | Reference Measuring Point: Ground Surface

Depth (Ft.)	Sample Type No.	Sample Blows Recovery	Graphic Log	Sample Description: Group Name, Grain Size Distribution, Soil Classification, Color, Moisture Content, Sorting, Angularity, Mineralogy, Max Particle Size, Reaction to HCl	Comments: Depth of Casing, Drilling Method, Method of Driving Sampling Tool, Sampler Size, Water Level
0				0-2: Eolian silty sand (mS) / loamy	Diesel Hammer.
	Archive	Full		Dry, 10YR 4/3	· Add water for dust control
					0-2: Archive grab
		Full		2'-16': Sandy Gravel (sG) 85%g, 15%s;	
		No rtrs		Clast sprtd. Poorly srtd. sub-w.rndd. f.pbl-bldr. of 50% bslt, 50% felsic meta. least clasts	· Add water continuously to aid ctgs.
5				of bslt. dacite present w/m.-c.S. of	· Hard Drilling.
	Archive	Periodic		90% Qtz-felds, 10% mafic. unconsolidated.	
					8': Add water
10				10': 80%G, 20%S. (sand content ↑)	
					5-10': Archive grab
				• Texture fining downward.	
					· Add water
	Archive	Periodic / Sanded		14': Sandy Gravel continues. (sG) 80%G, 20-25%S	· Stoke 13'-8'
15				v.w.-sub rndd. v.f.pbl-sm.cbl. of 80% bslt, 20%	
				Meta. w/ f.-v.c. ang.-subang. felsic. dom. S.	12'-15': Archive grab
				16'-28': Silty Sandy Gravel (msG) 65%G, 20%S, 15%M	16'-18': Drill Rate increase
		Full		c.pbl-sm.cbl, v.w.-sub rndd., of 80% bslt. w/	
	Archive			felsic. dom. sand. 2.5Y 5/2 H.gry. moist.	
20				18-25': Sandy Gravel (sG) 75-80%G, 15-25%S	18-20': Archive grab
				w.w. rndd. v.f.pbl-v.c.pbl. of 99% bslt w/	
	Archive	Periodic		ang. m.-c.S. of 85% Qtz, 15% felsic-mafic AL 4.22.10	
25				25'-38: Sandy Gravel (sG) 65%G, 30%S, 5%M	
				Bimodal. v.w. rndd meta.-sub ang. bslt Gravel of	20'-25': Archive grab
				v.f.-m.pbl. + sm.cbl. of 80% bslt, 20% felsic meta.	
				+ felsic vole. w/ f.-v.c. S (ang) of 60% felsic,	
				40% Mafic comp. 2.5Y 5/2 gry. No rxn w/ HCl	28': grab observation.
30	Archive / Sieve			Damp.	Sieve Grab
				30': Gravels coarsen to f.pbl-L.cbl	30': Archive / Sieve Grab
				~~38': Silty Sandy Gravel (msG) 70%G, 15%S, 15%M~~	AL 5.4.10
35	Archive Grab			~~v.w. rndd. m.-c.pbl (w. srtd.) of 70% bslt, 30% meta.~~	
				38'-38.5: Gravel (pebbly) (G)	35': Archive / Sieve Grab
				v.w. srtd. f.-c.pbl. v.w. rndd. of 60% bslt, 40% mafic felsic.	• Gravels Appear gradational to silt contact. Contact Sharp
	Archive Sieve	Full		38.5-44.4: Sandy Silt (sM) - Silt (M) 7.5YR 4/6 - "strong brown" w/f. stringers of $CaCO_3$. Sharp Contact.	38': Archive / Sieve Grab

Reported By: A. Langan		Reviewed By: L.D. Walker	
Title: Geologist		Title: Geologist	
Signature: [signature]	Date: 4.22.10	Signature: [signature]	Date: 7/17/10

A-6003-642 (03/03)

BOREHOLE LOG

Page 2 of 2

Date: 5-4-10

Well ID: C7104 | Well Name: 199-H1-40 | Location: NE. of H Reactor, Along River

Project: 100-HR-3 OU Pump+Treat Expansion | Reference Measuring Point: Ground Surface

Depth (Ft.)	Sample Type No.	Sample Blows Recovery	Graphic Log	Sample Description: Group Name, Grain Size Distribution, Soil Classification, Color, Moisture Content, Sorting, Angularity, Mineralogy, Max Particle Size, Reaction to HCl	Comments: Depth of Casing, Drilling Method, Method of Driving Sampling Tool, Sampler Size, Water Level
40		periodic		38.5'-44.4' Sandy Silt - Silt (SM-M) 90%M, 10-5%G. Gravels from above will not	• Gravels from above will not
				S. is v.f.-m. grained. Silt is 7.5YR 4/6 "strong	excavate. Bit
	Split Spoon			brown" slightly moist w/ mr low plasticity, v.f.	41.4'-43.9': Split Spoon
				strongers of $CaCO_3$ present.	Sample B22Y09
					Casing @ 44.1
45		T.D. 44.4			TD: 44.4' bgs.

Reported By: A. Lanton		Reviewed By: L.D. Walker	
Title: Geologist		Title: Geologist	
Signature: Aaron Lanton	Date: 5.4.10	Signature: L.D. Walker	Date: 7/16/10

A-6003-642 (03/03)

BOREHOLE LOG

Page 1 of 2
Date: 5.13.10

Well ID: C7105 | Well Name: 199 - H1 - 33 | Location: NE of H1 - Reactor

Project: 100-HR-3OU Pump & Treat expansion | Reference Measuring Point: GROUND SURFACE

Depth (Ft.)	Sample Type No.	Sample Blows Recovery	Graphic Log	Sample Description: Group Name, Grain Size Distribution, Soil Classification, Color, Moisture Content, Sorting, Angularity, Mineralogy, Max Particle Size, Reaction to HCl	Comments: Depth of Casing, Drilling Method, Method of Driving Sampling Tool, Sampler Size, Water Level
0				0 - 13.4' bgs Silty Sandy Gravel (msG)	
				Gravel: 60% v. sm pebbles to Lg. cobbles	
				(occasional sm. boulder) intermediate comp	
				20% sand - v. fn to v. crs; 20% m	
				wet from added water. 10YR 3/2 v. dk.	
5	G.S.			grayish brown	Archive @ 5'
10	G.S.			@ 8' size of gravel (some) is increasing	Archive @ 10'
				~ 25-30mm	
				Silt decrease @ 13.4' bgs // 13.4-39' bgs	
				slightly silty Gravel / Sandy Gravel (SG)	
15	G.S.			60% Gravel; 40% sand; <5% m	Archive @ 15'
				same color 10YR 3/2	
				→ 70% mafic gravels w/ 30%	
				felsic: qtz, granite, F-Spar	
				angular - subrounded	
20	G.S.				Archive @ 20'
25	G.S.			Sandy Gravel	Archive @ 25'
30	G.S.				Archive @ 30'
					DTW: 33.4.
35	G.S.				Archive @ 35'
				@ 39 - LITHOLOGY CHANGE (see pg 2 →)	

Reported By: J. Schilzeroort		Reviewed By: L.D. Walker	
Title: Geologist		Title: Geologist	
Signature: Jonin Schilzeroort	Date: 5.13.10	Signature:	Date: 7/19/10

A-6003-642 (03/03)

BOREHOLE LOG

Page 2 of 2

Date:

Well ID: C9105 | Well Name: 199-H1-33 | Location: NE of H-Reactor

Project: 100-HR-3 OU Pump Test expansion | Reference Measuring Point: Ground Surface

Depth (Ft.)	Sample Type No.	Sample Blows Recovery	Graphic Log	Sample Description: Group Name, Grain Size Distribution, Soil Classification, Color, Moisture Content, Sorting, Angularity, Mineralogy, Max Particle Size, Reaction to HCl	Comments: Depth of Casing, Drilling Method, Method of Driving Sampling Tool, Sampler Size, Water Level
40	G.S.			@39' bgs LITHOLOGY CHANGE	Borehole @ 40'
	NCO Soil SS			39'-45' bgs: sandy Silt (SM)	
				80% m 10YR 5/4 Yellowish brn	42'-44' bgs NCO Soil
				w/20% sand: v. fn. to med - damp	Split spoon. Collected
45				Contains a few pebbles: sm-med	@1425 on 5.13.2010
			TD		HEIS# B22X70
				TDC 45' bgs	
50					

Reported By: J. Schilperoort | Reviewed By: L.D. Walker

Title: Geologist | Title: Geologist

Signature: [signature] | Date: 5.13.10 | Signature: [signature] | Date: 7/19/10

A-6003-642 (03/03)

BOREHOLE LOG

Page 1 of 2
Date: 5.12.10

Well ID: C7106	Well Name: 199-H1-35	Location: E: 576958.64 N: 153627.61	
Project: 100 HR-3 Pump + Treat		Reference Measuring Point: ground surface	

Depth (Ft.)	Sample Type No.	Sample Blows Recovery	Graphic Log	Sample Description: Group Name, Grain Size Distribution, Soil Classification, Color, Moisture Content, Sorting, Angularity, Mineralogy, Max Particle Size, Reaction to HCl	Comments: Depth of Casing, Drilling Method, Method of Driving Sampling Tool, Sampler Size, Water Level
					· Becker Hammer – AP1000
0				0-5 Silty Sandy Gravel (nsG): 60% sub-rounded fine to v. coarse pebbles, 25% v. fine to medium sand, 15% silt. Color, moist, 7.5YR 3/2 (dark brown), weak HCl rxn. moderatly sorted. 70% mafic, 30% felsic	· 10¾"x8" dual wall 60 lb/ft · water as needed.
5	archive				archive at 5'
				5-41 Sandy Gravel (sG): 70% sub-angular fine to v. coarse pebbles, 22% angular fine to v. coarse sand, 8% silt. Color, wet, 10YR 4/1 (dark gray). no HCl rxn. moderatly sorted. 80% mafic, 20% felsic.	
10	archive				archive at 10'
15	archive				archive at 15'
20	archive				archive at 20'
25	archive				archive at 25'
30	archive				Depth to water 31.7
	SS HX7				archive at 30'
					Split Spoon collected at 30.2' → 32.7' HE157.
	SS HX8				B22HX7
35	archive				Split spoon collected at 32.0' → 24.5' - HE15
					B22HX8
	SS HX9				archive + save at 35'
					Split Spoon collected at 36'

Reported By: A. Pappas		Reviewed By: L.D. Walker	
Title: Field Geologist		Title: Geologist	
Signature:	Date: 5.12.10	Signature:	Date: 7/20/10

A-6003-642 (03/03)

BOREHOLE LOG

Page 2 of 2
Date: 5.12.10

Well ID: C7106 | Well Name: 199-H1-36 | Location: E: 576958.64 N: 153627.61

Project: 100 HR-3 Pump + Treat | Reference Measuring Point: Ground Surface

Depth (Ft.)	Sample Type No.	Sample Blows Recovery	Graphic Log	Sample Description: Group Name, Grain Size Distribution, Soil Classification, Color, Moisture Content, Sorting, Angularity, Mineralogy, Max Particle Size, Reaction to HCl	Comments: Depth of Casing, Drilling Method, Method of Driving Sampling Tool, Sampler Size, Water Level
40	archive			5-41' Sandy Gravel (SG): 70% sub-angular fine to v. coarse pebbles, 22% angular fine to v. coarse sand, 8% silt. Color, wet, 10YR 4/1 (dark gray). no HCl rxn. moderately sorted. 80% mafic 20% felsic	· Becker Hammer · 10 3/4" x 8" dual wall. · Water a standard
	1.5 8PT				Split spoon collected at 35.9' → 38.4' - HE6A# B22HX9
45		archive		41-46.8' Silt (M): <5% sub-rounded medium to v. coarse pebbles + sml cobbles (97mm max) → decreasing signficantly with depth, 20% v. fine to f.m. sand, 75% silt. color, moist 7.5YR 4/4 (brown). no HCl rxn. poorly sorted. weak plasticity	Split spoon collected at 43.2' → 45.7' · HE6B# B23BF7
	5'	archive			Split spoon collected at 45.5' to 48.0' - HE6C# B22HY2, Dup B22HY0
			TD 46.8' 48.0 LW 7-20-10	TD = 48.0 ft bgs	archive at 40' archive at 45' archive at 46.8' TD

Reported By: A. Pappas | Reviewed By: L.D. Walker
Title: Field Geologist | Title: Geologist
Signature: [signature] Date: 5.12.10 | Signature: [signature] Date: 7/20/10

A-6003-642 (03/03)

BOREHOLE LOG

Date: 9-29-09

Well ID: C7107	Well Name: 199-H1-42	Location: 100 H, W, of 128-H-1 Excavation
Project: 100-HR-3 OU P&T Expansion		Reference Measuring Point: Ground Surface.

Depth (Ft.)	Sample Type No.	Sample Blows Recovery	Graphic Log	Sample Description: Group Name, Grain Size Distribution, Soil Classification, Color, Moisture Content, Sorting, Angularity, Mineralogy, Max Particle Size, Reaction to HCl	Comments: Depth of Casing, Drilling Method, Method of Driving Sampling Tool, Sampler Size, Water Level
0		Periodic Returns		0-8' : Silty Sandy Gravel (mSG) (80%G, 10%S, 10%M)	Diesel Hammer
				Gravel: Sub.rnd.-w.rnd. c.pl-b.c. of Bslt. Silty	drill rig
				Sand: v.f. Sand of felsic comp.	10 3/4" OD casing
				[Hanford fm.]	
				-4': Gravel comp. A to 90% Bslt, 10% Qtzite.	
5	Archive				4': Add water to aid Rtns.
				-6': Max clast size to boulder (Bslt)	5: Archive Grab
				8-28': Sandy Gravel (sG) 80%G, 20% S.	8-10.5' Archive Grab
	Archive			Gravel: Bslt-ang, felsics-rndd, s.cbls.-Bldrs.	8.5' Add Water
10				of 90% Bslt., 10% Qtzite + Grn Sltst schists. Sand: ang-	
				Sub.ang. f.-v.c. Sand of 30% mafic, 70% felsic comp.	
				[Hanford fm.]	
				+13': Sand % increase to 25%	13': Add water for returns
				Gravel: f.pbl. to s.cbl, Sand: m-c. grained	
15	Archive				14.5-15.0: Archive Grab
					15.5': Add water
20	Archive			- 20': Sandy Gravel (sG) Similar to above	19.0-20.0: Archive Grab
				(70%G, 30%S) Gravel: w.rndd. c.pbl-b.cbl. of	20.5': Add water
				90% bslt. Sand: m-vc. ang. Sand 20% mafic.	
					23': Add water
25	Archive			- 25': 10% silt present	24.5-25' Archive Grab
					25.5': Add water
				28-39: Silty Sandy Gravel (mSG) (60%G, 20%S, 20%M)	
		29.4'		Gravel: f.pbl-m.pbl. sub.rndd-discoidal w/	- Drill Rate increase
30				v.f-v.c. subang.-ang. Sand of 40% Mafic, 60% fels.	(DTW: 29.4' bgs)
	Archive			Silt is ~~5Y 5/1 Gray~~ 2.5Y 4/1 Gray	30.0-31.5: Archive Grab/Sieve
				[Possible Ringold Gravel]	Fast Drilling
				- 33': Gravel: w.rndd. 60% Bslt, 40% metamorph/felsic	
				volcanic.	
35	Archive				34-36': Archive Grab/Sieve
					36': Drill Rate Dec.
		Poor		38': One 1ry Boulder bisected by drilling. (Bslt.)	
	Archive			- Silt content increase to 30%-25%	39': Archive Grab/Sieve

Reported By: A. Lantow		Reviewed By: L. S. Walker	
Title: Geologist		Title: Geologist	
Signature: Aaron Lantow	Date: 9-29-09	Signature: LS Walker	Date: 10/20/09

BOREHOLE LOG

Date: 9-29-09

Well ID: C7407 | Well Name: 199-H1-12 | Location: See pg 1.

Project: See pg 1. | Reference Measuring Point: Ground Surface.

Depth (Ft.)	Sample Type No.	Sample Blows Recovery	Graphic Log	Sample Description: Group Name, Grain Size Distribution, Soil Classification, Color, Moisture Content, Sorting, Angularity, Mineralogy, Max Particle Size, Reaction to HCl	Comments: Depth of Casing, Drilling Method, Method of Driving Sampling Tool, Sampler Size, Water Level
40				39.0'-41': Silty Gravel (mG) (60%G, 40%m)	39': Archive/Sieve Grab
				Gravel: w. rnd. f.-v.c pbl. of Bslt comp. w/	
	S.S. SAMPLE	REC. = 100%		Clayey Silt color: 7.5 YR 4/6 Strong brn.	42': Archive Grab of RUM
				41.0'-44.0': Silt. slightly Plastic, moist-wet.	
				Color: 7.5 YR 4/6 Strong brn. w/chips of caliche.	40.9 - 43.4 ft bgs
45			TD	mod-strong rxn. w/HCl; [RUM]	split spoon sample;
					Rec. = 100%
				TD = 44.0' bgs.	
50					
55					
60					

Reported By: A. Lanton | Reviewed By: L.D. Walker

Title: Geologist | Title: Geologist

Signature: Aaron Lanton | Date: 9-29-09 | Signature: LD Walker | Date: 10/20/09

BOREHOLE LOG

Page 1 of 1
Date: 5-4-10

Well ID: C7108
Well Name: ~~199-H3-34~~ 199-H1-34 5/4/10
Location: N.153447.00 E.576899.00. NE. of H-Reactor by River
Project: 100-HR-3 OU Pump & Treat Expansion
Reference Measuring Point: Ground Surface

Depth (Ft.)	Sample Type No.	Sample Blows Recovery	Graphic Log	Sample Description: Group Name, Grain Size Distribution, Soil Classification, Color, Moisture Content, Sorting, Angularity, Mineralogy, Max Particle Size, Reaction to HCl	Comments: Depth of Casing, Drilling Method, Method of Driving Sampling Tool, Sampler Size, Water Level
0				0-3: Silty pebble Gravel (mG) 70%G, 30%m.	Diesel Hammer.
	Archive			v.f.pbl-m.pbl. of 90% bslt, 10% fels. meta. w/ silt-v.c. Sand. 10YR 4/3 brown. wet. Mixed plant matter present.	· Add water to aid ctrn.
					3': Archive Grab
				3'-18: Sandy Gravel (sG) 80%G 20%S.	
5	Archive			Poorly Sorted. f.pbl-blder of 40-60% bslt, 60-40% fels. meta. w/ m-v.c. S of same comp. 10YR 4/2 dk grysh brown. clasts: sub-v.w.rnd.	5': Archive Grab. · Drill rate ↓ dramatically.
					7': Near refusal
10					10': Archive grab
	Archive				
				13': Clasts size ↓ Downward fining. vf pbl-sm cbl.	
15	Archive			· 15': Sand content ↑ 80% G, 30-20% S.	15': Archive grab
				18'-22': Silty Sandy Gravel 70%G 20%S, 10%M (mSG) m-c.pbl. v.w.rnd L. of 60% bslt, 40% fels. meta. w/ m-c.ang. S 10YR 3/4 brown. damp.	18': Drill Rate ↑ 19': Archive Grab
20	Archive				
				22-34: 22'-34': Sandy Gravel - Gravelly Sand (sG-gS) 60%G-40%G, 40-60%S; m-c pbl of 60% fels. met. 40% bslt. w/ m-v.f.-m. S of same comp. Silt <10% 10YR 3/4 brown. damp.	
25	Archive Sieve				25': Archive / Sieve Grab
				· Sparse boulder of bslt. present	
30	Archive Sieve	5.4.10			30': Archive / Sieve grab
					Water: 32' bgS. 5.5.10
				34'- Sandy Gravel 80%G, 20%S (sG); v.w.rnd. v.f.pbl-L.Cbl. of 60% bslt, 40% fels. meta. w/ v.f-v.c. subang.-ang. S. of same comp. 10YR 3/3 brown-Gray.	
35	Archive Sieve			38'- 39.5 Sandy Silt (SM) v.f.-m. Sand. 90% Felsic, 10% Mafic. wet 10YR 3/4 Ylwsh. brown. w/ 1" thick caliche horizon	35'-38': Archive Grab Sieve

Reported By: A. Lanton		Reviewed By: L.D. Walker	
Title: Geologist		Title: Geologist	
Signature: Aaron Lanton	Date: 5-4-10	Signature: L.D. Walker	Date: 7/19/10

A-6003-642 (03/03)

BOREHOLE LOG

Page 2 of 2

Date: 5.5.10

LW 7-19-10

Well ID: C7108

Well Name: ~~199-H3-34~~ 199-H1-34 5.7.10

Location: ~~See fgt.~~ 100 H Area

Project: fgt 100-HR-3 Pump & Treat

Reference Measuring Point: fgt Ground Surface LW 7-19-10

Depth (Ft.)	Sample Type No.	Sample Blows Recovery	Graphic Log	Sample Description: Group Name, Grain Size Distribution, Soil Classification, Color, Moisture Content, Sorting, Angularity, Mineralogy, Max Particle Size, Reaction to HCl	Comments: Depth of Casing, Drilling Method, Method of Driving Sampling Tool, Sampler Size, Water Level
40				39.5-44.9': Silt-Sandy Silt (SM) ~~90%M, 10%S~~ LW 5.5.10	(Run Sieve analysis on
				7.5YR 4/6 Strong brown, v.w. consolidated, low plasticity,	40' interval 50%M, 50%S.
				50%M, 50% v.f sand. Damp. Soaks up water.	41.7-43.7: Split spoon.
	Split Spoon	Slurry + chunks			
					Total Depth: 43.7' (5.5.10)
45			T.D.		New T.D: 44.9' bgs.
50					
55					

Reported By: A. Lantau		Reviewed By: L. D. Walker	
Title: Geologist		Title: Geologist	
Signature: Aaron Lato	Date: 5.5.10	Signature: LD Walker	Date: 7/19/10

A-6003-642 (03/03)

BOREHOLE LOG

Page 1 of 2
Date: 4.29.10

Well ID: C7109	Well Name: 199-H1-39	Location: E: 153533.0	N: 577224.00
Project: 100 HR-3 pump + Treat		Reference Measuring Point:	Ground Surface

Depth (Ft.)	Sample Type No.	Sample Blows Recovery	Graphic Log	Sample Description: Group Name, Grain Size Distribution, Soil Classification, Color, Moisture Content, Sorting, Angularity, Mineralogy, Max Particle Size, Reaction to HCl	Comments: Depth of Casing, Drilling Method, Method of Driving Sampling Tool, Sampler Size, Water Level
					• Becker Hammer
0				0' - 5' Silty Sandy Gravel, (msG):	• 10 3/4" x 8" dual wall casing
				70% sub-rounded medium to v. coarse	• water as needed.
				pebbles, 20% fine to v. fine sand,	
				10% silt. Moderatly sorted, no HCl	
5	archive			rxn. Color, moist, 10YR 4/3 (brown)	
				60% basalt, 40% felsic.	archive at 5'
				5'-38' Sandy Gravel, (sG): 70%	
				sub-angular medium to v. coarse pebbles +	
				small cobbles (170mm max), 25% sub-angular	
10	archive			medium to v. coarse sand, 5%	
				silt. Moderatly sorted, no HCl rxn.	archive at 10'
				Color, wet, 2.5Y 4/2 (dark	
				grayish brown), 70% mafic, 30% felsic	
15	archive				archive at 15'
20	archive				archive at 20'
				at 23 pebbles + cobbles become angular	
25	archive				archive at 25'
30	archive				archive at 30'
					water at 32.9' bgs
35	archive				archive at 35'
				38 - 44 TD Silt (m): <5% sub angular pebbles cobbles, 95% silt	

Reported By: A. Pappas		Reviewed By: L.D. Walker	
Title: Field Geologist		Title: Geologist	
Signature:	Date: 5.4.10	Signature:	Date: 7/19/10

A-6003-642 (03/03)

BOREHOLE LOG

Page 2 of 2

Date: 4.30.10

Well ID: C7109	Well Name: 199-H1-39	Location: E: 153533.0 N: 577224.00
Project: 100 HR-3 pump + Treat		Reference Measuring Point: Ground Surface

Depth (Ft.)	Sample Type No.	Sample Blows Recovery	Graphic Log	Sample Description: Group Name, Grain Size Distribution, Soil Classification, Color, Moisture Content, Sorting, Angularity, Mineralogy, Max Particle Size, Reaction to HCl	Comments: Depth of Casing, Drilling Method, Method of Driving Sampling Tool, Sampler Size, Water Level
40	archive			38 - 44TD Silt (M) : <5% sub rounded coarse pebbles + sml cobbles (165mm max), 95% silt. Color, wet, 10YR 5/4 (yellowish brown). Poorly sorted. weak HCl rxn, moderate plasticity.	Becker Hammer 10 3/4" x 8" dual wall casing. water as needed. archive 40'
44	archive				
45			44.0' TD	pebbles + cobbles decrease significantly with depth	archive at 44 TD
				at 42.5' pieces of caliche present, color changes to 7.5YR 6/3 (light brown)	
50				Hole TD at 44.0' bgs	
55					

Reported By: A. Peppes		Reviewed By: L.D. Walker	
Title: Field Geologist		Title: Geologist	
Signature:	Date: 5.4.10	Signature:	Date: 7/19/10

A-6003-642 (03/03)

BOREHOLE LOG

Page 1 of 2

Date: 9.15.09

Well ID: C7110	Well Name: 199-H3-25	Location: 200 m N of Ground water Warehouse
Project: 100-HR-3 FY09 PWT EXPANSION		Reference Measuring Point: GROUND SURFACE

Depth (Ft.)	Sample Type No.	Sample Blows Recovery	Graphic Log	Sample Description: Group Name, Grain Size Distribution, Soil Classification, Color, Moisture Content, Sorting, Angularity, Mineralogy, Max Particle Size, Reaction to HCl	Comments: Depth of Casing, Drilling Method, Method of Driving Sampling Tool, Sampler Size, Water Level
0				0-12: silty sandy gravel (msG): 30%G, 15%M, 65%S. G: well sorted FP-rare MP, SR-R, 50% basalt. Sand: M-C, SA, 50% basalt. M: strong rxn HCl. Dry. 10YR 4/3 brown.	Becker hammer 10 3/4"/8" dual wall casing. Adding water as necessary.
				12-15:	0-3: Prominent CaCO3 sinks on gravels. Trace roots.
5	archive				
10	archive		Color change	10: gravel to 50%, avg g.s. ↑ to MP. R, 50% basalt. Sand as above. Silt ↓ to ≥10%.	12-15: gravels VCP-LC.
				12-20: Sandy gravel: 50% gravel 45% sand 5% silt. Gravel FP-VCP avg F-MD, SR-R, 70% basalt. Sand as above. Mud to strong rxn HCl. 2.5Y 4/1 dark gray.	17: DR↓
					17-21: overdrilled.
15	archive				
20	archive			20-22: silty sandy gravel (msG): all as above but silt to 20%.	
				22-45: Sandy gravel (sG) as 12-20, but gravel 50-60%.	26-30: DR very low, overdrilled. Silt may be under-represented due to amount of added water.
25	archive				25: boulder to ~25(?) cm.
30	archive			30: gravel more poorly sorted. Fractured.	
				32:	
35	archive			35: gravel ↓ to 40%. Sand slightly more fine than above.	
					DTW = 39.01 (9.16.09)

Reported By: L. Stratton		Reviewed By: L.D. Walker	
Title: Geologist		Title: Geologist	
Signature: [signature]	Date: 9.16.09	Signature: [signature]	Date: 10/20/09

A-6003-642 (03/03)

BOREHOLE LOG

Page 2 of 2

Date: 9/15/09

Well ID: C7810	Well Name: 199-H3-25	Location: 200m N of Groundwater Warehouse
Project: 100-HR-3 FY09 Pump+Treat Expansion		Reference Measuring Point: GROUND SURFACE

Depth (Ft.)	Sample Type No.	Sample Blows Recovery	Graphic Log	Sample Description: Group Name, Grain Size Distribution, Soil Classification, Color, Moisture Content, Sorting, Angularity, Mineralogy, Max Particle Size, Reaction to HCl	Comments: Depth of Casing, Drilling Method, Method of Driving Sampling Tool, Sampler Size, Water Level
40	archive/ sieve			40: Consistent w/ 35:	Becker Hammer drill rig w/ 10 3/4"/8" dual-wall casing.
					DTW = 39.0' (9-16-09)
45	archive/ sieve			45-55: GRAVEL (G): 80% G, 10% S, 10% M. G v. poorly sorted VFD-LC (suspect longer), fractured, 50% basalt 50% andesite. Sand A-SA, F-VC, silt 2.5Y 5/2 grayish brown. Abundant water.	45-55: may actually be silty sandy gravel; fines being lost to carousel but water contains significant silt.
50	archive/ sieve			50: grain size ↑: gravel SC-boulder 50%. Sand ↑ to 15%, silt ↓ to 5%. Fines likely under-represented, losing to carousel.	
55				55-56: SILTY GRAVEL (SG): silt matrix as below around gravel as above	(reworked)
	archive split spoon	56.2-68 (refusal) 47 blows, Sample full		56- : MUD (M): 95% M 5% fine sand. Mud med to high plasticity; mottled areas of $CaCO_3$ w/ strong rxn HCl. Matrix 2.5Y 5/4 yellowish brown.	Split spoon: lines #3/4 break appears to be caliche.
60				61: sand ↑ 10%; 'clasts' sandstone - v. high yield strength. More M than above.	
			61.2'= TD		

Reported By: L. Stratton		Reviewed By: L.D. Walker	
Title: Geologist		Title: Geologist	
Signature: [signature]	Date: 9-16-09	Signature: [signature]	Date: 9/20/09

A-6003-642 (03/03)

BOREHOLE LOG

Page 1 of 1

Date: 5-18-10

Well ID: C7111 | Well Name: 199-H1-21 | Location: N. 154163.20, E. 575896.60, N.W. of H-Reactor.

Project: 100-HR-3 OU Pump+Treat Expansion. | Reference Measuring Point: Ground Surface

Depth (Ft.)	Sample Type No.	Sample Blows Recovery	Graphic Log	Sample Description: Group Name, Grain Size Distribution, Soil Classification, Color, Moisture Content, Sorting, Angularity, Mineralogy, Max Particle Size, Reaction to HCl	Comments: Depth of Casing, Drilling Method, Method of Driving Sampling Tool, Sampler Size, Water Level
0				0-16': Sandy Gravel (SG) 80%G, 20%S 0-5%M. P.srtd. w.rndd v.f.pbl-blder. of 60% bslt, 40% felsic meta./volcanics. w/m.-v.c.S. of 60% mafic, 40% felds. silty. moist. Color: 10YR 3/4 brown. Silt sticking to clasts.	Diesel Percussion Hammer. Add Water Periodically Continuously ~10 gpm. 2-5': Archive grab.
	Archive				
5					
	Archive Sieve	upper Sieve			8-10: Archive
10					
15					
	Archive Sieve			16': ↑ Sand. 70%G 30%S. ≤5%M-10%M	16': Drill rate ↑
				16.0-20': slightly silty Sandy Gravel (M) SG. w.w.rndd. v.f.pbl-sm.cbl. of 70% felds. meta. + volc. 30% bslt-20% bslt. w/ang. v.f.-c.S. w/sprs. v.c.S. of 80% felds. Qtz. felds./20% Mafic. Wet. 2.5Y 4/2 dk. grayish brown.	15-17': Archive/Sieve grab
20	Archive Sieve	5-18-10 ▼			Water Table: 20.5' 5-18-10 19-21': Archive/Sieve grab
				20-26.5': Sandy Gravel (SG) 70% felds meta., 30% bslt. 70%G, 30%S, ≤1%M. v.f.pbl-v.c.pbl. v.w.rndd. w/v.f.-m.S. of 95% Qtz. felds. w/abundant mica.	
25	Archive Sieve	upper Sieve		26.5'-33: Sand (S) 100%S. v.f-f.S. of 98% Qtz. felds. + 2% Mafic. trace silt. 7.5YR 3/4 Brown. - abundant mica.	24-26' Archive/Sieve grab
	Archive Sieve	lower Sieve			26.5-28': Archive
30					30-32': Archive
	Archive Sieve			• Gradual gradation to a Silt.	
	observation			33'-39.8: well consolidated Silt. (M) 85%M, 15%S slightly moist Color: 7.5Y 4/4 Brown. no plasticity. no rxn to HCl. Encountered 1cm diameter SiO2 root cast.	35.7'-38.2': Split Spoon Archive. HE/SE #B22Y14
35	Split Spoon				
				T.D. 39.8'	T.D. 39.8' bgs.

Reported By: A. Lantow | Reviewed By: L.D. Walker

Title: Geologist | Title: Geologist

Signature: Aaron Lantow | Date: 5-18-10 | Signature: [signature] | Date: 7/16/10

A-6003-642 (03/03)

BOREHOLE LOG

Page 1 of 2
Date: 5.19.10

Well ID: C7113	Well Name: 199-H1-20	Location: E: 575705.7 N: 154184.4
Project: 100 HR-3 Pump + Treat		Reference Measuring Point: Ground Surface

Depth (Ft.)	Sample Type No.	Sample Blows Recovery	Graphic Log	Sample Description: Group Name, Grain Size Distribution, Soil Classification, Color, Moisture Content, Sorting, Angularity, Mineralogy, Max Particle Size, Reaction to HCl	Comments: Depth of Casing, Drilling Method, Method of Driving Sampling Tool, Sampler Size, Water Level
					Becher Hammer
0				0-7' Silty Sandy Gravel (nsG):	10¾" x 8" dual wall 60'10¾"
				55% sub-rounded medium to v. coarse	water as needed
				pebbles, 20% v. fine to medium sand,	
				25% Silt. Moderatly Sorted. no HCl	
				rxn. Color, moist, 7.5YR 5/3 (brown)	
5	archive			80% mafic, 20% felsic	archive at 5'
				7'-12' Silty Sandy Gravel (nsG): 60%	
				sub-rounded fine to v. coarse pebbles, 20%	
				v. fine to medium sand, 20% Silt. moderatly	
10	archive			Sorted. no HCl rxn. Color, moist, 10YR	archive at 10'
				3/3 (dark brown). 70% mafic, 30% felsic	
				12'-32' Sandy Gravel (sG): 65% sub-	
				angular fine to coarse pebbles, 25% fine	
15	archive			to coarse sand, 10% Silt. moderatly	DTW: 14.8'
				Sorted. no HCl rxn. Color, moist, 10YR 3/2	archive at 15'
				(v. dark grayish brown). 90% mafic,	
				10% felsic	
20	archive			+19' increasin silt, till 20'; lense	
					archive at 20'
25	archive				archive at 25'
30	archive				archive at 30'
				32'-38' Silty Sand (MS): 5	
				rounded fine to medium pebbles, 50%	
				v. fine to fine sand, 45% Silt. poorly	
35				Sorted. no HCl rxn. Color, wet, 10YR 4/4	archive at 35'
				(dark yellowish brown). 90% mafic, 10% felsic	

Reported By: A. Pappas		Reviewed By: L.D. Walker	
Title: Field Geologist		Title: Geologist	
Signature:	Date: 5.19.10	Signature:	Date: 7/19/10

A-6003-642 (03/03)

BOREHOLE LOG

Page 2 of 2
Date: 5.20.10

Well ID: C7113 | Well Name: 199-H1-20 | Location: E: 575205.7 N: 154184.4

Project: 100 HR-3 Pump + Treat | Reference Measuring Point: Ground Surface

Depth (Ft.)	Sample Type No.	Sample Blows Recovery	Graphic Log	Sample Description: Group Name, Grain Size Distribution, Soil Classification, Color, Moisture Content, Sorting, Angularity, Mineralogy, Max Particle Size, Reaction to HCl	Comments: Depth of Casing, Drilling Method, Method of Driving Sampling Tool, Sampler Size, Water Level
40	SS B22Y15	archive		38-40 Silt (M): 20% v. fine to fine sand, 80% silt. Moderately sorted. No HCl rxn. Color, moist, 10YR 5/4 (yellowish brown). Weak plasticity.	· Becker Hammer · 10¾" x 8" dual wall / 60 lbs/ft · Water as needed split spoon at 38.5' to 41' - HEIS B22Y15
		archive		40-52 Silty Sand (SM): 60% v. fine to fine sand, 40% silt. Poorly sorted. No HCl rxn. Color moist 10YR 5/4 (yellowish brown). Occasional fragments of Caliche.	· archive at 40' · archive at 45'
45					
47					
50	archive				archive at 50'
				52 - 57.7 TD Sandy Silt (SM): 25% v. fine to fine sand. 75% silt. Poorly sorted. No HCl rxn. Color, wet, 10YR 4/4 (dark yellow brown) weak plasticity.	
55	archive SS B22Y15				archive at 55'
			57.7 TD		archive at 57.7'
					Split Spoon collected at 54.3' to 56.8' bgs, HEIS # B25VR8

Reported By: A. Pappas | Reviewed By: L.D. Walker

Title: Field Geologist | Title: Geologist

Signature: [signature] Date: 5.20.10 | Signature: [signature] Date: 7/19/10

A-6003-642 (03/03)

BOREHOLE LOG

Page 1 of 2
Date: 9·14·09

Well ID: C7114	Well Name: 199-H3-27	Location: E. OF GROUNDWATER WAREHOUSE
Project: 100-HR-3 FY09 PMT EXPANSION		Reference Measuring Point: GROUND SURFACE

Depth (Ft.)	Sample Type No.	Sample Blows Recovery	Graphic Log	Sample Description: Group Name, Grain Size Distribution, Soil Classification, Color, Moisture Content, Sorting, Angularity, Mineralogy, Max Particle Size, Reaction to HCl	Comments: Depth of Casing, Drilling Method, Method of Driving Sampling Tool, Sampler Size, Water Level
0				0–14: silty sandy gravel (SMG): 40% G, 40% S, 20% M. Gravel FP-VCP; SA-SR, 50% basalt. Sand VF-VC, poorly sorted; 70% basalt 30% qtz/other, SA. Silt: mod rxn HCl, moist, 10YR 4/2 dark grayish brown.	DRILL METHOD: BECKER HAMMER w/ 10 3/4"/8" DUAL-WALLED CASING. ADDING WATER AS NEEDED.
5	archive				
10	archive			10: silt ↓ to 17.5%; sand contains greater fraction VF-F.	
15	archive			14–20: SANDY GRAVEL (SG): 50% G 50% S trace M. Gravel bimodal FP (Rounded); VCP-SC: SA. 70% basalt 30% qtz/other. Sand M-C, SA, 80% basalt 20% qtz/other. Mod rxn HCl. Dry.	15: NOTE: archive not representative, contains abundant graded fines from above.
				19: gravel GS ↑ for ~2 ft.	
20	archive			23: Gravel v. coarse: boulders to 30 cm long axis	
25	archive			27: 20 cm basalt, R.	
30	archive			31: gravel ↓ to ≥ 80%; sand 70% (gravel MP-VCP, 80% basalt 20% qtz/other, SR. Sand: well sorted M w/ 20% CS. 50% basalt 50% qtz/other. NR to no rxn HCl.	
35				35: trace to 5% silt. 37: silt 5-10%.	

Reported By: L. Stratton		Reviewed By: L. D. Walker	
Title: Geologist		Title: Geologist	
Signature: [signature]	Date: 9-18-09	Signature: [signature]	Date: 9/20/09

A-6003-642 (03/03)

BOREHOLE LOG

Page 2 of 2

Date: 9.17.09

Well ID: C7114	Well Name: 199-H3-27	Location: E OF GROUNDWATER WAREHOUSE
Project: 100-HR-3 FY09 P&T EXPANSION		Reference Measuring Point: GROUND SURFACE

Depth (Ft.)	Sample Type No.	Sample Blows Recovery	Graphic Log	Sample Description: Group Name, Grain Size Distribution, Soil Classification, Color, Moisture Content, Sorting, Angularity, Mineralogy, Max Particle Size, Reaction to HCl	Comments: Depth of Casing, Drilling Method, Method of Driving Sampling Tool, Sampler Size, Water Level
40	archive/sieve	DTW = 41.02' (9/18/09)		40-43: SILTY SANDY GRAVEL (MGG): 50% G 40% S ≥10% M. G: FP-VCP; SR-R (except where fractured), 40% basalt 60% qtz/other (granitic prominent). Sand as above. No rxn HCl. Silt 10YR 5/2 v. dark grayish brown.	BECKER HAMMER DRILL RIG, 10¾"/8" DUAL-WALL CASING. ADDING WATER AS NECESSARY.
45	archive/sieve			43-49: SANDY GRAVEL (SG): 50% G 50% S ~~trace M~~ LS 5% M. Gravel: 40% qtz/other 60% basalt, FP-CP, clasts bladed to SR. Sand, silt as above.	
				[49-53]	
50	archive/sieve			49: SILTY SANDY GRAVEL (MGG): 40% G 40% S 20% M. G: 50% basalt, FP-SC; SA. Sand M-C, SA, 50% basalt. Silt 10YR 4/1 dark gray. Abundant water.	
				53-57: SANDY GRAVEL (SG): 40% G, 55% S, 5% M. Gravel mod sorted VCP-SC, SR; 60% basalt 40% qtz/other. Sand M-VC, A-SA, 50% basalt 50% qtz/other. Silt as above.	
55	archive/sieve				
	archive			57-61.5: MUD (M): LS ~~SS~~ 95% M 5% S. S: VF, 50% basalt. Mud mod to high plasticity, no rxn HCl. 10YR 5/2 brown.	
60	NO ARCHIVE		TD=61.9		Note: No 62' archive - no recovery

Reported By: L. Stratton		Reviewed By: L.D. Walker	
Title: Geologist		Title: Geologist	
Signature: [signature]	Date: 9.17.09	Signature: [signature]	Date: 10/20/09

A-6003-642 (03/03)

BOREHOLE LOG

Page 1 of 2
Date: 9/14/09

Well ID: C7115	Well Name: 199-H8-26	Location: N OF 100-H WAREHOUSE
Project: 100-HR-3 FY09 P&T EXPANSION		Reference Measuring Point: GROUND SURFACE

Depth (Ft.)	Sample Type No.	Sample Blows Recovery	Graphic Log	Sample Description: Group Name, Grain Size Distribution, Soil Classification, Color, Moisture Content, Sorting, Angularity, Mineralogy, Max Particle Size, Reaction to HCl	Comments: Depth of Casing, Drilling Method, Method of Driving Sampling Tool, Sampler Size, Water Level
0				1-6: gravelly silty sand (gmS): 20% G, 20% M, 60% S. G: VF-MP, SA-SR. Sand v. poorly sorted VF-VC, 30% basalt 70% qtz/other, SA. Silt dry/moist, strong rxn HCl. 10YR 3/2 v. dark grayish brown.	DRILL METHOD: BECKER HAMMER w/ 10 3/4"/8" CASING. ADDING WATER AS NECESSARY.
					5' ARCHIVE SAMPLES.
5	archive			6-15: sandy gravel (SG): ≥30% gravel, <5% silt 65% sand. G: FP-VCP, SA-SR, basalt 30% (?). Sand 70% basalt C-VC, SA-A. Mod rxn HCl.	6: FP (basalt, angular) common
10	archive				11: DR ↓
					14: DR ↑
15	archive			15-17: mSG. As above but silt to ≥10%. 2.5Y 4/2 dark grayish brown. Mod rxn HCl.	
				17-21: gravelly sand (gS): 25% G 75% S No silt. Gravel FP-VCP, SA-R avg SR, 70% basalt. Sand 50% basalt M-C, SA-R avg SR. No rxn HCl.	
20	archive	? ? Very poor recovery		21-26: gravel: MP-LC, SA-SR, basaltic (?). Sand present in cuttings <20% but suspect not representative.	Note: 21-25 v. poor recovery — sample v. graded, re-drilled. Large cobbles blocking discharge hose.
25	archive			26-32: silty sandy gravel (msG): 50% G 40% S ≥10%. M. G as above. S: M-C, SR, 50% basalt 50% qtz/other. No rxn HCl. 2.5Y 4/1 dark gray.	32: sand ↑↑
					26-30: overdrilled
30	archive				
				32-45: sandy gravel (SG). As above but silt: trace, gravel 40% sand 60%. Avg g.s. gravel ¼ to CP. Wk-mod rxn HCl.	
35	archive				35: DR ↑
					DTW = 37.50 (9.15.09)

Reported By: L. Stratton		Reviewed By: L. J. Walker	
Title: Geologist		Title: Geologist	
Signature: [signature]	Date: 9.14.09	Signature: [signature]	Date: 10/20/09

A-6003-642 (03/03)

BOREHOLE LOG

Page 2 of 2

Date: 9/14/09

Well ID: C7115	Well Name: 199-H3-26	Location: IMMEDIATELY N OF 100-H WAREHOUSE
Project: 100-HR-3 FY09 P&T EXPANSION		Reference Measuring Point: GROUND SURFACE

Depth (Ft.)	Sample Type No.	Sample Blows Recovery	Graphic Log	Sample Description: Group Name, Grain Size Distribution, Soil Classification, Color, Moisture Content, Sorting, Angularity, Mineralogy, Max Particle Size, Reaction to HCl	Comments: Depth of Casing, Drilling Method, Method of Driving Sampling Tool, Sampler Size, Water Level
40	archive/ sieve			40: gravel to FP-MP. ~~Sand P to 35%~~ gravel LS	Becker hammer w/ 10 3/4"/8" dual wall casing. Adding water as necessary.
45	archive/ sieve			45-50: sandy gravel/gravelly sand (sG/gS): 30% gravel, 65% sand 5% silt. Gravel VFP-SC, SR, 60% basalt. Sand v. poorly sorted, SA, 50% basalt. Silt as above. Saturated.	
50	archive/ sieve			50-51: sandy gravel (sG): 50% G 40% S & 10% M. G: VFP-CP poorly sorted, 60% basalt 40% qtz/other. A-R avg SR. Sand VC-VC. 40% basalt 60% qtz/other. Basalt A, qtz SR-R. Silt as above	50: abundant water
	archive s.s.	52.8-54.8/ 100% recovery, 37 blows		51-52: silty gravel: LC to boulder (SA, bladed) in matrix of silt as below.	Split spoon HEIS # B21ND7.
55	archive		TD = 56.23	52-56: MUD (m): 100% M; trace G. No rxn HCl. Moist 10YR 4/3 brown. Mod-high plasticity. 56: lithified: v. high dry strength; zones f sand (to 6" thick) strongly cemented. No rxn HCl. Dry. Mottled brown 10YR 4/3 brown + 7.5Y 4/3 brown. Discrete veins (to 2mm) (CaCO3) running throughout.	
60					

Reported By: L. Stratton		Reviewed By: L.D. Walker	
Title: Geologist		Title: Geologist	
Signature: [signature]	Date: 9/15/09	Signature: [signature]	Date: 10/20/09

A-6003-642 (03/03)

BOREHOLE LOG

Page 1 of 2
Date: 9.23.09

Well ID: C7477 | Well Name: 199-H1-45 | Location: NW of C7110

Project: 100-HR-3 FY09 P&T Expansion | Reference Measuring Point: Ground Surface

Depth (Ft.)	Sample Type No.	Sample Blows Recovery	Graphic Log	Sample Description: Group Name, Grain Size Distribution, Soil Classification, Color, Moisture Content, Sorting, Angularity, Mineralogy, Max Particle Size, Reaction to HCl	Comments: Depth of Casing, Drilling Method, Method of Driving Sampling Tool, Sampler Size, Water Level
0				0-16: SILTY SANDY GRAVEL (mcG): 60% G, 15% M, 25% S. Gravel bimodal: 50% VFP, 50% MP. Rare VCP. F-MP: SR-R; VFP A-SR. 50% basalt(?). Sand coarse, SA-SR, 40% basalt 60% qtz/other. Wk rxn HCl. 10YR 4/2 dark grayish brown.	Drill method: Becker Hammer w/ 10 3/4"/8" dual-wall casing. Adding water as necessary.
5	archive				
10	archive			10: 10YR 4/3 brown.	11: significant fine to v. fine sand grading in cyclone while drilling
15	archive			15: gravel ↑ to 70%; silt to 20% → 10 sand. Sand May be under-represented. 75% of gravel angular FP basalt.	Contact ~14? 16: DRW
20	archive			16-45: SANDY GRAVEL (SG): 40% G 60% S trace M. Gravel VF-SC. 80% SC, SA-SR, 20% basalt 80% qtz/other (granitics predom.) Sand M-C E-C avg M, SA, 75% qtz/other. Mod rxn HCl. 22: gravel g.s. to large cobble	
25	archive			24: Sandy gravel diff. from above. Gravel 50%; well to mod sorted VFP-CP avg rounded FP. 50% basalt. Sand as above. Trace silt. No rxn HCl.	
30	archive			30: sand to 60%.	
35	archive / ~~sieve(?)~~ LG			35: Sand ↓ gravel ↑ 50% ; to large cobble. May be saturated but may be due to drilling.	Sieve sample collected @ 35 returned to spoils - above water

Reported By: L. Stratton | Reviewed By: L. D. Walker

Title: Geologist | Title: Geologist

Signature: [signature] Date: 9.21.09 | Signature: [signature] Date: 10/20/09

A-6003-642 (03/03)

BOREHOLE LOG

Page 2 of 2

Date: 9-23-09

Well ID: C7477	Well Name: 199-H1-46	Location: NW of C7110
Project: 100-HR-3 FY09 P&T Expansion		Reference Measuring Point: Ground Surface

Depth (Ft.)	Sample Type No.	Sample Blows Recovery	Graphic Log	Sample Description: Group Name, Grain Size Distribution, Soil Classification, Color, Moisture Content, Sorting, Angularity, Mineralogy, Max Particle Size, Reaction to HCl	Comments: Depth of Casing, Drilling Method, Method of Driving Sampling Tool, Sampler Size, Water Level
40	archive/sieve			40: gravel to 60%; VF-FP prominent. Gravel 40% small to large cobbles.	Becker hammer drilling w/ 6 3/4" / 8" dual-wall casing. Adding water as necessary.
		poor recovery		55.5	
				[45-56] LS	LS 41: drill rate VVV
45	archive/sieve			45: SILTY SANDY GRAVEL (MSG): 70% G, 15% M, 15% S. G: VFP-CD, avg R to SR. 40% basalt 60% gneiss-mafics & ultramafics (?) common, gneiss, granitics. Sand v. poorly sorted VF-VC, 50% basalt. Silt 10YR 5/2 grayish brown.	Ringold E ?? 45, 50: silt probably under-represented
50	archive/sieve				
55	archive/sieve archive	split spoon 55.83-57.83/ 47 blows.		55: MSG as above, but 60% G 20% M 20% S. G v. poorly sorted VFP-LC, 35% basalt 65% gneiss-granitics ~~prominent~~ LS prominent. Sand v. poorly sorted VF-VC SA-SR, 90% gneiss. 10YR 5/2 grayish brown.	
56					See HEIS # B21NDB
				56: contact w/ RUM. Mud: 10%. No rxn HCl, mud to high plasticity. 7.5YR 5/4 brown.	
56.5					
60			TDC 61.08	CS 9-24-09	
					DTW: 39.47 (9/24/09)

Reported By: L. Stratton		Reviewed By: L.D. Walker	
Title: Geologist		Title: Geologist	
Signature: [signature]	Date: 9-24-09	Signature: [signature]	Date: 10/20/09

A-6003-642 (03/03)

BOREHOLE LOG

Page 1 of 1

Date: 5.17.10

Well ID: C7478 | Well Name: 199-H1-25 | Location: E: 576279.2 N: 154069.9

Project: 100 HR-3 P&T | Reference Measuring Point: Ground Surface

Depth (Ft.)	Sample Type No.	Sample Blows Recovery	Graphic Log	Sample Description: Group Name, Grain Size Distribution, Soil Classification, Color, Moisture Content, Sorting, Angularity, Mineralogy, Max Particle Size, Reaction to HCl	Comments: Depth of Casing, Drilling Method, Method of Driving Sampling Tool, Sampler Size, Water Level
					Becher Hammer
0	archive AD 5.17			0-4 Silty Sandy Gravel (msG): 55% sub rounded fine to coarse pebbles, 30% v. fine to fine sand, 15% silt. Modertly sorted. Color, wet, 7.5YR 3/3 (dark brown). moderate HCl rxn. 50% mafic, 50% felsic	10 3/4" x 8" dual wall water as needed
5	archive			4-16' Silty Sandy Gravel (msG): 50% sub rounded fine to v. coarse pebbles, 35% v. fine to coarse sand, 15% silt. well sorted. no HCl rxn. Color, wet, 10YR 5/2 (grayish brown). 60% mafic, 40% felsic. • silt decreasing with depth	•5' archive
10	archive				• 10' archive
15	archive				•15', archive
				16' - 32' Sandy Gravel (sG): 60% sub-angular fine to v. coarse pebbles and sml cobbles (120 mm max), 35% angular medium to v. coarse sand, <5% silt. Moderatly sorted. Color, wet, 10YR 4/1 (dark gray). no HCl rxn. 90% mafic, 10% felsic.	
20	archive				•20', archive
					•22.5', Depth to water.
25	archive				archive, 25' ~~Sieve at 25'~~
				• 28': increase in silt, new comp- 60% G, 30% S, 10% M	
30	archive				• archive 30' • Sieve, 30'
				32' - 39.5' TD Silt (M): <5% sub-rounded coarse to v. coarse pebbles (decreasing with depth), 15% v. fine sand, 80% silt. well sorted. Color, moist, 10YR 4/4 (dark yellowish brown). no HCl rxn. weak plasticity.	
35	archive SS				• 39.5', archive • 35', archive. • Split spoon collected from 35.8' - 38.3' HEIS # B22Y16
				TOTAL DEPTH 39.5'/Archive @ 39.5'	

Reported By: A. Pappas | Reviewed By: L.D. Walker

Title: Field Geologist | Title: Geologist

Signature: [signature] Date: 5.17.10 | Signature: [signature] Date: 7/19/10

A-6003-642 (03/03)

BOREHOLE LOG

Page 1 of 2
Date: 5.14.10

Well ID: C7480 | Well Name: 199-H1-23 (~~199-H1-27~~) | Location: E: 576403.9 N: 154023.6

Project: 100 HR-3 Pump + Treat | Reference Measuring Point: Ground Surface

Depth (Ft.)	Sample Type No.	Sample Blows Recovery	Graphic Log	Sample Description: Group Name, Grain Size Distribution, Soil Classification, Color, Moisture Content, Sorting, Angularity, Mineralogy, Max Particle Size, Reaction to HCl	Comments: Depth of Casing, Drilling Method, Method of Driving Sampling Tool, Sampler Size, Water Level
					Becker Hammer
0				0'-5' Silty Sandy Gravel (MSG):	water as needed
				55% rounded fine to coarse	10 3/4" x 8" dual wall
				pebbles, 30% v. fine to medium	
				Sand, 15% Silt. Color, wet,	
5	archive			7.5YR 4/3 (brown). Moderate	
				HCl rxn. Moderatly sorted. 80%	archive at 5'
				mafic, ~~80% to felsic~~ 20% felsic.	
				5'-35' Sandy Gravel (SG): 65%	
				sub-rounded fine to v. coarse	
				pebbles + sml cobbles (90mm max),	
10	archive			25% medium to coarse sand,	archive at 10'
				10% silt. Color, wet, 10YR 4/1	
				(dark gray). Moderatly sorted. no	
				HCl rxn. 70% mafic, 30%	
15	archive			felsic.	
					archive at 15'
20	archive				archive at 20'
					water at 23.1'
25	archive				archive at 25'
30	archive sieve				archive at 30'
					sieve at 30'
35	archive sieve			35'-41.2' Silt (M): <5% rounded	archive at 35'
				coarse pebbles + sml. cobbles (170mm	sieve at 35'
				max), 95% Silt. Color, wet, 10YR 3/4	Split spoon collected from
				(dark yellowish brown). No HCl rxn.	38' to 40.5' bgs HCl Bzzzz

Reported By: A. Pappas | Reviewed By: L.D. Walker
Title: Field Geologist | Title: Geologist
Signature: | Date: 5.17.10 | Signature: | Date: 7/20/10

A-6003-642 (03/03)

BOREHOLE LOG

Page 2 of 2
Date: 5.17.10

Well ID: C7480
Well Name: ~~199-H1-37~~ 199-H1-27 AP 5.18
Location: E: 576403.9 N: 154023.6
Project: 100 HR-3 Pump + Treat
Reference Measuring Point: Ground Surface

Depth (Ft.)	Sample Type No.	Sample Blows Recovery	Graphic Log	Sample Description: Group Name, Grain Size Distribution, Soil Classification, Color, Moisture Content, Sorting, Angularity, Mineralogy, Max Particle Size, Reaction to HCl	Comments: Depth of Casing, Drilling Method, Method of Driving Sampling Tool, Sampler Size, Water Level
40	Spl Spoon B22Y17	archive archive	41.2' TD 5.17	~~Silt~~ AP 35 - 41.2' TD Silt (M): <5% rounded coarse pebbles + sml cobbles (170mm max), 95% silt. Color, wet, 10YR 3/4 (dark yellowish brown). No HCl rxn. Weak plasticity.	· Becker Hammer · Water as needed · 10 3/4" x 8' dual wall Split spoon collected from 38 to 40.5' bgs HGIS # B22Y17 archive at 40' archive at 41.2' TD Straightness test on 5.17

Reported By: A. Pappas
Title: Field Geologist
Signature: [signature] Date: 5.17.10

Reviewed By: L.D. Walker
Title: Geologist
Signature: [signature] Date: 7-20-10

A-6003-642 (03/03)

BOREHOLE LOG

Page 1 of 2
Date: 9-3-09

Well ID: C7483	Well Name: 199-HA-70	Location: ~500 M ENE of H REACTOR, N of C7487
Project: 100-HR-3 FY09 P&T EXPANSION (H-AREA)		Reference Measuring Point: GROUND SURFACE

Depth (Ft.)	Sample Type No.	Sample Blows Recovery	Graphic Log	Sample Description: Group Name, Grain Size Distribution, Soil Classification, Color, Moisture Content, Sorting, Angularity, Mineralogy, Max Particle Size, Reaction to HCl	Comments: Depth of Casing, Drilling Method, Method of Driving Sampling Tool, Sampler Size, Water Level
0				0-15: SANDY GRAVEL. 60% G 30% S ≤10% M. Gravel VF-MP rare SC. avg FP. SA. 70% basalt 30% qtz/other. Sand v. poorly sorted VF-VC, 50% basalt 50% qtz/other. SA. Silt 2.5Y 3/3 olive. Wk rxn HCl.	Drill method bucket hammer 10¾"/8" dual-wall casing. Adding significant water
5	archive			6-10: SILT ↓ to trace. Avg grain size gravel M: ~50% VCP. Sand g.s. ↓; less VCS. Strong rxn HCl. Dry.	6: casing caught on cobble. Not adding water.
10	archive				
15	archive			15-18(?): GRAVEL (G). 85% G, 10% S, 5% M. Gravel bimodal: 60% FP, 40% VCP. Trace VFP, MP. 70% basalt. A-SR, avg SA-SR. Sand as above. Mod rxn HCl. 2.5Y 5/1 gray.	15: silt may be due to drilling; drill rate low. Adding water.
20	archive			18-35: sandy gravel (SG): As 6' bgs; but gravel to small cobble, sand mod sorted M-CS. Wk rxn HCl.	
25	archive			25: silt ↑ to ≥5%. Gravel less basaltic; 50%. Gravel fractured by drill method.	
30	archive			28: avg g.s. ↓; gravel to CP. 30 gradual transition: silt increasing; sand decreasing with depth.	30-35: overdrilled twice
35	archive			35: SILTY SANDY GRAVEL: 10% silt 20% sand 70% gravel. Sand M-C, 40% basalt 60% qtz/other. Gravel VF-CP avg MP, 50% basalt, SA-SR. Silt 2.5Y 5/3 olive to 5/1 gray.	

Reported By: L. Stratton		Reviewed By: L. D. Walker	
Title: Geologist		Title: Geologist	
Signature: [signature]	Date: 9-8-09	Signature: [signature]	Date: 10/13/09

A-6003-642 (03/03)

BOREHOLE LOG

Page 2 of 2

Date: 9-3-09

Well ID: C7483 | Well Name: 199-H4-70 | Location: ~500 m ENE of H Reactor, N of C7487

Project: 100-HR-3 FY09 P&T Expansion - 100H Area | Reference Measuring Point: Ground Surface

Depth (Ft.)	Sample Type No.	Sample Blows Recovery	Graphic Log	Sample Description: Group Name, Grain Size Distribution, Soil Classification, Color, Moisture Content, Sorting, Angularity, Mineralogy, Max Particle Size, Reaction to HCl	Comments: Depth of Casing, Drilling Method, Method of Driving Sampling Tool, Sampler Size, Water Level
40	archive			40: Silt to trace. Sand 40%, 60% gravel: Sandy gravel (SG). Individual fractions as above.	Becker hammer, 10 3/4 x 8" dual-wall casing. Adding water.
					41: Dry
45	archive			45: Silty sandy gravel (mSG) ≥10% silt, 50% sand 50% gravel. Gravel as above. Sand well sorted F-M avg M, SR, 50% basalt. Silt as above.	35-45: v. gradual transitions from mSG → SG, controlled by variable sand & silt %.
				48: gravelly sand (gS): ≤30% gravel ≥70% sand trace silt. Gravel VFP - rare MP avg FP. 70% basalt 30% quartz/other. Sand as above.	46.3: DTW 9/22/09
50	archive				
55	archive			55: Sandy gravel (SG): ≤10% silt, 40% gravel, 50% sand 50% Gravel, bimodal: FP - VCP, 50% basalt 50% qtz/other, SA-SR; 50% VFP: angular basalt. Sand: VCS, 80% basalt 20% qtz/other. Silt: 10YR 5/3 brown. Saturated.	
	archive				
	T.S.S. 57.4-60.1	50 blows/100y. recovery		56-61.4: MUD (M). ≤10% gravel, ≤5% sand ≥85% M. Gravel as above, sand VF-VC, basaltic 50%. Mud: wet, mod plasticity, 10YR 4/4 dark yellowish brown.	
60	archive			60: distinct 1-4 mm $CaCO_3$ veins through M. Moist to dry.	
			61.4 = TD	61: dry.	
65					
70					

Reported By: L. Stratton | Reviewed By: L.D. Walker

Title: Geologist | Title: Geologist

Signature: [signature] Date: 9/8/09 | Signature: [signature] Date: 10/13/09

A-6003-642 (03/03)

BOREHOLE LOG

Page 1 of 2
Date: 8·27·09

Well ID: C7484 | Well Name: 199-H4-73 | Location: W of H Ave, ~500 m SE of H Reactor

Project: 100-HR-3 P&T Expansion - 100 H Area | Reference Measuring Point: Ground Surface

Depth (Ft.)	Sample Type No.	Sample Blows Recovery	Graphic Log	Sample Description: Group Name, Grain Size Distribution, Soil Classification, Color, Moisture Content, Sorting, Angularity, Mineralogy, Max Particle Size, Reaction to HCl	Comments: Depth of Casing, Drilling Method, Method of Driving Sampling Tool, Sampler Size, Water Level
0				0-30: sandy gravel (SG): 40% G 55% S 5% M. Gravel VFP-MP avg FP, SA-R avg SR, 40% basalt 60% qtz/other. Sand VF-VC v. poorly sorted, A-SR avg SA. 70% qtz/other 30% basalt. Silt dry, strong rxn HCl, 10YR 4/2 dark grayish brown.	Drill method: Becker hammer w/ 10¾"/8" dual-walled casing.
5	archive				Note: approx 6" compact brown sand/silt observed from cyclone btwn 0-5ft, not retrievable
					5-10: low DR: fractured cobbles in cyclone
					Starting @ 5ft, adding approx 6-9 gal water / 10 ft joint.
10	archive			10: average grain size ↑; gravel to 60%. Gravels to 8", suspect larger, more basaltic (50-60%). Sand M-C, 50% basalt. Silt slightly moist (water added while drilling) 2.5Y 4/1 dark gray.	Running 100-200 psi while drilling; 300-850 psi to clear borehole.
				11-14: gravel to small cobble (≤15 cm). Sand ↑ to 80%, finer (avg g.s. MS). WR to mod rxn HCl.	
15	archive				Note: entire interval of Hanford gravels overdrilled
				17: small lens (1-2"?) brown silt observed in hopper	
20	archive			20: gravel predominantly MP, SR-R, 79% basalt. Silt ↑ to ≤10%.	23: DR ↓↓↓, appears stuck on cobble.
25	archive			26: sand to 65%, M-C. Gravel FP (Rounded) to SC avg M-CP, SR. More felsic than above. No silt. No rxn HCl	Cobble @ 28-29 DR ↓
				25-30: gradual transition to SILTY SANDY GRAVEL (MSG). As above but silt to 15% (No rxn HCl, low plasticity); rare SC to 5": fractured, suspect larger.	
30	archive				Contact w/SG ~ 33?
				35-53: SANDY GRAVEL	
35	archive			35: SANDY GRAVEL (SG): 50% G 50% S TRACE M. Gravel to 12" long axis, fractured. No VF, FP. MP: R. Sand as above.	

Reported By: L. Stratton | Reviewed By: L.D. Walker

Title: Geologist | Title: Geologist

Signature: [signature] | Date: 8-27-09 | Signature: [signature] | Date: 10/8/09

A-6003-642 (03/03)

BOREHOLE LOG

Date: 8·27·09

Well ID: C7484 | Well Name: 199-H4-73 | Location: W of H Ave 500 m SE of H Reactor

Project: 100-HR-3 P+T Expansion ~ 100-H Area | Reference Measuring Point: Ground Surface

Depth (Ft.)	Sample Type No.	Sample Blows Recovery	Graphic Log	Sample Description: Group Name, Grain Size Distribution, Soil Classification, Color, Moisture Content, Sorting, Angularity, Mineralogy, Max Particle Size, Reaction to HCl	Comments: Depth of Casing, Drilling Method, Method of Driving Sampling Tool, Sampler Size, Water Level
40	archive			40: sandy gravel as 35; see page 1.	Becker Hammer drill rig, 10 3/4" dual walled casing, reverse air
					43: DR ↑↑
45	archive			46: sand ↑ 60%, well sorted M, 50% basalt 50% qtz/other. Trace silt. Gravel g.s. ↓↓, max 2", SR-R. Moist (no water added for ~10 ft).	44.5 DTW (8·28·09)
50	archive			50: As above, but wet & visible water on surface of pebbles. Gravel well sorted: MP, R. G ↑ to 45%. Trace silt.	
				53-64.5: GRAVEL	
55	archive/ sieve*			53: GRAVEL (G): 80% G, 15% S, 5% M. Saturated. G: Mod. sorted, VFP-MP predom FP. R. >80% basaltic. Sand as above but 80% basalt. M: 10YR 5/3 brown.	* Sieve samples composited
60	archive/ sieve*			60: sand ↓ silt ↑ to 10%. Gravel more fractured than above.	
	sieve split sieve	200+/~80%			
65	archive			64.5: approximated contact with MUD: 7.5YR 4/6 strong brown s.s. as described below w/ ≤30% silt/clay (?), mod yield strength. 65-70 MUD appears significantly reworked - up to 20-30% Hanford gravels as above present; saturation variable.	Note: contact possibly as high as 62.0 but significantly mixed w/ gravels until 64.5.
70	archive			70: MUD 10YR 5/3 lt. olive brown, mod plasticity. ≤10% sand, occasional basalt cobbles v VFP. Cementation variable - saturated plastic clay to v. high dry strength clasts s.s. (vitreous-appearing). No to strong rxn HCl - clasts appearing as paleosol present showing veins white $CaCO_3$: $CaSO_4$ cementation.	
	archive		TD=71.0	71: Sandstone. Strongly cemented, v. high dry strength. 7.5YR 4/6 strong brown, no rxn HCl. Sand: VF, 97% qtz, ≤2.5% basalt (?) - black mafic. Sand appears saturated.	

Reported By: L. Stratton | Reviewed By: L.D. Walker

Title: Geologist | Title: Geologist

Signature: [signature] Date: 8·28·09 | Signature: [signature] Date: 10/12/09

A-6003-642 (03/03)

BOREHOLE LOG

Page 1 of 2

Date: 9/8/09

Well ID: C7485	Well Name: 199-H4-69	Location: 100 ft E of H Ave, NE of Reactor
Project: 100-HR-3 FY09 P&T EXPANSION		Reference Measuring Point: GROUND SURFACE

Depth (Ft.)	Sample Type No.	Sample Blows Recovery	Graphic Log	Sample Description: Group Name, Grain Size Distribution, Soil Classification, Color, Moisture Content, Sorting, Angularity, Mineralogy, Max Particle Size, Reaction to HCl	Comments: Depth of Casing, Drilling Method, Method of Driving Sampling Tool, Sampler Size, Water Level
0				0-0.4: drill pad	Drill method: Becker hammer, 10 3/4"/8" dual-walled casing. Adding water as necessary to control dust.
				0.4-5: silty sandy gravel (msG) 15% M, 50% G, 35% S. G: VFP-VCP, avg CP, SR-R, 50% basalt 50% qtz/other. Sand VC, 70% basalt. Silt: mod plasticity, wk-mod rxn HCl, 2.5Y 4/2 dk olive gray.	3: DR ↓. stuck on rock
5	archive			5-27: sandy gravel (sG): 50% G 50% S trace M. M: 2.5Y 3/1 V. dark gray. Sand, gravel as above. Sand poorly sorted.	5.5: silt to 5%.
10	archive			10: silt ↑ to 5%+10%. Gravel: >75% uniform FP(R), basaltic. Sand well sorted M, 50% basalt 50% qtz/other.	
15	archive			15: gravel more fractured than above, slightly finer.	
20	archive				21: DR ↓↓; stuck on rock
25	archive			25: silt ↓↓ to trace. Sorting of gravel ↑; 80% FP 20% MP. 90% basaltic. Sorting of sand ↓; VF-CS.	
30	archive			27-33: silty sandy gravel (msG): 20% M, 40% S, 50% G. Gravel v. poorly sorted VFP - boulder (36 cm, fractured), 80% basalt. Sand F-C avg M, 50% basalt 50% qtz/other. Silt 2.5Y 4/1 v. dark gray. Wk rxn HCl.	
35	archive			33-43: sandy gravel (sG): 40% G 60% S no silt. G: VFP-LC but >80% R MP. 80% basalt. Sand F-M avg F, 30% basalt 70% qtz/other.	35-38 Overdrilled; DR low. 35: silt to 5%.

Reported By: L. Stratton		Reviewed By: L. D. Walker	
Title: Geologist		Title: Geologist	
Signature: L. Stratton	Date: 9/8/09	Signature: L. D. Walker	Date: 10/14/09

A-6003-642 (03/03)

BOREHOLE LOG

Page 2 of 2

Date: 9/8/09

Well ID: C7485	Well Name: 199-H4-69	Location: 100 ft E of H Ave NE of Reactor
Project: 100-HR-3 FY09 P&T Expansion (100H Area)		Reference Measuring Point: GROUND SURFACE

Depth (Ft.)	Sample Type No.	Sample Blows Recovery	Graphic Log	Sample Description: Group Name, Grain Size Distribution, Soil Classification, Color, Moisture Content, Sorting, Angularity, Mineralogy, Max Particle Size, Reaction to HCl	Comments: Depth of Casing, Drilling Method, Method of Driving Sampling Tool, Sampler Size, Water Level
40	archive			40: boulder 30cm; sorting gravel &	Drill method: Becker hammer w/ 10 3/4"/8" dual-wall casing. Adding water as necessary.
				43-58: SILTY SANDY GRAVEL (mSG): 40% G 50% S, ≥10% M. Gravel as above; fractured. Sand: M-VC avg C, 40% basalt 60% qtz/others.	
45	archive/ sieve				DTW = 45.95 (9.9.09)
50	archive/ sieve			50: gravel ↑ to 70%; sand 20%, silt 10%. 50% gravel FP: basaltic, R-A. All else as above.	
55	archive/ sieve			55: sand M-C Gravel F-MP; 60%; 30% sand ≥10% silt. Silt may be under-represented, lost to water from cyclone.	58: DRILL
58	archive			58-60: gradational contact to MUD: silt change color abruptly to 10YR 4/4 dark yellowish brown; ↑ to 30-40% as matrix surrounding sand + gravel as above.	
60	split spoon 59.5-62	~10/90% HEIS: BB:NFI		Some discrete clasts SILT: low plasticity, 7.5YR 3/6 strong brown. moist, no rxn HCl. ≤10% sand.	'clasts' mud: compact, med dry strength.
	archive			60-63.8: MUD: 90% mud as matrix above, 10% fine sand to VFS;	
65			TD = 63.83	62: 10YR 5/6 yellowish brown. Rare cobble. 64: strong brown, very high dry strength/cementation. strong rxn HCl.	
				Note: sieve samples composited	

Reported By: L. Stratton		Reviewed By: L.D. Walker	
Title: Geologist		Title: Geologist	
Signature: [signature]	Date: 9.9.09	Signature: [signature]	Date: 10/14/09

A-6003-642 (03/03)

BOREHOLE LOG

Page 1 of 2
Date: 8·28·09

Well ID: C7487 | Well Name: 199-H4-71 | Location: E of H Avenue, 500m NE of H Reactor

Project: 100-HR-3 P&T Expansion - 100 H Area | Reference Measuring Point:

Depth (Ft.)	Sample Type No.	Sample Blows Recovery	Graphic Log	Sample Description: Group Name, Grain Size Distribution, Soil Classification, Color, Moisture Content, Sorting, Angularity, Mineralogy, Max Particle Size, Reaction to HCl	Comments: Depth of Casing, Drilling Method, Method of Driving Sampling Tool, Sampler Size, Water Level
0				0-4": asphalt.	Becker Hammer 10 3/4 / 8".
				4"- 15?): GRAVEL : 80% G 15% S 5% M. Gravel mod sorted VF-MP avg F-MP, A-R avg SR, 40% basalt 60% qtz/other. Sand 50% basalt, M-VC avg C, SR. Dry. Wk-mod rxn HCl.	Adding water intermittently.
					6.-20: low DR
5	archive			15?) - 25 : SANDY GRAVEL (SG): 50% G 50% S trace M. G: v poorly sorted VFP-LC (to 14cm), SA, 50% basalt 50% qtz/other. Sand VF-C avg F-M, 40% basalt 60% qtz/other. Mod to strong rxn HCl.	
					Note: throughout Hanford formation, sand variable between approx 15% & 40% - formation thus varies gradationally between SG & G. From 20 to ~29, appears clast-supported open framework?
10	archive				
15	archive			15: As above but sand ↓ to 30%; 70% gravel. FP↑, rounding↑.	Note: entire Hanford interval backpulled & overdrilled multiple times
20	archive			20: silt ↑ to 5%, avg g.s. gravel ↑ to OP.	
				21: sand ↓	21: DR↓
				22: Gravel to LC, cobbles 10-14 cm common. Basalt ↑ to 70%, particularly FP (>90% basalt)	
25	archive			25: all as above but sand ↓ 15%, 5% silt ∴ GRAVEL v. coarse. No rxn HCl. 25-27: GRAVEL	
				29-33: SG: Sandy GRAVEL	
				29: sand to ~25-30% ∴ SANDY GRAVEL	28: 18cm fractured cobble (granitic)
30	archive				
					32: DR↓ stuck w/no change 5 min
				33-45 : Sandy gravel as above, avg g.s. ↓ but appears due to low drill rate - gravel v. fractured. Sand 50%. FP: rounded, basaltic. Wk rxn HCl. 10YR 4/1 dark gray. Trace to 5% silt.	
35	archive				

Reported By: Laurel Stratton | Reviewed By: C.D. Walker

Title: Geologist | Title: Geologist

Signature: [signature] Date: 8·28·09 | Signature: [signature] Date: 10/12/09

A-6003-642 (03/03)

BOREHOLE LOG

Page 2 of 2

Date: 8-31-09

Well ID: C7487 | Well Name: 199-H4-71 | Location: E of H Avenue, 500 m SE of H Reactor

Project: 100-HR-3 PyT Expansion - 100 H Area | Reference Measuring Point: Ground Surface

Depth (Ft.)	Sample Type No.	Sample Blows Recovery	Graphic Log	Sample Description: Group Name, Grain Size Distribution, Soil Classification, Color, Moisture Content, Sorting, Angularity, Mineralogy, Max Particle Size, Reaction to HCl	Comments: Depth of Casing, Drilling Method, Method of Driving Sampling Tool, Sampler Size, Water Level
40	archive			40: Sand ↓ to 30%. Gravel moderately sorted F-MP w/ rare CP. SA-SR avg SR. 50% basalt 50% qtz/other. Sand, silt as above.	Becker hammer 10 3/4"/8" adding water intermittently.
				[45-49: MSG]	
45	archive			45: silt to ≥10%: silty sandy gravel (MSG). Gr: VFP-MP poorly sorted, A-SR, 50% basalt. Sand as above. Silt as above.	DTW = 47.3 (8-31-09)
50	~~archive~~ ~~archive~~ archive			49: sandy gravel (SG): 60% sand 40% gravel trace silt. Sand well sorted F-M, 60% qtz/other/40% basalt. Gvl VF-MP, SR.	
				51: gravel to 50%, silt to 5%. Gravel v. well sorted SC: A-SR avg SR, 50% basalt 50% qtz/other. Saturated. Sand M-C, 70% qtz/other 30% basalt.	
55	archive			55: sand slightly finer F-C avg F-M; silt to 7.5%.	
60	archive			60: trace silt, gravel to 70%; MP-SC. Sand: VC, A-SR, 50% basalt 50% qtz/other.	
	archive			62: contact w/ MUD: 1st 1 ft = ~~gravelly silt~~ silty gravel → gravelly silt (GM) @ 63. ≤ 20% sand decreasing w/ depth. Mud 10YR 5/3 brown, med plasticity. Plasticity ↑ w/ depth. Moisture ↓ w/ depth.	
65	S.S. (over-driven)	23/100%		63: dry. 100% mud 7.5YR 4/5 brown. Strong rxn HCl.	
70	archive			70: color slightly lighter, but adding significant water, sludge from above mixed in.	
			TD	TD = 71.0	

Reported By: L. Stratton | Reviewed By: L.D. Walker

Title: Geologist | Title: Geologist

Signature: [signature] | Date: 8-31-09 | Signature: [signature] | Date: 10/12/09

A-6003-642 (03/03)

BOREHOLE LOG

Page 1 of 2
Date: 9/10/09

Well ID: C7488 | Well Name: 199-H4-72 | Location: 500 m E of H Reactor

Project: 100-HR-3 FY09 P&T Expansion (100-H Area) | Reference Measuring Point: GROUND SURFACE

Depth (Ft.)	Sample Type No.	Sample Blows Recovery	Graphic Log	Sample Description: Group Name, Grain Size Distribution, Soil Classification, Color, Moisture Content, Sorting, Angularity, Mineralogy, Max Particle Size, Reaction to HCl	Comments: Depth of Casing, Drilling Method, Method of Driving Sampling Tool, Sampler Size, Water Level
0				0-3: gravelly silty sand (gmS): 50% sand, 35% gravel 25% silt. Gravel: FP-VCP; avg MP. SR. 90% basalt 9% gr. gr/other. Sand VF-M avg VF-F 90% gr/other 10% basalt, SR. Silt 2.5Y 4/3 olive brown. Strong rxn HCl.	Becker Hammer 10 3/4" / 9" dual wall. Adding water.
	archive			3-8: silty sandy gravel (msG): as above, but gravel to 40%; grain size to SC. Sand more coarse than above.	0-3: prominant R gr pebbles ~3 mm. May be filter pack from previous well ??
5	archive				0-8: Fill?
					12: DR ↓
10	archive			8-12: msG (different from above): 40% G 40% S 20% M. Gravel v. poorly sorted VFP-LC, 50% basalt (?), A-R avg SR. Sand poorly sorted F-C, 40% basalt 60% gr/other, SA. Silt 5Y 3/2 dark olive gray. Strong rxn HCl.	
				12-20: sandy gravel (SG): As above but silt to ≤10%. Sand medium to coarse. Gravel predom. basaltic FP, R.	
15	archive				15-19.5: No good recovery - hose blocked by LC.
20	archive			20-25: gravelly sand: 25% G ≤5% M 70% S. Sand 60% basalt 40% gr/other, M-C, SA. Gravel VFP (basaltic, angular) to boulders (>25 cm, suspect larger). 50% basalt, SA. No rxn HCl.	24: DR ↓; stuck on rock
25	archive			25-27: sandy gravel (SG): as above but gravel to 40%, 40% basalt. Gravel VFP-LC; rare boulder. No rxn HCl.	
30	archive			30: gravel to 50%, silt to trace. G.S. gravel ↓ (no boulders). V. wk rxn HCl. Dry.	
35	archive			35: gravel grain size ↓ max VCP. Trace silt on clasts; sand clean. V. wk rxn HCl. Sand well sorted F. 37-42: silty sandy gravel (msG): gravel 50% sand 35% silt 15%. All as above.	Sand: trace micas

Reported By: L. Stratton		Reviewed By: L. D. Walker	
Title: Geologist		Title: Geologist	
Signature: [signature]	Date: 9/10/09	Signature: [signature]	Date: 10/20/09

A-6003-642 (03/03)

BOREHOLE LOG

Page 2 of 2
Date: 9/10/09

Well ID: C7488 | Well Name: 199-H4-72 | Location: 500 m E of H REACTOR

Project: 100-HR-3 FY09 P&T EXPANSION | Reference Measuring Point: GROUND SURFACE

Depth (Ft.)	Sample Type No.	Sample Blows Recovery	Graphic Log	Sample Description: Group Name, Grain Size Distribution, Soil Classification, Color, Moisture Content, Sorting, Angularity, Mineralogy, Max Particle Size, Reaction to HCl	Comments: Depth of Casing, Drilling Method, Method of Driving Sampling Tool, Sampler Size, Water Level
40	archive/ sieve			42: Sa: Sandy gravel as 35' bgs. Sand poorly sorted F-VC; SA. No rxn HCl. Saturated (?)	BECKER HAMMER, 10 3/4/8" CASING. ADDING WATER AS NEEDED.
45	archive/ sieve	45 9/10/09			42.30 DTW = ~~45.45~~ 42 (9/10/09)
50	archive/ sieve			50: Sand M-C; 30% basalt 70% qtz/other, SA.	
55	archive/ sieve			54: gravel ~~M~~ to 70% <5% silt. Sand VF-VC; 50% basalt, SA. G: VFP-SC, >50% FP: Round, 30% basalt. 10YR 4/2 dark grayish brown.	
	57.0-59.6 split spoon	12+		56-TD: MUD (M). 90% Mud 10% Sand. Mud mod plasticity, no rxn HCl, wet, 10YR 4/4 dark yellowish brown. low to mod cementation	
60	archive		TD= 61.25	61: 10YR 5/4 yellow brown. Consolidated. Mud rxn HCl. Moist.	

Reported By: L. Stratton | Reviewed By: L.D. Walker

Title: Geologist | Title: Geologist

Signature: [signature] Date: 9/10/09 | Signature: [signature] Date: 10/20/09

A-6003-642 (03/03)

BOREHOLE LOG

Page 1 of 2
Date: 8·25·09

Well ID: C7489	Well Name: 199-H6-2	Location: W of H Avenue SE of H Reactor
Project: HR-3 Pump & Treat Expansion FY09		Reference Measuring Point: GROUND SURFACE

Depth (Ft.)	Sample Type No.	Sample Blows Recovery	Graphic Log	Sample Description: Group Name, Grain Size Distribution, Soil Classification, Color, Moisture Content, Sorting, Angularity, Mineralogy, Max Particle Size, Reaction to HCl	Comments: Depth of Casing, Drilling Method, Method of Driving Sampling Tool, Sampler Size, Water Level
0		drill pad		0-5: "Silty slightly gravelly sand (mg)" LS 8-25-09; gm S: 20% M 10% G 70% S. G: VF-MP avg EP; SA-SR, 50% basalt 50% qtz/other. S: VF-VC avg VF-F, SR, 90% qtz/other 10% basalt. M: 2.5Y 5/3 olive. Dry. Strong rxn HCl.	Drill method: Becker Hammer. 10 3/4"/8" dual wall casing. Drilling dry unless noted.
5	archive			5-20: Sandy gravel: 40% gravel 35% sand 5% silt. G: VF-MP avg F/M (bimodal), SA-SR, 60% basalt 40% qtz/other. S: VF-C avg M, A-SA, 50% qtz/other 50% basalt. Silt as above but no rxn HCl. Trace rootlets. Dry.	NOTE: contact depth between gmS & SG uncertain. 6' is estimate.
10	archive				12': DR ↓↓, GS gravel ↑
15	archive			15: as above but G ↑ to 50%. Avg grain size gravel ↑; no VEP or EP; avg MP. Some fracturing due to drill method. Sand SR. Basalt ↑ to 70%.	NOTE: All estimates of grain size are based on available sample ∴ are under representative of silt/fine sand in formation.
20	archive			20-45: GRAVEL 20: As above but gravel to 85% ∴ GRAVEL. 15% sand. Gravel F-rare CP avg MP, SR-R. 80% basalt 20% qtz/other - andesite, quartzite. Sand as above. No silt. Dry.	23: DR ↓ 26: " ↑
25	archive			25: as above. Notable vesicular basalt, metabasalt conglomerate, granitics. SC to 8cm, suspect larger.	
30	archive			30: Sand to 20/30% (?) "salt & pepper" 50% basalt, C, SA. G SA-R, as above.	32: DR ↓
35	archive				

Reported By: L. Stratton		Reviewed By: L. D. Walker	
Title: Geologist		Title: Geologist	
Signature: [signature]	Date: 8-25-09	Signature: [signature]	Date: 10/8/09

A-6003-642 (03/03)

BOREHOLE LOG

Page 2 of 2

Date: 8·25·09

Well ID: C7489 | Well Name: 199-H6-2 | Location: W of H Avenue SE of H Reactor

Project: 100 HR 3 PYT Expansion | Reference Measuring Point: GROUND SURFACE.

Depth (Ft.)	Sample Type No.	Sample Blows Recovery	Graphic Log	Sample Description: Group Name, Grain Size Distribution, Soil Classification, Color, Moisture Content, Sorting, Angularity, Mineralogy, Max Particle Size, Reaction to HCl	Comments: Depth of Casing, Drilling Method, Method of Driving Sampling Tool, Sampler Size, Water Level
40	archive			40: As 20' (sand ↓ to ~15%). Dry.	Becker hammer w/ 10¾/8" casing. Drilling w/out water.
					DTW = 48.00 8·26·09
45	archive			45-51: sandy gravel (sG): 35% S 65% G. G as above. S: M-C, SA-SR, 40% ~~qtz~~ 70% ~~feldspar~~ basalt. No rxn HCl. Moist. LS 8·25·09	
50	archive/ Sieve archive	S.S. 50-52		49: sandy gravel as above, but avg gs ↓; well sorted gravel F-MP, R, 70% basalt. Sand as above but to 40% total. V. moist	49-50: capillary fringe. 50: saturated. *
				51: contact with sandy silt (SM): 5% G, 30% S, 65% M. G+S as above. M 2.5Y 5/3 olive. No rxn HCl. Discrete 'clasts' mud - low plasticity in 'matrix' of mud with sand.	Note: based on split spoon 50-52', appears contact with mud ~ 50'.
55	archive			52: 2.5Y 6/3 lt olive. No rxn HCl. Low plasticity. Dry to moist, v. compact	
				55: low to med plasticity. Moist. Trace MP.	
60	archive		TD	60: 10YR 5/8 yellowish brown. Clay ↓ silt ↑ NO to low plasticity. Dry. Less compact than above. Trace VFS.	
				TD = 60.7	* Sediments ~~from~~ appeared dry until approximately 49' bgs while drilling; water subsequently was tagged at 43' bgs. LS 8·25·09
				NOT USED LS 8·26·09	

Reported By: L. Stratton | Reviewed By: L.D. Walker

Title: Geologist | Title: Geologist

Signature: [signature] | Date: 8·26·09 | Signature: [signature] | Date: 10/8/09

A-6003-642 (03/03)

BOREHOLE LOG

Page 1 of 2
Date: 9-28-09

Well ID: C7492 | Well Name: 199-H1-43 | Location: W of 128-H-1 Excavation

Project: 100-HR-3 FY09 P&T Expansion | Reference Measuring Point: Ground Surface

Depth (Ft.)	Sample Type, No.	Sample Blows Recovery	Graphic Log	Sample Description: Group Name, Grain Size Distribution, Soil Classification, Color, Moisture Content, Sorting, Angularity, Mineralogy, Max Particle Size, Reaction to HCl	Comments: Depth of Casing, Drilling Method, Method of Driving Sampling Tool, Sampler Size, Water Level
0				0-20: Silty sandy gravel (mG): 70%G, 20%SIL, 30%S, 60%G. Gravel FP-VOP, SA-SR, 80% basalt 20% qtz/other. Sand 80% basalt 20% qtz/other v. poorly sorted VF-VC. DR 4/2 dk gray-ish brown. No rxn HCl. Low drill rate.	Becker Hammer w/ 10 3/4" / 8" dual-wall casing. Adding water as needed.
					Note: using large amounts of water.
5	archive				
		poor recovery			
				10: gravel? 5-10 v. poor recovery; no fines represented due to large amounts of water added. Gravels 9-60% basalt, SC-LC, SR. Granitics prominent.	
10	archive				
15	archive			15: mG. Silt more gray than above. DR v. low; gravels uniformly fractured. Sand VC-C ang. Ends.	
20	Archive			20': SG (80%G, 20%S <5%M) Gravel: Sub ang-w.-rndd. C.pbl-Sm.cbl of 50% bslt./50% metamorphics + fels. volc. Sand: S.ang. v.fn-m.S of 10-15% maf./75-90% fels. Matrix dr: 10 YR 3/1 gray.	
25	Archive			25': Silty Sandy Gravel (20%M, 20%S, 60%G) Gravel: S.rndd-w.rndd M.pbl-S.cbl. of 60% bslt, 40% felsics. Sand: v.f-m. S.ang of 15% mafics.	
30	Archive			30': SG (85%G, 15%S, <10%M) Gravel: w.rndd m.pbl to lrg.cbl of 80% bslt, 20% metamorphics/volcanic granits. Sand: v.f-m. S.ang. 90% felsic.	31.51 DTW (9-29-09)
35	Archive			35': ~~Similar to above~~ Sandy Gravel (S.G) (80%G, 20%S) Gravel: f.pbl-v.c.pbl. w.rndd. of 80% bslt, 20% felsic. Sand: ang-S.ang. M-v.c. of 10-15% mafics. Damp. 37': Gravelly Sand (gS) (90%S, 10%G) Gravel: w.rndd c.pbl-S.cbl of 60% bslt, 40% metamorphic. Continue.	

Reported By: A. Lantow / L Stratton | Reviewed By: L. D. Walker

Title: Geologist | Title: Geologist

Signature: Aaron Lantow | Date: 9-29-09 | Signature: LD Walker | Date: 10/20/09

A-6003-642 (03/03)

BOREHOLE LOG

Page 2 of 2

Date: 9-29-09

Well ID: C7492	Well Name: 199-H1-43	Location: 100-H, W. of 128-H-1 Extraction well
Project: 100-HR-3 P&T Expansion		Reference Measuring Point: Ground Surface

Depth (Ft.)	Sample Type No.	Sample Blows Recovery	Graphic Log	Sample Description: Group Name, Grain Size Distribution, Soil Classification, Color, Moisture Content, Sorting, Angularity, Mineralogy, Max Particle Size, Reaction to HCl	Comments: Depth of Casing, Drilling Method, Method of Driving Sampling Tool, Sampler Size, Water Level
40	Dakotas.			37' continue (gS) Sand: sub-ang-ang c.-v.c.S. of ~ 80% basalt, 20% felsics. Wet.	Becker Hammer w/10 3/4" 8" dual wall casing.
				43': Gravelly Silt: gS gM (70%M, 30%G) Gravel: w.rndd.-sub.rndd. f.pbl-S.cbl. of 60% basalt, 40% felsics.	
	Archive	10 cy./ 37 blows		Clayey Silt. of color: 2.5Y 6/4 lt. Yellowish brn.	43'-45.3': Split Spoon Sample B21NF5.
45				45': Clayey Silt: Color: 2.5Y 6/4 lt. Yellowish brn. Plastic w/ fn. stringers of $CaCO_3$. mod. rxn w/ HCl.	
	no Archive				
50			TD=49.0		
55					

Reported By: A. Lantum		Reviewed By: L.D. Walker	
Title: Geologist		Title: Geologist	
Signature: Aaron Lantum	Date: 9-29-09	Signature: L.D. Walker	Date: 10/20/09

BOREHOLE LOG

Page 1 of 3

Date: 2.18.10

Well ID: C7580	Well Name: 199-D4-101	Location: E. 572800.30	N. 151425.7
Project: 100-HR-3 Pump + Treat		Reference Measuring Point: Ground Surface	

Depth (Ft.)	Sample Type No.	Sample Blows Recovery	Graphic Log	Sample Description: Group Name, Grain Size Distribution, Soil Classification, Color, Moisture Content, Sorting, Angularity, Mineralogy, Max Particle Size, Reaction to HCl	Comments: Depth of Casing, Drilling Method, Method of Driving Sampling Tool, Sampler Size, Water Level
					Becker Hammer
0	....			0 – 6 gravelly Sand (gS) –	10 3/4" x 8" dual wall
				30% rounded coarse pebbles, 65%	carbonne sample every
				rounded coarse Sand, 5% silt.	5', Type symbol: "AS"
				Color (moist) 7.5YR 3/1 (very dark gray).	
5	AS			weak reaction to HCl. 70% basalt, 30%	
				felsic. moderatly Sorted	
				6 – 22 Sandy gravel (sG) – 50%	
				fine to coarse pebbles, 45% Coarse	
				Sand, 5% silt. Color (dry) 7.5YR 5/1	
10	AS			(Gray). weak reaction to HCl. 70%	
				basalt, 30% felsic, moderatly Sorted	
15	AS				
				@ 19' bgs reaction to HCl very weak	
20	AS				
				22 – 34 gravelly Sand (gS) 30%	
				well rounded fine to medium pebbles,	
				68% Medium Sand, <2% silt.	
25	AS			Color, not wet, GLEY2 2.5/10B (bluish black)	
				no reaction to HCl. 60% basalt, 40% felsic	
				well sorted. Increase in pebbles	
				with depth.	
30	AS				
35	AS			34 – 38 Sandy gravel (sG) 45%	
				well rounded Medium to v. coarse pebbles,	
				50% Medium Sand, <5% silt.	
				Color (wet), GLEY 2.5/10B (bluish black).	
				no reaction to HCl. 60% basalt, 40% felsic	

Reported By: A. Pappas		Reviewed By: L.D. Walker	
Title: Field Geologist		Title: Geologist	
Signature:	Date: 2.18.10	Signature:	Date: 5/26/10

A-6003-642 (03/03)

BOREHOLE LOG

Page 2 of 3

Date: 2.18.10 / 2.22.10

Well ID: C7580	Well Name: 199-D4-101	Location: E 572800.30 N. 115425.7
Project: 100D/HR3 Pump + Treat		Reference Measuring Point: ground surface

Depth (Ft.)	Sample Type No.	Sample Blows Recovery	Graphic Log	Sample Description: Group Name, Grain Size Distribution, Soil Classification, Color, Moisture Content, Sorting, Angularity, Mineralogy, Max Particle Size, Reaction to HCl	Comments: Depth of Casing, Drilling Method, Method of Driving Sampling Tool, Sampler Size, Water Level
40	AS			38'-48' gravelly sand (gS). 30% well rounded fine to medium pebbles, 68% medium sand, <2% silt. Color, moist, GLEY 2 2.5/10B (bluish black) no HCl reaction. 60% basalt, 40% felsite well sorted.	Becker Hammer 10 3/4" x 8" dual wall archive sample every 5', type symbol: AS" • Decrease in drilling speed.
45	AS			@46' increase in pebble size and %	
50	AS			48'-54' Sandy gravel (SG): 40% sub-rounded fine to coarse pebbles, 45% fine to coarse sand, <5% silt. Color, moist, 7.5 YR 4/2 (brown) no reaction to HCl solution. 65% felsic, 35% basalt. well sorted.	
55	AS			54'-63' Sandy Gravel (SG) 45% moderately well rounded medium pebbles, 65% medium sand <5% silt. color moist GLEY 2 2.5/10B (bluish black) no reaction to HCl. 60% basalt, 40% felsic. well sorted.	
60	AS				
65	AS			63'-67' Silty sandy Gravel (msG) 55% fine to coarse pebbles with occasional small cobbles, 35% very fine to medium sand 10% silt. color, moist, 7.5YR 4/3 (brown). no HCl reaction. 60% felsic, 40 basalt moderate sorting.	
70	AS			67'-74' Gravelly sand (gS). 15% well rounded fine to medium pebbles, 80% very fine to fine sand, <5% silt. Color, moist, is 10YR 5/4 (light yellowish brown). no HCl reaction. 55% basalt, 45% felsic. moderately sorted. occasional cobble (100mm mm) with depth.	• Drilling speed becomes very slow.
75	AS			74'-102' Sandy Gravel (SG) 50% sub-rounded medium-coarse pebbles with occasional small cobble. 47% very coarse-fine sand, <3% silt	

Reported By: A. Pappas		Reviewed By: L.D. Walker	
Title: Field Geologist		Title: Geologist	
Signature:	Date: 2.22.10	Signature:	Date: 5/26/10

A-6003-642 (03/03)

BOREHOLE LOG

Page 3 of 3
Date: 2.2210

Well ID: C7580	Well Name: 199-D4-101	Location: E: 572800.30	N: 151425.7
Project: 100-HR-3 Pump + Test		Reference Measuring Point:	ground surface

Depth (Ft.)	Sample Type No.	Sample Blows Recovery	Graphic Log	Sample Description: Group Name, Grain Size Distribution, Soil Classification, Color, Moisture Content, Sorting, Angularity, Mineralogy, Max Particle Size, Reaction to HCl	Comments: Depth of Casing, Drilling Method, Method of Driving Sampling Tool, Sampler Size, Water Level
80	AS.			74'-102' Sandy Gravel (SG) 60% sub-rounded medium-coarse pebbles with occasional small cobble, 47% very coarse to fine sand, <3% silt. Color, wet, 10YR 5/3 (brown), no reaction to HCl, 60% felsic / 40% mafic/basalt, moderatly sorted	Becker Hammer 10 3/4"x8" dual wall archive sample every 5' type symbol: "AS" Sieve samples every 5' after water reached and compiled into 10' samples type symbol: "SS" Depth to water 84.75' bgs
85	AS				
90	AS				
				at 94' bgs composition change 70% pebbles, 27% sand, <3% silt.	
95	AS SS				
				at ~98' bgs very poor recovery	
100	AS. Poor Recovery SS				@100' bgs: Archive sample - poor recovery Sieve sample - poor recovery
				102'-105' Silty Gravel (mG) 55% sub-rounded coarse to very coarse pebbles, 40% silt, <5% fine to very fine sand	~103' drill speed - dead slow
105	AS Split Spoon			Color, wet, 10YR 6/2 (light brownish gray), weak rxn to HCl, moderatly sorted, 70% mafic 30% felsic	Split Spoon collected, 103.5'-105.5' bgs. HEIS B23R67 2.22.10
				105'-109.9 TD Silt (M) 98% silt, <2% very fine sand. Color, moist 10YR 6/1 (gray), no rxn to HCl, well sorted, weak plasticity	
110			TD 109.9'		

Reported By: A. Pappas		Reviewed By: L. W. Walker	
Title: Geologist		Title: Geologist	
Signature:	Date: 2.22.10	Signature:	Date: 5/26/10

A-6003-642 (03/03)

BOREHOLE LOG

Page 1 of 2
Date: 6.21.10

Well ID: C7581 | Well Name: 199-H1-3 | Location: NW of H reactor

Project: 100-OU HR3 Pump a Treat | Reference Measuring Point: GROUND SURFACE

Depth (Ft.)	Sample Type No.	Sample Blows Recovery	Graphic Log	Sample Description (Group Name, Grain Size Distribution, Soil Classification, Color, Moisture Content, Sorting, Angularity, Mineralogy, Max Particle Size, Reaction to HCl)	Comments (Depth of Casing, Drilling Method, Method of Driving Sampling Tool, Sampler Size, Water Level)
0					Diesel hammer
				Top of cuttings is crushed gravel drill pad	10¾x8" dual wall casing
					using added H_2O
				0'-44' bgs	
				Slightly silty Sandy Gravel (mSG)	
5	G.S.			80% gravel: v.sm pebbles to lg cobbles	Archive @ 5' bgs
				intermediate mix comp. sub ang. Ang.	
				~15% sand + ~5% silt no rxn to HCl	
				7.5YR 3/2 - Brown	
10	G.S.			→ @ ~10' bgs gravel is more rounded	Archive @ 10' bgs
				+ average size is medium - lg pebbles	
				w/ occasional cobbles	
15	G.S.				Archive @ 15' bgs
20	G.S.			@ 20' bgs: considerably more sand	Archive @ 20' bgs
				blk + white particles w/ smaller	
				gravel. ~60% gravel; ~30% sand,	
				~10% silt	
25	G.S.				Archive @ 25' bgs
				Sand lense @ 27'-29' bgs	
				medium salt + pepper sand w/ sm pebbs	
				(~5%)	
30	G.S.				Archive @ 30' bgs
35	G.S.				Archive @ 35' bgs

Reported By: J. Schilperoort		Reviewed By: L.D. Walker	
Title: Geologist		Title: Geologist	
Signature: J. Schilperoort	Date: 6.21.10	Signature: L.D. Walker	Date: 10-11-10

A-6003-642 (03/03)

BOREHOLE LOG

Page 2 of 2
Date: 6.21.2010

Well ID: C7581 | Well Name: 199-H1-3 | Location: NW of H Reactor

Project: 100-HR3 Pump&treat | Reference Measuring Point: Ground surface

Depth (Ft.)	Sample Type No.	Sample Blows Recovery	Graphic Log	Sample Description: Group Name, Grain Size Distribution, Soil Classification, Color, Moisture Content, Sorting, Angularity, Mineralogy, Max Particle Size, Reaction to HCl	Comments: Depth of Casing, Drilling Method, Method of Driving Sampling Tool, Sampler Size, Water Level
40	G.S.	▽		0'-42': silty Sandy Gravel (GMSG) cont'd	Archive @ 40' bgs
				(40% gravel, 30% sand, 10% m)	water table @ 40' bgs
				42'-46.5': gravelly sandy silt (gsM)	
	NCO S.S. sample			75% m, ~20% sand, ~5% gravel (sm pebbs	NCO S.S. @ 43.6'-45.6' bgs
45				to lg pebbs) TOP OF RUM	#ES# B24D84, B23PW6
				moderate rxn to HCl; damp,	6.21.2010 @ 1400 ~~Trip blank~~
				10YR3/4 dk yellowish brn	
				TD @ ~~48.6~~ 48.5' bgs	
				LW 10-11-10	

Reported By: J. Schilperoort | Reviewed By: L.D. Walker

Title: Geologist | Title: Geologist

Signature: J. Schilperoort | Date: 6.21.10 | Signature: L. Walker | Date: 10-11-10

A-6003-642 (03/03)

BOREHOLE LOG

Page 1 of 3

Date: 3·31·10

Well ID: C7582 | Well Name: 199-D8-97 | Location: N.152087.60, E.573859, NE of DR Reactor

Project: 100-HR-3 OU Pump + Treat Remedial Alternative 5 | Reference Measuring Point: Ground Surface

Depth (Ft.)	Sample Type No.	Sample Blows Recovery	Graphic Log	Sample Description: Group Name, Grain Size Distribution, Soil Classification, Color, Moisture Content, Sorting, Angularity, Mineralogy, Max Particle Size, Reaction to HCl	Comments: Depth of Casing, Drilling Method, Method of Driving Sampling Tool, Sampler Size, Water Level
0				0-5': Sand (S) sub-ang-ang. m-v.c.S.	Diesel Percussion / Rev.
				of Binodal m.felsic/c.Mafic 50/50% mix.	Circ.
				10YR 5/2 Black, Salt + Pepper appearance	
5	Archive			5-19: Similar to above. Sparse m.pbl. present.	5': Archive grab
				80% bslt, 20% Qtz.	
10	Archive	100%	Full Time		10' Archive grab
15				15': 90%(S) - 10%(v.f-m. pbl. of 85% bslt, 15% Qtz)	15' Archive grab
	Archive	20%	Periodic	17': Gravel content ↑	17': Drill Rate ↓, v. poor returns
20	Archive	v. poor returns		19'-32' Sandy gravel (sG): 50%	
				sub-rounded medium to v. coarse pebbles,	
				45% medium to coarse sand, <5% silt,	
				Color, wet, Gley 1 2.5/N (black), moderatly	18': Archive Grab
				sorted, no HCl rxn. 80% mafic 20% felsic	· Stroke 18'-16'
25	archive				25': archive grab, despite poor returns.
30	Archive				30': archive grab - still poor returns.
				32'-35' Sandy Gravel (sG): 70%	
				angular fine to v. coarse pebbles 20%	
35	Archive			medium to v. coarse sand, 10% silt,	
				poorly sorted. Color, wet, 7.5YR 4/2 (brown).	35: Archive grab, poor returns.
				moderate HCl rxn. 80% mafic 20% felsic	

Reported By: A. Lorbeer | Reviewed By: L.D. Walker

Title: Geologist | Title: Geologist

Signature: Aaron Lorbeer | Date: 3·31·10 | Signature: L.D. Walker | Date: 5/24/10

A-6003-642 (03/03)

BOREHOLE LOG

Page 2 of 3

Date: 4.1.10

Well ID: C7582	Well Name: 199-D8-97	Location: E 573859 N 152087.60
Project: 100 HR-3 Pump + Treat		Reference Measuring Point: Ground Surface

Depth (Ft.)	Sample Type No.	Sample Blows Recovery	Graphic Log	Sample Description: Group Name, Grain Size Distribution, Soil Classification, Color, Moisture Content, Sorting, Angularity, Mineralogy, Max Particle Size, Reaction to HCl	Comments: Depth of Casing, Drilling Method, Method of Driving Sampling Tool, Sampler Size, Water Level
40	Archive			39 – 51 Sandy Gravel (SG): 75% sub-angular medium to v. coarse pebbles, 15% coarse to v. coarse sand, 10% silt, moderatly sorted. Color, wet, Gley 1 2.5/N (black). no HCl rxn, 60% mafic, 40% felsic	archive grab at 40'
45	Archive			"at 48' – composition change: 30% pebbles, 60% sand, 10% silt.	archive grab at 45'
50	Archive				archive grab at 50'
55	Archive			51' – 58' composition changes: 70% pebbles with occasional sml. cobble (~120mm) 25% sand, 5% silt.	archive grab at 55'
60	Archive			58 – 68 Sandy Gravel (SG): 65% sub rounded medium to very coarse pebbles, 30% fine to medium sand, 5% silt. moderatly sorted. Color, moist, 7.5YR 5/2 (brown). strong rxn to HCl. 80% mafic, 20% felsic.	archive at 60'
65	Archive				archive at 65'
70	archive			67': lrg. cbl. present. 10%-20% 68': Δ lith. 95% felsic metamorphic, 15% bolt. gravel & sand. chips of cemented sand material present. infrangible	67': v. hard. Fm. Stroke 67'-65' archive 70'
75	Archive Sieve	9.30			70-75': Archive/Sieve grab.

Reported By: A. Pappas	Reviewed By: L.A. Walker
Title: Field Geologist	Title: Geology
Signature:	Signature:
Date: 4.5.10	Date: 5/24/10

A-6003-642 (03/03)

BOREHOLE LOG

Page 3 of 3
Date: 4.5.10

Well ID: C7582	Well Name: 199-D8-97	Location: E: 573859	N: 152087.60
Project: 100 HR-3 Pump & Treat		Reference Measuring Point:	Ground Surface

Depth (Ft.)	Sample Type No.	Sample Blows Recovery	Graphic Log	Sample Description: Group Name, Grain Size Distribution, Soil Classification, Color, Moisture Content, Sorting, Angularity, Mineralogy, Max Particle Size, Reaction to HCl	Comments: Depth of Casing, Drilling Method, Method of Driving Sampling Tool, Sampler Size, Water Level
80	Archive			68'-98' : Sandy Gravel (SG) 70% G, 25% S v.f.-m. Sand of 85% felsic. comp. w/ sangbst. v.w. rnd. -subrnd. v.f-pbl-lrg cbl. of 85% felsic meta. 15% basalt. Matrix is v.w. cemented (in frangable) 10YR 5/3 brown. v. strong rxn. w/HCl. at 82' no longer seeing cementation, HCl rxn weak/non.	• Bauer Hammer • 10¾" x 8" dual wall • at 80' archive sample • very slow drilling rate • hole started 78'-82' • at 85 archive sample Sieve Sample.
85	Archive				
90	Archive				at 90': archive sample, Sieve sample
95	Archive			at 94', elements of cementation/caliche present again, HCl rxn weak/moderate.	at 95': archive sample, Sieve sample
100	Archive			98-104.3 Silt/Mud <5% rounded coarse pebbles to small cobbles (150 mm max) (80% basalt, 20% felsic), 95% silt. moderately sorted (pebbles deeper with depth). Color, Moist, 7.5YR 6/2 (pinkish gray). No HCl rxn. Moderate-weak plasticity.	at 100': archive sample.
105	Archive		104.3' TD		at 104': archive sample
110					
115					

Reported By: A. Pappas		Reviewed By: L. J. Walker	
Title: Field Geologist		Title: Geologist	
Signature:	Date: 4.6.10	Signature:	Date: 5/24/10

A-6003-642 (03/03)

rev 5-24-10

C7583

BOREHOLE LOG

Page 1 of 3

Date: 2.25.10

Well ID: C7583	Well Name: 199-D5-101	Location: E: 572942.78 N: 151521.9
Project: 100 HR-3 . pump + Trust		Reference Measuring Point: ground Surface

Depth (Ft.)	Sample Type No.	Sample Blows Recovery	Graphic Log	Sample Description: Group Name, Grain Size Distribution, Soil Classification, Color, Moisture Content, Sorting, Angularity, Mineralogy, Max Particle Size, Reaction to HCl	Comments: Depth of Casing, Drilling Method, Method of Driving Sampling Tool, Sampler Size, Water Level
					• Becker Hammer
0	A.S.			0'-8' Gravelly Sand, gS: 25% sub-rounded very fine to fine pebbles, 70% medium to v. coarse sand, <5% silt. Color, moist, 7.5YR 4/2 (Brown) moderate rxn HCl, 65% mafic, 35% felsic, well sorted.	• 10 7/8" x 8" dwall wall • Archive sample every 5', typeID: "A.S."
5	A.S.				
				8'-27' Sandy Gravel, sG: 70% sub-angular medium to coarse pebbles w/ occasional small cobble, 25% coarse to very coarse sand, <5% silt. Color, wet, 10YR 3/1 (very dark gray). no HCl rxn. 70% mafic, 30% felsic. moderly sorted	
10	A.S.				
15	A.S.				
20	A.S.				
25	A.S.				
				27-42 Gravelly Sand, gS: 20% rounded fine to medium pebbles + sml cobbles, 75% sand - coarse - v. coarse. <5% silt. Color, dry, 10YR 4/1 (dark gray). no HCl rxn. poorly sorted, 60% mafic, 40% felsic.	
30	A.S.				
35	A.S.			~34'-38 Sand lense encountered, 99% sand <1% silt, color 10YR 4/1	

Reported By: A. Pappas		Reviewed By: L.D. Walker	
Title: Field Geologist		Title: Geologist	
Signature:	Date: 3.1.10	Signature:	Date: 5/24/10

A-6003-642 (03/03)

BOREHOLE LOG

Page 2 of 3

Date: 2.25.10

Well ID: C7583 | Well Name: 199-D5-101 | Location: E: 572942.78 N: 151587.9

Project: 100 HR-3 Pump + Treat | Reference Measuring Point: ground surface

Depth (Ft.)	Sample Type No.	Sample Blows Recovery	Graphic Log	Sample Description: Group Name, Grain Size Distribution, Soil Classification, Color, Moisture Content, Sorting, Angularity, Mineralogy, Max Particle Size, Reaction to HCl	Comments: Depth of Casing, Drilling Method, Method of Driving Sampling Tool, Sampler Size, Water Level
40	A.S.			27-42 Gravelly Sand, gS: 20% rounded fine + medium pebbles + small cobbles, 75% coarse - very coarse sand <5% silt. color, dry, 10YR 4/1 (dark gray) No HCl rxn. poorly sorted. 60% mafic 40% felsic	Becher Hammer 10¾" x 8" dual wall Acetate sample every 5', type ID: "AS"
45	A.S.			42-58 Sandy gravel, SG: 65% Subrounded medium to very coarse with occasional small cobble, 30% fine to coarse sand, <5% silt. Color, dry, 5YR 4/2 (dark reddish gray). no HCl rxn, moderately sorted, 50% mafic, 50% felsic.	
50	A.S.				
55	A.S.			58-102': Sandy gravel: SG: 55% subrounded medium to coarse pebbles 40% v. fine to medium sand, <5% silt. color, dry, 10YR 7/2 (v. pale brown) No HCl rxn. poor sorting 50% mafic 50% felsic	
60	A.S.				
65	A.S.				@66' drill speed v. slow
70	A.S.				@69' drill pipe becomes tight
75	A.S.				@75 drill speed "dead" slow

Reported By: A. Pappas | Reviewed By: L.J. Walker

Title: Field Geologist | Title: Geologist

Signature: [signature] Date: 3.LW | Signature: [signature] Date: 5/24/10

A-6003-642 (03/03)

BOREHOLE LOG

Page 3 of 3

Date: 2.26.10/3.1.10

Well ID: C7583	Well Name: 199-D5-101	Location: E: 572942.78 N: 151521.9
Project: 100 HR-3 Pump + Treat		Reference Measuring Point: ground surface

Depth (Ft.)	Sample Type No.	Sample Blows Recovery	Graphic Log	Sample Description: Group Name, Grain Size Distribution, Soil Classification, Color, Moisture Content, Sorting, Angularity, Mineralogy, Max Particle Size, Reaction to HCl	Comments: Depth of Casing, Drilling Method, Method of Driving Sampling Tool, Sampler Size, Water Level
80	AS SS NR 2.35			66-102 Sandy Gravel, GG: 55% sub-rounded medium to coarse pebbles, 40% v. fine to medium sand, <5% silt. Color, dry, 10YR 7/3 (v. pale brown). no HCl rxn. poor sorting. 50% mafic, 50% felsic.	• Becker Hammer • 10¾" x 8" dual wall • Archive sample every 5', type ID: "AS." • Sieve sample every 5' (10ft compl.) below water table. type ID: "SS" • Depth to water 85.6' - 3.1.10
85	AS S.S.				
90	AS SS.				
				@ 93' pebbles become sub-angular	
95	AS SS.			@ 96' increase in pebbles, new composition: 70% pebbles, 25% sand <5% silt.	
100	AS S.S.				
				102'-108' Gravel, G: 85% sub-rounded medium to very coarse pebbles, 10% fine to medium sand, <5% silt. Color, wet, 7.5YR 6/3 (light brown). no HCl rxn, moderate sorting, 60% felsic 40% mafic.	
105	AS. S.S.				
				108 - 114.3 TD Silt, M: <5% coarse pebbles 95% silt. Color, moist, 7.5YR 5/3 (brown). no HCl rxn, well sorted, medium plasticity. Pebble concentration decreasing with depth	
110	AS.				
115	AS.		TD 114.3		

Reported By: A. Pappas		Reviewed By: L. D. Walker	
Title: Field Geologist		Title: Geologist	
Signature:	Date: 3.1.10	Signature:	Date: 5/24/10

A-6003-642 (03/03)

BOREHOLE LOG

Page 1 of 2

Date: 6-30-10

Well ID: C7584	Well Name: 199-H1-2	Location: NW of H & NE of D reactors
Project: 100-HR-3-OU Pump & treat		Reference Measuring Point: ground surface

Depth (Ft.)	Sample Type No.	Sample Blows Recovery	Graphic Log	Sample Description: Group Name, Grain Size Distribution, Soil Classification, Color, Moisture Content, Sorting, Angularity, Mineralogy, Max Particle Size, Reaction to HCl	Comments: Depth of Casing, Drilling Method, Method of Driving Sampling Tool, Sampler Size, Water Level
0				gravel pad contributes to % gravel is the first few feet.	Water is added to ease cutting returns.
5	G.S.			0.0'-7.5' bgs silty Gravel (m(g)) 60% G: sm pebbles to lg cobbles, sub-rnd to ang. 60% mafic/40% felsic, 30% m, 10% sand: v. fn to fn sand. Dry/wet from added water) Wet color: 10YR 4/2 dk grayish brn, no rxn to HCl	Archive @ 5' bgs
10	G.S.				Archive @ 10' bgs
				7.5'-15' bgs slightly silty sand gravel (msG) 60% gravel: sm pebbles to lg cobbles, sub-rnd to ang. 60% mafic/40% felsic, 35% sand: v. fn to crs - 50/50% mafic/felsic (salt & pepper), no rxn HCl 10YR 4/2 dk grayish brown - wet from added water	
15	G.S.				Archive @ 15' bgs
				@ 15-34.5' bgs very sandy lense 60% Sand (v.fn. to crs) blk/white + 35% gravel: sm pebbles-lg cobbs, <5% m	
20	G.S.				Archive @ 20' bgs
				15'-34.5' bgs Gravelly Sand (gS) 60% sand: v. fn to crs, 50/50% mafic/felsic angular, 35% gravel: sm pebbs to lg cobbs sub-rnd - ang 70% mafic/30% felsic, wet from added water, 10YR 4/2 dk grayish brn 5% m	
25	G.S.				Archive @ 25' bgs
30	G.S.			34.5'-45.6' bgs silty sandy gravel (msG) 50% gravel: sm pebbs to lg cobbs sub-rnd to ang 70% mafic 30% felsic, 40% sand: v. fn to crs sand, 50/50% mafic/felsic 10% m (wet from added water) no rxn to HCl - 10YR 4/2 dk grayish brn	Archive @ 30' bgs
					Water @ 37.4'
35	NCO S.S. I-001	Water 37.4'			Archive @ 35' bgs
					@ 6.30.10 I-001 ~~36.2-40.7~~ 36.2-38.7' bgs NCO S.S. 6.30.10 @ HEIS# B2400 4 (LESL ONLY)

(see pg 2 →)

Reported By: J. Schilperoort		Reviewed By: L.D. Walker	
Title: Geologist		Title: Geologist	
Signature: J. Schilperoort	Date: 6.30.10	Signature: [signature]	Date: 10-11-10

A-6003-642 (03/03)

BOREHOLE LOG

Page 2 of 2

Date: (cont) 6.30.10

Well ID: C7984	Well Name: 199-H1-2	Location: 8 NW of H + NE of D reactors	
Project: 100-HR-3-OU Pump & treat		Reference Measuring Point: Ground surface	

Depth (Ft.)	Sample Type No.	Sample Blows Recovery	Graphic Log	Sample Description: Group Name, Grain Size Distribution, Soil Classification, Color, Moisture Content, Sorting, Angularity, Mineralogy, Max Particle Size, Reaction to HCl	Comments: Depth of Casing, Drilling Method, Method of Driving Sampling Tool, Sampler Size, Water Level
40	G.S.			MSG (cont'd (see pg 1)	Archive @ 40' bgs
	NCO S.S.			34.5' - 45.6' bgs	T-002
					NCO S.S. @ 38.9'-41.9' bgs
	NCO S.S.			lw 10-11-10	@ 1040; HEIS # B24DD6
				54.5	
	G.S.			45.6' - 52.0 bgs: silt/clay (M)	ARCHIVE @ 45' bgs
45				60% sticky silt/clay 10YR 4/2-4/4: dk yellowish brn	6.30.2010
	NCO S.S.			40% Gravel: sm pebbs to 1g cobbs sub rnd to	T-003 NCO S.S. @ 41.8'-44.3' bgs
				ang. n<5% sand, consolidated, mod rxn to HCl	@ 1200; HEIS # B24DD8
				damp, consolidated.	6.30.10
	G.S.				T-004 NCO S.S. @ 46.2'-48.7' bgs
50				→ decrease in Gravel @ 48'	@ 1375; HEIS # B24DB5
				~80% m, n<5% gravel, n<5% sand	ARCHIVE @ 50' bgs
	NCO S.S.				6.30.10
				5" split spoon sampler	T-005 NCO S.S. @ 52.0-54.5' bgs
55				to 54.5' bgs = TD	@ 1515; HEIS # B24DF0
					Water @ 37.4' bgs

Reported By: J. Schilperoort		Reviewed By: L. D. Walker	
Title: Geologist		Title: Geologist	
Signature: [signature]	Date: 6.30.10	Signature: [signature]	Date: 10/11/10

A-6003-642 (03/03)

BOREHOLE LOG

Page 1 of 2

Date: 7.01.2010

(8) 7.1.10

Well ID: C78-7585	Well Name: 199-H1-1	Location: NW of H & NE of D reactor
Project: 100-HR3-04 Pump & treat Expansion		Reference Measuring Point: ground surface

Depth (Ft.)	Sample Type No.	Sample Blows Recovery	Graphic Log	Sample Description: Group Name, Grain Size Distribution, Soil Classification, Color, Moisture Content, Sorting, Angularity, Mineralogy, Max Particle Size, Reaction to HCl	Comments: Depth of Casing, Drilling Method, Method of Driving Sampling Tool, Sampler Size, Water Level
0				0-26': Silty Sandy Gravel (MSG)	Diesel Hammer
				65% Gravel, sm pebbles to lg cobbles; bd/poor.	Add Water continuously
				Mafic/felsic, sub-rnd to ang. 25% sand	for dust control
				v.fn-crs 50/50 mafic/felsic, 10% m	
				Mod. rxn to HCl; 2.5YR 4/2 dk grayish brn	Archive @ 5' bgs
5	G.S.			→ wet from added water	
				→ @ ~3' gravel comp = 70% felsic/30% mafic	
10	G.S.			→ Drilling slows down @ ~10' bgs	Archive @ 10' bgs
				→ some very lg cobbs present sparse.	
15	G.S.			→ Sand increase to 60% G, 30% S, 10% m @ ~15' bgs	15' Archive
20	G.S. Sieve				20': Archive / Sieve
		7.1.10			22.5': Water Level
				@ ~23-24' bgs sand inc. to 45-50%	
				gravel: 55-50% + m: ~10-5%	25': Archive / Sieve
25	G.S. Sieve			(prs. bldrs. present. of bslt. Sub rnd.)	26'-28': v. rapid Drill rate. Archive
				~26': finer pebbles, not as many (95% bslt.)	
				26-28': slightly silty sandy Gravel [(m)SG]:	30': Archive / Sieve
	Archive Sieve			70% G, 25% S, 5-10% m. Bed of sub-rnd. v.f pbl.	
30				Coarsening to lrg. cbl. of 70% bslt, 10% felds. w/	
				v.f. S. coarsening to c. S. of 85% Qtz-felds/15%	
				mafic. comp. matrix color: 10YR 4/3 brown.	33.8': Archive / Sieve
	Archive Sieve			28'-33.8: Slightly silty (Sandy Gravel) cont. 80% G, 20% S	
				w. rnd. v.f pbl-sm. cbl. prs. l. cbl. of 85% bslt, 15%	
35	Split Spoon	100%		felsic, w/ ang. m. S. of 75% qtz-felds. 25% bslt. Grey	33.8'-35.5': Split Spoon
				35.8'-36.0: Silt (M): slightly moist. low-med.	B24D81, B24D86
		Delayed Periodic		Plastic. 10YR 5/4 strong brown. stringers	
				of $CaCO_3$ strong rxn w/ HCl. 7.5YR 5/6-4/6 strong brown.	
				36.0'-41.1: Gravelly Sandy Silt (gSM): 80% G →	

Periodic & Very Graded →

Full to Graded →

Reported By: J. Schilperoort / A. Lantow	Reviewed By: L.D. Walker
Title: Geologist / Geo.	Title: Geologist
Signature: [signature] Date: 07.01.10	Signature: [signature] Date: 10-12-10

A-6003-642 (03/03)

BOREHOLE LOG

Page 2 of 2
Date: 7-1-10

Well ID: C7585 | Well Name: 199-H1-1 | Location: N.W. of Horex + NE. of D-Reactor.

Project: C75 100-HR-3 OU Pump + Treat Expansion | Reference Measuring Point: See Pg 1.

Depth (Ft.)	Sample Type No.	Sample Blows Recovery	Graphic Log	Sample Description: Group Name, Grain Size Distribution, Soil Classification, Color, Moisture Content, Sorting, Angularity, Mineralogy, Max Particle Size, Reaction to HCl	Comments: Depth of Casing, Drilling Method, Method of Driving Sampling Tool, Sampler Size, Water Level
40	Archive		TOHII	36.0-41.1: gravelly Sandy Silt (gsM) 80%-85%M 0-10%G, 0-15%M. v.w.rndd. v.pbl. coarsening to lrg cbl. of 70% bslt, 30% felsic volc. w/ m-vfg. v.c. sub.rndd-ang. S. of 100% bslt. in 7.5YR 5/6 strong brown. Plastic-non plastic Silt! v. strong rxn w/HCl.	Diesel Hammer. 4" Archive
45				TD = 41.1' bgs	

Reported By: A. Lapham | Reviewed By: L.D. Walker

Title: Geologist | Title: Geologist

Signature: [signature] Date: 7-1-10 | Signature: [signature] Date: 10/12/10

A-6003-642 (03/03)

BOREHOLE LOG

Page 1 of 2
Date: 6·24·10

Well ID: C7586 | Well Name: 199-H4-79 | Location: Between 100-H + 100-D Reactors

Project: Pump & Treat Expansion for 100-HR-3 OU | Reference Measuring Point: Ground Surface

Depth (Ft.)	Sample Type No.	Sample Blows Recovery	Graphic Log	Sample Description: Group Name, Grain Size Distribution, Soil Classification, Color, Moisture Content, Sorting, Angularity, Mineralogy, Max Particle Size, Reaction to HCl	Comments: Depth of Casing, Drilling Method, Method of Driving Sampling Tool, Sampler Size, Water Level
0				0-3': Sandy Silt (sM) loamy. 90% M.	Diesel Hammer
				10% S. v.f-v.c. ang. bslt. Sand w/ Dry 10YR 4/3	Water Added Continuously
				brown. Silt. Dry.	
				3-7': Gravelly Sandy Silt (gsM)	
				• Graded contact to underlying Sandy Gravel	
5					
				7-18': Sandy Gravel (sG) 75-65%G, 25-35%S	7-9': Archive grab
	Archive			S. Sub rndd. v.f.-v.c. pbl. of 65% felsic, 35% bslt	
				w/ sprs. sm. cbl. w/ v.f-v.c. ang. S. silt lightly	
10				coating clasts. (<5% M)	
				• 13': silt absent.	
					15': Archive
15	Archive			• 15': v.f-c. pbl. w/ sprs sm. cbl. (sub-w. rndd.) of	
				60% bslt, 40% felsic, w/ C. ang. black Sand of	
				90% Mafic. comp.	
				18'-31': gravelly Sand (gS) 55% S, 45% G	
				w. rndd f.-v.c. pbl. w/ sprs. sm. cbl. of 60% felsic	20': Archive
20	Archive			40% bslt. w/ m-C. ang. S. of 90% Mafic, comp.	
				Black overall.	
					25': Archive
25	Archive			• 70% bslt. 30% Qtz + mixed meta. + felsic vol.	
				Black	
				• 29': Sand coarsening downward. of ang. c.-	• 29': Drill Rate ↑ slightly
30	Sieve Archive			v.c. S. w/ vf-v.c. pbl. (w. rndd) of 70% bslt. 30% felsic	29-30': Archive/ sieve grab
				31'-46': Sandy Gravel (sG) 70% G, 30% S.	
				v.f-c. pbl. v.w. rndd. of 80-70% bslt, 20-30% Qtz.	
				w/ m-c. S. (ang.) of 50-60% felsic Qtz, 40-50%	
				mafic. Moist 10YR 4/3 Dark grayish brown.	
35	Archive Sieve				34-36': Archive/ Sieve
				• 35': 85% bslt, 15% felsic gravel. w/ sand	
				increasing in felsic content w/ depth.	

Reported By: Aaron Lanton | Reviewed By: L.D. Walker

Title: Geologist | Title: Geologist

Signature: Aaron Lanton | Date: 6·24·10 | Signature: L.D. Walker | Date: 10/12/10

A-6003-642 (03/03)

BOREHOLE LOG

Page 2 of 2
Date: 6-24-10/6-28-10

Well ID: C7586 | Well Name: 199-H4-77 | Location: See pg 1.

Project: See pg 1. HR-3 Pump & Treat | Reference Measuring Point: See pg 1. Ground Surface

Depth (Ft.)	Sample Type No.	Sample Blows Recovery	Graphic Log	Sample Description: Group Name, Grain Size Distribution, Soil Classification, Color, Moisture Content, Sorting, Angularity, Mineralogy, Max Particle Size, Reaction to HCl	Comments: Depth of Casing, Drilling Method, Method of Driving Sampling Tool, Sampler Size, Water Level
40	Archive Sieve			38-46': Sandy Gravel (SG): 70%G, 30%S. v.w.rndd f.-v.c.pbl. of 70-80%bslt, 20-20% felsic. Qtz w/ ang. m-c. S. of 50-60% qtz-felds. Moist-wet: 10YR 4/2 drk grysh brwn.	40-42': Archive/Sieve
					•44': Stroke to 41' bgs.
45	Archive Sieve			•44': 65% felsic, 35% bslt. gravel. 95% felds. S. 46'-48: Gravelly Sand (gS) 60%S, 40%G v.w.rndd. f-c.pbl. of 70% felds, 30% bslt, w/ 95% Qtz S. Color: 2.5Y 3/2 grysh brwn. wet.	44-46': Archive Sieve Water: 45.4 (6-25-10)
50	Archive Sieve			48'-53: Sandy Gravel (SG) 70-60%G, 30-40%S. v.w.rndd f-c.pbl. of 80% felsic, meta. + int. volc. w/ f-m. ang. S. of 99% Qtz felds. Color: 2.5Y 3/2 grysh brwn. [Speculate Ringgold.] •Sps. sm. cbl. present.	49-51': Archive/Sieve
55	Archive Sample			53.0-57: Sandy Gravel Continues. •nodules of carbonate + carbonate coatings on clasts. Present. •54': clay clots present 10YR 7/3 very pale brown. 57'-59.5: gravelly Sand (gS) 85%S, 15%G.	Archive: 53-57' bgs.
60	Archive			v.w.rndd. m.-c.pbl. of 95% felsic, 5% bslt in C. ang. S. of 60% felds, 40% mafic. comp. overall black + white color; nodules of clay present up to 10mm. 10YR 8/3 brown to tanish gray.	Archive: 57'-60'. 60.1-62.1: Split Spoon B24D87, B24D67
	Split Spoon	100%		59.5-65': Silt (M) clayey. very plastic. >60% clay content. Dry. 2.5Y 7/3 lt. olv. brown.	
65					TD.: 65.0'
70					
75					

Reported By: A. Lanfam		Reviewed By: L.D. Walker	
Title: Geologist		Title: Geologist	
Signature: Aaron Lanfam	Date: 6-24-10	Signature: [signature]	Date: 10/12/10

A-6003-642 (03/03)

BOREHOLE LOG

Page 1 of 2

Date: 9.15.10

Well ID: C7587 | Well Name: 199-H4-76 | Location: W. of H-Reactor

Project: 100-HR-3 OU Pump & Treat Expansion | Reference Measuring Point: Ground Surface.

Depth (Ft.)	Sample Type No.	Sample Blows Recovery	Graphic Log	Sample Description: Group Name, Grain Size Distribution, Soil Classification, Color, Moisture Content, Sorting, Angularity, Mineralogy, Max Particle Size, Reaction to HCl	Comments: Depth of Casing, Drilling Method, Method of Driving Sampling Tool, Sampler Size, Water Level
0		Full Time		0'-6': Sandy Silt (SM) Loamy Dry. 80%M, 20%-S. v.f-m. sub.ang. S. Color: 10YR 5/3 Brown. Roots present.	Diesel Hammer. Adding 2-5 gpm clean H_2O to control dust & Aid stress. 3-5': Archive
5	Archive grab			6'-10': Gradual gradation to Sandy Gravel f. pbl-sm.cbl. of 90% bslt, 10% felsic w/ m-v.f. sub ang. S. of 90% bslt. •9': 90% Gravel bed. —	
10	Archive	Full / Periodic Graded		10'-24': Sandy Gravel (sG) 50%-70% G, 30-30% S. Sub ang.-Sub rndd. v.f. pbl-sm.cbl of 20-40% bslt, 80-60% felsic. volc/meta. w/ v.f-v.c. ang. S. of 80% mafic, 20% fels. Matrix color: 10YR 3/3 Brown	5'-10': Archive •9': Drill Rate ↓ 10': Drill Rate stop
15	Archive			•17': clasts sub-w.rndd. c.pbl-v.c.pbl. Discoidal 70-80% Gravel, 20-30% S. same comp. as above.	13'-15': Archive •18': D. Rate ↑ slightly
20	Archive			•20': sprs. sm. cbl. v.w.rndd discoidal. present. may be residual from above.	15'-20': Archive
25	Archive			24'-33': Sand (S) 85-90% S, 15-10% pbl. v.w. srtd. m-c. S. of sub ang. of 80-90% felsic comp. Color: 10YR 3/4 yllwsh. brown. sprs. mica. present. Rocks may be residual from above.	20-24': Archive •24': D Rate ↑ fast — •25': D Rate Rapid —
30	Archive			•30': Sand comp. Mafic domn. 80% bslt. 20% Qtz. •31': Cobbls. present. m f.pbl. v.w.rndd. ~5-10%	24'-30': Archive
35	Archive			33'-37': Gradual Gradation to Sandy Gravel v.w.rndd. m.-c. S. of 80% bslt. 20% Qtz. w/ 10-20% v.w.rndd. f.pbl.-m.pbl. of bslt. (m.pbl. sprs.) Coarsening Downward.	30'-35': Archive / Sieve
				37'-45': Gravelly Sand-Sandy Gravel (gS-sG) 80-90% S, 20-10% G. sub rndd. f.pbl.-vc.pbl. of 50% mafic/felsic comp. w/ m. S. of 50% maf/fels.	•37': D. Rate ↓ slowly

Reported By: A. Lantow		Reviewed By: L. D. Walker	
Title: Geologist		Title: Geologist	
Signature: [signature]	Date: 9.15.10	Signature: [signature]	Date: 10-12-10

A-6003-642 (03/03)

BOREHOLE LOG

Page 2 of 2
Date: 9.15.10

Well ID: C7587 | Well Name: 199-H4-76 | Location: W. of H-Reactor

Project: 100-HR-3 OU Pump + Treat Expansion. | Reference Measuring Point: G. S.

Depth (Ft.)	Sample Type No.	Sample Blows Recovery	Graphic Log	Sample Description: Group Name, Grain Size Distribution, Soil Classification, Color, Moisture Content, Sorting, Angularity, Mineralogy, Max Particle Size, Reaction to HCl	Comments: Depth of Casing, Drilling Method, Method of Driving Sampling Tool, Sampler Size, Water Level
40	Archive Sieve	Full time		37'-45': Gravelly Sand (SS) to Sandy Gravel (SG)	39'-40': Archive / Sieve
					Water: 43.1' bgs.
45	Archive Sieve	Periodic		45'-47.5': Sandy Gravel to Gravel 80-90% G w.f.pbl.-sm.cbl. v.w. rndd. of 98% bsH. 2% Qtz. w/ m.-c. ang. S. of 40% fels/60% mafic.	40'-47.5': Archive / Sieve. (1" H.olv. brown. clay nodules Present)
				47.5'-56.4: Silt (M) slightly moist. Color: 2.5Y 5/4 H. olive brown. low-med. plastic.	
50	Split Spoon	100%			48.3'-50.1': Split Spoon (1.8') HEIS # B24D88
				·52': Color: 7.5YR 5/6 strong brown. v. low.-no plasticity.	53'-56.4': Archive
55	Archive	Periodic			
					TD: 56.4', Casing @ 56.0'

Reported By: A. Lantow | Reviewed By: C.D. Walker

Title: Geologist | Title: Geologist

Signature: Aaron Lantow | Date: 9.15.10 | Signature: [signature] | Date: 10-12-10

A-6003-642 (03/03)

BOREHOLE LOG
199-H4-78

Page 1 of 2
Date: 6.23.10

Well ID: C7588 | Well Name: ~~199-H4-76~~ AB 8.10 | Location: S.E. of 100-H Reactor

Project: 100-HR-3 OU Pump + Treat Expansion | Reference Measuring Point: Ground Surface

Depth (Ft.)	Sample Type No.	Sample Blows Recovery	Graphic Log	Sample Description: Group Name, Grain Size Distribution, Soil Classification, Color, Moisture Content, Sorting, Angularity, Mineralogy, Max Particle Size, Reaction to HCl	Comments: Depth of Casing, Drilling Method, Method of Driving Sampling Tool, Sampler Size, Water Level
0				0'-8.5': Silty Gravel (MG): 90%G, 10-15%M:	Diesel Percussion Hammer
				sub.rnd.-sub.ang. f.pbl.-sm.cbl. of bslt. color:	Add Water continuously
				10YR 4/3 brown.	
	Archive				8.5: Archive grab
5				• Downward coarsening.	
				8.5'-19': Sandy Gravel (sG) 65-70%G, 55-	
				80%S, v.w.-sub.rnd. v.f.pbl.-v.c.pbl. of 40%	8.5-9': Archive Grab
	Archive			bslt/60% fels, int. volc. + meta. w/ ang.c.-v.c.	
10				S. of 85% Qtz-felds., 15% Mafic.	
				• Alternating fine to coarse sed.	
				• Sand fraction alternating 30%-55%.	
					13-17': Archive Grab
15	Archive				
				• Gravel gradually coarsening downward.	
				19'-25': Gravelly Sand (gS) 65-70%S, 35-30%G	19-22': Archive Grab
20	Archive			v.f.-v.c. pbl w/ sprs sm.cbl. v.w.rndd. of 75%	
				fels. med. + volc., 25% bslt. Clasts discoidal w/ ang.	
				m.S. of 80% fels. Qtz., 20% Mafic. 10YR 4/3 brown.	
				AB 6.23.10	
25	Archive			• ~~Gradual downward coarsening~~ large Gradation	24-26': Archive Grab
				25'-35': Sandy Gravel (sG) 35%S, 65%G	
				sed. similar to above.	
					28': Drill rate slows gradually
30	Archive Sieve				29-31': Archive/Sieve grab
				34' Max clast size ↑ f.gravel w.rndd. sm.cbl.	33: Drill Rate ↑
35	Archive Sieve			35'-58.5': Sandy Gravel (sG) 75%G, 25%S.	
				v.w.-sub.rnd. f.-c.pbl. w/ sprs (10%) sm.cbl. of 70%	34-37': Archive/Sieve grab
				felsic meta. + volc., 30% bslt. w/ f.-c. S. of 90% Qtz-	
				felds. 10% Mafic. comp. Wet: ~~10Y~~ 2.5Y 3/2 Grayish brown.	

Reported By: A. Lontou | Reviewed By: L.D. Walker

Title: Geologist | Title: Geologist

Signature: Jason Lato | Date: 6.23.10 | Signature: [illegible] | Date: 10-12-10

A-6003-642 (03/03)

BOREHOLE LOG
199-H4-78

Page 2 of 2
Date: 6·24·10

Well ID: C7588 | Well Name: ~~199-H4-76~~ 199-H4-78 | Location: S.E. of 100-H Reactor.

Project: 100-HR-3 OU Pump + Treat Expansion | Reference Measuring Point: Ground Surface

Depth (Ft.)	Sample Type No.	Sample Blows Recovery	Graphic Log	Sample Description: Group Name, Grain Size Distribution, Soil Classification, Color, Moisture Content, Sorting, Angularity, Mineralogy, Max Particle Size, Reaction to HCl	Comments: Depth of Casing, Drilling Method, Method of Driving Sampling Tool, Sampler Size, Water Level
		6·23·10 ▼		35-58.5 Sandy Gravel (SG) 75%G, 25%S.	36-41 Archive / Sieve grab
40	Archive Sieve			v.w-sub.rndd. f.-c.pbl. w/sm.cbl. (<10%) of 70% felsic int. volc.+meta. w/ any-f.-m. S. of 90% Qtz-felds 10% mafic. comp. 2.5Y 5/2 Grayish brown. rxd. rxn w/ HCl.	Water Table: 40.1'
					44-46: Archive Sieve Grab
45	Archive Sieve			•45': 80%G, 20%S. - silt coating clasts < 5% 80% felsic + int. meta + volc. 20%-15% bslt.	
				•48': no silt. Sandy Gravel continues.	
50	Archive Sieve			•50': Gravels coarsening. f.pbl-sm.cbl. abndt. 85% felsic, 15% bslt. unconsolidated. abndt. micas.	49-51': Archive Sieve Grab
55	Archive Sieve				54-57: Archive Sieve Grab 56': Drill rate ↓ Stroke casing to 54' Casing lodged in Fm. @ 56'
	Archive			58.5-59.0: Silty Sandy Gravel (mSG) nodules of Carbonate present.	
60	Archive Split Spoon			v.w.rndd. vf.-c.pbl. of 95% felsic. meta-volc., 15% bslt. w/v.f-v.c. sub.ang. Sand of 95% Qtz-felds. *Gravels may be super imposed on Mud surface*	58.5': Drill Rate ↑ 58-59': Archive grab 59-60': Archive grab
				59.0-59.5 Gravelly Silt contact (graded)	59.5-61.5: Split Spoon
65			T.D.	w.rndd. v.c.pbl. of bslt. + felsic. comp. in 10YR 7/4 v.pale brown. clay. w/ sparse f.-m. Sand. 59.5-64.1: Silt (m): Clayey mod plasticity color: 2.5Y 5/2 grayish brown. w/ spts. rndd. m-v.c.pbl. of bslt + Qtzite.	59.5-61.5: Split Spoon B24D87, B24DB9, B24DB3 B24HF8, B24DD3. T.D.: 64.1'
70					
75					

Reported By: A. Lanton | Reviewed By: L.D. Walker
Title: Geologist | Title: Geologist
Signature: Aaron Lito | Date: 6·23·10 | Signature: [signature] | Date: 10-12-10

A-6003-642 (03/03)

BOREHOLE LOG

Page 1 of 3

Date: 3-23-10

Well ID: C7589 | Well Name: 199-D8-95 | Location: N-152160.76, E-573611.76, N.W. of DR Reactor

Project: 100-HR-3 OU Pump & Treat Well | Reference Measuring Point: Ground surface of well pad.

Depth (Ft.)	Sample Type No.	Sample Blows Recovery	Graphic Log	Sample Description: Group Name, Grain Size Distribution, Soil Classification, Color, Moisture Content, Sorting, Angularity, Mineralogy, Max Particle Size, Reaction to HCl	Comments: Depth of Casing, Drilling Method, Method of Driving Sampling Tool, Sampler Size, Water Level
0				0'-2': Coal slag from Coal fire plant. (drilling through slag discard pile.) Jet... Black	Diesel Percussion Hammer Reverse Circulation.
				2-7': Sandy Gravel (SG) 50%S, 50%G.	· Add water to prevent dust.
				m.-c. ang. Sand & v.f.-f. pbl. of 100% bslt.	
				Black from Slag overburden. Man made	5': Archive grab
5	Archive	good Full		gravel pad of 3/8 minus gravel.	
				7'-23': ~~Sandy Gravel (SG)~~ gravelly Sand (gS)	
				ang. f-m-c. S. of 85% Mafic w/ f. pbl -	
		100%		bldr. of bslt. (v.w.rndd.) Dry 10YR 3/3 grysh brown.	
		0%		60-70%S., 40-30%g. No rxn w/ HCl	
10	Archive	Highly Graded			10': Archive grab
15	Archive	Periodic Full			15': Archive grab · Add water
				· becoming less coarse.	
20	Archive	100% Full time		· 20': boulders absent. Cobbles of ~~fine~~ present sparse	20': Archive grab · Add water
				23-41': Sand. (S)	
25	Archive	100% Full Time		m.-v.c. ang. Sand w/ trace w.rndd. v.f. pbl. to ~~small~~ v.c. pbl. of bslt. Sand of 95% bslt. 10% Qtz. Black + White	25': Archive grab
30	Archive	Full Time			30': Archive grab
35	Archive	100%			35': Archive grab

Reported By: A. Lantau | Reviewed By: L.S. Walker

Title: Geologist | Title: Geologist

Signature: Aaron Lantau | Date: 3-23-10 | Signature: [signature] | Date: 3/26/10

A-6003-642 (03/03)

BOREHOLE LOG

Page 2 of 3
Date: 3/23/10

Well ID: C7589 | Well Name: 199-D8-95 | Location: N.W. of DR Reactor

Project: 100-HR-3 OU Pump + Treat well | Reference Measuring Point: Ground Surface

Depth (Ft.)	Sample Type No.	Sample Blows Recovery	Graphic Log	Sample Description: Group Name, Grain Size Distribution, Soil Classification, Color, Moisture Content, Sorting, Angularity, Mineralogy, Max Particle Size, Reaction to HCl	Comments: Depth of Casing, Drilling Method, Method of Driving Sampling Tool, Sampler Size, Water Level
40		100%		23'-41': Sand(S). m.-v.c.S. ang. w/trace w.rndd v.f-v.c.pbl. of bslt. Sand of 95% bslt. Blackish white.	
	Archive	100%		41'-45: Sandy Gravel 50-55%S, 50-45 G Normally Graded. f-c.pbl. v.w.rndd. of 90% bslt, 10% Qtz. + C. ang. S. of 95% bslt. 10-5% felsic. Moist. overall 10YR 2/1 Black. (Salt+pepper appearance)	42': Archive grab
45	Archive	Graded	Periodic	45'-55: Sandy Gravel-Gravel 90%G. 10% S Sub.rndd-w.rndd. f.-v.c.pbl. of 90% bslt, 10%S meta. w/ ang. c. S. of 90% bslt. Moist, 10YR 2/1 black • 48': 85% bslt. 15% meta. no rxn w/HCl Slightly silty.	• Hard Drilling @ 45' 45': Archive grab Stroke 48'-49'
50	Archive			• Coarsening downward. 80%-75% G. 20-25% S. Gravel: v.f.-sm.cbl. sub-v.w.rndd. w/v.f.-v.c. sub.rndd. Sand.	50: Archive Grab • ~~Stroke~~ at 3-23-10
55	Archive			55'-58': Silty Sandy Gravel (MSG) 70%G 20% S. 10% M. sub rndd-subang. v.f pbl-sm.cbl. of 60% Mafic bslt, 40% Meta. w/ v.f-v.c. sub rndd-sub.ang. Sand of 60% bslt, 40% felsic. slightly moist; Color: 10YR 3/3 v.drk.grayish brown. Strong rxn w/ HCl.	55: Archive Sample 55: v. Hard Drilling. • Stroke 58'-50'
60	Archive			58'-65': Felsic Dominant Silty Sandy Gravel 90% Felsic Metamorphics + Granits, 10% bslt. 70%G v.w.disoriented rndd. v.f.pbl-c.pbl. of 90% meta. w/ 20% S: m. qtz. felds. ang.-sub.rnd. Sand. Color: 10YR 3/3 H.dk. brown. mod. rxn w/HCl.	60: Archive Sample 61: Refusal → Stroke 61-55' • Add copious amount of water • Start backup compressor 1500 cfm.
65	Archive			65'-68: ~~Sandy Gravel (SG)~~ Gravelly Sand (gS) 80-85% S, 20-15% g: v.w.rndd. v.f pbl-c.pbl. of 95% Qtz, Meta. 5% bslt. in Bimodal Sand. Sand: f-m. sub-ang. grains of Qtz-felds, + 10% C. ang. grains of bslt. Color: 10YR 3/3 H.dk. brown.	65: Archive grab Slightly moist. mild rxn w/HCl
70	Archive Sieve			• 70'+ : Sandy Gravel (SG) 55%G, 45%S <10% silt. Sed. similar to above. 10YR 3/3 brown. mica present.	70': Archive/Sieve grab • Add water ~ equal
75	Archive Sieve				75': Archive/Sieve grab • Add water ~ equal
	Archive Sieve				79-80': Archive/Sieve grab

Reported By: A. Lanham | Reviewed By: L.D. Walker

Title: Geologist | Title: Geologist

Signature: Aaron Lanham | Date: 3/23/10 | Signature: [signature] | Date: 5/21/10

A-6003-642 (03/03)

BOREHOLE LOG

Page 3 of 3
Date: 3·23·10

Well ID: C7589 | Well Name: 199-D8-95 | Location: NW of DR Reactor

Project: 100-HR-3 OU Pump & Treat Well | Reference Measuring Point: Ground Surface

Depth (Ft.)	Sample Type No.	Sample Blows Recovery	Graphic Log	Sample Description: Group Name, Grain Size Distribution, Soil Classification, Color, Moisture Content, Sorting, Angularity, Mineralogy, Max Particle Size, Reaction to HCl	Comments: Depth of Casing, Drilling Method, Method of Driving Sampling Tool, Sampler Size, Water Level
	Archive			70'-80': Sandy Gravel (sG) 55%G, 45%S	·80': Refusal → Stroke 80'-75'
80	3-24-10	0%		f.-v.c. w.rndd-subrndd. pbls. of 98% felsic comp. w/	·Stroke 83.5'-75'
	Archive	10%	Graded	f.-m. sand of 98% Qtz. felds., 2% bslt. Dry.-moist.	82': Archive/Sieve grab.
		60%		10YR 5/3 brown to 10YR 5/3 lt. brownish gray.	·Stroke 85'-75'
		100%		80'-83.5': Gravel (G) 90%G, 10%S.	Extremely Hard Drilling
	Archive Sieve			·80-82': v.c. pbl-bldr. of 70% bslt, 30% Meta.	85': Archive/Sieve grab
85			Periodic Graded	w/10% fels. f.-m. ang. Sand. of 80% felsic.	·Stroke 86'-84'
				·82'-83.5': v.f-f. pbl., subrndd. of 60% felsic, 40%	Water: 80.5 (3-24-10)
				bslt. w/v.f-c. Sand. 80% felsic. 20-15%S	AZ 3-24-10
				83.5'-89: Sandy Gravel (sG) 80%G 20%S <10%m	
	Archive Sieve			v.w.rndd. v.c. pbl-sm. cbl. of 60% bslt, 40% Qtz > Granit >	
90				meta. w/ f-m.c. ang. Sand of ~~60%~~ 50% fels. ~~50% mafic~~.	90': Archive/Sieve grab
				89'-97.0: Silty Sandy Gravel (mSG) 75%G 15%S	
				10%m. v.w.rndd. f. pbl-sm. cbl. of 60% bslt, Andesite.	
				40% Meta > Dacite > granite w/ v.f.-v.c. Sand of	
95	Archive Sieve		Periodic Graded	70% felsic, 30% mafic. 65%G 15%S 20%m	95': Archive/Sieve grab
		Full		95': Silt content ↑ ~~60%G, 20%G, 15%S 15%m~~	AZ 3-24-10
				96': Clasts coated in $CaCO_3$ + Solid 1" nodules of	
	Archive	Full	Periodic	carbonate (crystaline) present.	
				97'-104.4: Silt. (M) 95%M, 5%g.	97'-98': Archive grab
		Short		·97-100': 10YR 5/3 lt. yllwsh. brown. w/w.rndd.	
100		Split Spoon 80% Recovery		C. pbl. of bslt + meta. slightly plastic - mild rxn w/ HCl	
	Archive			·100-104.4: 10YR 5/3 brown. w/ 5% c.-v.c. ang. Sh	101-102: Archive grab
				+ f. sub. rndd. pbls. (trace).	99-101.5: Split Spoon Sample
				·101': 100% silt. 10YR 5/3 brown.	B23PH8,
			T.D.		Bore Hole TD: 104.5
105					
110					
115					

Reported By: A. Lantzen | Reviewed By: L.D. Walker

Title: Geologist | Title: Geologist

Signature: [signature] Date: 3-24-10 | Signature: [signature] Date: 5/21/10

A-6003-642 (03/03)

BOREHOLE LOG

Page 1 of 3

Date: 3-10-10/

Well ID: C7590 | Well Name: 199-D5-130 | Location: N. 151928.16, E. 574039.43, E. of DR reactor

Project: 100-HR-3OU, Pump+Treat, Remedial Project Optimization | Reference Measuring Point: Ground Surface

Depth (Ft.)	Sample Type No.	Sample Blows Recovery	Graphic Log	Sample Description: Group Name, Grain Size Distribution, Soil Classification, Color, Moisture Content, Sorting, Angularity, Mineralogy, Max Particle Size, Reaction to HCl	Comments: Depth of Casing, Drilling Method, Method of Driving Sampling Tool, Sampler Size, Water Level
0					Diesel Percussion w/ Reverse
				0-6': Silty Sand w/ sparse gravel. 80%S, 20% M.	circulation.
				<5%g. sub ang.-ang. v.f.-v.c. Sand of bsalt.	will Add water intermittently
				w/ sub ang. f.-m. pbl. of bsalt. 2.5Y 5/3 H. olv. brn.	to aid returns.
5	Grab				5': Archive grab
				6'-10': Sandy Gravel to Gravelly Sand. 50%G, 50%S,	
				w. rndd. v.f.-pbl-S.cbl of bsalt w/ ang. C. Sand of	
				90% bsalt, 10% Qtz. Mesocratic Black+White.	
10	Grab			10'-15': Sand w/ sparse gravel. 95%S, ≤5%g	10': Archive grab
				ang. v.f.-C. ang. Sand of 50% mafic, 50% felsic comp.	
				w/ sparse w. rndd. f-m. pbl. of bsalt. Mesocratic.	
				Dry	
15	Grab				15': Archive grab
				15-20': Gravelly Sand. (GS) 80%S, 20%g.	16': Add water for returns.
				ang. v.c.-v.f. Sand of 50% mafic, 50% felsic comp. w/	
				w. rndd. f.-v.c. pbl. of bsalt. Mesocratic Black+white	
				Dry	
20	Grab				20': Archive grab
				20'-25': Sand (S) 100%S. Similar to above	
				Sans gravel fraction. Mesocratic (v.f.-v.c. ang.	
				grains)	
25	Grab			25'-28': Gravelly Sand (gS) 70%S, 30%g Matrix supptd.	25': Archive grab
				Bimodal sand; ang-subrndd. v.f.-C. sand of v.f.-f.	
				felsic fraction (75% felsic), + w. rndd m-v.c. sand fran. of bsalt (25%)	
				w/ w. rndd. m-v.c. pbl. of bsalt, andesite, greystone, int. volc.	
				28'-36': Silty Sand. (mS) 75%-80% S, 20-25% M	28'-30': Archive grab
30	Grab			v.f. ang. felsic sand w/ Dry 10YR 6/3 Pale brn.	
				silt. Unconsolidated. Dry. no rxn w/ HCl.	
35	Grab				29'-30': Archive grab
				36'-44': Sandy Gravel (sG) 75%G, 25%S.	
				Matrix Supported sub-w. rndd. v.f. pbl-m.cbl of bsalt +	Drill Rate 1'/5min.
				granitoid. w/ v.f-m. ang. Sand. 50% mafic, 50% felsic	Begin Stroking
				comp. Black overall color. Moist.	44': Add water for Returns.

Full Recovery; 10'/min; Intermittent Full Rtns; Continuous Rtns; Intermittent Rtns

Reported By: L. Lantow	Reviewed By: L. D. Walker
Title: Geologist	Title: Geologist
Signature: Aaron Lantow — Date: 3-10-10	Signature: [signature] — Date: 5/20/10

A-6003-642 (03/03)

BOREHOLE LOG

Page 2 of 3

Date: 3-10-10

Well ID: C7590 | Well Name: 199-D5-130 | Location: N.151928.16, E.574039.43; F of 100-DR-Reactor

Project: 100HR-3OU Pump+Treat Project Remedial Optimization (RPO) | Reference Measuring Point: Ground Surface

Depth (Ft.)	Sample Type No.	Sample Blows Recovery	Graphic Log	Sample Description: Group Name, Grain Size Distribution, Soil Classification, Color, Moisture Content, Sorting, Angularity, Mineralogy, Max Particle Size, Reaction to HCl	Comments: Depth of Casing, Drilling Method, Method of Driving Sampling Tool, Sampler Size, Water Level
40	G.S. (Grab Sample)			38'-44: Sandy Gravel 75%G, 25%S. Matrix supported. Sub-w. rndd v.f.pbl-M.cbl. of bslt w/ v.f-m. sand. of 50% mafic mat'l. Black overall. •41: Gravel comp. change to 20% Qtz. 80% bslt.	See pg 1. Diesel Hammer. Add water for Rtns. 40' archive grab. 41': Add H_2O for Rtns. Drill rate slows
45	G.S.			44'-55: Sandy Gravel. gravel size range change to f.pbl-v.c.pbl. Sand. coarsens to m-c. Sand trace silt. overall color: 10YR 4/3 dark grayish brown. moist	44' 45': Archive grab Sample (G.S.) 46': backstroke casing to 37' bgs.
	(G.S.) Grab			•48': 80%G, 20% Sand. Gravels of Granitoids, Bslt, Qtz, Mixed Metamorphics. ~~Dominant bslt.~~ At time Mixed metamorphics dominant. Gravel coarsens: f.pbl-sm.cbl. [Ringold E unit/Hanford interface]	48'-50': Archive grab
50					
55	G.S.	1ft/min.		•55'-57': 85%G, 15%S. Clast supported. 55'-62': Gravel (G.) <15%S w. rndd v.f.pbl-sm.cbl. of 95% felsic comp. w/ m.-c. Sand. ang. of 60 mafic, 40% felsic. Mesocratic Black & white, wet. Mod. Rxn w/ HCl.	55': Archive grab. Add water for returns. 60'-62': Archive Grab.
60	G.S.			60': Sand % increase 80%G; 20%S	62'-65: Archive Grab
65	G.S.			62'-68': Gravelly Sand (gS) 80%S, 20%g. Mo. grain, rndd-w. rndd Sand w/ <5% m. w/ w. rndd m.pbl-f.pbl. of felsic dom. comp. Color: 2.5Y 6/3 ~~H. Yellow~~ Pale Brown. lt. yellowish brn. Dry. Mica present. [Ringold FM, Upper Sand sequence] 68'-76': Sand (S) 100%S. Micaceous. vf.-m. grain, sub-rndd-ang. of 95% felsic comp. w/ 5% mafic grains. Dry. Color: 2.5Y 6/3 lt. yellowish brn.	
70	G.S.				70': Archive grab
75	G.S.			76'-95: Sandy Gravel (sG) 80%-75%G, 15-20% 15-20%S, mod.w. rndd. m.pbl-v.c.pbl. of 95% felsic volcanics & metamorphics. 5% bslt. w/ subang.-sub rndd v.f.-c. Sand w/ ~5-10% silt. 2.5Y 6/3 lt. yellowish brn. wet.	76': Archive grab. Stroke 84' → 78' v. hard pull.

Intermittent Returns. Full returns. intermittent

Reported By: A. Lanton		Reviewed By: L. D. Walker	
Title: Geologist		Title: Geologist	
Signature: Aaron Lanton	Date: 3-11-10	Signature: LD Walker	Date: 5/20/10

A-6003-642 (03/03)

BOREHOLE LOG

Page 3 of 3

Date: 3-11-10

Well ID: C2590 | Well Name: 199-D5-13D | Location: Sec Pg 1.

Project: ~~Sec Pg~~ 1. 100 NR-3 Pump & Treat | Reference Measuring Point: Ground Surface

Depth (Ft.)	Sample Type No.	Sample Blows Recovery	Graphic Log	Sample Description (Group Name, Grain Size Distribution, Soil Classification, Color, Moisture Content, Sorting, Angularity, Mineralogy, Max Particle Size, Reaction to HCl)	Comments (Depth of Casing, Drilling Method, Method of Driving Sampling Tool, Sampler Size, Water Level)
80	G.S. Sieve	Intermittent		76'-95': Sandy Gravel (SG) 75-80%G, 15-25%S,	80': Archive grab/Sieve grab
				0-10%m. v.w.rnd. M-v.c.pbl. of 95% felsic comp.	
				Metamorphics > Qtz > granit > bslt. Dacite present. w/	v. hard drilling.
				sub ang-sub rnd v.f.-v.c. Sand. of 95% Qtz-feldsp.	Refusal 84'. Stroke 84'-78'.
				wet. Color: 5Y 5/3 olive. matrix.	82': Water Table 3-11-10
85	G.S. Sieve			·85': Clast size increase to large cobble. (based on activity)	85': Archive/Sieve grab
				largest clasts 9" diameter of bslt.	Stroke 90-87'
				·88': silt not present	
90	G.S. Archive Sieve				90': Archive/Sieve grab
					Stroke 92-87'
	Split Spoon				92.9': Archive grab/Sieve
95	Archive Sieve	Split Spoon		95.0': Sandy Silt/Clay - Sandy Clayey Silt.	
				10%-15% Sand: vf-m. felsic grains. in highly plastic	95'-96': Archive of RUM.
				clayey silt. Compact. 10YR 5/3 brown.	Contact.
				v. Sharp Contact w/above stratum.	
				very compact layer 1" thick @ 96' bgs.	96.0-98.5': Split Spoon
100	Archive	3-11-10		·w. rnd. sm. cbl. of bslt present + very sparse.	soil chem. sample. 3-11-10
				·Clay nodules present in soft silt matrix.	HEIS# B23PH9, B23B10
				no rxn w/ HCl	equipment blank on shoe + liner
					ran in morning. 3-11-10
105					96.0'-101.4': Archive grab.
					Borehole TD: 101.4'
110					
115					

Reported By: A. Lanton		Reviewed By: L.D. Walker	
Title: Geologist		Title: Geologist	
Signature: Aaron Lanton	Date: 3-11-10	Signature: LD Walker	Date: 5/20/10

A-6003-642 (03/03)

BOREHOLE LOG

Page 1 of 3

Date: 2.23.10 /224

Well ID: C7591	Well Name: 199-D5-~~127~~ 124	Location: E: 572992.87	N: 151428.66
Project: 100 HR-3 Pump + Treat		Reference Measuring Point:	ground surface

Depth (Ft.)	Sample Type No.	Sample Blows Recovery	Graphic Log	Sample Description: Group Name, Grain Size Distribution, Soil Classification, Color, Moisture Content, Sorting, Angularity, Mineralogy, Max Particle Size, Reaction to HCl	Comments: Depth of Casing, Drilling Method, Method of Driving Sampling Tool, Sampler Size, Water Level
0	....			0'-13' gravelly Sand (gS); 25% sub rounded fine - coarse pebbles, 70% medium sand, <5% silt, color, moist 7.5YR 4/3 (brown), moderate HCl rxn, well sorted, 30% mafic, 70% felsic	Becher Hammer 10 3/4" x 8" dual wall archive sample every 5', type ID: "AS"
5	A.S.			occasional large cobble (150±mm) with depth	
				@ 5' boulders encountered	
				@ 9' bgs returns are very poor	
10	A.S. poor recovery				Sample at ten ft, has poor recovery.
				13'-32' Sandy Gravel (sG): 45% sub-rounded fine to coarse pebbles w/ occasional small cobble, 50% medium to coarse sand, <5% silt. Color, moist, 10YR 3/1 (very dark gray), no HCl rxn, well sorted. 65% mafic, 35% felsic.	
15	A.S.				
20	A.S.			@ 21' decrease in pebbles, new comp: 30% pebbles, 65% sand, <5% silt	
25	A.S.				
30	A.S.				
				32'-52' Gravelly Sand, (gS): 15% sub rounded very fine to medium pebbles, 80% coarse to very coarse sand, <5% silt color, moist, (GLEY 2 10B (black black), no HCl reaction, well sorted, 65% mafic, 35% felsic	
35	A.S.				

Reported By: A. Parsons		Reviewed By: L.D. Walker	
Title: Field Geologist		Title: Geologist	
Signature:	Date: 2.23.10	Signature:	Date: 5-19-10

A-6003-642 (03/03)

BOREHOLE LOG

Page 2 of 3
Date: 2.24.10

Well ID: C7541 | Well Name: 199-D5-127 | Location: E: 572992.87 N: 151428.66

Project: 100HR-3 Pump+Treat | Reference Measuring Point: ground surface

Depth (Ft.)	Sample Type No.	Sample Blows Recovery	Graphic Log	Sample Description: Group Name, Grain Size Distribution, Soil Classification, Color, Moisture Content, Sorting, Angularity, Mineralogy, Max Particle Size, Reaction to HCl	Comments: Depth of Casing, Drilling Method, Method of Driving Sampling Tool, Sampler Size, Water Level
40	AS.			32'-52' Gravelly Sand, gS: 15% sub-rounded very fine to medium pebbles, 80% coarse to very coarse sand <5% silt. Color, moist, GLEY2 10B (bluish black), no HCl rxn. well sorted. 65% mafic, 35% felsic	Becker Hammer 10¾"x8" dual wall medium sample every 5'. type ID: "AS"
45	AS.			@45' + occasional large pebbles with depth	
50	AS.				
				52'-64' Sandy Gravel, sG: 60% sub-rounded medium to v. coarse pebbles, 35% coarse to v. coarse sand, <5% silt Color, wet, GLEY2 10B (bluish black), no HCl rxn, moderatly sorted, [illegible] mafic [illegible] felsic	
55	AS.				
60	AS.				
				64'-101' Sandy Gravel: 65% sub-rounded medium to very coarse pebbles, 30% v. fine to coarse sand, <5% silt. Color, moist, 7.5YR 4/4 (brown). Strong HCl rxn. moderatly sorted, 50% mafic, [illegible] felsic	
65	A.S.				
70	A.S.			@70' poor returns	@70' drilling becomes very slow.
75	AS	Poor returns			

Reported By: A. Pappas | Reviewed By: L.D. Walker

Title: Field Geologist | Title: Geologist

Signature: [illegible] | Date: 2.24.10 | Signature: [illegible] | Date: 5/19/10

A-6003-642 (03/03)

BOREHOLE LOG

Page 3 of 3

Date: 2.24.10

Well ID: C7591 | Well Name: 199-D5-127 | Location: E: 572992.87 N: 151428.66

Project: 100HR-3 Pump & Treat | Reference Measuring Point: ground surface

Depth (Ft.)	Sample Type No.	Sample Blows Recovery	Graphic Log	Sample Description: Group Name, Grain Size Distribution, Soil Classification, Color, Moisture Content, Sorting, Angularity, Mineralogy, Max Particle Size, Reaction to HCl	Comments: Depth of Casing, Drilling Method, Method of Driving Sampling Tool, Sampler Size, Water Level
80	A.S.			64' – 104' Sandy Gravel; SG, 65% sub-rounded medium to very coarse pebbles, 30% v. fine to coarse sand, < 5% silt. Color, moist, 7.5YR 4/2 (brown) Strong HCl rxn. Moderatly sorted, 50% Mafic, 50% felsic	• Becker Hammer • 10 3/4" x 8" dual wall • archive sample every 5'. type ID: "A.S." • since 70' very slow drilling speed
85	A.S. S.S.			@85' decrease in sand, increase in silt & pebbles new comp. 75% pebbles, 20% sand, 10% silt	• Depth to water at 85.2' • Sieve sample every 5' below water to compile into 10' sample. type ID: "S.S."
90	S.S. A.S.				
95	S.S. A.S.			C96' increase in amt. of small cobbles (67mm – 100mm)	
100	S.S. A.S.			C99' increase in silt & fine sand. 101'–106' Gravelly silt, gM: 75% medium to coarse pebbles, 5% fine to very fine sand, 80% silt. Color, moist, 7.5YR 5/3 (Brown). medium HCl rxn moderate plasticity. poor sorting. 60% mafic 40% felsic	
105	A.S.			106'–109' Silt, M: 99% M, <1% very fine sand. Color, moist, 10YR 6/2 (light brownish gray). no HCl reaction. V. weak plasticity. Very well sorted.	
110	A.S.		TD 109'		

Reported By: A. Pappas		Reviewed By: L.D. Walker	
Title: Field Geologist		Title: Geologist	
Signature:	Date: ~~4.24.10~~ 2.24.10	Signature:	Date: 5-19-10

A-6003-642 (03/03)

BOREHOLE LOG

C7592 LW 5-19-10

Page 1 of 3

Date: 3.3.10

Well ID: 199-D6-1 | Well Name: 199-D6-1 | Location: E: 574129.64 N: 151691.50

Project: 100 HR-3 Pump & Treat | Reference Measuring Point: ground surface

Depth (Ft.)	Sample Type No.	Sample Blows Recovery	Graphic Log	Sample Description: Group Name, Grain Size Distribution, Soil Classification, Color, Moisture Content, Sorting, Angularity, Mineralogy, Max Particle Size, Reaction to HCl	Comments: Depth of Casing, Drilling Method, Method of Driving Sampling Tool, Sampler Size, Water Level
					Becker Hammer
0	....			0'- 7' Silty Sandy Gravel, nSG:	10 3/4" x 8" dual wall casing
				35% sub rounded medium to v. coarse	Auxiliary Sample every 5',
				pebbles, 55% fine to v. fine sand,	type ID - "AS."
				10% silt. Color, moist, 10YR 4/3. (brown)	
				strong HCl rxn. moderate sorting. 70%	
5	A.S.			mafic, 30% felsic	
				7'- 23' Sandy Gravel, sG: 65%	
				Sub rounded medium to v. coarse pebbles	
				and occasional small cobble (100mm max), 30% sub-	
10	A.S.			rounded medium to coarse sand, 5%	
				silt. Color, moist. 7.5YR 3/1 (v. dark	
				grey). moderate HCl rxn, moderate sorting	
				75% mafic, 25% felsic.	
15	A.S.			at 15' HCl rxn is non-evident.	
20	A.S.			at 19' sand composition becomes coarse	
				23'- 48' Gravelly Sand, gS: 15%	
25	A.S			rounded medium to coarse pebbles, occasional	
				small cobble (110 mm max), 80% coarse-	
				sub-rounded sand, 5% silt. Color,	
				moist, 7.5YR 3/1 (v. dark grey). no HCl rxn,	
				well sorted. 80% mafic, 20% felsic.	
30	A.S				
35	A.S				

Reported By: A. Pappas | Reviewed By: L.D. Walker

Title: Field Geologist | Title: Geologist

Signature: | Date: 3.3.10 | Signature: | Date: 5-19-10

A-6003-642 (03/03)

BOREHOLE LOG

Page 2 of 3

Date: 3.3.10

AA 3.3.10

Well ID: ~~199-D6-1~~ C7592	Well Name: 199-D6-1	Location: E: 574129.64	N: 151691.50
Project: 100 HR-3 Pump+Treat		Reference Measuring Point:	Ground Surface

Depth (Ft.)	Sample Type No.	Sample Blows Recovery	Graphic Log	Sample Description: Group Name, Grain Size Distribution, Soil Classification, Color, Moisture Content, Sorting, Angularity, Mineralogy, Max Particle Size, Reaction to HCl	Comments: Depth of Casing, Drilling Method, Method of Driving Sampling Tool, Sampler Size, Water Level
40	A.S.			23'-48' Gravelly Sand, gS: 15% rounded medium to coarse pebbles, occasional small cobbles (110mm max), 80% sub-rounded coarse sand, <5% silt. Color, moist, 7.5YR3/1 (v. Dark Gray). no HCl rxn. well sorted. 80% mafic, 20% felsic	Becker Hammer 10 3/4" x 8" dual wall casing Archive sample every 5' type ID - "A.S."
45	A.S.				at 46' drill speed slows
50	A.S.			48'-62' Sandy Gravel, sG: 45% sub rounded fine to coarse pebbles, occasional small cobble (90mm max), 50% fine to sub rounded coarse sand, and <5% silt. Color, moist, 7.5YR3/1 (v. dark gray). moderate HCl rxn. moderatly sorted. 60% mafic 40% felsic	
55	A.S.				
60	A.S.				
65	A.S.			62'-72' Gravelly Sand, gS: 20% sub-rounded medium to coarse pebbles (45mm max), 70% fine to medium sand, 10% silt. Color, dry, 10YR 6/3 (pale brown) moderatly sorted, v. weak HCl rxn. 30% mafic, 70% felsic	
70	A.S.				
75	A.S.			72'-97' Sandy Gravel, sG: 75% sub rounded medium to v. coarse pebbles (55mm max), 20% fine to med sand, 5% silt. color, moist, 10YR 4/2 (dark grayish brown). Strong HCl rxn. moderatly sorted. 50% mafic, 50% felsic	

Reported By: A. Pappas		Reviewed By: L.J. Walker	
Title: Field Geologist		Title: Geologist	
Signature:	Date: 3.3.10	Signature:	Date: 5/19/10

A-6003-642 (03/03)

BOREHOLE LOG

Page 3 of 3
Date: 3.3.10 – 3.4

Well ID: 199 C7592 | Well Name: 199-D6-1 | Location: E: 574129.64 N: 151691.50

Project: 100HR-3 Pump + Treat | Reference Measuring Point: ground surface

Depth (Ft.)	Sample Type No.	Sample Blows Recovery	Graphic Log	Sample Description: Group Name, Grain Size Distribution, Soil Classification, Color, Moisture Content, Sorting, Angularity, Mineralogy, Max Particle Size, Reaction to HCl	Comments: Depth of Casing, Drilling Method, Method of Driving Sampling Tool, Sampler Size, Water Level
80	A.S.			72'–97' Sandy Gravel, SG: 75% sub-rounded medium to v. coarse pebbles, (50mm max), 20% fine to medium sand, 5% silt. Color, moist, 10YR 4/2 (dark grayish brown). Strong HCl rxn. moderatly sorted. 50% mafic, 50% felsic.	Becker Hammer 10¾"x8" dual wall Archive Sample every 5', type ID - "A.S." Sieve Sample collected every 5' for 10' completion below est. water depth (80'). type ID - "S.S" DTW 87.1' (3.4.10)
85	A.S. S.S.				
90	A.S. S.S.			at 89' increase in amount of sand, new composition: 60% pebbles, 35% sand, 5% silt.	
95	A.S. S.S.			at 95' no HCl rxn.	~~DTW 93.14 (3.4.10)~~ AP 3.3.10 ·94' - Drill speed v. slow.
100	A.S. S.S.			97'–101' Gravel, SG: 90% angular fine to v. coarse pebbles, occasional cobble (max 90mm), 10% sub-angular medium to coarse sand. Color, wet, 10YR 5/3 (brown). No HCl rxn, poorly sorted. 65% mafic, 35% felsic.	•Split Spoon collected 101.6'–103.6' - HES B23PD5
105	A.S.			101'–107' Mud/silt M: <5% fine to medium rounded pebbles, 95% silt. Color, moist, 7.5YR 5/2 (brown). No HCl rxn. well sorted. Weak stratigraphy, pebbles decrease significantly with depth. @102 pebbles <1%	
	A.S.		107 TD		

Reported By: A. Pappas		Reviewed By: L.d. Walker	
Title: Field Geologist		Title: Geologist	
Signature:	Date: 3.3.10 3.4.10	Signature:	Date: 5-19-10

A-6003-642 (03/03)

BOREHOLE LOG

Page 1 of 3
Date: 4.8.10

Well ID: C7593 | Well Name: 199-D8-99 | Location: N. 1523439, E. 574008.34, Next to Transfer Station.

Project: 100 HR-3 Pump Test | Reference Measuring Point: Ground Surface

Depth (Ft.)	Sample Type No.	Sample Blows Recovery	Graphic Log	Sample Description: Group Name, Grain Size Distribution, Soil Classification, Color, Moisture Content, Sorting, Angularity, Mineralogy, Max Particle Size, Reaction to HCl	Comments: Depth of Casing, Drilling Method, Method of Driving Sampling Tool, Sampler Size, Water Level
0					· Becker Hammer
				0-24 Sandy Gravel (SG) 65% rounded fine to coarse pebbles, 30% medium to coarse sand 5% silt. moderatly sorted color, moist, 7.5YR 3/2 (dark brown). no HCl rxn. 70% mafic, 30% felsic	· 10 3/4" x 8" dual wall, 60 lbs/ft · water as needed
5	archive				at 5' archive collected
					· 8': Add water
				at 8' increase in silt, new composition 65% pebbles, 25% sand, 10% silt.	
10	archive				at 10' archive collected · 10': Add Water
15	archive				at 15' archive collected · Add water
20	archive				at 20' archive collected
				24-32 Sandy Gravel (SG): 55% sub-rounded medium to v. coarse pebbles and small cobbles (100mm max), 40% medium to v. coarse sand, <5% silt. moderatly sorted. color, wet, Gley 1 2.5/N (black). no HCl rxn. 85% mafic, 15% felsic.	
25	archive				at 25' archive collected
30	archive				at 30' archive collected.
				32-43 Sand (S): 10% sub-rounded fine to coarse pebbles, 85% medium to v. coarse sand, <5% silt. well sorted. color, wet, Gley 1 2.5/N (black). no HCl rxn. 85% mafic, 15% felsic	
35	archive				at 35' archive collected
				hd 4.9.10	

Reported By: A. Lantzer		Reviewed By: L.D. Walker	
Title: Geologist		Title: Geologist	
Signature: Aaron Lantzer	Date: 4.9.10	Signature: LD Walker	Date: 5-19-10

A-6003-642 (03/03)

BOREHOLE LOG

Page 2 of 3

Date: 4.8.10

Well ID: C7593	Well Name: 199-D8-99	Location: Next to 100-D Pump+Treat Transfer Station	
Project: 100 HR-3 Pump + Treat		Reference Measuring Point: Ground Surface	

Depth (Ft.)	Sample Type No.	Sample Blows Recovery	Graphic Log	Sample Description: Group Name, Grain Size Distribution, Soil Classification, Color, Moisture Content, Sorting, Angularity, Mineralogy, Max Particle Size, Reaction to HCl	Comments: Depth of Casing, Drilling Method, Method of Driving Sampling Tool, Sampler Size, Water Level
40	archive			32-43 Sand (S): 10% sub-rounded fine to coarse pebbles, 85% medium to v. coarse sand. <5% silt, well sorted, color, wet, Gley 2 5/N (black). no HCl rxn. 85% mafic, 15% felsic.	archive collected at 40'. Baker Hammer. 10 3/4" x 8" dual wall, 60 lbs/ft. water as needed
45	archive	cw 6/30/11		43-57' Sandy Gravel (SG): 60% sub-angular medium to v. coarse pebbles, 35% v. fine to medium sand, 5% silt. ~~Moderately~~ Moderate sorted, color, dry, 5Y 6/2 (light olive gray), weak HCl rxn. 95% felsic/ 5% mafic. Sparse sm. cbl. (3-5%).	archive collected at 45'. Stake 48-45'
50	Sieve Archive			50': Gravel coarsens v.f.pbl-sm.cbl. spts. l.cbl. mafic. bslt. sub.rndd. felsic clasts. v.w.rndd.	50': Archive grab/Sieve Grab
55	Sieve Archive				55': Archive/Sieve grab
60	Archive			57-65': ~~Sand~~ Gravelly sand (gS) grading to Sandy Gravel (SG) 90-95%S. 10-60%G. 57-63: c. subang. Sand of 80% felsic comp. w/ 10% v.w.rndd. m.-c.pbl. of 98% metamorphics (felsic) Color 10YR 8/3 brown. wet. no silt. 63-65': 60% m-v.c. ang. Mafic Sand w/ 40% v.w.rndd m.-c.pbl of 98% fels. meta. Color Black + White. Gravels may be from above interval of felsic comp. Moist. Wet.	58': Archive/Sieve grab. Fast Drilling. 60': Archive/Sieve grab. Water: 64.5', 4.9.10. 65': Archive/Sieve grab
75	Archive Sieve			65'-81': Sandy Gravel (SG) 70-80%G, 30-20%S. 0-10%M. v.f.pbl-v.c.pbl. v.w.rndd. of 98% felsic meta. w/ f.-c.S. of 98% felsic comp. Color: 2.5Y 4/3 olv. brown. wet. Gravels discoidal. no rxn w/ HCl. cw 6/30/11 ~~70: 20% silt to 15% AK 4.9.10~~ ~~70': slightly silty sandy gravel (g) SG~~ 77': 10% sm. cbl. of Metamorphics present.	70': Archive/Sieve grab. 75': Archive/Sieve grab

Reported By: A. Lantau		Reviewed By: L.D. Walker	
Title: Geologist		Title: Geologist	
Signature: Aaron Lat	Date: 4.9.10	Signature: LD Walker	Date: 5/19/10

A-6003-642 (03/03)

BOREHOLE LOG

Page 3 of 3

Date: 4.9.10

Well ID: C7593 | Well Name: 199-D8-99 | Location: Next to 100-D Pump + Treat Transfer Station.

Project: 100-HR-3 OU Pump & Treat Remedial Alternative 5 | Reference Measuring Point: Ground Surface

Depth (Ft.)	Sample Type No.	Sample Blows Recovery	Graphic Log	Sample Description: Group Name, Grain Size Distribution, Soil Classification, Color, Moisture Content, Sorting, Angularity, Mineralogy, Max Particle Size, Reaction to HCl	Comments: Depth of Casing, Drilling Method, Method of Driving Sampling Tool, Sampler Size, Water Level
80				65'-81': Sandy Gravel (SG) 80%G, 15%S, 5%M	80': Archive / Sieve grab
				v.w.rndd. discoidal, f.pbl.-sm.cbl. of 98% felsic meta.	
		Full		w/m.-c. subrnd. Sand of 98% Qtz.-felds. 2% mafic.	82'-84.5': Split Spoon Sample
	Split Spoon	100%		2.5Y 5/3 olv. brown. no rxn w/ HCl.	1323PX1. 4.9.10
				81'-84': Gravelly Silt (gM) 75%M, 5%g.	84.5': Archive grab
85				v.plastic, clayey, Silt. 10YR 5/3 lt. olv. brown. no rxn w/HCl.	
				w/ subrndd. v.c.-c. pbl. of 99% bslt. 1% felsic meta.	
				84'-89 (TD): Silt. (M) non-slightly plastic	
				10YR 4/3 brown. slightly damp. Small f.pbl-sized pieces	
	Archive			of $CaCO_3$. Silt no rxn w/ HCl.	89': Archive grab
			T.D.		
90					
95					
100					

Reported By: A. Lantow | Reviewed By: L.A. Walker

Title: Geologist | Title: Geologist

Signature: Aaron Lantow | Date: 4.9.10 | Signature: [illegible] | Date: 5/19/10

A-6003-642 (03/03)

BOREHOLE LOG

Page 1 of 2

Date: 3-15-10/3-16-10

Well ID: C7594 | Well Name: 199-D7-4 | Location: N. 15 236954, E. 574376.96. SE. of DR reactor

Project: 100-HR-3 OU. Pump & Treat. Project Optimization | Reference Measuring Point: Ground Surface

Depth (Ft.)	Sample Type No.	Sample Blows Recovery	Graphic Log	Sample Description (Group Name, Grain Size Distribution, Soil Classification, Color, Moisture Content, Sorting, Angularity, Mineralogy, Max Particle Size, Reaction to HCl)	Comments (Depth of Casing, Drilling Method, Method of Driving Sampling Tool, Sampler Size, Water Level)
0				0-4': Silty/Loamy Sand (m S) 70%S, 30%m. v.f.-m. Sand w/ 2.5Y 4/3 olv. brn. silt. Moist. • Sparse well rndd. m-v.f. pbl. of bslt.	Diesel Percussion Hammer Reverse Circulation. 4': Archive Grab
	Grab	Full	Rtns.		
5				4'-8': Silty Sandy Gravel (m S G) 40-50%G, 40-50%S 0-20% m; w.-sub rndd. v.c. pbl-m. pbl of 85% bslt. 15% intermediate volc. Dacite present. w/ ang. m-v.f. Sand. 2.5Y 4/3 olv. brn. matrix. Dry	
	Grab	Periodic	Rtns. Graded.		
10				8-17': Sandy Gravel (s G) 70%G, 30%S. w.-sub rndd v.f. pbl-sm. Cbl of 80% bslt, 20% felsic w/ sub-ang. C-v.c. Sand of 80% matrix-90% mafic 10% felsic. Mesocratic Black & White color.	10': Archive Grab
15					
				AS 3-15-10 17-30':	
	Grab	Full	Rtns.	17-19': Slightly Silty Gravelly Sand (m) g S. 55%S, 30%g, 15%m; w.-sub-ang. f.-m. pbl of 90% Mafic, 10% felsic metamorphics. w/ ang. v.c. AS 3-15-10 v.f-C Sand of 60% felsic, 40% mafic comp. Dry 2.5Y 4/3 olv. brn. mod rxn w/ HCl	16-18': Archive Grab
20					
25	Grab				25': Archive Grab
30				AS 3-15-10 30'-34': Gravel (~~pebbles~~) (G) 85-90%G 10-15%S. v.f. pbl-L. Cbl. of w. rndd. bslt. w/ v.f. pbl-v.c. pbl. of w. rndd. 90% bslt., 10% felsic meta./m.-v.c. Sand. Mesocratic Black & White whole color.	31': Archive Grab • Add Water
	Grab	Periodic/ Graded	Rtns.		
35	Grab	Periodic/ Graded	Rtns.	34'-44': Sandy Gravel (sG) 75-80%G, 25-20%S. w. rndd f. pbl-v.c pbl of 80% bslt, 20% felsic meta. w/ ang. med. Sand of 60% felsic, 40% mafic comp. Damp-Wet (from drilling) Matrix color: 2.5Y 4/3 olv. brn. v. mild rxn. w/ HCl	35': Archive Grab • Add Water • 34': Drill Rate almost Stop.

Reported By: A. Lantow		Reviewed By: L. D. Walker	
Title: Geologist		Title: Geologist	
Signature: Aaron Lantow	Date: 3-16-10	Signature: L D Walker	Date: 5/18/10

A-6003-642 (03/03)

BOREHOLE LOG

Page 2 of 2

Date: 3-15-10/3-15-10

Well ID: C7594 | Well Name: 199-D7-4 | Location: See pg 1.

Project: See pg 1. | Reference Measuring Point: See pg 1.

Depth (Ft.)	Sample Type No.	Sample Blows Recovery	Graphic Log	Sample Description: Group Name, Grain Size Distribution, Soil Classification, Color, Moisture Content, Sorting, Angularity, Mineralogy, Max Particle Size, Reaction to HCl	Comments: Depth of Casing, Drilling Method, Method of Driving Sampling Tool, Sampler Size, Water Level
40	Sieve Grab	Periodic	Stratified	34'-44': Sandy Gravel (sG): 75-80%g, 20-25%S f.-v.c. pbl. w.-sub-rndd. of 80% felsic, 20% mafic w/ ang. m. Sand of 60% felsic, 40% mafic comp. v. mild rxn w/ HCl. Matrix Color: 2.5Y 4/3 H. ylwsh. brown.	Diesel Percussion. 40': Archive Grab
45	Sieve Grab	Full		44'-47': Sand (S): ang. v.f-m. Sand of 99% felsic, 1% mafic. Dry. 2.5Y 4/3 H. ylwsh. brn. no Rxn w/ HCl.	44'-47': Archive/Sieve Grab
		Full		47'-49': Gravelly Sand (gS) 40%g 60%S. f.-c. pbl. w.-vw. rndd. of 70% felsic comp. w/ ang. m.-c. Sand of 95% felsic comp. Color: 2.5Y 4/3 H. ylwsh. brn.	Color: 2.5Y 4/3 H. olv. brn.
50	Sieve Grab	Periodic		49-60': Sandy Gravel (sG) 75%G, 25%S, <5%M sub-rndd-w. rndd. f. pbl-sm cbl. of 85% felsic, metamorphics 15% Bslt. w/ sub-ang.-sub-rndd. v.f.-c. sand of 80% felsic comp. Matrix color: 2.5Y 4/3 dk olvgrsh. brn. Wet.	50': Archive/Sieve Grab. 54.5': Static Water 7-16-10
55	Sieve Grab		Graded		55': Archive/Sieve
60	Sieve Grab	Periodic	v. Graded	60'-64': Silty Sandy Gravel (mSG) 60%G, 25%S 15%M: sub-w. rndd. sm-c. pbl. of 85% felsic meta. w/ ang. f-m. felsic Sand. Sticky to touch. Matrix. 10YR 4/3 brn. Damp. no rxn w/ HCl	60': Archive Sieve
65	Sieve Grab	Graded	Full	64'-71': Sandy Gravel (sG) 75-80%G, 20-25%S v.w. rndd. m.-c. pbl. of 85% felsic meta. Color: 10YR 5/3 brn. wet.	64': v. Hard Drilling. Add Water
70	Sieve Grab	Full		71'-72': Gravelly Silt 45%G, 40-55%M. v.w. rndd m. pbl. of both. in 10YR 5/3 brn. silt. wet. Plastic.	Stroke 68'-64'
	Archive	Poor Possible Stratified		72'-74': Gravel: v.w. rndd. m. pbl-sm. cbl. of 85% felsic 15% mafic. comp. (may actually be residual from above)	68': Archive/Sieve grab. Add Water. 70'-71': Archive grab
75	Grab	Full 100%		74'-77.4': Clayey Silt: Plastic 10YR 5/2 H. brownish gry. w/ nodules of Caliche. v. strong rxn w/ HCl. Moist. 77': Color 10YR 3/3 brown. w/ 10% mottling of 10YR 5/2 H. brownish. gry.	75'-77.5': Split Spoon. 4" ID. B23R10. Archive. Chem 3
	split spoon				
	TD				

Reported By: A. Lanton | Reviewed By: L. J. Walker

Title: Geologist | Title: Geologist

Signature: Aaron Lanton | Date: 3-16-10 | Signature: L J Walker | Date: 5-19-10

A-6003-642 (03/03)

BOREHOLE LOG

Page 1 of 2
Date: 6-14-10 / 6-14-10

Well ID: C7595 | Well Name: 199-H4-80 | Location: N: 152568.23m E: 573239.41m

Project: 100 HR-3 P+T | Reference Measuring Point: Ground Surface (G.S.) @ 6-14-10

Depth (Ft.)	Sample Type No.	Sample Blows Recovery	Graphic Log	Sample Description: Group Name, Grain Size Distribution, Soil Classification, Color, Moisture Content, Sorting, Angularity, Mineralogy, Max Particle Size, Reaction to HCl	Comments: Depth of Casing, Drilling Method, Method of Driving Sampling Tool, Sampler Size, Water Level
0				(Ground Surface)	Becker Hammer drilling 10 3/4" x 8" dual wall. 60 lb/ft hammer. Water added as needed.
				0.0 - 1.5 'bgs: Sandy gravel (sG) ~70% v. fine to v. crs, sub-rnd to v. ang gravels, 30% v. fine to v. crs sand, dry, loose, 70% mafic, 30% fels, strong rxn w/HCl; 7.5YR 7/1, "light gray."	
5	Archive G.S.			1.5 - 10.0 'bgs: silty, sandy, gravel (msG) ~60% v. fine to coarse, sub-rnd to v. angular gravel, 20% v. fine to v. coarse sand, ≤20% silt, damp, semi-compact, 70% mafic, 30% fels, no rxn w/HCl, 7.5YR 2.5/1, "black".	· Archive g.s. (grab sample) @ 5' bgs. · H_2O added - damp soils · Archive g.s. @ 10' bgs
10	Archive G.S.			10.0 - 32.5' bgs: Sand, gravel (sG) ~70% v. fine to pebbles to small cobbs (100mm) @ 6-14-10, 20% v. fine to v. coarse sand, ≤10% silt, damp, v. loose, 80% mafic, 20% fels, no rxn w/HCl, 10YR 4/2, "dark grayish brown".	
15	Archive G.S.				· Archive g.s. @ 15' bgs
20	Archive G.S.			→ silt inc. to 20%, grav. dec to 60%, @ ~20' bgs.	· Archive @ 20' bgs
25	Archive G.S.			→ @ ~25' bgs, silt dec to ≤10%, sand inc. to 30%.	· Archive @ 25' bgs.
30	Archive G.S.			→ @ 6-14-10	· Archive @ 30' bgs.
				32.5 - 40 'bgs: gravel (G) ~85% v. fine pebbs to sm. cobbs (110mm), sub-rnd to very ang, 15% v. fine to v. coarse sand, damp, loose, no rxn w/HCl, 2.5Y 3/1, "very dark gray"; 85% mafic, 15% felsic.	· Archive @ 35' bgs.
35	Archive G.S.				

(see pg. 2) (see pg 2 →)

Reported By: T. Buswell		Reviewed By: L. D. Walker	
Title: Geologist		Title: Geologist	
Signature: [signature]	Date: 6/14/10	Signature: [signature]	Date: 7/15/10

A-6003-642 (03/03)

BOREHOLE LOG

Page 2 of 2

Date: 6-14-10 / 6-16-10

Well ID: C7595 | Well Name: 199-H4-80 | Location: N: 152568.23m E: 575239.41

Project: 100 HR-3 P+T | Reference Measuring Point: Ground Surface

Depth (Ft.)	Sample Type No.	Sample Blows Recovery	Graphic Log	Sample Description (Group Name, Grain Size Distribution, Soil Classification, Color, Moisture Content, Sorting, Angularity, Mineralogy, Max Particle Size, Reaction to HCl)	Comments (Depth of Casing, Drilling Method, Method of Driving Sampling Tool, Sampler Size, Water Level)
				(see pg. 1)	(see pg. 1)
40 (TB) 6-14-10	Archive G.S			40.0 - 57.0' bgs: gravel (G) ~80% v. fine pebbles to sm cobbs (<10cm) 10% in fine to med sand, ≤10% silt wet, v. loose, no rxn w/HCl, ~~bomb~~ 70% felsic, 30% mafic, micas noticed in sand, 2.5Y 5/3, "lt. olive brown". Poss. Ringold Fm.	· Archive g.s. @ 40' bgs · DTW @ 39.7' bgs 6/14/10.
45	Archive G.S				· Archive g.s. @ 45' bgs
50	Archive G.S.				· Archive g.s. @ 50' bgs
55	Archive G.S				· Archive g.s. @ 55' bgs
				57.0 - 67.0' bgs: sandy gravel (SG) ~60% fine pebbles to sm cobbs (<90mm) subrnd to ang, 40% fine to coarse sand, very wet, very loose, no rxn w/HCl, 80% felsic, 20% mafic, 5Y 4/2, "olive gray".	· Archive g.s @ 60' bgs
60	Archive G.S.				
65				→ @ ~65.0' bgs, gravels inc. in size to med. pebbs to sm. cobbs ≤120mm diam, lith the same. Cobbs = subrnd to subang	
	Archive G.S.	(TB) 6/15/10		67.0 - 74.3' bgs: RUM (Sandy silty gravel) ~30% mfc to coarse pebbs, round to subrang, 90% silt/clay med. plasticity, ≤20% fine to med sand, damp, compact, no rxn w/HCl, 10YR 4/4, "dark yellowish brown".	· Archive @ 67.0' bgs.
70	S.S. I-001 100%			→ @ ~69' bgs, gravels dec. to 15%, silt/clay inc. to 85%. → @ ~70' bgs, gravels dec to <10% noticed.	· Split-spoon @ 71.0' - 73.5' bgs @ 0915, 6/15/10. HE15#B24D9X, B24DC8 I-001, 100% rec.
75			T.D.		T.D. = 74.3' bgs.

Reported By: T. Buswell | Reviewed By: L.A. Walker

Title: Geologist | Title: Geologist

Signature: [signature] Date: 6/16/10 | Signature: [signature] Date: 7/15/10

A-6003-642 (03/03)

BOREHOLE LOG

Page 1 of 2

Date: 6·14·10

Well ID: C7596	Well Name: 199-H4-~~80~~ 81 (AR 6/14/10)	Location: Between 100-D & 100-H Reactors
Project: 100-HR-3 as Pump+Treat Expansion		Reference Measuring Point: Ground Surface

Depth (Ft.)	Sample Type No.	Sample Blows Recovery	Graphic Log	Sample Description: Group Name, Grain Size Distribution, Soil Classification, Color, Moisture Content, Sorting, Angularity, Mineralogy, Max Particle Size, Reaction to HCl	Comments: Depth of Casing, Drilling Method, Method of Driving Sampling Tool, Sampler Size, Water Level
0				0-4: Gravelly silt. Top soil. (gM) 80%M, 20%g	Diesel Percussion Hammer.
				v.f. sub. rndd-sub ang. gravel w/ 7.5YR 4/3 brown	Add Water continuously.
				silt. Dry.	
	Archive	Full			2-4: Archive grab
				4-7: Gravel (G) 100%g. w. Srtd. w. rndd-sub rndd.	
5				f.-v.c.pbl. of 90% bslt, 10% int.-fels. volc/meta.	5-7: Archive grab
				Downward Coarsening.	
	Archive	Graded. Periodic		7-15: Sandy Gravel (sG) 70%G, 30%S.	
				Mod. Srtd. sub. rndd-sub ang. m.pbl-v.c.pbl. of 90%	8-12: Archive grab
	Archive			bslt, w/ v.f-v.c. Sand of 90% felsic qtz-felds., 10%	
10				Mafic comp. Mod. rxn w/ HCl. Matrix. 10YR 4/2 dark.	
				grysh. brown.	
				15'-20': Silty Sandy Gravel (msG) 60%g, 30%S,	14-16: Archive grab
15	Archive Grab			10-15%m. Mod-p. Srtd. v.f.pbl.-sm.cbl. of 65%	
				bslt, 35% felsic volc. + int.-fels. meta. w/ v.f-v.c. ang.	
				Sand. of 90% Qtz. felds, 10% Mafic.	
				Downward Coarsening.	
20	Archive				19-21: Archive grab
				20-24: Gravel (G) 100% G. v.f.pbl-sm.cbl. v.w.-sub. rndd. of 40% felsic/60% mafic bslt. Ingst. clasts of sub. rndd. bslt. felsic clasts. v.w. rndd.	
		Periodic Graded		24'-27': Sand-Sandy Gravel (pebbly) (S-sG)	24': Drill Rate↑
25	Sieve Archive			90%S-30%S, 10%g-70%g. Downward Coarsing.	24-26': Archive/Sieve grab
				v.w. rndd. v.f-v.c.pbl of 60% bslt. 40% felsic	24.5': Water
				int. volc. meta. no rxn w/ HCl	
				27'-35': Sandy Gravel (sG) 80%G, 20%S.	
				Mod. Srtd. v.f.pbl-sm.cbl. of w. rndd. of 55% felsic	28-31: Archive/Sieve grab
30	Archive Sieve			45% bslt. w/ v.f-v.c. sub ang-ang. Sand. 10YR 4/2 dark.	
				grysh brown.	
					34-36: Archive/Sieve grab
35	Archive Sieve	Rigid?		• 35': 60%G, 40%S. v.w.rndd. discoidal, v.f.pbl	29-35 (AR 6/14/10)
				to c.pbl. of 55% bslt, 45% felsic w/ m-c. ang. S. of	
				90% Qtz-felds., 20% Mafic	
				• 37.5': Gravel Coarsen v.f.pbl-L.cbl discoidal.	

Reported By: A. Lanton		Reviewed By: L. A. Walker	
Title: Geologist		Title: Geologist	
Signature: Aaron Lanton	Date: 6.14.10	Signature: [signature]	Date: 7/15/10

A-6003-642 (03/03)

LW 7-15-10

7696

BOREHOLE LOG

LW 7-15-10

Page 2 of 2

Date: 6-14-10/6-15-10

Well ID: C ~~7696~~	Well Name: 199-H4-81	Location: ~~See pg.~~ Between 100D & 100H
Project: ~~See pg.~~ 100HR-3 Pump & Treat		Reference Measuring Point: Ground Surface.

LW 7-15-10

Depth (Ft.)	Sample Type No.	Sample Blows Recovery	Graphic Log	Sample Description: Group Name, Grain Size Distribution, Soil Classification, Color, Moisture Content, Sorting, Angularity, Mineralogy, Max Particle Size, Reaction to HCl	Comments: Depth of Casing, Drilling Method, Method of Driving Sampling Tool, Sampler Size, Water Level
40				27'-39.0': Sandy Gravel (SG): 80%G, 20%S.	
				u.f.pbl-L.Cbl. v.w.rndd.dominant. of 60% felsic,	41.4-43.4: Split spoon
				40% Mafic. w/ ang.c.-m. Sand. of 60% felsic	B24DC1, B24D91
	split spoon			40% Mafic.	
				39'-44.4': Silt. (M) w/ sprs. w.rndd. 5m.cbls.	TD: 44.4'
			T.D.	non Plastic, mod. consolidated. Slightly moist.	
45				10YR 4/4 dk.grysh. brown. - 7.5YR 4/4 brwn.	
50					

Reported By: A. Lanton		Reviewed By: L.D. Walker	
Title: Geologist		Title: Geologist	
Signature: Aaron Lanton	Date: 6/14/10	Signature: LD Walker	Date: 7/15/10

A-6003-642 (03/03)

BOREHOLE LOG

Page 1 of 2

Date: 6-29-10

N. AK 6-29-10

Well ID: C7597 | Well Name: 199-H4-75 | Location: S.W. of 100-H Reactor

Project: 100-HR-3 OU Pump + Treat Expansion | Reference Measuring Point: Ground Surface

Depth (Ft.)	Sample Type No.	Sample Blows Recovery	Graphic Log	Sample Description: Group Name, Grain Size Distribution, Soil Classification, Color, Moisture Content, Sorting, Angularity, Mineralogy, Max Particle Size, Reaction to HCl	Comments: Depth of Casing, Drilling Method, Method of Driving Sampling Tool, Sampler Size, Water Level
0				0-8': Silty Sandy Gravel (MSG): 80%G, 10%S, 10% m. sub. rndd-rndd. v.f.-c. pbl. w/ 10% sm. cbl. of 75-65% fels. meta. + volc. 25-35% bslt. w/ v.f.-v.c. ang-sub.rndd. S. of 70% Qtz-felds.	Diesel Hammer Rig
	Archive				3': Archive
5					
	Archive			·8': Sand % ↓ 5% = Silty Gravel	8': Archive
				8'-50': Gravel to Sandy Gravel (G-sG) Normally Graded beds. 2-3' thick. 0-30% S. 100-70% G. v.f pbl-sm. cbl. of 65-55% bslt, 35-45% fels. meta + volc. w/ v.f.-v.c. ang. S. of 80% bslt Color of matrix: 10YR 3/3 brown. - 10YR 3/4 grayish brown	
10					
15'	Archive				14': Archive
				·16': Sand Coarsens to m-v.c. sub.ang. Clay nodules present 10YR 4/6 brownish yellow. 1/4"-3" in size.	
				·18': Sandy Pebble bed.	
20	Archive Sieve			·21': Gravel (G) 95% g, 5% S, sub.rndd. m-c.pbl-sm.cbl.	20': Drill Rate ↓ Archive/Sieve grab
				·22': Gravel cont.: 85% G, 15% S w. rndd. f.pbl.-v.c.pbl. w/ c.-v.c. S. of 90% mafic comp.	22': Stroke 22'-18'.
				· Graded to gravel 21'-25' downward Coarsening bed.	
25	Archive Sieve			25': 90% G. w. rndd. m-v.f.pbl-v.c.pbl.	25': Archive/Sieve grab
30	Archive Sieve			·29': Sandy Gravel (sG) 70% G, 30% S. v.f.-c. pbl. of 65% Fels, 35% bslt. w/ m. S. of 70% fels. comp.	30': Archive/Sieve grab
				·31': Grades to Gravel (G) 90% g, 10% w.S. v.f. pbl.-sm.cbl. w/ v.f.-m. S. of 80% Qtz.	35': Archive/Sieve grab
35	Archive Sieve			·35': Sandy Gravel (sG): 75% G, 25% S.: v.f.-m. pbl. of 75% bslt, 25% fels. w/ v.f.-v.c. S. w/ sprs. sm.cbl. (Poorly Srtd.)	sm.cbl. relect of drilling from above interval.
				·38': 100% bslt clasts.	

Reported By: A. Lantow | Reviewed By: L. D. Walker

Title: Geologist | Title: Geologist

Signature: Aaron Lantow | Date: 6-29-10 | Signature: L. D. Walker | Date: 10-12-10

A-6003-642 (03/03)

BOREHOLE LOG

Page 2 of 2
Date: 6.29.10

Well ID: C7597 | Well Name: 199-H4-75 | Location: S.W. of 100-H Reactor

Project: 100-HR-3OU. Pump & Treat Expansion | Reference Measuring Point: Ground Surface

Depth (Ft.)	Sample Type No.	Sample Blows Recovery	Graphic Log	Sample Description: Group Name, Grain Size Distribution, Soil Classification, Color, Moisture Content, Sorting, Angularity, Mineralogy, Max Particle Size, Reaction to HCl	Comments: Depth of Casing, Drilling Method, Method of Driving Sampling Tool, Sampler Size, Water Level
40	Archive/ Sieve			8'-60': Gravel - Sandy Gravel (g-sG) cont. Normal Graded beds 2'-5' thick. of v.f.pbl.-sm.cbl. of 55-75% bslt, 45-25% felsic meta. + volc. w/ v.f.-v.c. ang-subang. S. of 80 fels. Mafic to 80% fels. (fels. comp. ↑ w/ depth)	40'-44': Archive/Sieve grab TAG WATER @ 40.60' BGS (6.30.10)
45	44 6.29.10			• 40': Sandy Gravel (sg) ~~grades to~~ 75%S-25%G, v.f.-v.c.pbl. w. rndd. of 70% fels. w/m. S. of 85% Qtz. Coarsens downward.	46'-84.5': Archive/Sieve grab
	Archive Sieve			• 44': Gravel (G) 80%G, 20%S. v.f.pbl.-sm.cbl. of 75%-80% felsic, 25-20% bslt. w/v.f.-v.c. felsic sand.	
50				• 46': Gravel cont. (G) f.pbl-m.pbl. v.w.rndd. 10% S.	
	Spl't Spoon	100%		• 48': Sandy Gravel (sG) 80%G, 20%S m.pbl.-sm. cbl. of 85% fels. w/v.f.-v.c. felsic sand. Downward Coarsening.	50.8'-52.8': Spl't Spoon B24D92, B24DC2
55	G.S.			50'-51.5': Clayey Silt (M) v. plastic. 10YR 4/6 ylwsh. brwn. slight rxn. w/ HCl	ARCHIVE GRAB @ 55' BGS
				51.5'-52.8': Silt. w/ Caliche, no plasticity. 10YR 5/4 Ylwsh. brwn. w/ tiney specks of black. v. Strong rxn. w/ HCl.	
	G.S	TD 59.2			ARCHIVE GRAB SAMPLE @ 54' BGS
60	~~G.S.~~	gp		• 50-59' (TD) CLAYEY SILT; NO PLASTICITY; 10YR 5/4 YELLOWISH BROWN; 5% SAND, 5% GRAVEL, 5% COBBLE; SLIGHT RXN TO HCL	~~ARCHIVE GRAB SAMPLE @ 60' BGS~~ TD @ 59.20; TAG BOTTOM @ 59.20' BGS.
65					
70					
75					

Reported By: Aaron Lanton / JAMES PATTERSON | Reviewed By: L. D. Walker

Title: Geologist / | Title: Geologist

Signature: Aaron Lanton / James Patterson Date: 6.29.10 | Signature: L. D. Walker Date: 10/12/10

A-6003-642 (03/03)

BOREHOLE LOG

Page 1 of 2
Date: 6-28-10

Well ID: C7598 | Well Name: 199-H4-74 | Location: S.W. of 100-H Reactor

Project: 100-HR-3 ou Pump & Treat Expansion | Reference Measuring Point: Ground Surface

Depth (Ft.)	Sample Type No.	Sample Blows Recovery	Graphic Log	Sample Description: Group Name, Grain Size Distribution, Soil Classification, Color, Moisture Content, Sorting, Angularity, Mineralogy, Max Particle Size, Reaction to HCl	Comments: Depth of Casing, Drilling Method, Method of Driving Sampling Tool, Sampler Size, Water Level
0				0-20': Silty Sandy Gravel (MSG) 70%G, 15%S, 15%M. sub.ang-sub.rndd. v.f.pbl.-c.pbl. w/ spars. lrg. cbl. of 60-70% bslt, 30-40% felsic meta. & volc. w/ v.f-v.c. ang. S. of 70% Mafic, 30% fels. comp. Color. 5Y 3/2 olv. gry.	Diesel Hammer. Add water continuously. 5': Archive
5	Archive				
10	Archive				10': Archive
15	Archive			• Clasts more rounded. v.w.rndd.-sub.rndd. c.pbl-sm cbl. • 18': Gravels coarsening w/ depth max size sm. Cbl. AZ 6-28-10	15': Archive
20	Archive			~~20'-25'~~: slightly silty Sandy Gravel ([G]SG) 20-22': 80% G, 10% S 10% M. v.w.rndd. v.f.-v.c. pbl. f. 55-60% bslt, 45-40% fels. w/ v.f.-v.c. S of same comp. 5Y 3/2 olv. gry. 22'-30': ~~Sandy~~ Gravelly Sand (gS): 70%-60% S 30-40% G. v.f-c.pbl. spars. sm.cbl of 55-60% felsic meta; int. volc. w/ v.f-vc. ang. S. 10Y 3/2 olv. gry.	20': Archive • Drilling slows. 22': Drill rate ↑
25	Archive			• felsic comp ↑ 38.0' LW 10-11-10	25': Archive
30	Archive Sieve			30'-39.5': Gravelly Sand (gS): 70-80% S, 30-20% G v.w.rndd. disc.idal. 80% felsic v.f.pbl-sm.cbl. w/ f-m. S. of. 75% bslt, 25% Qtz. grains.	30: Archive/Sieve → Drill Rate Rap'd. 30.5' Water 6-29-10
35	Archive Sieve				35: Archive Sieve
				38.0'-42.5': Silty Clay. w/ spars Gravel. ~~39.5'-~~ • ~~Gravelly Silt Silty Gravel (gm-mG)~~ cont. → Next. Pg. → AZ 6-29-10	← may be mixed by drilling.

Reported By: A. Lantow		Reviewed By: L. D. Walker	
Title: Geologist		Title: Geologist	
Signature: Aaron Lantow	Date: 6-28-10	Signature: [signature]	Date: 10/11/10

A-6003-642 (03/03)

BOREHOLE LOG

Date: 6·29·10

Well ID: C7598	Well Name: 199-H4-74	Location: S.W. of 100-H Reactor
Project: 100-HR-3 OU Pump + Treat Expansion		Reference Measuring Point: G.S.

Depth (Ft.)	Sample Type No.	Sample Blows Recovery	Graphic Log	Sample Description: Group Name, Grain Size Distribution, Soil Classification, Color, Moisture Content, Sorting, Angularity, Mineralogy, Max Particle Size, Reaction to HCl	Comments: Depth of Casing, Drilling Method, Method of Driving Sampling Tool, Sampler Size, Water Level
40		Mixed Fm. v. long Dabon		~~38'-46' (TD) 6.28.10~~	v. fast drill rate. Hammer stopped firing/driving casing @ 42' bgs.
				38-42.5': Clay (M) v. plastic (sticky) moist-dry. 10YR 5/3 pale brown. mod-v. strong rxn w/ HCl. sprs mebls. of bslt. present.	• SAP called out MUD @ 51' bgs. Cause of overdrill.
	Split Spoon	100%		• 42.5': 2" thick layer of $CaCO_3$ nodules to posible massive layer. 10YR 5/3 pale brown-white. w/ v.f. black speckles. (not sand). v. strong rxn w/ HCl.	
45				42.5'-46.0' (TD): Silt (M) 10YR 4/3 brown. no plasticity. no rxn w/ HCl. dry-slightly moist. Massive. breaks Hackley.	TD: 46.0 42.0-44.0: Split Spoon B24D93, B24DC3 (Chase) 6.28.10
50					

Reported By: A. Lofton		Reviewed By: C.D. Walker	
Title: Geologist		Title: Geologist	
Signature: Aaron Lofton	Date: 6·29·10	Signature: C.D. Walker	Date: 10/11/10

A-6003-642 (03/03)

BOREHOLE LOG

Page 1 of 3

Date: 4.10.10

Well ID: C7599	Well Name: 199-D7-3	Location: E: 574151.35	N: 152354.06
Project: 100HR-3 Pump & Treat		Reference Measuring Point:	Ground Surface

Depth (Ft.)	Sample Type No.	Sample Blows Recovery	Graphic Log	Sample Description: Group Name, Grain Size Distribution, Soil Classification, Color, Moisture Content, Sorting, Angularity, Mineralogy, Max Particle Size, Reaction to HCl	Comments: Depth of Casing, Drilling Method, Method of Driving Sampling Tool, Sampler Size, Water Level
					Becker Hammer
0				0 - 7 Sandy Gravel (sG): 45% fine to coarse sub-rounded pebbles, 50% v. fine to medium sand, <5% silt. Color, moist, 2.5Y 4/3 (olive brown). Moderately sorted. Strong HCl rxn. 40% mafic, 60% felsic	10¾" dual wall (6.5') 60'/3 gal. water as needed.
5	archive				archive at 5'
				7 - 26 Sandy Gravel (sG) 80% v. fine to coarse pebbles (sub-rounded), 15% medium to v. coarse sub-angular sand, 5% silt. Color, wet, Gley1 2.5/N (black) moderately sorted, no HCl rxn. 90% mafic 10% felsic.	
10	archive				archive at 10'
15	archive			~15' occasional cobble (110mm max)	archive at 15'
20	archive				archive at 20'
25	archive				archive at 25'
				26 - 46 gravelly sand (gS): 30% sub rounded medium to coarse pebbles and occasional sml. cobble (150mm max), 65% medium to v. coarse sand, <5% silt. moderately sorted. Color, wet, Gley1 2.5/N (black). no HCl rxn. 90% mafic, 10% felsic.	
30	archive				archive at 30'
35	archive				

Reported By: A. Papps		Reviewed By: L.D. Walker	
Title: Field Geologist		Title: Geologist	
Signature:	Date: 4.10.10	Signature:	Date: 5/19/10

A-6003-642 (03/03)

BOREHOLE LOG

Page 2 of 3
Date: 4.10.10

Well ID: C7599 | Well Name: 199-D7-3 | Location: E: 574151.35 N: 152354.06

Project: 100 HR-3 Pump + Treat | Reference Measuring Point: Ground Surface

Depth (Ft.)	Sample Type No.	Sample Blows Recovery	Graphic Log	Sample Description: Group Name, Grain Size Distribution, Soil Classification, Color, Moisture Content, Sorting, Angularity, Mineralogy, Max Particle Size, Reaction to HCl	Comments: Depth of Casing, Drilling Method, Method of Driving Sampling Tool, Sampler Size, Water Level
40	archive			26-46 Gravelly Sand (gS): 30% subrounded	archive at 40'
				Medium to coarse pebbles and occasional sml. cobble (120mm max), 65% medium to coarse sand, <5% silt, moderately	· Becker Hammer
				sorted. Color, wet, Gley 1 2.5/N (black). no HCl rxn.	· 10¾" x 8" drillwell, 60' bgs
				90% mafic, 10% felsic	· water at 44'
	archive			44' - increase in silt, new composition:	
45				30% pebbles, 60% sand, 10% silt	archive at 45'
				46 — 61 Sandy Gravel (sG): 70%	
				Sub-angular medium to v. coarse pebbles +	
				sml cobbles (100mm max), 25% v. fine	
50	archive			to medium sand, 5% silt. moderately	
				sorted. color, moist, 7.5YR 4/2 (brown).	archive at 50'
				moderate HCl rxn. 60% mafic, 40% felsic	
55	archive				archive at 55'
60	archive			~~61 Sand~~	archive at 60'
				61 — 84 Sandy Gravel (sG): 80% sub-	DTW: 60.1' (4.12.10)
				angular fine to coarse pebbles + occasional	
				sml. cobbles (95mm max), 15% fine to coarse	
65	archive sieve			sand, 5% silt. poorly sorted. color,	
				wet, 7.5YR 5/2 (brown). no HCl rxn. 70%	archive at 65'
				mafic, 30% felsic	~~sieve~~
				69' - increase silt, new composition 75%	
70	sieve archive			pebbles + cobbles, 15% sand, 10% silt. sand grain	
				size becomes v. fine to fine.	archive at 70'
					sieve at 70'
75	sieve archive				archive at 75'
					sieve at 75'

Reported By: A. Pappas | Reviewed By: L. D. Walker

Title: Field Geologist | Title: Geologist

Signature: [signature] Date: 4.10.10 | Signature: [signature] Date: 5/19/10

A-6003-642 (03/03)

BOREHOLE LOG

Page 3 of 3
Date: 4.12.10

Well ID: C7599 | Well Name: 199-D7-3 | Location: E: 574151.35 N: 152354.06

Project: 100 HR-3 Pump + Treat | Reference Measuring Point: Ground Surface

Depth (Ft.)	Sample Type No.	Sample Blows Recovery	Graphic Log	Sample Description: Group Name, Grain Size Distribution, Soil Classification, Color, Moisture Content, Sorting, Angularity, Mineralogy, Max Particle Size, Reaction to HCl	Comments: Depth of Casing, Drilling Method, Method of Driving Sampling Tool, Sampler Size, Water Level
80	Split Spoon			61-84 Sandy Gravel (SG): 75% pebbles, cobbles, 15% sand, 10% silt — cw 6/30/11	archive at 80'
					Split at 80'
					· Becker Hammer
				83' - Pieces of caliche present.	· 10 3/4" x 8" dual wall, 60 lbs/ft
				84' - 89.3' Silt/Mud (M): <5% rounded	· water as needed
85	archive			Coarse to V. Coarse pebbles and small	
				cobbles (110mm max) - decreasing with depth,	archive at 85'
				95% silt. poorly sorted. color, moist,	Split spoon collected
				10YR 6/4 (light yellowish brown). moderate	at 86' - 88.4' - HE1500
	archive			rxn to HCl, weak plasticity.	B26R23.
					archive at 89.3' (TD)
90			89.3' TD		

Reported By: A. Pappas		Reviewed By: L.D. Walker	
Title: Field Geologist		Title: Geologist	
Signature:	Date: 4.12.10	Signature:	Date: 5/19/10

A-6003-642 (03/03)

BOREHOLE LOG

Page 1 of 3
Date: 1/26/10

Well ID: C7600 | Well Name: 199-D5-129 | Location: Between 105-D & 105-DR Reactors

Project: 100-HR-3 PotT Expansion (FY09 - 100-D) | Reference Measuring Point: Ground Surface

Depth (Ft.)	Sample Type No.	Sample Blows Recovery	Graphic Log	Sample Description: Group Name, Grain Size Distribution, Soil Classification, Color, Moisture Content, Sorting, Angularity, Mineralogy, Max Particle Size, Reaction to HCl	Comments: Depth of Casing, Drilling Method, Method of Driving Sampling Tool, Sampler Size, Water Level
0				0-9: slightly gravelly sand (gms): 15% gravel, 15% silt, 70% sand. Gravel well-sorted MP, SR, basaltic. Sand bimodal VF-F, C-VC, 80% basalt(?), SR-R. Silt: V. strong rxn HCl, moist, 2.5Y 4/2 dark grayish brown	Drill method Becker hammer w/ 10 3/4"/8" dual-wall casing. Adding water to control dust + aid drilling returns.
5	0-5 archive				≤1 ft fill. Natural seals immed. below
				8: sorting ↓↓ (gravel to 10cm, VFP ↑↑; coarse sand?). Increasingly basaltic.	6-10: overdrilled 2x
				9-17: silty sandy gravel (mcsg): 40% gravel, 10% silt 50% sand. Silt as above, gravel as above. Sand 50% as above, 50% C-VC basalt, angular. Wk rxn HCl. Dry.	9: Hanford fm
10	9-12 archive	gradual color change lock brown tone			Drilling dry ~5-50'.
15	archive				17: DR ↑
				17-32: SAND (S). >90% sand <10% gravel, trace silt. Sand medium-coarse, 70% basalt, A-SA. Dry. No to wk rxn HCl. 2.5Y 3/1 v. dark gray.	
20	archive				
25	archive			25: 100% sand w/ only trace gravel, no silt. V. well sorted, coarse. 80% basalt. Moist.	
30	archive			30: As above; no rxn HCl.	
		color change		32-48: silty sandy gravel (mcsg): 40% gravel, 10% silt 50% sand. Gravel poorly sorted, MP-VCP, A-SA, 60% basalt. Sand VF-VC, 60% basalt, SA. Dry. Wk rxn HCl. 2.5Y 4/1-4/2 dark gray to dk grayish brown.	32: DR ↓
35	archive				

Reported By: L. Stratton | Reviewed By: L.D. Walker

Title: Geologist | Title: Geologist

Signature: [signature] Date: 1/26/10 | Signature: [signature] Date: 2/25/10

A-6003-642 (03/03)

BOREHOLE LOG

Page 2 of 3

Date: 1/26/10

Well ID: C7600 | Well Name: 199-D5-129 | Location: Between 105-D & 105-DR Reactors

Project: 100-HR-3 P&T Expansion (100-D, FY09) | Reference Measuring Point: Ground surface

Depth (Ft.)	Sample Type No.	Sample Blows Recovery	Graphic Log	Sample Description: Group Name, Grain Size Distribution, Soil Classification, Color, Moisture Content, Sorting, Angularity, Mineralogy, Max Particle Size, Reaction to HCl	Comments: Depth of Casing, Drilling Method, Method of Driving Sampling Tool, Sampler Size, Water Level
40	archive			40: sand more basaltic than above	Becker hammer w/ 10 3/4"/ 8" dual-wall casing. Drilling dry.
45	archive			45: gravel ↑ to 60%, better sorted: prominent rounded FP. Basalt ↓ to ≤50%, vesicular clasts common. Silt ↓ to ≤10%.	
50	archive			48-57: gravelly sand (gS) 15% gravel, <10% silt, >75% sand. Gravel VFP-MP, A-SR, 50% basalt; Sand mod sorted M-VC, A-SA, 50% basalt 50% qtz/other. No rxn HCl. Dry. 2.5Y 4/2-3/2 dark to very dark grayish brown.	
55	archive			55: gravel to 20-25%, more brown than above; silt ≥10%.	55: Adding water 57: DR↓.
60	archive	appear to be Ringold E contact		57-60: silty sandy gravel (mcG): 60% gravel 15% silt 25% sand. Gravel FP-VCP, SR (fractured), 40-50% basalt; quartz/other more prominent than above. Sand as above: Silt 2.5Y 5/4 lt olive brown, wk to strong rxn HCl.	57: reworked Ringold? 60: DR ↓↓↓: very slow (20 min or more for 5 ft) 63: DR ↑ slightly
65	archive	No evidence of carbonate cementation, but drill rate very low		60-100: sandy gravel (SG): 50% gravel 50% sand no silt. Gravel diverse lithologies w/ prominent quartz, F-MP, SR-R. Sand F w/ limited M, >95% quartz, R. Wk rxn HCl but probably strongly cemented based on drill rate. Dry. 2.5Y 5/4 lt. olive brown.	65-67(?) gravels to large cobbles (depth uncertain)
70	archive			70: mod rxn HCl.	
75				75: gravel to ≤80%; sand slightly coarser than above: avg M w/ ~25% C. Sorting gravels ★. Slightly more basaltic ~30-40%. No rxn HCl. Dry.	

Reported By: L. Stratton | Reviewed By: L.D. Walker

Title: Geologist | Title: Geologist

Signature: [illegible] | Date: 1/27/10 | Signature: [illegible] | Date: 2/25/10

A-6003-642 (03/03)

BOREHOLE LOG

Page 3 of 3
Date: 1/27/10

Well ID: C7600 | Well Name: 199-D5-129 | Location: Between 105-D & 105-DR Reactors

Project: 100-HR-3 P&T Expansion (FY09 - 100-D) | Reference Measuring Point: Ground Surface

Depth (Ft.)	Sample Type No.	Sample Blows Recovery	Graphic Log	Sample Description: Group Name, Grain Size Distribution, Soil Classification, Color, Moisture Content, Sorting, Angularity, Mineralogy, Max Particle Size, Reaction to HCl	Comments: Depth of Casing, Drilling Method, Method of Driving Sampling Tool, Sampler Size, Water Level
80	archive			80: ~~At 60'~~ 5y. As 75' but sand ↑ to 50%. 2.5Y 5/3: color from trace silt; sand relatively un-staining.	Becker hammer w/ 10 3/4"/ 8" dual-wall casing.
		DTW = 83.05 (1/28/10)			
85	archive			85: As 75'; 5% silt. Slightly darker than above: 2.5Y 4/3 olive brown. No rxn HCl.	85-90: 25 min steady drilling
90	archive/ sieve			90: 2.5Y 4/2 dark grayish brown. Gravel to 60%, bimodal: 50% rounded FP, 50% M-CP, SR. >40% basalt. Saturated?	
95	archive			95: silt ↓ to <5%. No fine pebbles.	
100	archive/ sieve			100 - 105.5: silty sandy gravel: (mrcg). As above but silt to 20% w/ isolated 'clasts' silt. Sand very coarse. Silt increasing w/ depth.	
				104: Sand very poorly sorted, 20% quartz, 10% basalt, 70% other. Angular. Uncemented.	104: abundant water.
105	archive S.S. 105.75-107.75	32/refusal 100%		105.5 - 113.5 sharp contact w/ mud. (M). Massive, predominantly clay (?), 10YR 5/3 brown, no rxn HCl. V. high dry strength. High plasticity where not compacted. ~~Dry~~ Moist.	Split Spoon HEIS #: 823MT1
110	archive			110: dry. low to med dry strength. Silty.	
115			TD = 113.6		

Reported By: L. Stratton | Reviewed By: L.D. Walker

Title: Geologist | Title: Geologist

Signature: [signature] | Date: 1-28-10 | Signature: [signature] | Date: 2/25/10

A-6003-642 (03/03)

BOREHOLE LOG

Page 1 of 3

Date: 3-25-10/3-25-10

Well ID: C7601 | Well Name: 199-D5-131 | Location: N. 152007.01, E. 573684.30, N. of DR Reactor Core.

Project: 100-HR-3 OU Pump+Treat, Remedial Action-5 | Reference Measuring Point: Ground Surface

Depth (Ft.)	Sample Type No.	Sample Blows Recovery	Graphic Log	Sample Description (Group Name, Grain Size Distribution, Soil Classification, Color, Moisture Content, Sorting, Angularity, Mineralogy, Max Particle Size, Reaction to HCl)	Comments (Depth of Casing, Drilling Method, Method of Driving Sampling Tool, Sampler Size, Water Level)
				0-2': Coal Slag from vicinity coal slag pile.	Diesel Percussion Hammer, Reverse Circ.
0				2-8': Sandy loamy gravelly Sand (gS) (10%g)	
				m-v.c. ang-sub rndd. bslt. pbls. w/ 90% sub rndd-ang.	
	Archive			v.f-m-c. Sand. 10YR 3/1 v.dk. brownish gray. likely from	5': Archive grab
5				leachate of slag.	
		100% Fall		•7' gravel content ↑ 20-30% LW 6/30/11	
				8-24': Sandy Gravel (SG): ~~Sub~~ 70%G, 60%S.	
	Archive			Sub rndd-v.f pbl-bldr. of 80% bslt, 20%	9': Archive grab
10				Qtz Mica. w/ v.c-m. ang. Sand of 80% bslt, 20% felsic.	• Add Water
				Color: Black 10YR 2/1 Black LW 6/30/11	
				•Max clast > 10"	
	Archive				15': Archive grab
15					• Add Water
20	Archive	Periodic V. Graded			21': Archive grab
					• Add water
				24-33': Gravelly Sand (gS) 75%-70%S, 25-30%g	• Add Water
25	Archive			m-pbl-v.c.pbl-sm cbl. sub-w. rndd. of 70% bslt.	25' Archive grab
				30% felsic. w/ v.c-m. Sand of 90% bslt. 10% other	
				Color: 10YR 2/1 Black w Salt & Pepper appearance.	
	Archive	Periodic Representative			
30					30': Archive grab
				33-38': Sand. Coarse-v. Coarse ang. Sand of	
				98% bslt, 2% felsic. Color 10YR 2/1 Black.	
35	Archive			Dry Sparce f-m. pbl.	
				[Ringold?]	35' Archive grab
		100% Fall		38'-58': Sand Sandy Gravel (sG) 70%G, 30%S	
				sub-v.w. rndd. f.pbl-bldr. of 65-70% bslt, 45-30% felsic. cont. silt layer.	

Reported By: A Lantow | Reviewed By: L.A. Walker

Title: Geologist | Title: Geologist

Signature: [signature] Date: 3-26-10 | Signature: [signature] Date: 5-18-10

A-6003-642 (03/03)

BOREHOLE LOG

Page 2 of 3

Date: 3-25-10/3-26-10

Well ID: C7601 | Well Name: 199-D5-131 | Location: N. of DR Reactor

Project: 100-HR-3 OU Pump & Treat Well | Reference Measuring Point: Ground Surface

Depth (Ft.)	Sample Type No.	Sample Blows Recovery	Graphic Log	Sample Description: Group Name, Grain Size Distribution, Soil Classification, Color, Moisture Content, Sorting, Angularity, Mineralogy, Max Particle Size, Reaction to HCl	Comments: Depth of Casing, Drilling Method, Method of Driving Sampling Tool, Sampler Size, Water Level
40				38'-58': Sandy Gravel (SG) 70%G, 30%S. v.w.rndd-sub.rndd-f.pbl-bldr. of 65%bslt, 45%-30% felsic meta. w/ v.f-v.c. sub.ang. bslt. Sand.	40': Add water
	Archive				
45					44': Archive grab 44': Hard drilling Drill rate drops dramatically
				48: Clast size becomes less coarse v.f.pbl-sm.cbl. • Bslt. bldrs not present.	•Stroke 47-44' •47' Drill rate increase slightly. •Add copious amount of water
50	Archive				
55	Archive			55': A lith. 65% Qtz, Meta (felsic), 45% bslt.	55': Archive grab
				(gS) 58'-66': gravelly Sand. 80%S 20%g, ≤5%m	58-61 Archive grab
60	Archive	100% Full Liner		•Bimodal m. sub.rnd Qtz-felds. Sand + c-v.c. ang. bslt. sand w/ f.-v.c. pbls. (v.w.rndd) of 80% felsic meta., 20% bslt. sparse discoidal sm. cbl. of schist. Moist slightly. Color: 10YR 3/3 brown. Sand 90% Qtz. felds., 10% mafic	•Drill Rate ↑ rapidly. 9, 50: cfm.
65	Archive			•65': 70%S, 30%g 66'-67.5': Sandy Gravel (SG) 75-80%G, 20-25%S	65': Archive grab
		No Liner		m.pbl-sm.cbl. (discoidal v.w.rndd.) of 85% felsic meta., 15% bslt. w/ sub.rndd. m. Sand of 99% Qtz-felds.	•66': Add water. •Drill Rate decrease.
	Archive			•66-67.5': felsic ctrs. of large radii. Boulders present •67.5-69': v.w.rndd. m.pbl bed. of 100% felsics.	• Refusal 1800 cfm. • Stroke 67-69
70					69': Archive
				69-76: Sand (S). v. Micaceous. (Golden Color) f.-m. sub.ang. Sand of 99% Qtz-felds. Slightly moist. Color: 2.5Y 5/3 lt. olv. brwn. No rxn w/ HCl	
75	Archive				75': Archive
				76-84: gravelly Sand. (GS) 80%S 20%g, <10%m v.f-f. S. of 100% felsic. w/ m-v.c. pbl. (v.w.rndd.) of 95% felsic. Color 2.5Y 5/3 lt. olv. brwn.	v. strong rxn w/ HCl

Reported By: A. Lanton | Reviewed By: L.D. Walker

Title: Geologist | Title: Geologist

Signature: Aaron Lanton | Date: 3-25-10 | Signature: [signature] | Date: 5/18/10

A-6003-642 (03/03)

BOREHOLE LOG

Page 3 of 3
Date: 3·26·10

Well ID: C7601 | Well Name: 199-D5-131 | Location: N of DR Reactor

Project: 100-HR-3 OU. Pump & Treat Remedial Alternative | Reference Measuring Point: Ground Surface.

Depth (Ft.)	Sample Type No.	Sample Blows Recovery	Graphic Log	Sample Description (Group Name, Grain Size Distribution, Soil Classification, Color, Moisture Content, Sorting, Angularity, Mineralogy, Max Particle Size, Reaction to HCl)	Comments (Depth of Casing, Drilling Method, Method of Driving Sampling Tool, Sampler Size, Water Level)
80	Archive Sieve	Full		76'-84': Gravelly Sand (gS) 80%S, 15%g, 5%m. vf.-f. felsic sand w/ v.w.rndd. m.-v.c. pbl. of 95% felsic meta. slightly moist-dry Color 2.5Y 3/3 lt. olv. brown. ·Silt nodule present. of same color. v. strong rxn w/ HCl	80': Archive / Sieve grab
				Az 3-26-10	
85	Archive Sieve	Periodic		84'-87': Silty Sandy Gravel (grsG) 75%G, 5%S v.w.rndd. m.-v.c. pbl of 85% felsic meta. w/ vf.-m. S of 95% Qtz-felds. Sparse sm. cbl. of Qtz.	85': Archive / Sieve grab ·Extremly Hard Drilling Water: 86.1'
				87'-100': Silty Sandy Gravel 70-75%G, 15%S, 10-15%m v.w.rndd. m.-v.c. pbl. of 85% felsic meta. w/ v.f.-m S. of 85% Qtz-felds. Color: 2.5Y 5/3 lt. olv. brown. 90': Coarsen to bldr.	
90	Archive Sieve	Periodic	Poorly graded		90': Archive / Sieve grab
				93': 80%G, 10%S, 10%m	
95	Archive Sieve				95': Archive / Sieve grab
		Periodic	V. Graded		
100	Archive Sieve			100'-106': Slightly Silty Sandy Gravel (m)sG 70%G, 55%S, 5%m: m.-c. ang. S. of 95% felds., f. pbl-sm. cbl. of 85% felsic meta. mica present. Color: 2.5Y 4/3 olv. brown.	100': Archive / Sieve grab
		Periodic	V. graded	106'-107': Sandy Gravel (sG): 75%G, 25%S w. rndd-sub rndd. v.f-v.c. pbl. of 30% felsic, 70% bslt. w/ v.f-m. felsic sand. Carbonate nodules present.	-Clasts coated w/ $CaCO_3$
105	Archive Sieve			107'-109': Silty Gravel (mG) 75%G, 25%m sub.ang.-ang. sub rndd. f. pbl-sm. cbl of 80% felsic meta. Color: 10YR 3/3 brown. Saturated, plastic. strong rxn w/ HCl.	105': Archive grab / Sieve grab w. strong rxn w/ HCl.
	Archive	Full			108': Archive grab
110	Archive			109'-116.4' (TD) Silt. w/ sparse m-pbl.-sm. cbl. of Qtz + granit. Color: 10YR 3/3 brown. w/ 10YR 5/2 lt. brownish gray mottling. slightly moist. mild rxn w/ HCl. (no sand present.) [Ringold Fm. Upper Mud]	111-113.5: Split Spoon B23R36
	Split Spoon	Full Periodic			
115	Archive			·115': 10YR 6/4 lt. yllwsh. brown. slightly moist.	116': Archive
			T.D.	v. mild rxn w/ HCl	

Reported By: A Lanton | Reviewed By: L.D. Walker

Title: Geologist | Title: Geologist

Signature: Aaron Lanton | Date: 3-26-10 | Signature: L.D. Walker | Date: 5/18/10

A-6003-642 (03/03)

BOREHOLE LOG

Page 1 of 3

Date: 4.7.10

Well ID: C7602	Well Name: 199-D8-98	Location: E: 574012.53 N: 152122.67
Project: 100 HR-3 Pump + Treat		Reference Measuring Point: Ground Surface

Depth (Ft.)	Sample Type No.	Sample Blows Recovery	Graphic Log	Sample Description: Group Name, Grain Size Distribution, Soil Classification, Color, Moisture Content, Sorting, Angularity, Mineralogy, Max Particle Size, Reaction to HCl	Comments: Depth of Casing, Drilling Method, Method of Driving Sampling Tool, Sampler Size, Water Level
0					· Becker Hammer
				0 – 12 gravelly Sand, (gS): 25% sub-rounded medium to coarse pebbles, 70% fine to coarse sand, <5% silt. well sorted, Color, moist, 7.5YR 3/2 (d. brown). 90% basalt, 10% felsic. weak HCl rxn.	· 10¾" x 8" dual wall, 60 lb/ft · water as needed
5	archive				archive at 5'
10	archive				archive at 10'
15	archive			12 – 19 ~~Sandy Gravel (SG)~~ rev. 4.7.10: gravelly Sand (gS): 15% rounded fine to coarse pebbles, 80% fine to v. coarse sand, <5% silt. well sorted. Color, moist, Gley 1 3/N (black) 80% mafic, 20% felsic. no HCl rxn.	archive at 15'
20	archive			19 – 27 Sand (S): 5% rounded fine pebbles, 90% v. fine to medium sand, 5% silt. well sorted. color, moist, 5YR 5/4 (reddish brown). 50% mafic, 50% felsic. fine fragments of calcite present. no HCl rxn	archive at 20'
25	archive				archive at 25
30	archive			27 – 43 Sandy Gravel (SG): 60% rounded – sub rounded fine to small cobbles (100 mm max), 35% medium to coarse sand, <5% silt. moderately sorted. color, moist, 2.5Y 3/1 (v. dark grey). 60% mafic, 40% felsic, no HCl rxn	archive at 30
					at 32', drilling speed decreases
35	archive				archive at 35'

Reported By: A. Pappas		Reviewed By: L.D. Walker	
Title: Field Geologist		Title: Geologist	
Signature:	Date: 4.7.10	Signature:	Date: 5/18/10

A-6003-642 (03/03)

BOREHOLE LOG

Page 2 of 3
Date: 4.7.10

Well ID: C7602 | Well Name: 199-D8-98 | Location: E: 574012.53 N: 152122.67

Project: 100 HR-3 Pump and Treat. | Reference Measuring Point: Ground surface

Depth (Ft.)	Sample Type No.	Sample Blows Recovery	Graphic Log	Sample Description: Group Name, Grain Size Distribution, Soil Classification, Color, Moisture Content, Sorting, Angularity, Mineralogy, Max Particle Size, Reaction to HCl	Comments: Depth of Casing, Drilling Method, Method of Driving Sampling Tool, Sampler Size, Water Level
40	archive			27 – 43 Sandy Gravel (sG): 60% rounded-sub-rounded fine to small cobbles (100mm max), 35% medium to coarse sand, <5% silt. moderatly sorted. Color, moist, 2.5Y 3/1 (v. dark gray). 60% mafic, 40% felsic, no HCl rxn.	archive at 40' · Becker Hammer · 10¾ x 8" dual wall, 60 lbs/ft · water as needed
45	archive			43 – 48 silty Sandy Gravel (msG): 60% sub rounded coarse to v. coarse pebbles with small cobbles (95mm max), 20% fine to v. fine sand, 20% silt. moderatly sorted. Color, wet, 10YR 4/3 (brown) 40% mafic, 60 felsic. no HCl rxn.	archive at 45'
50	archive			48 – 72 Sandy Gravel (sG): 65% sub angular medium to v. coarse small cobbles (90mm max), 30% medium to v. coarse sandy <5% silt. moderatly sorted. Color, wet, 10YR 3/2 (v. dark grayish brown), 65% mafic, 35% felsic, no HCl rxn.	archive at 50'
55	archive				archive at 55'
60	archive.				archive at 60' ~~Sieve sample @ 60'~~ AP 4.7
65	archive			at 66', decrease in pebble size to fine to coarse, decrease in cobbles.	archive at 65' sieve sample at 65
70	archive	▽			Depth to water: 68.9' archive at 70' sieve sample at 70'
75	archive			72 – 85 sandy Gravel (sG): 70% sub-angular fine to small cobbles (90mm max), 20% v. fine to medium sand, 10% silt. moderatly sorted. Color, wet, 10YR 4/2 (dark grayish brown). 60% mafic, 40% felsic. no HCl rxn	at 75', archive. sieve sample at 75'

Reported By: A. Pappas		Reviewed By: L.D. Walker	
Title: Field Geologist		Title: Geologist	
Signature:	Date: 4.7.10	Signature: LD Walker	Date: 5/18/10

A-6003-642 (03/03)

BOREHOLE LOG

Page 3 of 3
Date: 4.7.10

Well ID: C7602	Well Name: 199-D8-98	Location: E: 574012.53 N: 152122.67
Project: 100 HR-3 Pump & Treat		Reference Measuring Point: Ground Surface

Depth (Ft.)	Sample Type No.	Sample Blows Recovery	Graphic Log	Sample Description: Group Name, Grain Size Distribution, Soil Classification, Color, Moisture Content, Sorting, Angularity, Mineralogy, Max Particle Size, Reaction to HCl	Comments: Depth of Casing, Drilling Method, Method of Driving Sampling Tool, Sampler Size, Water Level
80	archive			~~48~~ 72 - 85 Sandy Gravel (sg): 70% sub-angular fine to v. coarse pebbles & small cobbles (90mm max), 20% v. fine to medium sand, 10% silt. Moderatly sorted. Color, wet, 10YR 4/2 (dark grayish brown) 60% mafic, 40% felsic, no HCl rxn	· archive at 80' · Sieve sample at 80' Becker Hammer 10¾" x 8" dual wall, 60'/ft water as needed.
85	archive			· Pieces of calcite at 83'	85' archive collected
				85 - 91.4 Silt/Mud (M) <5% coarse sand pebbles (decreasing in depth), 95% silt. Moderatly sorted. Color, wet, 10YR 4/3 (pale brown). moderate plasticity. no HCl rxn.	
90	archive			* at contact of mud than is a 1' thick gravel lense.	archive at 90'
	archive		91.4 TD		archive at 91.4'

Reported By: A Pappas		Reviewed By: L.D. Walker	
Title: Field Geologist		Title: Geologist	
Signature:	Date: 4.7.10	Signature:	Date: 5/18/10

A-6003-642 (03/03)

BOREHOLE LOG

Page 1 of 3
Date: 3/27/10

Well ID: C7603 | Well Name: 199-D8-96 | Location: N.1521.52.59, E. 573705.59; N. of DR Reactor

Project: 100-HR-3 OU, Pump & Treat Well | Reference Measuring Point: Ground Surface

Depth (Ft.)	Sample Type No.	Sample Blows Recovery	Graphic Log	Sample Description (Group Name, Grain Size Distribution, Soil Classification, Color, Moisture Content, Sorting, Angularity, Mineralogy, Max Particle Size, Reaction to HCl)	Comments (Depth of Casing, Drilling Method, Method of Driving Sampling Tool, Sampler Size, Water Level)
0				0 – 25 ~~Sandy Gravel (sG)~~ JZ 3-29-10	* Gravelly Sand (gS) ~~80% S, 20% G~~ JZ 3-29-10
				70% sand (V fine to V coars)	Diesel Hammer
				Sub rnd to sub angular	drilling rig
				mostly Basalt. 30% Gravel	
				mostly Basalt v.f. pbls mostly. sub	
5	G.S.			rnd to sub angular. max	Archive @ 5
				chip ≈ 2". Black, no rxn	
				w/ HCl (sparse m-e.pbl.)	
10	G.S			·10': silt present ≤10%	Archive @ 10
				- Downward Coarsening Sequence.	
				- m.-v.c. ang. S. 98% bslt. w/ sparse w.rnd.	
				m.pbl. of Qtz. > Bslt.	
15	G.S.			15': Gravelly Sand continue Coarsening.	Archive @ 15'
				·m. pbls. becoming more abundant.	·Add Water
				70% S, 30% g Black 10YR 3/1 Blk.	
20	G.S.			@ 20' Increase in JZ 3-29-10	Archive @ 20'
				Gravel size 10% ~~cobbles~~	
				m.-v.c. pbl. v.w.rnd. of mixed lith.	
25	G.S			25 – 40 Sand (S)	Archive @ 25
				V fine to course, sub rnd	
				to sub angular 50% mafic	
				50% felsic no rxn w/ HCl	
				Broad. v.f.-m. Qtz. sand & v.c. ang. bslt. sand.	
30	G.S.			@ 30 increase silt content	Archive @ 30
				to ≈ 10%; 90% sand	
				30% mafic 70% felsic	
				2.5Y 5/4 light olive Brown	
35	G.S			@ 35 decrease silt to 0%	Archive @ 35
				80 mafic (Basalt) Black, 20%	
				felsic (f.-m.) grained. Broad. f. sand of	
				Qtz, m. Sand of bslt.	
					@ 39' drilling slows

Reported By: J. Osborn | Reviewed By: L.D. Walker

Title: Env Engr | Title: Geologist

Signature: [signature] Date: 3/27/10 | Signature: [signature] Date: 5-18-10

A-6003-642 (03/03)

BOREHOLE LOG

Page 2 of 3

Date: 3·29·10/3·30·10

Well ID: C7603 | Well Name: 199-D8-96 | Location: N. of DR Reactor

Project: 100-HR-3 OU, Pump & Treat well | Reference Measuring Point: Ground Surface

Depth (Ft.)	Sample Type No.	Sample Blows Recovery	Graphic Log	Sample Description: Group Name, Grain Size Distribution, Soil Classification, Color, Moisture Content, Sorting, Angularity, Mineralogy, Max Particle Size, Reaction to HCl	Comments: Depth of Casing, Drilling Method, Method of Driving Sampling Tool, Sampler Size, Water Level
40	Archive			40-45: Gravelly Sand (gS) 20% f.pbl-v.c.pbl. max chip 1", 80% sub.rndd.-sub.ang. v.f-v.c. Sand. 2.5Y 5/3 lt. olv. brown. 70% mafic, 30% felsic. no rxn w/ HCl	40' Archive
45	Archive			45-50: Gravel (G) 80%G, 20%S. sub rndd-sub.ang. m.pbl-10% sm.cbl. w/ v.c. ang. Sand. 70% Mafic, 30% felsic metamorphics. Max chip 4" no rxn. w/ HCl	45' Archive
50	Archive			50'-65': Sandy Gravel (sG) 75%G, 25%S v.f-m. Qtz-felds. Sand w/ v.w. rndd. v.f. pbl-sm. cbl of 80% felsic, 20% bslt. 2.5Y 5/3 lt. olv. brown. v. strong rxn w/ HCl.	50' Archive
55	Archive				55' Archive
				AK 3-29-10 (85%)	
60	Archive			60': 70%G, 30%S of felsic metamorphics w/ w. rndd. v.f-m. pbl. +20% sm. cbls. no rxn. w/ HCl	60' Archive
65	Archive			65'-70': Sandy Gravel (SG)-Gravel (G) 75-80%G, 25-20%S Downward coarsening. v.f-v.c. Subrnd-sub ang. S. 80% felsic w/ v.w. rndd. v.f-v.c. pbl. of 85% felsic meta., 15% bslt. 2.5Y 5/3 lt. olv. brown. mild rxn. w/ HCl	65' Archive
	Archive				68' Archive
70	Archive Sieve			70'-85': Gravel (G) 80-90%G, 20-10%S. w.w. rndd. v.f. pbl-2% bldrs. of 80% felsic meta. w/ w.w. rndd cemented matrix of ang. v.f-v.c. S. of 85% felsic comp. v. strong rxn. w/ HCl. micaceous. 1" chip of calcareous sand matrix. w/ impressions of clasts. Clast supported. 2.5Y 5/3 lt. olv. brown. wet.	70' Archive / Sieve
75	Archive Sieve				75' Archive / Sieve

Reported By: A. Lantow | Reviewed By: L.D. Walker

Title: Geologist | Title: Geologist

Signature: [signature] Date: 3-29-10 | Signature: [signature] Date: 5-18-10

A-6003-642 (03/03)

BOREHOLE LOG

Page 3 of 3

Date: 3-29-10

Well ID: C7603 | Well Name: 199-D8-96 | Location: N. of DR Reactor

Project: 100-HR-3 OU Pump & Treat Remedial Alternatives | Reference Measuring Point: Ground Surface

Depth (Ft.)	Sample Type No.	Sample Blows Recovery	Graphic Log	Sample Description (Group Name, Grain Size Distribution, Soil Classification, Color, Moisture Content, Sorting, Angularity, Mineralogy, Max Particle Size, Reaction to HCl)	Comments (Depth of Casing, Drilling Method, Method of Driving Sampling Tool, Sampler Size, Water Level)
80	Sieve Archive			70-85: Gravel (G) 80-90%G, 10-20%S:	80': Archive/Sieve grab
				f. pbl- bldr. of 85% felsic meta. 15% bslt (v.w.rnd)	
				w/ v.w.cemented matrix of ang. v.f-v.c. S. of	
				85% felsic, 15% mafic comp. micaceous.	v. strong rxn w/ HCl
				1" chip of Carbonate cement sandy matrix w/ impressions	
85	Archive Sieve			of gravel. 2.5Y 5/3 Halv. brown.	85': Archive Grab/Sieve Grab
				85-90': Sandy Gravel (SG) 80%G, 15%S, 5%M	
				v.f. pbl-sm cbl. v.w.rnd. of 85% felsic meta.	
				Dacite present. w/ v.f-m. S. of 85% Qtz-Felds.	6/30/11
	Sieve Archive			15% felsic comp. Color 2.5Y 5/3 lt.olv.brown.	no rxn w/ HCl
90				90'-91': Sandy Gravel (SG) ~~80%G, 20%S~~ 90%G, 10%S	88-90': Sieve/Archive
	Sieve			Sub-rnd. v.f. pbl-v.c. pbl. of 70% bslt, 30% felsic meta.	90': Archive/Sieve Grab
				w/ 80% felsic sand. clasts coated in CaCO3. Subrnd.	
	Archive			crystalized Carbonate present 3/4" max chip.	v. strong rxn w/ HCl.
		Not collected Split Spoon		91-93.4: Silty Gravel (70%g, 30% Sandy M.) (MG)	
95	Archive			m. pbl. f.w.rnd.) of Qtz, fels. meta. + ~~m~~ c. pbl-sm	92': Archive Grab
				c bl. (ang.) of bslt > felsic meta. Color 10YR 7/3	93.4-96.0': Split Spoon
				lt. brown. ~~2.5Y 3/2 lt. gray brown~~ v. pl. brown.	(not collected) 3-29-10 (Rocks!)
				93.4'- : Silt (M) 3-31-10 (Clayey)	95': Archive grab
				93.4-97' : Gravelly Silt. (gM) 85% M, 15% g.	
100	Split Spoon	100%		~~10YR 3/2 v.pl. brown 3-29-10~~ w/ v.c. pbl-sm. cbl. sub rnd.	99.0': 10 3/4" Casing Terminus
				of 80% bslt, 20% felsic meta. 5Y 5/3 olive.	
				slightly moist. very plastic. no rxn w/ HCl.	99-101.5: Split spoon
		Archive		97'-101.5: Silt (M) low plasticity. Massive.	HCIS # B23R61
			T.D.	Color 10YR 4/3 brown. slightly moist to dry.	101.5': Archive grab.
				no rxn w/ HCl	
105				• 97-99': 10YR 4/3 brown, massive, v. low plastisity.	
				• 99-101.5 (TD): Olivenish green no Munsel color	
				match. slightly moist, mod. plastic. no rxn w/ HCl	
110					
115					

Reported By: A. Lantan | Reviewed By: L.D. Walker

Title: Geologist | Title: Geologist

Signature: Aaron Lantan | Date: 3-30-10 | Signature: [signature] | Date: 5-18-10

A-6003-642 (03/03)

BOREHOLE LOG

Page 1 of 2
Date: 6.24.10

Well ID: C7604 | Well Name: 199-H2-4 | Location: NW of H + NE of O reactors

Project: 100-HBU Pump+ treat | Reference Measuring Point: ground surface

Depth (Ft.)	Sample Type No.	Sample Blows Recovery	Graphic Log	Sample Description: Group Name, Grain Size Distribution, Soil Classification, Color, Moisture Content, Sorting, Angularity, Mineralogy, Max Particle Size, Reaction to HCl	Comments: Depth of Casing, Drilling Method, Method of Driving Sampling Tool, Sampler Size, Water Level
0				0.0'-41.0' bgs: Silty Sandy Gravel (MSG) 70% gravel: sm. pebbles to lg cobbles sub rnd-ang; 15% sand: fn to lg grain 15% m. No rxn to HCl, dry, 10YR 4/2 dark grayish brn	Added H_2O for drilling aid. Diesel hammer 10 3/4 x 8" dia/wall casing
5	G.S.				Archive @ 5' bgs
10	G.S.				Archive @ 10' bgs
				15-18.4': Gravelly SAND	
15	G.S.			→ @ ~15' bgs (@6.22.10) Sand lense, fairly well sorted w/ occassional pebbles bk/white sand (75% fn-med sand 25% sm pebbles <5 cm)	Archive @ 15' bgs
				→ @ 18.4' back to MSG as above	
20	G.S.				Archive @ 20' bgs
25	G.S.			Same porportions of gravel, sand, silt → gravel size is more evenly distributed sm pebbles (30%) lg pebbles (60%) cobbs (10%)	Archive @ 25' bgs
30	G.S.			→ lenses of lg cobbs still present	Archive @ 30' bgs
		RWES 30' Sample Zone			(34': Deep vadose soil sample not collected. 6.24.10)
35	G.S.	Not collected Deep vadose		Slightly more sand dominated (60% gravel and 30% sand w/ ~10% m) Weak to no HCl RXN ~30% large pebbles & 30% small pebbles w/ 10% cobbs. Cobbs dom mafic, pebbles dom felsic. Even mafic/felsic sand distribution	Archive @ 35' bgs. Water: 36.4' NLO S.S. 37.3'-39.3' 6-24-10 @ 10:25 HEIS # B24005
	NLO S.S. 37.3-39.3'				

Reported By: J. Schilperoort / J. Patterson		Reviewed By: L.A. Walker	
Title: Geologist		Title: Geologist	
Signature: James Schilperoort / James Patterson	Date: 6.24.10	Signature: L.A. Walker	Date: 10/11/10

A-6003-642 (03/03)

BOREHOLE LOG

Page 1 of 2
Date: 6.24.10

Well ID: C7604 | Well Name: 199-H1-4 | Location: NW of H + NE of D reactors

Project: 100-HOU Pump & treat | Reference Measuring Point: Ground Surface

Depth (Ft.)	Sample Type No.	Sample Blows Recovery	Graphic Log	Sample Description: Group Name, Grain Size Distribution, Soil Classification, Color, Moisture Content, Sorting, Angularity, Mineralogy, Max Particle Size, Reaction to HCl	Comments: Depth of Casing, Drilling Method, Method of Driving Sampling Tool, Sampler Size, Water Level
40	GeS	NCO S.S.		0.0'- 41' bgs: MSG (cont'd)	Archive @ 40' bgs
				@ ~ 41' formation change to RUM	(Deep vadose aquifer sample not collected) 9.24.10
				41'-~~46.5'~~ 48.5' bgs: Silt (M) — w 6/30/11	NCO, HESH B24D94
	S.S.	NCO C.S.		Brownish yellow (7yr 4/3), Dam Silty	Archive SS. @ 43' bgs
				clay to occ U. fine sand with rare med-	6.24.10 4% 41.1'-43.1' bgs
45				or sand grains. Weak to sli mod HCl RXN.	NCO, HESH B24DF7
	SS			Silt in damp and malleable	Archive @ 46' bgs
				Distribution: 90% silty clay, 5% coarse sand	6.24.10 46.5-48.5' bgs
			TD ~~46.5'~~ 48.5'	5% gravel, Rare cobb (<1%)	
50				Log 10-11-10	Required Sampling:
					1 • Deep vadose (missed)
				5" split spoon sampler driven	2 • Shallow aquifer (37.3-39.3)
				to 48.5' bgs	3 • Deep aquifer (missed)
					4 • MUD contact (41.1-43.1)
					5 • TD (46.5-48.5)
					6 • Sieve (35'-41.5')
					7 • Archive (@ 5' intervals)

Reported By: J. Schilperoort / James Patterson		Reviewed By: L.A. Walker	
Title: Geologist		Title: Geologist	
Signature: Jessica Schilperoort / James Patterson	Date: 6.24.10	Signature:	Date: 10/11/10

A-6003-642 (03/03)

BOREHOLE LOG

Page 1 of 2
Date: 7.2.10

Well ID: 199-H4-77 @ 7.2.10 | Well Name: C7605 | Location: NW of H + NE D reactors

Project: 100-HR3-04 Pump & Treat | Reference Measuring Point: ground surface

Depth (Ft.)	Sample Type No.	Sample Blows Recovery	Graphic Log	Sample Description: Group Name, Grain Size Distribution, Soil Classification, Color, Moisture Content, Sorting, Angularity, Mineralogy, Max Particle Size, Reaction to HCl	Comments: Depth of Casing, Drilling Method, Method of Driving Sampling Tool, Sampler Size, Water Level
0				→ Gravel drill pad	Water added to ease returns.
				0.0'-8.0' bgs: Silty Sandy Gravel (ms G) 50% Gravel: sm pebbles to lg cobbs, subrnd to ang. 50/50 mafic felsic, 30% sand: v. fn to crs, 20% m. Wet from added water.	
5	G.S.			v. slt. rxn to HCl, unconsolidated. 10YR 4/3 BROWN	Archive @ 5' bgs
				@ ~8' bgs → silt decrease to ~10% or less → more sand w sm. pebbs.	
10	G.S.			50% gravel, ~40% v. fn sand to crs sand, ~10% m 5Y 3/1 v. dk gray	Archive @ 10' bgs
				8.0'-42.5' bgs: Sandy Gravel (S G) 60% gravel: sm pebbs to lg cobbs (60% pebbs (40% cobbs) 35% sand: v. fn to crs (80% crs/20% fn) <5% m, wet from added water, no rxn to HCl, unconsolidated, 5Y 3/1: v. dk gray	
15	G.S.				Archive @ 15' bgs
20	G.S.			~20' color slightly different due to sm % increase in silt: 2.5YR 3/2 v. dk grayish brown, ~15-20% silt @ 7.2.10	Archive @ 20' bgs
25	G.S. Sieve			→ Silt decrease to 10% @ ~29' bgs ~55% gravel, 45%-40% sand) 5%-10% m	Archive @ 25' bgs
30	G.S. Sieve				Archive @ 30' bgs
35	G.S. Sieve			Water table: 36.7' bgs	Archive @ 35' bgs
					(See pg 2 →)

Reported By: J. Schilperoort | Reviewed By: L.D. Walker
Title: Geologist | Title: Geologist
Signature: [signature] Date: 7/02/10 | Signature: [signature] Date: 10-11-10

A-6003-642 (03/03)

BOREHOLE LOG

Page 2 of 2

Date: 7.2.10

Well ID: C7605 | Well Name: 199-H4-77 | Location: NW of H & NE of D reactors

Project: 100-HR3-OU Pump & treat expansion | Reference Measuring Point: ground surface

Depth (Ft.)	Sample Type-No.	Sample Blows Recovery	Graphic Log	Sample Description: Group Name, Grain Size Distribution, Soil Classification, Color, Moisture Content, Sorting, Angularity, Mineralogy, Max Particle Size, Reaction to HCl	Comments: Depth of Casing, Drilling Method, Method of Driving Sampling Tool, Sampler Size, Water Level
40	G.S. SIEVE			SG cont'd: 8.0'-42.5' bgs	
					Archive @ 40' bgs
				~~50.7'~~ 51.0' LW 10-11-10	
	G.S.			42.5'-~~51.0~~ TD bgs: gravelly Silt (gM)	Archive @ 42.5' bgs
				80% m: damp semi-consolidated, mod	
45	NCO S.S. 44.5-47.0' bgs	G.S.		rxn to HCl, 10YR 4/4 dark yellowish brown	7.7.2010
				15% Gravel: sm pebbles to lg cobbles, mostly	NCO S.S. @ 0920
				mafic/basalt gravels + chips; <5% sand	HEIS#B24DC5, B24D95
50				LW 10-11-10	Archive @ 45' bgs
				Total Depth: ~~51.0~~ bgs	
				~~50.7'~~	
				~~50~~ 51.0'	
				LW 10-11-10	

Reported By: J. Schlipscort | Reviewed By: L.D. Walker

Title: Geologist | Title: Geologist

Signature: Jason Schlipscort | Date: 7.2.10 | Signature: [signature] | Date: 10-11-10

A-6003-642 (03/03)

BOREHOLE LOG

Page 1 of 2

Date: 6.28.10

Well ID: C7606 | Well Name: 199-H1-6 | Location: NW of 100-H + NE of D reactors (6.28.10)

Project: 100-HR3-OU Pump & Treat | Reference Measuring Point:

Depth (Ft.)	Sample Type No.	Sample Blows Recovery	Graphic Log	Sample Description: Group Name, Grain Size Distribution, Soil Classification, Color, Moisture Content, Sorting, Angularity, Mineralogy, Max Particle Size, Reaction to HCl	Comments: Depth of Casing, Drilling Method, Method of Driving Sampling Tool, Sampler Size, Water Level
					samples wet from added H_2O
0				0.0'-36.5' bgs silty sandy gravel (MSG) 60% gravel: 5mm pebbles to LG cobbles (70% mafic) sub-rnd to ang. 20% sand fine-medium salt/pepper look (50/50 mafic/felsic) 10% m. no rxn to HCl dry, (originally) 10YR 4/2 dk grayish brn	
5	G.S.				Archive 5' bgs
				→ @ ~9' bgs sand 'lense' or increase to 30% gravel; 60% sand; 10% m	
10	G.S.				Archive @ 10' bgs
15	G.S.				Archive 15' bgs
20	G.S.				Archive 20' bgs
25	G.S.			Sandy Gravel? Gravelly sand? MSG? @26' bgs high sand content ~ 60/50 sand gravel w/ minor silt 9.	Archive @ 25' bgs 26': Deep vadose RFS soil sample not collected. AK 6.28.10 Water: 28.5 (6.29.10)
		▽			
30	G.S.			@ ~31' sand % ↓ to 40%; 60% gravel 10% m	Archive @ 30' bgs
35	G.S.				Archive @ 35' bgs
	NCO S.S. 37.5-40' bgs			36.5'-41' bgs: Silt/clay (M) 85% m: 10YR 4/5 dk yellowish brn 10% gravel (sm pebbles to med cobbles) 5% sand	37.5'-40.0' bgs NCO S.S. 6.29.2010 HEIS# B24D96 (WSCF) # B24DC6 (ESL) @ 0910

Reported By: J. Schilperoort | Reviewed By: L.D. Walker

Title: Geologist | Title: Geologist

Signature: Jan Schilperoort | Date: 6.28.10 | Signature: [signature] | Date: 10-11-10

A-6003-642 (03/03)

BOREHOLE LOG

Page 2 of 2

Date: 6-28-10/6-29-10

Well ID: C7606 | Well Name: 199-H1-6 | Location: NW of H & NE of D reactors (GSC 28.10)

Project: 100-HR-3-OU Pump & treat | Reference Measuring Point:

Depth (Ft.)	Sample Type No.	Sample Blows Recovery	Graphic Log	Sample Description: Group Name, Grain Size Distribution, Soil Classification, Color, Moisture Content, Sorting, Angularity, Mineralogy, Max Particle Size, Reaction to HCl	Comments: Depth of Casing, Drilling Method, Method of Driving Sampling Tool, Sampler Size, Water Level
40	G.S.			M cont'd	Archive @ 40' bgs
				85% m 10YR 4/5 dk yellowish brown	
				10% gravel (5m pebbles to lg cobbles) 5% sand	
				fine-medium grain. Med. rxn to HCl	
				damp, fairly consolidated.	
45	G.S.				Archive @ 45' bgs
			TD	TD = 47.0' bgs	
50					

Reported By: T. Schilperoort | Reviewed By: L.D. Walker

Title: Geologist | Title: Geologist

Signature: [signature] Date: 6-28-10 | Signature: [signature] Date: 10/11/10

A-6003-642 (03/03)

BOREHOLE LOG

Page 1 of 3

Date: 3-20-10

Well ID: C7607 | Well Name: 199-D6-2 | Location: N. 151970.55, E. ~~744545~~ 574545.22 (AZ 8-23-10), S.E. of DR-Reactor

Project: 100-HR-3 OU Pump + Treat Remedial Project Optimization | Reference Measuring Point: Ground Surface

Depth (Ft.)	Sample Type No.	Sample Blows Recovery	Graphic Log	Sample Description: Group Name, Grain Size Distribution, Soil Classification, Color, Moisture Content, Sorting, Angularity, Mineralogy, Max Particle Size, Reaction to HCl	Comments: Depth of Casing, Drilling Method, Method of Driving Sampling Tool, Sampler Size, Water Level
					Diesel Percussion Hammer
0				0-4': Silty/Loamy Sand (mS) 15-20%M, 85-80%S	Reverse Circulation
				Moist slightly, ang. m-v.f. Sand. 80% mafic,	• New driller to rig + Area.
				20% felsic. Color 10YR 4/3 brown.	10 3/4" Dual Wall casing.
				4-7': gravelly Sand (gS) 0-15%g, 100-85%S	4' Archive grab
5	Grab	100% Full time		Normally graded from above. m.-v.c. S. (ang.)	• Add Water ~5 gal)
	Ag 3-20-10 Grab			of 85 bslt. 15% Qtz. w/ w.rndd f.pbl. of mix lith.	
				overall Black + white. Mostly black. Moist.	7': Archive grab
	Grab	Graded		7-23: slightly silty sandy gravel ((m)SG)	8': Add Water for returns.
				80%G, 15%S, ~5%m. sub.rndd. f.pbl-v.c.pbl.	Drill rate slows.
10	No Grab			of 80% bslt, 20% felsic metamorphics + volcanics.	
					10': Stroke 10'-7' bgs.
				13': Silt increase 80%G, 10%S, 10%m.	
15	Grab	Graded Periodic			14': Archive Grab
					• Hard Drilling
				17': Silt not present.	•
				19': Gravel size increase to f.pbl-sm.cbl. w.rndd.	
20		Highly fractured Graded. Periodic		of 60% Metamorphics, 40% bslt. ~~Largest clasts of bslt.~~ AK 3-20-10	
				→ Gravels coarsen over interval. clasts may	
				be larger than sm.cbl. based on radii.	
					• Stroke 25-18' bgs.
	Grab	Full 100%		23'-26.5': Sand - gravelly Sand (gS) - 90%S, 10%g	23': Archive grab
25				f-c. sub.rndd S. ~~mat~~ of ~~70-80%~~ felsic, 20% mafic	
				w/ sub.rndd. v.f.-f.pbl. of bslt. Color: 2.5YR 3/2	
				grayish brown. slightly moist. no rxn w/ HCl	
				26.5'-44': Gravelly Sand (gS) 60%-75%S, 40%-	30': Archive grab
30	Grab			25% Gravel. w.rndd f.pbl-~~sm.cbl.~~ sm.pbl. AK 3-20-10 of 60% bslt,	Mod. Hard drilling.
				40% mixed meta. Dacite present. w/ ang. m. S. of	Largest clast: v.c.pbl.
				bimodal 80% Qtz, 20% bslt. → bslt grains sub rndd.	
		Periodic Graded		up to c. grain.	
35	Grab				35': Archive grab
					• Stroke 38'-34'

Reported By: A. Lantau		Reviewed By: L. D. Walker	
Title: Geologist		Title: Geologist	
Signature: Aaron Lantau	Date: 3-20-10	Signature: L D Walker	Date: 5-18-10

A-6003-642 (03/03)

BOREHOLE LOG

Page 2 of 3
Date: 3·20·10/3·22·10

Well ID: C7607 | Well Name: 199-D6-2 | Location: See pg 1. 100-D

Project: 100-HR-3 OU Pump & Treat RPO wells. | Reference Measuring Point: Ground Surface.

Depth (Ft.)	Sample Type No.	Sample Blows Recovery	Graphic Log	Sample Description: Group Name, Grain Size Distribution, Soil Classification, Color, Moisture Content, Sorting, Angularity, Mineralogy, Max Particle Size, Reaction to HCl	Comments: Depth of Casing, Drilling Method, Method of Driving Sampling Tool, Sampler Size, Water Level
40	Grab	Periodic Very Graded		26.5'-44': gravelly Sand (gS) 60-75%S, 40-25%G. v.w.rndd. f-v.c.pbl. of 40% mixed metamorphics (felsic) 60% bslt. w/ang. m. Sand of bimodal f-m. felsic grains + 20% v.c. grains of bslt.	Diesel Hammer. 40': Archive Grab
45	Grab			44'-58': Gravelly Sand - Sandy Gravel (gS-Sg) 50%S, 50%G. v.w.rndd. f.pbl-sub.cbl. of 65% felsic mixed meta. >Rhyolite>Dacite, 45% bslt w/ sub rndd.-sub.ang. f-m. Sand of 80% alter. felsic	45': Archive Grab. • Drilling Slows
	Sieve/ Grab	No Rhys Periodic		20% bslt (mafics) sparse micas present. Color: 2.5 3/3 lt. olv. brn. Damp. v. mild rxn w/HCl when dry.	49'-50': Archive/Sieve grab • Stroke 46-38'
50		No Rhys		• 48': Gravel becomes more coarse. (modal size:- c.pbl.- v.c.pbl).	53.2': Water level 3.20.10
55	Sieve Grab	Periodic Graded			53-56': Archive/Sieve grab
				• 58': Comp. 80% mixed meta. >20% bslt.	
60	Sieve Grab			58'-73': Sandy Gravel (sG) 60-75%G 40%-25% sand. Sand content dec. w/ depth. f.-v.c.pbl. of w/ rndd.-v.w.rndd. of 80% felsic, 20% mafic comp. w/ m.-f. Sand of 80% felsic, 20% mafic comp. Color: 2.5YR 3/3 lt. olv. brown. Wet-Saturated.	58-60': Archive/Sieve grab
65	Sieve/ Grab	Periodic Graded			65': Archive/Sieve grab
70	Sieve Grab			• 70': Δ lith. 60-65% felsic, meta. • 70': 80%G, 20%S	70': Archive Grab/Sieve grab.
		Poor		At 3.20.10 (sandy)	73-74': Archive Grab
75	Grab	Fair		73'-74': gravelly Silt. 90%M, 10% gravel/Sand. Clayey silt 10YR 4/3 brown w/ f-m. sand + v.w.rndd. f-m. pbl of 100% felsic comp.	74-77.2': Split Spoon. 10% Recovery. (Gravel)
	Split Spoon	At 3.22.10 Moderate		74'- : Silt (M) 10YR 4/3. very plastic. • 74-77': Gravelly silt continues. (gM)	At 3.22.10
	Split Spoon	100%		Interval modified on next pg.	78-80.4': Split Spoon →

Reported By: Aaron Lanton | Reviewed By: L.D. Walker
Title: Geologist | Title: Geologist
Signature: Aaron Lanton | Date: 3·20·10 | Signature: [signature] | Date: 5-18-10

A-6003-642 (03/03)

BOREHOLE LOG

Page 3 of 3
Date: 3·22·10

Well ID: C7607 | Well Name: 199-D6-2 | Location: See pg 1. 100-D

Project: 100-FR-3 on Pump & Treat RPO wells. | Reference Measuring Point: Ground Surface.

Depth (Ft.)	Sample Type No.	Sample Blows Recovery	Graphic Log	Sample Description: Group Name, Grain Size Distribution, Soil Classification, Color, Moisture Content, Sorting, Angularity, Mineralogy, Max Particle Size, Reaction to HCl	Comments: Depth of Casing, Drilling Method, Method of Driving Sampling Tool, Sampler Size, Water Level
80	Split Spoon	100%		73'-77': sandy gravelly Silt (sg M) 75-80% M 10-20% g, 0-15% S; Matrix supported, clayey silt mottled 10YR 4/3 brown + 10YR 5/3 Pale brown. Plastic. w. rndd. v.f-v.c. pbl. of 100% bslt. + Stratified v.f.-c. baltic. sand. no rxn w/ HCl. (Saturated-Damp)	78.0-80.4': Split Spoon B23R64, B23R65 (Dup) (3·22·10) 10¾" OD Casing Set @ 80.0' TD: 80.4' bgs.
85			T.D.	77-80.4' (T.D.). Silt (M): Plastic, Clayey carbonaceous, Mod.-strong rxn w/ HCl. Color: 10YR 4/3 brown, 10YR 5/3 Pale brown, 10YR 8/1 white. Dry.-slightly moist. Sparse v.c. pbl. w. rndd. of bslt. present. [RUM]	
90					

Not Used At

Not Used At

Not Used At

Reported By: A. Lantow | Reviewed By: L.D. Walker

Title: Geologist | Title: Geologist

Signature: Aaron Lantow | Date: 3·22·10 | Signature: LD Walker | Date: 5/18/10

A-6003-642 (03/03)

BOREHOLE LOG

Page 1 of 1
Date: 6.9.10

Well ID: C7608	Well Name: 199-D7-5	Location: E: 574434.21	N: 152678.57
Project: 100 HR-3 Pump and Treat Expansion		Reference Measuring Point:	ground surface

Depth (Ft.)	Sample Type No.	Sample Blows Recovery	Graphic Log	Sample Description: Group Name, Grain Size Distribution, Soil Classification, Color, Moisture Content, Sorting, Angularity, Mineralogy, Max Particle Size, Reaction to HCl	Comments: Depth of Casing, Drilling Method, Method of Driving Sampling Tool, Sampler Size, Water Level
					Becker Hammer
0				0'-8' Silty Sandy Gravel (nsG): 70% well-rounded v. fine to coarse pebbles, 15% well rounded fine to v. coarse sand, 15% silt. Moderatly sorted. Color, moist, 7.5YR 3/3 (dark brown). V. strong rxn to HCl. 70% mafic, 30% felsic	10 3/4" x 8" dual wall water added as needed
5	archive				archive at 5'
				8'-29 Sandy Gravel (sG): 70% sub-rounded fine to v. coarse pebbles + sml. cobbles (90mm max), 25% Medium to coarse sand, 5% silt. Moderatly sorted, color, wet, 10YR 4/2 (dark grayish brown). weak HCl rxn 80% mafic, 20% felsic.	
10	archive				archive at 10'
15	archive				archive at 15'
				at 19'-20' gravel lense.	
20	archive				archive at 20'
25	archive				archive at 25'
				at 27 increase in fine pebbles and v. coarse sand	
				29'-38 Silty Sandy Gravel (nsG): 45% fine to coarse sub-rounded pebbles + sml cobbles (110mm max), 15% Silt, 40% v. fine to medium sand. poorly sorted. color dry 2.5Y 6/2 (light brownish gray). V. strong rxn to HCl. 80% mafic 20% felsic	at 29' drilling speed decreases archive at 30'
30					
35					archive at 35'
				38-54 Sandy Gravel (sG): 65% sub angular medium to v. coarse pebbles and..	split spoon collected from 39' to 41' bgs (HEIS 132RDY

Reported By: A. Rippe / A. Lantow		Reviewed By: L.D. Walker	
Title: Geologist / Geologist		Title: Geologist	
Signature: A. Lantow	Date: 6-11-10	Signature:	Date: 7/16/10

A-6003-642 (03/03)

BOREHOLE LOG

Page 2 of 2

Date: 6·11·10

Well ID: C7608 | Well Name: 199-D7-5 | Location: N. 152678.87, E. 574434.21

Project: 100-HR-3 OU Pump + Treat Expansion | Reference Measuring Point: Ground Surface

Depth (Ft.)	Sample Type No.	Sample Blows Recovery	Graphic Log	Sample Description: Group Name, Grain Size Distribution, Soil Classification, Color, Moisture Content, Sorting, Angularity, Mineralogy, Max Particle Size, Reaction to HCl	Comments: Depth of Casing, Drilling Method, Method of Driving Sampling Tool, Sampler Size, Water Level
40	rotary	split spoon		38-54' Sandy Gravel (GG): 65% sub angular medium to v. coarse pebble and small cobbles (120mm max), 30% fine to coarse sand 5% silt. Color, wet, 10YR 4/3 (brown), no HCl rxn. 85% mafic, 15% felsic	Becker Hammer 10 3/4" x 8" dual wall water no needed archaic at 40' 39'-41': Split Spoon B23RD4
45	archaic sieve	split spoon			43.9-46.1: Split Spoon B23RD5 Water: 45.9' 6·10·10
50	archaic sieve	split spoon / collapsed fm.			48.5-50.7: Split Spoon B23RD6 Casing pulled to retrieve Sample
55	archaic	split spoon		54'-63.5 (TD) Silt (M): 5% (decreasing w/depth) sub-rounded to rounded medium to coarse pebbles, 95% silt. Color, moist, 5Y 5/1 (gray). no HCl rxn. poorly sorted	54.0-56.2: Split Spoon B23RD7 Casing @ 61.0'
60	split spoon	0%		• 61: Color Δ: 2.5Y 4/2 Dark grayish brown. non Plastic. Sparse w. rnd. sm. cbl. present.	59-61.5: Split Spoon ~~B23RD8~~ MT. 6·11·10
	split spoon	100%			61.0'-63.5: Split spoon (B23RD8) Total Depth: 63.5'
65			T.D.		

Reported By: A. Pappas / A. Lantzen		Reviewed By: L. J. Walker	
Title: Geologist / Geologist		Title: Geologist	
Signature:	Date: 6·11·10	Signature:	Date: 7/16/10

A-6003-642 (03/03)

BOREHOLE LOG

Page 1 of 2
Date: 6.12.10

Well ID: C7609	Well Name: 199-H4-82	Location: E: 574861.12	N: 152684.44
Project: 100 HR-3 Pump + Treat		Reference Measuring Point:	ground Surface

Depth (Ft.)	Sample Type No.	Sample Blows Recovery	Graphic Log	Sample Description: Group Name, Grain Size Distribution, Soil Classification, Color, Moisture Content, Sorting, Angularity, Mineralogy, Max Particle Size, Reaction to HCl	Comments: Depth of Casing, Drilling Method, Method of Driving Sampling Tool, Sampler Size, Water Level
					Becker Hammer
0				0'-7' Silty Sandy Gravel (MSG):	10¾"x8" dual wall 60 bm/ft
				60% sub rounded medium to v. coarse	water as needed
				pebbles, 20% v. fine to fine sand,	
				20% silt. Color, moist, 10YR 4/3	
				(brown). Moderatly sorted. 60% mafic	
5	archive			40% felsic.	archive at 5'
				7-30' Sandy Gravel (SG): 65%	
				sub-rounded fine to v. coarse pebbles and	
				occasional sml. cobble (140mm max), 30%	
				sub-angular medium to v. coarse sand,	
10	archive			<5% silt. Color, wet, 10YR 2/1	archive at 10'
				(black). moderatly sorted. 80% mafic	
				20% felsic.	
15	archive				archive at 15'
				at 18' pebbles + cobbles become sub-angular	
20	archive				archive at 20'
25	archive				archive at 25'
30	archive			30-53 Silty Sandy Gravel (MSG): 55%	archive at 30'
				sub-rounded medium to v. coarse pebbles +	
				sml. cobbles (115mm max), 25% fine	
				to v. coarse sand, 20% silt. Color,	
35	archive			wet, 7.5YR 4/1 (dark gray). moderatly	
				sorted. 70% mafic, 30% felsic.	archive at 35'

Reported By: A. Pappas		Reviewed By: L.D. Walker	
Title: Geologist		Title: Geologist	
Signature:	Date: 6.12.10	Signature:	Date: 7/15/10

A-6003-642 (03/03)

BOREHOLE LOG

Page 2 of 2
Date: 6.12.10

Well ID: C7609 | Well Name: 199-H4-82 | Location: E: 574861.2, N: 152684.44

Project: 100 HR-3 pump & Treat | Reference Measuring Point: ground surface

Depth (Ft.)	Sample Type No.	Sample Blows Recovery	Graphic Log	Sample Description: Group Name, Grain Size Distribution, Soil Classification, Color, Moisture Content, Sorting, Angularity, Mineralogy, Max Particle Size, Reaction to HCl	Comments: Depth of Casing, Drilling Method, Method of Driving Sampling Tool, Sampler Size, Water Level
40	archive			30'-53' Silty Sandy Gravel (MSG): 55% sub-rounded medium to v. coarse pebbles, sml. cobbles (115mm max), 25% fine to v. coarse sand, 20% silt, color, wet, 7.5YR 4/1 (dark gray), moderately sorted. 70% mafic, 30% felsic.	Becker Hammer 10 3/4" x 8" dual wall 60 lbs/ft water as needed DTW: 40.4' bgs archive at 40'
45	archive sieve				archive at 45' sieve at 45'
50	archive sieve				archive at 50' sieve at 50'
55				53'-59.1' Silt (M): <5% rounded Medium to v. coarse pebbles (at depth of 55' become nonexistent), 95% silt. Color, moist, 7.5YR 6/3 (light brown) well sorted. Moderate plasticity.	archive at 55'
	S.S. 1.00'				S.S. @ 56.2'-58.7' bgs @ 0905 6/14/10. HE25# B24D67, B24D97 (I-001); 70% rec
60			T.D.		T.D. = 59.1' bgs

Reported By: A. Rupp / T. Brown | Reviewed By: L.D. Walker

Title: Geologist | Title: Geologist

Signature: [illegible] | Date: 6.12.10 6-14-10 | Signature: [illegible] | Date: 7/15/10

A-6003-642 (03/03)

BOREHOLE LOG

Page 1 of 2

Date: 6·12·10

Well ID: C7610 | Well Name: 199-H1-5 | Location: N. 153904.21, E. 524876.11 NE. of D-Reactor

Project: 100-HR-3OU Pump & Treat Expansion | Reference Measuring Point: Ground Surface

Depth (Ft.)	Sample Type No.	Sample Blows Recovery	Graphic Log	Sample Description: Group Name, Grain Size Distribution, Soil Classification, Color, Moisture Content, Sorting, Angularity, Mineralogy, Max Particle Size, Reaction to HCl	Comments: Depth of Casing, Drilling Method, Method of Driving Sampling Tool, Sampler Size, Water Level
0				0-3': Top Soil of slightly Sandy Silt (SM) 90%M	Diesel Percussion Hammer.
	Archive	Full Time		Slightly moist - Dry unconsolidated. of 10YR 3/2 brown. v.f. S. sparse.	Add Water Continuously ~10gpm. 0-3': Archive grab
					Drill rate almost stops
				3-7': Gravel (G) 90%G, 5%S.	
5	Archive	Periodic		v.P.srtd. sm.pbl - Bldr. sub ang. of 75%Bslt, 25% int. volc. + fels. meta. w/ v.c. ang. Sand.	5-7': Archive grab 7': Drill Rate speeds slightly.
				7-15': Sandy Gravel (SG) 85%G, 10%S, 5%M	
				Mod.-P. srtd. sub ang.-sub rndd. f.pbl.-v.c.pbl. w/ 10% sm. cbl. of 70%Bslt, 30% int. volc. + fels. meta. w/ v.f.-c. ang. S. of 70% Qtz-felds. 30% Mafic.	9-12: Archive grab
10	Archive	Periodic	v. Graded	Matrix. color: 10YR 4/2 Drk. grysh. brown, slightly moist. no rxn w/ HCl.	
				• Downward fining	
				13': ↑ Sand content 70%G, 25%S, 5%M	15' Drill Rate fast
15	Archive	Full Time		15'-25': Gravelly Sand (gS) 80-70%S, 20-30%G v.f.pbl-v.c.pbl w/ sprs sm. cbl. v.w.rndd (discoidal) of 80% fels meta + int. volc. 20% bslt. w/ v.f-m. S. of 90% Qtz-fels, 10% mafic. [RINGOLD] Fm.	18-18' Archive grab
				• 18'-gravel content. 75%G, 20%S, 5%M	
20	Sieve Archive	Full Time v. Graded.		• Downward Coarsening sequence. • No rxn w/ HCl • Silt coating clasts. Must wash sample to determine composition.	20-22': Archive/Sieve grab 21.8': Water 6·12·10
				25-33': Sandy Gravel (SG) 12 6·12·10 85%G 15%S.	• Drill rate gradually decrease
25	Archive Sieve	Sand Full Time Gravel Periodic Graded		• Sandy Gravel continues: 75-80%G 25-20% S, v.f. pbl-sm cbl. v.w.rndd. of 85% fels. meta. + int. to fels. volc., 15% Bslt. w/ sub ang.-ang. C. Sand. of 95% Qtz-felds. 5% fels. Unconsolidated. moist no rxn w/ HCl	20-25': Archive/Sieve grab 25-28': ↗
30	Sieve Archive			• 28-33 - Downward fining	30-32': Archive/Sieve grab
				32.5 No sand present. 100% Gravel.	
				33.0' - Gravelly Sand. (gS) 65%S, 35%g v.w.srtd. v.w.rndd m.pbl-v.c.pbl. of 85% felsic-int. volc. + met. 15% bslt. w/ f-m. ang S. of 95% Qtz-feld. 5% Mafic. No silt. no rxn w/ HCl. unconsolidated. Matrix color 10YR 4/3 brown.	
35	Sieve Archive			• Gravel size Coarsening. abnt. mica • Downward Coarsening. Sequence.	34'-36': Archive/Sieve grab

Reported By: A. Lantow		Reviewed By: L.D. Walker	
Title: Geologist		Title: Geologist	
Signature: Aaron Lantow	Date: 6·12·10	Signature: [signature]	Date: 7/15/10

A-6003-642 (03/03)

BOREHOLE LOG

Page 2 of 2
Date: 6·12·10

Well ID: C7610 | Well Name: 199-H1-5 | Location: See pg 1.

Project: ~~See pg 1.~~ 100-HR-3 Pump & Treat | Reference Measuring Point: Ground Surface

CW 2-15-10

Depth (Ft.)	Sample Type No.	Sample Blows Recovery	Graphic Log	Sample Description: Group Name, Grain Size Distribution, Soil Classification, Color, Moisture Content, Sorting, Angularity, Mineralogy, Max Particle Size, Reaction to HCl	Comments: Depth of Casing, Drilling Method, Method of Driving Sampling Tool, Sampler Size, Water Level
40	Archive/ Sieve	Full Time		40'-42.5: Sandy Gravel (SG) 70%G, 30%S, 0%m v.cw.rndd. m.pbl-s.c.pbl. w/sprs. sm.cbl. of 85-90% felsic-int. metavolc., 10-15% bslt. w/c.S. of 95% Qtz:Felt., 5% Mafic. comp. Color 10YR 4/3 brown.	Diesel Percussion Hammer. 39-42.5: Archive/Sieve grab
	~~4½ HWD Casing Shoe TD~~	Periodic		Unconsolidated. no cmnt w/ HCl. Clasts are discoidal. abnt. micas.	~~44.0' TD of 11¾" casing.~~ 6½" HO
45	Split Spoon	100%		42.5-46.5(TD): Silt.-Clayey Silt. Slightly moist. Mod. plastic - 7.5YR 4/3 Brown.	44.0-46.5: Split Spoon B29DC8, B24D98
			T.D.		T.D. 46.5' bgs. 5" diameter. 10¾" @ TD diameter.
50					
55					

Reported By: A. Lanton		Reviewed By: C.A. Walker	
Title: Geologist		Title: Geologist	
Signature: Aaron Lanton	Date: 6·12·10	Signature: C A Walker	Date: 7/15/10

A-6003-642 (03/03)

BOREHOLE LOG

Page 1 of 2
Date: 6·10·10

Well ID: C7611 | Well Name: 199-D7-6 | Location: N.152980.21, E.574228.64

Project: 100-HR-3 OU Pump+Treat Expansion/RI/FS study | Reference Measuring Point: Ground Surface

Depth (Ft.)	Sample Type No.	Sample Blows Recovery	Graphic Log	Sample Description (Group Name, Grain Size Distribution, Soil Classification, Color, Moisture Content, Sorting, Angularity, Mineralogy, Max Particle Size, Reaction to HCl)	Comments (Depth of Casing, Drilling Method, Method of Driving Sampling Tool, Sampler Size, Water Level)
0				0-2': Gravel Pad.	Diesel Percussion Hammer.
				2-13: Sandy Silt. (SM)-silty Sand (mS)	Add Water Periodically to aid Rtrns.
				v.f. ang.-sub ang. felsic Sand-silty sand. Dry	
				~~10YR 5/4~~ 2.5Y 4/1 lt. olv. brown, Sprs. plant matter.	2-5: Archive grab
5	Archive				
		Fall 100%	Time		
10	Archive				9-11: Archive Grab
				13-16: Graded Contact or Graded Rtrns.	
				13-20: Sandy Gravel (SG) 80%G, 15%S, ≤5%M	13': Drill Rate Slows.
				Poorly Srtd. v.f. pbl-sm. cbl. of 70% bslt. 30% fels.	14/-16 Archive grab
15	Archive	Periodic Sand may be Mixed w/ new		meta. + volcanics. (w.-sub. rndd.) w/ f.-m. ang.	Add Water Constantly for
				Sand of 80% fels. Qtz. 20% bslt. Matrix color:	Rtrns.
				2.5Y 4/1 lt. olv. brown, wet. from drilling water	
					LW 6/30/11
20	Archive/Sieve	Graded 50% Recovery		20': Decrease Sand content: 90%G, 10%S.	~~20~~ 18-22: Archive/Sieve Grab
				20-35: Gravel 80%G, 20%S, <2%F, 2%M.	
				v.f. pbl-sm. cbl. w.-sub rndd of 70% fels/ m-v.c. ang-	22.3-24.6': RI/FS split spoon.
	RI/FS Split Spoon	50% Recovery		sub ang. Sand of 50% felsic/mafic ratio. Sprs. mica	B244W2,
				present. Clast Comp. 80% fels. meta. /20% bslt.	
25	Archive/Sieve	Graded/Periodic		Matrix color: 10YR 5/1 Gray olive brown.	24.6-27: Hit 6.10.10
missing split spoon				Sprs. L-Cbl. of bslt.	~~25': Archive/Sieve grab~~ 6.10.10
				25.5: WATER 6·10·10	25-28': Archive/Sieve grab
					(missing upper split spoon of upper aquifer.)
				Clasts v.w. rndd + discoidal. of 85% felsic + int.	25.5: Water
30		Graded Periodic		meta + volc., 15% Bslt.	6.10.10
					32.9
					~~27.9~~-35.4': RI/FS split Spoon
					B244W3
	Archive/RI/FS Split Spoon	Sieve 20-15%			~~Archive + Sieve also.~~ 6.10.10 OK
35				36'-36.5': Gravel 100% v.w. srtd. f.-m. pbl of w.w rndd.	
		Periodic		95-90% felsic-intermediate volc. + meta. w/ abundant	
				carbonate coated clasts. Sprs. nodules of sandy	36.5-37.0': Split Spoon.
				$CaCO_3$.	Archive grab + Sample
41	Split Spoon			36.5-41.5: Silt (M). Plastic, slightly moist	~~B244W4~~ (B23R66)

Reported By: A. Lantow | Reviewed By: L.D. Walker LW 6/30/11

Title: Geologist | Title: Geologist

Signature: Aaron Lantow | Date: 6·10·10 | Signature: [signature] | Date: 7/16/10

A-6003-642 (03/03)

BOREHOLE LOG

LW 7/16/10

Page 2 of 2

Date: 6·10·10

Well ID: C7611 | Well Name: 199-D7-6 | Location: ~~See pg. 1~~ NE. of 100 D

Project: ~~See pg. 1~~ 100-HR-3 | Reference Measuring Point: Ground Surface

LW 7/16/10

Depth (Ft.)	Sample Type No.	Sample Blows Recovery	Graphic Log	Sample Description: Group Name, Grain Size Distribution, Soil Classification, Color, Moisture Content, Sorting, Angularity, Mineralogy, Max Particle Size, Reaction to HCl	Comments: Depth of Casing, Drilling Method, Method of Driving Sampling Tool, Sampler Size, Water Level
40		11" hole		36.5-43.5: Silt (M). Slightly Plastic-Plastic. Slightly moist. Color: 2.5Y 7/2 lt. gray. mod. rxn w/ HCl	
		5" hole			41'-43.5': RIFS Split spoon + Archive grab.
				41': 2.5 5/3 lt. olv. brown. mod. rxn w/ HCl.	B244W5
			T.D.		TD: 43.5
45					
50					

Reported By: S. Lantow		Reviewed By: L. D. Walker	
Title: Geologist		Title: Geologist	
Signature: Aaron Lantow	Date: 6·10·10	Signature: L D Walker	Date: 7/16/10

A-6003-642 (03/03)

BOREHOLE LOG

Page 1 of 3
Date: 1.28.10

Well ID: C7612 | Well Name: 199-D5-128 | Location: SW OF 105-DR REACTOR, S OF ELECTRICAL SUB-STATION

Project: 100-HR-3 P&T EXPANSION (100-D, FY09) | Reference Measuring Point: GROUND SURFACE

Depth (Ft.)	Sample Type No.	Sample Blows Recovery	Graphic Log	Sample Description (Group Name, Grain Size Distribution, Soil Classification, Color, Moisture Content, Sorting, Angularity, Mineralogy, Max Particle Size, Reaction to HCl)	Comments (Depth of Casing, Drilling Method, Method of Driving Sampling Tool, Sampler Size, Water Level)
					• AP 1000 Becker hammer
0				0'-2' gravel pad	• 10 3/8" x 8' dual wall
					• Archive sample every 5' → "A.S."
				2'-9' Gravelly Silty Sand (gmS). 60% medium coarse sand, 25% pebbles (7-40mm), 15 silt. sub-rounded, well sorted. no HCL rxn. 60% mafic, 40% felsic color. 7.5YR 4/3 (brown). increase in pebbles with depth moist	
5	A.S.				
				9'-25': Silty Gravel (mG) 80% pebbles (8mm-32mm) + Sm cobbles, 5% fine sand, 15% silt. Sub angular. moderatly sorted. moderate HCL rxn. 65% felsic, 35% mafic color (dry) 10YR 6/1 (Gray). LW 6/30/11	
10	A.S.				
15					
20					
25	archive			25: Sandy gravel (sG): 60% gravel 35% sand ≤5% silt. Gravel ≥80% basalt, VFP-MP avg FP, SR. Sand M-C, A-SA, 75% basalt. Silt 2.5Y 4/2-4/3 dark grayish brown to olive brown. No rxn HCL.	
				[28-56: gS] 30 (contact gradational; ~28'?) gravelly sand (gS). 15-20% Gravel, <5% silt, >75% sand. Gravel v. poorly sorted MP-SC, fractured, 70% basalt. Sand M-VC, 60% basalt, A-SR. Dry. Silt as above.	
30	archive				S1: gravel ↑ for ~1'
35	archive			35: gravels to LC, 20% More basaltic than above.	

Reported By:	A. Pappas / L. Stratton	Reviewed By:	L. D. Walker
Title:	Field Geologist	Title:	Geologist
Signature:		Signature:	
Date:	1.28.10	Date:	2/26/10

A-6003-642 (03/03)

BOREHOLE LOG

Page 2 of 3
Date: 1/29/10

Well ID: C7612 | Well Name: 199-D5-128 | Location: SW of 105-DR Reactor, S of electrical sub-station

Project: 100-HR-3 P&T Expansion (100-D, F409) | Reference Measuring Point: Ground Surface

Depth (Ft.)	Sample Type No.	Sample Blows Recovery	Graphic Log	Sample Description: Group Name, Grain Size Distribution, Soil Classification, Color, Moisture Content, Sorting, Angularity, Mineralogy, Max Particle Size, Reaction to HCl	Comments: Depth of Casing, Drilling Method, Method of Driving Sampling Tool, Sampler Size, Water Level
40	archive			40: silt to trace, gravel to ≥10%. Sand well sorted C w/ limited M+VC, >85% basalt. Moist. No rxn HCl.	Becker hammer w/ 10 3/4"/8" dual-wall casing.
45	archive			45-50: SAND (S). As above but gravel ↓ to 5%, silt only trace. VCS ↑: sand sorting ↓. 80% basalt.	
50	archive			50: gravelly sand (gS): As above but gravel to 15%, silt to 5%. Poorly sorted, basalt ↓ to 65%, no rxn HCl, more brown than above (probably due to ↑ silt)	56: DR ↓. Adding water.
55	archive			55: gravel fractured, silt ↑ to ≤10%. 10YR 5/1 dark gray. No rxn HCl.	
				56-75: Sandy gravel (SG): gravel ≤80%, sand ≥20%, No silt. Gravel SR-R, FP-MP, diverse lithologies, ≤40% basalt. Sand still 80% basalt, as above.	Note: except for greater diversity of gravel lithologies, no evidence of Ringold Unit E; basalt % far too high.
60	archive				62: DR ↑
65	archive			65: sand ↑ to 50% for ~3 ft (?); gravel more basaltic than above. Sand M-C. Trace silt.	
70	archive			70: sand to 40%, 40% basalt 60% qtz other. M-VC, more brown than above. Gravel F-MP, 40% basalt 60% other, SR-R.	
75	archive			75-81: silty sandy gravel (msG): 40% gravel 50% sand 10% silt. All as above. Silt 10YR 3/2 v. dark grayish brown.	75: add aux air compressor. 78: DR ↓ (grain size ↑), cobbles kicking casing off

Reported By: L.E. Stratton | Reviewed By: L.D. Walker

Title: Geologist | Title: Geologist

Signature: [signature] | Date: 1/29/10 | Signature: [signature] | Date: 2/26/10

A-6003-642 (03/03)

BOREHOLE LOG

Page 3 of 3
Date: 1/29/10

Well ID: C7612 | Well Name: 199-D5-128 | Location: SW of 105-DR Reactors, S of electrical sub-station

Project: 100-HR-3 P&T Expansion (100-D, FY09) | Reference Measuring Point: Ground Surface

Depth (Ft.)	Sample Type No.	Sample Blows Recovery	Graphic Log	Sample Description: Group Name, Grain Size Distribution, Soil Classification, Color, Moisture Content, Sorting, Angularity, Mineralogy, Max Particle Size, Reaction to HCl	Comments: Depth of Casing, Drilling Method, Method of Driving Sampling Tool, Sampler Size, Water Level
80	S.S. archive archive	attempt S.S 78'- No recovery DTW @ 81.85' (1.29.10)		[81-87: GRAVEL] 81: gravel (G): 85% gravel, 15% sand trace silt. Gravel M-CP, SR-R (suspect larger), 40% basalt 60% other, granitics common. Sand 95% qtz 5% mafics, F-M, R. No rxn HCl. 10YR 4/2 dark grayish brown (becoming more brown, lighter w/ depth) 86: gravel to 95%.	Becker hammer w/ 10 3/4" dual-wall casing. 81: gravels still relatively basaltic, but distinct change in sand size & composition - v. hard drilling ∴ Ringold E?
88	archive archive	grab		87: sandy gravel (sG): gravel as above, sand to 50%. very well sorted M, 70% qtz 30% mafic loose. (DR↑) [87-90: SG]	GRAB (86) HEIS # B23MT7
	S.S. 88.0-90.5	~46/100% 90: archive			S.S. HEIS # B23MT8
90				90-98: Gravelly sand (gS): 15% gravel, <10% silt, >85% sand. Gravel MP, R, 40% basalt. Sand M-C, 40% mafic 60% qtz. Silt 10YR 5/6 yellowish brown. Saturated.	Note: Ringold E more mafic than typical in 100-D Area.
95	S.S. 95.0-97.0	archive		95: gravel to 25%, MP-SC, irregularly shaped. Silt 2.5Y 5/4 olive brown. Sand slightly finer than above, avg M.	97: increasing silt. 98: DR↑
	archive			98-99: silty gravel: gravel & sand as above, but silt ↑↑ to 50%. Silt as matrix and fragmented clasts w/ mod to high yield strength. 10YR 5/6 yellowish brown. Wet.	
100	S.S. 99-101.5	81/100% HEIS B23MT2		100: dry, consolidated. Massive. No rxn HCl. Mud to high plasticity. [silt]	RUM homogenous throughout, 100-106.6
	S.S. 103.4-105.9	41/100% HEIS B23MV3		[99-106.6: M]	
105			TD = 106.6		Sieve samples: • 86-90' • 95'
110					
115					

Reported By: L. Stratton | Reviewed By: L.D. Walker

Title: Geologist | Title: Geologist

Signature: [illegible] | Date: 2.1.10 | Signature: [illegible] | Date: 2/26/10

A-6003-642 (03/03)

Appendix C

Development Forms and Notes: 100-D and –H Area Wells

WELL DEVELOPMENT AND TESTING DATA

Well Name:	Well ID:	Well Location:	Date:
199-D4-95	C7083	200 m SW of 15RM Pond	11/20/09

Reference Measuring Point (unless otherwise noted): TOP OF OUTER CASING (TOC)

Has the well been surveyed? ○ Yes ⊗ No | Does the well have a cement pad? ○ Yes ⊗ No

PART 1

STATIC WATER LEVEL:

Start of Job 87.1' TOC (83.92' bgs)

End of Job 87.2' TOC (84.02' bgs)

DEPTH TO BOTTOM:

Start of Job 120.2' TOC (117.02' bgs)

End of Job 120.1' TOC (116.9' bgs)

PART 2

WELL DEVELOPMENT DATA

Pump Model 5 HP Franklin Electric

Intake Depth LOWER 116.1' TOC / UPPER 106.1' TOC

Starting Turbidity 28.6 NTU / 8.18 NTU

	Pump Start	Stop	Flow Rate
L	1009	1108	47.8 gpm
L	1125	1159	47.8 gpm
U	1227	1306	19.0 gpm

Total Pumped LOWER 5258 gal / UPPER 941 gal

Final Turbidity 5.07 NTU / 2.12 NTU

XD SN/Range (PSI) 5217 (20 psi)

PART 3

INSTANTANEOUS SLUG TEST

Static Water Level (TOC)

Transducer Depth

Baseline Start

Injection Start

Baseline Start

Withdrawal Start

Slug Volume

XD SN/Range (PSI)

NOT USED 11/20/09

PART 4

Last Recorded Measurements Date: N/A

Current Measurements Date: 11/20/09

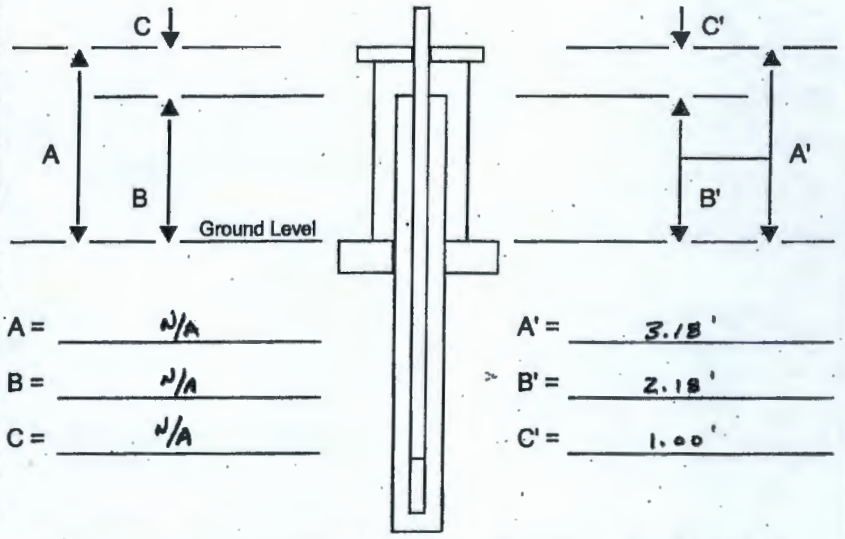

A = N/A

B = N/A

C = N/A

A' = 3.18'

B' = 2.18'

C' = 1.00'

Are there any reference marks on the casing strings? ○ Yes ⊗ No

PART 5

COMMENTS:

FIELD TEST KIT #1

2100P TURBIDIMETER (HACH)

STD.	READ
5.64 NTU	5.79 NTU
48.4 NTU	48.4 NTU
520 NTU	513 NTU

HQ 40d MULTIMETER (pH/Cond.)

(pH)

STD	READ
7.0	7.05
10.0	10.1

(Cond.)

STD	READ
1417 µS/cm	970 µS/cm

HERMIT = "BURT"

TRANSDUCER = 5217 (20 psi)

LOWER INTERVAL

TEST #1 PORT WD1 = DRAW

TEST #2 PORT WD2 = REC.

~~TEST #3 PORT WD3 = I~~ MBB 11/20/09

UPPER INTERVAL

TEST #3 PORT WD3 = DRAW

TEST #4 PORT WD4 = REC.

INITIAL XD = 25.550' LOW

INITIAL XD = 15.535' HIGH

Prepared by (print name):	Signature:	Date:
Jess Hocking	[signature]	11/20/2009
Reviewed by (print name):	**Signature:**	**Date:**
L.D. Walker	[signature]	1-12-10

A-6003-644 (03/03)

FIELD ACTIVITY REPORT - DAILY DRILLING

Page 1 of 3

Date: 11/20/2009

Well Name: 199-D4-95 | Well ID: C7083

Location: 200 M SW of 1SRM Pond | Report No.: 7

Start	Finish	Total
Time 0630	Time 1538	Time 9 hrs. 8 min.
Hole Depth/Csg - / -	Hole Depth/Csg - / -	Hole Depth/Csg - / -

Reference Measuring Point: GROUND SURFACE

Casing String No. ① 2 3 4 ____ Rod Size: ① 6" perm. SS

See Report No. 1 WELL DEVELOPMENT

Time/Depth From	Time/Depth To	Description of Activities/Operations with Depth (Attach applicable drawings and document straightness test results)
0630	0700	P.O.D Mtg.
0700	0729	Crew gets ready to bail sediment from sump.
	0730	Geo. tags DTW @ 87.1' TOC (84.1' bgs); Drillers tag sediment @
		114.2' TOC (Btm of hole = 120.2' TOC; ~6' fill)
0735		Drillers begin bailing hole.
	0740	Geo. "calibrates" Field Test Kit #1 for water parameter observations
	0834	Finished bailing well; DTB tagged @ 120.2' TOC (117.02' bgs).
0853	0914	Drillers prepare to trip in pump.
0915		Drillers begin tripping in pump; (3x21' + 2x20' + 1x10' + 1x5.6'
		- 2.5' = 116.1' TOC intake (112.92' bgs) [~4' from btm.]
	1006	Started WD TEST #1 (PORT WD1) on HERMIT "BURT."
	1009	Pump started; Flowrate = 47.8 gpm; Initial XD = 25.350' H_2O
	1108	Pump shut off - switching purge trucks; Draw test still running.
	1125	Pump turned back on; Flowrate = 47.8 gpm; continue development in
		lower interval.
	1159	Pump shut off; Recovery test started (Port WD2); Lower interval
		pumped 5,258 gal; Final NTU = 5.07.
	1211	Recovery test stopped. + 100% recovered (due to slug of water
		returning from tremmie pipe).
1219		Drillers raise pump (& intake) up ~10 ft to the second
		interval (intake ~106.1' TOC [102.92' bgs]
	1224	Re-drop transducer down hole.
	1227	Pump started for 2nd interval (PORT WD3); Flowrate @ 19 gpm.
	1256	Geo. informs FTR that NCO needed for chem. sample.

Reported By: Jess Hocking | Reviewed By: L.D. Walker

Title: Lead Geologist | Date: 11/20/09 | Title: Geologist | Date: 1/12/10

Signature: [signature] | Signature: [signature]

A-6003-651 (REV 1)

FIELD ACTIVITY REPORT - DAILY DRILLING

Continuation Page

Date: 11-20-2009

Well Name: 199-D4-95

Well ID: C7083

Location: 20 m SW of 1SRM Pond

Continuation of Report No.: 7

Time/Depth From	Time/Depth To	Description of Activities/Operations with Depth
	1306	Pump shut off; Recovery test started (Port WD 4); waiting for NCOs to arrive for chem. sample.
	1313	NCOs arrive on site - prepare to sample well.
	1315	Recovery test stopped; + 100% recovery (due to slug of water dropping out of tremmie).
1335	1336	Prepare to turn on pump for chem. sample.
1337		Turn pump on; NCOs begin testing parameters (before taking sample).
	1350	NCOs take water sample; HEIS # = B22X28 & B22X29.
	1400	NCOs depart the site.
	1408	Purge truck departs for 200 EAST, Tot. pumped for the day = 5,999 gal.
1410		Drillers begin tripping pump from the well.
	1430	Pump out of the well.
	1434	Tag DTB @ 120.1' TOC; Tag DTW @ 87.2' TOC.
1435	1451	Drillers break down rig.
1452	1500	RIG MAINTENANCE (Pump rig won't start) ~~Move rig to decon pad~~ PSH 11/20/09
1501	1530	Drillers move rig to C7087.
	1538	Geo. no longer needed on site - heads for town.

NOT USED

11/20/09

Reported By: Jess Hocking

Title: Lead Geologist

Date: 11/20/09

Signature: [signature]

Reviewed By: L.A. Welker

Title: Geologist

Date: 1/12/10

Signature: [signature]

A-6003-652 (04/03)

FIELD ACTIVITY REPORT - DAILY DRILLING

Continuation Page

Page 3 of 3

Date: 11/20/2009

Well Name: 199 - D4-95

Well ID: C 7083

Location: 200 m SW of ISRM Pond

Continuation of Report No.: 7

Time/Depth From	Time/Depth To	TIME	XD	TURB. (NTU)	pH	Cond. (µS/cm)	Temp. (°C)
	LOWER	1029	16.403	28.6	7.78	602	13.1°
		1038	16.362	19.4	7.90	576	14.6°
		1049	16.274	11.8	7.89	578	14.6°
		1056	16.260	10.3	7.88	580	14.0°
		1128	17.186	29.1	7.83	590	15.2°
		1139	16.869	9.01	7.98	574	15.1°
		1147	16.813	6.10	8.03	573	14.8°
		1155	16.732	5.07	8.06	575	14.9°
	UPPER	1248	12.018	3.18	8.08	571	15.2°
		1259	12.006	2.12	8.06	571	15.1°

NOT USED

11/20/09

Description of Activities/Operations with Depth

Reported By: Jess Hocking

Title: Lead Geologist

Date: 11/20/09

Signature: [signature]

Reviewed By: L.D. Walker

Title: Geologist

Date: 1/12/10

Signature: [signature]

A-6003-652 (04/03)

WELL DEVELOPMENT AND TESTING DATA

Well Name:	Well ID:	Well Location:	Date:
199-D4-96	C7084	NW edge of ISRM well, 100 D	10.28.9

Reference Measuring Point (unless otherwise noted): TOP OF OUTER CASING (TOC)

Has the well been surveyed? ○ Yes ○ No

Does the well have a cement pad? ○ Yes ● No

PART 1

STATIC WATER LEVEL:

Start of Job	90.3	(87.4 bgs)
End of Job	90.4	(87.5 bgs)

DEPTH TO BOTTOM:

Start of Job	103.9	(101 bgs)
End of Job	103.9	(101 bgs)

PART 2

WELL DEVELOPMENT DATA

Pump Model Brantings 5hp

Intake Depth 100.2' (97.3' bgs)

Starting Turbidity 237 ntu

Pump Start	Stop/Δ	Flow Rate
1225	1230	10gpm
1230	1232	17gpm
1232	1440	15gpm
	not used	

Total Pumped 2 hrs 15 min / 1,959 gal.

Final Turbidity 3.48

XD SN/Range (PSI)

PART 3

INSTANTANEOUS SLUG TEST

Static Water Level (TOC)

Transducer Depth

Baseline Start

Injection Start

Baseline Start

Withdrawal Start

Slug Volume

XD SN/Range (PSI)

N/A

PART 4

Last Recorded Measurements Date: 10.22.9

Current Measurements Date: 10.28.9

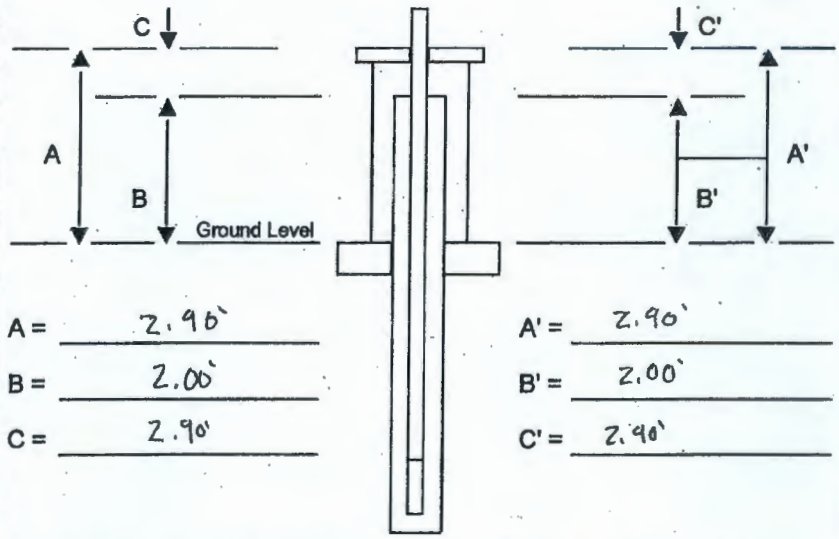

A =	2.90'	A' =	2.90'
B =	2.00'	B' =	2.00'
C =	2.90'	C' =	2.90'

Are there any reference marks on the casing strings? ○ Yes ○ No

PART 5

COMMENTS:

no cement pad, all measurements from ground

hermit 3K-45422: Burd probe XDSN 10500

pump intake placed at 97.3' bgs, .7' above screen bottom

probe placed 94.3' bgs, 3.7' above screen bottom.

water is 7.4' above probe at start.

Prepared by (print name):	Signature:	Date:
A. Pappas	[signature]	10.28.9
Reviewed by (print name):	**Signature:**	**Date:**
L.D. Walker	[signature]	11-10-09

A-6003-644 (03/03)

FIELD ACTIVITY REPORT - DAILY DRILLING

Page 1 of 3

Date: 10.28.9

Well Name: 199 - D9-96	Well ID: C7084
Location: NW edge of ISRM pond	Report No.: ~~6~~ 7 CW 11/10/09

Start	Finish	Total
Time 0600	Time 1556	Time 9 hrs 56 min
Hole Depth/Csg N/A / N/A	Hole Depth/Csg N/A / N/A	Hole Depth/Csg N/A / N/A

Reference Measuring Point: GROUND SURFACE

Casing String No. 1 2 3 4 _____ Rod Size:

See Report No. 1 AP 10.21

Time/Depth From	Time/Depth To	Description of Activities/Operations with Depth (Attach applicable drawings and document straightness test results)
0600		POD at ISRM trailer with IBTR, drillers, geologists. discussed
	0703	VPP.
0703		Drillers demob at site C7085 and prepare to
	0932	develop site. Purge trucks delivered to site
0932		Drillers bail out 3' of waste in well
		Tag bottom of well tagged at ~~[illegible]~~ 101' bgs
	1115	Tag of water 87.4' bgs
1115		Trip in pump, pump ~~screen~~ intake placed at 97.3' bgs,
		probe taped to pump tube at 94.3' bgs
1225		Start pump, initial flow rate 10 gpm, then 17, then 15 gpm as
		recorded on ~~[illegible]~~ following pages.
1322		NCO's take water sample after they call field supervisor.
		afraid turbidity would have over 10 after an hour of waiting.
		B22HD2 & B22HD3 are sample names provided by NCO's
	144	Finish development pumping /activities and start recovery
144	1532	Drillers trip out well.
1532	1555	Tag bottom of well at 101' bgs, water level at
		90.4' TOC (87.5' bgs
		Tests used today include WD7, Blue + WD8, Blue
	1556	Drillers + geologist exit site
		Not used AP

Reported By: A. Papps		Reviewed By: L.D. Walker	
Title: Geologist	Date: 10.28.9	Title: Geologist	Date: 11/10/09
Signature: [signature]		Signature: [signature]	

A-6003-651 (REV 1)

LW 11-10-09 LW 11-10-09

FIELD ACTIVITY REPORT - ~~DAILY DRILLING~~ calibration record / development page

Continuation Page

Page ~~2~~ 2 of 3

Date: 10.28.9

Well Name: See pg 1.

Well ID: See pg 1.

Location: See pg 1.

Continuation of Report No.: 67 LW 11/10/09

Time/Depth From	Time/Depth To	Description of Activities/Operations with Depth
		Hermit Name: 3K-45422 · Probe Depth: 94.3 bgs · Intake Depth: · Aquifer Thickness:
		Test: Blue w 87 · XDT: 7.412 · Head above Intake: 97.3
		Calibration of Field Instruments:
		Turbidity: Standard: 4.86 · Reading 4.80 · $\frac{X_2-X_1}{X_2+X_1}/100$:
		: Std. : 49 · Reading 49.1 · " :
		: Std. : 584 · Reading 582 · " :
		pH : Std. : 10.0 · Reading 10.15 · Slope: cat# BDH5072
		Std. : 7.0 · Reading 7.07 · cat# BDH5046
		Std : 4.0 · Reading ·
		Conductivity: Std : 1417 · Reading 1462 · $\frac{X_2-X_1}{X_2+X_1}/100$: cat # 82344-938
		Pump on:

		xD(ft)	NTU	Temp C°	DO (mg/L)	pH (pKa)	Flow (gpm)	Notes:
#8	1310	1.623	7.14	16.2		7.29	15	697
#9	1315	1.569	7.56	15.7		7.34	15	701
#10	1320	1.517	9.08	16.1		7.38	15	693
#11	1325	1.456	7.19	16.1		7.51	15	695
#12	1330	1.432	6.51	16.1		7.54	15	698
#13	1335	1.400	6.55	15.9		7.58	15	700

1225		Start pump.
1230		increase pump rate to 17 gpm (drawdown ↑; turn pump down when xD = 1.7)
1232		decrease pump rate to 15 gpm
1235		Collect water sample #1. 237 NTU / 15.3°C / 6.90 pH / 704 µS/cm
		xD = 1.930
1240		Collect sample #2. xD = 1.809 / 230 NTU / 15.0°C / pH = 6.81 / 696 µS/cm
1245		Collect sample #3 xD 1.806 / 14.2 NTU / 15.9°C / pH 6.87 / 701 µS/cm
1250		Collect Sample #4 xD 1.765 / 10.6 NTU / 16.1°C / pH — / 695 µS/cm
1255		Collect Sample #5 xD 1.773 / 9.49 NTU / 15.7°C / pH — / 700 µS/cm
1300		Collect sample #6 xD 1.727 / 9.48 NTU / 15.9°C / pH 7.21 / 701 µS/cm
1305		Collect Sample #7 xD 1.679 / 8.70 NTU / 15.9°C / pH 7.21 / 697 µS/cm

Reported By: A. Pappas		Reviewed By: L.D. Walker	
Title: Geologist	Date: 10.28.9	Title: Geologist	Date: 11/10/09
Signature:		Signature:	

A-6003-652 (04/03)

LW 11-10-09

FIELD ACTIVITY REPORT - ~~DAILY DRILLING~~ Continuation Development page
Continuation Page

Page 3 of 3

Date: 10.28.09

Well Name: See pg 1.

Well ID: See pg 1.

Location: See pg 1.

Continuation of Report No.: 7

Time/Depth From	Time/Depth To	Description of Activities/Operations with Depth
		Hermit Name: Probe Depth: Intake Depth: Aquifer Thickness:
		Test: XDI: Head above Intake:
		Calibration of Field Instruments:
		Turbidity: Standard: Reading: $\frac{X_2-X_1}{X_2+X_1}/100$:
		: Std.: Reading: " :
		: Std.: Reading: " :
		pH: Std.: 10.0 Reading: Slope:
		Std.: 7.0 Reading:
		Std.: 4.0 Reading:
		Conductivity: Std.: Reading: $\frac{X_2-X_1}{X_2+X_1}/100$:
		Pump on:

Sample #	Time	xD(ft)	NTU	Temp C°	DO(mg/L)	pH(pKa)	Flow(gpm)	Notes: µ/cm
#14	1340	1.344	6.43	16.0		7.61	15	702
#15	1350	1.313	5.7	16.0		7.66	15	697
#16	1402	1.225	5.73	15.8		7.69	15	701
#17	1412	1.153	5.25	16.1		7.71	15	706
#18	1417	1.147	5.84	16.6		7.72	15	698
#19	1422	1.118	5.57	16.2		7.71	15	699
#20	1427	1.086	4.53	15.9		7.66	15	701
#21	1432	1.172	24.3	15.9		7.70	15	701 + NTU machinery error possibly
#22	1435	1.113	4.16	15.9		7.70	15	701
#23	1440	1.08	3.48	16.0		7.72	15	701

1444 Stop Test (WD7, Blue); Start Test (WD8, Blue)
(Pump off, valve closed)
1527 recovery achieved at 7.169, 1524 active test shut off

not used
AD 10.28.9

Reported By: A. Papp / L. Stratton

Title: Geologist

Date: 10.28.9

Signature:

Reviewed By: L.D. Walker

Title: Geologist

Date: 11/10/09

Signature:

A-6003-652 (04/03)

WELL DEVELOPMENT AND TESTING DATA

Well Name:	Well ID:	Well Location:	Date:
199-D4-97	C7085	NE Corner 1SRM Pond	10/3/09

Reference Measuring Point (unless otherwise noted): TOP OF OUTER CASING (TOC)

Has the well been surveyed? ○ Yes ☒ No | Does the well have a cement pad? ○ Yes ☒ No

PART 1

STATIC WATER LEVEL:

Start of Job 89.10' TOC (86.10' bgs)

End of Job 89.21' TOC (86.21' bgs)

DEPTH TO BOTTOM:

Start of Job 106.05' bgs

End of Job 106.05' bgs

PART 2

WELL DEVELOPMENT DATA

Pump Model Franklin Electrical Single phase 5hp Submersible.

Intake Depth 100.04' bgs.

Starting Turbidity 16.9 NTU

Pump Start	Stop	Flow Rate
0823	0937	
flow rate varied 15 & 49.8 gpm – See F.A.R. report #9.		

Total Pumped 2867 gal

Final Turbidity 1.33 NTU

XD SN/Range (PSI) 20

PART 3

INSTANTANEOUS SLUG TEST

Static Water Level (TOC) /

Transducer Depth 96.84' bgs

Baseline Start

Injection Start

Baseline Start

Withdrawal Start

Slug Volume

XD SN/Range (PSI)

PART 4

Last Recorded Measurements Date: N/A

Current Measurements Date:

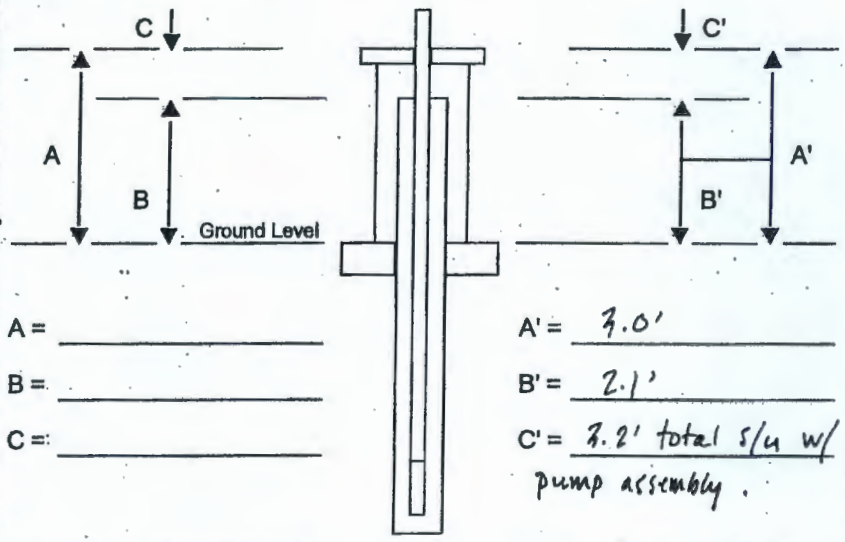

A = _____

B = _____

C = _____

A' = 3.0'

B' = 2.1'

C' = 3.2' total s/u w/ pump assembly.

Are there any reference marks on the casing strings? ○ Yes ☒ No

PART 5

COMMENTS:

All measurements to ground surface as when drilled – no cement pad.

See Reports 8 + 9 (Nov 2003) for detailed development data.

Data logger In Situ Hermit 3000 "Burt"
"Sprint WD03" → drawdown
"Sprint WD04" → recovery

Sample collected following <5 NTU samples, HEIS #: B22D12, B22FX2; B22D29, B22FX3 (dup).

Prepared by (print name):	Signature:	Date:
L. Stratton, Geologist		11/3/09
Reviewed by (print name):	**Signature:**	**Date:**
L.J. Walker		11-10-09

A-6003-644 (03/03)

FIELD ACTIVITY REPORT - DAILY DRILLING

Page 1 of 1

Date: 10.29.9

Well Name: 199-D4-97	Well ID: C7085
Location: N edges of ISRM pond	Report No.: 7

Start	Finish	Total
Time 0600	Time 10:15	Time 4 hrs 15 min
Hole Depth/Csg — / —	Hole Depth/Csg — / —	Hole Depth/Csg /

Reference Measuring Point: GROUND SURFACE

Casing String No. 1 2 3 4 ____ Rod Size:
See Report No. 1 DTW 86.1' bgs

Time/Depth From	Time/Depth To	Description of Activities/Operations with Depth (Attach applicable drawings and document straightness test results)
0600		PJD at ISRM Trailer with BTR, drillers, drillers safety
	0716	rep. and geologists. discuss wet weather safety.
0716		Drillers prep to move completion rig from
	0754	C7084 to C7085.
0754		Completion rig on site, prep to bail well
		and set up to start development on
	1015	Monday. Bail from 101.1' to 106' bgs.

not used

Reported By: A. Pappas		Reviewed By: L.D. Walker	
Title: Geologist	Date: 10.29.9	Title: Geologist	Date: 11/10/09
Signature: [signature]		Signature: [signature]	

A-6003-651 (REV 1)

FIELD ACTIVITY REPORT - DAILY DRILLING

Page 1 of 1

Date: ~~10/2/09~~ 11/2/09 LW 11-10-09

Well Name: 199-D4-97	Well ID: C7085
Location: NE Corner of ISRM Pond	Report No.: 8

Start	Finish	Total
Time 1300	Time 1430	Time 2:30
Hole Depth/Csg N/A /	Hole Depth/Csg N/A /	Hole Depth/Csg N/A /

Reference Measuring Point: GROUND SURFACE

Casing String No. 1 2 3 4 ____ Rod Size:
See Report No. 1 N/A

Time/Depth From	Time/Depth To	Description of Activities/Operations with Depth (Attach applicable drawings and document straightness test results)
1300		Geo onsite. (contractor had a.m. flight from Seattle)
1330		Tag bottom. DTB = 109.05' TOC / 106.05' bgs = 0.05' fill (bailed previously)
		Prepare to trip in development pump:
		Franklin Electrical 5hp single phase submersible. w/ current bowl
		assembly, max flow rate ~100 gpm. 5.58' long total, including
		couplers. Intake 2.4' from bottom.
		Riser pipe: 2½" OD galvanized: 19.85', 21.01', 21.10', 21.10', 10.0', 10.0' =
		101.96' total + 5.58' pump = 107.54 − 2.4' to intake = 105.14' TOC −
1345		[3.0' s/u + 8.1 landing plate / coupler] = INTAKE DEPTH 100.04' bgs
		Transducer PXD-261 (no other markings) on riser XDSN 10500 −
		3.2' above intake (zip-tied to riser pipe) = TRANSDUCER DEPTH 96.84' bgs.
1430		Geo offsite. Development will take place tomorrow.
		NOT USED
		LK
		10.2.09

Reported By: L. Stratton		Reviewed By: L. Walker	
Title: Geologist	Date: ~~10/2/09~~ 11/2/09 LW 11-10-09	Title: Geologist	Date: 11-10-09
Signature: [signature]		Signature: [signature]	

A-6003-651 (REV 1)

FIELD ACTIVITY REPORT - DAILY DRILLING

Page 1 of 3

Date: ~~10/3/09~~ 11/3/09 LW 11-10-09

Well Name: 199-D4-97	Well ID: C7085
Location: NE Corner of ISRM Pond	Report No.: 9

Start	Finish	Total
Time 0600	Time 10:20	Time 4:20
Hole Depth/Csg N/A /	Hole Depth/Csg N/A /	Hole Depth/Csg N/A /

Reference Measuring Point: GROUND SURFACE

Casing String No. 1 2 3 4 ____ Rod Size:
See Report No. 1 N/A

Time/Depth From	Time/Depth To	Description of Activities/Operations with Depth (Attach applicable drawings and document straightness test results)
0600		POD / wait for light
0650		On site. Geo calibrate meters for development:
		KIT#3:
		• Hach Turbidimeter 2100P S/N 950800008453G, cal. 8/31/09.
		Standard: 584 NTU → 511 NTU reading
		: 49 NTU → 41.3 NTU
		: 4.80 NTU → 4.61 NTU
		• Thermo Orion 135A conductivity meter 067530/02; cell: Orion 013010A.
		One shot traceable conductivity standard 62344-938 exp. 1/16/2010, 1417 µS/cm.
		After 4 attempts to calibrate, probe still reading 2.12 mS/cm @ 8.9°C.
		Keep meter in truck cab to attempt better calibration at higher T, otherwise
		continue w/ development.
		• Hach pH meter 07010C290043G / cal. 10/20/09 US due 1/20/10.
		Standard: pH 7.00 → 6.95 @ 4.6°C reading
		pH 10.00 → 12.12 @ 5.9°C "
0730		DTW = 89.10 TOC / 86.10 bgs. E-tape WLN-26, standardized 2/4/2008
		Connect data logger:
		In-Situ Hermit 3000 "Burt", input #2: XDSN 10500 / reel 10500.
		[xD initial = 13.383]
0740		Ready to begin but due to purgewater truck constraints wait to
		turn on pump until NCO arrival confirmed/imminent - per BTR.
0823		Start pump / test #3 "Sprint WD03"
25		xD = 11.3 / e-tape 91.1 TOC. Pump rate 15 gpm.
26		Increase pump rate to 29.9 gpm

Reported By: L. Stratton		Reviewed By: L. D. Walker	
Title: Geologist	Date: 11-3-09	Title: Geologist	Date: 11/10/09
Signature: [signature]		Signature: [signature]	

A-6003-651 (REV 1)

FIELD ACTIVITY REPORT - DAILY DRILLING

Continuation Page

Page 2 of 3

Date: 11/3/09

Well Name: 199-D4-97

Well ID: C7085

Location: NE Corner of ISRM Pond

Continuation of Report No.: 9

Time/Depth From	Time/Depth To	Description of Activities/Operations with Depth
0837		Collect water sample. XD = 9.71 / flow rate 29.9 gpm / 16.9 NTU / 0.899 mS/cm / pH = 6.48 / 13.3°C.
0840		Collect water sample. xD = 9.74 / 29.5 gpm / 7.26 NTU / 0.557 mS/cm pH = 6.74 / 13.5°C.
		Increase pump rate to 33.6 gpm.
0845		NCOs on site.
		xD = 8.670
46		increase pump rate to 41 gpm
48		Collect water sample. xD = 7.411 / 41 gpm / 6.59 NTU / 0.591 mS/cm pH = 6.97 / 14.4°C.
0850		xD = 7.281. Increase pump rate to 47.8 gpm
52		xD = 6.336 " 49.8 gpm
54		Collect water sample. xD = 6.203 / 49.8 gpm / 6.03 NTU / 0.544 mS/cm pH = 7.07 / 14.5°C.
55		Pump full open → 49.3 gpm. (95.2' TOC). XD = 5.96
		xD; 13.38 - xD 5.96 = 7.42' drawdown. 17' total water column = ~44% drawdown. Confirm pump full on - not ideal d.d. but ok. Keep pump open for remainder of development. Note. NTUs dropping quickly but sand notable in all water samples.
0901		Collect water sample. xD = 5.836 / 3.07 NTU / 0.557 mS/cm pH = 7.23 / 13.9°C. (49.5 gpm)
0906		Collect water sample. xD = 5.777 / 1.86 NTU / 0.547 mS/cm pH = 7.28 / 14.3°C → WELL DEVELOPED PER REQs.
0910		NCOs begin collecting sample field parameters.
0915		xD = 9.655. Check conductivity meter calibration to see if higher temps improved - 2.11 mS/cm on 1417 uS/cm standard.
0917		Decrease pump rate to 19.9 gpm due to purgewater limits.
0920		Collect water sample. xD = 10.445 / 1.33 NTU / 0.796 uS/cm / pH = 6.68 / 14.3°C.

Reported By: L. Stratton

Title: Geologist

Date: 11-3-09

Signature: [signature]

Reviewed By: L.D. Walker

Title: Geologist

Date: 11/10/09

Signature: [signature]

A-6003-652 (04/03)

FIELD ACTIVITY REPORT - DAILY DRILLING

Continuation Page

Page 3 of 3

Date: 11/3/09

Well Name: 199-D4-97

Well ID: C7085

Location: NE Corner of 15EM Pond

Continuation of Report No.: 9

Time/Depth From	Time/Depth To	Description of Activities/Operations with Depth
0925		NCOs collect groundwater sample. HEIS # B22D12, B22EX2;
		B22D29, B22EX3 (duplicate).
27		XD = 10.473
0937		Shut off pump / close valve / start test #4 "Sprint WD4". Note:
		no check valve in pump (see BTR to contain water on pad)
0955		DTW = 89.21 TOC. Stop test #4.
1020		Pump out of well. DTB = 109.0 TOC (106.0 bgs) = 0.1' fill-in.
		Geo / drillers move to C7091 for development.

NOT USED
LS
11.2.09

Reported By: L. Stratton

Title: Geologist

Date: 11.2.09

Signature:

Reviewed By: L.D. Walker

Title: Geologist

Date: 11/10/09

Signature:

A-6003-652 (04/03)

WELL DEVELOPMENT AND TESTING DATA

Well Name:	Well ID:	Well Location:	Date:
199-D4-98	C7086	100D	12.4.9

Reference Measuring Point (unless otherwise noted): TOP OF OUTER CASING (TOC)

Has the well been surveyed? ○ Yes ● No | Does the well have a cement pad? ○ Yes ● No

PART 1

STATIC WATER LEVEL:

Start of Job	82.7' bgs
End of Job	82.8

DEPTH TO BOTTOM:

Start of Job	103' bgs
End of Job	103.1' bgs

PART 2

WELL DEVELOPMENT DATA

Pump Model	5hp, 47 gpm
Intake Depth	99' bgs
Starting Turbidity	

Pump Start	Stop/Δ	Flow Rate
~~AD 12.4 1103~~	~~1220~~	~~50.8 gpm~~
1103	1106	44.88 gpm
1106	1220	50.8 gpm
	Autovac	

Total Pumped	760.96 gallons
Final Turbidity	0.89
XD SN/Range (PSI)	

PART 3

INSTANTANEOUS SLUG TEST

Static Water Level (TOC)	
Transducer Depth	
Baseline Start	
Injection Start	N/A
Baseline Start	
Withdrawal Start	
Slug Volume	
XD SN/Range (PSI)	

PART 4

Last Recorded Measurements
Date:

Current Measurements
Date:

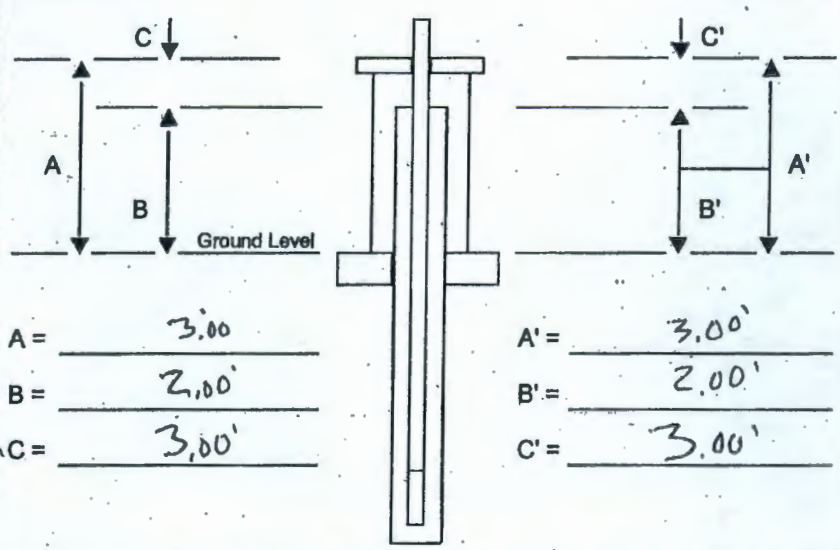

A =	3.00	A' =	3.00'
B =	2.00'	B' =	2.00'
C =	3.00'	C' =	3.00'

Are there any reference marks on the casing strings? ○ Yes ○ No

PART 5

COMMENTS:

initial YD/t 1h 52
no cement pad
probe: 5217
hermit: Burt
tests used: Bender WD1, Bender WD2
Pump intake at 99' bgs
probe at 98' bgs

Prepared by (print name):	Signature:	Date:
A. Pappas		12.4.9
Reviewed by (print name):	**Signature:**	**Date:**
L.D. Walker		1-13-10

A-6003-644 (03/03)

FIELD ACTIVITY REPORT - DAILY DRILLING

Page 1 of 3

Date: 12.4.9

Well Name: 199-D4-98 | Well ID: C7086

Location: 100D | Report No.: 6

Start	Finish	Total
Time 0600	Time 1339	Time 7 hrs 39 min
Hole Depth/Csg - / -	Hole Depth/Csg - / -	Hole Depth/Csg - / -

Reference Measuring Point: GROUND SURFACE

Casing String No. (1) 2 3 4 ____ Rod Size: ~~to 3¼", 8" dual wall~~ removed

See Report No. 1 DTW 82.7 bgs

Time/Depth From	Time/Depth To	Description of Activities/Operations with Depth (Attach applicable drawings and document straightness test results)
0600	0709	POD at ISRM trailer, 100D
0709	/	to site, drillers prep to setup for well
/	0747	development.
0747	/	Tag inside of well at 97' bgs, 7' of fill in
/	/	permanent casing, Drillers setup bailer and began
/	0955	bailing. DTW tagged at 82.7' bgs, DTB tagged at 103' bgs at finish
0955	/	Drillers began tripping in pump. 4 x 21' of pipe
/	/	1x10 1x5 = total stick - 94' pump intake at 94' bgs, probe
/	1044	at 96.4 bgs. Pump is 5 hp, 47 gpm
1044	1103	Drillers prepare to pump.
1103	/	Drillers start pump. Test: #1 Bender WD1
/	/	See FAR page 3 for details on Calibration, Probe, + Pump

Sample #	Time	XD ft.	NTU	Temp C°	pH	gpm	µM	Notes
X								
1	1104	10.540 ~~[illegible]~~	62.6	8.4	\	4.88	1288	
X	1106	(increase pump rate 50.8)						
2	1109	10.398	15.9	11.10	6.89	50.8	1042	
3	1113	10.365	9.10	11.2	7.07	50.8	1029	
4	1117	10.357	6.04	10.7	7.10	50.8	1021	
5	1127	10.307	5.49	10.8	7.22	50.8	1024	
6	1137	10.245	4.28	10.9	7.33	50.8	1031	
7	1147	10.209	2.46	10.8	7.44	50.8	1025	
8	1157	10.179	1.31	11.2	7.48	50.8	1039	
9	1207	10.131	1.17	10.5	7.54	50.8	1050	
10	1217	10.107	.89	11.0	7.55	50.8	1046	

Reported By: A. Pappas | Reviewed By: L.J. Walker

Title: Field Geologist | Date: 12.4.9 | Title: Geologist | Date: 1/13/10

Signature: [signature] | Signature: [signature]

A-6003-651 (REV 1)

FIELD ACTIVITY REPORT - DAILY DRILLING

Continuation Page

Page 2 of 3

Date: 12.4.9

Well Name: 199-D4-98

Well ID: C7086

Location: 100 D

Continuation of Report No.: 6

Time/Depth From	Time/Depth To	Description of Activities/Operations with Depth
		not used
1211	1211	NCOS collect samples, HEIS # B22-X30 & B22-X31
1220		Start Draw down test, test number 02 Bender WD2
		10.107 at start (real), stop at 30 min, xDST
	1250	at 11.405 - recovered (test off at 1250)
1250	1318	Drillers trip out pump
1318		Drillers clean up site, geologist does paperwork
	1339	DTB tagged at 103.1', DTW 87.8' bgs.
1339		Geologist exits site

Not Used

Reported By: A. Pappas		Reviewed By: L.D. Walker	
Title: Field Geologist	Date: 12.4.9	Title: Geologist	Date: 1/13/10
Signature:		Signature:	

A-6003-652 (04/03)

FIELD ACTIVITY REPORT

Calibration ~~Drawing~~ Continuation Page

Date: 12.4.9

Well Name:	199-D4-98	Well ID:	C7086
Location:	100D	Continuation of Report No.:	6

Calibration

	Standard	Reading	Standard ID/Cal. #
Turbidity:	Standard: 581.00	Reading: 578.00	
	Standard: 47.50	Reading: 47.30	
	Standard: 4.78	Reading: 4.63	
pH	Standard: 10.00	Reading 10.15	BDH5072 - 500ml
	Standard: 7.00	Reading 7.08	BDH 5046 - 500ml
	Standard:	Reading	
Conductivity	Standard: 1417	Reading 1898	62344-438

Hermit Name: BURT

Probe ID: 5217

Tests used: Bender WD1, Bender WD2

DTW 82.7

Pump

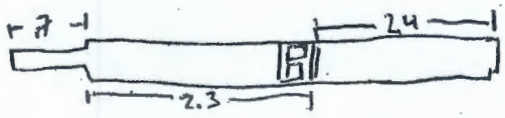

5 hp
37 gpm

Reported By: A. Pappas		Reviewed By: L.D. Walker	
Title: Field Geologist	Date: 12.4.9	Title: Geologist	Date: 1/13/10
Signature: [signature]		Signature: [signature]	

A-6003-711 (06/03)

WELL DEVELOPMENT AND TESTING DATA

Well Name:	Well ID:	Well Location:	Date:
199-D4-99	C7087	S bank Columbia R N of 5RM nuclk	11-23-09

Reference Measuring Point (unless otherwise noted): TOP OF OUTER CASING (TOC)

Has the well been surveyed? ○ Yes ⊗ No | Does the well have a cement pad? ○ Yes ⊗ No

PART 1

STATIC WATER LEVEL:

Start of Job 86.8 TOC 83.9 bgs.

End of Job

DEPTH TO BOTTOM:

Start of Job 100.17' TOC

End of Job

PART 2

WELL DEVELOPMENT DATA

Pump Model 5hp. w/ 30 gpm pump

Intake Depth ~~103 TOC~~ 109' TOC

Starting Turbidity

Pump Start	Stop	Flow Rate
1146	1345	~43 ~~?~~/min
1439	1515	~23 ~~?~~/min

Total Pumped 5988

Final Turbidity 3.17

XD SN/Range (PSI) 20psi / 10415

PART 3

INSTANTANEOUS SLUG TEST

Static Water Level (TOC) ~~86.8~~ NA LW 1-12

Transducer Depth ~~108.2~~ 93.7

Baseline Start

Injection Start

Baseline Start N/A

Withdrawal Start

Slug Volume

XD SN/Range (PSI)

PART 4

Last Recorded Measurements Date: 11-23-09

Current Measurements Date:

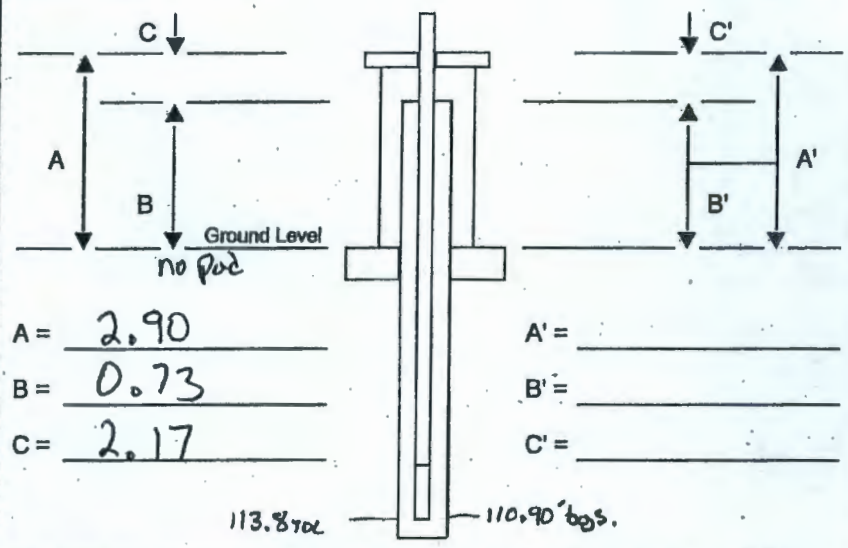

A = 2.90 | A' =

B = 0.73 | B' =

C = 2.17 | C' =

Are there any reference marks on the casing strings? ○ Yes ○ No

PART 5 Burt

COMMENTS:

Test WD5 "Sprint" performed on Lower interval. (Drawdown)
Recovery Test on WD6 "Sprint."
Interval: Lower 5160 gal Total

Drawdown on Upper Interval:
Test "Sprint WD7
Recovery on Test "Sprint WD8" = 828 gal Total

Prepared by (print name):	Signature:	Date:
A. Lontsen	Aaron Lots	11-23-09
Reviewed by (print name):	**Signature:**	**Date:**
L. Walker	[signature]	1-13-10

A-6003-644 (03/03)

FIELD ACTIVITY REPORT - DAILY DRILLING

Page 1 of 3

Date: 11-23-09

Well Name: 199-D4-99 | Well ID: C7087

Location: S bank Columbia R N of ISRM wells | Report No.: 7

Start	Finish	Total
Time 0600	Time 1540	Time 9.75
Hole Depth/Csg 98.0 / 110.9 bgs	Hole Depth/Csg 110.9 / 110.9	Hole Depth/Csg 12.9 / 0.0

Reference Measuring Point: GROUND SURFACE

Casing String No. ~~1 2 3 4~~ See Report No. 1 | Rod Size:

Time/Depth From	/ To	Description of Activities/Operations with Depth (Attach applicable drawings and document straightness test results)
0600	0700	P.O.D. @ 100-D Area I.S.R.M. trailer. will develope well.
0700	0730	Tag DTB 98' bgs. Warming rig.
0730	0800	Towering up. prepare to bail 12' of sed. from well.
0800	1010	Bail well. to 110.9' bgs.
1010	—	Trip 30gpm pump (5hp.) in to well. Trip in 21'x3stk + 20'x2stk + 3'stk + 3' intake =
—	1145	106' bgs to intake. Hand in transducer to top of pump @ ~~106~~ 103 bgs. ≈13' below water
1146	1351	Start Drawdown test @ 45gpm. See pg 2. Test "Sprint" WD5.
1351	1421	Start recovery test on Hermit name: Burt. test "Sprint" WD6.
1421	—	Pull transducer. Forgot to turn recovery test off. Rais pump
—	—	10 ft. to 96' bgs. = 12.1' bgs. below water. 11-23-09
—	1439	Start drawdown test + development. (WD7)
	1515	Stop drawdown test + Start recovery test. (WD8)
1515	1535	Allow recovery of water to within .5 ft. Stop recovery test.
1535	1540	Secure well head + Exit Area.

Not Used AF

Reported By: A. Lantau | Reviewed By: L.D. Walker

Title: Geologist | Date: 11-23-09 | Title: Geologist | Date: 1/13/10

Signature: Aaron Lantau | Signature: LD Walker

A-6003-651 (REV 1)

FIELD ACTIVITY REPORT - DAILY DRILLING

Continuation Page

Page 2 of 3

Date: 11-23-09

Well Name: ~~See pg 1.~~ 199-D4-99 (LW 1-13-10)

Well ID: ~~See pg 1.~~ C7087

Location: See pg 1. (LW 1-13-10)

Continuation of Report No.: 7

Time/Depth From	Time/Depth To	Description of Activities/Operations with Depth
		Hermit Name: BURT; Probe Depth: ~~103~~ 108.7 bgs (AL 11-23-09); Intake Depth: 106' bgs; Aquifer Thickness: 24.2'
		Test: Sprint WD5/WD6; XDT: 18.956 (=13.2); Head above Intake: 19.2' bgs; Develope in 2 stages.
		Calibration of Field Instruments: 50% of aquifer = 12' = 98.8' TOC
		Turbidity: Standard: 5.64 · Reading 5.65 · $\frac{X_2-X_1}{X_2+X_1}/100$:
		: Std. : 48.9 · Reading 49.6 · " :
		: Std. : 520 · Reading 512 · " : Notes: "Purge"
		pH : Std. : 10.0 · Reading 10.18 · Slope: no slope; Purge vol. = 118.9 gal
		Std. : 7.0 · Reading 7.16 · @ 45 gpm = 2.6 min.
		Std : 4.0 · Reading NA (Out of Sln.)
		Conductivity: Std : 1417 · Reading 1000 · $\frac{X_2-X_1}{X_2+X_1}/100$: Too Cold. @ 17°C
		Pump on:

	Power-Interval	xD(ft)	NTU	Temp C°	~~DO~~ Conductivity (µS)	pH (pH)	Flow (gpm)	Notes: Probe Depth 108.7, Intake
1146								
1157		10.68	491	14.8		8.29	45 gpm	Adjust flow to 45 gpm
1203		8.937	75.7	14.8	1006	8.06	45 gpm	
1207		8.815	25.7	14.7	1054	8.02	45 gpm	
1213		8.68	19.9	15.5	1084	7.97	45	10' draw $\frac{10-24}{10+24}/100$ = 41% drawdown.
1217		8.69	19.7	15.3	1090	7.96	39	
1223		8.47	12.6	15.3	1096	7.95	38.9	
1227		8.407	9.13	15.7	1109	7.94	38.9	
1237	AL 11-23-09	8.28	12.7	14.7	1112	7.93	43.3	
~~1242~~	1242	8.25	10.6	14.5	1119	7.93	43.3	
1250			~~11.3~~					Kill pump to switch tanks.
1252								Restart pump. @ 43.3 gpm.
1305		8.44	11.3	15.3	1132	7.90	41.8	
1320		8.07	10.8	15.1	1126	7.91	41.8	
1325		8.02	9.84	14.9	1118	7.92	41.8	
1335		7.97	4.78	15.3	1133	7.92	41.8	
1340		7.94	3.49	15.9	1129	7.91	41.8	
1345		7.80	4.93	15.9	1134	7.90	41.8	Kill pump @ 1351. Recovery on WD6

Reported By: A. Lantau		Reviewed By: L.A. Walker	
Title: Geologist	Date: 11-23-09	Title: Geologist	Date: 1/13/10
Signature: Aaron Lantau		Signature: [signature]	

A-6003-652 (04/03)

FIELD ACTIVITY REPORT - DAILY DRILLING

Continuation Page

Page 2 of 3

Date: 11-23-09

LW 1-13-10 ~~See pg 1.~~ 199-D4-99 | LW 1-13-10 ~~See pg 1.~~ C7087

Location: See pg 1. | Continuation of Report No.: 7

Time/Depth From	Time/Depth To	Description of Activities/Operations with Depth
		Hermit Name: Burt; Probe Depth: 93.7; Intake Depth: 96 bgs; Aquifer Thickness: 24.2
		Test: WD7 / WD8; XDT: 9.07; Head above Intake: 12.1
		Calibration of Field Instruments:
		Turbidity: Standard: · Reading · $\frac{X_2-X_1}{X_2+X_1}/100$:
		: Std. : · Reading · " :
		: Std. : · Reading · " :
		pH : Std. : 10.0 · Reading · Slope:
		Std. : 7.0 · Reading ·
		Std : 4.0 · Reading ·
		Conductivity: Std : · Reading · $\frac{X_2-X_1}{X_2+X_1}/100$:
		Pump on:

Purge info.
Purge Vol. 118 gal.
@ 20.9 gpm = 5.6 min

		xD(ft)	NTU	Temp C°	~~DO~~ (µS)	pH (pKa)	flow (gpm)	Notes: Upper Interval
1439	upper Interval							
1444		3.4	—	—	—	—	31.4	Adjust flow to
1445		4.47	9.98	14.7	1168	7.95	20.9	Slow flow
1451		5.00	8.87	15.0	1131	7.94	20.9	
~~1501~~ AK 11-23-09	1456	4.50	4.30	15.4	1115	7.92	23.0	Increase flow
1501	AK 11-23-09	4.47	4.09	15.1	1112	7.93	23.0	steady flow
1505		~~3.17~~ 4.94	3.17	—				
1515		~~3.17~~	3.17	15.0	1117	7.92	23.0	
1516		Step Drawdown Test & Start Recovery Test on "Sprint" DW8 Test.						

Not Used AZ

Reported By: A. Lanken		Reviewed By: L. D. Walker	
Title: Geologist	Date: 11-23-09	Title: Geologist	Date: 1-13-10
Signature: Aaron Lanken		Signature: L D Walker	

A-6003-652 (04/03)

FIELD ACTIVITY REPORT - DAILY DRILLING

Page 1 of 1

Date: 11.24.9

Well Name: 199-D4-99	Well ID: C7087
Location: S bank of Columbia River, N. of ISRM bar	Report No.: 8

Start	Finish	Total
Time 0600	Time 0912	Time 3 hrs 12 min
Hole Depth/Csg 110.9 / 110.9	Hole Depth/Csg 110.9 / 110.9	Hole Depth/Csg 110.9 / 110.9

Reference Measuring Point: GROUND SURFACE

Casing String No. ~~1 2 3 4~~ _____ Rod Size:
See Report No. 1

Time/Depth From	Time/Depth To	Description of Activities/Operations with Depth (Attach applicable drawings and document straightness test results)
0600	0650	POD at ISRM trailer.
0650	/	to site, drillers setup to resume
/	0713	pumping to obtain a water sample
0713	/	Start purging well, pump at 106' bgs,
/	0734	5 ~~50~~ HP motor, pumping at 16 gpm [KS 11-10-09 → 106 TOC /
0734	/	Water purged to 2.6 NTUs, sampling begin 103' bgs]
/	0800	thru sample collection
0800	/	Sample collected by NCOs, Sample # (first) F09-056-028
/	0803	I-002
0803	/	transducer removed, pump tripped out, inside of well
/	0833	tagged at 110.9' bgs - does not need to be bailed
0833	/	Drillers rig down clean up site, geo
/	0903	does paperwork
0903	/	Geologist tags DTW 83.9' bgs, Geologists
/	0912	Preps to leave site
0912		Geologist exits site, drillers remain to clean up site

notused

Reported By: A. Pappas		Reviewed By: L.D. Walker	
Title: Field Geologist	Date: 11.24.9	Title: Geologist	Date: 1-13-10
Signature:		Signature:	

A-6003-651 (REV 1)

WELL DEVELOPMENT AND TESTING DATA

Well Name:	Well ID:	Well Location:	Date:
~~199~~ 199-D2-10	C7089	100-D floodplain	1-25-10

1-25-10

Reference Measuring Point (unless otherwise noted): TOP OF OUTER CASING (TOC)

Has the well been surveyed? ○ Yes ⊗ No | Does the well have a cement pad? ○ Yes ⊗ No

PART 1

STATIC WATER LEVEL:

Start of Job	10.77' bgs
End of Job	10.97' bgs

DEPTH TO BOTTOM:

Start of Job	27.9' bgs
End of Job	27.9' bgs

PART 2

WELL DEVELOPMENT DATA

Pump Model	Franklin Electric 5 hp
Intake Depth	23.74
Starting Turbidity	523

Pump Start	Stop	Flow Rate
1211		22 gpm
1213	1318	15 gpm
1326	1341	15 gpm

Total Pumped	1229 gallons
Final Turbidity	2.13 NTU
XD SN/Range (PSI)	10500 / 20 psi

PART 3

INSTANTANEOUS SLUG TEST

Static Water Level (TOC)	
Transducer Depth	
Baseline Start	
Injection Start	NOT USED
Baseline Start	
Withdrawal Start	
Slug Volume	
XD SN/Range (PSI)	

PART 4

Last Recorded Measurements Date: N/A

Current Measurements Date: 1/25/10

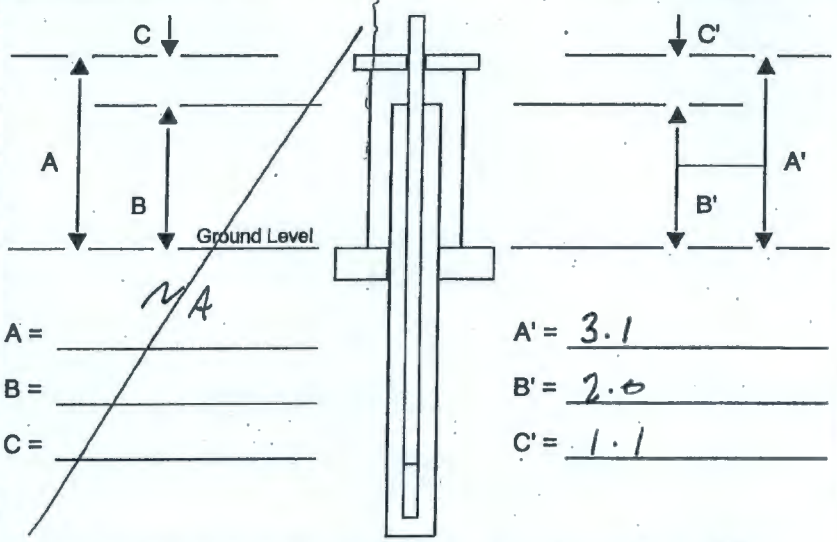

A =	N/A	A' =	3.1
B =		B' =	2.0
C =		C' =	1.1

Are there any reference marks on the casing strings? ○ Yes ⊗ No

PART 5

COMMENTS:

Drawdown/recovery monitored w/ Hermit "Sherman", transducer 10500, Input 2.
Test #1: "Smile WD1": drawdown
Test #2: "Smile WD2": recovery.

Sample HEIS # B22Y50 collected following stable parameters, NTU <5.

Prepared by (print name): L. Stratton	Signature:	Date: 1-25-10
Reviewed by (print name): L.D. Walker	Signature:	Date: 2-26-10

A-6003-644 (03/03)

FIELD ACTIVITY REPORT - DAILY DRILLING

Page 1 of 2

Date: 1/25/10

Well Name: C7089

Well ID: 199-D2-10

Location: 100-D floodplain

Report No.: 4

Start	Finish	Total
Time 0600	Time 1400	Time 8:00
Hole Depth/Csg — / —	Hole Depth/Csg — / —	Hole Depth/Csg — / —

Reference Measuring Point: GROUND SURFACE

Casing String No. 1 2 3 4 ____ See Report No. 1

Rod Size: DEVELOPMENT

Time/Depth From	To	Description of Activities/Operations with Depth (Attach applicable drawings and document straightness test results)
0600		POD
0630		Geo to get development kit in 200 East
0720		Geo on site. Drillers setting up site, rigging up.
		~~Screen interval: 17.38 – 27.24~~ LS
0759		DTB = 27.67 bgs / DTW = 13.87 TOC - 3.1 = 10.77' bgs
		Pump: 5hp Franklin Electric / ~50 gpm max. 5.34' long; 2.84' to intake from top.
0800	0825	Trip in pump on 2" tremmie 20.0 + 4.00 = 23.74 to intake
0825		Per BTR, wait to pump until NCO availability confirmed.
		In-Situ, Inc.
		• Monitor development w/ PXD-260 pressure transducer (20 PSI) XDSN 10500, In-Situ, Inc. Hermit 3000 "Sherman", Input #2.
		• Kit #3:
		• Turbidimeter Hach 2100P SN 9808000049336 cal due 2/28/10
		581 standard → 583 NTU reading
		47.5 46.5
		4.78 4.90
		• Hach SN 0701002900426
		pH 7.00 → 6.35
		10.00 → 10.03
		• Thermo Electron Corp. Orion 135A S/N 067530/026
		1.336 mS/cm reading for 1413 µS/cm single shot exp 8/10/10, analyzic 8029 LS
1145		Per BTR, NCOs leaving office @ noon. Start ~noon.

Reported By: L. Stratton

Title: Geologist Date: 1-25-10

Signature: [signature]

Reviewed By: L. D. Walker

Title: Geologist Date: 2/26/10

Signature: [signature]

A-6003-651 (REV 1)

FIELD ACTIVITY REPORT - DAILY DRILLING

Continuation Page

Page 2 of 2

Date: 1/25/10

Well Name: 199-D2-10

Well ID: C7089

Location: 100-D floodplain

Continuation of Report No.: 4

Time/Depth From	Time/Depth To	Description of Activities/Operations with Depth
1200		xD$_i$ = 8.829 / transducer 20.0' bgs.
		Test #1 "Smile WD1" = drawdown
1211		Start test / pump @ 22 gpm
13		turn down to 15 gpm (only ~1' left above transducer)
14		Collect sample xD = 4.348 / 523 NTU / 0.328 ms/cm / 13.4°C / pH = 6.42
16		xD = 5.020
19		Collect Sample. xD = 4.98 / 36.2 NTU / 0.310 ms/cm / 13.9°C / pH = 6.71
24		Collect sample. xD = 4.838 / 18.1 NTU / 0.308 ms/cm / 14.1°C / pH = 6.79
29		Collect sample. xD = 4.776 / 8.25 NTU / 0.309 ms/cm / 13.4°C / pH = 6.94
34		Collect sample. xD = 4.452 / 4.07 NTU / 0.310 ms/cm / 13.4°C / pH = 6.99
39		Collect sample. xD = 4.704 / 2.91 NTU / 0.308 ms/cm / 13.8°C / pH = 7.09
1245		NCOs on site
45		Collect sample xD = 4.689 / 2.23 NTU / 0.304 ms/cm / 13.0°C / pH = 7.07
50		Collect sample. xD = 4.661 / 2.13 NTU / 0.307 ms/cm / 13.4°C / pH = 7.25 * ?
1300		NCOs begin collecting field parameters
~~1210~~ 1310		[Collect sample B22X50]
1315		Safety on site
1310		Pump off / end test #1 / start test #2 "Smile WD2": recovery
26		xD = 8.6 [10.9 bgs]
27		Pump on - NCOs forgot to fill one bottle
40		8.0 NTU - collect final bottle (unfiltered)
41		Pump off
44		NCOs off site
		DTB = 27.8' bgs = no fill
1400		Drillers to pump off Poly tank at adjacent site; geo offsite
		Not USGD
		S/S

Reported By: L. Stratton

Title: Geologist

Date: 1-25-10

Signature: [signature]

Reviewed By: L.D. Walker

Title: Geologist

Date: 2/26/10

Signature: [signature]

A-6003-652 (04/03)

WELL DEVELOPMENT AND TESTING DATA

Well Name:	Well ID:	Well Location:	Date:
199-D2-12	C7090	100 D, "the horn"	12.22.9

Reference Measuring Point (unless otherwise noted): TOP OF OUTER CASING (TOC)

Has the well been surveyed? ○ Yes ● No | Does the well have a cement pad? ○ Yes ● No

PART 1

STATIC WATER LEVEL:

Start of Job	11.0'
End of Job	11.0'

DEPTH TO BOTTOM:

Start of Job	29.35'
End of Job	29.5'

PART 2

WELL DEVELOPMENT DATA

Pump Model	50 gpm, Grundfoss
Intake Depth	25.96' bgs
Starting Turbidity	859 NTU

Pump Start	Stop/Δ	Flow Rate
1006	Δ 1021	20.9 gpm
1021	Δ 1121	41.0 gpm
1121	Δ 1133	38.8 gpm
1133	1142	68.8

Total Pumped	3858.3 gallons
Final Turbidity	~~3.54~~ 2.25 NTU
XD SN/Range (PSI)	5217 (20 psi)

PART 3

INSTANTANEOUS SLUG TEST

Static Water Level (TOC)	~~12.18~~ 12.22 / 11.50 AD 12.22 Probe ~~Empt~~
Transducer Depth	~~23.02'~~ bgs AD 12.22
Baseline Start	
Injection Start	N/A
Baseline Start	
Withdrawal Start	
Slug Volume	
XD SN/Range (PSI)	

PART 4

Last Recorded Measurements Date:

Current Measurements Date:

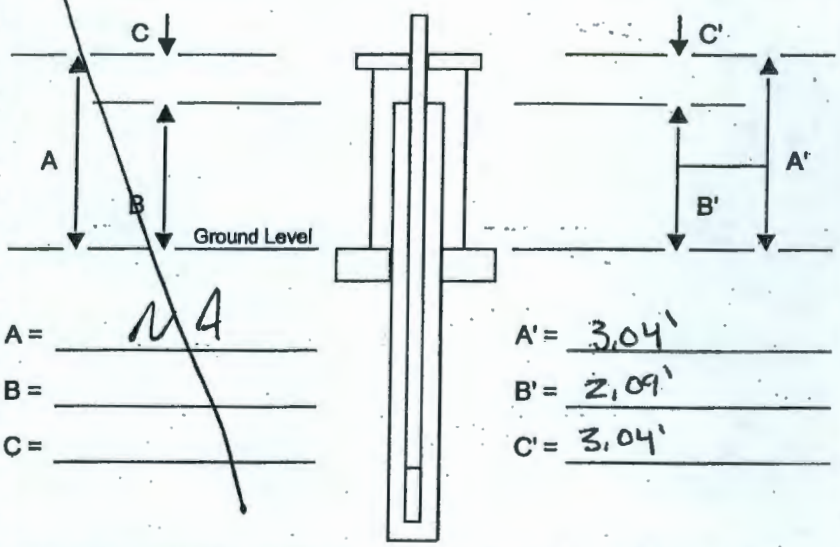

A =	N/A	A' =	3.04'
B =		B' =	2.09'
C =		C' =	3.04'

Are there any reference marks on the casing strings? ○ Yes ● No

PART 5

COMMENTS:

Recorded on heart: Burt, probe 5217
Test 1: Bender WDS
Test 2 (recovery): Bender WDS
total pipe used: 31.55 (includes pump)
probe at: 23.02' bgs
intake at: 25.96' bgs
bottom of pump: 28.51' bgs

Prepared by (print name): A. Pappas	Signature:	Date: 12.22.9
Reviewed by (print name): L.D. Walker	Signature:	Date: 1-13-10

A-6003-644 (03/03)

FIELD ACTIVITY REPORT - DAILY DRILLING

Page 1 of 3

Date: 12.22.9

Well Name: 199-DZ-12 | Well ID: C7090

Location: 100D "Horn" | Report No.: 6

Start	Finish	Total
Time 0600	Time 1229	Time 6 hrs 29 min
Hole Depth/Csg N/A / N/A	Hole Depth/Csg N/A / N/A	Hole Depth/Csg – / –

Reference Measuring Point: GROUND SURFACE

Casing String No. (1) 2 3 4 ____ See Report No. 1

Rod Size: #1: 10¾" x 8" dual wall

Time/Depth From	Time/Depth To	Description of Activities/Operations with Depth (Attach applicable drawings and document straightness test results)
0600	0709	POD at ISRM trailer
0709	/	to site. Drillers setup to ~~resume~~ AP 12.22 began
/	/	development activities
/	/	Depth to water tagged at 11.0' bgs
/	/	Depth to bottom tagged at 24.7' bgs, 5.3' of
/	0828	fill mtrl. in sump
0828	0924	Drillers began cleaning out sump.
0924	/	~~Burt~~ AP 12.22.9 sump cleaned up, Depth to bottom 29.35' bgs
/	/	Drillers began to trip in pump. Diagram of
/	0944	pump on page 3.
0944	/	Pump tripped in. bottom of pump at 28.51' bgs,
/	/	intake at 25.96' bgs, probe at 23.02' bgs. Drillers
/	/	contact to purge truck. geologist sets up equipment.
/	/	Instrument check
/	/	NTU: std Reading pH: std Reading µS: std Reading
/	/	444 444 10 10.17 1405 1418
/	/	543 52.8 7 7.05
/	1006	5.03 2.44
1006	/	Start pump, test Bender WDS (Burt)
/	/	XD NTU pH µS Temp(c) flow rate (gpm)
/	1010	11.875 859 7.57 287 9.8 20.9
/	1020	11.879 89.6 7.35 279 12.0 20.9
/	1021	(D Pump rate: 41 gpm)
/	1030	11.288 48.1 7.30 279 12.6 41.0

Reported By: A. Pappas | Reviewed By: L. D. Walker

Title: Field Geologist (GRAM) | Date: 12.22.9 | Title: Geologist | Date: 1/13/10

Signature: [signature] | Signature: [signature]

A-6003-651 (REV 1)

FIELD ACTIVITY REPORT - DAILY DRILLING

Continuation Page

Page 2 of 3

Date: 12.22.9

Well Name: 199-D2-12 | Well ID: C7090

Location: 100D "the horn" | Continuation of Report No.: 6

Time/Depth From	Time/Depth To	Description of Activities/Operations with Depth
/	/	Pump test Bender WD5 cont. from page 1
/	/	XD NTU pH µS Temp(c) flow rate (gpm)
/	1040	11.277 17.4 7.30 289 12.0 41.0
/	1050	11.266 8.62 7.29 293 13.2 41.0
/	1055	11.264 6.19 7.24 293 13.4 41.0
/	1100	11.258 5.46 7.25 292 13.3 41.0
/	1105	11.256 5.79 7.29 292 12.8 41.0
/	1110	11.256 4.85 7.29 294 12.8 41.0
/	1115	11.247 3.59 7.27 296 13.8 41.0
/	1120	(NCO's collect water samples, HEIS# BZZY51 BZZY34
/	1125	11.242 2.25 7.29 296 13.4 68.8
/	1133	(Δ pumprate 68.8 gpm)
/	1141	Stable (8.475, probe)
/	1142	shut off pump, Remy test Bender WD6
/	1152	well recovered (probe 12.352, tagger 11.0')
1152	/	Drillers trip out pump + probe. Clean up
/	/	site. Geologist does paper work
/	1229	Depth to bottom tagged at 29.6 bgs
1229		Site Secure, Drillers + Geologist exit

Not used 12.22.9

Reported By: A. Pappas | Reviewed By: L.D. Walker

Title: Field Geologist (GRAM) | Date: 12.22.9 | Title: Geologist | Date: 1/13/10

Signature: [signature] | Signature: [signature]

A-6003-652 (04/03)

FIELD ACTIVITY REPORT
Drawing Continuation Page

Page 3 of 3
Date: 12.22.9

Well Name: 199-D2-12	Well ID: C7090
Location: 100D, "the horn"	Continuation of Report No.: 6

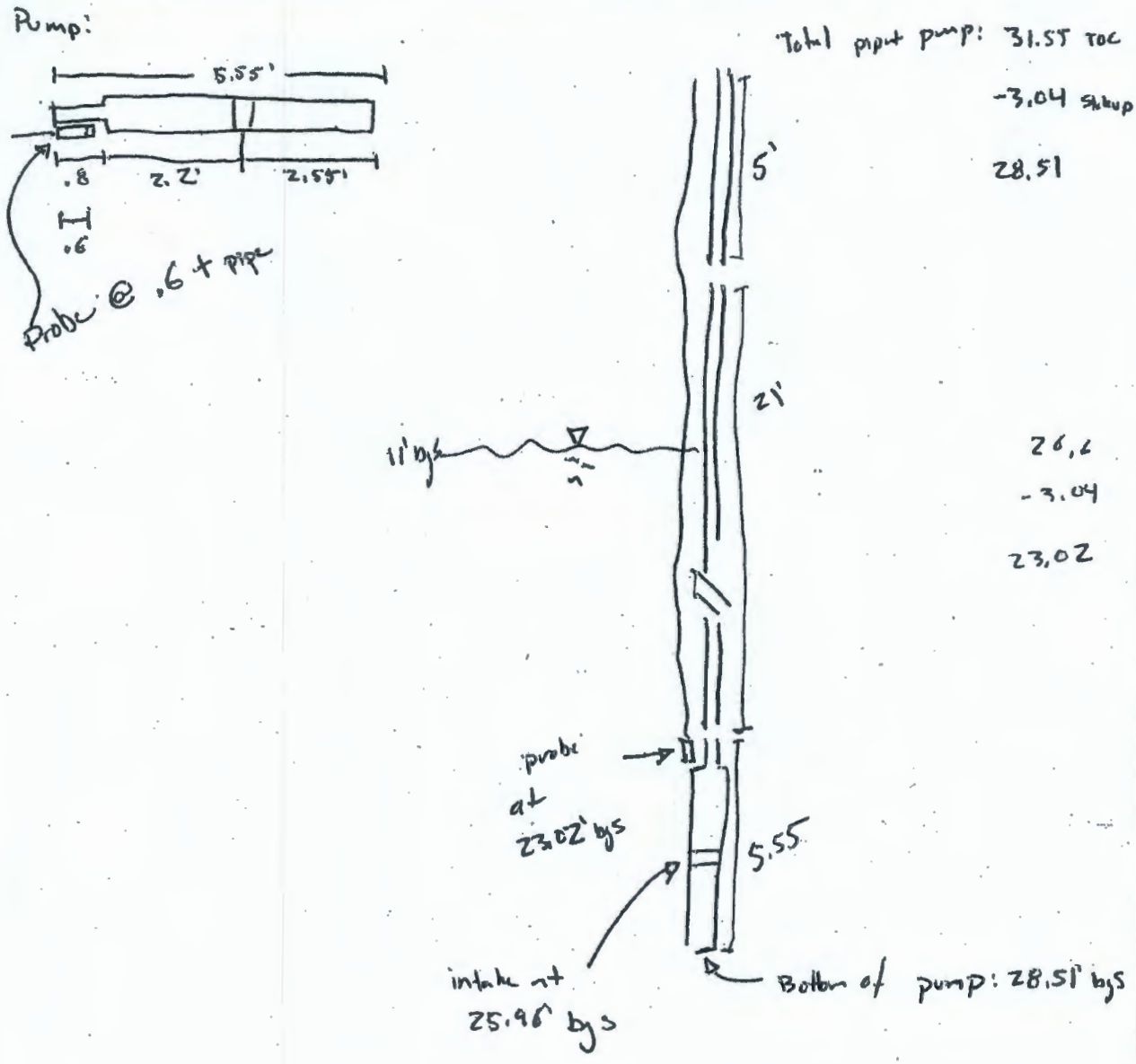

Reported By: A. Pappas		Reviewed By: L.D. Walker	
Title: Field Geologist (GRAM)	Date: 12.22.9	Title: Geologist	Date: 1/13/10
Signature:		Signature:	

A-6003-711 (06/03)

WELL DEVELOPMENT AND TESTING DATA

Well Name:	Well ID:	Well Location:	Date:
199-D8-89	C7091	N of 100-D Fence, W of 199-D8-5.	11/3/09

Reference Measuring Point (unless otherwise noted): TOP OF OUTER CASING (TOC)

Has the well been surveyed? ○ Yes ☑ No | Does the well have a cement pad? ○ Yes ☑ No

PART 1

STATIC WATER LEVEL:

Start of Job	68.85' bgs
End of Job	69.08' bgs

DEPTH TO BOTTOM:

Start of Job	80.0' bgs
End of Job	80.1' bgs

PART 2

WELL DEVELOPMENT DATA

Pump Model	Franklin Electric 5 hp submersible.
Intake Depth	70.7' bgs
Starting Turbidity	4.64 NTU

Pump Start	Stop	Flow Rate
1341	1450	
flow rate btwn 15 &		
26.9 gpm - see F.A.R.		
report #8.		

Total Pumped	1572.3 gallons
Final Turbidity	2.24 NTU
XD SN/Range (PSI)	20

PART 3

INSTANTANEOUS SLUG TEST

Static Water Level (TOC)	/
Transducer Depth	74.35' bgs
Baseline Start	
Injection Start	
Baseline Start	
Withdrawal Start	
Slug Volume	
XD SN/Range (PSI)	

PART 4

Last Recorded Measurements Date: N/A

Current Measurements Date: 11/3/09

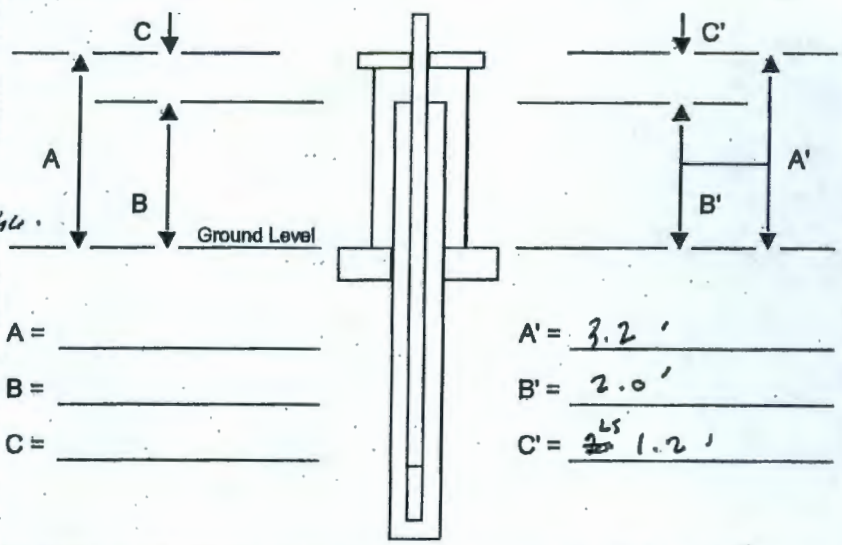

A = _____ | A' = 3.2'

B = _____ | B' = 2.0'

C = _____ | C' = ~~2~~ 1.2'

Are there any reference marks on the casing strings? ○ Yes ☑ No

PART 5

COMMENTS:

All measurements to drilling ground surface - no cement pad.

See F.A.R. report #8 (11.4.09) for detailed development data.

Data logger In Situ Hermit 3000 "Kurt":

Test #1 : "Sprint WD01" : drawdown

Test #2 : "Sprint WD02" : recovery.

Sample collected following ≤5 NTU for chemical analysis. HEIS# B22H04, B22H05.

Prepared by (print name):	Signature:	Date:
L. Stratton, Geologist.	[signature]	11.3.09
Reviewed by (print name):	**Signature:**	**Date:**
L. D. Walker	[signature]	11-9-09

A-6003-644 (03/03)

FIELD ACTIVITY REPORT - DAILY DRILLING

Page 1 of 3

Date: 11/3/09

Well Name: 199-D8-89 | Well ID: C7091

Location: N of 100-D Fence, W of 199-D8-5 | Report No.: 8

Start	Finish	Total
Time 1115	Time 1550	Time 4:35
Hole Depth/Csg N/A /	Hole Depth/Csg N/A /	Hole Depth/Csg N/A /

Reference Measuring Point: GROUND SURFACE

Casing String No. 1 2 3 4 ____ Rod Size: N/A

See Report No. 1

Time/Depth From	To	Description of Activities/Operations with Depth (Attach applicable drawings and document straightness test results)
1115		On site from C7085. Rig up to run pump for well development.
1130		DTB = 75.4' bgs. = 4.6' fill
1200	1245	Bail well. Fill consists of ~ 50/50 filter pack / formation sand.
		Tag bottom = 80.0 = 0.1' fill → okay.
1255		Trip in pump:
		• Franklin Electric single phase 5hp submerssible.
		5.8' long including coupler; intake 2.4' from bottom.
		• Riser pipe 2¼" OD galvanized: 21.1', 21.1, 21.1, 10.0, 5.0' =
		78.3' pipe + 5.8 - 2.4 = ~~78.4~~ 81.7 - 5.2' s/u = 76.5' TO INTAKE
		(0.5' above bottom of screen).
		• Transducer zip-tied 2.15' above intake = 74.35 to TRANSDUCER
		20psi pressure transducer SN 10500 - no calibration sticker.
		(PXD 261)
		Geo calibrate/check std on meters while tripping in:
		KIT#3:
		• Hach Turbidimeter 2100P S/N 95080000845 3G, cal. 8/31/09.
		Standard: 584 NTU → 584 reading
		: 49.0 NTU → 41.3 reading
		: 4.80 NTU → 4.64 reading
		• Thermo Orion 135A conductivity meter 062630/02, cell Orion 013010A.
		One shot traceable conductivity std 62344-938 exp. 1/16/2010, 1413 µs/cm:
		Used for calibration this morning @ C7085, poor match after 3+
		attempts - cold weather? (~25°F). Reattempt for C7091;
		1908 µs/cm reading on 1413 std after 2 attempts (better...)

Reported By: L. Stratton | Reviewed By: C.D. Walker

Title: Geologist | Date: 11/3/09 | Title: Geologist | Date: 11/9/09

Signature: [signature] | Signature: [signature]

A-6003-651 (REV 1)

FIELD ACTIVITY REPORT - DAILY DRILLING
Continuation Page

Page 2 of 3

Date: 11/3/09

Well Name: 199-D8-89 | Well ID: C7091

Location: N of 100-D fence, W of 199-D8-5 | Continuation of Report No.: 8

Time/Depth From	Time/Depth To	Description of Activities/Operations with Depth
		• pH meter: Hach 07C10029004 2.G, cal. 10/20/09 due 1/20/10.
		Standard 10.00 → 10.12 reading
		7.00 → 7.03
1340		DTW = 72.05 TOC − 3.2 = 68.85' bgs. E-tape WLN-26, standardized
		2/7/2008. Connect data logger: In Situ Hermit 3000 "Burt", input #2.
		[xD initial = 5.018]
1341		Start pump / start test #1 "Sprint WD1": gpm = 26.9
43		xD = 0.014
44		Cut pump rate to 22 gpm
45		xD = 0.015
46		Cut pump rate to 14.9 gpm : DTW = 76.6 TOC / xD = 0.8
49		74.45 TOC.
50		Collect water sample. xD = 2.525 / 4.64 NTU → notably sandy /
		cond = 0.690 mS/cm / pH = 7.16 / T = 17.9°C.
55		Collect water sample. xD = 2.524 / 11.9 NTU → notably sandy /
		cond = 0.677 mS/cm / pH = 7.18 / T = 18.4°C.
56		open pump valve. xD = 2.5 steady. check flow - didn't change.
58		" gpm = 19.4
1400		Collect sample. xD = 1.992 / turb = 3.56 NTU; sandy. / 0.680 mS/cm /
		pH = 7.33 / T = 18.1°C. ?? - suspect ?
1406		Collect sample. xD = 0.806 / turb = 8.05 NTU / 1798 mS/cm
		pH = 7.34 / T = 18.5°C.
1412		Collect sample. xD = 0.666 / 3.53 NTU / 0.672 mS/cm / pH = 7.35 / T = 18.3°C
16		" xD = 0.617 / 3.24 NTU / 0.669 " / pH = 7.33 / T = 18.2°C
21		" xD = 0.570 / 2.19 NTU / 0.663 " / pH = 7.53 / T = 17.4°C
25		NCOs begin collecting parameters for groundwater sample
26		Geo collect water: xD = 0.475 / 2.88 NTU / 0.664 mS/cm / pH = 7.63 / 16.7°C.
1442		NCOs collect groundwater sample
		HEIS#: B22HD4, B22HD5.

Reported By: L. Stratton | Reviewed By: L. D. Walker

Title: Geologist | Date: 11.3.09 | Title: Geologist | Date: 11/4/09

Signature: [signature] | Signature: [signature]

A-6003-652 (04/03)

FIELD ACTIVITY REPORT - DAILY DRILLING

Continuation Page

Page 3 of 3

Date: 11/3/09

Well Name: 199-D8-89

Well ID: C7091

Location: N of 100-D Fence, W of 199-D8-5

Continuation of Report No.: 8

Time/Depth From	Time/Depth To	Description of Activities/Operations with Depth
1446		geo collect water sample: xD = 0.236 / 2.24 NTU / 0.664 mS/cm / ~~pH~~ LS 11/3/09
		pH = 7.79 / T = 16.7°C.
1490		Pump off / start test #2 "Sprint WD02"
52		NCOs offsite.
1520		xD = 4.719. Test off. Begin pulling pump.
1540		DTB = 80.1' bgs.
		DTW = 69.08' bgs.
1550		Geo offsite / drillers offsite.
		NOT USED
		LS
		11/3/09

Reported By: L. Stratton

Title: Geologist

Date: 11.3.09

Signature:

Reviewed By: L.D. Walker

Title: Geologist

Date: 11/4/09

Signature:

A-6003-652 (04/03)

WELL DEVELOPMENT AND TESTING DATA

Well Name:	Well ID:	Well Location:	Date:
199-D8-90	C7092	100D	1.26.10

Reference Measuring Point (unless otherwise noted): TOP OF OUTER CASING (TOC)

Has the well been surveyed? ○ Yes ● No | Does the well have a cement pad? ○ Yes ● No

PART 1

STATIC WATER LEVEL:

Start of Job	29.2
End of Job	29.25

DEPTH TO BOTTOM:

Start of Job	52.5'
End of Job	52.5'

PART 2

WELL DEVELOPMENT DATA

Pump Model	5 hp / 50 gpm
Intake Depth	35.3' bgs
Starting Turbidity	148

Pump Start	Stop/Δ	Flow Rate
1450	1505	14.90
1505	1535	14.96

Total Pumped	672.3
Final Turbidity	2.91
XD SN/Range (PSI)	10500 /

PART 3

INSTANTANEOUS SLUG TEST

Static Water Level (TOC)	
Transducer Depth	
Baseline Start	
Injection Start	
Baseline Start	
Withdrawal Start	
Slug Volume	
XD SN/Range (PSI)	

PART 4

~~Last Recorded~~ Current Measurements (LW 2/1/10)
Date: 1-26-10

Current Measurements
Date:

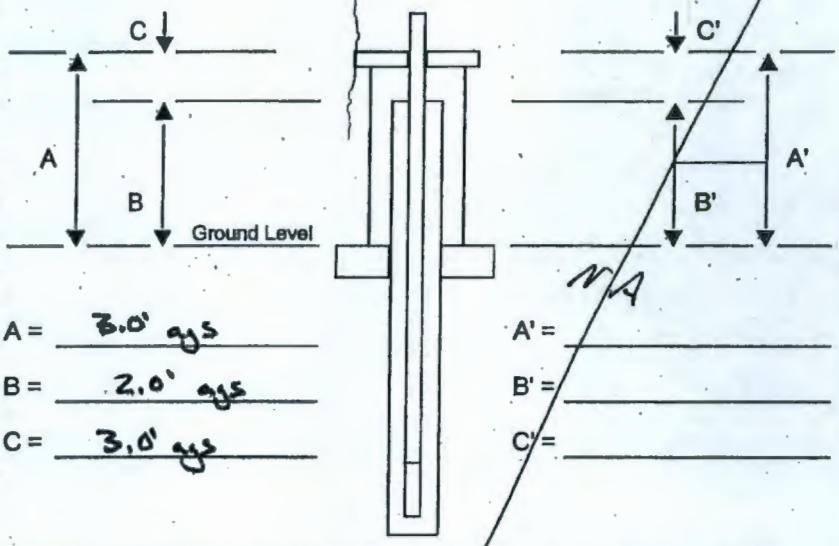

A =	3.0' bgs	A' =	NA
B =	2.0' bgs	B' =	
C =	3.0' bgs	C' =	

Are there any reference marks on the casing strings? ○ Yes ○ No

PART 5

COMMENTS:

Hernit: Sherman
Probe: 10500
Development 1 (35-50): Test Smile LADS

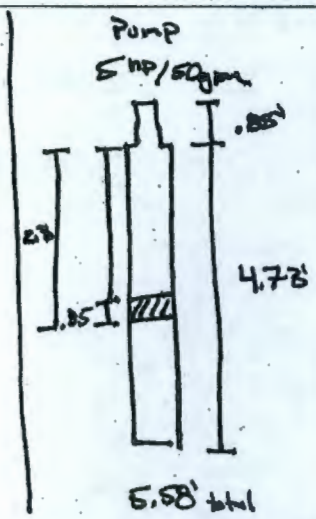

Prepared by (print name):	Signature:	Date:
A. Pappas	[signature]	1.26.10
Reviewed by (print name):	**Signature:**	**Date:**
L.d. Walker	[signature]	3-1-10

A-6003-644 (03/03)

WELL DEVELOPMENT AND TESTING DATA

Well Name:	Well ID:	Well Location:	Date:
199-D8-90	C7092	100D	1.28.10

Reference Measuring Point (unless otherwise noted): TOP OF OUTER CASING (TOC)

Has the well been surveyed? ○ Yes ● No | Does the well have a cement pad? ○ Yes ● No

PART 1

STATIC WATER LEVEL:

Start of Job	29.25'
End of Job	29.4'

DEPTH TO BOTTOM:

Start of Job	52.5'
End of Job	52.55'

PART 2

WELL DEVELOPMENT DATA

Pump Model	5 hp / 50 gpm
Intake Depth	48.4
Starting Turbidity	71 NTU

Pump Start	Stop	Flow Rate
0854	1019	32.9

Total Pumped	2,796.5 gallons
Final Turbidity	2.17 NTU
XD SN/Range (PSI)	10500 /

PART 3

INSTANTANEOUS SLUG TEST

Static Water Level (TOC)	
Transducer Depth	
Baseline Start	
Injection Start	
Baseline Start	
Withdrawal Start	
Slug Volume	
XD SN/Range (PSI)	

PART 4

~~Last Recorded~~ Current Measurements Date: 1.28.10 LW 3-1-10

Current Measurements Date:

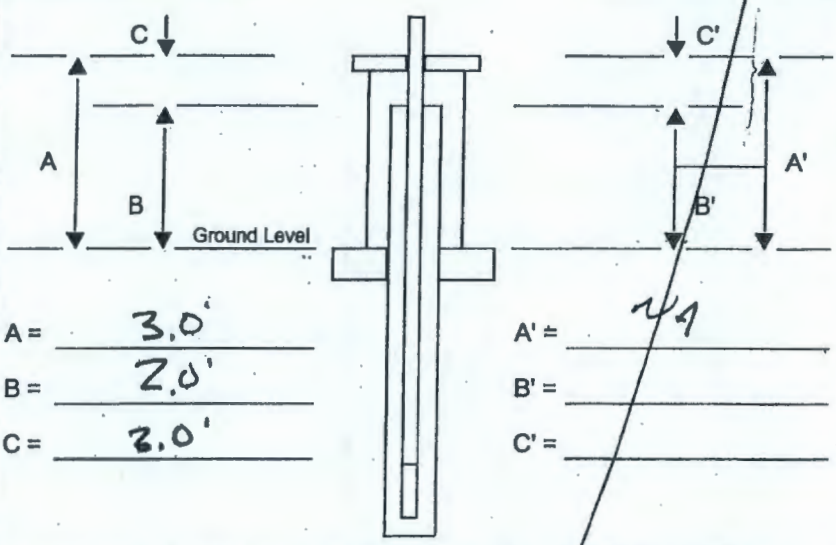

A =	3.0'	A' =	NA
B =	2.0'	B' =	
C =	2.0'	C' =	

Are there any reference marks on the casing strings? ○ Yes ○ No

PART 5

COMMENTS:

Hermit: "Sherman"

Development test 2: "Smile WD6"

recovery test: "Smile WD7"

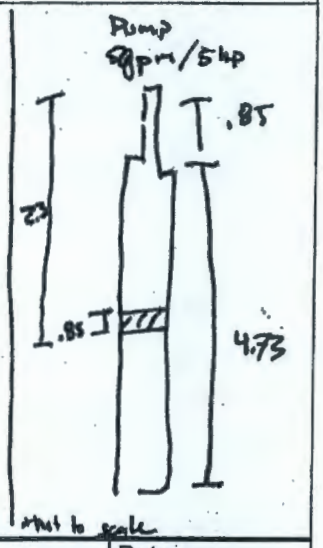

Prepared by (print name):	Signature:	Date:
A. Pappas	[signature]	1.28.10
Reviewed by (print name):	**Signature:**	**Date:**
L.D. Walker	[signature]	3-1-10

A-6003-644 (03/03)

FIELD ACTIVITY REPORT - DAILY DRILLING

Page 1 of 1

Date: 1.26.10

Well Name: 199-D8-90 | Well ID: C7092

Location: 100D | Report No.: ~~4~~ 5 cw 3/1/10

Start	Finish	Total
Time 1410	Time 1549	Time 1 hr 39 min
Hole Depth/Csg N/A / N/A	Hole Depth/Csg N/A / N/A	Hole Depth/Csg — / —

Reference Measuring Point: GROUND SURFACE

Casing String No. ~~1~~ 2 3 4 ____ See Report No. 1

Rod Size:

Time/Depth From	Time/Depth To	Description of Activities/Operations with Depth (Attach applicable drawings and document straightness test results)
1410	/	Geologist on site Drillers prep to trip in
/	1420	pump + Probe
1420	/	Drillers trip in pump (5 hp/ 50 gpm) 5.58',
/	/	and pipe 21', 10', 5' lengths.
/	/	Pump intake at: 35.3' bgs
/	/	Prope at: 33.0' bgs
/	/	Depth to water tagged at: 29.2' bgs
/	/	xD pre pumping: 3.697
/	/	Standards test
/	/	Turbidity: STD Act. pH STD Act Conductivity STD Act
/	/	5.03 3.54 10 10.26 1413 1403
/	/	54.3 53.4 7 7.23
/	/	499 498
1450	/	Start developing → Hermit: Sherman Test: Smile WD5
/	/	xD pH µ NTU Temp gpm
/	1450	-.003 7.82 361 148 13.4°c 14.9
/	1500	.491 8.25 323 66.2 14.7°c 14.9
/	1510	.447 8.30 318 10.7 15.4°c 14.96
/	1520	.453 8.28 322 6.21 14.5°c 14.96
/	1530	.504 8.25 324 2.91 14.9°c 14.96
/	1535	Stop test final xD .504 final NTU 2.91
1535	/	Drillers rig down. Geo completes paperwork
/	1549	Packs up kit.
1549	/	Geo + Drillers exit site

Reported By: A. Pappas	Reviewed By: L.D. Walker
Title: Field Geologist Date: 1.26.9	Title: Geologist Date: 3/1/10
Signature:	Signature:

A-6003-651 (REV 1)

FIELD ACTIVITY REPORT - DAILY DRILLING

Page 1 of 1

Date: 1.27.10

Well Name: 199-D8-90 | Well ID: C7092

Location: 100D | Report No.: ~~5~~ 6 CW 3/1/10

Start	Finish	Total
Time 0600	Time 1030	Time 4 hrs 30 min
Hole Depth/Csg N/A / N/A	Hole Depth/Csg N/A / N/A	Hole Depth/Csg — / —

Reference Measuring Point: GROUND SURFACE

Casing ~~String~~ No. 1 2 3 4 ____ Rod Size:
See Report No. 1

Time/Depth From	Time/Depth To	Description of Activities/Operations with Depth (Attach applicable drawings and document straightness test results)
0600	0631	POD at ISRM trailer
0631		to site drillers prep to resume well development
		Depth to water tagged at 29.25' bgs
		remove 10' + 5' of pipe
		add 21', 5', 2.8' pipe
		~~Probe~~ Pump intake at 48.4' ~~49.1'~~ bgs
		Probe depth 46.1' ~~46.8'~~ AP bgs
	0730	xD pre pump at 16.879 (16.85 actual)
0730		Standards check
		Turbidity STD reading pH STD reading Conductivity STD reading
		5.03 3.02 10 10.26 1413 1426
		54.3 52.7 7 7.23
		499 496
		AP ~~Start developing~~
		1.27 ~~xD pH NTU Temp GPM~~
	1024	Waiting for NCO sample team confirmation
1024	1030	Geologist packs up gear
1030		Geologist exits site

Notified

Reported By: A. Page		Reviewed By: L.D. Walker	
Title: Field Geologist	Date: 1.27.10	Title: Geologist	Date: 3/1/10
Signature:		Signature:	

A-6003-651 (REV 1)

FIELD ACTIVITY REPORT - DAILY DRILLING

Page 1 of 2

Date: 1.28.10

Well Name: 199-D8-90 | Well ID: C7092

Location: 100D | Report No.: ~~6~~ 7 LW 3/1/10

Start	Finish	Total
Time 0600	Time 1117	Time 5 hrs 17 min
Hole Depth/Csg N/A / N/A	Hole Depth/Csg N/A / N/A	Hole Depth/Csg NA / NA

Reference Measuring Point: GROUND SURFACE

Casing String No. 1 2 3 4 ____ See Report No. 1

Rod Size:

Time/Depth From	Time/Depth To	Description of Activities/Operations with Depth (Attach applicable drawings and document straightness test results)
0600	0651	POD at ISRM barrier trailer
0651	/	To site, drillers rig up, geo sets up
/	0709	equipment for development
0709	/	Drillers + Geo wait for NCO's sample
/	0838	Collection team confirmation to come on out.
0838	/	NCO on way. Geologist preps instruments, standards test.
/	/	Turbidity STD reading pH STD reading Conductivity STD reading
/	/	5.03 2.90 10 10.34 1413 1430
/	/	54.3 51.3 7 7.25
/	/	499 486
/	/	Pump intake: 48.4'
/	/	Depth to water: 29.25'
/	/	XD pre pump: 16.965'
0854	/	Start Developing – Hermit: Slamm Test smile WDG
/	/	XD pH µ NTU Temp GPM
/	0855	6.746 7.76 351 71 9°c 32.9
/	0905	5.692 8.04 340 110 11.6°c 32.9
/	0915	5.535 8.27 341 18.6 11.6°c 32.9
/	0925	5.500 8.30 347 8.52 12.5°c 32.9
/	0935	5.459 8.30 342 6.11 13.4°c 32.9
/	0945	5.385 8.28 338 8.63 14.2°c 32.9
/	0950	5.350 8.28 341 5.09 15.0°c 32.9
/	0955	5.339 8.27 345 4.80 14.3°c 32.9
/	1000	5.328 8.25 339 3.99 16.4°c 32.9

Reported By: A. Pappas | Reviewed By: L.D. Walker

Title: Field Geologist | Date: 1.28.10 | Title: Geologist | Date: 3/1/10

Signature: | Signature:

A-6003-651 (REV 1)

FIELD ACTIVITY REPORT - DAILY DRILLING

Continuation Page

Page 2 of 2

Date: 1/28/10

Well Name: 199-D8-90

Well ID: C7092

Location: 100D

Continuation of Report No.: ~~6~~ 7 LW 3/1/10

Time/Depth From	Time/Depth To	Description of Activities/Operations with Depth
/	~~1005~~ 1010	XD pH µ NTU Temp GPM
/	1005	5.274 8.26 339 3.50 16.3° ~~36.9~~ 32.9
/	1010	5.257 8.23 340 3.34 16.1° 32.9
/	1019	5.209 8.24 339 2.17 15.2° 32.9
/	1019	Stop pump, start recovery test (Sherman – test: Smile WD#)
/	1044	recovery test stopped. (xD at 16.639)
/	1044	Geo begins to pack up gear
/	/	NCO's sample collected at 10:10a
/	/	HEIS # BZ3466 & BZ3465
/	1047	
1047	1114	Drillers remove pump.
1114	/	Drillers clean up site / rig down. Geologist does paperwork
/	/	Depth to water: 29.4' bgs
/	1117	Depth to bottom: 52.55' bgs
1117		Geologist exits site

Not Used AM v20

Reported By: A. Pappas

Title: Field Geologist

Date: 1.28.10

Signature: [signature]

Reviewed By: L.d. Walker

Title: Geologist

Date: 3/1/10

Signature: [signature]

A-6003-652 (04/03)

WELL DEVELOPMENT AND TESTING DATA

Well Name:	Well ID:	Well Location:	Date:
199-D8-91	C7093	100D	1.26.9

Reference Measuring Point (unless otherwise noted): TOP OF OUTER CASING (TOC)

Has the well been surveyed? ○ Yes ● No | Does the well have a cement pad? ○ Yes ● No

PART 1

STATIC WATER LEVEL:

Start of Job	22' bgs
End of Job	22.15' bgs

DEPTH TO BOTTOM:

Start of Job	41.6' bgs
End of Job	41.6

PART 2

WELL DEVELOPMENT DATA

Pump Model	5hp / 50gpm
Intake Depth	38.53' bgs
Starting Turbidity	497 NTUs

Pump Start	Stop/Δ	Flow Rate
1024	1025	29.9 gpm
1025	1035	25.0 gpm
1035	1115	28.9 gpm
1115	1150	26.9 gpm

Total Pumped	2417.4 gallons
Final Turbidity	2.24 NTU
XD SN/Range (PSI)	10500 / 20

PART 3

INSTANTANEOUS SLUG TEST

Static Water Level (TOC)	
Transducer Depth	
Baseline Start	
Injection Start	
Baseline Start	
Withdrawal Start	
Slug Volume	
XD SN/Range (PSI)	

PART 4

Last Recorded Measurements
Date: 1.26.09

Current Measurements
Date:

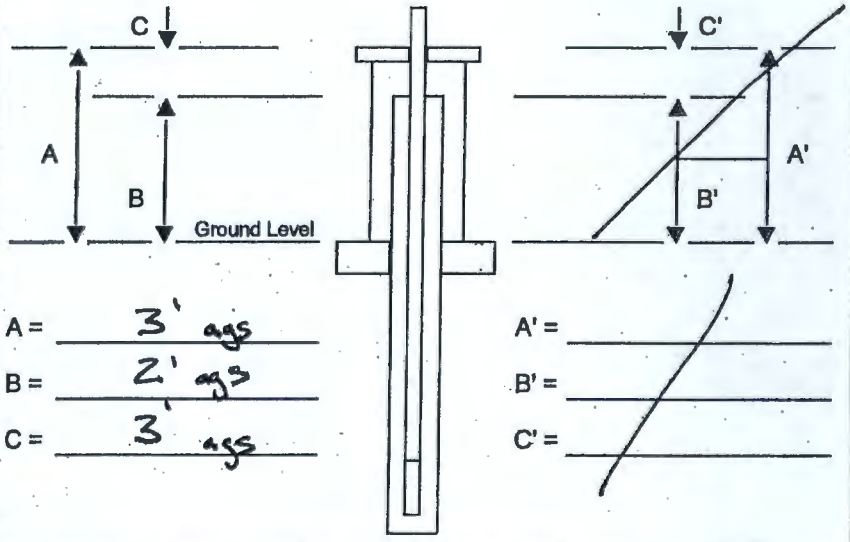

A = 3' ags
B = 2' ags
C = 3' ags

A' =
B' =
C' =

Are there any reference marks on the casing strings? ○ Yes ● No

PART 5

COMMENTS:

Hermit: Sherman
probe SN: 10500
Development test: Smile WD3
Recovery test: Smile WD4

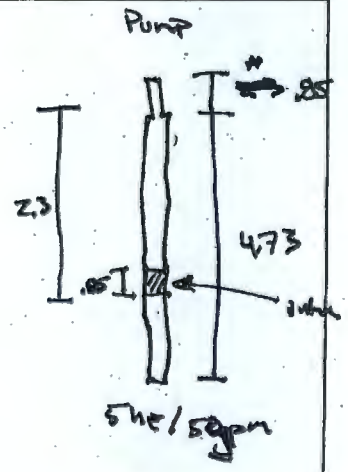

Prepared by (print name):	Signature:	Date:
A. Pappas		1.26.9
Reviewed by (print name):	**Signature:**	**Date:**
L.D. Walker		3-1-10

A-6003-644 (03/03)

FIELD ACTIVITY REPORT - DAILY DRILLING

Page 1 of 2

Date: 1/26/10

Well Name: 199-D8-91

Well ID: C7093

Location: 100D

Report No.: 6

Start	Finish	Total
Time 0600	Time 1243	Time 6 hrs 43 min
Hole Depth/Csg N/A / N/A	Hole Depth/Csg N/A / N/A	Hole Depth/Csg /

Reference Measuring Point: GROUND SURFACE

Casing String No. 1 2 3 4 ____ Rod Size:
See Report No. 1

Time/Depth From	Time/Depth To	Description of Activities/Operations with Depth (Attach applicable drawings and document straightness test results)
0600	0712	POD at ISRM trailers, discuss IGMS.
0712	0930	to site, drillers prep to begin well development activities
0930		Drillers trip in pump.
		Pump is 5hp/15gpm, (5.58'), pipe pieces
		follow 21', 10', 5' (in length)
		intake at 38.58' bgs, probe at 35.43' bgs
	1002	Depth to water tagged at 22' bgs
1002		Test equipment
		turbidity STD actual pH STD actual Conductivity STD
		4.78 4.84 10 10.09 1413 µ
		47.5 48.9 7 7.06 actual
		581 582 1334 µ
		XD @ T=0 min 10.882' (actual 13.43')
1024		Start test → Hermit: Sherman, Test: Smile WD3
		XD pH µ NTU Temp. gpm
	1025	5.482 6.82 347 497 12.1°C 25
	1035	5.984 7.07 287 19 13.4°C 25
	1045	5.845 7.19 282 11.8 13.1°C 29
	1055	5.857 7.24 287 7.54 12.8°C 29
	1105	5.830 7.43 290 5.74 12.1°C 29
	1115	5.803 7.39 286 5.89 13°C 29
	1120	5.783 7.47 290 5.30 13.3°C 26.9
	1125	5.765 7.50 287 3.72 13.2°C 26.9
	1135	5.735 7.58 289 ~~3.72~~ 3.16 14.0°C 26.9

Reported By: A. Pappas

Title: Field Geologist

Date: 1/26/10

Signature: [signature]

Reviewed By: L.D. Walker

Title: Geologist

Date: 3/1/10

Signature: [signature]

A-6003-651 (REV 1)

FIELD ACTIVITY REPORT - DAILY DRILLING
Continuation Page

Page 2 of 2
Date: 1.26.29

Well Name: 199-D8-91
Well ID: C7093
Location: 100D
Continuation of Report No.: 6

Time/Depth From	Time/Depth To	Description of Activities/Operations with Depth
		xD pH µ NTU Temp gpm
	1150	5,690 7.59 286 2.24 13.2°C 26.9
	1150	pump shut down. start recovery test (smile WD4)
		final NTU: ~~286~~ 2.24, xD: 5,690
	1215	recovery test stopped final xD 10,653 (actual 22.2' bgs)
		Development complete samples collected at 1140
		HEIS # B23 468 B23 467
	1220	Drillers begin to remove pump
1227		Pump + probe removed. Drillers clean up site
		begin rig down. Geologist does paperwork
		Tag bottom of well at 41.6' bgs
	1243	Tag water at 22.15' bgs
1243		Geologist exits site

Not used AP 1.26

Reported By: A. Pappas		Reviewed By: L.D. Walker	
Title: Field Geologist	Date: 1.26.10	Title: Geologist	Date: 5/1/10
Signature:		Signature:	

A-6003-652 (04/03)

FIELD ACTIVITY REPORT - DAILY DRILLING

Page 1 of 1

Date: 12-21-09

Well Name: 199-D8-93 | Well ID: C7095

Location: Floodplain below 100-D, downstream of "D" island | Report No.: 6

Start	Finish	Total
Time 1130	Time 1330	Time 4.0
Hole Depth/Csg 18.1' / ~~18.50~~ 18.10 (12-21-09)	Hole Depth/Csg 18.1 / 18.1	Hole Depth/Csg 0.0 / 0.0

Reference Measuring Point: GROUND SURFACE

Casing String No. 1 2 3 4 ____ Rod Size:

See Report No. 1 DTW: I: 11' bgs.

Time/Depth From	Time/Depth To	Description of Activities/Operations with Depth (Attach applicable drawings and document straightness test results)
1130	1145	Set rig up on well. Tag DTB: 18.1'. bgs
1145		Bail well. + Check instruments. Hatch HQ40d PHmeter problematic
		Tag DTB (post Bail) @ 18.50' bgs. (v. fine fn. sand + high silt content)
		Install Grundfoss pump (5 hp 230 v. 1-phase, w/ 50 gpm impellers)
		-Intake to 15.0' bgs. 18' TOC.
		-XD I on probe registers 0.99' of water. Call BTR to allow skipping
		use of data logger on this well. BTR permits use of E-Tape to measure
	1340	drawdown.
		Turn on pump → pump drew well dry immediatly. Kill pump.
	1340	Turn off pump + Shut valves to allow recharge. 0.1' / 37 sec
		37 sec = 0.62 min (12-21-09) 0.1' x 3.14 (3²)/4 = .00625 ft³ = 0.046 gal / 0.62 min = 0.23 gpm ~~0.08 gpm~~ recharge
1		
1340		Remove pump from well. Call field Supervisor. Notifies to swab screen
	1345	to gain conductance w/ screen + aquifer.
1345	1400	Field super brings out swab (duel surge block)
1400	1457	Begin swabbing screen.
1457	1500	Tag DTB: 18.1' bgs. ◀(Water looks like thick orange mud.)◀
1500		Reinstall 50 hp Grundfoss pump w/ 50 gpm impellers. to 15' bgs.
		DTW I: 13.35' TOC 10.35' bgs. = 4.65' above intake.
1313		Pump on draw down to 17.65' TOC. adjusting flow 16.95' sustaining (very dark mud. reddish color)
	1319	Pumpcheck (flow) 1.7 gpm. intermittent. flow is waxing + waining.
	1319	Pumped well dry. → Out of water. Perform recharge test.
1319		Kill pump. Recharge flow 0.5 gpm. Water level not recharging fast
	1330	enough to justify final DTW. All personnel exit site.

Reported By: A. Lantow | Reviewed By: L.D. Walker

Title: Geologist | Date: 12-21-09 | Title: Geologist | Date: 1-13-10

Signature: Aaron Lantow | Signature: LD Walker

A-6003-651 (REV 1)

WELL DEVELOPMENT AND TESTING DATA

Well Name:	Well ID:	Well Location:	Date:
199-D8-94	C7096	Floodplain below 100-D off toe of "D" Island	12-18-09

Reference Measuring Point (unless otherwise noted): TOP OF OUTER CASING (TOC)

Has the well been surveyed? ○ Yes ⊗ No | Does the well have a cement pad? ○ Yes ⊗ No

PART 1

STATIC WATER LEVEL:

Start of Job 12.7 bgs

End of Job 12.7 bgs

DEPTH TO BOTTOM:

Start of Job 26' bgs, 29' toc

End of Job will measure post bail.

PART 2

WELL DEVELOPMENT DATA

Pump Model 50 gpm, stainless steel, Grundfos

Intake Depth ~~21' bgs, 27' TOC~~ 12-18-09 24' bgs 27' toc

Starting Turbidity 178 NTU

Pump Start	Stop	Flow Rate
1405	1505	34 gpm (~)

Total Pumped ~~2090 gal~~ 12-18-09 1870 gal

Final Turbidity lowest = 21.2 NTU

XD SN/Range (PSI) 20 psi, 5217 (SN)

PART 3

INSTANTANEOUS SLUG TEST

Static Water Level (TOC) 15.7' toc

Transducer Depth 20.7 toc

Baseline Start

Injection Start N/A

Baseline Start

Withdrawal Start

Slug Volume

XD SN/Range (PSI)

PART 4

Last Recorded Measurements Date:

Current Measurements Date:

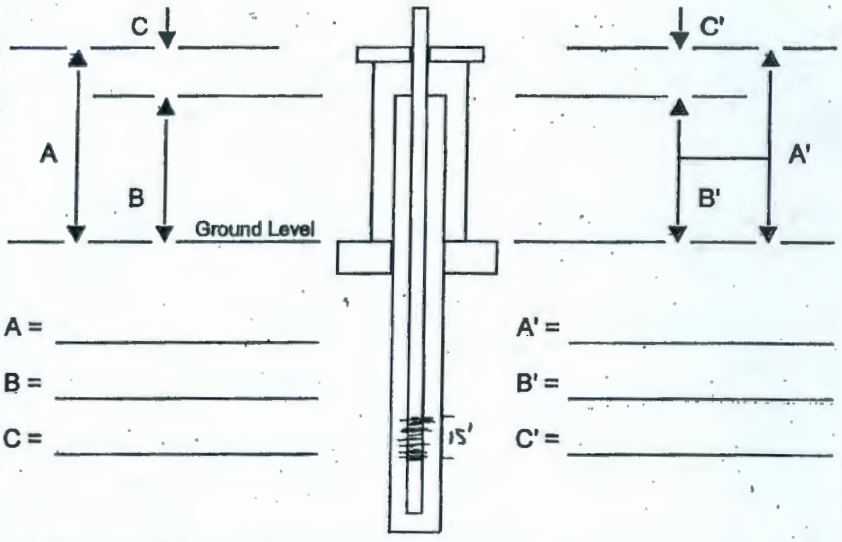

A = _____ A' = _____

B = _____ B' = _____

C = _____ C' = _____

Are there any reference marks on the casing strings? ○ Yes ⊗ No

PART 5

Transducer Hermit Name: BURT

COMMENTS:

Drawdown Test: Bender WD3 → Stop due to leak → Restart test on #WD4

XD_f: 0.211 XD_I: 8.070

Recovery Test: Bender WD_No recovery Test

Prepared by (print name):	Signature:	Date:
A. Fontana	[signature]	12-18-09
Reviewed by (print name):	**Signature:**	**Date:**
L.S. Walker	[signature]	1-13-10

A-6003-644 (03/03)

WELL DEVELOPMENT AND TESTING DATA

Well Name:	Well ID:	Well Location:	Date:
199-D8-94	~~C7092~~ C7096	Floodplain below 100-D off toe of "D" Island	12-21-09

Reference Measuring Point (unless otherwise noted): TOP OF OUTER CASING (TOC)

Has the well been surveyed? ○ Yes ⊗ No | Does the well have a cement pad? ○ Yes ⊗ No

PART 1

STATIC WATER LEVEL:

Start of Job 13.2

End of Job 14.1 River has dropped.

DEPTH TO BOTTOM:

Start of Job 26.05 bgs 29.05 TOC

End of Job ~~24.5~~ 31.0 TOC

PART 2

WELL DEVELOPMENT DATA

Pump Model 5hp, 1-phase, 50gpm impellers

Intake Depth ~~24.5~~ 20.5' bgs. 23.5 TOC.

Starting Turbidity 78.4

Pump Start	Stop	Flow Rate
0753	0758	50.0
0758	0920	33
0920	0922	25
0922	1015	14.2

Total Pumped 2679.4 gal

Final Turbidity 0.83

XD SN/Range (PSI) 20psi / 5217(SN)

PART 3

INSTANTANEOUS SLUG TEST

Static Water Level (TOC)

Transducer Depth 20.7' TOC.

Baseline Start

Injection Start

Baseline Start

Withdrawal Start

Slug Volume

XD SN/Range (PSI)

PART 4

Last Recorded Measurements Date: 12-21-09

Current Measurements Date:

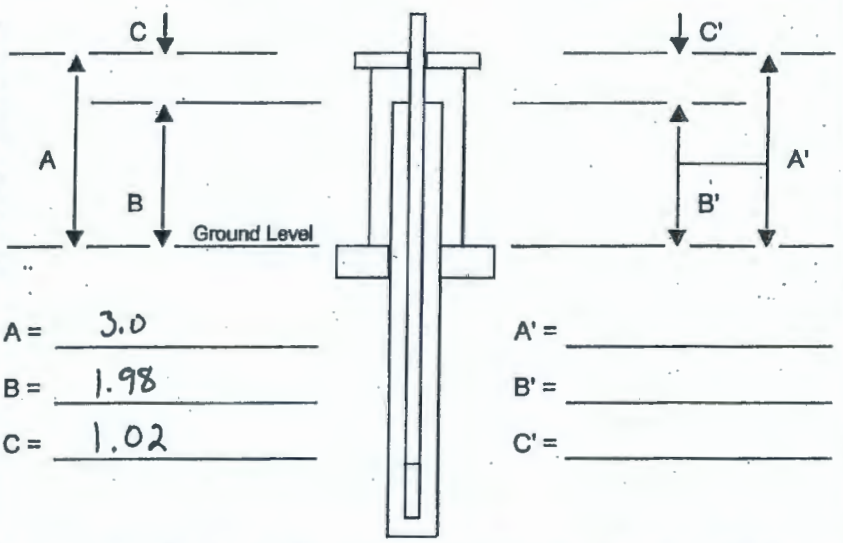

A = 3.0

B = 1.98

C = 1.02

A' =

B' =

C' =

Are there any reference marks on the casing strings? ○ Yes ⊗ No

PART 5

Hermit Name: BURT → No pigtail + poor connection.

COMMENTS:

No Drawdown info recorded on datalogger.
No Recovery info recorded on data logger.

Collect water sample HEIS # B23471, B23472

Prepared by (print name):	Signature:	Date:
A. Lanton	Aaron Lanton	12-21-09
Reviewed by (print name):	**Signature:**	**Date:**
L.D. Walker	L.D. Walker	1-13-10

A-6003-644 (03/03)

FIELD ACTIVITY REPORT - DAILY DRILLING

Page 1 of 2

Date: 12-18-09

Well Name: 199-D8-94 | Well ID: C7096

Location: Floodplain below 100-D off toe of D Island | Report No.: 5

Start	Finish	Total
Time 1100	Time 15:45	Time 3.75
Hole Depth/Csg 21 / 28.01' bgs	Hole Depth/Csg 26 / 28.01'	Hole Depth/Csg 5 / 0.0

Reference Measuring Point: GROUND SURFACE

Casing String No. ~~1 2 3 4~~ ____ Rod Size: NA

See Report No. 1 Initial DTW: 12.7' toc.

Time/Depth From	To	Description of Activities/Operations with Depth (Attach applicable drawings and document straightness test results)
1100		Drillers to site. Set up pump rig & begin bailing well using ball bailer.
	1300	Initial tag: 21' bgs. = 7' sed. in well. → Bail
1300	1302	Tag DTB @ 26.8' bgs. = 1.2' in sump. BTR allows pump to be
1302	1305	placed in well w/ concurrence w/ Geo & Contractor head.
1305		Place Pump & Transducer in well. Intake @ 21'+3'+3' = -3' stkup = 24' bgs.
	1345	= 14' below water. Transducer placed 8' below water.
1345	—	Check field Instruments: Also, Waiting for Grounding strap for Generator.
		σ: std: 5.64 → Readings = 5.95; 48.4 = 50.6; 520 = 516
		pH: Temp: 2°C; std: 7.00 = 7.08; : 10.00 = 10.22
1405		Pump on. Very Turbid. → Sample full of Sand

	XD	NTU	PH	µS/cm	Temp °C	Flow Rate gpm
1410	~~XD~~ 3.23	178	7.31	—	14.7	~~33~~ 165 330 gal at 12-18-09
1415	3.06	112	7.39	—	—	37.5 stablized
1420	2.937	91	7.39	207.6	14.9	~~37.5~~ 615 gal at 12-18-09 187 gal
1422	4.16	—	—	—	—	25 gpm slow flow 125
1424	—	—	—	—	—	33 gpm Return rate:
1425	4.25	90.1	7.42	205.6	14.8	33 gpm
1430	4.248	45.6	7.43	204.6	14.8	33 gpm
1435	4.130	25.8	7.42	205.4	14.7	" "
1440	3.946	22.8	7.42	205.1	14.3	" "
1445	3.851	21.2	7.43	207	14.6	" " 693 gal

0.15

Reported By: Aaron Lanteu | Reviewed By: L.D. Walker

Title: Geologist | Date: 12-18-09 | Title: Geologist | Date: 1-13-10

Signature: Aaron Lanteu | Signature: [signature]

A-6003-651 (REV 1)

FIELD ACTIVITY REPORT - DAILY DRILLING

LW 1-13-10 **Continuation Page** LW 1-13-10

Page 2 of 2

Date: 12-18-09

Well Name: ~~See pg 1.~~ 199-D8-94

Well ID: ~~See pg 1.~~ (C7096)

Location: ~~See pg 1.~~ 100 D

Continuation of Report No.: 5

Time/Depth From	Time/Depth To	Description of Activities/Operations with Depth	XD	NTU	pH	r (µS/cm)	Temp (°C)	Flow (gal/min)
1450			0.217	>1000				50	250
1455			0.211	>1000	7.48	212.4	14.0	45	450
1500			0.412	78.4	7.46	216.0	15.7	45	Tank nearly full
1503			K						Kill pump., no recovery test Today.
									No sample Today.
1515	1545	Secure well head + Site. Geo + Drillers exit zone.							

Not Used

Reported By: Aaron Lontaas

Title: Geologist Date: 12-18-09

Signature: Aaron Lontaas

Reviewed By: L.D. Walker

Title: Geologist Date: 1/13/10

Signature: LD Walker

A-6003-652 (04/03)

FIELD ACTIVITY REPORT - DAILY DRILLING

Page 1 of 2

Date: 12-21-09

Well Name: 199-D8-94 | Well ID: C7096

Location: Floodplain below 100-D off toe of "D" Island | Report No.: 6

Start	Finish	Total
Time 0605	Time 1058	Time ~5 hr
Hole Depth/Csg 29.05 TOC / 28.01	Hole Depth/Csg 28.00 / 28.01	Hole Depth/Csg / /

Reference Measuring Point: GROUND SURFACE

Casing String No. ~~1 2 3 4~~ ____ ~~Rod Size:~~

See Report No. 1

Time/Depth From	Time/Depth To	Description of Activities/Operations with Depth (Attach applicable drawings and document straightness test results)
0605	0700	POD @ ISRM take cover / sample trailer.
0700		Geologist, Drillers & BTR on site. Drillers warming rig & Generator.
		Drillers preparing to develope.
	0753	Pump on. Continue to measure parameters on next page. Hermit not connectable to probe.
	0755	Samplers on site. Geo collect parameters. (no pig tail & no cambock)
1000	time	Collect water sample. HEIS # B23472(CR⁶), B23471
	1015	Kill pump. No drawdown nor recovery info available. No pigtail for Hermit
		& Reel cam broken. to permit proper connection w/ data logger.
1015	1030	Pull pump, drop pipe (21') & probe.
1030	1045	Bail preparations. Pump drummed water to purgetruck.
1045	1055	Bail well. Tag(x) = 26.05' bgs. = 1.95 sed. in well.
1055	1058	Tag DTB @ 28.00' bgs.
1058		Tower rig down & move to next site.

Reported By: A. Lontan | Reviewed By: L. D. Walker

Title: Geologist | Date: 12-21-09 | Title: Geologist | Date: 1/13/10

Signature: Aaron Lontan | Signature: [signature]

A-6003-651 (REV 1)

FIELD ACTIVITY REPORT - DAILY DRILLING

Continuation Page

LW 1-13-10 LW 1-13-10

Page 2 of 2

Date: 12-21-09

Well Name: ~~See pg 1.~~ 199-D8-94

Well ID: ~~See pg 1.~~ C7096

Location: ~~See pg 1.~~ 100D

Continuation of Report No.: 6

Time/Depth From	Time/Depth To	Description of Activities/Operations with Depth
		Hermit Name: Burt; Probe Depth: ; Intake Depth: ; Aquifer Thickness:
		Test: No test conducted; XDT: ~~15~~ 13.2'; Head above Intake: ; AK 12-21-09 14.8
		Calibration of Field Instruments: Note: 33 gal to purge.
		Turbidity: Standard: Reading • $\frac{X_2-X_1}{X_2+X_1}/100$:
		: Std. : Reading • " :
		: Std. : Reading • " :
		pH : Std. : 10.0 Reading • Slope:
		Std. : 7.0 Reading •
		Std : 4.0 Reading •
		Conductivity: Std : Reading • $\frac{X_2-X_1}{X_2+X_1}/100$:
0753	—	Pump on:

		XD(ft)	NTU	Temp(C°)	DO(mg/L)	pH(pKa)	Flow(gpm)	Notes: ~~X~~ (µS/cm) AK 12-21-09	Notes:
	0758	~~18.2~~	78.4	15.0	–	–	33	227	Pump on @ 50 gpm
0803	12-21-09 AK	~~18.46~~	10.8	14.8	–	7.25	33	209.5	~5' drawdown (samplers here)
	0815	18.75	9.74	13.2	–	7.13	33	211.2	5.55' drawdown
	0825	18.77	9.82	13.3	–	7.34	33	213.7	5.57 drawdown
	0835	~~18.75~~	13.3	16.2	–	7.32	33?	217.1	5.53 drawdown
	0845	18.77	12.5	13.8	–	7.41	33	214.2	check flow w/ 5 gal bucket
	0900	18.77	7.11	13.0	–	7.41	33	217.2	
	0910	18.77	26.3	14.9	–	7.40	33	222.0	truck almost full.
	0920	18.80	36.0	13.6	–	7.44	33	216.2	
	0921	–	–	–		–	25	–	25 gpm (slow flow)
	0922	–	–	–		–	14.2	–	Slow flow to 14.2 gpm.
	0928	16.20	25.8	14.8		7.36	14.2	215.1	
	0933	16.15	6.78	14.6		7.36	14.2	209.8	
	0940	16.07	2.28	14.2		7.35	14.2	210.3	Samplers collect parameters.
	945	16.07	1.23	17.3		7.18	14.2	286	
	0950	16.07	1.29	17.3		7.25	14.2	210	B23472
	1000	16.07	0.83	17.2		7.35	14.2	209	Collect Sample. B23471

Reported By: A. Lantow

Title: Geologist Date: 12-21-09

Signature: Aaron Lantow

Reviewed By: L. D. Walker

Title: Geologist Date: 1/13/10

Signature: L D Walker

A-6003-652 (04/03)

WELL DEVELOPMENT AND TESTING DATA

Well Name:	Well ID:	Well Location:	Date:
199-H1-38	C7098	N. 153562.12, E. 577159.31	5/20/2010

Reference Measuring Point (unless otherwise noted): TOP OF OUTER CASING (TOC)

Has the well been surveyed? ○ Yes ● No | Does the well have a cement pad? ○ Yes ● No

PART 1

STATIC WATER LEVEL:

Start of Job 36.8' TOC.

End of Job 36.85' TOC.

DEPTH TO BOTTOM:

Start of Job 47.5' TOC.

End of Job 47.5' TOC.

PART 2

WELL DEVELOPMENT DATA

Pump Model 5HP FRANKLIN ELECTRIC

Intake Depth 41' TOC (38.05' bgs)

Starting Turbidity 10.5 NTU

Pump Start	Stop	Flow Rate
0918	1114	12 GPM

Total Pumped 1,392 gal.

Final Turbidity 1.50 NTU

XD SN/Range (PSI) 10500 (20 PSI)

PART 3

INSTANTANEOUS SLUG TEST

Static Water Level (TOC)

Transducer Depth

Baseline Start

Injection Start

Baseline Start

Withdrawal Start

Slug Volume

XD SN/Range (PSI)

NOT USED 5/20/10

PART 4

Last Recorded Measurements Date: 5/20/2010

Current Measurements Date: 5/20/2010

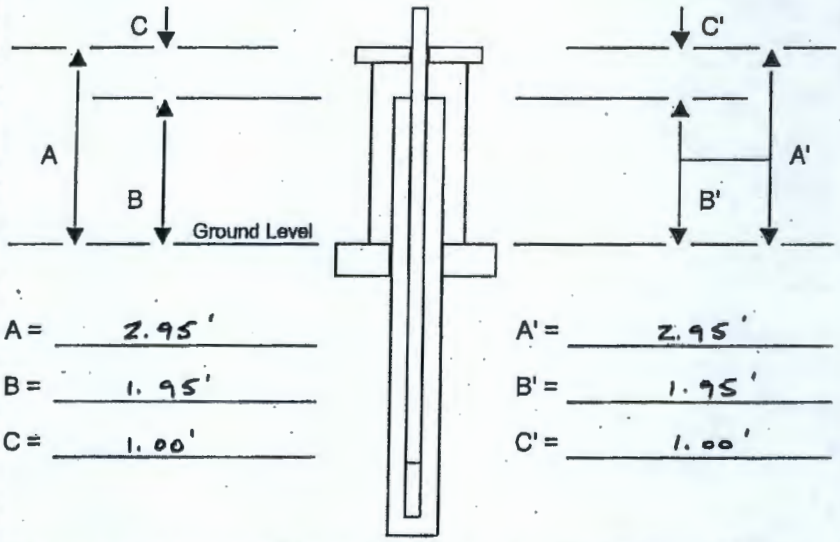

A = 2.95'

B = 1.95'

C = 1.00'

A' = 2.95'

B' = 1.95'

C' = 1.00'

Are there any reference marks on the casing strings? ○ Yes ● No

PART 5

COMMENTS:

At 1036 WS THE TURBIDMETER MALFUNCTIONED WHILE MONITORING LOW RANGE VALUES; TURBIDITY READINGS WERE MONITORED BY USING A TURBIDIMETER SUPPLIED BY THE NLO SAMPLERS ON SITE FOR A GROUNDWATER SAMPLE. ALL OTHER PARAMETER METERS WERE WITHIN CALIBRATION REQUIREMENTS.

HERMIT = "BURT"

TRANSDUCER = 10500 (20 PSI); MAX DEPTH = 46'

TEST #4: TEAM USA WD4, RUN: 0918 - 1114 (5/20/10) DRAW

TEST #5: TEAM USA WD5, RUN: 1114 - 1145 (5/20/10) RECOVERY

Prepared by (print name):	Signature:	Date:
T. H.	[signature]	5/20/2010

FIELD ACTIVITY REPORT - DAILY DRILLING

Page 1 of 2

Date: 5-20-2010

Well Name: 199-H1-38

Well ID: C7098

Location: N. 153562.12, E. 577159.31

Report No.: 4

Start	Finish	Total
Time 0600	Time 1220	Time 6hrs. 20min.
Hole Depth/Csg N/A / N/A	Hole Depth/Csg N/A / N/A	Hole Depth/Csg N/A / N/A

Reference Measuring Point: GROUND SURFACE

Casing String No. (1) 2 3 4 ____ Rod Size: N/A

See Report No. 1 WELL DEVELOPMENT

Time/Depth From	Time/Depth To	Description of Activities/Operations with Depth (Attach applicable drawings and document straightness test results)
0600	0630	P.O.D Mtg. - BTR (Imhoff), GRAM, LAYNE IN ATTENDANCE.
0630	0640	Move to site.
0640		Drillers prepare C7098 site for well development.
	0800	Geo. tags DTW @ 36.8' TOC (33.85' bgs); DTB @ 45.5' TOC (BTM of
		perm. = 47.53' TOC; fill = 2.03' sediment, Drillers leave site to
		obtain waste barrel for bailing.
0825	0827	Drillers prepare to start bailing.
0828		Begin bailing C7098.
	0838	Stop bailing; Re-tag DTB @ 47.50' TOC; fill = 0.03'
0847		Drillers prepare to trip in pump (Tremie = 21' + 17' + 5.5' pump =
		43.5' - 2.5' = 41' TOC (38.05' bgs) intake).
	0908	Pump @ depth; prepare to begin development, Initial XD = 1.915' H_2O
0918		Begin pumping; Start draw test (TEAM USA WD 4)
	1030	NCO samplers begin taking water parameters.
	1052	NCO samplers take H_2O sample; HEIS #'s = B22Y20, B22Y37,
		~~B22~~ B23ØT6 (pup) & B23ØT7. MH 5/20/10
	1114	Pump stopped; Recovery test started (TEAM USA WD 5).
	1145	Recovery test ~~started~~ stopped. MH 5/20/10
1147	1158	Begin tripping pump out of the well.
	1159	Pump out of well; DTW tagged @ 36.85' TOC; DTB tagged @
		47.5' TOC
1211		Drillers begin breaking down the pump rig.
	1219	Rig broken down & ready to mob.
	1220	Geo. departs from site.

Reported By: Jess Hocking

Title: Lead Geologist

Date: 5/20/2010

Reviewed By: L. D. Walker

Title: Geologist

Date: 7/20/10

FIELD ACTIVITY REPORT - DAILY DRILLING

Continuation Page

Page 2 of 2

Date: 5-20-2010

Well Name: 199-H1-38

Well ID: C7098

Location: N. 153562.12, E. 577159.31

Continuation of Report No.: 4

Time/Depth From	Time/Depth To	Description of Activities/Operations with Depth
		WELL DEVELOPMENT

Initial XD = 1.915' H_2O

TIME	TURB. (NTU)	pH	Cond. (µS/cm)	Temp. (°C)	XD (ft H_2O)	DRAW (ft.)
0936	10.5	7.89	414	16.3°	0.536	1.379'
0943	6.83	7.83	417	16.0°	0.369	1.546'
0953	9.73	7.81	417	16.2°	0.171	1.744'
1004	8.03	7.76	416	16.3°	0.069	1.846'
1014	6.53	7.79	419	15.7°	0.245	1.670'
1024	8.37	7.79	412	16.1°	0.229	1.686'
1036	4.56	-	-	-	0.243	1.672'
1048	2.15	-	-	-	-	-
1050	1.79	-	-	-	-	-
1052	1.50	-	-	-	-	-
1113	-	-	-	-	0.139	1.776'
1114	DRAW TEST ENDS; RECOVERY TEST STARTS					

NOT USED

5/20/10

Reported By: Jess Hocking

Title: Lead Geologist

Date: 5/20/2010

Signature:

Reviewed By: L.D. Walker

Title: Geologist

Date: 7/20/10

WELL DEVELOPMENT AND TESTING DATA

Well Name:	Well ID:	Well Location:	Date:
199-H1-37	C7099	1½ NE of HR reactor by River	5.14.10

Reference Measuring Point (unless otherwise noted): TOP OF OUTER CASING (TOC)

Has the well been surveyed? ○ Yes ○ No | Does the well have a cement pad? ○ Yes ⊗ No

PART 1

STATIC WATER LEVEL:

Start of Job	33.2 bgs. 36.2 TOC
End of Job	33.2 bgs. 36.2 TOC

DEPTH TO BOTTOM:

Start of Job	45.0 TOC
End of Job	46.5 TOC

PART 2

WELL DEVELOPMENT DATA

Pump Model	5 hp w/ 50 gpm bowls.
Intake Depth	40.5 bgs, 43.5 TOC
Starting Turbidity	35

Pump Start	Stop	Flow Rate
1115	1222	20.9
1222	1243	56.8

Total Pumped	2,492 gal
Final Turbidity	1.31
XD SN/Range (PSI)	

PART 3

INSTANTANEOUS SLUG TEST

Static Water Level (TOC)	
Transducer Depth	38.5' bgs.
Baseline Start	
Injection Start	
Baseline Start	
Withdrawal Start	
Slug Volume	
XD SN/Range (PSI)	

PART 4

Last Recorded Measurements Date: 5/14.10

Current Measurements Date:

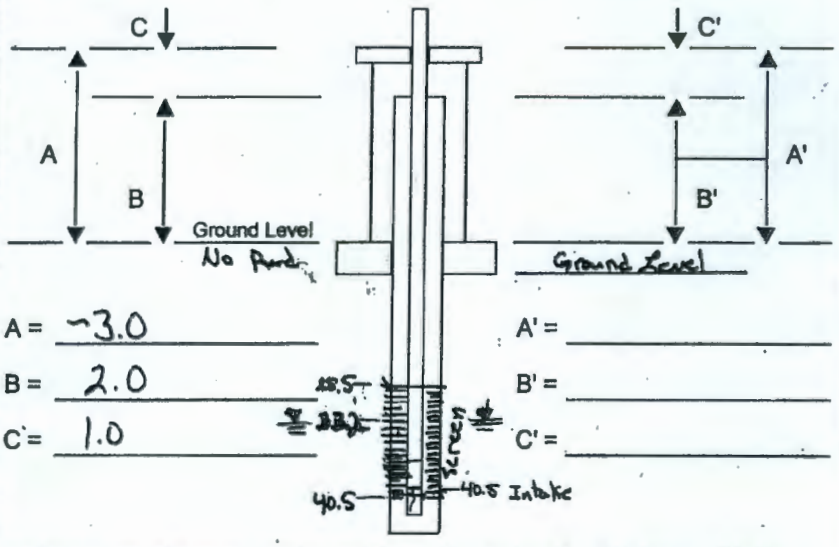

A = ~3.0 | A' =

B = 2.0 | B' =

C = 1.0 | C' =

Are there any reference marks on the casing strings? ○ Yes ⊗ No

PART 5

Tool Name: Sheldon

COMMENTS:

Drawdown under file HR-3 100-H/C7099
Recovery under Same file.

Collect Sample: B22Y21, B22Y38

Prepared by (print name):	Signature:	Date:
A Lantow	Aaron Lanto	5.14.10
Reviewed by (print name):	**Signature:**	**Date:**
L.D. Walker	[signature]	7-19-10

A-6003-644 (03/03)

FIELD ACTIVITY REPORT - DAILY DRILLING

Page 1 of 1

Date: 5·14·10

Well Name: 199-H1-37 | Well ID: C7099

Location: NE. of H Reactor by River | Report No.: 5

Start	Finish	Total
Time 0600	Time	Time
Hole Depth/Csg 42.0 / 43.54	Hole Depth/Csg 43.5 / 43.54	Hole Depth/Csg ~1.5 / ~~NA~~

Reference Measuring Point: GROUND SURFACE

Casing String No. 1 2 3 4 ____ See Report No. 1 DTW: 33.1

Rod Size: AM DTB: 42.0 | PM

Time/Depth From	To	Description of Activities/Operations with Depth (Attach applicable drawings and document straightness test results)
0600	0700	POD @ ISRM Trailer. Will develope today.
0700	0847	Geo + Driller on site. Prepare for development. Move equipment.
0847		Change bowls on pump from 100gpm to 50gpm bowls.
		Check equipment w/ standards.
		pH: 10.00 - Read: 10.13; 7.00 - Read: 7.11
		NTU: 494.0 - Read: 497.0; 53.0 - Read: 53.1; 4.24 - Read: 4.37
		Tag DTW: 33.1' bgs.
		Tag DTB: 42.0' bgs.
		Tag DTB: Post Bail: 43.5' bgs.
	1025	xD: 5.9 ft = 7.9 ft above intake.
1025		Trip in pump. 21' + 10' + 5' + 4.5' of 2" galvanized drop pipe + 5.5' long pump = 46.0' - (3' stickup) -
		2.5' motor to intake = 40.5' bgs. Probe set @ 38.5'. 0.05 = 2.05' above intake
		xD: 5.9 xDF:

	xD	NTU	T(C°)	pH	DO	gpm	Notes.
1115	5.9	34.2	15.8	7.44	4.54	20.9	Adjusting flow.
1138	4.64	2.6	15.75				Add 2' to intake.
1145	4.64	3.0	15.75	7.62	8.63	20.9	
1150	4.63	3.5	15.76	7.63	8.11	20.9	
1155	4.63	1.31	15.76	7.61	8.56	20.9	
		1.31					

1204	Time	Collect water sample: B22Y21, B22Y38.
1222		Turn pump up to gpm. 0.4 ft xD = 1300 gpm total
		xD / GPM
1226		0.05 Adjusting flow. 59.0 → 56.8 gpm
1243		Kill pump & Start recovery Test 1.

Reported By: A. Lantow | Reviewed By: L. D. Walker

Title: Geologist | Date: 5·14·10 | Title: Geologist | Date: 7/19/10

Signature: Aaron Lanto | Signature: [signature]

A-6003-651 (REV 1)

FIELD ACTIVITY REPORT - DAILY DRILLING

Continuation Page

Page 2 of 2

Date: 5·14·10

Well Name: 199-H1-37

Well ID: C7099

Location: NE. of H Reactor

Continuation of Report No.: 5

Time/Depth From	Time/Depth To	Description of Activities/Operations with Depth
1243	1313	Continue recovery Test. Kill recovery test @ 1313.
1313	1330	Pull Pump. XDF. = 4.9 Tag DTW: 33.3 DTB: 343.5
1330	1425	Tower down & move to next borehole.

Not Used

Reported By: A. Laptan

Title: Geologist

Date: 5·14·10

Signature: [signature]

Reviewed By: L.S. Walker

Title: Geologist

Date: 7/19/10

Signature: [signature]

A-6003-652 (04/03)

WELL DEVELOPMENT AND TESTING DATA

Well Name:	Well ID:	Well Location:	Date:
199-H1-32	C7100	100-HR-3 OU, NW of H-REACTOR	5/21/2010

Reference Measuring Point (unless otherwise noted): TOP OF OUTER CASING (TOC)

Has the well been surveyed? ○ Yes ● No | Does the well have a cement pad? ○ Yes ● No

PART 1

STATIC WATER LEVEL:

Start of Job	40.35' TOC.
End of Job	40.32' TOC.

DEPTH TO BOTTOM:

Start of Job	48.60' TOC
End of Job	48.60' TOC.

PART 2

WELL DEVELOPMENT DATA

Pump Model	5 HP FRANKLIN ELECTRIC
Intake Depth	45' TOC (41.95' bgs)
Starting Turbidity	383 NTU

Pump Start	Stop	Flow Rate
1232	1334	6 GPM

Total Pumped	372 Gal.
Final Turbidity	1.08 NTU
XD SN/Range (PSI)	10500 (20 PSI)

PART 3

INSTANTANEOUS SLUG TEST

Static Water Level (TOC)	
Transducer Depth	
Baseline Start	
Injection Start	
Baseline Start	
Withdrawal Start	
Slug Volume	
XD SN/Range (PSI)	

NOT USED 5/21/10

PART 4

Last Recorded Measurements Date: 5/21/10

Current Measurements Date: 5/21/10

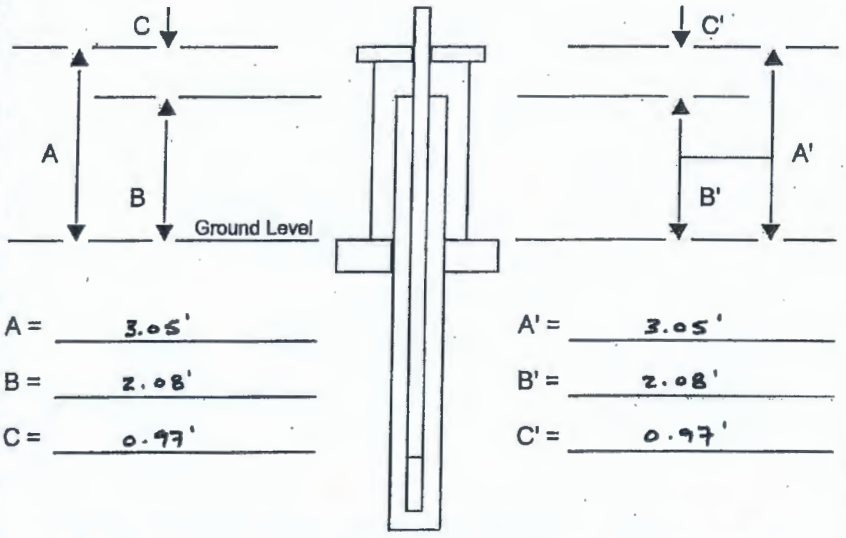

A =	3.05'	A' =	3.05'
B =	2.08'	B' =	2.08'
C =	0.97'	C' =	0.97'

Are there any reference marks on the casing strings? ○ Yes ● No

PART 5

COMMENTS:

ALL FIELD INSTRUMENTS WERE CALIBRATION TESTED ON SITE WITHIN NORMAL PARAMETERS.

DRAW TEST = TEAM USA WD 6 = 1232 - 1334 (RUN TIME)

RECOVERY TEST = TEAM USA WD 7 = 1334 - 1354 (RUN TIME)

Prepared by (print name):	Signature:	Date:
Jess Hocking		5/21/10
Reviewed by (print name):	**Signature:**	**Date:**
L.D. Walker		7/20/10

A-6003-644 (03/03)

FIELD ACTIVITY REPORT - DAILY DRILLING

Page 1 of 2

Date: 5-21-2010

Well Name: 199-H1-32	Well ID: C7100
Location: 100-HR-3 OU, NW of H-REACTOR	Report No.: 4

Start	Finish	Total
Time 0600	Time 1430	Time 8 hrs. 30 min.
Hole Depth/Csg N/A / N/A	Hole Depth/Csg N/A / N/A	Hole Depth/Csg N/A / N/A

Reference Measuring Point: GROUND SURFACE

Casing String No. (1) 2 3 4 . Rod Size: N/A

See Report No. 1 WELL DEVELOPMENT

Time/Depth From	Time/Depth To	Description of Activities/Operations with Depth (Attach applicable drawings and document straightness test results)
0600	0630	P.O.D MTG - BTR (~~IMHoff~~ IMHOFF), GRAM & LAYNE IN ATTENDANCE;
		Safety Topic: Cable Sling break from M-24 project.
0630	0640	Move to 100-H Area.
0640		Crew prepares to move well development equipment to C7100.
	1000	Geo. tags depth to water @ 40.35' TOC (37.30' bgs); DTB @
		47.0' TOC (perm. casing tot. = ~~48.0'~~ 47.63'); stkup = 3.05' (0.97' diff.); Sediment
		fill = ~ ~~2.0'~~ 1.60' to be bailed.
1015	~~1030~~ 1050	Prepare to bail C7100.
1050		Begin bailing C7100.
	1130	END Bailing; DTB @ ~~47.63'~~ 48.6' TOC; Drillers prepare to trip pump
		down hole.
1135		Begin tripping pump down hole. (17 + 21 + 6.5 - 2.5 = 41' TOC ~~intake~~ intake = [37.95' bgs]; Transducer = 38' TOC [34.95' bgs]
	1200	Pump to depth, (~ 8.25 ft water in column)
	1207	Initial XD = 0.007' H_2O (Depth to H_2O = 40.33' TOC)
	1222	Need to be deeper in H_2O; Drillers add 4' = 45' TOC INTAKE
		(41.95' bgs); Transducer = 42' TOC (38.95' bgs)
	1227	Initial XD = 2.680' H_2O; (DTW = 40.32' TOC [37.27' bgs])
1232		Begin pumping C7100.
	1247	NCOs on site.
1302		NCOs begin taking water parameters for H_2O sample.
	1323	NCOs take H_2O sample; HEIS# = B22Y22 & B22Y39.
	1334	End pumping @ C7100; Start Recovery test.
	1354	End recovery test; Prepare to pull pump.

Reported By: Jess Hocking	Reviewed By: L.D. Walker
Title: Lead Geologist Date: 5/21/2010	Title: Geologist Date: 7/20/10
Signature: J. Hocking	Signature: L.D. Walker

A-6003-651 (REV 1)

FIELD ACTIVITY REPORT - DAILY DRILLING

Continuation Page

Page 2 of 2

Date: 5-21-2010

Well Name: 199-H1-32

Well ID: C7100

Location: 100-HR-3 OU, NW of H-Reactor

Continuation of Report No.: 4

Time/Depth From	Time/Depth To	Description of Activities/Operations with Depth
	1415	Pump out of C7100; Drillers prepare to break down pump rig.
1421	1429	Drillers break down rig.
	1430	Geo. no longer needed on site - heads for town.

Initial XD = 2.680 ' H_2O

Time	XD	TURB.	pH	Cond.	Temp.	Flow	DRAW
1241	0.977	383	-	-	-	6	1.703
1244	0.960	69.6	7.50	442	19.3°	6	1.720
1256	0.925	8.15	7.62	409	18.1°	6	1.755
1302	0.922	4.83	7.71	409	17.6°	6	1.758
1309	0.933	3.03	7.79	408	17.6°	6	1.747
1323	SAMPLE TAKEN			-	-	-	-
1332	0.953	1.08	-	-	-	6	1.747
HRS	ft H_2O	NTU	-	mS/cm	°C	GPM	ft

AVG. DRAW = 1.735 ft @ 6 GPM

DRAW TEST = TEAM USA WD 6

RECOVERY TEST = TEAM USA WD 7

NOT USED

5/21/10

Reported By: Jess Hocking

Title: Lead Geologist

Date: 5/21/10

Signature:

Reviewed By: L.D. Walker

Title: Geologist

Date: 7/20/10

Signature:

A-6003-652 (04/03)

WELL DEVELOPMENT AND TESTING DATA

Well Name:	Well ID:	Well Location:	Date:
199 - H1 - 36	C7102	N. 153486.75, E. 576885.17 (100-H)	5/19/2010

Reference Measuring Point (unless otherwise noted): TOP OF OUTER CASING (TOC)

Has the well been surveyed? ○ Yes ● No | Does the well have a cement pad? ○ Yes ● No

PART 1

STATIC WATER LEVEL:

Start of Job	34.47' TOC
End of Job	34.51' TOC.

DEPTH TO BOTTOM:

Start of Job	44.00' TOC
End of Job	44.01' TOC

PART 2

WELL DEVELOPMENT DATA

Pump Model	5 HP Franklin Electric
Intake Depth	~~41' TOC (+38.08' bgs)~~ 41' TOC 38.08' bgs MSH 5/19/10
Starting Turbidity	45.5 NTU.

Pump Start	Stop	Flow Rate
0900	1030	6.7 GPM ~~6 GPM~~ MSH 5/19/10

Total Pumped	603 gal.
Final Turbidity	1.09 NTU.
XD SN/Range (PSI)	10500 (20 psi)

PART 3

INSTANTANEOUS SLUG TEST

Static Water Level (TOC)	
Transducer Depth	
Baseline Start	
Injection Start	
Baseline Start	
Withdrawal Start	
Slug Volume	
XD SN/Range (PSI)	

NOT USED 5/19/10

PART 4

Last Recorded Measurements Date: 5/19/2010

Current Measurements Date: N/A

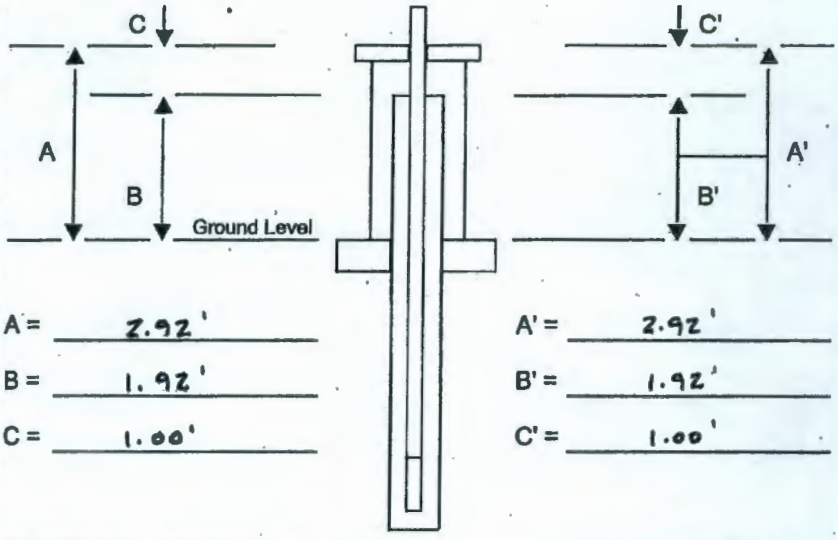

A =	2.92'	A' =	2.92'
B =	1.92'	B' =	1.92'
C =	1.00'	C' =	1.00'

Are there any reference marks on the casing strings? ○ Yes ● No

PART 5

COMMENTS:

All water parameter meters are within tech. certified calibration dates. Currently Geo. has no parameter standards in which to QA the calibrations on site.

HERMIT = "BURT"
TRANSDUCER = 10500 (20psi); max depth = 46'
TEST #2: Nihao WD2, RUN: 0900 - 1030 (5/19/10) DRAW
TEST #3: Nihao WD3, RUN: 1030 - 1110 (5/19/10) RECOVERY

Prepared by (print name):	Signature:	Date:
Jess Hocking	J Hocking	5/19/2010
Reviewed by (print name):	**Signature:**	**Date:**
L.D. Walker	LD Walker	8/16/10

A-6003-644 (03/03)

FIELD ACTIVITY REPORT - DAILY DRILLING

Page 1 of 2

Date: 5-19-2010

Well Name: 199-H1-36

Well ID: C7102

Location: N. 153486.75, E. 576885.17, NW of H-Reactor

Report No.: 5

Start	Finish	Total
Time 0600	Time 1200	Time 6 hrs.
Hole Depth/Csg N/A / N/A	Hole Depth/Csg N/A / N/A	Hole Depth/Csg N/A / N/A

Reference Measuring Point: GROUND SURFACE

Casing String No. (1) 2 3 4 ____ Rod Size: N/A

See Report No. 1 WELL DEVELOPMENT

Time/Depth From	Time/Depth To	Description of Activities/Operations with Depth (Attach applicable drawings and document straightness test results)
0600	0630	P.O.D MTG; BTR (IMHOFF), Safety (DeWitt), GRAM, Layne;
		Safety topic: Deer in the roadway early in the morning.
0635	0640	Move to development site.
0640	0730	Prepare C7102 site for development.
	0735	Geo. tags DTW @ 34.47' TOC (31.55' bgs) & DTB @ 42.1' TOC
		(39.18' bgs); 44.02' TOC perm/monument casing = 1.92' fill inside
		the well.
0740	0804	Drillers prepare to bail sediment from the well.
0805		Drillers begin bailing the well.
	0825	Bailing stopped; DTB tagged @ 44.0' TOC; fill = 0.02'
0827		Drillers prepare to trip in development pump.
	0830	RCT on site - nothing for RCT to survey; leaves site.
0840		Drillers begin tripping pump down hole; Pump = 5.5 ft + ~~138~~ 38 ft MSH Stinglio
		1.5" tremie = ~~143.5'~~ 43.5' MSH Stinglio (intake @ ~~141'~~ 41' TOC ~~bgs~~ MSH Stinglio).
	0851	Pump to depth; (intake @ ~ ~~138.08'~~ 38.08' MSH Stinglio bgs).
	0853	Initial XD = 4.257' H_2O.
0855	0859	Drillers prepare to begin pumping. Flowrate = 6.7 gpm.
0900		Begin pumping; Draw test started.
	0951	NCO sampler's on site to collect water sample; 14 gal vol (42 gal [x3])
		needed to purge - purged @ this point ~ 400 gals.
1000		NCOs begin taking parameters.
	1007	NCOs take H_2O sample (HEIS* = BZZY23 & BZZY40).
	1024	NCOs leave site.
1030		Draw test stopped; Recovery test started.

Reported By: Jess Hocking

Title: Lead Geologist

Date: 5/19/2010

Signature: [signature]

Reviewed By: L.D. Walker

Title: Geologist

Date: 7/16/10

Signature: [signature]

A-6003-651 (REV 1)

FIELD ACTIVITY REPORT - DAILY DRILLING

Continuation Page

Page 2 of 2

Date: 5 - 19 - 2010

Well Name: 199-H1-36

Well ID: C7102

Location: N. 153486.75, E. 576885.17; NW of H-Reactor

Continuation of Report No.: 5

Time/Depth From	Time/Depth To	Description of Activities/Operations with Depth
1030	1110	~~Recovery te~~ MSH 5/14/10 Recovery test run.
1115		Drillers begin tripping pump out of the well.
	1126	Pump out of the borehole. Drillers begin breaking down pump rig.
	1200	Pump rig broken down & staged for next development. Geo. leaves site and heads for town.

Initial XD = 4.257' H_2O

TIME	TURB.	pH	Cond.	Temp.	XD	Flow	DRAW	REC.
0913	45.5	7.87	429	20.1°	2.602	6.7	1.655	-
0920	31.2	7.86	433	19.0°	2.559	6.7	1.698	-
0930	25.9	7.85	414	19.4°	2.540	6.7	1.717	-
0940	15.3	-	-	-	2.534	6.7	1.723	-
0948	3.15	7.85	416	19.3°	2.512	6.7	1.745	-
1028	1.09	-	-	-	2.473	6.7	1.784	
1030	START RECOVERY TEST				-	~~6.7~~ 0 MSH 5/14/10	RECOVER	-
1034	-	-	-	-	4.174	0	-	98%
1110	-	-	-	-	4.161	0	-	97.7%
1115	TRIP PUMP OUT OF WELL				-	-	-	-

NOT USED
5/14/10

Reported By: Jess Hocking

Title: Lead ~~Geol~~ Geologist MSH 5/14/10

Date: 5/19/2010

Signature: [signature]

Reviewed By: L.D. Walker

Title: Geologist

Date: 7/16/10

Signature: [signature]

A-6003-652 (04/03)

WELL DEVELOPMENT AND TESTING DATA

Well Name:	Well ID:	Well Location:	Date:
199-H1-40	C7104	NE. of H-Reactor by River	5-18-10

Reference Measuring Point (unless otherwise noted): TOP OF OUTER CASING (TOC)

Has the well been surveyed? ○ Yes ⊘ No | Does the well have a cement pad? ○ Yes ⊗ No

PART 1

STATIC WATER LEVEL:

Start of Job	~~42~~ 33.1 TOC
End of Job	33.1 TOC

DEPTH TO BOTTOM:

Start of Job	42.7' TOC
End of Job	44.0' TOC

PART 2

WELL DEVELOPMENT DATA

Pump Model: Shp/w/ 50gpm Pump

Intake Depth: 38.0' bgs 41' TOC.

Starting Turbidity

Pump Start	Stop	Flow Rate
0743	0938 115min	5.3

Total Pumped: 609.5 gal

Final Turbidity: 1.27

XD SN/Range (PSI): 69psi

PART 3

INSTANTANEOUS SLUG TEST

Static Water Level (TOC)	
Transducer Depth	39' TOC = 36 bgs.
Baseline Start	
Injection Start	
Baseline Start	
Withdrawal Start	
Slug Volume	
XD SN/Range (PSI)	

PART 4

Last Recorded Measurements Date: 5-17-10

Current Measurements Date:

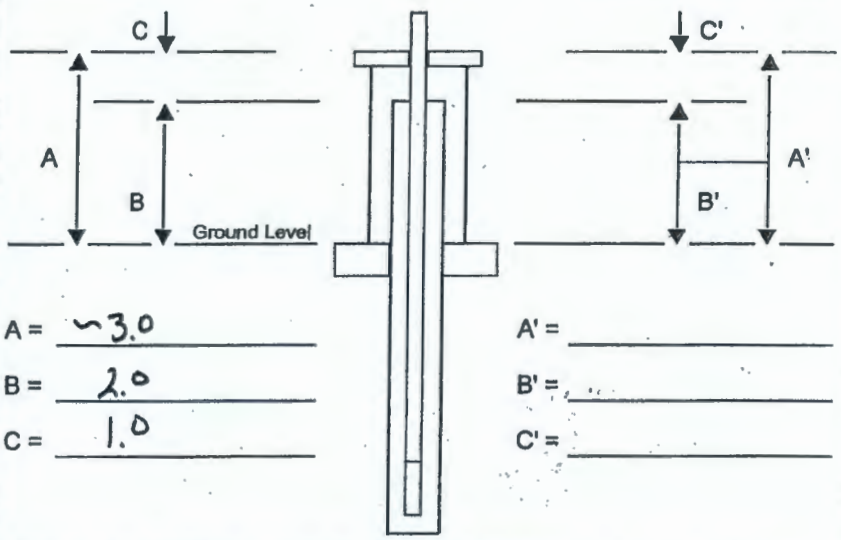

A = ~3.0 | A' =

B = 2.0 | B' =

C = 1.0 | C' =

Are there any reference marks on the casing strings? ○ Yes ○ No

PART 5

COMMENTS:

Test Recorded on File: HR-3_100-H → C7104

Max drawdown: 4.6

Collect Sample: B22Y24, B22Y41

Prepared by (print name):	Signature:	Date:
A. Fontana	[signature]	5-17-10
Reviewed by (print name):	**Signature:**	**Date:**
L.D. Walker	[signature]	2/16/10

A-6003-644 (03/03)

FIELD ACTIVITY REPORT - DAILY DRILLING

Page 1 of 1

Date: 5-17-10

Well Name: 199-H1-4D	Well ID: C7104
Location: NE. of H-Reactor by River	Report No.: 05

Start	Finish	Total
Time: 1250 (At 5/17/10 clock)	Time: 15 15	Time: 1.5
Hole Depth/Csg: 39.7 / 41.0	Hole Depth/Csg: 41.1 / 41.1	Hole Depth/Csg: -1.4 / 0.0

Reference Measuring Point: GROUND SURFACE

Casing String No. 1 2 3 4 ____ Rod Size:

See Report No. 1 DTW: 33.1 TOC 31.1 bgs.

Time/Depth From	Time/Depth To	Description of Activities/Operations with Depth (Attach applicable drawings and document straightness test results)
1250	1324	Set up pump rig + equipment for Development. DTB: 42.7 TOC = 39.7
1324	1400	Bail well of 1.5' sed. to 44.0' TOC. = 41.1' bgs.
1400	1435	Install Pump (5hp. w/ 50gpm bowls.) Set intake to 38' bgs. 41.0' TOC.
1435	1515	Prepare to develop in the morning

Not Used AZ

Reported By: A. Lantow		Reviewed By: L.D. Walker	
Title: Geologist	Date: 5-17-10	Title: Geologist	Date: 7/16/10
Signature: Aaron Lantow		Signature: L.D. Walker	

A-6003-651 (REV 1)

FIELD ACTIVITY REPORT - DAILY DRILLING

Page 1 of 1

Date: 5-18-10

Well Name: 199-H1-40 | Well ID: C7104

Location: NE. of H-Reactor by River | Report No.: 06

Start	Finish	Total
Time 0600	Time 1015	Time 4.25
Hole Depth/Csg 41.04 / 41.04	Hole Depth/Csg 41.04 / 41.04	Hole Depth/Csg — / —

Reference Measuring Point: GROUND SURFACE

Casing String No. 1 2 3 4 ____ Rod Size:

See Report No. 1 Development.

Time/Depth From	Time/Depth To	Description of Activities/Operations with Depth (Attach applicable drawings and document straightness test results)						
0600	0700	POD @ ISRM Trailer. Will develop well. Then move to nearby site to construct.						
0700		Geo + Drillers on site. Prepare for Sampling.						
		xDI: 2.81						
0743	Pump on	xDI	NTU	T°	pH	DOx	GPM	Notes:
0750	0[illegible]	3.94	349	16.9	7.75	8.33	5.9	Adjust flow D.TW: 39.3' TOC =
0759								Suspend Test. Adjust flow.
0823		Dry 0.7	583	16.8 17.74	7.75	9.4	5.3	DTW: 38.5 Resume test.
0830		Dry	2.07	16.9	7.71	9.81	5.3	DTW: 38.7 steady
0840		Dry	1.23	17.0	7.68	9.74	5.3	DTW: 38.65 steady.
0859		Dry	1.37	17.3	7.48	9.56	5.3	Collect Sample B22Y24, B22Y41 @ 850
0900		Dry	—	—	—	—	—	DTW: 38.7' TOC Kill pump + Start recovery Test
0938	0954							Kill Recovery Test. + Pull Pump.
0954	—							DTB: 44.04 TOC. 41.04 bgs.
—	1015	Break down site + trip. Move to nearby site.						

Not Used
RJ

Reported By: A. Lanter | Reviewed By: L.D. Walker

Title: Geologist | Date: 5-18-10 | Title: Geologist | Date: 7/16/10

Signature: Aaron Lanter | Signature: LD Walker

A-6003-651 (REV 1)

WELL DEVELOPMENT AND TESTING DATA

Well Name:	Well ID:	Well Location:	Date:
199-H1-33	C7105	100-HR-3 OU, NW of H-Reactor	5-27-10

Reference Measuring Point (unless otherwise noted): TOP OF OUTER CASING (TOC)

Has the well been surveyed? ○ Yes ● No | Does the well have a cement pad? ○ Yes ● No

PART 1

STATIC WATER LEVEL:

Start of Job 34.95' TOC

End of Job 34.96' TOC

DEPTH TO BOTTOM:

Start of Job 44.00' TOC

End of Job 44.00' TOC

PART 2

WELL DEVELOPMENT DATA

Pump Model 5 HP Franklin Electric

Intake Depth 41' TOC

Starting Turbidity 5.14 NTU

Pump Start	Stop	Flow Rate
0924	1026	30

Total Pumped 1860 gal

Final Turbidity 0.62 NTU

XD SN/Range (PSI) 115276 (30 PSI)

PART 3

INSTANTANEOUS SLUG TEST

Static Water Level (TOC)

Transducer Depth

Baseline Start

Injection Start

Baseline Start

Withdrawal Start

Slug Volume

XD SN/Range (PSI)

Not Used JAJ 5-27-10

PART 4

Last Recorded Measurements Date: 5-27-10

Current Measurements Date: 5-27-10

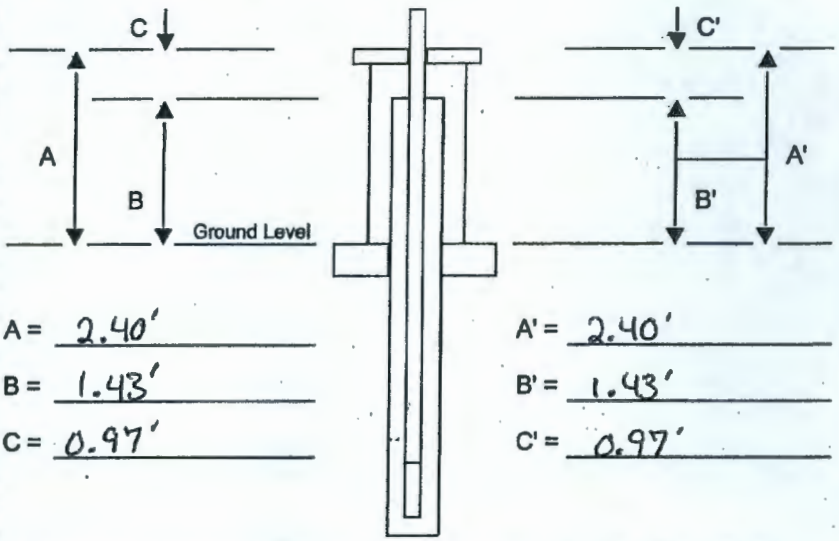

A = 2.40'

B = 1.43'

C = 0.97'

A' = 2.40'

B' = 1.43'

C' = 0.97'

Are there any reference marks on the casing strings? ○ Yes ● No

PART 5

COMMENTS:

All meters met operating standards.
We pumped from 0924 to 1026 at ~~30gpm~~ 30 GPM max flow

Prepared by (print name):	Signature:	Date:
Julie Johanson	Julie Johanson	5-27-10
Reviewed by (print name):	**Signature:**	**Date:**
L.D. Walker	LD Walker	7-19-10

A-6003-644 (03/03)

FIELD ACTIVITY REPORT - DAILY DRILLING

Page 1 of 2

Date: 5-27-10

Well Name: 199-H1-33 | Well ID: C7105

Location: 100-HR-3 OU NW of H Reactor | Report No.: 4

Start	Finish	Total
Time 0600	Time 1137	Time 5hrs. 37min.
Hole Depth/Csg N/A / N/A	Hole Depth/Csg N/A / N/A	Hole Depth/Csg N/A / N/A

Reference Measuring Point: GROUND SURFACE

Casing String No. (1) 2 3 4 ____ Rod Size:

See Report No. 1 Well Development

Time/Depth From	Time/Depth To	Description of Activities/Operations with Depth (Attach applicable drawings and document straightness test results)
0600	0630	To ISRM trailer for POD meeting.
0630	—	Move to site remove pump from C7478. Rig down and move
—	—	to C7105 site.
—	07:48	Tagged at 37.55' TOC for well C7478
—	07:48	DTW @ 23.34' TOC for well C7478
08:22	—	Arrived on site of C7105. Rigging up to start the development
—	—	on C7105.
—	08:34	DTB = 44.00' TOC
—	08:36	DTW = 34.95' TOC
08:57	0924	Started tripping in the pump, XD 3.78' H_2O.
0924	—	Started pumping, Flow rate of 30gpm
—	—	Instrument calibrated correctly.
—	0954	NCOs arrived on site
—	1007	Official Sample time, HEIS#: B22Y25, B22Y42
—	1026	Pump turned off ~~@ 10:26~~ JAJ 5-27-10
1026	10:48	Started the recovery test
1051	—	Start removing pump from well.
—	1103	Had difficulty starting truck but has now been started.
—	1117	Pump completely removed
—	—	DTB = 44.00' TOC
—	1121	DTW = 34.96' TOC
1121	—	Break rig down. Move rig to C7111. Geologist no longer
—	1137	needed on site.
—	—	Not Used JAJ 5-27-10

Reported By: Julie Johanson | Reviewed By: L.D. Walker

Title: Geologist | Date: 5-27-10 | Title: Geologist | Date: 7/19/10

Signature: Julie Johanson | Signature: LD Walker

A-6003-651 (REV 1)

FIELD ACTIVITY REPORT - DAILY DRILLING

Continuation Page

Page 2 of 2

Date: 5-27-10

Well Name: 199-H1-33

Well ID: C7105

Location: 100-HR3 OU, NW of H-Reactor

Continuation of Report No.: 4

Time/Depth From	Time/Depth To	Description of Activities/Operations with Depth							
—	—	Time	XD	Turb.	Temp.	pH	Cond.	Flow	Draw
—	—	0941	1.67	5.14	16.20	7.23	476	30	2.11
—	—	0949	1.65	1.53	16.22	7.27	389	30	2.13
—	—	0958	1.62	1.53	16.19	7.38	399	30	2.18
—	—	1013	1.60	0.67	16.22	7.63	387	30	2.20
—	—	1019	1.57	0.62	16.18	7.78	390	30	2.23

Not Used
JAJ 5-27-10

Reported By: Julie Johanson

Title: Geologist

Date: 5-27-10

Signature: Julie Johanson

Reviewed By: L.D. Walker

Title: Geologist

Date: 7/12/10

Signature: L.D. Walker

A-6003-652 (04/03)

WELL DEVELOPMENT AND TESTING DATA

Well Name:	Well ID:	Well Location:	Date:
199- H1-35	C7106	100-HR-3 OU, NW of H-REACTOR	5/24/2010

Reference Measuring Point (unless otherwise noted): TOP OF OUTER CASING (TOC)

Has the well been surveyed? ○ Yes ● No | Does the well have a cement pad? ○ Yes ● No

PART 1

STATIC WATER LEVEL:

Start of Job	34.05' TOC.
End of Job	34.04' TOC.

DEPTH TO BOTTOM:

Start of Job	46.5' TOC.
End of Job	46.5' TOC.

PART 2

WELL DEVELOPMENT DATA

Pump Model	5-HP FRANKLIN ELECTRIC
Intake Depth	43' TOC (40' bgs)
Starting Turbidity	34.8 NTU

Pump Start	Stop	Flow Rate
0932	1039	15 GPM

Total Pumped	1,005 Gal.
Final Turbidity	1.83 NTU
XD SN/Range (PSI)	115276 / 30 PSI

PART 3

INSTANTANEOUS SLUG TEST

Static Water Level (TOC)	
Transducer Depth	
Baseline Start	
Injection Start	
Baseline Start	
Withdrawal Start	
Slug Volume	
XD SN/Range (PSI)	

NOT USED 5/24/10

PART 4

Last Recorded Measurements Date: 5/24/10

Current Measurements Date: 5/24/10

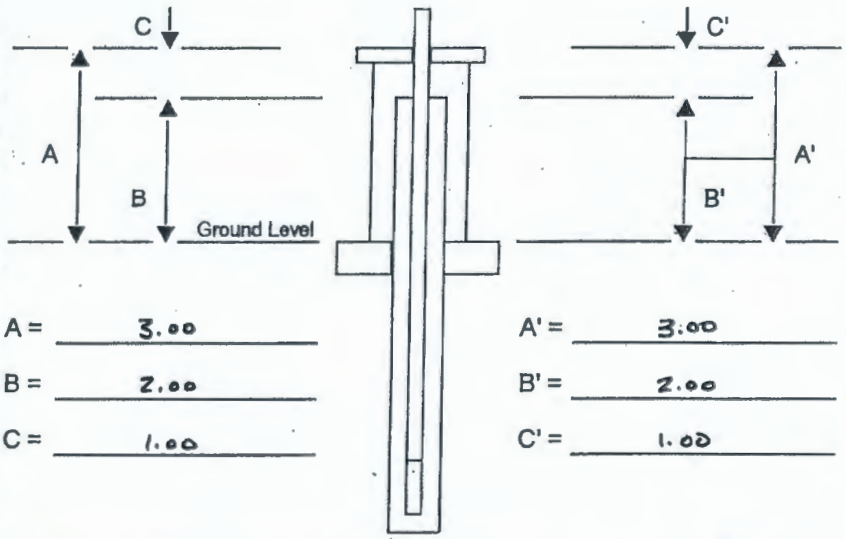

A =	3.00	A' =	3.00
B =	2.00	B' =	2.00
C =	1.00	C' =	1.00

Are there any reference marks on the casing strings? ○ Yes ● No

PART 5

COMMENTS:

ALL WATER PARAMETER MONITORING DEVICES WERE "FIELD CALIBRATED" WITHIN NORMAL OPERATING TOLERANCES.

MONITORING DEVICE = 700 LEVEL TROLL (SHELDON).
DRAW/RECOVERY TEST = C7106 DRAW 1
DRAW TEST RUN: 0932 - 1039 (5/24/10)
RECOVERY TEST RUN: 1039 - 1059 (5/24/10)

TROLL POSITIONED @ 40' TOC (37' bgs).

Prepared by (print name):	Signature:	Date:
Jess Hocking	[signature]	5/24/2010
Reviewed by (print name):	**Signature:**	**Date:**
L.D. Walker	[signature]	7/20/10

A-6003-644 (03/03)

FIELD ACTIVITY REPORT - DAILY DRILLING

Page 1 of 2

Date: 5-24-2010

Well Name: 199-H1-35

Well ID: C7106

Location: 100-HR-3 OU, NW of H-REACTOR

Report No.: 4

Start	Finish	Total
Time 0600	Time 1200	Time 6 hrs.
Hole Depth/Csg N/A / N/A	Hole Depth/Csg N/A / N/A	Hole Depth/Csg N/A / N/A

Reference Measuring Point: GROUND SURFACE

Casing String No. (1) 2 3 4 ____ Rod Size: N/A

See Report No. 1 WELL DEVELOPMENT

Time/Depth From	Time/Depth To	Description of Activities/Operations with Depth (Attach applicable drawings and document straightness test results)
0600	0630	P.O.D MTG. - BTR (IMHOFF), LAYNE & GRAM IN ATTENDANCE;
		Safety Topic: Rigging Safety.
0635	0645	Move to job site.
0650		Drillers set up development rig @ C7106.
	0750	Geo. tags DTB @ 45.5' TOC (42.5' bgs); Btm. of well = 43.5' bgs
		(1 ft of sediment fill to be bailed); DTW @ 34.05' TOC (31.05' bgs);
		Available column of H_2O = 12.45'
0755	0821	Drillers prepare to bail sediment from the well.
0822		Begin bailing C7106.
	0900	End bailing; Depth to btm = 46.5' TOC (43.5' bgs); 0.0 sediment
		fill.
0905	0910	Prepare to trip in the pump.
0910	0927	Trip pump down hole; Intake = 43' TOC (40' bgs); Troll depth =
		40' TOC (37' bgs).
	0929	Initial XD = 6.97' H_2O.
0932		Begin pumping C7106; ~ 12 GPM
	0935	Kicked flow up to ~ 15 GPM.
	1000	NCO samplers on site for H_2O sample.
	1015	NCOs take H_2O samples (HEIS #: B23502 & B23503.)
	1039	Pump stopped; Recovery test started.
	1059	Recovery test stopped.
1100	1114	Prepare to trip pump out of well.
1115		Begin tripping pump out of the well.
	1125	Pump out of well; DTW @ 34.04' TOC (33.04' bgs); DTB @ 46.5' TOC (43.5' bgs)

Reported By: Jess Hocking		Reviewed By: L. D. Walker	
Title: Lead Geologist	Date: 5/24/10	Title: Geologist	Date: 7/24/10
Signature: [signature]		Signature: [signature]	

A-6003-651 (REV 1)

FIELD ACTIVITY REPORT - DAILY DRILLING

Continuation Page

Page 2 of 2

Date: 5-24-2010

Well Name: 199-H1-35

Well ID: C7106

Location: 100-HR-3 OU, NW of H-REACTOR

Continuation of Report No.: 4

Time/Depth From	Time/Depth To	Description of Activities/Operations with Depth
1127	1135	Drillers prepare to break down development rig.
1136	1145	Drillers begin breaking down development rig.
	1200	Geo. no longer required - leaves site.

Initial XD = 6.97' H_2O

TIME	XD	TURB.	Temp.	pH	Cond.	Flow	DRAW
0942	6.58	34.8	15.93°	7.49	415	15	0.39
0952	6.55	5.63	15.95°	7.61	380	15	0.42
1002	6.56	2.37	15.93°	7.77	376	15	0.41
1035	6.57	1.83	15.95°	7.81	376	15	0.40

NOT USED

5/24/10

Reported By: Jess Hocking

Title: Lead Geologist

Date: 5/24/10

Signature: [signature]

Reviewed By: L. D. Walker

Title: Geologist

Date: 7/20/10

Signature: [signature]

A-6003-652 (04/03)

WELL DEVELOPMENT AND TESTING DATA

Well Name:	Well ID:	Well Location:	Date:
199-H1-43	C7107	150m. W. of 12A-H-1 Excavation, 100-H Area	10-2-09

Reference Measuring Point (unless otherwise noted): TOP OF OUTER CASING (TOC)

Has the well been surveyed? ○ Yes ⊗ No | Does the well have a cement pad? ○ Yes ⊗ No

PART 1

STATIC WATER LEVEL:

Start of Job 32.4

End of Job 32.4

DEPTH TO BOTTOM:

Start of Job 40.1 bgs, 43.1 TOC

End of Job ~~45.0' bgs 48.0' TOC~~ AF 10-2-09 40.9' bgs, 43.9' TOC

PART 2

WELL DEVELOPMENT DATA

Pump Model 1-phase, 5hp, 55, 6 stg, 100gpm

Intake Depth 36.0' bgs 39.0' TOC

Starting Turbidity 17.3

Pump Start	Stop	Flow Rate
1318	1330	29.9 gpm
1330	1401	14.9 gpm
1401	1441	37.5 gpm

Total Pumped 2320 gal

Final Turbidity 1.47

XD SN/Range (PSI) 10415 / 20 psi

PART 3

INSTANTANEOUS SLUG TEST

Static Water Level (TOC)

Transducer Depth 33.7 bgs 36.7 TOC

Baseline Start

Injection Start

Baseline Start

Withdrawal Start

Slug Volume

XD SN/Range (PSI)

PART 4

Last Recorded Measurements Date: 10-2-09

Current Measurements Date:

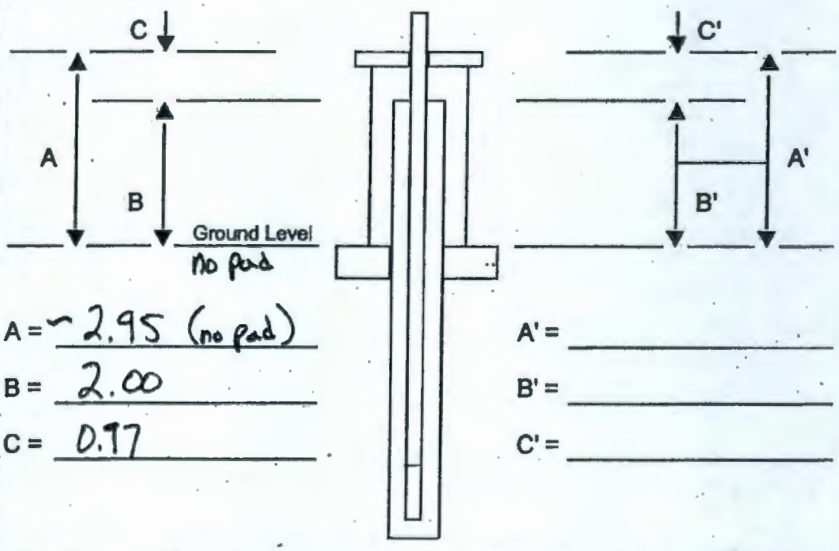

A = ~2.95 (no pad)

B = 2.00

C = 0.97

A' =

B' =

C' =

Are there any reference marks on the casing strings? ○ Yes ⊗ No

PART 5 Hermit Name: Rocky

COMMENTS:

Drawdown on "Sham ~~DW4~~ DW3" (Primary Test + slow flow)

29.9 gpm = ~~1~~ variable flow. @ ~~1330~~ 10-2-09

Decrease flow to 14.9 gpm. @ 1330

Drawdown on "Sham DW4" (Secondary Test - fast flow)

Max Drawdown = ~~7.98~~ 4.93' AF 10-2-09

Recovery Test on "Sham DW5"

Prepared by (print name):	Signature:	Date:
Aaron Lantow	Aaron Lantow	10-2-09
Reviewed by (print name):	**Signature:**	**Date:**
L.D. Walker	[signature]	10-20-09

A-6003-644 (03/03)

FIELD ACTIVITY REPORT - DAILY DRILLING

LW 12/3/09 WW 6-2-11

Page 1 of 2

Date: 10-2-09

Well Name: 199-H1-~~43~~42	Well ID: ~~E74~~ C7107
Location: 150m W. of 1-H-1 Excavation, 100-H Area	Report No.: 4

Start	Finish	Total
Time 1130	Time 1600	Time 5.5
Hole Depth/Csg 40.1 / 40.89	Hole Depth/Csg 40.90 / 40.89	Hole Depth/Csg 0.8' / 0.0

Reference Measuring Point: GROUND SURFACE

Casing String No. 1 2 3 4 ____ Rod Size:

See Report No. 1 DTW: 32.4 TOC, 29.4 Bgs.

Time/Depth From	Time/Depth To	Description of Activities/Operations with Depth (Attach applicable drawings and document straightness test results)
1130	1210	Move Rig + support equipment on site for development. Tower up.
1210		Tag DTB = 40.1. Change bowls/stages out on pump motor to 100gpm.
		Pump motor 1phase, 5-hp w/ 6stage Grundfoss S.S. impellers.
		- Talk w/ BTR: will establish maximum drawdown of well before beginning
		drawdown test + development + sampling. will develop well slowly for
		sampling then ~~restart~~ will start new test for increased (fast) flow rate.
	1257	Installing pump (5.55') (2.5' to intake) + 21' + 21' of 2" galvanized drop pipe.
1257	1300	Pump on bottom → stickup = 8.4' → too high. pull 21' pipe.
1300	1318	Add 10' + 5' drop pipe = (5.5' pump) + 21 + 10 + 5 2" pipe) = 41.5' - 5' stickup = 35.5 - (intake 2.5') = 36' bgs.
1330	1328	Pump on @ ~ 29.9 gpm. w/ 6' Drawdown. Record on "DW 3" (see pg 2)
1328		Decrease flow to 15 gpm
Time	1350	Collect sample B21N97, B21N98 (Duplicate).
	1401	Start Test "Sham DW4." Increase flow to ~30gpm.
	1412	Increase flow slowly to ~ 40.39 gpm
1441		Tank full. Kill Pump + Start Recharge "Test Sham WD5"
	1517	- Drillers preparing to pull pump + bail well.
1517		Kill recovery Test. Pull pump + Bail
	1530	Tag DTB: 40.1' bgs. → Bail. 20/30 ≤ 55 slot or finer than 8-16 mesh. filter sand.
1540	1540	Tag DTB: 40.90 → 40.90 bgs ~~43.90~~ 43.90 TOC LW 6/2/11
1540		Secure drums, secure well, Tower down, move off of hole.
	1600	Secure zone boundary. Personnel exit Area.

Reported By: A. Lanton		Reviewed By: L. S. Walker	
Title: Geologist	Date: 10-2-09	Title: Geologist	Date: 10/20/09
Signature: Aaron Lanton		Signature: [signature]	

A-6003-651 (REV 1)

FIELD ACTIVITY REPORT - DAILY DRILLING

Continuation Page

Page 2 of 2

Date: 10-2-09

Well Name: 199-H - 42, LCH 06-29-2011 | Well ID: C7107

Location: 150m. W. of 128-H-1 Excavation, 100-H Area | Continuation of Report No.: 4

Time/Depth From	Time/Depth To	Description of Activities/Operations with Depth
—	—	HERMIT Name: Rocky	Probe #: 6415	Probe Depth: 33.7 bgs	Intake: 36 bgs
—	—	Test# Name: Sham WD3	XDI: 4.39	Head: 6.6'
—	—	DTB: ~~Not Used~~ ~~Toc~~ ~~bgs~~ 11-10-2009	DTW: 32.4' Toc, 29.4' bgs	Aquifer thickness: 8.6'
	—	Calibrate Field Instruments:	Pass/fail (~10%-20%)
—	—	Turbidity: Std. → Reading →	/
—	—	std → Reading →	/
—	—	std → Reading →	/
—	—	pH : std 7.00 → Reading →	Previously calibrated At 10-2-09
—	—	std 10.00 → Reading →	
—	—	γ Conductivity: std → Reading →	/
1318	—	Pump on	

		xD(ft)	NTU	Temp(C°)	DOx (mg/L)	pH (Epa)	γ (mS)	flow (gpm)	Notes:
		1.01						29.9	check max flow + Adjust
	1330	3.183	17.3	—	8.52	7.62	0.469	14.9	slow flow
	1335	3.190	7.52	19.9	8.75	7.60	0.456	14.9	
	1336	3.182	2.70	18.0	8.57	7.62	0.547	14.9	
	1343	3.170	1.50	18.2	8.61	7.62	0.458	14.9	
	1350							Collect Samples B21NB	AK 10-2-09
	~~14~~								B21N97, B21N98 Dup.
1401	1402		Start	New test	DW4			~~AK 10-2-09~~ ~~35.9~~	increase 35.9 gpm
	1405	0.71	(out of water)					38.9	increase
	1412	37.3 Toc	2.69	18.2	10.24	7.61	0.457	40.39 gpm	DTW: 37.3' Toc = 34.3' (Probe Dry)
	1417	37.35 Toc	3.00	17.4	10.36	7.61	0.460	40.39	37.35 Toc. − 33.7 / 0.6
	1421	37.34 Toc	1.65	17.2	10.34	7.62	0.459	37.40	
	1433	37.33 Toc	1.47	17.9	10.44	7.62	0.456	35.91	
	1441	Kill	Pump	Start Rebound Test "DW5"				—	$\bar{x}$ = 37.48 σ = 2.27
	1442	32.7' Toc	—	—	—	—	—	—	
	1445	33.2 Toc	—	—	—	—	—	—	max Drawdown 4.93'
	1455	32.5 Toc	—	—	—	—	—	—	

Reported By: A. Lantow | Reviewed By: L.D. Walker

Title: Geologist | Date: 10-2-09 | Title: Geologist | Date: 10/20/09

Signature: Aaron Lantow | Signature: [signature]

A-6003-652 (04/03)

WELL DEVELOPMENT AND TESTING DATA

Well Name:	Well ID:	Well Location:	Date:
199-H1-34	C7108	100-HR-3 OU, NW of H-Reactor	5-25-2010

Reference Measuring Point (unless otherwise noted): TOP OF OUTER CASING (TOC)

Has the well been surveyed? ○ Yes ● No | Does the well have a cement pad? ○ Yes ● No

PART 1

STATIC WATER LEVEL:

Start of Job	33.25' TOC
End of Job	33.24' TOC.

DEPTH TO BOTTOM:

Start of Job	45.6' TOC
End of Job	45.6' TOC

PART 2

WELL DEVELOPMENT DATA

Pump Model	5-HP FRANKLIN ELECTRIC
Intake Depth	39' TOC (36' bgs)
Starting Turbidity	65.8 NTU

Pump Start	Stop	Flow Rate
0916	1007	36 GPM

Total Pumped	1,856 gal.
Final Turbidity	2.88 NTU
XD SN/Range (PSI)	115276 (30 PSI)

PART 3

INSTANTANEOUS SLUG TEST

Static Water Level (TOC)	
Transducer Depth	
Baseline Start	
Injection Start	
Baseline Start	
Withdrawal Start	
Slug Volume	
XD SN/Range (PSI)	

NOT USED 6/25/10

PART 4

Last Recorded Measurements Date: 5/25/10

Current Measurements Date: 5/26/10

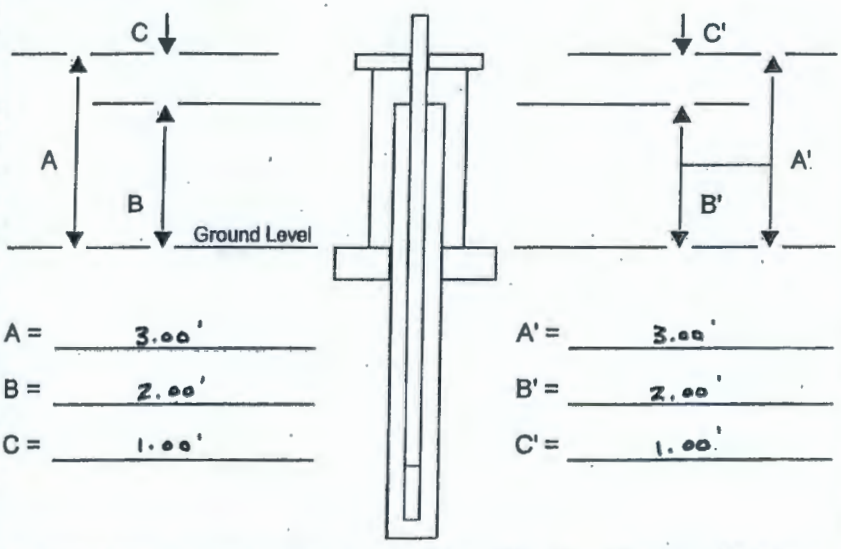

A =	3.00'	A' =	3.00'
B =	2.00'	B' =	2.00'
C =	1.00'	C' =	1.00'

Are there any reference marks on the casing strings? ○ Yes ● No

PART 5

COMMENTS:

ALL WATER PARAMETER INSTRUMENTS WERE "FIELD CALIBRATED" WITHIN NORMAL OPERATING TOLERANCES.

C7108 DRAW TEST : RUN 0916 - 1007

C7108 RECOVERY TEST : RUN 1007 - 1027

700 LEVEL TROLL : SHELDON

Prepared by (print name):	Signature:	Date:
Jess Hocking	[signature]	5/25/10
Reviewed by (print name):	**Signature:**	**Date:**
L.D. Walker	[signature]	7-19-10

A-6003-644 (03/03)

FIELD ACTIVITY REPORT - DAILY DRILLING

Page 1 of 2

Date: 5-25-2010

Well Name: 199-H1-34

Well ID: C7108

Location: 100-HR-3 OU, NW of H-Reactor

Report No.: 5

Start	Finish	Total
Time 0600	Time 1128	Time 5 hrs. 28 min.
Hole Depth/Csg N/A / N/A	Hole Depth/Csg N/A / N/A	Hole Depth/Csg N/A / N/A

Reference Measuring Point: GROUND SURFACE

Casing String No. (1) 2 3 4 ____ Rod Size: N/A

See Report No. 1 WELL DEVELOPMENT

Time/Depth From	Time/Depth To	Description of Activities/Operations with Depth (Attach applicable drawings and document straightness test results)
0600	0630	P.O.D Mtg. - BTR (IMHOFF), GRAM, LAYNE IN ATTENDANCE; SAFETY
		TOPIC - RIG SAFETY.
0630	0640	Move to job sites. (H-AREA)
0640	0734	Drillers prepare to move over C7108.
0735	0753	Drillers begin moving over C7108.
	0754	Geo. tags DTW @ 33.25' TOC (30.25' bgs); Tag DTB @ 45' TOC
		(42' bgs) - Sump btm = ~~42.6'~~ 45.6' TOC (42.6' bgs); fill = 0.6 ft.
0759	0810	Drillers prepare to bail sediment from well.
0810	0835	Bailing well.
0840	0854	Prepare to trip pump down hole; DTB tagged @ 45.6' TOC.
0855	0905	Begin tripping pump down hole.
	0906	Pump to depth; Transducer (Troll) @ 36' TOC, Intake = 39' TOC
		(BTM OF SCREEN = 40.6' TOC).
	0914	Initial XD = 3.44' H_2O.
0916		Begin pumping C7108; 36 GPM Flowrate; NCOs on site
		for H_2O sample.
	0952	NCOs take H_2O sample; HEIS#: B22Y27 + B22Y44.
	1007	Stop pumping C7108; Recovery test started.
	1027	Stop recovery test.
1028	1030	Drillers prepare to remove pump from down hole.
1030	1100	Drillers pull pump from well.
1102	1110	Drillers prepare to break down rig.
1110	1119	Drillers break down rig.
1119		Drillers prepare to move to C7480.

Reported By: Jess Hocking		Reviewed By: C.D. Walter	
Title: Lead Geologist	Date: 5/25/10	Title: Geologist	Date: 7/19/10
Signature: [signature]		Signature: [signature]	

A-6003-651 (REV 1)

FIELD ACTIVITY REPORT - DAILY DRILLING

Continuation Page

Page 2 of 2

Date: 5-25-2010

Well Name: 199-H1-34

Well ID: C7108

Location: 100-HR-3 OU, NW of H-REACTOR

Continuation of Report No.: 5

Time/Depth From	Time/Depth To	Description of Activities/Operations with Depth
	1128	Drillers move rig to C 7480.
		Initial XD = 3.44' H_2O

TIME	XD	DRAW	TURB.	TEMP.	pH	Cond.	Flow
0924	0.05	3.39	65.8	16.72°	7.49	410	36
0934	0.06	3.38	8.81	17.36°	7.59	370	36
0944	0.06	3.38	4.54	17.62°	7.70	369	36
0952	0.06	3.38	3.61	17.75°	7.71	369	36
1004	0.06	3.38	2.88	17.85°	7.73	370	36

NOT USED

5/25/2010

Reported By: Jess Hocking

Title: Lead Geologist

Date: 5/25/10

Signature: [signature]

Reviewed By: L.D. Walker

Title: Geologist

Date: 7/19/10

Signature: [signature]

A-6003-652 (04/03)

WELL DEVELOPMENT AND TESTING DATA

Well Name:	Well ID:	Well Location:	Date:
199-H1-39	C7109	NE. of H Reactor by River	5.17.10

Reference Measuring Point (unless otherwise noted): TOP OF OUTER CASING (TOC)

Has the well been surveyed? ○ Yes ⊗ No | Does the well have a cement pad? ○ Yes ⊗ No

PART 1

STATIC WATER LEVEL:

Start of Job 34.8' TOC

End of Job 34.8' 5.17.10

DEPTH TO BOTTOM:

Start of Job 44.09

End of Job 44.09

PART 2

WELL DEVELOPMENT DATA

Pump Model Shp. w/50 gpm bowls

Intake Depth 38.0 bgs 41' TOC

Starting Turbidity

Pump Start	Stop	Flow Rate
0843	0903	5.0
~~0903~~-0910	0920	4.4
0958	1113	4.9

Total Pumped 556.5 gal

Final Turbidity 2.45

XD SN/Range (PSI) Troll. 69 psi

PART 3

INSTANTANEOUS SLUG TEST

Static Water Level (TOC) 34.8' TOC

Transducer Depth 39' TOC

Baseline Start

Injection Start

Baseline Start

Withdrawal Start

Slug Volume

XD SN/Range (PSI)

N/A

PART 4

Last Recorded Measurements Date: 5.17.10

Current Measurements Date:

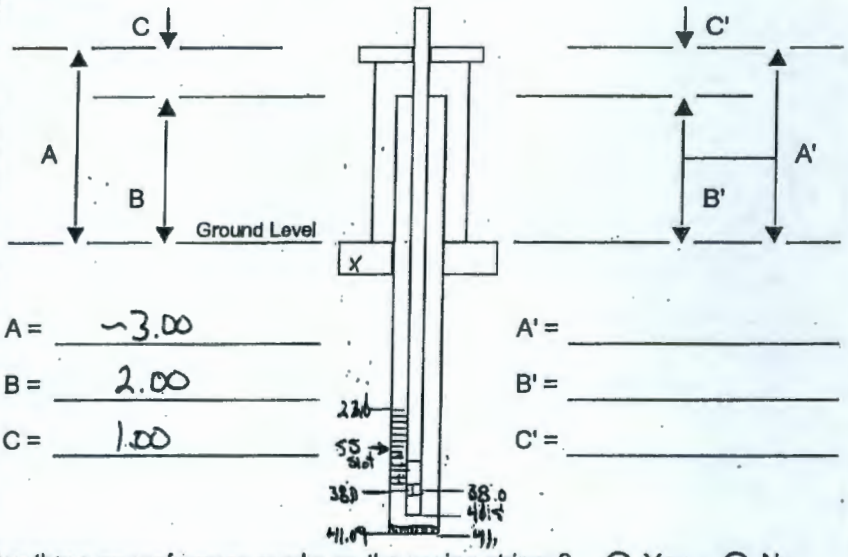

A = ~3.00 | A' =

B = 2.00 | B' =

C = 1.00 | C' =

Are there any reference marks on the casing strings? ○ Yes ○ No

PART 5 Troll Name: Sheldon

COMMENTS:

Drawdown & Recovery Test on File: 100HR-3_100-H→C7109.
Max drawdown @ 5.5 gpm. 3.95'
Aquifer thickness 4.9'
~~*Df.~~

Collect Sample: B22Y28, B22Y45

Prepared by (print name):	Signature:	Date:
A. Lawson	[signature]	5.17.10
Reviewed by (print name):	**Signature:**	**Date:**
L.D. Walker	[signature]	7-19-10

A-6003-644 (03/03)

FIELD ACTIVITY REPORT - DAILY DRILLING

Page 1 of 1

Date: 5-14-10

Well Name: 199-H1-39

Well ID: C7109

Location: NE. of H-Reactor by River

Report No.: 6

Start	Finish	Total
Time 1425	Time 1530	Time 1.0
Hole Depth/Csg 40.5 / 40.0	Hole Depth/Csg ~~40.09~~ 41.09 / 41.0	Hole Depth/Csg 0.59 / NA

Reference Measuring Point: GROUND SURFACE

Casing String No. ~~1~~ 2 3 4 ____ Rod Size:

See Report No. 1

Time/Depth From	Time/Depth To	Description of Activities/Operations with Depth (Attach applicable drawings and document straightness test results)
1425	1500	Pull pump rig on site. Tower up. Tag DTB: 40.5' bgs. = 0.5' sed. in well.
1500	1525	Bail well of sed. Tag DTB: 40.09' bgs.
1525	1530	Secure site. All personnel exit area.

Not Used

Reported By: A. Lanton

Title: Geologist

Date: 5-14-10

Signature: Aaron Lanton

Reviewed By: L.D. Walker

Title: Geologist

Date: 7/19/10

Signature: LD Walker

A-6003-651 (REV 1)

FIELD ACTIVITY REPORT - DAILY DRILLING

Page 1 of 2

Date: 5·17·10

Well Name: 199-H1-39 | Well ID: C7109

Location: NE. of H-Reactor by River. | Report No.: 7

Start	Finish	Total
Time 0600	Time 1250	Time 7.0
Hole Depth/Csg 41.09 / 41.09	Hole Depth/Csg 41.09 / 41.09	Hole Depth/Csg 0.0 / -NA-

Reference Measuring Point: GROUND SURFACE

Casing String No. 1 2 3 4 ____ Rod Size:
See Report No. 1 Development. DTW:

Time/Depth From	To	Description of Activities/Operations with Depth (Attach applicable drawings and document straightness test results)
0600	0635	POD @ ISRM Trailer. Will Develop.
0635	0700	Travel to site. Drillers warming rig performing safety survey + rig maintenance.
0700		Geo on site. Talk w/ driller on where to place pump intake. Sump @ 41.09' bgs.
		Add (21 pipe + 15) + 5.5 (pump) = 41.5 - 3 (stickup) 38.5' bottom of pump ... + 2.0' pipe = 40.5' bgs. (~2.5 meter
	0745	= 38.0' bgs to intake.
0745	0800	Install Pump. 5 hp. w/ 50 gpm bowls.
0800		Check sampling instruments. Samplers on site.

PH ±10%		NTU ±10%		DOx.	No Conductivity.	Setup Tests on Troll
Std: 7.00	Read: 7.10	Std: 4.0	Read: 4.95	8.48 dry.		Named: Sheldon.
Std: 10.00	Read: 10.13	Std: 53.0	Read: 53.30			Under File: HR-3 100-H → C7109
		Std: 4.24	Read: 4.57			

xDI: 3.88' DTW: 31.8' bgs. DTBI: 41.09' bgs. Intake: 38.0' bgs Transducer: 36' bgs.

		xD(ft)	NTU	°C	pH (std)	DOx (mg/L)	GPM	Notes: Adjust Flow
Pump on	0843	0.11	>1000	16.38	6.76	7.74	4.4	Start @ 40 gpm lower to 5 gpm
	0857	0.40	414	17.3	7.78	7.37	5.9	Tag DTW 40.8 TOC, 37.8 bgs.
Pump's Test	0903	Slug Recharge		17.8			0.0	Kill pump. DTW 36.3 TOC ↑, 34.8 TOC ↑
	0910	3.91 ±2		17.8			0.0	
	0910	0.43		18.01			5.9	DTW: (TOC) 38.3
	0914	Dry 0.84	3.39	17.76			4.4	
	0915							Turn pump down 39.5
	920	Dry 0.04					4.4	40.8 TOC = 37.8' bgs = 0.2' above intake.
Pump's Test	0920.5	Slug Recharge					Kill Pump	
	0923	3.94		17.78				34.8 TOC 1.5 gal/ft / 6' = 9 gal / 3 = 3 gal/min recharge

Reported By: A. Lanton | Reviewed By: L. D. Walker

Title: Geologist | Date: 5·17·10 | Title: Geologist | Date: 7/14/10

Signature: Aaron Lanton | Signature: [signature]

A-6003-651 (REV 1)

FIELD ACTIVITY REPORT - DAILY DRILLING

Continuation Page

Page 2 of 2

Date: 5·17·10

Well Name: 199-H1-39 | Well ID: C7109

Location: NE. of H-Reactor by River. | Continuation of Report No.: 7

Time/Depth From	Time/Depth To	Description of Activities/Operations with Depth						
		XDf	NTU	C°	pH	DO%	GPM	Notes
	0955	3.87					–	DTW: 34.9 TOC
Pump On	0958	~~Dry~~					4.4	
	1001.5	~~Dry~~ 0.05	277	17.3	7.79	7.59	4.4	DTW: 39? color 10YR 5/4 olv. brown.
	1005	Dry	176	17.6	7.77	7.57	4.4	DTW: 40.75 dropping slowly. → Steady flow.
	1010	Dry	36.1	18.8	7.75	9.92	4.4	DTW: 40.75
	1015	Dry	16.7	19.4	7.71	8.60	4.4	
	1020	Dry	10.1	19.4	7.73	9.62	4.4	DTW: 40.76
	1025	Dry	7.70	19.5	7.74	9.53		DTW: 40.76
	1032	Dry	4.85	20.0	7.74	~~9.59~~ 9.70	3.74	DTW: 40.75
	~~1038~~ 1040	Dry	4.75	20.1	7.71	9.57	3.75	DTW: 40.75
	1055	—					—	Collect Sample B22Y28, B22Y45
	1105	~~3.95~~ Dry	2.45	18.7	7.79	9.46	5.2	DTW: 40.75 TOC
	1113	Kill Pump ~~then~~ start Recovery Test.						
	1138	3.87: XDf Kill Recovery Test						DTW: 34.9 TOC 31.9'
1138	1206	Pull pump + instruments.						
1206	1209	Tag DTB: 41.09' clean.						
1209	1250	Secure borehole + Move to next site.						

Not Used

Reported By: A. Lanteen		Reviewed By: L.D. Walker	
Title: Geologist	Date: 5·17·10	Title: Geologist	Date: 7/19/10
Signature: Aaron Lanteen		Signature: [signature]	

A-6003-652 (04/03)

WELL DEVELOPMENT AND TESTING DATA

Well Name:	Well ID:	Well Location:	Date:
199-H3-25	C7110	200m N. of Groundwater Pit 100-HR-3 OU	9-24-09

Reference Measuring Point (unless otherwise noted): TOP OF OUTER CASING (TOC)

Has the well been surveyed? ○ Yes ⊗ No | Does the well have a cement pad? ○ Yes ⊗ No

PART 1

STATIC WATER LEVEL:

Start of Job 42.1' TOC

End of Job 42.1 TOC

DEPTH TO BOTTOM:

Start of Job 54.2 bgs → bail → 55.4' bgs

End of Job 55.4' bgs → bail →

PART 2

WELL DEVELOPMENT DATA

Pump Model (1-phase, 5-hp) w/ 5. S. impellers

Intake Depth 52.0'

Starting Turbidity 14.3 NTU

Pump Start	Stop	Flow Rate
1317	1403	6.21 gal/min

Total Pumped 2881.1 gal

Final Turbidity 0.91

XD SN/Range (PSI) 10415 / 20 psi

PART 3

INSTANTANEOUS SLUG TEST

Static Water Level (TOC) 42.1

Transducer Depth 52.2

Baseline Start

Injection Start

Baseline Start

Withdrawal Start

Slug Volume

XD SN/Range (PSI)

N/A

PART 4

Last Recorded Measurements Date: 9-24-09

Current Measurements Date:

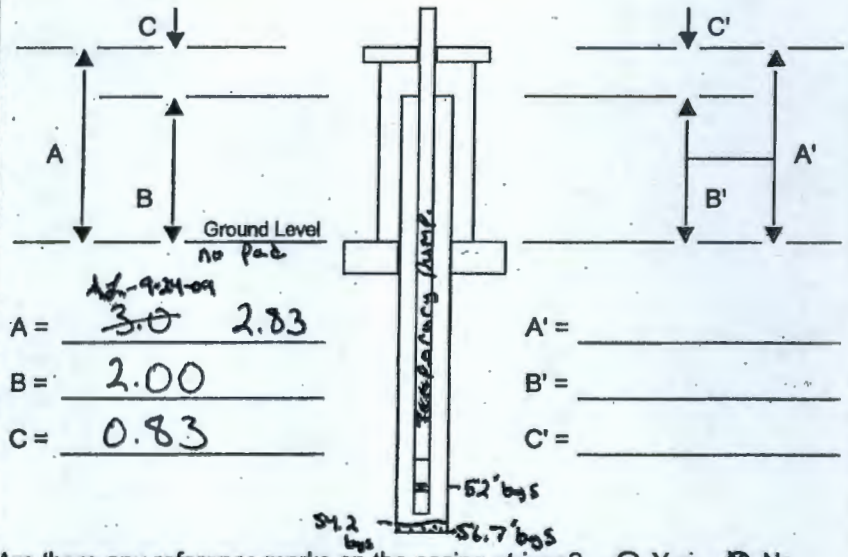

A =	~~3.0~~ 2.83 (AL 9-24-09)	A' =	
B =	2.00	B' =	
C =	0.83	C' =	

Are there any reference marks on the casing strings? ○ Yes ⊗ No

PART 5

Hermit Name: Rocky AL 9-24-09

COMMENTS: Drawdown on Test "Idiocracy ~~WD1~~ WD2
Drawdown Total: 0.05"

Rebound Test "Idiocracy WD3"

Development pump & associated equipment removed from well on 9-24-09. Final bail on 9-25-09.

Collect Sample B21N99

Prepared by (print name):	Signature:	Date:
Aaron Lantau	Aaron Lantau	9-24-09
Reviewed by (print name):	**Signature:**	**Date:**
L. D. Walker	[signature]	10-20-09

A-6003-644 (03/03)

FIELD ACTIVITY REPORT - DAILY DRILLING

Page 1 of 2

Date: 9-24-09

Well Name: 199-H3-25 | Well ID: C7110

Location: 200m N. of Groundwater Warehouse | Report No.: 04

Start	Finish	Total
Time 1200	Time 1430	Time 2.5 hrs
Hole Depth/Csg 54.2 / 56.72	Hole Depth/Csg 55.4 / 56.72	Hole Depth/Csg 1.2 / 0.0

Reference Measuring Point: GROUND SURFACE

Casing String No. 1 2 3 4 ____ Rod Size:
See Report No. 1 DTW: 39.1' bgs., 42.1' TOC

Time/Depth From	To	Description of Activities/Operations with Depth (Attach applicable drawings and document straightness test results)
1200	1214	Drillers move on site. set up perimeter & Tower up rig.
–	1214	- Tag DTB: 54.5' bgs = 2.2' sed. in sump. → must bail.
1214		Drillers pull pump from hole. → prepare to bail
		Bail sump of sed. med-C. Sand 50% mafic, 50% felsic w/ 5% 6-12 so. si. sand pack
	1250	Bail 50gal. Tag @ 55.4 = 1.3' sed in sump.
1250		Trip in pump & 2" ~~tremie~~ Drop pipe. Set intake @ 52' bgs.
1316	1316.5	Fals start on pump Test #1 not used (Samplers on site @ 1320)
1317	→	Start test Drawdown #2 & Collect parameters (see pg 2.)
Time	1357	Collect water sample HEIS# B21N99
	1403	Kill pump & Start Rebound Test @ Idiocracy WD2"
–	1413	Stop rebound Test.
1413		Pull pump & affiliated Equipment.
		Tag DTB: 55.4' bgs 58.4' TOC. DTW: 39.1' bgs.
	1430	- Will Bail Tomorrow –
1430	1440	Secure site & exit Area.

Not Used

Reported By: A. Lantow		Reviewed By: L.D. Walker	
Title: Geologist	Date: 9-24-09	Title: Geologist	Date: 10/20/09
Signature: Aaron Lantow		Signature: L.D. Walker	

A-6003-651 (REV 1)

FIELD ACTIVITY REPORT - DAILY DRILLING

Continuation Page

Page 2 of 2

Date: 9-24-09

Well Name: 199-H3-25 | Well ID: C7110

Location: See pg 1. | Continuation of Report No.: 04

Time/Depth From	Time/Depth To	Description of Activities/Operations with Depth
—	—	HERMIT Name: Rocky Probe IN: 10415 Probe Depth: 52.2' bgs Intake: 52 bgs
—	—	Test # 1 Name: Idiocracy WD1 DW2 Drawdown XD1: 13.1 Head: 12.9
—	Start:	DTB: 57.2' TOC, 54.2' bgs DTW: 42.1' TOC, 39.1' bgs Aquifer thickness: 14.6'
	—	Calibrate Field Instruments: Pass/fail (~10%-20%)
—	—	Turbidity: Std. → Reading →
—	—	std → Reading →
—	—	std → Reading →
—	—	pH : std 7.00 → Reading →
—	—	std 10.00 → Reading →
—	—	Conductivity: std → Reading →
1317	—	Pump on (1phase, 5hp) w/s.s. impellers.

		xD(ft)	NTU	Temp(C°)	DOx(mg/L)	pH(std)	σ(mS)	flow(gpm)	Notes:
	1321	13.09	14.3	19.5	8.28	7.95	0.495	60.1	wide open.
	1327	13.09	6.14	21.4	8.20	7.99	0.473	60.1	
	1333	13.07	1.76	22.7	8.06	7.99	0.469	61.3	
	1344	13.06	1.20	20.4	8.08	8.03	0.463	61.3	Samplers collect readings
	1401	13.05	0.91	18.4	8.33	8.03	0.467	61.0	
Time	1357	Collect Sample AEIS# → (B21N99 x96 bottles)							
—	1403	Start Rebound Test "Idiocracy WD3"							
	Total Down	0.05'						X=62.2	

— Not Used - JL

Reported By: A. Lantau		Reviewed By: L.J. Walker	
Title: Geologist	Date: 9-24-09	Title: Geologist	Date: 10/20/09
Signature: Jason Lantau		Signature: LJ Walker	

A-6003-652 (04/03)

FIELD ACTIVITY REPORT - DAILY DRILLING

Page 1 of 1

Date: 9-25-09

Well Name: 199-H3-25

Well ID: C7110

Location: 200m N. of warehouse

Report No.: 5

Start	Finish	Total
Time 0600	Time 0730	Time 1.5
Hole Depth/Csg 55.4 / 56.7	Hole Depth/Csg 56.6 / 56.7	Hole Depth/Csg -1.2 / 0.0

Reference Measuring Point: GROUND SURFACE

Casing String No. 1 2 3 4 ____ Rod Size: See Report No. 1

Time/Depth From	Time/Depth To	Description of Activities/Operations with Depth (Attach applicable drawings and document straightness test results)
0600	0630	POD on site.
0630	0638	Warm rig Tag DTB 55.4' bgs
0638	0710	Bail well Tag @ 56.6' ~within 1' of bottom
0710	/	Secure site, Remove rig from well head → move rig to decon pad.
/	0730	Decon equipment for development + move equipment to next hole.

Not Used

Reported By: A. Lantau

Title: Geologist

Date: 9-25-09

Signature: Aaron Lantau

Reviewed By: L.D. Walker

Title: Geologist

Date: 10/20/09

Signature: LD Walker

A-6003-651 (REV 1)

WELL DEVELOPMENT AND TESTING DATA

Well Name:	Well ID:	Well Location:	Date:
199-H1-21	C7111	100-HR-3 OU, NW of H-Reactor	6/3/2010

Reference Measuring Point (unless otherwise noted): TOP OF OUTER CASING (TOC)

Has the well been surveyed? ○ Yes ● No | Does the well have a cement pad? ○ Yes ● No

PART 1

STATIC WATER LEVEL:

Start of Job	17.81' TOC
End of Job	17.81' TOC

DEPTH TO BOTTOM:

Start of Job	38.12' TOC
End of Job	38.12' TOC

PART 2

WELL DEVELOPMENT DATA

Pump Model	5-HP, 6 stage FE Elec.
Intake Depth	33.51' TOC
Starting Turbidity	55.5 NTU

Pump Start	Stop	Flow Rate
0927	1027	80.7

Total Pumped	4,842 gal
Final Turbidity	2.21 NTU
XD SN/Range (PSI)	115 276 (30 PSI)

PART 3

INSTANTANEOUS SLUG TEST

Static Water Level (TOC)	
Transducer Depth	
Baseline Start	
Injection Start	
Baseline Start	
Withdrawal Start	
Slug Volume	
XD SN/Range (PSI)	

NOT USED 6/3/2010

PART 4

Last Recorded Measurements Date: 6/3/2010

Current Measurements Date: 6/3/2010

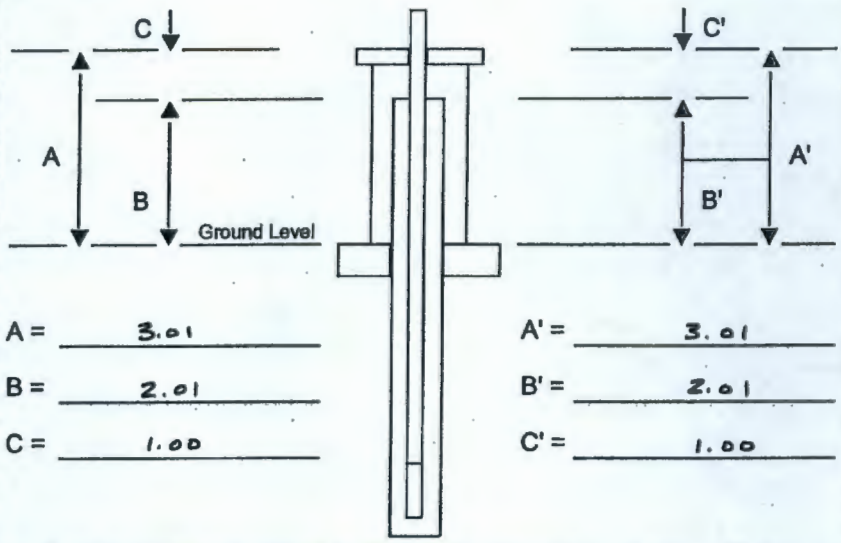

A =	3.01	A' =	3.01
B =	2.01	B' =	2.01
C =	1.00	C' =	1.00

Are there any reference marks on the casing strings? ○ Yes ● No

PART 5

COMMENTS:

ALL WATER PARAMETER MONITORING DEVICES WERE "FIELD CALIBRATED" WITHIN NORMAL OPERATING TOLERANCES

MONITORING DEVICE: 700 LEVEL TROLL (SHELDON)

DRAW / RECOVERY TEST: C7111 DRAW 1

TROLL POSITIONED @ 31.51' TOC.

Prepared by (print name):	Signature:	Date:
Jess Hocking		6/3/2010
Reviewed by (print name):	**Signature:**	**Date:**
L. D. Walker		7/16/10

A-6003-644 (03/03)

FIELD ACTIVITY REPORT - DAILY DRILLING

Page 1 of 2

Date: 6-3-2010.

Well Name: 199-H1-21 | Well ID: C7111

Location: 100-HR-3 OU, NW of H-REACTOR | Report No.: 3

Start	Finish	Total
Time 0600	Time 1121	Time 5hrs. 21min.
Hole Depth/Csg N/A / N/A	Hole Depth/Csg N/A / N/A	Hole Depth/Csg N/A / N/A

Reference Measuring Point: GROUND SURFACE

Casing String No. (1) 2 3 4 ____ Rod Size: N/A

See Report No. 1 WELL DEVELOPMENT

Time/Depth From	Time/Depth To	Description of Activities/Operations with Depth (Attach applicable drawings and document straightness test results)
0600	0630	P.O.D - Safety Mtg. - BTR (IMHOFF), Safety (DEWITT), LAYNE,
		GRAM IN ATTENDANCE.
0630	0640	Move to 100-H AREA JOB SITES.
0645	0714	Drillers prepare to move development rig to C7111.
0715	0718	Drillers move development rig to C7111.
0719	0738	Drillers set development rig over C7111.
	0740	Geo. tags DTW @ 17.81' TOC (14.80' bgs); DTB @ 32.8' TOC
		(BTM OF WELL = 38.12' TOC); Fill = 5.32'; V = 29.82 gal;
		H_2O column = 20.31'
0750		Drillers begin bailing the well.
	0824	End bailing; DTB @ 38.12' TOC (fill = 0.00 ft)
0826	0837	Drillers prepare to trip pump down hole.
0838		Drillers begin tripping the 5-HP (6 stage) submersible
		pump (~100 gpm max) down hole.
	0856	Pump to depth; Intake @ 33.51' TOC (BTM SCREN = 35.12' TOC);
		Troll depth = 31.51' TOC
	0858	Initial XD = 13.18' H_2O
0900		Waiting for NCOs to arrive before starting draw test
		at request of BTR.
	0926	NCOs arrive on site.
0927		Begin pumping well; Flow rate = 80.7 gpm.
	0958	NCOs take H_2O sample; HEIS # = B22Y29; B22Y46
	1027	End pumping well; Begin recovery test.
	1053	End recovery test.

Reported By: Jess Hocking		Reviewed By: C.J. Walker	
Title: Lead Geologist	Date: 6/3/10	Title: Geologist	Date: 7/16/10
Signature: J. Hocking		Signature: D. Walker	

A-6003-651 (REV 1)

FIELD ACTIVITY REPORT - DAILY DRILLING

Continuation Page

Page 2 of 2

Date: 6 - 3 - 2010

Well Name: 199- H1- 21

Well ID: C7111

Location: 100- HR-3 OU, NW of H-REACTOR

Continuation of Report No.: 3

Time/Depth From	Time/Depth To	Description of Activities/Operations with Depth
1055	1110	Drillers remove pump from C7111.
	1112	Tag DTB @ 38.12' TOC & DTW @ 17.81' TOC.
1113	1116	Drillers prepare to break down rig.
1117	1120	Drillers break down development rig.
	1121	Geo. no longer needed - leaves site.

Initial XD = 13.18' H_2O

TIME	XD	DRAW	Turb.	pH	Cond.	Temp.	Flow
0935	8.47	4.71	55.5	7.33	270	15.53°	80.7
0942	8.38	4.80	11.5	7.56	227	15.47°	80.7
0947	8.32	4.86	5.70	7.37	257	15.44°	80.7
0953	8.28	4.90	4.97	7.55	225	15.44°	80.7
0959	8.21	4.97	4.29	7.68	226	15.42°	80.7
1015	8.32	4.86	2.21	7.78	219.6	15.39°	80.7

NOT USED

6/3/10

Reported By: Jess Hocking

Title: Lead Geologist

Date: 6/3/10

Signature: J Hocking

Reviewed By: L.D. Walker

Title: Geologist

Date: 7/16/10

Signature: D Walker

A-6003-652 (04/03)

WELL DEVELOPMENT AND TESTING DATA

Well Name:	Well ID:	Well Location:	Date:
199-H1-20	C7113	100-HR-3 OU, NW of H-REACTOR	6/2/2010

Reference Measuring Point (unless otherwise noted): TOP OF OUTER CASING (TOC)

Has the well been surveyed? ○ Yes ● No | Does the well have a cement pad? ○ Yes ● No

PART 1

STATIC WATER LEVEL:

Start of Job	17.56' TOC
End of Job	17.43' TOC.

DEPTH TO BOTTOM:

Start of Job	37.48' TOC
End of Job	37.48' TOC

PART 2

WELL DEVELOPMENT DATA

Pump Model	100-HP FRANKLIN ELECTRIC
Intake Depth	L 33.1' TOC / U 23.1' TOC
Starting Turbidity	L 5.12 NTU / U 5.53 NTU

Pump Start	Stop	Flow Rate
L 0918	0955	89.7
U 1041	1110	83.7

Total Pumped	L 5,746.2 gal U
Final Turbidity	L 1.34 NTU / U 1.01 NTU
XD SN/Range (PSI)	115276 (30 PSI)

PART 3

INSTANTANEOUS SLUG TEST

NOT USED

Static Water Level (TOC)	
Transducer Depth	
Baseline Start	
Injection Start	
Baseline Start	
Withdrawal Start	
Slug Volume	
XD SN/Range (PSI)	

PART 4

Last Recorded Measurements Date: 6/2/2010

Current Measurements Date: 6/2/2010

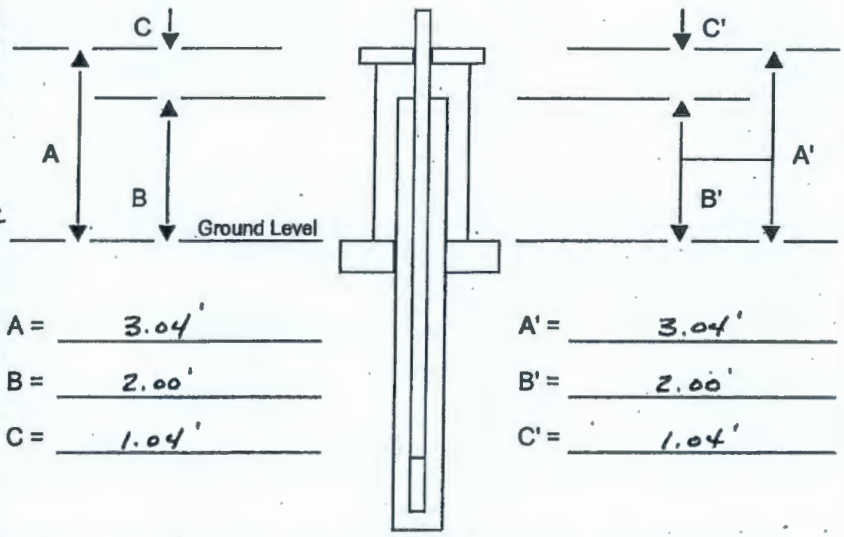

A =	3.04'	A' =	3.04'
B =	2.00'	B' =	2.00'
C =	1.04'	C' =	1.04'

Are there any reference marks on the casing strings? ○ Yes ● No

PART 5

COMMENTS:

All WATER PARAMETER MONITORING DEVICES WERE "FIELD CALIBRATED" WITHIN NORMAL OPERATING TOLERANCES.

MONITORING DEVICE: 700 LEVEL TROLL (SHELDON)
LOWER INTERVAL = C7113 DRAW 1
UPPER INTERVAL = C7113 DRAW 2
RECOVERY TEST = C7113 DRAW 2

TROLL POSITIONED @ 30.9' TOC lower interval & 20.9' TOC upper interval.

Prepared by (print name):	Signature:	Date:
Jess Hocking		6/2/2010
Reviewed by (print name):	**Signature:**	**Date:**
L.D. Walker		7-19-10

A-6003-644 (03/03)

FIELD ACTIVITY REPORT - DAILY DRILLING

Page 1 of 2

Date: 6-2-2010

Well Name: 199-H1-20

Well ID: C7113

Location: 100-HR-3 OU, NW of H-REACTOR

Report No.: 5

Start	Finish	Total
Time 0600	Time 1218	Time 6hrs. 18 min.
Hole Depth/Csg N/A / N/A	Hole Depth/Csg N/A / N/A	Hole Depth/Csg N/A / N/A

Reference Measuring Point: GROUND SURFACE

Casing String No. (1) 2 3 4 ____ Rod Size: N/A

See Report No. 1 WELL DEVELOPMENT

Time/Depth From	Time/Depth To	Description of Activities/Operations with Depth (Attach applicable drawings and document straightness test results)
0600	0630	Safety Mtg. - P.O.D; BTR (IMHOFF), Safety (DEWITT),
		Layne, GRAM in ATTENDANCE.
0630	0640	Move to 100-H AREA job site.
0640		Drillers prepare C7113 site for well development activities.
	0750	Geo. tags DTB @ 36' TOC (BTM. of well = 37.48' TOC); Fill = 1.48';
		DTW @ 17.56' TOC; Vol. = 29.25 gal; Column = 19.92 ft H_2O
0752	0755	Drillers prepare to bail sediment from well.
0756		Drillers begin bailing sediment from well.
	0832	End bailing; DTB tagged @ 37.5' TOC (BTM. of WELL)
0845	0847	Drillers prepare to drop pump down hole.
0848		Begin dropping pump downhole.
	0917	Pump to depth; Initial XD = 13.48' H_2O
0918		Begin pumping lower interval, Avg. Draw = 0.424 ft @ 89.7 gpm
	0955	End pumping lower interval; Drillers move pump up 10';
		Initial XD = 2.42' H_2O
	1040	NCO samplers arrive on site.
1041		Begin pumping upper interval; Avg. Draw = 0.375 ft @ 83.7 gpm.
	1058	NCOs collect H_2O sample; HEIS # = BZZY30 & BZZY47.
	1110	End pumping upper interval; Begin recovery test.
	1135	End recovery test.
1145		Begin pulling pump from well.
	1155	Pump removed from well.
	1159	DTB re-tagged @ 37.5' TOC (Btm. of well); DTW tagged @ 17.43' TOC
1200		Drillers break down pump rig to move to C7111.

Reported By: Jess Hocking

Title: Lead Geologist Date: 6/2/2010

Signature: J. Hocking

Reviewed By: L.A. Walker

Title: Geologist Date: 7/19/10

Signature: L.A. Walker

A-6003-651 (REV 1)

FIELD ACTIVITY REPORT - DAILY DRILLING

Continuation Page

Page 2 of 2

Date: 6-2-2010

Well Name: 199-H1-20

Well ID: C7113

Location: 100-HR-3 OU, NW of H-REACTOR

Continuation of Report No.: 5

Time/Depth From	Time/Depth To	Description of Activities/Operations with Depth
	1218	Geo. no longer needed - leaves site.

Initial XD_L = 13.48' H_2O

TIME	XD	DRAW	Turb.	pH	Cond.	Temp.	Flow
0929	13.06	0.42'	5.12	7.02	274	15.13°	89.7
0934	13.05	0.43'	2.90	7.14	244	15.13°	89.7
0939	13.06	0.42'	1.99	7.25	243	15.17°	89.7
0944	13.06	0.42'	1.26	7.31	245	15.14°	89.7
0947	13.05	0.43'	1.34	7.42	242	15.16°	89.7

Initial XD_U = 2.42' H_2O

TIME	XD	DRAW	Turb.	pH	Cond.	Temp.	Flow
1047	2.04	0.38'	5.53	7.48	240	15.15°	83.7
1050	2.02	0.40'	2.45	7.35	241	15.14°	83.7
1054	2.02	0.40'	1.47	7.37	240	15.14°	83.7
1058	2.02	0.40'	1.01	7.44	237	15.13°	83.7

NOT USED

6/2/2010

Reported By: Jess Hocking

Title: Lead Geologist

Date: 6/2/2010

Signature:

Reviewed By: L.D. Walker

Title: Geologist

Date: 7/12/10

Signature:

A-6003-652 (04/03)

WELL DEVELOPMENT AND TESTING DATA

Well Name:	Well ID:	Well Location:	Date:
199-H3-27	C7114	E of Groundwater Warehouse	9-25-09

Reference Measuring Point (unless otherwise noted): TOP OF OUTER CASING (TOC)

Has the well been surveyed? ○ Yes ⊗ No | Does the well have a cement pad? ○ Yes ⊗ No

PART 1

STATIC WATER LEVEL:

Start of Job 44.25

End of Job 44.25

DEPTH TO BOTTOM:

Start of Job 50.0

End of Job 61.9

PART 2

WELL DEVELOPMENT DATA

Pump Model (1-phase, 5-hp) (S.S. impellers)

Intake Depth 55.0' bgs 58 TOC

Starting Turbidity 50.9

Pump Start	Stop	Flow Rate
0931	0949	42.5
0949	1054	37.0

Total Pumped 2806.5

Final Turbidity 2.98

XD SN/Range (PSI) 10415/20

PART 3

INSTANTANEOUS SLUG TEST

Static Water Level (TOC) NA

Transducer Depth 52.3'

Baseline Start

Injection Start

Baseline Start

Withdrawal Start

Slug Volume

XD SN/Range (PSI)

NA

PART 4

Last Recorded Measurements Date: 9-25-09

Current Measurements Date:

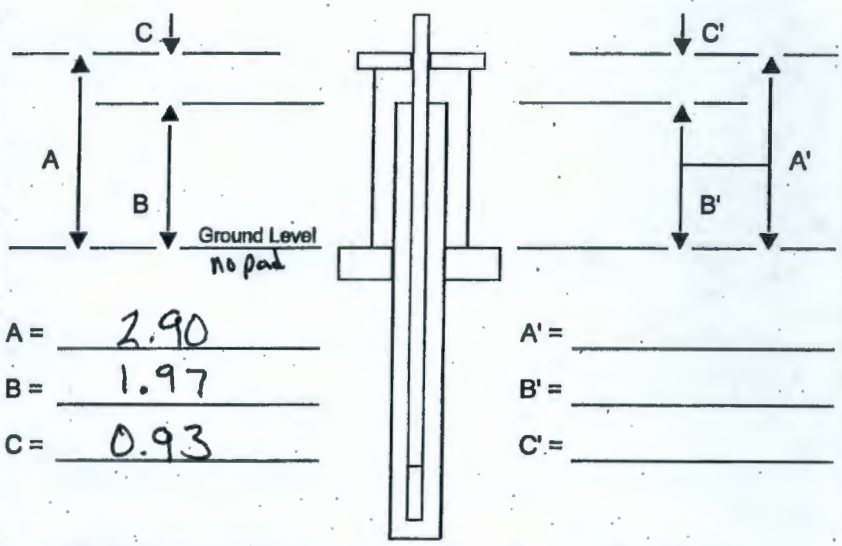

A = 2.90

B = 1.97

C = 0.93

A' =

B' =

C' =

Are there any reference marks on the casing strings? ○ Yes ○ No

PART 5 HERMIT Name: Rocky

COMMENTS:

Drawdown on Test: ~~"WD5"~~ "Idiocracy WD4"

Total Drawdown: 9.1

Recovery on Test: "Idiocracy WD5"

Prepared by (print name):	Signature:	Date:
A. Lantow	Aaron Lantow	9-25-09
Reviewed by (print name):	**Signature:**	**Date:**
L. D. Walker	LD Walker	10-20-09

A-6003-644 (03/03)

FIELD ACTIVITY REPORT - DAILY DRILLING

Page 1 of 2

Date: 9-25-09

Well Name: 199-H3-27 | Well ID: C7114

Location: E of Groundwater Warehouse | Report No.: 5

Start	Finish	Total
Time 0600	Time 12	Time 6:00
Hole Depth/Csg 57.0 / 58.9	Hole Depth/Csg 58.9 / 58.9	Hole Depth/Csg 1.9 / 0.0

Reference Measuring Point: GROUND SURFACE

Casing String No. 1 2 3 4 ____ Rod Size:

See Report No. 1 DTW: 44.25 TOC 41.4 bgs.

Time/Depth From	Time/Depth To	Description of Activities/Operations with Depth (Attach applicable drawings and document straightness test results)
0600		POD on site.
	0730	Tag DTB: 59.9 ~~bgs~~ TOC, 57.0' bgs = 1.9' fill
0730	0745	Bailed well of sed. Sed consists of 30% Colorado Si. Sand ≤ 6-12 mesh.
0745		Tag DTB: 58.9' bgs. "Clean Tag" 70% native sand.
	0850	Install pump. Install intake to ~~54.5'~~ bgs. 55' bgs.
0931		Start Pump Drawdown Test recorded on "WD4" Test. (See pg 2)
		Pump @ 32.5 gpm. → Drawdown past transducer
		@ 0951 slow flow to 37.4 gpm
		@ 0945 Samplers on site. preparing for sampler.
—	1045	Kill pump + Start Rebound Test. "WD6"
	1130	Kill Test "WD5" + Pull equipment from well.
1203	1209	Tag well @ ~~57.3 bgs~~ AK 9-25-09 58.9' bgs.
1209		Tower rig down + Clean site

not used

Reported By: A. Lantow		Reviewed By: L.D. Walker	
Title: Geologist	Date: 9-25-09	Title: Geologist	Date: 10/20/09
Signature: Aaron Lantow		Signature: LD Walk	

A-6003-651 (REV 1)

FIELD ACTIVITY REPORT - DAILY DRILLING

Continuation Page

Page 2 of 2

Date: 9-25-09

Well Name: 199-H3-27 | Well ID: C7114

Location: E of Groundwater Warehouse | Continuation of Report No.: 5

Time/Depth From	Time/Depth To	Description of Activities/Operations with Depth
—	—	HERMIT Name: Rocky | Probe IN: 10415 | Probe Depth: 52.3' bgs | Intake: 55'
—	—	Test # 4 Name: "Idiocracy DW4" | Drawdown | XD: 10.891 | Head: 13.6
—	—	DTB: Toc, bgs | DTW: Toc, bgs | Aquifer Thickness: 14.3'
	—	Calibrate Field Instruments: Pass/fail (~10%-20%)
—	—	Turbidity: Std. 5.62 → Reading 5.62 →
—	—	std 48.9 → Reading 49.2 →
—	—	std 520 → Reading 522 →
—	—	pH : std 7.00 → Reading →
—	—	std 10.00 → Reading 9.710 →
—	—	σ Conductivity: std 142 (mS) → Reading 14.02 (mS) →
0931	—	Pump on

	xD(ft)	NTU	Temp(C°)	DOx (mg/L)	pH (SPU)	σ (mS)	flow (gpm)	Notes:
0935	0.099	50.7	18.5	8.851	7.93	0.416	42.5	
0949	0.06	30.4	19.8	8.74	7.99	0.420	42.0	
0950							37.4	Slow Flow
0951	1.683						37.4	
0953	1.914	21.4	19.8	8.54	7.99	0.411	37.4	
0958	1.898	15.4	19.8	8.61	7.99	0.412	37.4	
1006	1.867	12.2	19.5	8.64	8.00	0.413	37.4	
1014	1.809	8.75	19.8	8.65	8.00	0.416	37.0	
1018	1.800	7.58	20.5	8.52	7.99	0.414	37.0	
1023	1.772	6.55	20.5	8.50	7.99	0.415	37.0	
1031	1.764	~~6.61~~ 4.60	21.0	8.43	7.99	0.415		
1038	1.765	3.32	19.7	8.25	7.98	0.413	37.0	
1043	1.781	2.98	20.7	8.40	7.99	0.415	37.0	
1045	Collect Sample HEIS# B21NB0							
	1.786							
— 1054	Kill Pump + Start Drawdown Test "Idiocracy WD5"							

Reported By: A. Lantow | Reviewed By: L.D. Walker

Title: Geologist | Date: 9-25-09 | Title: Geologist | Date: 10-20-09

Signature: Aaron Lantow | Signature: LD Walker

A-6003-652 (04/03)

WELL DEVELOPMENT AND TESTING DATA

Well Name:	Well ID:	Well Location:	Date:
199-H3-26	C7115	Next to N end of Interim H-R3 P&T	9-22-09

Reference Measuring Point (unless otherwise noted): TOP OF OUTER CASING (TOC)

Has the well been surveyed? ○ Yes ⊗ No | Does the well have a cement pad? ○ Yes ⊗ No

PART 1

STATIC WATER LEVEL:

Start of Job	40.6
End of Job	40.6

DEPTH TO BOTTOM:

Start of Job	55.5
End of Job	55.9

PART 2

WELL DEVELOPMENT DATA

Pump Model (1-phase, 5hp.)(S.S. impellers)

Intake Depth 49.5'

Starting Turbidity 11.3

Pump Start	Stop	Flow Rate
1320	1328	67.3 g/min
1328	1414	16.5 g/min

Total Pumped

Final Turbidity

XD SN/Range (PSI) 10415 / 20psi

PART 3

INSTANTANEOUS SLUG TEST

Static Water Level (TOC)

Transducer Depth 49.43 bgs.

Baseline Start — Not Used

Injection Start

Baseline Start

Withdrawal Start — Not Used

Slug Volume

XD SN/Range (PSI)

PART 4

Last Recorded Measurements Date:

Current Measurements Date: 9/22/09

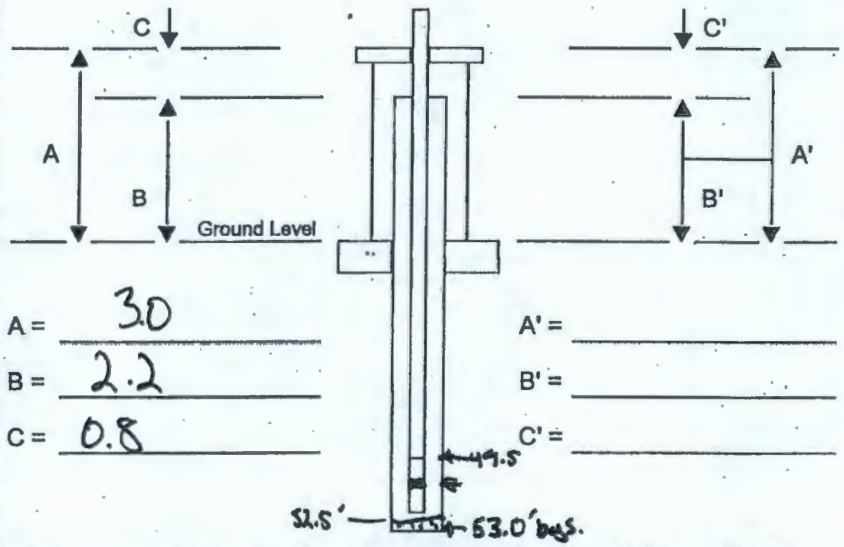

A = 3.0 | A' =

B = 2.2 | B' =

C = 0.8 | C' =

Are there any reference marks on the casing strings? ○ Yes ⊗ No

PART 5

Hermit Name: Rockie

COMMENTS:

Drawdown on Test Qualm ~~WD8~~ WD8

Total Drawdown:

Recharge test Qualm ~~8~~ WD9

Prepared by (print name):	Signature:	Date:
A. Lantan	[signature]	9-22-09
Reviewed by (print name):	**Signature:**	**Date:**
L.D. Walker	[signature]	10-20-09

A-6003-644 (03/03)

FIELD ACTIVITY REPORT - DAILY DRILLING

Page 1 of 2

Date: 9-22-09

Well Name: 199-H3-26

Well ID: C7115

Location: NW. of Pump & Treat Facility (5m)

Report No.: 4

Start	Finish	Total
Time 1130	Time 1600	Time 4.5 hrs
Hole Depth/Csg 52.5 / 53.0	Hole Depth/Csg 052.9 / 53	Hole Depth/Csg 0.4 / 0.0

Reference Measuring Point: GROUND SURFACE

Casing String No. 1 2 3 4 ____ Rod Size:

See Report No. 1

Time/Depth From	Time/Depth To	Description of Activities/Operations with Depth (Attach applicable drawings and document straightness test results)
1130	1200	Set up on site.
1200		Prepare to Develope well. Tag DTW: 37.6' bgs 30.6' TOC
	1300	Install pump + Drop pipe (2" galvanized) to 49.5' (intake)
1300		Transducer to top of pump @ 48.7' bgs
		Begin Test: see pg. 2.
	1345	Samplers on site.
Time	1403	Sample collection HEIS # B21NB1
1414	—	Start recharge test "Qualm WD8" (See pg 2.)
—	1422	- Drillers prepare to extract equipment from well.
1422	1444	Extract equipment from well
1444	1445	Tag DTB: 52.3' bgs = 8" in well
1445	1457	Bail well → Tag 52.90' 0.1' sed. in sump. DTW: 37.6' TOC.
1457	1515	Dewater drum into Purge water truck.
1515	1537	Tower rig down + move to next borehole to construct.
1337	1600	Move to well site C7114.

Not Used AL

Reported By: A. Lantzer

Title: Geologist

Date: 7-22-09

Signature: Aaron Lantzer

Reviewed By: L.D. Walker

Title: Geologist

Date: 10/20/09

Signature: LD Walker

A-6003-651 (REV 1)

FIELD ACTIVITY REPORT - DAILY DRILLING
Continuation Page

Page 2 of 2
Date: 9-22-09

Well Name: 199-H3-26 | Well ID: C7115
Location: NW. corner of Pump & Treat facility | Continuation of Report No.: 4

Time/Depth From	Time/Depth To	Description of Activities/Operations with Depth
—	—	HERMIT Name: Rocky | Probe #: 10415 | Probe Depth: 49.43' bgs. | Intake: 49.5'
—	—	Test # 8 Name: "Qualm WD8" | Drawdown | xD: 8.83' | Head: 11.9'
—	—	DTB: toc, bgs | DTW: toc, bgs | Aquifer length: 12.5'
	—	Calibrate Field Instruments: Pass/fail (~10%-20%)
—	—	Turbidity: Std. → Reading → [illegible]
—	—	std. → Reading → [illegible]
—	—	std. → Reading → [illegible]
—	—	pH : std 7.00 → Reading → [illegible]
—	—	std 10.00 → Reading → [illegible]
—	—	γ Conductivity: std. → Reading → [illegible]
1320	—	Pump on

		xD(ft)	NTU	Temp (C°)	DOx (mg/L)	pH (s.u.)	γ (mS)	flow (gpm)	Notes:
	1325	8.59	11.3	19.7	—	—	0.483	67.3	wide open
	1328	8.67	2.24	20.0	9.03	7.89	0.471	17.0 gpm	Reduce rate for vol. control.
	1333	8.77	1.25	20.6	8.95	7.86	0.468	16.5	
	1338	8.76	1.02	20.7	8.99	7.87	0.470	16.5	
	1343	8.79	1.02	20.6	8.94	8.76	0.471	16.5	
Time	1401	Collect sample B21WB1						16.5	Samplers Collect measurements.
	1415	Start Rebound Test on "Qualm ~~Dat~~ WD9" (#9-2-09)						16.5	
	1422	Kill Test. Drillers Disturbed well.							
		(Return to pg 1)							

Not used
L.P.

Reported By: A. Lantau | Reviewed By: L. D. Walker
Title: Geologist | Date: 9-22-09 | Title: Geologist | Date: 10/20/09
Signature: Aaron Lantau | Signature: [illegible]

A-6003-652 (04/03)

WELL DEVELOPMENT AND TESTING DATA

Well Name:	Well ID:	Well Location:	Date:
199-H1-45	C7477	N. of well C7110	9-28-09

Reference Measuring Point (unless otherwise noted): TOP OF OUTER CASING (TOC)

Has the well been surveyed? ○ Yes ⊗ No | Does the well have a cement pad? ○ Yes ⊗ No

PART 1

STATIC WATER LEVEL:

Start of Job 39.65

End of Job 39.65

DEPTH TO BOTTOM:

Start of Job 55.4

End of Job 59.88

PART 2

WELL DEVELOPMENT DATA

Pump Model (1 Phase, 5hp X 5 impellers

Intake Depth 52.0' bgs 55.0' bgs.

Starting Turbidity 195

Pump Start	Stop	Flow Rate
0928	1005	17.8
1005	1022	63.0

Total Pumped 1729.7

Final Turbidity 0.93

XD SN/Range (PSI) 10415 / 20psi

PART 3

INSTANTANEOUS SLUG TEST

Static Water Level (TOC)

Transducer Depth 51.2

Baseline Start

Injection Start

Baseline Start

Withdrawal Start

Slug Volume

XD SN/Range (PSI)

NA

PART 4

Last Recorded Measurements Date: 9-28-09

Current Measurements Date:

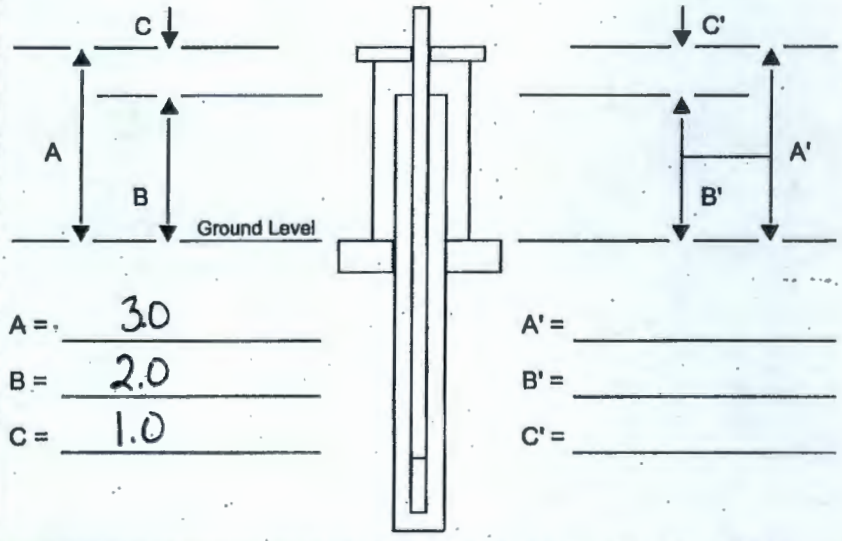

A = 3.0

B = 2.0

C = 1.0

A' =

B' =

C' =

Are there any reference marks on the casing strings? ○ Yes ⊗ No

PART 5 HERMIT Name: ROCKY

COMMENTS:

Drawdown Test recorded on "Idiocracy WD6"
Total drawdown = 0.83'

Recovery Test: "Idiocracy WD7"

Prepared by (print name):	Signature:	Date:
Aaron Lantow	Aaron Lantow	9-28-09
Reviewed by (print name):	**Signature:**	**Date:**
L.D. Walker	LD Walker	10/20/09

A-6003-644 (03/03)

FIELD ACTIVITY REPORT - DAILY DRILLING

Page 1 of 2

Date: 9-28-09

Well Name: 199-H1-45 (H1)

Well ID: C7477

Location: N of C7110

Report No.: 5

Start	Finish	Total
Time 0600	Time 1100	Time 5
Hole Depth/Csg 52.4 / 56.88	Hole Depth/Csg 56.88 / 56.88	Hole Depth/Csg ~~56.8~~ 4.4 / 0.0 (AL 9-28-09)

Reference Measuring Point: GROUND SURFACE

Casing String No. 1 2 3 4 ____ Rod Size:

See Report No. 1 DTW: 37.65

Time/Depth From	Time/Depth To	Description of Activities/Operations with Depth (Attach applicable drawings and document straightness test results)
0600	0650	POD at site.
0650	0710	Geologist on site, awaiting drillers to arrive with waste drums for bailing well.
0710	0730	Drillers arrive on site & set rig up over well.
—	—	Prepare to bail. Geologist prepares for sampling - Calibrate field equipment.
—	0735	(see pg 2)
0735	0830	Bail well to 56.8' bgs.
0830	0928	Install pump & 2" galvanized droppipe. Intake @ 51.5' bgs. → Move pump to 52.0' bgs
0928		Pump on. Drawdown test on HERMIT Name: ROCKY. Test# "Idiocracy WD6"
Time	0825	Samplers on site collecting parameters (see pg 2 for test.)
	1000	Collect sample B21NB2
	1022	Kill pump Record recovery test on "WD7"
1022	1100	Pull pump & equipment from well.
1100	—	Tag well DTB: 59.9 = 56.88
—	1100	Secure site & Depart area for Required meeting in town.

Not Used

Reported By: A. Lanham

Title: Geologist

Date: 9-28-09

Signature: A. Lanham

Reviewed By: C.D. Walker

Title: Geologist

Date: 10/20/09

Signature: CD Walker

A-6003-651 (REV 1)

FIELD ACTIVITY REPORT - DAILY DRILLING
Continuation Page

Page 2 of 2
Date: 9-28-09

Well Name: 199-H1-45 | Well ID: C7477
Location: N. of well C7110 | Continuation of Report No.: 05

Time/Depth From	Time/Depth To	Description of Activities/Operations with Depth
—	—	HERMIT Name: Rocky | Probe #: 10415 | Probe Depth: ~~54.5~~ 51.2 (9-28-09 ok) | Intake: ~~54.5~~ 52.0 bgs (9-28-09)
—	—	Test# __ Name: "Idiocracy WD6" | XDT: 11.47 | Head: 11.8
—	—	DTB: ' Toc, ' bgs | DTW: ' Toc, ' bgs | Aquifer thickness: 14.5' (24.3 gal) (2)
	—	Calibrate Field Instruments: Pass/fail (~10%-20%)
—	—	Turbidity: Std. 5.60 → Reading 5.73 →
—	—	std 48.9 → Reading 49.3 (48.7) → rotate bottle 20° c.c.w.
—	—	std 520 → Reading 523 → 522
—	—	pH : std 7.00 → Reading 7.50 → Retry 6.99 → 7.9 → 6.99
—	—	Temp 28.9° std 10.00 → Reading 9.97 → + std: 4.00 → Reading 3.99
—	—	σ Conductivity: std 1412 → Reading 9.98 ~~1410~~ 1412 → 1404 ok
0928	—	Pump on

	xD(ft)	NTU	Temp(C°)	DOx (mg/L)	pH (SU)	σ (mS)	flow (gpm)	Notes:
0959	11.32	195	17.4	8.55	7.89	0.538	17.9	adjust flow from 39 gpm
0914	11.33	24.1	16.6	8.62	7.88	0.477	17.9	
0920	11.33	7.04	16.7	8.69	7.87	0.474	17.8	
0924	11.320	3.87	16.8	8.62	7.87	0.475	17.8	
0935	11.307	1.80	16.9	8.65	8.65	0.474	17.8	
0948	11.314	1.20	17.6	8.54	7.87	0.474	17.8	
0956	11.322	0.93	17.6	8.56	7.86	0.476	17.8	
1000	Collect sample B21 NB2							
1005	11.322	0.88	17.8	8.50	7.84	0.477	17.8	
1008	10.59	194	17.8	8.62	7.86	~~0.78~~	63 gpm	increase flow AL 9-28-09
1013	10.54	105	17.5	8.60	7.85	0.476	~~68~~ 62.8 gpm	
1021	10.57	37.3	17.9	8.75	7.85	0.476	63 gpm	Tank full Capacity ~2500 gal
1022	~~1022~~	Kill pump Start Recovery test: Idiocracy WD7						Kill Pump
	1024	11.460						monitor Recovery.
	1031	Kill Recovery test						

Reported By: A. Lantow | Reviewed By: L.D. Walker
Title: Geologist | Date: 9-28-09 | Title: Geologist | Date: 10/20/09
Signature: Aaron Lantow | Signature: L.D. Walker

A-6003-652 (04/03)

WELL DEVELOPMENT AND TESTING DATA

Well Name:	Well ID:	Well Location: 100-HR3 OU NW of H Reactor	Date:
199-H1-25	C7478	E: 576279.2 N: 154069.9	5-26-10

Reference Measuring Point (unless otherwise noted): TOP OF OUTER CASING (TOC)

Has the well been surveyed? ○ Yes ● No | Does the well have a cement pad? ○ Yes ● No

PART 1

STATIC WATER LEVEL:

Start of Job 23.51' TOC

End of Job

DEPTH TO BOTTOM:

Start of Job 37.55' TOC

End of Job

PART 2

WELL DEVELOPMENT DATA

Pump Model 5 HP FRANKLIN Electric

Intake Depth 33' TOC (30' bgs)

Starting Turbidity 21.00 NTU

Pump Start	Stop	Flow Rate
1245	1317	71
1317	1324	59
1324	1347	5
1347	1402	71

Total Pumped 3870 gal

Final Turbidity 0.80 NTU

XD SN/Range (PSI) 115276 (30 PSI)

PART 3

INSTANTANEOUS SLUG TEST

Static Water Level (TOC)

Transducer Depth

Baseline Start

Injection Start

Baseline Start

Withdrawal Start

Slug Volume

XD SN/Range (PSI)

OPS 5-26-10

PART 4

Last Recorded Measurements Date: 5/26/10

Current Measurements Date: 5-26-10

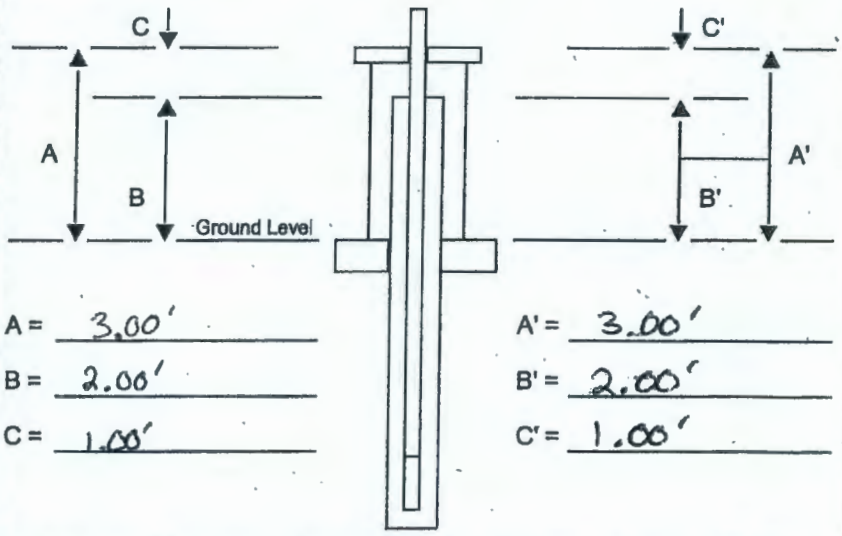

A = 3.00'

B = 2.00'

C = 1.00'

A' = 3.00'

B' = 2.00'

C' = 1.00'

Are there any reference marks on the casing strings? ○ Yes ● No

PART 5

COMMENTS:

Flow Rate change is due to the purge truck becoming too full. Samplers were ready to sample and we didn't want the truck to overflow.
We switched to a second purge truck.

Prepared by (print name):	Signature:	Date:
Julie Johanson	Julie Johanson	5-26-10
Reviewed by (print name):	**Signature:**	**Date:**
L.D. Walker	LD Walker	7-19-10

A-6003-644 (03/03)

FIELD ACTIVITY REPORT - DAILY DRILLING

Page 1 of 2

Date: 5-26-10

Well Name: 199-H1-25 | Well ID: C7478

Location: 100-HR3 OU NW of H Reactor | Report No.: 4

Start	Finish	Total
Time 0940	Time 1411	Time 4 hr. 31 min
Hole Depth/Csg N/A / N/A	Hole Depth/Csg N/A / N/A	Hole Depth/Csg N/A / N/A

Reference Measuring Point: GROUND SURFACE

Casing String No. (1) 2 3 4 ____ Rod Size:
See Report No. 1 Well Development

Time/Depth From	Time/Depth To	Description of Activities/Operations with Depth (Attach applicable drawings and document straightness test results)
0940	09:48	Moved from C7105 to C7478.
0948	0954	Setting up rig over the well.
0954	—	Well tagged at 34.00' TOC, Well depth @ 37.51' TOC,
—	1001	3.51' of sludge at bottom.
1001	1026	Drillers left to pick up equipment for bailing.
1026	1031	Prepare to bail well.
1031	—	Start to bail
—	—	Top of water @ 23.51' TOC
—	1118	Bottom of well tag @ 37.55' TOC
1118	—	Waiting to hear from the BTR if the NCO dispute has been
—	1202	settled to decide what the next action will be.
1202	1226	Setting up for tripping the pump down the well.
1226	—	Started tripping the pump in the well.
—	1228	NCO Samplers arrived
—	1235	pH meter: field calibration failed but is reading at the right
—	—	standard
—	1240	initial XD = 6.95' H_2O
12:45	—	Start pumping
—	—	Flow rate 71 gpm
—	1317	backed down the flow because the tank is almost full (90%)
—	—	to 59 gpm.
—	1324	lowered it to 5 gpm because we are ready to sample and
—	—	we didn't want to overflow the truck.
—	1333	Switched to a different purge truck.

Reported By:		Reviewed By: L.D. Walker	
Title: Julie Johanson	Date: 5-26-10	Title: Geologist	Date: 7/19/10
Signature: Julie Johanson		Signature: D Walker	

A-6003-651 (REV 1)

FIELD ACTIVITY REPORT - DAILY DRILLING

Continuation Page

Page 2 of 2

Date: 5-26-10

Well Name: 199-H1-25 | Well ID: C7478

Location: 100-HR3 OU NW of H Reactor | Continuation of Report No.: 4

Time/Depth From	Time/Depth To	Description of Activities/Operations with Depth
—	1338	NCO official sample time HEIS# B22448, B22431
—	1347	RCT showed up on site, readings at or below background,
—	—	kicked back up to full blast 71 gpm.
—	~~14:02~~	BTR called about lightning strike sighted within 50 miles of site
—	1402	Ordered shut down
1402	—	Stopped Pumping and started a recovery test.
—	1411	BTR confirmed site shutdown. Site put in a secure and safe
		maner. Geologists left site

Initial XD = 6.95 in H_2O

Time	XD	Turb.	Temp.	pH	Cond.	Flow	Draw
1303	0.06	21.00	15.32	7.56	311	71	6.89
1311	0.08	12.40	15.31	—	—	71	6.87
1314	0.07	6.70	15.29	7.60	286	71	6.88
1324	6.50	0.74	15.34	7.49	297*	59	0.45
1341	6.54	0.80	15.34	7.54	272	5	0.41
1355	0.07	0.80	15.31	7.54	293	71	6.88

Not Used
JAJ 5-26-10

Reported By:

Title: Julie Johanson | Date: 5-26-10

Signature: Julie Johanson

Reviewed By: L. D. Walker

Title: Geologist | Date: 7/19/10

Signature: [signature]

A-6003-652 (04/03)

WELL DEVELOPMENT AND TESTING DATA

Well Name:	Well ID:	Well Location:	Date:
199-H1-27	C7480	100-HR-3 OU, NW of H-REACTOR	5-25-2010

Reference Measuring Point (unless otherwise noted): TOP OF OUTER CASING (TOC)

Has the well been surveyed? ○ Yes ● No | Does the well have a cement pad? ○ Yes ● No

PART 1

STATIC WATER LEVEL:

Start of Job	25.72' TOC
End of Job	25.72' TOC.

DEPTH TO BOTTOM:

Start of Job	40.27' TOC
End of Job	40.27' TOC

PART 2

WELL DEVELOPMENT DATA

Pump Model	5-HP FRANKLIN ELECTRIC
Intake Depth	36' TOC (33' bgs)
Starting Turbidity	36.7 NTU

Pump Start	Stop	Flow Rate
1305	1401	24 GPM ~~30 GPM~~ MGN 5/25/10

Total Pumped	1,344 Gal.
Final Turbidity	1.42 NTU
XD SN/Range (PSI)	115276 (30 PSI)

PART 3

INSTANTANEOUS SLUG TEST

Static Water Level (TOC)	
Transducer Depth	
Baseline Start	
Injection Start	
Baseline Start	
Withdrawal Start	
Slug Volume	
XD SN/Range (PSI)	

NOT USED [illegible] 5/25/10

PART 4

Last Recorded Measurements Date:

Current Measurements Date:

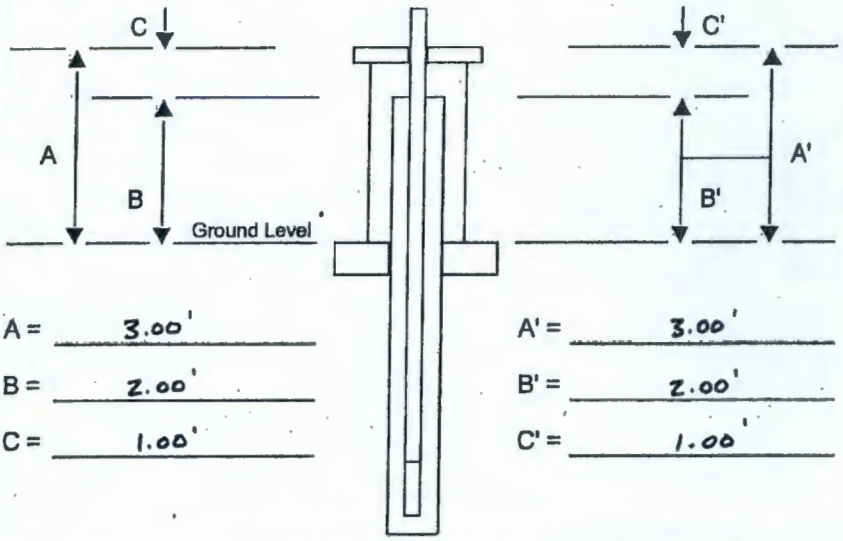

A =	3.00'	A' =	3.00'
B =	2.00'	B' =	2.00'
C =	1.00'	C' =	1.00'

Are there any reference marks on the casing strings? ○ Yes ● No

PART 5

COMMENTS:
ALL WATER PARAMETER INSTRUMENTS WERE "FIELD CALIBRATED" WITHIN NORMAL OPERATING TOLERANCES.

C7480 DRAW TEST = RUN 1305 - 1401.

C7480 RECOVERY TEST = RUN 1401 - 1436

700 LEVEL TROLL = SHELDON

Prepared by (print name):	Signature:	Date:
Jess Hacking	[signature]	5/25/2010
Reviewed by (print name):	**Signature:**	**Date:**
L.D. Walker	[signature]	7/20/10

A-6003-644 (03/03)

FIELD ACTIVITY REPORT - DAILY DRILLING

Page 1 of 2

Date: 5-25-2010

Well Name: 199-H1-27

Well ID: C7480

Location: 100-HR-3 OU, NW of H-REACTOR

Report No.: 5

Start	Finish	Total
Time 1128	Time 1506	Time 3hrs. 38 min.
Hole Depth/Csg N/A / N/A	Hole Depth/Csg N/A / N/A	Hole Depth/Csg N/A / N/A

Reference Measuring Point: GROUND SURFACE

Casing String No. (1) 2 3 4 ____ Rod Size: N/A

See Report No. 1 WELL DEVELOPMENT

Time/Depth From	Time/Depth To	Description of Activities/Operations with Depth (Attach applicable drawings and document straightness test results)
1128	1135	Move development from C7108 to C7480.
1136	1149	Drillers set up development rig over C7480.
	1201	Geo. tags DTW @ 25.72' TOC (22.72' bgs); DTB tagged @
		37.7' TOC (depth to sump = 40.27' TOC; fill = 2.57').
1202	1237	Drillers begin bailing sediment from the well.
1237	1244	Drillers prepare to trip pump down hole; DTB @ 40.27' TOC.
1245	1259	Begin tripping pump down hole.
	1300	Initial XD = 8.04' H_2O; Intake = 36' TOC; Troll = 33' TOC.
1302	1304	Drillers prepare to begin pumping.
1305		Begin pumping; Flowrate = 30 GPM.
	1320	Kicked flow down to 24 GPM (water was drawing past
		troll depth & Geo. was no longer able to monitor draw).
	1335	NCOs on site for H_2O sample.
	1346	NCOs take H_2O samples; HEIS # = BZZY49 & BZZY32.
	1401	Pumping stopped; Recovery test started.
	1436	Recovery test stopped; CHPRC Safety Rep. (Dewitt) & DOE
		FAC. Rep. on site to observe development activities.
1439	1440	Drillers prepare to pull pump from well.
1440	1456	Pump removed from well.
1458		Drillers prepare to break down development rig.
	1506	Drillers break rig down; Geo no longer needed - heads for
		town.

SEE PAGE 2

Reported By: Jess Hocking		Reviewed By: L.D. Walker	
Title: Lead Geologist	Date: 5/25/10	Title: Geologist	Date: 7/20/10
Signature: [signature]		Signature: [signature]	

A-6003-651 (REV 1)

FIELD ACTIVITY REPORT - DAILY DRILLING

Continuation Page

Page 2 of 2

Date: 5-25-2010

Well Name: 199-H1-27

Well ID: C7480

Location: 100-HR-3 OU, NW of H-REACTOR

Continuation of Report No.: 5

Time/Depth From	Time/Depth To	Description of Activities/Operations with Depth
		Initial XD = 8.04' H_2O

TIME	XD	DRAW	TURB.	TEMP.	pH	Cond.	Flow
1315	0.24	7.80	36.7	15.64°	7.49	579	30
1329	2.03	6.01	2.18	15.58°	7.74	305	24
1337	1.94	6.10	1.46	15.55°	7.80	307	24
1344	1.87	6.17	1.33	15.55°	7.60	345	24
1354	1.76	6.28	1.42	15.54°	7.72	309	24

NOT USED

5/25/2010

Reported By: Jess Hocking

Title: Lead Geologist

Date: 5/25/10

Signature:

Reviewed By: L.D. Walker

Title: Geologist

Date: 7/20/10

Signature:

A-6003-652 (04/03)

WELL DEVELOPMENT AND TESTING DATA

Well Name:	Well ID:	Well Location:	Date:
199-H4-70	C7483	550m, NE of H-Reactor,	9-18-09

Reference Measuring Point (unless otherwise noted): TOP OF OUTER CASING (TOC)

Has the well been surveyed? ○ Yes ⊗ No | Does the well have a cement pad? ○ Yes ⊗ No

PART 1

STATIC WATER LEVEL:

Start of Job 49.65 TOC

End of Job 49.65

DEPTH TO BOTTOM:

Start of Job 60.6

End of Job 60.45 BOT → End of Job 09-59-90 ~~60.45 TOC~~

PART 2

WELL DEVELOPMENT DATA

Pump Model S.S. impellers (9 sta) w/ 5 hp (1 phase)

Intake Depth 55.0' TOC, 52' bgs.

Starting Turbidity 370

Pump Start	Stop	Flow Rate
1346	1413	30 gpm
1415	1516	37.5 gpm
0713	0805	~~37.5~~ gpm
0713	0805	26.9 gpm
0805	0822	11.2 gpm

Total Pumped 4109.2

Final Turbidity 0.75

XD SN/Range (PSI) 10415 / 4-X20

PART 3

INSTANTANEOUS SLUG TEST

Static Water Level (TOC) 49.65

Transducer Depth 59.5

Baseline Start

Injection Start

Baseline Start

Withdrawal Start

Slug Volume

XD SN/Range (PSI)

— NA —

PART 4

Last Recorded Measurements Date: ~~NA~~

Current Measurements Date: 9-18-09

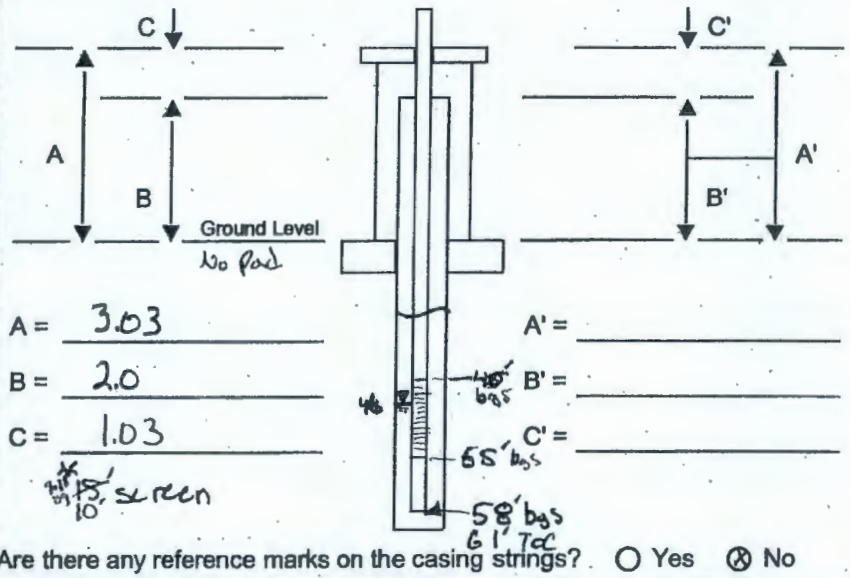

A = 3.03

B = 2.0

C = 1.03

A' =

B' =

C' =

~~2-19-09~~ 10 ft. screen

Are there any reference marks on the casing strings? ○ Yes ⊗ No

PART 5

Hermit Name: BURT

COMMENTS: Top of pump-intake = 2.5', Motor length = 2.5'

Drawdown on Test #4 "Chiawana WD4"

XD_I: ~~9.98~~ 9.918 XD_F: 4.4

Test stopped @ 1516 hrs. → no recovery Test.

Pump off @ 1413 to 1415 on again. → Recorded on Test #4 Continue.

New drawdown Test on "Rocky" Hermit Test # Qualm #WD1

Drawdown @ 37.5 gpm = 4.4

Drawdown @ 26.9 gpm = 3.89

Recovery on Test # Qualm WD2.

Collect water sample @ ~~0950~~ 0920 AL 9-21-09 BR1NB3

Prepared by (print name):	Signature:	Date:
A. Lantow	Aaron Lantow	9-18-09
Reviewed by (print name):	**Signature:**	**Date:**
L.D. Walker	[signature]	10-13-09

A-6003-644 (03/03)

FIELD ACTIVITY REPORT - DAILY DRILLING

Page 1 of 2

Date: 9-18-09

Well Name: 199-H4-70	Well ID: C7483
Location: E. of H-Reactor (500m NE. of H reactor)	Report No.: 05

Start	Finish	Total
Time 1100	Time 1545	Time ~~6.45~~ 6.75 hrs (AA 9-18-09)
Hole Depth/Csg 57.6 / 58.00	Hole Depth/Csg — / 58.00	Hole Depth/Csg / 0.0

Reference Measuring Point: GROUND SURFACE

Casing String No. 1 2 3 4 ____ Rod Size:

See Report No. 1 DTW: 49.65 TOC 46.65 bgs.

Time/Depth From	Time/Depth To	Description of Activities/Operations with Depth (Attach applicable drawings and document straightness test results)
1100		finish Decon. + Move Pumpring + equipment to well site. Geo. follows.
	1140	Tag DTB: 57.6' bgs, 60.6' TOC., DTW: 46.65 bgs, 49.65 TOC.
1140	1238	Preparing pump, pipe, + manifold for test.
1238		Install 5 hp (+phase) (55 impeller) pump to 52' bgs = 3' above base of screen
		-8.4' aquifer, 50% = 4.2' draw Head 46.6-52 = 5.4' below water
	1300	Pump @ depth: 5.6 required. intake 3' below 1st coupler.
1300		Attach flow meter to line (1½" threads.) → not enough parts to plumb
	1345	flow meter.
1345	1346	Prepare to pump. See pg 2 for Test.
1346	~~1410~~ 1347	Start pump + open valve to 50 gpm → Drawdown to pump intake
	1347	within 30 sec. x Dmax drawdown unknown but recorded on data logger Test #4
~~1347~~ ~1411	1410	→ Back flow rate slowly to 30 gpm w/ 3.25' drawdown = 39% drawdown (3.25/8.5)
~1410		- Driller super. stop pump w/out notifying geo. Continue to run Test
	~1415	#4 on data logger. Pump stopped to add flow meter to line.
~1415		Restart Pump + adjust flow to 37.5 gpm → no water chemistry
		collected since Geo figuring out flow meter w/ Drillers Super + BTR.
	1450	figured out flow meter reads in Cu ft/min = $\frac{7.48 \text{ gal}}{\text{ft}^3} \times \text{min} = 37.5 \frac{\text{gal}}{\text{min}}$
1450	1516	Continue to Pump @ 37.5 gpm + Start collecting parameters. 4.4' Drawdown.
	1516	Stop pump + record valve setting + shut valve.
1516		No record recovery test. will record Drawdown / Recovery when
		sample is collected.
		Tag final DTW: 49.6' TOC - No tag to bottom → Equipment in
		well.
	1545	Drillers + Geo + FWS' exit + secure site.

Reported By: A. Lontan		Reviewed By: L. D. Walker	
Title: Geologist	Date: 9-18-09	Title: Geologist	Date: 10/13/09
Signature: Aaron Lontan		Signature: LD Walker	

A-6003-651 (REV 1)

FIELD ACTIVITY REPORT - DAILY DRILLING

Continuation Page (Pump Test)

Page 2 of 2

Date: 9-18-09

Well Name: 199-H4-70

Well ID: C7483

Location:

Continuation of Report No.: 05

Time/Depth From	Time/Depth To	Description of Activities/Operations with Depth
		Pump Test — Hermit name "BURT" → Test# __ Drawdown (sump) "chiawanaWD"
Intake:	55.0' TOC	~~Intake Depth: 9.5 bgs, 64.5 TOC~~ Transducer: 56.5' bgs 59.5 TOC Head above screen base: 8.3
		DTW$_i$: 46.6 bgs, 49.6 TOC DTW$_f$: 41.0 55.2' TOC Pump on: 1346 Pump off: 1516

		NTU	Temp (C°)	pH	DO$_x$ (mg/L)	Cond. (mS)	xD (ft head)	flow (gpm)	Notes
1							9.98		
1346	Start Test	Drew down to pump ~30 sec. Slowly turn flow back from 50 gpm.						50 gpm	50 gpm next day
	1352	370	23.2	7.92	8.64	.415	6.750		30 gpm
	1367	73.5	22.3	7.88	8.75	.410	6.730	30 gpm	
	1402	30.8	21.0	7.85	8.77	.406	6.728	30 gpm	
	1407	6.00	21.9	7.90	8.99	.406	6.735	~30 gpm	
		Stop pump to attach → Restart Pump. → flow meter faulty							Stop + Start pump
	1452	4.20	22.4	7.87	8.17	.405	5.62	37.5 gpm	
	1457	3.30	22.4	7.92	8.47	.404	5.59	37.5 gpm	
	1502	3.01	22.5	7.89	8.41	.406	5.58	37.5 gpm	(stable.)
	1516	Test off. No pump Kill Time.					Total		
							4.4 ft		

Not Used
KJ

Reported By: A. Lantow

Reviewed By: L. S. Walker

Title: Geologist Date: 9-18-09

Title: Geologist Date: 10/13/09

Signature: Aaron Lantow

Signature: L S Walker

A-6003-652 (04/03)

FIELD ACTIVITY REPORT - DAILY DRILLING

Page 1 of 2

Date: 9-21-09

Well Name: 199-H4-70	Well ID: C7483
Location: E. of Hwy. NE. of H Reactor.	Report No.: 06

Start	Finish	Total
Time 0600	Time 1045	Time 4.75
Hole Depth/Csg 57.45 / 58.00	Hole Depth/Csg 57.90' / 58.0'	Hole Depth/Csg 0.55' / 0.0

Reference Measuring Point: GROUND SURFACE

Casing String No. 1 2 3 4 ____ Rod Size: See Report No. 1

Time/Depth From	Time/Depth To	Description of Activities/Operations with Depth (Attach applicable drawings and document straightness test results)
0600	0650	POD on site.
–	0650	Tag DTW: ~~47.7 bgs. 50.7 TOC.~~ 46.7 bgs, ~~AC 9-21-09~~ 49.7 TOC
0650	0713	Calibrate equipment for monitoring water quality. Too cold to calibrate pH + ORP
0713	0800	Turn pump on + collect DTW + XD + flow info.
0800	0805	Kill pump to conserve volume in purge truck → no recovery test
0805	0808	Restart pump for drawdown
0808	0820	Kill pump + Record recovery on Test #WD2. see pg 2. –
0820		Samplers on site + Restart pump → reduce flow to 11.2 gpm @ 0822
		- Samplers collecting parameters prior to sampling. Their ph instrument is also
		taking a long time calibrate + read sample. → likely due to cool morning temp.
	0914	flow rate dropped to 9.5 gpm. → Parameters becoming erratic.
0914		adjust flow back to 11.2 gpm to permit parameters to stabalize.
Time	0920	Collect Sample B21NB3
0921	0945	Kill pump + pull equipment from well.
0945	0950	Tag DTB: 60.45 TOC, 57.45' = 0.55' sed. in sump.
0950		Bail well of fines. sed. consists of 10-15% m, 60% v.f-m. sand, 25%-
	1020	Co. si. Sand < 55 mesh size, larger grains discoidal.
1020		Tag DTB: 57.90' bgs, ~~59.95~~ TOC, ~~AC 9-21-09~~ 60.95. Drillers secure borehole +
	1045	Prepare rig to demobilize + decon equipment. Pump water off of bailed sed.
1045		Move to next borehole.
		Not Used AC

Reported By: A. Lantau		Reviewed By: L.D. Walker	
Title: Geologist	Date: 9-21-09	Title: Geologist	Date: 10/13/09
Signature: Aaron Lantau		Signature: LD Walker	

A-6003-651 (REV 1)

FIELD ACTIVITY REPORT - DAILY DRILLING

Continuation Page

Page 2 of 2

Date: 9-21-09

Well Name: 199-H4-70 | Well ID: C7983

Location: NE of H Reactor | Continuation of Report No.: 06

Time/Depth From	Time/Depth To	Description of Activities/Operations with Depth
—	—	HERMIT Name: ROCKY | Probe IN: 10415 | Probe Depth: 56.5' bgs | Intake: 52.0 bgs
—	—	Test #1 Name: Qualm WD1 | XDI: 10.336 | Head: 8.5
—	—	DTB: ' Toc, ' bgs | DTW: 49.7 ' Toc, 46.7 ' bgs
	—	Calibrate Field Instruments: Pass/fail (~10%-20%)
—	—	Turbidity: Std. 5.6 → Reading → 5.59
—	—	std 48.9 → Reading → 49.0
—	—	std 520 → Reading → 526
—	—	pH : std 7.00 → Reading 7.005 →
—	—	std 10.00 → Reading 10.002 →
—	—	γ Conductivity: std → Reading →
	—	Pump on

	XD(ft)	NTU	Temp(C°)	DOx (mg/L)	pH (std)	γ (mS)	flow (gpm)	Notes:
0713	6.541	17.2			—	—	26.9	Too cold to calibrate pH/γ
0721	6.482	7.95			—	—	26.9	
0725	6.47	3.94			—	—	—	
0730	6.458	2.15			—	—	—	
0735	6.454	2.20			—	—	—	
0740	6.444	1.97			—	—	—	
0745	6.447	1.75	15.3	9.70	7.56	—	—	
0750	6.447	1.45	15.0	9.64	7.59	—	26.9	
0800	Kill pump & start Recovery on Test #2 "Qualm WD2							Recovery test did not start. (no data)
0804	Restart pump		14.9				26.9	Restart pump continue on Test 1
0805		20.8	14.9	9.74	7.62		26.9	
0808	Kill pump & Now start Recovery Test on #2 "Qualm WD2"							Recovery Test
0822	Restart pump for samplers & monitor only NTU							No test ran.
0825	9.45	0.75	15.0	—	—	—	11.2	Samplers collect readings.
0827	Pump off & Start Recovery on Test "Qualm WD3."							
—	—	(Refer Back To pg no. 1)						

Reported By: A. Lantow | Reviewed By: L.D. Walker

Title: Geologist | Date: 9-21-09 | Title: Geologist | Date: 10/13/09

Signature: Aaron Lantow | Signature: LD Walker

A-6003-652 (04/03)

WELL DEVELOPMENT AND TESTING DATA

Well Name:	Well ID:	Well Location:	Date:
199-H4-73	C7484	W. of Have. 500m SE. of H Reactor	9-16-09

Reference Measuring Point (unless otherwise noted): TOP OF OUTER CASING (TOC)

Has the well been surveyed? ○ Yes ○ No | Does the well have a cement pad? ○ Yes ○ No

PART 1

STATIC WATER LEVEL:

Start of Job	48.2
End of Job	48.2

DEPTH TO BOTTOM:

Start of Job	68.75
End of Job	69.20

PART 2

WELL DEVELOPMENT DATA

Pump Model Grundfos 5 hp

Intake Depth I_1: 63.2 (bos), I_2: 54.2 (bos)

Starting Turbidity 256 NTU

Pump Start	Stop	Flow Rate
0931	0940	10.4 gpm
0945	1028	17.9 gpm
1109	1137	15.2 gpm

Total Pumped 1378.4

Final Turbidity lower(I_1): 2.27, upper I_2: 2.91

XD SN/Range (PSI) 1040 / 20 psi

PART 3

INSTANTANEOUS SLUG TEST

Static Water Level (TOC)	
Transducer Depth	
Baseline Start	
Injection Start	N/A
Baseline Start	
Withdrawal Start	
Slug Volume	
XD SN/Range (PSI)	

PART 4

Last Recorded Measurements Date: 9-16-09

~~Current Measurements Date:~~

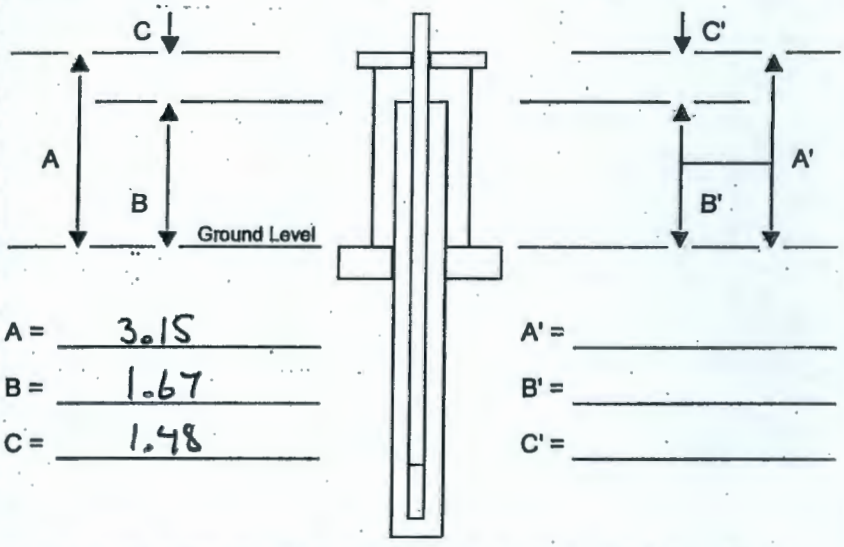

A = 3.15 | A' =

B = 1.67 | B' =

C = 1.48 | C' =

Are there any reference marks on the casing strings? ○ Yes ○ No

PART 5

COMMENTS: Hermit name burst

I_1 (interval one) XD_I: 17.9 XD_f: 17.27 = 1.1' drawdown

Intake: 63.2

Transducer: 66.1

Test #3: Drawdown

Test #4: Recovery

I_2 (interval two)

Intake: 54.2 XD_I: ~~18.2~~ 9-16-09 19.2 XD_f: 18.2

Transducer: 67.7

Drawdown: Test #5

Recovery: Test #6

Prepared by (print name):	Signature:	Date:
A. Lanham	Geologist Aaron Lanham	9-16-09
Reviewed by (print name):	**Signature:**	**Date:**
L.D. Walker	LD Walker	10-12-09

A-6003-644 (03/03)

FIELD ACTIVITY REPORT - DAILY DRILLING

Page 1 of 3

Date: 9-16-09

Well Name: 199-H4-73 | Well ID: C7484

Location: W. of H ave. S-E. of H-Reactor | Report No.: 05

Start	Finish	Total
Time 0600	Time 1400	Time 8
Hole Depth/Csg 65.55 / 66.29	Hole Depth/Csg 66.1 / 66.29	Hole Depth/Csg 0.6 / 0.0

Reference Measuring Point: GROUND SURFACE

Casing String No. 1 2 3 4 ____ Rod Size: See Report No. 1

Time/Depth From	Time/Depth To	Description of Activities/Operations with Depth (Attach applicable drawings and document straightness test results)
0600	0650	POD@Site.
0650		Drillers prepare to develope well.
		- Tag ~~DTB~~ DTW: 48.2 TOC, 45.1 bgs. DTB: 68.75 TOC, 65.55 bgs.
	0732	DTW = 20.4' water column
0732	–	Bail well of fines. no headway. DTB: 68.75'
Time	0845	- RCT on site: readings ≤ Bkgrnd. continue to bail. Tag DTD: 68.85'
–	0917	Set Pump intake to (21+21+21+4.7-2.5)=65.7 ~~62.7~~ intake move to 63.4' bgs. 60.4 TOC
0917	0932	Prep to pump will record drawdown on Test #3 on Hermit name BURT
0932	0945	Turn on pump @ 6.8 gpm → increase flow to 10.4 (@0930 - Samplers on site)
0945	1028	Increase flow to 17.9 gpm
Time	1018	- Collect water sample HEIS # B21NB4 x9 bottles
	1028	Kill pump + Start Recovery test (#4 test on hermit)
1028	1108	Rais pump intake to 54.2' bgs, 51.2' TOC Hermit transducer moved to ~64' bgs.
1108	1137	Start Drawdown test + Pump. Test recorded on Test # 5 on Hermit.
1137		Start Recovery test on #5 test. → Drillers moved transducer while
	1140	preparing to pull pump. during recovery test.
1140	1205	Remove all equipment from well.
1205		Drillers prep to move to next site. Tag DTB: 68.55 TOC, 65.45 bgs.
		Driller disagrees on tag. may be stretched tag line.
		- Geo uses water tager to tag bottom: continue on ~~next pg.~~ pg 3.
		not used

Reported By: A. Lantow		Reviewed By: L.D. Walker	
Title: Geologist	Date: 9-16-09	Title: Geologist	Date: 10/12/09
Signature: Aaron Lantow		Signature: D Walker	

A-6003-651 (REV 1)

FIELD ACTIVITY REPORT - DAILY DRILLING

Continuation Page

Date: 9-16-09

Well Name: 199-H4-73 | Well ID: C7484

Location: W. of H ave. SW. of H-Reactor | Continuation of Report No.: 05

Time/Depth From	Time/Depth To	Description of Activities/Operations with Depth						
Test	#1	Lower aquifer Test: recorder on Test #3 on hermit name Burt						
0931	Pump on	Turbidity (NTU)	PH (PH)	DO (mg/L)	XD (ft)	Temp (C°)	10.4 gpm. Conductivity	
	0940	256	7.77	8.93	17.6	20.1C°	no conductivit measurements-	
~	0945	Turn pump up to 17.9 gpm						Intake:
	0955	4.2	7.76	8.89	17.3	20.1C°		
	1000	3.14	7.77	9.13	17.24	20.0		
	1005	1.84	7.80	9.53	17.29	19.9	(mS)	
	1015	2.27	7.71	9.48	17.24	19.8	523	
Time	1018	Collect water sample HEIS# B21NB4 - XDc 17.27 = 49.35' TOC						
	1028	Begin Recovery Test on Test #4 - Drawdown Total = 1.1'						
	1109	Start Test #5 drawdown. Intake @ 54.2 XDI: 18.28 ft						
	1115	19.5	7.83	8.25	18.3	20.0	XDI.	
	1120	7.83	7.83	8.75	18.34	20.1		
	1125	5.85	7.81	9.20	18.22	20.7		
	1130	4.45	7.82	9.39	18.15	21.8		
	1135	~~4~~ 3.07	7.82	8.99	18.15	21.2		
	1140	2.91	7.80	8.97	18.15	20.3	XDc.	
	1141	Start Recovery Test #6						
		Drillers moved probe → Stop Test						
		Continue to next page.						

Reported By: A. Lanton | Reviewed By: L.D. Walker

Title: Geologist | Date: 9-16-09 | Title: Geologist | Date: 10/12/09

Signature: Aaron Lanton | Signature: [signature]

A-6003-652 (04/03)

FIELD ACTIVITY REPORT - DAILY DRILLING

Continuation Page

Page 3 of 3

Date: 9-16-09

Well Name: ~~199-H6-73~~ 199-H4-73 9-16-09

Well ID: C7484

Location: W. of H ave. SE. of H-Reactor

Continuation of Report No.: 05

Time/Depth From	Time/Depth To	Description of Activities/Operations with Depth
1205	cont.	Tag DTB: 68.55' TOC., 67.04 top of 6" casing, 65.55 bgs.
		well Head Design
		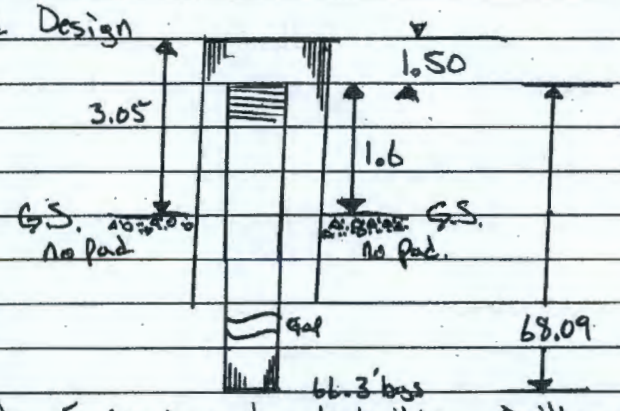
	1215	Driller calls Supervisor to ok bailing. Driller confident that tag is hitting solid surface of well sump.
1245	1350	Bail well of ~~cuttings~~ 9-16-09 sediment.
1350		Move rig to next hole & Set up.
		Tag DTB: 69.2 TOC., 67.7 top of 6" well, 66.1' bgs. (0.19' of sed. in sump) ≈ 0.2' of sand in well.
	1400	Geo & Drillers secure site & exit.

Reported By: D. Lantow		Reviewed By: L.D. Walker	
Title: Geologist	Date: 9-16-09	Title: Geologist	Date: 10/12/09
Signature: Darren Lantow		Signature: L.D. Walker	

A-6003-652 (04/03)

WELL DEVELOPMENT AND TESTING DATA

Well Name:	Well ID:	Well Location:	Date:
199-H4-69	C7485	N-E. of H-Reactor, E. of H-ave.	9-21-09

Reference Measuring Point (unless otherwise noted): TOP OF OUTER CASING (TOC)

Has the well been surveyed? ○ Yes ⊗ No | Does the well have a cement pad? ○ Yes ⊗ No

PART 1

STATIC WATER LEVEL:

Start of Job 49.3' TOC

End of Job 49.2 TOC.

DEPTH TO BOTTOM:

Start of Job 58.5' bgs. 61.5 TOC

End of Job 61.65' TOC.

PART 2

WELL DEVELOPMENT DATA

Pump Model Motor (1-phase, 5hp.) Pump (S.S 50 gpm)

Intake Depth 52' bgs, 55' TOC.

Starting Turbidity

Pump Start	Stop	Flow Rate
1221	1353	26.9

Total Pumped 1990.6 gal

Final Turbidity 3.31

XD SN/Range (PSI) 10415 / 20psi

PART 3

INSTANTANEOUS SLUG TEST

Static Water Level (TOC) 49.3

Transducer Depth 58.5 TOC

Baseline Start

Injection Start

Baseline Start

Withdrawal Start

Slug Volume

XD SN/Range (PSI)

N/A

PART 4

Last Recorded Measurements Date:

Current Measurements Date: 9-21-09

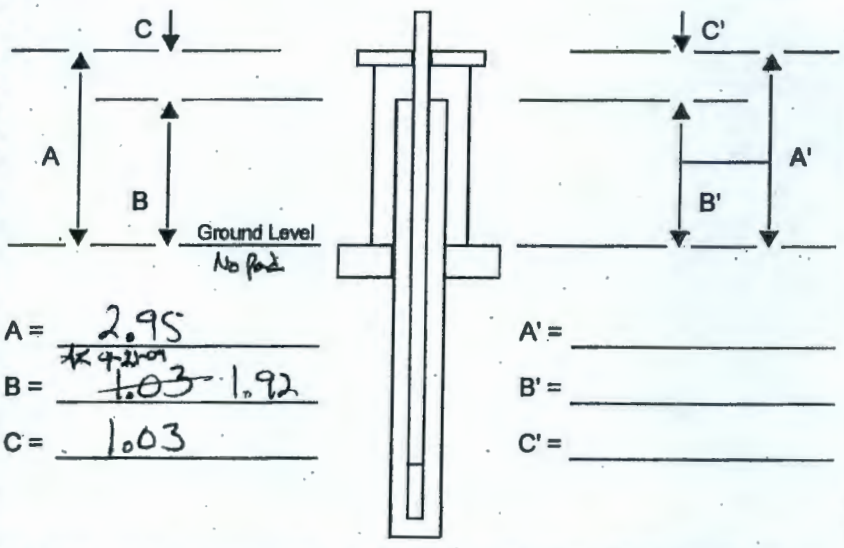

A = 2.95 AK 9-21-09

B = ~~1.03~~ 1.92

C = 1.03

A' =

B' =

C' =

Are there any reference marks on the casing strings? ○ Yes ○ No

PART 5

COMMENTS: Hermit Name B "Rocky"
Drawdown on Test "Qualm DW 3"
Total Drawdown: 5.8'

Recovery on Test "Qualm DW 4" (stop early/Cancel)

Recovery on Test "Qualm DW 5"

Prepared by (print name):	Signature:	Date:
A. Lantow	Aaron Lantow	9-21-09
Reviewed by (print name):	**Signature:**	**Date:**
L.D. Walker	LD Walker	10-14-09

A-6003-644 (03/03)

FIELD ACTIVITY REPORT - DAILY DRILLING

Page 1 of 2

Date: 9-21-09

Well Name: 199-H4-69	Well ID: C7485
Location: NE. of H-Reactor, E. of H Ave.	Report No.: 05

Start	Finish	Total
Time 1130	Time 1530	Time 4 hrs.
Hole Depth/Csg ~~58.65~~ 58.50 / 58.77	Hole Depth/Csg 58.65 / 58.77	Hole Depth/Csg -0.15 / 0.0

Reference Measuring Point: GROUND SURFACE

Casing String No. 1 2 3 4 ____ Rod Size:
See Report No. 1 DTW: 46.3 bgs. 49.3 TOC.

Time/Depth From	To	Description of Activities/Operations with Depth (Attach applicable drawings and document straightness test results)
1130		Rig up on new well. Tag DTB: 61.5 TOC, 58.5 bgs.
		55' - 46.3 = 8.7' aquifer thickness.
		Trip pump + 2" Galvanized ~~[illegible]~~ Drop pipe. Hand in Transducer to 55.5' bgs.
	1217	- Calibrate PH & γ See pg. 2.
1217	1221	Equipment in well & Preparing to pump. Notify BTR to call samplers.
1221	1354	Pump on + Purge @ → 29.9 gpm. Collect parameters.
Time	1350	Collect water sample HEIS #B21NB5
–	1354	Pump off Start recovery test # Qualm DW5 (see pg 2.)
	1355	NCO still needs to collect a confirmatory sample (post sample) quality check
		Geo Calls sampling lead. → Verify issue + notes that sample will not
		be collected + must be noted in sampling paperwork.
1355		Restart pump + Collect sample (confirmatory sample) → parameters are
		unstable eg. above variance of sampling quality. Sampling lead
	1409	gives ok to keep sample set.
1409		Start Recovery test on "Qualm DW5" Test. (see pg. 2)
		- Drillers preparing to bail hole, move rig + Remove equipment from well.
	1439	Stop Recovery test. Drillers Pull Equipment from well.
1439	1453	Tag DTB: 58.65 bgs 61.65' TOC. – 0.12' sed in sump. → No bail
1453		Tower rig down Decon down hole equipment + move to next site.

Reported By: A. Lanter		Reviewed By: L.S. Walker	
Title: Geologist	Date: 9-21-09	Title: Geologist	Date: 10/14/09
Signature: Aaron Lanter		Signature: [illegible]	

A-6003-651 (REV 1)

QTY.	NO. REQ.	DESCRIPTION

NOTES:

1. ALL STRUCTURAL STEEL SHAPES, PLATES & BARS SHALL BE ASTM A-36 AND SHALL HAVE BITUMINOUS COATING.
2. UNLESS OTHERWISE NOTED, ALL PIPE SHALL BE PER CODE 34-9 B-2-37750 SHEET 2.
3. ALL PIPE SUPPORT SLEEVE SHOES & SUPPORT RACKS SHALL BE ANCHORED TO ENCASEMENT BOTTOM W/ 3/4"-13 UNC X 7" LG. HEX HD. MACH. BOLT / NUT & L.W.

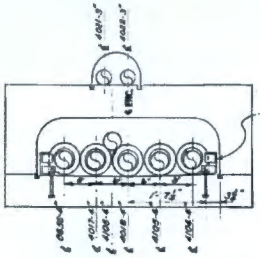

SECTION X-X REF DWG H-2-44820
RESTRAINING PIPE SUPPORT

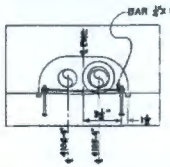

SECTION W-W REF DETAIL
PIPE SUPPORT GUIDE DWG. H-2-44823

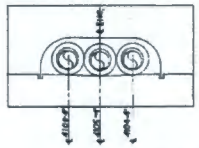

SECTION C-C REF. DWG. H-2-44820
TYPICAL SECTION

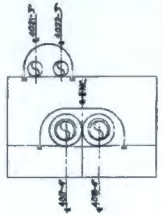

SECTION G-G REF. DWG. H-2-44820 DWG. H-2-44823
TYPICAL SECTION

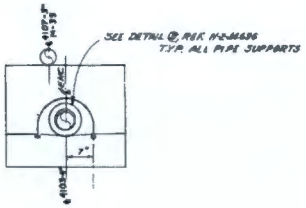

SECTION Y-Y
TYPICAL SECTION

SECTION Z-Z REF. DWG. H-2-44820
TYPICAL SECTION

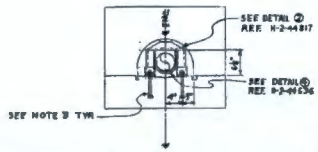

SECTION D-D REF. DETAIL DWG. H-2-44827 & DWG H-2-44778
RESTRAINING PIPE GUIDE

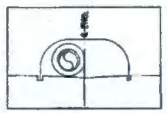

SECTION H-H REF. DETAIL & DWG. H-2-44827

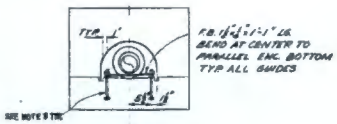

SECTION U-U
PIPE SUPPORT GUIDE

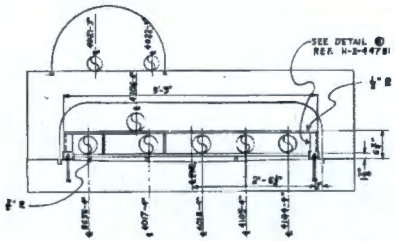

SECTION A-A REF. DETAIL DWG. H-2-44823
PIPE SUPPORT

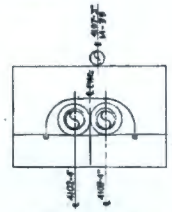

SECTION E-E REF. DWG. H-2-44820
TYPICAL SECTION

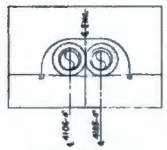

SECTION F-F REF. DWG. H-2-44820
TYPICAL SECTION

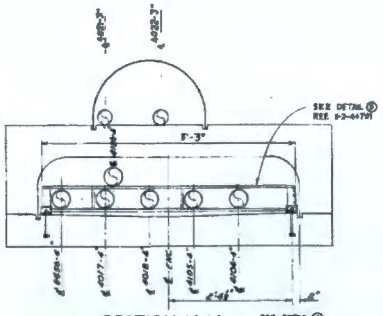

SECTION V-V REF. DETAIL DWG. H-2-44821
PIPE SUPPORT

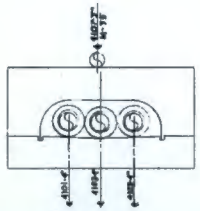

SECTION B-B REF. DWG. H-2-44820
TYPICAL SECTION

NO.	DESCRIPTION	DATE	APPD. BY	PER	DATE
6	CHECKED FOR AS-BUILTS	JWJ 2-21-63	GWL	JWC	2/21

REVISIONS

NO.	DRAWING NO.	DRAWING TITLE
9	H-2-44778	PLAN & PROFILE, LINE "B" 0+65.15
8	H-2-44781	MISC. FABRICATION DETAILS
7	H-2-44817	PROC. WASTE LINES, SECTIONS & DETAILS
6	H-2-44696	WASTE LINE ENC. 3'-0" ANCHOR CL. DETS.
5	H-2-44827	PROC. WASTE LINES, PIPING DETAILS
4	H-2-44821	PROC. WASTE LINES, PIPING DETAILS
3	H-2-44820	PROC. WASTE LINES, DIVERTER TO T.F.
2	H-2-44750	DWG. INDEX
1	HW9-7777	CONST. SPEC.

REFERENCE DRAWINGS

NEXT USED ON H-2-44820, H-2-44821 & H-2-44823

CHECK PRINT — COMMENT PRINT — APPROVED FOR CONST. — APPROVED FOR PURCHASE — APPROVED FOR DESIGN

SCALE 0 — DFT. — ENGLISH — CAD TYPE — CAD FILE — CAD SIZE — CAD REV. — CAD DATE

CAD 370 W40308 — 2-21-63

CLASSIFICATION: NONE

HANFORD ATOMIC PRODUCTS OPERATION
GENERAL ELECTRIC
RICHLAND WASHINGTON
CAL 970 APPROVED
BY [signature] 2-21-63
FOR QUALITY ASSURANCE DATE
APPROVAL INDICATES CONFORMANCE WITH DESIGN CRITERIA BUT DOES NOT EXTEND TO DESIGN ENGINEERING AND JANUS JOINTS (Ref. AEC Manual, Janus Rules Cal. 1)

SOVAY ENGINEERS, INC.
SPOKANE HOUSTON BATON ROUGE

U. S. ATOMIC ENERGY COMMISSION
HANFORD ATOMIC PRODUCTS OPERATION
GENERAL ELECTRIC

PROCESS WASTE LINES SECTIONS AND DETAILS

PUREX WASTE ROUTING

PLANT NO. 241-AX — SUBJECT NO. 04038 8408

H-2-44824

H-2-44824 — SHEET 2 — REV. 7

FIELD ACTIVITY REPORT - DAILY DRILLING
Continuation Page

Page 2 of 2
Date: 9-21-09

Well Name: 199-H4-69 | Well ID: C7485
Location: NE. of H-Reactor, E. of H ave. | Continuation of Report No.: 05

Time/Depth From	Time/Depth To	Description of Activities/Operations with Depth
—	—	HERMIT Name: Rocky | Probe IN: 10415 | Probe Depth: 55.5 bgs | Intake: 52' bgs
—	—	Test # 3 Name: Qual M DW3 | Drawdown | XDI: 9.140 | Head: 5.55
—	—	DTB: 61.5' TOC, 58.5' bgs | DTW: 49.3' TOC, 46.9' bgs | Drawdown stabilized 54.54'
	—	Calibrate Field Instruments: Pass/Fail (~10%-20%)
—	—	Turbidity: Std. 5.6 → Reading 5.57 → $\frac{.03}{5.60}$ = .005 = 0.5% σ
—	—	std 48.9 → Reading 49.3 → $\frac{0.4}{48.9}$ = .008 = 0.8% σ
—	—	std 520 → Reading 522 → $\frac{2}{520}$ = 0.3% σ
—	—	pH : std 7.00 → Reading 7.060 → $\frac{.06}{7.0}$ = 0.8% σ
—	—	std 10.00 → Reading 10.15 → $\frac{.15}{10.00}$ = 1.5% σ
—	—	Conductivity: std 1412 → Reading 1395 (21.6°C) → σ = $\frac{16}{2808}$ | $\frac{16}{1412}$ = .011 = 1.1% σ
1221	—	Pump on

		xD(ft)	NTU	Temp(C°)	DOx(mg/L)	pH(SU)	σ(mS)	flow(gpm)	Notes:
	1225	3.84	139	19.3	10.76	8.43	0.430	29.93	no flow adjustment.
	1230	3.83	51.9	20.5	10.43	8.14	0.416	29.9	
	1235	3.83	21.2	21.3	10.33	8.04	0.404	28.4	
	1245	3.836	5.77	22.4	10.91	7.98	0.407	28.4	
	1300	3.83	4.30	22.7	—	7.95	0.409	—	
	1320	3.85	5.35	20.9	10.35	7.97	0.411	25.4	
	1325	3.83	3.28	21.6	10.50	7.96	0.412	25.4	
	1330	3.830	2.84	21.8	10.78	7.96	0.414	23.9	
	1335	3.840	3.31	21.4	10.49	7.97	0.412	23.9	
time	1354	Pump off Start Rebound Test # Qual M DW4							
	1355	Restart pump. Sampler did not ok & needed one sample							
time	1409	Start Recovery test on "Qual M DW5"							
	1426	8.93	[illegible]						
	1436	8.97							
	1439	Stop Recovery Test.							
		Continue on (Pg. 1)							

Reported By: A. Lantow | Reviewed By: L. D. Walker
Title: Geologist | Date: 9-21-09 | Title: Geologist | Date: 10/14/09
Signature: Aaron Lantow | Signature: [illegible]

A-6003-652 (04/03)

WELL DEVELOPMENT AND TESTING DATA

Well Name:	Well ID:	Well Location:	Date:
199-H4-71	~~C487~~ C7487 (LW 6/2/11)	E. of H Ave. E. of H Reactor	9-17-09

Reference Measuring Point (unless otherwise noted): TOP OF OUTER CASING (TOC)

Has the well been surveyed? ○ Yes ⊗ No | Does the well have a cement pad? ○ Yes ⊗ No

PART 1

STATIC WATER LEVEL:

	Test 1	Test 2
Start of Job	50.1 TOC	50.2 TOC
End of Job	50.2 TOC	50.2 TOC

DEPTH TO BOTTOM:

Start of Job	65.4 TOC	65.7 TOC
End of Job	65.7	65.6 TOC

PART 2

WELL DEVELOPMENT DATA

Pump Model: Grundfoss, 5hp.

Intake Depth: 59.7 bgs / 62.7 ~~TOC~~ bgs AK 9-17-09

Starting Turbidity: 166 / 131

Pump Start	Stop	Flow Rate
0938	1056	16.6
1337	1425	23.1
1426	1469	Recovery

Total Pumped: 2403.6 gal

Final Turbidity: 2.72 / 3.05

XD SN/Range (PSI): 10415 / 20psi

PART 3

INSTANTANEOUS SLUG TEST

Not Used AK

Static Water Level (TOC)	
Transducer Depth	
Baseline Start	
Injection Start	
Baseline Start	
Withdrawal Start	
Slug Volume	
XD SN/Range (PSI)	

PART 4

Last Recorded Measurements Date:

Current Measurements Date:

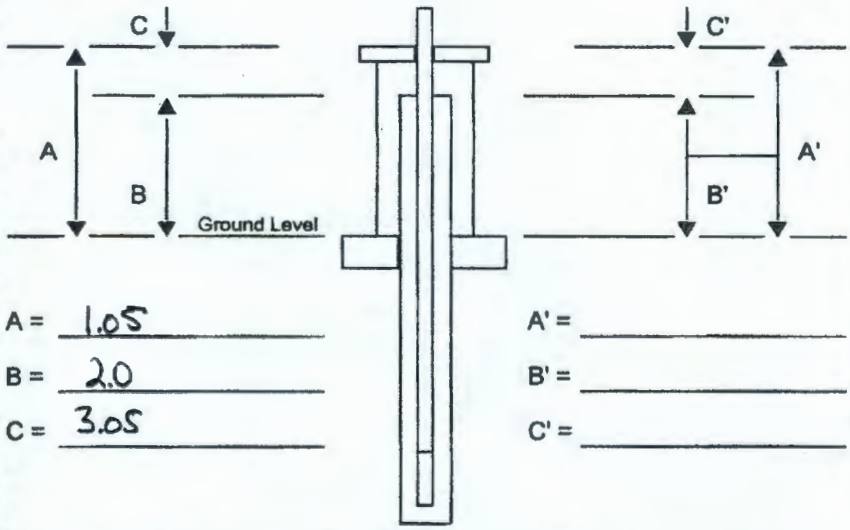

A = 1.05 | A' =

B = 2.0 | B' =

C = 3.05 | C' =

Are there any reference marks on the casing strings? ○ Yes ○ No

PART 5

Hermit name BURT

COMMENTS:

Test #1 "Chiawana WD1": Drawdown & recovery

XD_I: 12.647, XD_f: 10.88 Total = 1.76'

Total Purged 1294.8 gal @ 16.6 gpm

Collect Sample ~~B21NB4 B21~~ B21NB6

Test #2 "Chiawana WD2": High flow Drawdown

XD_I: 9.75 XD_f: 7.20 Intake: 62.7' TOC

Transducer: 59.7 TOC

GPM: 23.1 gpm

~~GPM~~: Total Pumped: 1108.8

Test #3 "Chiawana WD3": Recovery test

Bailed sed from well: DTB (Post Bail) (Final):

Prepared by (print name):	Signature:	Date:
A. Lantau	Geologist for A. Lantau	9-17-09
Reviewed by (print name):	**Signature:**	**Date:**
L.D. Walker		9/12/09

A-6003-644 (03/03)

FIELD ACTIVITY REPORT - DAILY DRILLING

Page 1 of 6

Date: 9-16-09

Well Name: 199-H4-71

Well ID: C7487

Location: ~~W~~E. of H ave. E. of H-Reactor

Report No.: 06

Start	Finish	Total
Time 1330	Time 1600	Time 2.5
Hole Depth/Csg - / 63	Hole Depth/Csg - / -	Hole Depth/Csg - / -

Reference Measuring Point: GROUND SURFACE

Casing String No. 1 2 3 4 ____ Rod Size: See Report No. 1

Time/Depth From	Time/Depth To	Description of Activities/Operations with Depth (Attach applicable drawings and document straightness test results)
1330	-	Pull pump rig over well. Prepare for development.
-	-	-DTW: 50.1 TOC, 47.15 bgs. = 15.5' water
-	1346	-DTB: 65.4 TOC, 62.45 bgs + 69.3' ~~to~~ Top of 6" casing.
1346	-	Installing 5 hp. pump (grundfoss) + 21+21+21' Drop pipe. (3/4") galvanized steel
-	1600	Set pump 0.5' off of bottom. intake @ base of screen.
1600	TIME	Secure site Drillers + Geo. exit area.

Not Used

Reported By: A. Lantow		Reviewed By: L.D. Walker	
Title: Geologist	Date: 9-16-09	Title: Geologist	Date: 10/12/09
Signature: Aaron Lantow		Signature: [signature]	

A-6003-651 (REV 1)

FIELD ACTIVITY REPORT - DAILY DRILLING

Page 1 of 3

Date: 9-17-09

Well Name: 199-H4-71	Well ID: C7487
Location: E. of H ave. ~500m NE. of H-Reactor	Report No.: 07

Start	Finish	Total
Time 0600	Time 1545	Time 9.25
Hole Depth/Csg 62.45 / 63.09 bgs	Hole Depth/Csg 62.60 / 63.09	Hole Depth/Csg ~0.5' / 0.0

Reference Measuring Point: GROUND SURFACE

Casing String No. 1 2 3 4 _____ Rod Size:
See Report No. 1

Time/Depth From	Time/Depth To	Description of Activities/Operations with Depth (Attach applicable drawings and document straightness test results)
0600	0700	Arrive on site with drillers. BTR at stand down safety meeting.
0700	0800	P.O.D. @ drill site.
0830	—	Drillers retreiving equipment. Tag DTW: 50.1 TOC, 47.2 bgs
—		Tag DTB: 65.4 TOC, 62.45 bgs, 64.3' TOC(6")
"		Check calibration of samplline equipment
		PH std Read | conductivity std µS | Set Pump intake @ 59.7 bgs.
		7.00 - 6.69 | 1405(std) - 1392(Read)
		10.00 - 10.08 | 1412(std) - 1387(read)
0938		Start Pump & Record Drawdown on Test #1 "Chiawana WD1"
		Pump @ 16.6 gpm. - Samplers onsite. - Geo taking parameters
TIME	1045	Collect water sample (B21NB6) VOC/SVOC x9 bottles
-	1109	Continue to run Test #1 on hermit. (Pump off @ 1109)
-	1109	Test #2 failed to run.
1109	1115	Prepare to pull pump. - Prepare Purgewater truck for mobility
1115	1135	Pull pump + Drop pipe. Tag DTB (62.7' bgs.)
1135	1200	Prepare pump to be changed impellers. Note: all impellers rated for (5-13 gpm)
1200		Change out impellers on pump to (35 gpm rating).
	1245	Measure Pump & new stages. + Pump 1 2.5 2.6 Total = 5.1'
1245	1310	Set Pump @ (21+21+21+2.5-6.3) = 59.2' bgs. 62.2' TOC ← Intake
1310 →	1310	Transducer @ 56.7 bgs. DTW: 50.23 TOC = ~~55.23~~ 53.23
1310	1337	Prepare for Drawdown Test + Sustainability test. (See pg 2.)
1337	1426	Start Pump @ 23 gpm Record on test # "WD2"
1426		Start Recovery Test

Reported By: A. Lanham		Reviewed By: L.A. Walker	
Title: Geologist	Date: 9-17-09	Title: Geologist	Date: 10/12/09
Signature: A. Lanham		Signature: LA Walker	

A-6003-651 (REV 1)

FIELD ACTIVITY REPORT - DAILY DRILLING
Continuation Page

Page 2 of 3
Date: 9-17-09

Well Name: 199-H4-71 | Well ID: C7487
Location: E. of H ave. E. of H-Reactor | Continuation of Report No.: 07

Time/Depth From	Time/Depth To	Description of Activities/Operations with Depth					
		Pump Test / Aquifer development					
0938		Start Test + pump @ 16.6 gpm (start rate slower then raised to 16.6)					
		NTU	PH	Temp (°C)	DOx (mg/L)	Conductivity (mS) AF 9-17-09	XD
0935	~~0945~~	166					12.647 XD_I Pre-pump.
	0950	166	7.85	20.7	7.06	Error	11.14
	1000	28.0	8.03	20.6	7.83		10.98
	1005	34.1	8.05	20.5	8.65	0.442.	10.91
	1015	17.9	8.01	20.5	8.54	0.442	10.907
	1020	7.27	8.05	20.4	8.45	0.443	10.913
	1025	3.69	8.06	21.0	8.65	0.442	10.879 (1.8' draw)
	1030	2.12	8.05	21.3	8.46	0.439	10.870
	1045	2.22	8.05	20.3	8.60	0.440	10.867
Time AF 9-17-09 ~~1056~~	1045	Collect H_2O Sample HEIS# B21NB6 x 9 bottles					XD_f = 10.882
	1056	Pump off. Start Recovery Test #2 "Chiawanas WD2"					
1056	-	Recovery test did not start. monitor recovery on Test #1 (Probably un-usfull)					
-	1109	- Talk w/ BTR + Samplers → Concurance on collection of					
-	-	water sample before increasing pump size. - Stop Test #1 @ 1109					
1310		Test #2 "Chiawanis WD2"					
		Pump @ 62.2' bgs, 65.2 TOC / Pump is 5 hp w/ (30 gpm) 9 stage w/ S.S. impellers.					
		XD_I: 9.75' Transducer set @ 56.7' bgs., 59.7 TOC.					
1337	—	Pump on @ 23. gpm					XD_I = 9.75
—	—	NTU	pH	T (°C)	DOx (mg/L)	Conductivity (mS)	XD
	1345	131	8.01	25.6	7.12	~~.467~~ .437	7.23
	1350	22.4	8.06	22.4	8.44	.437	7.27
	1355	8.32	8.06	22.3	8.05	.439	7.24
	1400	5.44	8.05	21.3	8.37	.438	7.24
	1405	4.21	8.05	21.3	8.43	.440	7.22
	1410	2.79	8.05	21.5	8.43	.440	7.21

Reported By: A. Lantow | Reviewed By: L. D. Walker
Title: Geologist | Date: 9-17-09 | Title: Geologist | Date: 10/12/09
Signature: [signature] | Signature: [signature]

A-6003-652 (04/03)

FIELD ACTIVITY REPORT - DAILY DRILLING
Continuation Page

Page 3 of 3

Date: 9-17-09

Well Name: 199-H4-71 | Well ID: C7487

Location: See pg 1. | Continuation of Report No.: 07

Time/Depth From	Time/Depth To	Description of Activities/Operations with Depth
		NTU / PH / T(C°) / DO (mg/L) / Conductivity (mS) / XD
		3.05 / ~~8.58~~ AZ 9-17-09 / 22.1 / 8.58 / .439 / 7.22 → Developed.
		8.06
1420	1425	Recovery Test on #"WD3" - Turn Pump off →
1425	–	Test gets start. → Restart Pump + allow draw → (XDf = 7.20 52.7' TOC)
1425	–	Restart Test #"WD3" + Kill pump.
–	–	(Recovery Test) → Drillers preparing to pull pump.
		@1430 BTR calls science lead to see if 25 is enough flow.
	1440	Science lead orders higher flow rate.
14[illegible]		Continue Recovery test. Drillers reconfigure manifold to achieve higher
	1459	Kill Recovery test. flow.
1459		~~Pull transducer.~~ AZ 9-17-09 Prepare to try new manifold + larger hose to
		achieve higher flow rate.
1514		Turn on pump. 42.8 gpm. 5.5' drawdown.
	1545	Tag: DTB: 62.6 bgs 65.6 TOC - Pull pump + Equipment from well.
1545		Secure well Site + Exit zone.

Not Used

Reported By: A. Lantow		Reviewed By: L.D. Walker	
Title: Geologist	Date: 9-17-09	Title: Geologist	Date: 10/12/09
Signature: Aron Lantow		Signature: [illegible]	

A-6003-652 (04/03)

FIELD ACTIVITY REPORT - DAILY DRILLING

Page 1 of 1

Date: 9-18-09

Well Name: 199-H4-71 | Well ID: C7487

Location: E. of Hove. E. of H-Reactor | Report No.: 08

Start	Finish	Total
Time 0600	Time 1030	Time 4.5
Hole Depth/Csg 62.60 / 63.09	Hole Depth/Csg 62.7 / 63.09	Hole Depth/Csg ~0.1 / 63.09

Reference Measuring Point: GROUND SURFACE

Casing String No. 1 2 3 4 ____ Rod Size:
See Report No. 1 DTW: 62.6' bgs, 65.06 TOC

Time/Depth From	Time/Depth To	Description of Activities/Operations with Depth (Attach applicable drawings and document straightness test results)
0600	0715	POD @ ground water office. → Cover changes in Hosp.
0715	0815	Drillers to site & preparing to continue develope well @ higher flow rate.
0815	—	Science Lead orders larger flow rate than what has previously been
		performed at this well. Drill manager runs out to procure larger pipe
	0840	to yield greater flow. → Drillers begin to bail well. Bail weight >200 lbs.
0840		Use sand pump ~~11.6~~ 13.00' long x 5½" OD, 3½" ID (~~11.6~~ 9-18-09 long closed)(21.0' open)
	0901	- Sand pump will not extend/open. → work on sand pump. (8' slide.)
0901	0910	Check pump to make sure it slides closed freely.
0910	0920	- Tape shackle to protect screen. - DOE. contractor Representatives on site.
0920		Bail well. ~~+ Tag~~ AL 9-18-09 @0930 Bail hung on plunger + fell to bottom of well ~2'
		- Tag DTB: 62.5' bgs. ~0.5' → Continue to bail → M.T. → M.T. →
	0954	- Tag DTB: 62.7' bgs ~0.3' sed. in sump. Bailer brought up ~~0.5~~ AL 9-18-09 0.5 v.f. sand + Silt. (0.5 gal)
0954		Move to next hole.

Not Used

Reported By: A. Lontour | Reviewed By: L.D. Walker

Title: Geologist | Date: 9/18/09 | Title: Geologist | Date: 10/2/09

Signature: Aaron Lontour | Signature: LD Walker

A-6003-651 (REV 1)

WELL DEVELOPMENT AND TESTING DATA

Well Name:	Well ID:	Well Location:	Date:
199-H4-72	C7488	600-ME of H Reactor 199-H4-72	9-22-09

Reference Measuring Point (unless otherwise noted): TOP OF OUTER CASING (TOC)

Has the well been surveyed? ○ Yes ⊘ No | Does the well have a cement pad? ○ Yes ⊘ No

PART 1

STATIC WATER LEVEL:

Start of Job	~~45.9~~ 45.8
End of Job	~~45.8~~ 45.7

DEPTH TO BOTTOM:

Start of Job	60.6
End of Job	60.7 → bail → 60.9

PART 2

WELL DEVELOPMENT DATA

Pump Model	1-phase, 5hp, S.S. impeller
Intake Depth	52' bgs 55' TOC
Starting Turbidity	129

Pump Start	Stop	Flow Rate
~~0750~~	~~0925~~	~~9-22-09~~
0750	0820	37.0
0820	0908	15.0
0908	0925	37.4

Total Pumped	2465 gal
Final Turbidity	2.92
XD SN/Range (PSI)	10415 / 20psi

PART 3

INSTANTANEOUS SLUG TEST

Static Water Level (TOC)	45.8
Transducer Depth	58.5 bgs.
Baseline Start	Not Used
Injection Start	
Baseline Start	
Withdrawal Start	
Slug Volume	
XD SN/Range (PSI)	

PART 4

Last Recorded Measurements Date: 9-22-09

Current Measurements Date:

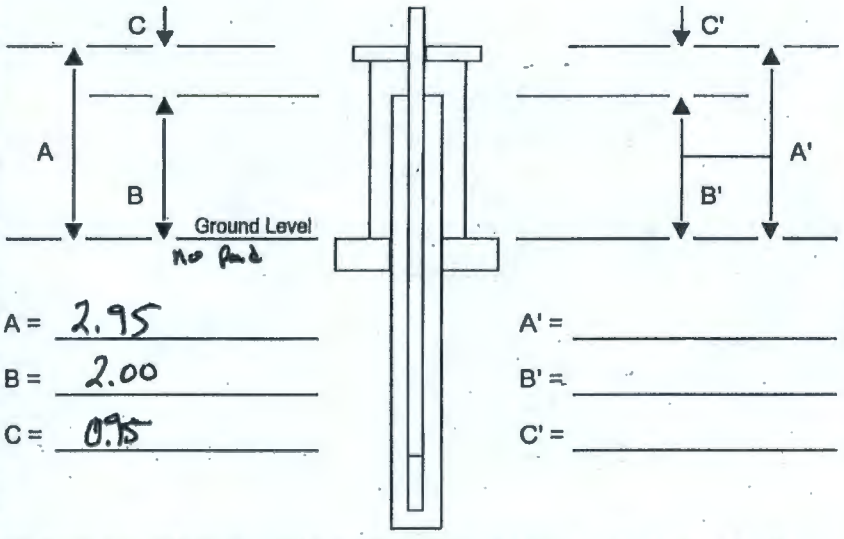

A =	2.95	A' =	
B =	2.00	B' =	
C =	0.95	C' =	

Are there any reference marks on the casing strings? ○ Yes ○ No

PART 5

HERmit Name: Rocky

COMMENTS:

Drawdown Test #"Qualm DW6" / Aquifer length: 12.2

Total drawdown 8.76, = 71% of aquifer

Recovery: Test #"Qualm DW7"

Prepared by (print name):	Signature:	Date:
A. Lantzer	Aaron Lantzer	9-22-09
Reviewed by (print name):	**Signature:**	**Date:**
L.D. Walker	L.D. Walker	10-20-09

A-6003-644 (03/03)

FIELD ACTIVITY REPORT - DAILY DRILLING

Page 1 of 2

Date: 9-22-09

Well Name: 199-H9-72	Well ID: C7488
Location: ~500m E. of H-Reactor	Report No.: 3

Start	Finish	Total
Time 0600	Time 1130	Time 5.5
Hole Depth/Csg 57.6 / 58.07	Hole Depth/Csg 57.9 / 58.07	Hole Depth/Csg ~0.3' / 0.0

Reference Measuring Point: GROUND SURFACE

Casing String No. 1 2 3 4 ____ Rod Size: See Report No. 1

Time/Depth From	Time/Depth To	Description of Activities/Operations with Depth (Attach applicable drawings and document straightness test results)
0600	0630	POD on site.
0630	—	Drillers tower rig up. Install pump to 52' bgs. (intake depth)
—	0750	DTW: 45.8 TOC, 43.8' bgs. ~12.2' aquifer = 9.2' head above intake
0750	—	Start Drawdown @ 37 gpm Record on Hermit Nore Rocky Test Quick DWG
Time	0853	Collect water sample B21NB8 (See pg 2) AK 9-22-09
—	0925	Stop Drawdown Test & Start Rebound Test (see pg 2.)
0925	—	Run rebound test. Drillers prepare to ~~bail~~ pull equipment
—	0957	from well + Bail.
0957	1012	Pull Pump, 2" Drop pipe + pressure transducer.
1012	1015	Tag DTB: 60.6' TOC 57.7' bgs. ~0.37' sed.
1015	—	Bail well. sed is of 90% mafic f-m. sand, 10% < #6 mesh si. Sand.
—	1048	4 bails loads. Tag DTB: 57.8' bgs. → 57.9' bgs. = 0.17' remain in sump.
1048	1100	Decant remaining purge water to truck.
1100		Demobilize to next site.

Reported By: A. Lanton		Reviewed By: L.D. Walker	
Title: Geologist	Date: 9-22-09	Title: Geologist	Date: 6/2/11
Signature: Aaron Lanton		Signature: [signature]	

A-6003-651 (REV 1)

FIELD ACTIVITY REPORT - DAILY DRILLING
Continuation Page

Page 2 of 2
Date: 9-22-09

Well Name: 199-H4-72 | Well ID: C7488
Location: 500m E. of H Reactor | Continuation of Report No.: 3

Time/Depth From	Time/Depth To	Description of Activities/Operations with Depth
—	—	HERMIT Name: Rocky | Probe #: 10415 | Probe Depth: 58.5 bgs | Intake: 52' bgs
—	—	Test # 6 Name: Qualm WD 6 | Drawdown | XDT: 12.35' | Head: 9.2
—	—	DTB: 60.6 TOC, 57.6 bgs | DTW: 45.8 TOC, 42.8 bgs | ← Start of Job.
	—	Calibrate Field Instruments: Pass/Fail (-10%-20%)
—	—	Turbidity: Std. → Reading →
—	—	std → Reading →
—	—	std → Reading →
—	—	pH : std 7.00 → Reading 7.06 → ok
—	—	std 10.00 → Reading 10.04 → ok
—	—	Conductivity: std → Reading →
0750	—	Pump on

		xD(ft)	NTU	Temp(C°)	DOx(mg/L)	pH(SU)	σ(mS)	flow(gpm)	Notes:
	0800	4.503	[illegible]	15.7	9.45	7.49	0.432	37.4	
	0805	3.899	66.5	16.8	9.29	7.95	0.432	37.0	
	0813	3.665	20.6	17.5	10.24	7.99	0.429	37.0	
	0820	3.627	7.66	17.8	—	8.01	0.429		
	0832	9.79	3.91	17.9	10.04	8.02	0.427	17.0	Turn flow down to permit more time for sampling.
	0838	9.71	30.9	18.0	9.03	7.98	0.427	14.9	Further reduce.
	0849	9.767	5.82	17.9	9.42	7.98	0.43	14.5	
	0900	9.8	5.09	17.9	—	—	—	14.9	NCO's collect parameters
	0905	9.79	2.92	17.9	9.37	7.98	0.429	14.9	Post sample parameter
0853	Time	Collect Sample B21NB8				→		→	Collect sample.
	0908	9.85	—	—	—	—	—	~~37.4~~ 28	increase flow
	0911	3.607	19.3	17.8	9.34	8.01	0.428	37.4	increase flow
	0916	3.604	11.3	18.1	11.60	8.02	0.427	37.4	
	0924	3.59	8.49	18.0	11.91	8.01	0.428	37.4	
Pump off →	0925	Rebound Test Qualm WD7				→		→	Rebound Test
		8.76 Drawdown Total					gpm $\bar{x}$ = 32.2 σ^2=5.2 σ=2.2		
	0935	12.08					47min @ 37.0 gpm		

Reported By: A. Lantow | Reviewed By: L.A. Walker
Title: Geologist | Date: 9/22/09 | Title: Geologist | Date: 10/20/09
Signature: Aaron Lantow | Signature: LA Walker

A-6003-652 (04/03)

FIELD ACTIVITY REPORT - DAILY DRILLING
Continuation Page

Date: 9-21-09

Well Name: 199-H4-69 | Well ID: C7485

Location: NE. of H-Reactor, E. of H ave. | Continuation of Report No.: 05

Time/Depth From	Time/Depth To	Description of Activities/Operations with Depth
—	—	HERMIT Name: Rocky | Probe #: 10415 | Probe Depth: 55.5 bgs | Intake: 52' bgs
—	—	Test # 3 Name: Qual M DW3 | Drawdown | XDT: 9.140 | Head: 5.55
—	—	DTB: 61.5' Toc, 58.5' bgs | DTW: 49.3' Toc, 46.9' bgs | Drawdown stabilized 54.54'
	—	Calibrate Field Instruments: Pass/fail (~10%-20%)
—	—	Turbidity: Std. 5.6 → Reading 5.57 → $\frac{.03}{5.60}$ = .005 = 0.5% σ
—	—	std 48.9 → Reading 49.3 → $\frac{0.4}{48.9}$ = .008 = 0.8% σ
—	—	std 520 → Reading 522 → $\frac{2}{520}$ = 0.3% σ
—	—	pH : std 7.00 → Reading 7.060 → $\frac{.06}{7.0}$ = 0.8% σ
—	—	std 10.00 → Reading 10.15 → $\frac{.15}{10.00}$ = 1.5% σ
—	—	γ Conductivity: std 1412 → Reading 1395 (21.6°C) → σ = $\frac{16}{2808}$ / $\frac{16}{1412}$ = .011 = 1.1% σ
1221	—	Pump on

	XD(ft)	NTU	Temp(C°)	DOx (mg/L)	pH (std)	γ (mS)	flow (gpm)	Notes:
1225	3.84	139	19.3	10.76	8.43	0.430	29.93	no flow adjustment.
1230	3.83	51.9	20.5	10.43	8.14	0.416	29.9	
1235	3.83	21.2	21.3	10.33	8.04	0.404	28.4	
1245	3.836	5.77	22.4	10.91	7.98	0.407	28.4	
1300	3.83	4.30	22.7	—	7.95	0.409	—	
1320	3.85	5.35	20.9	10.35	7.97	0.411	25.4	
1325	3.83	3.28	21.6	10.50	7.96	0.412	25.4	
1330	3.830	2.84	21.8	10.78	7.96	0.414	23.9	
1335	3.840	3.31	21.4	10.49	7.97	0.412	23.9	
time 1354	Pump off Start Rebound Test # Qual M DW4							
1355	Restart pump. Sampler did not ok & needed one sample							
time 1409	Start Recovery test on "Qual M DW5"							
1426	8.93							
1436	8.97							
1439	Stop Recovery Test.							
	Continue on (Pg. 1)							

Reported By: A. Lantow | Reviewed By: L.A. Walker

Title: Geologist | Date: 9-21-09 | Title: Geologist | Date: 10/14/09

Signature: Jason Lantow | Signature: [signature]

A-6003-652 (04/03)

WELL DEVELOPMENT AND TESTING DATA

Well Name:	Well ID:	Well Location:	Date:
199-H4-71	~~C4487~~ C7487 (LW 6/2/11)	E. of H Ave. E. of H Reactor	7-17-09

Reference Measuring Point (unless otherwise noted): TOP OF OUTER CASING (TOC)

Has the well been surveyed? ○ Yes ⊗ No | Does the well have a cement pad? ○ Yes ⊗ No

PART 1

STATIC WATER LEVEL:

	Test 1	Test 2
Start of Job	50.1 TOC	50.2 TOC
End of Job	50.2 TOC	50.2 TOC

DEPTH TO BOTTOM:

Start of Job	65.4 TOC	65.7 TOC
End of Job	65.7	65.6 TOC

PART 2

WELL DEVELOPMENT DATA

Pump Model: Grundfoss, 5hp.

Intake Depth: 59.7 bgs / 62.7 ~~TOC~~ bgs AZ 9-17-09

Starting Turbidity: 166 / 131

Pump Start	Stop	Flow Rate
0938	1056	16.6
1337	1425	23.1
1426	1469	Recovery

Total Pumped: 2403.6 gal

Final Turbidity: 2.72 / 3.05

XD SN/Range (PSI): 10415 / 20psi

PART 3

INSTANTANEOUS SLUG TEST

Not Used

Static Water Level (TOC)	
Transducer Depth	
Baseline Start	
Injection Start	
Baseline Start	
Withdrawal Start	
Slug Volume	
XD SN/Range (PSI)	

PART 4

Last Recorded Measurements Date:

Current Measurements Date:

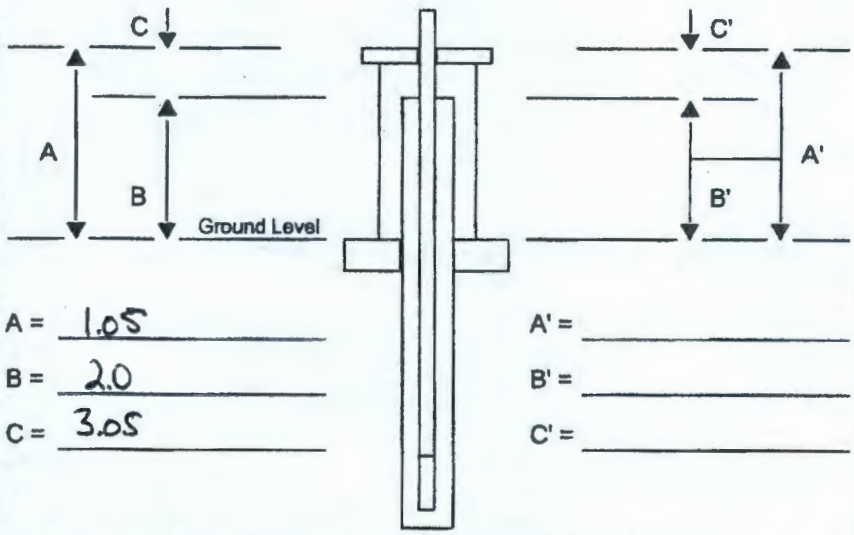

A = 1.05 | A' =

B = 2.0 | B' =

C = 3.05 | C' =

Are there any reference marks on the casing strings? ○ Yes ○ No

PART 5

Hermit name BURT

COMMENTS:

Test #1 "Chiawana WD1": Drawdown & recovery

XD_I: 12.647, XD_f: 10.88 Total = 1.76'

Total Pumped 1294.8 gal @ 16.6 gpm

Collect Sample ~~B21NB4~~ B21NB6

Test #2 "Chiawana WD2": High flow Drawdown

XD_I: 9.75 XD_f: 7.20 Intake: 62.7' TOC

GPM: 23.1 gpm Transducer: 59.7 TOC

~~GPM~~: Total Pumped: 1108.8

Test #3 "Chiawana WD3": Recovery test

Bailed sed from well: DTB (Final Post Bail):

Prepared by (print name):	Signature:	Date:
A. Lantzau	Geologist for A. Lantzau	9-17-09
Reviewed by (print name):	**Signature:**	**Date:**
L.D. Walker		9/12/09

A-6003-644 (03/03)

FIELD ACTIVITY REPORT - DAILY DRILLING

Page 1 of 6

Date: 9-16-09

Well Name: 199-H4-71

Well ID: C7487

Location: E. of H ave. E. of H-Reactor

Report No.: 06

Start	Finish	Total
Time 1330	Time 1600	Time 2.5
Hole Depth/Csg - / 63	Hole Depth/Csg - / -	Hole Depth/Csg - / -

Reference Measuring Point: GROUND SURFACE

Casing String No. 1 2 3 4 ____ Rod Size: See Report No. 1

Time/Depth From	Time/Depth To	Description of Activities/Operations with Depth (Attach applicable drawings and document straightness test results)
1330	-	Pull pump rig over well. Prepare for development.
-	-	-DTW: 50.1 TOC, 47.15 bgs. = 15.5' water
-	1346	-DTB: 65.4 TOC, 62.45 bgs + 64.3' ~~be~~ Top of 6" casing.
1346	-	Installing 5 hp. pump (grundfoss) + 21+21+21' Drop pipe. (¾") galvanized steel
-	1600	Set pump 0.5' off of bottom. intake @ base of screen.
1600	Time	Secure site Drillers + Geo. exit area.

Not Used

Reported By: A. Lantow		Reviewed By: L.D. Walker	
Title: Geologist	Date: 9-16-09	Title: Geologist	Date: 10/12/09
Signature: Aaron Lantow		Signature: RD Walker	

A-6003-651 (REV 1)

FIELD ACTIVITY REPORT - DAILY DRILLING

Page 1 of 3

Date: 9-17-09

Well Name: 199-H4-71 | Well ID: C7487

Location: E. of H ave. ~500m NE. of H-Reactor | Report No.: 07

Start	Finish	Total
Time 0600	Time 1545	Time 9.25
Hole Depth/Csg 62.45 / 63.09 bgs	Hole Depth/Csg 62.60 / 63.09	Hole Depth/Csg ~0.5' / 0.0

Reference Measuring Point: GROUND SURFACE

Casing String No. 1 2 3 4 _____ Rod Size:
See Report No. 1

Time/Depth From	Time/Depth To	Description of Activities/Operations with Depth (Attach applicable drawings and document straightness test results)
0600	0700	Arrive on site with drillers. BTR at stand down safety meeting.
0700	0800	P.O.D. @ drill site.
0830	—	Drillers retreiving equipment. Tag DTW: 50.1 TOC, 47.2 bgs
—		Tag DTB: 65.4 TOC, 62.45 bgs, 64.3' TOC(6")
"		Check calibration of sampline equipment
		PH std Read | Conductivity std HS
		7.00 - 6.69 | 1405(std) - 1392(Read)
		10.00 - 10.08 | 1412(std) - 1387(read)
		Set Pump intake @ 59.7 bgs.
0938		Start Pump & Record Drawdown on Test #1 "Chiawana WD1"
		Pump @ 16.6 gpm. - Samplers on site. - Geo taking parameters
Time	1045	Collect water sample (B21NB6) WEIS# x9 bottles
-	1109	Continue to run Test #1 on hermit. (Pump off @ 1109)
-	1109	Test #2 failed to run.
1109	1115	Prepare to pull pump. - Prepare Purgewater truck for mobility
1115	1135	Pull pump + Drop pipe. Tag DTB: 62.7' bgs.
1135	1200	Prepare pump to be changed impellers. Note: old impellers rated for (5-13 gpm)
1200		Change out impellers on pump to (35 gpm rating).
	1245	Measure Pump & new stages. & Pump 1 2.5 2.6 Total = 5.1'
1245	1310	Set Pump @ (21+21+21+2.5-6.3) = 59.2' bgs., 62.2' TOC ← Intake
1310 →	1310	Transducer @ 56.7 bgs., DTW: 60.23 TOC = ~~55.23~~ 53.23
1310	1337	Prepare for Drawdown Test + Sustainability test. (See pg 2.)
1337	1426	Start Pump @ 23 gpm Record on test # "WD2"
1426		Start Recovery Test

Reported By: A. Lanton | Reviewed By: L.A. Walker

Title: Geologist | Date: 9-17-09 | Title: Geologist | Date: 10/12/09

Signature: A. Lanton | Signature: LA Walker

A-6003-651 (REV 1)

FIELD ACTIVITY REPORT - DAILY DRILLING
Continuation Page

Page 2 of 3
Date: 9-17-09

Well Name: 199-H4-71 | Well ID: C7487
Location: E. of H ave. E. of H-Reactor | Continuation of Report No.: 07

Time/Depth From	Time/Depth To	Description of Activities/Operations with Depth					
		Pump Test / Aquifer development					
0938		Start Test + pump @ 16.6 gpm (start rate slower then raised to 16.6)					
		NTU	PH	Temp (°C)	DO (mg/L)	Conductivity (mS) AF 9-17-09	XD
0935	~~0945~~	166					12.647 XD_I Pre-pump.
	0950	166	7.85	20.7	7.06	Error	11.14
	1000	28.0	8.03	20.6	7.83		10.98
	1005	34.1	8.05	20.5	8.65	0.442.	10.91
	1015	17.9	8.01	20.5	8.56	0.442	10.907
	1020	7.27	8.05	20.4	8.65	0.443	10.913
	1025	3.69	8.06	21.0	8.65	0.442	10.878 (1.8' draw)
	1030	2.12	8.05	21.3	8.46	0.439	10.870
	1045	2.22	8.05	20.3	8.60	0.440	10.867
Time AF 9-17-09 ~~1056~~	1045	Collect H_2O Sample HEIS# B21NB6 x 9 bottles					XD_f = 10.882
	1056	Pump off. Start Recovery Test #2 "Chiawanas WD2"					
1056	-	Recovery test did not start. monitor recovery on Test #1 (probably un-usfull)					
-	1109	- Talk w/ BTR + Samplers → Concurance on collection of					
-	-	water sample before increasing pump size. - Stop Test #1 @ 1109					
1310		Test #2 "Chiawanis WD2"					
		Pump @ 62.2' bgs, 65.2 TOC / Pump is 5 hp w/ (30 gpm) 9 stage w/ S.S. impellers.					
		XD_I: 9.75' Transducer set @ 56.7' bgs., 59.7 TOC.					
1337	—	Pump on @ 23. gpm					XD_I = 9.75
—	—	NTU	pH	T (°C)	DO (mg/L)	Conductivity (mS)	XD
	1345	131	8.01	25.6	7.12	~~.467~~ .437	7.23
	1350	22.4	8.06	22.4	8.44	.437	7.27
	1355	8.32	8.06	22.3	8.05	.439	7.24
	1400	5.44	8.05	21.3	8.37	.438	7.24
	1405	4.21	8.05	21.3	8.43	.440	7.22
	1410	2.79	8.05	21.5	8.43	.440	7.21

Reported By: A. Lantow | Reviewed By: L. D. Walker
Title: Geologist | Date: 9-17-09 | Title: Geologist | Date: 10/12/09
Signature: [signature] | Signature: [signature]

A-6003-652 (04/03)

FIELD ACTIVITY REPORT - DAILY DRILLING
Continuation Page

Page 3 of 3
Date: 9-17-09

Well Name: 199-H4-71 | Well ID: C7487
Location: See pg 1. | Continuation of Report No.: 07

Time/Depth From	Time/Depth To	Description of Activities/Operations with Depth
		NTU / PH / T(C°) / DO (mg/L) / Conductivity (mS) / XD
		3.05 / ~~8.58~~ AZ 9-17-09 / 22.1 / 8.58 / .439 / 7.23 → Developed.
		8.06
1420	1425	Recovery Test on #"WD3" - Turn pump off →
1425	–	Test ~~fails~~ start. → Restart Pump + allow draw → (XDf = 7.20 52.7' TOC)
1425	–	Restart Test #"WD3" + Kill pump.
–	–	(Recovery Test) → Drillers preparing to pull pump.
		@1430 BTR calls science lead to see if 25 is enough flow.
	1440	Science lead orders higher flow rate.
14[illegible]		Continue Recovery test. Drillers reconfigure manifold to achieve higher
	1459	Kill Recovery test. flow.
1459		~~Pull transducer.~~ AZ 9-17-09 Prepare to try new manifold + larger hose to
		achieve higher flow rate.
1514		Turn on pump. 42.8 gpm. 5.5' drawdown.
	1545	Tag: DTB: 62.6 bgs 65.6 TOC - Pull pump + Equipment from well.
1545		Secure well Site + Exit zone.

Not Used

Reported By: A. Lantow		Reviewed By: L.D. Walker	
Title: Geologist	Date: 9-17-09	Title: Geologist	Date: 10/12/09
Signature: Aaron Lantow		Signature: [illegible]	

A-6003-652 (04/03)

FIELD ACTIVITY REPORT - DAILY DRILLING

Page 1 of 1

Date: 9-18-09

Well Name: 199-H4-71 | Well ID: C7487

Location: E. of Hwy. E. of H-Reactor | Report No.: 08

Start	Finish	Total
Time 0600	Time 1030	Time 4.5
Hole Depth/Csg 62.60 / 63.09	Hole Depth/Csg 62.7 / 63.09	Hole Depth/Csg ~0.1 / 63.09

Reference Measuring Point: GROUND SURFACE

Casing String No. 1 2 3 4 ____ Rod Size:

See Report No. 1 DTW: 62.6' bgs, 65.06 TOC

Time/Depth From	Time/Depth To	Description of Activities/Operations with Depth (Attach applicable drawings and document straightness test results)
0600	0715	POD @ groundwater office. → Cover changes in Hosp.
0715	0815	Drillers to site & preparing to continue develope well @ higher flow rate.
0815	–	Science Lead orders larger flow rate than what has previously been
		performed at this well. Drill manager runs out to procure larger pipe
	0840	to yield greater flow. → Drillers begin to bail well. Bail weig >200 lbs.
0840		Use sand pump 11.6' long x 5½" OD, 3½" ID (11.6' long closed)(21.0' open)
	0901	– Sand pump will not extend/open. → work on sand pump. (8' slide)
0901	0910	Check pump to make sure it slids closed freely.
0910	0920	– Tape shackle to protect screen. – DOE. contractor Representatives on site.
0920		Bail well. ~~+ Tag~~ @0930 Bail hung on plunger + fell to bottom of well ~2'
		– Tag DTB: 62.5' bgs. ~0.5' → Continue to bail → M.T. → M.T. →
	0954	– Tag DTB: 62.7' bgs ~0.3' sed. in sump. Bailer brought up 0.5 v.f. sand + silt. (0.50)
0954		Move to next hole.

Not Used

Reported By: A. Lontan		Reviewed By: L.D. Walker	
Title: Geologist	Date: 9-18-09	Title: Geologist	Date: 10/12/09
Signature: Aaron Lontan		Signature: LD Walker	

A-6003-651 (REV 1)

WELL DEVELOPMENT AND TESTING DATA

Well Name:	Well ID:	Well Location:	Date:
199-H4-72	C7488	600-ME of H Reactor 199-H4-72	9-22-09

Reference Measuring Point (unless otherwise noted): TOP OF OUTER CASING (TOC)

Has the well been surveyed? ○ Yes ⊘ No | Does the well have a cement pad? ○ Yes ⊘ No

PART 1

STATIC WATER LEVEL:

Start of Job	~~48~~ 45.8
End of Job	~~45.8~~ 45.7 AL 9-22-09

DEPTH TO BOTTOM:

Start of Job	60.6
End of Job	60.7 → bail → 60.9

PART 2

WELL DEVELOPMENT DATA

Pump Model	1-phase, 5hp, S.S. impeller
Intake Depth	52' bgs 55' TOC
Starting Turbidity	129

Pump Start	Stop	Flow Rate
~~0750~~	~~0925~~	~~AL 9-22-09~~
0750	0820	37.0
0820	0908	15.0
0908	0925	37.4

Total Pumped	2465 gal
Final Turbidity	2.92
XD SN/Range (PSI)	10415 / 20psi

PART 3

INSTANTANEOUS SLUG TEST

Static Water Level (TOC)	45.8
Transducer Depth	59.5 bgs.
Baseline Start	Not Used
Injection Start	
Baseline Start	
Withdrawal Start	
Slug Volume	
XD SN/Range (PSI)	

PART 4

Last Recorded Measurements Date: 9-22-09

Current Measurements Date:

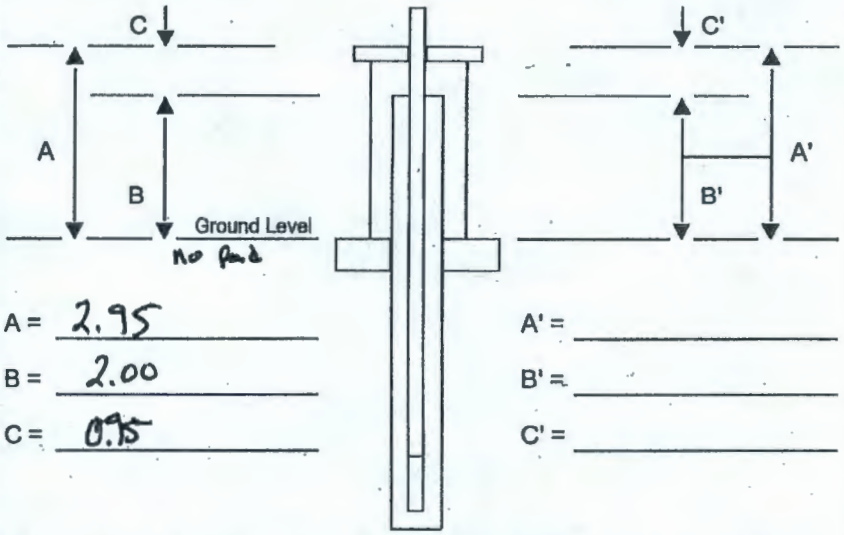

A =	2.95	A' =	
B =	2.00	B' =	
C =	0.95	C' =	

Are there any reference marks on the casing strings? ○ Yes ○ No

PART 5

HERmit Name: Rocky

COMMENTS:

Drawdown Test #"Qualm DW6" / Aquifer length: 12.2

Total drawdown 8.76, = 71% of aquifer

Recovery: Test #"Qualm DW7"

Prepared by (print name):	Signature:	Date:
A. Lantzer	Aaron Lantzer	9-22-09
Reviewed by (print name):	**Signature:**	**Date:**
L.D. Walker	L.D. Walker	10-20-09

A-6003-644 (03/03)

FIELD ACTIVITY REPORT - DAILY DRILLING

Page 1 of 2

Date: 9-22-09

Well Name: 199-H4-72	Well ID: C7488
Location: ~500m E. of H-Reactor	Report No.: 3

Start	Finish	Total
Time 0600	Time 1130	Time 5.5
Hole Depth/Csg 57.6 / 58.07	Hole Depth/Csg 57.9 / 58.07	Hole Depth/Csg -0.3' / 0.0

Reference Measuring Point: GROUND SURFACE

Casing String No. 1 2 3 4 ____ Rod Size:
See Report No. 1

Time/Depth From	Time/Depth To	Description of Activities/Operations with Depth (Attach applicable drawings and document straightness test results)
0600	0630	POD on site.
0630	—	Drillers tower rig up. Install pump to 52' bgs. (intake depth)
—	0750	DTW: 45.8 TOC, 43.8' bgs. ~12.2' aquifer = 9.2' head above intake
0750	—	Start Drawdown @ 37 gpm Record on Hermit name Rocky Test Quality DW5
Time	0853	Collect water sample B21NB8 (See pg 2) AK 9-22-09
—	0925	Stop Drawdown Test & Start Rebound Test (see pg 2.)
0925	—	Run rebound test. Drillers prepare to ~~bail~~ pull equipment AK 9-22-09
—	0957	from well & Bail.
0957	1012	Pull Pump, 2" Drop pipe + pressure transducer.
1012	1015	Tag DTB: 60.6' TOC 57.7' bgs. ~0.37' sed.
1015	—	Bail well. sed is of 90% mafic f-m. sand, 10% < #6 mesh s. sand.
—	1048	4 bails loads. Tag DTB: 57.8' bgs. → 57.9' bgs. ≈0.17' remain in sump.
1048	1100	Decant remaining purge water to truck.
1100		Demobilize to next site.

Reported By: A. Lupton		Reviewed By: L.D. Walker	
Title: Geologist	Date: 9-22-09	Title: Geologist	Date: 6/2/11
Signature: Aaron Lupton		Signature: [signature]	

A-6003-651 (REV 1)

FIELD ACTIVITY REPORT - DAILY DRILLING

Continuation Page

Page 2 of 2

Date: 9-22-09

Well Name: 199-H4-72 | Well ID: C7488

Location: 500m E. of H Reactor | Continuation of Report No.: 3

Time/Depth From	Time/Depth To	Description of Activities/Operations with Depth
—	—	HERMIT Name: Rocky | Probe #: 10415 | Probe Depth: 58.5 bgs | Intake: 52' bgs
—	—	Test # 6 Name: Qualm WD 6 | Drawdown | XDT: 12.35' | Head: 9.2
—	—	DTB: 60.6' TOC, 57.6' bgs | DTW: 45.8' TOC, 42.8' bgs | ← Start of Job.
	—	Calibrate Field Instruments: Pass/fail (~10%-20%)
—	—	Turbidity: Std. → Reading →
—	—	std → Reading →
—	—	std → Reading →
—	—	pH : std 7.00 → Reading 7.06 → ok
—	—	std 10.00 → Reading 10.04 → ok
—	—	γ Conductivity: std → Reading →
0750	—	Pump on

		XD(ft)	NTU	Temp(C°)	DOx (mg/L)	pH (units)	γ (mS)	flow (gpm)	Notes:
	0800	4.503	[illegible]	15.7	9.45	7.49	0.432	37.4	
	0805	3.899	66.5	16.8	9.29	7.95	0.432	37.0	
	0813	3.665	20.6	17.5	10.24	7.99	0.429	37.0	
	0820	3.627	7.66	17.8	—	8.01	0.429		
	0832	9.79	3.91	17.9	10.04	8.02	0.427	17.0	Turn flow down to permit more time for sampling.
	0838	9.71	30.9	18.0	9.03	7.98	0.427	14.9	Further Reduce.
	0849	9.767	5.82	17.9	9.42	7.98	0.43	14.5	
	0900	9.8	5.09	17.9	—	—	—	14.9	NCO's collect parameters
	0905	9.79	2.92	17.9	9.37	7.98	0.429	14.9	Post sample parameter
0853	Time	Collect Sample B21NB8				→			Collect sample.
	0908	9.85	—	—	—	—	—	~~37.4~~ 28	increase flow
	0911	3.607	19.3	17.8	9.34	8.01	0.428	37.4	increase flow
	0916	3.604	11.3	18.1	11.60	8.02	0.427	37.4	
	0924	3.59	8.49	18.0	11.91	8.01	0.428	37.4	
Pump off →	0925	Rebound Test Qualm WD7				→			Rebound Test
		8.76 Drawdown Total							
	0935	12.08							

gpm $\bar{x}$ = 32.2 σ^2 = 5.2 σ = 2.2
47min @ 37.0 gpm

Reported By: A. Lantow | Reviewed By: L. A. Walker

Title: Geologist | Date: 9/22/09 | Title: Geologist | Date: 10/20/09

Signature: Jason Lantow | Signature: LA Walker

A-6003-652 (04/03)

WELL DEVELOPMENT AND TESTING DATA

Well Name:	Well ID:	Well Location:	Date:
199-H6-2	C7489	W. of Have. S.E. of H-Reactor	9-15-09

Reference Measuring Point (unless otherwise noted): TOP OF OUTER CASING (TOC)

Has the well been surveyed? ○ Yes ⊗ No | Does the well have a cement pad? ○ Yes ⊗ No

PART 1

STATIC WATER LEVEL:

Start of Job 46.5 TOC

End of Job 48.2 trising

DEPTH TO BOTTOM:

Start of Job 52.7 TOC ~~56.7 TOC~~ bgs

End of Job 52.8' ~~TOC~~ bgs

PART 2

WELL DEVELOPMENT DATA

Pump Model Grundfoss, 5hp, Mo. 224303 8002

Intake Depth 52.0' TOC

Starting Turbidity 78.9

Pump Start	Stop	Flow Rate
1105	1135	5gpm
1135	1215	10.4 gpm
1236	1333	10.4 gpm
—	—	—
—	—	—

Total Pumped 966.2 gal

Final Turbidity 2.56 NTU

XD SN/Range (PSI) 10415/4-20mA

PART 3

INSTANTANEOUS SLUG TEST

Static Water Level (TOC)

Transducer Depth

Baseline Start

Injection Start

Baseline Start

Withdrawal Start

Slug Volume

XD SN/Range (PSI)

PART 4

Last Recorded Measurements Date: 9-15-09

Current Measurements Date:

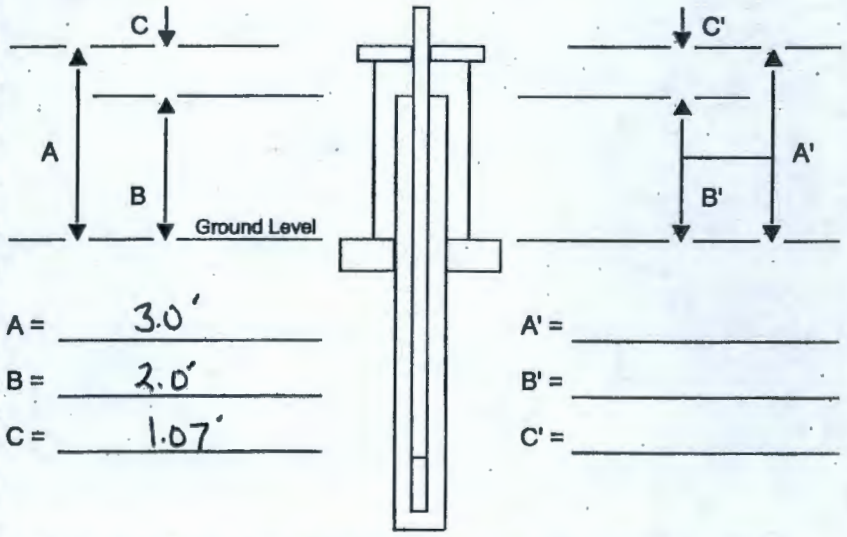

A = 3.0'

B = 2.0'

C = 1.07'

A' =

B' =

C' =

Are there any reference marks on the casing strings? ○ Yes ⊗ No

PART 5

COMMENTS: Hermit Name: Bert.

Test #1: Drawdown $XD_I \approx 6.48$ $XD_f \approx 5.30$

Test #2: Recovery

Collect water sample HE15# BQ1NB8

Prepared by (print name):	Signature:	Date:
A. Lanton	Aaron Lanton	9-15-09
Reviewed by (print name):	**Signature:**	**Date:**
L.D. Walker	LD Walker	10/8/09

A-6003-644 (03/03)

FIELD ACTIVITY REPORT - DAILY DRILLING

Page 1 of 2

Date: 9-15-09

Well Name: 199-H6-2 | Well ID: C7489

Location: W. of H Avenue, SE. of H-Reactor | Report No.: 06

Start	Finish	Total
Time 0600	Time 1500	Time 9
Hole Depth/Csg 52.7 / 52.83	Hole Depth/Csg 52.8 TOC / 52.8 TOC.	Hole Depth/Csg 0.1 / 0

Reference Measuring Point: GROUND SURFACE

Casing String No. 1 2 3 4 ____ Rod Size:
See Report No. 1

Time/Depth From	Time/Depth To	Description of Activities/Operations with Depth (Attach applicable drawings and document straightness test results)
0600	—	POD @ site E. of H-Reactor. Drillers mobilizing to site. Prepare to develope.
—	—	Recorded Depth to base of sump = 52.83' bgs. -
—	—	Tag DTB: 52.7' bgs., 55.8 TOC DTW: 46.5 TOC
—	—	43.5 bgs.
—	—	- Volume: 9.8' water $\pi r^2 h$ $.25^2 \cdot \pi (7.481)^{gal/ft^3} (9.3') = 13.7$ gal (3) 40.9 gal
—	—	Total Purge vol.
—	—	Pump: Grundfoss w/ Franklin Electric motor (submersible)
—	—	serial # 07C18-21-0305 model # 2243038602 (5hp) @ 230 v, 27.5-23 A., 60 HZ
—	—	Length 4.7' to nipple. nipple to intake = 2.0'
—	—	Intake depth: (TOC) 10' + 21 + 21 + 4.7 (Pump) = 56.7 (3) - 53.7 Intake @ 49.5' bgs.
—	—	56.7 - 52 = 4.7' stkup. = 1.7' above w.H.
-	0953	- Bail hole of cuttings & for sand Tag DTB: 55.8 TOC
0953	—	
—	—	Calibrate instruments
—	—	NTU: STD Read / PH: STD - Read / Conductivity / Temp
—	—	5. ok 5.6 - 5.65 / 7.0 - 7.11 ok / Std:
—	—	ok 48.9 - 49.4 / 10.0 - 10.10 ~ $\frac{10-10.10}{10} = 1.0\%$ ok / 1.405 - 1.400 / T @ 25.0°C
—	—	ok 520 - 524
1000	~	Install Pump + Drop pipe.
—	—	Intake set @ 49.0' Transducer @ 47' bgs. = 3.5' bwt
—	—	= 5.5' bwt.
-	1048	Move pump up. to Intake = 48.5, Transducer = 46.3
—	—	bwt = 5.0 bwt = 2.8
—	—	Pump Test on next Page.

Reported By: A. Lantau | Reviewed By: L.D. Walker

Title: Geologist | Date: 9-15-09 | Title: Geologist | Date: 10/8/09

Signature: Aaron Lantau | Signature: LD Walker

A-6003-651 (REV 1)

FIELD ACTIVITY REPORT - DAILY DRILLING
Continuation Page

Page 2 of 2
Date: 9-15-09

Well Name: 199-H6-2 | Well ID: C7489
Location: W. of Ave. S.E. of H-Reactor | Continuation of Report No.: 06

Time/Depth From	Time/Depth To	Description of Activities/Operations with Depth						
	Time	Collect Perameters:				Pump on 1105 @ 5gpm		
1105	Pump on	PH (~~pH~~)	Temp (°C)	NTU	DO (mg/L)	Conductivity (~~µS~~)	Depth To H_2O (TOC)	
	1115	7.70	20.1	78.9	8.31mg	0.544		
	1120	7.87	19.3	55.2	8.83	0.524		
	1125	7.88	19.5	25.7	8.94	0.527		
	1130	7.88	20.0	8.14	~~8.48~~ 8.94	0.525	48.8	
	1135	7.89	20.4	3.24	8.63	0.526		
Time	1136	increase	flow rate	to 8.9gpm			47.6	
Time	1138	increase	flow rate	to 10.42gpm			47.9	
	1140	~~10.6~~ 7.87	20.5	10.6	8.57	0.521	48	
	1145	7.86	20.0	9.06	8.42	0.518	48.01	
	1150	7.87	20.02	8.57	8.53	~~0.518~~ 0.520	48.03	
	1155	7.87	20.01	8.50	8.48	0.522	48.05	
	1200	7.87	19.8	6.98	8.46	0.522	48.09	
	1205	7.88	20.00	3.17	8.17	0.521		
	1215	Stop test allow for recovery						
	1236	Start Pump & Test #1 on Hermit name Bert.					XD	$XD_1 = 6.48$
	1246	7.88	19.95	13.3	8.16	0.521	5.46	
	1256	7.87	19.70	4.73	8.41	0.522	5.436	-RCT on site
	1300	7.87	19.60	3.28	8.46	0.522	5.320	≤ Bkgrnd.
	1315	7.88	19.8	2.56	7.94	0.517	5.230	
	1315	NCO's on site to collect water sample. (B21NB8)						
Time	1325	collect sample HEIS # (B21NB8) x9 bottles.						
		-Rct on site to scan equipment + surfaces: ≤ Bkgrnd.						
	1333	Start Recovery Test on #2. - Drillers Prepacing to Pull Pump.						
	1402	~~P~~ Stop Recovery Test.						
1402	1425	Pull Pump, transducer + Drop pipe from hole.						
1425	—	Tag DTB 52.80' TOC DTW: 48.2 TOC						
—	1500	-Drillers Demob rig to next site.						

Reported By: A. Lantow | Reviewed By: L. A. Walker
Title: Geologist | Date: 9-15-09 | Title: Geologist | Date: 10/8/09
Signature: Aaron Lantow | Signature: [signature]

A-6003-652 (04/03)

WELL DEVELOPMENT AND TESTING DATA

Well Name:	Well ID:	Well Location:	Date:
C7492	199-H1-4X43 (cw 12-2-09)	See Fac.	10-2-09

Reference Measuring Point (unless otherwise noted): TOP OF OUTER CASING (TOC)

Has the well been surveyed? ○ Yes ⊗ No | Does the well have a cement pad? ○ Yes ⊗ No

PART 1

STATIC WATER LEVEL:

Start of Job 34.8

End of Job 34.8

DEPTH TO BOTTOM:

Start of Job 44.0' bgs 48' TOC 47.0'

End of Job 45.0' bgs. 48' TOC

PART 2

WELL DEVELOPMENT DATA

Pump Model 1-phase, 5hp. w/ 6 stage SS (100 gpm)

Intake Depth 44 TOC

Starting Turbidity 48.9 NTU

Pump Start	Stop	Flow Rate
0829	0832	31.0 gpm
0832	0935	16.4
0935	0952	67.3 gpm

Total Pumped 2284.9 gal

Final Turbidity 0.79 NTU

XD SN/Range (PSI) 104/15/20 psi

PART 3

INSTANTANEOUS SLUG TEST

Static Water Level (TOC) 34.8

Transducer Depth 41.43' TOC

Baseline Start

Injection Start

Baseline Start

Withdrawal Start

Slug Volume

XD SN/Range (PSI)

NA

PART 4

Last Recorded Measurements Date: ~~10-2-09~~ 10-2-09 cw 6/2/11

Current Measurements Date:

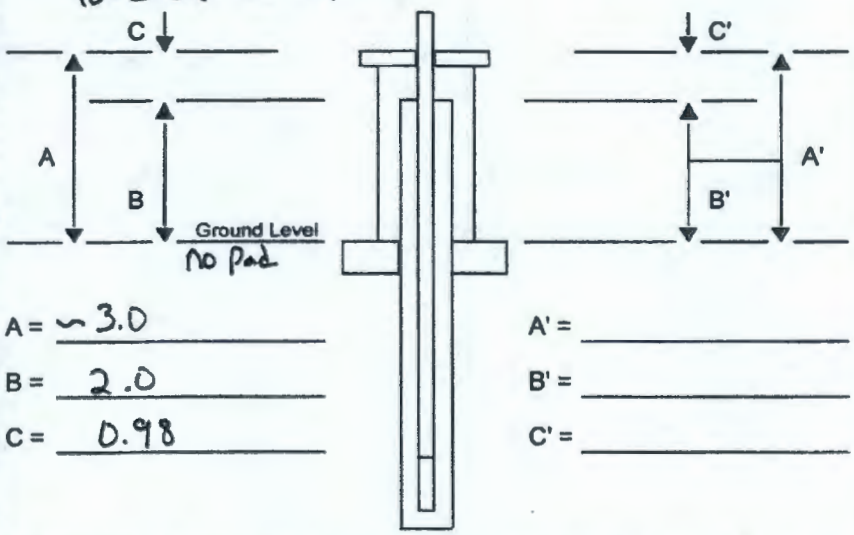

A = ~3.0

B = 2.0

C = 0.98

A' =

B' =

C' =

Are there any reference marks on the casing strings? ○ Yes ⊗ No

PART 5 HERMIT NAME: ROCKY

COMMENTS:

Drawdown Test on Sham WD1

Total drawdown: 0.96

Recovery Test # Sham WD2

Prepared by (print name):	Signature:	Date:
A. Lanton	Aaron Lanton	10-2-09
Reviewed by (print name):	**Signature:**	**Date:**
L. D. Walker	[signature]	10-20-09

A-6003-644 (03/03)

FIELD ACTIVITY REPORT - DAILY DRILLING

LW 12-3-09

Page 1 of 2

Date: 10-2-09

Well Name: 199-H1-~~42~~ 43	Well ID: C7492
Location: W. of 128-H-1 Excavation 100-H Area	Report No.: 5

Start	Finish	Total
Time 0600	Time 1115	Time 4.25
Hole Depth/Csg 44.0 / 45.	Hole Depth/Csg ~~44~~ 45.0' / 45	Hole Depth/Csg 1.0 / 0.0

Reference Measuring Point: GROUND SURFACE

Casing String No. 1 2 3 4 ____ Rod Size:
See Report No. 1

Time/Depth From	Time/Depth To	Description of Activities/Operations with Depth (Attach applicable drawings and document straightness test results)
0600	0715	POD on site. cloudy + Dark. extend meeting waiting for sufficient light for work.
0715	800	Geo + Drillers on site. Change pump stages from 100gpm to 30 gpm. Warming rig.
800		Install pump: 5.55', 2.5' intake from top, + 21' + 21' of 2" galvanized drop pipe.
		- intake @ 41' bgs.
	0829	Pump on @ 0827. measuring flow + water chemistry (See pg 2.)
Time	0825	NCO's on site @ 0825 hrs.
Time	0915	Collect sample HEIS # B21NB9 x9
	0935	Increase flow to 67.3 gpm less than 1' drawdown (See pg 2)
0935	0952	Kill pump + Start Rebound Test.
1030	1100	Tag DTB: 44.0 → Bail well. → Tag DTB: 45.0' bgs.
		Sed in well consists of 6" of <8-16 mesh sand + ~4" of natural (native) med. Sand.
1100		Tower down rig + prepare to mobilize for decon.
		1057 hrs: IH on site.
	1115	All personnel exit site w/ equipment.

Not Used

Reported By: A. Lanton		Reviewed By: L.D. Walker	
Title: Geologist.	Date: 10-2-09	Title: Geologist	Date: 10/20/09
Signature: Aaron Lanton		Signature: LD Walker	

A-6003-651 (REV 1)

FIELD ACTIVITY REPORT - DAILY DRILLING

Continuation Page

Page 2 of 2

Date: 10-2-09

Well Name: 199-H1-~~42~~ 43 | Well ID: C7492

Location: W of 128 -H-1 Excavation | Continuation of Report No.: 5

Time/Depth From	Time/Depth To	Description of Activities/Operations with Depth
—	—	HERMIT Name: ROCKY | Probe W: 10415 | Probe Depth: 39.83 | Intake: 41.0'
—	—	~~Test #01 Name~~: Sham WD1 | XDT: 8.029 | Head: 10.0
—	—	~~DTB: Not Used~~ | DTW: 34.8 ' TOC, 31.8 bgs | Aquifer thickness: 10.2
	—	Calibrate Field Instruments: Pass/fail (~10%-20%)
—	—	Turbidity: Std. 5.73 4.00 → Reading 3.964 5.73 →
—	—	std 48.9 → Reading 48.9 →
—	—	std 520 → Reading 522 →
—	—	pH : std 7.00 → Reading 7.02 → std 4.00 → 3.964
—	—	std 10.00 → Reading 10.01 →
—	—	Conductivity: std [redacted] → Reading → slope: -58.77, r² = 0.999
0829	—	Pump on

		xD(ft)	NTU	Temp(C°)	DOx (mg/L)	pH (SU)	Cond (mS)	flow (gpm)	Notes:
	0830	7.86	—	—	—	NA —	—	31 gpm	1' drop
	0832	~~48.9~~	48.9	15.1	9.40	~~9.40~~	0.451	16.46	slow flow
	0837	7.96	31.7	15.4	9.33	7.53	0.435	16.45	
	0843	7.86	9.36	15.2	9.31	7.59	0.435	16.44	
	0851	7.864	3.07	15.4	9.37	7.72	0.435	16.44	
	0900	7.859	0.95	16.4	9.52	7.53	0.541	16.44	
	0905	7.94	0.79	15.8	9.78	7.72	0.438	16.44	
Time	0915	7.14							collect sample B21NB9
	0935	7.10						67.33	Turn pump wide open
Time	0952	7.06	Pump off. Start recovery Test "Sham WD2"					67.33	Pump off.
		Δ=0.96							
	1012								kill recovery Test

Reported By: A. Lantow | Reviewed By: L. D. Walker

Title: Geologist | Date: 10-2-09 | Title: Geologist | Date: 10/20/09

Signature: Aaron Lantow | Signature: LD Walker

A-6003-652 (04/03)

WELL DEVELOPMENT AND TESTING DATA

CW 5-26-10

Well Name: 199-D4-601 (~~199-D4-TOT~~)	Well ID: C7580	Well Location: N: 151425.7 E: 572800.3	Date: 3.3.2010

Reference Measuring Point (unless otherwise noted): TOP OF OUTER CASING (TOC)

Has the well been surveyed? ○ Yes ☒ No | Does the well have a cement pad? ○ Yes ☒ No

PART 1

STATIC WATER LEVEL: (BGS)

Start of Job	84.75' BGS
End of Job	84.85' BGS

DEPTH TO BOTTOM: (BGS)

Start of Job	106.2' BGS
End of Job	106.3' BGS

PART 2

WELL DEVELOPMENT DATA

Pump Model	2243038607 Shop Franklin Electric
Intake Depth	98' bgs
Starting Turbidity	> 1000

Pump Start	Stop	Flow Rate
1338	1443	10gpm

Total Pumped	650 gallons
Final Turbidity	3.24
XD SN/Range (PSI)	10500 / 20 PSI

PART 3

INSTANTANEOUS SLUG TEST NOT USED

Static Water Level (TOC)	
Transducer Depth	
Baseline Start	
Injection Start	
Baseline Start	
Withdrawal Start	
Slug Volume	
XD SN/Range (PSI)	

PART 4

Last Recorded Measurements Date: 2/26/10

Current Measurements Date: 3/3/2010

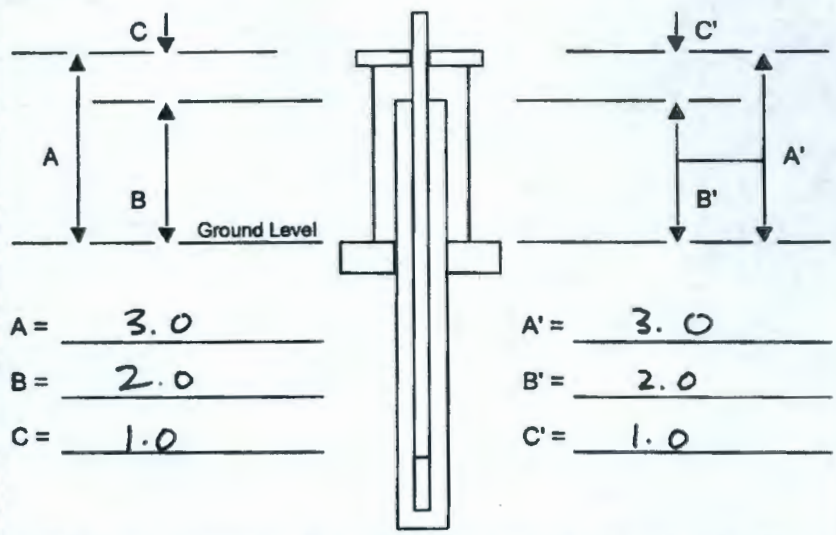

A =	3.0	A' =	3.0
B =	2.0	B' =	2.0
C =	1.0	C' =	1.0

Are there any reference marks on the casing strings? ○ Yes ○ No

PART 5 USING SHERMAN (SN 45744) Probe 10500

COMMENTS:

PARAMETERS

Conductivity Stan.	Conductivity actual	pH Stan.	pH actual	Turbidity Stan.	Turbidity actual
1413	1408	7	7.11	4.24	4.08
				53.0	53.0
		10	10.07	494	497

Test #1 ~~JEER WDI~~ TEAM USA WDI	Test #2 TEAM USA WD2 Recovery
Xi: 9.905	Xi
Xf: 5.757	Xf

NOT USED

Prepared by (print name):	Signature:	Date:
J. Schilperoort	Jessica Schilperoort	3.3.2010
Reviewed by (print name):	Signature:	Date:

FIELD ACTIVITY REPORT - DAILY DRILLING

cw 5-26-10

Page 1 of 2

Date: 3/3/2010

Well Name: ~~199-D4-101~~ 199-D4-101

Well ID: C7580

Location: N: 151425.7 E: 572800.3

Report No.: 6

Start	Finish	Total
Time 0600	Time 1530	Time 4.5
Hole Depth/Csg — / —	Hole Depth/Csg — / —	Hole Depth/Csg — / —

Reference Measuring Point: GROUND SURFACE

Casing String No. 1 2 3 4 ____ Rod Size:

See Report No. 1 WELL DEVELOPMENT

Time/Depth From	Time/Depth To	Description of Activities/Operations with Depth (Attach applicable drawings and document straightness test results)
0600	0630	To 100-D Trailer for POD. Hi of 61° - Rainy
0630	—	Drillers to site to fold down rig & move it over to C7580.
—	0820	→ Geo goes to 200-E to collect development kit.
0820	0850	Geo back to site. Drillers continue to prep for development
0850	—	Begin bailing out sump; ~5' of fill. Bailer holds 5 gallons
—	0950	→ bail x ~~IIII~~ ~~IIII~~ IIII = 70 gallons bailed → Tag bottom of well: 106.3' bgs
0950	—	Prep to trip in pipe & pump.
—	—	→ Pump model: 224303 8602 5hp → 1 phase Franklin Electric
—	1015	50 gpm max → 4.7' Lj intake @ 2.5' up.
1015		Begin lowering pipe & 5hp pump -
	1117	→ Take parameters (see chart below)
1117		Hermit/probe not working properly → try & figure out why
	1191	→ something wrong w/ data logger → develop manually w/ E-TAPE

PARAMETERS

Conductivity actual	Conductivity Standard	pH act.	pH Stan.	Turbidity actual	Turbidity standard
		7.11	7	4.08	4.24
1408	1413 µS/cm	10.07	10	53.0	53.0
				497	494

Intake will be 2.5' above bottom of screen: 101.2 - 2.5 = 98.7' bgs

→ 5' stick of pipe missing → USE 4.3' instead making it: 98.0

(SEE PAGE 2)

Reported By: J. Schilperoort

Title: Geologist

Date: 3/3/10

Signature: Jessica Schilperoort

Reviewed By: L.O. Walker

Title: Geologist

Date: 5/26/10

Signature: [signature]

FIELD ACTIVITY REPORT - DAILY DRILLING

Continuation Page

Page 2 of 2

Date: 3/3/2010

Well Name: ~~199-D4-101~~ 199-D4-101 Well ID: C7580

Location: N: 151425.7 E: 572800.3 Continuation of Report No.: 6

Time/Depth From	Time/Depth To	Description of Activities/Operations with Depth
		TEAM USA WD2 BURT (SN45422)
		Test #1 ~~JEER WD1 on SHERMAN (SN49744)~~ (using E-Tape)
		INTAKE @ 98.0' bgs; Pump: Shp xi: 87.89' TOC (9.905) w/ BURT
Pump on: ~~1151~~ 1338	Pump off: ~~1152~~ 1443	RATE: 10 gpm V_f: 5.757

TIME	DEPTH	TURBIDITY NTU	pH	conductivity uS/cm	T°C	NOTES
~~1151~~	—	—	—	—		@ 1151 - only pumping air
1338	2.387	71000	6.69	657	17.6	NO WATER COMING OUT
1345	5.912	109	6.86	642	16.9	Working now! @ 1338
1348	5.930	37.7	6.52	703	16.8	- pumping @ higher than 10gpm
1352	5.934	10.8	7.24	651	17.1	caused too much drawdown
1357	5.935	6.87	7.28	653	17.3	good.
1403	5.909	8.23	7.38	651	17.2	
—	1159	—	—	—	—	—

1159		Pump NOT working, pull out pump + pipe.
		→ kind of sandy water / silty; so bail ~ 6 loads = 30 gal
	1302	→ Get different data logger - BURT (SN45422)
1302	1330	Lower down pump + pipe again to retry development
1330	→	Start development (see table above + below)

TIME	DEPTH	Turbidity (NTU)	pH	Conductivity uS/cm	T°C	NOTES
1410	5.856	6.54	7.59	649	17.6	
1417	5.830	4.72	7.61	656	17.1	
1425	5.780	4.06	7.64	653	17.7	
1430	5.751	3.24	7.70	649	17.6	→ pump shut off on its own + recharged immediately.
—	—					

—	—	Samplers to site @ 1403. Water sample: HEIS → B24IW7, B24IW8
—	1445	→ Sample collected @ 1431 B24381
1445	1520	Get purge trucks ready to leave + trip out pump + pipe.
1520	1530	Tag well @ 106.3' bgs + clean up site
1530		Geo no longer needed - departs from site
		NOT USED

Reported By: J. Schilperoort		Reviewed By: L.D. Walker	
Title: Geologist	Date: 3/3/10	Title: Geologist	Date: 5/26/10
Signature: Jessica Schilperoort		Signature: [signature]	

A-6003-652 (04/03)

CHPRC WELL DEVELOPMENT AND TESTING DATA

Well Name:	Well ID:	Well Location:	Date:
199-H1-3 ~~199-H1-53~~ KW 5-18-11	C7581	100-H	4-28-11

Reference Measuring Point (unless otherwise noted): TOP OF OUTER CASING (TOC)

Has the well been surveyed? ○ Yes ○ No | Does the well have a cement pad? ☑ Yes ○ No

PART 1

STATIC WATER LEVEL:

Start of Job	41.9
End of Job	43.5

DEPTH TO BOTTOM:

Start of Job	50.1
End of Job	50.1

PART 2

WELL DEVELOPMENT DATA

Pump Model	Redi Flow 2
Intake Depth	48.5
Starting Turbidity	228

Pump Start	Stop	Flow Rate
9:40	2:50	3/4 GAL/min

Total Pumped	335
Final Turbidity	2.5
XD SN/Range (PSI)	

PART 3

INSTANTANEOUS SLUG TEST

Static Water Level (TOC)	
Transducer Depth	
Baseline Start	
Injection Start	PMG 03MAY11
Baseline Start	
Withdrawal Start	
Slug Volume	
XD SN/Range (PSI)	

PART 4

Last Recorded Measurements Date:

Current Measurements Date:

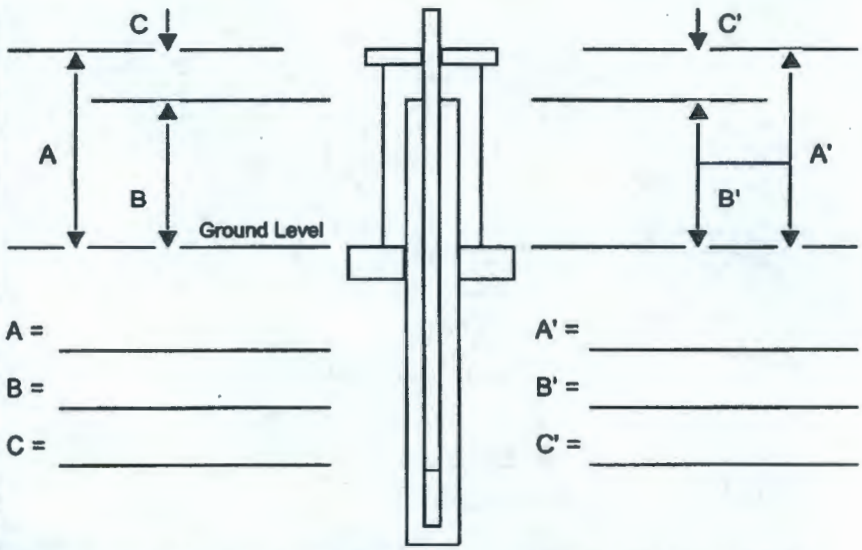

A = _____ A' = _____

B = _____ B' = _____

C = _____ C' = _____

Are there any reference marks on the casing strings? ○ Yes ○ No

PART 5

COMMENTS: Rate of return 12min = 1 Ft.
After 4th Pump Cycle recharge rate = 15min 1 Ft.

Prepared by (print name):	Signature:	Date:
Ken R. Jones	Ken R. Jones	4-28-11
Reviewed by (print name):	**Signature:**	**Date:**
L.J. Walker	L.J. Walker	5-18-11

FIELD ACTIVITY REPORT - DAILY DRILLING

Page 1 of 1

Date: 9.27.2010

Well Name: 199-H1-3

Well ID: C7581

Location: NW of 100-H Reactor

Report No.: 5

Start	Finish	Total
Time 1115	Time 1315	Time 2 hr.
Hole Depth/Csg – / –	Hole Depth/Csg – / –	Hole Depth/Csg – / –

Reference Measuring Point: GROUND SURFACE

Casing String No. 1 2 3 4 ____ Rod Size:
See Report No. 1

Time/Depth From	Time/Depth To	Description of Activities/Operations with Depth (Attach applicable drawings and document straightness test results)
1115		To site. Set up rig & Tag well: 48.6' bgs
	1200	=1.5' of fill. → Water tagged @ 40.2' bgs
1200	1300	Bail out: 1TN 1 loads; Tag 47.3' bgs = clean
1300	—	Move rig back to C7585 for development.
—	1315	→ Rig will be set up & pump tripped in
1315		Done for day Geo depart from site.

NOT USED

JP 9.27.2010

Reported By: J. Fleming

Title: Geologist

Date: 9.27.10

Signature: J. Fleming

Reviewed By: L.D. Walker

Title: Geologist

Date: 10/11/10

Signature: D Walker

A-6003-651 (REV 1)

FIELD ACTIVITY REPORT - DAILY DRILLING

Page 1 of 1

Date: 9.28.2010

Well Name: 199-H1-2

Well ID: C7581

Location: NW of 100-H Reactor

Report No.: 6

Start	Finish	Total
Time 1000	Time 1130	Time 1.5 hr
Hole Depth/Csg — / —	Hole Depth/Csg — / —	Hole Depth/Csg — / —

Reference Measuring Point: GROUND SURFACE

Casing String No. 1 2 3 4 ____ Rod Size:
See Report No. 1

Time/Depth From	Time/Depth To	Description of Activities/Operations with Depth (Attach applicable drawings and document straightness test results)
1000	—	Drillers set up over well: tag → 45.5 = ~1' fill
—	—	bail out & bail out water until loads are insignif.
—	1115	→ Recharge rate low = ~4gal/1min
1115	1130	Drillers take down site & Geo paper work

Reported By: J. Fleming

Title: Geologist

Date: 9.28.10

Signature: J. Fleming

Reviewed By: C.D. Walker

Title: Geologist

Date: 10/11/10

Signature: CD Walker

A-6003-651 (REV 1)

WELL DEVELOPMENT AND TESTING DATA

Well Name:	Well ID:	Well Location:	Date:
199-08-97	C7582	E: 573869.59 N: 152087.60	4.26.10

Reference Measuring Point (unless otherwise noted): TOP OF OUTER CASING (TOC)

Has the well been surveyed? ○ Yes ● No | Does the well have a cement pad? ○ Yes ● No

PART 1

STATIC WATER LEVEL:

Start of Job	77.5' bgs
End of Job	77.5' bgs

DEPTH TO BOTTOM:

Start of Job	100.90' bgs
End of Job	100.93' bgs

PART 2

WELL DEVELOPMENT DATA

Pump Model	100 Hp
Intake Depth	S1 95' bgs / S2 85' bgs
Starting Turbidity	S1 147 / S2 1.61

Pump Start	Stop	Flow Rate
S1 0757	0902	27.0
S2 0949	1042	18.0

Total Pumped	S1 1755 / S2 954 / T 2709
Final Turbidity	S1 4.64 / S2 1.75
XD SN/Range (PSI)	115276

PART 3

INSTANTANEOUS SLUG TEST

Static Water Level (TOC)	
Transducer Depth	
Baseline Start	
Injection Start	
Baseline Start	
Withdrawal Start	
Slug Volume	
XD SN/Range (PSI)	

PART 4

Last Recorded Measurements Date:

Current Measurements Date:

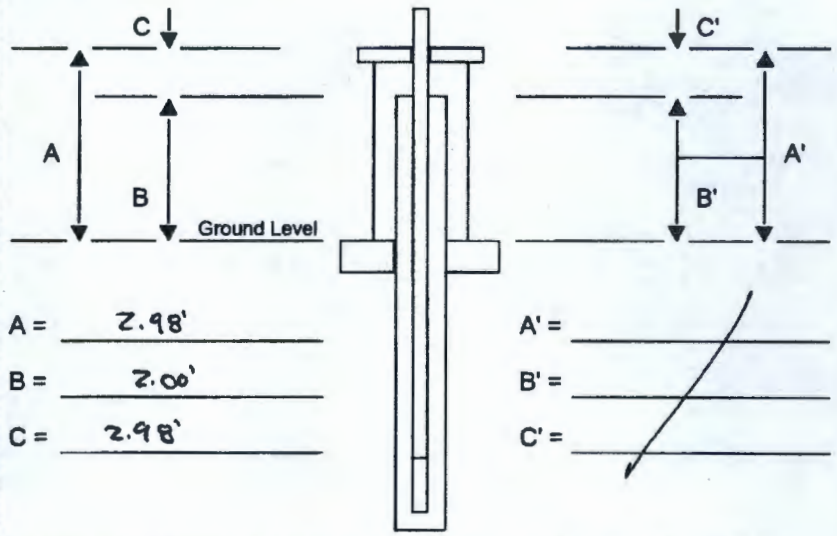

A =	2.98'	A' =	
B =	2.00'	B' =	
C =	2.98'	C' =	

Are there any reference marks on the casing strings? ○ Yes ● No

PART 5

COMMENTS:

- Well developed in two parts/tests, one recovery test.
- test 1, 95'-85' bgs, recorded on "C7582 lower".
- test 2, 85'-77.5' bgs, recorded on "C7582 upper"
- recovery test recorded on "C7582 upper"
- S_1 = Test 1, "C7582 lower"
  S_2 = Test 2, "C7582 upper"

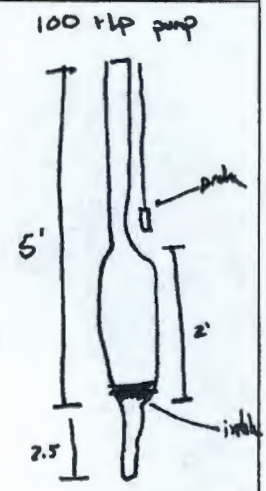

Prepared by (print name):	Signature:	Date:
A. Pappas		4.26.10
Reviewed by (print name):	**Signature:**	**Date:**
L. D. Walker		5-24-10

A-6003-644 (03/03)

FIELD ACTIVITY REPORT - DAILY DRILLING

Page 1 of 2

Date: 4.26.10

Well Name: 199-D8-97

Well ID: C7582

Location: E: 573859.59 N: 152087.60

Report No.: 10

Start	Finish	Total
Time 0600	Time 1051	Time 4 hrs 51 min
Hole Depth/Csg — / —	Hole Depth/Csg — / —	Hole Depth/Csg — / —

Reference Measuring Point: GROUND SURFACE

Casing String No. ~~1~~ 2 3 4 ____ See Report No. 1

Rod Size:

DTW: 77.5'

Time/Depth From	Time/Depth To	Description of Activities/Operations with Depth (Attach applicable drawings and document straightness test results)
0600	0651	POD at ISRM trailer.
0651	/	Drillers setup to trip in 100 Hp pump and pipe.
/	0717	Tag water at 77.5' bgs
0717	/	Drillers trip in pump and pipe, intake at 95' bgs,
/	0739	probe at 93' bgs (bottom section)
/	/	Drillers hook up to purge trucks, geologist calibrate equipment.
/	/	pH conductivity turbidity troll S/N
/	/	std 10 act 10.20 std act std act "115 276"
/	/	7 7.11 1414 1297 494 497
/	/	53.0 526
/	/	xDintral: 15.39 424 3.59
0757	/	pump on, begin test 1, "C7582 lower", 95'-85' bgs.
/	"sampling"	xD NTUs pH µS temp c° gpm
/	0757	-15.29 147 N/R 720 21.0 27
/	0807	8.12 141 7.84 660 21.3 27
/	0817	7.99 51.9 8.01 648 21.3 27
/	0827	8.02 12.5 8.02 645 21.3 27
/	0837	8.00 7.32 7.97 646 21.3 27
/	0847	7.98 5.77 8.00 647 21.3 27
/	0857	8.00 5.00 8.03 653 21.3 27
/	0902	7.93 4.64* 8.05 873* 21.3 27
0902	0937	* due to error - had to repump for 35 min to recollect.
0937	/	Move pump up 10', intake now at 85' bgs, probe
/	0949	at 83' bgs

Reported By: A. Pappas

Title: Field Geologist

Date: 4.26.10

Signature:

Reviewed By: L. D. Walker

Title: Geologist

Date: 5/24/10

Signature:

A-6003-651 (REV 1)

FIELD ACTIVITY REPORT - DAILY DRILLING

Continuation Page

Page 2 of 2

Date: 4.26.10

Well Name: 199-D8-97

Well ID: C7582

Location: E: 575859.59 N: 526870

Continuation of Report No.: 10

Time/Depth From	Time/Depth To	Description of Activities/Operations with Depth
0949	/	Start pumping section 85' - 77' bgs, test 2 test
/	/	ID "C7582 upper". xD initial: 5.10
/	Sampler time	xD NTU pH µS temp °C gpm
/	0949	~5.10 31.3 8.14 639 21.6 18
/	0959	.04 463 8.14 639 21.9 18
/	1009*	.05 4.03 8.05 636 22.0 18
/	1019	.05 3.03 8.05 628 21.9 18
/	1029	.05 1.61 8.06 634 21.8 18
/	1039	NCO: collect water samples, HEIS #: B23PJ7, B23PJ8
/	1042	.05 1.75 8.20 637 21.8 18
1042	1112	pump off, begin recovery test, recorded on "C7582 upper"
1112	/	stop recovery test, pull pump, pipe, and probe
/	1132	final xD 5.13.
1132	/	Pump removed. Drillers clean up site. Geologist does
/	/	paperwork. Depth to water tagged at 77.5' bgs. Depth to
/	1051	bottom tagged at 103.8' bgs.
1051		Geologist + Drillers exit site.

4.26.10

Reported By: A. Pappas

Title: Field Geologist

Date: 4.26.10

Signature:

Reviewed By: L. D. Walker

Title: Geologist

Date: 5/24/10

Signature:

A-6003-652 (04/03)

WELL DEVELOPMENT AND TESTING DATA Test 1

Well Name:	Well ID:	Well Location:	Date:
199-D5-101	C7583	E: 572942.78 N: 151521.90	3.12.10

Reference Measuring Point (unless otherwise noted): TOP OF OUTER CASING (TOC)

Has the well been surveyed? ○ Yes ● No | Does the well have a cement pad? ○ Yes ● No

PART 1

STATIC WATER LEVEL:

Start of Job	85.5' bgs
End of Job	85.5' bgs

DEPTH TO BOTTOM:

Start of Job	111.31' bgs
End of Job	111.31' bgs

PART 2

WELL DEVELOPMENT DATA

Pump Model 50 hp

Intake Depth 1st: 98.05' / 2nd: —

Starting Turbidity 1st: 476 / 2nd —

	Pump Start	Stop/Δ	Flow Rate
T1:	0950	0953	11.9 gpm
T1:	0953	1013	14.9 gpm
T2:	1035	1036	26.4
T2:	1036	1049	44.8

Total Pumped 1st: 333.7 gal 2nd: —

Final Turbidity 1st: 3.04 / 2nd: —

XD SN/Range (PSI) 115276 / 20 psi

PART 3

INSTANTANEOUS SLUG TEST

Static Water Level (TOC)	
Transducer Depth	
Baseline Start	
Injection Start	
Baseline Start	
Withdrawal Start	
Slug Volume	
XD SN/Range (PSI)	

PART 4

Last Recorded Measurements Date:

Current Measurements Date:

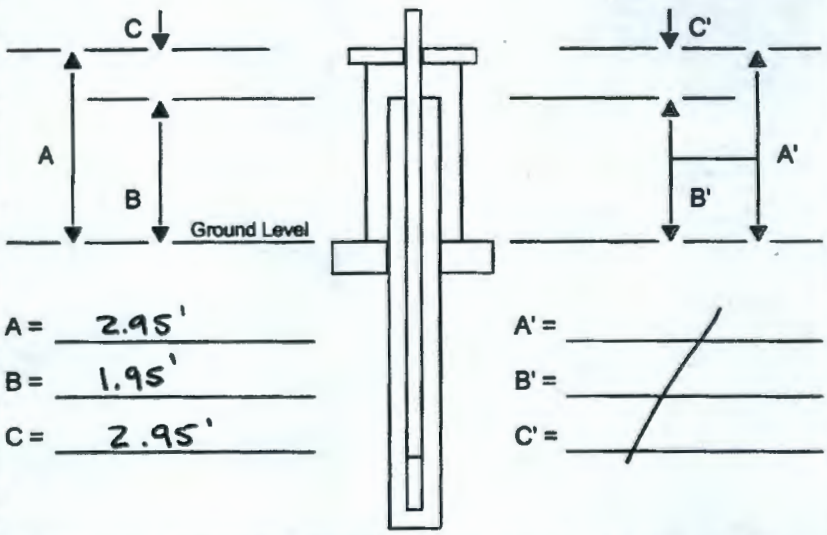

A = 2.95'

B = 1.95'

C = 2.95'

A' =

B' =

C' =

Are there any reference marks on the casing strings? ○ Yes ○ No

PART 5

COMMENTS:

Levels/development recorded using Troll (SN: 115276)

TEST USED: C7583 for first level.

2nd test using 50 hp pump failed to produce effective draw down needed.

Prepared by (print name):	Signature:	Date:
A. Pappas		3.12.10
Reviewed by (print name):	**Signature:**	**Date:**

WELL DEVELOPMENT AND TESTING DATA TEST 2

Well Name:	Well ID:	Well Location:	Date:
199-DS-101	C7583	E: 572942.78 N: 151521.90	3.12.10

Reference Measuring Point (unless otherwise noted): TOP OF OUTER CASING (TOC)

Has the well been surveyed? ○ Yes ● No | Does the well have a cement pad? ○ Yes ● No

PART 1

STATIC WATER LEVEL:

Start of Job	85.5' bgs
End of Job	85.5' bgs

DEPTH TO BOTTOM:

Start of Job	113.31' bgs
End of Job	113.31' bgs

PART 2

WELL DEVELOPMENT DATA

Pump Model	100 hp
Intake Depth	105.75
Starting Turbidity	389 ntu

Pump Start	Stop/Δ	Flow Rate
1255	1335	75

Total Pumped	3,000 gal
Final Turbidity	1.71 ntu
XD SN/Range (PSI)	115276 / 20 psi

PART 3

INSTANTANEOUS SLUG TEST

Static Water Level (TOC)	
Transducer Depth	
Baseline Start	
Injection Start	
Baseline Start	
Withdrawal Start	
Slug Volume	
XD SN/Range (PSI)	

PART 4

Last Recorded Measurements Date:

Current Measurements Date:

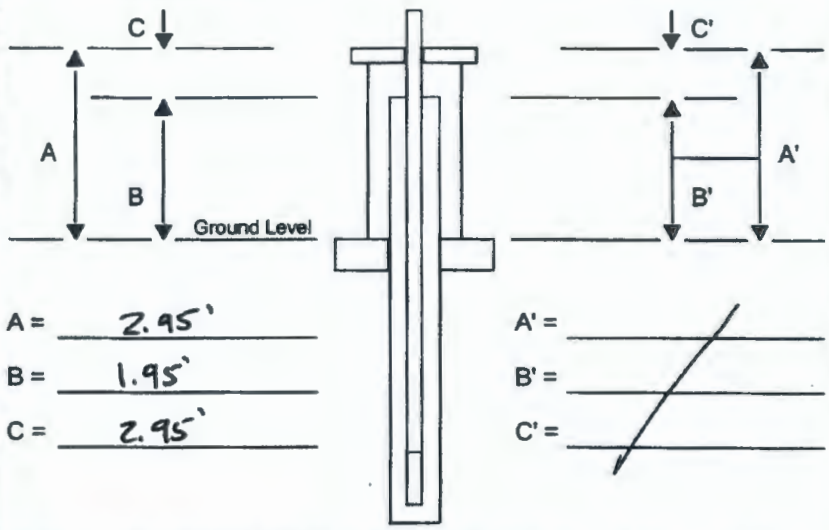

A =	2.95'	A' =	
B =	1.95'	B' =	
C =	2.95'	C' =	

Are there any reference marks on the casing strings? ○ Yes ○ No

PART 5

COMMENTS:

- 100 hp motor used to collect 2nd zone
- Test used to record 2nd zone development: "C7583 2nd level" (also used to record recovery)

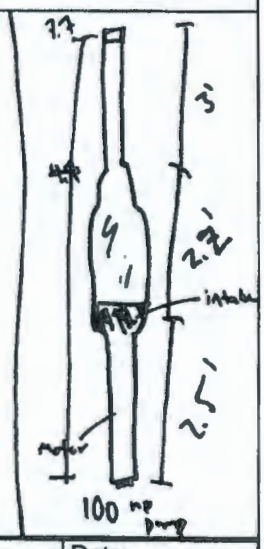

Prepared by (print name):	Signature:	Date:
A. Pappas		3.12.10
Reviewed by (print name):	**Signature:**	**Date:**

FIELD ACTIVITY REPORT - DAILY DRILLING

Page 1 of 2

Date: 3.12.10

Well Name: 199-D5-101	Well ID: C7583
Location: N: 151521.90 E: 572942.78	Report No.: 7

Start	Finish	Total
Time 0600	Time 1452	Time 8 hrs 52 min
Hole Depth/Csg / /	Hole Depth/Csg / /	Hole Depth/Csg — / —

Reference Measuring Point: GROUND SURFACE

Casing String No. 1 2 3 4 ____ Rod Size:
See Report No. 1 DTW 85.5' bgs

Time/Depth From	Time/Depth To	Description of Activities/Operations with Depth (Attach applicable drawings and document straightness test results)
0600	0710	POD at ISRM trailer.
0710	/	to site, Drillers prep to bail well of fill material.
/	/	Depth to bottom tagged at 109' toc bgs - bottom of
/	0728	well at 111.31 bgs, 4.31' of fill.
0728	/	Drillers bail well
/	/	Sample collected from well fill, ID: "fill sample C7583"
0857	/	Drillers trip in 50 hp pump and pipe (3 - 2', 1-20', 1-10',
/	/	1-5' pieces) for first intake, intake at 98.05' bgs
/	0935	(including 2.95' stick up). probe at 98.05' bgs.
0935	/	Calibration of instrument
/	/	Turbidity pH Conductivity
/	/	STD Reads STD Reads STD → reads
/	/	494 → 497 10 → 10.13 1413 → 1288
/	/	53 → 57.4 7 → 7.16
/	0950	4.24 → 3.49 xD initial 4.38'
0950	/	Start pump
/	/	xD NTU µ °C pH GPM
/	0950	03.55 476 556 16.70 6.66 11.9
/	1000	03.51 253 580 16.37 7.16 14.9
/	1010	03.50 3.37 505 16.42 7.25 14.9 → Developed
/	1013	03.51 3.04 504 16.42 7.37 14.9 → final, pump stop
1013	/	Drillers add 15' of pipe. intake at 108.05' bgs,
/	/	probe at 105.05'.
/	1035	xD initial for "Zone 2": 18.66'

Reported By: A. Pappas	Reviewed By: L. A. Walker
Title: Field Geologist Date: 3.12.10	Title: Geologist Date: 5/24/10
Signature:	Signature:

FIELD ACTIVITY REPORT - DAILY DRILLING

Continuation Page

Page 2 of 2

Date: 3.12.10

Well Name: 199-D5-101

Well ID: C7583

Location: E: 572942.78 N: 151521.90

Continuation of Report No.: 7

Time/Depth From	Time/Depth To	Description of Activities/Operations with Depth
1035		Start pump:
		xD NTU µ °C pH GPM
	1035	18.66 28.6 492 16.4 7.71 26.9
	1045	15.76 11.4 491 16.17 7.76 44.0
	1048	xD not >50% test not passable. Drillers must add 100 HP pump
1048		Drillers pull pump, replace motor. Motor swap
	1142	50 to 100 hp.
1142		Drillers trip in pump, 100 hp, and pipe (3-21', 2-20')
		pump intake at 105.25' bgs, probe at 100.5' bgs
		~~Start pump xD initial:~~ AP 3.12.10
	1251	~~xD NTU µ °C pH GPM~~ AP 3.12.10
1251		Pump failure. pump cannot be started drillers trouble shoot.
1255		Start pump xD initial: 14.25'
		xD NTU µ °C pH GPM
	1255	14.25 389 516 16.23 6.57 75
	1305	11.44 6.32 507 16.18 7.02 75
	1315	11.27 3.99 510 16.17 7.40 75
	1325	11.21 1.89 507 16.18 7.41 75 (NCO's collect sample)
	1335	11.23 1.71 501 16.18 7.51 75
1335		Stop pump, began recovery. Sample numbers from
	1405	NCO collection are B24ZC5, B24ZC4, B243B3.
1405	1436	Stop recovery test. Drillers remove pump.
1436		Pump removed, Drillers clean up site. Geologist does
		paper work DTW tagged at 85.5' bgs, Depth to
	1452	bottom tagged at 111.31' bgs
1452		Geologist exits site

Not used

Reported By: A. Pappas		Reviewed By: L.D. Walker	
Title: Field Geologist	Date: 3.12.10	Title: Geologist	Date: 5/28/10
Signature:		Signature:	

WELL DEVELOPMENT AND TESTING DATA

Well Name:	Well ID:	Well Location:	Date:
199-H1-2	C7584	NW of 100-H Reactor	9.28.2010

Reference Measuring Point (unless otherwise noted): TOP OF OUTER CASING (TOC)

Has the well been surveyed? ○ Yes ☒ No

Does the well have a cement pad? ☒ Yes ○ No

PART 1

STATIC WATER LEVEL:	BGS
Start of Job	
End of Job	
DEPTH TO BOTTOM:	BGS
Start of Job	
End of Job	

PART 2

WELL DEVELOPMENT DATA

Pump Model	5hp
Intake Depth	44.5' bgs
Starting Turbidity	> 1,000

Pump Start	Stop	Flow Rate
1122	1321	3.7 gpm

Total Pumped	660 gallons
Final Turbidity	4.15
XD SN/Range (PSI)	168724 / 30 PSI

PART 3

INSTANTANEOUS SLUG TEST

Static Water Level (TOC)	
Transducer Depth	
Baseline Start	
Injection Start	
Baseline Start	
Withdrawal Start	
Slug Volume	
XD SN/Range (PSI)	

PART 4

Last Recorded Measurements Date: 9/14/10

Current Measurements Date: 9.28.10

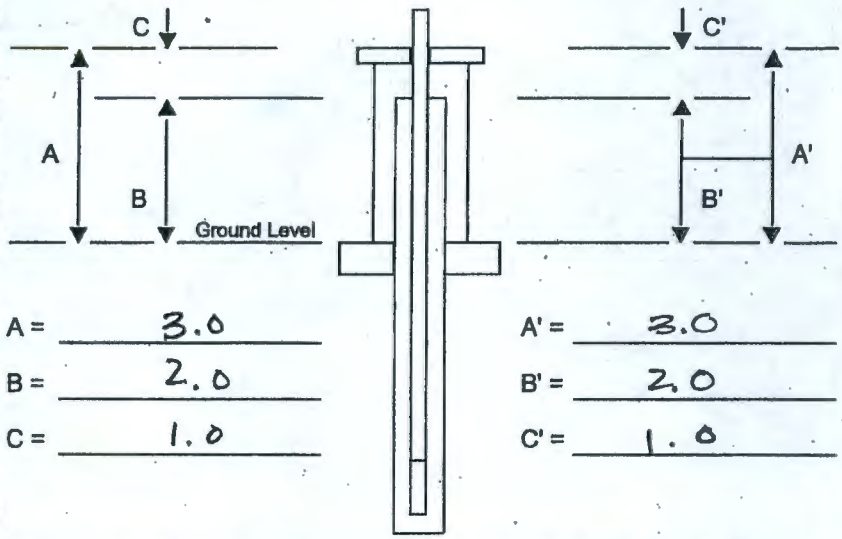

A =	3.0	A' =	3.0
B =	2.0	B' =	2.0
C =	1.0	C' =	1.0

Are there any reference marks on the casing strings? ○ Yes ☒ No

PART 5

COMMENTS:

Test #1

Di: 4.01

Df: 0.04

30 min recovery

Di: 0.04

Df: 3.88

Prepared by (print name):	Signature:	Date:
J. Fleming	J. Fleming	9.28.2010
Reviewed by (print name):	**Signature:**	**Date:**
L.D. Walker	L.D. Walker	10-11-10

A-6003-644 (03/03)

FIELD ACTIVITY REPORT - DAILY DRILLING

Page 1 of 1

Date: 9.27.2010

Well Name: 199-H1-2	Well ID: C7584
Location: NW of 100-H Reactor	Report No.: ~~04~~ 05

Start	Finish (JP 9.28.10)	Total
Time 1000	Time	Time
Hole Depth/Csg — / —	Hole Depth/Csg — / —	Hole Depth/Csg — / —

Reference Measuring Point: GROUND SURFACE

Casing String No. 1 2 3 4 ____ Rod Size:
See Report No. 1

Time/Depth From	Time/Depth To	Description of Activities/Operations with Depth (Attach applicable drawings and document straightness test results)
1000	—	To site to bail out well. Set up rig over well
—		+ tag fill; bottom of well is 50.6' bgs empty
	1050	tagged @ 53.2' bgs = 2.6' of fill.
1050	—	Bail: IIIIIII loads → Tag: 50.5' bgs = EMPTY
—	1115	→ Move rig to next well to bail out.

NOT USED

JP 9.27.10

Reported By: J. Fleming		Reviewed By: L.D. Walker	
Title: Geologist	Date: 9.27.10	Title: Geologist	Date: 10-11-10
Signature: Jim Fleming		Signature: LD Walker	

A-6003-651 (REV 1)

FIELD ACTIVITY REPORT - DAILY DRILLING

Page 1 of 2

Date: 9.28.2010

Well Name: 199-H1-2

Well ID: C7584

Location: NW of 100-H Reactor

Report No.: 6

Start	Finish	Total
Time 1000	Time 1600	Time 6
Hole Depth/Csg — / —	Hole Depth/Csg — / —	Hole Depth/Csg — / —

Reference Measuring Point: GROUND SURFACE

Casing String No. 1 2 3 4 ____ Rod Size:

See Report No. 1 DEVELOPMENT

Time/Depth From	Time/Depth To	Description of Activities/Operations with Depth (Attach applicable drawings and document straightness test results)
1000		Set up C7584 for development
		→ trip in pump; intake @ 44.5' bgs
	1100	Prep for development & take caution w/ pumping
1100	1400	Begin development. See pg 2.
1400	1500	Drillers trip out pump & prep to mob to C7604
1500	1600	Geo paperwork. Drillers set up @ ~~C7604~~ C7604 to drill.

NOT USED

JF 9.28.2010

Reported By: J. Fleming

Title: Geologist

Date: 9.28.10

Signature: Jim Fleming

Reviewed By: L.D. Walker

Title: Geologist

Date: 10/11/10

Signature: [signature]

A-6003-651 (REV 1)

FIELD ACTIVITY REPORT - DAILY DRILLING

Continuation Page

Page 2 of 2

Date: 9-28-10

Well Name: 199-H1-2 | Well ID: C7584

Location: NW of 100H | Continuation of Report No.: 6

Time/Depth From	Time/Depth To	Description of Activities/Operations with Depth
		Test #1 w/ Troll 168724
		Di: 4.0 Df: .04 intake: 44.5'bgs 3.7gpm
		PUMP ON: 1122 PUMP OFF: 1321 gpm 4.2gpm

TIME	DEPTH	Turbidity(NTU)	Conductivity(µS/cm)	pH	T°(c)	NOTES
1125	0.23	>1000	501	7.53	17.06	Barely pumping
1133	.02	285	441	7.70	17.26	draw down too much
1138	.03	84.1	434	7.77	17.36	recharge not enough
1140	.04	45.7	438	7.78	17.44	@ 1135 turn pump ↓ 3.7gpm
1145	.03	29.0	438	7.82	17.50	
1150	.04	21.0	435	7.82	17.52	
1155	.04	11.6	435	7.87	17.65	
1200	.04	9.8	429	7.91	17.75	
1205	.04	7.66	436	7.86	17.78	
1210	.04	8.16	436	7.85	17.80	
1215	.04	6.48	432	7.88	17.86	
1220	.04	6.36	435	7.85	17.88	
1225	.02 .04	6.54	436	7.84	17.89	
~~1244~~	~~.04~~	~~df 9.28.10~~				
1230	.04	6.27	435	7.86	17.90	
1240	.04	6.01	436	7.84	17.88	
1245	.04	6.28	430	7.84	17.88	
1250	.04	6.36	436	7.84	17.91	
1310	.04	4.47	432	7.86	17.90	
1315	.04	4.42	436	7.87	17.90	
1320	.04	4.15	436	7.86	17.90	
TIME	DEPTH					
1321	.04	Recovery				
1351	3.88					

Reported By: J. Fleming | Reviewed By: L. D. Walker

Title: Geologist | Date: 9.28.10 | Title: Geologist | Date: 10-11-10

Signature: J. Fleming | Signature: L. D. Walker

A-6003-652 (04/03)

WELL DEVELOPMENT AND TESTING DATA

Well Name:	Well ID:	Well Location:	Date:
199-H1-1	C7585	NW of 100-H Reactor	9.28.2010

Reference Measuring Point (unless otherwise noted): TOP OF OUTER CASING (TOC)

Has the well been surveyed? ○ Yes ☒ No | Does the well have a cement pad? ☒ Yes ○ No

PART 1

STATIC WATER LEVEL:	BGS
Start of Job	22.5'
End of Job	21.3'
DEPTH TO BOTTOM:	BGS
Start of Job	38'
End of Job	38'

PART 2

WELL DEVELOPMENT DATA

Pump Model	5hp
Intake Depth	33' bgs
Starting Turbidity	28.0

Pump Start	Stop	Flow Rate
0755	0820	72gpm

Total Pumped	1,800 gallons
Final Turbidity	3.06
XD SN/Range (PSI)	168724 / 30 PSI

PART 3

INSTANTANEOUS SLUG TEST

Static Water Level (TOC)	
Transducer Depth	
Baseline Start	
Injection Start	
Baseline Start	
Withdrawal Start	
Slug Volume	
XD SN/Range (PSI)	

PART 4

Last Recorded Measurements Date:

Current Measurements Date:

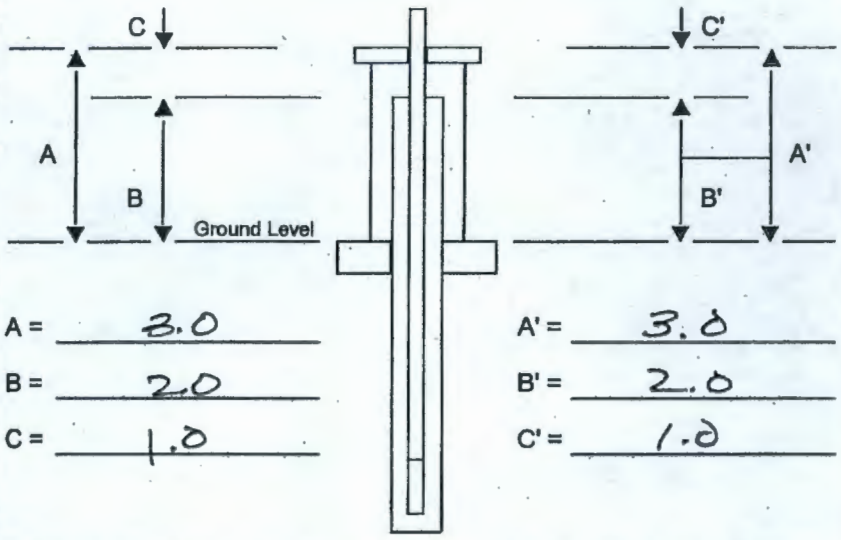

A =	3.0	A' =	3.0
B =	2.0	B' =	2.0
C =	1.0	C' =	1.0

Are there any reference marks on the casing strings? ○ Yes ○ No

PART 5

COMMENTS:

Test 1 w/Troll 168724

Di: 5.98

Df: 9.28.10 6.67

Recovery 30 min

0820 Di: 6.67

0850 Df: 6.11

Prepared by (print name):	Signature:	Date:
Jessica Fleming	[signature]	9.28.2010
Reviewed by (print name):	**Signature:**	**Date:**
L.D. Walker	[signature]	10-12-10

A-6003-644 (03/03)

FIELD ACTIVITY REPORT - DAILY DRILLING

Page 1 of 1

Date: 9.23.2010

Well Name: 199-H1-1	Well ID: C7585
Location: NW of 100-H Reactor	Report No.: 03

Start	Finish	Total
Time 1100	Time 1530	Time 4.5
Hole Depth/Csg — / —	Hole Depth/Csg — / —	Hole Depth/Csg — / —

Reference Measuring Point: GROUND SURFACE

Casing String No. 1 2 3 4 ____ Rod Size:
See Report No. 1 DEVELOPMENT

Time/Depth From	Time/Depth To	Description of Activities/Operations with Depth (Attach applicable drawings and document straightness test results)
1100	—	Mob to site & set up for development. -Tagwater: 25.5'
—	—	→ Tag inside of well: 34' bgs = 4' of fill
—	1205	→ Drillers bail out fill: ~~IIII~~ IIII loads; Tag: 38' bgs = clean
1205	1250	Begin tripping in trem & 5hp pump → set intake @ 33' bgs
1250	—	Wait for purge truck to arrive on site (Drillers to move
—	1330	it over from C7604) @ 1330
1330	—	Samplers on site @ 1330
—	—	→ The generator will not work. Drillers
—	1530	try to figure out why.
1530		No development today. Geo departs from site

NOT USED

JF 9.23.2010

Reported By: J. Fleming		Reviewed By: L. D. Walker	
Title: Geologist	Date: 9.23.10	Title: Geologist	Date: 10/12/10
Signature: J. Fleming		Signature: D. Walker	

A-6003-651 (REV 1)

FIELD ACTIVITY REPORT - DAILY DRILLING

Page 1 of 1

Date: 9.27.2010

Well Name: 199-H1-1

Well ID: C7585

Location: NW of 100-H Reactor

Report No.: 04

Start	Finish	Total
Time 0600	Time	Time
Hole Depth/Csg — / —	Hole Depth/Csg — / —	Hole Depth/Csg — / —

Reference Measuring Point: GROUND SURFACE

Casing String No. 1 2 3 4 ____ Rod Size:
See Report No. 1 DEVELOPMENT

Time/Depth From	Time/Depth To	Description of Activities/Operations with Depth (Attach applicable drawings and document straightness test results)
0600	0645	To ISRM trailer for POD. Hi of 85°
0645	0800	Drillers leave site + get gas + generator.
0800	—	Set up for development
—	—	→ @ 0830 a stop work was called by NCO's;
—	—	since HR-3 development includes a water
—	—	sample, no development will take place until
—	0900	HOLD is lifted.
0900	—	Drillers will bail out any fill in wells.
—	0915	→ Geo to follow rig around.

NOT USED

JP 9.27.2010

Reported By: J. Fleming

Title: Geologist

Date: 9.27.10

Signature: [signature]

Reviewed By: L.D. Walker

Title: Geologist

Date: 10/12/10

Signature: [signature]

A-6003-651 (REV 1)

FIELD ACTIVITY REPORT - DAILY DRILLING

Page 1 of 2

Date: 9.28.2010

Well Name: 199-H1-1

Well ID: C7585

Location: NW of 100-H Reactor

Report No.: 05

Start	Finish	Total
Time 0600	Time 1000	Time 4
Hole Depth/Csg - / -	Hole Depth/Csg - / -	Hole Depth/Csg - / -

Reference Measuring Point: GROUND SURFACE

Casing String No. 1 2 3 4 ____ Rod Size:
See Report No. 1

Time/Depth From	Time/Depth To	Description of Activities/Operations with Depth (Attach applicable drawings and document straightness test results)
0600	0630	To ISRM trailer for PSD. Hi of 86°
0630	0745	To C7585. Prep for development
0745	0900	Begin Development. See pg 2
0900	—	Take down site & prep to move to C7584
—		→ Geo & drillers mob to C7584.

USED

9.28.2010

NOT

Reported By: J. Fleming

Title: Geologist

Date: 9.28.10

Signature: J Fleming

Reviewed By: L.D. Walker

Title: Geologist

Date: 10/12/10

Signature: LD Walker

A-6003-651 (REV 1)

FIELD ACTIVITY REPORT - DAILY DRILLING

Continuation Page

Date: 9.28.2010

Well Name: 199-H1-1

Well ID: 67585

Location: NW of 100-H Reactor

Continuation of Report No.: 66

Time/Depth From	Time/Depth To	Description of Activities/Operations with Depth
		DEVELOPMENT
		Test #1 w/ TROLL: 168724
		Pump on: 0755 off: 0820 gpm: 72 gpm
		Di: 5.98 Df: 6.67 intake: 33' bgs

TIME	DEPTH	Turbidity (NTU)	Conductivity (µS/cm)	pH	T (°C)	NOTES
0759	5.64	28.0	671	7.52	16.03	
0805	5.69	8.84	401	7.61	15.96	
0810	5.68	3.94	398	7.72	15.95	
0815	5.68	3.33	396	7.75	15.94	
0820	5.67	3.06	397	7.75	15.96	
TIME	DEPTH	RECOVERY				
0820	5.67					
0850	6.11					

NOT USED

JF 9.28.10

Reported By: J. Fleming

Title: Geologist

Date: 9.28.2010

Signature: J. Fleming

Reviewed By: C.D. Walker

Title: Geologist

Date: 10/12/10

Signature: C.D. Walker

A-6003-652 (04/03)

WELL DEVELOPMENT AND TESTING DATA

Well Name:	Well ID:	Well Location:	Date:
199-H4-79	C7586	SW of 100-H Reactor	9.21.10

1 **Reference Measuring Point (unless otherwise noted): TOP OF OUTER CASING (TOC)**

Has the well been surveyed? ○ Yes ⊗ No | Does the well have a cement pad? ○ Yes ⊗ No

PART 1

STATIC WATER LEVEL:	bgs
Start of Job	45.4
End of Job	45.4
DEPTH TO BOTTOM:	
Start of Job	64
End of Job	64.2

PART 2

WELL DEVELOPMENT DATA

Pump Model	5 hp Grundfos/100 stg bowls
Intake Depth	60' bgs
Starting Turbidity	572

Pump Start	Stop	Flow Rate
1340	1430	44.8

Total Pumped	2240
Final Turbidity	2.45
XD SN/Range (PSI)	

PART 3

INSTANTANEOUS SLUG TEST

Static Water Level (TOC)	
Transducer Depth	
Baseline Start	
Injection Start	
Baseline Start	
Withdrawal Start	
Slug Volume	
XD SN/Range (PSI)	

PART 4

Last Recorded Measurements Date:

Current Measurements Date:

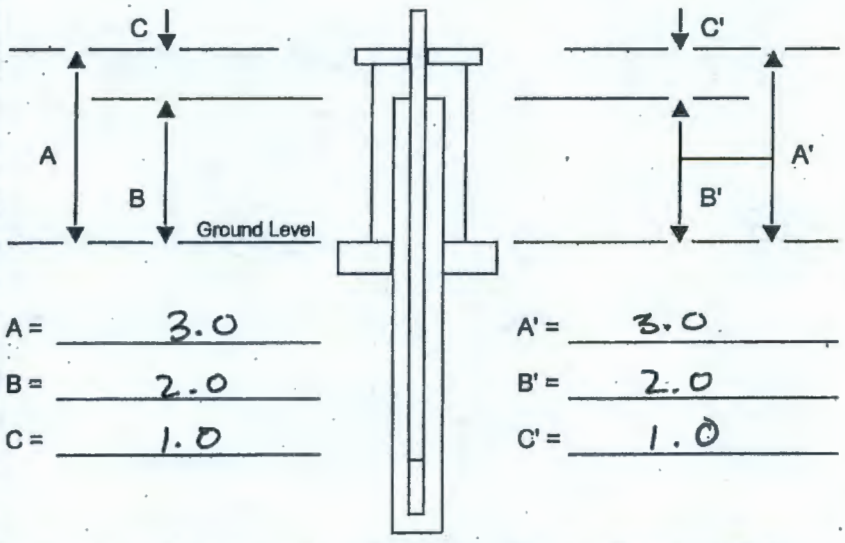

A =	3.0	A' =	3.0
B =	2.0	B' =	2.0
C =	1.0	C' =	1.0

Are there any reference marks on the casing strings? ○ Yes ⊗ No

PART 5 Troll #

COMMENTS:

Test 1

XDi: 11.04

XDf: 9.35

Recovery (30 min) 11.02' below water

Prepared by (print name):	Signature:	Date:
J. Fleming / A. Lantow	[signature] Exxon Lantow	9.21.10
Reviewed by (print name):	**Signature:**	**Date:**
L.D. Walker	[signature]	10-12-10

A-6003-644 (03/03)

FIELD ACTIVITY REPORT - DAILY DRILLING

Page 1 of 1

Date: 9.21.2010

(SF) 9.21.10

Well Name: ~~C76~~ 199-H4-79 | Well ID: C7988

Location: SW of 100-H Reactor | Report No.: 02

Start	Finish	Total
Time 1100	Time 1530	Time 4.5
Hole Depth/Csg — / —	Hole Depth/Csg — / —	Hole Depth/Csg — / —

Reference Measuring Point: GROUND SURFACE

Casing String No. 1 2 3 4 ____ Rod Size:

See Report No. 1 DEVELOPMENT

Time/Depth From	Time/Depth To	Description of Activities/Operations with Depth (Attach applicable drawings and document straightness test results)
1100	—	Mob to site from C7988. Set up for development.
—	1140	→ Tag well: 58' bgs = 6' of fill. Drillers will bail
1140	1240	Bail out fill: (IIII/IIII/IIII loads) Tag: 64.2' bgs = EMPTY no fill
1240	1330	Begin tripping in trem pipe & pump; intake set @ 60' bgs.
1330	—	BEGIN DEVELOPMENT 39'-59' bgs TEST 1
—	—	xDi: 11.04 xDf: 9.35 gpm: 44.8 [Probe @ 55' bgs]
—	—	Pump on: 1340 pump off: 1430

TIME	DEPTH	Turbidity (NTU)	Conductivity (µS/cm)	pH	T°(C)	NOTES
1345	9.6	9.72	350	7.76	16.3	
1350	9.51	7.12	346	7.85	16.27	
1355	9.45	3.65	346	8.01	16.24	
1400	9.44	2.86	347	8.09	16.25	
1405	9.43	2.49	347	8.05	16.26	
		SAMPLERS ON SITE @ 1400				
	T-002	Sample # B24D55, B24D71				
1430	9.35	RECOVERY	TEST	30	MIN	
1500	11.02					
—	—	Samplers depart from site.				
—	1500	Begin cleaning up site. —				
1500	—	Trip out trem & pump. Geo paperwork				
—	1530	→ Tag inside of well: 64.2' bgs				
1530		Geo departs from site.				

Reported By: J. Fleming		Reviewed By: L.D. Walker	
Title: Geologist	Date: 9.21.10	Title: Geologist	Date: 10-12-10
Signature: [signature]		Signature: [signature]	

A-6003-651 (REV 1)

WELL DEVELOPMENT AND TESTING DATA

Well Name:	Well ID:	Well Location:	Date:
199-H4-76	C7587	NW of 100-H Reactor	9.29.10

Reference Measuring Point (unless otherwise noted): TOP OF OUTER CASING (TOC)

Has the well been surveyed? ○ Yes ☒ No

Does the well have a cement pad? ☒ Yes ○ No

PART 1

STATIC WATER LEVEL:

Start of Job	43.1' bgs
End of Job	43.5' bgs

DEPTH TO BOTTOM:

Start of Job	52' bgs
End of Job	52' bgs

PART 2

WELL DEVELOPMENT DATA

Pump Model	5hp
Intake Depth	49' bgs
Starting Turbidity	11.9

Pump Start	Stop	Flow Rate
1621	1644	30

Total Pumped	690
Final Turbidity	1.76
XD SN/Range (PSI)	168724/30PSI

PART 3

INSTANTANEOUS SLUG TEST

Static Water Level (TOC)	
Transducer Depth	
Baseline Start	
Injection Start	
Baseline Start	
Withdrawal Start	
Slug Volume	
XD SN/Range (PSI)	

PART 4

Last Recorded Measurements Date:

Current Measurements Date:

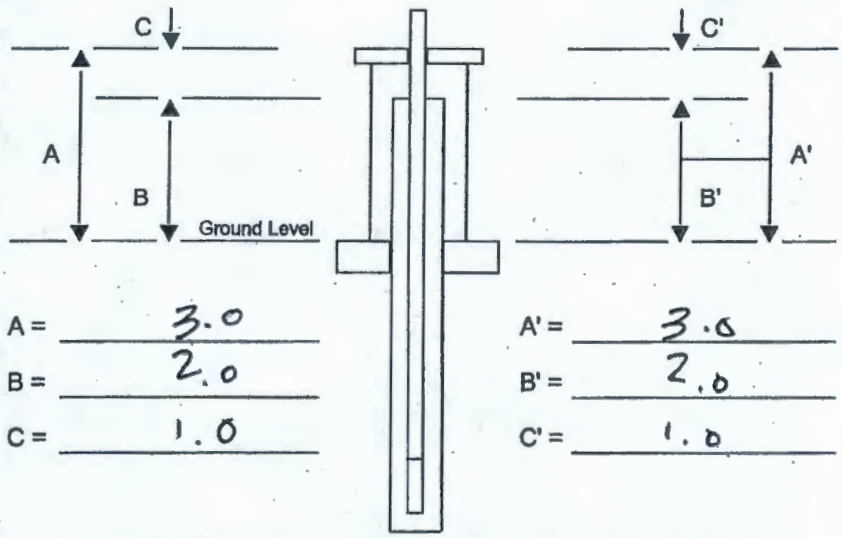

A =	3.0	A' =	3.0
B =	2.0	B' =	2.0
C =	1.0	C' =	1.0

Are there any reference marks on the casing strings? ○ Yes ○ No

PART 5

COMMENTS:

Test #1 (37'-47' screen)

Di: 3.18

Df: 1.66

Recovery (30 min)

Di: 1.66

Df: 3.17

Prepared by (print name):	Signature:	Date:
Jessica Fleming	[signature]	9.29.10
Reviewed by (print name):	**Signature:**	**Date:**
L. D. Walker	[signature]	10-12-10

A-6003-644 (03/03)

FIELD ACTIVITY REPORT - DAILY DRILLING

Page 1 of 2

Date: 9.29.2010

Well Name: 199-H4-76

Well ID: C7587

Location: NW of 100-H Reactor

Report No.: 4

Start	Finish	Total
Time 1400	Time 1730	Time 3.5
Hole Depth/Csg – / –	Hole Depth/Csg – / –	Hole Depth/Csg – / –

Reference Measuring Point: GROUND SURFACE

Casing String No. 1 2 3 4 ____ Rod Size:
See Report No. 1

Time/Depth From	Time/Depth To	Description of Activities/Operations with Depth (Attach applicable drawings and document straightness test results)
1400	–	To site. Set up over well + tag depth: 51' = 1' fill
–	–	→ Bail out until clean; Tag: 52' bgs
–	1520	→ Tag water @ 48.5' bgs
1520	1615	Trip pump into well & set intake @ 49' bgs
1615	1715	Begin development. (See pg 2)
1715	1730	Clean up & secure site. Geo paperwork
1730		Geo & drillers depart from site

NOT USED

JF 9.29.10

Reported By: J. Fleming

Title: Geologist

Date: 9.29.10

Signature: Jon Fleming

Reviewed By: L.D. Walker

Title: Geologist

Date: 10/12/10

Signature: [signature]

A-6003-651 (REV 1)

FIELD ACTIVITY REPORT - DAILY DRILLING

Continuation Page

Page 2 of 2

Date: 9.29.10

Well Name: 199-H4-76

Well ID: ~~C78~~ C7587

Location: NW of 100-H Reactor

Continuation of Report No.: 4

Time/Depth From	Time/Depth To	Description of Activities/Operations with Depth
		Development Test 1 w/ Troll 168729/30 psi
		xDi: 3.18 xDf: 1.66 intake @ 49' bgs 9.29.10
		pump on: 1621 pump off: 1644 gpm: ~~24~~ 30
		total gallons: 690 max drawdown: 1.52'

TIME	DEPTH	Turbidity (NTU)	Conductivity (µS)	pH	Temp (C°)	NOTES
1625	1.70	11.9	379	7.80	16.18	
1632	1.68	4.53	387	7.79	16.18	
1636	1.66	4.86	390	7.76	16.16	
1641	1.66	1.76	390	7.84	16.15	

TIME	DEPTH	RECOVERY	(30 min)			Immediate recharge
1644	1.66					
1716	3.17					

Reported By: J. Fleming

Title: Geologist

Date: 9.29.10

Signature: J. Fleming

Reviewed By: L.D. Walker

Title: Geologist

Date: 10/12/10

Signature: L.D. Walker

A-6003-652 (04/03)

WELL DEVELOPMENT AND TESTING DATA

Well Name:	Well ID:	Well Location:	Date:
199-H4-78	C7588	SW of 100-H Reactor	9.21.10

Reference Measuring Point (unless otherwise noted): TOP OF OUTER CASING (TOC)

Has the well been surveyed? ☒ Yes ○ No | Does the well have a cement pad? ☒ Yes ○ No

PART 1 ground surface

STATIC WATER LEVEL:

Start of Job	40.2'
End of Job	40.2'

DEPTH TO BOTTOM: (bgs)

Start of Job	64.1
End of Job	64

PART 2

WELL DEVELOPMENT DATA

Pump Model Sh, GrundFos 100 gpm

Intake Depth 55.0

Starting Turbidity 4.94

Pump Start	Stop	Flow Rate
0744	0831	44.8gpm

Total Pumped 2,105 gallons

Final Turbidity 1.09

XD SN/Range (PSI)

PART 3

INSTANTANEOUS SLUG TEST

Static Water Level (TOC)

Transducer Depth

Baseline Start

Injection Start

Baseline Start

Withdrawal Start

Slug Volume

XD SN/Range (PSI)

PART 4

Last Recorded Measurements Date:

Current Measurements Date:

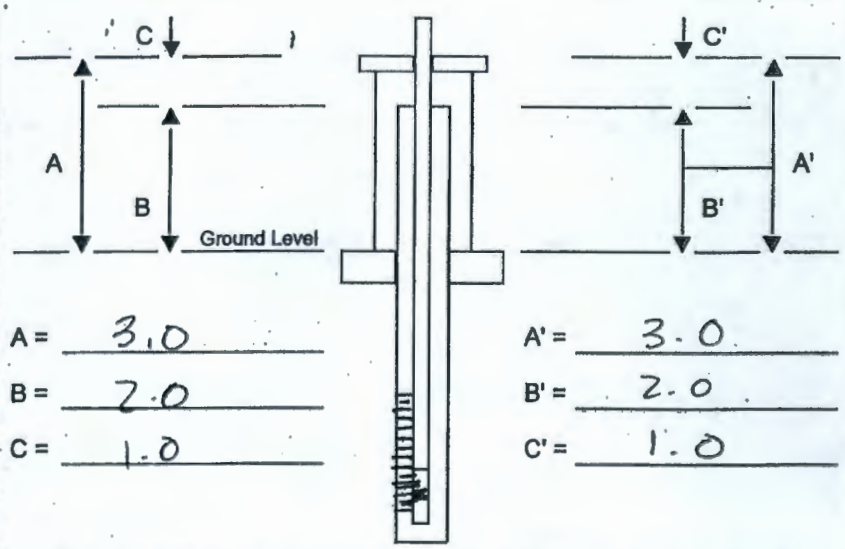

A = 3.0 | A' = 3.0

B = 2.0 | B' = 2.0

C = 1.0 | C' = 1.0

Are there any reference marks on the casing strings? ○ Yes ○ No

PART 5

COMMENTS:

STANDARDS

Turb.		Cond.		pH	
S	S	S	A	S	A
562	562	1421	1487	7.0	7.16
478	47.7			10.0	10.23
4.85	4.85				

Test 1

Di: 14.26 Recovery (30 mi): 14.55

Df: 7.49

Prepared by (print name):	Signature:	Date:
J. Fleming	[signature]	9.21.10
Reviewed by (print name):	**Signature:**	**Date:**
L.A. Walker	[signature]	10-12-10

A-6003-644 (03/03)

FIELD ACTIVITY REPORT - DAILY DRILLING

Page 1 of 2

Date: 9.21.2010

Well Name: 199-H4-78

Well ID: C7588

Location: SW of 100-H Reactor

Report No.: 7

Start	Finish	Total
Time 0600	Time 1100	Time 5 hrs
Hole Depth/Csg — / —	Hole Depth/Csg — / —	Hole Depth/Csg — / —

Reference Measuring Point: GROUND SURFACE

Casing String No. 1 2 3 4 ____ Rod Size:
See Report No. 1

Time/Depth From	Time/Depth To	Description of Activities/Operations with Depth (Attach applicable drawings and document straightness test results)
0600	0630	To ISRM trailer for POD. Hi of 71°
0630	—	To site. Set up for development.
—	0740	→ Samplers to site @ 0740
0740	—	Begin development activities (See pg 2)
—	0900	→ Samplers depart @ 0848 - HEIS#'s
0900	1100	Drillers clean up site & prep to move onto C7586
1100		Geo departs to C7586

NOT USED (JF) 9.21.2010

Reported By: J. Fleming

Title: Geologist

Date: 9.21.10

Signature: J. Fleming

Reviewed By: L.D. Walker

Title: Geologist

Date: 10/12/10

Signature: D. Walker

A-6003-651 (REV 1)

FIELD ACTIVITY REPORT - DAILY DRILLING

Continuation Page

Date: 9.21.10

Well Name: 199-H4-78

Well ID: C2588

Location: SW of 100-H Reactor

Continuation of Report No.: 7

Time/Depth

Description of Activities/Operations with Depth

Test 1

Standards ran yesterday - Pump on: 0744 off: 0831

Di: 14.26 Df: 7.49 - intake @ 56' bgs 1 gpm: 44.8

From	To	Time	Depth	Turbidity (NTU)	Conductivity (µS/cm)	pH	T (°C)	NOTES
		0752	10.50	4.94	424	8.12	13.8	Laptop froze
		0805	8.26	1.44	403	7.83	15.0	
		0810	8.75	1.11	402	7.82	14.9	
		0820	8.90	1.09	401	7.81	14.8	
				RECOVERY	30 MIN: 0900			
		0900	14.99					
				Sample collected; HEIS#'s B24D57, B24D73				

Reported By: J. Fleming

Title: Geologist

Date: 9.21.10

Signature: J. Fleming

Reviewed By: L.D. Walker

Title: Geologist

Date: 10-12-10

Signature: D Walker

A-6003-652 (04/03)

WELL DEVELOPMENT AND TESTING DATA

Well Name:	Well ID:	Well Location:	Date:
199-D8-95	C7589	E: 573611.76 N: 152100.76	4.29.10

Reference Measuring Point (unless otherwise noted): TOP OF OUTER CASING (TOC)

Has the well been surveyed? ○ Yes ☑ No

Does the well have a cement pad? ☑ Yes ○ No

PART 1

STATIC WATER LEVEL:

Start of Job	81.1'	bgs
End of Job	81.3'	bgs

DEPTH TO BOTTOM:

Start of Job	99.95'	bgs
End of Job	99.95'	bgs

PART 2

WELL DEVELOPMENT DATA

Pump Model	100 Hp
Intake Depth	94.5' bgs
Starting Turbidity	143

Pump Start	Stop/Δ	Flow Rate
0945	1045	33

Total Pumped	1980 gallons
Final Turbidity	3.51
XD SN/Range (PSI)	115276

PART 3

INSTANTANEOUS SLUG TEST

Static Water Level (TOC)	
Transducer Depth	
Baseline Start	
Injection Start	
Baseline Start	
Withdrawal Start	
Slug Volume	
XD SN/Range (PSI)	

PART 4

Last Recorded Measurements Date:

Current Measurements Date:

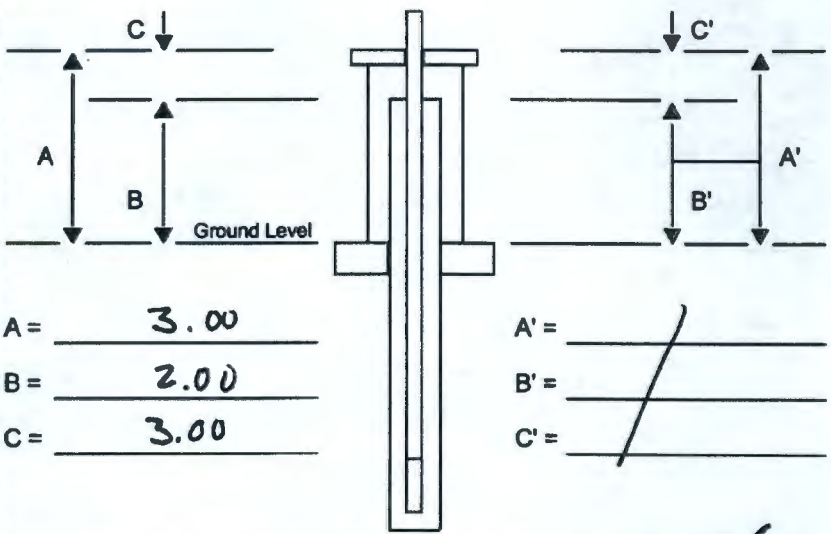

A =	3.00	A' =	
B =	2.00	B' =	
C =	3.00	C' =	

Are there any reference marks on the casing strings? ○ Yes ☑ No

PART 5

COMMENTS:

- Development done in one zone, 94.5'-81.1' bgs, and one recovery test
- test recorded on troll S/N 115276
- test recorded as "C7589" for both pumping test and recovery test.

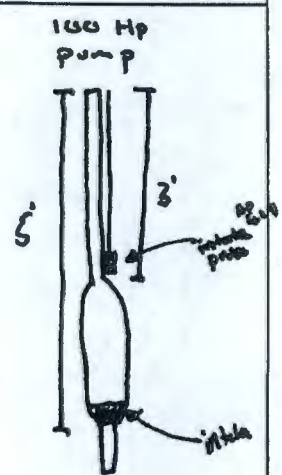

Prepared by (print name):	Signature:	Date:
A. Pappas		4.29.10
Reviewed by (print name):	**Signature:**	**Date:**

FIELD ACTIVITY REPORT - DAILY DRILLING

Page 1 of 1

Date: 4.28.10

Well Name: 199-D8-95

Well ID: C7589

Location: E: 573611.76 N: 152160.76

Report No.: 6

Start	Finish	Total
Time 0600	Time	Time
Hole Depth/Csg — / —	Hole Depth/Csg — / —	Hole Depth/Csg — / —

Reference Measuring Point: GROUND SURFACE

Casing String No. 1 2 3 4 ____ Rod Size:

See Report No. 1

Time/Depth From	Time/Depth To	Description of Activities/Operations with Depth (Attach applicable drawings and document straightness test results)
0600	0644	POD at ISRM trailer.
0644	0721	to site, drillers rig on to site.
0721	/	rig up, tag inside permanent at 97.9' bgs,
/	/	actual is 99.96 — 2.06' of fill inside.
/	0753	begin to bail well
0753	0801	well has be bailed. tag is 99.95' bgs.
0801	0804	Drillers secure site rig off.
0804		Geologist exits site

Reported By: A. Pappas

Title: Field Geologist

Date: 4.28.10

Signature: [signature]

Reviewed By: C. D. Walker

Title: Geologist

Date: 5/21/10

Signature: [signature]

FIELD ACTIVITY REPORT - DAILY DRILLING

Page 1 of 2

Date: 4.29.10

Well Name: 199-D8-95 | Well ID: C7589

Location: E: 573611.76 N: 152160.76 | Report No.: 7

Start	Finish	Total
Time 0600	Time 1200	Time 6 hrs
Hole Depth/Csg — / —	Hole Depth/Csg — / —	Hole Depth/Csg — / —

Reference Measuring Point: GROUND SURFACE

Casing String No. 1 2 3 4 ____ Rod Size:
See Report No. 1

Time/Depth From	Time/Depth To	Description of Activities/Operations with Depth (Attach applicable drawings and document straightness test results)
0600	0728	POD at ISRM Emiker. ~~Drillers setup to run~~
0728		~~in pump.~~ AD 4.n to site, drillers rig up on
		hole. Setup to trip in pump Depth
		bottom tagged at 99.95' bgs Depth to water tagged at
	0846	81.1' bgs
0846	0920	Drillers trip in pump.
0920		Pump and probe tripped in. Pump at 94.5' bgs,
		probe at 92.5' bgs. Drillers hook up to truck, Geologist
		connects and tests equipment. only one zone to develop
		pH NTU's µS
		std act std act std act
		10 10.15 494 498 1411 1338
		7 7.08 520 528
	0945	4.24 3.78 XD initial 11.89
0945		Drillers start pumping first zone, 94.5' - 81.1 bgs, recorded
		on troll S/N 115276 as test "C7589"
		XD NTU's pH µS temp°C gpm
	0945	-11.89 193 7.00 648 18.1 33
	0955	4.75 42.8 7.89 601 18.3 33
	1005	4.62 12.4 7.88 601 18.3 33
	1015	4.61 7.14 7.99 607 18.3 33
	1025	4.58 4.48 8.20 605 18.3 33
	1035	4.54 4.44 7.94 603 18.3 33
	1040	NCO's collect water sample, HETS #8 BD 759 ~~[illegible]~~

Reported By: A. Pappas | Reviewed By: L. S. Walker

Title: Field Geologist | Date: 4.29.10 | Title: Geologist | Date: 5/21/10

Signature: [signature] | Signature: [signature]

FIELD ACTIVITY REPORT - DAILY DRILLING

Continuation Page

Page 2 of 2

Date: 4.29.10

Well Name: 199-D8-95

Well ID: C7589

Location: E: 573611.76 N: 1521607.6

Continuation of Report No.: 7

Time/Depth From	Time/Depth To	Description of Activities/Operations with Depth
		pump test, zone 1, cont...
		xD NTU's pH µs temp °C gpm
	1045	4.50 7.51 8.14 602 18.3 33
1045		pump off begin recovery test, recorded on test
	1115	"C7589".
1115		recovery test stopped. Drillers remove pump
	1146	and probe. xD final: 11.55'
1146		Pump removed, Drillers clean and secure site.
		Geologist does paperwork. Depth to bottom is 99.95' bgs
	1200	Depth to water is 81.3' bgs
1200		Geologist exits site

A. P. 4.29.10

Not Used

Reported By: A. Pappas		Reviewed By: L. D. Walker	
Title: Field Geologist	Date: 4.29.10	Title: Geologist	Date: 5/21/10
Signature:		Signature:	

WELL DEVELOPMENT AND TESTING DATA

Well Name:	Well ID:	Well Location:	Date:
199-DS-130	C7590	E: 574639.43 N. 151428.2	3.23.10

Reference Measuring Point (unless otherwise noted): TOP OF OUTER CASING (TOC)

Has the well been surveyed? ○ Yes ● No

Does the well have a cement pad? ○ Yes ● No

PART 1

STATIC WATER LEVEL:

Start of Job	84.85' TOC
End of Job	84.80' TOC

DEPTH TO BOTTOM:

Start of Job	99.0' bgs
End of Job	98.9' bgs

PART 2

WELL DEVELOPMENT DATA

Pump Model	100 HP
Intake Depth	90' bgs
Starting Turbidity	189 ntus

Pump Start	Stop	Flow Rate
0853	0854	20
0854	1005	11

Total Pumped	801 gallons
Final Turbidity	220 ntus
XD SN/Range (PSI)	115276

PART 3

INSTANTANEOUS SLUG TEST

Static Water Level (TOC)	
Transducer Depth	
Baseline Start	
Injection Start	
Baseline Start	
Withdrawal Start	
Slug Volume	
XD SN/Range (PSI)	

PART 4

Last Recorded Measurements Date:

Current Measurements Date:

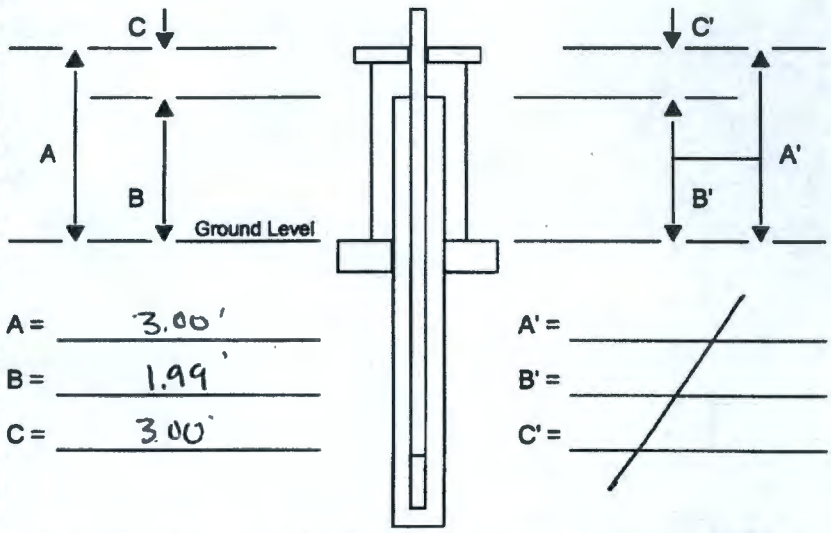

A =	3.00'	A' =	
B =	1.99'	B' =	
C =	3.00'	C' =	

Are there any reference marks on the casing strings? ○ Yes ● No

PART 5

COMMENTS:

- Draw down and recovery test recorded on Troll 700, SN: 115276.
- intake at 90' bgs.
- Troll at 88' bgs
- Pump on at 0853 off at 1005.

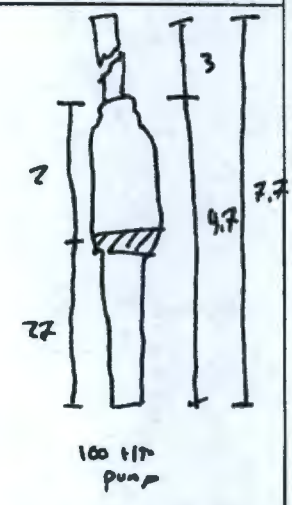

Prepared by (print name):	Signature:	Date:
A. Pappas		3.23.10
Reviewed by (print name):	**Signature:**	**Date:**

FIELD ACTIVITY REPORT - DAILY DRILLING

Page 1 of 2

Date: 3.23.10

Well Name: 199-D5-130 | Well ID: C7590

Location: E: 574039.43 N: 151428.26 | Report No.: 7

Start	Finish	Total
Time 0600	Time 1123	Time 5 hrs 23 min
Hole Depth/Csg — / —	Hole Depth/Csg — / —	Hole Depth/Csg — / —

Reference Measuring Point: GROUND SURFACE

Casing ~~String~~ No. 1 2 3 4 ____ Rod Size:
~~See Report No. 1~~

Time/Depth From	To	Description of Activities/Operations with Depth (Attach applicable drawings and document straightness test results)
0600	0658	POD at ISRM trailer.
0658	0750	Drillers set up for development (well cleaned out yesterday, tag at 99.0')
0750	/	Drillers trip pump along with 88' of pipe.
/	0816	intake at 90' bgs, probe at 88' bgs
0816	/	Check instruments.
/	/	ntu's pH conductivity
/	/	std reading std reading std reading
/	/	4.24 2.72 7.00 6.91 1414 1242
/	/	53.0 51.2 10.00 10.13
/	/	444 492 DTW 84.85 TOC
/	0853	xD interval 5.35
0853	/	Start pump, test on Troll 700: "C7590"
/	/	xD ntu pH µ gpm Temp
/	0853	2.84 189 8.98 642 20 6.6°c
/	0903	0.39 358 8.21 785 11 16.8°c
/	0913	0.37 18.9 8.01 772 11 17.5°c
/	0923	0.34 5.86 7.97 777 11 17.1°c
/	0933	0.33 4.31 7.97 774 11 16.8°c
/	0943	0.30 5.21 7.98 784 11 18.0°c
/	0958	0.28 1.71 7.88 783 11 18.7°c
/	1005	pump off, test on Troll 700: "C7590"
1005	/	final xD ntu pH µ gpm Temp Time
/	/	~~[illegible]~~ 0.26 2.20 781 777 11 17.4°c (1005)
/	/	Samples collected Sample at 0950, HEIS # B23PK1

Reported By: A. Pappas | Reviewed By: L.D. Walker

Title: Field Geologist | Date: 3.23.10 | Title: Geologist | Date: 3/25/10

Signature: | Signature:

FIELD ACTIVITY REPORT - DAILY DRILLING

Continuation Page

Page 2 of 2

Date: 3.23.10

Well Name: 199-D5-130

Well ID: C7590

Location: E: 574039.43 N: 151428.26

Continuation of Report No.: 7

Time/Depth From	Time/Depth To	Description of Activities/Operations with Depth
/	1035	and HELSA B23BK2.
1035	/	End vcconny test final xD 5.30, begin
/	1123	to pull pump and probe from well
1123		Pump and Troll/probe removed. Drillers clean up
		site. Depth to bottom tagged at 98.9'
		Depth to water tagged at. 84.80' TOC. Geologist
		does paperwork
		Geologist exits site

Not Used
A. Papes
3.23.10

Reported By: A. Papes

Reviewed By: C.D. Walker

Title: Field Geologist

Date: 3.23.10

Title: Geologist

Date: 5/20/10

Signature:

Signature:

WELL DEVELOPMENT AND TESTING DATA

Well Name:	Well ID:	Well Location:	Date:
199-D5-127	C7591	N-151428.66, E-572992.87	3-5-10

Reference Measuring Point (unless otherwise noted): TOP OF OUTER CASING (TOC)

Has the well been surveyed? ○ Yes ⊗ No | Does the well have a cement pad? ○ Yes ⊗ No

PART 1

STATIC WATER LEVEL:

Start of Job 88.1' TOC

End of Job 88.1 TOC

DEPTH TO BOTTOM:

Start of Job 99.0' TOC

End of Job 107.45 TOC, 104.45 bgs

PART 2

WELL DEVELOPMENT DATA

Pump Model Shp w/ 30gpm bowls.

Intake Depth 96' bgs, 99.0' TOC.

Starting Turbidity 48.7'

Pump Start	Stop	Flow Rate
1116	1224	23 gpm
1'		

Total Pumped 1886 gal

Final Turbidity 3.01

XD SN/Range (PSI) 10500/20

PART 3

INSTANTANEOUS SLUG TEST

Static Water Level (TOC) ____

Transducer Depth ~~99~~ 103.7' TOC/100.7 bgs

Baseline Start

Injection Start

Baseline Start

Withdrawal Start

Slug Volume

XD SN/Range (PSI)

Not Performed

PART 4

Last Recorded Measurements Date: 3-5-10

Current Measurements Date:

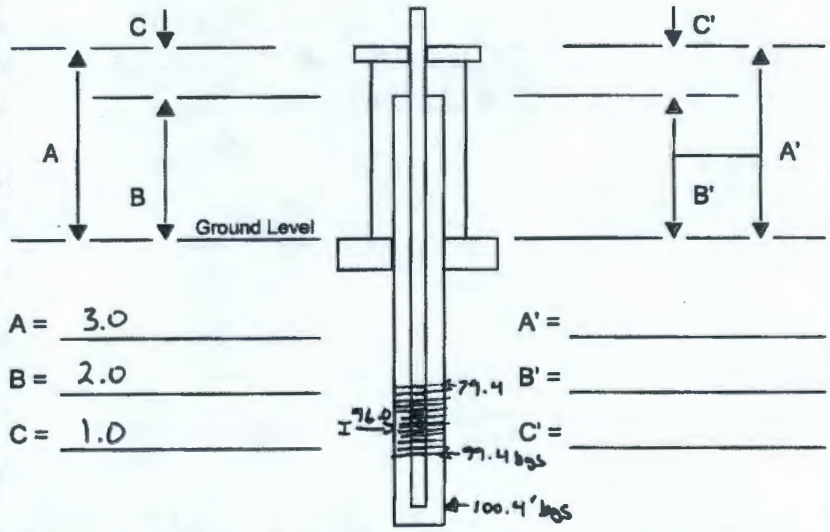

A = 3.0 | A' = ____

B = 2.0 | B' = ____

C = 1.0 | C' = ____

Are there any reference marks on the casing strings? ○ Yes ⊗ No

PART 5

Hermit name: BURT

COMMENTS:

Test # TEAMUSAWD2 → Drawdown

XD_I: 15.6'

Pump breaker box tripped off for 30 sec. after start of drawdown.

XD_F: 10.79

Time elapsed: 82 min

Test # TEAMUSAWD3 → Recovery

Shut valve prior to killing pump for minimal slug.

XD_I: 10.79

XD_F: 15.54

Time elapsed: min.

Collect Sample HEIS # B242C6, B242C7, B243B4

Duplicate HEIS # B24HF3, B24HF4, B24HF5

Prepared by (print name):	Signature:	Date:
A. Lantow	Aaron Lantow	3-5-10
Reviewed by (print name):	**Signature:**	**Date:**

FIELD ACTIVITY REPORT - DAILY DRILLING

Page 1 of 2

Date: 3-5-10

Well Name: 199 - D5-127

Well ID: C7591

Location: See pg 1.

Report No.: ~~07~~ 6

Start	Finish	Total
Time 0600	Time 1315	Time 10.25
Hole Depth/Csg 99.5 / 104.39 (In well)	Hole Depth/Csg 104.39 / 104.35 (in well)	Hole Depth/Csg 4.1 / 0.0 (in well)

Reference Measuring Point: GROUND SURFACE

Casing String No. 1 2 3 4 _____ Rod Size:

See Report No. 1

Time/Depth From	Time/Depth To	Description of Activities/Operations with Depth (Attach applicable drawings and document straightness test results)
0600	0635	P.O.D. @ 200 E. groundwater office. Will Develope Today. One driller, One Geo.
0635	0655	Travel to site.
0655		Geologist + Driller on site. Moving equipment + preparing to develop well.
0837	0837	Tag DTW: 88.1 TOC, 85.1' bgs. Prepare to bail. DTB: 99.0 TOC = 5.3' sed. in sump.
0842		begin bailing well. w/ ball bailer 2" diameter x 4' long.
		observe sed. 100% < 10 mesh Co. Si. Sand., 0922 hrs: Tag @ 102.0' bgs. = 2.4' sed. in sump.
		Continue to bail. 99% < 10-20 mesh Co. Si. Sand. looks like 10-20 mesh but passes through hand
	0936	sieve. Drums full @ 0936 hrs. Must pump water to purge tank.
0936	0950	Pump water from drums.
0950	1012	Continue to bail well. sed is 99-100% < 10-20 mesh Co. Si. Sand. no fn. sand.
1012	1020	Tag DTB: 104.5' bgs. 107.5' TOC. Prepare to set pump.
1020		Setting pump to ~~89~~ 96' bgs (intake depth.) 20+21+21+21+10+4 = 97 (2" diameter) Drop pipe ~~[illegible]~~ + 5' pump
		-3' intake -3' stickup: 96' bgs. (intake) • bottom of screen = 99.5' Top = 79.5
		Head above intake = 10.9' head.
		• Check equipment in field kit.
		NTU: / No std. sln. / PH: Temp: 14.4°C / Probe # 10500
		Std: 4.24 read 3.45 / to check / Std: 7.0. read: 7.10 @ 14.4°C. / Hand in to 100.7' bgs.
		Std: 53.0 read 52.2 / conductivity. / Std: 10.0 read: 10.12 @ 14.7°C / ~15.6' x D_I
		Std: 494.0 read. 495.0
	1315	Skip to next page for development.

Reported By: Aaron Lantow

Title: Geologist

Date: 3-5-10

Signature: Aaron Lantow

Reviewed By: C.D. Walker

Title: Geologist

Date: 5/19/10

Signature: CD Walker

FIELD ACTIVITY REPORT - DAILY DRILLING

Continuation Page

Page 1 of 1

Date: 3-5-10

Well Name: 199-D5-127

Well ID: C7591

Location: N. 154428.66, E. 572992.87

Continuation of Report No.: ~~07~~ 6

Time/Depth From	Time/Depth To	Description of Activities/Operations with Depth
		Test #2 name: Team USA WD2 on Hermit BURT
1115		Pump on → Pump Tripped off. Restart pump @ 1116
		XD- | NTU | PH | K µS | T °C | Rate gpm
		11.190 | — | — | — | - | ? 23.9 gpm | 75 draw Notes:
	1122	11.075 | 48.7 | — | 574 | 14.3 | 23.9 gpm | —
	1127	10.98 | 25.4 | 8.13 | 594 | 15.5 | 21.9 gpm | 0.7 gal/15 sec.
	1132	10.98 | 16.4 | 8.06 | 592 | 16.5 | 23.5 gpm | —
	1137	10.92 | 13.4 | 7.96 | 6.08 | 16.9 | 23.0 | —
	1142	10.91 | 4.23 | 7.92 | 598 | 17.0 | 23.0 | —
	1202	10.90 | 3.19 | 7.93 | 591 | 17.0 | 23 | Samplers on site @ 1152
	1212	10.81 | 3.00 | 7.91 | 592 | 16.7 | " | Collecting parameters.
Time	1212	10.80 | — | — | — | — | " | Collect Samples #'s
	1224	10.79 | 3.01 | 7.92 | 591 | 16.8 | 23 gpm | B242C6, B242C7, B243B4
	1224	Duplicates → B24HF3, B24HF4, B24HF5
	1224	Start Recovery on Test WD3
	1225	10.79
	1238	15.50
	1253	Kill Recovery Test XDF: 15.54'
1253		Remove transducer pressure probe from well. Remove pump.
	1319	Tag DTB: 107.45 TOC 104.45 bgs.
1319	1338	DTW: 88.1 TOC 85.1 bgs. Tower rig down + move off of hole.
1338		Move rig to next borehole.

Not Used AJ

Reported By: A. Lantow		Reviewed By: L.D. Walker	
Title: Geologist	Date: 3-5-10	Title: Geologist	Date: 5/19/10
Signature: Aaron Lanto		Signature: [illegible]	

WELL DEVELOPMENT AND TESTING DATA

Well Name:	Well ID:	Well Location:	Date:
199-D6-1	C7592	ESE of D Reactor	3-11-2010

Reference Measuring Point (unless otherwise noted): TOP OF OUTER CASING (TOC)

Has the well been surveyed? ○ Yes ⊗ No | Does the well have a cement pad? ○ Yes ⊗ No

PART 1

STATIC WATER LEVEL:

Start of Job 87.1' BGS

End of Job 87.1' BGS (3-11-2010)

DEPTH TO BOTTOM:

Start of Job 105' bgs

End of Job 105' bgs

PART 2

WELL DEVELOPMENT DATA

Pump Model Franklin Electric #2243038602 Sub-1 stage

Intake Depth 98' BGS

Starting Turbidity 628 NTU

Pump Start	Stop	Flow Rate
0935	1120	16 gpm

Total Pumped 105 min x 16 gpm = 1,680

Final Turbidity 4.49 NTU

XD SN/Range (PSI) SN 115276 / 30 PSI

PART 3

INSTANTANEOUS SLUG TEST

Static Water Level (TOC)

Transducer Depth

Baseline Start

Injection Start

Baseline Start

Withdrawal Start

Slug Volume

XD SN/Range (PSI)

NOT USED 3.11.2010 JS

PART 4

Last Recorded Measurements Date: 3/10/10

Current Measurements Date: 3/11/2010

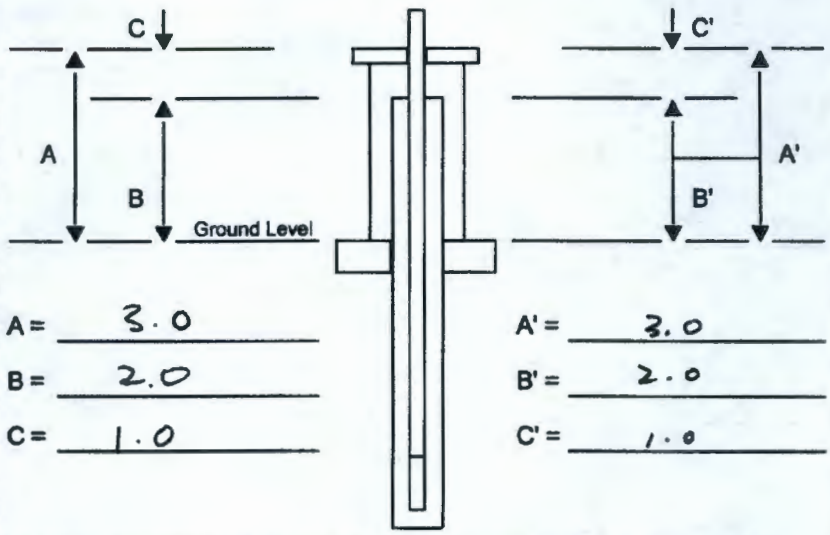

A = 3.0 | A' = 3.0

B = 2.0 | B' = 2.0

C = 1.0 | C' = 1.0

Are there any reference marks on the casing strings? ○ Yes ○ No

PART 5 TROLL: SHELDON (SN115276)

COMMENTS:

STANDARDS

Turbidity (NTU) Stan.	actual	Conductivity (µS/cm) Stan.	actual	pH Stan.	actual
4.24	3.28	1413	1424	7	7.11
53	51.9			10	10.11
494	495				

Test #1

Xi: 16.121

Xf: 6.310

Recharge

Xi: 6.310

Xf: 16.310

Prepared by (print name):	Signature:	Date:
J. Schilperoort	Jonia Schilperoort	3.11.2010
Reviewed by (print name):	**Signature:**	**Date:**

FIELD ACTIVITY REPORT - DAILY DRILLING

Page 1 of 2

Date: 3/11/2010

Well Name: 199-D6-1 | Well ID: C7592

Location: SE of D reactor | Report No.: 6

Start	Finish	Total
Time 0600	Time 1400	Time 8hr
Hole Depth/Csg — / —	Hole Depth/Csg — / —	Hole Depth/Csg — / —

Reference Measuring Point: GROUND SURFACE

Casing String No. 1 2 3 4 ____ Rod Size:
See Report No. 1 DEVELOPMENT

Time/Depth From	Time/Depth To	Description of Activities/Operations with Depth (Attach applicable drawings and document straightness test results)
0600	0645	To 100-D 1 SRM trailer for POD. Windy - hi of 50°
0645	✓	To site. Prep to develop - Tag inside of well: 104.1' bgs
✓	✓	→ .9' of fill in bottom of well - Drillers get dumpster to bail
✓	0815	out well. → Bail 8 loads: 8x(5gal) ≈ 40 gallons; Tag well: 105' bgs
0815	✓	Begin tripping in pump & pipe - Pump: 5.5 L; intake ≈ 25 above
✓	0925	bottom - Model # 224303860 2 - Franklin Electric 1-phase - 5hp
0925	✓	Pump is set; intake @ 98' bgs - Begin development. See pg 2
✓	✓	→ Samplers arrive @ 1048; HEIS #'s B23PT6, ~~B23PT6(DUP)~~ 3.11.10
✓	✓	B23PT7, sample taken @ 11:11
✓	1126	Pump off @ 1120 - Begin recovery test; stop @ 1130
1126	✓	Drillers begin tripping out pump & pipe
	1400	→ Move development/construction rig to C7583 for development.
1400		Geo no longer needed. Geo departs from site.

NOT USED

JS 3/11/2010

Reported By: J. Schilperoort | Reviewed By: L. S. Walker

Title: Geologist | Date: 3/11/2010 | Title: Geologist | Date: 5/19/10

Signature: J. Schilperoort | Signature: [signature]

FIELD ACTIVITY REPORT - DAILY DRILLING

Continuation Page

Date: 3.11.2010

Well Name: 199-D6-1 | Well ID: C7592

Location: ESE of D reactor | Continuation of Report No.: 6

Time/Depth From	Time/Depth To	Description of Activities/Operations with Depth

STANDARDS TEST

TURBIDITY (NTU) standard	TURBIDITY (NTU) actual	Conductivity (µS/cm) standard	Conductivity (µS/cm) actual	pH stan.	pH actual
4.24	3.28	1413	1424	7	7.11
53	51.9			10	10.11
494	495				

Test #1 – Troll: Sheldon (SN115276) intake @ 98' bgs

Test start: 0935 Test end: 1120 Pump rate: 16 gpm

Time	Depth	Turbidity NTU	Conductivity (µS/cm)	T°(C)	pH	NOTES
0939	6.291	62.8	774	17.0	7.01	xi: 16.121
0950	6.295	65.3	714	17.6	7.17	xf: 6.310
0957	6.306	30.3	807	17.5	7.24	
1006	6.303	16.2	806	17.6	7.40	pumped: 105 min
1010	6.307	11.0	796	18.1	7.41	total gallons: 1,680 gallons
1018	6.308	10.4	798	18.6	7.46	
1026	6.309	7.35	806	18.4	7.00	
1031	6.302	7.22	800	18.2	7.53	
1038	6.306	6.45	801	17.8	7.60	
1044	6.310	~~6.310~~ 5.50	814	18.5	7.62	
1053	6.308	~~6.45~~ 5.18	(4.45) 801	18.0	7.59	
1100	6.309	4.38	809	17.9	7.60	
1104	6.310	4.49	803	18.9	7.64	

Recharge 1120 – 1130: 10 min

xi: 6.310

xf: 16.13

Reported By: J. Schilperoort | Reviewed By: L.D. Walker

Title: Geologist | Date: 3.11.10 | Title: Geologist | Date: 5/19/10

Signature: Jason Schilperoort | Signature: L.D. Walker

WELL DEVELOPMENT AND TESTING DATA

Well Name:	Well ID:	Well Location:	Date:
199-D8-99	C7593	E: 574006.34 N: 152363.99	4.22.10

Reference Measuring Point (unless otherwise noted): TOP OF OUTER CASING (TOC)

Has the well been surveyed? ○ Yes ● No | Does the well have a cement pad? ○ Yes ● No

PART 1

STATIC WATER LEVEL:	
Start of Job	64.5
End of Job	65.0
DEPTH TO BOTTOM:	
Start of Job	84.7
End of Job	84.6

PART 2

WELL DEVELOPMENT DATA

Pump Model	100 Hp
Intake Depth	S1 75' bgs / S2 79.5' bgs
Starting Turbidity	S1 617 ntu / S2 97.5 ntu

Pump Start	Stop / Δ	Flow Rate
S1 0905	0945	32.9
S2 0959	1002	30
S2 1002	1109	45
S2 1109	1142	27

Total Pumped	S1 1316 / S2 3996 / T 5312
Final Turbidity	S1 5.00 ntu / S2 3.04 ntu
XD SN/Range (PSI)	115276

PART 3

INSTANTANEOUS SLUG TEST

Static Water Level (TOC)	
Transducer Depth	
Baseline Start	
Injection Start	
Baseline Start	
Withdrawal Start	
Slug Volume	
XD SN/Range (PSI)	

PART 4

Last Recorded Measurements Date:

Current Measurements Date:

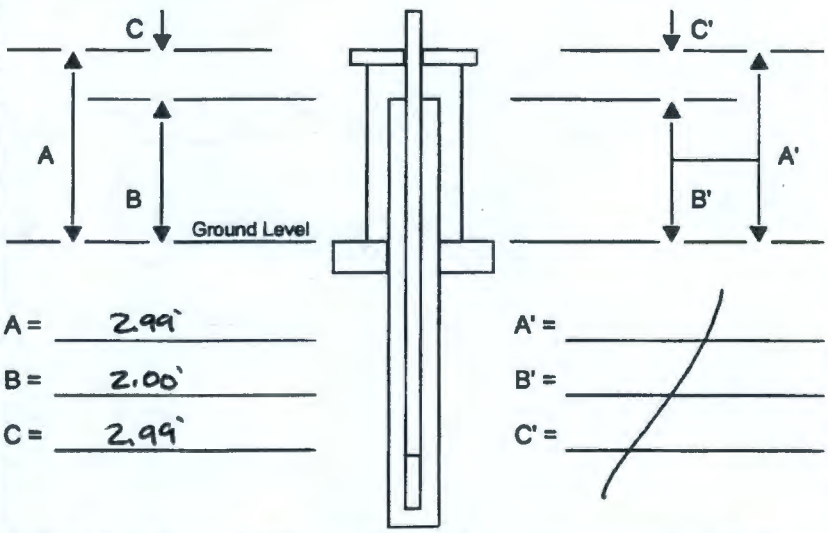

A = 2.99'
B = 2.00'
C = 2.99'

A' =
B' =
C' =

Are there any reference marks on the casing strings? ○ Yes ● No

PART 5

COMMENTS:

- Drawdown done in two tests
- test 1 75.0' - 64.5' bgs, recorded on test "C7593 upper"
- test 2 ~~64.5~~ 79.5 - 75' bgs recorded on test "C7593 lower"
- 30 minutes recovery test recorded on test "C7593 recovery"

S_1 = test 1
S_2 = test 2

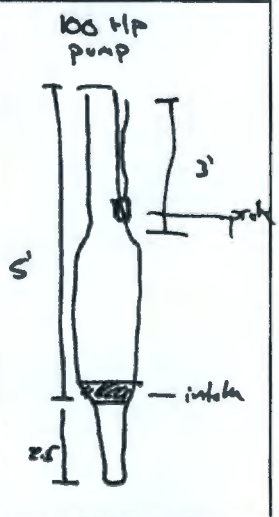

Prepared by (print name):	Signature:	Date:
A. Pappas		4.22.10
Reviewed by (print name):	Signature:	Date:

FIELD ACTIVITY REPORT - DAILY DRILLING

Page 1 of 1

Date: 4.21.10

Well Name: 199-D8-99	Well ID: C7593
Location: E: 574606.34 N: 152863.94	Report No.: 6

Start	Finish	Total
Time 1441	Time 1525	Time 44 min
Hole Depth/Csg N/A / N/A	Hole Depth/Csg N/A / N/A	Hole Depth/Csg – / –

Reference Measuring Point: GROUND SURFACE

Casing String No. ~~1~~ 2 3 4 ____ Rod Size:
See Report No. 1

Time/Depth From	Time/Depth To	Description of Activities/Operations with Depth (Attach applicable drawings and document straightness test results)
1441		tag well at 80' bgs → 5' of fill. begin
	1525	to bail well.
1525		Well bailed to 83.3' bgs, still have 1.7'
		remaining – Drillers clean up site geologist
		does paperwork
		Geologist exits site.

4.21.10

Reported By: A. Pappas		Reviewed By: L.D. Walker	
Title: Field Geologist	Date: 4.21.10	Title: Geologist	Date: 5/10/10
Signature:		Signature:	

FIELD ACTIVITY REPORT - DAILY DRILLING

Page 1 of 2

Date: 4.22.10

Well Name: 199-D8-99

Well ID: C7593

Location: E: 574006.34 N: 152363.94

Report No.: 1

Start	Finish	Total
Time 0600	Time 1300	Time 7 hrs
Hole Depth/Csg N/A / N/A	Hole Depth/Csg N/A / N/A	Hole Depth/Csg — / —

Reference Measuring Point: GROUND SURFACE

Casing String No. 1 2 3 4 _____ Rod Size:
See Report No. 1

Time/Depth From	To	Description of Activities/Operations with Depth (Attach applicable drawings and document straightness test results)
0600	0657	POD at ISRM trailer.
0657		to site, drillers set up to resume bailing well -
		1.7' remaining.
0729	0819	Drillers resume bailing — bailed to 84.7'
0819		Drillers trip in 100 tip pump (5'), 3 x 2i, 1 x 10'
	0846	of pipe. Depth to water tagged at 64.5' bgs.
0846		Pipe tripped in. intake at 75' bgs, probe at 73' bgs.
		Drillers prepare to pump, geologist checks equipment
		pH std act — turbidity std 494 Act — Conductivity (µs) std 1414 act. 1276
		10 10.18 — 494 494
		7 7.10 — 53.0 52.9 — XD initial 8.16
		4.24 3.59
0905		Drillers start pumping zone 1 (75-[illegible]'), test "C7593 upper"
		XD pH NTU µs gpm temp °C
	0905	8.16 7.74 67 693 32.9 23.33
	0915	.53 7.92 38.2 660 32.9 23.73
	0925	.41 7.04 12.8 667 32.9 23.85
	0935	.37 8.05 5.09 652 32.9 23.89
	0945	.34 8.09 5.00 657 32.9 24.02
0945		Pump off, Test "C7593 upper" complete, drillers add
		4.5' of pipe, intake now at 79.5' bgs and
		probe at 77.5' bgs. Second zone will be 79.5' -
		75' bgs, recorded on test "C7593 lower"

Reported By: A. Papps

Title: Field Geologist — Date: 4.22.10

Signature:

Reviewed By: C.D. Walker

Title: Geologist — Date: 5/19/10

Signature: CD Walker

FIELD ACTIVITY REPORT - DAILY DRILLING

Continuation Page

Page 2 of 2

Date: 4.22.10

Well Name: 199-D8-99

Well ID: C 7593

Location: E: 574006.39 N: 152363.99

Continuation of Report No.: 7

Time/Depth From	Time/Depth To	Description of Activities/Operations with Depth
0959		Drillers start pumping zone 2 (79.5'-75' bgs), test
		recorded on "C7593 lower". xD initial - 12.22
		xD pH NTU µ gpm temp°C
	0959	12.22 8.69 925 654 30 24.01
	1009	1.11 8.20 78.0 643 ~~34~~ 45 23.8
	1019	.60 8.04 15.3 657 45 23.8
	1029	.36 8.19 12.4 637 45 23.8
	1039	.05 8.14 29.2 652 45 23.9
	1049	.05 8.02 20.8 642 45 24.0
	1059	.05 8.13 17.0 664 45 24.0
	1109	.06 8.00 40.3 661 45 24.0
	1119	5.99 8.01 3.22 659 27 23.8
	1129	6.00 8.09 3.04 653 27 23.8
	1134	NCO's collect water sample, Nos of B23PX5, B23PX6
	1142	6.01 8.00 3.04 670 27 23.9
1142	1146	Setup for recovery / pump on/off
1146		Drawdown at 15', shut off run recovery.
		recovery test recorded on "C7593 recovery". Drillers
	1216	Clean up site.
1216		recovery test complete final xD 11.94', drillers
	1244	remove pump.
1244		Pump removed. Drillers clean site, geologist
		does paperwork. Depth to bottom 84.6' bgs,
	1300	depth to water 85.0' bgs
1300		Geologist exits site

4.22

Reported By: A. Propes

Title: Field Geologist

Date: 4.22.10

Signature:

Reviewed By: L.d. Walker

Title: Geologist

Date: 5/19/10

Signature: LD Walker

WELL DEVELOPMENT AND TESTING DATA

Well Name:	Well ID:	Well Location:	Date:
199-D7-4	C7594	E: 574376.96 N: 152369.54	3.22.10

Reference Measuring Point (unless otherwise noted): TOP OF OUTER CASING (TOC)

Has the well been surveyed? ○ Yes ⊘ No | Does the well have a cement pad? ○ Yes ⊘ No

PART 1

STATIC WATER LEVEL:

Start of Job	54.35' bgs
End of Job	54.40' bgs

DEPTH TO BOTTOM:

Start of Job	75.0'
End of Job	75.0'

PART 2

WELL DEVELOPMENT DATA

Pump Model	100 HP
Intake Depth	67.25
Starting Turbidity	498 ntu

Pump Start	Stop/Δ	Flow Rate
1112	1114	30 gpm
1114	1120	27 gpm
1120	1142	23 gpm
1142	1222	14.9 gpm

Total Pumped	1,324 gallons
Final Turbidity	1.23 ntu
XD SN/Range (PSI)	115276

PART 3

INSTANTANEOUS SLUG TEST

Static Water Level (TOC)	
Transducer Depth	
Baseline Start	
Injection Start	
Baseline Start	
Withdrawal Start	
Slug Volume	
XD SN/Range (PSI)	

PART 4

Last Recorded Measurements Date:

Current Measurements Date:

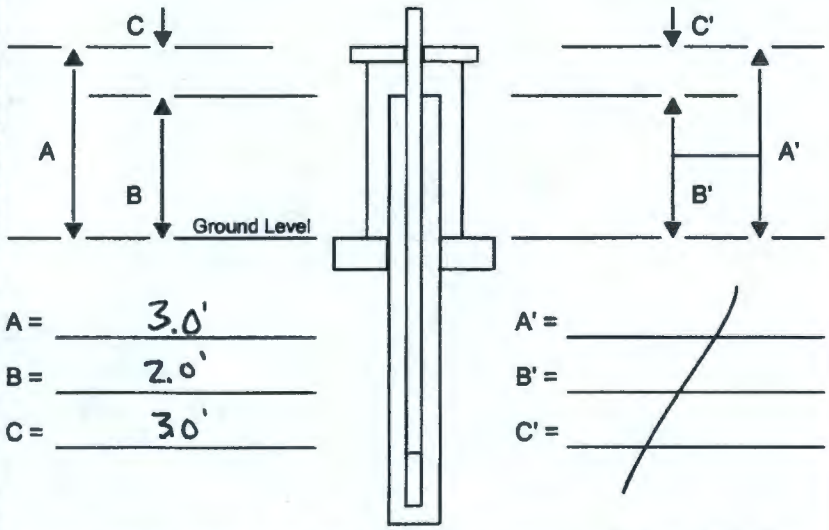

A =	3.0'	A' =	
B =	2.0'	B' =	
C =	3.0'	C' =	

Are there any reference marks on the casing strings? ○ Yes ○ No

PART 5

COMMENTS:

Pump + Recovery test recorded on Troll, test 'C7594'

Troll SN: 115276

intake depth 67.25' bgs

probe depth 65.00' bgs

final ntu: 1.34

purge volume: 930 gallons

recovery test 1222 – 1252

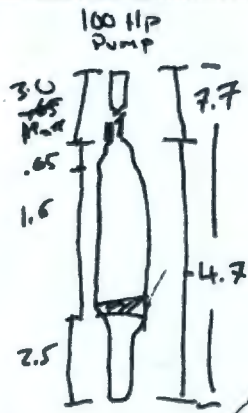

Prepared by (print name):	Signature:	Date:
A. Pappas		3.22.10
Reviewed by (print name):	**Signature:**	**Date:**

FIELD ACTIVITY REPORT - DAILY DRILLING

Page 1 of 2

Date: 3.22.10

Well Name: 199-D7-4 | Well ID: C7594

Location: E: 574376.96 N: 152369.54 | Report No.: 5

Start	Finish	Total
Time 0600	Time 1503	Time 9 hrs 3 min
Hole Depth/Csg - / -	Hole Depth/Csg - / -	Hole Depth/Csg - / -

Reference Measuring Point: GROUND SURFACE

Casing String No. 1 2 3 4 ____ ~~Rod Size~~

See Report No. 1

DTW 54.35

Time/Depth From	Time/Depth To	Description of Activities/Operations with Depth (Attach applicable drawings and document straightness test results)
0600	0638	POD at ISRM trailer
0638	0824	Geologist goes to fetch Development equipment.
0824	0837	Geologist on site. Tag well at 73' bgs, 2' of fill
0837	0910	Drillers bail well. Depth bottom when completed:
0910	0940	Drillers setup for well development
0940	/	Drillers trip in pipe + 100 HP pump.
/	1007	Troll at 65' bgs, intake at 64.25' bgs.
1007	/	Test equipment for pump test
/	/	NTU STD Reading pH STD Reading Conductivity STD Read
/	/	4.24 3.94 7.00 7.00 1414 1349
/	/	53.0 53.0 10.00 10.01
/	/	494 498
1013	1057	Geo discovers he has two Conductivity meters, tests pH
1057	1100	Geo resumes testing equipment
1100	/	Ready to start pump. xD intake 10.66'
1112	/	Pump start, recorded on test "C7594"
/	~~1112~~	xD NTU pH µ GPM
/	1112	4.78 498 8.31 530 30
/	1127	1.83 371 7.99 538 23
/	1132	1.00 167 7.94 539 23
/	1142	.35 61.4 7.85 547 23
/	1152	4.78 13.3 7.78 545 14.9
/	1157	4.74 3.35 7.88 544 14.9
/	1202	4.70 3.14 7.84 545 14.9

Reported By: A. Pappas | Reviewed By: L.A. Walker

Title: Field Geologist | Date: 3.22.10 | Title: Geologist | Date: 5/19/10

Signature: [signature] | Signature: [signature]

FIELD ACTIVITY REPORT - DAILY DRILLING

Continuation Page

Date: 3.22.10

Well Name: 199-D7-4 | Well ID: C7594

Location: E: 574376.96 N: 152369.54 | Continuation of Report No.: 5

Time/Depth From	Time/Depth To	Description of Activities/Operations with Depth
/	/	Cont pump test...
/	/	xD NTU pH µ Gpm Temp
/	1212	4.58 1.60 8.04 547 14.9 18.3
/	1222	4.46 1.23 8.00 530 14.9 19.7
1222	/	Shut off pump, start recovery test. recorded on
/	1552	test "C7594", final xD 10.58
1552	1327	Drillers remove pump.
1327	/	Pump removed, Drillers clean up site. Geologist
/	/	does paperwork. Depth to bottom tagged at 75' bgs
/	1503	Depth to water tagged at 54.4' bgs
1503		Geologist off site.

3.22.10

Reported By: A. Pappas | Reviewed By: L.D. Walker

Title: Field Geologist | Date: 3.22.10 | Title: Geologist | Date: 5/10/10

Signature: | Signature: L D Walker

WELL DEVELOPMENT AND TESTING DATA

Well Name:	Well ID:	Well Location:	Date:
199-H4-80	C7595	BETWEEN 100-H & 100-D/DR REACTOR	6/22/2010

Reference Measuring Point (unless otherwise noted): TOP OF OUTER CASING (TOC)

Has the well been surveyed? ○ Yes ● No | Does the well have a cement pad? ○ Yes ● No

PART 1

STATIC WATER LEVEL:

Start of Job	42.24' TOC
End of Job	42.35' TOC

DEPTH TO BOTTOM:

Start of Job	69.2' bgs
End of Job	69.2' bgs

PART 2

WELL DEVELOPMENT DATA

Pump Model: 5 Hp, 100 gpm

Intake Depth: T_1 49' bgs, T_2 68' bgs

Starting Turbidity: T_1 141 ntu, T_2 5.69 ntu

Pump Start	Stop	Flow Rate
1000	1002	41.8 gpm
1002	1032	68.8 gpm
1055	1210	68.8 gpm

Total Pumped: T_1 2079 gal, T_2 5100

Final Turbidity: T_1 2.78, T_2 1.41

XD SN/Range (PSI): 115276 / 20 psi

PART 3

INSTANTANEOUS SLUG TEST

Static Water Level (TOC)	
Transducer Depth	
Baseline Start	
Injection Start	
Baseline Start	
Withdrawal Start	
Slug Volume	
XD SN/Range (PSI)	

Not used 6/22/2010

PART 4

Last Recorded Measurements Date: 6/21/2010

Current Measurements Date: 6/22/2010

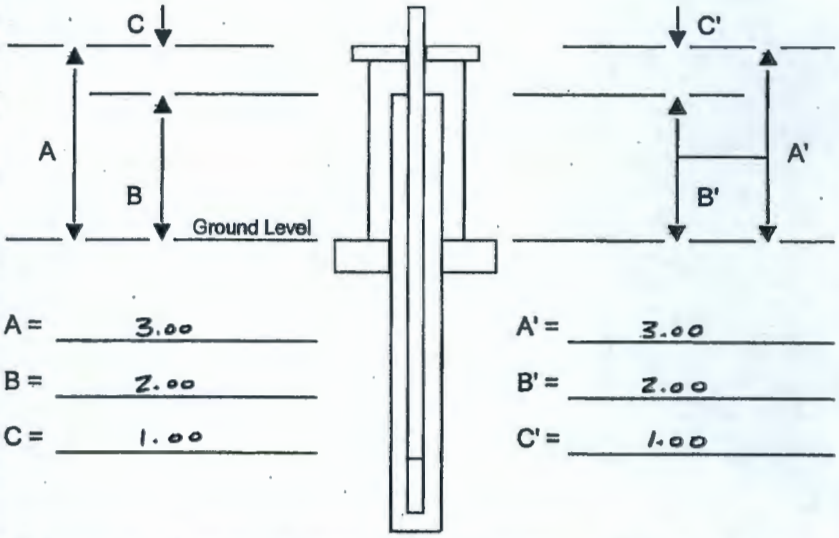

A =	3.00	A' =	3.00
B =	2.00	B' =	2.00
C =	1.00	C' =	1.00

Are there any reference marks on the casing strings? ○ Yes ● No

PART 5

COMMENTS:

- Pumping test done in two sections.
- First section: pump intake at 49' bgs, recorded as "C7595 Upper". "T_1"
- Section two: pump intake at 68' bgs, recorded as "C7595 lower" – "T_2"
- Recovery test recorded on "C7595 lower"

Prepared by (print name):	Signature:	Date:
A. Pappas	[signature]	6.22.10
Reviewed by (print name):	**Signature:**	**Date:**
L.S. Walker	[signature]	7/15/10

A-6003-644 (03/03)

FIELD ACTIVITY REPORT - DAILY DRILLING

Page 1 of 2

Date: 6-22-2010

Well Name: 199-H4-80 | Well ID: C7595

Location: Between 100-H & 100-D/DR REACTORS | Report No.: 6

Start	Finish	Total
Time 0600	Time	Time
Hole Depth/Csg N/A / N/A	Hole Depth/Csg N/A / N/A	Hole Depth/Csg N/A / N/A

Reference Measuring Point: GROUND SURFACE

Casing String No. (1) 2 3 4 ____ Rod Size:

See Report No. 1 WELL DEVELOPMENT

Time/Depth From	Time/Depth To	Description of Activities/Operations with Depth (Attach applicable drawings and document straightness test results)
0600	0630	P.O.D Mtg. - BTR (IMHOFF), Layne & GRAM IN ATTENDANCE.
0630	0700	Move to job site.
0700		Drillers prepare site & rig for well development activities.
	0745	Geo. tags DTB @ 69.0' TOC (BTM OF HOLE = 72.2' TOC); Fill = 3.2'.
		Geo tags DTW @ 42.24' TOC (39.24' bgs)
	0752	Drillers leave site to get purge truck.
	0754	Geo. (PAPPAS) on site to take over for Geo. (HOCKING)
0834	0917	Drillers begin to bail well.
0917		Well bailed, DTB @ 72.2' TOC. Drillers trip
		in pump, intake at 59' bgs. Geologist places probe
		at 59' bgs. Geologist tests equipment
		turbidity: Stnd Actual pH: Stnd Actual conductivity: Stnd Actual
		562 563 10 10.07 1413 1372
		48.7 49.0 7 7.07
		493 5.02
10:00		Start pump. (xD intial: 5.92). test recorded on troll 115276 as test
	1032	"C7595 upper". See page 3 for pumping test details.
1032		Pump off, test stopped. Drillers lower pump to 63' bgs
		probe lowered to 59' bgs.
1055		Start pump on second zone. (xD intial: 19.84) test recorded on
		troll 115276 as test "C7595 lower". See page 3 for pumping
		test details.
1151		NCO's collect sample; HEIS # B24D58 + B24D74.
1210	1240	Pump off. Begin Recovery test, recorded under "C7595 lower"

Reported By: Jess Hocking / A. Pappas | Reviewed By: L.J. Walker

Title: Lead Geologist / Geologist | Date: 6/22/10 | Title: Geologist | Date: 7/15/10

Signature: | Signature:

A-6003-651 (REV 1)

FIELD ACTIVITY REPORT - DAILY DRILLING

Continuation Page

Page 2 of 3

Date: 6.22.10

Well Name: 199-H4-80

Well ID: C7595

Location: Between 100-H & 100-D reactors

Continuation of Report No.: 6

Time/Depth From	Time/Depth To	Description of Activities/Operations with Depth
1240		Recovery test stopped. final xD was 19.85'.
	1321	Drillers remove pump, Geologist removes transducer.
1321		Pump removed, Depth to bottom tagged at: 72.2' TOC
		Depth to water tagged at: 39.35' bgs. Drillers
	1350	clean and secure site. Geologist does paperwork.
1350		Geologist exits site

Not used — A.P. 6.22.10

Reported By: A. Pappas

Title: Geologist

Date: 6.22.10

Signature: [signature]

Reviewed By: L. S. Walker

Title: Geologist

Date: 7/15/10

Signature: [signature]

A-6003-652 (04/03)

FIELD ACTIVITY REPORT - DAILY DRILLING

Continuation Page

Page 3 of 3

Date: 6.22.10

Well Name: 199-H4-80

Well ID: C7595

Location: Between 100 H + 100D reactors

Continuation of Report No.: 6

Time/Depth From	Time/Depth To	Description of Activities/Operations with Depth
		(ACTUAL DEPTH) BTM HOLE = 74.3'
		BTM CASING = 69.2'
		PUMP ON = T1 1000 T2 1055
		H_2O SEEN = T1 1000 T2 1055
		Vol. to Purge = T1 2079 gal , T2 5100 gal
		Vol. Purged = TT 7179
		Flow rate = 1000 - 1002 : 41.8 gpm , 1002 - 1032 : 68.8 , 1055 - 1210 : 68.8
		DTW = Start: 39.2' bgs end: 39.35'
		SAMPLE HEIS #: B24D58 + B24D74
		Initial XD = T1 5.92 T2 19.89 FINAL XD = T1 4.65 T2 18.61 (% REC. = 100%)

	TIME	Flow rate	XD	DRAW	Turb.	pH	Cond.	D.O.	Temp. °C
	1000	41.8 gpm	5.37		141	7.81	380	\	20.6
	1010	68.8	4.70		13.6	7.84	368	\	18.7
	1020	68.8	4.65		5.43	8.04	369	\	18.6
	1031	68.8	4.65		2.78	8.11	364	\	19.4
			test	stopped 1032					
	1055	68.8	18.75		6.69	7.89	366	\	23.0
	1105	68.8	18.68		13.33	8.05	365	\	20.5
*DEVELOPED	1115	68.8	18.67		1.94	\	361	\	19.1
	1135	68.8	18.64		.82	8.05	362	\	19.1
	1201	68.8	18.61		1.71	8.16	354	\	20.0
Stop pump	1210	68.8	18.61		1.41	8.12	360	\	22.8

Not Used A.P. 6.22.10

Reported By: A. Pappas

Title: Geologist

Date: 6.22.10

Signature: Alexandra Pappas

Reviewed By: L.D. Walker

Title: Geologist

Date: 7/15/10

Signature: LD Walker

A-6003-652 (04/03)

WELL DEVELOPMENT AND TESTING DATA

Well Name:	Well ID:	Well Location:	Date:
199-H4-81	C7596	HORN AREA between D/DR & H Reactors	6-24-2010

Reference Measuring Point (unless otherwise noted): TOP OF OUTER CASING (TOC)

Has the well been surveyed? ○ Yes ● No | Does the well have a cement pad? ○ Yes ● No

PART 1

STATIC WATER LEVEL:

Start of Job	26.87' TOC.
End of Job	26.85' TOC

DEPTH TO BOTTOM:

Start of Job	44.0' TOC
End of Job	44.0' TOC

PART 2

WELL DEVELOPMENT DATA

Pump Model		
Intake Depth	LOW 40.5' TOC	HIGH N/A
Starting Turbidity	LOW 11.2 NTU	HIGH N/A

Pump Start	Stop	Flow Rate
0912	0938	60 gpm
0941	1012	60 gpm

Total Pumped	3,420 gal
Final Turbidity	LOW 2.32 NTU / HIGH N/A
XD SN/Range (PSI)	115276 (80 psi)

PART 3

INSTANTANEOUS SLUG TEST

Static Water Level (TOC)	
Transducer Depth	
Baseline Start	
Injection Start	
Baseline Start	
Withdrawal Start	
Slug Volume	
XD SN/Range (PSI)	

NOT USED 6/24/10

PART 4

Last Recorded Measurements Date: 6/23/2010

Current Measurements Date: 6/24/2010

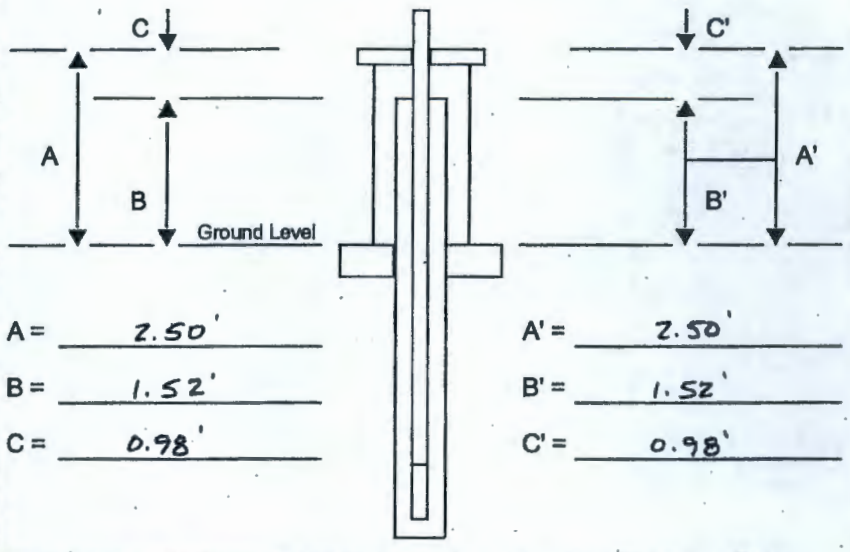

A =	2.50'	A' =	2.50'
B =	1.52'	B' =	1.52'
C =	0.98'	C' =	0.98'

Are there any reference marks on the casing strings? ○ Yes ● No

PART 5

COMMENTS:

All WATER PARAMETER METERS ARE OPERATING TO WITHIN OPERATIONAL TOLERANCES ACCORDING TO "FIELD CALIBRATION" CHECK.

Troll 115276 (SHELDON) TEST = C7596 lower 1; DRAW & RECOVERY ON SAME TEST.

Avg. Draw = 13.02' @ 60 gpm for ~~~60~~ 57 min. (Max Wheelie)

Rec. = 99.4% in ~ 43 min.

STATIC H_2O INCREASE = 0.02' H_2O

Prepared by (print name):	Signature:	Date:
Jess Hocking	[signature]	6/24/2010
Reviewed by (print name):	**Signature:**	**Date:**
L.D. Walker	[signature]	7-15-10

A-6003-644 (03/03)

FIELD ACTIVITY REPORT - DAILY DRILLING

Page 1 of 1

Date: 6.23.2010

Well Name: 199-H4-81	Well ID: C7596
Location: NW of H + NE of D reactors	Report No.: 3

Start	Finish	Total
Time 1230	Time ___	Time ___
Hole Depth/Csg — / —	Hole Depth/Csg — / —	Hole Depth/Csg — / —

Reference Measuring Point: GROUND SURFACE	Casing String No. 1 2 3 4 ___ Rod Size: See Report No. 1

Time/Depth From	Time/Depth To	Description of Activities/Operations with Depth (Attach applicable drawings and document straightness test results)
1230	—	To C7596 from C7609. Set up site for development
—	1340	→ Tag well: 35' bgs = 6.5' of fill.
1340		Begin bailing out fill (which is mostly filter pack)
		(~4.5 gal) x 𝍸𝍸𝍸 11 = 76.5 gallons bailed

Reported By: J. Schilperoort		Reviewed By: L.D. Walker	
Title: Geologist	Date: 6.23.10	Title: Geologist	Date: 7/15/10
Signature: [signature]		Signature: [signature]	

A-6003-651 (REV 1)

FIELD ACTIVITY REPORT - DAILY DRILLING

Page 1 of 2

Date: 6-24-2010

Well Name: 199-H4-81

Well ID: C7596

Location: Horn Area between D/DR & H-Reactors

Report No.: 4

Start	Finish	Total
Time 0600	Time 1206	Time 6hrs. 6min.
Hole Depth/Csg N/A / N/A	Hole Depth/Csg N/A / N/A	Hole Depth/Csg N/A / N/A

Reference Measuring Point: GROUND SURFACE

Casing String No. (1) 2 3 4 ____ Rod Size: N/A

See Report No. 1 WELL DEVELOPMENT

Time/Depth From	Time/Depth To	Description of Activities/Operations with Depth (Attach applicable drawings and document straightness test results)
0600	0630	P.O.D Mtg. - BTR (IMHOFF), Layne & GRAM, Inc. in attendance.
0630	0730	New Geo. (Patterson) signed into job site.
0730	0750	Move to job site.
	0755	Drop New Geo. @ C7604.
	0800	Geo. arrives on C7596 - Drillers have already dropped
		pump down hole.
	0810	Hang Troll down hole - Initial XD = 17.13' H_2O;
		Intake = 38' bgs (40.5' TOC) [BTM OF SCREEN = 38.5' bgs (41' TOC)] for
		1st interval.
0815		Wait for NCOs to arrive on site before pumping is started.
	0912	Pump started (two intervals may be necessary, therefore pumping
		was started before NCOs arrive).
	0917	Flowrate ≈ 60 GPM (draw = 12.9' H_2O) - upper interval will
		not be possible w/ this pump and level of draw @ half-way open,
		therefore only the lower interval will be run (Troll would be above H_2O too.)
	0934	NCOs arrive on site.
0938		Pump dies?! Geo. informs Driller.
	0941	Driller restarts generator - pumping resumes, Flow rate = 60 gpm
		(draw = 13.01' H_2O).
	0959	NCOs begin running water parameter tests.
	1002	NCOs take H_2O sample: HEIS #s = B24D59 & B24D75.
	1012	Pumping stopped, Recovery started.
	1020	NCOs leave site.
	1057	Recovery stopped (99.4% rec.); Ready to pull pump.

Reported By: Jess Hocking

Title: Lead Geologist

Date: 6/24/10

Signature: J. Hocking

Reviewed By: L. J. Wetherell

Title: Geologist

Date: 7/15/10

Signature: [signature]

A-6003-651 (REV 1)

FIELD ACTIVITY REPORT - DAILY DRILLING

Continuation Page

Page 2 of 2

Date: 6-24-2010

Well Name: 199-H4-81

Well ID: C 7596

Location: Horn Area between ~~100-D/DR~~ D/DR & H REACTORS MSH 6/24/10

Continuation of Report No.: 4

Time/Depth From	Time/Depth To	Description of Activities/Operations with Depth
		WELL DEVELOPMENT (CONT'D)
	1102	Pull troll from well.
1117		Begin removing pump from well.
	1131	Pump fully removed from well.
	1137	DTW tagged @ 24.35' bgs & DTB tagged @ 41.5' bgs.
	1206	Geo. no longer needed on site - heads for town.

Initial XD = 17.13' H_2O ; PURGE (x3) = 74 gal.

TIME	FLOWRATE	XD	DRAW	Turb.	pH	Temp.	Cond.
0923	60 GPM	4.15'	12.98'	11.2 NTU	7.73	16.52°C	378 mS/cm
0934	60 GPM	4.12'	13.01'	4.76 NTU	7.85	16.50°C	378 mS/cm
0950	60 GPM	4.11'	13.02'	5.27 NTU	7.91	16.50°C	379 mS/cm
0956	60 GPM	4.10'	13.03'	3.56 NTU	7.84	16.49°C	376 mS/cm
1006	60 GPM	4.08'	13.05'	2.32 NTU	7.81	16.48°C	378 mS/cm

Recovered to 99.4% in ~43 min.

Pumped 3,420 gal total.

NOT USED

6/24/10

Reported By: Jess Hacking

Title: Lead Geologist

Date: 6/24/10

Signature:

Reviewed By: L.J. Walker

Title: Geologist

Date: 7/15/10

Signature:

A-6003-652 (04/03)

WELL DEVELOPMENT AND TESTING DATA

Well Name:	Well ID:	Well Location:	Date:
199-H4-75	C7597	W of 100-H Reactor	9.30.2010

Reference Measuring Point (unless otherwise noted): TOP OF OUTER CASING (TOC)

Has the well been surveyed? ○ Yes ⊗ No | Does the well have a cement pad? ⊗ Yes ○ No

PART 1

STATIC WATER LEVEL:

Start of Job	40.6' bgs
End of Job	41.0' bgs

DEPTH TO BOTTOM:

Start of Job	54.5' bgs
End of Job	54.5' bgs

PART 2

WELL DEVELOPMENT DATA

Pump Model	5hp
Intake Depth	49' bgs
Starting Turbidity	

Pump Start	Stop	Flow Rate
0849	0958	44gpm

Total Pumped	~2948 gallons
Final Turbidity	0.68
XD SN/Range (PSI)	168724/ 30PSI

PART 3

INSTANTANEOUS SLUG TEST

Static Water Level (TOC)	
Transducer Depth	
Baseline Start	
Injection Start	
Baseline Start	
Withdrawal Start	
Slug Volume	
XD SN/Range (PSI)	

PART 4

Last Recorded Measurements Date:

Current Measurements Date: 9.30.10

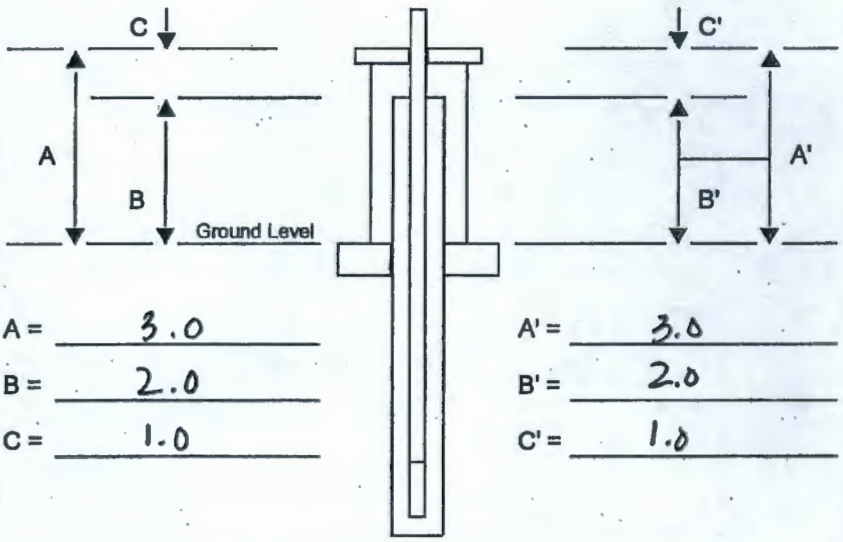

A =	3.0	A' =	3.0
B =	2.0	B' =	2.0
C =	1.0	C' =	1.0

Are there any reference marks on the casing strings? ○ Yes ○ No

PART 5

COMMENTS:

Test #1 (49.5'-34.5')

Di: 5.72

Df: 2.59

Recovery (30 min)

Di: 2.59

Df: 5.62

Prepared by (print name):	Signature:	Date:
J. Fleming	[signature]	9.30.10
Reviewed by (print name):	**Signature:**	**Date:**
L.S. Walker	[signature]	10-12-10

A-6003-644 (03/03)

FIELD ACTIVITY REPORT - DAILY DRILLING

Page 1 of 2

Date: 9.30.2010

Well Name: 199-H4-75	Well ID: C7597
Location: W of 100-H Reactor	Report No.: 4

Start	Finish	Total
Time 0600	Time 1000	Time ~~4~~ 5.0 (JP 9.30.10)
Hole Depth/Csg — / —	Hole Depth/Csg — / —	Hole Depth/Csg — / —

Reference Measuring Point: GROUND SURFACE

Casing String No. 1 2 3 4 ____ Rod Size: See Report No. 1

Time/Depth From	Time/Depth To	Description of Activities/Operations with Depth (Attach applicable drawings and document straightness test results)
0600	0645	To ISRM trailer for POD. Hi of 85°
0645	0715	Mob from C7587 to C7597
0715	—	Set up development rig over well & Tag: 53.5' bgs
—	—	→ 1' fill → bail out & Tag: 54.5' bgs - Empty
—	0850	→ water tagged @ 41' bgs
0850	0900	Begin tripping in pump. Set intake @ 49' bgs
0900	1030	Begin development (See pg 2)
1030	1100	Begin taking down site & move to C7598
1100		Geo & drillers to C7598

NOT USED

JP 9.30.2010

Reported By: T. Fleming		Reviewed By: L.S. Walker	
Title: Geologist	Date: 9.30.10	Title: Geologist	Date: 10/12/10
Signature: Jim Fleming		Signature: L.S. Walker	

A-6003-651 (REV 1)

FIELD ACTIVITY REPORT - DAILY DRILLING

Continuation Page

Page 2 of 2

Date: 9.30.2010

Well Name: 199-H4-75 | Well ID: C7597

Location: W of 100-H Reactor | Continuation of Report No.: 4

Time/Depth From	Time/Depth To	Description of Activities/Operations with Depth
		Test #1 w/ Troll 168724 (49.5'-34.5')
		Di: 5.72 Df: 2.59 Intake: 49' bgs
		PUMP ON: 0849 PUMP OFF: 0956 gpm: 51/45 @ 0947

TIME	DEPTH	TURBIDITY (NTU)	CONDUCTIVITY (µS)	pH	TEMP (C°)	NOTES
0852	2.78	55.8	475	7.55	16.53	
0857	2.52	29.8	465	7.62	16.52	
0905	2.13	17.9	463	7.69	16.53	
0910	1.93	9.39	458	7.77	16.53	
0915	1.80	9.25	460	7.84	16.53	
0917	1.69	9.01	459	7.81	16.52	
0920	1.50	8.31	462	7.80	16.53	
0925	1.30	7.44	460	7.84	16.53	
0930	1.27	9.13	461	7.84	16.53	
0935	0.90	10.1	458	7.83	16.53	
0940	0.75	7.01	461	7.80	16.53	
0943	0.51	8.24	459	7.80	16.53	→ max dd.
0950	2.55	3.34	459	7.79	16.53	
0952	2.60	1.79	461	7.78	16.53	
0955	2.59	0.68	497	7.82	16.52	

TIME	DEPTH	
		RECOVERY 30 min
0956	2.59	
~~0924~~ 9:30		
1024	5.62	

Reported By: J. Fleming | Reviewed By: L.D. Walker

Title: Geologist | Date: 9.30.10 | Title: Geologist | Date: 10/12/10

Signature: J. Fleming | Signature: L.D. Walker

A-6003-652 (04/03)

WELL DEVELOPMENT AND TESTING DATA

Well Name:	Well ID:	Well Location:	Date:
199-H4-74	C7588	WSW of H Reactor	9.30.10

Reference Measuring Point (unless otherwise noted): TOP OF OUTER CASING (TOC)

Has the well been surveyed? ○ Yes ☒ No

Does the well have a cement pad? ☒ Yes ○ No

PART 1

STATIC WATER LEVEL:

Start of Job	30.5' bgs
End of Job	30.5' bgs

DEPTH TO BOTTOM:

Start of Job	43' bgs
End of Job	43' bgs

PART 2

WELL DEVELOPMENT DATA

Pump Model	5hp
Intake Depth	38' bgs
Starting Turbidity	54.4

Pump Start	Stop	Flow Rate
1135	1206	21

Total Pumped	651
Final Turbidity	1.69
XD SN/Range (PSI)	168724/30 PSI

PART 3

INSTANTANEOUS SLUG TEST

Static Water Level (TOC)	
Transducer Depth	
Baseline Start	
Injection Start	
Baseline Start	
Withdrawal Start	
Slug Volume	
XD SN/Range (PSI)	

PART 4

Last Recorded Measurements Date:

Current Measurements Date:

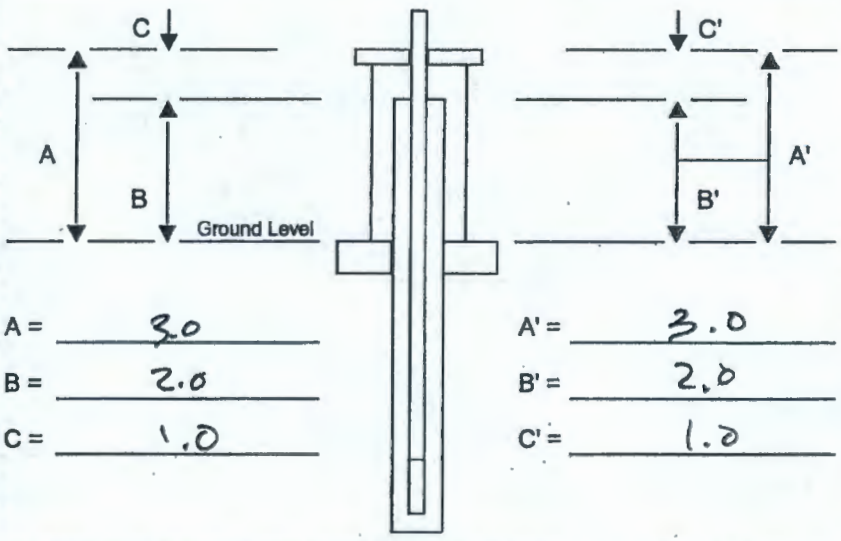

A =	3.0	A' =	3.0
B =	2.0	B' =	2.0
C =	1.0	C' =	1.0

Are there any reference marks on the casing strings? ○ Yes ○ No

PART 5

COMMENTS:

Test #1 (28'-38' screen)

Di: 4.45

Df: 2.07

30 min Recovery

Di: 2.07

Df: 4.43

Prepared by (print name):	Signature:	Date:
Jessica Fleming	J. Fleming	9.30.10
Reviewed by (print name):	**Signature:**	**Date:**
L.D. Walker	L.D. Walker	10-11-10

A-6003-644 (03/03)

FIELD ACTIVITY REPORT - DAILY DRILLING

Page 1 of 2

Date: 9.30.10

Well Name: 199-H4-74	Well ID: C7598
Location: SW of 100-H Reactor	Report No.: 5

Start	Finish	Total
Time 1100	Time 1300	Time 2
Hole Depth/Csg — / —	Hole Depth/Csg — / —	Hole Depth/Csg — / —

Reference Measuring Point: GROUND SURFACE

Casing String No. 1 2 3 4 ____ Rod Size: See Report No. 1

Time/Depth From	Time/Depth To	Description of Activities/Operations with Depth (Attach applicable drawings and document straightness test results)
1100	—	Set up over well & Tag: 42.5' = w 1/2 ft of fill.
—	1115	→ Bail out & Tag: 43.1' bgs = clean; Water @ 30.5'
1115	—	Begin tripping in pump; intake @ 38' bgs
—	1130	Begin development (See pg 2)
1130	1240	Development activities
1240		Take site down & move equipment
	1300	→ Geo paperwork.
1300		Geo departs from site.

NOT USED

9.30.10

Reported By: J. Fleming		Reviewed By: L.S. Walker	
Title: Geologist	Date: 9.30.10	Title: Geologist	Date: 10/11/10
Signature:		Signature:	

A-6003-651 (REV 1)

FIELD ACTIVITY REPORT - DAILY DRILLING

Continuation Page

Page 2 of 2

Date: 9-30-10

Well Name: 199-H4-74

Well ID: C7508

Location: WSW of 100-H Reactor

Continuation of Report No.: 5

Time/Depth From	Time/Depth To	Description of Activities/Operations with Depth
		Test #1 w/ Troll 168724
		Di: 4.45 Df: 2.07 intake: 38' bgs (OP) 9.30.10
		PUMP ON: 1135 PUMP OFF: 1206 gpm: ~~30~~ 21
		total pumped: 651 gallons

TIME	DEPTH	Turbidity (NTU)	Conductivity (µS)	pH	Temp (C°)	NOTES
1137	2.26	54.4	721	8.03	16.40	
1145	2.18	20.9	539	7.99	16.15	
1150	2.13	8.42	538	7.98	16.09	
1155	2.11	4.88	539	7.94	16.08	
1200	~~3.09~~	2.10/3.09	543	7.93	16.09	
1205	2.08	1.69	528	7.98	16.08	
		Recovery	(30 min)			
1206	2.06					
1236	4.43					

Reported By: J. Fleming

Title: Geologist

Date: 9.30.10

Signature: J. Fleming

Reviewed By: L. B. Walker

Title: Geologist

Date: 10-11-10

Signature: L. B. Walker

A-6003-652 (04/03)

WELL DEVELOPMENT AND TESTING DATA

Well Name:	Well ID:	Well Location:	Date:
199 - D7-3	C7599	E: 574515.35 N: 152[illegible]4.08	4.21.10

Reference Measuring Point (unless otherwise noted): TOP OF OUTER CASING (TOC)

Has the well been surveyed? ○ Yes ● No | Does the well have a cement pad? ○ Yes ● No

PART 1

STATIC WATER LEVEL:

Start of Job	60.2'
End of Job	60.3'

DEPTH TO BOTTOM:

Start of Job	87.4' bgs
End of Job	87.2' bgs

PART 2

WELL DEVELOPMENT DATA

Pump Model	100 H/P
Intake Depth	S1 - 70' bgs / S2 - 80' bgs
Starting Turbidity	S1 252 / S2 35.0

Pump Start	Stop	Flow Rate
S1 0934	1029	53.8
S2 1122	1126	41.8
S2 1126	1235	50.9
/	/	/
/	/	/

Total Pumped	S1 3959 S2 3505.2 T 6464.2
Final Turbidity	S1 4.38 / S2 4.86
XD SN/Range (PSI)	115276

PART 3

INSTANTANEOUS SLUG TEST

Static Water Level (TOC)	
Transducer Depth	
Baseline Start	
Injection Start	
Baseline Start	
Withdrawal Start	
Slug Volume	
XD SN/Range (PSI)	

PART 4

Last Recorded Measurements Date:

Current Measurements Date:

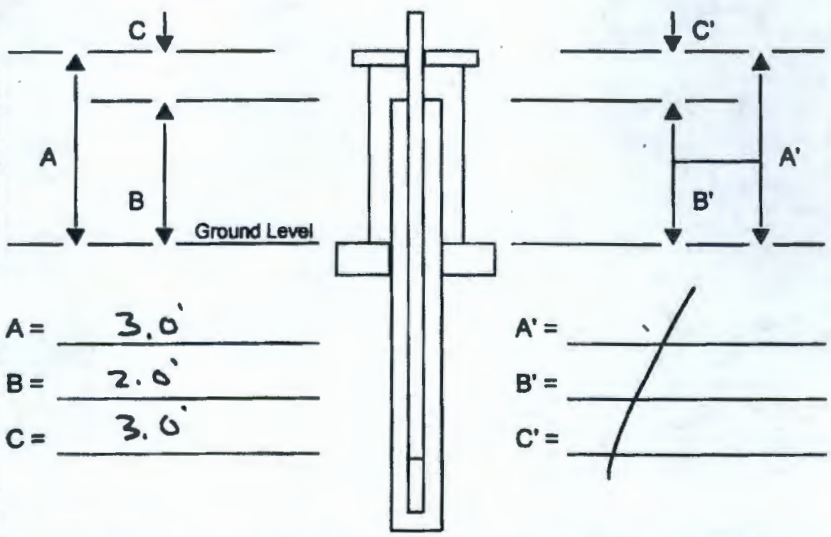

A = 3.0'
B = 2.0'
C = 3.0'

A' =
B' =
C' =

Are there any reference marks on the casing strings? ○ Yes ● No

PART 5

COMMENTS:

- Test/development 1 (60.2-70.6') recorded on "7599 upper"
- Test/development 2 ( ) recorded on "7599 lower"
- recovery test, 30 min, recorded on "7599 lower"
- tests recorded on Trail S/N 115276

S_1 = Section/test 1
S_2 = Section/test 2

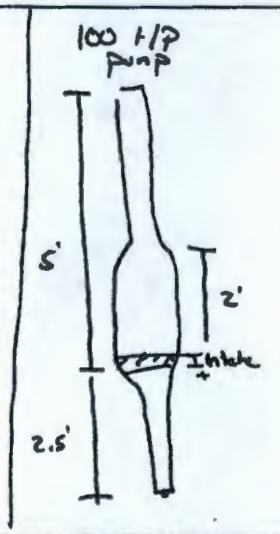

Prepared by (print name):	Signature:	Date:
A. Pappas	[signature]	4.21.10
Reviewed by (print name):	**Signature:**	**Date:**

FIELD ACTIVITY REPORT - DAILY DRILLING

Page 1 of 2

Date: 4.21.10

Well Name: 199-D7-3 | Well ID: C7599

Location: E: 574151.35 N: 152364.06 | Report No.: 5

Start	Finish	Total
Time 0600	Time 1354	Time 7 hrs 54 min
Hole Depth/Csg N/A / N/A	Hole Depth/Csg N/A / N/A	Hole Depth/Csg - / -

Reference Measuring Point: GROUND SURFACE

Casing String No. 1 2 3 4 ____ Rod Size:
See Report No. 1 60.2 - DTW

Time/Depth From	Time/Depth To	Description of Activities/Operations with Depth (Attach applicable drawings and document straightness test results)
0600	0710	POD at ISRM trailer.
0710	0737	to site, drillers set up to bail well.
0737	/	Drillers bail out 3' (87.3 - 84.3) of fill material
/	/	well bailed to 87.4' bgs, drillers prep to trip
/	0847	in pump. Depth to water 60.2' bgs
0843	/	Drillers trip in pump (5'), 3 x 21' of pipe, ~~1 x 45'~~ 1x5'
/	0918	of pipe — intake at ~~69.5'~~ 70.0' bgs, probe at ~~67.5'~~ 68.0' bgs
0918	/	Drillers prep to start pump. Geologist calibrates
/	/	instruments.
/	/	pH µ turbidity
/	/	std act std act std 494 act 497
/	/	10 10.12 1414 1367 530 527
/	/	7 7.08 4.24 3.9
/	/	xD interval 7.92'
0934	/	Start pumping interval one (60.2' - 70.0'), test C7599 upper.
/	/	xD pH NEVs µ temp °C gpm
/	0934	7.92 7.23 252 843 22.2 53.8
/	0944	5.41 7.98 43.9 742 22.1 53.8
/	0954	4.95 8.07 18.2 739 22.4 53.8
/	1004	4.72 8.05 9.06 739 22.5 53.8
/	1014	4.67 8.04 7.18 752 22.5 53.8
/	1024	4.45 ~~4.82~~ 8.06 ~~8.05~~ 4.82 740 22.5 53.8
/	1029	4.43 8.02 4.38 737 22.5 53.8 - development done
1029	/	Drillers move pump down to next interval.

Reported By: A. Pappas | Reviewed By: L.d. Walker

Title: Field Geologist | Date: 4.21.10 | Title: Geologist | Date: 5/19/10

Signature: | Signature:

FIELD ACTIVITY REPORT - DAILY DRILLING

Continuation Page

Date: 4.21.10

Well Name: 199 - D7-3

Well ID: C7599

Location: E: 574151.35 N: 152364.06

Continuation of Report No.: 5

Time/Depth From	Time/Depth To	Description of Activities/Operations with Depth
/	1056	new intake depth: 80.0' bgs, probe at 78.0' bgs.
1056	1122	Waiting on purge truck.
1122	/	Pump truck on site, hooked up - Drillers
/	/	start pump. xD initial 17.79' test "C7599 lower"
/	/	xD pH NTU µ temp°c gpm
/	1122	17.74 8.15 35.0 738 22.8 41.8
/	1132	14.77 8.06 14.8 729 22.5 50.8
/	1142	14.33 8.15 6.26 733 22.5 50.8
/	1152	14.28 8.02 7.67 739 22.51 50.8
/	1202	14.15 8.01 2.98 732 22.5 50.8
/	1212	14.09 8.00 4.86 732 22.5 50.8
/	1222	NCO collect water sample, HELS #'s B23R29 + B23R30 -
/	/	Duplicate HELS #'s B23R27 B23R28.
/	1235	13.99 7.74 2.28 739 22.6 50.8
1235	/	pump off, begin recovery test, recorded on "C7599 lower"
/	1305	final xD 17.71
1305	1337	Drillers remove pump.
1337	/	Pumped removed, Drillers clean up site. Geologist does
/	/	paperwork. DTB at ~~to~~ 67.2' bgs, DTW
/	1354	is 60.31' bgs.
1354		Geologist exits site

4.21.10

Reported By: A. Pappas

Title: Field Geologist

Date: 4.21.10

Signature:

Reviewed By: L.D. Walker

Title: Geologist

Date: 5/19/10

Signature: LD Walker

WELL DEVELOPMENT AND TESTING DATA

Well Name:	Well ID:	Well Location:	Date:
199-D5-129	C7600	100D	2.11.10

Reference Measuring Point (unless otherwise noted): TOP OF OUTER CASING (TOC)

Has the well been surveyed? ○ Yes ☑ No | Does the well have a cement pad? ○ Yes ☑ No

PART 1

STATIC WATER LEVEL:

Start of Job	83.4'
End of Job	83.37'

DEPTH TO BOTTOM:

Start of Job	108.0'
End of Job	108.05'

PART 2

WELL DEVELOPMENT DATA

Pump Model	5hp
Intake Depth	Test 1: 87' bgs / T2: 103'
Starting Turbidity	T1: 51.1 / T2: 18.9

	Pump Start	Stop	Flow Rate
Test 1	(T1) 1146	(T1) ~~1155~~	14.96 gpm
	(T1) 1155	(T1) 1228	17.0 gpm
Test 2	(T2) 1228	1328	23.0 gpm
	1328	1348	47.9

Total Pumped	T1 661.64 / T2 2108 gallons
Final Turbidity	T1 1.47 / T2 .96
XD SN/Range (PSI)	5218

PART 3

INSTANTANEOUS SLUG TEST

Static Water Level (TOC)	
Transducer Depth	
Baseline Start	
Injection Start	
Baseline Start	
Withdrawal Start	
Slug Volume	
XD SN/Range (PSI)	

PART 4

Last Recorded Measurements Date:

Current Measurements Date:

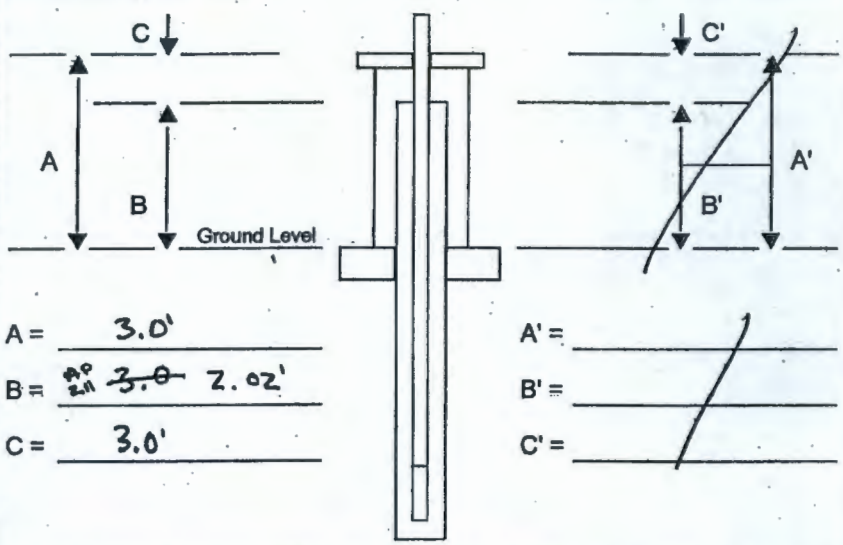

A =	3.0'	A' =	
B =	~~3.0~~ 2.02'	B' =	
C =	3.0'	C' =	

Are there any reference marks on the casing strings? ○ Yes ○ No

PART 5

COMMENTS:

Hermit: Jeff

Transducer: 5218

Pump/development test 1 (12-78): "Cardsrulewd5"

Pump/development test 2 (103-93): "Cardsrulewd6"

recovery test: "Cardsrulewd7"

HEIS numbers for samples collected. B23MT3, B23MT4.

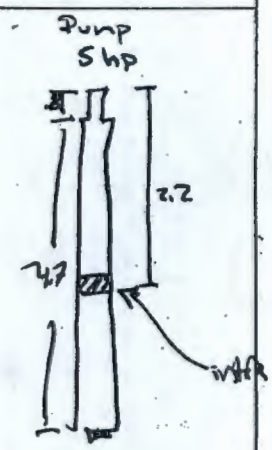

Prepared by (print name):	Signature:	Date:
A. Pappas		2.11.10
Reviewed by (print name):	**Signature:**	**Date:**
D. Walker		2-25-10

A-6003-644 (03/03)

FIELD ACTIVITY REPORT - DAILY DRILLING

Page 1 of 2

Date: 2.11.10

Well Name: 199-D5-129 | Well ID: C7600

Location: 100D | Report No.: 11

Start	Finish	Total
Time 0600	Time 1500	Time 9 hrs
Hole Depth/Csg N/A / N/A	Hole Depth/Csg N/A / N/A	Hole Depth/Csg — / —

Reference Measuring Point: GROUND SURFACE

Casing String No. 1 2 3 4 ____ See Report No. 1 | Rod Size:

Time/Depth From	To	Description of Activities/Operations with Depth (Attach applicable drawings and document straightness test results)
0660	0654	POD at ISRM trailer.
0654		to site. drillers setup to resume well
		completion.
		tag inside of well at 101.5' bgs 7' of fill needs to
	0730	be bailed.
0730	0811	Drillers setup bail prepare to bail well.
0811	1003	Drillers begin to bail out well.
1003		Drillers complete bail. begin getting ready to
	1038	trip in 5hp pump
1038		Drillers trip in 5hp pump(2.2hp) followed by: 21' pipe,
		21' pipe, 21' pipe, 20' pipe, 10' 3' pipe. total pipe placed 93 ft, w/
	1108	pump at 90' bgs.
		Probe at 83' bgs (probe/transducer ID: 5218)
		intake at 93' bgs Depth to water 83.4'
		Hermit: Jeff
1108		Geologist tests equipment
		turbidimeter: std reading; pH: std reading; Conductivity: std reading
		507 517; 7 7.03; 1413 1475
		48.3 51.4; 10 10.11
	1146	5.61 5.97 xD @ 0min: 6.344
1146		Start pump. Development test "CambeRule WDS"
		xD pH µ NTU °C GPM
	1146	6.106 8.16 621 51.1 14.3 14.96
	1156	6.096 7.95 624 28.9 15.6 17.0

Reported By: A. Pappas | Reviewed By: L.S. Walker

Title: Field Geologist | Date: 2.11.10 | Title: Geologist | Date: 2/25/10

Signature: [signature] | Signature: [signature]

A-6003-651 (REV 1)

FIELD ACTIVITY REPORT - DAILY DRILLING
Continuation Page

Page 2 of 2
Date: 2-11-10

Well Name: 199-D5-129 | Well ID: C7600
Location: 100D | Continuation of Report No.: 11

Time/Depth From	Time/Depth To	Description of Activities/Operations with Depth
		pump/development 1 continued
		xD pH µ NTU °C GPM
	1206	6.047 7.94 623 9.24 15.2 17.0
	1216	6.086 7.90 630 5.04 14.8 17.0
	1221	6.086 7.95 618 2.42 15.9 17.0
	1226	6.086 1.47
	1226	Pump shut off, drillers prep to add 10' of pipe
1226		Drillers 10' of pipe, total pipe tally: 103'
		probe now at 100' bgs
		intake now at 103' bgs
	1238	xD @ 0 min: 16.166
1238		Start development of Section 2, test "CardsRule WD
		xD pH µ NTU °C GPM
	1238	15.825 7.88 608 18.9 16.5 23.0
	1248	15.822 7.97 620 10.8 15.5 23.0
	1258	15.814 7.87 613 5.38 16.4 23.0
	1308	15.822 7.78 631 2.90 14.4 23.0
	1318	15.813 7.96 622 1.15 15.6 23.0
	1322	NCO: collect water samples, HEIS #s B23MT3, B23MT4
	1328	15.810 7.92 622 .85 15.9 23.0
	1333	15.308 7.93 614 1.45 15.4 47.9
	1348	15.290 7.93 618 .96 14.0 47.9
	1348	Stop pump
1348	1408	begin recovery test (cardsrule WD7).
1408	1432	Drillers pull out pipe as recovery has finished
1432		Pump & pipe removed. Drillers clean up site.
	1449	Depth to bottom 108.05, Depth to water 83.37
1449		Geologist exits site.
		Not yet [illegible] 2/11

Reported By: A. Pappas | Reviewed By: L.D. Walker
Title: Field Geologist | Date: 2.11.10 | Title: Geologist | Date: 2/25/10
Signature: [signature] | Signature: [signature]

A-6003-652 (04/03)

WELL DEVELOPMENT AND TESTING DATA

Well Name:	Well ID:	Well Location:	Date:
199-D5-131	C7601	E: 573684.3 N: 152007.01	4.27.10

Reference Measuring Point (unless otherwise noted): TOP OF OUTER CASING (TOC)

Has the well been surveyed? ○ Yes ● No | Does the well have a cement pad? ○ Yes ● No

PART 1

STATIC WATER LEVEL:

Start of Job	86.4' bgs
End of Job	86.5' bgs

DEPTH TO BOTTOM:

Start of Job	111.1' bgs
End of Job	111.1' bgs

PART 2

WELL DEVELOPMENT DATA

Pump Model	100 Hp
Intake Depth	T1 105' bgs T2 95' bgs
Starting Turbidity	T1 >999 T2 461

Pump Start	Stop	Flow Rate
T1 1244	1330	29.0
T2 1340	1435	300

Total Pumped	T1 1334 T2 1650 T3 2984
Final Turbidity	T1 4.40 T2 7.33
XD SN/Range (PSI)	115276

PART 3

INSTANTANEOUS SLUG TEST

Static Water Level (TOC)	
Transducer Depth	
Baseline Start	
Injection Start	
Baseline Start	
Withdrawal Start	
Slug Volume	
XD SN/Range (PSI)	

PART 4

Last Recorded Measurements Date:

Current Measurements Date:

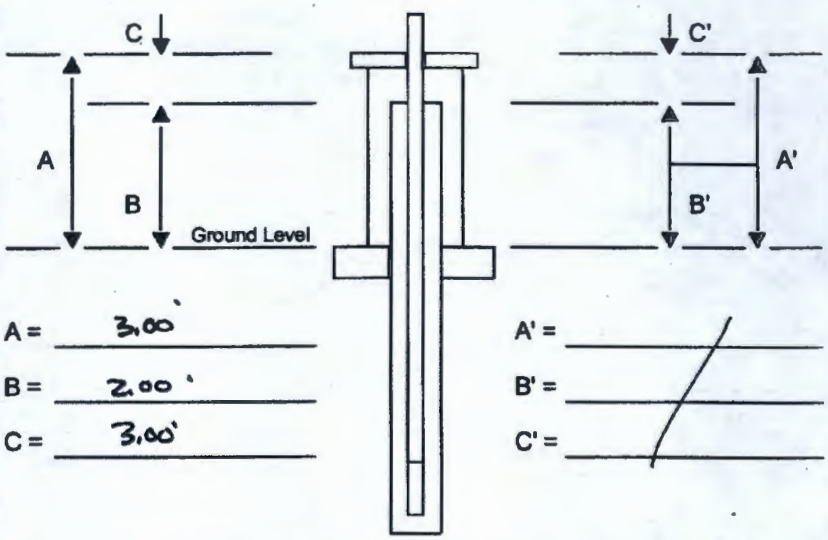

A = 3.00'

B = 2.00'

C = 3.00'

A' =

B' =

C' =

Are there any reference marks on the casing strings? ○ Yes ● No

PART 5

COMMENTS:

- Development done in two sections, recorded on troll S/N 115276, + one recovery
- pump test 1, 105'-95' bgs, recorded as "C7601 lower"
- pump test 2, 95'-86.4' bgs, recorded as "C7601 upper"
- recovery test recorded as "C7601 upper"

100 Hp pump

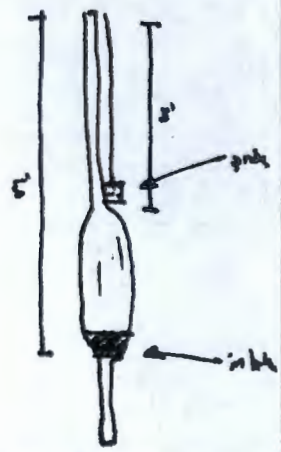

Prepared by (print name):	Signature:	Date:
A. Pappas		4.27.10
Reviewed by (print name):	**Signature:**	**Date:**

FIELD ACTIVITY REPORT - DAILY DRILLING

Page 1 of 2

Date: 4.27.10

Well Name: ~~199-D8-131~~ 199-D5-131

Well ID: C7601

Location: E:573684.3 N:1520070.1

Report No.: 8

Start	Finish	Total
Time 1103	Time 1542	Time 4 hrs 39 min
Hole Depth/Csg — / —	Hole Depth/Csg — / —	Hole Depth/Csg — / —

Reference Measuring Point: GROUND SURFACE

Casing String No. 1 2 3 4 ____ Rod Size:

See Report No. 1 DTW: 86.4' bgs

Time/Depth From	Time/Depth To	Description of Activities/Operations with Depth (Attach applicable drawings and document straightness test results)
1103		Drillers rig on to site. Tag bottom of
		well at 105.9' bgs, actual bottom is 111.18' bgs
		about 5' of fill needs to be removed prior to
		development. Drillers prep to bail well.
1125	1156	Drillers start to bail well
1156		Well bailed back to 111.1' bgs, drillers
	1235	trip in lower pump. Depth to water tagged at 86.4' bgs
1235		pump tripped in. intake at 105' bgs, probe/transducer
		at 103' bgs. Drillers hook up to trailer, geologist calibrate/
		tests equipment
		pH turbidity µS
		std act std Act std act
		10 10.16 494 497 1414 1414
		7 7.10 530 529
		4.24 4.04 xD initial 16.33
		~~test~~ will be done in two series, and recorded on
	1244	troll S/N: 115276.
1244		Start test one, 105'-95' bgs, recorded on "C7601 lower"
		xD NTUs pH µs temp°c gpm
	1244	-16.73 >999 7.88 581 19.4 29
	1254	14.05 105 7.96 579 19.6 29
	1304	14.03 29.0 7.86 576 19.6 29
	1314	14.03 13.0 8.05 573 19.6 29
	1324	14.02 4.88 7.93 570 19.6 29

Reported By: A. Pappas

Reviewed By: L.D. Walker

Title: Field Geologist

Date: 4.29.10

Title: Geologist

Date: 5/18/10

Signature:

Signature:

FIELD ACTIVITY REPORT - DAILY DRILLING

Continuation Page

Date: 4.27.10

Well Name: 199-D5-B1 | Well ID: C7601

Location: E: 573684.3 N: 152007.01 | Continuation of Report No.: 8

Time/Depth From	Time/Depth To	Description of Activities/Operations with Depth
		test "C7601 lower" cont.
		xD NTU's pH µS temp°c gpm
	1330	14.02 4.90 8.00 573 19.8 29
1330		pump off, test stopped. drillers move pump up 10',
	1340	new intake at 95' bgs, probe at 92' bgs.
1340		Drillers start pumping test 2, 95'-86.4' bgs, recorded
		as "C7601 upper". xD initial: 6.37'
		xD NTU's pH µS Temp°c gpm
	1340	-6.37 461 7.87 566 19.7 30
	1350	3.96 37.6 7.86 565 19.6 30
	1400	3.97 25.0 8.00 559 19.6 30
	1410	3.97 4.60 8.00 572 19.6 30.
	1420	3.96 2.34 7.98 563 19.6 30
	1426	NCO's collect water sample, HEIS #s B23R37, B23R38
	1430	3.93 2.50 7.97 555 19.6 30
	1435	3.94 2.33 7.97 562 19.6 30
1435	1505	pump off, begin recovery test. Test recorded on "C7601 upper".
1505		stop recovery test, remove pump and probe.
	1528	final xD: 6.36
1528		Pump removed. Drillers clean site & rig down. Geologist
		does paperwork. Depth to water tagged at 86.5' bgs
	1542	Depth to bottom tagged at 111.1' bgs
1542		Geologist and drillers ~~left~~ Apuzen exit site

Not Used 4.29.10

Reported By: A. Pepper | Reviewed By: L.D. Walker

Title: Field Geologist | Date: 4.27.10 | Title: Geologist | Date: 5/18/10

Signature: | Signature:

WELL DEVELOPMENT AND TESTING DATA

Well Name:	Well ID:	Well Location:	Date:
199-D8-98	C7602	E: 574002.53 N: 152122.67	4.23.10

Reference Measuring Point (unless otherwise noted): TOP OF OUTER CASING (TOC)

Has the well been surveyed? ○ Yes ● No | Does the well have a cement pad? ○ Yes ● No

PART 1

STATIC WATER LEVEL:

Start of Job	~~68.5~~ 68.5
End of Job	68.7

DEPTH TO BOTTOM:

Start of Job	87.8'
End of Job	87.8'

PART 2

WELL DEVELOPMENT DATA

Pump Model 100 Hp

Intake Depth S1 77 / S2 82

Starting Turbidity S1 482 / S2 37.4

Pump Start	Stop/D	Flow Rate
0834	0919	~~20.421~~
0939	1034	27

Total Pumped S1 945 / S2 1485 / T 2480

Final Turbidity S1 4.31 / S2 1.82

XD SN/Range (PSI) 115 276

PART 3

INSTANTANEOUS SLUG TEST

Static Water Level (TOC)	
Transducer Depth	
Baseline Start	
Injection Start	
Baseline Start	
Withdrawal Start	
Slug Volume	
XD SN/Range (PSI)	

PART 4

Last Recorded Measurements Date:

Current Measurements Date:

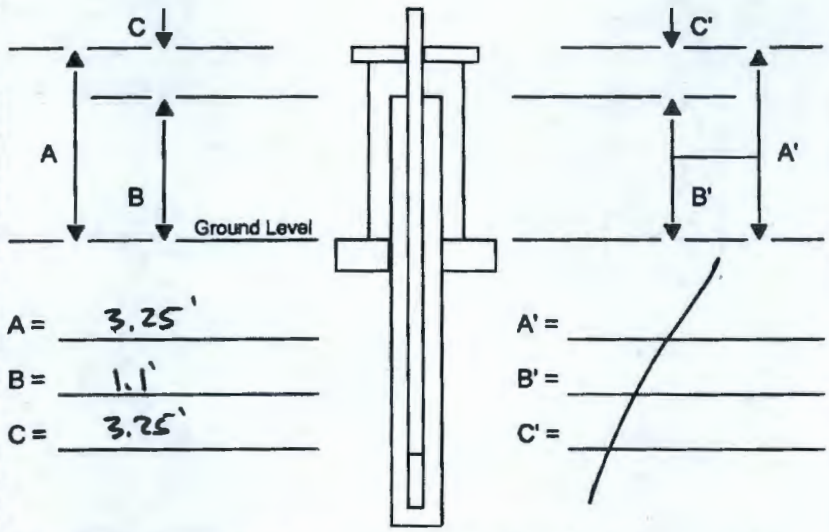

A = 3.25'

B = 1.1'

C = 3.25'

A' =

B' =

C' =

Are there any reference marks on the casing strings? ○ Yes ○ No

PART 5

COMMENTS:

- development done in 2 tests, 1 recovery
- test 1 recorded on "C7602 upper" (77'-68.5')
- test 2 recorded on "C7602 lower" (85'-77')
- recovery recorded on "C7602 lower" (30 min)

S_1 = test 1

S_2 = test 2

100 Hp pump

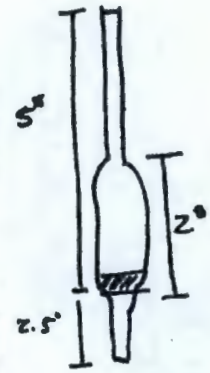

Prepared by (print name):	Signature:	Date:
A. Pappas		4.23.10
Reviewed by (print name):	Signature:	Date:

FIELD ACTIVITY REPORT - DAILY DRILLING

Page 1 of 1

Date: 4.22.10

Well Name: 199-D8-98

Well ID: C7602

Location: E: 574012.53 N: 152122.67

Report No.: 4

Start	Finish	Total
Time 1424	Time 1528	Time 1hr 4min
Hole Depth/Csg - / -	Hole Depth/Csg - / -	Hole Depth/Csg - / -

Reference Measuring Point: GROUND SURFACE

Casing String No. 1 2 3 4 ____ Rod Size:

See Report No. 1

Time/Depth From	Time/Depth To	Description of Activities/Operations with Depth (Attach applicable drawings and document straightness test results)
1424		Drillers tag well at ~~76.4'~~ ~~86.4' bgs~~, actual bottom is
		~~79.9~~ 87.95' bgs, ~ 1.5' of fill inside well.
	1525	Drillers bail well
1525		Well bailed to 87.5' bgs, still have ~.5'
		remaining. Drillers clean site, geologist does
	1528	paperwork
1528		Geologist exits site.

Reported By: A. Pepper

Title: Field Geologist

Date: 4.22.10

Signature: [signature]

Reviewed By: L. A. Walker

Title: Geologist

Date: 5/18/10

Signature: LA Walker

FIELD ACTIVITY REPORT - DAILY DRILLING

Page 1 of 2

Date: 4.23.10

Well Name: 199-D8-98	Well ID: C7602
Location: E: 574012.53 N: 152122.69	Report No.: 5

Start	Finish	Total
Time 0600	Time ~~5 hrs~~ AP 4.23 1145	Time 5 hrs 45 min
Hole Depth/Csg — / —	Hole Depth/Csg — / —	Hole Depth/Csg — / —

Reference Measuring Point: GROUND SURFACE

Casing String No. ~~1~~ 2 3 4 ____ Rod Size:
See Report No. 1

Time/Depth From	Time/Depth To	Description of Activities/Operations with Depth (Attach applicable drawings and document straightness test results)
0600	0652	POD at 25RM trailer.
0652	0730	Drillers setup to bail well.
0730	0738	Drillers resume bailing well
0738	/	well bailed to 87.8' bgs, drillers trip in
/	/	pipe and low flow pump. Depth to water tagged
/	/	at ~~86.5~~ 68.5 bgs. intake at 77' bgs, probe at
/	0817	~~75~~ 75 bgs.
0817	/	Drillers setup truck to pump, geologist calibrates
/	/	equipment.
/	/	Turbidity, pH, µ
/	/	std act. std. act. std. act.
/	/	494 497 7 7.04 1414 1341
/	/	530 527 10 10.12
/	/	4.24 3.74 xD initial: 6.14'
0834	/	Start pumping Section 1, 77' - ~~86.5~~ 68.5' bgs - test "C7602 upper".
/	~~0834~~	xD NTUs pH µ Temp°C gpm
/	0834	6.14 482 8.66 849 22.6 21
/	0844	1.82 105 8.11 789 23.2 21
/	854	1.80 23.8 8.21 785 23.3 21
/	0904	1.83 7.91 7.97 782 23.3 21
/	0914	1.85 3.18 7.97 771 23.3 21
/	0919	1.87 4.31 7.93 776 23.3 21
0919	/	pump off. add 5' of pipe, new intake at
/	/	82' bgs, probe at 80' bgs

Reported By: A. Pappas		Reviewed By: L.A. Walker	
Title: Field Geologist	Date: 4.23.10	Title: Geologist	Date: 5/18/10
Signature:		Signature:	

FIELD ACTIVITY REPORT - DAILY DRILLING

Continuation Page

Page 2 of 2

Date: 4.23.10

Well Name: 199-D8-98

Well ID: C7602

Location: E: 574012.50 N: 152122.67

Continuation of Report No.: 5

Time/Depth From	Time/Depth To	Description of Activities/Operations with Depth
0939	/	Start pumping Section 2, 82' - 72' test "C7602 lower"
/	/	xD intial 11.12
/	~~0939~~	xD NTU's pH µ Temp°c gpm
/	0939	~11.12 37.4 7.99 763 23.6 ~~26.4~~ 27.0
/	0949	6.18 35.5 7.91 770 23.2 27
/	0959	6.16 6.03 ~~6.03~~ 7.90 769 23.2 27
/	1009	6.15 4.36 7.92 774 23.2 27
/	1019	6.13 3.00 7.99 773 23.2 27
/	1024	NCO's collect water sample, HE16 B23R40, B23R41
/	1034	6.14 1.82 7.87 761 23.3 27
1034	/	Pump off, begin recovery test, recorded
/	/	on test "C7602 lower".
1164	~~1164~~	remove pump / end recovery test. final
/	1135	xD 11.10.
1135	/	Pump removed, Depth to water tagged at 68.7,
/	1137	Depth to bottom tagged at 87.86' bgs
1137	1145	Drillers clean up site, geologist does paperwork
1145		Geologist exits site

Reported By: A. Pappas

Title: Field Geologist

Date: 4.23.10

Signature:

Reviewed By: L.D. Walker

Title: Geologist

Date: 5/18/10

Signature:

WELL DEVELOPMENT AND TESTING DATA

Well Name:	Well ID:	Well Location:	Date:
199-D8-96	C7603	E:573859.59 N:152087.60	4.27.10

Reference Measuring Point (unless otherwise noted): TOP OF OUTER CASING (TOC)

Has the well been surveyed? ○ Yes ● No | Does the well have a cement pad? ○ Yes ● No

PART 1

STATIC WATER LEVEL:

Start of Job	76.4'	bgs
End of Job	76.5'	" "

DEPTH TO BOTTOM:

Start of Job	95.1'	bgs
End of Job	95.1'	" "

PART 2

WELL DEVELOPMENT DATA

Pump Model	100 Hp
Intake Depth	89.5' bgs
Starting Turbidity	266 NTUs

Pump Start	Stop/Δ	Flow Rate
0725	0730	24 gpm
0730	0740	34.2 gpm
0740	0905	38.8 gpm

Total Pumped	3,760 gallons
Final Turbidity	4.44 NTUs
XD SN/Range (PSI)	115276

PART 3

INSTANTANEOUS SLUG TEST

Static Water Level (TOC)	
Transducer Depth	
Baseline Start	
Injection Start	
Baseline Start	
Withdrawal Start	
Slug Volume	
XD SN/Range (PSI)	

PART 4

Last Recorded Measurements Date:

Current Measurements Date:

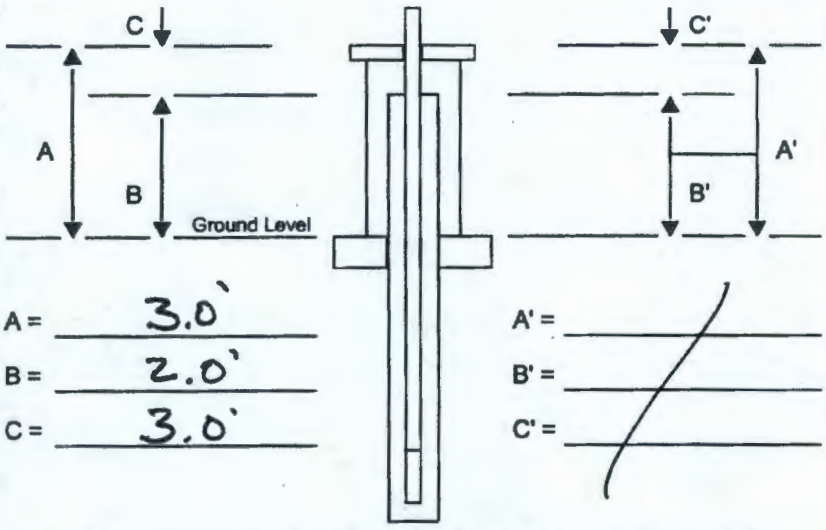

A =	3.0'	A' =	
B =	2.0'	B' =	
C =	3.0'	C' =	

Are there any reference marks on the casing strings? ○ Yes ○ No

PART 5

COMMENTS:

- Development done in one pump test, and on recovery test - recorded on Troll S/N 115276.
- Development pump test recorded as "C7603"
- recovery test recorded as "C7603"

100 Hp pump

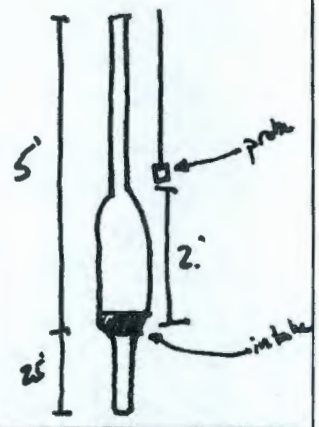

Prepared by (print name): A. Pappas	Signature:	Date: 4.27.10
Reviewed by (print name):	Signature:	Date:

FIELD ACTIVITY REPORT - DAILY DRILLING

Page 1 of 1

Date: 4.26.10

Well Name: 199-D8-96

Well ID: C7603

Location: E: 573859.59 N: 152087.60

Report No.: 7

Start	Finish	Total
Time 1158	Time 1546	Time 3 hrs 44 min
Hole Depth/Csg - / -	Hole Depth/Csg - / -	Hole Depth/Csg - / -

Reference Measuring Point: GROUND SURFACE

Casing String No. 1 2 3 4 ____ Rod Size:
See Report No. 1

Time/Depth From	Time/Depth To	Description of Activities/Operations with Depth (Attach applicable drawings and document straightness test results)
1158	/	Drillers on site, rig up. Tag bottom of well at 92.9'
/	/	bgs.
1243	1504	Drillers begin to bail well
1504	/	Drillers bail well to 95.1' bgs, trip in pump.
/	/	Pump tripped in, intake at 89.5' bgs.
/	/	tomorrow probe will be tripped in and
/	/	pumping test will begin. Drillers clean up site
/	1546	. Geologist does paper work.
1546		Geologist exits site.

A. Pappas 4.26.10

Reported By: A. Pappas

Title: Field Geologist

Date: 4.26.10

Signature:

Reviewed By: L.D. Walker

Title: Geologist

Date: 5/18/10

Signature:

FIELD ACTIVITY REPORT - DAILY DRILLING

Page 1 of 2

Date: ~~4.27~~ 4.27.10

Well Name: 199-D8-96	Well ID: C7603
Location: E:573859.59 N: 152087.60	Report No.: ~~7~~ 8 LW 5-18-10

Start	Finish	Total
Time 0600	Time 1008	Time 4 hrs 8 min
Hole Depth/Csg — / —	Hole Depth/Csg — / —	Hole Depth/Csg — / —

Reference Measuring Point: GROUND SURFACE

Casing String No. 1 2 3 4 ____ Rod Size:
See Report No. 1 DTW 76.4' bgs

Time/Depth From	Time/Depth To	Description of Activities/Operations with Depth (Attach applicable drawings and document straightness test results)
0600	0651	POD at ISRM trailer
0651	/	to site, drillers setup to run pump.
/	/	Geologist sets probe. Depth to water 76.4' bgs.
/	/	Depth to bottom at 95.1' bgs. intake at
/	0710	89.5, probe at 87.5'.
0710	/	Geologist preps equipment.
/	/	Turbidity std/act — pH — µs
/	/	494 498 — std act — std act
/	/	53 522 — 10 10.13 — 1414 1246
/	/	4.24 4.10 — 7 7.10
/	/	xD initial: 11.25
0725	/	Start pump, test zone 89.5 - 76.4', recorded on "C7603"
/	/	on troll S/N 115276.
/	/	xD NTU's pH µs temp°c gpm
/	0725	~1.25 266 7.59 666 20.0 24
/	0735	5.04 187 7.90 618 20.0 34.2
/	0745	1.54 48.8 8.09 606 20.0 38.8
/	0755	1.21 9.40 8.15 602 20.0 38.8
/	0805	1.03 5.90 8.10 601 20.0 38.8
/	0815	1.04 7.93 8.14 603 20.0 38.8
/	0825	.75 5.16 8.17 606 20.0 38.8
/	0835	.45 8.00 8.19 613 20.0 38.8
/	0845	.27 7.72 8.18 609 20.0 38.8
/	0854	NLO's collect sample, HEIS #'s B23R62, B23R63

Reported By: A. Pappas	Reviewed By: L.D. Walker
Title: Field Geologist — Date: 4.27.10	Title: Geologist — Date: 5-18-10
Signature:	Signature:

FIELD ACTIVITY REPORT - DAILY DRILLING

Continuation Page

Date: 4.27.10

Well Name: 199 - D8 - 96

Well ID: C7603

Location: E: 573859.59 N: 152087.60

Continuation of Report No.: 8

Time/Depth From	Time/Depth To	Description of Activities/Operations with Depth
/	/	test "C7603" cont.
/	/	xD NTUs pH µS temp gpm
/	0855	.05 9.24 8.08 607.0 20.0 38.8
/	0905	.05 4.44 8.12 606 20.0 38.8
0905	/	shut off pump, begin recovery test, recorded on
/	0935	"C7603".
0935	/	recovery test complete. Drillers pull pump. final
/	1002	xD 11.10
1002	/	pump removed. Drillers clean site. Geologist does
/	/	paper work. Depth to water tagged at 76.5' bgs
/	1008	Depth to bottom tagged at 95.11' bgs
1008		Geologist cooks site, Drillers rig down and exit

Not Used 4.27.10

Reported By: A. Pappas

Reviewed By: L.D. Walker

Title: Field Geologist

Date: 4.27.10

Title: Geologist

Date: 5-18-10

Signature:

Signature:

CHPRC WELL DEVELOPMENT AND TESTING DATA

Well Name:	Well ID:	Well Location:	Date:
199-H1-4	C-7604	100-H	4-26-11

Reference Measuring Point (unless otherwise noted): TOP OF OUTER CASING (TOC)

Has the well been surveyed? ○ Yes ○ No

Does the well have a cement pad? ⊗ Yes ○ No

PART 1

STATIC WATER LEVEL:

Start of Job	38.8
End of Job	39.4

DEPTH TO BOTTOM:

Start of Job	49.2
End of Job	49.2

PART 2

WELL DEVELOPMENT DATA

Pump Model	REDI FLOW #2
Intake Depth	48.1
Starting Turbidity	17.6

Pump Start	Stop	Flow Rate
9:38	10:00	5 GPM
~~10:00~~	~~10:20~~	
10:20	10:37	5 GPM
10:50	11:20	3 GPM
11:30	11:45	3.6 GPM

Total Pumped	500 GAL
Final Turbidity	4.35
XD SN/Range (PSI)	

PART 3

INSTANTANEOUS SLUG TEST

Static Water Level (TOC)	
Transducer Depth	
Baseline Start	
Injection Start	
Baseline Start	
Withdrawal Start	
Slug Volume	
XD SN/Range (PSI)	

N/A PMGENT 4/27/11

PART 4

Last Recorded Measurements Date:

Current Measurements Date: 4-26-11

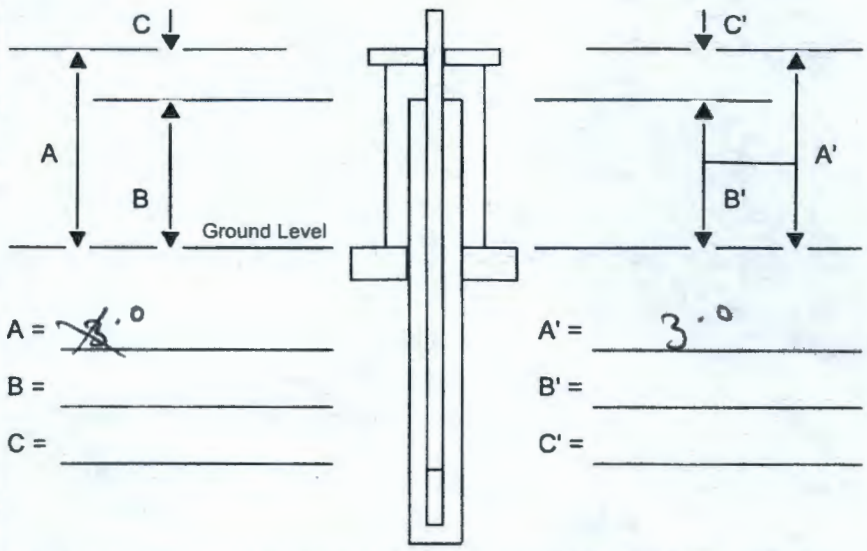

A = ~~3~~.0

B =

C =

A' = 3.0

B' =

C' =

Are there any reference marks on the casing strings? ○ Yes ○ No

PART 5

COMMENTS:

DRAW DOWN H2O to 48 ft.
~~17~~ 5 min REC. to static 39.4

Prepared by (print name):	Signature:	Date:
Len Jones	Len Jones	4-26-11
Reviewed by (print name):	**Signature:**	**Date:**
L.D. Walker	L.D. Walker	5-3-11

A-6005-205 (REV 0)

FIELD ACTIVITY REPORT - DAILY DRILLING

Page 1 of 1

Date: 9.22.2010

Well Name: 199-H1-4	Well ID: C7604
Location: NW of 100-H Reactor	Report No.: 03

Start	Finish	Total
Time 0600	Time 1530	Time 9 hrs
Hole Depth/Csg — / —	Hole Depth/Csg — / —	Hole Depth/Csg — / —

Reference Measuring Point: GROUND SURFACE

Casing String No. 1 2 3 4 ____ Rod Size:
See Report No. 1 DEVELOPMENT

Time/Depth From	Time/Depth To	Description of Activities/Operations with Depth (Attach applicable drawings and document straightness test results)
0600	0630	To ISRM trailer for POD. Hi of 74°
0630	—	To site. Drillers Mob to C7604 from C7586.
—	1000	→ Setup site & prep for development.
1000	—	Tag inside of well: 45' bgs = 1' of fill
—	1045	→ Drillers bail fill out of well: IIIII loads bailed out
1045	—	Begin tripping in pump & trem pipe
—	1140	→ set intake @ ~~40.5~~ 41.0 bgs (JP 9.22.10)
1140	—	Begin development → See page 2
—	—	→ Pump can't be turned down low enough; recharge
—	1500	rate is too slow. → Try to find smaller pump to develop
1500	1530	Trip out 5hp pump & trip in 1/4hp pump
1530		Done for day. GCO no longer needed

NDE

VRD

JP 9.22.2010

Reported By: J. Fleming		Reviewed By: L.D. Walker	
Title: Geologist	Date: 9.22.10	Title: Geologist	Date: 10-11-10
Signature: J. Fleming		Signature: L.D. Walker	

A-6003-651 (REV 1)

FIELD ACTIVITY REPORT - DAILY DRILLING

Page 1 of 1

Date: 9.23.2010

Well Name: 199-H1-4

Well ID: C7604

Location: NW of H-Reactor

Report No.: 4

Start	Finish	Total
Time 0800	Time 1100	Time 3
Hole Depth/Csg — / —	Hole Depth/Csg — / —	Hole Depth/Csg — / —

Reference Measuring Point: GROUND SURFACE

Casing String No. 1 2 3 4 ____ Rod Size:
See Report No. 1

Time/Depth From	Time/Depth To	Description of Activities/Operations with Depth (Attach applicable drawings and document straightness test results)
0800	—	Drillers on site after company mtg.
—	—	→ Try to turn pump (1/4hp) on → not working.
—	—	→ will develop this well at a later time.
—	1100	→ Drillers mob to C7585 + prep for development.

NOT USED

JP 9.23.10

Reported By: A. Lantow

Title: Geologist

Date: 9.23.10

Signature: Aaron Lantow

Reviewed By: L. A. Walker

Title: Geologist

Date: 10-11-10

Signature: [signature]

A-6003-651 (REV 1)

FIELD ACTIVITY REPORT - DAILY DRILLING

Page 1 of 1

Date: 9.28.2010

Well Name: 199-H1-4

Well ID: C7604

Location: NW of H Reactor

Report No.: 5

Start	Finish	Total
Time 1500	Time 1600	Time 1hr
Hole Depth/Csg — / —	Hole Depth/Csg — / —	Hole Depth/Csg — / —

Reference Measuring Point: GROUND SURFACE

Casing String No. 1 2 3 4 ____ Rod Size:

See Report No. 1

Time/Depth From	Time/Depth To	Description of Activities/Operations with Depth (Attach applicable drawings and document straightness test results)
1500	—	Drillers set up over well C7604 and bail well
—	—	until no more water comes up.
—	—	→ Recharge rate: ~ 4 gal/1 min
—	1600	→ Drillers will move to C7606 for development
1600		Geo departs from site.

Reported By: J. Fleming

Title: Geologist

Date: 9.28.10

Signature: J. Fleming

Reviewed By: L.D. Walker

Title: Geologist

Date: 10/11/10

Signature: L.D. Walker

A-6003-651 (REV 1)

WELL DEVELOPMENT AND TESTING DATA

Well Name:	Well ID:	Well Location:	Date:
99-HA-77	C7605	NW of H Reactor	9.29.10

Reference Measuring Point (unless otherwise noted): TOP OF OUTER CASING (TOC)

Has the well been surveyed? ○ Yes ⊗ No

Does the well have a cement pad? ⊗ Yes ○ No

PART 1

STATIC WATER LEVEL: BGS

Start of Job	36.7'
End of Job	36.5'

DEPTH TO BOTTOM: BGS

Start of Job	47.5
End of Job	47.5

PART 2

WELL DEVELOPMENT DATA

Pump Model	Shp
Intake Depth	42.5' bgs
Starting Turbidity	154

Pump Start	Stop	Flow Rate
1228	1304	6 gpm

Total Pumped	~ 300 gallons
Final Turbidity	2.17
XD SN/Range (PSI)	168724/ 30 PSI

PART 3

INSTANTANEOUS SLUG TEST

Static Water Level (TOC)	
Transducer Depth	
Baseline Start	
Injection Start	
Baseline Start	
Withdrawal Start	
Slug Volume	
XD SN/Range (PSI)	

PART 4

Last Recorded Measurements
Date: 9.17.10

Current Measurements
Date: 9.29.10

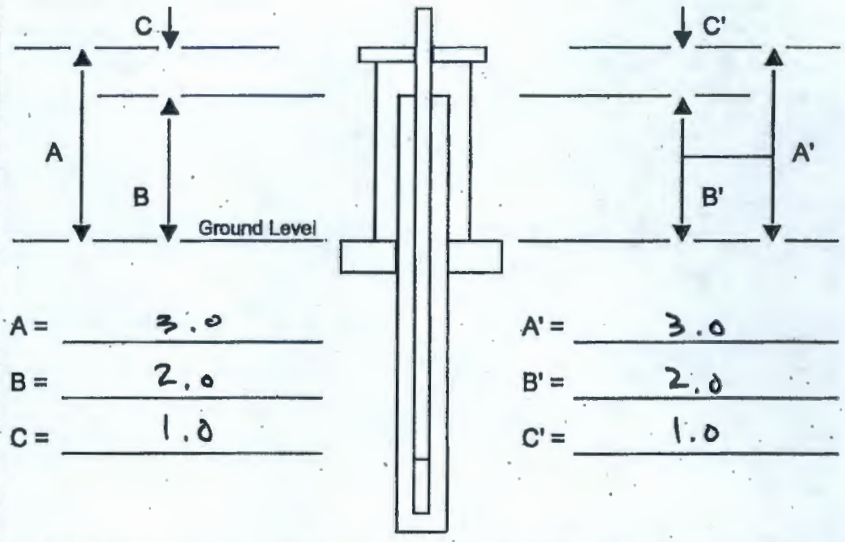

A =	3.0	A' =	3.0
B =	2.0	B' =	2.0
C =	1.0	C' =	1.0

Are there any reference marks on the casing strings? ○ Yes ○ No

PART 5

COMMENTS:

Test #1 – max drawdown was to 0.04' H2O above probe = 4.1' drawdown

Di: 4.14

Df: 1.76

30 min Recovery

Di: 1.76'

Df: 4.01'

9.29.10

Prepared by (print name):	Signature:	Date:
J. Fleming	J. Fleming	9.29.10
Reviewed by (print name):	**Signature:**	**Date:**
L.D. Walker	L.D. Walker	10-11-10

A-6003-644 (03/03)

FIELD ACTIVITY REPORT - DAILY DRILLING

Page 1 of 2

Date: 9.29.10

Well Name: 199-H4-77	Well ID: C7605
Location: NW of 100-H Reactor	Report No.: 6

Start	Finish	Total
Time 1100	Time 1400	Time 3hr.
Hole Depth/Csg — / —	Hole Depth/Csg — / —	Hole Depth/Csg — / —

Reference Measuring Point: GROUND SURFACE

Casing String No. 1 2 3 4 ____ Rod Size:
See Report No. 1

Time/Depth From	Time/Depth To	Description of Activities/Operations with Depth (Attach applicable drawings and document straightness test results)
1100	—	Set up over well & tag: 45.5' = 2' of fill.
—	—	Bail out fill.
—	1200	→ Tag water @ 36.5' bgs (no significant change)
1200	1220	Begin tripping in pump. Set intake @ ~~43.5~~ 42.5' bgs @ 9.29.10
1220	1345	Begin development → see pg 2
1345	—	Take down site + trip out pump and head to
—	1400	C7586 for development
1400		Geo + drillers depart to next site

NOT USED
JF 9.29.2010

Reported By: J. Fleming		Reviewed By: L. D. Walker	
Title: Geologist	Date: 9.29.10	Title: Geologist	Date: 10-11-10
Signature: [signature]		Signature: [signature]	

A-6003-651 (REV 1)

FIELD ACTIVITY REPORT - DAILY DRILLING

Continuation Page

Page 1 of 2

Date: 9.29.2010

Well Name: 199-H4-77

Well ID: L7605

Location: NW of 100-H Reactor

Continuation of Report No.: 6

Time/Depth From	Time/Depth To	Description of Activities/Operations with Depth
		Test #1 w/ Troll: 168724
		XDi: 4.14 X Df: 1.76 intake: 42.5' bgs
		PUMP ON: 1228 PUMP OFF: 1304
		Gpm: 8.5; @ 1236 turn down to: 6 gpm
		max draw down: 0.04 = (4.1' of immediate drawdown)

TIME	DEPTH	Turbidity (NTU)	Conductivity (%)	pH	Temp (C°)	NOTES
1229	0.53	154	411	7.65	16.37	
1235	0.19	43.2	384	7.69	16.62	
1240	1.70	21.10	384	7.74	16.50	
1243	1.90	13.0	384	7.81	16.58	
1247	1.87	6.84	383	7.91	16.62	
1252	1.83	3.6	384	7.90	16.58	
1257	1.79	2.79	384	7.93	16.61	
1302	1.76	2.17	386	7.91	16.63	

TIME	DEPTH	RECOVERY	(30 MIN)
1304	1.76		
1334	4.01		

NOT USED

JP 9.29.2010

Reported By: J. Fleming

Title: Geologist Date: 9.29.10

Signature: J. Fleming

Reviewed By: L.D. Walker

Title: Geologist Date: 10-11-10

Signature: L.D. Walker

A-6003-652 (04/03)

CHPRC WELL DEVELOPMENT AND TESTING DATA

Well Name:	Well ID:	Well Location:	Date:
199-H1-6	C-7606	100-H	4-27-11

Reference Measuring Point (unless otherwise noted): TOP OF OUTER CASING (TOC)

Has the well been surveyed? ○ Yes ○ No

Does the well have a cement pad? ⊗ Yes ○ No

PART 1

STATIC WATER LEVEL:

Start of Job	30.8
End of Job	30.1

DEPTH TO BOTTOM:

Start of Job	43.8
End of Job	43.8

PART 2

WELL DEVELOPMENT DATA

Pump Model	R/F 2
Intake Depth	42.0
Starting Turbidity	74.0

Pump Start	Stop	Flow Rate
10:15	10:45	5 GPM
10:52	11:20	5 GPM

Total Pumped	500 GAL.
Final Turbidity	2.7
XD SN/Range (PSI)	

PART 3

INSTANTANEOUS SLUG TEST

Static Water Level (TOC)	N/A
Transducer Depth	
Baseline Start	
Injection Start	
Baseline Start	
Withdrawal Start	
Slug Volume	
XD SN/Range (PSI)	

PART 4

Last Recorded Measurements
Date:

Current Measurements
Date: 4-27-11

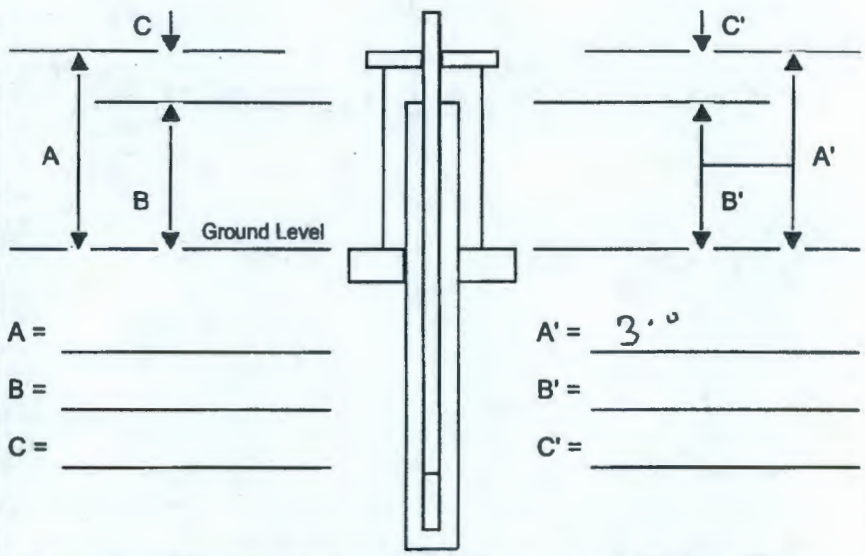

A = _____ A' = 3.0

B = _____ B' = _____

C = _____ C' = _____

Are there any reference marks on the casing strings? ○ Yes ○ No

PART 5

COMMENTS:

DRAW DOWN 30.5 to 34.1, RECOVER to STATIC IN. 7 min.

Prepared by (print name):	Signature:	Date:
REN JONES	Ren Jones	4-27-11
Reviewed by (print name):	**Signature:**	**Date:**
L.S. Walker	L.S. Walker	5-3-11

FIELD ACTIVITY REPORT - DAILY DRILLING

Page 1 of 1

Date: 9.29.10

Well Name: 199-H1-6

Well ID: C76006

Location: NW of 100-H Reactor

Report No.: 5

Start	Finish	Total
Time 0600	Time 1100	Time 4hr
Hole Depth/Csg — / —	Hole Depth/Csg — / —	Hole Depth/Csg — / —

Reference Measuring Point: GROUND SURFACE

Casing String No. 1 2 3 4 ____ Rod Size:

See Report No. 1 DEVELOPMENT

Time/Depth From	Time/Depth To	Description of Activities/Operations with Depth (Attach applicable drawings and document straightness test results)
0600	0645	To ISRM trailer for POD. Hi of 83°
0645	—	To site. Tag inside of well: 39' = 1' of fill
—	0830	→ bail out until clean → Tag: 40.5' bgs = clean
0830		Prep for well development → trip pump in & set
	0917	intake @ 35.5' bgs; water @ 30.3' bgs
0917	0930	Begin development → See pg 2 (pump on @ 0922)
0930		@ 0930 Pump is turned off; recharge rate
—	—	can't keep up w/ pump (pumping @ 2gpm) & pump
—	—	was heating up water.
—	—	→ will move on to C76006 & develop.
—	1100	Geo & drillers depart from site.

NOT USED JF 9.29.10

Reported By: J. Fleming

Title: Geologist

Date: 9.29.10

Signature: J. Fleming

Reviewed By: L. D. Walker

Title: Geologist

Date: 10/11/10

Signature: D Walker

A-6003-651 (REV 1)

WELL DEVELOPMENT AND TESTING DATA

Well Name:	Well ID:	Well Location:	Date:
199-D6-2	C7607	E: 574545.22 N: 151970.55	4.20.10

Reference Measuring Point (unless otherwise noted): TOP OF OUTER CASING (TOC)

Has the well been surveyed? ○ Yes ● No | Does the well have a cement pad? ○ Yes ● No

PART 1

STATIC WATER LEVEL:

Start of Job	53.45'
End of Job	53.5'

DEPTH TO BOTTOM:

Start of Job	77.2
End of Job	77.1

PART 2

WELL DEVELOPMENT DATA

Pump Model: 100 Hp

Intake Depth S1: 62.5' / S2: 70.5'

Starting Turbidity S1: 908 / S2: 802

	Pump Start	Stop/Δ	Flow Rate
S1	1022	1044	74.8
	1108	1114	29.92
S2	1114	1134	44.0
S2	1134	1216	53.8

Total Pumped S1: 1645 g / S2: 3571 g / Total: 5216.0

Final Turbidity S1: 4.06 / S2: 4.15

XD SN/Range (PSI): 115276

PART 3

INSTANTANEOUS SLUG TEST

Static Water Level (TOC)	
Transducer Depth	
Baseline Start	
Injection Start	
Baseline Start	
Withdrawal Start	
Slug Volume	
XD SN/Range (PSI)	

PART 4

Last Recorded Measurements Date:

Current Measurements Date:

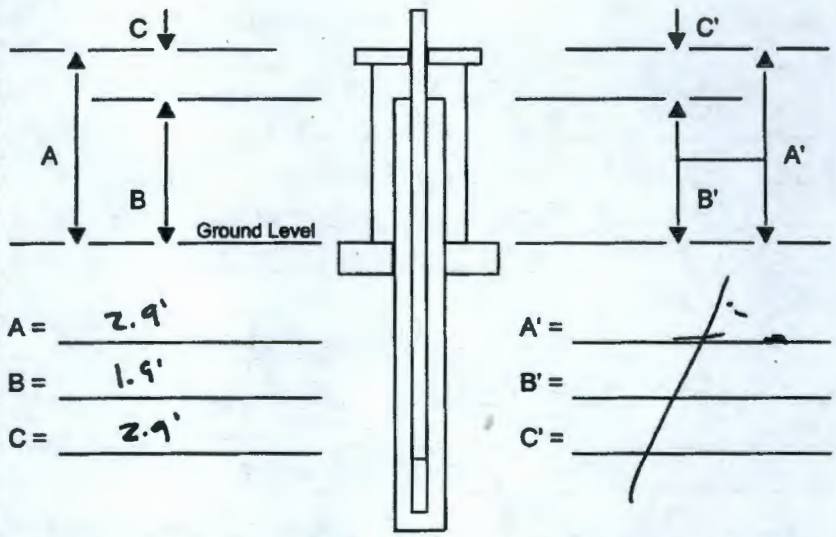

A = 2.9'

B = 1.9'

C = 2.9'

A' =

B' =

C' =

Are there any reference marks on the casing strings? ○ Yes ○ No

PART 5

COMMENTS:

- two internal development
- first interval recorded as "C7607 upper" at 62.5' bgs
- 2nd interval recorded as "C7607 lower" at 72.5' bgs
- 2nd interval also contains recovery test.
- Sample HEIS #'s: B23R69, B23R68

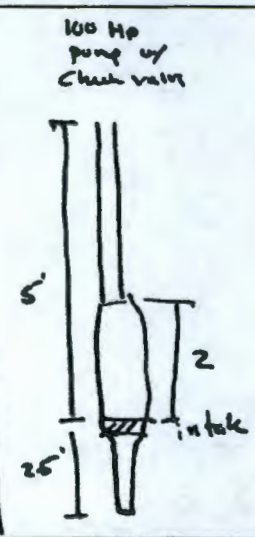

Prepared by (print name):	Signature:	Date:
A. Pappas		4.20.10
Reviewed by (print name):	Signature:	Date:

FIELD ACTIVITY REPORT - DAILY DRILLING

Page 1 of 3

Date: 4.20.10

Well Name: 199-D6-2	Well ID: C7607
Location: E: 574545.22 N: 151970.55	Report No.: 7

Start	Finish	Total
Time 0600	Time 1336	Time 7 hrs 36 min
Hole Depth/Csg N/A / N/A	Hole Depth/Csg N/A / N/A	Hole Depth/Csg N/A / N/A

Reference Measuring Point: GROUND SURFACE

Casing ~~String~~ No. 1 2 3 4 ____ Rod Size:
See Report No. 1 DTW 53.45' bgs

Time/Depth From	Time/Depth To	Description of Activities/Operations with Depth (Attach applicable drawings and document straightness test results)
0600	0659	POD at ISRM trailer
0659	/	to site, drillers set up to develop well.
/	/	Depth to bottom tagged at 75' bgs - 2' of ~~of~~ fill
/	/	needs to be removed prior to development. Depth to
/	0732	water tagged at 53.45' bgs - Development in two intervals
0732	0850	Drillers bail well.
0850		Well bailed to 77.2' bgs, Drillers prep
/	0937	to trip in pump.
0932	/	Drillers trip in pump, 100 HP: in this order 100 HP pump +
/	/	3' stick (5.5), 2x21' pieces, 1x14.5', 1x2' piece - total is 65.5'
/	1002	intake at 62.5' bgs, probe at ~~[illegible]~~ 60.5' bgs.
/	/	Geologist checks equipment, drillers setup rest of pump.
/	/	turbidity std act / pH std 10 act 10.13 / conductivity std act
/	/	494 497 / 7 7.11 / 1414 1587
/	/	55 53.6
/	1022	4.24 4.32
1022	/	Start pump - Interval 1 (62.5-53.5) x D interval: 5.00'
/	/	xD NTU pH temp C° µ gpm
/	1022	5.00 908 9.26 19.53 484 74.8
/	1032	.22 8.49 8.63 20.03 398 74.8
/	1037	.22 5.00 8.42 20.02 397 74.8
/	1040	.21 4.79 8.35 20.03 398 74.8
/	1044	.23 4.14 8.32 20.06 405 74.8 - Surge complete

Reported By: A. Pappas	Reviewed By: C.D. Walker
Title: Field Geologist Date: 4.20.10	Title: Geologist Date: 5/18/10
Signature:	Signature:

FIELD ACTIVITY REPORT - DAILY DRILLING

Continuation Page

Page 2 of 2

Date: 4.20.10

Well Name: 199-D6-2

Well ID: C7607

Location: E: 574545.22 N: 151970.55

Continuation of Report No.: 7

Time/Depth From	Time/Depth To	Description of Activities/Operations with Depth
/	1044	Section 1 developed. final NTUs 4.14,
1044	/	Drillers added 10' of pipe, remove 2' of pipe new intake
/	/	depth 70.5' bgs, new probe depth at 68.5' bgs.
/	/	Start section 2 development (70.5' to 62.5' bgs). test C7607 lower
1108	/	xD new pH temp °C µ gpm (initial 12.88')
/	1108	12.88 8.02 8.07 19.59 394 29.92
/	1118	8.00 31.7 8.40 19.36 393 44
/	1128	7.51 3.24 8.44 19.35 395 44
/	1138	5.94 17.5 8.30 19.34 394 59.8
/	1148	5.82 4.02 8.31 19.36 392 59.8
/	1158	5.72 4.15 8.25 19.37 392 59.8
/	1208	* NCO's collect bottle set, HEIS #s B23 R68 &
/	/	B23 R69 (1,847 gal purged)
/	1216	5.64 4.06 8.37 19.51 392 59.8
1216	1246	pump off, begin recovery test (C7607 lower)
1246	1330	recovery test over, drillers remove pump
1330	/	Drillers removed pump, Clean up site. Geologist
/	/	does paperwork. Depth to water tagged at: 53.5' bgs
/	1336	Depth to bottom tagged at:
1336		Geologist exits site

4.20.10

Reported By: A. Pappas

Title: Field Geologist

Date: 4.20.10

Signature:

Reviewed By: L.D. Walker

Title: Geologist

Date: 5/18/10

Signature:

WELL DEVELOPMENT AND TESTING DATA

Well Name:	Well ID:	Well Location:	Date:
199-D7-5	C7608	E: 594434.21 N: 122698.57	6.17.10

Reference Measuring Point (unless otherwise noted): TOP OF OUTER CASING (TOC)

Has the well been surveyed? ○ Yes ● No | Does the well have a cement pad? ○ Yes ● No

PART 1

STATIC WATER LEVEL:

Start of Job	45.7' bgs
End of Job	45.6' bgs

DEPTH TO BOTTOM:

Start of Job	58.5' bgs
End of Job	58.5' bgs

PART 2

WELL DEVELOPMENT DATA

Pump Model	5 hp, 100 GPM
Intake Depth	50' bgs
Starting Turbidity	>1000

Pump Start	Stop	Flow Rate
1011	1126	30 gpm

Total Pumped	2,250 gallons
Final Turbidity	1.94
XD SN/Range (PSI)	08250 / 20 psi

PART 3

INSTANTANEOUS SLUG TEST

Static Water Level (TOC)	
Transducer Depth	
Baseline Start	
Injection Start	
Baseline Start	
Withdrawal Start	
Slug Volume	
XD SN/Range (PSI)	

PART 4

Last Recorded Measurements Date:

Current Measurements Date:

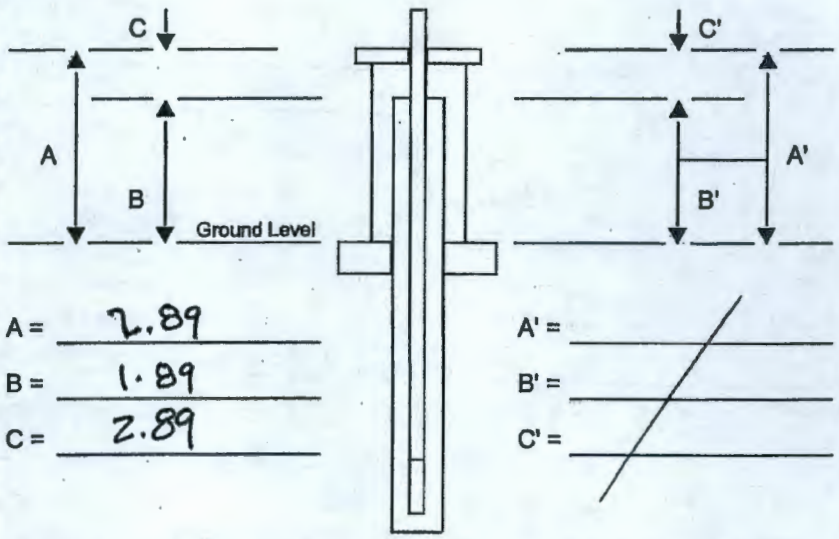

A =	2.89	A' =	
B =	1.89	B' =	
C =	2.89	C' =	

Are there any reference marks on the casing strings? ○ Yes ○ No

PART 5

COMMENTS:

using transducer 08250, hermit "ROCKY".
pump test recorded on: "Rainier WD1"
recovery test recorded on: "Rainier WD2"
Sample HEIS #s B23XW8, B23XW7

Prepared by (print name):	Signature:	Date:
A. Papps	[signature]	6.17.10
Reviewed by (print name):	**Signature:**	**Date:**
L.D. Walker	[signature]	7-16-10

A-6003-644 (03/03)

FIELD ACTIVITY REPORT - DAILY DRILLING

Page 1 of 2

Date: 6.17.10

Well Name: 199-D7-5

Well ID: C7608

Location: E: 574434.21 N, 152678.57

Report No.: 6

Start	Finish	Total
Time 0600	Time 12.52	Time 6 hrs 52 min
Hole Depth/Csg – / –	Hole Depth/Csg – / –	Hole Depth/Csg /

Reference Measuring Point: GROUND SURFACE

Casing String No. 1 2 3 4 ____ Rod Size:
See Report No. 1

Time/Depth From	Time/Depth To	Description of Activities/Operations with Depth (Attach applicable drawings and document straightness test results)
6:00	7:01	PoD at ISRM trailer
7:01	—	Drillers set up to bail well. DTB tagged at 57.9' –
—	7:16	roughly 1.5' of fill.
7:16	—	Drillers bail well. DTB tagged at 58.5' bgs, DTW
—	7:43	tagged at 45.7' bgs.
7:43	—	Drillers trip in 5 hp/100gpm pump to a depth
—	—	of 53.3' bgs (intake actual). Geologist places transducer
—	—	08250 at 50.0' bgs, syncs with Hermit "ROCKY"
—	—	Geologist test standards.
—	—	Conductivity: Stnd. Act. pH: Stnd. Act.
—	—	1413 1320 10 9.99
—	—	turbidity: Stnd. Act. 7 6.87
—	—	5.58 6.67
—	—	48.9 59.8 xD initial: 5.046
—	1006	512 513
1011	—	Start pump + pumping test, recorded as "RainierWD1"
—	—	(after take cover drill 8:21 – 10:06)
—	—	xD NTU pH gpm µ temp C°
1011	—	<5.0 >1000 7.24 30 1168 18.2
1021	—	.072 63.5 7.36 30 465 17.9
1031	—	.074 6.80 7.40 30 461 18.1
1041	—	.075 5.7 7.44 30 460 19.0
1051	—	.073 4.8 7.39 30 458 18.7 – developed
1051	—	Samplers gather prameters, prep to collect sample.

Reported By: A. Pappas

Title: Geologist

Date: 6.17.10

Signature: Alex D Pappas

Reviewed By: C.D. Walker

Title: Geologist

Date: 7/16/10

Signature: CD Walker

A-6003-651 (REV 1)

FIELD ACTIVITY REPORT - DAILY DRILLING

Continuation Page

Date: 6.17.10

Well Name: 199-D7-5

Well ID: C7608

Location: E: 574434.21 N: 152678.57

Continuation of Report No.: 6

Time/Depth From	Time/Depth To	Description of Activities/Operations with Depth
1118	—	Samplers collect water sample, HEIS #s B23XH7 and
—	—	B23XH8.
1126	—	Stop pump and begin recovery test (recorded as
—	—	"Rainier WDZ") final measurements are as follows:
—	—	vD NTU pH gpm µ temp °C
—	1156	.064 1.94 7.56 30 453 19.9
1156	1230	Stop recovery test, remove probe/transducer and pump.
1230	—	Drillers clean and secure site. Geologist does paperwork
—	1252	DTB tagged at 58.5' bgs, DTW tagged at 45.6' bgs.
1252		Geologist & Drillers exit site.

Not used A.P. 6.17.10

Reported By: A. Pappas

Title: Field Geologist

Date: 6.17.10

Signature: Allen D. Pappas

Reviewed By: L.S. Walker

Title: Geologist

Date: 7/16/10

Signature: L.S. Walker

A-6003-652 (04/03)

FIELD ACTIVITY REPORT - DAILY DRILLING

Page 1 of 2

Date: 6.23.2010

Well Name: 199-H4-82 | Well ID: C7609

Location: NW of H Reactor, NE of D reactor | Report No.: 4

Start	Finish	Total
Time 0600	Time 1230	Time 6.5
Hole Depth/Csg — / —	Hole Depth/Csg — / —	Hole Depth/Csg — / —

Reference Measuring Point: GROUND SURFACE

Casing String No. 1 2 3 4 ____ Rod Size:

See Report No. 1 DEVELOPMENT

Time/Depth From	Time/Depth To	Description of Activities/Operations with Depth (Attach applicable drawings and document straightness test results)
0600	0640	To 1GRM trailer for POD. Hi of 92° – partly cloudy
0640	—	To site. Prep for development of well. Tag bottom of well @ 51' bgs
—	0725	→ 4.5' of fill in well
0725	—	Begin bailing well (~4.5 gal) x ~~IIIIIIIII~~ = 45 gallons bailed
—	0815	→ 80% of fill is gravel pack → bail out to 55.5' bgs – clean
0815	—	Move purge trucks in; Tag water: 40.2' bgs
—	—	→ lower tremmie pipe: 21'+21'+5'+2'+7.5 = 56.5 – 3' stup = 53.5 –
—	0915	2.5' to intake = 51': Intake @ 51' bgs
0915		Begin development → <u>See page 2</u>
		→ samplers arrive @ 0920 #EIS # B24D65, B24D81
	1110	Sample collected @ 1030 → NCO's depart @ 1045
1110	1230	Tripout trem pipe + pump + prep to move off site.
1230		Depart for next well development site.

NOT USED

JS 6.23.2010

Reported By: J. Schilperoort

Title: Geologist | Date: 6.23.2010

Signature: Jonica Schilperoort

Reviewed By: L.D. Walker

Title: Geologist | Date: 7/15/10

Signature: LD Walker

A-6003-651 (REV 1)

FIELD ACTIVITY REPORT - DAILY DRILLING

Continuation Page

Page 2 of 2

Date: 6.23.2010

Well Name: 199-H4-32

Well ID: C7609

Location: NW of H + NE of D reactors

Continuation of Report No.: 4

Time/Depth From	Time/Depth To	Description of Activities/Operations with Depth
		Development: using trail + PO
		TEST STANDARDS
		NCO water sample

pH stan.	pH actual	Conductivity stan.	Conductivity actual	Turbidity stan.	Turbidity actual	HEIS#:
10.0	10.02	1421	1469	4.93	4.99	B24D65,
7.0	7.00			48.7	49.1	B24D81 - Hx chrome
				562	562	

DEVELOPMENT TEST: #1 C7609 PROBE: 115276 (level Trall 700)

Intake: 81' bgs initial depth: 9.28' Final:

pump on: 0923 OFF: 1036 gpm: 50.8/38.8

Total pumped: ~3022 gal

TIME	DEPTH	TURBIDITY	CONDUCTIVITY	pH	T°(C)	NOTES
0925	—	1000	452	7.86	18.2	did not catch depth
0940	6.0	284	465	8.19	18.19	turn down pump to: 38.8
0947	5.81	13.4	443	7.93	18.18	
0955	5.70	11.3	442	7.88	18.18	
1000	5.52	4.42	442	7.81	18.19	
1011	5.31	2.96	442	8.07	18.18	
1018	5.22	3.05	441	8.04	18.19	—

	RECOVERY	TEST			Recovery test
Time	depth				
1036	5.01				
1037	9.08				
1044	9.19				
1106	9.21				

→ End Recovery test @ 1106

Reported By: J. Schilperoort

Title: Geologist Date: 6.23.10

Signature: Jessica Schilperoort

Reviewed By: L.D. Walker

Title: Geologist Date: 7/15/10

Signature: [signature]

A-6003-652 (04/03)

WELL DEVELOPMENT AND TESTING DATA

Well Name:	Well ID:	Well Location:	Date:
199-H4-82	C7609	NW of H & NE of D reactors	6.23.10

Reference Measuring Point (unless otherwise noted): TOP OF OUTER CASING (TOC)

Has the well been surveyed? ○ Yes ⊗ No | Does the well have a cement pad? ○ Yes ⊗ No

PART 1

STATIC WATER LEVEL: FT BGS

Start of Job 40.4'

End of Job 40.4'

DEPTH TO BOTTOM:

Start of Job 55.68'

End of Job 55.5'

PART 2

WELL DEVELOPMENT DATA

Pump Model ~~Grundfos~~ Flow to 100gpm ~~Grundfos~~ Franklin electric

Intake Depth 51'

Starting Turbidity >1000

Pump Start	Stop	Flow Rate
0923	reduced gpm @ 0940	50 gpm
0940	1036	38.8 gpm

Total Pumped 3,022.8 gallons

Final Turbidity 3.05

XD SN/Range (PSI) 115276

PART 3

INSTANTANEOUS SLUG TEST

NOT USED

Static Water Level (TOC)

Transducer Depth

Baseline Start

Injection Start

Baseline Start

Withdrawal Start

Slug Volume

XD SN/Range (PSI)

PART 4

Last Recorded Measurements Date: 6.22.10

Current Measurements Date: 6.23.10

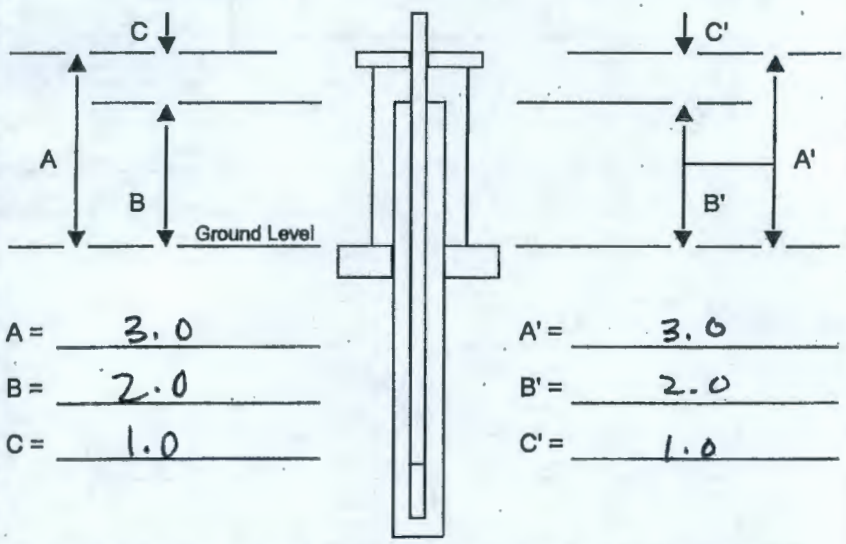

A = 3.0 | A' = 3.0

B = 2.0 | B' = 2.0

C = 1.0 | C' = 1.0

Are there any reference marks on the casing strings? ○ Yes ○ No

PART 5

COMMENTS:

Test standards

pH stan.	pH act.	Conductivity stan	Conductivity actual	turbidity stan	turbidity actual
10.0		1421		4.93	4.99
7.0				49.7	49.1
				562	562

Test 1: drawdown

X_i: 9.28'

X_f: 5.01'

Recovery

X_i: 5.01'

X_f: 9.21'

Prepared by (print name):	Signature:	Date:
J. Schilperoort	Jonas Schilperoort	6.23.2010
Reviewed by (print name):	**Signature:**	**Date:**
C.D. Walker	CD Walker	7/15/10

A-6003-644 (03/03)

FIELD ACTIVITY REPORT
TUBULAR GOODS TALLY

Page 1 of 1

Date: 6.12.10

Well Name: 199-H4-82

Well ID: C7609

TEMPORARY				PERMANENT*						SCREEN/CAP*		
Jt. #	Length (ft.)	Jt. #	Length (ft.)	Jt. #	Length (ft.)	C	Jt. #	Length (ft.)	C	Jt. #	Length (ft.)	C
1	11.30'	21		1	3.00 sump		21			1		
2	10.00 (21.3')	22		2	10.01 screen	0.070	22			2		
3	10.00 (31.3')	23		3	10.01 screen	0.070	23			3		
4	10.00 (41.3')	24		4	20.01 casing		24			4		
5	10.00 (51.3')	25		5	10.00 casing		25			5		
6	10.00 (61.3')	26		6	5.00 casing		26			6		
7		27		7	5.00 casing		27			7		
8		28		8	Sub Tot: 63.03	6.22.10	28			8		
9		29		9	Total: -0.23		29			9		
10		30		10			30			10		
11		31		11			31			11		
12		32		12			32			12		
13		33		13			33			13		
14		34		14			34			14		
15		35		15			35			15		
16		36		16			36			16		
17		37		17			37			17		
18		38		18			38			18		
19		39		19			39			19		
20		40		20			40			20		
Tot		Tot		Tot	Tot: 57.80'		Tot			Tot		

*Indicate those joints with centralizers with a C in the available box.
ALL Casing length shall be measured to the nearest 0.01 ft.

Comments/Remarks:
Carbon steel, 60 lbs/ft
first set of temporary is 1.3' shoe + 10' stick

Temporary: O.D./I.D. 10 3/4" x 8"

Permanent: O.D./I.D. 6 5/8" / 6 1/8"

Screen: O.D./I.D. 6 5/8" / 6 1/8"

To set sump @ 55.5' bgs. must have 63.03 - 55.5 = 7.53' stickup.

Set sump @ 55.68' bgs. *

Reported By: A. Pappas / D. Lanton

Title: Geologist / Geo.

Date: 6.12.10

Signature: / Aaron Lanton

Reviewed By: L.H. Walker

Title: Geologist

Date: 7/15/10

Signature:

A-6003-655 (04/03)

WELL DEVELOPMENT AND TESTING DATA

Well Name:	Well ID:	Well Location:	Date:
199-H1-5	C7610	NE of 100 D area	6.21.10

Reference Measuring Point (unless otherwise noted): TOP OF OUTER CASING (TOC)

Has the well been surveyed? ○ Yes ● No | Does the well have a cement pad? ○ Yes ● No

PART 1

STATIC WATER LEVEL:

Start of Job	21.4' bgs
End of Job	21.6' bgs

DEPTH TO BOTTOM:

Start of Job	44.4' bgs
End of Job	44.4' bgs

PART 2

WELL DEVELOPMENT DATA

Pump Model 5hp, 100 gpm

Intake Depth T_1 - 33' bgs, T_2 - 38' bgs

Starting Turbidity T_1 - >1000, T_2 - 43.5

	Pump Start	Stop	Flow Rate
T_1	10:10	10:44	65.8
	11:05	12:18	74.8
T_2	14:25	15:00	71.8

Total Pumped T_1 - 2237 gal, T_2 - 7973 gal

Final Turbidity T_1 - 3.29, T_2 - .90

XD SN/Range (PSI) 115276

PART 3

INSTANTANEOUS SLUG TEST

Static Water Level (TOC)	
Transducer Depth	
Baseline Start	
Injection Start	
Baseline Start	
Withdrawal Start	
Slug Volume	
XD SN/Range (PSI)	

PART 4

Last Recorded Measurements Date:

Current Measurements Date:

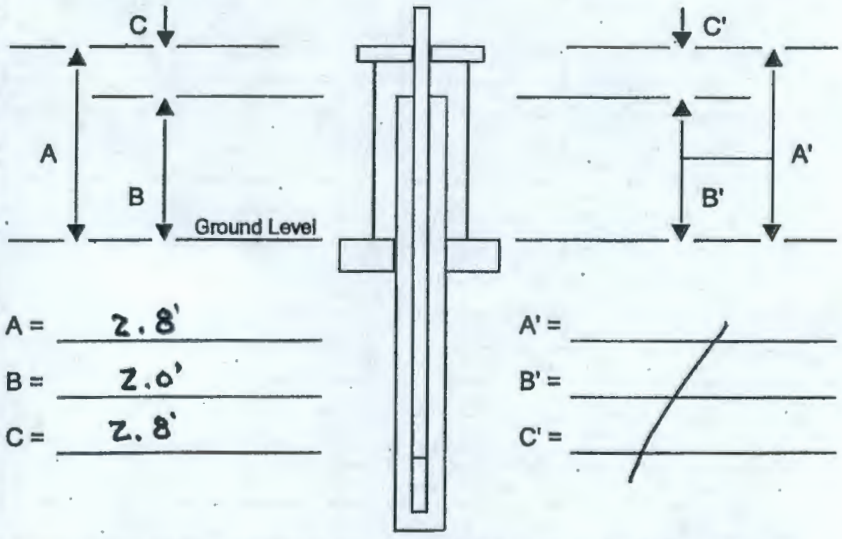

A = 2.8'

B = 2.0'

C = 2.8'

A' =

B' =

C' =

Are there any reference marks on the casing strings? ○ Yes ○ No

PART 5

COMMENTS:

- Well developed with 5 hp/100 gpm pump.
- Well developed in two sections.
- first section recorded as "C7610 upper", intake at 33' bgs. – T_1
- Second section recorded as "C7610 lower", intake at 38' bgs – T_2
- recovery test recorded under "C7610 lower"

Prepared by (print name):	Signature:	Date:
A. Pappas	[signature]	6.21.10
Reviewed by (print name):	**Signature:**	**Date:**
L.D. Walker	[signature]	7/15/10

A-6003-644 (03/03)

FIELD ACTIVITY REPORT - DAILY DRILLING

Page 1 of 3

Date: 6.21.10

Well Name: 199-H1-5

Well ID: C 7610

Location: NE of "100 D" area

Report No.: 4

Start	Finish	Total
Time 0600	Time 1555	Time 9 hrs 55 min
Hole Depth/Csg - / -	Hole Depth/Csg - / -	Hole Depth/Csg - / -

Reference Measuring Point: GROUND SURFACE

Casing String No. 1 2 3 4 ____ Rod Size: See Report No. 1

Time/Depth From	Time/Depth To	Description of Activities/Operations with Depth (Attach applicable drawings and document straightness test results)
6:00	6:37	POD at ISRM trailer.
6:37		Drillers setup to bail well. Bottom of well
	8:40	set at 44.1' bgs.
8:40		Drillers tag in side on well at 42.6' bgs (roughly
	9:20	1.5' of fill). Drillers begin to bail well.
9:20		Hole cleaned out depth to bottom tagged at
		44.4' bgs. Depth to water tagged at 21.4' bgs
		Drillers trip pump to 33' bgs (intake). Geologist
		tests gear.
		turbidity / pH / conductivity
		std / actual / std / actual / std / actual
		562 / 565 / 10 / 10.04 / 1413 / 1344
		48.7 / 49.1 / 7 / 6.95
	1007	4.43 / 4.98
1007		Pump tripped in, probe set at 31' bgs. xD intrel
		9.58' ready to turn on pump.
1010		Start pump, recorded on troll 115276 under test "C7610 upper"
1010 Start		xD / NTU / pH / µ / GPM / temp °C
1010		9.58 / 71000 / 7.25 / 454 / 6.2 AD / 65.8 / 18.0
1022		1.68 / 15.7 / 7.49 / 406 / 65.8 / 19.2
1032		1.66 / 5.74 / 7.56 / 403 / 65.8 / 18.9
1042		1.65 / 3.29 / 7.59 / 399 / 65.8 / 18.5 – developed
1044		Pump off, lower pump intake to 30' bgs, geologist
		places transducer at 36' bgs.

Reported By: A. Pappas

Title: Geologist

Date: 6.21.10

Signature: Mark D Pappas

Reviewed By: L.J. Walker

Title: Geologist

Date: 7/15/10

Signature: [signature]

A-6003-651 (REV 1)

FIELD ACTIVITY REPORT - DAILY DRILLING

Continuation Page

Date: 6.21.10

Well Name: 199-H1-5 | Well ID: C7610

Location: NE of "100 D" reactor | Continuation of Report No.: 4

Time/Depth From	Time/Depth To	Description of Activities/Operations with Depth
11:05		Start pumping test of lower section, recorded
		on transducer 115276, test recorded as C7610 lower
		(xD intial 14.45').
		xD NTU pH µ GPM temp °C
11:05		<14.45 43.5 7.70 400 74.8 20.4
11:15		4.61 79.8 7.71 403 74.8 19.9
11:25		4.63 11.5 7.58 398 74.8 18.3
11:35		4.60 4.30 7.63 399 74.8 18.6 developed
11:55		4.25 3.66 7.59 398 74.8 19.3
12:18		Pump dies while waiting for samplers. Drillers
		unsure of cause, decide to pull pump. Geo
	13:00	stops test, pulls probe.
13:00		Pump appears to be normal from quick look over.
	13:02	Drillers trouble shoot.
13:02		Drillers discover failure is in fuse box. fix problem,
	13:39	and begin to trip in pump again.
13:39		Pump set at 38' bgs, probe at 36' bgs. ready
		to restart pumping test, waiting on NCO's
14:25		Start pump, recorded as test "C7610 lower". (xD intial 14.53)
		xD NTU pH µ Gpm temp °C
14:25		<14.53 32.4 7.99 539 71.8 21.4
14:35		5.18 1.73 7.92 464 71.8 19.1 - re-developed.
14:57		NCO's collect water sample. HEIS #s B24D66 and B24D82
15:00		Collect final sample, shut off pump - begin recovery test,
		recorded also on "C7610 lower".
		xD NTU pH µ GPM temp °C
		4.98 0.90 8.10 38.7 71.8 20.3
15:31	15:45	final xD 14.43. Stop recovery test, remove pump.
15:45		pump removed, depth to bottom tagged at 44.4' bgs

Reported By: A. Pappas		Reviewed By: C.J. Walker	
Title: Geologist	Date: 6.21.10	Title: Geologist	Date: 7/15/10
Signature: Allen D. Pa[illegible]		Signature: [illegible]	

A-6003-652 (04/03)

FIELD ACTIVITY REPORT - DAILY DRILLING

Continuation Page

Page 3 of 3

Date: 6.21.10

Well Name: 199-H1-5

Well ID: C7610

Location: NE of "100-D" reactor

Continuation of Report No.: 4

Time/Depth From	Time/Depth To	Description of Activities/Operations with Depth
		water tagged at 21.6' bgs. Drillers clean
	15:55	and secure site. Geologist does paperwork.
15:55		Geologist exits site.

not used A.P 6.21.10

Reported By: A. Pappas

Title: Geologist

Date: 6.21.10

Signature: Alan D Pa

Reviewed By: L.D. Walker

Title: Geologist

Date: 7/15/10

Signature: LD Walker

A-6003-652 (04/03)

WELL DEVELOPMENT AND TESTING DATA

Well Name:	Well ID:	Well Location:	Date:
199-D7-6	C7611	NE of 100 D	6.14.10

Reference Measuring Point (unless otherwise noted): TOP OF OUTER CASING (TOC)

Has the well been surveyed? ○ Yes ● No | Does the well have a cement pad? ○ Yes ● No

PART 1

STATIC WATER LEVEL:

Start of Job	24.9' bgs
End of Job	24.9' bgs

DEPTH TO BOTTOM:

Start of Job	40.5' bgs
End of Job	40.5' bgs

PART 2

WELL DEVELOPMENT DATA

Pump Model	5 hp, 100 GPM
Intake Depth	35.3' bgs
Starting Turbidity	457

Pump Start	Stop	Flow Rate
0952	0955	50.8
0955	0958	74.8
1012	1123	77.7
1300	1332	80.9
1332	1405	44.8 *

Total Pumped	10,271.5
Final Turbidity	.83
XD SN/Range (PSI)	115276

PART 3

INSTANTANEOUS SLUG TEST

Static Water Level (TOC)	
Transducer Depth	
Baseline Start	
Injection Start	
Baseline Start	
Withdrawal Start	
Slug Volume	
XD SN/Range (PSI)	

PART 4

Last Recorded Measurements Date: 6/14/10

Current Measurements Date:

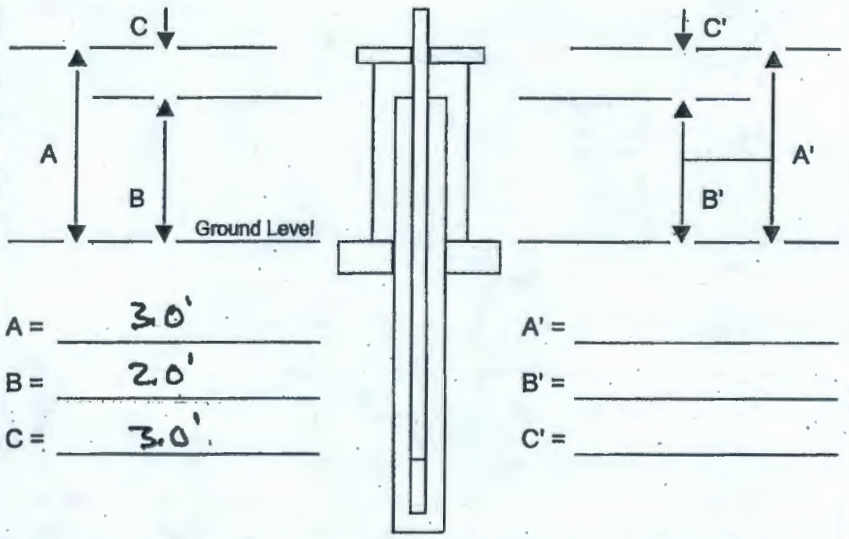

A =	3.0'	A' =	
B =	2.0'	B' =	
C =	3.0'	C' =	

Are there any reference marks on the casing strings? ○ Yes ● No

PART 5

COMMENTS:

Pump test on recorded as "7611"

* pump changed rate again from 44.8 to 77.7 at 1405 till 1409

Prepared by (print name):	Signature:	Date:
A. Pappas	[signature]	6.14.10
Reviewed by (print name):	**Signature:**	**Date:**
L.D. Walker	[signature]	2-16-10

A-6003-644 (03/03)

FIELD ACTIVITY REPORT - DAILY DRILLING

Page 1 of 2

Date: 06.14.10

Well Name: 199-D7-6

Well ID: C7611

Location: NE. of 100-D area.

Report No.: ~~2~~ 3 CW 7-16-10

Start	Finish	Total
Time 0600	Time ~~1457~~ 1500	Time 9 hrs
Hole Depth/Csg 0600 /	Hole Depth/Csg NAT	Hole Depth/Csg NAT

Reference Measuring Point: GROUND SURFACE

Casing String No. 1 2 3 4 ____ Rod Size:

See Report No. 1

Time/Depth From	To	Description of Activities/Operations with Depth (Attach applicable drawings and document straightness test results)
0600	0640	POD @ ISRM trailer.
0640	0715	Drillers + Geo on site. Geo monitoring 2 adjacent sites. Jump Starting rig.
0715	0730	Tag. DTB: 40.2' bgs. Sump @ 40.5. Set up welder.
0730	0745	Bail well to 40.5' bgs. Tag bottom. 40.5' clean. no sed.
0745	0816	BTR calls geo to adjacent site. ~~Samplers assemble s.s/n. w/ Texan liners.~~ AK 6.14.10
0816		Install 100 gpm pump bowls w/ 5-hp. motor w/ 21' + 5' of 1.5" galvanized pipe. Geo will hand in
		transducer later. Intake will be set @ [7.8 pump + (21+5) pipe] 33.8 - 3' stkup - 3' motor = 30.8'
		[7.8' pump + 21 + 10 + 2 = 40.8 - 3' stkup - 2.5' motor] = Intake = 35.3'
0917		DTW tagged at 24.9' bgs
0921		trip in probe to 34.0' bgs, xD intral 9.35
		test equipment
		MTU std/act — 5.58/5.70 48.9/fail 512/fail
0948		turbidity meter broken. ∴ will use samplers
0952		start pump, at 58.8 gpm
0955		Δ pump rate 74.8
0957		turbidity at 887 NTUs
0958		Stop pump + setup for two trucks
1012		Start pump, pump rate 77.7
1016		at xP - 7.62, NTU - 457
1018		— xD 7.60, NTU - 260
1021		— xD 7.59, NTU - 120
1027		— xD 7.57, NTU - 141
1043		— xD 7.54, NTU - 39.9
1051		— xD 7.88, NTU - 10.1

Reported By: A. Lantow / Alex Pappas

Title: Geologist Date: 6.14.10

Signature: Aaron Lanto / AL

Reviewed By: C.D. Walker

Title: Geologist Date: 7/16/10

Signature: CD Walker

A-6003-651 (REV 1)

FIELD ACTIVITY REPORT - DAILY DRILLING

Continuation Page

Page 2 of 2

Date: 6.14.10

Well Name: 199-D7-6 | Well ID: C7611

Location: NE of 100 D | Continuation of Report No.: ~~B~~ 3 CW 7-16-10

Time/Depth From	Time/Depth To	Description of Activities/Operations with Depth
1054		- xD 7.89 , NTU 7.87
1106		xD 7.86 , NTU 4.44 (purge vol. = 4195.8 gal)
		~~well is developed NCO's collect bottle~~
		~~set HEIS #'s~~ AP 6.14.10
1123		NCO's fail to collect sample in time.
	1235	trucks max out. Waiting for MT truck. ≪6 samplers on site≫
1235		MT purge truck on site. Transfering water from truck w/ leaking problem to
	1250	new truck.
1250	1300	3rd Purge water truck on site. Samplers blocking access to well pad.
1300		Pump on pumping @ 109.8 gpm. Samplers preparing to collect sample. Reading
		parameters.
		xD: 9.48 , Temp: 16.6 C° , NTU: 64.5 . Gpm: 80.9
	1310	xD: 9.48 , Temp: 16.5 C , NTU: 31.4
		xD: 7.56 Temp: - , NTU: 27.2
	1315	xD: ~~9.48~~ 7.48 AP 6.14.10 , T-C°: 16.30 , NTU: 21.4
	1320	xD: 7.56 , T-C°: 16.30 , NTU: 19.70 , Gpm: 80.78
	~~1325~~	~~xD: , T-C°: , NTU: , Gpm: 80.8~~ FIP 6.14.10
	1332	change pump rate: 44.8
	1335	xD: 8.27 NTU: 5.26
	1340	xD: 8.25 NTU: 3.11 - well developed , NCO's
		make second attempt at sample
	1405	Sample collected . HEIS #'s B23RD2 + B23RD3
		final xD (increase Δ gpm = 77.7) : 7.46 , NTU: 0.83
	1409	Stop pump , start recovery - recorded on test "C7611"
1439		Stop recovery test , final xD 9.31 , final water level 24.9' bgs
	1459	drillers remove pump , probe and pipe.
1459		Drillers clean and secure site , geologist does
		paperwork. Depth to bottom at 40.6 bgs
1506		Geologist exits site

Reported By: A. Puppos | Reviewed By: L.D. Walker

Title: Field Geologist | Date: 6/14/10 | Title: Geologist | Date: 7/16/10

Signature: [signature] | Signature: [signature]

A-6003-652 (04/03)

WELL DEVELOPMENT AND TESTING DATA

Well Name:	Well ID:	Well Location:	Date:
199-D5-128	C7612	100D	2.10.10

Reference Measuring Point (unless otherwise noted): TOP OF OUTER CASING (TOC)

Has the well been surveyed? ○ Yes ✓ No | Does the well have a cement pad? ○ Yes ✓ No

PART 1

STATIC WATER LEVEL:

Start of Job	82.0
End of Job	82.0

DEPTH TO BOTTOM:

Start of Job	103.0'
End of Job	103.1'

PART 2

WELL DEVELOPMENT DATA

Pump Model 5hp

Intake Depth 95.9' bgs

Starting Turbidity 375

Pump Start	Stop	Flow Rate
1123	1126	26.9
1126	1210	20.0
1210	1232	44.8
/	/	/
/	/	/

Total Pumped 1946.3

Final Turbidity 4.84

XD SN/Range (PSI) 528/

PART 3

INSTANTANEOUS SLUG TEST

Static Water Level (TOC)	
Transducer Depth	
Baseline Start	
Injection Start	
Baseline Start	
Withdrawal Start	
Slug Volume	
XD SN/Range (PSI)	

PART 4

Last Recorded Measurements Date:

Current Measurements Date:

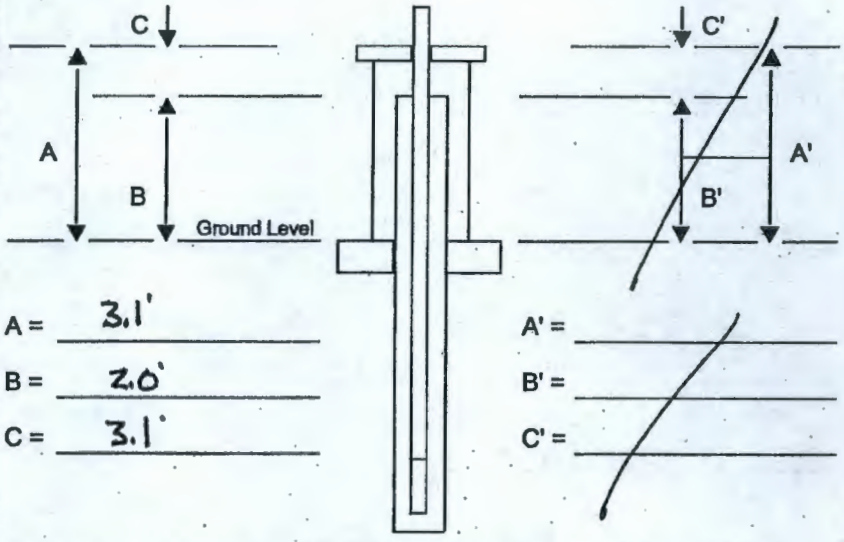

A = 3.1'

B = 2.0'

C = 3.1'

A' =

B' =

C' =

Are there any reference marks on the casing strings? ○ Yes ○ No

PART 5

COMMENTS:

Hermit: Jeff transducer: 5218

Pump test: Cards rule WD3

recovery test: Cards rule WD4

Water samples: HE5 & B23MT5 + B23MT6

transducer depth: 92.9' bgs

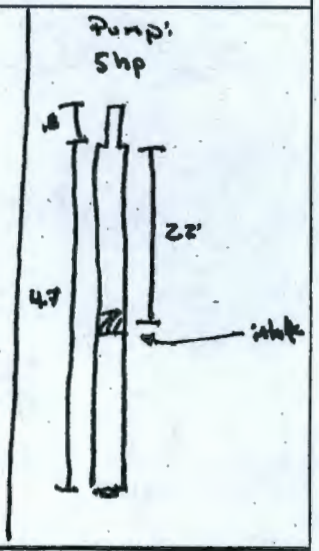

Prepared by (print name):	Signature:	Date:
A. Pappas	a	2.10.10
Reviewed by (print name):	**Signature:**	**Date:**
L.D. Walker	[signature]	2-26-10

A-6003-644 (03/03)

FIELD ACTIVITY REPORT - DAILY DRILLING

Page 1 of 2

Date: 2.10.10

Well Name: 199-D5-128 | Well ID: C7612

Location: 100D | Report No.: 7

Start	Finish	Total
Time 0600	Time 1405	Time 8 hrs 5 min
Hole Depth/Csg N/A / N/A	Hole Depth/Csg N/A / N/A	Hole Depth/Csg — / —

Reference Measuring Point: GROUND SURFACE

Casing String No. 1 2 3 4 ____ Rod Size:
See Report No. 1

Time/Depth From	Time/Depth To	Description of Activities/Operations with Depth (Attach applicable drawings and document straightness test results)
0600	0702	POD at ISRM trailer.
0702	/	Drillers setup to develop well.
/	0921	Drillers rig up, remake tagger/sounder
0921	/	Drillers hook bailer. Depth to bottom inside stainless
/	/	is 100.4' bgs – roughly 2.5' of fill. Drillers begin
/	1010	to bail inside of well.
1010	1012	Drillers complete bailing – depth to bottom at 103.0' bgs
1012	1030	Drillers prep to trip in pump.
1030	/	Drillers trip in 5hp pump, followed by: 21' of pipe,
/	/	21' of pipe, 21' of pipe, 20' of pipe, 10' of pipe, 3' pipe
/	/	Depth to water 82.0' bgs
/	/	total pipe tripped in 96'
/	/	depth of transducer 92.9' bgs – (probe 5218)
/	1111	depth of intake 95.9' bgs
1111	/	Instrument Check
/	/	Turbidity: stock reading: pH: stock reading Conductivity: stock reading
/	/	507 526 7.0 7.013 1413 1475
/	/	48.3 53.9 10.0 10.12
/	/	5.61 6.07 xD DO: 10.511
1123	/	Start pump – pump test Cardstrule WD3
/	/	xD pH turbidity conductivity temp. GPM
/	1123	8.456 9.53 375 575 13.5°c 26.9
/	1133	~~xD~~ 8.868 8.08 29.4 510 14.2°c 20.0
/	1143	8.859 ~~5.74~~ 2.10 8.04 5.74 510 13.6°c 20.0

Reported By: A. Rapp		Reviewed By: L.A. Walker	
Title: Field Geologist	Date: 2.10.10	Title: Geologist	Date: 2/26/10
Signature:		Signature:	

A-6003-651 (REV 1)

FIELD ACTIVITY REPORT - DAILY DRILLING

Continuation Page

Page 2 of 2

Date: 2.10.10

Well Name: 199-D5-128

Well ID: C7612

Location: 100D

Continuation of Report No.: 7

Time/Depth From	Time/Depth To	Description of Activities/Operations with Depth						
/	/	xD	pH	NTU	µ	°C	GPM	
*	1148	8.856	8.01	3.76	506	14.8	20	* Sample collected
/	1158	8.849	7.96	.96	508	14.2	20	
/	1208	8.835	8.01	.55	510	15.8	20	
/	1218	5.782	8.02	15.4	495	15.1	44.8	
/	1228	5.640	8.01	4.71	498	14.7	44.8	
/	1232	5.616	8.04	4.84	491	16.0	44.8	
1232	~~1232~~	pump shut off, recovery test started - test Cardsrule WDM.						
/	1302	Stop recovery test. final xD 10.436						
1302	1342	Drillers begin to remove pump and pipe.						
1342	/	Drillers begin to clean up site. Geologist does						
/	/	paperwork. Drillers rig down						
/	~~1405~~ 1410	Depth to bottom tagged at 103.11' bgs						
/	1405	Depth to water tagged at 82.0' bgs						
1405		Geologist exits site						

NOT USED
AP 2.10.10

Reported By: A. Pappas

Title: Field Geologist

Date: 2.10.10

Signature: [signature]

Reviewed By: L.D. Walker

Title: Geologist

Date: 2/26/10

Signature: [signature]

A-6003-652 (04/03)

DISTRIBUTION

Onsite

1 Hard Copy	U.S. Department of Energy Richland Operations Office	
	DOE Public Reading Room	H2-53
Electronic Only	CHPRC	
	A.J. Green	R3-60
	J.B. Geiger	R3-19
	L.C. Hall	R3-60
	Jadie Kaas	R3-60
	J.W. McKibben	R3-60
	E.C. Rafuse	R3-19
	W.R. Thackaberry	R3-60
	J.L. Smoot	R3-50
	F. Biebesheimer	R3-60
	B.J. Howard	R3-60
	L. D. Walker	R3-60
	C.S. Wright	R3-60
	D.P. Capelle	R3-60
	D.E. Dooley	R3-60
1 Hard Copy	Lockheed Martin Services, Inc.	
	Central Files	B1-07
1 Hard Copy	Pacific Northwest National Laboratory	
	Hanford Technical Library	P8-55