START

0028090

DON'T SAY IT --- *Write It!*

DATE: May 19, 1992

TO: Dan Duncan - EPA
Cathy Massimino - EPA
Toby Michelena - Ecology

FROM: [redacted]

Telephone: (509) 376-7957

cc: R. C. Bowman - WHC
C. E. Clark - RL

SUBJECT: SECONDARY CONTAINMENT STRUCTURE - WASTE WATER PILOT PLANT

An inflatable berm system was proposed for use as secondary containment in the waste loading and unloading areas as described in the Waste Water Pilot Plant Research, Development, and Demonstration (RD&D) Permit Application, Revision 1. The EPA has requested additional vendor information on the liners for use with an inflatable berm system.

Because of the inability of the vendor of the inflatable berms to supply the information requested by the EPA, a similar product will be used in lieu of the inflatable berm system described in Revision 1 of the RD&D permit application. The new containment system selected for use is the SpilGard* Model SG 0313 system manufactured by ModuTank Incorporated. This unit has a 7,500 gallon capacity and is similar in design to the one-millon-gallon storage units constructed by ModuTank at the Hanford Site for purgewater storage.

The SpilGard unit uses a 30-mil geomembrane liner manufactured by the Seaman Corporation. According to the information supplied by the Seaman Corporation, the liner has chemical resistance and physical strength properties equal to or better than the polyvinyl chloride liner used in the inflatable berm system.

To prevent failure of the liner caused by punctures or abrasion, the liner will be installed using a 100-mil geotextile fabric placed below and above the liner floor material. As a further precaution, the upper geotextile layer will be covered with sheets of plywood to protect the liner from damage caused by the truck tires.

Attached is vendor information on the portable berm system. Page changes to Revision 1 of the RD&D permit application will be supplied to EPA and Ecology as soon as possible. If you have any comments or questions, don't hesitate to call.

* SpilGard is a trademark of ModuTank Incorporated

MAY 1993
RECEIVED
EDMC

9312935216 3

ModuTank Inc.
41-04 35th Ave Long Island City, N.Y. 11101 (718) 392-1112

FAX: (718) 786-1008

FAX TRANSMITTAL COVER SHEET

TO: Steve Skurla

COMPANY Westinghouse Hanford

FAX NO. 509-376-6476

FROM: Reed Margulis

DATE: 5/12/92

NUMBER OF PAGES INCLUDING THIS COVER SHEET: 6

COMMENTS: Information re SpilGard

SpilGard™ 2' high modular galvanized steel secondary containment for tanker trucks. Comes with gate(s), XR-5 Liner, geotextile underlayment and geotextile liner protection layer.

Model	Capacity Gallons	Inside Dimensions x 8' High	Shipping Weight (lbs. est.)	Price
SG 0308	5,000	11'-9"x30'-6"	1490	$3,060
SG 0313	7,500	11'-9"x49'-3"	1900	3,945
SG 0326	15,000	11'-9"x98'-0"	3000	6,960

Model	Capacity Gallons	Inside Dimensions x 8' High	Shipping Weight (lbs. est.)	Price
SG 0813	15,000	23'-0"x49'-3"	2500	$ 5,935
SG 1313	32,000	49'-3"x49'-3"	3900	10,480

ModuTank Inc.

May 12, 1992

Mr. Don Scully
Mail Station R3-45
Westinghouse Hanford
P. O. Box 1970
Richland, Washington 99352

Dear Mr. Scully:

Thank you for your inquiry regarding the SpilGard. We are enclosing our catalog which describes this unit in general terms and have also included installation instructions for a typical SpilGard. We have also enclosed our price list for typical units. As we discussed if you require SpilGards with different configurations, they can be furnished due to the modular design.

We have enclosed samples of XR-5, the 30 mil reinforced membrane liner material along with a technical data book as well as a sample of the 100 mil Geotextile used for the protective underlay and overlay.

Please note that a SpilGard similar to the one we discussed was supplied to the Naval Air Propulsion Center in Trenton, New Jersey. The contact is Mrs. Rosemarie Benedetto, telephone: 609-538-6636.

We look forward to being of service to you.

Very truly yours,

Reed Margulis

RM/gc
Encs.

cc: Steve Skurla

9312935216 5

ModuTank Inc.
41-04 35th Ave., Long Island City, NY 11101 (718) 392-1112 Fax (718) 786-1008

SpilGard Assembly Instructions

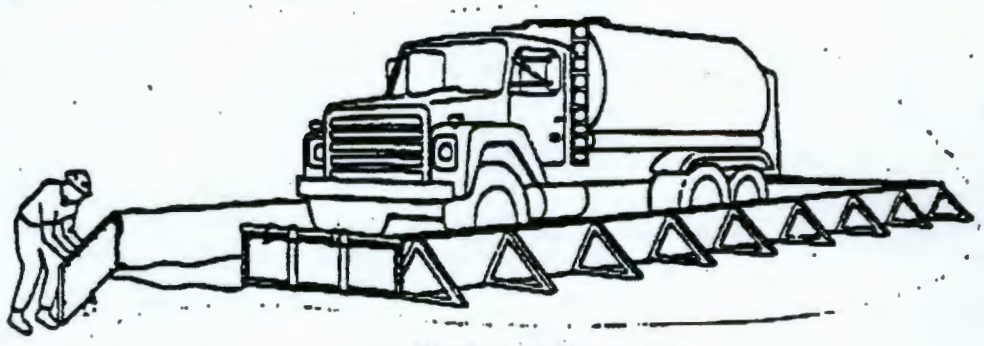

— IMPORTANT —

Read instructions completely before starting assembly of your tank. All parts are prefabricated and bolt together with the supplied hardware. Check all parts against parts list. File claim for missing or damaged parts immediately. Contact ModuTank for prices.

DATE	PO NUMBER

BILL TO

NAME OF JOB _____

ADDRESS _____

CITY _____ STATE _____ ZIP _____

CONTACT _____

PHONE ( ) _____

SHIP TO

NAME OF JOB _____

ADDRESS _____

CITY _____ STATE _____ ZIP _____

CONTACT _____

PHONE ( ) _____

PARTS LIST/PACKING LIST

INSIDE DIMENSIONS _____ X _____ WALL PANELS ON EACH SIDE _____ X _____ FRAMES ON EACH SIDE _____ X _____

PART NO. AND NAME	QUANTITY	CHECK BOX

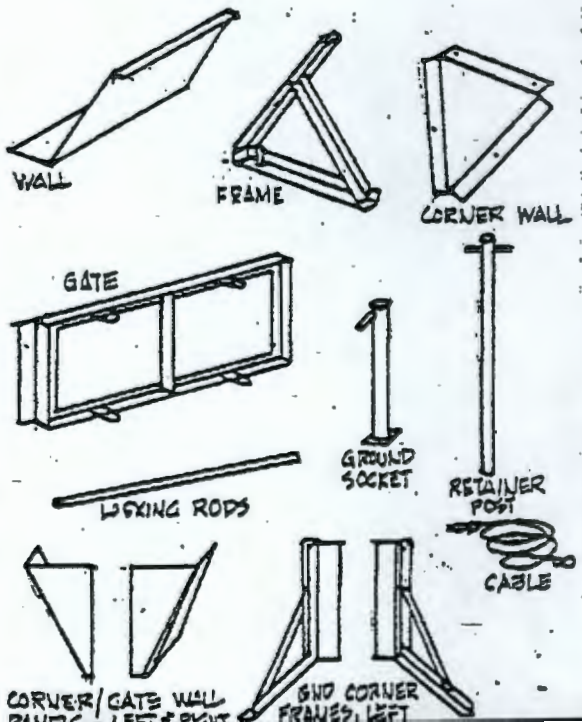

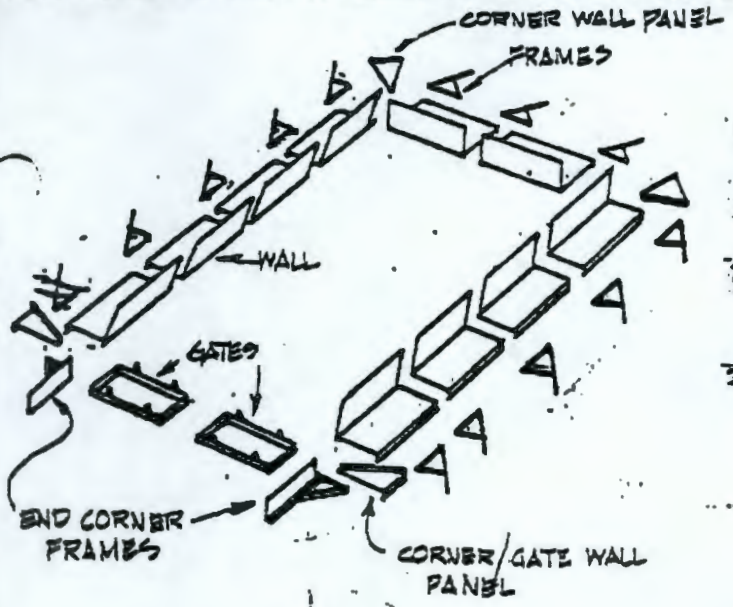

1. CHECK PARTS AGAINST PARTS LIST. CHECK SHIPMENT FOR HIDDEN DAMAGE AND MISSING PARTS.

2. LAYOUT INSIDE DIMENSIONS OF TANK ON GROUND WITH A CHALK LINE.

3. PLACE PANELS, FRAMES, GATES, GROUND SOCKETS AND CABLES ON GROUND OUTSIDE CHALK LINE.

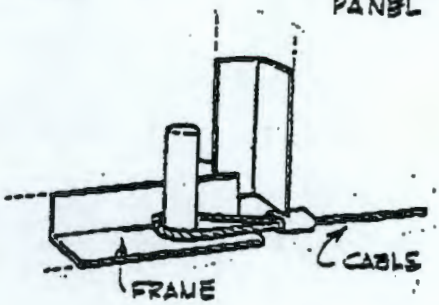

4. ATTACH CABLES TO FRAMES ALONG ONE LONG BY SLIPPING CABLE LOOP OVER POSTS ON BOTTOMS OF FRAMES (ONE CABLE PER FRAME). STRETCH CABLES DIRECTLY ACROSS TANK. THEY WILL BE ATTACHED FOR FRAMES ON OPPOSITE WALL IN A LATER STEP.

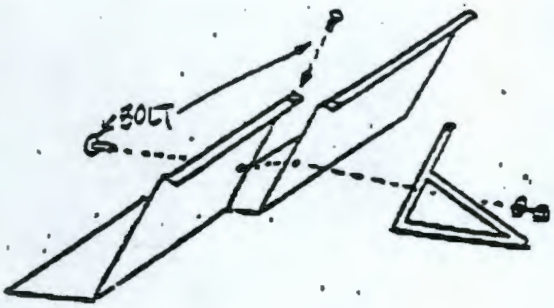

5. STARTING AT ONE CORNER, NEAREST THE GATES, STAND 2 ADJACENT WALL PANELS ON WIDE "FOOT". LINE UP BENDS ON WALL PANELS WITH CHALK LINES. LINE UP HOLES IN WALL PANELS WITH HOLE IN SUPPORT FRAME AND BOLT TOGETHER. HAND TIGHTEN ONLY. BOLT HEADS MUST BE ON INSIDE OF SPILGARD.

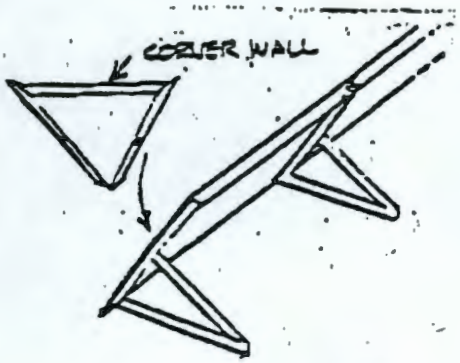

6. BOLT CORNER WALL PANEL TO END OF COMPLETED LONG WALL. PANEL FITS BETWEEN FRAME AND WALL. IT IS NECESSARY TO REMOVE THE BOLT IN ORDER TO INSERT THE CORNER PANEL.

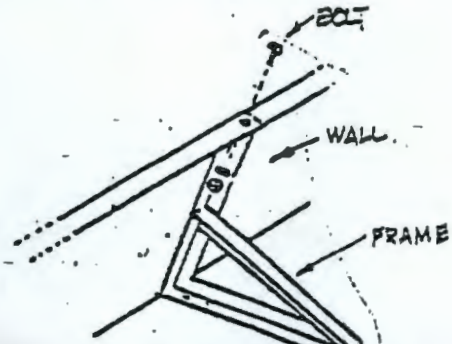

7. BOLT TOP FLANGE ON WALL PANELS TO TOPS OF FRAMES.

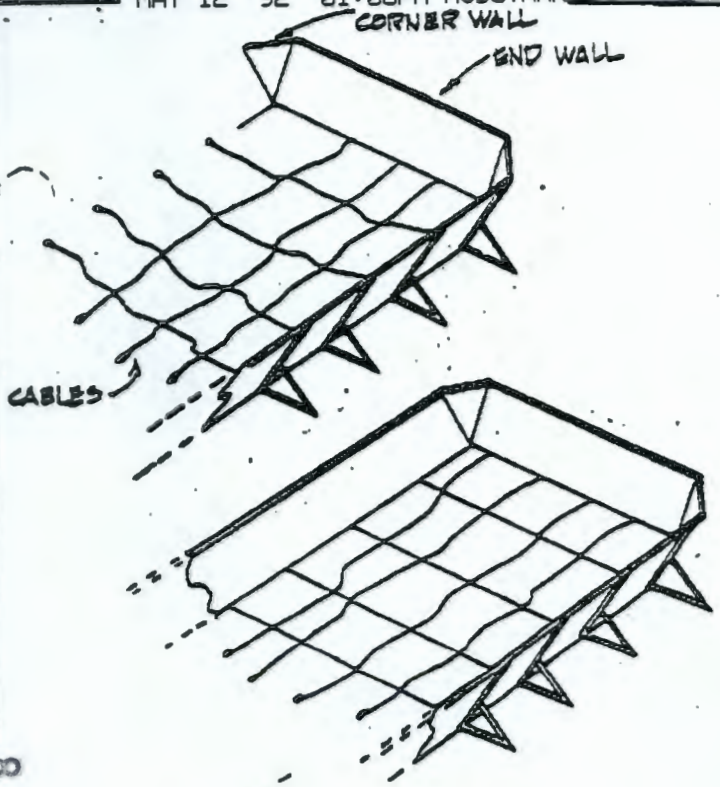

8. ASSEMBLE END WALL AS IN PREVIOUS STEPS. KEEP WALLS SQUARE. MAKE SURE BEND ON WALL PANEL LINES UP WITH CHALK LINE.

9. ATTACH FREE END OF SHORT CABLES TO FRAMES THAT ARE DIRECTLY OPPOSITE EACH OTHER.

10. ATTACH REMAINING LONG WALL AS ABOVE STEPS.

11. SQUARE-UP TANK

12. ATTACH LEFT & RIGHT CORNER/GATE WALL PANELS. REMOVE BOLT HOLDING END FRAME TO WALL. SLIP FLANGE ON CORNER/GATE WALL PANEL BETWEEN FRAME & WALL. REPLACE BOLT.

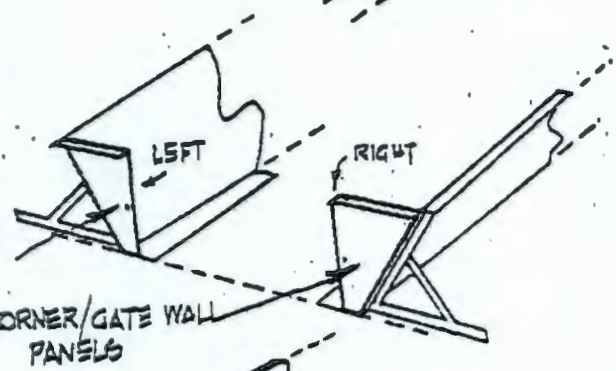

13. IF CORNER/GATE WALL PANELS DO NOT LINE UP WITH CHALK LINE; DRAW A NEW CHALK LINE THE OUTSIDE FACES OF BOTH LEFT & RIGHT PANELS.

14. ATTACH END CORNER FRAMES TO CORNER/GATE WALL PANELS WITH 2 BOLTS. BOLT HEADS MUST BE ON INSIDE OF TANK.
NOTE: THERE IS A LEFT & RIGHT FRAME. THE PLASTIC FLAPS ON EACH FRAME FACE TOWARD THE OPENING.

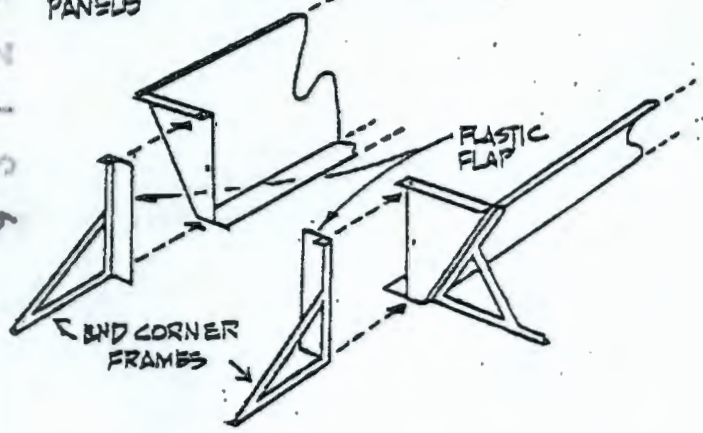

15. STAND BOTH GATES ON BOTTOM EDGES. THE TOP EDGE OF EACH GATE HAS 4 "U" SHAPED RECEPTICLES. THE BOTTOM PLASTIC FLAPS SHOULD BE ON THE INSIDE OF THE SPILGARD. OUTSIDE OF LEFT & RIGHT GATES SHOULD BE TOUCHING PLASTIC FLAPS ON LEFT & RIGHT FRAMES. MAKE SURE THE VERTICAL STEEL WALL PANEL ON THE INSIDE OF EACH GATE IS LINED UP WITH THE CHALK LINE, NOT THE PLASTIC BOTTOM FLAPS.

NOTE: THE SPACES BETWEEN WALL PANELS AND THE GATES SHOULD BE APPROXIMATELY EQUAL.

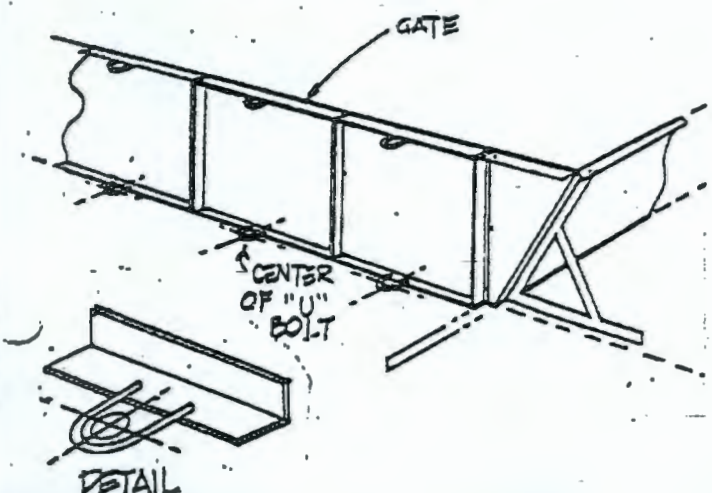

16. MARK CENTERS OF "U" BOLTS ON THE GROUND. THERE ARE 2 ON THE BOTTOM OF EACH GATE.

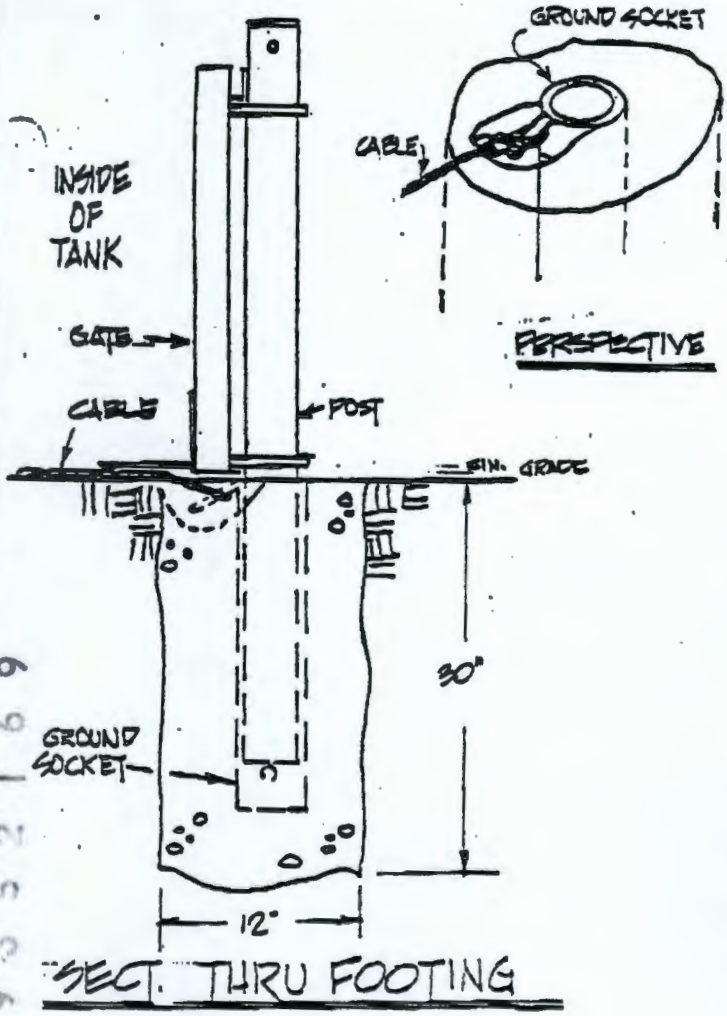

17. MOVE GATES OUT OF THE WAY AND DIG 12" DIA. HOLES 30" DEEP. HOLES SHOULD BE DUG ON THE "U" BOLT CENTERS AS IN STEP 17.

18. PLACE A GROUND SOCKET IN EACH HOLE.

19. REPLACE GATES. LINE UP WITH CHALK LINE AS IN PREVIOUS STEPS.

20. SLIP POSTS THROUGH "U" BOLTS AND INTO GROUND SOCKETS. PROP GROUND SOCKETS FLUSH WITH FINISHED GRADE.
    NOTE: ANGLED CABLE POST MUST BE ON INSIDE OF TANK FACING OPPOSITE SIDE OF TANK.

21. POUR CONCRETE INTO FOOTING HOLE UP TO FINISHED GRADE. DO NOT ALLOW CONCRETE TO ENTER GROUND SOCKET
    NOTE: SCOOP CONCRETE AWAY FROM FRONT AND BOTTOM OF POST ALLOWING 1" OF CLEARENCE. THIS SPACE ALLOWS CABLE ATTACHMENT.

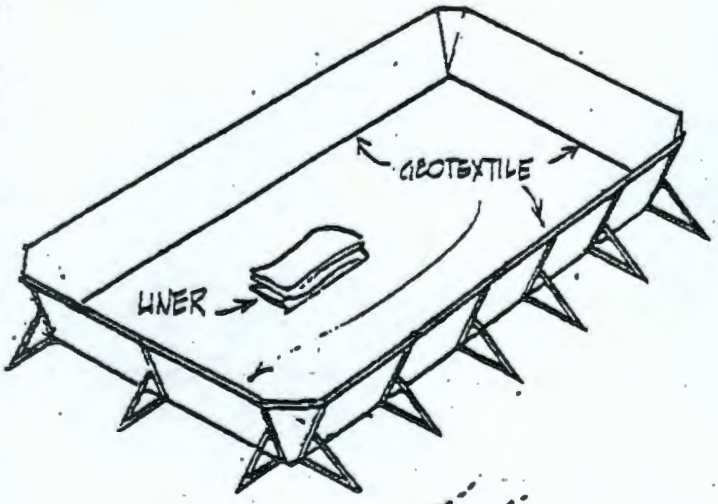

22. ATTACH LONG CABLES TO GROUND SOCKETS AND END SUPPORT FRAMES

23. COVER ENTIRE BOTTOM OF TANK WITH GEOTEXTILE.

24. PLACE LINER IN TANK AND UNFOLD TOWARD THE 4 WALLS. MAKE SURE LINER IS CENTERED IN TANK. FLOP EXCESS MATERIAL EVENLY OVER THE WALLS. MAKE SURE LINER COVERS ENTIRE BOTTOM AND FITS SNUGLY INTO BOTTOM "FOLD" ON WALL PANELS AND INTO THE CORNERS.

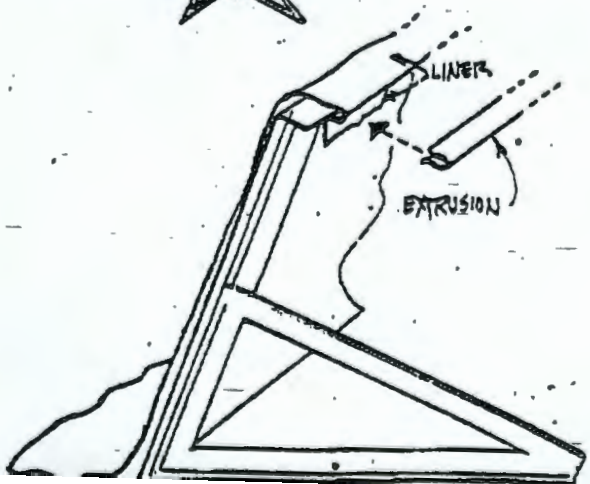

25. FOLD LINER UNDER THE LIP ON THE 2 LONG AND 1 END WALL PANELS. PUSH "U" SHAPED PLASTIC EXTRUSIONS OVER LINER/WALLS.

TECHNICAL DATA and SPECIFICATIONS for

XR-5®

Chemical, Oil and High Temperature Resistant Geomembrane

Seaman Corporation
INDUSTRIAL FABRIC DIVISION
1000 Venture Blvd.
Wooster, Ohio 44691
(216) 262-1111

9312935521170

SECTION A - PHYSICAL PROPERTIES

PART A-1: MATERIAL SPECIFICATIONS

8130 XR-5 : Property	Test Method	Requirement
1. Thickness	ASTM 751	30±2 mill (8130) 0.030 to 0.034 in. 40± 2 mill (8138).
2. Weight	ASTM D-751	30.0± 2 oz./sq. yd. (8130) 38.0± 2 oz./sq. yd. (8138)
3. Tear Strength	ASTM D-751	125 lbs./125 lbs.
4. Breaking Yield Strength	ASTM-D-751 Grab Tensile	475 lbs./425 lbs.
5. Low Temperature	ASTM-D-2136 4 hrs. — ⅛" mandrel	−30°F. No cracking
6. Dimensional Stability (each direction)	ASTM-D-1204 212°F.−1 hr.	2% max.
7. Hydrostatic Resistance	ASTM-D-751 Method A	500 psi (min.)
8. Blocking Resistance 180°F.	Method 5872 Fed. Std. 191a	#2 Rating Max.
9. Adhesion—Ply. lbs./in. of width	ASTM-D-413 2" per min.	9 lbs./in. (min.) or film tearing bond
10. Adhesion—heat sealed seam lbs./in. of width	ASTM-D-751	10 lbs./in. (min.)
11. Dead Load Seam shear strength	(Mil-T-52983E Para. 4.5.2.19 2" overlap seam	Must withstand 210 lbs./in. @ 70°F. 105 lbs./in. @ 160°F.
12. Abrasion Resistance (Taber Method)	Method 5306 Fed. Std. 191a H-18 Wheel 1000 gm. load	2000 cycles before fabric exposure 50 mg./100 cycles max. wt. loss
13. Weathering Resistance	Carbon-Arc Atlas Weather-o-meter	2,000 hrs. No appreciable changes or stiffening or cracking of coating
14. Water Absorption	ASTM-D-471 7 days	5% max. @ 70°F. 12% max. @ 212°F.
15. Wicking	Shelter-Rite procedure	⅛" max.
16. Puncture Resistance	FTMS 101B Method 2031	350 lbs.

PART A-2: ELONGATION PROPERTIES (UNIAXIAL)
STRESS VS. STRAIN 8130 and 8138 XR-5

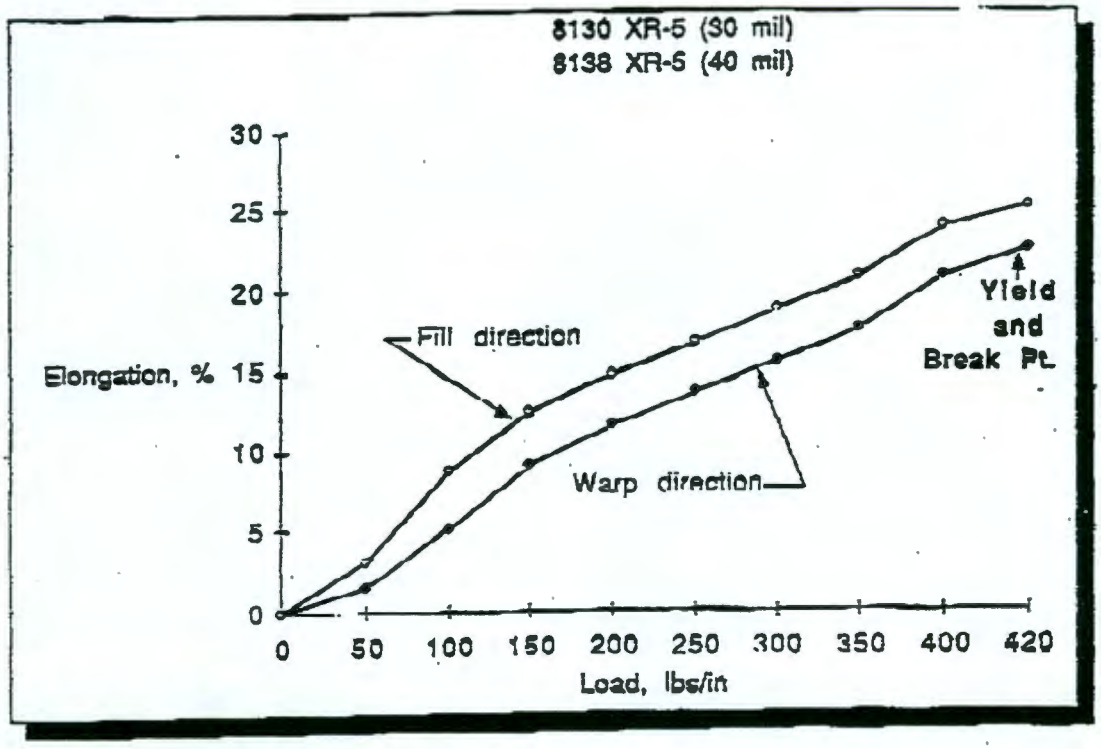

Test Method: Method 5102, Fed. Std. 191, 12 inch/min. speed.

9 3 1 2 9 3 5 2 1 7 2

SECTION B — CHEMICAL/ENVIRONMENTAL RESISTANCE

PART B-1: XR-5® FLUID RESISTANCE GUIDELINES

The data below is the result of laboratory tests and is intended to serve only as a guide. No performance warranty is intended or implied. The degree of chemical attack on any material is governed by the conditions under which it is exposed. Exposure time, temperature, and size of the area of exposure usually varies considerably in application, therefore, this table is given and accepted at the user's risk. Confirmation of the validity and suitability in specific cases should be obtained.

When considering XR-5 for specific applications, it is suggested that a sample be tested in actual service before specification. Where impractical, tests should be devised which simulate actual service conditions as closely as possible.

EXPOSURE	RATING
Acetic Acid (5%)	B
Acetic Acid (50%)	C
Ammonium Phosphate	T
Ammonium Sulfate	T
Antifreeze (ethylene glycol)	A
Animal Oil	A
Aqua Regia	X
ASTM Fuel A (100% Iso-octane)	A
ASTM Oil #2 (Flash pt. 240°C)	A
ASTM Oil #3	A
Benzene	X
Calcium Chloride Solutions	T
Calcium Hydroxide	T
20% Chlorine Solution	A
Clorox	A
Conc. Ammonium Hydroxide	A
Corn Oil	A
Crude Oil	A
Diesel Fuel	A
Ethanol	A
Ethyl Acetate	C
Ethyl Alcohol	A
Fertilizer Solution	A
#2 Fuel Oil	A
#6 Fuel Oil	A
Furfural	X
Gasoline	B
Glycerin	A
Hydraulic Fluid	A
Hydrocarbon Type II (40% Aromatic)	C
Hydrochloric Acid (50%)	A
Hydrofluoric Acid (5%)	A
Hydrofluoric Acid (50%)	A
Hydrofluosilicic Acid (30%)	A
Isopropyl Alcohol	T
Ivory Soap	A
Jet A	A
JP-4 Jet Fuel	A

EXPOSURE	RATING
JP-5 Jet Fuel	A
JP-8 Jet Fuel	A
Kerosene	A
Magnesium Chloride	T
Magnesium Hydroxide	T
Methanol	A
Methyl Alcohol	A
Methyl Ethyl Ketone	X
Mineral Spirits	A
Naptha	A
Nitric Acid (5%)	B
Nitric Acid (50%)	C
Perchloroethylene	C
Phenol	X
Phenol Formaldehyde	B
Phosphoric Acid (50%)	A
Phosphoric Acid (100%)	C
Phthalate Plasticizer	C
Potassium Chloride	T
Potassium Sulphate	T
Raw Linseed Oil	A
SAE-30 Oil	A
Salt Water (25%)	B
Sea Water	A
Sodium Acetate Solutions	T
Sodium Bisulfite Solution	T
Sodium Hydroxide (50%)	A
Sodium Phosphate	T
Sulphuric Acid (50%)	A
50% Tanic Acid	A
Toluene	C
Transformer Oil	A
Turpentine	A
Urea Formaldehyde	A
UAN	A
Vegetable Oil	A
Water (200°F.)	A
Xylene	X
Zinc Chloride	T

Ratings are based on visual and physical examination of samples after removal from the test chemical after the samples of Black XR-5 were immersed for 28 days at room temperature. Results represent ability of material to retain its performance properties when in contact with the indicated chemical.

RATING KEY:
A—Fluid has little or no effect
B—Fluid has minor to moderate effect
C—Fuild has severe effect
T—No data-likely to be acceptable
X—No data-not likely to be acceptable

PART B-2: COMPARATIVE CHEMICAL RESISTANCE

The table below lists a variety of chemicals and indicates the action of each material when in contact with Black XR-5, CPE, Hypalon, Urethane, and supported PVC. Membrane samples were totally immersed in each of the chemicals for a period of 28 days at room temperature. The rating system is indicated as:

A — Fluid has little or no effect at R.T.
B — Fluid has minor to moderate effect at R.T.
C — Fluid has severe effect at R.T.

Chemical	XR-5®	Hypalon	Urethane	CPE	PVC
Kerosene	A	C	A	C	C
Diesel Fuel	A	C	A	C	C
Ohio Crude Oil	A	B	A	B	C
Hydraulic Fluid	A	C	A	B	C
Naptha	A	B	A	B	C
Conc. Ammonia Hydroxide	A	A	C	A	A
50% Acetic Acid	C	B	C	B	C
50% Phosphoric Acid	A	B	C	A	A
50% Hydrochloric Acid	A	A	C	A	A
50% Nitric Acid	C	B	C	A	C
50% Sulfuric Acid	A	C	C	C	A
60% Sodium Hydroxide	A	A	C	B	C
Methyl Alcohol	A	A	A	A	C
JP-4 Jet Fuel	A	B	A	B	C
Salt Water 180°F	A	B	B	B	C
Phthalate Plasticizers	B	C	A	C	C
SAE-30 Oil	A	A	A	A	C
Raw Linseed Oil	A	A	A	A	C

All technical information published in the brochure refers to the Black XR-5; other colors may not have the same chemical resistance as the black. If a color other than black is required, we suggest you check with Seaman Corporation as to the compatability and resistance to that particular chemical environment.

The above ratings were arrived at by visual and physical examination of the membrane samples after their removal from the test chemical. When considering XR-5® for specific application, it is important to study the requirements such as permeability, service temperature, concentration, size to be contained, etc. Sample of XR-5® should be tested close to actual service conditions and also Seaman Corporation should be consulted.

SECTION E — WARRANTY INFORMATION

WARRANTY

XR-5 is offered with Seaman Corporation standard warranty which addresses weathering and chemical compatibility for a 10-year period. A test immersion is required with subsequent testing and approval by Seaman Corporation.

PART E-1: INSTRUCTIONS FOR XR-5® TEST IMMERSIONS AND WARRANTY REQUESTS

1. Completely immerse six Style 8130 XR-5® samples (8-1/2" x 11" size) in the liquid to be contained.

2. At the end of approximately thirty days, retrieve three of the samples. The samples should be rinsed with fresh water and dried.

3. Send the three samples to: Attn: Geomembrane Department
   Seaman Corporation
   1000 Venture Blvd.
   Wooster, Ohio 44691

4. Keep the other three samples immersed until further notice in case longer immersion data is required.

5. Complete and return the information form (Section E-2) on the liner application.

93129352175

PART E-2: MEMBRANE APPLICATION & UTILIZATION FORM

INSTALLATION OWNER & ADDRESS:

_____

_____

_____

_____

_____

_____

PHYSICAL LOCATION OF INSTALLATION:

_____

_____

_____

_____

_____

_____

EXPECTED DATE OF INSTALLATION: _____

EXPECTED BEGINNING DATE OF SERVICE: _____

DESCRIPTION OF APPLICATION:
(Example: impoundment used to contain brine on an emergency basis)

_____

_____

_____

_____

_____

PHYSICAL FEATURES OF APPLICATION:
(Example: 1.3 million gallon earthen impoundment with overall top dimensions of 160′ x 160′ with 3:1 slopes and 10′ deep)

_____

_____

_____

_____

_____

_____

_____

9 3 1 2 9 3 5 2 1 7 6

DESCRIPTION OF LIQUID:
(Describe content of liquid including pollutants and expected temperature extremes in basin and at application point. Attach analysis of liquid chemistry, composition taken on a representative basis.)

OPERATIONAL CHARACTERISTICS:
(Describe the operation of the facility such as filling schedules, fluctuating liquid levels, operating temperatures, etc.)

PERFORMANCE REQUIREMENTS, ETC.
(State any other requirements, such as rate of permeability, etc. required)

Owner represents the information herein is complete and accurate, and understands and agrees that issuance of Seaman Corporation Warranty for XR-5 Style 8130 is conditioned upon such completeness and accuracy.

OWNER'S SIGNATURE:

REFERENCE MATERIALS:

** TOTAL PAGE.010 **

9 3 1 2 9 3 5 2 1 7 7

BUY OR RENT

Low-Cost Tanks

Shipped From Inventory*...

2,000 / 5,000 / 10,000 / 20,000 / 30,000 / 50,000 / 100,000 gallon tanks

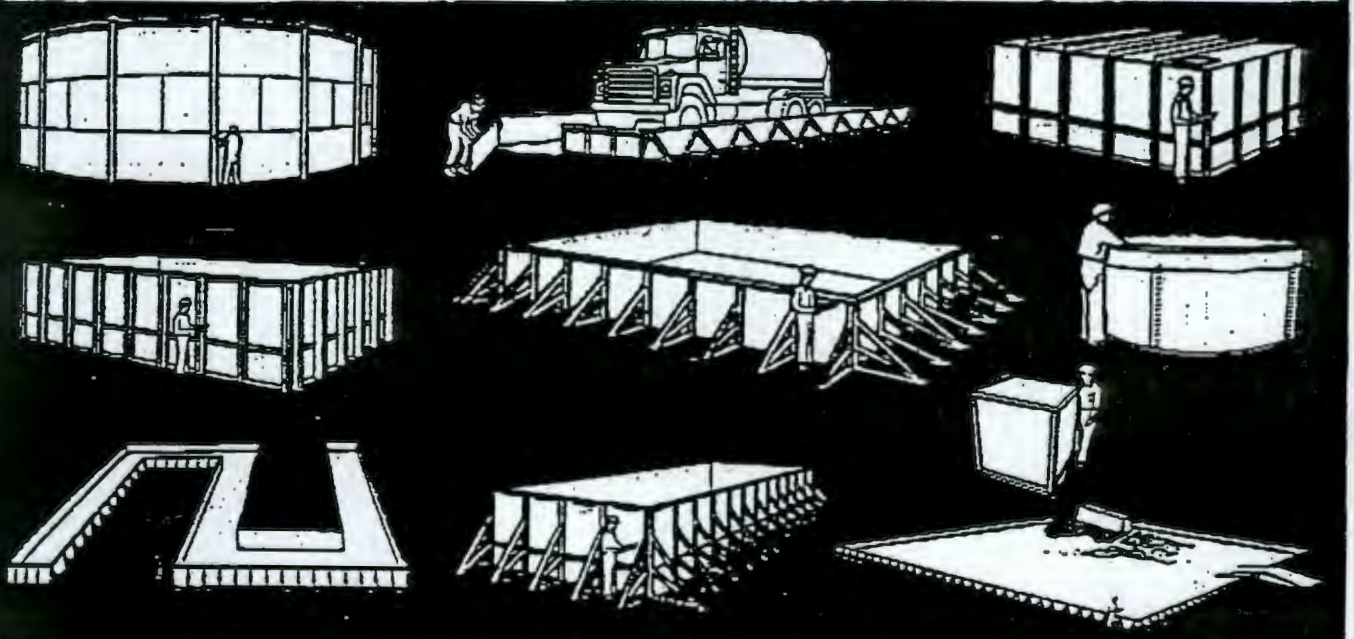

ModuTank™ 8,000–unlimited gallons
Designed for heavy-duty permanent or standby containment, low-cost ModuTanks feature modular steel components for rapid bolt-together assembly on any firm, level surface.

EconoTank™ 8,000–unlimited gallons
EconoTanks, similar in construction to ModuTanks are engineered specifically for short-term containment and cost as little as 4¢/gallon for a two million gallon tank.

Special Shapes Virtually any shape utilizing right angles such a "T" - "L" - "Cross" etc. can be assembled from ModuTank's unique, modular components. This capability is especially useful for installations with special flow requirements or irregularly shaped sites.

HiStor™ 100,000–unlimited gallons
High-capacity 6'-3" high HiStor tanks, offering more than 30% greater holding capacity than ModuTanks, are preferred choices for heavy-duty standby or permanent storage.

ComPak™ 250 gallons and up
Small capacity tanks for permanent or standby storage indoors or outdoors. Modular steel components hand carry through doorways for or emergency containment...for almost instant setup ...for short-term storage during spill clean up.

EconoStor™ 2,000–18,000 gallons
These tanks fit anywhere. Low-cost EconoStors utilize compact heavy-duty components for hand carrying and rapid bolt-together assembly in hard-to-reach places.

AlumStor™ 500–10,000 gallons
AlumStor storage and feed systems are designed for converting water treatment plants from dry to liquid alum for operational savings up to 30%.

ChemStor™ 500–10,000 gallons
All the features of the versatile EconoStor, but specially engineered for liquid chemical storage.

PermaStor™ 100,000 gallons and up
Permastor, an 8'-high steel tank system, is designed for long-term fixed position installations.

ModuStor™ 8,000–850,000 gallons
ModuStor's prefabricated bolt-together steel wall panels rapidly assemble into a wide range of tank sizes from 15 to 100 feet in diameter tanker truck spills at loading and storage points.

TerraStor™ 500–unlimited cubic yards
Low-cost TerraStor containment systems are ideal answers for the temporary storage and treatment of hazardous earth materials, sand and clay.

ModuTainer™ 2,200–unlimited gallons
Low-cost ModuTainer systems in rectangular or round configurations are designed for assembly around existing or new tank installations.

Ponds & Liners 500–unlimited gallons
ModuTank Inc. offers factory fabricated and field installed membrane liners for ponds and new or existing tanks.

*EconoTank

Discover why more than 65 Fortune 500 companies have purchased ModuTank Inc. products. ASK FOR A FREE CATALOG

ENGINEERED CONTAINMENT SYSTEMS SINCE 1970

ModuTank

From: Donald E Scully at ~WHC95 5/12/92 1:00PM (606 bytes: 4 ln)
To: Steven J Skurla at ~WHC250, Don L Flyckt at ~WHC14, Robert S Pavlina at ~WHC215, William R Owen at ~WHC15, Nicholas A Hertelendy at ~WHC174
cc: Donald E Scully
Subject: portable berms - addendum

---------- Message Contents ----------

Although not included in the faxed Seaman literature containing the XR-5 8130 geomembrane specs, Kent Sogge has informed me that the carbon black content is >3% by weight. The spec for the LERF geomembrane is "2 to 3%."

9 3 1 2 9 3 5 2 1 7 9