B

OFFICIAL RELEASE
BY WHC
DATE JUL 09 1988

ROCKWELL REVIEW COPY ON FILE
SUBMITTAL NO. 005.27A
DATE 8-14-87

JUN 1990
RECEIVED
EDMC

IMPACT LEVEL 2
EDT NO. 100853

	DATE
WHC APPROVAL BY LD Vansdow	7/7/88
PROJ ENGR [signature]	3/5/87
QA [signature]	3/4/87
APPROVED BY N/A	
SAFETY N/A	
APPROVED BY W. Du Rie	3/4/87
CHECKED BY W. Du Rie	2/23/87
DRAWN BY D. O'KEEF	12/10/86
DESIGNED BY D. O'KEEF	12/10/86

U. S. DEPARTMENT OF ENERGY
Richland Operations Office

Associated Technologies Incorporated
212 S. Tryon St.
Charlotte, N.C.
28281

FILTRATION SYSTEM PIPING, SECTIONS & DETAILS

PROJECT TITLE
TRANSPORTABLE GROUT EQUIPMENT

PROJ	WO	JOB
B-475		

SCALE	BLDG	INDEX
AS NOTED	243-G8	8900

DRAWING NUMBER	SHEET	OF	REV
H-2-98829	1	1	0

DESCRIPTION	REV
NS	

A

0009571

2

1

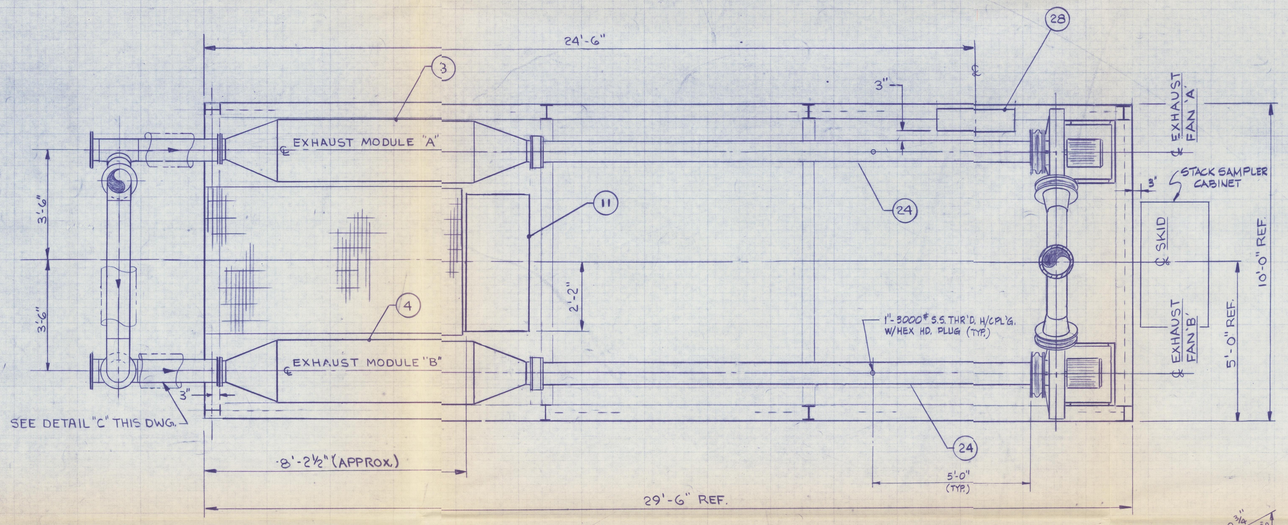

SECTION A-A

SEE DWG. H-2-98828
SCALE: ½" = 1'-0"

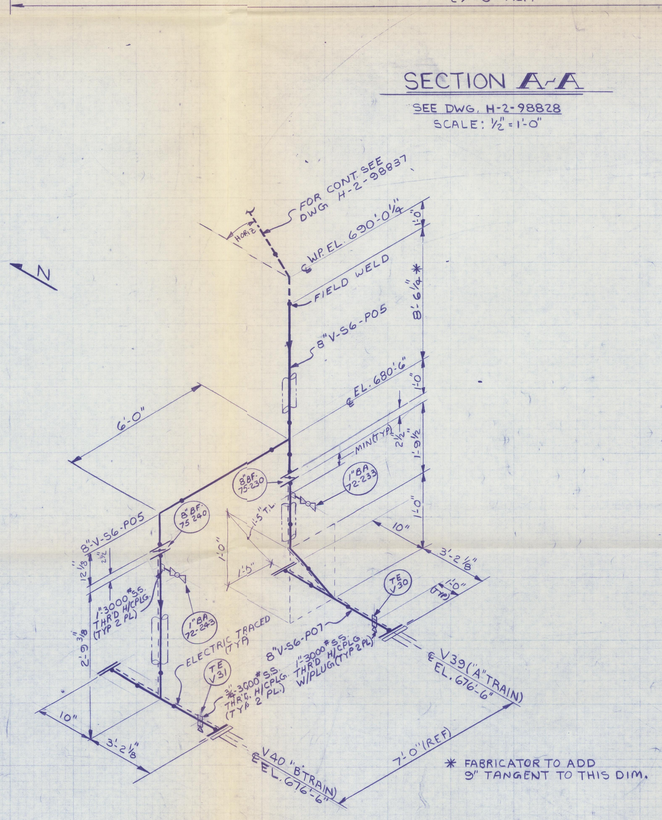

DETAIL "C"

DWG. H-2-98828 +29
N.T.S.

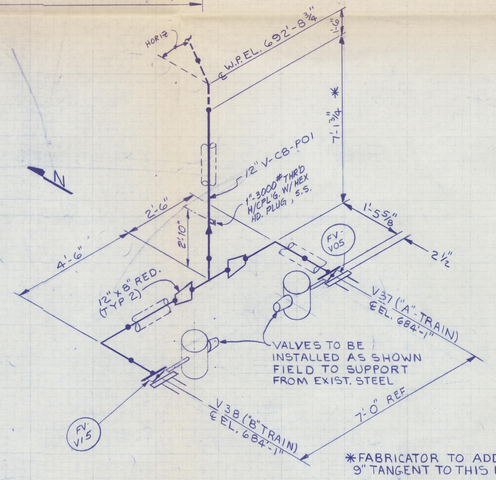

DETAIL "D"

DWG. H-2-98828
N.T.S.

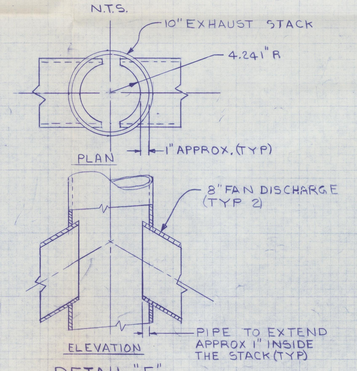

DETAIL "E"

H-2-98828
N.T.S.

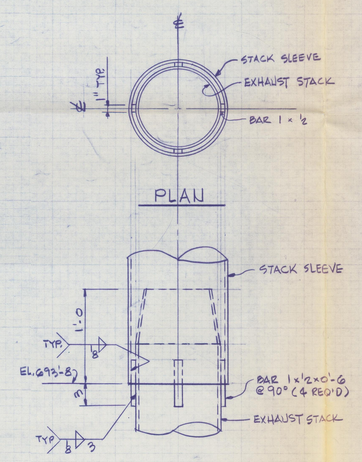

ELEVATION DETAIL "A"

SCALE: 1½ = 1'-0 H-2-98828

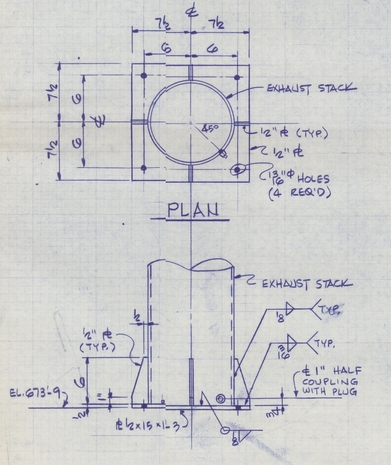

ELEVATION DETAIL "B"

SCALE: 1½ = 1'-0 H-2-98828

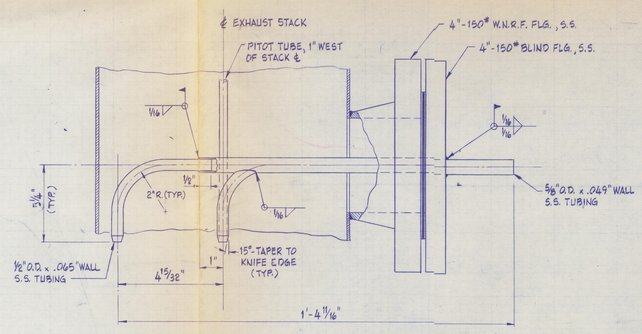

DETAIL "F"

SCALE: 3/8" = 1" H-2-98828

OFFICIAL RELEASE BY WHC DATE JUL 09 1988

ROCKWELL REVIEW COPY ON FILE SUBMITTAL NO. 205-27A DATE 2-11-87

JUN 1990 RECEIVED EDMC

IMPACT LEVEL 2
EDT NO. 100853

DRAWING TRACEABILITY LIST			
NUMBER	TITLE	DRAWING LIST NUMBER	REFERENCES TITLE
		H-2-98814	NEXT USED ON H-2-98828

MICROFILMED

REVISIONS				
BY-DATE APPROVAL	BY-DATE APPROVAL	REV BY DATE	DESCRIPTION	REV
COMMENT REVIEW				

WHC APPROVAL BY L.D. Vandour	DATE 7/7/88	U. S. DEPARTMENT OF ENERGY Richland Operations Office
PROJ ENGR T.M. Cain	4/1/87	Associated Technologies Incorporated 1972 Tyler Ave. Suite A-E
DES ENGR Charles D. Powers	3/19/87	
APPROVED BY N/A		FILTRATION SYSTEM PIPING, SECTIONS & DETAILS
SAFETY N/A		PROJECT TITLE TRANSPORTABLE GROUT EQUIPMENT
APPROVED BY W. Du Rie	7/1/87	PROJ B-475 WO JOB
CHECKED BY W. Du Rie	3/28/87	SCALE AS NOTED BLDG 243-68 INDEX 8900
DRAWN BY B. O'KEEF	12/16/86	DRAWING NUMBER H-2-98829 SHEET 1 OF 1 REV 0
DESIGNED BY B. O'KEEF	12/16/86	

0009571

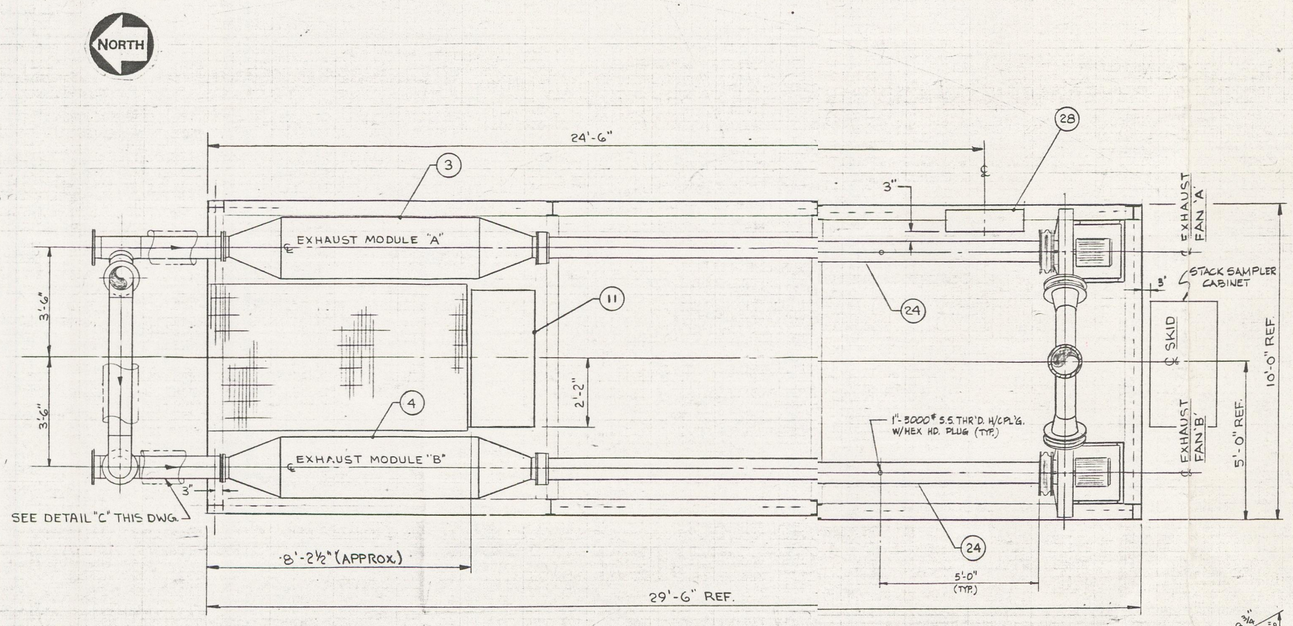

SECTION A-A

SEE DWG. H-2-98828
SCALE: ½" = 1'-0"

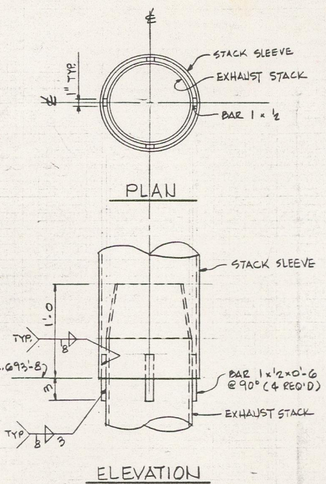

ELEVATION
DETAIL "A"

SCALE: 1½ = 1'-0 H-2-98828

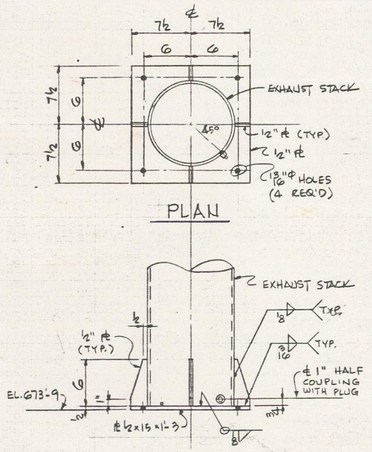

ELEVATION
DETAIL "B"

SCALE: 1½ = 1'-0 H-2-98828

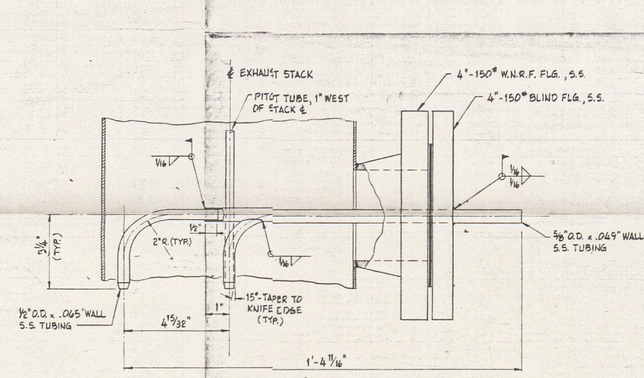

DETAIL "F"

SCALE: 3/8" = 1" H-2-98828

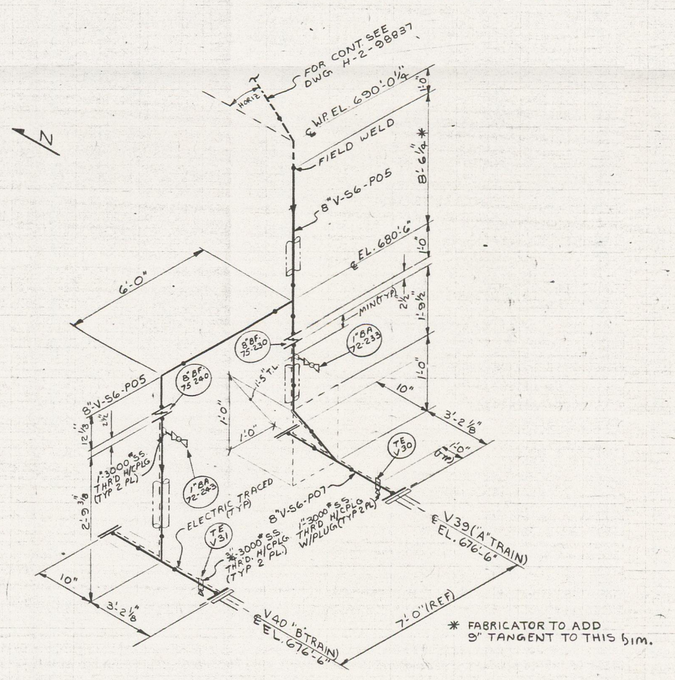

DETAIL "C"

DWG. H-2-98828 +29
N.T.S.

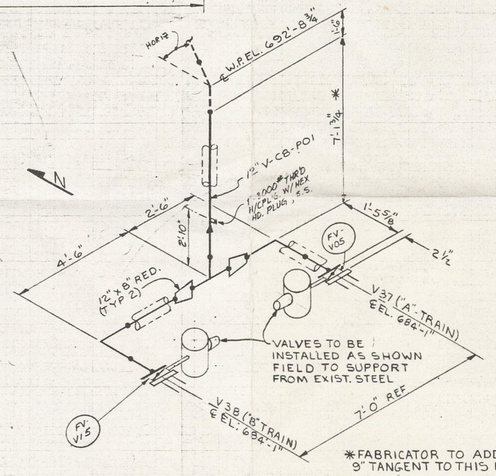

DETAIL "D"

DWG. H-2-98828
N.T.S.

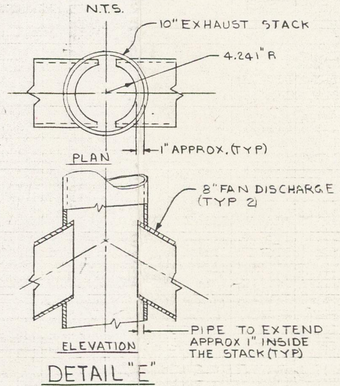

DETAIL "E"

H-2-98828
N.T.S.

OFFICIAL RELEASE BY WHC
DATE JUL 09 1988

ROCKWELL REVIEW COPY ON FILE
SUBMITTAL NO. 22234
DATE 6-14-88

JUN 1988 RECEIVED EDMC

IMPACT LEVEL 2
EDT NO. 100853

WHC APPROVAL BY S.D. Vanausdour	DATE 7/1/88	U. S. DEPARTMENT OF ENERGY Richland Operations Office	
PROJ ENGR Tim Cain	7/1/88		
DES ENGR Richard D. Parker	7/1/88		
APPROVED BY N/A			
SAFETY N/A		FILTRATION SYSTEM PIPING, SECTIONS & DETAILS	
APPROVED BY W.D. Richie	7/1/88	PROJECT TITLE TRANSPORTABLE GROUT EQUIPMENT	
CHECKED BY M Dan Rice	2/28/87	PROJ B-475 WO	JOB
DRAWN BY D.O'KEEF.	12/14/86	SCALE AS NOTED BLDG 243-G8	INDEX 8900
DESIGNED BY D.O'KEEF.	12/14/86	DRAWING NUMBER H-2-98829 SHEET 1 OF 1	REV 0

NUMBER	TITLE
DRAWING TRACEABILITY LIST	

NUMBER	TITLE
H-2-98814	DRAWING LIST
REFERENCES	
NEXT USED ON H-2-98828	

MICROFILMED

BY-DATE	BY-DATE	REV BY DATE	DESCRIPTION	REV
APPROVAL	APPROVAL		REVISIONS	
			COMMENT REVIEW	

0009374