0059010

SNF-8163
Revision 5

Performance Specification for the K East Basin Sludge Transportation System - Project A.16

RECEIVED
APR 04 2003
EDMC

Prepared for the U.S. Department of Energy
Assistant Secretary for Environmental Management

Fluor Hanford
P.O. Box 1000
Richland, Washington

Contractor for the U.S. Department of Energy
Richland Operations Office under Contract DE-AC06-96RL13200

Approved for Public Release
(Upon receipt of Clearance approval)
Further Dissemination Unlimited

SNF-8163
Revision 5

Performance Specification for the K East Basin Sludge Transportation System - Project A.16

R. K. Sanan

Fluor Hanford, Inc.

November 2002

Prepared for the U.S. Department of Energy
Assistant Secretary for Environmental Management

Fluor Hanford
P.O. Box 1000
Richland, Washington

Contractor for the U.S. Department of Energy
Richland Operations Office under Contract DE-AC06-96RL13200

DEC 2 2002
DATE:
STA:
HANFORD RELEASE
ID:
#19
15

Janis Braden
Clearance Approval

12/2/02
Date

Release Approval (stamp)

Approved for Public Release
(Upon receipt of Clearance approval)
Further Dissemination Unlimited

SNF-8163
Revision 5

For use with Technical Documents (when appropriate)	
EDC- HNF-EDC-02-13280	FMP-
EDT-	ECN-
Project No.: A.16	Division: SNF
Document Type: SPECP	Page Count: 70

For use with Speeches, Articles, or Presentations (when appropriate)							
Abstract		Summary		Full Paper		Visual Aid	
Conference Name:							
Conference Date:							
Conference Location:							
Conference Sponsor:							
Published In:							
Publication Date:							

LEGAL DISCLAIMER

This report was prepared as an account of work sponsored by an agency of the United States Government. Neither the United States Government nor any agency thereof, nor any of their employees, nor any of their contractors, subcontractors or their employees, makes any warranty, express or implied, or assumes any legal liability or responsibility for the accuracy, completeness, or any third party's use or the results of such use of any information, apparatus, product, or process disclosed, or represents that its use would not infringe privately owned rights. Reference herein to any specific commercial product, process, or service by trade name, trademark, manufacturer, or otherwise, does not necessarily constitute or imply its endorsement, recommendation, or favoring by the United States Government or any agency thereof or its contractors or subcontractors. The views and opinions of authors expressed herein do not necessarily state or reflect those of the United States Government or any agency thereof.

Scientific or technical information is available to U.S. Government and U.S. Government contractor personnel through the Office of Scientific and Technical Information (OSTI). It is available to others through the National Technical Information Service (NTIS).

This report has been reproduced from the best available copy.

Printed in the United States of America

RECORD OF REVISION	(1) Document Number SNF-8163	Page 1

(2) Title
SNF-8163, REV. 5, PERFORMANCE SPECIFICATION FOR THE K BASINS SLUDGE TRANSPORTATION SYSTEM - PROJECT A-16

Change Control Record

(3) Revision	(4) Description of Change - Replace, Add, and Delete Pages	Authorized for Release (5) Cog. Engr.	(6) Cog. Mgr.	Date
0	(7) INITIAL RELEASE PER EDT 629246			
1	REVISE SECTIONS 5.5.2, 5.7.1.3, 5.11.2, 5.11.3. ADD SECTIONS 5.7.3 AND 5.7.3.1	DR PRECECHTEL	JE CROCKER	
2	CORRECT TYPOGRAPHICAL ERRORS IN TABLE 3-2 AND LIST OF TABLES AND FIGURES.	DR PRECECHTEL	JE CROCKER	
3	COMPLETE REWRITE PER ECN 664976	AE BRIDGES	JE CROCKER	
4	CHANGES IN SECTIONS 3.5, 4.1, 4.1.2.10, 7.1.2, 7.5.11.7, 7.6.2	AE BRIDGES	JE CROCKER	
5 RS	DIRECT REVISION PER HNF-EDC-02-13280	RK SANAN	CG MATTSSON	12/02

A-7320-005 (10/97)

S

HNF-EDC-02-13280

ENGINEERING DOCUMENT CHANGE CONTROL

Change Identification

1. Change Category:
☒ Direct Revision ☐ Supplemental Change ☐ Page Change
☐ Supersedure ☐ Cancel/Void ☐ New

2. Classification of Change:
☐ Major ☒ Minor ☐ Conf Baseline

3. Date: 11/15/02

4. Originator's Name, Organization, MSIN, and Telephone No.:
Gary Sly, SNF Construction, X3-85, 372-3603

21. Release:
DEC 2 2002
DATE:
STA: #19
HANFORD RELEASE
ID: 15

5. USQ Required? ☒ Yes ☐ No
USQ No.: 1451-2002
CX No.: N/A

6. Technical Authority: R.K. Sanan

7. Project/Program (WMP, FFTF, etc.): SNF

8. Area: 100K

9. Building: KE-105

10. Reviewer Designator: ERQIF

11. Plan:
Update SNF-8163, Performance Specification for the K East Basin Sludge Transportation System - Project A.16

12. Criteria:
Project requirement to direct the design and building of the Sludge Water System Transportation system referenced in SNF-8166 Functional Design Criteria for the K Basins Sludge and Water System - Project A-16.

13. Change Description:
Direct Revision 5 to SNF-8163, Performance Specification for the K East Basin Sludge Transportation System - Project A.16, which includes minor changes as listed below:

14. Documents Issued or Changed by this EDC:

Document	Page	Revision	Comments
SNF-8163	All	4	

15. Technical Justification (Need):
Incorporate Contract Modifications and Design Requirements identifed during design reviews.

Evaluation and Coordination

16. Change Impact:
Provide clarification and modified design criteria for the design and fabrication of the Sludge Water System - K East Sludge Transporation System.

17. Affected Documents:

Document Number	Page	Revision	Person Notified/Comments
N/A			

ENGINEERING DOCUMENT CHANGE CONTROL (continued)

Verification

18. Verification:

Provided by review and signature of approvers.

19. Approvals/Reviews:

Initials, Last Name, Date, MSIN	Initials, Last Name, Date, MSIN
Technical Authority: R.K. Sanan 11/21/02	Technical Authority Manager: J.K. McClusky 11/26/02
Reviewer (Title): Industrial Safety M.D. Richardson 11/21/02	Reviewer (Title): Fire Protection S.C. Wallace 11/21/02
Reviewer (Title): Project Engineering Manager C.G. Mattsson 11/21/02	Reviewer (Title): Quality Assurance FOR GEORGE E. Griswold G.E. Mata 11-25-02 MATA
Reviewer (Title): Safety G.A. Chaffee 11/25/02	Reviewer (Title): Environmental R.T. Winward 11/25/02
Reviewer (Title): Project Manager R.B. Morson 11/25/2002	Reviewer (Title): Operations Manager J.E. Gamin 11/25/02
Reviewer (Title): Facility Engineering Manager D.T. Mildon 11/21/02	Reviewer (Title): ALARA J.N. Earley 11.21.02
Reviewer (Title): Radiological Control C.J. Slotemaker 11/25/02	Reviewer (Title): Construction Manager R.J. Adkins 11/21/02
Reviewer (Title): Facility Design Authority D.D. Craig 11-21-02	Reviewer (Title):

Solution

20. Change Description (Solution) - Continuation Sheet:

Direct Revision 5 to SNF-8163, Performance Specification for the K East Basin Sludge Transportation System - Project A.16, which includes minor changes as listed below:

SECTION	REVISION/CHANGE	JUSTIFICATION
Abstract	Changed the facility name from K Basins to K East Basin globally throughout the document.	Addressed K East Basin only.
	Changed to one size of inner sludge container.	Addressed design and fabrication of one size only.
1.1	Expanded the scope statement to identify the respective sections of the specification.	To clarify the specification.
1.2	Second paragraph, last sentence. Removed the reference to the sludge volume in K West Basin.	Addressed K East Basin only.
2.3	Hanford documents. Included the latest revision; added and deleted a number of documents.	Updated the document list.
2.3	Hanford References. Added References 60 through 66.	Clarification.

ENGINEERING DOCUMENT CHANGE CONTROL (continued)

3.1	Last sentence of first paragraph. Changed bounding conditions to 54.8 m3 (1936.1/ft3) for sludge volume.	Clarification of requirement.
3.1	Third sentence of second paragraph. Added Reference 65 and added footnote on analysis.	Clarification of analysis.
4.1	Third paragraph. Inserted new sentence for the installation of the NucFil filter and rupture disc. Corrected references.	Clarification of operations.
4.1	Facility Description. Expanded the description of the K East Basin facility to include use of the process shield plate, piping/hose connections air filter and rupture disc installation, and preparation for transport to T Plant.	More clearly described the originating facility.
4.2.3.4	1st and 2nd paragraph. Name correction was to "Process Shielding Plate" to "Process Shield Plate"	Clarification.
4.3.3.4	Added "as described in Section" to last sentence.	Clarification.
5.1.3.4.1	Added reference to DOE/RL-2001-0036, Rev. 0, "Hanford Sitewide Transportation Safety Document"	Clarification.
5.1.3.4.2 thru 5.1.3.4.4	Renumbered subparagraphs as 5.1.3.4.1.1 thru 5.1.3.4.1.3	Typo.
5.2.3.2	Revised worst case over-pressurization requriement to which the cask can be exposed to be limited by cask design.	Clarification.
6.1	2nd paragraph, 3rd sentence was revised to read T Plant dry "process" cells.	Clarificaiton.
Figure 6-2	T Plant Lifting Hook for large diameter container.	Requested by T Plant Operations.
7.0	Large Container. Added the storage of the large sludge container at T Plant.	Addressed an additional container handling operation.
7.5.1	Change "125 RMS" to "250 RMS or better".	KE Large containers are not immersed (versus potentially KW container) and can be decontaminated with a rougher surface.
7.5.6.1	Inlet Pipe. Described the length requirements of the inlet pipe.	Clarification of requirement.
7.5.6.2	Diffusion Plate. Described the basic requirements	Clarification of

ENGINEERING DOCUMENT CHANGE CONTROL (continued)

	of the diffusion plate.	requirement.
7.5.7.1 thru 7.5.7.3	Filter System. Included a description of the internal sludge filter assembly requirements in the large container.	Clarification of the filter assembly requirement.
7.5.11.5	Added phrase to clarify the radiation streaming requirements.	Comply with Contract Mod #5.
7.5.11.13	Level Sensor Wash Port. Added the new level sensor wash port requirements.	Addressed additional port for the large container.
7.5.11.14	Level Sensor Port. Added the new level sensor port.	Addressed additional port for the large container.
7.8.3 thru 7.8.3.5	Shielding Pucks. Added the shielding puck requirements for the respective large container nozzle pipes.	Addressed shielding pucks.
7.9.2	Large Container Cleaning Prior to Disposal. Added cleaning requirements of the container at the end of the storage service life.	Comply with Contract Mod #5.
8.4.3	Change "125 RMS" to "250 RMS or better".	Made consist with Large Containers and Cask surface finish.
8.6.3	Gas Generation and Venting. Inserted the phrase addressing radiation streaming.	Comply with Contract Mod #5.
8.7.3	Lid. Added the requirement for a replacable seal or gasket on the cask lid.	Clarification of sealing requirements.
9.1.6.2 thru 9.1.6.4	Suspension of Trailer. Included the trailer height adjusting requirements, trailer weighting system, and compressed air connections.	Comply with Contract Mod #5.
9.1.13.1 thru 9.1.13.2.4	Cask Lid Storage. Included the handling and storage of the cask lid on a holding fixture on the rear of the trailer.	Comply with Contract Mod #5.
10.1.2.4	Process Shield Plate. Inserted the phrase addressing radiation streaming.	Comply with Contract Mod #5.

DISTRIBUTION SHEET

To	From	Page 1 of 2
Distribution	G.A. Sly	Date 10/25/02
Project Title/Work Order		EDT No.
SNF-8163, Rev 5, Performance Specification for the K East Basin Sludge Transportation System - Project A.16		ECN No. EDC-02-13280

Name	MSIN	Text With All Attach.	Text Only	Attach./ Appendix Only	EDT/ECN Only
Adkins, R. J.	X3-85	X			
Barker, S. L.	X3-85	X			
Mata, G. E.	X3-80	X			
Brubaker, M. L.	R3-13	X			
Chaffee, G. A.	X3-79	X			
Craig, D. D.	X4-01	X			
Decker, W. A.	X3-67				X
Earley, J. N.	X3-85				X
Erpenbeck, E. G.	L0-30				X
Erickson, D. G.	E6-17				X
Evarts, M. D.	N1-29				X
Ferguson, D. R.	X3-85	X			
Fetterly, W. M.	R3-13	X			
Gamin, J. E.	X3-61	X			
Ginn, S. J.	X3-85	X			
Griswold, R. L.	X3-85	X			
Hall, M. N.	X3-85				X
Jacobsen, P. H.	X4-06				X
John, D. L.	X3-85				X
Langevin, M. J.	X4-01				X
Mathews, J. D.	X3-65				X
Mattsson, C. G.	X3-85	X			
McCall, D. L.	H1-11	X			
McClusky, J. K.	X4-01				X
Mildon, D. T.	X4-01				X
Molnar, C. S.	X4-01				X
Morson, R. B.	X3-85				X
Myott, E. M.	X4-01				X
Petersen, C. A.	L0-30				X
Richardson, M. D.	X4-01				X
~~Rourk, R. J.~~ GAS 11/27/02	~~H3-85~~				~~X~~

A-6000-136 (10/97)

DISTRIBUTION SHEET

To	From	Page 2 of 2
Distribution	G.A. Sly	Date 10/25/02
Project Title/Work Order		EDT No.
SNF-8163, Rev 5, Performance Specification for the K East Basin Sludge Transportation System - Project A.16		ECN No. EDC-02-13280

Name	MSIN	Text With All Attach.	Text Only	Attach/ Appendix Only	EDT/ECN Only
Ruane, T. J.	X3-51	X			
Rutherford, W. W.	L0-30				X
Sanan, R. K.	X3-85	X			
Sifuentes, M. B.	X3-85	X			
Sly, G. A.	X3-85	X			
~~Smith, J. I.~~ 11/27/02	~~X3-85~~				
Suyama, B. M.	X3-71				X
Triner, G. C.	T3-05				X
Wallace, S. C.	X4-01				X
Watson, D. J.	X3-79				X
Williams, J. D.	X3-79				X
Winward, R. T.	X3-79	X			
Central Files LMSI	B1-07	X			
Document Process Center	A3-94	X			
SNF Project Files A.16	X3-85	X			
Central Files	A3-88	X			
Helmann, S. L. - DOE	A4-79	X			
Steelman, M. R. - DOE	A4-79	X			
SNF Project Control (2) - Advanced Copies	X3-85	X			
Erickson, T. L.	L1-02	X			
Nelson, E.	X3-85	X			
Slotemaker, C.J.	X3-68				X

TABLE OF CONTENTS

1.0 INTRODUCTION 1
1.1 PURPOSE AND SCOPE 1
1.2 BACKGROUND 1
2.0 REFERENCES 3
2.1 NONGOVERNMENT DOCUMENTS 3
2.2 GOVERNMENT DOCUMENTS 4
2.3 HANFORD DOCUMENTS 5
3.0 PAYLOAD DESCRIPTION 8
3.1 KE BASIN SLUDGE DESCRIPTION 8
3.2 SLUDGE SLURRY CHARACTERISTICS 8
3.3 SLUDGE TRANSPORTATION SYSTEM PAYLOAD COMPOSITION 9
3.4 THERMAL DESCRIPTION 10
3.5 GAS GENERATION 10
3.6 PAYLOAD TRANSPORTATION CLASS 11
3.7 QUALITY LEVELS AND REQUIREMENTS 11
4.0 ORIGINATING FACILITIES - KE BASIN 12
4.1 FACILITY DESCRIPTION 12
4.2 NORMAL CONDITIONS OF KE OPERATIONS 16
4.3 ACCIDENT CONDITIONS OF KE OPERATIONS 17
5.0 TRANSPORTATION OPERATIONS AND INTERFACES 20
5.1 NORMAL CONDITIONS OF TRANSPORT 20
5.2 HYPOTHETICAL ACCIDENT CONDITIONS 23
6.0 RECEIVING FACILITY - T PLANT 26
6.1 FACILITY DESCRIPTION 26
6.2 NORMAL CONDITIONS OF T PLANT UNLOADING OPERATIONS ... 29
6.3 ACCIDENT CONDITIONS OF T PLANT UNLOADING OPERATIONS 30
6.4 NORMAL CONDITIONS OF T PLANT STORAGE OPERATIONS 32
6.5 ACCIDENT CONDITIONS OF T PLANT STORAGE OPERATIONS 34
7.0 LARGE CONTAINER 37
7.1 DIMENSIONS, VOLUME, AND ORIENTATION 37

7.2 WEIGHT 37
7.3 MATERIALS 38
7.4 FABRICATION 38
7.5 GENERAL DESIGN AND INTERFACE REQUIREMENTS 39
7.6 SERVICE LIFE 43
7.7 CONFINEMENT 44
7.8 SHIELDING 44
7.9 SLUDGE RETRIEVAL AND CONTAINER DECONTAMINATION 46
8.0 SHIPPING CASK (PACKAGING) 47
8.1 CASK DIMENSIONS, VOLUME AND ORIENTATION 47
8.2 MAXIMUM GROSS WEIGHT 47
8.3 MATERIALS 47
8.4 FABRICATION METHODS 48
8.5 LIFTING AND TIEDOWN ATTACHMENTS 48
8.6 GAS GENERATION AND VENTING 49
8.7 LID 49
8.8 CONTAINMENT 50
8.9 SHIELDING DURING OPERATIONS (KE BASIN AND T PLANT) 50
8.10 SERVICE LIFE 50
9.0 TRANSPORT TRAILER AND TRAILER SUPERSTRUCTURE 51
9.1 TRAILER 51
9.2 TRAILER SUPERSTRUCTURE 56
10.0 SUPPORT EQUIPMENT 57
10.1 PROCESS SHIELD PLATE 57
10.2 SPACERS 58
10.3 CASK LID INSTALLATION AND REMOVAL DEVICES 58
10.4 MAINTENANCE DEVICES 58
10.5 OFF-NORMAL CASK VENTING DEVICES 60

LIST OF TABLES AND FIGURES

Table 3-1 – DETERMINATION OF PAYLOAD LIMITS 10
Table 4-1 – KE BASIN ENVIRONMENT 13
Table 5-1 – PEAK HANFORD AIR TEMPERATURES 20
Table 5-2 – MAXIMUM SOLAR RADIATION (BTU/h-ft^2) 21
Table 6-1 – T PLANT ENVIRONMENT 26
Table 9-1 – TRAILER REGULATORY STANDARDS 51
Table 9-2 – TRAILER CHARACTERISTICS 52

Figure 4-1 – KE BASIN TRANSFER AREA 14
Figure 4-2 – CONCEPTUAL SLUDGE TRANSPORTATION SYSTEM 15
Figure 6-1 – T PLANT LIFTING HOOK FOR CASK LID 27
Figure 6-2 – T PLANT LIFTING HOOK FOR LARGE DIAMETER CONTAINER ... 28
Figure 7-1 - -T PLANT WATER ADDITION NOZZLE 45
Figure 10-1 – PROCESS SHIELD PLATE 59
Figure 10-2 – KE BASIN CRANE HOOK 60

Key words: K Basin, Sludge Transportation System, Spent Nuclear Fuel Project, shielded shipping cask, transportation trailer, sludge containers, sludge, Project A.16, sludge storage, T Plant dry cells.

Abstract: This performance specification documents the necessary requirements and criteria for procurement of the Hanford KE Basin Sludge Transportation System, for use by the Fluor Hanford Spent Nuclear Fuel Project. The Sludge Transportation System shall be used for the onsite shipment of Hanford KE Basin sludge to T Plant for subsequent storage. Fundamentally, the system shall consist of a shielded shipping cask, transportation trailer, and one size of inner sludge container.

ACRONYMS AND ABBREVIATIONS

AC	Acceptance Criteria
AISC	American Institute of Steel Construction
ALARA	as low as reasonably achievable
ASME	American Society of Mechanical Engineers
BTU/h	British thermal units per hour
CJP	complete joint penetration
cm	centimeter
container	Vessel holding the sludge and water
CWI	certified weld inspector
DAR	Design Analysis Report
DOT	U.S. Department of Transportation
FH	Fluor Hanford
FMCSR	Federal Motor Carrier Safety Regulations
ft	foot
ft^3	cubic foot
g	grams
gal	gallon
gpm	gallons per minute
HAC	hypothetical accident condition
in	inch
ISA	International Society for Measurement and Control
IXM	Ion Exchange Modules
KE	K East
k_{eff}	k effective
kg	kilogram
kg/m^3	kilogram per cubic meter
km	kilometer
km/h	kilometer per hour

kPa	kiloPascal
kPag	kiloPascal
KW	K West
L/m	liter per minute
lb	pound
lb/ft^3	pounds per cubic foot
m	meter
m^3	cubic meter
µgL	micrograms per liter
µm	micrometer (micron)
mi	mile
mm	millimeter
mrem/hr	millirem/hour
NCT	normal conditions of transport
NDE	nondestructive examination
NPS	nominal pipe size
NRC	U.S. Nuclear Regulatory Commission
OD	outside diameter
OSHA	Occupational Safety and Health Administration
package	Combination of packaging and payload, a fully loaded cask.
packaging	Hardware that contains and protects the payload. Packaging includes the cask with a container.
payload	Packaging (loaded cask) contents. Sludge and water.
PC	performance category
PCB	polychlorinated biphenyl
psi	pounds per square inch
psig	pounds per square inch gauge
PUREX	Plutonium Uranium Reduction Extraction Facility
QL	Quality Level
rad/hr	rad per hour
RH-TRU	remote-handled transuranic

RL	U.S. Department of Energy, Richland Operations Office
RMS	root mean square
SARP	Safety Analysis Report for Packaging
SNF	Spent Nuclear Fuel
std	standard
STS	sludge transportation system
vol%	volume percent

1.0 INTRODUCTION

1.1 PURPOSE AND SCOPE

This performance specification documents the necessary requirements and criteria for procurement of the Hanford K East (KE) Basin Sludge Transportation System (STS), for use by the Fluor Hanford (FH) Spent Nuclear Fuel (SNF) Project. The STS shall be used for the onsite shipment of KE Basin sludge to T Plant for subsequent storage. Fundamentally, the system shall consist of a shielded shipping cask (packaging), a transportation trailer, and an inner sludge container.

The scope of this specification includes the following items:

- Codes, standards, and governmental documents
- System payload description
- Originating facility sludge handling interfaces
- Transport trailer operations and interfaces
- Receiving facility container handling operations
- Large container performance requirements
- Shipping cask performance and packaging requirements
- Transport trailer regulatory and superstructure requirements
- Process shield plate, associated devices, and support equipment requirements

This specification also provides the safety criteria required for the development of a Hanford onsite Packaging and Shipping Safety Document (PSSD) in accordance with the *Hanford Sitewide Transportation Safety Document* (Reference 49), which shall document the technical justification for U.S. Department of Energy, Richland Operations Office (RL) approval of the transport of the sludge packaging on the Hanford Site. However, the development of the onsite PSSD is not part of the scope of this procurement.

1.2 BACKGROUND

The K Basins, built in the early 1950s, have been used to store irradiated N Reactor SNF underwater starting in 1975 for KE Basin, 1981 for K West (KW) Basin, and much earlier for single-pass reactor SNF. In 1992, the decision to deactivate the Plutonium Uranium Reduction Extraction (PUREX) Facility precluded processing the approximately 2,100 metric tons (2,315 tons) of heavy metal from SNF left in the K Basins, where it has remained. The SNF in KE Basin is stored in open-top canisters; some have closed bottoms while others have screened bottoms. The SNF in KW Basin is stored in canisters that have closed tops and bottoms; therefore, most of the corrosion products are retained within the canisters. A significant fraction of SNF in K Basins has become degraded due to cladding breaches during reactor discharge. Corrosion has

continued during underwater storage. Reference 46 provides detailed information on SNF contained in K Basins.

Associated with this SNF is an accumulation of particulate-layered material that is generally called sludge. Sludge is found on the basin floors, in canisters, and in the basin pits. As defined by the SNF Project and used herein, the term "sludge" refers to particulate matter that shall pass through a screen with 0.64-cm (0.25-in.) openings. The sludge is composed of irradiated nuclear fuel, fuel corrosion products, cladding, storage canister corrosion products, structural degradation, and corrosion products from features in the basin pools (e.g., racks, pipes, sloughed off concrete, etc.), beads lost from Ion Exchange Modules (IXM beads), environmental debris (e.g., wind blown sand, insects, pieces of vegetation, etc.), and various materials accumulated through the operation (e.g., sand filter media, hardware, plastic, etc.) of the basins over the past 30 years, *Observations of K Basins Sludge Behavior in Relation to Sludge Container Design and Storage at T Plant* (Reference 34). The estimated total sludge volume in KE Basin is nominally 42.6 m^3 (11,254 gal) as referenced in *105-K Basin Material Design Basis Feed Description For Spent Nuclear Fuel Project Facilities, Volume 2, Sludge* (Reference 41).

The basin water and sludge have the potential to leak to the environment due to the age and condition of KE Basin. The RL has determined the material stored in KE Basin presents a potential threat to human health and the environment, and a non-time-critical removal action conducted under the Comprehensive Environmental Response, Compensation, and Liability Act of 1980 is warranted to reduce this threat. The SNF Project mission includes safe removal and transportation of all sludge from the KE storage basin to a more secure storage state in the 200 West Area (currently identified as T Plant). Upon exiting KE Basin, sludge will be managed as remote-handled, transuranic (RH-TRU) waste and regulated as a polychlorinated biphenyl (PCB) remediation waste under the Toxic Substances Control Act, *10 Code of Federal Regulations (CFR) 835* and *10 CFR 830, Nuclear Safety Management* (Reference 16). The sludge will remain in storage until integrated into the plans for treating and disposing of the RH-TRU waste located on the Hanford Site, in accordance with Tri-Party Agreement Milestone M-91.

2.0 REFERENCES

This section lists documents that apply and/or are mandatory to the design, fabrication, analysis, testing, delivery, and operation of the SNF procured equipment described in this specification. Unless otherwise stated, the documents shall be the latest revision available as of June 1, 2001. Any conflict between this specification and the referenced documents shall be brought to the attention of the Buyer for resolution of the discrepancy.

2.1 NONGOVERNMENT DOCUMENTS

1) ANSI 14.23, *Draft American National Standard Design Basis for Resistance to Shock and Vibration of Radioactive Material Packages Greater Than One Ton in Truck Transport*, American National Standards Institute, New York, New York.

2) ANSI N14.5, *Radioactive Materials Leakage Tests on Packages for Shipment*, American National Standards Institute, New York, New York.

3) ANSI N14.6, *Special Lifting Devices for Shipping Containers Weighing 10,000* Pounds *or More*, American National Standards Institute Inc. NY, NY.

4) ANSI/AWS D1.1, *Structural Welding Code—Steel, American National Standards Institute and American Welding Society*, Miami, Florida.

5) ANSI/AWS D1.6, *Structural Welding Code—Stainless Steel, American National Standards Institute and American Welding Society*, Miami, Florida.

6) ASME, NQA-1, Subpart 2.2, *Quality Assurance Requirements for Packaging, Shipping, Receiving, Storage, and Handling of Items for Nuclear Power Plants*, (1994 Addition).

6a) ASME NQA-1 Part 1, Quality Assurance Requirements for Nuclear Facilities Application (1994 Addition).

7) ASME Boiler and Pressure Vessel Code, Section III, Division 1, Subsection NB, *Rules for Construction of Nuclear Facility Components*.

8) ASME, Section V, *Nondestructive Examination*, ASME Boiler and Pressure Vessel Code, American Society of Mechanical Engineers, New York, New York.

9) ASME Boiler and Pressure Vessel Code, Section VIII, Division 1, Subsection NB, *Rules for Construction of Pressure Vessels*.

10) ASME, Section IX, *Qualification Standard for Welding and Brazing Procedures, Welders, Brazers, and Welding and Brazing Operators*, ASME Boiler and Pressure Vessel Code, American Society of Mechanical Engineers, New York, New York.

11) ASME, Y14 Series, *Engineering Drawing and Related Documentation Practices*, American Society of Mechanical Engineers, New York, New York.

12) ANSI/AWS A2.4, *Standard Symbols for Welding, Brazing and Non Destructive Examination.*

2.2 GOVERNMENT DOCUMENTS

13) 10 CFR 61, *Licensing Requirements for Land Disposal of Radioactive Waste*, Code of Federal Regulations, as amended.

14) 10 CFR 71, *Packaging and Transportation of Radioactive Material*, Code of Federal Regulations, as amended.

15) 10 CFR 820, *General Statement of Enforcement Policy*, Code of Federal Regulations, as amended.

16) 10 CFR 830, *Nuclear Safety Management*, Code of Federal Regulations, as amended.

17) 10 CFR 835, subpart K, *Design & Control*, Code of Federal Regulations, as amended.

18) 10 CFR 835.704(b), *Administrative Records*, Code of Federal Regulations, as amended.

19) 29 CFR 1910, *Occupational Safety and Health Standards*, Code of Federal Regulations, as amended.

20) 49 CFR 172.500, Subpart F, *Placarding*, Code of Federal Regulations, as amended.

21) 49 CFR 173, *Shippers. General Requirements for Shipments and Packagings*, Code of Federal Regulations, as amended.

22) 49 CFR 393, *Protection Against Shifting or Falling Cargo*, Code of Federal Regulations, as amended.

23) 49 CFR 566, *Manufacturer Identification*, Code of Federal Regulations, as amended.

24) 49 CFR 567, *Certification*, Code of Federal Regulations, as amended.

25) 49 CFR 571, *Federal Motor Vehicle Safety Standards*, Code of Federal Regulations, as amended.

26) DOE Order 460.1A, *Packaging and Transportation Safety*, U. S. Department of Energy, Washington, D.C.

27) —DELETED–

28) NRC Information Notice 84-72, *Clarification of Conditions for Waste Shipments Subject to Hydrogen Gas Generation*, U.S. Nuclear Regulatory Commission, Washington, D.C.

29) NRC, NUREG/CR-3854, *Fabrication Criteria for Shipping Containers*, Fischer and Lai, U.S. Nuclear Regulatory Commission, Washington, D.C.

30) NRC, NUREG/CR-3019, *Recommended Welding Criteria For Use in the Fabrication of Shipping Containers for Radioactive Materials*, Monroe et al, U.S. Nuclear Regulatory Commission, Washington, D.C.

31) NRC, Regulatory Guide 7.11, *Fracture Toughness Criteria of Base Material for Ferritic Steel Shipping Cask Containment Vessels with a Maximum Wall Thickness of 4 Inches (0.1 m)*, U.S. Nuclear Regulatory Commission, Washington, D.C.

32) NRC, Regulatory Guide 7.12, *Fracture Toughness Criteria of Base Material for Ferritic Steel Shipping Cask Containment Vessels with a Wall Thickness Greater Than 4 Inches (0.1 m) But Not Exceeding 12 Inches (0.3 m)*, U.S. Nuclear Regulatory Commission, Washington, D.C.

2.3 HANFORD DOCUMENTS

33) AP-EN-6-042, Rev. 0, *Development of System Design Description*, Fluor Hanford, Richland, Washington.

34) Baker, R.B., B. J. Makenas, and J. A. Pottmeyer, 2000, *Observations of K Basins Sludge Behavior in Relation to Sludge Container Design and Storage at T Plant*, HNF-6705, Revision 0, Fluor Hanford, Richland, Washington.

35) Fadeff, J. G., 1992, *Environmental Conditions for On-Site Hazardous Materials Packages*, WHC-SD-TP-RPT-004, Rev. 0, Westinghouse Hanford Company, Richland, Washington.

36) Gibson, K.D. 2000, *K Basins Safety Analysis Report*, HNF-SD-WM-SAR-062, Rev. 5, Fluor Hanford, Richland, Washington.

37) Glitz and Johnson, 2001, *PHMC Radiological Control Manual*, HNF-5173, Rev 1, Fluor Hanford, Richland, Washington.

38) Green, J. R., 1996, *Preliminary Radiological Risk Assessment for Risk-Based Design Criteria of the K Basin Sludge Package*, WHC-SD-TP-RA-002, Rev. 0, Westinghouse Hanford Company, Richland, Washington.

39) —DELETED—

40) Packer, M.J., 1999, *105-K Basin Material Design Basis Feed Description for Spent Nuclear Fuel Project Facilities*, Volume 1, Fuel, HNF-SD-SNF-TI-009, Volume 1, Rev. 3, Numatec Hanford, Inc., Richland, Washington.

41) Pearce, K.L., 2001, *105-K Basin Material Design Basis Feed Description For Spent Nuclear Fuel Project Facilities*, Volume 2, Sludge, HNF-SD-SNF-TI-009, Volume 2, Rev. 4, Fluor Hanford, Richland, Washington.

42) Plys, M.G. and Pearce, K.L., 2001, *Supporting Basis for Spent Nuclear Fuel Project Sludge Technical Databook*, SNF-7765, Rev. 1, Fluor Hanford, Richland, Washington.

43) Boehnke, W.M., 2001, *Safety Analysis Report for Packaging (Onsite) Multicanister Overpack Cask*, HNF-SD-TP-SARP-017, Rev. 3B, Fluor Hanford, Richland, Washington.

44) HNF-PRO-097, Rev. 2, *Engineering Design and Evaluation (Natural Phenomena Hazard)*, Project Hanford Management System Procedure.

45) Ha, N. D., 1997, Letter Report, *Evaluation of Response Spectra for 105-KE/105-KW Basin*, SNF-TP-98-026 Fluor Hanford, Richland, Washington.

46) Duncan, D.R., 2001, *Spent Nuclear Fuel Project Technical Databook*, Volume 1, Fuel, HNF-SD-SNF-TI-015, Rev. 7, Fluor Hanford, Richland, Washington.

47) Pearce, K.L., 2001, *Spent Nuclear Fuel Project Technical Databook*, Volume 2, Sludge, HNF-SD-SNF-TI-015, Rev. 8, Fluor Hanford, Richland, Washington.

48) Schmidt, A., 2002, *Assessment of K Basin Sludge Volume Expansion Resulting from Uranium Corrosion During Storage*, PNNL 13786, Pacific Northwest National Laboratory, Richland, Washington.

49) DOE/RL-2001-0036, *Hanford Sitewide Transportation Safety Document.*

50) Nelson, R., 2001, SNF-8509, *Rev. 0, ALARA Design Report for 100 K East Basin Sludge and Water System – Project A-16*, Fluor Hanford, Richland, Washington.

51) DOE/RL-2001-46, Rev. 3, *Radioactive Air Monitoring Plan, K-East Basin Sludge and Water System.*

52) Carter, S.D., 1998, SD-RE-DGS-002, Rev. 3, *Jumper Design Standard.*

53) DOE-RL-92-36, *Hanford Site Hoisting and Rigging Manual.*

54) FH-0200768, *Safety Basis Thermal Analysis of The Sludge Transport System*, Letter Report from Schliebe M.J. to Crawford, R.M dated February 14, 2002 (incorporated into Reference 64).

55) Schultz, M.V., and Dodd III, E.N., 2001, HNF-6227, Rev. 1, *Hazard Evaluation for Storage for SNF Sludge at the Solid Waste Treatment Facility*, Flour Hanford, Richland, Washington.

56) —DELETED—

57) Megyesy, Eugene, *Pressure Vessel Handbook*, Eighth Edition, 1989, pg 213.

58) McDowell, A.K., 2001, *Hanford Site Solid Waste Acceptance Criteria*, HNF-EP-0063, Flour Hanford, Richland, Washington.

59) FH-0200821, *Safety Basis Thermal Analysis for T Plant Storage of Large Diameter Containers*, Letter Report from Schliebe M.J. to Crawford, R.M dated February 28, 2002 (incorporated into Reference 64).

60) HNF-11362, Rev. 0, *Hydrodynamic and Thermal Behavior of Reactive Sludge in Storage Containers (FAI/02-39)*, September 2002.

61) SNF-10607, Rev. 0, *Fuel Cycle Facility Source Term Model HADCRT 1.4: User's Manual (FAI/02-50)*

62) SNF-14042, Rev. 0, *HANSF/Sludge Computer Program User's Manual* (FAI/02-13), August 2002

63) HNF-10280, Rev. 0, FAI/02-08, *Sludge Settling and Segregation During Loading*, Fluor Hanford, Richland, Washington.

64) SNF-9955, Rev. 1, *Safety Basis Thermal Analysis for KE Basin Sludge Transport and Storage*, Fluor Hanford, Richland, Washington.

65) Pearce, K. L., 2002, *Spent Nuclear Fuel Project Technical Databook, Volume 2, Sludge*, HNF-SD-SNF-TI-015, Rev. 9, Fluor Hanford, Richland, Washington.

66) HNF-10439, Rev. 0, *Independent Calculation for Hanford SNF Sludge Transportation and Storage (FAI/02-11)*, Fluor Hanford, Richland, Washington.

2.3.1 Payload Definitions

2.3.1.1 For purpose of thermal and gas generation analysis 2 m^3 shall be considered the maximum payload.

2.3.1.2 For purpose of criticality 3 m^3 shall be considered the maximum payload.

2.3.1.3 For purpose of shielding and structural analysis 3 m^3 shall be considered as the design payload and the maximum fill volume (based on physical canister volumetric properties) shall be considered the maximum payload.

3.0 PAYLOAD DESCRIPTION

3.1 KE BASIN SLUDGE DESCRIPTION

Retrieved sludge from KE Basin shall be managed and packaged as one waste stream. The KE sludge stream is to be comprised of KE floor, pits and canister sludge. The KE sludge shall be stored in the large containers described in Section 7.0 of this specification. The estimated total nominal volume of KE Basin sludge to be packaged in large containers is 42.6 m^3 (1,505 ft^3) and 54.8 m^3 (1936.1 ft^3) bounding.

Spent Nuclear Fuel Project Technical Databook, Sludge, HNF-SD-SNF-TI-015, Volume 2 (Reference 47) provides an overview of the nominal and bounding properties of the KE floor and KE canister sludge from KE Basin that shall be stored in the large containers. Each source of sludge is a unique, non-homogeneous mixture, possibly containing irradiated fuel, debris such as windblown sand or insects, rack and canister corrosion products, and/or fission products. The source for sludge composition and properties as described in *105-K Basin Material Design Basis Feed Description For Spent Nuclear Fuel Project Facilities*, Volume 2, Sludge (Reference 41), *Supporting Basis for Spent Nuclear Fuel Project Sludge Technical Databook*,(Reference 42) and References 47 and 65[1], shall be used unless otherwise directed by the buyer. The basin water is radioactive and will cover the sludge within the large container. The basin process water comes from loading and flushing operations.

3.2 SLUDGE SLURRY CHARACTERISTICS

The large container will be loaded via water/sludge slurry using KE Basin water and sludge having characteristics described in Section 3.3.

The water/sludge slurry shall be transferred as suspended solids. Following transfer, the sludge concentration is expected to be nominally 30% solids by volume, on average.

An exception to the sludge composition and properties listed in the above referenced documents is that the maximum particle size shall be conservatively assumed to be 0.89 cm (0.35 in.). The most limiting payload configuration, including layering, settling, or geometric re-configuration, shall be evaluated for each respective thermal, gas generation, shielding, and criticality evaluation.

[1] For the process shield plate calculations, Revision 9 of HNF-SD-SNF-TI-015 (Reference 65) was used. For all other analyses, Revision 8 (Reference 47) was used.

3.3 SLUDGE TRANSPORTATION SYSTEM PAYLOAD COMPOSITION

The nominal ratio of KE sludge streams that makes up the payload of a large container is approximately 80-vol% KE floor and 20-vol% KE canister sludge (80/20). The worst-case ratio is 60/40.

The payload capacity for the large container is specified in Section 7.1.2. The behavior of the sludge, during loading, transportation and/or storage may limit the maximum volume loading of the large container. The performance and AC (criticality, shielding, thermal, etc.) for each of the STS components (cask, container, etc.), during each of the operational segments (loading, transportation, storage) should serve as the basis for determination of the worst case KE sludge stream ratio and accompanying volume.

3.3.1 Determination of Payload Limits

Based on the volume definitions listed at the end of this section, the effects of loaded volume and sludge stream ratio must be evaluated. Table 3-1, outlines the required analytic processes and required calculations for the determination of payload limits for normal, bounding and maximum acceptable payload volumes. The prescriptive process steps for each analytic discipline (shielding, structural, etc.) are as follows:

- Perform the analyses in Columns A and B.
  - ✓ Design requirements are satisfied provided the Acceptance Criteria (AC) of Column A is ≥ 0.
  - ✓ The volumes determined at Column B are the maximum payload volumes that may be accommodated under the applicable AC. Each analytic discipline (e.g., criticality, shielding, structural, etc.) might be expected to determine a different maximum payload volume. The lesser of these several volumes is designed as the limiting maximum volume, $V_{max\ 60/40}$.
- The limiting maximum volume, $V_{max\ 60/40}$, is next compared to the maximum normal volume, V_{mn}.
- If $V_{max\ 60/40} < V_{mn}$; then perform the calculations of Column C. Again, each analytic discipline might well arrive at different mix ratios at which the AC goes to zero at maximum normal payload. The lesser mix ratio is now finally designated as the "Worst-Case Source Term."
- If the calculations of Column C need not be performed, then the "Worst-Case Source Term" is defined as the source associated with $V_{max\ 60/40}$, found above.

This "Worst-Case Source Term" is thus defined, as the mixture ratio of KE sludge streams that when considered in the evaluations is more unfavorable. The "Worst-Case Source Term" will be used for defining the off-normal accident payload mixture concentration and volume.

Table 3-1 – DETERMINATION OF PAYLOAD LIMITS

	A	B	C
	Nominal Payload Mixture Ratio (Mix Ratio = 80/20)	Bounding Limit Payload Mixture Ratio (Mix Ratio = 60/40)	Maximum Normal Volume
Normal	Input - Set Max Normal Volume Input - Set 80/20 Mix Ratio Output - AC on design criteria	Input - AC=0.0 on design criteria Input - Set 60/40 Ratio Output- Determine Volume	Input - AC=0.0 on design criteria Input - Set Max Normal Volume Output - Determine limiting mix ratio
Off-Normal /Accident	Input - Set LC Capacity Volume Input - Set 80/20 Ratio Output - AC on design criteria	Input - AC=0.0 on design criteria Input - Set 60/40 Ratio Output - Determine Volume	Input - AC=0.0 on design criteria Input - Set Max Normal Volume Output - Determine limiting mix ratio

Notes: AC = Acceptance Criteria

3.3.2 Radionuclide Composition

This section provides the source terms to be used for the shielding, criticality, thermal, containment, and dose consequence (i.e., release) evaluations of the large containers and cask system. Reference 47 provides the shielding design basis source term for the large container. Reference 47 also provides the dose consequence source term for the large container. Table 4-17 of Reference 47 shall be used for all shielding evaluations. Reference 47 provides the mass and activity of the KE Basin process water. This activity must be considered for the interstitial and cover water in the large container.

3.3.3 CHEMICAL COMPOSITION

Chemical inventory of the sludge shall be determined using values in Reference 41.

3.4 THERMAL DESCRIPTION

The heat generation of the sludge shall be determined using the data contained in Reference 47 and Reference 41 and shall consider both the decay power and exothermic chemical heat. The sludge heat generation is a function of temperature and dependant on the KE floor to KE canister payload mixture and the operational sequence during KE Basin loading.

3.5 GAS GENERATION

Sludge and water mixtures may produce gases from fission gas release, radiolysis, and uranium reaction with water. Radiolysis produces both hydrogen and oxygen gas while uranium/water reactions produce hydrogen gas. Refer to Sections 4.0, 5.0, and 6.0 for gas generation analysis criterion. Gas Generation of the sludge shall be based on the data contained in Reference 47.

In addition to the sludge volume loadings described in Section 3.3.1, the initial volume loading, V_o, considering the following shall be determined based on the following calculation.

For Storage:

$$1.54 \times 1.22 \times V_0 + V_{10inches\ H2O} < \text{max. vol. capacity} \qquad \text{(Eq-1)}$$

For Basin Loading and Transportation:

$$V_0 + V_{10inches\ H2O} + 1.6m^3 < \text{max. vol. capacity} \qquad \text{(Eq-2)}$$

Where:

V_o = Volume of as-settled sludge.

1.54 = Allowable gas expansion.

1.22 = Uranium corrosion, Reference 48

$1.6m^3$ = Void Volume in both container and cask following loading, Reference 54

Equation 1 should be used for all calculations and analysis involving long term storage at T Plant (large container only condition). Equation 2 should be used for all calculations and analysis involving KE Basin loading and transportation (loading and/or sealed cask condition).

3.6 PAYLOAD TRANSPORTATION CLASS

The sludge package is classified under the U.S. Nuclear Regulatory Commission (NRC)/U.S. Department of Transportation (DOT) regulations as Type B fissile payload.

3.7 QUALITY LEVELS AND REQUIREMENTS

The Contractor is required to provide a cross match matrix of the FH Quality Level (QL) to the Contractor's quality program. The QL of the components is identified in the appropriate sections of the statement of work.

4.0 ORIGINATING FACILITIES - KE BASIN

4.1 FACILITY DESCRIPTION

The sludge loading operation of the large container will take place in the north transfer bay within KE Basin (see Figure 4-1). The cask containing the large container will arrive on the transport trailer as a single-unit, fixed system (see Figure 4-2). The cask will remain on the trailer during loading operations. The cask lid will be removed and stowed on the trailer using KE Basin overhead bridge crane. The large container will remain within the cask during the sludge loading operation. A process shield plate will be placed onto the cask and will cover the large container, with openings allowed for the process piping connections and lifting attachment.

The sludge removed from the basin will be pumped directly to the large container. The transport water will be filtered inside of the large container and returned to the basin. The payload in the large container will be monitored for sludge weight and level. It will be controlled to ensure that the weight/level limits described in the as low as reasonably achievable (ALARA) management plan are not exceeded.

Upon completion of the loading operation of the large container to payload requirements, the large container will be prepared for shipment. The process piping/hose connections will be disconnected and secured. Following loading and final decanting of the large diameter container, a NucFil filter and a rupture disc will be installed. Mating caps will be placed on the nozzles of the large container. The process shield plate (PSP) will be removed and set aside in a storage rack. The cask lid will be replaced on the cask and bolted. The transport trailer will be withdrawn from the KE Basin building and the shipment of sludge will be transported via Hanford Site roads to T Plant within a 30-hour maximum shipping time interval.

The STS design shall be performed in accordance with:

- K Basins Safety Analysis Report, Reference 36
- Preliminary Radiological Risk Assessment for Risk-Based Design Criteria of the K Basin Sludge Package, Reference 38
- ALARA Report – Sludge and Water Systems Pre-Conceptual Design Project A.16, Reference 50
- Radioactive Air Monitoring Plan, K-East Basin Sludge and Water System, Reference 51

Radiation monitoring is not within the Contractor's scope of this performance specification.

4.1.1 Environmental (Ambient) Conditions

KE Basin environmental conditions are derived in (Reference 47) and summarized in Table 4-1.

Table 4-1 – KE BASIN ENVIRONMENT
Safety Analysis Report for Packaging (Onsite) Multicanister Overpack Cask (Reference 43)

Parameter	Maximum	Minimum
Ambient Temperature	115 °F (46 °C)	-1 °F (-18 °C)
Normal Pool Water Temperature	77 °F (25 °C)	50 °F (10 °C)
Off-Normal Pool Water Temperature	90 °F (32 °C)	43 °F (6 °C)

4.1.2 Facility/Process Interface

The component-specific interfaces, such as process ports, are defined in the respective sections of this specification

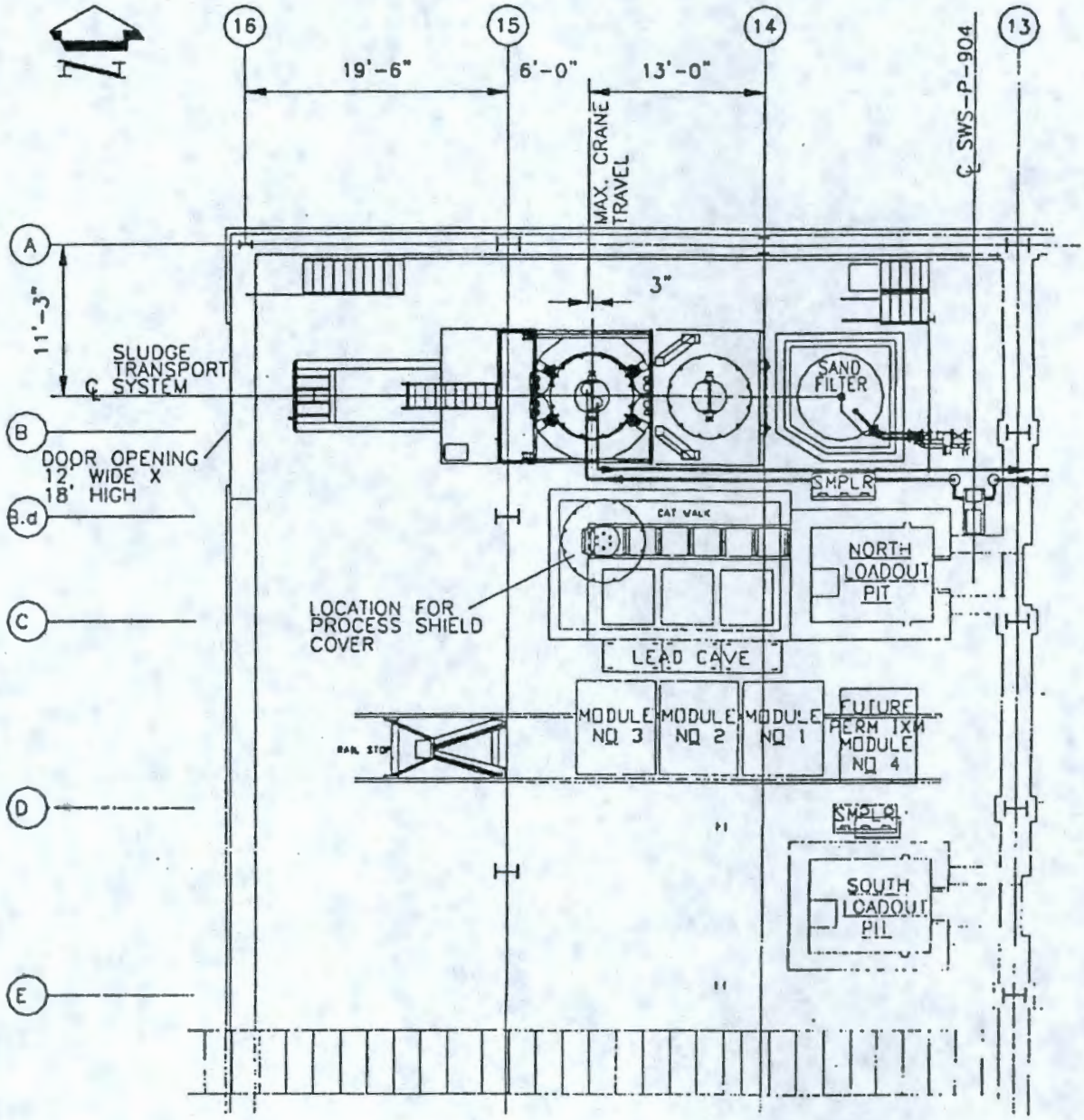

Figure 4-1 – KE BASIN TRANSFER AREA

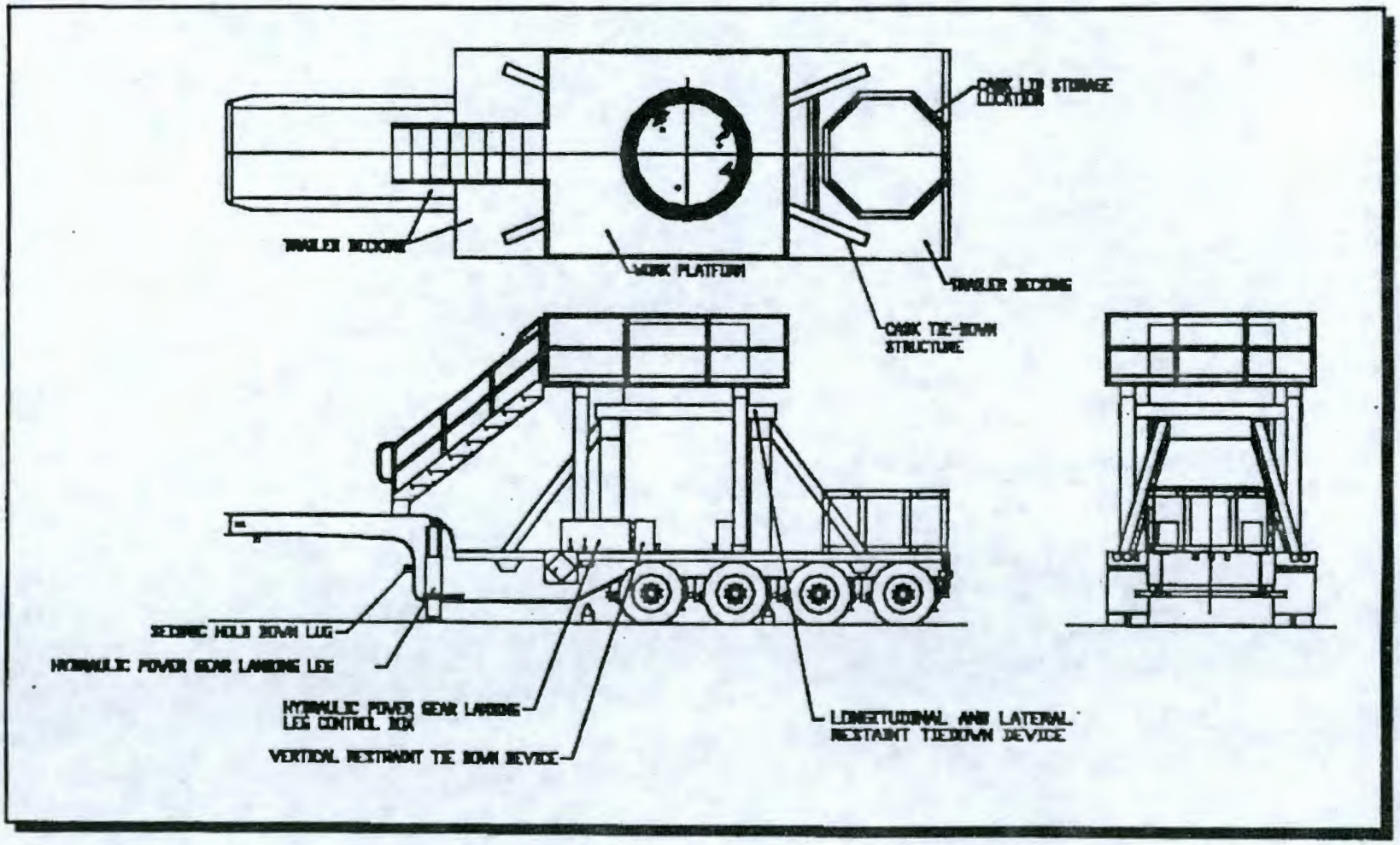

Figure 4-2 – CONCEPTUAL SLUDGE TRANSPORTATION SYSTEM

4.2 NORMAL CONDITIONS OF KE OPERATIONS

For conditions normally incident to KE operations the STS shall be evaluated for its ability to perform normal operations and maintain confinement, process integrity, shielding, and nuclear criticality control when subjected to the following conditions:

4.2.1 Initial Conditions

With respect to the initial conditions for the load conditions in this section, the demonstration of compliance with the AC described in Section 4.2.3 must be based on the initial environmental conditions, defined in Section 4.1.1, preceding and following the load condition and remaining at that value whichever is most unfavorable for the feature/analysis under consideration. The initial internal pressure within the pressure boundary must be considered to be the pressure with the ambient conditions considered to precede and follow the load conditions.

Note: The load conditions and associated criteria may be bounded by, or equivalent to, the evaluations of other operational segments, thus detailed evaluation may not be required provided adequate justification is provided.

4.2.2 Load Conditions

The following loading conditions shall be used for all normal KE Basin calculations.

4.2.2.1 CONDITION 1: The maximum heat generation rate based on the limiting normal payload as described in Section 3.0, plus **maximum normal** initial environment conditions (e.g., normal temperatures during the summer).

4.2.2.2 CONDITION 2: The maximum heat generation rate based on the limiting normal payload as described in Section 3.0, plus **minimum normal** initial environment conditions (e.g., normal temperatures during the winter).

4.2.3 Acceptance Criteria

The design limits for the individual components, parts, and materials shall be determined by analyses. The analyses shall be based upon the conditions listed below. The operational temperatures, pressures shall be shown to not exceed the design limits.

4.2.3.1 Confinement: The large container design shall ensure the payload is confined during normal KE operations. For this operational segment, the container and sludge loadout piping are primary containment boundaries. Confinement for the large container is demonstrated by retention of structural integrity and no unmitigated leakage.

4.2.3.2 Thermal: The STS design shall ensure the maximum temperature of the payload does not reach 100 °C (212 °F) at any time during loading, transportation and storage.

4.2.3.3 Criticality: The STS design shall ensure the following criteria are satisfied during operations at KE Basin:

4.2.3.3.1 The contents shall remain subcritical (k_{eff} less than 0.98, where 0.98 is the mean value plus two times the one standard deviation value [two standard deviations] with bias applied) for the casks during normal KE operations, also assuming the following:

4.2.3.3.1.1 The most reactive credible configuration is consistent with the chemical and physical form of the allowed packaged material,

4.2.3.3.1.2 Moderation by water to the most reactive credible extent,

4.2.3.3.1.3 Close reflection of the containment system by water on all sides or such greater reflection of the containment system as may additionally be provided by the surrounding material of the packaging.

4.2.3.4 Shielding: The Cask and Process Shield Plate design shall ensure their respective shielding criteria are met during normal KE operations.

The normal conditions shielding requirements for the Cask and Process Shield Plate are described in Sections 5.1.3.3 and 10.1.2.3, respectively.

4.2.3.5 Gas Generation: The hydrogen gas generation shall be evaluated to show that during sludge loading and preparation for transportation no accumulation of hydrogen gas exceeds one-quarter of the lower flammability limit assuming normal operation of KE Basin ventilation.

4.3 ACCIDENT CONDITIONS OF KE OPERATIONS

The STS shall be evaluated for the following events, assumed to occur separately. For design evaluation, these accidents shall be evaluated at whichever is more severe of the environmental conditions defined in Section 4.1.1 for the individual incident. For accident conditions incident to KE operations the STS shall be evaluated for its ability to maintain containment, shielding, and nuclear criticality control when subjected to the following conditions:

4.3.1 Initial Conditions

With respect to the initial conditions for the load conditions in this section, the demonstration of compliance with the AC described in Section 4.3.3 must be based on the initial environmental conditions, defined in Section 4.1.1, preceding and following the load condition and remaining at that value whichever is most unfavorable for the feature/analysis under consideration. The initial internal pressure within the pressure boundary must be considered to be the pressure with the ambient conditions considered to precede and follow the load conditions.

Note: The load conditions and associated criteria may be bounded by, or equivalent to, the evaluations of other operational segments, thus detailed evaluation may not be required provided adequate justification is provided.

4.3.2 Load Conditions

The following loading conditions shall be used for all normal KE Basin calculations.

4.3.2.1 CONDITION 3: The maximum heat generation rate based on the limiting off-normal/accident payload as described in Section 3.0, plus **maximum off-normal** initial environment conditions.

4.3.2.2 CONDITION 4: The maximum heat generation rate based on the limiting off-normal/accident payload as described in Section 3.0, plus **minimum off-normal** initial environment conditions.

4.3.2.3 Earthquake: The STS shall be evaluated to a performance category (PC) 3 earthquake, as defined by *Engineering Design and Evaluation (Natural Phenomena Hazard),* (Reference 44) and *Evaluation of Response Spectra for 105-KE/105-KW Basin* (Reference 45). The analysis shall consider the container in the cask and attached to the trailer.

4.3.2.4 Object Impact: The Cask Lid and Process Shield Plate shall be evaluated to demonstrate the impact of the hemispherical end of a vertical steel cylinder of 3.2-cm (1.25-in.) diameter and 5.9-kg (13-lb) mass, dropped from a height of 1 m (40- in.) onto the exposed surface of the package that is expected to be most vulnerable to puncture. The long axis of the cylinder must be perpendicular to the cask surface.

4.3.3 Acceptance Criteria

The design limits for the individual components, parts, and materials shall be determined by analyses. The analyses shall be based upon the conditions listed below. The operational temperatures, pressures shall be shown to not exceed the design limits.

4.3.3.1 Confinement: The STS design shall ensure the payload is confined during off-normal KE operations. Confinement is demonstrated by structural stability and integrity of the cask and trailer.

4.3.3.2 Thermal: The STS design shall ensure the maximum temperature of the payload does not reach 100 °C (212 °F) at any time during loading, transportation and storage.

4.3.3.3 Criticality: Subsequent to the conditions described in Section 4.3.2, a single STS cask shall be evaluated versus the following criteria:

4.3.3.3.1 The contents shall remain subcritical (k_{eff} less than 0.98) for the off-normal volume loading, during and subsequent to any single condition described in Section 4.3.2, also assuming the following:

4.3.3.3.1.1 The fissile material is in the most reactive credible configuration consistent with the chemical form and damaged condition of the cask and payload.

4.3.3.3.1.2 There is optimum interspersed aqueous moderation.

4.3.3.4 Shielding: Subsequent to any single condition described in Section 4.3.2, accident conditions shielding requirements for the cask as described in Section 5.1.3.3 and accident conditions shielding requirements for the Process Shield Plate as described in Section 10.1.2.4, must be met.

4.3.3.5 Gas Generation: The hydrogen gas generation shall be evaluated to show that within KE Basin no accumulation of hydrogen gas exceeds one-quarter of the lower flammability limit assuming off-normal operation of KE Basin ventilation.

5.0 TRANSPORTATION OPERATIONS AND INTERFACES

5.1 NORMAL CONDITIONS OF TRANSPORT

Evaluation of the transportation package design under normal conditions of transport (NCT) shall include a determination of the effect on the package of the load conditions specified in this section. A Design Analysis Report (DAR) shall evaluate the cask design for its ability to maintain containment, shielding, and nuclear criticality control.

5.1.1 Initial Conditions

With respect to the initial conditions for the load conditions in this section, the demonstration of compliance with the AC described in Section 5.1.3 must be based on the ambient temperature preceding and following the load condition remaining at that value between –33 °C (-27 °F) and 46 °C (115 °F) (see Reference 49) whichever is most unfavorable for the feature/analysis under consideration. The ambient temperatures at the Hanford Site for the peak summer month are tabulated in Table 5-1. The initial internal pressure within the pressure boundary must be considered to be the pressure with the ambient conditions considered to precede and follow the load conditions.

Table 5-1 – PEAK HANFORD AIR TEMPERATURES
Environmental Conditions for Onsite Hazardous Materials Packages (see Reference 35)

Time	Temperature °C/°F	Time	Temperature °C/°F
12 a.m.	28/82	2 p.m.	44/111
2 a.m.	26/78	4 p.m.	46/115
4 a.m.	24/75	6 p.m.	45/113
6 a.m.	23/74	8 p.m.	38/100
8 a.m.	29/85	10 p.m.	32/89
10 a.m.	36/97	12 a.m.	28/82
12 p.m.	39/103		

Table 5-2 – MAXIMUM SOLAR RADIATION (BTU/h-ft^2)
(see Reference 35)

Time	Vertical surfaces facing								Horizontal surface facing up
	N	NE	E	SE	S	SW	W	NW	
4 a.m.	0	0	0	0	0	0	0	0	0
6 a.m.	57	192	211	105	17	17	17	17	64
8 a.m.	35	173	268	208	42	32	32	32	127
10 a.m.	42	56	177	213	126	45	42	42	281
12 noon	45	45	49	120	167	120	49	45	314
2 p.m.	42	42	42	45	126	213	177	56	281
4 p.m.	35	32	32	32	42	208	268	173	127
6 p.m.	57	17	17	17	17	105	211	192	64
8 p.m.	0	0	0	0	0	0	0	0	0

5.1.2 Load Conditions

The following loading conditions shall be used for all normal transportation calculations.

5.1.2.1 CONDITION 5: The maximum heat generation rate based on the limiting payload as described in Section 3.0, plus <u>maximum normal</u> initial environment conditions, plus maximum solar heat load (see Table 5-2) plus <u>maximum</u> air temperature of 46 °C (115 °F).

5.1.2.2 CONDITION 6: The maximum heat generation rate based on the limiting payload as described in Section 3.0, plus <u>minimum normal</u> initial environment conditions.

5.1.2.3 A minimum air temperature –33 °C (-27 °F) and zero heat generation rate.

5.1.2.4 Reduced External Pressure: An external pressure of 25 kPa (3.5 psi) absolute.

5.1.2.5 Increased External Pressure: An external pressure of 140 kPa (20 psi) absolute.

5.1.2.6 Maximum Internal Pressure: An internal operating pressure of 551.58 kPag (80 psig) is the maximum achievable pressure during transportation.

5.1.2.7 Vibration: Vibration normally incident to transport. The cask shall be evaluated in accordance with *Draft American National Standard Design Basis for Resistance to Shock and Vibration of Radioactive Material Packages Greater Than One Ton in Truck Transport* (Reference 1) to demonstrate containment when exposed to normal vibration due to the onsite transfers defined herein by the selected transport vehicle. Tiedowns and hold down bolts shall also be evaluated for this scenario.

5.1.2.8 Water Spray: The cask shall be evaluated to demonstrate containment through a water spray that simulates exposure to rainfall of approximately 5 cm (2 in.) per hour for at least one hour.

5.1.2.9 Penetration: The cask shall be evaluated to demonstrate the impact of the hemispherical end of a vertical steel cylinder of 3.2 -m (1.25-in.) diameter and 6 kg (13 lb) mass, dropped from a height of 1 m (40 in.) onto the exposed surface of the package that is expected to be most vulnerable to puncture. The long axis of the cylinder must be perpendicular to the cask surface.

5.1.2.10 Free Drop: The cask shall be evaluated to demonstrate containment subsequent to a 0.3 m (1 ft) free drop onto a 20.3-cm (8-in.) thick concrete surface with a concrete strength of 20,685 kPa (3,000 psi), Grade 60, No. 7 reinforcing bar spaced 30.5 cm (12 in.) apart with 5.1-cm (2-in.) cover, each way, each face, and soil properties in accordance with *DOE/RL-2001-0036, Hanford Sitewide Transportation Safety Document* (Reference 49). The cask shall impact in an orientation expected to cause maximum damage. If the worst case orientation does not bound the corner drop accident, additional analysis will be performed.

5.1.3 Acceptance Criteria

The design limits for the individual components, parts, and materials shall be determined by analyses. The analyses shall be based upon the conditions listed below. The operational temperatures, pressures shall be shown to not exceed the design limits.

5.1.3.1 Containment: The cask shall be designed, constructed, and prepared for shipment so that when subjected to normal conditions, the containment boundary shall remain leak-tight in accordance with the *Radioactive Materials Leakage Tests on Packages for Shipment* (Reference 2) definition of "leak-tight" (leakage less than 10^{-7} std cc/sec air). If the cask design incorporates a venting feature, the leakage rate evaluation shall be made with the vent(s) sealed. For conditions normally incident to transfer, the packaging shall be evaluated by analysis to meet the containment criteria listed above.

5.1.3.2 Thermal: Maximum accessible outside surface temperature of the cask shall be less than 85 °C (185 °F) in 37.8 °C (100 °F) air temperature and in the shade. The STS design shall ensure the maximum temperature of the payload does not exceed 100 °C (212 °F) at any time during loading, transportation and storage.

5.1.3.3 Shielding: Shielding shall meet the DOT requirements for shipments of radioactive materials as defined in *Shippers General Requirements for Shipments and Packaging* (Reference 21).

5.1.3.4 Criticality: The cask design shall ensure the cask meets the following criteria:

5.1.3.4.1 The contents shall remain subcritical (keff less than 0.98, where 0.98 is the mean value plus two times the one standard deviation value [two standard deviations] with bias applied) for the casks during normal conditions of transfer, as described in Section 5.1.1, also assuming the following (DOE/RL-2001-0036, Rev. 0, *Hanford Sitewide Transportation Safety Document*):

5.1.3.4.1.1 The most reactive credible configuration is consistent with the chemical and physical form of the allowed packaged material,

5.1.3.4.1.2 Moderation by water to the most reactive credible extent,

5.1.3.4.1.3 Close reflection of the containment system by water on all sides or such greater reflection of the containment system as may additionally be provided by the surrounding material of the packaging. In addition analysis to evaluate arrays of packages in accordance with 10 CFR 71.55 (Reference 14) will be performed.

5.2 HYPOTHETICAL ACCIDENT CONDITIONS

Based on the preliminary risk evaluation, *Preliminary Radiological Risk Assessment for Risk-Based Design Criteria of the K Basin Sludge Package* (References 38 and 49), the following accidents meet the criteria for a performance-based design package. Evaluation for hypothetical accident conditions (HAC) shall be based on sequential application of the load conditions specified in this section. A DAR shall evaluate the cask design for its ability to maintain containment, shielding, and nuclear criticality control.

5.2.1 Initial Conditions

With respect to the initial conditions for the load conditions in this section, the demonstration of compliance with the AC described in Section 5.2.3, must be based on the ambient temperature preceding and following the load condition remaining at that value between -33 °C (-27 °F) and 46 °C (115 °F) whichever is most unfavorable for the feature under consideration. The initial internal pressure within the pressure boundary must be considered to be the pressure with the ambient conditions considered to precede and follow the load conditions.

5.2.2 Load Conditions

5.2.2.1 Impact: The worst case failure threshold evaluation for the cask system shall be a free drop of 9.1 m (30 ft) onto an 20.3-cm (8-in.) thick concrete surface with a concrete strength of 20,685 kPa (3,000 psi), Grade 60, No. 7 rebar spaced 30.5 cm (12 in.) apart with 5.1-cm (2-in.) cover, each way, each face, and soil properties in accordance with Reference 49. The cask shall impact in an orientation expected to cause maximum damage.

5.2.2.2 Puncture: The worst case credible puncture incident is equivalent to a free drop of the cask through a distance of 1 m (40 in.) in a position expected to cause the maximum damage, onto the upper end of a solid, vertical, cylindrical, mild-steel bar. The bar must be 15 cm (6 in.) in diameter, with the top horizontal and its edge rounded to a radius of not more than 6 mm (0.25 in.) and of a length to cause maximum damage to the cask, but not less than 20 cm (8 in.) long. The puncture bar is mounted on a 20.3-cm (8-in.) thick concrete horizontal surface with a concrete strength of 20,685 kPa 3,000 psi, Grade 60, No. 7 rebar spaced 30.5 cm (12 in.) apart with a 5.1-cm (2-in.) cover, each way, each face, and soil properties in accordance with Reference 49.

5.2.2.3 Fire: The worst-case fire that the cask system can be exposed to during transport is a 30-minute, 800 °C (1,475 °F) engulfing fire that has an emissivity coefficient of 0.9. The surface absorptivity of the cask shall be the greater of the anticipated absorptivity or 0.8. Insolation may be assumed to be 'inactive' following the fire. Active cooling of the cask following the 30-minute fire can be assumed. If assumed, the active cooling shall consist of quenching the outer cask surfaces using water spray from a fire hose rated at 473 L/m (125 gal/min.) Flow at this maximum rate shall be assumed to occur for a maximum of 45 minutes. If needed, additional quenching water flow can be assumed for an additional period of 100 minutes at a maximum flow rate of 189 L/m (50 gal/min.). Assume a water temperature of 29 °C (85 °F) for this procedure. Any active cooling system for the packaging shall be assumed to be inoperative during the fire.

5.2.3 Acceptance Criteria

The design limits for the individual components, parts, and materials shall be determined by analyses. The analyses shall be based upon the conditions listed below. The operational temperatures, pressures shall be shown to not exceed the design limits.

5.2.3.1 Containment: Subsequent to the conditions described in Section 5.2.3, the packaging system shall maintain a single containment barrier for the payload. The system must structurally retain the container and its contents. Gas or radiological material (except Kr 85) leakage past the seals following accident conditions shall limit releases to 1 A_2 [see 49 CFR 173.435 (Reference 21)] per week.

5.2.3.2 Over Pressurization: The worst-case over-pressurization that the cask system can be exposed to shall not be limited by cask design.

5.2.3.3 Thermal: The STS design shall ensure the maximum temperature of the payload does not reach 100 °C (212 °F) at any time during loading, transportation, storage and subjected to accident conditions.

5.2.3.4 Shielding: Subsequent to the conditions described in Section 5.2.2, the dose 1 m (3.3 ft) from the surface of the packaging system shall not exceed 1 rem/h. With respect to the thermal condition, there shall be no net loss of lead shielding if lead is used. Lead may melt but cannot be lost.

5.2.3.5 Criticality: Subsequent to the conditions described in Section 5.2.3, the packaging system shall be evaluated for one cask to meet the following criteria:

5.2.3.5.1 The contents shall remain subcritical (keff less than 0.98) for the fully loaded cask during and subsequent to an accident condition, also assuming the following:

5.2.3.5.1.1 The fissile material is in the most reactive credible configuration consistent with the chemical form and damaged condition of the cask and payload.

5.2.3.5.1.2 There is optimum interspersed aqueous moderation.

5.2.3.5.1.3 The payload shall be evaluated for storage configurations of an infinite array and close full reflection in accordance with 10 CFR 71.55 (Reference 14).

6.0 RECEIVING FACILITY - T PLANT

6.1 FACILITY DESCRIPTION

The receiving facility will be T Plant, a remote handling facility, located in the 200 West Area. The cask and transport trailer, with a load of sludge in the large container, will arrive as a single-unit, fixed system (see Figure 4-2).

The cask will remain on the trailer during unloading of the large container. The cask lid, followed by the large container, will be removed from the cask using the T Plant, 10-ton, overhead bridge crane. The large containers will be stored within liner assemblies placed in T Plant dry process cells. All operations following the cask bolt removal shall be by remote handling.

A new empty large container will be drawn from temporary storage at T Plant and inserted into the cask with the 10-ton crane. The cask lid will be replaced. The empty container will be transported to KE Basin for loading with sludge.

The new empty large containers will be protected from the possibility of surface contamination during the temporary storage or cask loading operation at T Plant.

6.1.1 Environmental Conditions

T Plant environmental conditions are derived in Reference 47 and summarized in Table 6-1.

Table 6-1 – T PLANT ENVIRONMENT

Parameter	Maximum	Minimum
Airflow though Canyon	35,800 CFM	natural convection
Airflow through Process Cell	995 CFM	485 CFM
Ambient Temperature	90°F (32°C)	+19.4°F (-7°C)

6.1.2 Operating Scenarios and Assumptions

All governing operating scenarios and assumptions have been provided in the respective section of the performance specification.

6.1.3 Facility/Process Interface

The components specific interfaces, such as process ports, are defined in the respective sections of this specification. No outside facility/process interfaces for the Sludge Transport System have been identified to exist outside the requirements contained in this performance specification. Figure 6-1 shows the dimensions of the lifting hook for removal of the cask lid using the cask lid lifting device. Figure 6-2 shows the dimensions of the hook for removal of the large diameter container from the cask.

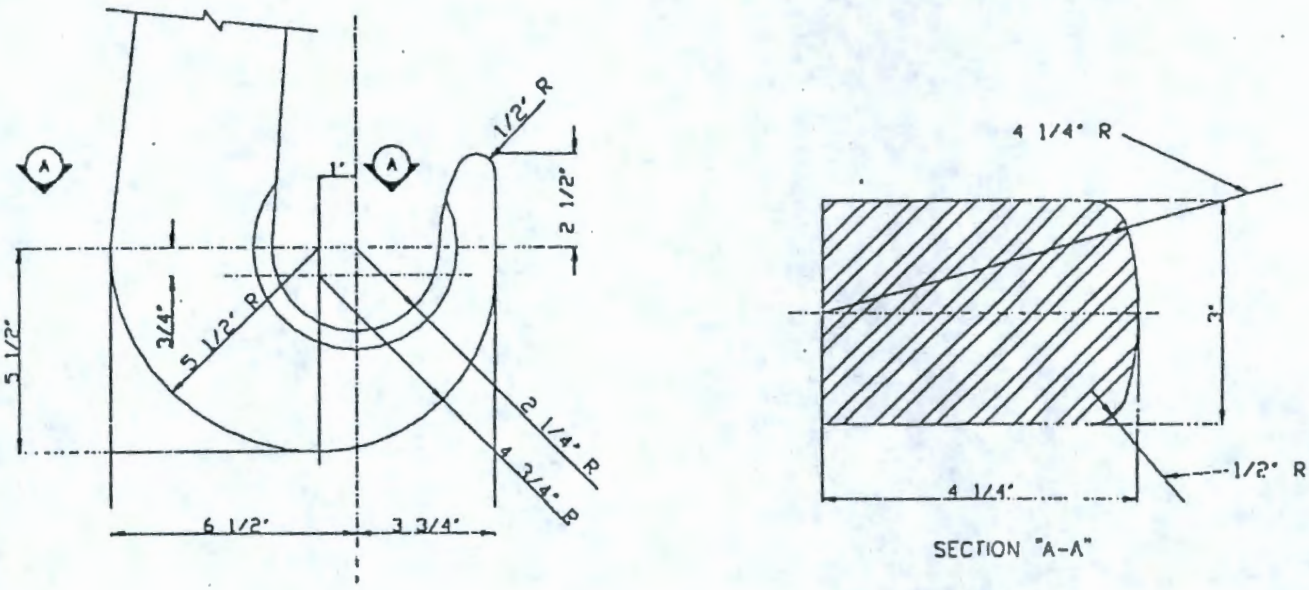

Figure 6-1 – T PLANT LIFTING HOOK FOR CASK LID

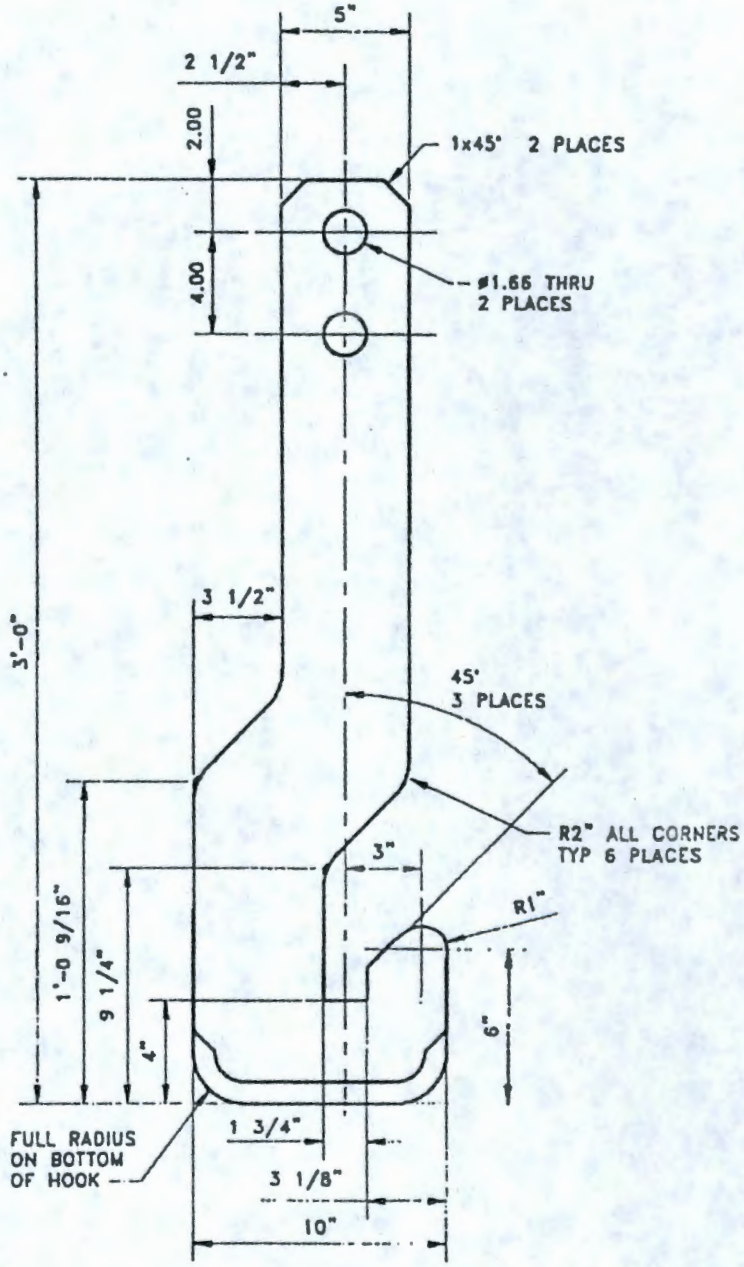

Figure 6-2 – T PLANT LIFTING HOOK FOR LARGE DIAMETER CONTAINER

6.2 NORMAL CONDITIONS OF T PLANT UNLOADING OPERATIONS

For conditions normally incident to T Plant Operations the STS shall be evaluated for its ability to perform normal operations and maintain shielding, and nuclear criticality control. Evaluation for normal conditions shall be based on sequential application of the load conditions specified in this section.

6.2.1 Initial Conditions

With respect to the initial conditions for the load conditions in this section, the demonstration of compliance with the AC described in Section 6.2.3 must be based on the initial environmental conditions, defined in Section 6.1.1, preceding and following the load condition and remaining at that value whichever is most unfavorable for the feature/analysis under consideration. The initial internal pressure within the pressure boundary must be considered to be the pressure with the ambient conditions considered to precede and follow the load conditions.

Note: The load conditions and associated criteria may be bounded by, or equivalent to, the evaluations of other operational segments, thus detail evaluation may not be required provided adequate justification is provided.

6.2.2 Load Conditions

The following loading conditions shall be used for all normal T Plant calculations.

6.2.2.1 CONDITION 7: The maximum heat generation rate based on the limiting payload as described in Section 3.0, plus **maximum normal** initial environment conditions.

6.2.2.2 CONDITION 8: The maximum heat generation rate based on the limiting payload as described in Section 3.0, plus **minimum normal** initial environment conditions.

6.2.2.3 The minimum normal initial environment conditions are zero heat generation rate and normal volume loading.

6.2.3 Acceptance Criteria

The design limits for the individual components, parts, and materials shall be determined by analyses. The analyses shall be based upon the conditions listed below. The operational temperatures, pressures shall be shown to not exceed the design limits.

6.2.3.1 Confinement: The large container design shall ensure the payload is confined during normal T Plant operations. For this operational segment, the container is primary confinement. Confinement is demonstrated by retention of structural integrity.

6.2.3.2 Thermal: The STS design shall ensure the maximum temperature of the payload does not reach 100 °C (212 °F) at any time during loading, transportation and storage.

6.2.3.3 Criticality: The STS design shall ensure the following criteria are satisfied during operations at T Plant Basin:

6.2.3.3.1 An accidental criticality shall be shown to be incredible for the casks during normal T Plant unloading operations, as described in Section 4.2.1, also assuming the following:

6.2.3.3.1.1 The most reactive credible configuration is consistent with the chemical and physical form of the allowed packaged material,

6.2.3.3.1.2 Moderation by water to the most reactive credible extent,

6.2.3.4 Shielding: The cask and large container designs shall ensure their respective normal conditions shielding criteria are met during normal T Plant operations.

The normal conditions shielding requirements for the cask and large container are described in Sections 5.1.3.3 and 7.8.1, respectively.

6.2.3.5 Gas Generation: The hydrogen gas generation shall be evaluated to show that within the T Plant no accumulation of hydrogen gas exceeds one-quarter of the lower flammability limit assuming off-normal operation of the T Plant ventilation.

6.3 ACCIDENT CONDITIONS OF T PLANT UNLOADING OPERATIONS

The STS shall be evaluated for the following events, assumed to occur separately. For design evaluation, these accidents shall be evaluated at whichever is more severe of the Environmental Conditions defined in Section 6.1.1 for the individual incident. For accident conditions incident to T Plant Operations the STS shall be evaluated for its ability to maintain confinement, shielding, and nuclear criticality control. Additionally, the STS shall be designed (analysis or engineered features) to ensure that during accident conditions the STS does not violate the T Plant hazards analysis and safety basis identified in *Hazard Evaluation for Storage for SNF Sludge at the Solid Waste Treatment Facility* (Reference 55) and *Preliminary Accident Analysis for Storage of K Basin Sludge*

in T Plant (Reference 54). Evaluation for accident conditions shall be based on sequential application of the load conditions specified in this section.

6.3.1 Initial Conditions

With respect to the initial conditions for the load conditions in this section, the demonstration of compliance with the AC described in Section 6.3.3 must be based on the initial environmental conditions, defined in Section 6.1.1, preceding and following the load condition and remaining at that value whichever is most unfavorable for the feature/analysis under consideration. The initial internal pressure within the pressure boundary must be considered to be the pressure with the ambient conditions considered to precede and follow the load conditions.

Note: The load conditions and associated criteria may be bounded by, or equivalent to, the evaluations of other operational segments, thus detail evaluation may not be required provided adequate justification is provided.

6.3.2 Load Conditions

The following loading conditions shall be used for all accident T Plant calculations.

6.3.2.1 CONDITION 9: The maximum heat generation rate is based on the limiting payload as described in Section 3.0, plus **maximum off-normal** initial environment conditions.

6.3.2.2 CONDITION 10: The maximum heat generation rate is based on the limiting payload as described in Section 3.0, plus **minimum off-normal** initial environment conditions.

6.3.2.3 Earthquake: The STS shall be designed, constructed, and prepared for operations to withstand a PC2 earthquake.

6.3.3 Acceptance Criteria

The design limits for the individual components, parts, and materials shall be determined by analyses. The analyses shall be based upon the conditions listed below. The operational temperatures, pressures shall be shown to not exceed the design limits.

6.3.3.1 Confinement: The large container design shall ensure the payload is confined during normal T Plant operations. For this operational segment, the container is primary confinement. Confinement is demonstrated by retention of structural integrity.

6.3.3.2 Thermal: The STS design shall ensure the maximum temperature of the payload does not reach 100 °C (212 °F) at any time during loading, transportation, storage and subjected to accident conditions.

6.3.3.3 Criticality: Subsequent to any single T Plant unloading condition, a single STS container shall be evaluated versus the following criteria:

6.3.3.3.1 An accidental criticality shall be shown to be incredible for the normal volume loading, during and subsequent to any single condition described in Section 6.3.2, also assuming the following:

6.3.3.3.1.1 The fissile material is in the most reactive credible configuration consistent with the chemical form and damaged condition of the cask and payload.

6.3.3.3.1.2 There is optimum interspersed aqueous moderation.

6.3.3.4 Shielding: The cask and large container designs shall ensure their respective normal conditions shielding criteria are met during normal T Plant operations.

The normal conditions shielding requirements for the cask and large container are described in Sections 5.2.3.4 and 7.8.1, respectively.

6.3.3.5 Gas Generation: The hydrogen gas generation shall be evaluated to show that within the T Plant canyon or tunnel no accumulation of hydrogen gas exceeds one-quarter of the lower flammability limit assuming off-normal operation of the T Plant ventilation.

6.4 NORMAL CONDITIONS OF T PLANT STORAGE OPERATIONS

For conditions normally incident to T Plant storage the large container shall be evaluated for its ability to maintain, shielding, and nuclear criticality control when subjected to the following conditions:

6.4.1 Initial Conditions

With respect to the initial conditions for the load conditions in this section, the demonstration of compliance with the AC described in Section 6.4.3 must be based on the initial environmental conditions, defined in Section 6.1.1, preceding and following the load condition and remaining at that value whichever is most unfavorable for the feature/analysis under consideration. The initial internal pressure within the pressure boundary must be considered to be the pressure with the ambient conditions considered to precede and follow the load conditions.

Note: The load conditions and associated criteria may be bounded by, or equivalent to, the evaluations of other operational segments, thus detail evaluation may not be required provided adequate justification is provided.

6.4.2 Load Conditions

The following loading conditions shall be used for all normal T Plant calculations.

6.4.2.1 CONDITION 11: The maximum heat generation rate based on the limiting payload as described in Section 3.0, plus **maximum normal** initial environment conditions.

6.4.2.2 CONDITION 12: The maximum heat generation rate based on the limiting payload as described in Section 3.0, plus **minimum normal** initial environment conditions.

6.4.2.3 Minimum air temperature of –33 °C (-27 °F) and zero heat generation rate and assuming normal volume loading.

6.4.3 Acceptance Criteria

The design limits for the individual components, parts, and materials shall be determined by analyses. The analyses shall be based upon the conditions listed below. The operational temperatures, pressures shall be shown to not exceed the design limits.

6.4.3.1 Confinement: For this operational segment, the container is primary confinement. The large container design shall ensure the payload is confined in accordance with the definition of 7.7.1 during normal T Plant operations.

6.4.3.2 Thermal: The large container design shall ensure the maximum temperature of the payload does not reach 100 °C (212 °F) at any time during loading, transportation and storage.

6.4.3.3 Criticality: The large container design shall ensure the following criteria are satisfied during T Plant storage operations:

6.4.3.3.1 An accidental criticality shall be shown to be incredible for the casks during normal T Plant storage operations, also assuming the following:

6.4.3.3.1.1 The most reactive credible configuration is consistent with the chemical and physical form of the allowed packaged material,

6.4.3.3.1.2 Moderation by water to the most reactive credible extent,

6.4.3.3.1.3 Close reflection of the containment system by water on all sides or such greater reflection of the containment system as may additionally be provided by the surrounding material of the packaging.

6.4.3.4 Shielding: The large container design shall ensure their respective normal conditions shielding criteria are met during normal T Plant storage operations.

The normal conditions shielding requirements for the large container are described in Section 7.8.1.

6.4.3.5 Gas Generation: The hydrogen gas generation shall be evaluated to show that within the T Plant no accumulation of hydrogen gas exceeds one-quarter of the lower flammability limit assuming off-normal operation of the T Plant ventilation.

6.5 ACCIDENT CONDITIONS OF T PLANT STORAGE OPERATIONS

The large container shall be evaluated for the following events, assumed to occur separately. For design evaluation, these accidents shall be evaluated at whichever is more severe of the Environmental Conditions defined in Section 6.1.1 for the individual incident. For accident conditions incident to T Plant Operations the STS shall be evaluated for its ability to maintain confinement, shielding, and nuclear criticality control. Additionally, the STS shall be designed (analysis or engineered features) to ensure that during accident conditions the STS does not violate the T Plant hazards analysis and safety basis identified in Reference 55. Evaluation for accident conditions shall be based on sequential application of the load conditions specified in this section.

6.5.1 Initial Conditions

With respect to the initial conditions for the load conditions in this section, the demonstration of compliance with the AC described in Section 6.5.3 must be based on the initial environmental conditions, defined in Section 6.1.1, preceding and following the load condition and remaining at that value whichever is most unfavorable for the feature under consideration. The initial internal pressure within the pressure boundary must be considered to be the pressure with the ambient conditions considered to precede and follow the load conditions.

Note: The load conditions and associated criteria may be bounded by, or equivalent to, the evaluations of other operational segments, thus detail evaluation may not be required provided adequate justification is provided.

6.5.2 Load Conditions

The following loading conditions shall be used for all accident T Plant calculations.

6.5.2.1 CONDITION 13: The maximum heat generation rate is based on the limiting payload as described in Section 3.0, plus **maximum off-normal** initial environment conditions.

6.5.2.2 CONDITION 14: The maximum heat generation rate is based on the limiting payload as described in Section 3.0, plus **minimum off-normal** initial environment conditions.

6.5.2.3 Earthquake: The large container shall be designed, constructed, and prepared for operations to withstand a performance category 2 (PC2) earthquake.

6.5.2.4 Object Impact: The large container shall be evaluated to demonstrate the impact of the hemispherical end of a vertical steel cylinder of 3.2-cm (1.25-in.) diameter and 5.9-kg (13-lb) mass, dropped from a height of 1 m (40 in.) onto the exposed surface of the package that is expected to be most vulnerable to puncture. The long axis of the cylinder must be perpendicular to the large container surface. This accident shall be demonstrated that it is bounding of the dropped container onto a T Plant cover block or another container as described in *Hazard Evaluation for Storage for SNF Sludge at the Solid Waste Treatment Facility* (Reference 55) and *Preliminary Accident Analysis for Storage of K Basin Sludge in T Plant* (Reference 56).

6.5.3 Acceptance Criteria

The design limits for the individual components, parts, and materials shall be determined by analyses. The analyses shall be based upon the conditions listed below. The operational temperatures, pressures shall be shown to not exceed the design limits.

6.5.3.1 Confinement: For this operational segment, the container is primary confinement. The large container design shall ensure the payload is confined per the definition of 7.7.1 during normal T Plant operations.

6.5.3.2 Thermal: The large container design shall ensure the maximum temperature of the payload does not reach 100 °C (212 °F) at any time during loading, transportation, storage and subjected to accident conditions.

6.5.3.3 Criticality: Subsequent to any single T Plant unloading condition, a large container array shall be evaluated versus the following criteria:

6.5.3.3.1 An accidental criticality shall be shown to be incredible for the normal volume loading, during and subsequent to any single condition described in Section 6.5.2, also assuming the following:

6.5.3.3.1.1 The fissile material is in the most reactive credible configuration consistent with the chemical form and damaged condition of the container and payload.

6.5.3.3.1.2 There is optimum interspersed aqueous moderation.

6.5.3.4 Shielding: The large container design shall ensure their respective normal conditions shielding criteria are met during normal T Plant storage operations.

The normal conditions shielding requirements for the large container are described in Section 7.8.

6.5.3.5 Gas Generation: The hydrogen gas generation shall be evaluated to show that within the T Plant no accumulation of hydrogen gas exceeds quarter of the lower flammability limit assuming normal operation of the T Plant ventilation.

7.0 LARGE CONTAINER

The large container shall be capable of operating under five distinct operating regimes:

- Process that includes KE Basin sludge loadout and supernate where decant (see Section 4.0)
- Transportation involving cask transport to T Plant (see Section 5.0)
- Placement and storage in T Plant dry cell storage (see Section 6.0)
- Retrieval that includes sludge retrieval from the large container following the storage period
- Decontamination, following retrieval of sludge

Each of these operating regimes require specific performance characteristics be included in the large container design.

7.1 DIMENSIONS, VOLUME, AND ORIENTATION

7.1.1 The large container shall be a right circular cylinder with standard ellipsoidal heads, maximum 1.524 m (5 ft.) in diameter, and 3.05 m (10 ft) in height. Fabrication tolerances shall be defined in the approved contractor design.

7.1.2 The payload capacity for the large container shall be designed for a maximum payload of 3.0 m^3 of as-settled sludge, with a nominal cover of 25.4 cm (10 in.) of basin process water. A minimum void air space volume above the payload (including the void space in the cask) shall be equal to or greater than 1.6 m^3. The maximum normal capacity of the large container, based on the 'as-settled condition' of the sludge (see Reference 47), shall be determined considering the minimum void air space requirement. Refer to Section 3.2 for a description of the payload sludge composition.

7.1.3 Large containers shall be designed to be freestanding.

7.1.4 The large container shall have vent holes in the lower support ring to facilitate thermal heat transfer and cask purging prior to transportation.

7.2 WEIGHT

7.2.1 The maximum weight of the large container, payload, and any lifting attachments shall not exceed 8,390 kg (18,500 lb).

7.3 MATERIALS

7.3.1 The large container pressure boundary and all external members shall be fabricated using stainless steel type 316/316L and shall otherwise be per *American Society of Mechanical Engineers (ASME) Section VIII, Division 1* (Reference 9). The large container shall be fabricated of materials that are corrosion resistant in the environment in which they will be used (e.g., T Plant atmosphere of unconditioned outside air and a temperature range of 20 °F to 90 °F). For the purpose of analysis, unless adequate justification can be provided by the Contractor, a corrosion allowance of 3-5 mil/yr (Megyesy Eighth Edition, Reference 57) or 1/8 in. over a 30-year life shall be used.

7.3.2 The large container internal components shall be fabricated using materials compatible with the sludge such that any chemical, galvanic, corrosive, physical, or radiological reactions occurring between the components and the sludge do not limit the service life stated in Section 7.6.

7.3.3 Filters, Seals and Gaskets shall be selected to withstand the radiological, chemical, thermal and physical properties of the payload. Additionally, since the filters and internal filter manifold may include Polypropylene or PVC, and analysis of the possibility of Polypropylene or PVC breakdown and chloride formation should be provided because of the corrosive effects of chloride on stainless steel.

7.3.4 Coatings shall not be relied upon for component integrity and shall be used only for visibility for remote handling activities. Coatings shall be Amercote 450-HS or Buyer-approved equivalent. Buyer will approve color.

7.4 FABRICATION

7.4.1 The large container shall be designed, fabricated up to but not including the code stamp in accordance with Reference 9, in accordance with the manufacturer's established fabrication, inspection, and testing programs.

7.4.2 The design shall incorporate ALARA principles (10 CFR 835) for minimizing the potential for build-up of surface contamination. Surfaces, including weld surfaces, shall have smoothed edges and contours and the external surface finish shall be in accordance with Section 7.5.1.

7.4.3 The Contractor shall examine all welds and weld joints in accordance with Reference 9. Weld inspection reports shall be provided to the Buyer.

7.4.4 Nondestructive examination (NDE) shall be conducted by the contractor in accordance with Reference 9. 100% radiography is required for all welds in accordance with governing codes and standards.

7.4.5 The Contractor shall inspect the final large container assembly to verify compliance with all dimensions shown on the Buyer-approved fabrication drawings and provide documentation of this inspection to the Buyer.

7.4.6 Weld Processes, Weld Procedures, and Welders shall be qualified in accordance with *ASME Section IX, Qualification Standard for Welding and Brazing Procedures, Welders, Brazers, and Welding and Brazing Operators* (Reference 10).

7.4.7 Design shall incorporate dissimilar materials for threaded connections.

7.5 GENERAL DESIGN AND INTERFACE REQUIREMENTS

The following requirements are specific to the large container performance as a process vessel used for loading KE Basin sludge into the large container and for decanting the water supernate from the large container, as described.

7.5.1 All external large container surfaces shall be smooth to minimum 250 RMS (root mean square), or better.

7.5.2 The large container shall be designed for a maximum operating pressure of 1034.21 kPag (150 psig).

7.5.3 The large container shall be designed for a minimum operating temperature of -33 °C (-27 °F) and a maximum operating temperature of 60 °C (140 °F).

7.5.4 The container shall be equipped with level detection indication to be monitored remotely. Level detection will be capable of, alternatively, identifying both the water and as-settled sludge interfaces to within 1 in. The level detection shall have the capability to remotely wash obstructing deposits from the sensor.

7.5.5 The level indicator shall provide a 4-20 mA output signal corresponding to the as-settled sludge/water height within the container. All instrumentation components shall conform to applicable ANSI, Institute of Electrical Engineers (IEEE) and International Society for Measurement and Control (ISA) standards.

7.5.6 The large container shall be capable of receiving 30 to 90 gpm of sludge slurry transferred to the large container. The slurry flow of 30 gpm shall be considered the minimum. The normal flow for which the large container is designed shall be identified and be capable of up to 60 gpm continuously. Slurry flow up to 90 gpm

shall be acceptable for short duration transfers of high-density material, as needed to ensure adequate transfer velocities are attained. The inlet flow shall be designed to promote uniform mixing of fluid above the settling sludge.

7.5.6.1 The inlet pipe within the large container shall be a length that will not penetrate the uniform mixing layer above the settled sludge.

7.5.6.2 A diffusion plate shall be mounted on the lower end of the inlet pipe to ensure uniform mixing of the fluid above the settled sludge.

7.5.7 The large container shall be capable of retaining particulate of 5μm and larger by the use of a filter system with 98% efficiency during all phases of sludge filling and supernate decanting operations.

7.5.7.1 The filter system shall be mounted internally in the upper portion of the large container to allow at least a 2 m^3 capacity for the sludge in the lower portion of the container.

7.5.7.2 The filter assembly shall be totally enclosed within the large container and no provisions shall be made to change out any filter units.

7.5.7.3 The filter system shall be designed for a one-time use and no maintenance provisions are anticipated, with the exception of backwash activities during the filling operation.

7.5.8 The large container filters shall be capable of being backwashed using Basin water and/or large container filtrate. The design shall incorporate features that upon integration with the KE Basin sludge load-out system are capable of retaining the backwashed solids (as defined in Section 7.5.7) throughout the backwash operation and return to large container filling. Additionally, the backwash filters must maintain integrity and useful life after a backwash operation at the container design pressure of 150 psig or the designed working pressure of the internal filters, whichever is less.

7.5.9 Large containers shall be labeled on the top with a unique identifier in letters at least 3.8-cm (1.5-in.) high that are permanently affixed or engraved so as to be readable for the 30-year storage service life.

7.5.10 The large container interior shall be designed in a manner that allows for removal of the sludge heel, including particles as large as 0.64 cm (0.25 in.).

BEST AVAILABLE COPY

7.5.11 General Port/Penetration Requirements:

7.5.11.1 All ports/connections shall be positioned on the top of the large container oriented to ensure operability from overhead work positions or remote tooling.

7.5.11.2 All ports/connections necessary for operations at KE Basin shall penetrate through the process shield plate to ensure connections can be made above the process shield plate.

7.5.11.3 All ports/connections shall not interfere with the cask lid or the process shield plate during filling operation, transport, or handling.

7.5.11.4 The ports/connections shall not interfere with the operation of the T Plant lifting device shown by Figure 6-2.

7.5.11.5 All ports/penetrations must be designed to eliminate, to the extent possible and consistent with 10 CFR 835, radiation streaming. Shielding devices will be provided in the design for ports going through the process shield plate that are not in use.

7.5.11.6 Fill Port: A 1-1/2-inch male disconnect coupler (cam and groove type or Buyer-approved equivalent). A mating cap shall be placed on the inlet connection after sludge loading process is complete and shall remain in place during transport, storage, and sludge retrieval.

7.5.11.7 Outlet Port A 3-in. male disconnect coupler (cam and groove type or Buyer-approved equivalent). The outlet shall connect to a filter assembly such that process slurry water must pass through filtration prior to being discharged from the large container. A mating cap shall be placed on the outlet connection after sludge load-out is complete and shall remain in place during transport and storage.

7.5.11.8 Decant: In addition to the requirements of Section 7.1.2, the large container shall include provisions for decanting the supernate to a height equivalent to 2 m^3 sludge loading. The decant shall be filtered in accordance with Section 7.5.7 requirements. If the decant is performed via a separate nozzle from the outlet then it shall be a 2-in. male disconnect coupler (cam and grove type or Buyer-approved equivalent). A mating cap shall be placed on the decant connection after sludge load-out is complete and shall remain in place during transport and storage.

7.5.11.9 Process Vent Port: A 2-in. male disconnect coupler (cam and groove type or Buyer-approved equivalent). The large container shall be capable of automatically displacing air/gases during all process operations. The large

BEST AVAILABLE COPY

container shall also include provisions for automatically breaking the vacuum associated with the decant operations. A rupture disc shall be installed following the sludge filling operations and remain in place during transport and storage. The rupture disc and mounting shall be designed for quick disconnect and shall be sized at 344.7 kPag (50 psig).

7.5.11.10 Transport/Storage Vent Port: A 2-in. male disconnect coupler (cam and groove type or Buyer-approved equivalent). Air displaced from the large container during transportation and storage operations shall be vented through a passive filtered vent. The filtered vent shall be a 2-in. sintered steel NucFil or approved equal. The Buyer will provide and install the filters.

7.5.11.11 Water Makeup: Figure 7-1 provides the detail for the T Plant water addition nozzle and device. Clearance of 15.24 cm (6 in.) in radius shall be maintained around the nozzle. The nozzle shall include a hex head pipe plug (2-in. NPT) that will be installed during all KE Basin process operations. The hex head shall have a retention groove in the side to interface with the T Plant impact wrench. The port must allow for direct and unobstructed vertical access to the sludge in the lower portion of the large container during loading in KE Basin and storage in T Plant. Additionally, the nozzle shall have an external flat collar (kick plate) to actuate the water addition device.

7.5.11.12 Sludge Off-Load: A 3-in. NPS port shall be included for removal of the payload at T Plant. The port shall allow unobstructed access to the bottom of the large container to assist with sludge removal. The nozzle shall include a hex head pipe plug that will be installed during all KE Basin process operations. The hex head shall have a retention groove in the side to interface with the T Plant impact wrench.

7.5.11.13 Level Sensor Wash Port: A 3/4-in. male disconnect coupler (cam and groove type or Buyer-approved equivalent). The level sensor wash port shall provide water to wash deposits off the level sensor within the large container during the filling operations. A mating cap shall be placed on the level sensor wash connection after sludge loadout is complete and shall remain in place during transport and storage (see Section 7.5.4).

7.5.11.14 Level Sensor Port: A 5-in. slip-on flange, Class 150, raised-face, 300 series Stainless Steel (SS) mounted on a 5-in. diameter pipe, Schedule 10, 316SS, cut to length, as required. A mating 5-in. blind flange, Class 150, 316SS, shall be modified to mount the level sensor (see Section 7.5.4).

BEST AVAILABLE COPY

7.5.12 BELOW THE HOOK LIFTING ATTACHMENTS

7.5.12.1 Lifting attachments shall be designed to the maximum loaded weight of the large container and tested to meet or exceed the requirements set forth in ANSI N14.6, *Special Lifting Devices for Shipping Containers Weighing 10,000 Pounds or More* (Reference 3). Additionally, the design shall meet or exceed the requirements of DOE-RL-92-36, *Hanford Site Hoisting and Rigging Manual* (Reference 53).

7.5.12.2 Lifting attachments shall be self-centering such that the large container shall hang vertical to the deck during handling at T Plant. Figure 6-1 shows the dimensions of the lifting hook.

7.5.12.3 Lifting attachments shall be coated using yellow Amercote 450-HS or Buyer-approved equivalent for visibility.

7.5.12.4 The lifting attachments shall not interfere with the port penetrations during filling operations or transport operations at KE Basin, and inspection operations during storage at T Plant.

7.6 SERVICE LIFE

7.6.1 Process Service: The large container during normal KE Basin operations shall be capable of not less than 6 months of full operations within KE Basin operation segment as defined in Section 4.0. The operation begins once filling of the large container begins and ends once the containment boundary of the cask has been established.

7.6.2 Storage Service: The large container pressure boundary, including the filter and rupture disc, shall be capable of normal conditions confinement for a period not less than 30 years of operations within the T Plant operation segment as defined in Section 6.0. The life span requirement begins once filling of the large container begins.

The large container internal filter has two service life requirements. The first being five years during loading in KE Basin (functional). The second being 30 years is related to the decomposition and corrosion of the filter media and assembly (filter physical integrity).

7.6.3 The large container shall be maintenance free during the process service life.

BEST AVAILABLE COPY

7.7 CONFINEMENT

7.7.1 The large container shall be designed so that during normal conditions at KE Basin and T Plant, gas leakage does not exceed the capacity of the filter specified in Section 7.5.11.10.

7.8 SHIELDING

7.8.1 Individual large containers with a designed payload shall meet the criteria for a remote handled cell at T Plant (<500 rad/hr at one (1) meter).

7.8.2 Design shall meet the requirements set forth in 10 CFR 835, subpart K, *Design & Control* (Reference 17).

7.8.3 Shielding Pucks: Shielding pucks shall be attached to the pipes leading to five of the large container nozzles and work in conjunction with the process shield plate to prevent streaming. The pucks are to be made of stainless steel material and are to be permanently attached to the respective pipe of the following nozzles:

7.8.3.1 Fill Port, 1-1/2-in. NPS (see Section 7.5.11.6)

7.8.3.2 Outlet Port, 3-in. NPS (see Section 7.5.11.7)

7.8.3.3 Process Vent Port, 2-in. NPS (see Section 7.5.11.9)

7.8.3.4 Transport/Storage Vent Port, 2-in. NPS (see Section 7.5.11.10)

7.8.3.5 Level Sensor Wash Port, 3/4-in. NPS (see Section 7.5.11.13)

BEST AVAILABLE COPY

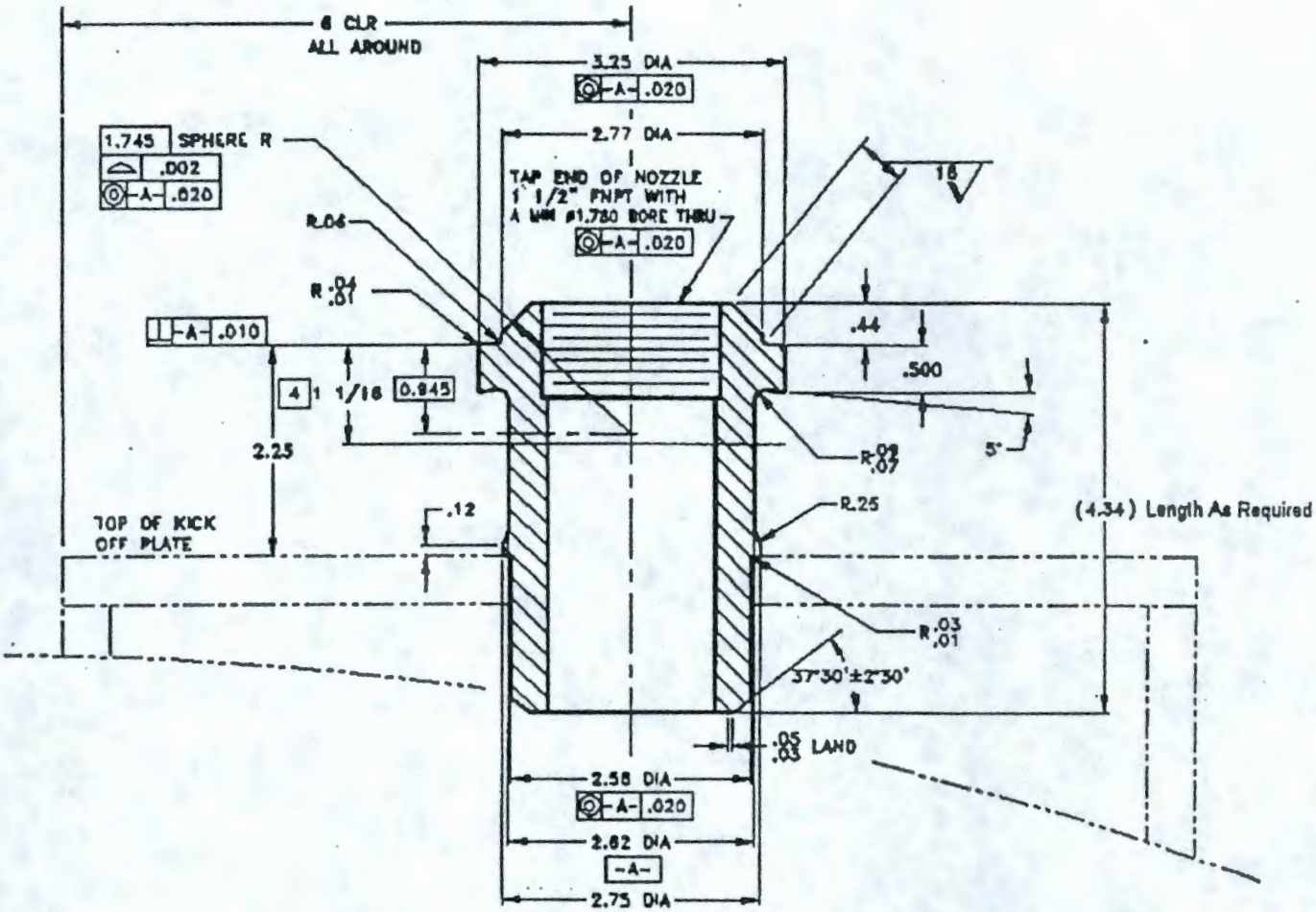

2" MALE NOZZLE

GENERAL NOTES:

1. MATERIAL: SST TO MATCH CONTAINE.
2. FINISH 250 ALL OVER EXCEPT AS NOTED.
3. BREAK ALL SHARP CORNERS 1/64 MAX.
4. PROVIDE THREADED PLUG TO FIT NOZZLE. REMOVABLE BY REMOTE IMPACT WRENCH, AND 1 1/2" HEXAGONAL SOCKET.

Figure 7-1 - -T PLANT WATER ADDITION NOZZLE

BEST AVAILABLE COPY

7.9 SLUDGE RETRIEVAL AND CONTAINER DECONTAMINATION

7.9.1 The large container interior shall be designed to allow sludge removal by flushing with water.

7.9.2 The large container shall be designed to allow retrieval of the sludge to the extent practical and to allow cleaning of residual sludge from internal surfaces of the container prior to disposal of the container at the end of the storage service life.

7.9.3 Analysis shall be provided that demonstrates that degradation of the container internals over the 30-year storage life does not result in debris that interferes with sludge retrieval from the container and/or change the chemical or physical properties of the waste matrix (reference Section 1.2).

BEST AVAILABLE COPY

8.0 SHIPPING CASK (PACKAGING)

8.1 CASK DIMENSIONS, VOLUME AND ORIENTATION

8.1.1 The cask consists of the cask shell, bottom, and lid.

8.1.2 The internal dimensions for the cask shall be sufficient to accommodate a large container defined in Section 7.0.

8.1.3 The maximum dimensions for the cask exterior shall be based on the handling limits of KE Basin and T Plant defined in Sections 4.1 and 6.1.

8.1.4 The cask lid lifting device shall be in the same orientation as the large container lifting device.

8.1.5 The cask shall be designed with an engineered feature (such as alignment pins) that consistently orients both the cask lid and process shield plate. The large container penetration pipes shall not be used for alignment purposes. The large container lift device may be used for alignment purposes.

8.1.6 The cask shall be designed with a drain in the lower cask forging that can be accessed and operated without loss of payload confinement. The drain shall be sized to allow for draining of sludge from the annulus and facilitate potential decontamination activities.

8.2 MAXIMUM GROSS WEIGHT

8.2.1 The weight of a cask with a loaded large container shall not exceed 38,555 kg (85,000 lb). The maximum load of the cask and trailer (120,000) exceeds the Washington State limits and documentation must be prepared to acquire an exemption for exclusive onsite application.

8.3 MATERIALS

8.3.1 The structural containment boundary materials for the cask shall comply with material requirements identified in NUREG/CR-3854, *Fabrication Criteria for Shipping Containers* (Reference 29). The cask shall be fabricated equivalent to ASME Section III, Division 1, Subsection NB, up to, but not including the code stamp. The materials of construction shall meet the fracture toughness requirements of NRC, Regulatory Guide 7.11, *Fracture Toughness Criteria of Base Material for Ferritic Steel Shipping Cask Containment Vessels with a Maximum Wall Thickness of 4 in. (0.1 m)* (Reference 31), or NRC, Regulatory

BEST AVAILABLE COPY

Guide 7.12, *Fracture Toughness Criteria of Base Material for Ferritic Steel Shipping Cask Containment Vessels with a Wall Thickness Greater Than 4 Inches (0.1 m) But Not Exceeding 12 Inches (0.3 m)* (Reference 32), as applicable. The materials shall be compatible with or provide adequate resistance to the corrosive effects of materials (liquids, vapors, gases, solids, and by products) that they shall be in contact with throughout their life cycle defined in Section 8.10. The materials shall also be selected to minimize chemical-galvanic reactions between the payload constituents, as defined in Section 3.0, and the cask

8.3.2 Seals and Gaskets shall be selected to withstand the radiological, chemical, thermal, and physical properties of the payload.

8.4 FABRICATION METHODS

8.4.1 Fabrication criteria for a Category I cask (packaging), as delineated in NUREG/CR-3854 (Reference 29), shall be followed. Fabrication of the cask shall be performed in accordance with ASME Section III, Division 1, Subsection NB, as required by NUREG/CR-3854, up to but not including the code stamp.

8.4.2 Welding criteria for a Category I cask (packaging), as delineated in NUREG/CR-3019, *Recommended Welding Criteria For Use in the Fabrication of Shipping Containers for Radioactive Materials* (Reference 30), shall be followed. All welds and weld joints shall comply with ASME Section III, Division 1, Subsection NB (Reference 7). The use of complete joint penetration (CJP) designators on design drawings is acceptable in Phase 1, if during Phase 2 the weld joint geometry is provided with the fabrication drawings and travelers and included with the traveler submittals. The buyer must approve all fabrication drawings and travelers.

8.4.3 All welds shall be smoothed to 250 RMS, or better.

8.5 LIFTING AND TIEDOWN ATTACHMENTS

8.5.1 Lifting attachments shall be designed in accordance with Reference 3 and Reference 53. Lifting attachments shall be provided for removing the cask from the trailer, and for removing the lid from the cask and replacing it back on the cask.

8.5.2 A tiedown system shall be designed to secure the cask system to the trailer. The tiedown system shall meet the requirements of 10 CFR 71.45 (Reference 14).

BEST AVAILABLE COPY

8.5.3 The tiedown system shall be designed to allow for the safe inspection, minor repairs, and replacement of the cask lid gaskets and seals (e.g., operator does not have to go under cask lid to replace the seals).

8.5.4 The lifting attachment shall be designed to be removed from the crane hook remotely without operator assistance. Thereby, allowing for total remote operation of cask lid removal in both T Plant and KE Basin once the cask bolts are removed.

8.6 GAS GENERATION AND VENTING

8.6.1 The cask design and payload shall prevent a flammable gas mixture in the headspace and annulus during a period of time twice the maximum expected shipping time. Estimated maximum shipping time is 30 hours. There must be a designed provision for safely inerting or purging the container and cask.

8.6.2 Any ports that are incorporated in the design shall be capable of being closed and made leak-tight in accordance with the ANSI N14.5 (Reference 2) definition of "leak-tight" (leakage less than 10^{-7} std cc/sec for air). For conditions normally incident to transfer, the packaging shall be evaluated by analysis to meet the containment criteria listed above.

8.6.2.1 During and subsequent to accident conditions, the release of materials from the cask, including the venting system shall not exceed the limits set in Section 8.8.

8.6.2.2 Instrumentation used to verify leak-tight shall be calibrated to national standards before and after testing.

8.6.3 The cask design shall incorporate two emergency vent ports for releasing gas. These ports shall be designed to be opened with a designed special device and to vent pressure away from the operator. The design shall also eliminate, to the extent possible and consistent with 10 CFR 835, radiation streaming. These vents shall be designed for helium purging of the cask interior prior to transport and receipt at T Plant.

8.7 LID

8.7.1 The cask lid shall be designed to be a positive fastening device that cannot be opened unintentionally.

8.7.2 The lid design shall incorporate tamper-indicating devices.

BEST AVAILABLE COPY

8.7.3 The lid shall be designed to have a replaceable seal or gasket (see Section 9.1.13.1).

8.8 CONTAINMENT

8.8.1 The cask shall be designed so that during normal transfer conditions from KE Basin to T Plant, the cask prevents leakage from exceeding ANSI N14.5 (Reference 2) leak-tight requirements, as demonstrated through performance-based analysis. ASME Section III, Service Level A (Reference 7) stress allowable shall be used for analytical acceptance.

8.8.2 The cask system shall be designed such that it meets the conditions of 10 CFR 71 (Reference 14) and that during accident conditions (Section 5.2) a single containment barrier is maintained for the large container, as demonstrated by performance- based analysis. ASME Section III, Service Level D (Reference 7) stress allowable shall be used for analytical acceptance. Energy absorbed by the cask during the drop is accounted for based on elastic-plastic analysis. During the fire scenario, the inner cask seal will survive the fire and maintain containment of the payload.

8.9 SHIELDING DURING OPERATIONS (KE BASIN AND T PLANT)

8.9.1 Shielding shall meet the requirements set forth in 10 CFR 835, subpart K (Reference 17), for loading and cask lid operations and shall be documented in accordance with 10 CFR 835, Section 704(b) (Reference 18). Shielding shall be maximized while staying within the weight limits of a fully loaded cask in accordance with Section 8.2.

8.10 SERVICE LIFE

The service life of the cask shall be five years.

BEST AVAILABLE COPY

9.0 TRANSPORT TRAILER AND TRAILER SUPERSTRUCTURE

9.1 TRAILER

9.1.1 REGULATORY REQUIREMENTS

9.1.1.1 The trailer shall comply with the applicable federal regulations and standards including, but not limited to, those listed in Table 9-1 and shall comply with all current Washington State regulations at time of manufacture.

Table 9-1 – TRAILER REGULATORY STANDARDS
(References 10 CFR 20, 22, 23, 24 and 25)

Part	49 CFR--current issue, including revisions	
566	Manufacturer identification	
567	Certification	
567.4 (g)(6)	Vehicle Identification	
393	Parts and accessories necessary for safe operation	
172, Appendix C	Dimensional specifications for recommended placard holder	
571	Federal motor vehicle safety standards--vehicle safety standards developed by the U.S. Department of Transportation for commercial vehicle certification with the National Highway Traffic Safety Administration	
	Section	**Title**
	106	Brake hose
	108	Lamps, reflective devices, and associated equipment
	119	New pneumatic tires for vehicles other than passenger cars
	120	Tire selection and rims for motor vehicles other than passenger cars
	121	Air brake systems

9.1.1.2 The trailer shall be a National Highway Traffic Safety Administration-registered trailer.

BEST AVAILABLE COPY

9.1.1.3 The trailer shall have packaging attachment cross members meeting the securement systems requirements of 49 CFR 393.102(d), *Attachment to the Vehicle* (Reference 22).

9.1.1.4 There shall be four metal flip-frame type placards designed and placed on the trailer in accordance with 49 CFR 172.500, Subpart F, *Placarding* (Reference 20).

9.1.1.5 The bumper (rear-end protection) height and width shall comply with 49 CFR 393.86, *Rear Impact Guards and Rear End Protection* (Reference 22).

9.1.1.6 The trailer shall be fabricated to meet the applicable requirements of the Federal Motor Carrier Safety Regulations (FMCSR), Part 393 (Reference 22).

9.1.2 WEIGHT AND DIMENSIONAL REQUIREMENTS

9.1.2.1 The trailer shall be capable of interfacing with the KE Basin loading area, Hanford Site roadways, and T Plant unloading area described in Section 4.0.

9.1.2.2 The trailer shall be a single-drop flatbed.

9.1.2.3 The trailer, with a fully loaded cask and all support hardware attached, shall not exceed the requirements of Table 9-2. The trailer's maximum gross loaded weight (with the maximum payload) shall have a design weight limit of 54,430 kg (120,000 lb). The length dimension is based on the restricted space available in the KE Basin loading and unloading area in the T Plant tunnel. Additionally, because of the STS design dimensions and weight requirements, the trailer shall be required to obtain a Washington transportation travel permit. The maximum load exceeds the Washington State limits and documentation must be prepared to acquire an exemption for exclusive onsite application.

Table 9-2 – TRAILER CHARACTERISTICS

Maximum length	10.7 m (35 ft)
Maximum overall height including packaging and all attached support equipment	5.2 m (17 ft)
Maximum height of drop deck	55.9 cm (22 in.)
Maximum width	3.1 m (10 ft)

BEST AVAILABLE COPY

9.1.3 MATERIAL, STRUCTURAL, AND FABRICATION REQUIREMENTS

9.1.3.1 The trailer shall accommodate the concentrated load of the fully loaded cask and attached equipment. The cask shall be maintained in an upright position for loading, transport, and unloading.

9.1.3.2 Trailer materials shall comply with American Society for Testing and Materials (ASTM) or American Institute of Steel Construction (AISC) standards. Materials for all primary structural members of the trailer and cask supports shall be selected and constructed in accordance with industry accepted practice (e.g., ANSI/AWS standards).

9.1.3.3 All structural components shall meet (at least) a 2:1 factor of safety on yield strength. Consideration shall be made for the concentrated weight load of the cask.

9.1.3.4 The main frame shall be an inboard I-beam design or equal. Web stiffeners shall be used at high-load points.

9.1.3.5 Decking shall be nonskid metal.

9.1.4 TRAILER TIEDOWN STRUCTURES

9.1.4.1 The trailer tiedown structures shall be designed to meet the criteria of Section 8.5 and FMCSR Part 393, Subpart I, 100-106. The trailer shall have blocking and bracing devices.

9.1.5 LANDING GEAR

9.1.5.1 The landing gear shall have a hydraulic ram with sand pads capable of accommodating a fully loaded trailer. Sand pads shall be sized so as not to sink into asphalt under the ambient conditions of Table 5-1. Means shall be provided to level the trailer with the cask installed. The Buyer shall approve hydraulic fluid.

9.1.6 SUSPENSION

9.1.6.1 The trailer suspension shall be capable of handling a fully loaded cask plus the weight of all support equipment and decking, see Section 9.1.8.1.4.

9.1.6.2 The trailer suspension system shall be capable of adjusting the height of the trailer decking and top of cask to interface with the KE Basin loadout facility equipment.

BEST AVAILABLE COPY

9.1.6.3 The trailer suspension system shall provide an integrated weighing system that measures the weight of the trailer while unhooked from the tractor and produces a single proportional 4-20 mA output signal. The system shall have an overall accuracy sufficient to detect + or – 300 lb with an 8,800 lb sludge load in the container. The weighing system shall not increase the overall height of the trailer.

9.1.6.4 The trailer shall be equipped with a compressed air connection to provide compressed air to the suspension and weighing systems.

9.1.7 BRAKE SYSTEM

9.1.7.1 Brake system shall be designed for the anticipated load.

9.1.8 TRACTOR INTERFACE

9.1.8.1 The trailer, in both the loaded and unloaded configurations, shall be compatible with a typical (Buyer-owned) short haul, three-axle tractor described as follows:

9.1.8.1.1 Kingpin diameter will be 6.35 cm (2.5 in.), or industry-accepted standard.

9.1.8.1.2 Kingpin height will be 1.27 to 1.32 m (50 to 52 in.), typical.

9.1.8.1.3 Kingpin setting will be 0.46 to .61 m (18 to 24 in.) typical, or industry-accepted equivalent to provide a swing clearance of 2.29 to 2.44 m (90 to 96 in.).

9.1.8.1.4 Tractor axle capacities will be 5,897 kg (13,000 lb) for the front axle and 15,422 kg (34,000 lb) for tandem axles.

9.1.9 LIGHTING

9.1.9.1 The lighting system shall conform to 10 571.108 (Reference 25). Connections shall be seven-way standard contact. All wiring shall be sealed in metal or plastic conduit and routed, secured, and protected from abrasion and chafing.

9.1.10 PAINTING

9.1.10.1 The trailer and wheels shall be primed and painted with products suitable for disposal as non-hazardous waste at the Hanford Site, Amercote 450-HS or Buyer-approved equivalent. Both the primer and finish coats shall be applied according to manufacturer's instructions, with a minimum of two finish coats

BEST AVAILABLE COPY

of white color (Amercote, white, product code RT-8301). Prior to priming, surfaces shall be clean and free of weld slag, rust, and other foreign materials.

9.1.11 DECONTAMINATION REQUIREMENTS

9.1.11.1 The trailer design (including the superstructure) shall provide for the appropriate decontamination of all exposed surfaces, and for general cleaning by spraying down with high-pressure water. Decking and framework shall be smooth without cracks or crevices. There shall be no blind/hidden corners or joints in areas potentially exposed to contamination that cannot be readily accessed from the topside by handheld spray devices. Framework and deck joints shall be covered, or seal welded and ground flush if applicable.

9.1.12 SERVICE LIFE

9.1.12.1 The trailer shall be designed for a service life of five years.

9.1.13 CASK LID STORAGE

9.1.13.1 The trailer shall have adequate space for storage of the cask lid. Location shall be near the rear of the trailer to accommodate the restricted movement of the KE Basin overhead bridge crane.

9.1.13.2 The cask lid shall be stored or placed in a manner to allow for the safe inspection of the cask seals and mating surface.

9.1.13.2.1 The cask lid shall be oriented greater than 90 degrees (up to 180 degrees) from the horizontal seal-down position that it would normally reside in after removal from the cask and shall be placed into the holding fixture for access to the cask sealer.

9.1.13.2.2 The cask lid shall be secured within the holding fixture to prevent inadvertent movement due to seismic activity during placement or rotation of the cask lid.

9.1.13.2.3 The cask lid shall be rotated by a mechanical handle incorporated into the holding fixture.

9.1.13.2.4 Final orientation of the cask lid for inspection and seal replacement shall allow sufficient room for personnel to perform those activities and allow safe and timely egress during upset conditions in the facility (CAM Alarm, High-Rad Alarm, etc.).

BEST AVAILABLE COPY

9.2 TRAILER SUPERSTRUCTURE

9.2.1 The trailer superstructure welding, weld joint preparation, cleaning, welding procedures, welder qualifications, and inspections/examinations shall be in accordance with ANSI/AWS standards such as defined in References 4, 5 and 12. Welding qualifications in accordance with ASME Section IX (Reference 10), are acceptable. All slag, spatter, and weld discontinuities shall be removed and repaired/re-inspected as provided for in ANSI/AWS standards. Inspections shall be performed by a CWI (certified weld inspector) (AWS). All examinations (NDE) shall be performed by qualified ASNT -TC-1A individuals. All load bearing welds shall be magnetic particle or liquid penetrate examined, AC in accordance with ANSI/AWS standards.

9.2.2 The trailer superstructure shall be primed and painted with products suitable for disposal as non-hazardous waste at the Hanford Site, Amercote 450-HS or Buyer-approved equivalent. Both the primer and finish coats shall be applied according to manufacturer's instructions, with a minimum of two finish coats of white color (Amercote, white, product code RT-8301). Prior to priming, surfaces shall be clean and free of weld slag, rust, and other foreign materials.

9.2.3 Stairway handrails shall be provided as one piece round handrails as identified in 29 CFR 1910.23 (e)(5)(i) (Reference 19). Where removable handrails are required, the removable handrails shall be provided in accordance with 29 CFR 1910.23(e)(1) (Reference 19) rather than safety chains.

9.2.4 A permanent working non-skid metal deck and stairway meeting appropriate industry safety (OSHA) standards shall be provided, to allow access to the upper cask closure area during loading and unloading operations. The deck shall accommodate a minimum of four persons. One stairway shall be provided from the lower trailer deck to the working deck.

9.2.5 All latching mechanisms for removable platforms shall be operable by one person. Proper engagement of the latching mechanism shall be capable of visual verification from the working deck as well as the lower trailer deck.

BEST AVAILABLE COPY

10.0 SUPPORT EQUIPMENT

10.1 PROCESS SHIELD PLATE

10.1.1 LOCATION

10.1.1.1 A single exterior process shield plate shall be provided for each cask that is located above the large container, to allow for manual connection to all penetrations of Section 7.5 to be made above the process shield plate. Figure 10-1 shows a preconceptual sketch of a process shield plate in place.

10.1.1.2 The process shield plate shall be designed for access to the lifting attachment of the large container by the KE Basin crane hook while the process shield plate is installed. Both process lids shall be the same in physical dimensions thereby, facilitating storage in KE Basin. Figure 10-2 shows the KE Basin crane hook.

10.1.1.3 Ports shall be identified in unique nomenclature with letters 3.8 cm (1.5 in.) on the top of the process shield plate.

10.1.1.4 Process shield plate lifting attachments shall be designed in accordance with ANSI N14.6 (Reference 3) and shall not interfere with the operation of the large container at KE Basin.

10.1.2 SHIELDING

10.1.2.1 The design life of the process shield plate shall be 5 years.

10.1.2.2 Shielding thickness shall be designed based on the highest specific-activity sludge. For KE Basin, the maximum off-normal payload volume must be considered. For transportation and T Plant storage the payload volume would be the maximum shipping volume.

10.1.2.3 The normal conditions shielding evaluation shall be with the maximum normal sludge volume settled to the bottom of the large container. The normal conditions dose above the Process Shield Plate shall be limited to < 20 mrem/hr at 30 cm. The design shall eliminate radiation streaming from the penetrations.

BEST AVAILABLE COPY

10.1.2.4 The off-normal and/or accident conditions shielding evaluation shall be with the sludge filling the large canister volume capacity. The off-normal conditions dose above the Process Shield Plate shall be limited to < 80 mrem/hr at 30 cm. The design shall eliminate, to the extent possible and consistent with 10 CFR 835, radiation streaming from the penetrations.

10.1.2.5 Material selection shall consider decontamination. If lead is used, it shall be isolated from contact with radioactive material.

10.1.2.6 The design shall minimize the use of temporary shielding.

10.1.3 PAINTING

10.1.3.1 Process shield plates shall be painted with Amercote 450-HS.

10.1.4 ORIENTATION

10.1.4.1 Process shield plates shall be aligned using the cask guide pins and/or interface with the large container.

10.2 SPACERS

Spacers shall be designed and fabricated to center and consistently orient the large container within the cask and provide lateral stability for the container, unless analysis determined that spacers are not required. Design and fabrication shall be in accordance with 10 CFR 71, *Packaging and Transportation of Radioactive Material* (Reference 14).

10.3 CASK LID INSTALLATION AND REMOVAL DEVICES

Devices shall be designed and fabricated for cask lid installation and removal. This device is required to interface with the T Plant impact wrench (SD-RE-DGS-002, Jumper Design Standard Figures 7, 13, 14, Reference 52).

10.4 MAINTENANCE DEVICES

Design and fabrication of other devices for maintenance and operation of the large containers, casks, and trailers shall be provided.

BEST AVAILABLE COPY

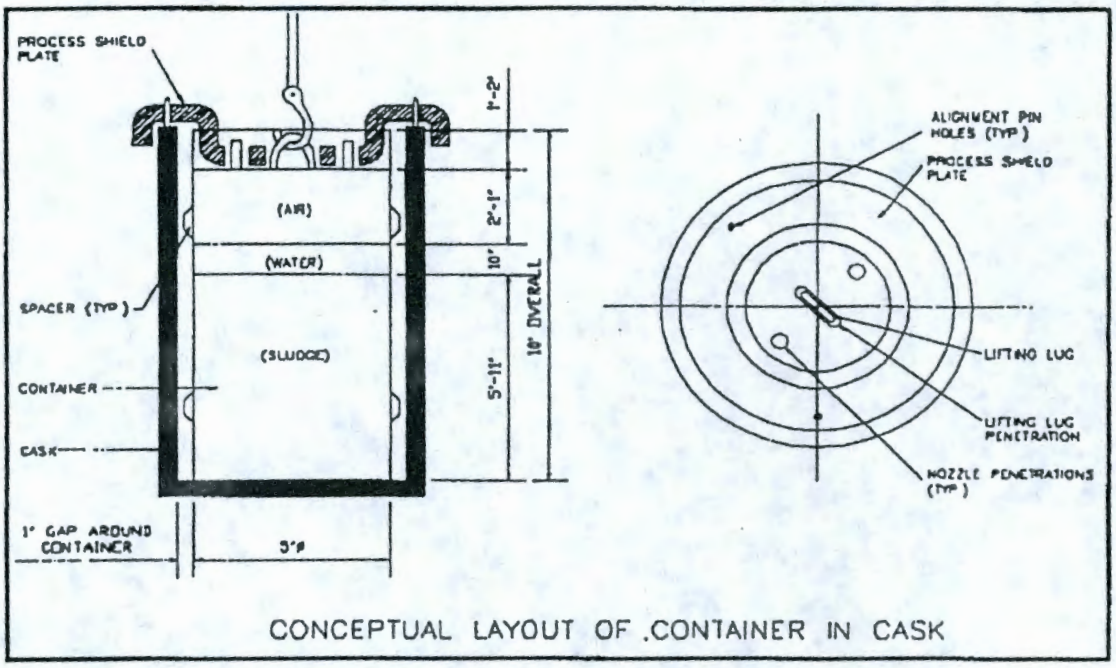

Figure 10-1 – PROCESS SHIELD PLATE

BEST AVAILABLE COPY

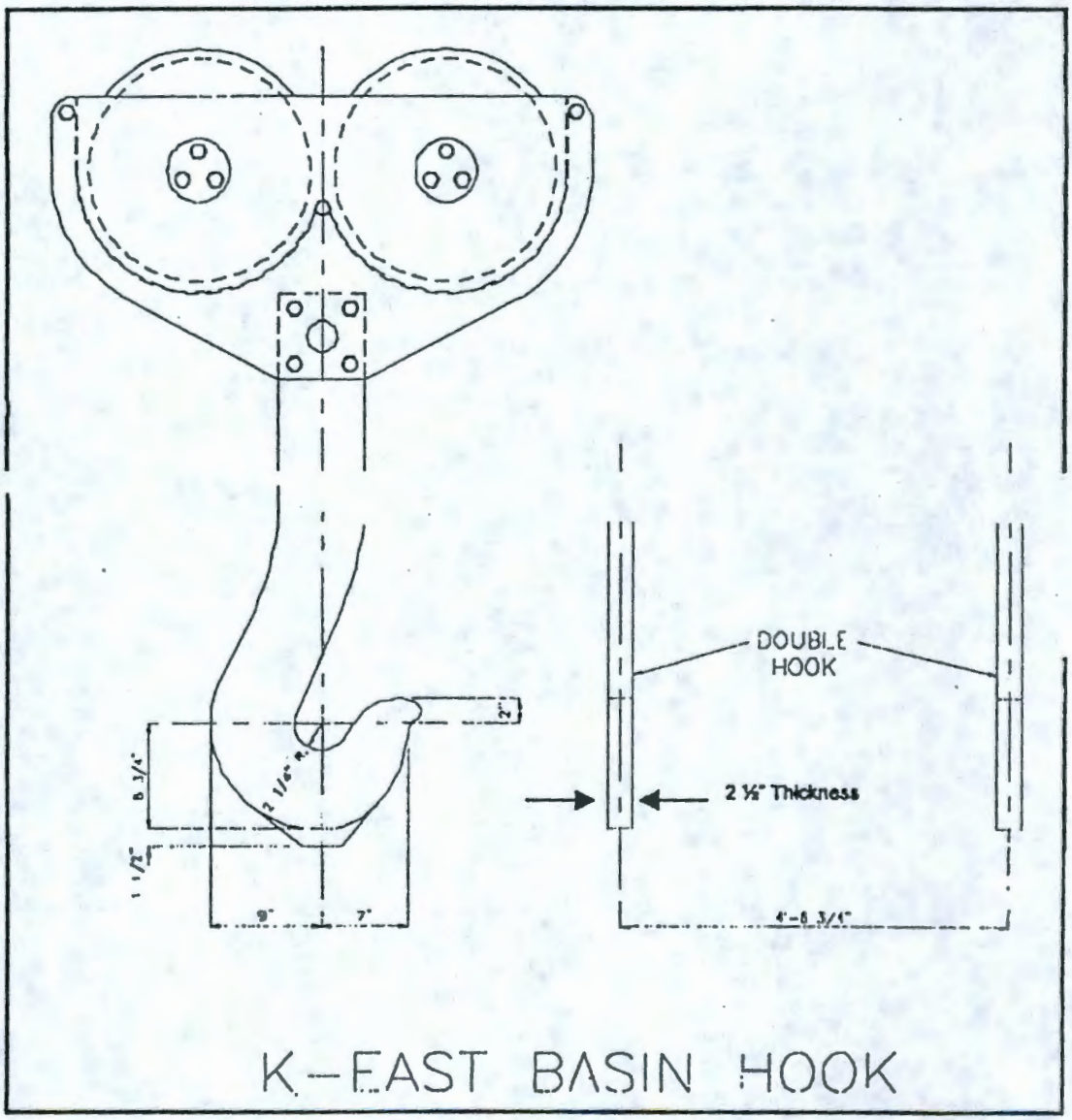

Figure 10-2 – KE BASIN CRANE HOOK

10.5 OFF-NORMAL CASK VENTING DEVICES

If during transportation the STS transporter is delayed and it will exceed the shipping window, it may become necessary to vent the STS cask. Therefore, a venting devices will be provided to both vent and purge the STS. The venting device (similar to the MCO venting tool) will be designed and fabricated to be attached to the cask venting ports while maintaining cask confinement.