1221355

SGW-55605
Revision 0

Description of Work for the Installation of Four Wells in the 100-KR-4 Groundwater Operable Unit, FY2013

Prepared for the U.S. Department of Energy
Assistant Secretary for Environmental Management

Contractor for the U.S. Department of Energy
under Contract DE-AC06-08RL14788

CH2MHILL
Plateau Remediation Company
P.O. Box 1600
Richland, Washington 99352

RECEIVED
AUG 20 2013
EDMC

Approved for Public Release;
Further Dissemination Unlimited

Date Received for Clearance Process (MM/DD/YYYY)
08/05/2013

INFORMATION CLEARANCE FORM

A. Information Category

- [ ] Abstract
- [ ] Journal Article
- [ ] Summary
- [ ] Internet
- [ ] Visual Aid
- [ ] Software
- [ ] Full Paper
- [x] Report
- [ ] Other _____

B. Document Number SGW-55605 Revision 0

C. Title
Description of Work for the Installation of Four Wells in the 100-KR-4 Groundwater Operable Unit, FY2013

D. Proposed Internet Address

E. Required Information (MANDATORY)

1. Is document potentially Classified? (•) No ( ) Yes
   Capelle, David P — Manager Required (Print and Sign)
   If Yes _____ ADC Required (Print and Sign) ( ) No ( ) Yes Classified
2. Official Use Only (•) No ( ) Yes Exemption No. ____
3. Export Controlled Information (•) No ( ) Yes OUO Exemption No. 3
4. UCNI (•) No ( ) Yes
5. Applied Technology (•) No ( ) Yes OUO Exemption No. 5
6. Other (Specify) _____

7. Does Information Contain the Following:
   a. New or Novel (Patentable) Subject Matter? (•) No ( ) Yes
      If "Yes", OUO Exemption No. 3
      If "Yes", Disclosure No.: _____
   b. Commercial Proprietary Information Received in Confidence, Such as Proprietary and/or Inventions?
      (•) No ( ) Yes If "Yes", OUO Exemption No. 4
   c. Corporate Privileged Information? (•) No ( ) Yes
      If "Yes", OUO Exemption No. 4
   d. Government Privileged Information? (•) No ( ) Yes
      If "Yes", Exemption No. 5
   e. Copyrights? ( ) No (•) Yes If "Yes", Attach Permission.
   f. Trademarks? (•) No ( ) Yes If "Yes", Identify in Document.
8. Is Information requiring submission to OSTI? (•) No ( ) Yes
9. Release Level? (•) Public ( ) Limited

F. Complete for a Journal Article

1. Title of Journal

G. Complete for a Presentation

1. Title for Conference or Meeting _____
2. Group Sponsoring _____
3. Date of Conference _____
4. City/State _____
5. Will Information be Published in Proceedings? (•) No ( ) Yes
6. Will Material be Handed Out? (•) No ( ) Yes

H. Information Owner/Author/Requestor
Swanson, L Craig — (Print and Sign)

Responsible Manager
Capelle, David P — (Print and Sign)

Approval by Direct Report to President (Speech/Articles Only) _____ (Print and Sign)

I. Reviewers

	Yes	Print	Signature	Public Y/N (If N, complete J)
General Counsel	[x]	Swenson, Raymond T	Approved via IDMS data file	Y / N
Office of External Affairs	[ ]			Y / N
DOE	[ ]			Y / N
Other	[x]	Witherspoon, Wiley V	Approved via IDMS data file	Y / N
Other	[ ]			Y / N
Other	[ ]			Y / N

J. Comments

Information Clearance Approval

Approved for Public Release; Further Dissemination Unlimited

APPROVED
By Shauna Adams at 1:34 pm, Aug 12, 2013

If Additional Comments, Please Attach Separate Sheet

A-6001-401 (REV 5)

- <workflow name="**(SA) SGW-55605 Rev. 0**" id="**178442289**">
  - <task name="**Clearance Process**" id="**0**" date-initiated="**20130807T1446**" performer="**Shauna E Adams**" performer-id="**149199266**" username="**h4564811**">
    <comments>**Please review SGW-55605 Rev. 0, and give approval for Public Release. POC - Craig Swanson Thank you, Shauna Adams IM Information Clearance 376-4060**</comments>
  </task>
  <task name="**Add XML**" id="**1**" date-due="**20130807T1446**" date-done="**20130807T1446**" />
  <task name="**Manager Approval**" id="**41**" date-due="**20130812T1446**" date-done="**20130807T1500**" performer="**Shauna E Adams**" performer-id="**149199266**" username="**h4564811**" disposition="**Approve**" authentication="**true**" />
  <task name="**Document Reviewer2**" id="**53**" date-due="**20130812T1500**" date-done="**20130808T0748**" performer="**Wiley V Witherspoon**" performer-id="**7836587**" username="**h0032948**" disposition="**Public Release**" authentication="**true**" />
  <task name="**Document Reviewer1**" id="**54**" date-due="**20130812T1500**" date-done="**20130809T1640**" performer="**Raymond T Swenson**" performer-id="**141094653**" username="**h0059138**" disposition="**Public Release**" authentication="**true**" />
  <task name="**Doc Owner Clearance Review**" id="**13**" date-due="**20130812T1640**" date-done="**20130812T1022**" performer="**Shauna E Adams**" performer-id="**149199266**" username="**h4564811**" disposition="**Send On**" authentication="**true**" />
  <task name="**Verify Doc Consistency**" id="**4**" date-due="**20130813T1022**" date-done="**20130812T1023**" performer="**Shauna E Adams**" performer-id="**149199266**" username="**h4564811**" disposition="**Cleared**" authentication="**true**" />
</workflow>

SGW-55605
Revision 0

Description of Work for the Installation of Four Wells in the 100-KR-4 Groundwater Operable Unit, FY2013

Document Type: TR

L. C. Swanson
CH2M HILL Plateau Remediation Company

K. M. Whitley
CH2M HILL Plateau Remediation Company

Date Published
August 2013

Prepared for the U.S. Department of Energy
Assistant Secretary for Environmental Management

Contractor for the U.S. Department of Energy
under Contract DE-AC06-08RL14788

CH2MHILL
Plateau Remediation Company
P.O. Box 1600
Richland, Washington 99352

APPROVED
By Shauna Adams at 1:34 pm, Aug 12, 2013

Release Approval Date

Approved for Public Release;
Further Dissemination Unlimited

TRADEMARK DISCLAIMER

Reference herein to any specific commercial product, process, or service by tradename, trademark, manufacturer, or otherwise, does not necessarily constitute or imply its endorsement, recommendation, or favoring by the United States Government or any agency thereof or its contractors or subcontractors.

This report has been reproduced from the best available copy.

Printed in the United States of America

Contents

1 Introduction and Scope of Work 1

2 Background 4

2.1 Previous Work Activities and Remediation Goals 4
2.2 Geology 4
2.3 Hydrogeology 5
2.4 Contaminants of Concern 7

3 Description of Work Activities 8

3.1 Well Site Preparation 8
3.2 Drilling 8
3.3 Data Collection 10
3.3.1 Geologic Archive Samples 10
3.3.2 Split Spoon Samples 10
3.3.3 Groundwater Samples 10
3.3.4 Geophysical Logging 11
3.4 Construction 12
3.5 Development 15
3.6 Final Report 16

4 Waste Management 17

4.1 Vadose Zone Waste 17
4.2 Groundwater-Contacted Waste 17
4.3 Purgewater 17

5 Quality Assurance 18

6 Schedule 18

7 Technical Procedures 19

8 General Requirements 20

9 Project Documentation 21

10 References 22

Distribution Dist-1

Tables

Table 1 - Well Identification and Location Summary 1
Table 2 - Estimated Depths to Geologic Units 5
Table 3 - Proposed Well Construction Summary for the 100-KR-4 Wells 9
Table 4 - Summary of Well Sample Intervals and Depths 11

Figures

Figure 1 - Hanford Site Map Including the 100-K Area 2
Figure 2 - Location of Existing and Proposed Wells 3
Figure 3 - General Well Construction Diagram for Monitoring of Unconfined Aquifer and for Extraction/Injection Wells 13
Figure 4 - Diagram Showing Configuration of Access Port in Protective Casing 14

Terms

AMSL	above mean sea level
bgs	below ground surface
BTR	Buyer's Technical Representative
CERCLA	*Comprehensive Environmental Response, Compensation, and Liability Act of 1980*
CFR	*Code of Federal Regulations*
CHPRC	CH2M Hill Plateau Remediation Company
CGET	CHPRC General Employee Training
Cr(VI)	Hexavalent Chromium
DOE	U.S. Department of Energy
DOW	description of work
EPA	U.S. Environmental Protection Agency
ft	foot (feet)
FY	fiscal year
gpm	gallons per minute
GPR	Ground Penetrating Radar
HASQARD	Hanford Analytical Services Quality Assurance Requirements Document
HEIS	Hanford Environmental Information System
ID	Identification
KE	K East
KW	K West
m	meter(s)
NTU	nephelometric turbidity units
OU	Operable Unit
PTD	potential total depth
QA	quality assurance
RCRA	*Resource Conservation and Recovery Act of 1976*
RI/FS	remedial investigation/feasibility study
ROD	Record of Decision
RUM	Ringold Upper Mud
TD	Total Depth
WAC	*Washington Administrative Code*

1 Introduction and Scope of Work

This Description of Work (DOW) describes the drilling, construction, development and sampling activities associated with the installation, sampling and testing of two (2) extraction/monitoring wells, one (1) injection and one (1) optional extraction/monitoring well to be installed in the 100-KR-4 Groundwater Operable Unit (OU) in 100-K Area of the Hanford Site during fiscal year (FY) 2013 (Figure 1). These extraction and injection wells are being installed to increase mass removal hexavalent chromium [Cr(VI)] from groundwater and to provide better plume definition and capability for removal of strontium -90 from the groundwater.

The installation of the these well supports Ecology et al., (1989), *Hanford Federal Facility Agreement and Consent Order,* and will be in compliance with requirements of the *Resource Conservation and Recovery Act of 1976* (RCRA) as well as the *Comprehensive Environmental Response, Compensation, and Liability Act of 1980* (CERCLA). Activities to be carried out during the installation of the new wells will include well drilling, soil and water sampling, and well-construction and development is in accordance with addendum 1 of DOE/RL-2013-36, *100-KR-4 Operable Unit Well Installation Sampling and Analysis Plan.*

A project site map with locations of the four proposed extraction/monitoring wells and optional inject well is shown in Figure 2. Wells 100-K-205 (C8292) and 100-K-206 (C8293) are located in 100-K West near the former 183.1 KW Head House. Well 199-K-202 (C8289) is located north of the 105-KE Reactor building. Well 100-K-220 (C8795) is located within the former sedimentation basins and is an optional well. The well location coordinates are summarized in Table 1.

All drilling, decommissioning, and well construction will be performed by a drilling subcontractor. Sampling and testing will be performed by CH2M Hill Plateau Remediation Company (CHPRC) and affiliates.

This document follows the requirements of CHPRC procedure GRP-EE-01-1.4, *Descriptions of Work for Well Drilling and Decommissioning.*

Table 1 - Well Identification and Location Summary

Well ID	Well Name	Type	Easting (m)	Northing (m)	Elevation (m)
C8289	199-K-202	Extraction	146792.84	569101.62	141.3
C8292	199-K-205	Extraction	146090.48	568845.56	147.8
C8293	199-K-206	Injection	146049.78	568734.15	149.9
C8795*	199-K-220	Extraction	146404.86	569362.12	145.6

* Optional well

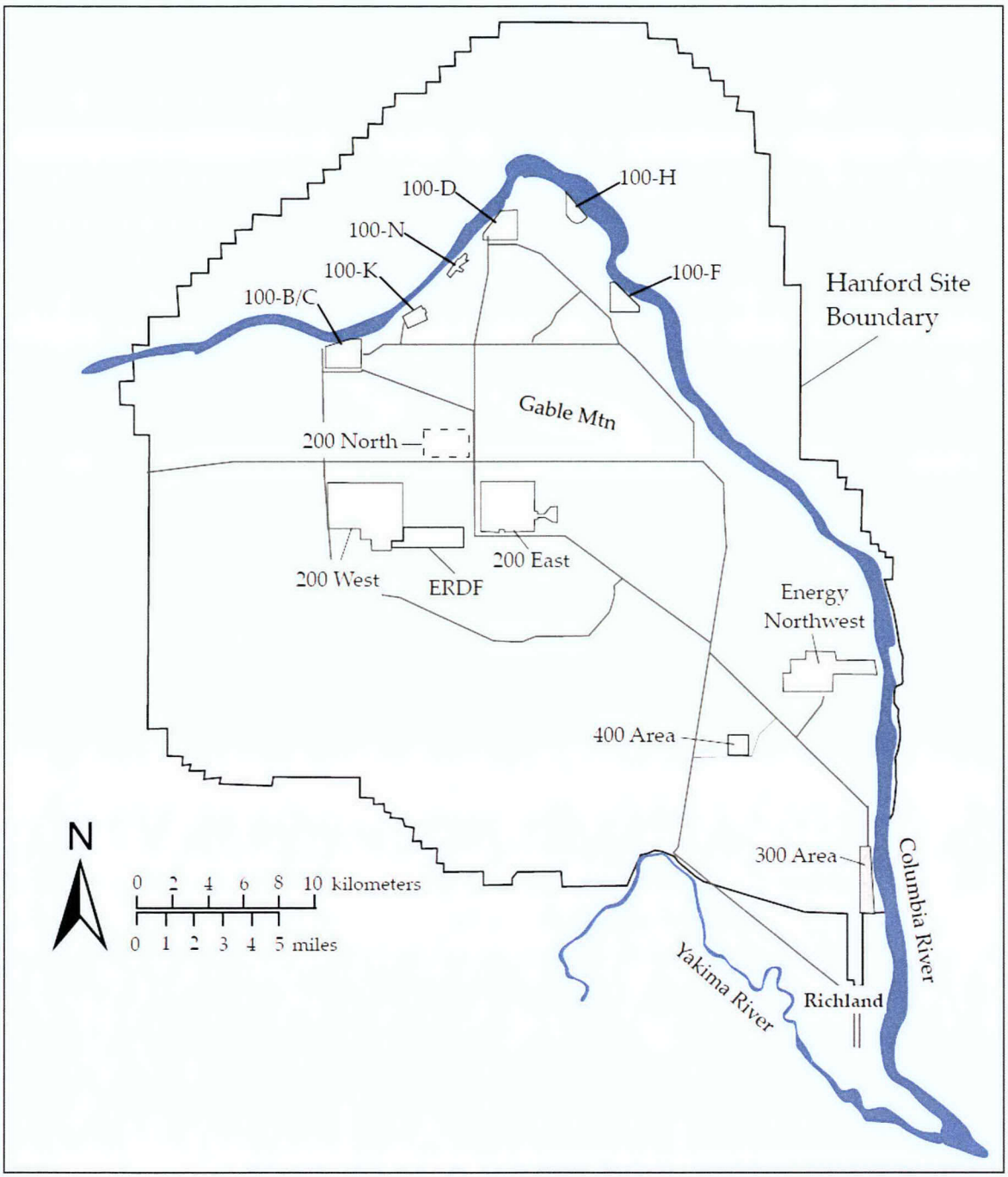

Figure 1 - Hanford Site Map Including the 100-K Area

Figure 2 - Location of Existing and Proposed Wells

2 Background

This section briefly discusses previous work activities and regulatory decisions associated with the 100-KR-4 OU. General summaries of hydrogeology, contaminants of interest, and conceptual models of relevant factors associated with the planned work activities are presented.

2.1 Previous Work Activities and Remediation Goals

The 100-KR-4 OU is located in the northwest portion of the Hanford Site along the southern shoreline of the Columbia River and is located approximately 28 miles north-northwest of Richland, Washington. The 100-KR-4 groundwater OU includes the 100-K East (KE) and 100-K West (KW) Reactor Areas and adjacent portions of the 600 Area.

During the operation of the KE and KW Reactors, use of sodium dichromate dihydrate in the reactors' cooling systems resulted in extensive Cr(VI) contamination in the unconfined aquifer beneath 100-K Area. After irradiation, cooling water was moved from the reactor systems to retention basins and eventually to the 116-K-2 Trench (also known as the Mile-Long Trench), which received about 300 billion L of contaminated water from 1955 through 1971. The liquid effluent included about 300,000 kg of dissolved sodium dichromate; therefore, the dissolved sodium dichromate concentration is equivalent to an average of about 1 mg/L, or 0.4 mg/L as Cr(VI). Tritium, nitrate, and carbon-14 were primarily released to the ground in waste water at the 116-KE-1 and 116-KW-1 Reactor Gas Dryer Condensate Cribs. Strontium-90 was released to the ground at three primary locations; radiologically-contaminated overflow water from the reactor FSBs was routinely discharged to the 116-KE-3 and 116-KW-2 Cribs/Reverse Wells. Radiologically-contaminated reactor cooling water, also containing strontium-90, was released to the ground at the 116-K-2 Trench. A specific source and release point has not been identified for the trichloroethylene observed in groundwater in the vicinity of the 105-KW Reactor; it is assumed to have originated from the use of the solvent during maintenance and repair of reactor components.

Efforts to remediate the groundwater contamination began in 1996, pursuant to the 100 Areas inclusion in the Hanford Site's 1989 listing on the CERCLA National Priorities List. The issuance of an interim Record of Decision (EPA et al. 1996, *Declaration of the Record of Decision for the 100-HR-3 and 100-KR-4 Operable Units at the Hanford Site [Interim Remedial Actions]*) outlined remediation action goals. Currently three CERCLA interim action ion-exchange pump-and-treat systems are operating in the 100-KR-4 OU. The original KR4 treatment system around the 116-K-2 Trench began operations in 1997. The new KX system, which began operations in February 2009, is treating groundwater contaminated by the 116-K-2 Trench that has migrated to the N Reactor fence line. The KW system began remediating Cr(VI) in the KW Reactor area in January 2007. In addition, characterization efforts have been developed within the remedial investigation/feasibility study (RI/FS) work plan (DOE/RL-2008-46-ADD2, *Integrated 100 Area Remedial Investigation/Feasibility Study Work Plan, Addendum 2: 100-KR-1, 100-KR-2, and 100-KR-4 Operable Units*) and results and remediation alternatives compiled in the RI/FS (DOE/RL-2010-97, *Remedial Investigation/Feasibility Study for the 100-KR-1, 100-KR-2, and 100-KR-4 Operable Units*).

2.2 Geology

The stratigraphy of the 100-K area is consistent with the regional geologic setting, composed of unconsolidated sedimentary deposits overlying the Columbia River Basalt Group and associated Ellensburg Formation interbeds. Units overlying the basalt include Holocene alluvial, eolian, and anthropogenic deposits, the Pleistocene Hanford formation, and the Miocene-Pliocene Ringold Formation.

The surface topography of 100-K near the river is generally formed upon a large-scale flood bar (Hanford formation) deposited by the late-Pleistocene cataclysmic floods. Since then, a series of step-like river channel terraces has been carved by the ancestral Columbia River, as described in *Late Pleistocene and Holocene-Age Columbia River Sediments and Bedforms: Hanford Reach Area, Washington, Part 1* (BHI-01648). Each terrace is a fragment of the channel bed and has a distinct sedimentary deposit, typically consisting of sandy pebble-to-cobble gravel. Channel beds may be armored with larger boulder-to-cobble sized material. Each terrace is defined by a low sloping to more sharply defined scarp connecting the adjacent flat areas.

Five terraces are present along the 100-K stretch of the Columbia River. The upper terrace is at an elevation of 133 to 137 m (435 to 448 ft) AMSL and displays at least two channels. One channel followed the current northeast trend of the Columbia River in this area. A second broad channel splits off to sweep south of the 100-N Reactor, and cuts through an area of irregular large-scale current ripples. The 116-K-2 Trench was dug within this first terrace. The next three terraces also follow the northeast trend of the current river channel and terminate at the 100-N Reactor, with the fifth terrace representing the lateral extent of the current Columbia River channel. Within the 100-K Reactor Area, construction obliterated many of the terraces while grading during construction. Fill dirt has been placed along the reactor area's northern fence line to a depth of 4.6+ m (15+ ft) and to thicknesses of 7 m (23 ft) around water basin and reactor foundations.

Underlying any Holocene deposits, the Hanford formation is a Pleistocene, cataclysmic flood and interflood deposit unit resulting from the Missoula Floods that occurred from 15,000 to 12,000 years ago. The Hanford formation can be divided loosely into three facies: gravel-dominated, sand-dominated, and slackwater (WHC-SD-EN-TI-011, *Geology of the Northern Part of the Hanford Site: An outline of Data Sources and the Geologic Setting of the 100 Areas*). In the 100 Areas, the gravel facies is most common. The gravel-dominated Hanford formation is highly basaltic, ranging from approximately 50% to 80% basalt (WHC-SD-EN-TI-011).

Disconformably underlying the Hanford formation, the Ringold Formation Unit E is composed of fluvial matrix-supported gravels and sands with intercalated fine to coarse sand and silt layers. Unit E lithology is between 35% and 90% felsic consisting mainly of metamorphic, intermediate volcanics, and felsic volcanics (WHC-SD-EN-TI-011). Silica and/or carbonate cementation is/are highly variable depending on depth and location.

The contact between the Hanford formation and Ringold Unit E can be difficult to distinguish. The Hanford formation ranges in thickness from less than 1 m (3.3 ft) near the river shoreline to approximately 30 m (100 ft) near the south boundary of 100-K (WHC-SD-EN-TI-011). Within the 100-K Reactor area, the Hanford formation is no more than 20 m (65 ft) thick. Where the Hanford formation thins near the shoreline of the Columbia River, the Ringold Formation is exposed from along the riverbank up to 366 m (1,200 ft) inland (100-HR-3 and 100-KR-4 OU ROD [EPA/ROD/R10-96/134]). The Hanford formation comprises most of the vadose zone throughout the area and, therefore, was affected by contaminated fluids where releases or leaks occurred. At one location at the northeast end of the 116-K-2 Trench, during high river stage, groundwater appears to rise into Hanford gravel sediments that locally reach to an elevation low of 116.5 m (382 ft) AMSL.

2.3 Hydrogeology

The vadose zone in the project area is composed of Holocene deposits, Hanford formation gravels, and Ringold Unit E gravels, as described in Table 2.

The unconfined aquifer in the project area is contained within the Ringold Unit E sediments overlying the less-permeable RUM. A prominent erosional channel in the RUM is present between the former 116-K-2 Trench and the existing 100-KR-4 OU injection well field, which may provide a deep, preferred flow path approximately parallel to the Columbia River (DOE/RL-2006-75, *Supplement to the 100-HR-3 and 100-KR-4 Remedial Design Report and Remedial Action Workplan for the Expansion of the 100-KR-4 Pump-and-Treat System*). Groundwater flow beneath this area is generally to the northwest, toward the Columbia River, but has been affected by two pump-and-treat systems.

Near the Columbia River, the unconfined aquifer is strongly influenced by fluctuations in river stage, which affect the pattern of movement and the rate at which groundwater discharges to the river. During periods of prolonged high river conditions, the elevated water table may contact and mobilize contaminants held in the normally unsaturated lower vadose zone (DOE/RL-2010-11, *Hanford Site Groundwater Monitoring and Performance Report for 2009*). Additionally, dilution of contaminants may occur in near-river wells as river water mixes with aquifer water.

Estimated groundwater depths for the new extraction and injection wells are specified in Table 2. All depths and thicknesses are estimates and may vary due to the nature of the depositional/erosional environment along the riverbank as well as seasonal and diurnal fluctuations in the water table.

Table 2 - Estimated Depths to Geologic Units

Well ID (Name)	Hanford and Surficial Deposits	Ringold E Depth (ft bgs)	RUM Depth (ft bgs)	Water Table (ft bgs)	PTD (ft bgs)
C8289 (199-K-202)	Surface to Top of the Ringold E	40	160	74	160
C8292 (199-K-205)		50	167	79	175
C8293 (199-K-206)		45	175	85	180
C8795* (199-K-220)		43	165	80	175

* Optional well
bgs = below ground surface
RUM = Ringold Upper Mud
PTD = Potential Total Depth

2.4 Contaminants of Concern

The primary groundwater contaminant of concern in the 100-KR-4 OU is Cr(VI). Groundwater co-contaminants of concern are strontium-90, carbon-14, nitrate, trichloroethene, and tritium. Cr(VI) groundwater contamination originated from planned discharges of chromium-treated cooling water in addition to planned and unplanned releases of concentrated sodium dichromate solution used to treat the reactor cooling water. Tritium, nitrate, and carbon-14 were primarily released to the ground in waste water at the 116-KE-1 and 116-KW-1 Reactor Gas Dryer Condensate Cribs. Strontium-90 was released to the ground from radiologically-contaminated overflow water from the reactor fuel storage basins was routinely discharged to the 116-KE-3 and 116-KW-2 Cribs/Reverse Wells. Radiologically-contaminated reactor cooling water, also containing strontium-90, was released to the ground at the 116-K-2 Trench. A specific source and release point has not been identified for the trichloroethylene observed in groundwater in the vicinity of the 105-W Reactor; it is assumed to have originated from the use of the solvent during maintenance and repair of reactor components.

3 Description of Work Activities

Activities to be conducted at each well include site preparation, drilling, sampling, well construction, and well development. All activities describes in this document will be conducted in accordance with the guidelines and requirements set forth in GRP-EE-02-14.1, *Drilling, Remediating, and Decommissioning Resource Protection Wells and Geotechnical Soil Borings* and shall conform to minimum resource protection well standards as defined in Washington Administrative Code (WAC) 173-160, "Minimum Standards for Construction and Maintenance of Well." The WDOH (2008), *The Department of Energy Hanford Site Radioactive Air Emissions License #FF-01*, Enclosure 3, "ALARACT Agreements, ALARACT 18, "Environmental Restoration Program ALARACT Demonstration for Drilling," shall also apply. All drilling and well construction work will be performed by a licensed drilling subcontractor. Information for major subtasks is included in the following sections.

3.1 Well Site Preparation

Each well site has been staked and assigned a unique well number. Drilling sites are accessible by the existing 100-K Area road network. Limited well access roads will be graveled for stabilization and for dust and contamination control, if necessary. Drill pads will be constructed as needed, to provide stable foundations and workspace during drilling and/or sampling activities. Grub surveys will be performed by radiation control technicians for each site prior to the drill pad and access road construction. Ground penetrating radar surveys will also be conducted as necessary and excavation permits will be obtained as part of site preparations prior to the start of drilling.

3.2 Drilling

The drilling contractor will be responsible for complying with well drilling and construction standards defined in WAC 173-160 and all applicable CHPRC procedures. Drilling activities at the well site will be documented by the Buyer's field geologist on daily field activity report sheets. The field geologist will examine the material from the boreholes and prepare borehole logs as specified in GRP-EE-01-7.0, *Geologic Logging*.

Boreholes will be drilled using temporary casing diameters to accommodate the construction standards for specific well types. The nominal casing diameter for the boreholes that will go to total depth (TD) shall be no less than 10 inches. This assures that the completion of each well will retain a minim 2-inch annulus as called for under WAC 173-160. Estimated total drilling and construction depths for the four wells are presented in Table 3. The actual TD of the wells will be determined by CHPRC's field geologist or hydrogeologist and may vary from anticipated depths depending on the hydrogeologic conditions encountered. The final well screen intervals will be determined by CHPRC depending on the hydrogeologic conditions encountered.

The boreholes are to be drilled through unconsolidated clays, silts, gravel, boulders, semi-consolidated materials or hard cemented zones containing these materials. The Drilling Contractor's selected equipment and methods shall be capable of advancing through the anticipated geological formations, and maintaining an open borehole, free of drilling cuttings and other obtrusive materials to the depth explored and at individually selected sampling, depths as applicable. In addition, Contractor's selected equipment and method shall be capable of installing and removing all temporary casing. Drill aids such as bentonite, other clay-based agents, water or any foreign matter capable of affecting the characteristics of the sediment samples or groundwater will not be placed in the well without prior approval of CHPRC. Lubricants used on down hole equipment shall be environmentally compatible; hydrocarbon based lubricants are not acceptable.

Table 3 - Proposed Well Construction Summary for the 100-KR-4 Wells

Listed In Priority	Well Name (Well ID)	Estimated Depth to Water (ft bgs)	Estimated Drill Depth (ft bgs)	Screen Length (ft)/ Interval (ft bgs)	Backfill Interval[a] (ft bgs)	Filter Pack Interval[b] (ft bgs)	Bentonite Pellet Seal Interval (ft bgs)	Bentonite Crumble/ Chips Seal Interval (ft bgs)	Cement Seal Interval (ft bgs)
1	C8293 (199-K-206)	85	180	60 / 80 - 140	180 – 150	145 – 75	70 – 68	68 – 10	10-0
2	C8292 (199-K-205)	79	175	80 / 75 - 155	175 – 160	160 – 70	65 – 63	63 - 10	10-0
3	C8289 (199-K-202)	74	160	80 / 65 - 145	160 – 155	150 - 60	60 – 56	10 - 60	10-0
4[c]	C8795 (199-K-220)	80	175	60 / 75 - 135	175 – 145	140 - 70	70 - 67	10 - 67	10-0

NOTE: Information presented on this table are estimates. Final drill depth, position of well screen, backfill interval, filter pack interval, and bentonite seal intervals will be determined based upon actual borehole conditions.

a. Backfill includes clean sand

b. Filter pack interval to consist of 10-20 mesh Colorado silica sand (subject to change).

c. C8795 is an optional well.

bgs = below ground surface

During drilling and sampling all reasonable efforts will be made to minimize, or eliminate, the addition of water to the borehole. If water addition is necessary, the volume added should be kept to the smallest volume required and added with the approval of the BTR or project lead. Only potable water will be added during drilling. Water addition of one to three gallons should be sufficient to facilitate drilling and/or sampling. If conditions indicate the need for water addition in greater volumes, the field personnel will contact the project technical lead for direction.

Extraction wells will be drilled to a depth adequate to ensure pump operations during low water periods. Wells completed in the first water bearing unit of the RUM will be drilled to the bottom of the water producing zone. The driller will be required to downsize temporary casing when drilling through the RUM and completing in the lower water bearing unit to prevent interconnecting aquifers as required in WAC-173-160-181, *Minimum Standards for Construction and Maintenance of Wells*, "What Are the Requirements for Preserving the Natural Barriers to Ground Water Movement Between Aquifers?".

Prior to the start of the project and between each well, the drill rig and all down-hole equipment shall be decontaminated by high temperature and pressure washing (180° F at >1000 psi) to minimize potential cross-contamination.

Drilling activities for the potential wells listed in this DOW have been evaluated to pose a low radiological and chemical risk based on site history, sampling of nearby waste sites and existing wells. Drilling activities determined to have a low radiological hazard under the radiological risk assessment required by WDOH (2008) are not restricted to any particular drilling method. Based on this assessment, the planned frequency for radiological and industrial hygiene monitoring is twice daily (AM and PM). If radiological contamination is detected during drilling, the work shall immediately be stopped, and the boring upgraded to either "medium or high radiological hazard" and a Radiological Work Permit (RWP) may be developed to instruct workers concerning the radiological requirements. A Scheduled Radiation Survey Task Description will be prepared by CHPRC to provide instructions to the radiological control technician for surveying potentially contaminated soils. In the event radiological contamination or

perched water is encountered, drill casing diameter must be reduced to prevent dragging contamination down the hole into a low-hazard zone. If elevated chemical contamination is encountered, work shall be stopped immediately, the Contractor's Buyer's Technical Representative (BTR) contacted, and an appropriate chemical monitoring plan prepared by CHPRC.

Although the radiological risk at well 200-K-202 was evaluated as a low risk, process history and knowledge regarding the strontium-90 plume indicates that there is a potential strontium-90 will be encountered during drilling and therefore shall be drilled by cable tool method only.

All drill cuttings from the borehole will be handled as specified in Section 4.0 of this DOW.

3.3 Data Collection

Details of the data collection associated with this work scope are included in addendum 1 of DOE/RL-2013-36, *100-KR-4 Groundwater Operable Unit Well Installation Sampling and Analysis Plan*. Sampling requirements for the boreholes include sediment sampling and groundwater sampling. Sediment sampling is to include: (1) geologic archive samples of drill cuttings collected at 5-ft intervals throughout the borehole and at changes in lithology; and (2) sieve grab samples collected at 5-ft intervals below the water table and composited every 20 ft and (3) split spoon samples collected for chemical analysis from expected vadose zone contaminated intervals as indicated in Table 4. Groundwater samples will be collected from all three wells (and optional well if drilled) from the top and bottom of the unconfined aquifer and from the midpoint of the screened interval. Additionally, immediately following well development, a groundwater sample will be collected. A sample summary is provided in Table 4.

3.3.1 Geologic Archive Samples

The Buyer's field geologist will collect drill cuttings every 5 ft for the purpose of geologic description and archived storage. Cuttings will be collected in pint-sized glass jars and chip trays. If radiological contamination is detected by radiological control technician's field-screening instruments, no archive samples will be retained. Detailed geologic descriptions will be performed according to CHPRC procedure GRP-EE-01-7.0.

3.3.2 Split Spoon Samples

Split spoon soil samples will be collect at each well at the top and bottom of the unconfined aquifer, and one at the midpoint of the screen intervals for physical and chemical analysis. From wells 100-K-202 and 100-K-220 (if drilled) a split spoon will be collected at the high water point for chemical analysis. Five additional split spoon samples shall be collected through the vadose zone during the drilling of well 100-K-205 for chemical analysis.

If field observations of drill cuttings from the vadose zone indicate discoloration, excessive moisture, or unusual odors (e.g., stained soil), these cuttings may be collected and analyzed. Discoloration is a key indicator of significant sodium dichromate contamination. The field geologist will determine if the cuttings meet the collection criteria. The Buyer's Technical Representative, in consultation with the field geologist, may require the collection of split-spoon samples or a grab sample to capture the contaminated strata.

3.3.3 Groundwater Samples

Groundwater samples will be collected at intervals throughout the thickness of the aquifer during drilling, at the top and bottom of the unconfined aquifer and one at the midpoint of the screened interval, to confirm ambient chromium concentrations, develop a baseline chromium concentration within the aquifer in the vicinity of the new well, and determine if a vertical distribution of contaminants is present. Samples

will be screened for Cr(VI) in the field to determine screen placement and whether use of the well in the selected location is appropriate for extraction or injection purposes.

Groundwater samples will be collected using a temporary submersible pump. Each completed well will also have one groundwater sample collected at the end of well development for laboratory analysis. All groundwater samples collected from a completed well after demonstrating stable field parameters (pH, temperature, conductivity, and dissolved oxygen).

3.3.4 Geophysical Logging

Geophysical logging will be performed, by OTHERS, through each single string of casing (i.e. before telescoping) to produce a geophysical log of the entire length of the borehole. A Spectral Gamma Logging System (SGLS) will be passed form ground surface to the TD of the borehole for all drilled wells to determine the vertical distribution of gamma-emitting radionuclide. A neutron-Moisture Logging System (NMLS) will also be passed from ground surface to the top of the water table for all drilled wells to determine soil moisture.

Table 4 - Summary of Well Sample Intervals and Depths

Well ID/Name	Geologic Grab Sample	Sieve Analysis Grab Sample (ft bgs)	Split Spoon Sample Depths (ft bgs)[a]	Groundwater Samples (ft bgs)[a]
C8289/ 199-K-202	Every 5 ft or where lithologic changes occur; in one pint jar and a chip tray from drill cuttings.	Sieve grab samples collected at 5 ft intervals and at fine grained intervals throughout aquifer. Composite samples into 20-ft intervals.	• 70.0-72.5 • 75.0-77.5 • 120-122.5 • 158.0-160.5	• 75.0-77.5 • 120-122.5 • 158.0-160.5 • One sample after well completion
C8292/ 199-K-205			• 30.0-32.5 • 40.0-42.5 • 50.0-52.5 • 60.0-62.5 • 70.0-72.5 • 78-80.5 • 120-122.5 • 160-162.5	• 70-80.5 • 120-122.5 • 160-162.5 • One sample after well completion
C8293/ 199-K-206			• 88-90.5 • 130-132.5 • 170-172.5	• 88-90.5 • 130-132.5 • 170-172.5 • One sample after well completion
C8795/ 199-K-220[b]			• 71-73.5 • 73.5-76 • 110-112.5 • 158-160.5	• 73.5-76 • 110-112.5 • 158-160.5 • One sample after well completion

a. Sample depths are estimated based on the geology at nearby wells and intervals may be subject to change based on geologic conditions.
b. Well C8795/100-K-220 is an optional well.

3.4 Construction

Final well design will be confirmed by the BTR and/or CHPRC Project Lead prior to initiating well construction. The design of the wells will meet the minimum standards required in WAC 173-160 for construction of resource protection wells. Final well design, including well screen placement and length, will be determined by concurrence of the filed geologist, drilling lead, and operable unit lead based upon field conditions. If completion is different from WAC 173-160 requirements, then variances will be obtained from the Washington State Department of Ecology (Ecology). Expected well design/construction parameters are provided in Table 3.

Boreholes must pass a straightness test prior to initiating the well construction. The straightness test will involve lowering a solid length of pipe 20-ft in length with continuous diameter no less than 1-in smaller than the inside diameter of the temporary casing. The test pipe must descend freely of its own weight and then be withdrawn without binding. The straightness test shall be performed in the presence of the CHPRC BTR or delegate. In the event that the straightness test fails, CHPRC and Drilling Contractor will determine the best alternative forward under the terms set forth in the drilling contract.

The wells will be constructed generally (as shown in Figure 3) using 15.2 cm (6 in.) diameter (or larger) casing. The drilling method will be determined by the drilling lead and drilling contractor. The wells will be built with Schedule 10, Type 304 or 316, stainless steel, V-slot, continuous wire-wrap screen, on top of a 0.9 to 1.5 m (3 to 5 ft) long, stainless steel sump with end cap. The screen will fully penetrate the aquifer and the top of the screen will be set above the high water level mark except for the well(s) completed in the RUM. Wells will be drilled to a depth adequate to ensure pump operations during low water periods. A schedule 10 stainless steel casing will extend from the top of the well screen to the ground surface. Colorado silica sand or approved equivalent will be used for the sand pack; sodium bentonite pellets and/or natural sodium bentonite chunks, crumbles, or powdered bentonite will be used for bentonite sealing material; Type I/II Portland cement will be used for cement grout.

Surface construction will consist of a protective casing, protective guard posts, and cement pad. The protective casing shall be a minimum of 5.1 cm (2 in.) larger in diameter than the permanent casing. Protective casing shall rise approximately 0.9 m (3 ft) above ground surface. Permanent casing shall rise to approximately 0.3 m (1 ft) below the top of the protective casing. Protective casing shall have a lockable well cap extending approximately 38 cm (15 in.) above the top of the protective casing.

An access port will also be installed in the temporary casing as shown in Figure 4.

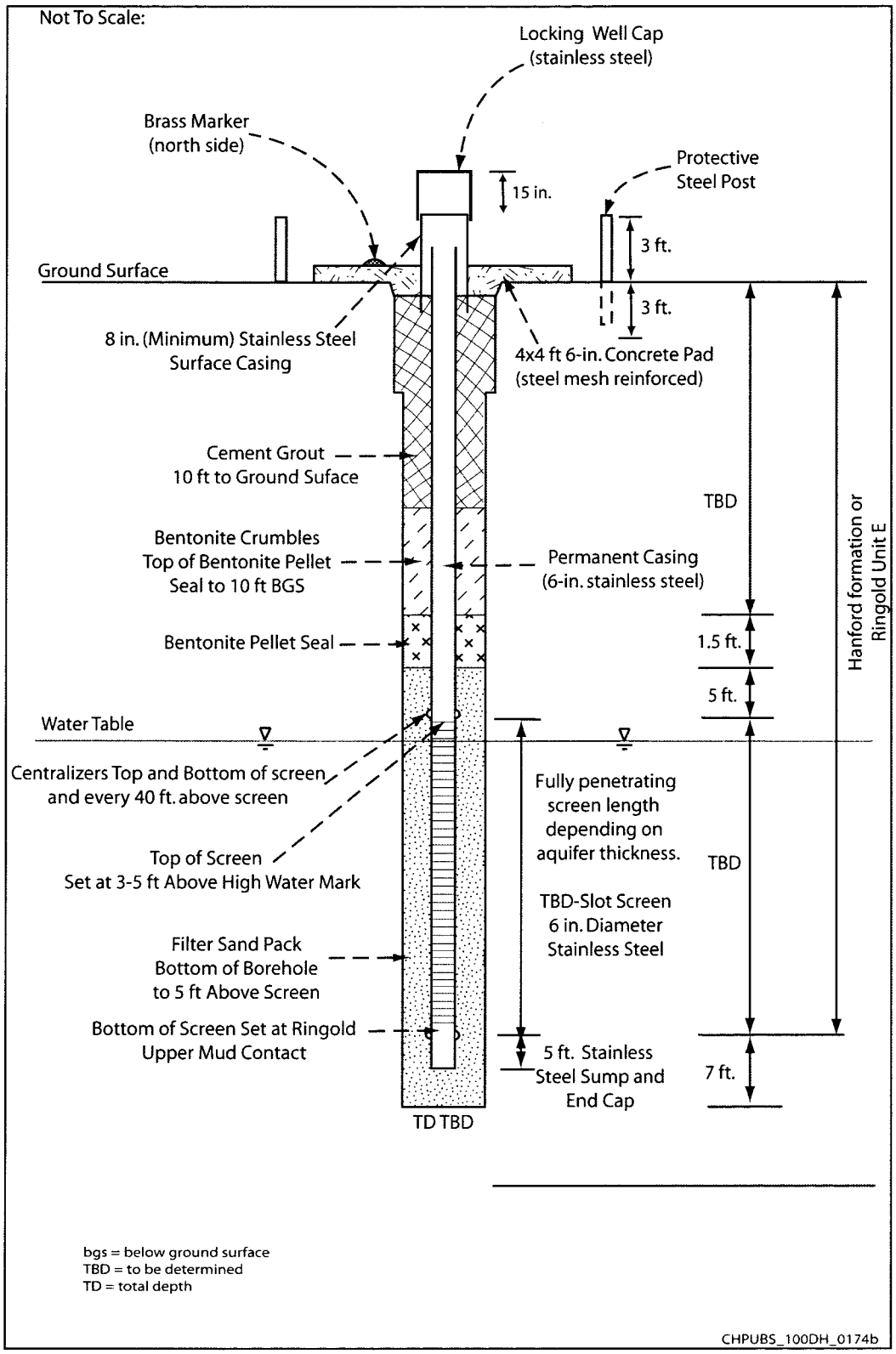

Figure 3 - General Well Construction Diagram for Monitoring of Unconfined Aquifer and for Extraction/Injection Wells

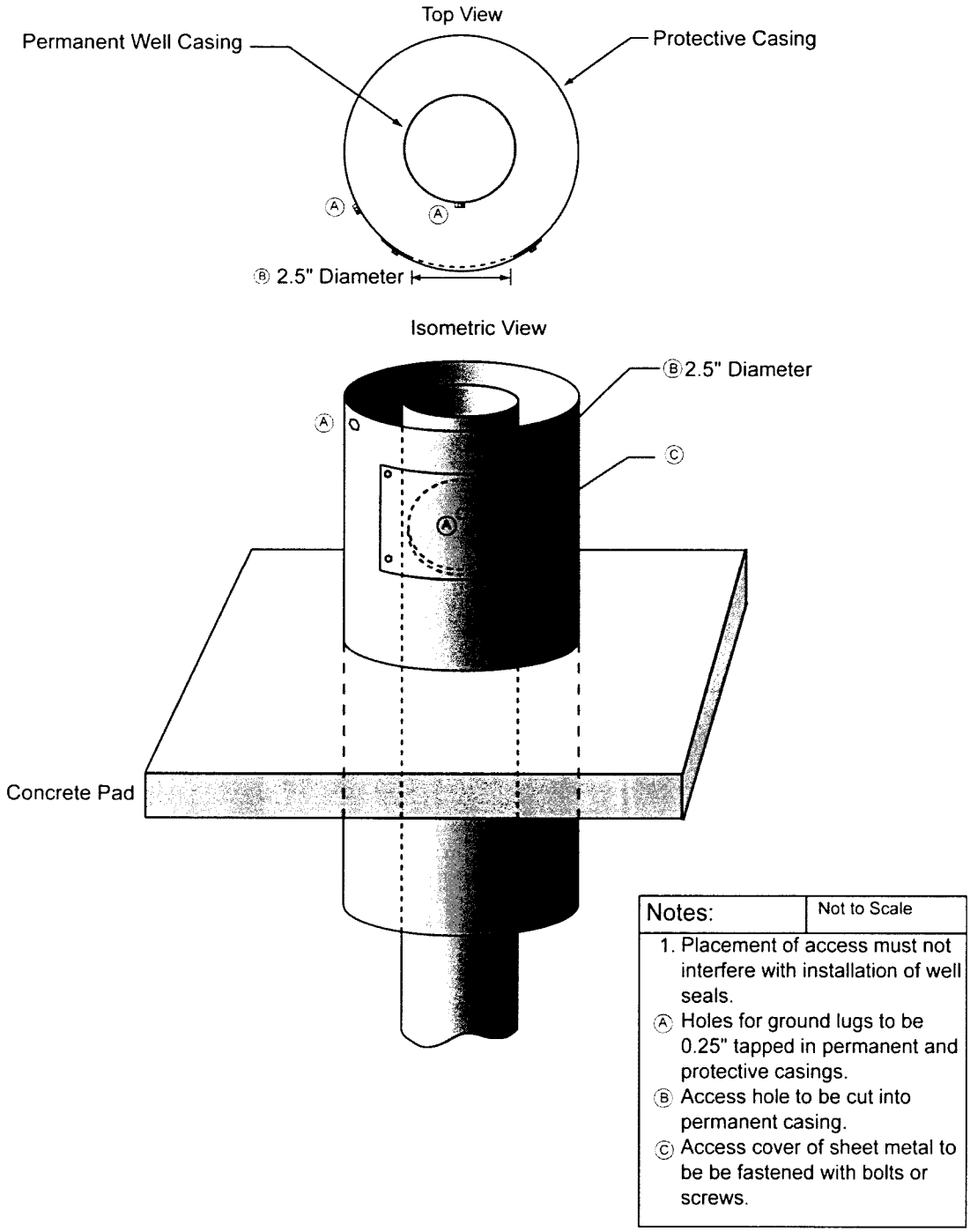

Figure 4 - Diagram Showing Configuration of Access Port in Protective Casing

3.5 Development

The objectives of well development are to settle the filter pack, prevent uncontrolled infiltration of fines, and ensure communication of the well with the surrounding formation. Well development will be conducted in two stages with initial development performed during well construction and final development performed after each well is completed. Well development activities are directed toward ensuring adequate aquifer communication by removing fine-grained sediments from the aquifer, repairing borehole wall damage incurred during drilling, and settling the filter pack. To this end, the drilling contractor must provide a variety of well development tools and capabilities.

Initial development will be performed during well construction in conjunction with placement of the filter pack with the use of a dual-flange surge block to both settle the filter pack and to develop communication across the borehole wall. Combining surging with the filter pack placement provides an abrasive action on the borehole wall that enhances hydraulic efficiency. The dual-flange surge block will be configured with sufficient weight to generate a downward stroke/force that is equivalent to the upward stroke. This initial development is performed as follows:

- Following final placement of the screen and permanent stainless steel casing, drilling sub-contractors shall add an appropriate amount of filter pack silica while withdrawing the temporary casing in no more than 10 ft intervals, depending on the length of the screen;
- Surging is carried out with a dual-flange surge block over intervals not to exceed more than 10 ft of filter pack silica at a given time. Surging shall be considered complete when the filter pack silica level settles no more than 0.1 ft in 15 minutes;
- Surging continues until the field geologist confirms completion of the initial development;
- Fines shall be removed from the well as necessary to keep the screen free from sediment buildup during surging, by use of a bailing device (i.e., sand pump, dart bailer, etc.).

Final development shall be performed immediately following well completion. Fines are removed from the well by bailing and/or pumping in preparation for final development. Final well development with a submersible pump will occur after the fines are removed. A pump capable of producing 20 to 50 gallons per minute (gpm) at the well head should be installed at a depth chosen by CHPRC's field geologist and/or project technical lead or as directed by the BTR: generally the pump should be installed as deep as possible to maximize the available water column (but above the sump). The drilling subcontractor must provide a valve for water sampling at the sump manifold and an accurate flow meter. The on-site geologist will monitor the development using a pressure transducer and data logger or similar device and/or an electronic sounding tape, depending on circumstances encountered during the development process.

If the screen is greater than 20 ft long, the well should be developed in 2 or more intervals. Development should ideally take place at the highest sustainable pumping rate depending on constraints like purgewater disposal capacity. Drawdown equal to about fifty percent of the screen length is desirable. Pumping will continue until physical parameters including temperature, pH, and conductivity have stabilized and the turbidity has decreased to <5 nephelometric turbidity units (NTU), based on measurements using calibrated field instruments. During recovery monitoring, the pumps and all down-hole monitoring equipment must remain in place. Recovery monitoring generally takes at least 30 minutes per final development stage, but will be specified by the geologist.

The field geologist shall determine when the development is complete in accordance with GRP-EE-01-6.3, *Well Development and Testing*. Should these conditions not be met, CHPRC's field geologist, sampling lead, and BTR shall consult with CHPRC's project technical lead to determine the conditions for adequate development.

3.6 Final Report

A borehole summary report will be prepared after well completion to document well construction. The purpose of this document is to compile and archive records, observations, and measurements associated with the drilling and well construction. The borehole summary report includes the field notes and forms prepared during the drilling and construction of each well, well construction details, and well development data. Additional information presented in the report includes the geologic log based on the description of the borehole cuttings, the results of the civil survey with elevation and depth corrections to measurements made while drilling, records of the management and disposition of drilling-derived waste, and the well acceptance documentation.

4 Waste Management

Waste shall be managed in accordance with the *Interim Action Waste Management Plan for the 100-HR-3 and 100-KR-4 Operable Units* (DOE/RL-97-01); and packaged in accordance with SGRP-PRO-OP-50120, *Waste Packaging and Handling at S&GRP*. The Contractor shall be responsible for packaging and for handling all wastes generated during construction and/or decommissioning, development, decontamination and demobilization of the subject wells, in accordance with the SGRP-PRO-OP-50120, *Waste Packaging and Handling at S&GRP*. The CHPRC Waste Management Specialist will provide final waste management instructions for the project.

Vadose and saturated zone miscellaneous solid waste will be stored and managed as outlined in SGRP-PRO-OP-50120. Investigation-derived waste, which includes open containers of groundwater-contacted sediment, purgewater, drill cuttings, etc., will be surveyed by the Industrial Health and Radiation Control technicians in accordance with the site-specific Health and Safety Plan.

4.1 Vadose Zone Waste

All drill cuttings collected from above the highest historical water table will be contained at the drill pad and sampled and analyzed for designation for the appropriate disposal method. These soils will be disposed at the drill pad if the return-to-environment requirements are met or, if required, at the Environmental Restoration Disposal Facility.

4.2 Groundwater-Contacted Waste

All drill cuttings collected from below the historical high water mark will be contained in drums and periodically surveyed using the appropriate radiological and volatile organic field screening instruments at the point of generation. Contained soil slurries will be de-watered, as necessary, before disposal. De-watering contained cuttings is allowed without prior approval and decanted water will be managed as purgewater. The contained cuttings and all decontamination and miscellaneous solid wastes will be stored, characterized (if necessary), and disposed in accordance with the SGRP-PRO-OP-50120.

For all wells, groundwater-contacted wastes will not be designated as "ignitable, corrosive, or reactive" based on historic Hanford Site groundwater Hanford Environmental Information System (HEIS) database data.

4.3 Purgewater

Purgewater will be generated during well installation, development, testing, monitoring, sampling, maintenance, and de-watering of drill-cuttings. Purgewater will be collected and contained at the wellhead until transported to the Purgewater Modular Storage Units or Effluent Treatment Facility (DOE/RL-2009-80, *Investigative Derived Waste Purgewater Management Work Plan*).

5 Quality Assurance

CHPRC issued document PRC-MP-QA-599, *Quality Assurance Program,* describes how CHPRC implements the quality assurance (QA) requirements conveyed in U.S. Department of Energy Order 414.1D, *Quality Assurance*, and 10 Code of Federal Regulations (CFR) 830.121, *Nuclear Safety Management*. PRC-MP-QA-599 also shows how the Tri-Party Agreement (Ecology et al. 1989) and DOE/RL-96-68, *Hanford Analytical Services Quality Assurance Requirements Document* (HASQARD) apply to the Environmental QA Program Plans. CHPRC has also issued CHPRC-00189, *CHPRC Environmental Quality Assurance Program Plan.*

All CHPRC employees and subcontractors performing environmental cleanup activities are responsible for performing work in accordance with the requirements set forth in CHPRC-00189. All work performed under this DOW will be performed in compliance with Project Hanford Management System overall QA program design (PRC-MP-QA-599). A project specific QA program plan for the Soil & Groundwater Remediation Project scope is presented in Appendix C of CHPRC-00189.

All operations including drilling, sampling and well completion/decommissioning, testing and associated documentation are subject to surveillance by CHPRC, CHPRC's authorizing agent and/or owner. This surveillance shall in no way relieve the contractor of any contractual responsibilities. Note the term "surveillance" as used here may include inspection, survey, and/or assessment.

Commercially available tape measures and electronic depth sounders shall have an accuracy of +/- 0.1 ft in 300 ft as required by CHPRC procedure GRP-EE-01-7.4, *Requirements for Use of Hydrogeologic Field Measurements & Monitoring Equipment*, and will be used to make depth and length measurements to +/- 0.01 ft tolerance while drilling and completing the well. The surface of the ground adjacent to the borehole will be used as the "ground surface" reference for depth measurements. The elevation of the brass marker on the concrete well pad and the top of the protective casing will be surveyed after the well has been completed. A correlation of the measurements made while drilling to the surveyed elevation will be included in the final report.

Technical procedures to be followed are listed in Section 7 of this document.

6 Schedule

The 100-KR-4 new well field efforts are planned to begin in August 2013. The drilling and well construction activities have a goal completion date of September 30, 2013.

7 Technical Procedures

This section identifies technical procedures/specifications applicable to field activities performed under this DOW. Activities associated with the drilling and installation of these wells and management of waste generated by these activities will adhere to, at a minimum, the following procedures and requirements:

- 0000X-DC-W0001, Rev. 9, *Supplemental Waste Acceptance Criteria for Disposal at Environmental Restoration Disposal Facility*
- GRP-EE-01-1.11, *Purgewater Management*
- GRP-EE-01-6.2, *Field Cleaning and/or Decontamination of GeoProbe® and Drilling Equipment*
- GRP-EE-01-6.3, *Well Development and Testing*
- GRP-EE-01-7.0, *Geologic Logging*
- GRP-EE-01-7.4, *Requirements for Use of Hydrogeologic Field Measurement & Monitoring Equipment*
- GRP-EE-02-14.1, *Drilling, Remediating, and Decommissioning Resource Protection Wells and Geotechnical Soil Borings*
- GRP-EE-02-14.5, *Returning Vadose Zone Drill Cuttings/Soils to the Environment*
- GRP-EE-05-1.21, *Particle Size Distribution of Soil-Wet Sieve Analysis*
- GRP-FS-04-G-005, *Control of Monitoring Instruments*
- GRP-FS-04-G-012, *Sample Packaging, Transporting and Shipping*
- GRP-FS-04-G-016, *Chain of Custody/Sample Analysis Request*
- GRP-FS-04-G-028, *Field Characterization & Treatment Monitoring Activities Groundwater Sampling*
- GRP-FS-04-G-029, *Non-VOC Soil and Sediment Sampling*
- GRP-FS-04-G-030, *VOC Soil and Sediment Sampling*
- PRC-PRO-IRM-8310, Document Control Processes
- PRC-PRO-IRM-10863, Control of Notebooks and Logbooks
- PRC-PRO-EP-15333, Environmental Protection Processes
- PRC-PRO-EP-15334, Effluent and Environmental Monitoring for Radionuclide Airborne Emissions
- PRC-PRO-EP-15335, Environmental Permitting and Document Preparation
- PRC-RD-EP-15332, Environmental Protection Requirements
- SGRP-PRO-OP-50120, *Waste Packaging and Handling at S&GRP*
- WAC 173-160, *Minimum Standards for construction and Maintenance of Wells*
- WCH-191, *Environmental Restoration and Disposal Facility Waste Acceptance Criteria*

8 General Requirements

All personnel working at the drilling sites will have completed, at a minimum:

- Occupational Safety and Health Administration Act 40-hour Hazardous Waste Site Worker training program (29 CFR 1910.120).
- CHPRC General Employee Training (CGET).
- Hanford Radiation Worker II training.

Work will be performed in accordance with the following procedures:

- CHPRC-00073, *CH2M HILL Plateau Remediation Company Radiological Control Manual*
- Soil and Groundwater Remediation Project Radiological Control Procedures.
- CHPRC Occupational Safety and Health Procedures
- Site specific plans, as applicable:
  - Health and safety plans
  - Radiological Work Permit, as applicable
  - Activity hazard analysis/job safety analysis.

9 Project Documentation

Document requirements for these activities are separated into scoping documents, field activity documents, and reporting documents. The following documents will be prepared to support the project activity:

Scoping Documents

- DOW (this document)
  - Drilling specifications/subcontractor scope of work (procurement package)
  - Excavation permit
  - Additional waste management documents, as required
- Field Documentation
  - Well drilling/decommissioning planning form
  - Daily field activity reports (includes water level measurements)
  - Sample collection, custody, and shipment documentation for waste samples
  - Sample collection, custody, and shipment documentation for soil and groundwater samples
  - Well logs (borehole, lithologic, and completion)
  - Field logbook
  - Well construction summary report
  - Well summary sheet
  - Field cleaning and/or decontamination sheets
  - Well development and test data sheets
  - Sieve Analysis sheets
  - Well survey data report
  - Well acceptance report
- Reporting Documents
  - Borehole Summary Report
  - State of Washington Resource Protection Well Report (generated by the driller)
  - Field documentation will be transmitted to the Geoscience Support for incorporation into the well database.

The records produced for this project will undergo technical and management review in accordance with CHPRC practices and procedures. The required reviewers will be identified prior to document completion and the review time will be established as soon as practical.

10 References

CH2M Hill Plateau Remediation Company Soil and Groundwater Remediation Project Procedures:

GRP-EE-01-1.4, *Descriptions of Work for Well Drilling and Decommissioning*

GRP-EE-01-1.11, *Purgewater Management*

GRP-EE-01-6.2, *Field Cleaning and/or Decontamination of GeoProbe® and Drilling Equipment*

GRP-EE-01-6.3, *Well Development and Testing*

GRP-EE-01-7.0, *Geologic Logging*

GRP-EE-01-7.4, *Requirements for Use of Hydrogeologic Field Measurement & Monitoring Equipment*

GRP-EE-02-14.1, *Drilling, Remediating, and Decommissioning Resource Protection Wells and Geotechnical Soil Borings*

GRP-EE-02-14.5, *Returning Vadose Zone Drill Cuttings/Soils to the Environment*

GRP-EE-05-1.21, *Particle Size Distribution of Soil-Wet Sieve Analysis*

GRP-FS-04-G-005, *Control of Monitoring Instruments*

GRP-FS-04-G-012, *Sample Packaging, Transporting and Shipping*

GRP-FS-04-G-016, *Chain of Custody/Sample Analysis Request*

GRP-FS-04-G-028, *Field Characterization & Treatment Monitoring Activities Groundwater Sampling*

GRP-FS-04-G-029, *Non-VOC Soil and Sediment Sampling*

GRP-FS-04-G-030, *VOC Soil and Sediment Sampling*

PRC-MP-QA-599, 2010, *Quality Assurance Program Description*

PRC-PRO-IRM-8310, *Document Control Processes*

PRC-PRO-IRM-10863, *Control of Notebooks and Logbooks*

PRC-PRO-EP-15333, *Environmental Protection Processes*

PRC-PRO-EP-15334, *Effluent and Environmental Monitoring for Radionuclide Airborne Emissions*

PRC-PRO-EP-15335, *Environmental Permitting and Document Preparation*

PRC-RD-EP-15332, *Environmental Protection Requirements*

SGRP-PRO-OP-50120, *Waste Packaging and Handling at S&GRP*

Other References:

0000X-DC-W0001, 2013, *Supplemental Waste Acceptance Criteria for the Environmental Restoration Disposal Facility*, Rev. 18, Washington Closure Hanford, Richland, Washington.

10 CFR 830.121, *Nuclear Safety Management,* Code of Federal Regulations, as amended.

29 CFR 1910.120, *Hazardous Waste Operations and Emergency Response*, Code of Federal Regulations, as amended.

BHI-01648, *Late Pleistocene and Holocene-Age Columbia River Sediments and Bedforms: Hanford Reach Area, Washington, Part 1,* Rev 0, Bechtel Hanford, Inc., Richland, Washington

CHPRC-00073, 2013, *CH2M Hill Plateau Remediation Company Radiological Control Manual*, Rev. 9, CH2M Hill Plateau Remediation Company, Richland, Washington.

CHPRC-00189, 2013, *CH2M Hill Plateau Remediation Company Environmental Quality Assurance Program Plan*, Rev. 10, CH2M Hill Plateau Remediation Company, Richland, Washington.

Comprehensive Environmental Response, Compensation, and Liability Act of 1980, (CERCLA) 42 USC 9601, et seq.

DOE Order 414.1D, *Quality Assurance,* U.S. Department of Energy, Washington, D.C. Available at: https://www.directives.doe.gov/directives/414.1-BOrder-d/view

DOE-RL, 2007, *Hanford Site Radioactive Air Emissions License #FF-01, Enclosure 3, ALARACT Agreements, ALARACT 18, Environmental Restoration Program ALARACT Demonstration for Drilling,* U.S. Department of Energy, Richland Operations Office, Richland, Washington.

DOE/RL-96-68, 2007, *Hanford Analytical Services Quality Assurance Requirements Document (HASQARD)*, Rev. 3, U.S. Department of Energy, Richland Operations Office, Richland, Washington.

DOE/RL-97-01, 2005, *Interim Action Waste Management Plan for the 100-HR-3 and 100-KR-4 Operable Units,* Rev. 5, U.S. Department of Energy, Richland Operations Office, Richland, Washington.

DOE/RL-2006-75, 2008, *Supplement to the 100-HR-3 and 100-KR-4 Remedial Design Report and Remedial Action Workplan for the Expansion of the 100-KR-4 Pump-and-Treat System,* Rev. 1, U.S. Department of Energy, Richland Operations Office, Richland, Washington.

DOE/RL-2008-46-ADD2, *Integrated 100 Area Remedial Investigation/Feasibility Study Work Plan, Addendum 2: 100-KR-1, 100-KR-2, and 100-KR-4 Operable Units,* U.S. Department of Energy, Richland Operations Office, Richland, Washington.

DOE/RL-2009-80, 2009, *Investigative Derived Waste Purgewater Management Work Plan ,Rev. 0,* U.S. Department of Energy, Richland Operations Office, Richland, Washington.

DOE/RL-2010-11, 2010, *Hanford Site Groundwater Monitoring and Performance Report for 2009,* U.S. Department of Energy, Richland Operations Office, Richland, Washington. Available at: http://www.hanford.gov/rl/uploadfiles/GWRep09/html/start09.htm

DOE/RL-2010-97, *Remedial Investigation/Feasibility Study for the 100-KR-1, 100-KR-2, and 100-KR-4 Operable Units*, U.S. Department of Energy, Richland Operations Office, Richland, Washington.

DOE/RL-2013-36, 2013, *100-KR-4 Groundwater Operable Unit Well Installation Sampling and Analysis Plan,* Rev. 0, U.S. Department of Energy, Richland Operations Office, Richland, Washington.

DOE/RL-2013-36-ADD1, 2013, *100-KR-4 Groundwater Operable Unit Well Installation Sampling and Analysis Plan, Addendum 1,* Rev. 0, U.S. Department of Energy, Richland Operations Office, Richland, Washington.

Ecology, EPA, and DOE, 1989, *Hanford Federal Facility Agreement and Consent Order*, 2 vols., as amended, Washington State Department of Ecology, U.S. Environmental Protection Agency, and U.S. Department of Energy, Olympia, Washington. Available at: http://www.hanford.gov/?page=91&parent=0.

ROD/R10-96/134, 1996, *Declaration of the Record of Decision for the 100-HR-3 and 100-KR-4 Operable Units,* U.S. Department of Energy, Richland Operations Office, Richland, Washington. Available at: http://www5.hanford.gov/arpir/?content=findpage&AKey=D196097243

WAC 173-160, *Minimum Standards for Construction and Maintenance of Wells*, Washington Administrative Code, as amended, Washington State Department of Ecology, Olympia, Washington.

WCH-191, 2010, *Environmental Restoration Disposal Facility Waste Acceptance Criteria*, Rev. 1, Washington Closure Hanford, Richland, Washington.

WDOH, 2008, *The Department of Energy Hanford Site Radioactive Air Emissions License #FF-01*, Enclosure 3, "ALARACT Agreements," ALARACT 18, "Environmental Restoration Program ALARACT Demonstration for Drilling," Washington State Department of Health, Office of Radiation Protection, Radioactive Air Emissions Section, Richland, Washington. Available at: http://www.doh.wa.gov/Portals/1/Documents/4100/FF-01_a_.pdf

WHC-SD-EN-TI-011, 1992, *Geology of the Northern Part of the Hanford Site: An Outline of Data Sources and the Geologic Setting of the 100 Areas,* Rev. 0, Westinghouse Hanford Company, Richland, Washington.

Distribution

Onsite

1	U.S. Department of Energy Richland Operations Office	
	DOE Public Reading Room	H2-53
Electronic Copies Only	CHPRC	
	C.W. Miller	R3-50
	D.P. Capelle	R3-60
	J.B. Geiger	R3-60
	J.L. Kaas	R3-21
	A.J. Green	R3-60
	J.L. Hammons	R3-20
	S.L. Huggins	R3-21
	R.W. Oldham	R3-60
	L.C. Swanson	R3-60
	K.M. Whitley	R3-50
	D. Todak	R3-50
4	Lockheed Martin Services, Inc.	
	Central Files	B1-07
	Document Processing Center (1)	H6-08
	EDMC (2)	H6-08