0034482

4 MAR 1984 RECEIVED OSTI

DOE/EIS--0089D

DE83 008561

DOE/EIS-0089D

DRAFT
ENVIRONMENTAL IMPACT STATEMENT

Operation of PUREX and Uranium Oxide Plant Facilities

Hanford Site
Richland, Washington

MAY 1982

U.S. DEPARTMENT OF ENERGY

WASHINGTON, D.C. 20545

DISCLAIMER

This report was prepared as an account of work sponsored by an agency of the United States Government. Neither the United States Government nor any agency thereof, nor any of their employees, makes any warranty, express or implied, or assumes any legal liability or responsibility for the accuracy, completeness, or usefulness of any information, apparatus, product, or process disclosed, or represents that its use would not infringe privately owned rights. Reference herein to any specific commercial product, process, or service by trade name, trademark, manufacturer, or otherwise does not necessarily constitute or imply its endorsement, recommendation, or favoring by the United States Government or any agency thereof. The views and opinions of authors expressed herein do not necessarily state or reflect those of the United States Government or any agency thereof.

NOTICE

PORTIONS OF THIS REPORT ARE ILLEGIBLE. It has been reproduced from the best available copy to permit the broadest possible availability.

DISTRIBUTION OF THIS DOCUMENT IS UNLIMITED

LEGIBILITY NOTICE

A major purpose of the Technical Information Center is to provide the broadest dissemination possible of information contained in DOE's Research and Development Reports to business, industry, the academic community, and federal, state and local governments.

Although a small portion of this report is not reproducible, it is being made available to expedite the availability of information on the research discussed herein.

1

FEB 1994
RECEIVED
EPIC

COVER SHEET
DRAFT ENVIRONMENTAL IMPACT STATEMENT
DOE/EIS-00890

a) Lead Agency: The Department of Energy

b) Proposed Action: Operation of PUREX and Uranium Oxide Plant Facilities, Hanford Site, Washington.

c) For further information contact:

- Mr. Roger K. Heusser, Director, Division of Materials Processing, Office of Nuclear Materials Production, Mail Stop DP-73, Washington, DC 20545, (301)353-5496

- Dr. Robert J. Stern, Director, Environmental Compliance Division, EP-33 Office of the Assistant Secretary for Environmental Protection, Safety and Emergency Preparedness, 1000 Independence Avenue, S.W., Room 4G-064, Washington, DC 20585, (202)252-4600

To request copies of the DEIS contact: Mr. Roger K. Heusser at the address noted above.

d) Designation: Draft EIS

e) Abstract: The proposed action is the resumption of operations of the PUREX/UO_3 facilities to produce plutonium (and other special nuclear materials) for national defense needs. The facilities will include modifications to mitigate environmental impacts, reduce occupational hazards, and improve safety and security measures around the facilities. The scope of the EIS includes discussion of environmental impacts associated with the resumption of operation of the PUREX/UO_3 facilities. Three alternatives and their environmental impacts are evaluated and compared with the proposed action.

FOREWORD

This draft environmental impact statement (DEIS) analyzes the environmental effects of the Department of Energy's (DOE) proposal to resume operation of the Plutonium and Uranium Extraction (PUREX) and Uranium Oxide (UO_3) chemical processing facilities which are located on the Hanford Site near Richland, Washington. The PUREX and UO_3 facilities are used to process irradiated fuels and separate plutonium, uranium and neptunium for use in DOE's defense and research and development program. The PUREX and UO_3 plants were used from 1956 to 1972 to process the irradiated fuels produced by up to nine production reactors located on the Hanford Site.

After the PUREX and UO_3 facilities had processed the inventory of irradiated fuels available in 1972, their operation on a continuing basis to process the fuel produced in N-Reactor (the only reactor continuing in operation at Hanford) was no longer economical and plans were made to operate the facilities on a batch basis when sufficient quantities of irradiated fuel were available for processing and plutonium was required for defense program and research and development purposes. Therefore, the PUREX and UO_3 facilities have been maintained in standby condition since 1972. During this standby period, modifications have been made to the facilities to mitigate the environmental impact of their operation and maintain their operational viability. It has now been determined that processing of the irradiated fuels is required to meet the nation's defense needs and research and development needs. This DEIS analyzes the environmental impacts associated with resuming operations of the PUREX/UO_3 facilities, and alternatives thereto.

The waste processing and management aspects of operating the PUREX and UO_3 facilities were described and evaluated in detail in ERDA-1538, Final Environmental Statement, Waste Management Operations, Hanford Reservation, Richland, Washington, (December 1975), as supplemented by DOE/EIS-0063, Final Environmental Impact Statement, Supplement to ERDA-1538, Double-Shell Tanks for Defense High Level Radioactive Waste Storage. (April 1980a). This DEIS summarizes those impacts and updates the information contained in the earlier documents where appropriate.

This DEIS was prepared in accordance with the regulations of the Council on Environmental Quality (40 CFR Parts 1500-1508) and the Department of Energy Guidelines for Implementation of the CEQ Regulations (45 FR 20694). A Notice of Intent (NOI) to prepare an EIS analyzing the resumption of operation of the PUREX and UO_3 facilities was published in the Federal Register on January 22, 1981 (46 FR 7049), and was provided directly to the state governments of Washington, Oregon, and Idaho, local governments in the Hanford region, and the local news media. A total of twenty-one comment letters were received in response to the NOI. While most of the letters only requested copies of the DEIS when issued, four letters contained comments regarding the preparation of the DEIS and those comments were considered in preparation of this document.

This DEIS is being made available to appropriate Federal, State and local entities and members of the general public in order to provide those parties with an opportunity to review and comment on the document. The comments received on this DEIS will be assessed and considered by DOE in its preparation of the final EIS and the content of the document will be revised as appropriate. The final EIS will be transmitted to commenting agencies, made available to members of the public and filed with the Environmental Protection Agency (EPA). EPA will publish a notice in the Federal Register indicating that DOE has filed the final EIS. DOE will make a decision on the proposed action not earlier than thirty days after EPA has published the Federal Register notice. DOE will record its decision in a publicly available Record of Decision.

CONTENTS

FOREWORD iii

1.0 EXECUTIVE SUMMARY 1.1

1.1 PURPOSE AND NEED 1.1

1.2 PROPOSED ACTION AND ALTERNATIVES 1.1

1.2.1 Proposed Action 1.1

1.2.2 Construct New Fuel Processing Plant at Hanford 1.5

1.2.3 Process Fuel Offsite 1.5

1.2.4 No Action (Continue Present Action) Alternative . . . 1.6

1.2.5 Overall Evaluation of Alternatives 1.7

1.3 DESCRIPTION OF THE AFFECTED ENVIRONMENT 1.7

1.3.1 The Hanford Site 1.7

1.3.2 The Savannah River Plant Site 1.7

1.4 ENVIRONMENTAL CONSEQUENCES 1.10

2.0 PURPOSE AND NEED 2.1

3.0 ALTERNATIVES INCLUDING PROPOSED ACTION 3.1

3.1 RESUMPTION OF PUREX/UO_3 OPERATION AT HANFORD (PROPOSED ACTION) . . 3.2

3.1.1 PUREX/UO_3 Process Description 3.5

3.1.2 Description of PUREX/UO_3 Facilities 3.13

3.1.3 PUREX Processing Capabilities 3.15

3.1.4 PUREX/UO_3 Operational Requirements 3.15

3.1.5 Completed PUREX Facility Modifications 3.15

3.1.6 Planned Facility Mitigating Measures (Modifications) . . . 3.16

3.1.7 Other Mitigation Measures Considered and Not Proposed . . 3.17

3.1.8 Safeguards and Security Features 3.17

3.1.9 Natural Forces Resistance of the PUREX and UO_3 Plants . . 3.17

3.1.10 Reasonably Forseeable Environmental Effects 3.18

3.2 CONSTRUCT NEW FUEL PROCESSING FACILITY AT HANFORD 3.19

3.2.1 General Description of the Fuel Processing Facility . . . 3.19

3.2.2 New Plant Construction Costs, Schedules and Resources . . 3.22

3.2.3 Effluents from New Plant Operation at Hanford 3.22

3.2.4 Effects of Schedule for Plant Construction 3.23

3.2.5 Decommissioning 3.23

3.2.6 Reasonably Forseeable Environmental Effects 3.24

3.3 PROCESS FUEL OFFSITE 3.24

3.3.1 Previous Experience with Shipping and Processing N-Reactor Fuel Offsite 3.24

3.3.2 Cask Selection and Availability 3.25

3.3.3 Offsite Transportation 3.26

3.3.4 Fuel Handling Requirements 3.26

3.3.5 Processing Fuel Offsite 3.27

3.3.6 Cost Estimates 3.28

3.3.7 Reasonably Foreseeable Environmental Effects 3.28

3.4 NO ACTION (Continue the Present Action) 3.29

3.4.1 Present Action 3.29

3.4.2 Modification of Existing Storage Facilities 3.30

3.4.3 Construct New Storage Facility 3.30

3.4.4 Reasonably Foreseeable Environmental Effects 3.31

3.5 ALTERNATIVES ELIMINATED FROM DETAILED STUDY 3.31

3.6 OVERALL EVALUATION OF ALTERNATIVES 3.32

4.0 AFFECTED ENVIRONMENT 4.1

4.1 HANFORD SITE LOCATION AND LOCATION OF PUREX/UO_3 PLANT 4.1

4.2 LOCAL INDUSTRIAL, TRANSPORTATION, FEDERAL AND SITE-SPECIFIC ACTIVITIES 4.3

4.3 SUMMARY OF ENVIRONMENTAL CHARACTERISTICS 4.3

4.3.1 Geology-Topography 4.3

4.3.2 Seismicity 4.4

4.3.3 Climatology 4.4

4.3.4 Hydrology 4.5

4.3.5 Ecology 4.6

4.3.6 Background Radiation and Environmental Monitoring Program . . 4.8

4.4 SOCIOECONOMICS 4.8

4.4.1 Population 4.9

4.4.2 Labor Force 4.9

4.4.3 Housing 4.10

4.4.4 Education 4.11

4.4.5 Community Services 4.12
4.4.6 Land Use 4.13
4.4.7 Historical Sites and National Landmarks 4.13
4.5 BRIEF CHARACTERIZATION OF SAVANNAH RIVER PLANT 4.13
4.5.1 Site Location 4.13
4.5.2 Geology-Hydrology 4.13
4.5.3 Climatology 4.14
4.5.4 Seismicity 4.14
4.5.5 Ecology 4.14
4.5.6 Rare or Endangered Species 4.14
4.5.7 Background Radiation 4.14
4.5.8 Environmental Park 4.14
4.5.9 Population 4.15
4.5.10 Historic and National Landmarks 4.15
5.0 ENVIRONMENTAL CONSEQUENCES 5.1
5.1 PROPOSED ACTION 5.5
5.1.1 Radiological Impacts, Normal Operation 5.5
5.1.2 Nonradiological Impacts, Normal Operation 5.12
5.1.3 Impacts of Routine Transportation of Nuclear Materials . . 5.15
5.1.4 Potential Accident Impacts 5.17
5.1.5 Unavoidable Adverse Impacts 5.30
5.2 ALTERNATIVES TO PROPOSED ACTION 5.31
5.2.1 Construct a New Fuel Processing Plant at Hanford . . . 5.31
5.2.2 Processing Fuel Offsite 5.33
5.2.3 No Action (Continue Present Action) 5.37
5.3 SOCIOECONOMIC EFFECTS 5.37
5.3.1 Socioeconomic Effects of the Proposed Action 5.39
5.3.2 Socioeconomic Effects of the Alternatives to the Proposed Action 5.39
5.4 CUMULATIVE EFFECTS 5.40
5.4.1 Description of Nearby Facilities 5.40
5.4.2 Cumulative Effects of Proposed Action and Alternatives . . 5.41
5.5 DECONTAMINATION AND DECOMMISSIONING 5.41

5.6 RELATIONSHIP BETWEEN SHORT-TERM USE OF THE ENVIRONMENT AND ENHANCEMENT OF LONG-TERM PRODUCTIVITY 5.41

5.7 RELATIONSHIP OF PROPOSED ACTION TO LAND-USE PLANS, POLICIES, AND CONTROLS 5.44

5.8 IRREVERSIBLE AND IRRETRIEVABLE COMMITMENTS OF RESOURCES 5.44

6.0 DESCRIPTION OF APPLICABLE REGULATIONS AND GUIDELINES 6.1

6.1 DOE ORDER 5480.1A, CHAPTER XI 6.1

6.2 40 CFR 50 (NATIONAL PRIMARY AND SECONDARY AMBIENT AIR QUALITY STANDARDS) 6.3

6.3 40 CFR 52 (PREVENTION OF SIGNIFICANT DETERIORATION OF AIR QUALITY) . 6.3

6.4 WASHINGTON ADMINISTRATIVE CODE, TITLE 18 AND TITLE 173 . . . . . 6.4

7.0 LIST OF REVIEWERS AND PREPARERS 7.1

7.1 PACIFIC NORTHWEST LABORATORY 7.2

7.2 BATTELLE, COLUMBUS LABORATORIES 7.2

7.3 ROCKWELL HANFORD OPERATIONS 7.3

8.0 GLOSSARY 8.1

8.1 ABBREVIATIONS AND SYMBOLS 8.1

8.2 GLOSSARY DEFINITIONS 8.2

9.0 LIST OF AGENCIES AND INDIVIDUALS TO WHOM COPIES OF THE DRAFT ENVIRONMENTAL IMPACT STATEMENT WERE SENT 9.1

APPENDIX A: DETAILED DESCRIPTION OF PROPOSED ACTION A.1

APPENDIX B: ACCIDENT SAFETY ANALYSIS B.1

APPENDIX C: METHOD FOR CALCULATING RADIATION DOSE AND CONVERTING TO HEALTH EFFECTS C.1

APPENDIX D: COMPARISON OF PROCESS EFFLUENTS AND CONSEQUENCES AT VARYING PROCESSING RATES . . . . . D.

REFERENCES Ref.1

INDEX DEIS Index-1

FIGURES

3.1 PUREX/UO_3 Facilities and Other Hanford Facilities 3.3

3.2 Aerial View of the PUREX Facility 3.4

3.3 Abbreviated Flowsheet of the PUREX/UO_3 Process at Hanford . . . 3.6

3.4 UO_3 Facility Process Flow Diagram 3.7

3.5 Liquid Streams Leaving the PUREX Facility 3.12

3.6 Fuel Processing Plant Engineering, Procurement and Construction Schedule . 3.20

3.7 Fuel Processing Plant Construction Labor Force Schedule 3.21

4.1 Location of the Hanford Site 4.1

4.2 Hanford Site 4.2

4.3 Sagebrush and Cheatgrass, Typical Vegetation in the Central Part of the Hanford Reservation 4.7

4.4 Communities in an 80-km (50-Mile) Radius of the Hanford Site . . . 4.10

A.1 Cladding Removal and Uranium Dissolution Process Flow Diagram . . . A.3

A.2 First Decontamination and Partition Cycle Process Flow Diagram . . . A.8

A.3 Final Uranium Cycle Process Flow Diagram A.10

A.4 Final Plutonium Cycles Process Flow Diagram A.11

A.5 Neptunium Recovery Cycle—Phase I, II, III Operation Flow Diagram . . A.13

A.6 Neptunium Purification Process Flow Diagram A.15

A.7 Solvent Treatment Systems 1 and 2—Process Flow Diagrams A.17

A.8 Waste Concentration and Handling Flow Diagram A.18

A.9 Plutonium Oxide Conversion Process Flow Diagram A.39

C.1 Computer Programs for Calculating Public Doses from Routine Airborne Releases of Radionuclides C.2

C.2 Computer Programs for Calculating Public Doses from Accidental Airborne Releases of Radionuclides C.2

D.1 Principal Gaseous Waste Discharge Points from the PUREX Facility . . D.2

TABLES

1.1 Comparison of Proposed Action and Alternatives 1.2

1.2 Comparison of Environmental Consequences from the Proposed Action and Alternatives, 3000 MT/yr Processing Rate 1.8

3.1 Radioactive Liquids From PUREX Waste Management, m^3/yr 3.8

3.2 Approximate Need Schedule for Additional Waste Storage Tanks for Hanford Waste Management, 48,000 MT Fuel Processed 3.10

3.3 Annual Radioactive Solid Waste Discharged from the PUREX Plant . . . 3.14

3.4 Estimated Radioactive Gaseous Effluents from the New PUREX Facility, 3000 MT/yr Processing Rate 3.23

3.5 Projected Gaseous Releases from Processing N-Reactor Irradiated Fuels at SRP, 3000 MT/yr Processing Rate 3.28

3.6 Projected Liquid Releases from Processing N-Reactor Irradiated Fuels at SRP, 3000 MT/yr Processing Rate 3.28

3.7 Projected Radioactive Gaseous Effluents from the No-Action Alternative . 3.31

3.8 Comparison of Alternatives to Proposed Resumption of Operation of PUREX/UO_3 Plants 3.33

3.9 Comparison of the Environmental Consequences from the Proposed Action and Alternatives, 3000 MT/yr Processing Rate 3.34

3.10 Comparison of Gaseous Radioactive Effluents from Each Alternative . . 3.36

3.11 Comparison of Liquid Radioactive Effluents from Each Alternative . . 3.36

4.1 Tri-Cities Housing Vacancies, April 1980 . . . . . 4.11

5.1 Comparison of the Proposed Action and Past Operation of the PUREX Plant . 5.2

5.2 Comparison of the Environmental Consequences from the Proposed Action and Alternatives, 3000 MT/yr Processing Rate 5.3

5.3 Average Annual Occupational Doses Per Worker, 3000 MT/yr Processing Rate 5.7

5.4 Potential Radiation Doses to Members of the General Public from Routine Releases from the PUREX Plant, 3000 MT/yr Processing Rate 5.8

5.5 Potential Radiation Doses to Members of the General Public from Routine Releases from the UO_3 Plant, 3000 MT/yr Processing Rate 5.11

5.6 Nonradiological Pollutant Air Concentrations from PUREX/UO_3 Operations, 3000 MT/yr Processing Rate 5.14

5.7 Shipments of Nuclear Material Associated with Operation of the PUREX Facility, at a 3000 MT/yr Processing Rate 5.16

5.8 Potential Radiation Doses to Members of the General Public, Dissolving Short-Cooled Fuel Accident 1—no Mitigation 5.20

5.9 Potential Radiation Doses to Members of the General Public, Dissolving Short-Cooled Fuel Accident 1—with Mitigation 5.21

5.10 Potential Radiation Dose to Members of the General Public, U-Fire in Dissolver (Accident 2) 5.22

5.11 Potential Radiation Dose to Members of the General Public, H-Cell Solvent Fire (Accident 3) 5.23

5.12 Potential Radiation Dose to Members of the General Public, F-Cell Explosion (Accident 4) 5.24

5.13 Potential Radiation Dose to Members of the General Public, Criticality in Process Cell (Accident 5) 5.25

5.14 Comparison of Health Effects from Routine Operation and Potential Operating Accidents for PUREX/UO_3 Operations 5.26

5.15 Lifetime Dose to the Maximum Individual Due to Postulated Natural Forces Accidents Compared to Dose from Normal Operations 5.28

5.16 Potential Radiation Dose to Members of the General Public from Routine Releases from a New PUREX Plant at the Hanford Site, 3000 MT/yr Processing Rate . 5.32

5.17 Potential Radiation Doses to Members of the General Public from Routine Releases from Processing 3000 MT/yr of N-Reactor Fuel at SRP 5.35

5.18 Estimated Radiation Doses to the General Public and Crew From Routine Offsite Transport of N-Reactor Fuel 5.37

5.19 Potential Radiation Doses from a Severe Accident in Transporting N-Reactor Fuel 5.37

5.20 Potential Doses to Members of the General Public from the No-Action Option at Hanford 5.38

5.21 Estimated Manpower Requirements 5.40

5.22 Total Cumulative Radiological Impacts to the Maximum Individual From the Resumed PUREX/UO_3 Operation and Alternatives 5.42

5.23 Total Cumulative Radiological Impacts to the Population From the Resumed PUREX/UO_3 Operation and Alternatives 5.43

5.24 Chemical Consumption in PUREX/UO_3 Facilities, 3000 MT/yr Processing Rate 5.45

6.1 Radiation Protection Standards for Occupationally-Related External and Internal Exposure 6.2

6.2 Radiation Protection Standards for External and Internal Exposure to Members of the Public 6.2

6.3 Concentrations in Air and Water Above Natural Background, Excerpts from DOE Order 5480.1A 6.3

6.4 NO_x Emission Limitations 6.4

A.1 PUREX Plant Aqueous Effluents A.21

B.1 Postulated Abnormal Operations for PUREX Plant B.3

B.2 Postulated Abnormal Operations for PuO_2 Production System B.7

B.3 Postulated Abnormal Operations for UO_3 Plant B.10

B.4 Source Term for Dissolving of Short-Cooled Fuel at PUREX B.12

B.5 Source Terms for PUREX Dissolver Uranium Fire B.13

B.6 Source Term for Solvent Fire in Solvent Extraction Cell B.14

B.7 Source Term for Uncontrolled High-Level Waste Release to Cell . . . B.15

B.8 Significant Postulated Criticality Accidents B.17

B.9 Source Terms for Postulated Nuclear Criticality B.18

B.10 Source Term for Onsite Transportation Accident B.19

B.11 Source Term for Offsite Transportation Accident B.20

C.1 Computer Programs Used to Calculate Potential Radiation Doses from Effluents Released at PUREX C.1

C.2 Health Effects Risk Factors Recommended in DOE/EIS-0046F C.4

D.1 Radionuclide Content of Annual Gaseous Effluents from the PUREX Plant, 3000 MT/yr Processing Rate D.4

D.2 Radionuclide Content of Annual Gaseous Effluents from the PUREX Plant, 1050 and 2100 MT/yr Processing Rates D.5

D.3 Radionuclide Content of Annual Gaseous Effluents from the UO_3 Plant, 3000 MT/yr Processing Rate D.5

D.4 Radionuclide Content of Annual Gaseous Effluents from the UO_3 Plant, 1050 and 2100 MT/yr Processing Rates D.5

D.5 Estimated Annual Nonradioactive Gaseous Effluents from PUREX/UO_3 Plants, 3000 MT/yr Processing Rate D.6

D.6 Estimated Annual Nonradioactive Gaseous Effluents from PUREX/UO_3 Plants, 1050 and 2100 MT/yr Processing Rate D.6

D.7 Gaseous Effluents from Transportation of Major PUREX Materials, 3000 MT/yr Processing Rate D.6

D.8 Radionuclide Content of Annual Liquid Discharges from the PUREX Plant to Cribs and Ponds, 3000 MT/yr Processing Rate D.8

D.9 Radionuclide Content of Annual Liquid Discharges from the PUREX Plant to Cribs and Ponds, 1050 and 2100 MT/yr Processing Rates . . D.9

D.10 Radionuclide Content of Annual Liquid Discharges from the UO_3 Plant, 3000 MT/yr Processing Rate D.9

D.11 Radionuclide Content of Annual Liquid Discharges from the UO_3 Plant, 1050 and 2100 MT/yr Processing Rates D.10

D.12 Nonradioactive Chemicals in Liquid Effluents from PUREX and UO_3 Plants, 3000 MT/yr Processing Rate D.10

D.13 Nonradioactive Chemicals in Liquid Effluents from PUREX and UO_3 Plants, 1050 and 2100 MT/yr Processing Rates D.11

D.14 Average Annual Occupational Doses for Employees in the PUREX and UO_3 Plants, 3000 MT/yr Processing Rate D.11

D.15 Average Annual Occupational Doses for Employees in the PUREX and UO_3 Plants, 1050 and 2100 MT/yr Processing Rates D.12

D.16 Radiation Doses to Members of the General Public from Routine Releases from the PUREX Plant 1050 MT/yr, Processing Rate D.12

D.17 Potential Radiation Doses to Members of the General Public from Routine Releases from the PUREX Plant, 2100 MT/yr Processing Rate . . D.13

D.18 Potential Radiation Doses to Members of the General Public from Routine Releases from the UO_3 Plant, 1050 MT/yr Processing Rate . . D.14

D.19 Potential Radiation Doses to Members of the General Public from Routine Releases from the UO_3 Plant, 2100 MT/yr Processing Rate . . D.15

D.20 Estimated Radionuclide Content of Annual Gaseous Releases from a New PUREX Plant, 3000 and 1050 MT/yr Processing Rates D.16

D.21 Potential Radiation Doses to Members of the General Public from Routine Releases from a New PUREX Plant, 1050 MT/yr Processing Rate . . . D.17

D.22 Estimated Radionuclide Content of Annual Gaseous Releases from Processing N-Reactor Fuels at SRP, 3000 and 1050 MT/yr Processing Rates . . . D.18

D.23 Estimated Radionuclide Content of Liquid Discharges from Processing N-Reactor Fuels at SRP, 3000 and 1050 MT/yr Processing Rates D.19

D.24 Potential Radiation Doses to Members of the General Public from Processing 1050 MT/yr of N-Reactor Fuel at SRP D.19

CHAPTER 1

EXECUTIVE SUMMARY

1.0 EXECUTIVE SUMMARY

This is an environmental impact statement (EIS) on the resumption of irradiated fuel processing at the PUREX/UO [a] facilities located at the Hanford Site, near the Tri-Cities (Richland, Kennewick and Pasco) in southeastern Washington. This EIS describes: 1) the proposed action (resumption of chemical processing in the PUREX/UO_3 facilities in FY 1984) and the reasonable alternatives, and 2) the potential environmental consequences of the proposed action and the alternatives. In Table 1.1, the proposed action and its alternatives are summarized.

The PUREX/UO_3 facilities were operated for 17 years, from 1956 to 1972, and have been maintained in operational standby since 1972. Since about 1975, in accordance with improvement needs identified in ERDA-1538,[b] these facilities have been substantially modified[c] to mitigate potential environmental consequences primarily by reducing the emissions to the environment and improving the safety and security of operations.

1.1 PURPOSE AND NEED

The purpose of this EIS is to examine and compare the environmental impacts of reactivating the PUREX/UO_3 fuel processing facilities at DOE's Hanford Site near Richland, Washington (the proposed action) and the environmental impacts of alternatives to the proposed action. Pursuant to its programmatic responsibilities, one of which is to develop and maintain a capability to produce nuclear materials for the U.S. defense programs, DOE[d] has determined that additional near-term chemical processing of irradiated fuels is necessary to meet plutonium requirements including research and development programs. Further discussion of purpose and need is presented in Chapter 2.0.

1.2 PROPOSED ACTION AND ALTERNATIVES

Chapter 3.0 describes the proposed action and its alternatives in detail; a summary comparison is presented in Table 1.1.

1.2.1 Proposed Action

The proposed action is defined as the resumption of operation of the Hanford PUREX/UO_3 facilities to process irradiated N-Reactor[e] equivalent fuel including the N-Reactor fuel which has accumulated since 1972, plus that which will be produced during the

---

(a) PUREX is an acronym for Plutonium URanium EXtraction, and UO_3 is the chemical formula for uranium trioxide. Both facilities are chemical processing facilities; no nuclear fission or energy generation is involved in these facilities.

(b) The Final Environmental Statement on Waste Management Operations, Hanford Reservation (ERDA-1538, December 1975) and Supplement to ERDA-1538 on Storage of High-Level Waste in Double-Shell Tanks (DOE/EIS-0063, April 1980) discuss in detail the waste management aspects of the proposed action and the environmental consequences.

(c) The cost of the modifications has been about $40 million during 1975-1979. The estimated cost of the reactivating effort for the PUREX/UO_3 facilities during 1980-1984 is approximately $110 million. This includes costs for plant modifications and staff training; it does not include costs for plant maintenance in operational standby.

(d) The Department of Energy has the statutory responsibility to produce the plutonium needed for national defense per the Atomic Energy Act of 1954 as amended. The determination of the need for plutonium is an action by the President and the Congress which is beyond DOE's scope of authority.

(e) This is a nuclear reactor which has operated since 1963 at Hanford; it has produced and is producing irradiated fuel containing plutonium for defense and research and development purposes and by-product steam for generating electricity.

TABLE 1.1. Comparison of Proposed Action and Alternatives

Alternative	Potential Advantages	Potential Disadvantages	Potential Effects on Program Needs	Potential Radioactive Emissions	Potential Construction Requirements	Potential Environmental/ Socioeconomic Effects
Proposed Action (Resumption of PUREX/UO_3 Plant Operations).	No change from historic site use. Meets national defense needs.	Release of some gaseous fission products, oxides of nitrogen, and tritiated water to environment.	Earliest possible availability of plutonium.	^{85}Kr, ^{14}C, and part of ^{129}I and ^{3}H as gases; ^{3}H, β-emitters, and ^{239}Pu as both gases and liquids.	Minor additional modifications.	No perceptible adverse impact. (No increased demands for housing, schools, municipal services.)
No Action (continue the present action).	Could reduce amounts to be released depending on future decisions.	Construction of additional fuel storage facility. Does not meet programmatic needs.	Indefinite delay of plutonium availability.	Deferred until later decisions are made. Some potential for release during fuel storage.	Construction of fuel storage facilities.	Unchanged from present status.
Construct New Fuel Processing Plant at Hanford.	Reduced near-term release of radionuclides to environment.	Major construction effort. New facility decomissioning effort. Additional fuel storage needed. Does not meet programmatic needs prior to 1990.	Delay in plutonium availability.	Reduced release of ^{85}Kr and ^{14}C. Possible reduction in other routi. re-leases. Additional releases from decommissioning.	Major construction of processing plant. Construction for new fuel storage facilities.	Need to decommission another facility. Increased land use.
Process Fuel Offsite	At SRP cladding hulls become solid waste instead of liquid waste.	Personnel exposure from extra fuel handling. Risk of transportation accidents. No significant reduction in releases to environment. Additional fuel storage needed. Does not meet programmatic needs prior to 1986.	Delay in plutonium availability.	Similar to proposed action. Increased risk of releases during fuel transport and handling.	Shipping facilities and casks. New shear-leach facilities. New fuel storage facilities.	Exposure to public during transportation of irradiated fuel.

proposed campaign. Tentatively, this campaign would commence in FY 1984 and extend to about the year 2000.

For the proposed action, the basis used to analyze the effluent quantities and environmental consequences is an assumed 16 years of PUREX/UO_3 operation commencing in 1984, processing up to 3000 MT of N-Reactor equivalent irradiated fuel[a] per year. The 3000 MT/yr processing rate for 16 years represents the maximum possible processing rate in the Hanford PUREX facility and is intended to provide the "worst case" impacts or the upper bound of the potential environmental consequences. However, the actual level of operation may not reach that rate and in the initial years of operation of the PUREX facility the more likely processing rate is projected to be in the 1050 to 2100 MT/yr range. Impacts at these lower processing rates are described in Appendix D.

The analysis is based on processing 12 percent ^{240}Pu N-Reactor fuel as the reference fuel; however, other fuels that are similar to the N-Reactor fuel and compatible with the existing process may be processed at PUREX. For example, about 16 MT of PWR Core-II blanket assemblies from DOE's Shippingport Reactor are presently stored at Hanford and would be processed at PUREX. This would be comparable to processing a maximum of 69 MT of N-Reactor reference fuel. Additional fuel from the Shippingport Reactor, as well as similar fuel may be processed in the future. The environmental impacts from PUREX/UO_3 when processing other similar fuels would not be expected to exceed those described for processing 3000 MT/yr of the reference N-Reactor fuel.

The PUREX/UO_3 facilities consist of chemical processing facilities used during the 1956-1972 period. Modifications identified in ERDA-1538 have been incorporated into the facilities since 1975. Those of major significance with respect to mitigation of routine or potential environmental and safety impacts include the following:

- additional gaseous and liquid effluent control improvements for reducing emissions to the environment
- upgraded ventilation systems at PUREX plant, including a third ventilation filter before the main stack which will remain in standby (backup) mode during operation
- incorporation of a plutonium oxide preparation system in the PUREX building to produce a solid product for offsite shipment and eliminate the need to transport plutonium nitrate solutions to the previously used oxide conversion unit located 8 km (5 mi) away
- installation of additional security and safeguards procedures and systems for special nuclear materials
- a new criticality alarm system to improve criticality detection and permit more effective mitigative steps
- upgraded ventilation systems at the UO_3 plant product loadout station
- upgraded fire protection systems at both PUREX and UO_3 plants
- new waste transfer lines
- seismic upgrades.

These improvements will mitigate (reduce to lower levels than described in ERDA-1538) the environmental impacts and improve safety aspects as follows:

(a) N-Reactor equivalent fuel is defined as fuel 1) whose isotopic composition is similar to that of N-Reactor irradiated fuel analyzed in this EIS and 2) whose environmental consequences for processing at the Hanford PUREX/UO_3 facilities would not exceed the consequences described in this EIS.

- The radionuclides (major fission products except tritium)[a] in the process condensates discharged to the ground via cribs (see Table D.8) will be reduced to less than 50 percent of the 1972 values. Similarly, plutonium contained in liquid effluents discharged to cribs will be reduced from about 4 Ci/yr (detection limit) to an estimated 0.4 Ci/yr. The radionuclides contained in the ammonia scrubber wastes (previously sent directly to cribs) will be concentrated by distillation and stored in underground double-shell tanks.

- The risk of theft or sabotage will be reduced by enhanced safeguards for special nuclear materials and improved plant protection measures.

An additional modification considered but not included in the proposed action is as follows (see details in Chapter 3.0):

- Recovering ^{85}Kr gas from fuel dissolver offgases prior to discharge to the environment via the 61-m (200-ft) stack. The estimated capital cost would be $20 million for collection equipment, plus about $150 million for storage facilities.

PUREX operations without this modification will result in discharges and doses below applicable guidelines (DOE 5480.1A).[b] Therefore, the Department of Energy does not consider this modification to be necessary.

Waste Treatment and Management

The proposed action will generate current acid waste (high-level liquid radioactive waste containing most of the fission products such as ^{137}Cs, ^{90}Sr, etc.) which will increase the amount of waste at the Hanford Site that must be managed. Two options for treating this waste are: 1) directly neutralize the waste for interim storage and 2) process waste in B-Plant to recover ^{137}Cs and ^{90}Sr. Current plans call for direct neutralization of the waste; however, both these options have been employed at Hanford previously, as discussed in ERDA-1538 (USERDA 1975, pp II.1-31-36). The volume of high-level waste generated by processing approximately 48,000 MT of fuel over 16 years would be about 3.4×10^4 m^3 (8×10^6 gal) for either option. Additionally, high-level waste generated from the cladding removal step would be 2.9×10^4 m^3 (6.8×10^6 gal) and is common to both options. B-Plant operation would generate four low-level radioactive liquid effluents: 1) process condensates, 2) steam condensates, 3) chemical sewer, and 4) cooling water. The first two are discharged to cribs and the last two to a trench and pond, respectively. The annual average radioactivity level in all streams will be within the radiation protections standards outlined in DOE 5480.1A. The boiling waste resulting from either option would be stored in tanks designed for that purpose. Storage of wastes in double-shell tanks was discussed in detail in ERDA-1538 (USERDA 1975) and DOE/EIS-0063 (USDOE 1980b). Vapors generated from the boiling waste are decontaminated and sent to a crib. If 48,000 MT of fuel is processed over 16 yrs (3000 MT/yr case), 25 new double-shell tanks would be required to manage the neutralized high-level liquid waste that would be generated from the proposed action; if only 10,000 MT of fuel were processed, about 6 new double-shell tanks would be required. Appropriate environmental review would be performed prior to construction of the waste tanks.

(a) The estimated tritium discharge in the reference operating year (3000 MT/yr) is 50,000 Ci/yr. This is approximately 7 times that of 1972 when 1013 MT of fuel were processed. This difference is due to the assumed higher burnup of the fuel and the higher processing rate assumed for the "worst case" analysis. Based on data from prior Hanford operations, the impact of the ^3H would be within acceptable guidelines. See Section 5.1.1.2.

(b) DOE Order 5480.1A, Chapter XI, establishes guidelines for acceptable levels of radioactive material in effluents from DOE and DOE-contractor facilities. Table I guidelines are for areas to which access is controlled for purposes of protection from radiation exposure, and Table II guidelines are for uncontrolled areas. See Chapter 6 for further discussion of these standards and guidelines.

1.2.2. Construct New Fuel Processing Plant at Hanford

An alternative to the proposed action would be to construct a new PUREX plant at Hanford to process irradiated fuels based on currently demonstrated technology. Benefits of this alternative as compared to the proposed action would be controlled by the design criteria which could include several features for reduced environmental impacts: 1) ^{85}Kr recovery, 2) recovery of ^{129}I and 3) further reduction in occupational exposure. Section 3.2 describes the features of a new plant, the construction costs, impacts, schedules and resources, projected effluents from the new plant, effects of lead time for the new plant on plutonium availability, and the decommissioning of the new plant.

For the new plant, operational requirements and effluents would be similar to the proposed action except: 1) ^{85}Kr releases to the atmosphere could be reduced by 90 percent over the releases from the proposed action, and 2) a similar reduction in ^{129}I releases could be realized. However, ^{85}Kr recovery plant operators would receive some occupational exposure and accidental release of the stored krypton would be a possibility. Mellinger (1980) has evaluated ^{85}Kr management tradeoffs with the conclusion that it makes little difference to the magnitude of world population dose whether ^{85}Kr is collected and stored, or routinely released to the atmosphere.

The overall cost of construction and operation of a new plant would exceed $1.5 billion (1981 dollars) and involve a major site preparation and construction activity. Such activity would have local socioeconomic impacts in the areas of housing, health and public services, and traffic handling capabilities. Significant resource requirements for the new plant would include:

Land	
For plant facilities	40 ha (100 acres)
For parking, storage, temporary facilities, etc.	60 ha (150 acres)
Construction Materials	
Concrete	1.4×10^5 m^3 (1.8×10^5 yd^3)
Steel	3.1×10^4 MT (3.3×10^4 tons)
Copper	180 MT (200 tons)
Water	2.2×10^5 m^3 (5.8×10^7 gal)

About 2.3×10^4 m^3 (6.1×10^6 gal) of petroleum products would also be needed in addition to a peak electricity demand of 3.7 MWe. A railroad spur and a 2-lane paved road would be needed on the job site.

The new plant construction would require about 8 years from preliminary engineering to its operation. Including the time required for appropriation of funds, the new plant startup could not occur before 1990, a delay of 6 years from the schedule for the proposed action. Thus, availability of plutonium would be delayed by about 6 years beyond 1984 when plutonium would be available if the proposed action is implemented. Also, if the processing of fuel were not to begin by mid-1985, additional fuel storage for N-Reactor would be needed.

The new plant, if built, would require eventual decommissioning with its associated solid waste generation and other impacts. The cost of dismantling the new PUREX plant would be about $110 million (1981 dollars); this would be in addition to the cost of dismantling the existing PUREX plant.

1.2.3 Process Fuel Offsite

Another alternative to the proposed action would be to process the N-Reactor reference fuel at the Savannah River Plant (SRP) processing facility located near Aiken, South Carolina, a distance of 4800 km (3000 miles) from Hanford. This alternative would involve shipping about 10,000 MT of N-Reactor generated irradiated fuel by truck, rail or barge over

a 10-yr period. If plutonium needs were to continue beyond 1994, then shipping of the N-Reactor irradiated fuel from Hanford to SRP would also continue beyond the 10-yr period. Major steps involved in processing the N-Reactor fuel offsite would be: 1) acquisition of suitable shipping casks, 2) receiving and loading the casks at Hanford, 3) transportation of loaded casks, 4) receiving and unloading the irradiated fuel casks at SRP 5) return of empty casks to Hanford, 6) fuel storage at SRP, and 7) construction of a new shear-leach facility at SRP.

The currently available space in the fuel storage basins at Hanford would be exhausted by mid-1985. Thus, shipment of fuel would have to begin early in 1985, otherwise the amount of N-Reactor fuel generated would exceed currently approved storage capacity and further storage would be required.

Items discussed in this EIS (Section 3.3) under the offsite processing alternative include: 1) previous experience with shipping and processing N-Reactor fuel offsite, 2) selection and availability of casks for shipping by rail and truck, 3) feasibility and rates of offsite transportation, 4) radiation doses from routine offsite transportation, 5) transportation accidents, accident probabilities, and doses from accidents 6) fuel handling facilities needed during loading and receiving of irradiated fuel, 7) description of offsite processing at SRP and its impacts, and 8) estimation of overall costs of processing irradiated fuel at either Hanford PUREX or SRP facilities.

Adoption of this alternative would have the following results: 1) plutonium availability would be delayed by at least 2 years beyond 1984 because of the lead times necessary for cask procurement and at least 4 years to install shear-leach equipment to process N-Reactor fuel at SRP, 2) offsite transportation of fuel would cause about a 3 mrem/yr dose to the maximum individual by truck transportation without accidents and about 800 mrem with an accident, whose probability is 5×10^{-5}, 3) substantial amounts of fuel for transportation and construction materials for casks would be consumed, 4) substantial modifications would be needed at the SRP facility including construction of a fuel storage facility for up to 4 years storage, 5) the SRP would have incremental environmental consequences of processing similar to those for the proposed action; these would be within acceptable limits, and 6) the SRP would have overall processing costs which would be about the same as at Hanford PUREX. Shipping would have to begin in 1985 and steps to procure suitable casks should begin immediately or additional fuel storage basins would have to be constructed at Hanford to accommodate N-Reactor fuel generated beyond 1985.

1.2.4 No Action (Continue Present Action) Alternative

The no-action alternative is defined as the continued maintenance of PUREX/UO_3 facilities in the current operational standby mode, continued operation of the N-Reactor for plutonium production at its planned operating level (the N-Reactor also provides about 4 billion kWh/yr of by-product electrical energy to the Pacific Northwest region) and not processing the N-Reactor irradiated fuel. The adoption of this alternative would lead to: 1) nonfulfillment of the need for plutonium, 2) continued storage of existing and to-be-generated irradiated fuel in the Hanford Site basins, and 3) construction of additional storage basins to accommodate irradiated fuel to be generated beyond mid-1985 by the N-Reactor. Each of these items is discussed in detail in Section 3.4 of the EIS.

Adoption of the no-action alternative would have the following results:

1. Plutonium from N-Reactor would not be available for defense or research purposes.

2. Resumption of the PUREX plant operation would become more expensive and difficult; significant expenses would be required to maintain PUREX in operational standby.

3. Uranium contained in about 10,000 MT of N-Reactor irradiated fuel would not be available for reuse as fuel in production reactors. This would result in increased expenses for uranium.

4. New facilities for N-Reactor irradiated fuel storage would be needed.

An estimated cost for constructing additional fuel storage facilities is $270 million (1981 dollars).

1.2.5 Overall Evaluation of Alternatives

The proposed action and the three alternatives are summarized in Table 1.1. Any one of these four choices can be implemented such that its environmental consequences are within applicable standards. The environmental consequences of each alternative are compared in Table 1.2. Radiological consequences from routine operations of facilities are expected to be less than about 4.0 percent of the natural background radiation dose (100 mrem/yr) regardless of which alternative is selected. Construction activities are least for the proposed action. Routine offsite transportation of irradiated fuel by truck for the offsite processing alternative would deliver 3 mrem/yr to the maximum individual.

The proposed action to operate the existing PUREX/UO_3 facilities at the Hanford Site is the only alternative that would provide plutonium for national defense needs in a timely manner.

1.3 DESCRIPTION OF THE AFFECTED ENVIRONMENT

1.3.1 The Hanford Site

The Hanford Site occupies approximately 1500 km^2 (570 mi^2) in the semiarid region of southeastern Washington. The PUREX facilities are located in the Hanford Site's 200 East Area; the UO_3 facilities are in the 200 West Area. These areas comprising a portion of the Hanford Site have been dedicated by the Federal government since 1944 to fuels processing, waste fractionation, and waste storage. In common with the other developed areas of the Site, the facilities' locations have limited natural productivity. The Site has a number of favorable attributes with respect to the actual and potential environmental consequences of resuming operation of the PUREX/UO_3 facilities: 1) the 200 Areas are composed of up to several hundred meters (1000 ft) of sands, silts, and clays underlain by a basaltic lava accumulation estimated to be more than 3000 m (10,000 ft) thick, 2) annual precipitation (rain and snow) averages 16 cm (6.3 in); the upper sedimentary deposits are moisture-deficient, and have a high capacity to absorb liquids, 3) the water table is deep, ranging from 46 to 100 m (150 to 325 ft) beneath the ground surface, 4) the Site is located in an area of historically low seismicity, 5) tornadoes rarely occur in the Hanford region, tend to be small, and produce little damage, and 6) the nearest population center from the facilities' locations is 35 km (22 mi).

The Hanford Site ecology is chiefly influenced by the semi-arid environment of the region and by the Columbia River. Major facilities occupy about 6 percent of the Site land area and have little effect on the animal, plant, and aquatic life of the Site. The Hanford Site hydrology is also dominated by the Columbia River. The 200-Area plateau where the PUREX/UO_3 facilities are located is 75-90 m (250-300 ft) above the river and 60-75 m (200-250 ft) above the floodplain of the maximum probable flood. The water table ranges from 46-100 m (150-325 ft) below the ground surface at the PUREX/UO_3 facilities and slopes to the river.

The regional construction labor force is approximately 10,000 workers. About half of the labor force is employed by contractors building three commercial nuclear power plants on the Hanford Site for the Washington Public Power Supply System. Total Site employment for the U.S. Department of Energy activities is approximately 12,000 workers, of which the proposed action would employ about 375 workers. The 1980 population within an 80-km (50-mi) radius of the facilities is about 341,000. The growth rate of the area has been five times the national average. Regional community planning and development incorporates the projected long-term growth of the area. Further details of the affected environment and socioeconomics are presented in Chapter 4.0 of the EIS.

1.3.2 The Savannah River Plant Site

The Savannah River Plant, Aiken, South Carolina, is located in the South Eastern Coastal Plain Region of the United States. The site can be characterized by the following: 1) the geology consists of flat, mostly unconsolidated sediment, 2) surface

TABLE 1.2. Comparison of the Environmental Consequences from the Proposed Action and Alternatives (3000 MT/yr Processing Rate)

Environmental Consequences Item	Proposed Action (PA) Resumption of PUREX/ UO_3 Plant Operations	Alternative 1 Construct New PUREX Plant at Hanford Site	Alternative 2 Process Fuel Offsite	No Action Alternative Continue the Present Action
NORMAL OPERATION				
Occupational Exposure	Maximum skin dose of 2.4 to 4.5 rem/yr/worker and 1.5 to 2.4 rem/yr/worker total body dose.	Equal to or less than proposed action.	Essentially equal to proposed action, except increased transportation requirements involves exposure of a greater number of people.	Essentially zero dose since PUREX will not operate.
General Public Dose[a]	1800 man-rem dose[b] (thyroid) from a 16-yr release and 70-yr accumulation.	110 man-rem dose (thyroid) from a 16-yr release and 70-yr accumulation.	4600 man-rem dose (thyroid) from a 16-yr release and 70-yr accumulation.	0.23 man-rem dose (bone) from a 16-yr release and 70-yr accumulation (dose from irradiated fuel storage only).
Dose to Maximum Individual	20 mrem dose (thyroid) from 16-yr release and 70-yr accumulation.	1.3 mrem dose (thyroid) from 16-yr release and 70-yr accumulation.	46 mrem dose (thyroid) from 16-yr release and 70-yr accumulation.	3.4×10^{-3} mrem dose (bone) from 16-yr releas and 70-yr accumulation (dose from irradiated fuel storage only).
Impact on Air Quality	Annual ambient air quality standards for all pollutants will be met.[c]	Annual ambient air quality standards for all pollutants will be met.	Same as Alternative 1	Essentially zero emission since PUREX/UO_3 will not operate.
Impact on Water Quality	No direct discharges to public waterways.[d] Water use is less than 0.03 percent of total average Columbia River flow.	Essentially same as PA.	Greater than PA since there is direct discharge to waterway but within guidelines.	No impact since PUREX/ UO_3 will not operate.
Transportation-Related Exposure	Onsite transportation will result in essentially zero public dose. Occupation exposure from PuO_2 shipments limited to less than 5 mrem/hr by operational procedures.	Essentially same as PA.	Same as PA for onsite transportation. Offsite transportation would result in an annual 3300 man-rem dose for truck shipment and 4100 man-rem for rail shipment. Annual dose to the maximum individuals is 3 mrem for truck shipment and 0.3 mrem for train shipment.	No transport impacts.

(a) Dose is given for the critical organ; doses to other organs can be found in the tables in Sections 5.1.1.2, 5.2.1.1, 5.2.2.1, and 5.2.3.
(b) This is the population dose to an estimated (1990) population of 417,000 persons. For comparison, these persons would receive about 2.9×10^6 man-rem dose from natural background radiation over 70 years.
(c) Although ambient air quality standards will be met for NO_x, NO_x emissions will be regulated under a Prevention of Significant Deterioration (PSD) permit. See Section 5.1.2.1.
(d) Tritium, ^3H, has reached Columbia River from past operations, but concentrations in groundwater are about 10 percent of allowable limits and undetectable above background in the river. There is no demonstrated technology for tritium capture.

TABLE 1.2 (contd)

Environmental Consequences Item	Proposed Action (PA) Resumption of PUREX/ UO_3 Plant Operations	Alternative 1 Construct New PUREX Plant at Hanford Site	Alternative 2 Process Fuel Offsite	No Action Alternative Continue the Present Action
ABNORMAL OPERATION				
Operational Accidents (short-cooled, 25 days, fuel dissolution)	A worst-case credible accident (assuming administrative controls) would deliver an estimated acute dose (thyroid) of 1500 man-rem to the general population and 190 mrem to the maximum individual.	Same as PA.	Postulated worst-case accident would have less consequences than the PA because the fuel would have aged ~25 more days during transport.	Not applicable.
Onsite Transportation Accident	Postulated worst-case accident (irradiated fuel shipment accident) would result in a 2000 mrem (lung) dose to the maximum individual (offsite). Serious consequence onsite but accident is not considered credible with administrative controls.	Same as PA.	Offsite impacts greater due to more direct pathway and larger population.	Not applicable.
Offsite Transportation Accident	Not applicable.	Not applicable.	If postulated accident occurred in an urban area, the dose to the general population is estimated to be 1150 man-rem for truck shipment and 2300 man-rem for rail shipment. The dose to the maximum individual is estimated to be 0.76 rem for truck shipment and 0.9 rem for rail shipment.	Not applicable.
OTHER IMPACTS				
Construction Impacts	Almost none since there is no major activity.	Major activity but acceptable impacts.	Same as PA, plus shear-leach facility.	Same as PA plus additional storage basins as needed.
Construction Costs ($, million)	About $40 for facility modifications plus $110 for reactivation.	>$1500 for new PUREX facility.	About $400 for shear-leach facility.	About $270 for expanded fuel storage.
Socioeconomic Impacts	Negligible.	Substantially more than PA during construction.	Same as PA, except for transportation impacts which are acceptable.	Negligible.
Resource Commitments	A negligible fraction of national resource use.	Substantially more than the PA, but a negligible amount of national resource use.	More than PA due to fuel transport, but still a negligible fraction of national resource use.	Negligible fraction of national resource use for new fuel storage basins.
Decommissioning Costs ($, million)	Base case (about $110).	Base case + $110.	Same as PA.	Same as PA.

waters provide a mechanism for transporting unavoidable releases of chemicals and heat, 3) some severe weather conditions may be expected, 4) the site is located in an area of historically low seismicity, and 5) production and support facilities occupy only a small portion of the site and do not affect the wildlife. Further details of the affected environment are presented in Section 4.5.

1.4 ENVIRONMENTAL CONSEQUENCES

The environmental consequences of the proposed action and the three alternatives are described in detail in Chapter 5.0 of the EIS. The environmental effects discussed include: 1) normal operational impacts on workers, the general public, air quality, and water quality, 2) abnormal operational impacts, 3) onsite and offsite transportation aspects of radiation exposure from normal conditions and accidents, 4) construction impacts, and 5) socioeconomic impacts from operational and construction activities.

As described in Chapters 5.0 and 6.0 and summarized below for any of the processing rates which could occur under the proposed action, the environmental consequences to the operating personnel or the general public would comply with applicable guidelines (DOE order 5480.1A) and standards (40 CFR 50).

1. Based on historical data, potential radiation doses from normal operation of the PUREX/UO_3 facilities would be as follows:

   a) The highest occupational whole body dose to radiation zone workers would be about 2.4 rem/yr/worker and 0.3 rem/yr/worker for nonradiation zone workers. The maximum allowable occupational whole body dose is 5 rem/yr per radiation zone worker (DOE 5480.1A).

   b) The maximum individual (a member of the general public located at points of maximum probable exposure to radiation) dose would be about 20 mrem to the thyroid[a] from a 16-year release and 70-year accumulation. The natural background radiation in the Tri-Cities area is about 100 mrem/yr, 7000 mrem accumulated in 70 years. The radiation protection standard (for organs such as the thyroid) is 1500 mrem/yr to the maximum individual (DOE 5480.1A).

2. The overall dose to the thyroid for the maximum individual was calculated to be 0.16 mrem/yr from all Hanford Site operations in 1980 (Sula and Blumer 1981). This compares to 0.28 mrem/yr to the thyroid for the maximum individual computed for only PUREX/UO_3 operations. The accumulated 50-year dose commitment[b] to the thyroid for the population was calculated to be approximately 2 man-rem for all Hanford Site operations in 1980 (Sula and Blumer 1981). This compares to an accumulated 70-year dose commitment[b] from 1 year of PUREX/UO_3 operation calculated to be 31 man-rem. The incremental difference resulting from PUREX/UO_3 operation results in approximately twice the dose to the maximum individual and about fifteen times the population dose. These values are small compared to the natural background radiation level of 100 mrem/yr for an individual or about 41,700 man-rem to the population per year and are not expected to cause any significant impact.

3. The highest potential (70-year accumulated) thyroid dose to a member of the general public from abnormal (potential credible accidents) operational events would be 190 mrem. This assumes implementation of administrative controls (e.g., prevent local milk consumption for about 90 days) to mitigate the effect of the accident.

(a) Dose is given for the critical organ; doses to other organs can be found in the tables in Sections 5.1.1.2, 5.2.1.1, 5.2.2.1, and 5.2.3.
(b) Values using a 70-year accumulation base are not significantly different from those using a 50-year base.

4. A postulated worst-case onsite transportation accident (irradiated fuel shipment accident) could deliver a 70-year accumulated lung dose of 2000 mrem to the maximum individual. This would be approximately 3000 times greater than the 70-year accumulated lung dose of 0.63 mrem from normal operation, and 0.65 times the maximum annual allowable occupational dose (DOE Order 5480.1A) of 15,000 mrem for routine operations.

5. The principal nonradiological emission from the PUREX/UO_3 facility would be NO_x, primarily resulting from fuel dissolution (PUREX plant) and from UNH calcination (UO_3 plant). After application of best available control technology, the NO_x emissions from both plants amount to an estimated 435 MT/yr from processing 3000 MT/yr of fuel and 151 MT/yr from processing 1050 MT/yr. The maximum allowable NO_x emission is 474 MT/yr under a USEPA prevention of significant deterioration (PSD) permit. Neither facility produces sulfur oxides or photochemical oxidants.

These findings and those for the alternatives, summarized briefly in Table 1.2, indicate that for all four alternatives: 1) for normal operations the radiation doses to workers and the public would be within allowable guidelines per DOE 5480.1A, 2) the abnormal events (credible potential accidents) during operation of the PUREX/UO_3 process and during transportation would result in no adverse health effects to the public, 3) nonradiological and radiological emissions to air and water would be such that their onsite and offsite consequences would be within allowable guidelines (DOE 5480.1A) and standards, 4) the construction impacts and resource commitments would be lowest for the proposed action, and 5) the socioeconomic impacts of all the four choices should be minor.

These findings would be valid whether the PUREX/UO_3 facilities process N-Reactor fuel at the rate of approximately 1050 MT/yr or at its maximum operational rate of 3000 MT/yr for 16 years. The overall environmental consequences of operating PUREX/UO_3 at up to 3000 MT/yr throughput rate would be within prescribed guidelines (DOE 5480.1A and other applicable standards listed in Chapter 6.0) even though the actual doses and effluents from routine operations may increase up to three times the amount projected for the throughput rate of 1050 MT/yr.

From the environmental analysis performed for the proposed action three pollutants (^{85}Kr, NO_x and ^{3}H) were identified that would be released in substantially greater quantities than other pollutants:

- projected ^{85}Kr emissions from the proposed action would be 3.3×10^6 Ci/yr; control of ^{85}Kr is not considered necessary (see Section 3.1.7),

- after application of the best available control technology, NO_x emissions would amount to about 435 MT/yr; the National Ambient Air Quality Standards (40 CFR 50) for NO_x would not be exceeded and

- approximately 5×10^4Ci/yr of tritium would be released to cribs and ponds; control of tritium is not considered necessary because:

  a) the tritium-related radiation dose from 16 years of operation to maximum individual would be negligible at 5×10^{-2} mrem,

  b) based on data of prior Hanford operations, the tritium concentration in groundwater would not exceed 10 percent of the allowed limit, 3×10^{-3} μCi/mℓ (DOE 5480.1A); the concentration in the river itself would be undetectable above background due to dilution by the Columbia River average annual flow rate of 3.4×10^3 m^3/sec.

Consequences of Waste Treatment and Management

Current plans call for the current acid waste (liquid high-level radioactive waste) to be neutralized and stored in double-shell boiling waste tanks. The vapors from the tanks would be condensed and recycled to the tank to maintain a constant waste concentration. Any unrecycled condensate would be treated (evaporation and ion exchange) to meet concentration guidelines (DOE 5480.1A) and pumped to cribs. The gaseous releases would be maintained within release concentration guidelines (DOE 5480.1A) and below pre-1972 levels (ERDA-1538).

Alternatively, the current acid waste could be processed through the B-Plant where the cesium and strontium would be recovered, encapsulated and stored in water basins. The liquid wastes would be stored in underground double-shell tanks in the 200 East Area. The environmental consequences of these operations have been within acceptable guidelines as described in ERDA-1538 and DOE/EIS-0063, and would remain so for future operations. Radionuclide concentrations in all B-Plant liquid effluents discharged to cribs and ponds would be at or below 1972 levels identified in ERDA-1538.

The environmental consequences of both management options, including the hypothetical 3.0×10^3 m^3 (8×10^5 gal) and 3.8×10^3 m^3 (1.0×10^6 gal) tank leaks,[a] are discusssed in more detail in Chapter 5.0 of this EIS. The highest dose to the maximum individual from a tank leak would be 1.1 mrem (see page 5.12). While the use of double-shell tanks makes any leak highly unlikely, analysis of a previous 3.8×10^2 m^3 (10^5 gal) leak from a single-shell tank of the 200 West Area indicated that because of the ion sorption characteristics of the soil column, cesium and strontium have not reached the groundwater table and will not reach the river.

(a) These are hypothetical since they are not credible as explained in Chapter 5. They are included to provide the reader with a perspective of the relative safety associated with the use of double-shell tanks for interim storage of current acid waste. The engineered design barriers, leak detection and pumping system virtually eliminate the possibility for the accident to occur.

2.0 PURPOSE AND NEED

The purpose of this document is to evaluate the environmental impacts of reactivating the PUREX/UO_3 fuel processing facilities (the proposed action) at DOE's Hanford site near Richland, Washington and the environmental impacts of alternatives to the proposed action.

The PUREX/UO_3 facilities are large capacity chemical processing facilities which are used to recover plutonium and other special nuclear materials (SNM) from fuel that has been irradiated in nuclear reactors. These facilities operated from 1956 to 1972 to chemically process irradiated fuels produced by the plutonium production reactors then in operation at Hanford, as well as irradiated fuel produced by other reactors. By 1972, all of the production reactors at Hanford, except the N-Reactor, had been shut down and the amount of irradiated fuel then available for processing was not sufficient to allow for continuous operation of the PUREX/UO_3 facilities. The fuel processing facilities were placed in a standby mode at that time, awaiting sufficient availability of irradiated fuel and the need for special nuclear materials in the nation's defense and research and development activities.

DOE is now considering the resumption of the PUREX/UO_3 operations in order to meet projected needs for plutonium in the nation's nuclear defense and research and development programs.

The Department of Energy's (DOE) responsibilities in the defense programs area stem from the Atomic Energy Act of 1954, as amended. Included in the legislation is the Department's responsibility to develop and maintain a capability to design, test and manufacture all U.S. nuclear weapons and, more specifically, to develop and maintain a capability to produce all nuclear materials required for the U.S. weapons program.

In undertaking these missions, the DOE works closely with the Department of Defense (DOD) in planning and implementing the steps necessary to achieve the defense programs objectives. Annually, the DOD and the DOE jointly propose nuclear materials and weapons production schedules, long lead procurements, and planning activities. These proposals are forwarded to the President through the National Security Council. In accordance with the Atomic Energy Act, approval of these proposals by the President constitutes the legal authority and mandate to the DOE for U.S. nuclear materials and weapons production.

In addition to providing plutonium for other programmatic needs, DOE is responsible for providing special nuclear materials for research and development programs. Significant quantities of plutonium may be needed in the national breeder reactor program during the late 1980's and 1990's. The plutonium would be used primarily to fuel DOE's Fast Flux Test Facility (FFTF) and Clinch River Breeder Reactor (CRBR). Adoption of the proposed action or the alternatives thereto will provide processing capacity to help satisfy these research and development needs, as well as other program requirements for plutonium.

Three alternatives to process irradiated fuel are examined in this document: (1) process irradiated fuel at DOE's Hanford Site PUREX/UO_3 facilities, near Richland, Washington (the proposed action); (2) construct a new PUREX processing facility at Hanford; and (3) process the fuels at DOE's Savannah River Plant, Aiken, South Carolina. The fourth alternative is a "No Action" alternative which will not provide the needed plutonium. The first alternative, involving resumption of operation of the Hanford PUREX plant is DOE's preferred alternative since, as described in detail in this document, it would provide additional plutonium in the earliest possible time frame consistent with projected requirements, at a cost equal to or less than any other alternative and would involve the lowest overall level of environmental impacts.

In order to provide decision makers and the public with a comprehensive understanding of the environmental impacts that may result from the proposed action and other alternatives, this document analyzes the environmental impacts of operating the PUREX plant at its maximum operating capacity of 3000 metric tons/year of N-Reactor reference fuel. Calculation of impacts is based upon an assumed operating period of 16 years at the 3000 metric ton/year rate for a total processing campaign of 45,000 metric tons. The actual annual level of processing operations and the number of years that the PUREX/UO_3 facilities or an alternative operates will depend upon future needs for plutonium and other

special nuclear materials (SNM). Annual processing operations significantly below the 3000 metric tons/year processing rate are probable during the initial years of operation. By evaluating the environmental impacts on a 3000 metric ton/year processing rate, a conservative analysis is presented which should describe the highest levels of environmental impacts that may result from processing activities. Environmental impacts associated with lower processing rates are provided in Appendix D of the document.

The reference fuel used in the calculation of environmental impacts was 180-day cooled 12 percent ^{240}Pu N-Reactor irradiated fuel. For purposes of analysis, this reference fuel will provide the most conservative analysis of environmental impacts. However, most of the N-Reactor fuel that will be processed in the future will have lower concentrations of ^{240}Pu such as 6 percent ^{240}Pu or will be cooled longer than 180 days and will contain relatively lower amounts of fission products which contribute to environmental impact. Other fuels that are compatible with the Hanford PUREX plant process, and have isotopic compositions similar to N-Reactor fuel may also be processed. The volume of other material processed would be limited such that the impacts resulting from processing would not be significantly different from those set forth in this document for processing N-Reactor reference fuel. Appropriate environmental review would be undertaken before fuels other than N-Reactor fuel or Shippingport Reactor blanket fuel assemblies were processed.

The PUREX/UO_3 facilities are only two of a number of nuclear materials production and ancillary facilities located at the Hanford Site (see Figure 3.1, Section 3.0). The other operating facilities include fuel fabrication facilities, the new production reactor (N-Reactor), and waste management facilities. The fuel fabrication facilities prepare zirconium clad uranium metal fuels for subsequent irradiation in N-Reactor. N-Reactor is the only production reactor which remains in operation at Hanford. It irradiates uranium fuels to various levels of ^{240}Pu concentration in order to supply national defense and R&D needs for plutonium and produces by-product steam used for the generation of electricity. In the past, N-Reactor has produced irradiated fuels of 6 percent ^{240}Pu, 9 percent ^{240}Pu, and more recently 12 percent ^{240}Pu levels and is expected to return to production of 6 percent ^{240}Pu fuels. The waste management facilities process, store, and/or dispose of the radioactive wastes resulting from DOE's special nuclear materials production and research and development activities.

The scope of this document includes the discussion of the environmental consequences that could result from the operation of the PUREX/UO_3 facilities for recovery of plutonium (the proposed action, Section 3.0) and reasonable alternatives to the proposed action as previously stated. The other facilities located at Hanford are not within the scope of this document, but this document does update the waste management aspects of operating the PUREX/UO_3 facilities, including the need for construction of additional double-shell high-level waste storage tanks. Descriptions of other activities performed at Hanford and an evaluation of their waste management impacts, including those resulting from operation of the PUREX/UO_3 facil ties, can be found in previous environmental impact statements issued concerning Hanford operations. For example, the Final Environmental Statement (FEIS) on Waste Management Operations for the Hanford Reservation (ERDA-1538), issued in 1975, discussed the PUREX/UO_3 operations, as well as environmental releases from N Reactor, fuel fabrication activities, and waste storage facilities and methods. A supplementary FEIS on double-shell tanks waste storage at Hanford (DOE/EIS-0063, April 1980), expanded on the construction and safety features of double-shell tanks used for storage of high-level radioactive wastes.

CHAPTER 3

ALTERNATIVES INCLUDING PROPOSED ACTION

3.0 ALTERNATIVES INCLUDING PROPOSED ACTION

This chapter describes reasonable alternatives for processing irradiated fuel (N-Reactor or equivalent irradiated fuel)[a] to recover plutonium. The need for plutonium to meet national defense and research purposes was described in Chapter 2. The reasonable alternatives discussed here are:

- resumption of operation of PUREX/UO_3 facilities at Hanford (proposed action)
- construction of a new PUREX processing facility at Hanford
- process irradiated fuel offsite
- no action (i.e., continue present action).

Other alternatives considered but dismissed as nonresponsive to the need for plutonium are listed elsewhere in this chapter. Of the reasonable alternatives, only the no-action alternative will not involve the use of the PUREX process. PUREX (Plutonium URanium EXtraction) is a solvent extraction process that individually separates the uranium and plutonium from the accompanying fission products contained in irradiated fuel. The solvent generally used is tributyl phosphate (TBP), which has a high selectivity for uranium and plutonium. TBP is diluted with a refined hydrocarbon to favorably alter some of its physical properties, e.g. its viscosity and density are reduced.

The process is basically a straightforward chemical operation. The irradiated fuel is dissolved in nitric acid. The resulting nitrate solution is contacted with TBP to extract the uranium and plutonium from the fission products (which are separately stored and managed). the uranium and plutonium are separated from each other by further extraction steps, and then converted to the desired product form. However, since the purity of the uranium and plutonium products is important, the process also employs many purifying steps that involve scrubbing and internal recycles of incompletely separated streams. Variations in the approach to feed preparation, final product form, and to ancillary operations such as acid recovery and waste disposal are possible. Because the materials being processed are radioactive, all of these operations must be performed by remote control in heavily shielded cells. A brief description of the steps in the generic PUREX process follows.

The irradiated fuel may be either metal or oxide and typically, will be clad with either zirconium alloy, stainless steel, or aluminum. In each case, the fuel will be dissolved in nitric acid to obtain a nitrate solution for use in the solvent extraction step. Before dissolving the fuel, the cladding may first be dissolved chemically, or alternatively the fuel elements with their cladding may be mechanically sawed or sheared into short pieces to permit direct dissolution of only the fuel (the "shear-leach" process). The shear-leach process produces a solid cladding waste; chemical dissolution produces cladding waste in the form of a solution. The nitrate solution (feed) is contacted with TBP, generally in a vertical solvent extraction column. Here, the uranium and plutonium are partitioned from the bulk of the fission products. The feed is introduced to the column at about its midpoint, the TBP solvent is introduced at the bottom. The solvent extracts the uranium and plutonium as it rises to the top. A nitric acid scrub solution is introduced at the top of the column to scrub out the traces of fission products extracted or entrained with the solvent stream containing the uranium and plutonium (extract). Out of the bottom of the column flows the aqueous waste stream (raffinate), carrying with it over 99 percent of the fission products fed to the column.

The uranium and plutonium in the extract are individually separated from each other by a series of further extraction steps involving variation of the valence state of the plutonium. The purified plutonium nitrate is customarily converted to the oxide form before shipment. The pure uranium nitrate solution may be converted to either uranium oxide or uranium fluoride product.

(a) About 2440 metric tons (MT) of irradiated fuel elements generated at the N-Reactor at Hanford are now available (as of December 1981) for processing and recovery of plutonium for defense and other purposes. By 1983, this amount will be approximately 3800 MT, and thereafter irradiated fuel will be produced by N-Reactor at an annual rate of approximately 700 MT. The design features of the PUREX facility permit processing of other types of irradiated fuels. Fuels that are similar to N-Reactor fuel and compatible with the PUREX process could be processed at Hanford; for example, about 16 MT of PWR Core-II blanket assemblies from the Department of Energy's Shippingport Reactor are presently stored at Hanford and could be processed in PUREX.

One of the principal ancillary operations associated with the PUREX process is the management of the liquid radioactive waste containing the fission products (high-level radioactive waste). Pending their ultimate disposal, these wastes may be neutralized and placed in interim storage in underground tanks as per current practice.

3.1 RESUMPTION OF PUREX/UO_3 OPERATION AT HANFORD (PROPOSED ACTION)

The PUREX facility is a key element in the Hanford defense material processing complex of the Department of Energy. Its relationship to the other processing operations discussed in this document is shown schematically in Figure 3.1. The scope of this EIS is to discuss primarily the resumption of PUREX/UO_3 operations (see box in Figure 3.1). The PUREX process provides the means to individually separate the plutonium from irradiated fuel and to recycle unconverted (unfissioned) uranium to the fuel cycle. The Hanford PUREX facility was constructed between April 1953 and October 1955, and operated from 1956 to 1972; it was placed in operational standby status in 1972, awaiting the availability of sufficient quantities of irradiated fuel and a need for additional plutonium. An aerial view of the facility is shown in Figure 3.2. The Uranium Oxide (UO_3) facilities are used to convert the uranyl nitrate hexahydrate (UNH) produced in the PUREX Plant to UO_3. The UO_3 facilities are less complex than the PUREX facilities.

The proposed action is to resume operations of the PUREX/UO_3 facilities after completion of modifications, which include:

- upgrading capability for safeguarding special nuclear materials (SNM)
- improving gaseous and liquid effluent reduction and control
- upgrading ventilation systems
- incorporating a plutonium oxide production system within the PUREX 202-A Building
- upgrading UO_3 loadout systems
- installing a fire protection system in the UO_3 plant
- seismic upgrades.

The process and details of the plant modifications are described in this section for both the PUREX and UO_3 plants. A more detailed description is given in Appendix A.

The assumed processing rate for the Hanford PUREX/UO_3 facility is 3000 MT/yr of N-Reactor fuel, and this was used as the base case for the analysis and evaluation of environmental impacts. This is the maximum rate at which the PUREX facility could operate if some relatively minor equipment alterations were made. The calculation of environmental impacts further assumed the processing of 180-day cooled fuel which contains the greatest amount of short-lived radionuclides that would be processed in PUREX. Therefore, the 3000 MT/yr processing rate in combination with the 180-day cooled fuel establishes an upper boundary of potential environmental effects from the operation of the PUREX/UO_3 facilities.

The environmental impacts of two lower processing rates, 1050 and 2100 MT of irradiated fuel per year, have also been evaluated for the Hanford PUREX/UO_3 facilities. The range of 1050 to 2100 MT/yr would be the most probable processing rate, at least during initial operations, and 2100 MT/yr is the nominal upper limit processing rate of the PUREX facility without any modifications. The impacts of these two processing rates are presented in Appendix D.

The controlling parameter in determining plutonium output rate is the rate at which a PUREX plant can process irradiated fuel. Uranium constitutes the overwhelming bulk of the material to be processed; the plutonium represents only a very small fraction of the uranium in irradiated fuel. The capacity of a PUREX plant cannot be explicitly defined in terms of plutonium production. The quantity of plutonium and its isotopic content are dependent primarily upon the irradiation (exposure) of the uranium. The PUREX facility could also process other types of fuel in addition to N-Reactor fuel if the following two criteria were complied with: 1) the fuel must be compatible with the PUREX process at Hanford, e.g., Zircaloy or aluminum cladding, and 2) the fuel must have an equivalent (or lower) radionuclide content when compared with N-Reactor fuel on an annual throughput basis. This latter criteria could include fuel with a higher burnup than N-Reactor fuel, but which had been cooled a longer amount of time. Environmental impacts of processing fuels meeting these criteria will be within the envelope of impacts described herein for the reference case of 3000 MT/yr of N-Reactor fuel. For example, the 16 MT of Shippingport (PWR Core-II)

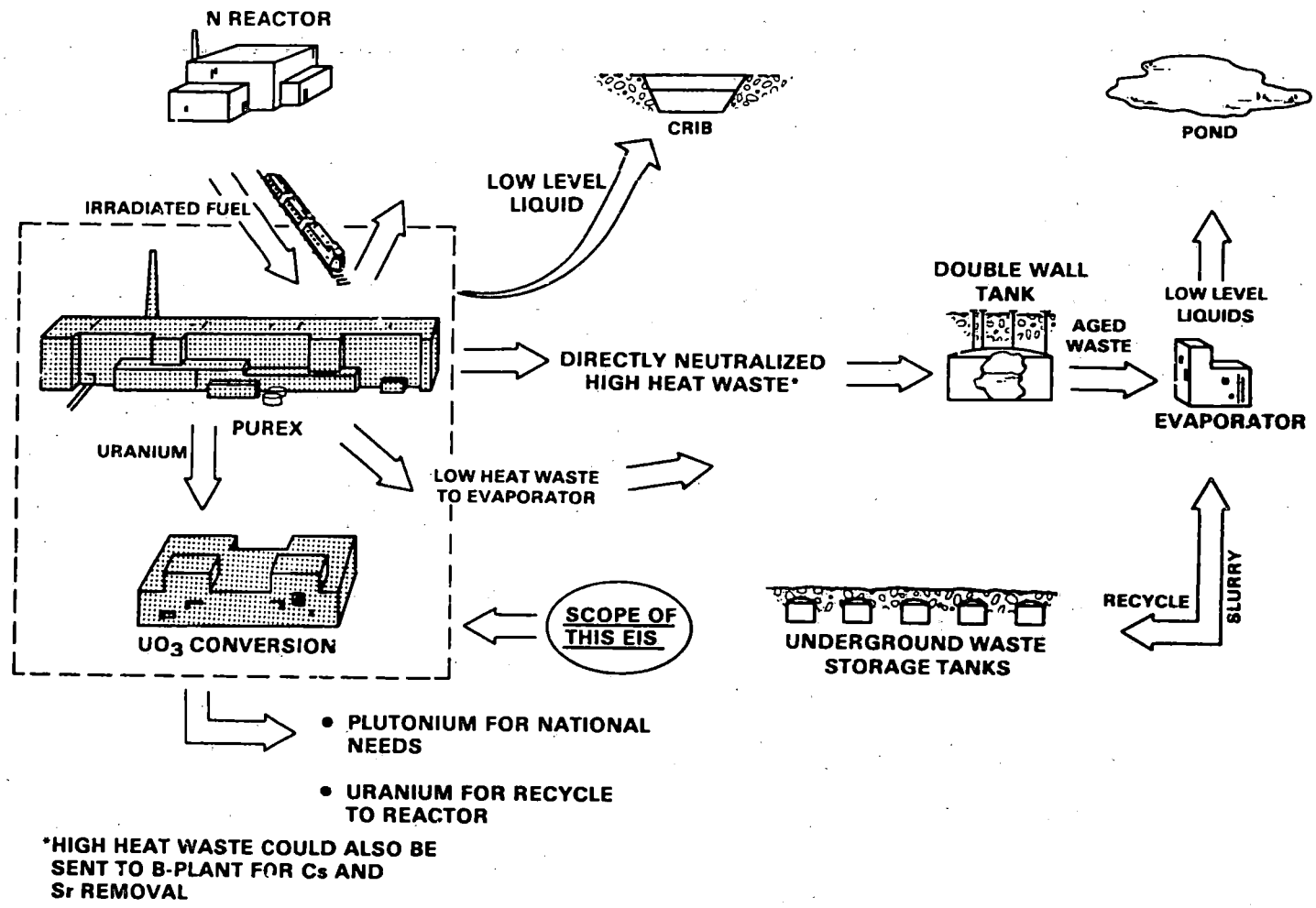

FIGURE 3.1. PUREX/UO_3 Facilities and Other Hanford Facilities

Figure 3.4 Aerial view of the Pinal Spring

blanket assemblies currently stored at Hanford would be processed if the proposed action is selected. These blanket assemblies have an average burnup of 15,236 MW_d/MT; they have aged seven years (1981). Processing these 16 MT of PWR Core-II would be equivalent to processing a maximum of 69 MT of N-Reactor reference fuel.

3.1.1 PUREX/UO_3 Process Description

The PUREX/UO_3 process operation is similar to many chemical processing plants; the major difference is that many materials in the PUREX process are radioactive and require special handling procedures. Figure 3.3 is a flow scheme of the PUREX/UO_3 process at Hanford; a description is also given below along with a discussion of the UO_3 plant process. The process details for both PUREX and UO_3 plants are more fully described in Appendices A and D.

3.1.1.1. Decladding and Dissolution of Fuel Elements (Feed Preparation)

The zircaloy cladding of the fuel elements is removed by dissolution in an ammonium fluoride solution. Hydrogen gas released by this dissolution could present an explosion hazard; therefore, ammonium nitrate is added to the ammonium fluoride solution to suppress hydrogen formation. Chemical reactions involved in the dissolution process are described in Appendix A.

The offgases from the decladding step are scrubbed with water to remove the ammonia produced during decladding, filtered to remove all fine particles, and discharged to the atmosphere through the 61 m (200 ft) main ventilation stack.

After the fuel elements are declad, they are treated with potassium hydroxide to convert the remaining small quantity of fluorides to oxides and then dissolved in nitric acid to produce a feed solution of uranyl and plutonium nitrates for the solvent extraction step. Neptunium and the fission products also form soluble nitrates and are contained in the feed solution. The feed solution is then sampled for product accountability.

The offgases from the dissolving step are heated and passed through a silver reactor (a column packed with an inert support media coated with silver nitrate), which removes most of the radioiodines, and filtered before they are passed through two acid absorbers, which recover nitric acid. The gases are then discharged to the atmosphere through the main ventilation stack. All of the ^{85}Kr, ^{3}H, and ^{14}C contained in the offgases will be released to the atmosphere (environmental consequences are discussed in Chapter 5.0). Only traces of the ^{129}I originally contained in the offgases will be released to the atmosphere. Most of the iodine is removed by the silver reactors and the acid absorbers.

3.1.1.2 Solvent Extraction and Product Recovery

The feed solution enters the solvent extraction column where, in addition to the plutonium and uranium normally extracted from irradiated fuel, neptunium may also be extracted at Hanford. In the partitioning column (Figure 3.3), plutonium is separated from the neptunium and uranium in the first extraction cycle. The neptunium can be separated from the uranium in the second extraction cycle. The neptunium-containing aqueous stream is concentrated in the backcycle waste system (see Other Waste Treatment, p. 3.10), after which the stream undergoes solvent extraction, concentration, and ion exchange to recover ^{237}Np in a nitrate solution.

The aqueous solution of uranyl nitrate hexahydrate (UNH) produced in the final uranium extraction cycle is concentrated through evaporation to about 60 percent UNH by weight, and shipped by tanker-trailer to the 200 West Area of the Hanford Site as feed for the UO_3 plant. After reduction to the +3 valence state and stripping into the aqueous phase, the $Pu(NO_3)_3$ is oxidized back to the +4 valence state $[Pu(NO_3)_4]$ and evaporated to provide a concentrated solution for oxalate precipitation and calcination to PuO_2.

UO_3 Process. In the UO_3 plant the 60 percent UNH is further concentrated to about 100 percent UNH, (Figure 3.4) and then calcined to convert the UNH to UO_3 powder by a thermal decomposition process. The UO_3 powder is loaded into steel containers for shipment to offsite customers for reuse as reactor fuel.

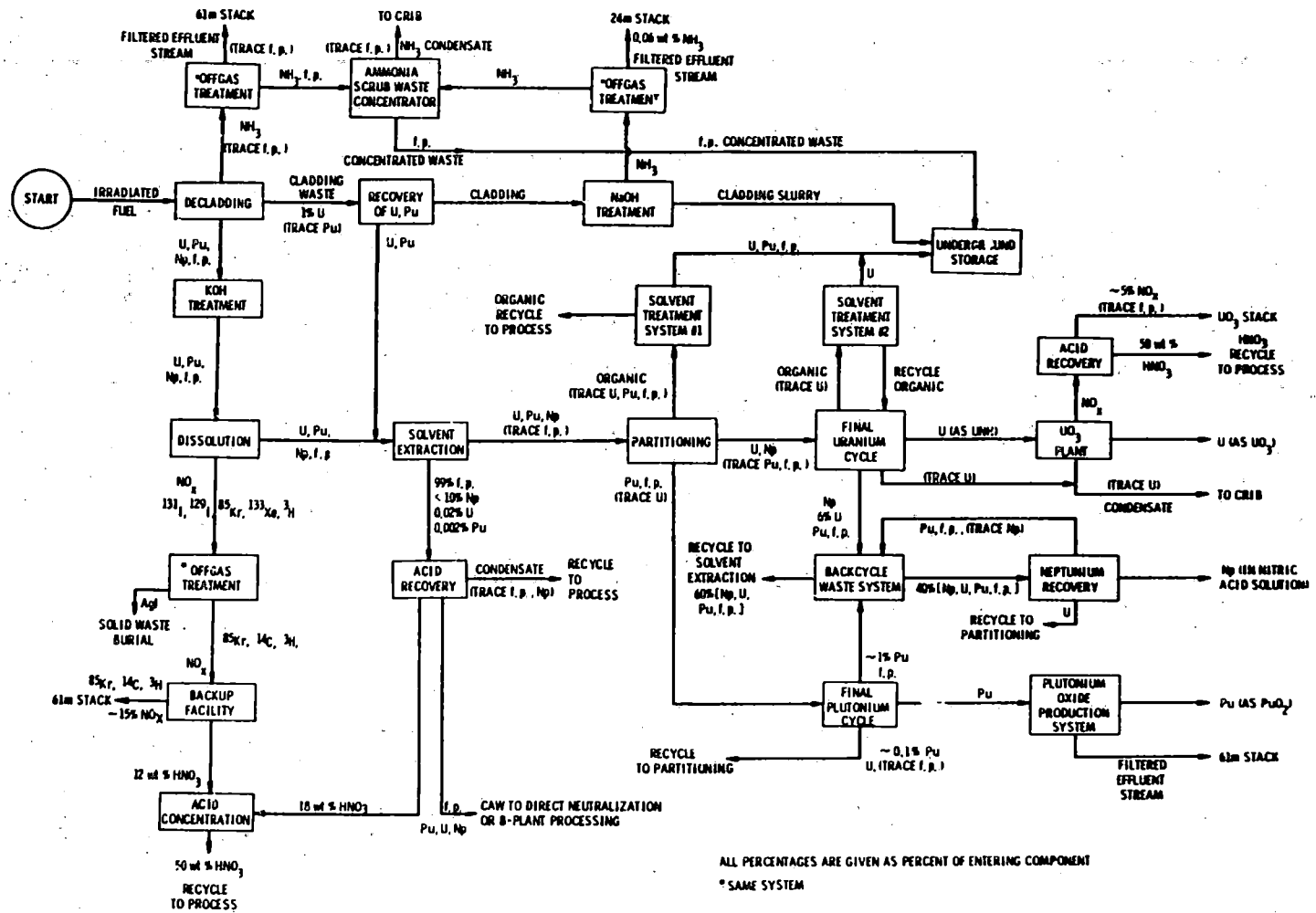

FIGURE 3.3. Abbreviated Flowsheet of the PUREX/UO_3 Process at Hanford

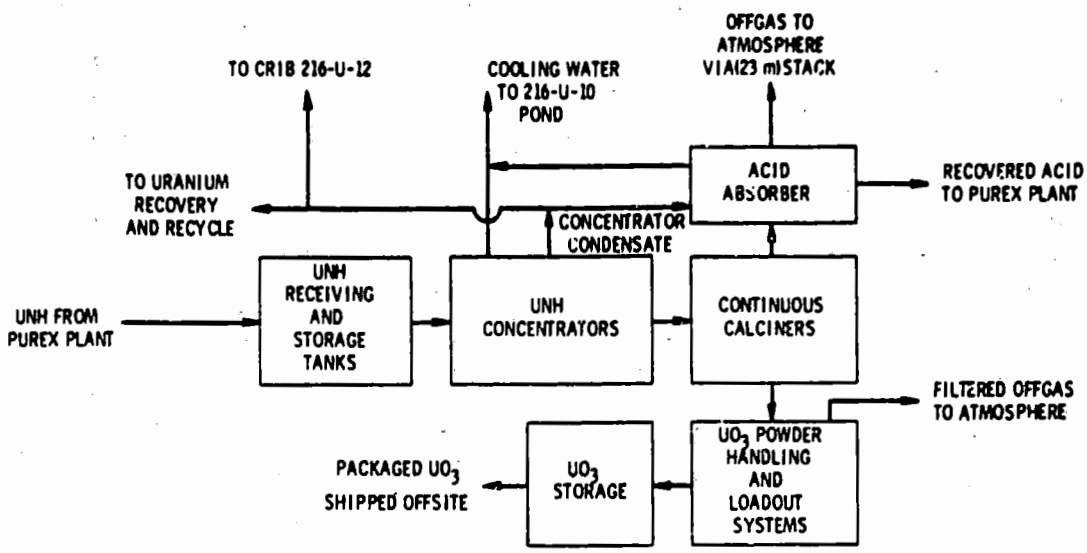

FIGURE 3.4. UO_3 Facility Process Flow Diagram

The gases from the UO_3 calciners, mostly oxides of nitrogen, are treated in an acid absorber after they are scrubbed and cooled. The recovered nitric acid is recycled to the PUREX process.

3.1.1.3 Waste Treatment and Acid Recovery Processes

The aqueous waste stream from the first solvent extraction column is the major source of the high-level liquid radioactive waste generated at Hanford. This waste stream, called the current acid waste (CAW) contains greater than 99 percent of the fission products (which include cesium and strontium), about 10 percent of the total neptunium, and trace quantities of uranium and plutonium. The CAW stream also contains most of the nitric acid used in the solvent extraction system. Nitric acid is recovered from this waste stream for reuse in the PUREX process by a series of operations (evaporation, acid absorption, sugar denitration, etc.).

Treatment of Current Acid Waste and Cladding Waste. This section discusses past CAW management practices and current waste management plans and options. Also discussed in this section are the present plans for management of the cladding waste and solvent wash (solutions used to regenerate the TBP solvent) waste solutions. Environmental consequences of CAW management are discussed in Chapter 5.0.

Current plans call for direct neutralization of the CAW and interim storage in the event of resumption of PUREX/UO_3 operations. Operation of B-Plant which recovers ^{90}Sr and ^{137}Cs from the CAW is an optional waste management plan.

Past PUREX operations have included both immediate and deferred separation and recovery of strontium (^{90}Sr) and cesium (^{137}Cs) from the CAW. The ^{90}Sr and ^{137}Cs are relatively long half-lived (30 yr) fission products and are the major heat producers in the CAW. Their removal eliminated long-term boiling of the waste in storage tanks and permitted the evaporation of the liquid waste to salt cake[a] and slurry after approximately 5 years of liquid waste storage.

(a) The waste from future PUREX operations will be converted to double-shell slurry, a mixture of fine solids suspended in a viscous liquid medium.

The ^{90}Sr and ^{137}Cs were separated and recovered in B-Plant. The separation procedure is described in ERDA-1538 (USERDA 1975, p. II.1-31). From 1968 to 1972, B-Plant and PUREX operated in parallel. When PUREX was placed in operational standby, B-Plant continued to process stored wastes, from 1972 to 1978. In its 10 years of operation, B-Plant removed approximately 57 million Ci of ^{90}Sr and 106 million Ci of ^{137}Cs from the CAW. These were stored as concentrated solutions in B-Plant pending further processing. To date, approximately one-third of the ^{90}Sr and ^{137}Cs has been encapsulated and stored in water basins in the Waste Encapsulation and Storage Facility (WESF). These procedures are also described in ERDA-1538 (USERDA 1975, p. II.1-31).

Direct Neutralization and Interim Storage of CAW. Direct neutralization and interim storage of the CAW generated by PUREX would give greater flexibility to the waste management program. This option would also allow deferred recovery of strontium and cesium. Direct neutralization leaves the waste in a form that is readily adaptable to many waste solidification methods.

The maximum postulated processing rate of 48,000 MT of N-Reactor fuel over a 16-year period would produce 4.4×10^4 m^3 (1.1×10^7 gal) of CAW. In this option, the CAW would be neutralized without cesium and strontium removal and stored in the AY-AZ tank farm.[a] Because this waste would still contain the strontium and cesium, the heat generation of the liquid would be sufficient to cause self-boiling. The condensate created by the self-boiling would be removed from the waste until the sodium concentration in the waste solution reached approximately 5 molar after which time the condensate would be returned to the tank to maintain the waste solution sodium concentration at that level. The condensate removed from the boiling waste would be discharged to a crib after decontamination by evaporation and ion exchange. The total volume of radioactive liquids would be approximately 4.5×10^3 m^3/yr (1.2×10^6 gal/yr), divided about equally between condensate and aging waste (Table 3.1).

B-Plant Operations. B-Plant can be operated in either a sequential or parallel mode with PUREX. A processing rate of either 3000 or 2100 MT of fuel per year would result in

TABLE 3.1. Radioactive Liquids From PUREX Waste Management, m^3/yr[a]

Source of Waste	To Disposal: Crib	To Disposal: Trench	To Disposal: Pond[b]	To Double-Shell Tank Storage
CAW Treatment[c]				
Option 1: Direct Neutralization	2.4×10^3	-0-	-0-	2.1×10^3
Option 2: B-Plant Operation	$7.0\text{–}8.8 \times 10^4$	1.4×10^6	1.2×10^7	2.1×10^3
Cladding Removal Solvent Wash[d]	1.2×10^4	-0-	-0-	1.8×10^3

(a) Based on a processing rate of 3000 MT of fuel per year in the PUREX plant.
(b) Non-contact cooling water.
(c) These are the volumes associated with the stored form of the HLW (either aging waste or double-shell slurry). There would be a time delay between when the fuel was processed and when these waste volumes were reached.
(d) This waste would be generated in PUREX and does not depend on the waste management option chosen.
SOURCE: Hawkins 1981c.

(a) These tanks were built specifically to store self-boiling waste. These tanks do not require cooling coils such as those used at the Savannah River Plant because the heat generation rate will be within the design criteria of the tanks (USERDA 1975, p. II.1-37). An overhead condenser cools the vapors from these tanks and the condensate is either returned to tanks or sent to cribs.

the parallel operation of B-Plant and PUREX. However, a 1050 MT/yr processing rate would allow a sequential mode of operation for the two facilities. This is due to the fact that the PUREX plant has a sufficiently high throughput rate that continuous operation would not be necessary to process 1050 MT/yr and the PUREX plant could temporarily revert to operational standby while B-Plant is in operation. The advantage of using this mode of operation is that it enables some of the same operating personnel to be used in both PUREX and B-Plant. The procedures for operating B-Plant itself would remain the same for both sequential and parallel modes. B-Plant and WESF operating procedures are briefly summarized here from the discussion contained in ERDA-1538 (USERDA 1975). The CAW from PUREX is routed to B-Plant via the 244-AR Vault. The solids are removed by centrifuging and are treated for strontium recovery, while the liquid is treated with phosphotungstic acid to precipitate cesium. The liquid remaining after the cesium precipitation is routed through four solvent extraction columns for recovery and purification of any strontium present. The cesium is redissolved in sodium hydroxide and further purified by ion exchange. In the WESF, the ^{137}Cs is encapsulated in the form of cesium chloride salt and the ^{90}Sr is encapsulated as strontium fluoride salt. The capsules[a] are placed in water basins for storage. After cesium-strontium removal, the CAW is neutralized with sodium hydroxide (NaOH), and sent to the AY-AZ underground tank farms.

The 4.4×10^4 m^3 (1.1×10^7 gal) of CAW produced by PUREX would contain approximately 4.5×10^8 Ci of ^{90}Sr and 5×10^8 Ci of ^{137}Cs. B-Plant processing and the WESF would produce approximately 2550 capsules of ^{90}Sr and approximately 3990 capsules of ^{137}Cs.

Liquid waste streams from B-Plant include steam and process condensates, chemical sewer, cooling water, low-level liquid waste, and dilute neutralized CAW. The low-level liquid waste is concentrated through evaporation to yield decontaminated condensate and double-shell slurry. The neutralized CAW is stored in underground double-shell tanks for 5 years prior to its conversion to double-shell slurry. During this storage period, the CAW is concentrated in-tank by self-boiling or heating of the CAW solution, followed by removal of the condensate. The degree of concentration is such that the sodium concentration of the CAW is maintained at approximately 5 molar by returning the condensate to the solution if necessary. The removed condensate is decontaminated through ion exchange and sent to a crib. After 5 years, the aged and concentrated CAW is eventually removed from the tank and evaporated to generate decontaminated condensate and double-shell slurry. Annual volumes of radioactive liquid effluents that would be generated from B-Plant operations are summarized in Table 3.1.

Additional Tanks for Storage of High-Level Wastes. The generation, treatment, and storage[b] of liquid high-level waste (HLW) from past PUREX operations at Hanford were discussed in detail in ERDA-1538 (USERDA 1975, pp. II.1-29-44) and in the EIS on double-shell steel tanks for HLW storage (USDOE 1980b). These documents also discussed in detail the environmental consequences of HLW storage in double-shell steel tanks. As indicated in Table 3.2, 25 additional tanks would be needed to accommodate the neutralized CAW which would result from processing 48,000 MT of fuel. If less fuel is processed, proportionately fewer tanks would be needed.[c] The tanks, each holding about 3.8×10^3 m^3 (one million gallons) of approximate specific gravity 2.0, would be constructed in the 200 East Area and would require about 18 ha (45 acres) of land. Fifteen of these tanks would contain aging waste and ten would contain cladding waste sludge. For the B-Plant processing option, 27 new tanks would be needed and would be used for cladding waste, double-shell slurry, and aging waste. The tanks would be constructed in accordance with or better than the tank design and construction specifications described in DOE/EIS-0063 (USDOE 1980b); appropriate environmental review would be performed before construction. The AY-AZ tank farms (already in existence) would be used to store the

(a) These capsules are approximately 53 cm (21 in.) long and 8 cm (3 in.) in diameter. The ^{90}Sr capsules have an inner capsule of Hasteloy C-276 and an outer capsule of 316 stainless steel. Both inner and outer capsules for the ^{137}Cs are of 316 stainless steel.

(b) Approximately 200,000 m^3 of solid and liquid in-tank wastes from past Hanford operation are currently being stored (NAS 1978).

(c) For a total of 10,000 MT of fuel processed, 6 additional tanks would be needed. Similarly, for 30,000 MT of fuel processed, approximately 17 additional tanks would be needed.

TABLE 3.2. Approximate Need Schedule for Additional Waste Storage Tanks for Hanford Waste Management, 48000 MT Fuel Processed

Year	New Tanks Needed[a]
1985	2
1986	3
1987	1
1988	0
1989	1
1990	1
1991	3
1992	1
1993	1
1994	2
1995	2
1996	2
1997	2
1998	2
1999	2
TOTAL	25

(a) Each has a nominal capacity of 3,800 m^3 (10^6 gal).

boiling waste from either management option. Waste storage tank accidents have been discussed in ERDA-1538 (USERDA 1975, p. III.2-2) and DOE/EIS-0063 (1980b).

Cladding Removal and Solvent Wash Waste. The waste management program currently planned for the cladding removal and solvent wash waste stream is compatible with either CAW management option. This liquid waste stream contains extensive amounts of suspended solids, which settle during storage in double-shell tanks. The liquid is then removed and concentrated through evaporation. The evaporator condensate is further decontaminated by ion exchange and discharged to a crib and the evaporator bottoms are stored with existing waste slurry in double-shell tanks (see Table 3.1).

Other Waste Treatment. A backcycle waste system (part of the PUREX process) collects and concentrates aqueous waste streams containing nitric acid, uranium, plutonium, neptunium, and fission products from various columns in the plant and condensates from some plant condensers. Streams entering the backcycle waste system are from the plutonium recovery cycle, the uranium recovery cycle, and the neptunium recovery system. The backcycle waste system consists of a concentrator and condenser; the concentrated aqueous wastes are recycled to the first extraction column and to the final neptunium cycle for neptunium recovery. The offgases from the condenser are processed through the condenser vent system.

Nitric acid is recovered from dissolver offgas with a downdraft condenser and two acid absorbers in series. Recovered nitric acid and the nitric acid recovered at the UO_3 plant are concentrated (in a vacuum fractionator) and reused in the PUREX plant. The distillate from the vacuum fractionator is recycled to the fractionator, used as absorber water in the acid absorbers, and routed to the backcycle waste system, as required.

Ammonia scrubber waste collected during cladding dissolution and cladding waste treatment is evaporated, driving off the ammonia, which is then absorbed and collected with the condensate from the evaporator. Because the radionuclides in the scrubber waste are not volatile, they remain in the evaporator in the concentrated bottoms liquor, which is periodically emptied from the evaporator and routed to underground storage tanks. The evaporator condensate is routed to a crib for disposal.

Iodine (^{129}I and ^{131}I) released in the dissolver and in the process vessels, is removed from the gaseous effluent by silver reactors. The reaction of silver nitrate

($AgNO_3$) with iodine forms silver iodide (AgI), a solid which remains in the reactor. When a reactor no longer efficiently removes iodine and cannot be effectively regenerated, it is replaced and sent to solid waste burial.

During continuous plant operation, process condensates from current acid waste concentration, backcycle waste concentration, acid fractionation, and Pu-U partition cycle concentration are used as scrub streams to various columns instead of being discharged to cribs. However, condensate from the final uranium cycle is routinely discharged to a crib because of its very low fission product concentration (see Table D.8).

Solvent wash waste and wastes collected in the cell sumps are made alkaline, sent to holding tanks, concentrated in the waste evaporator, and stored in underground waste tanks.

3.1.1.4. Process Effluents

Effluents from the operation of the Hanford PUREX/UO_3 facilities consist principally of gases and liquids; solid wastes are quite minor. The effluents may contain radioactive and/or nonradioactive pollutants. Their environmental effects, described in detail in Chapter 5, are summarized in this chapter in Section 3.1.8. Detailed effluent data are contained in Appendix D.

All gaseous effluents that might contain radionuclides are treated and filtered through high efficiency particulate filters[a] or deep fiberglass filters before discharge to the atmosphere.

Liquid radioactive wastes are concentrated by evaporation. Streams containing little or no radioactivity, such as non-contact cooling water and some condensate streams from the evaporator, are sent to man-made ponds and cribs (shown in Figure 3.1).

The projected values of the process effluents and their environmental effects are based on processing 3000 MT/yr of 180-day cooled 12 percent ^{240}Pu fuel. This assumed processing rate and fuel type is designated the "worst case" because it would result in the greatest dose to the public. Processing of lower-exposure N-Reactor fuel, with less than 12 percent ^{240}Pu would result in less-radioactive effluents and lower doses.

As noted earlier (Section 3.1), the PUREX processing rate may be much lower than 3000 MT irradiated fuel per year. At the rate of either 1050 or 2100 MT/yr, volumes of process effluents and radioactivity released would decrease, as would environmental effects in general (see Appendix D).

Gaseous Effluents. During 1972,[b] the last year of PUREX plant operation, the approximately 3.4×10^9 m^3 (1.2×10^{11} ft^3) of gaseous effluents discharged from the PUREX plant contained 0.6 Ci of particulate fission products and transuranic nuclides, 0.3 Ci of radioiodine isotopes, 0.7 Ci of ^{14}C, 4.1×10^5 Ci of ^{85}Kr, plus approximately 1000 Ci of ^3H. Estimated maximum annual discharges during PUREX plant operation at 3000 MT/yr would be approximately three times greater than those in 1972 (Table D.1). All effluent streams normally containing radionuclides would be analyzed for radioactivity. Effluent samples from the main stack would be analyzed for specific radionuclides.

Radionuclides released in gaseous effluent streams from the PUREX plant during operations would result in concentrations at the Hanford Site boundary that would be within the levels permitted in unrestricted populated areas. Concentrations in occupied areas within the Site boundary will be within the levels permitted in restricted areas (DOE Order 5480.1A Guidelines).

Gaseous effluents from the UO_3 plant for 1972 were estimated to comprise 3.4×10^7 m^3 (1.2×10^9 ft^3). Effluents were estimated to contain less than 10^{-4} alpha Ci and less than 10^{-2} beta Ci (see Appendix D). Projected gaseous effluents following

(a) These filters are capable of removing from an air stream at least 99.97 percent of the radioactive particulate material that is greater than 0.3 microns (0.01 mils) in diameter.

(b) During 1972, 1013 MT of irradiated fuel were processed at PUREX; this is equivalent to approximately one-third the design year tonnage for the assumed maximum operation.

resumption of UO_3 operations will be further reduced through the addition of HEPA filtration; concentrations are estimated to be well below permissible levels in unrestricted areas (Table D.3).

The principal nonradiological gaseous emission from the PUREX/UO_3 facility would be NO_x, resulting primarily from fuel dissolution (PUREX Plant) and from UNH calcination (UO_3 Plant), amounting to an estimated 435 MT/yr after application of the best available control technology (see Table D.5). Neither facility would produce sulfur oxides or photochemical oxidants. The environmental consequences are discussed in Section 5.1.2.1.

Liquid Effluents. As indicated in Figure 3.5, liquid effluents from the PUREX/UO_3 facilities include process and scrubber waste, steam condensates, process cooling water from heat exchangers, chemical sewer waste and sanitary waste. Current acid waste, the other liquid stream leaving the PUREX facility, may be neutralized and sent to underground tank storage or sent to B-Plant for further processing; it is not considered a liquid effluent in this section.

Process and steam condensates generated during PUREX operation would be discharged to underground cribs as described in ERDA-1538 (USERDA 1975, p. II.1-44). Modifications in plant design and operation procedures will reduce the liquid volume discharged to cribs on a m^3/MT fuel processed basis; total liquid volume may increase due to the increased processing rate. After resumption of operations, 6.3×10^5 m^3 (1.6×10^8 gal) liquid waste would be discharged to cribs, with steam condensates accounting for more than 85 percent of the liquids discharged.

More significantly, the combination of recycle and re-evaporation of condensates from the acid absorber, the backcycle waste concentrator, the first uranium cycle concentrator, and the evaporation of ammonia scrubber waste will measurably reduce the ^{90}Sr, ^{106}Ru, and ^{137}Cs contents of the condensates discharged to cribs. These are expected to decrease from hundreds of curies/yr to less than 15 Ci/yr (see Appendix D.1.2).

Heat exchanger cooling water (2.6×10^7 m^3/yr) and the chemical sewer (2.7×10^6 m^3/yr) are also considered liquid effluents from the PUREX operation. Because the radioactive content of these liquids is very low, they would be discharged to man-made ponds. Except for tritium, the annual totals discharged would amount to only a few curies. The radionuclide content of these discharges to the ponds is shown in Table D.8.

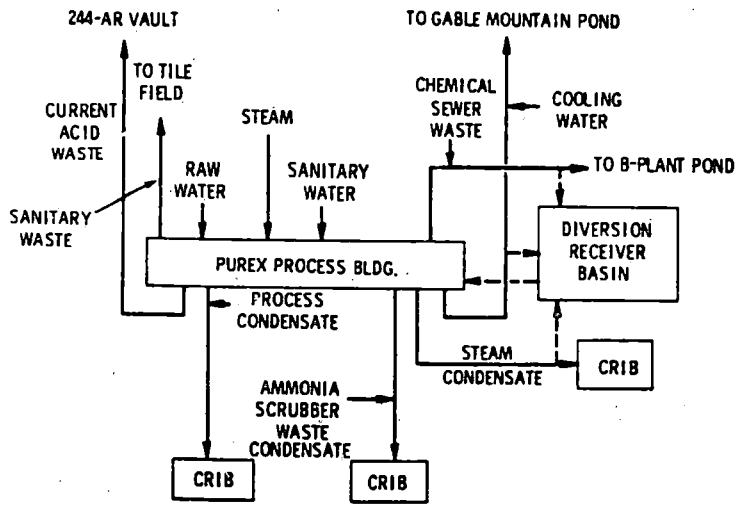

FIGURE 3.5. Liquid Streams Leaving the PUREX Facility

The onsite discharge of radioactive liquids to cribs and ponds would be controlled such that the resulting radiation dose to onsite personnel and offsite populations would be well below the amount allowable under DOE Order 5480.1A radiation protection standards. In fact, while these liquids would be discharged to an onsite radioactive waste disposal site, the concentration of all radionuclides would be sufficiently low that the liquids could meet criteria for direct discharge to a public sanitary sewer system (see Section 6.1 and DOE Order 5480.1A Table I, Column 2).

Sanitary waste is a non-radiological liquid waste discharged at a rate of approximately 1.5×10^6 m^3/yr. Ten percent of this waste is discharged to a septic tank-tile field disposal area, and the rest is routed to cribs via the process and ammonia scrubber condensates and to a pond via the chemical sewer.

Process condensate from the UO_3 plant amounting to approximately 1.8×10^3 m^3/yr would be sent to a crib. Heat exchanger cooling water (1.7×10^5 m^3/yr) and chemical sewer waste (1.1×10^4 m^3/yr) would be sent to a pond. Total radioactivity content of all UO_3 plant streams (see Table D.10) was estimated at less than 5 Ci/yr from 1972 operations, and future operations are projected to be comparable. As stated previously, these discharges would be controlled such that the resulting doses would be within the radiation protection standards of DOE Order 5480.1A.

The total liquid effluents from the UO_3 plant would contain less than 10 percent of the actinides and less than 50 percent of the total β curies routinely discharged to the ponds/cribs in the 200 West Area. (Other liquid discharges are from waste management facilities.)

Solid Wastes. Contaminated solid wastes from the PUREX plant are listed in Table 3.3 as transuranic (TRU) and non-TRU wastes and consist primarily of failed and unusable production equipment, tools, laboratory equipment, and other contaminated solids. These wastes would be disposed of according to their radionuclide content (see Appendix A.1.12).

Solid waste generated by UO_3 plant operation was approximately 21 m^3 (740 ft^3) in 1972. This was buried in the 200 West Area industrial burial ground as non-TRU waste as it contained only 0.95 kg of uranium, 0.5 Ci of total β emitters, and <0.03 Ci of combined ^{90}Sr, ^{137}Cs, and ^{106}Ru nuclides. Future UO_3 plant operation would also produce about 63 m^3 of solid wastes annually[a] with similar composition and hence would also be buried in the industrial burial grounds.

Past chemical processing operations have generated 1.56×10^5 m^3 of contaminated solid waste which is buried in 19 sites in the 200-Area plateau using 63 ha of land (USERDA 1975, p. II.1-19). Future 200 Area solid waste releases (of which the PUREX/UO_3 plants are only a part) were projected in ERDA-1538 (USERDA 1975, p. V-41) to require approximately 1 ha land use/year.

Solid waste from the plutonium oxide production system in the PUREX 202-A Building would include HEPA filters, gloves, clothing, swipe samples, tools, and laboratory cleanup materials. These would be stored as TRU wastes and have a 20-year retrieval capability.

Solid nonradioactive wastes, consisting of ordinary trash originating outside of contaminated areas, are collected in trash cans, plastic bags, cardboard boxes, etc. which are emptied into a dumpster. The waste is compacted to one-third volume and buried in the Hanford Site central sanitary landfill. The projected solid waste from PUREX/UO_3 facilities, approximately 396 m^3/yr (14,000 ft^3/yr), would be about four percent of the 10,200 m^3/yr (360,000 ft/yr), predicted for the entire Hanford Site (USERDA 1975).

3.1.2 Description of PUREX/UO_3 Facilities

The PUREX plant is located in the 200 East Area of the Hanford Site, the UO_3 plant is in the 200 West Area. The process complexity and equipment details of the PUREX plant are

(a) The solid waste volumes given above are based on processing about 3000 MT/yr of irradiated N-Reactor fuel. These volumes would decrease if the PUREX plant were to process 1050 or 2100 MT of fuel per year.

TABLE 3.3. Annual Radioactive Solid Waste Discharged From the PUREX Plant

Waste Type	Vol. (m^3)	1972 (actual) Curies Total	Curies (^{90}Sr, ^{137}Cs, ^{106}Ru)	Pu(g)
TRU[a]	1.9×10^2	180	—[b]	43
Non-TRU	4.5×10^2	31,000	2,500	<0.1[c]

Waste Type/Source	Vol. (m^3)[d]	Future (estimate)[d] Curies Total	Curies (^{90}Sr, ^{137}Cs, ^{106}Ru)	Pu(g)
TRU				
PUREX[e]	1.0×10^3	540	—	135
PuO_2 Line	5.7×10^1	—	—	2760
Non-TRU	1.2×10^3	81,000	6,600	0.3

(a) TRU waste is any waste measured or assumed to contain greater than 10 nanocuries of transuranic alpha activity per gram of waste.
(b) Data not available.
(c) Less than (<) values are derived from the lower limits of detection.
(d) Based on processing 3000 MT of irradiated fuel per year.
(e) This includes the PUREX canyon burial boxes which contribute 4.8×10^2 m^3 and 6 g Pu.
SOURCES: Hawkins 1980a, 1981b.

more extensive than that of the UO_3 plant. The PUREX plant operation as proposed will include facilities to convert plutonium nitrate to plutonium oxide; thus all plutonium-related processing would be conducted in the PUREX plant.

3.1.2.1. PUREX Facilities

The PUREX plant consists of a large processing building and associated support facilities (Figure 3.2). The processing building is about 300 m (1000 ft) long, 35 m (120 ft) wide, and 30 m (100 ft) high. In the processing building are cells containing vessels, tanks, pipes, columns, and other processing equipment necessary for fuel processing. Heavy shielding provides radiation protection for plant operating personnel. Instrumentation for monitoring and control of the process, as well as equipment for sampling of process streams is provided. Facilities for decontamination and repair of equipment are also provided. All liquid and gaseous effluents from the PUREX facility are monitored to assure compliance with applicable release standards. Further details of the process are given in Appendix A.

3.1.2.2 UO_3 Plant Facilities

The UO_3 plant includes facilities for receiving and concentrating the uranyl nitrate hexahydrate from the PUREX plant, six electrically-heated continuous calciners that convert UNH to UO_3, acid recovery equipment, and facilities for packaging and shipping of UO_3. Appendix A contains further details of the UO_3 plant.

Discussion of the UO_3 facility is brief because these facilities are much less complex in comparison with the PUREX facilities. Further, they process materials of very low radioactivity, not exceeding that of natural uranium, and do not require shielding or remote operations. Because of the relatively larger capacity of the UO_3 plant, it would operate for only about 105 days/yr for the assumed 3000 MT/yr of irradiated fuel. The UO_3 production facilities are located about 8 km (5 miles) west of the PUREX plant.

3.1.3 PUREX Processing Capabilities

Currently, the PUREX processing rate is limited by cladding waste handling operations to approximately 2300 MT/yr. Engineering studies indicate the capacity could be increased to 3100 MT/yr if process modifications were successfully demonstrated after plant startup. These modifications would eliminate some steps in the recovery of solids from the cladding waste, thereby lowering the volume of waste material which must be processed. The modifications would require changing a tank agitator and piping jumpers at a cost of about $30,000. These changes would be made remotely and would not increase occupational dose rates or industrial accident frequencies.

Alternatively using the current process, a capacity of 3000 MT/yr could be achieved with extensive modifications to the equipment in the waste handling and adjacent cells. Preliminary studies of this alternative place the cost at about $7,000,000 requiring 200 man-months and four months PUREX Plant downtime for installation and testing. A project of this magnitude would require approximately three years to implement following recognition of need. Again these changes would be made remotely and would not increase occupational dose rates or industrial accident frequencies. For futher details of both alternatives see Appendix A.2.1.

3.1.4 PUREX/UO_3 Operational Requirements

The PUREX/UO_3 facilities would require a total staff of approximately 400 people. The annual operating costs are estimated at $40 million based on operating the facilities at 2100 MT/yr throughput. Process needs for PUREX/UO_3 operations at a level of 3000 MT/yr would require steam generated by the consumption of approximately 96,000 MT/yr of coal. Electrical requirements would be 27 million kWh/yr. The raw water requirement would be approximately 4.2×10^7 m^3/yr.

3.1.5 Completed PUREX Facility Modifications

ERDA-1538 (USERDA 1975, pp. II.5-18,V-17) described the Federal government's plans to modify PUREX facilities to increase safety and reduce the environmental impacts of operation. To implement these, the PUREX plant and process have been continually upgraded to improve performance and add new capability. This program has continued since the plant was placed in operational standby condition in 1972. Some of the major modifications already made in response to changing environmental and safety requirements are described in this section. Many of these modifications have been completed and are briefly described in the following sections; additional details are contained in Appendix A.2.4. The current estimated cost of restart of the PUREX/UO_3 plants (covering the period FY1980-1984) is approximately $150 million; this includes plant modifications, plant upkeep and plant staff training.

3.1.5.1. Modifications in Liquid Effluent Control ($1,460,000)

Improved liquid effluent control for the PUREX facility, with consequent significant reductions in quantities of radioactivity discharged to cribs and ponds, has been achieved by the incorporation of re-evaporation steps to various process condensates and to the ammonia scrubber waste, with only the re-evaporated and decontaminated condensate being discharged.

As a result of these changes, the quantities of radionuclides released to the cribs (per metric ton of fuel processed), except for tritium, are reduced by at least 50 percent below the 1972 operating levels.

3.1.5.2 Modifications in Gaseous Effluent Control ($2,800,000)

Additional HEPA filtration systems have been installed on a number of cells in the PUREX plant building, and are expected to reduce effluent concentrations to levels permissible in air in unrestricted areas. A second stage of HEPA filtration was added to cells involved with plutonium and neptunium processing.

For improved effluent control for PUREX Building 202-A, a third filter has been installed on the main stack. This will serve as a standby backup to the two filters routinely used.

3.1.5.3 Improved Fire Protection ($1,030,000)

Improvements were made for fire detection and suppression (foam generation) systems in a number of cells in Building 202-A, primarily in those cells with significant inventories of organic solvent. A sprinkler system was added to the main ventilation tunnel for improved protection of the main stack filters.

3.1.5.4 New Criticality Alarm System ($300,000)

New nuclear criticality incident alarms were installed in the PUREX plant that meet current criteria for Nuclear Criticality Safety (DOE Order 5480.1A).

3.1.5.5 Upgrading Accountability Measurement System ($350,000)

The main accountability tank sampling system and the associated shielding were upgraded. Improvements have been made in the input measurement system particularly in analytical techniques and representative sampling procedures. This permits stricter control of plutonium inventories in the facility.

3.1.6 Planned Facility Mitigating Measures (Modifications)

Several additional modifications would be completed before the PUREX/UO_3 facilities began operation. These modifications will reduce environmental impacts from plant operation. A significant modification is the incorporation of the plutonium oxide conversion equipment within the PUREX plant, eliminating the former need to transport plutonium nitrate solutions 8 km for conversion.

3.1.6.1 Planned PUREX Liquid Effluent Control Modifications ($4,550,000)

A number of improvements in sampling, monitoring, and flow measurement of PUREX condensate, cooling water, and chemical sewer streams would be installed prior to resumption of operations (see Appendix A.2.5.1). These modifications will improve control of liquid effluents from PUREX.

3.1.6.2 Planned PUREX Gaseous Effluent Control Modifications ($3,330,000)

Gaseous effluent controls are planned which will improve sampling, monitoring, and measurement of total flow through the main stack and through the product removal room stack, and provide additional HEPA filtration in key areas. One major modification will be the reduction in PUREX NO_x emissions. Application of the best available control technology will increase NO_x removal from 46 percent to 80 percent (see Section A.2.5.2).

3.1.6.3 Planned PUREX Safeguards Modifications

The PUREX plant will be protected in accordance with the safeguards and security requirements of USDOE Orders of the 5630 series.

3.1.6.4 Upgrading PUREX Ventilation System ($700,000)

The PUREX ventilation system will be upgraded to improve the ability of the control system to maintain a positive pressure zone in Building 202-A in areas occupied by personnel, and additional sensors and alarms will be installed in different control zones to improve the ability to detect and respond to the spread of contamination in the event of an accidental release.

3.1.6.5 Waste Transfer Facilities ($2,600,000)

Three new encased waste transfer lines from PUREX 202-A Building to the AW tank farm will be installed.

3.1.6.6 Planned Modifications for UO_3 Plant ($2,620,000)

Modifications are planned to upgrade load-out systems: improved monitoring, sampling capability, and HEPA filtration to some exhaust stacks, to improve process dust control, and to improve the fire protection system.

3.1.6.7 Planned PUREX PuO_2 System Addition ($15,700,000)

A plutonium oxide production system is being installed in the 202-A Building to convert the plutonium nitrate obtained from the PUREX process to plutonium oxide. The engineering design of the system is complete and construction has begun. Use of this new system will eliminate the need to transport plutonium nitrate solution to the previously-used oxide conversion unit located 8 km away. It will also reduce total radiation exposure of operating personnel.

A more detailed description of the new PuO_2 system is contained in Appendix A.3.

3.1.6.8 Upgrade Seismic Resistance ($830,000)

The PUREX facility was constructed, in compliance with the Uniform Building Code applicable at the time of its construction in 1953, before the adoption of current earthquake resistance criteria. The DOE will incorporate structural upgrades consistent with current criteria into key areas before resumption of operation. (Specific modifications are discussed in more detail in Appendix A.2.5.7.)

3.1.7 Other Mitigation Measures Considered and Not Proposed

One mitigation measure considered was additional gaseous waste treatment to remove ^{3}H and ^{85}Kr from dissolver offgases. Without this modification the releases from the PUREX main stack will be about 3.0×10^{3} Ci/yr of ^{3}H and 3.3×10^{6} Ci/yr of ^{85}Kr. There is no known technology for capture of tritium. It would be possible to reduce ^{85}Kr release, possibly by 90 percent.

A ^{85}Kr collection and storage facility for the Hanford PUREX plant was estimated to have a cost of the order of $170 million. No clear benefits have been identified for ^{85}Kr recovery from gaseous wastes since the environmental consequences of the PUREX operation even without the modification are shown to be acceptably below allowable (DOE Order 5480.1A) levels. Additionally, recent research has indicated that this alternative could increase the occupational dose and possibly increase the dose to the general population in the event of an unplanned release (see Section 5.2.1.1). The adoption of this modification is not planned for resumption of PUREX plant operation.

3.1.8 Safeguards and Security Features

Although safeguards and security features are discussed here, under the heading of the proposed action, they will apply to all alternatives, and are not unique to a resumption of fuel processing operations at the existing PUREX/UO_3 plant at Hanford. The following comments can be applied generally to all activities dealing with Special Nuclear Material (SNM).

The objectives of special nuclear materials safeguards and security are to protect the health and safety of the public and to assure program continuity. Protection is afforded against intentional threats or acts of theft of SNM.

The Hanford PUREX plant is being protected in accordance with the safeguards and security requirements of USDOE Orders in the 5630 Series. Special nuclear material would be temporarily stored during plant operation within the PUREX Plant. This plant is a protected area and is appropriately fenced, guarded and secured. It is located inside the 200 East Area, a limited access area which is also appropriately fenced, guarded and secured.

3.1.9 Natural Forces Resistance of the PUREX and UO_3 Plants

The original PUREX structural design was in conformity with the Uniform Building Code (UBC), 1952 Edition, according to the original plant design criteria (General Electric 1952).

The original design criteria specified that earthquake resistance be provided in accordance with Zone 2 regulations of the 1952 UBC. These criteria required that structures have the lateral resistance to withstand a 0.10 g static force.

Recent seismic analyses (Blume and Associates 1976a,b; 1977, 1981a,b; Hawkins 1981a) have considered both 0.25 g Safe Shutdown Earthquake (SSE) ground motions (Hanford SDC 4.1 1974) and 0.10 g Hanford Regional Historical Earthquake (HRHE) motions (Blume and Associates 1981b). These indicated that the 202-A Building canyon would resist the HRHE, but would require upgrades to resist the SSE. Also, both the HRHE and SSE have the potential to disrupt utilities (water, electrical, steam, and telephone), plus major equipment and services.

The potential sources for major radionuclide releases from the PUREX Plant, without structural upgrading, in the event of a damaging earthquake were determined to be a uranium metal fire in a dissolver and a solvent fire in H-J Cells. Plans to upgrade the PUREX safety systems, components, and equipment to limit releases from the plant due to seismic ground motions to within DOE Order 5481.1A guidelines have been developed. The Department of Energy will incorporate these upgrades prior to operation of the PUREX/UO_3 facilities.

The probability of a 0.25 g earthquake (SSE) occurring cannot be defined because there is an unlimited time span per occurence; the probability of a 0.10 g earthquake (HRHE) is 8.6×10^{-3} for sixteen years of operation (USERDA 1975, Vol.1, p. III-2-28).

Because tornado design criteria were not specified in the 1952 Uniform Building Code, they were not included in the original design criteria. Recent tornado analyses of the PUREX facilities have been conducted to evaluate effects of credible tornado conditions for the Hanford Site (Hawkins 1981a). These indicate that the 202-A Building canyon could resist the 280 km/hr (175 mph) tornado, whose probability is estimated to be 6×10^{-6}/yr (USERDA 1975, p. III.2-33). The consequences of a tornado at the PUREX facility are given in Table 5.14. Also, the probability of such a tornado is very low. Structural modifications for tornado resistance are not planned for resumption of PUREX operations (Hawkins 1981a).

The design criteria and assumptions (UBC 1952, Hanford SDC 1952) for the PUREX facility which pertain to snow loadings, flooding, and subsurface hydrostatic loading are still applicable. No upgrades to withstand these natural forces are considered necessary.

In view of the very low radioactivity levels associated with recovered UO_3, equal or less than those for natural uranium, the radiological consequences caused by earthquake or tornado damage to the UO_3 facility would be insignificant. Data on resistance of the UO_3 plant to these same natural forces are not available.

3.1.10 Reasonably Foreseeable Environmental Effects

In the following discussion, the principal environmental consequences of the proposed action are summarized based on the detailed discussion presented in Chapter 5.0.

During normal operations, the PUREX process generates gaseous and liquid effluents and solid wastes. Projected quantities of generation for three processing rates (3000, 1050, and 2100 MT of irradiated fuel per year) are tabulated in Appendix D. These effluents contain both radioactive and nonradioactive chemicals. Principal radioactive isotopes present in the effluents are: ^{3}H (gaseous and liquid), ^{85}Kr (gaseous), ^{129}I (gaseous and solid), ^{131}I (gaseous), ^{14}C (gaseous), ^{239}Pu (liquid and solid), ^{90}Sr (liquid and solid), ^{137}Cs (liquid and solid), ^{106}Ru (liquid and solid), and ^{60}Co (liquid).

These isotopes would be present in the effluents in such quantities that the radiation dose to the public or to workers would be within DOE Order 5480.1A radiation protection standards and insignificant in terms of actual doses. For example, the radiation doses from ^{85}Kr (the principal radionuclide to be emitted to air at 3.3×10^{6} Ci/yr) would be 0.5 mrem from a 16-year release and 70-year total body accumulation to the maximum individual. For comparison, the natural background radiation dose to the individual would be 7000 mrem over 70 years. Principal nonradioactive chemicals emitted to air would be NO_x, 385 MT/yr from the PUREX process and 50 MT/yr from the UO_3 process. Ambient air concentration of NO_x from PUREX is estimated to be 2×10^{-2} $\mu g/m^3$, which is far below the Federal and State standards (see Table 5.6).

Liquid effluents from PUREX include: 1) process and scrubber waste, 2) steam condensates, 3) non-contact cooling water from heat exchangers, 4) chemical sewer waste, and

5) sanitary waste. As described in Appendix D and Chapter 5.0, the concentration of all isotopes and chemicals in these effluents would be below applicable DOE 5480.1A Guidelines. This is also true for liquid effluents from UO_3.

Solid wastes from both PUREX and UO_3 facility operations would be 396 m^3/yr, that is about 4 percent of the solid wastes to be generated per year for the entire Hanford Site.

The worst case accidents analyzed in Chapter 5.0 show: 1) dissolution of 25-day cooled fuel in PUREX could deliver an acute dose (thyroid) of 190 mrem to the maximum individual (the natural background radiation dose rate is 100 mrem/yr), and 2) an onsite transportation accident could deliver a 2000 mrem (lung) dose to the maximum individual. Neither of these accidents could be expected to occur after implementation of administrative controls, but are analyzed to provide an upper bound for possible effects of accidents.

There are no substantial construction-related impacts anticipated from the proposed action. No impacts on local socioeconomic needs such as housing, schools, and public services are expected. In summary, reasonable forseeable environmental effects from the proposed action would be insignificant.

3.2 CONSTRUCT NEW FUEL PROCESSING FACILITY AT HANFORD

An alternative to the proposed action is to construct a new PUREX facility at Hanford for processing irradiated fuels. Because of the short time before the plutonium is needed, this plant would necessarily be based on currently demonstrated technology. The new PUREX facility could include recently developed process refinements, but significant dollar costs would be associated with them. A recent study (USDOE 1979a) describes a reference fuel processing plant including many process refinements that would meet all current requirements for resistance to natural forces (earthquakes and tornadoes), and would further improve the control of radioactive emissions such as krypton and iodine. This plant description will be used as the basis for evaluating the construction schedule and costs of a new fuel processing facility at Hanford. The new facility would incorporate all of the process functions of both the existing PUREX plant and the UO_3 plant. The operating phase evaluation will be based on the radioisotope inventories contained in N-Reactor fuels and environmental emissions projections and standards for the reference plant.

This section describes the features of a new facility, requirements for the construction phase, effects of operating the facility, and consequences of the probable schedule for construction.

3.2.1 General Description of the Fuel Processing Facility

The Hanford PUREX facility was designed specifically for defense fuels, and a new PUREX facility at Hanford is assumed to have the same design objective. This section uses adjusted data for a reference plant to describe the construction and operating phases of a new PUREX facility at Hanford. The PUREX processing plant described in DOE/ET-0028 (USDOE 1979a) is used as the reference since it would be similar in size and complexity to a new Hanford PUREX facility.

Data for the reference facility were adjusted so that the processing rate would be 3000 MT/yr of uranium. Releases to the environment were calculated based on the radioactive content of irradiated N-Reactor fuel, and the fractional release values stated for the reference plant. Thus, the data as presented here closely approximate a plant designed specifically as a replacement for the Hanford PUREX plant, even though no new design effort was undertaken.

Operational requirements and effluents associated with a new PUREX plant at Hanford would be similar to the proposed action (Section 3.1) and are discussed further in Section 3.2.3. The most significant changes would be a potential tenfold reduction in krypton and iodine releases over the releases from existing Hanford operations (USDOE 1979a). However, an accidental release of the stored krypton could result in a higher airborne dose rate than would be possible if krypton were continually vented (see Section 5.2.1.1).

3.2.2 New Plant Construction Costs, Schedules and Resources

The new PUREX plant would be comparable to the reference plant and would have similar construction costs and impacts. Construction cost estimates were adjusted to a throughput rate of 3000 MT/yr.

Capital cost for the reference plant including waste management facilities is estimated to be about $1.5 billion in 1981 dollars. The main plant would cost $1.2 billion, as estimated from the cost details given in DOE/ET-0028 (USDOE 1979a). These costs do not include costs for waste management systems which are already in place at Hanford. If such facilities were needed because of the specific location of the new processing plant, costs for these additional facilities are expected to be less than the cost for the reference plant. The cost at Hanford for integration with existing waste management systems would be $0.3 billion, for a total of $1.5 billion.

Many factors relating to site preparation and construction of a new plant would impact the environment, the local economy, and the surrounding area. The following information is used to evaluate the impact of construction activities (see Sections 5.2.1 and 5.3.2). The data are based on DOE/ET-0028, but are adjusted to a new PUREX facility with the capacity of processing 3000 MT/yr of irradiated N-Reactor fuel.

Project Schedules and Construction Manpower. The estimated schedule for engineering, procurement, and construction of the plant is shown in Figure 3.6. The construction labor force size, composition, and schedule are shown in Figure 3.7.

Site Requirements. A new plant would require approximately 40 hectares (100 acres) for facility installations. Approximately 60 additional hectares (150 acres) would be required for construction storage, work yards, temporary buildings, and labor parking.

Construction Materials. Major material requirements for facility construction would be:

Concrete	140,000 m^3	(180,000 yd^3)
Steel	31,000 MT	(34,000 tons)
Copper (mainly wire and cable)	180 MT	(200 tons)
Zinc	11 MT	(12 tons)
Aluminum	270 MT	(300 tons)
Lumber	5,600 m^3	(2.4×10^6 board ft)
Water	2.2×10^5 m^3	(5.8×10^7 gal)

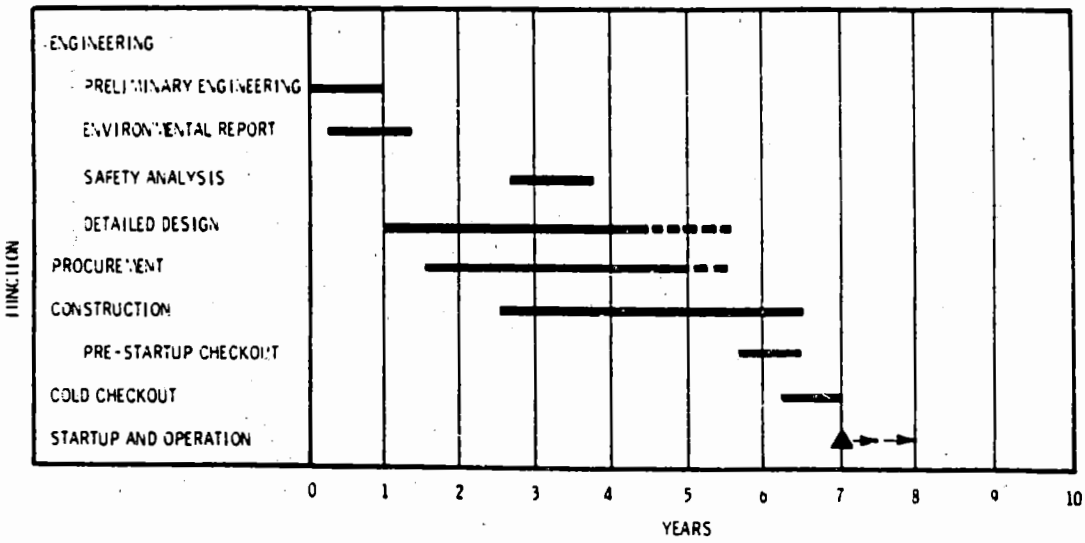

FIGURE 3.6. Fuel Processing Plant Engineering, Procurement and Construction Schedule (USDOE 1979a)

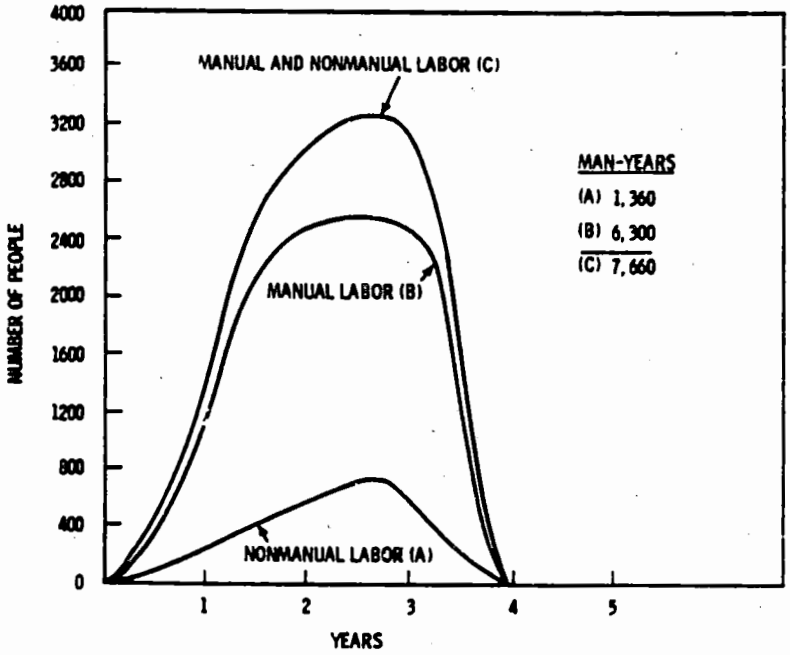

FIGURE 3.7. Fuel Processing Plant Construction Labor Force Schedule (USDOE 1979a)

Energy. Energy resources used during construction would be:

Propane 1,900 m^3 (490,000 gal)
Diesel fuel 9,100 m^3 (2,400,000 gal)
Gasoline 12,000 m^3 (3,200,000 gal)
Electricity
Peak demand 3,700 kW
Total energy 9.1×10^5 kWh

Transportation Requirements. A railroad spur track, assumed to be about 5 km (3 miles) long, would have to be brought to the construction site. This track would have to be routed so that spent fuel casks mounted on rail cars could be brought to the processing facility. A two-lane paved road assumed to be 5 km (3 miles) long would also have to be constructed to the job site. This will be required for workers' traffic and for truck deliveries of material and equipment.

Fuel Storage Requirements. Additional capacity for storage of irradiated fuel would be required to implement this alternative since existing storage capacity would be exhausted before a new plant could be ready for operation. This would consist of construction of an entirely new facility (see Section 3.4.3) at a cost of $270 million.

Other Requirements. A plant of this size operated independently is estimated to require a total staff of 1000 people (USDOE 1979a), including administrative and service personnel. Since many of the required administrative and service personnel are already available at Hanford, the incremental requirement would be about 500 people. Annual operating costs are estimated between $48 and $80 million based on operating the plant at full capacity. Required utilities include fossil fuel to generate about 90 MW of heat and about 21 MW of electrical power.

3.2.3 Effluents from New Plant Operation at Hanford

Effluents discharged to the environment from the new fuel processing plant would be determined by facility design. The new facility would contain certain features for reductions in emissions to the environment although not required to meet applicable release limits. Accordingly, the amounts of effluents released would be less than the amount of effluents that would be discharged from the existing Hanford PUREX facility, but this reduction would require additional construction costs, materials, and additional manpower for operations. The additional unit operations required to achieve lower releases would create additional solid waste as failed equipment. The operating design conditions for the reference plant (USDOE 1979a) are used to estimate the effects of the operating phase of the new plant. Throughput is 3000 MT of irradiated fuel per year,[a] and N-reactor fuel is used as a basis for the data presented in this report.

The basic chemical process of the new plant would be quite similar to the Hanford PUREX plant. However, liquid discharges would be reduced by extensive recycle of both process and cooling water and by vaporizing the excess process water instead of discharging it as a liquid. Annual total water use would be about 7.8×10^5 m^3 (2.1×10^8 gal), of which 7.0×10^5 m^3 (1.8×10^8 gal) would be cooling water, and 1.2×10^4 m^3 (3.2×10^6 gal) would be discharged as vaporized excess water. The balance of the water would be discharged as a nonradioactive liquid effluent.

Annual releases of nonradioactive material as liquid would include 2.2 MT of sulfate salts, 2.2 MT of nitrate salts, 3.8 MT of chloride salts, and 7.5 MT of alkali metal ions. No radioactive materials would be released as liquids.

Dissolver offgas would be treated differently in the new facility than in the present PUREX facility. The new facility would be designed to release no more than 10 percent of the ^{85}Kr, 0.1 percent of the ^{129}I, and 1 percent of the ^{14}C in the irradiated fuel (USDOE 1979a). It would also be designed to release all of the ^{3}H to the atmosphere, with none released in liquid effluents.

Recovery processes would use a silver-zeolite absorber for iodine removal, zeolite beds for carbon removal, and cryogenic absorption for krypton removal (USDOE 1979a). The gas leaving the iodine recovery subsystem would contain carbon dioxide, oxides of nitrogen, water vapor (including tritium from the dissolver), and inert gases including krypton. After removal of CO_2, NO_x and water vapor, the stream to the krypton recovery subsystem primarily would consist of air with very small amounts of NO_x and water. The oxygen would be removed as water by reacting it with hydrogen in a catalytic recombiner. Krypton gas would be recovered by cryogenic absorption, stripping, and distillation. The krypton gas would be placed in cylinders and sent to the krypton storage facility for extended storage to permit radioactive decay of the ^{85}Kr.

Estimated radioactive gaseous effluents from the new PUREX facility are shown in Table 3.4 for operation with 180 day cooled N-Reactor irradiated fuel. Effluent releases for the 1050 MT/yr case are presented in Table D.20. These estimated releases were derived from the fractional releases of radionuclides stated in the reference (USDOE 1979a), and the expected radionuclide content of irradiated fuel from N-Reactor. No radioactive material would be released as a liquid.

Most of the releases occur with the treated dissolver offgas, which has a volume of 2.2×10^6 m^3 per year, while most of the tritium would be released with the vaporized excess water stream in a volume of 4×10^7 m^3/yr. The concentration shown in Table 3.4 is based on the treated dissolver offgas for all nuclides except tritium. In practice, the dissolver offgas would be diluted by a factor of over 2000 by mixing with other sources of air before leaving the plant.

Irradiated fuel elements would be treated by shearing and leaching rather than by dissolving the cladding, and then dissolving the fuel. The cladding would be processed as solid waste, amounting to about 980 m^3/yr (35,000 ft^3).

(a) This throughput rate (3000 MT/yr) is consistent with the maximum capability of the Hanford PUREX facility.

TABLE 3.4. Estimated Radioactive Gaseous Effluents from the New PUREX Facility, 3000 MT/yr Processing Rate

Nuclide	Concentration, Ci/m^3	Annual Quantity, Curies
^{3}H	1.2×10^{-3}	6.9×10^{4}
^{14}C	4.2×10^{-8}	9.3×10^{-2}
^{85}Kr	1.5×10^{-1}	3.3×10^{5}
^{106}Ru	4.1×10^{-7}	8.6×10^{-1}
^{129}I	3.3×10^{-9}	7.2×10^{-3}
^{131}I	2.0×10^{-11}	5.0×10^{-5}
Other β	3.4×10^{-12}	1.0×10^{-5}
Total α	1.8×10^{-17}	3.9×10^{-11}

Other annual solid waste volumes would be about 1900 m^3 (67,000 ft^3) of failed equipment and other noncombustible waste, 5900 m^3 (210,000 ft^3) of low-activity level combustible waste, and 430 m^3 (15,000 ft^3) of sludges.[a]

3.2.4 Effects of Schedule for Plant Construction

The estimated time required for construction of the reference plant would be seven to eight years from beginning of preliminary engineering to plant startup and operation (USDOE 1979a). An additional one or two years would be required to place the appropriation of funds for an item of this magnitude in the federal budget. Thus, plant startup probably would not occur before 1990, a delay of about 6 years from the schedule for the proposed action. Plutonium availablity would be delayed because of the delay in processing N-Reactor fuel.

N-Reactor is projected to operate into the 1990s, to satisfy national needs for plutonium but its operation cannot continue beyond mid-1985 at the projected rate of irradiated fuel production unless some new arrangements are made for irradiated fuel storage or processing. Irradiated fuel storage is addressed in Section 3.3 for storage offsite and in Sections 3.4.2 and 3.4.3 for onsite storage. Offsite processing of fuel is discussed in Section 3.3.5.

3.2.5 Decommissioning

Although facility decommissioning is outside the scope of this EIS it is relevant to consider that additional decommissioning costs would be incurred by constructing and using a new processing facility at Hanford. Those costs would be in addition to the costs required to decommission the present PUREX facility. A recent study (Schneider 1978) examined the decommissioning of a plant that is comparable to the reference plant. Schneider's cost numbers are stated in 1975 dollars, but the costs cited below were adjusted to 1981 dollars by assuming a 10 percent per year cost increase.

Immediate dismantlement would cost approximately $103 million, and would generate 4600 m^3 (1.6×10^5 ft^3) of waste for disposal in a repository and 3100 m^3 (1.1×10^5 ft^3) of waste for shallow land burial. Occupational radiation exposure would be 510 man-rem.

(a) The term sludges is used here to mean intermediate-level concentrated liquids, wet wastes, and particulate solids. It includes certain concentrator bottoms, ion exchange resins, silica gel, filter precoats, solvent cleanup washes, and incinerator ashes.

Protective storage, surveillance for 10 years, and then dismantlement, would increase decommissioning costs to $113 million but reduce the occupational radiation exposure to 81 man-rem. Overall waste generation would be comparable to the type and amount generated by immediate dismantlement, but most of the waste would not be generated until after the 10-year surveillance period.

In either case, the 70-year radiation dose commitment to members of the public from airborne releases would be less than 15 man-rem (Schneider 1978).

3.2.6 Reasonably Foreseeable Environmental Effects

The principal environmental effects from this alternative would be due to: 1) construction of a major new processing facility at a cost of about $1.5 billion, 2) construction of additional irradiated fuel storage facilities at a cost of up to $270 million, 3) ultimate decommissioning of the processing facility and the storage facility, 4) release of limited quantities of radionuclides to the environment during plant operations, and 5) release of nonradioactive chemicals to the environment during plant operations. These effects are discussed in greater detail in Section 5.2.1.

Quantities of radionuclides released to the environment would be low, in accordance with best available demonstrated technology. No liquid radioactive effluents are released. Any excess water above that which can be recycled in the plant is released by evaporation rather than by release as a liquid.

The greatest expected environmental effects would be those related to construction and decommissioning. The environmental effects are compared to the other alternatives in Section 3.6.

3.3 PROCESS FUEL OFFSITE

In this alternative to the proposed action, irradiated fuel would be shipped offsite for processing and extraction of plutonium and uranium. Currently, the only other operational fuel processing facility in the United States capable of processing N-Reactor fuel is located at the DOE's Savannah River Plant (SRP), Aiken, South Carolina, about 4170 km (2500 mi) from Hanford. It is being operated at near capacity and would require substantial modifications to process N-Reactor fuel.

The currently approved space in fuel storage basins at Hanford will be exhausted by mid 1985 (see Section 3.4). Therefore, the alternative of processing offsite would not be viable by itself unless shipments of irradiated N-Reactor fuel could begin by early 1985 and continue at a rate at least equal to the rate of irradiated fuel discharge from N-Reactor, or unless additional fuel storage capacity were provided at Hanford. About 10,000 MT of irradiated fuel from N-Reactor will be available for processing before the year 2000, and this quantity is used as the basis for offsite shipments. In order to allow a comparison of environmental impacts with those for the proposed action, an incremental processing rate of 3000 MT/yr of irradiated N-Reactor reference fuel is assumed.

Items discussed in this section include: 1) previous experience with shipping and processing N-Reactor fuel offsite, 2) cask selection for shipment of irradiated fuel, 3) offsite transportation, 4) irradiated fuel handling during loading and receiving, 5) processing fuel offsite and 6) cost estimates for processing at Hanford and SRP. The overall processing costs at Hanford and at SRP are estimated to be approximately equal.

3.3.1 Previous Experience with Shipping and Processing N-Reactor Fuel Offsite

Experience with offsite shipment and processing of N-Reactor fuel has been very limited. This experience is discussed below to show that the few problems which occurred have been dealt with satisfactorily, and that the knowledge gained from this previous experience would be valuable in future processing.

During the late 1960s 352 MT (388 tons) of irradiated N-Reactor fuel elements were shipped to Nuclear Fuel Services (NFS) at West Valley, New York for processing. As a result of these shipments, NFS received some fuel with defective cladding. One shipment to NFS

contained about 15 percent of the outer elements and five percent of the inner elements with defective cladding from a total of 435 assemblies (Duckworth 1970). The defect rate seemed to increase as the exposure time in the reactor increased (Schulz 1972). The fuel with defects was returned to Hanford since it was uneconomical to process it at West Valley, although no technical problems would have prevented processing the fuel.

Even though some cladding became defective during shipment, no adverse environmental effects were observed. Future shipments would use this knowledge to further reduce the likelihood of cladding defects during shipment. Cask selection would be made to assure that the fuel would be contained during shipment even if the cladding were defective.

Most of the processing of irradiated N-Reactor fuel at NFS was satisfactory. Corrective actions were developed to prevent recurrence of a few incidents. These incidents included: development of a positive pressure in the dissolver (normally, the dissolver is under negative operating pressure to prevent leakage of gases), unexpected fires (zirconium burning) in stored cladding hulls and a fire that burned a hole in the dissolver tank (American Physical Society 1977). Because of conservative design of the processing plant, these incidents did not cause significant releases of radioactivity to the environment. Future offsite processing would provide: 1) corrective action to minimize the likelihood of recurrence of this type of incident, and 2) adequate backup protection to mitigate the consequences even if such an unlikely event were to occur.

Based on this past experience with offsite shipment and processing of N-Reactor fuel, future shipments and processing could be conducted in an environmentally safe and acceptable manner.

3.3.2 Cask Selection and Availability

Shipments of N-Reactor irradiated fuel in specially designed casks could be made by either truck or rail. Many casks potentially suitable for shipment of N-Reactor fuel are described by Rollins (1976). Several of these are currently used for shipping commercial light water reactor (LWR) fuels.

The actual amount of fuel that could be transported by each cask depends on many factors, including cavity dimensions, criticality considerations, external dose rates, heat dissipation capability of the cask, and projected irradiated fuel temperatures. Since use of the candidate casks for transport of N-Reactor fuel would constitute a significant change from the use for which the casks are approved, any proposed transport plan would have to be analyzed and the cask would have to be approved for this new proposed use. Even though approval to use existing casks could probably be obtained, appreciable time would be required for the analysis and approval process.

Casks are usually limited by total fissile content, heat generation, and physical volume. N-Reactor fuel has a higher density, lower enrichment, and lower heat output than LWR fuel. Thus, casks could physically accommodate much more N-Reactor fuel than their design capacity for LWR fuel. The limit for allowable temperature in a cask is dependent on its proposed use, and the limit might be different for the irradiated N-Reactor uranium metal fuel than for a uranium dioxide fuel. The metal reacts with water to form a hydride, melts at a lower temperature than the oxide, and forms low-melting compounds (eutectics) with some metals. Since uranium metal is more subject to adverse chemical reactions than is uranium dioxide, a lowered limit for allowable fuel temperature is likely if N-Reactor fuel is to be shipped. Analysis of the proposed shipping conditions would determine the allowable amount of fuel per cask so that an adequate margin of safety was assured.

A UNI study estimated a five-year lead time for cask approval and procurement (Curtiss 1974). This estimate of elapsed time for cask design and procurement is supported by Macklin (1976). Both Macklin and Hanson (1979) also predicted serious problems in cask capacity availability in the 1980s. However, this schedule for cask construction could undoubtedly be shortened significantly, if the need were sufficiently urgent. If existing designs were used, the first new cask could probably be obtained in 1 to 2 years. Depending on the overall size of the order, additional casks could probably be turned out at a rate of around three and perhaps as high as twelve per year. The number of casks available in the United States is small and their commitments to other transportation needs is not well defined; therefore, new casks would have to be constructed to assure that this alternative is viable.

3.3.3 Offsite Transportation

Irradiated N-Reactor fuel could be transported to South Carolina by truck or rail. Such transportation of irradiated fuel can be done in a manner that protects the environment from releases of radioactive material. For more than 30 years, nuclear materials have been transported in the United States, including about 4000 shipments of mainly commercial (not defense) irradiated fuel by rail or truck. These shipments have not resulted in accidents or incidents that were accompanied by significant releases of radioactive material (ONWI 1980). The Department of Energy maintains a Transportation Technology Center at Sandia Laboratories to conduct tests to demonstrate the integrity of container systems used to ship irradiated fuel and other radioactive materials.

The basis used to estimate the number of Hanford-South Carolina trips and the number of necessary casks is that truck casks can carry 1 MT of N-Reactor fuel and rail casks can carry 10 MT of N-Reactor fuel. To transport 10,000 MT of fuel would require 10,000 round trips by truck or 1000 round trips by rail. Cask requirements were estimated on the basis of shipping 700 MT of fuel/yr compatible with N-Reactor production rate. At this shipping rate, the basins at Hanford for storage of irradiated N-Reactor fuel will have to continue operating for several years after N-Reactor shutdown so that all of the fuel can be shipped offsite. Also, shipping would have to be initiated several years before processing so that the rate of processing at SRP would not be limited by lack of feed.

Round trip truck shipments between Richland, Washington and Aiken, South Carolina using the NAC-1 or NLI-1/2 casks (Rollins 1976) would require about 25 casks. The construction of these casks would require 75 MT of steel and 500 MT of lead (USDOE 1979a).

Round trip shipment by rail using the IF-300 or NLI-10/24 casks (Rollins 1976) would take about 36 days, and turn-around would be about 4 days (USDOE 1979a). With allowance for periodic maintenance and testing, each cask could make 8 trips/yr, so that 9 casks would be required to ship 700 MT of fuel/yr. An additional cask would be required for contingencies. Therefore, 10 casks would be required, and their construction would use 260 MT of steel, 650 MT of lead, and 50 MT of depleted uranium.

3.3.4 Fuel Handling Requirements

Since the time of the shipments of N-Reactor fuel to NFS, shipments of irradiated fuel have become routine in this country, including regular shipments from research and test reactors to Savannah River. However, N-Reactor fuel is unique, and the experience gained with handling and transporting oxide (commercial) fuel is not necessarily applicable to N-Reactor fuel (Lewis 1969).

Because some N-Reactor fuel elements have become defective during cross-country rail transport, the fuel would probably be "canned" before loading it into casks for offsite shipment. This would provide an additional barrier to release of radioactive material in the event of fuel failure.

A cask receiving and loading station would be required at one or more Hanford storage basins. A study was made by United Nuclear Industries in 1974 to provide data on shipment of N-Reactor fuel to Savannah River (Curtiss 1974). The study assumed that all fuel elements would be visually inspected, and that any element that was found to be damaged would be individually encapsulated. Undamaged elements were to be shipped in reusable aluminum tubes, four per tube. The fuel elements would also be in direct contact with water during shipping.

No studies have been made that describe how N-Reactor irradiated fuel would be received and stored at an offsite location using the proposed shipping mode. Experience at NFS is not applicable because the shipping mode to SRP would probably be appreciably different. However, cost and lead time for offsite receiving and storage are expected to be significantly less than for the other major aspects of fuel shipping and processing. Fuel receiving and storage basins exist at the Savannah River Plant.

About one percent of the stored irradiated fuel from N-Reactor is broken or cracked (Moffitt 1978), and during extended storage the damaged elements corrode and release appreciable amounts of uranium and plutonium oxides and fission products to the storage

basin water. Extensive handling or shipping of the irradiated fuel would result in additional damage to fuel elements. A detailed safety analysis would be required to determine whether shipment under water or in a dry inert atmosphere would be preferred. Adequate safety precautions would be provided by either selecting conditions to assure integrity of the fuel during shipment, or by providing suitable facilities for handling damaged fuel at the receiving site. In neither case, however, would there be any release of radioactivity to the environment in excess of applicable standards.

3.3.5 Processing Fuel Offsite

Processing offsite would be done at the DOE-operated Savannah River Plant (SRP), South Carolina (Sewell 1979). The basic PUREX process is also employed at SRP, although there are some differences from the process as employed at Hanford.

Fuel Dissolution

The irradiated fuel produced at SRP reactors is aluminum-clad and decladding at SRP is accomplished by leaching with caustic. The Hanford PUREX plant uses ammonium fluoride dissolution of the zircaloy cladding of N-Reactor fuel, removal of residual fluoride by reaction with potassium hydroxide, and dissolution of uranium metal by nitric acid (see Appendix A). Adoption of this process at SRP would result in unacceptable corrosion rates to the SRP dissolvers. Thus, a shear-leach process would probably be used at SRP for processing N-Reactor fuel. As a result, cladding hulls would be treated as solid waste at SRP.

Chemical dissolution of the cladding has the advantage of reduced potential for metallic fires, and minimal handling of pyrophoric zirconium and uranium metals (Schulz 1972). Also, the waste is more thermodynamically stable than the reactive metallic cladding hulls. The disadvantages of chemical dissolution are process time required, high volume of liquid waste, and introduction of corrosive fluoride into the process. Shear-leach dissolution has the advantage of low waste volumes, minimal liquid wastes, and no corrosive process chemicals. The disadvantages of shear-leach dissolution are the potential fires with metallic uranium and zirconium, chemically reactive waste, and equipment requiring appreciable maintenance. Although each system has both advantages and disadvantages, either system can be operated in a safe and economical manner.

There are other differences between the two plants; SRP does not have the equivalent of Hanford's B-plant so that ^{90}Sr and ^{137}Cs could not be removed from the high-level acid waste. The method employed at SRP to store the high-heat waste is to use cooled double-shell tanks.

Effluents From Processing at SRP

Estimated releases of radioactivity from processing an incremental 3000 MT of N-Reactor irradiated fuel per year at SRP are shown in Table 3.5 and Table 3.6,[a] and compared with releases during processing of SRP fuels and with other releases at SRP. Data for SRP releases were derived from data in USERDA 1977b because this reference is easily available to most readers, and it describes sources of all releases at SRP by individual plants. More recent data would reflect the continuing effort to reduce releases of radioactivity to the environment, so the SRP data cited are conservative.

The higher releases while processing N-Reactor fuels as compared to SRP fuels are based on the higher exposure, and higher fission product content of N-Reactor fuels. The basis used is 100 percent release of ^{85}Kr at each site, and a constant fractional release of all other activities. Releases from the SRP PUREX plant used for recovery of plutonium from irradiated reactor fuel (the 200-F separations plant) are used for the comparison. Less tritium and plutonium are released as a liquid at SRP as compared to Hanford since water at SRP travels much more quickly to the site boundary. Tritium at SRP is released as water vapor and plutonium is routed to high level waste. Processing of N-Reactor irradiated fuels is assumed to be at the rate of 3000 MT/yr, and to be in addition to processing SRP fuels at the rate (not specified) that was analyzed in USERDA 1977b.

(a) Effluent releases for processing 1050 MT/yr of N-Reactor are presented in Tables D.22 and D.23.

TABLE 3.5 Projected Gaseous Releases From Processing N-Reactor Irradiated Fuels at SRP, 3000 MT/yr Processing Rate

Nuclide	Annual Release, Curies		
	Processing N-Reactor Fuels	Processing SRP Fuels	Other SRP Releases
^{3}H	6.9×10^{4}	6.5×10^{3}	4.8×10^{5}
^{14}C	9.3×10^{0}	1.3×10^{1}	5.3×10^{1}
^{85}Kr	3.3×10^{6}	2.6×10^{5}	2.6×10^{5}
^{129}I	7.2×10^{-1}	7.0×10^{-2}	7.0×10^{-2}
^{131}I	5.0×10^{-3}	1.4×10^{-2}	1.1×10^{-1}
Other β	4.3×10^{-1}	4.0×10^{-2}	1.0×10^{-1}
Total α	1.4×10^{-2}	4.8×10^{-3}	2.4×10^{-3}

TABLE 3.6. Projected Liquid Releases From Processing N-Reactor Irradiated Fuels at SRP, 3000 MT/yr Processing Rate

Nuclide	Annual Release, Curies		
	Processing N-Reactor Fuels	Processing SRP Fuels	Other SRP Releases
^{3}H	1.7×10^{3}	1.6×10^{2}	9.2×10^{4}
^{90}Sr	1.3	1.2×10^{-1}	1.9
^{137}Cs	1.1×10^{1}	9.9×10^{-1}	7.1
^{106}Ru	4.3×10^{1}	4.0	2.4
Other β	2.0×10^{1}	1.8	1.1×10^{1}
^{239}Pu	6.0×10^{-2}	2.1×10^{-2}	2.8×10^{-2}
^{238}U	3.4×10^{-1}	1.2×10^{-1}	4.6×10^{-1}

3.3.6 Cost Estimates

The cost difference between the two sites is not considered significant. A significant factor in the choice of a processing site is the ability to meet on-time national objectives for material production. Processing at SRP would delay the availability of plutonium by at least two years. Either site would require about the same expenditure with a variation range at each site of up to 15 percent depending on specific assumptions made for the study.

3.3.7 Reasonably Forseeable Environmental Effects

The principal environmental effects from this alternative would be due to: 1) transportation of 10,000 MT of irradiated N-Reactor fuel from Washington to South Carolina, 2) construction of a new shear-leach facility at SRP, 3) construction of additional fuel storage facilities at Hanford, and 4) releases of both radioactive and nonradioactive materials during fuel processing. The environmental consequences are discussed in some detail in Section 5.2.2.

The most significant environmental effects would be those related to transportation of irradiated N-Reactor fuel, followed by the effects related to construction at both SRP and Hanford. The environmental effects are compared to the other alternatives in Section 3.6.

Releases of radioactive materials to the environment would be similar to releases from current operations at SRP. Some nuclides may be released in larger amounts than occur from current operations since the fission product content of N-Reactor irradiated fuel is greater than the fission product content of SRP irradiated fuel. Release of other nuclides (e.g., ^3H) would be a small fraction of the release from other operations at SRP that are not related to processing irradiated fuel.

3.4 NO ACTION (Continue the Present Action)

The no-action alternative would continue maintenance of the PUREX/UO_3 facilities in the current standby mode. N-Reactor irradiated fuel would continue to be generated but would not be processed. The no-action alternative would: 1) not supply plutonium for national defense and other purposes, 2) continue the storage of irradiated fuel at the Hanford Site and 3) require the construction of additional storage basins.

N-Reactor operates for the purpose of producing plutonium for use by the Federal government, and supplies by-product steam for the production of electricity. Since 1972, the irradiated fuel from N-Reactor has been stored for future processing to make the plutonium available at the appropriate time to satisfy governmental needs. If the PUREX facilities do not process the irradiated N-Reactor fuel, planned storage capacity would be fully used in mid-1985 and would require additional storage capacity at that time. This section describes the present action, potential facilities for storage of future irradiated fuel, and construction of a new storage facility.

3.4.1 Present Action

Since 1972 the Hanford PUREX plant has been in standby, while the N-Reactor has continued to operate. The discharged fuel has been stored in fuel storage basins, first at N-Reactor (UNI 1978), then at KE-Reactor (Moffitt 1978a), and most recently at KW-Reactor (Moffitt 1978b).

At the end of the calendar year 1981, a total of about 2440 MT of uranium in discharged fuel was in storage. Recent provisions were made to increase the storage capacity of the KE and KW basins, bringing the ultimate capacity for storage of discharged fuel at Hanford to 4415 MT.

The N-Reactor, in addition to its primary role in defense production, produces by-product steam used to generate an electrical energy output of about 4.0 billion kW hours per year.

If the Hanford PUREX/UO_3 facilities were not operated beginning in 1984 as proposed and if operation of N-Reactor were to be continued as currently planned, the following effects would occur:

- Plutonium contained in about 2440 MT of presently accumulated irradiated fuel and in all future irradiated fuel would not be available for national needs.
- Uranium usage of 700 MT/yr would continue for about 10 years, and the uranium content in about 2440 MT of presently accumulated irradiated fuel would not be available for refabrication into fuel or for other uses. A total of about 10,000 MT of uranium would be accumulated by 1991 and would not be recycled to fuel for production reactors.
- Construction of new fuel storage facilities would be needed.
- Radioactive emissions during fuel storage would continue since radioactivity levels in stored irradiated fuel would decrease only slowly because of the radioactive decay.
- Future restart of the Hanford PUREX plant would be more expensive.
- Generation of processing plant wastes would be deferred.

The technical aspects of the first two items do not need further analysis, the next two items are discussed in separate subsections below, and the remaining items are minor with respect to the environment.

3.4.2 Modification of Existing Storage Facilities

Presently, irradiated fuel is being stored at Hanford in several storage basins (UNI 1978, Moffitt 1978a, Moffitt 1978b). A recent small modification to these storage basins will provide an additional capacity of approximately 750 MT of uranium, which will cover the time to the proposed resumption of PUREX processing. Unless the Hanford PUREX plant is restarted by mid-1985 or alternative arrangements for processing are made by that time, additional storage space for irradiated fuel would be required.

Options for additional storage in existing facilities include the following: 1) reactivating the storage basins at one or more of the old reactors at the Hanford Site, and 2) modifying the KW-Reactor clearwell[a]. The first option would use basins contiguous with reactors that are retired at this time. The fuel storage basins are 26 to 37 years old, and were built in conformance to the Uniform Building Code applicable when they were constructed. The second option also uses an old facility, and one which was never designed for fuel storage. Neither the cost nor the schedule appears attractive for converting these basins for near-term storage. They could be restored to the condition they were in when last used, but they could not be upgraded to meet today's standards without extensive work.

3.4.3 Construct New Storage Facility

The major option for additional storage at Hanford is the construction of a new facility that would accommodate 10,000 MT of irradiated fuel. This construction would permit N-Reactor operation into the 1990s and would provide a margin of excess storage capacity to permit relocation of irradiated fuel from other basins, if necessary. The facility would meet the DOE requirements for a new plant, and could include heat recovery techniques and energy conservation methods as justified by life-cycle cost.

The facility could be located on the 200-Area plateau within the boundaries of the Hanford Site. The facility would contain irradiated fuel receiving and unloading equipment and a storage pool(s) with a total capacity of 10,000 MT of irradiated fuel from N-Reactor. The storage facility could be designed to allow for future expansion and would be adaptable for storage of other irradiated fuels (Commerce Business Daily 1980).

Support facilities would include: 1) a radioactive liquid concentration and solidification facility, 2) a handling and shipping facility to accomodate solid radioactive waste, and 3) an administrative office, guardhouse building, and medical facilities. The alternative of incorporating some of these support facilities into other buildings would be investigated. Utilities and services would include equipment for steam generation, water treatment, heat dissipation, primary and emergency water supply, and normal and emergency electric power.

No estimate of time or cost for this specific facility has been prepared. An estimate for an Away-From-Reactor (AFR) storage facility for 5000 MT of fuel from commercial power reactors showed that the cost of construction by 1983 would not exceed $270 million (King 1979). N-Reactor fuel is more dense than commercial power reactor fuel and contains a lower concentration of fissile material. Thus, both physical size and criticality control constraints on fuel spacing will permit storage of N-Reactor fuel with more material per unit volume of basin. Because of closer packing of the stored fuel, this cost estimate should provide a rough approximation of the cost for a new facility to store 10,000 MT of N-Reactor fuel.

(a) A clearwell is a water basin which supplies auxiliary water to the reactor. Since KW-Reactor is shut down, the clearwell is no longer needed for its original purpose and could be used for storage of irradiated N-Reactor fuel.

A design and construction project of this magnitude usually requires several years after completion of detailed design. The operation of such a new facility by 1985 when it would be needed would be possible if a greatly accelerated construction schedule (not a business-as-usual schedule) is followed.

3.4.4 Reasonably Forseeable Environmental Effects

The principal environmental effects from this alternative would be due to: 1) construction of new storage facilities at Hanford, and 2) release of radioactive materials during continued storage of irradiated N-Reactor fuel. The environmental consequences are discussed in Section 5.2.3.

The most significant environmental effects in the near term are those caused by construction. However, the environmental effects from processing are assumed to be added to these at some time in the future. These future effects will be similar to one of the first three alternatives (i.e., operation of Hanford PUREX/UO_3, construct new processing plant, or process offsite). The environmental effects are compared to the other alternatives in Section 3.6.

Release of radioactive materials during storage will depend on the design and operating constraints placed on the new storage facility to be constructed (Section 3.4.3). These constraints are expected to result in releases similar to those projected in a recent study of away-from-reactor storage (USDOE 1979a). However, the fission product content of irradiated N-Reactor fuel is significantly less than the fission product content used in USDOE 1979a, so that an adjustment must be made for the fission product inventory. Table 3.7 shows the expected annual gaseous releases when receiving 700 MT of irradiated N-Reactor fuel per year and storing the fuel for an average of 5 years. This would result in an average inventory of 3500 MT of fuel. If more fuel were to be received annually, releases would increase approximately in direct proportion. If more fuel were to be held in storage, ^{3}H releases would increase approximately in direct proportion but other releases would increase only slightly. No radioactive liquids will be discharged to the environment.

TABLE 3.7. Projected Radioactive Gaseous Effluents from the No Action Alternative

Nuclide	Annual Release, Curies
^{3}H	1.3×10^{-1}
^{14}C	6.7×10^{-6}
^{85}Kr	4.8×10^{1}
^{129}I	2.5×10^{-7}
^{131}I	1.0×10^{-7}
Other β	1.9×10^{-4}
Total α	Negligible

3.5 ALTERNATIVES ELIMINATED FROM DETAILED STUDY

Other alternatives were considered but were eliminated from detailed study for the reasons provided below. A variation of the no-action alternative where the irradiated fuel is not processed at all is not considered a viable alternative because of its incompatibility with the defense needs for plutonium. Two of the other alternatives are listed below:

1. Construction of a new processing plant offsite.

2. Processing of N-Reactor fuel at an offsite facility other than Savannah River Plant.

These alternatives were examined and eliminated from detailed study. The rationale for their elimination is discussed briefly below.

- Construction of a New Processing Plant Offsite

  Construction of a new processing plant offsite is not discussed since such a plant would be essentially the equivalent of a new plant constructed at Hanford as described in Section 3.2 together with fuel transportation and handling requirements described in Section 3.3.

- Processing Fuel at an Offsite Facility Other Than Savannah River Plant (SRP)
  There are no offsite DOE-owned or operated facilities other than SRP which are or could be made available to process N-Reactor fuel within the time required.

3.6 OVERALL EVALUATION OF ALTERNATIVES

Four alternatives (including the proposed action) were described and discussed in Sections 3.1 to 3.4. Each alternative, except the no-action alternative, fulfills in some degree the national need for plutonium to be used in defense and research activities. However, only the proposed action would provide plutonium in a timely manner. Environmental consequences for each alternative are analyzed in Chapter 5. The four alternatives are: 1) proposed action (restart and operation of the PUREX/UO_3 facilities after incorporation of improvements), 2) construction of a new PUREX processing plant at Hanford, 3) processing fuel offsite, and 4) no action (continue the present action). These alternatives are compared in Tables 3.8 and 3.9.

The no-action alternative cannot be continued indefinitely without some other action being taken. This alternative does not provide for irradiated fuel processing, nor does it change the rate of generation of irradiated fuel. Therefore, the need for an action to be completed by mid-1985 would exist because the current fuel storage capacity at Hanford will be used up by then. The comparison in Table 3.8 shows the effects of providing additional fuel storage capacity as being associated with No Action. In addition, some processing alternative must be selected at some future time so that the plutonium needed for defense and research and development purposes will be available. The consequences of future processing would then be added to the environmental consequences of the no action alternative.

Environmental consequences for each alternative are compared in Table 3.9. Radiological consequences to the public from normal operations are expected to be less than the natural background radiation, regardless of which alternative is selected. Construction activities are least with the proposed action. Transportation of irradiated N-Reactor fuel is similar for the proposed action, new PUREX plant at Hanford, and no-action alternatives. Appreciably more transportation will be required to process at SRP.

If the alternative of constructing a new fuel processing plant at Hanford or of shipping fuel offsite for processing were chosen, irradiated fuel storage would be required by mid-1985 so that some additional storage capacity would have to be provided as discussed above.

If fuel were to be shipped offsite for processing, it would be shipped to the Savannah River Plant (SRP) of the DOE. Some new construction as addition, modification, or improvement would be required at SRP. Since SRP is located in South Carolina, this alternative would require transportation of irradiated fuel from the Western U.S. to the East. Additional fuel storage at Hanford would also be required.

The radiological consequences of each alternative would be small (see Table 3.9). Projected releases of radioactive effluents from each alternative are shown in Table 3.10 for gaseous effluents and Table 3.11 for liquid effluents. The only other significant radiological consequences are those related to transportation of irradiated N-Reactor fuel offsite, and to decommissioning of new facilities that are constructed for processing or storage of N-Reactor fuel.

TABLE 3.8. Comparison of Alternatives to Proposed Resumption of Operation of PUREX/UO_3 Plants

Alternative	Potential Advantages	Potential Disadvantages	Potential Effects on Program Needs	Potential Radioactive Emissions	Potential Construction Requirements	Potential Environmental/ Socioeconomic Effects
Proposed Action (Resumption of PUREX/UO_3 Plant Operations).	No change from historic site use. Meets national defense needs.	Release of some gaseous fission products, oxides of nitrogen, and tritiated water to environment.	Earliest possible availability of plutonium.	^{85}Kr, ^{14}C, and part of ^{129}I and ^{3}H as gases; ^{3}H, β-emitters, and ^{239}Pu as both gases and liquids.	Minor additional modifications.	No perceptible adverse impact. (No increased demands for housing, schools, municipal services.)
No Action (continue the present action).	Could reduce amounts to be released depending on future decisions.	Construction of additional fuel storage facility. Does not meet programmatic needs.	Indefinite delay of plutonium availability.	Deferred until later decisions are made. Some potential for release during fuel storage.	Construction of fuel storage facilities.	Unchanged from present status.
Construct New Fuel Processing Plant at Hanford.	Reduced near-term release of radionuclides to environment.	Major construction effort. New facility decomissioning effort. Additional fuel storage needed. Does not meet programmatic needs prior to 1990.	Delay in plutonium availability.	Reduced release of ^{85}Kr and ^{14}C. Possible reduction in other routine releases. Additional releases from decommissioning.	Major construction of processing plant. Construction for new fuel storage facilities.	Need to decommission another facility. Increased land use.
Process Fuel Offsite	At SRP cladding hulls become solid waste instead of liquid waste.	Personnel exposure from extra fuel handling. Risk of transportation accidents. No significant reduction in releases to environment. Additional fuel storage needed. Does not meet programmatic needs prior to 1986.	Delay in plutonium availability.	Similar to proposed action. Increased risk of releases during fuel transport and handling.	Shipping facilities and casks. New shear-leach facilities. New fuel storage facilities.	Exposure to public during transportation of irradiated fuel.

TABLE 3.9. Comparison of the Environmental Consequences from the Proposed Action and Alternatives, 3000 MT/yr Processing Rate

Environmental Consequences Item	Proposed Action (PA) Resumption of PUREX/ UO_3 Plant Operations	Alternative 1 Construct New PUREX Plant at Hanford Site	Alternative 2 Process Fuel Offsite	No Action Alternative Continue the Present Action
NORMAL OPERATION				
Occupational Exposure	Maximum skin dose of 2.4 to 4.5 rem/yr/worker and 1.5 to 2.4 rem/yr/worker total body dose.	Equal to or less than proposed action.	Essentially equal to proposed action, except increased transportation requirements involves exposure of a greater number of people.	Essentially zero dose since PUREX will not operate.
General Public Dose[a]	1800 man-rem dose[b] (thyroid) from a 16-yr release and 70-yr accumulation.	110 man-rem dose (thyroid) from a 16-yr release and 70-yr accumulation.	4600 man-rem dose (thyroid) from a 16-yr release and 70-yr accumulation.	0.23 man-rem dose (bone) from a 16-yr release and 70-yr accumulation (dose from irradiated fuel storage only).
Dose to Maximum Individual	20 mrem dose (thyroid) from 16-yr release and 70-yr accumulation.	1.3 mrem dose (thyroid) from 16-yr release and 70-yr accumulation.	46 mrem dose (thyroid) from 16-yr release and 70-yr accumulation.	3.4×10^{-3} mrem dose (bone) from 16-yr release and 70-yr accumulation (dose from irradiated fuel storage only).
Impact on Air Quality	Annual ambient air quality standards for all pollutants will be met.[c]	Annual ambient air quality standards for all pollutants will be met.	Same as Alternative 1	Essentially zero emission since PUREX/UO_3 will not operate.
Impact on Water Quality	No direct discharges to public waterways.[d] Water use is less than 0.03 percent of total average Columbia River flow.	Essentially same as PA.	Within guidelines, but greater than PA since there is direct discharge to waterway.	No impact since PUREX/ UO_3 will not operate.
Transportation-Related Exposure	Onsite transportation will result in essentially zero public dose. Occupation exposure from PuO_2 shipments limited to less than 5 mrem/hr by operational procedures.	Essentially same as PA.	Same as PA for onsite transportation. Offsite transportation would result in an annual 3300 man-rem dose for truck shipment and 4100 man-rem for rail shipment. Annual dose to the maximum individuals is 3 mrem for truck shipment and 0.3 mrem for train shipment.	No transport impacts.

(a) Dose is given for the critical organ; doses to other organs can be found in the tables in Sections 5.1.1.2, 5.2.1.1, 5.2.2.1, and 5.2.3.
(b) This is the population dose to an estimated (1990) population of 417,000 persons. For comparison, these persons would receive about 2.9×10^6 man-rem dose from natural background radiation over 70 years.
(c) Although ambient air quality standards will be met for NO_x, NO_x emissions will be regulated under a Prevention of Significant Deterioration (PSD) permit. See Section 5.1.2.1.
(d) Tritium, ^3H, has reached Columbia River from past operations, but concentrations in groundwater are about 10 percent of allowable limits and undetectable above background in the river. There is no demonstrated technology for tritium capture.

TABLE 3.9. (contd)

Environmental Consequences Item	Proposed Action (PA) Resumption of PUREX/ UO_3 Plant Operations	Alternative 1 Construct New PUREX Plant at Hanford Site	Alternative 2 Process Fuel Offsite	No Action Alternative Continue the Present Action
ABNORMAL OPERATION				
Operational Accidents (short-cooled, 25 days, fuel dissolution)	A worst-case credible accident (assuming administrative controls) would deliver an estimated acute dose (thyroid) of 1500 man-rem to the general population and 190 mrem to the maximum individual.	Same as PA.	Postulated worst-case accident would have less consequences than the PA because the fuel would have aged ~25 more days during transport.	Not applicable.
Onsite Transportation Accident	Postulated worst-case accident (irradiated fuel shipment accident) would result in a 2000 mrem (lung) dose to the maximum individual (offsite). Serious consequence onsite but accident is not considered credible with administrative controls.	Same as PA.	Offsite impacts greater due to more direct pathway and larger population.	Not applicable.
Offsite Transportation Accident	Not applicable.	Not applicable.	If postulated accident occurred in an urban area, the dose to the general population is estimated to be 1150 man-rem for truck shipment and 2300 man-rem for rail shipment. The dose to the maximum individual is estimated to be 0.76 rem for truck shipment and 0.9 rem for rail shipment.	Not applicable.
OTHER IMPACTS				
Construction Impacts	Almost none since there is no major activity.	Major activity but acceptable impacts.	Same as PA, plus shear-leach facility.	Same as PA plus additional storage basins as needed.
Construction Costs ($, million)	About $40 for facility modifications plus $110 for reactivation.	>$1500 for new PUREX facility.	About $400 for shear-leach facility.	About $270 for expanded fuel storage.
Socioeconomic Impacts	Negligible.	Substantially more than PA during construction.	Same as PA, except for transportation impacts which are acceptable.	Negligible.
Resource Commitments	A negligible fraction of national resource use.	Substantially more than the PA, but a negligible amount of national resource use.	More than PA due to fuel transport, but still a negligible fraction of national resource use.	Negligible fraction of national resource use for new fuel storage basins.
Decommissioning Costs ($, million)	Base case (about $110).	Base case + $110.	Same as PA.	Same as PA.

TABLE 3.10. Comparison of Gaseous Radioactive Effluents From Each Alternative

Nuclide	Annual Release, Curies			
	Proposed Action	Alternative 1[a]	Alternative 2[a]	No Action
^{3}H	3.0×10^{3}	6.9×10^{4}	6.9×10^{4}	1.3×10^{-1}
^{14}C	9.0	9.3×10^{-2}	9.3	6.7×10^{-6}
^{85}Kr	3.3×10^{6}	3.3×10^{5}	3.3×10^{6}	4.8×10^{1}
^{129}I	5.1×10^{-1}	7.2×10^{-3}	7.2×10^{-1}	2.5×10^{-7}
^{131}I	3.0×10^{-1}	5×10^{-5}	5×10^{-3}	1.0×10^{-7}
Other β	1.2	1×10^{-5}	4.3×10^{-1}	1.9×10^{-4}
Total α	9×10^{-3}	3.9×10^{-11}	1.4×10^{-2}	Negligible

(a) Under these alternatives ^{3}H is released to the atmosphere by evaporation of the liquid effluents.

TABLE 3.11. Comparison of Liquid Radioactive Effluents From Each Alternative

Nuclide	Annual Release, Curies			
	Proposed Action	Alternative 1[a]	Alternative 2	No Action[a]
^{3}H	5.0×10^{4}	0	1.7×10^{3}	0
^{60}Co	1.3	0	NA	0
^{90}Sr	5.1	0	1.3	0
^{106}Ru	1.9×10^{1}	0	4.3×10^{1}	0
^{137}Cs	5.1	0	1.1×10^{1}	0
Other β	NA	0	2.0×10^{1}	0
^{239}Pu	7.9×10^{-1}	0	6.0×10^{-2}	0
^{238}U	3.2×10^{-2}	0	3.4×10^{-1}	0

(a) No liquid radioactive effluents are released to the environment.
NA No data available.

Environmental consequences of a release of radioactive materials is dependent on both the quantity of material released and the environment affected by the release. Because of its remoteness from public population and its favorable hydrology, Hanford can release radioactive materials as liquids with less environmental consequence than would be possible at a less favorably situated plant. Thus, most of the tritium would be released at Hanford as a liquid, and at other plants as a gas. Also, 5.1 Ci of ^{90}Sr and 0.79 Ci of ^{239}Pu would be released annually as liquids by the Hanford PUREX plant and the release would be greater than by the other alternatives, but the annual dose commitment to the maximum individual is still only a small fraction of that received from natural background radiation. Lower releases from a new PUREX plant or the no-action alternative would reduce the incremental dose commitment to the maximum individual for the critical organ (thyroid) based on a 16-year release, 70-year accumulation from 20 mrem for the proposed action to less than 2 mrem for the new plant or the no-action alternative. There is essentially no difference of any consequence in these numbers when compared to the 70-year natural dose accumulation of 7000 mrem. Even though the incremental dose above natural background might change by an order of magnitude or more, there is less than a 0.3 percent change in the total amount of ionizing radiation received by the maximum individual.

Transportation of irradiated N-Reactor fuel is similar for each of the options except for the offsite transportation if processing is to be done at SRP. During offsite transportation there is a potential for exposure of the public during both normal shipment and accident situations. Normal shipments will contribute a dose to the maximum individual of about 3 mrem/yr for truck shipments and 0.3 mrem/yr for rail shipments. These doses are about 20 and 2 times greater than the dose to the maximum individual of the public during processing, but are still only a small fraction of the dose to the maximum individual from natural background. Design and construction of casks is such that even a severe accident and fire would not breach the cask and release part of the irradiated fuel. However, for purposes of analysis, an accident involving partial loss of shielding and partial release of the contents (release fraction) is assumed. Under this severe accident scenario, the dose to the maximum individual is expected to be 760 mrem for truck shipments, or 900 mrem for rail shipments. These doses are significant compared to natural background radiation, but the probability of an accident of this severity is quite low (less than 2×10^{-5} for shipment of the entire 10,000 MT of irradiated fuel).

Construction requirements are greatest for a new PUREX plant (about $1500 million), followed by processing at SRP (about $400 million total for a new shear-leach facility at SRP and a new storage facility at Hanford), and the no-action alternative ($270 million for additional capacity for storage of irradiated fuel). The least amount of construction will be required for the proposed action. Decommissioning requirements will be greatest for facilities that involve breaching the cladding of the fuel elements (i.e., a new processing plant or a shear-leach facility), and will be least for facilities in which the fuel remains intact (i.e., a fuel storage basin). Existing processing facilities at both Hanford and SRP are already contaminated, and no new decommissioning requirements will be imposed if either of these facilities is used. Decommissioning of a new PUREX plant, as described in Section 3.2.5, would be comparable to the dose to the public received during normal operation of the existing Hanford PUREX plant for one year, which is a small fraction of natural background radiation.

Selection among the alternatives was based on a combination of environmental considerations and the requirement to satisfy nuclear material needs in a timely manner. The additional ionizing radiation received by the maximum individual of the public will be less than that received from natural background radiation during normal operation of any of the three processing plants that were considered. Releases during a maximum credible accident at the three plants would be similar to each other, and result in an acute dose 1.9 times greater than natural background radiation levels. Construction of a new processing plant was not selected because the construction impacts are avoided by operating the Hanford PUREX/UO_3 Plant. The no-action alternative was not selected because it does not satisfy programmatic requirements for plutonium. Thus, the preferred alternative of operating the Hanford PUREX/UO_3 facilities at the Hanford Site is an environmentally acceptable alternative; it is also the only alternative that would provide plutonium in a timely manner.

CHAPTER 4

AFFECTED ENVIRONMENT

4.0 AFFECTED ENVIRONMENT

This chapter provides a general background of the Hanford Site-specific environmental characteristics that would be directly affected by the PUREX/UO_3 facility operations.[a] Detailed Site and process information is presented in ERDA-1538, in Rockwell and Atlantic Richfield Hanford Company (ARHCO) operating documents (Moore and Walser 1980, Raab and Schmidt 1978). A brief summary of the affected environment at Savannah River Plant is included to address the alternative of shipping fuel offsite for processing.

4.1 HANFORD SITE LOCATION AND LOCATION OF PUREX/UO_3 PLANT

The Hanford Site (Figures 4.1 and 4.2) occupies approximately 1500 km^2 (570 $mile^2$) of a semi-arid region in the southeastern part of the state of Washington. The Site's greatest distance north to south is approximately 52 km (32 miles), and 42 km (26 miles) east to west. The nearest population center, Richland, Washington, 1980 population 33,578 (Bureau of Census 1981), is approximately 5 km (3 miles) south of the southernmost Site boundary and about 35 km (22 miles) southeast of the PUREX/UO_3 process facilities. The 1980 population within an 80 km (50 mile) radius was estimated to be 417,000 (Sommer et al. 1981). This is an estimate from the actual 1980 U.S. Census data.

In 1943, the U.S. Army Corps of Engineers selected the Hanford Site as the location for nuclear reactor and chemical separation facilities for the production and purification of

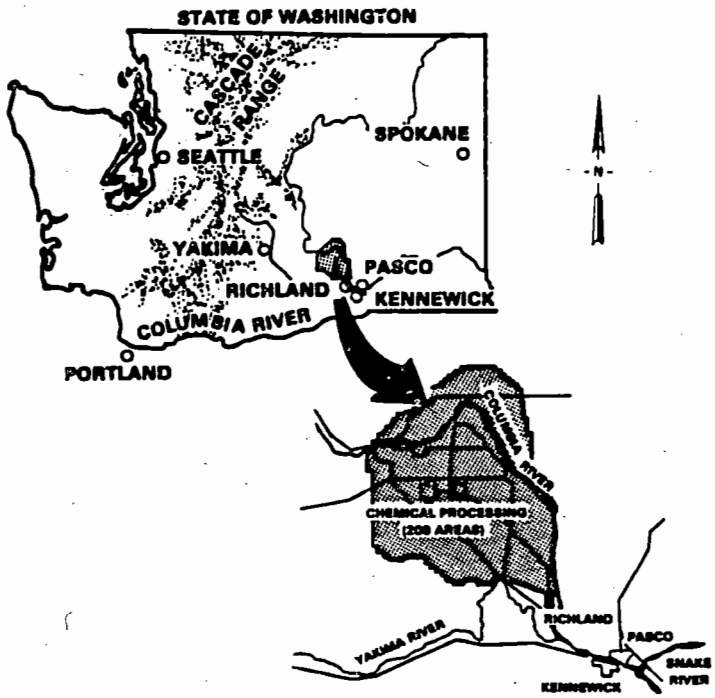

FIGURE 4.1 Location of the Hanford Site

(a) The material in this chapter updates and summarizes the descriptions of the Hanford Site environment that were published in the Final Environmental Statement, Waste Management Operations, Hanford Reservation, (ERDA-1538 1975).

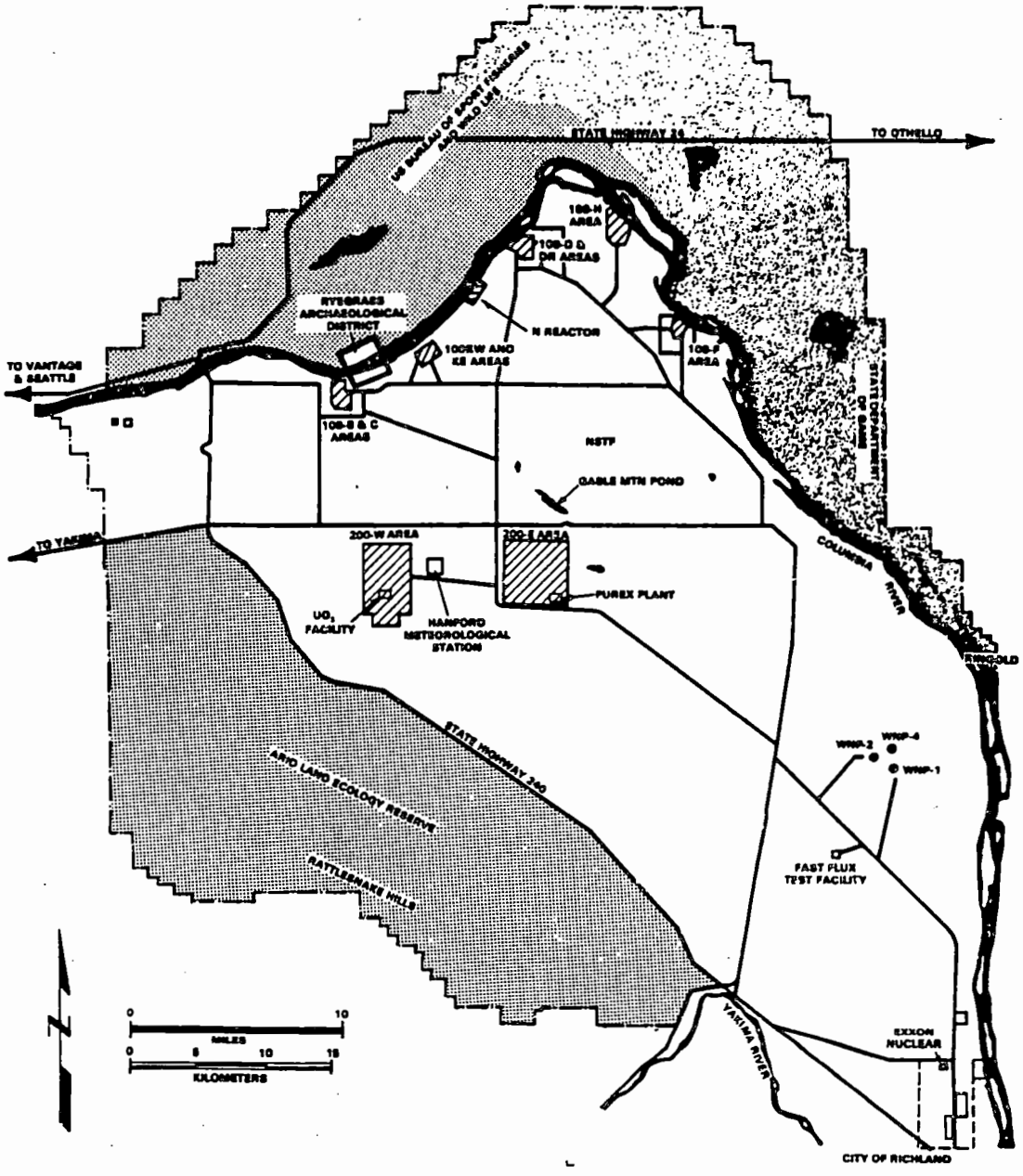

FIGURE 4.2. Hanford Site

plutonium for possible use in nuclear weapons (Manhattan Project). A total of eight graphite-moderated reactors using the Columbia River water for once-through cooling, and a dual-purpose reactor (N-Reactor) using recirculating water coolant, were built along the river. Currently, N-Reactor, which began operation in 1963 and is located in the 100N Area (see Figure 4.2), is the only plutonium production reactor in operation at Hanford and is

the source of irradiated fuel for the PUREX/UO_3 facilities. During fuel irradiation in the N-Reactor the by-product steam is sold to the Washington Public Power Supply System (WPPSS) to generate electricity.

The PUREX plant, located in the 200 East Area approximately 11 km (7 miles) south of the N-Reactor is designed to separate, recover, and purify plutonium, uranium, and neptunium from N-Reactor irradiated fuel. The PUREX plant last operated in 1972 and has been maintained in a standby condition since then.

The Uranium Oxide plant, located in the 200 West Area approximately 8 km (5 miles) west of the PUREX plant, is used to convert the PUREX uranium nitrate product solution to uranium trioxide (UO_3) powder.

4.2 LOCAL INDUSTRIAL, TRANSPORTATION, FEDERAL AND SITE-SPECIFIC ACTIVITIES

The region surrounding the Hanford Site has been developing and expanding with increased industrial and agricultural activities. Non-nuclear industrial facilities located in the region include a meat packing plant, food processing facilities, fertilizer plants, a pulp and paper mill, a chemical plant, and several small manufacturing plants. A wide variety of support and supply facilities serve this industrial base. Agriculture in the region includes a wide variety of dryland and irrigated crops and plays a major role in the local economy.

Major roads in the region are State Highways 14, 24, and 240; and U.S. Highways 12 and 395. Interstate Highways I-82 and I-182 are scheduled to be completed in the mid-1980s. Rail service includes the Burlington Northern and Union Pacific Railroads. Air transportation is available through three local airports including two (Pasco and Yakima) suitable for small commercial jet aircraft. In addition, commercial traffic on the Columbia River may travel to the North Richland dock area nearest the southern Hanford Site boundary.

Several regional power dams are located on the Columbia River including the Priest Rapids, Wanapum, and McNary dams. Another power dam (tentatively named Ben Franklin) has been studied. It would be located about 16 km (10 miles) upstream from Richland (Harty 1979, Corps of Engineers 1981); however, no action to construct the dam is considered likely.

The U.S. Army Yakima Firing Range used for training Army Reserves is located in an undeveloped area beginning approximately 16 km (10 miles) west of the Hanford Site boundary.

A number of government-owned and commercial nuclear facilities are located on the Hanford Site. Government installations include production and waste management facilities, research laboratories, and nuclear material storage areas. Government reactor facilities on the Site include the dual-purpose N-Reactor and the Fast Flux Test Facility (FFTF), a test reactor which is owned by DOE and which began operation in 1980. Eight other government-owned reactors, formerly used for production of nuclear materials, are now retired and shut down. Commercial nuclear facilities onsite include a low-level waste burial area, and two commercial nuclear power stations that are presently under construction by WPPSS. Construction on a third commercial nuclear power station has been discontinued. The Exxon Nuclear Corporation fuel fabrication plant is located just south of and adjacent to the Site boundary. Plans are under consideration for construction of additional commercial reactors on the Hanford Site. Research and development studies for isolation of radioactive waste in basalt formations on the Hanford Site are under way.

4.3 SUMMARY OF ENVIRONMENTAL CHARACTERISTICS

The following sections summarize the Hanford Sites physical and biological environmental characteristics. More extensive and detailed technical information about the Site and the surrounding region is available in ERDA-1538 (USERDA 1975).

4.3.1 Geology-Topography

The Hanford Site is located in southeastern Washington State in the Pasco Basin (a portion of the Columbia Plateau), which is composed of large quantities of basalt overlain

by thick layers of sedimentary material. The Hanford Site overlies the structural low point of the Pasco Basin and is bounded to the southwest, west and north by large ridges that trend eastward and southeasterly from the Cascade Range, enter the Pasco Basin and die out within its confines. The Site is bounded to the east by the Columbia River and the steep White Bluffs of the Ringold Formation. To the southeast the Site is bounded by the confluence of the Yakima and Columbia Rivers and by the City of Richland.

The earth materials beneath the Site consist of a thin mantle of wind-blown silts and sands which cover layers of coarse sands and gravels of the Hanford Formation. The Hanford Formation is up to 61 m (200 ft) thick and resulted from Pleistocene catastrophic floods (Tallman et al. 1979) that occurred during the last ice age. Sands, silts, and gravels of the Ringold Formation lying beneath the Hanford Formation gravels were deposited up to 305 m (1000 ft) thick during the Pliocene. Accumulation of basaltic lava of the Columbia River basalt group extruded over periods extending from 6 to 16 million years ago lies beneath the younger sediments. The total basaltic lava accumulation beneath the Hanford Site is known to be greater than 3650 m (12,000 ft) thick from borehole measurements. The water table in the PUREX/UO_3 processing areas lies in the Ringold Formation 46 to 91 m (150 to 300 ft) below the land surface (Tallman et al. 1979).

The Pleistocene deposits described above are moisture deficient and have a high capacity to sorb and retain cations from waste streams and from accidental spills, or leaks. Precipitation penetrates the ground to a maximum of approximately 4 m (13 ft) and is lost to the atmosphere by evaporation during the dry summers. The combination of these characteristics acts to prevent significant quantities of radionuclides that have leaked or spilled from reaching the water table (USERDA 1977a).

Detailed stratigraphic and geologic data are available to characterize the Hanford Site environment (Tallman et al. 1979, Atlantic Richfield Hanford Company 1976, Myers and Price et al. 1979) and have allowed subdivision of the basalts into a number of formations, members, and flows. Details concerning these flows can be found in the following references: Jones and Landon (1978), Reidel (1978), Fecht (1978), Geoscience Research Consultants (1978), Swanson et al. (1977), and Goff (1977). Details of the sedimentary layers and soils at the Hanford Site can be found in the following references: USERDA (1975, p II.3-B-1), Tallman et al. (1979), Routson and Fecht (1979), Baker (1973), Hajek (1966), and Routson (1973).

4.3.2 Seismicity

Hanford is located in an area of historically low seismic activity (Algermissen 1969, Algermissen and Perkins 1976). The U.S. Coast and Geodetic Survey (1969) has placed this region in the Zone 2 category of seismicity, which implies the potential for moderate damage from earthquakes. The United States Geologic Survey and the University of Washington have monitored earthquake activity in this region since 1969. Earthquakes recorded generally have magnitudes less than four on the Richter Scale (Wallace et al. 1980).

The largest local earthquake historically registered in the Pasco Basin was of Modified Mercalli (MM) magnitude of V or VI (approximately Richter magnitude 4.5 to 5.0) that occurred November 1, 1918, near Corfu 35 km (22 miles) north of the center of the Site (Coffman and Von Hake 1973). Ground motion felt at Hanford was estimated at approximately three percent of gravity acceleration (0.03 g), which is well within the range associated with a Zone 2 designation. Several earthquakes measuring MM-VII to -VIII have occurred in the surrounding region, but the magnitude had decreased to less than MM-IV by the time the Hanford Site was reached. The largest event to occur within the Columbia Basin, the 1936 Milton-Freewater earthquake, had a magnitude of MM-VII. Because this earthquake cannot definitely be linked to a geologic structure, it is assumed that a similar event could occur again anywhere in the Columbia Basin. This event has been designated the Hanford regional historical earthquake and has a peak horizontal ground acceleration at PUREX of 0.10 g (Blume and Associates 1981b). The largest potential fault near Hanford is the postulated Rattlesnake-Wallula lineament which is located at the southeast end of the Rattlesnake Hills and 17 to 20 km (10 to 12 miles) from the PUREX/UO_3 facilities.

4.3.3 Climatology

For general climatological purposes, meteorological data from the Hanford Meteorological Station (HMS) are representative of the Hanford Site. The HMS tower is

located between 200E and 200W Areas (Figure 4.2) and has continuously gathered data since 1944. Detailed climatological data are found in Stone et al. (1972). The Cascade Mountain Range to the West (Figure 4.1) greatly affects the climate of the Hanford area and forms a barrier to eastward-moving Pacific Ocean storm fronts. The mountains form a rain shadow producing mild temperatures and arid climatic conditions throughout the Pasco Basin region.

Average maximum and minimum temperatures recorded at Hanford for the month of January (the coldest month) are 3°C (37°F) and -6°C (22°F), and those for July (the warmest month of the year) are 33°C (92°F) and 16°C (61°F). Average annual precipitation is 16 cm (6.3 in.). The estimated average annual evaporation rate is 134 cm (53 in.) which essentially eliminates deep infiltration in the soil. Projections from available precipitation data indicate that a maximum accumulated annual rainfall of approximately 46 cm (18 in.) can be expected to have a recurrence interval of 1000 years (USERDA 1977a) with a maximum soil penetration of 4 m (13 ft).

Tornadoes rarely occur in the Hanford region, tend to be small, and produce little damage. Only one tornado has been observed on the Site in the last 29 years of observation. Existing data indicate that the probability of a tornado hitting a particular structure onsite during any one year is an estimated six chances in a million (USERDA 1975, p. II.3-E-23). Rockwell has evaluated the PUREX plant structure for 280 km/hr (175 mph) tornado conditions (Chapter 3.0).

4.3.4 Hydrology

The Columbia River is the dominating factor in the Hanford Site hydrology, and flows through the northern part and along the eastern boundary. The Yakima River is situated along part of the southern boundary. Groundwater exists beneath the Site in an unconfined aquifer, and in confined aquifers composed of interbeds and interflow zones within the underlying basalt flows.

The Columbia River is normally about 75 to 90 m (250 to 300 ft) below the plateau where the PUREX/UO_3 facilities are located. Under maximum probable flood conditions for the Columbia River Basin, the U.S. Army Corps of Engineers (1969) has estimated that PUREX/UO_3 facilities would still be 60 to 75 m (200 to 250 ft) above the highest probable water elevation. The 100-year and 500-year floods are not discussed because the probable maximum flood is more severe than the 500-year flood. Submersion of the Columbia River wetlands as a result of such flood conditions would have no direct effects on the facilities. Studies of a hypothetical 50 percent breach of the upstream Grand Coulee Dam, which would result in the devastation of downstream cities including Pasco, Richland, Kennewick, and Portland, show a flood elevation at 45 to 60 m (150 to 200 ft) below both the PUREX and UO_3 facilities (USERDA 1976b).

The water table, representing the upper limit of the unconfined aquifer, ranges from 46 to 100 m (150 to 328 ft) beneath the ground surface at the PUREX/UO_3 facilities and slopes toward the river. Near the Columbia River the water table fluctuates in response to river level changes and, in general, is within a few meters of the ground surface. Studies at Hanford indicate that precipitation does not directly reach the water table from the flat desert plains surrounding the PUREX facilities (USERDA 1975 p. II.3-D-22).

The unconfined aquifer occurs within the sedimentary deposits referred to as the Hanford and Ringold Formations. The aquifer receives natural recharge from the Cold Creek and Dry Creek Valleys west of the Hanford Site and from runoff along the Rattlesnake Hills. Artificial recharge enters the aquifer from two groundwater mounds created by waste processing and disposal activities in the 200E and 200W Areas. Groundwater flows in a general west to east direction from the recharge areas and discharges into the Columbia River (USERDA 1975, pp. II.3-D-22-27).

Groundwater also exists in the interflow zones of the basalt flows and in sedimentary interbeds referred to as the Rattlesnake Ridge, Selah, Cold Creek and Mabton zones of the Saddle Mountains and the Wanapum Basalt Formations. Recharge to these upper confined flow systems results from precipitation and stream flow in the mountains west of Hanford. Hydrologic data acquired from wells penetrating these aquifers indicate the same general west to east groundwater movement toward the Columbia River.

Extensive details of the subsurface hydrology are presented in three reports (USERDA 1975, p. II.3D-1; Atlantic Richfield Hanford Company 1976; Gephart et al. 1979).

4.3.5 Ecology

The Hanford Site contains large relatively undisturbed expanses that contain numerous plant and animal species suited to the semi-arid environment of the region. The Columbia River also provides a habitat for aquatic species. The major facilities and activities occupy only about 6 percent of the total available land area and the surrounding wildlife is little affected by these facilities. A very extensive discussion of the Site ecology, including detailed descriptions of the aquatic ecology, Columbia River biota, terrestrial ecology, plant species, animal species, insects, and rare or endangered species is presented in USERDA (1975, pp. II.3-F-3, II.4-G-1). A brief summary of some of this information is presented below:

4.3.5.1 Vegetation

The Hanford Site is within the boundaries of the sagebrush vegetation zone as it occurs in the State of Washington (Daubenmire 1970). Approximately 40 percent of the ground area is occupied by plants at the peak of the spring growing season. Some of the Site vegetation is not indigenous. For example cheatgrass and Russian thistle (tumbleweed), both dominant plant species, were introduced with the advent of agriculture.

Sagebrush/cheatgrass vegetation is the prevalent vegetation type in the 200-Area plateau (Figure 4.3). Typically, cheatgrass provides half of the total plant cover. Sagebrush is conspicuous because of the plant's relatively large size, with its combined plant canopies covering an estimated 18 percent of the ground (Cline et al. 1977). Tumbleweeds are of interest because they are an early invader of any cleared surface areas and continue in abundance until competition from other plants reduces their number.

Over 100 species of plants have been collected and identified for the 200-Area plateau (USERDA 1975, p. II.3-G-39, 44). Mosses and lichens appear abundantly on the soil surface; lichens commonly grow on shrub stems.

Since there are now no grazing livestock onsite, the amount of vegetation eaten by animals is small. Jackrabbits, pocket mice and birds probably consume less than the insect species. The decomposer organisms, bacteria and fungi, consume most of the primary production after the plant parts die.

4.3.5.2 Mammals

Over 30 mammal species have been observed on the Hanford Site. Most of these are small and nocturnal (USERDA 1975,. II.3-G-15,49).

The mule deer is the only big game mammal present in significant numbers and, while not abundant, it uses some of the pond areas for watering and feeding. Deer tagged near the Columbia River have been observed as far as 48 km from the Site (Fitzner and Price 1973).

The cottontail rabbit is scattered throughout the Site. The jackrabbit is also widely distributed and is an important food item for coyotes and birds of prey. Ponds and ditches support muskrat and beaver; porcupine and raccoon are also observed while badgers occur in low numbers. The dominant small mammal is the Great Basin pocket mouse.

Coyotes are the most important mammalian predator and roam over large areas, consuming a variety of prey.

4.3.5.3 Birds

Over 125 species of birds have been observed at the Hanford Site (USERDA 1975, p. II.3-G-17,46). The chukar partridge is the most important upland game bird and is concentrated primarily in the Arid Lands Ecology (ALE) Reserve portions of the Site and the Rattlesnake Hills. Local populations exist in the Gable Mountain and White Bluffs area.

FIGURE 4.3. Sagebrush and Cheatgrass, Typical Vegetation in the Central Part of the Hanford Reservation (the "200 Area Plateau")

The Canada goose is probably the most important of the nesting waterfowl. Its nesting habitat is confined to the islands in the Columbia River. The river also provides a resting sanctuary for migratory ducks and geese (Fitzner and Price 1973).

Birds associated with water ponds on the 200-Area plateau have been studied (Fitzner and Price 1973, Fitzner and Rickard 1975). Small perching birds and others are attracted to the ponds with tree-shrub communities. Shore birds frequent all ponds and the major migrating birds stop at the ponds for rest and forage.

Birds of prey use the Site as a refuge from human intrusions, and the golden eagle and bald eagle are both winter visitors (Fitzner and Rickard 1975).

4.3.5.4 Insects

Almost 300 species of insects have been identified at the Hanford Site (USERDA 1975, p. II.3-G-21,51). Of the insects, the darkling ground beetle and the grasshopper are probably the most important and prevalent. Dramatic natural fluctuation of these species has been noted over the observation years.

4.3.5.5 Reptiles and Amphibians

Approximately 16 species of amphibians and reptiles have been observed at the Hanford Site (USERDA 1975, p. II.3-G-20,46). When compared with the southwestern United States desert areas, the occurrence of these species is infrequent. Among reptiles, the side-blotched lizard is the most abundant and can be found throughout the Site. Horned and sagebrush lizards are also found but not commonly seen. The most common snake is the gopher snake; the yellow-bellied racer and the Pacific rattlesnake are also common. Striped

whipsnakes and desert night snakes appear occasionally and are an important food item for birds of prey. Some toads and frogs are observed near the 200-Area ponds and ditches.

4.3.5.6 Aquatic Ecology

The Columbia River supports the dominant aquatic ecosystem and presents a very complex set of trophic relationships which are discussed extensively in ERDA-1538 (1975, p. II.3-F-3). Several small ponds result from effluent discharge on the 200-Area plateau. The largest of these, Gable Mountain Pond, supports a simple food web based mainly on sedimented organic matter. This pond and "U" Pond both support introduced populations of goldfish.

4.3.5.7 Rare or Endangered Species.

No species of plant or animal registered as rare, threatened or endangered is known to exist or depend on the habitats unique to the 200-Area plateau. However, the presence of open water on the Site attracts and supports many species of plants and animals normally rare or unknown in the general plateau area. The prairie falcon nests in several regions on the Site, and long-billed curlews nest in cheatgrass fields and are relatively abundant.

4.3.6 Background Radiation and Environmental Monitoring Program

Natural background radiation includes both cosmic and terrestrial sources which vary slightly with location and altitude (United Nations 1962). The calculated annual background radiation dose received by the average person living in the vicinity of the Hanford Site is approximately 100 mrem per year: 75 mrem from cosmic and natural radiation sources (gamma 69 mrem, neutron 6 mrem) and 25 mrem from internally deposited naturally occurring radionuclides. More details on natural background radiation in the Hanford vicinity may be found in Speer et al. (1976), Houston and Blumer (1978; 1979a,b; 1980a,b) and National Academy of Science (1978). The dose to the average individual from the entire Hanford Site operations in 1979 was estimated to be <0.5 mrem/yr to any organ (Houston and Blumer 1980a,b). (The prime contributor to the baseline radiation dose at present is the N-Reactor. These dose contributions are imperceptible when compared to the normal 10 to 15 percent fluctuations which occur annually in the natural background radiation level of ~100 mrem/yr).

Radiological surveillance of the Hanford Site began before the first reactor startup in 1944 and has played a significant role, not only in the evaluation of the various Hanford operations, but also in providing significant scientific data not otherwise available. Many of the details have been published in the open literature as well as in topical reports or in annual reports to the Department of Energy. In recent years, the routine surveillance program results have been documented and published in a series of annual reports of radiological conditions in the Site environment (Houston and Blumer 1980a) and of the radiological status of the Hanford Site (Houston and Blumer 1980b). Becker (1973) has published a Bibliography of Aquatic Bioenvironmental Studies in the Columbia River which includes abstracts of major radiological analysis of biota at the Hanford Site.

An additional radiological surveillance program around the Hanford Site was initiated in 1979. This program includes special sampling to: 1) measure ^{85}Kr and ^{129}I in the background environment, 2) measure ^{14}C in the Site vegetation, and 3) measure tritium as gas in the ambient air. This sampling is part of the PUREX pre-operational program and is in addition to the routine surveillance program described above (Houston and Blumer 1980a,b). This sampling program would continue after the resumption of operations of the PUREX/UO_3 facilities.

4.4 SOCIOECONOMICS

Socioeconomic parameters of concern include employment, personal income, population, demographic characteristics, housing, recreation, health care, public finance, and relationship of the proposed action to other major construction activities which may occur concurrently.

The extensive nuclear-related development work which was initiated by the U.S. Government in 1943 has been a major factor influencing the socioeconomic growth of the region surrounding the Hanford Site. Construction activity has been significant for many years and the influx of temporary and permanent personnel has already had major effects on the rate of community growth, patterns of indirect business development, and community social structure. The Tri-Cities have community development plans in place that will ease the impacts caused by the influx of new project workers associated with construction of new facilities, and will ease the transition to the operation of those facilities.

Approximately 12,000 personnel work on DOE-related programs at the Hanford Site (August 1979), of which about 3700 are employed by Rockwell, which has the responsibility for upgrading and operating the PUREX/UO_3 facilities.

4.4.1 Population

The pre-1980 census population estimate given for the Tri-Cities Standard Metropolitan Statistical Area (Benton and Franklin Counties) shows a 54.7 percent increase over the 1970 bicounty census figure, up from 93,366 to approximately 144,500. The area rate of growth for this period is almost five times that experienced by the nation as a whole and more than twice that of the Pacific Northwest. This growth in population has taken place primarily in the years since 1973: 78 percent of the change in population in Benton County and 43 percent in Franklin County is attributable to inmigration (WSESD 1980a). State, city and private population projections for the Tri-City area all predict continued high rates of growth (a 10-year increase of around 20 percent by 1990, dropping to around 10 percent between 1990 and the year 2000). The past pattern of population expansion through inmigration is not expected to change in the near future.

The present 1990 estimate of the population within an 80 km (50 mile) radius of the Hanford Meteorological Station (HMS) is 417,000.[a] The HMS is located directly between the 200E and 200W Areas near the PUREX/UO_3 facilities. Local population centers are shown in Figure 4.4. Details of population distribution and the projection methodology will be found in Yandon (1976) and Sommer et al. (1981).

4.4.2 Labor Force

Statistics on bicounty employment show an increase of 90 percent over the last decade. This compares with a 13.2 percent national increase and a 34.6 percent gain in the Pacific Northwest. Employment, like population, has registered its most marked expansion in the years since 1973. Contract construction accounts for a large proportion of the growth in total employment, and Hanford project activities account for a large proportion of this growth. Contract construction as a share of non-agricultural wage and salary employment has increased from 5.9 percent in 1970 to 17.5 percent in 1979 (WSESD 1980a). Contract construction has a major impact on local employment, and consequently directly affects the stability and growth of the Tri-Cities. Of an area construction labor force of over 10,000 about half are employed by the Washington Public Power Supply System (WPPSS) in the construction of three Hanford commercial nuclear power plants. A strike in June 1980 idled more than 6000 construction workers at Hanford before it was resolved in November 1980. The strike was largely responsible for a major economic slowdown and the doubling of the local unemployment rate from 6 percent in May to 12 percent in July, and it illustrates the potential impacts that Hanford activities can have on the Tri-City region. Despite a low of 6 percent unemployment registered in May, the unemployment rate in the Tri-City area historically has been high in comparison to rates experienced in Washington State and in the nation. The continued existence of high relative rates of unemployment in the face of rapid expansion in employment indicates that many new positions have been filled by inmigrating workers equipped with specialized skills (WSESD 1980b).

The local supply of labor has outpaced the growth in population, expanding by 81 percent compared to an increase of 48 percent in population. This indicates that more women and youth are entering the labor force. In the last decade the percentage of population under the age of 19 has declined and the percentage of the population in the years between 19 and 45 has increased (WSESD 1980a). This has had a positive impact on the relative size of the area labor force. Because of the local labor force's higher than usual

(a) The 1980 census data show a population of 341,000 over the same area.

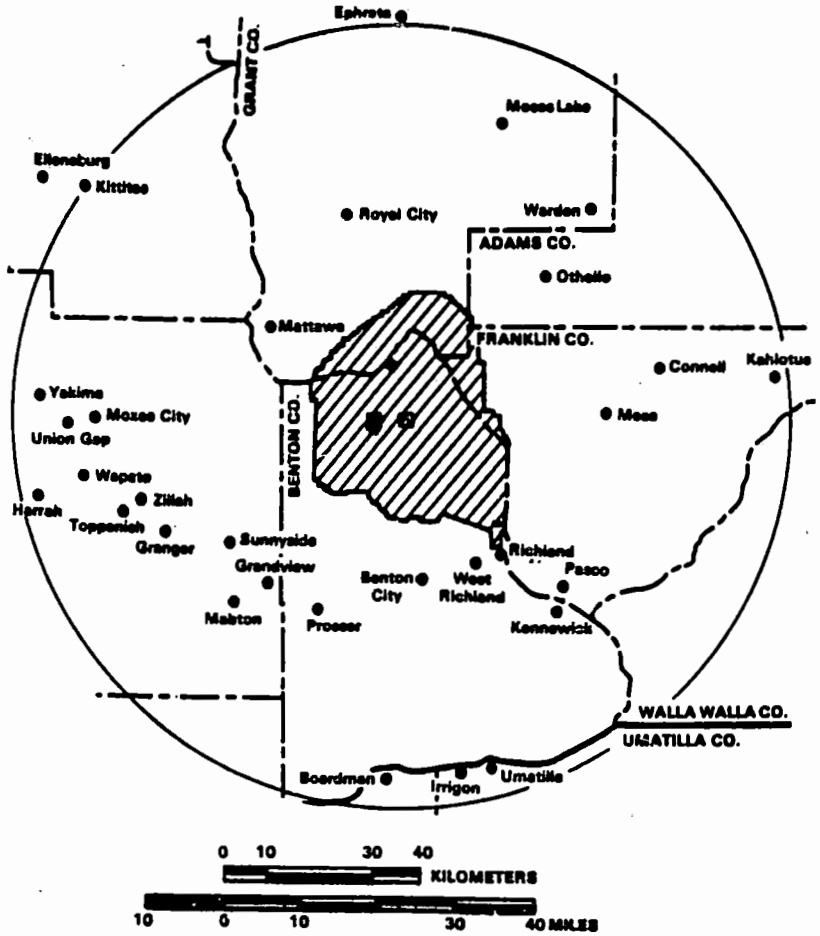

FIGURE 4.4. Communities in an 80 km (50 Mile) Radius of the Hanford Site

level of skills, its scientific and educational background, and the relatively high wage and salary structure of the labor market, the Tri-Cities are in a position to attract and supply the manpower required to meet current needs of the Hanford Site activities. The proposed action will not require additional workers from outside the region.

4.4.3 Housing

Indicators of a community's ability to provide housing for a growing population include: 1) consideration of the available housing stock, 2) cost of available housing, and 3) housing construction.

The Tri-Cities area has experienced rapid population growth in the last decade. The amount of housing has also grown rapidly. As reported in the Tri-Cities Real Estate Research Report (FHLBS 1980), the number of housing units has increased by 56 percent since 1975. The greatest amount of growth has been in Kennewick, where the number of units increased by 78 percent. Richland and Pasco have experienced an expansion of about 40 percent.

Several factors influenced the rapid growth in Kennewick: community growth policies, accessibility of the Hanford Site to the labor force; and the price of the available housing. The local community and government of Kennewick have adopted an aggressive annexation, economic, and community development policy. Also, residents of the region are not accustomed to long commuting distances and find the distance from Kennewick to Hanford, which employs approximately 20 percent of the regional labor force, an acceptable drive while the commuting distance of 56 km (35 miles) from Pasco is generally considered too great. And finally, the bulk of the local housing stock that middle income families can afford is located in Kennewick.

Ownership and rental patterns in the Tri-Cities region follow community growth patterns. The percentage of single family housing has been declining while the percentage of apartment units and mobile homes has been increasing (FHLBS 1980). However, while mobile home ownership is becoming more popular, its current relative market share is considerably less than apartments and homes. The overall increase of apartments and mobile home units since 1976 is 11 percent and 4 percent respectively. The growth in the available housing stock by city indicates:

- Kennewick--major percentage growth in apartments (10 percent)
- Richland--major percentage growth in apartments (17 percent)
- Pasco--major percentage growth in mobile homes (5 percent)

The number of completed new homes for the Tri-Cities was 85 for the first quarter of 1981. This number is down from previous years, and is attributed largely to difficulty in obtaining home financing. The stock of unsold new homes is primarily located in Kennewick (55), with Richland at 14, and Pasco with 16 new homes remaining unsold.

The unsold inventory of previously occupied homes has a similar pattern to the stock of new homes; of the 602 available, 299 are in Kennewick, 160 are in Richland, and 119 are in Pasco (FHLBS 1980).

Table 4.1 indicates the housing vacancy rates in the Tri-Cities area. The Federal Home Loan Bank of Seattle surveyed the area in April 1980 and found a vacancy rate of 2.8 percent (1316 units). This rate is up 0.8 percent from October 1979.

A typical new single-family dwelling costs $80,700 in Richland $71,900 in Pasco and $72,400 in Kennewick. Part of the variation in cost is due to an average of 6 percent higher cost for a lot in Richland. This higher cost of housing is expected because Richland is closer to the Hanford Site than Kennewick or Pasco.

Under these conditions, marginal increases of the regional labor force working at Hanford on construction activities would not significantly affect housing availability in the region. However, a high level of immigration into the Tri-City region in the absence of adequate lead times could cause a substantial tightening in the available supply.

4.4.4 Education

The Tri-Cities have a number of educational institutions which include:

- Joint Center for Graduate Study
- Columbia Basin College

TABLE 4.1. Tri-Cities Housing Vacancies, April 1980

	Total Units		Residences		Apartments		Mobile Homes	
	Number	Percent	Number	Percent	Number	Percent	Number	Percent
Kennewick	522	2.5	151	1.2	311	5.5	60	2.2
Richland	579	3.7	143	1.4	422	9.7	14	1.5
Pasco	215	1.9	73	1.1	122	5.5	20	1.0
Area Total	1316	2.8	367	1.2	885	7.0	94	1.6

SOURCE: FHLBS 1980.

- Modern Business College
- School districts in Kennewick, Pasco, and Richland
- Five private elementary schools.

Growth is particularly noticeable in the public school system. Data available from the local Chamber of Commerce indicates that 30 percent of the population is enrolled in elementary and secondary schools. Kennewick has 14 elementary and secondary schools, Richland has 14, and Pasco has 10. One of Richland's schools is a K- through 12th grade complex.

Student teacher ratios are within acceptable limits (TSA 1980):

Kennewick -	Kindergarten through 3rd Grade	25:1
	Middle School	25:1
	High School	25:1
Richland -	Elementary	23:1
	Junior High School	24:1
	Senior High School	25:1
Pasco -	Elementary	24:1
	Junior High School	17:1
	Senior High School	19:1

Most facilities within all school systems are filled to capacity. Kennewick, which has the greatest problem with crowded facilities, plans to construct 3 elementary schools (2 to open in the fall of 1982 and 1 in the fall of 1983), and has just completed facility expansions in both high schools. School administrators in Richland are considering the need, within 5 years, for an additional elementary school. Pasco is in the process of replacing one of the junior high schools (TSA 1980) to open in the fall of 1983.

School enrollment in the Tri-Cities area was about 400 less than was projected for the fall of 1980. Administrators for the three school systems indicate that this was primarily a direct result of the labor-management dispute at Hanford, which caused part of the construction labor force to leave the area. Enrollment is expected to increase moderately in the future. The public and private school systems have some additional capacity to handle future increases in enrollment that might be associated with additional construction activities at the Hanford Site and have programs underway to meet future anticipated population growth.

4.4.5 Community Services

Health services in the Tri-Cities area are adequate to serve the communities' need and have some additional capacity as well. Cost for services are comparable to the Washington State average.

Three hospitals serve the area:
- Kadlec Hospital (Richland)
- Kennewick General Hospital
- Our Lady of Lourdes (Pasco).

The total number of hospital beds is 277. Local health planning officials report that the hospital facilities are small, but the occupancy levels are low in Kennewick and Pasco. Our Lady of Lourdes Hospital in Pasco and Kadlec Hospital in Richland are undertaking an expansion of bed capacity so that total capacity would rise to 340-360. Although a shortage of nurses is apparent in the Tri-Cities (similar to national patterns), sufficient numbers of physicians serve the region.

Annual reports for Richland, Kennewick, and Pasco indicate a steady expansion of social, recreational, and safety services. Public works projects are planned in all three cities to accommodate the expected growth in the area. Several projects are underway to facilitate the flow of traffic into the Hanford Site, however it is generally agreed that traffic is a major community problem. Stevens Drive, one of the two main arterials to the Site, has recently been widened. Construction of Interstate 182 is underway. Once

constructed, I-182 would improve the transportation patterns in the area. A new bridge crossing the Columbia at North Richland is also planned and will further reduce traffic congestion.

4.4.6 Land Use

Land uses in the surrounding area include urban and industrial development, and irrigated and dry-land farming. Of the irrigated crops, alfalfa hay uses 34 percent of the total area, wheat 15 percent, and potatoes about 20 percent. And in recent years grapes have also gained in importance. Fruit and hop growing is also important in the Yakima region. Water removal, from the Columbia River other than Hanford's, amounts to about 2.5×10^8 m^3/yr (200,000 acre-feet/yr) within 80 km (50 miles) of the N-Reactor, from an annual average river flow of about 3.4×10^3 m^3/sec (120,000 ft^3/sec) or about 1.07×10^{11} m^3/yr (87 million acre-feet/yr).[a]

4.4.7 Historical Sites and National Landmarks

The U.S. Department of the Interior (1979) lists 20 historic sites for Benton, Grant, and Franklin Counties. Among these, the Ryegrass Archeological District is listed as being in the "Hanford Works Reservation" (since 1978 designated as "Hanford Site") along the Columbia River. Other historic sites listed are: Paris Archeological Site, Hanford Island Archeological Site, Hanford North Archeological District, Locke Island Archeological District, Rattlesnake Springs Sites, Snively Canyon Archeological District, Wooded Island Archeological District, and Savage Island Archeological District. A number of archeological sites within the Site boundaries have been identified (Rice 1968a,b) and are described in detail in USERDA (1975, p. II.3-A-14).

The Arid Lands Ecology (ALE) Reserve with the rest of the Hanford Site, exclusive of the operating areas (approximately 6 percent) was recently designated as a National Environmental Research Park (NERP). Areas of prime scientific interest include the Rattlesnake Hills and the Columbia River shoreline. Nuclear materials production and related activities are compatible with the NERP designation.

4.5 BRIEF CHARACTERIZATION OF SAVANNAH RIVER PLANT

If the alternative of shipping fuel offsite for processing were adopted, the major affected environment would shift to the Savannah River Plant (SRP), Aiken, South Carolina. The SRP environment is discussed in detail in two recent documents: The Final Environmental Statement on Waste Management Operations, Savannah River Plant (USERDA 1977b) and the Final Environmental Impact Statement on Long-Term Management of Defense High-Level Radioactive Wastes, Savannah River Plant (USDOE 1979c). Significant differences between the Hanford and Savannah River site are highlighted in the following discussion.

4.5.1 Site Location

The Savannah River Plant (SRP) occupies an approximately circular area of 777 ha (300 sq miles) in South Carolina, 40 km (25 miles) southeast of Augusta, Georgia. The site borders the Savannah River for approximately 27 km (17 miles) (USDOE 1979c, pg. III-1).

4.5.2 Geology-Hydrology

The plant site is located in the South Eastern Coastal Plain Region of the United States and the geology is characterized by flat, mostly unconsolidated sediments. The bedrock under the plant site is approximately 300 m (1000 ft) below the surface. In contrast to the Hanford Site, these bedrock formations are overlain with a sand and clay layer containing several prolific water-bearing beds, that supply over 3.8 m^3/min (1000 gal/min) of water from each of several individual wells on the plant site.

At SRP, surface waters provide a mechanism for transporting unavoidable releases of radioactive elements, stable elements, and heat offsite. The majority of the onsite streams

(a) Updated from USERDA 1975 based on information from the Pasco Farm Center.

drain to the Savannah River and no location at SRP is very far from a continuously flowing stream. In contrast, the Hanford Site has no such onsite free flowing streams and has limited groundwater flow.

The source of most of the water at SRP is either well water or water pumped from the Savannah River for various plant processes. The water is discharged to onsite streams or to onsite ponds. The major water source at Hanford is the Columbia River, the only fresh water source. At Hanford, no direct discharge is made to streams or the Columbia River from the PUREX/UO_3 process.

4.5.3 Climatology

The climate at SRP is characterized by mild winters and long summers. Temperatures average 8.8°C (48°F) in the winter, 29.4°C (85°F) in summer, and 18.3°C (65°F) annually. The average annual rainfall at SRP is 119 cm (47 in.); at Hanford it is 16 cm (6.3 in.).

The SRP is in an area where some severe weather conditions may be expected. Hurricanes along the coastal region have some influence on the SRP although the high winds associated with coastal hurricanes are greatly diminished by the time they reach the plant site which is 161 km (100 miles) inland. Occasional tornadoes are to be expected in the SRP region but major damage on the plant site is not anticipated (USERDA 1977b, pg. II-59). The Hanford Site is not characterized by severe weather conditions.

4.5.4 Seismicity

The SRP is located in an area where moderate damage might occur from earthquakes. On the basis of three centuries of recorded history of earthquakes, an earthquake above an intensity of VII on the Modified Mercalli (MM) scale would not be expected at the SRP. The SRP and Hanford sites are both located in Zone 2 of the U.S. Seismic Risk Areas as defined by the U.S. Coast and Geodetic Survey (USERDA 1977b, pg II-160).

4.5.5 Ecology

The biological productivity of the SRP environment is much greater than at Hanford, primarily because of the greater water availability and the favorable climate. The SRP site contains a wide variety of protected habitats; hence, the species' diversity and population are both much larger than at Hanford. A majority of the plant site is a natural preserve for biota typical of the Southeastern Coastal Plain; as at Hanford the production and support facilities occupy only a small portion of the plant site and wildlife is little affected at both sites.

There are extensive areas of scrub oak and longleaf pine forests and much of the area consists of managed pine forests. A wide variety of other vegetation is present (see USERDA 1977b, pg. II-166-172).

4.5.6 Rare or Endangered Species

Four species listed as endangered or threatened by the U.S. and Wildlife Service have been identified on the SRP site: bald eagle, red-cockaded woodpecker, Kirtland's warbler, and the American alligator. Only the red-cockaded woodpecker possibly could find suitable habitat in any of the areas affected by fuel processing. The S-area was surveyed in May 1979, and evidence of this species was not found.

4.5.7 Background Radiation

The calculated background radiation dose received by the average person living in the vicinity of the SRP is approximately 120 mrem/yr from natural sources (USERDA 1977b, pg. II-173), which is comparable to the natural background radiation at Hanford (approximately 100 mrem/yr).

4.5.8 Environmental Park

The SRP plant was designated as a National Environmental Research Park in June 1972, and extensive areas of land are protected from heavy traffic, casual visitors, real estate

development, and other disruptive influences. Similar large areas at Hanford are also designated as a National Environmental Research Park.

4.5.9 Population

Dose calculation at SRP are based on a population of 668,000 (1970 census) within 80 km (50 mile) of the geographical center of the site (USERDA 1977b, pg. III-30). This compares to approximately 417,000 (1990 estimate) population within the 80 km radius surrounding Hanford.

4.5.10 Historic and National Landmarks

No known historic or national landmarks are on the SRP site. Historical and archeological interests are protected by a site use permit procedure.

CHAPTER 5

ENVIRONMENTAL CONSSQUENCES

5.0 ENVIRONMENTAL CONSEQUENCES

The environmental consequences presented in this chapter would potentially result from the operation of the PUREX/UO_3 facilities (proposed action), and the alternatives to the proposed action described in Chapter 3.0. The environmental consequences described are those associated with normal and abnormal operations, transportation of nuclear material and construction activities. These consequences are related, where appropriate, to the Hanford Site and surrounding environment or the Savannah River Plant environment (described in Chapter 4.0) to indicate the relative impacts of the proposed action and alternatives.

The potential environmental consequences from the operation of the PUREX/UO_3 process are discussed in detail. Also discussed are the environmental consequences of the three alternatives to the proposed action: 1) construct a new PUREX plant at Hanford, 2) process fuel offsite, and 3) no action (continue present action).

In discussing the environmental consequences, the following items are considered:

- exposure of the general public and operating personnel to radiation from emissions during normal and abnormal operation
- exposure of the general public and operating personnel to nonradioactive pollutants emitted during normal operation
- changes in air and water quality as a result of PUREX/UO_3 operations
- radiation exposure to the general public and operating personnel from transportation of nuclear material
- construction-related impacts
- changes in short-term and long-term land use
- socioeconomic impacts on surrounding communities
- irretrievable and irreversible commitment of resources.

The data presented in this chapter are based on: 1) an estimation of the actual consequences or effects associated with the proposed action and alternatives, which can reasonably be quantitatively determined, and 2) use of state-of-the-art techniques for dose calculation (discussed in Appendix C).

Environmental measurement and surveillance programs have been in place at the Hanford Site from the beginning of the project in 1944. Programs (described in detail in USERDA 1975) in radiation biology, ecology, surface water hydrology, meteorology, and groundwater monitoring have been maintained to quantitatively measure the environmental consequences of operations at the Hanford Site. An additional radiological surveillance program around the Hanford Site was initiated in 1979. This program includes sampling to: 1) measure ^{85}Kr and ^{129}I in the background, 2) measure ^{14}C in the Site vegetation, and 3) measure tritium in the ambient air. This sampling is part of the PUREX pre-operational program and is in addition to the routine surveillance program described above (Houston and Blumer 1981a,b). This sampling would be continued after the resumption of PUREX/UO_3 operations.

Data accumulated during 17 years (1956-72) of PUREX/UO_3 operation and during the 8 years (1973-81) of standby indicated that 1) the PUREX/UO_3 plants and associated facilities have been operated without adversely affecting the health and safety of both the operating personnel and offsite populations, 2) the environmental impacts are generally insignificant and within a range of acceptability. Recent plant modifications and improved administrative controls would further reduce impacts and reduce the radionuclide releases and nonradiological effluents to levels as low as reasonably achievable (ALARA). Table 5.1 summarizes the environmental consequences of the proposed action and of past operation of the PUREX plant. Table 5.2 provides a comparison of the environmental consequences from the proposed action and from the alternatives. Calculated doses from the proposed action are presented in Tables 5.4 and 5.5. Based on these tabulated data and details presented later in this chapter the following brief summary is provided.

TABLE 5.1. Comparison of the Proposed Action and Past Operation of the PUREX Plant

Environmental Consequence	Proposed Action[a]	Past Operation
RADIATION DOSE		
Occupational Exposure	2.4 to 4.5 rem/yr/worker skin dose and 1.5 to 2.4 rem/yr/worker total body dose	0.9 to 1.9 rem/yr/worker skin dose and 0.4 to 1.7 rem/yr/worker total body dose
Dose to General Public	3.7 man-rem total body dose from a 1-year release and 1-year accumulation	2.5 man-rem/yr total body dose resulting from Hanford operations in 1972. Data for PUREX/UO_3 operations alone not available
Dose to Maximum Individual	3.3×10^{-5} rem total body dose from a 1-year release and 1-year accumulation	5.8×10^{-4} rem/year total-body dose from all effluents released at Hanford in 1972. Data for PUREX/UO_3 operations alone not available.
ANNUAL WASTE VOLUMES		
Liquid Waste to Cribs	5.4×10^5 m^3 of steam condensate and 2.7×10^4 m^3 of process condensate	1.8×10^5 m^3 of steam condensate and 2.9×10^4 m^3 of process condensate
Liquid Waste to Ponds	2.6×10^7 m^3 of cooling water and 2.7×10^6 m^3 of chemical sewer liquid	9.8×10^6 m^3 of cooling water and 2.4×10^5 m^3 of chemical sewer liquid
Solid Waste	1.1×10^3 m^3 of TRU waste and 1.2×10^3 m^3 of low-level wastes	1.9×10^2 m^3 of TRU waste and 4.5×10^2 m^3 of low-level wastes
RADIOACTIVITY DISCHARGED		
Liquids Discharged to Cribs	^3H 5.0×10^4 Ci/yr[b] ^{90}Sr 4.8 Ci/yr ^{137}Cs 3.3 Ci/yr ^{239}Pu 0.4 Ci/yr ^{106}Ru 1.3×10^1 Ci/yr ^{60}Co 1.8×10^{-1} Ci/yr	^3H 7.0×10^3 Ci/yr ^{90}Sr 1.5×10^2 Ci/yr ^{137}Cs 1.7×10^2 Ci/yr ^{239}Pu 4.3 Ci/yr ^{106}Ru 8.1×10^2 Ci/yr ^{60}Co 1.9×10^1 Ci/yr
Liquids Discharged to Ponds[c]	^3H 8.0×10^1 Ci/yr ^{90}Sr 3.3×10^{-1} Ci/yr ^{137}Cs 1.8 Ci/yr ^{239}Pu 4.0×10^{-1} Ci/yr ^{106}Ru 6.0 Ci/yr ^{60}Co 1.1 Ci/yr	^3H Not Analyzed ^{90}Sr 0.3 Ci/yr ^{137}Cs 1.8 Ci/yr ^{239}Pu 4.4×10^{-1} Ci/yr ^{106}Ru 4.9 Ci/yr ^{60}Co 1 Ci/yr
Gaseous Discharges	Total α (as ^{239}Pu) 9.0×10^{-3} Ci/yr Total β (as ^{90}Sr) 1.2 Ci/yr ^3H 3.0×10^3 Ci/yr ^{85}Kr 2.9×10^6 Ci/yr ^{131}I 3.0×10^{-1} Ci/yr	Total α (as ^{239}Pu) 4.3×10^{-3} Ci/yr Total β (as ^{90}Sr) 5.9×10^{-1} Ci/yr ^3H 1.0×10^3 Ci/yr ^{85}Kr 4.1×10^5 Ci/yr ^{131}I 2.1×10^{-1} Ci/yr
NONRADIOLOGIC EMISSIONS		
Gaseous Emissions	385 MT/yr of NO_x from PUREX and 50 MT/yr from UO_3. NO_x emissions per MT of fuel processed reduced from 1972 levels by installation of hydrogen peroxide absorption system	Not available prior to 1972
Solid Wastes	396 m^3/yr of solid waste from the combined PUREX and UO_3 facility operation	10,200 m^3/yr estimated for the entire Hanford Site

(a) Process effluents and doses from normal operation of PUREX are based on processing 3000 MT/year of 12 percent ^{240}Pu, 180 day cooled fuel, 20 percent of which is spike fuel. This is the worst case processing schedule for 3000 MT fuel/yr. The actual near-term processing rate is expected to be in the range of 1050 to 2100 MT/year which is similar to past operations. See Appendix D for detailed information on these lower processing rates.
(b) Due to high fuel exposure rates, i.e., 12 percent ^{240}Pu.
(c) For past operations, values are based on detection limits for the respective nuclides in solution; actual effluent values may have been less than the detection limit.

TABLE 5.2. Comparison of the Environmental Consequences from the Proposed Action and Alternatives, 3000 MT/yr Processing Rate

Environmental Consequences Item	Proposed Action (PA) Resumption of PUREX/UO_3 Plant Operations	Alternative 1 Construct New PUREX Plant at Hanford Site	Alternative 2 Process Fuel Offsite	No Action Alternative Continue the Present Action
NORMAL OPERATION				
Occupational Exposure	Maximum skin dose of 2.4 to 4.5 rem/yr/worker and 1.5 to 2.4 rem/yr/worker total body dose.	Equal to or less than proposed action.	Essentially equal to proposed action, except increased transportation requirements involves exposure of a greater number of people.	Essentially zero dose since PUREX will not operate.
General Public Dose[a]	1800 man-rem dose[b] (thyroid) from a 16-yr release and 70-yr accumulation.	110 man-rem dose (thyroid) from a 16-yr release and 70-yr accumulation.	4600 man-rem dose (thyroid) from a 16-yr release and 70-yr accumulation.	0.23 man-rem dose (bone) from a 16-yr release and 70-yr accumulation (dose from irradiated fuel storage only).
Dose to Maximum Individual	20 mrem dose (thyroid) from 16-yr release and 70-yr accumulation.	1.3 mrem dose (thyroid) from 16-yr release and 70-yr accumulation.	46 mrem dose (thyroid) from 16-yr release and 70-yr accumulation.	3.4×10^{-3} mrem dose (bone) from 16-yr release and 70-yr accumulation (dose from irradiated fuel storage only).
Impact on Air Quality	Annual ambient air quality standards for all pollutants will be met.[c]	Annual ambient air quality standards for all pollutants will be met.	Same as Alternative 1	Essentially zero emission since PUREX/UO_3 will not operate.
Impact on Water Quality	No direct discharges to public waterways.[d] Water use is less than 0.03 percent of total average Columbia River flow.	Essentially same as PA.	Within guidelines, but greater than PA since there is direct discharge to waterway.	No impact since PUREX/UO_3 will not operate.
Transportation-Related Exposure	Onsite transportation will result in essentially zero public dose. Occupation exposure from PuO_2 shipments limited to less than 5 mrem/hr by operational procedures.	Essentially same as PA.	Same as PA for onsite transportation. Offsite transportation would result in an annual 3300 man-rem dose for truck shipment and 4100 man-rem for rail shipment. Annual dose to the maximum individuals is 3 mrem for truck shipment and 0.3 mrem for train shipment.	No transport impacts.

(a) Dose is given for the critical organ; doses to other organs can be found in the tables in Sections 5.1.1.2, 5.2.1.1, 5.2.2.1, and 5.2.3.
(b) This is the population dose to an estimated (1990) population of 417,000 persons. For comparison, these persons would receive about 2.9×10^6 man-rem dose from natural background radiation over 70 years.
(c) Although ambient air quality standards will be met for NO_x, NO_x emissions will be regulated under a Prevention of Significant Deterioration (PSD) permit. See Section 5.1.2.1.
(d) Tritium, ^3H, has reached Columbia River from past operations, but concentrations in groundwater are about 10 percent of allowable limits and undetectable above background in the river. There is no demonstrated technology for tritium capture.

TABLE 5.2. (contd.)

Environmental Consequences Item	Proposed Action (PA) Resumption of PUREX/ UO_3 Plant Operations	Alternative 1 Construct New PUREX Plant at Hanford Site	Alternative 2 Process Fuel Offsite	No Action Alternative Continue the Present Action
ABNORMAL OPERATION				
Operational Accidents (short-cooled, 25 days, fuel dissolution)	A worst-case credible accident (assuming administrative controls) would deliver an estimated acute dose (thyroid) of 1500 man-rem to the general population and 190 mrem to the maximum individual.	Same as PA.	Postulated worst-case accident would have less consequences than the PA because the fuel would have aged ~25 more days during transport.	Not applicable.
Onsite Transportation Accident	Postulated worst-case accident (irradiated fuel shipment accident) would result in a 2000 mrem (lung) dose to the maximum individual (offsite). Serious consequence onsite but accident is not considered credible with administrative controls.	Same as PA.	Offsite impacts greater due to more direct pathway and larger population.	Not applicable.
Offsite Transportation Accident	Not applicable.	Not applicable.	If postulated accident occurred in an urban area, the dose to the general population is estimated to be 1150 man-rem for truck shipment and 2300 man-rem for rail shipment. The dose to the maximum individual is estimated to be 0.76 rem for truck shipment and 0.9 rem for rail shipment.	Not applicable.
OTHER IMPACTS				
Construction Impacts	Almost none since there is no major activity.	Major activity but acceptable impacts.	Same as PA, plus shear-leach facility.	Same as PA plus additional storage basins as needed.
Construction Costs ($, million)	About $40 for facility modifications plus $110 for reactivation.	>$1500 for new PUREX facility.	About $400 for shear-leach facility.	About $270 for expanded fuel storage.
Socioeconomic Impacts	Negligible.	Substantially more than PA during construction.	Same as PA, except for transportation impacts which are acceptable.	Negligible.
Resource Commitments	A negligible fraction of national resource use.	Substantially more than the PA, but a negligible amount of national resource use.	More than PA due to fuel transport, but still a negligible fraction of national resource use.	Negligible fraction of national resource use for new fuel storage basins.
Decommissioning Costs ($, million)	Base case (about $110).	Base case + $110.	Same as PA.	Same as PA.

The alternative of construction of a new PUREX plant for fuel processing at the Hanford Site would have more significant impacts (primarily from construction) than the adoption of the proposed action. The benefits to be derived from this alternative are increased structural integrity and greater environmental emission controls, which would not significantly alter the environmental impact of the processing facility. Dose to the maximum individual or general public would not be significantly different than for the proposed action (compare Tables 5.4 and 5.15).

The alternative of shipping the irradiated fuel offsite for processing will transfer the environmental consequences to another site and introduce additional consequences of rail, or truck transport of fuel to the processing site (i.e., South Carolina's Savannah River Plant). Present data indicate that the environmental consequences of the shipping action would be within acceptable parameters; however, the occupational and public doses from shipment would increase. Dose to the maximum individual from processing fuel at SRP is slightly greater than that obtained from processing at Hanford because of more direct pathways for radionuclide transport. Dose to the general public would increase principally because of larger population surrounding the Savannah River Plant Site (compare Tables 5.4 and 5.16). No major environmental benefit can be identified for adopting this alternative.

No major environmental consequences are associated with the no-action alternative (continue present action) which is to maintain PUREX/UO_3 in standby, but it does not resolve the problem of supplying defense material. Adoption of this alternative would require the construction of expanded storage facilities for irradiated fuel.

5.1 PROPOSED ACTION

This section discusses the environmental consequences from adopting the proposed action defined as the operation of the PUREX/UO_3 plants after incorporating modifications as described in Chapter 3.0. Particular attention is given to detailed analysis of abnormal events and credible accidents (see Appendix B) as well as to the impacts from normal operation of the PUREX/UO_3 facilities. The details of the proposed action were described in Section 3.1 and further expanded in Appendix A.

5.1.1 Radiological Impacts, Normal Operation

This section describes occupational and general population exposure based on past operating experience, and on the projected dose after adoption of mitigative measures to minimize environmental consequences. Normal operation of the Hanford PUREX/UO_3 facilities would lead to releases of small quantities of gaseous and liquid radioactive effluents to the environment and would expose the operating staff to low levels of radiation. Environmental impacts will be negligible and the exposure of operating staff will be maintained within Federal guidelines set forth in DOE Order 5480.1A and controlled to levels that are as low as reasonably achievable (ALARA).

The dose values for normal operation of the PUREX plant are based on processing 3000 MT per year of 12 percent ^{240}Pu 180-day cooled fuel, 20 percent of which is spiked fuel. This operating scheme was designated the "worst case" because it would result in the greatest dose to the public under the maximum possible processing rate. More likely near-term processing rates for PUREX are projected to be in the range of 1050 to 2100 MT per year. Dose commitments have been calculated for PUREX and the UO_3 plant operations for a projected 16-year operating period assuming a processing rate of 3000 MT/yr. For a perspective on current processing plans, doses for the processing rates of 1050 and 2100 MT/yr are included in Appendix D. Dose models and the general calculation methods used are described in Appendix C.

5.1.1.1 Occupational Exposure

A radiation exposure data base from radiation records is maintained at DOE's Pacific Northwest Laboratory. This data base contains routine occupational exposure records for

the PUREX/UO_3 and the former plutonium oxide facilities (Z-Plant)[a] for operating and radiation monitoring personnel from 1967 to 1972.

From historical occupational exposure data, the mean skin dose calculated for PUREX personnel ranged from 0.9 to 1.4 rem/yr in the PUREX/UO_3 facilities. Similarly, the mean whole-body dose ranged from 0.4 to 1.0 rem/yr. For the Z-Plant the historical data show that the mean skin dose ranged from 1.6 to 1.9 rem/yr and the whole-body dose from 1.4 to 1.7 rem/yr. In comparison with the allowable whole-body dose rates of 5 rem/year, the average annual doses were well within Federal guidelines, even though the historical data include occupational doses received during any abnormal operations.

Several new features will be incorporated into PUREX/UO_3 operations to further mitigate occupational doses. A new system using gloveboxes of improved design will be installed for plutonium oxide conversion operations to reduce chemical operator doses. The new plutonium oxide system will reduce total radiation exposure to operating personnel and eliminate the transportation of the plutonium nitrate.

Estimates of average annual dose for future PUREX/UO_3 employees are presented in Table 5.3 (Hawkins 1980c). These projected doses are within the Federal guidelines (DOE 5480.1).

5.1.1.2 Population Exposure

Although measurable quantities of radioactivity would be released to the environment during normal operation of the PUREX/UO_3 facility, the resulting radiation dose to the public would be insignificant. Historical dose data indicate that the average dose to a member of the general public from other Hanford Site operations is between 0.01 mrem/yr and 0.5 mrem/yr[b] total body dose (USERDA 1975, p. III.1-14; Houston and Blumer 1980a,b). These dose contributions are insignificant when compared to the natural background radiation level of approximately 100 mrem/yr (see Section 4.3.6). From Table 5.4, operation of PUREX would result in a thyroid dose to the maximum individual (1-yr release, 70-yr accumulation) of approximately 0.4 mrem/yr. The UO_3 plant doses are much lower in magnitude. Doses for the more likely processing rate of 1050 to 2100 MT/yr are given in Appendix D for comparison.

The overall dose to the thyroid (critical organ) for the maximum offsite individual in 1980 was calculated (without PUREX) to be 0.16 mrem/yr from all Hanford Site operations (Sula 1981). With PUREX/UO_3 operation the calculated annual dose would increase to 0.28 mrem/yr. Similarly, the accumulated 50-year[c] dose commitment to the thyroid for the general population for all Hanford Site operations in 1980 was about 2 man-rem (Sula 1981). One year of PUREX/UO_3 operation is calculated to result in a 70-yr dose commitment to the thyroid[c] for the population of 45 man-rem. These values are small compared to the natural background radiation level of 100 mrem/yr and would cause no significant impact.

Historically, ^{131}I has been the principal nuclide contributing to the public radiation dose via the consumption of local milk. In the early 1960s, ^{131}I released from both PUREX and REDOX (no longer operating) was limited to 1 Ci/day, to meet the lower range of the Federal Radiation Council's guidelines for intake of ^{131}I by the general public, i.e., 0 to 10 pCi ^{131}I/day (FRC 1961). The actual release rate was reduced to <0.1 Ci/day by 1968. A combined release rate of 1 Ci/day of ^{131}I from the 61-m stack was found to result in a maximum annual average concentration of 3 pCi/ℓ of milk at the nearest farm. Therefore, the dose to a child's thyroid during the decade beginning 1960 (during which PUREX operated) should not have exceeded 20 mrem/yr from the consumption of fresh milk. Federal guidelines existing then allowed a thyroid dose of 1500 mrem/yr to the maximum individual and 500 mrem/yr to the average individual. The maximum individual's dose from the proposed resumption of PUREX (Table 5.4, and discussed elsewhere in this EIS) would be 20 mrem to the thyroid for a 16-yr release and 70-year accumulation. This dose is small

(a) In past operations, plutonium nitrate was shipped to Z-Plant from PUREX for conversion to PuO_2. The distance between the facilities is 8 km. In future operations, conversion to PuO_2 would be done at the PUREX facility, with a system that is now under construction within the PUREX building (see Section 3.1.5.7 and Appendix A.3).
(b) Excludes dose contributions from PUREX.
(c) Values using a 70-yr accummulation dose are not significantly different for those using a 50-yr dose.

TABLE 5.3. Average Annual Occupational Doses Per Worker, 3000 MT/yr Processing Rate (from normal operations)

	Number of Workers	Skin Dose, rem/yr	Total Body Gamma rem/yr
For PUREX (excluding PuO_2 workers)			
Radiation Zone Workers	190	3.6	2.4
Non-radiation Zone Workers	90	0.6	0.3
For PUREX PuO_2 Workers			
Radiation Zone Workers[a]	30	4.5	0.7
Non-radiation Zone Workers	20	0.6	0.3
For UO_3 Facilities			
Radiation Zone Workers	28	2.4	1.5
Non-radiation Zone Workers	16	0.6	0.3
Standards (5480.1)			
Radiation Zone Workers		15	5.0
Non-radiation Zone Workers		1.5	0.5

(a) These radiation zone workers could receive dose up to 0.4 rem/yr from neutrons from plutonium.

when compared to a 70-yr accumulated dose of 7000 mrem from natural background radiation and is within the normal statistical variation in natural background measurements.

PUREX Gaseous Emissions. The principal radionuclides released to the atmosphere in gaseous form are krypton (^{85}Kr) and tritium (^{3}H). Table D.1 (Appendix D) summarizes the quantities of radionuclides released to the atmosphere in gaseous effluents from the PUREX plant in calendar year 1972. This table also shows the estimated maximum annual releases after resuming PUREX plant operation for the 3000 MT/yr processing rate. Gaseous effluents for the more likely initial processing rates of 1050 and 2100 MT/yr are summarized in Table D.2.

The release rates of all the radionuclides (including ^{85}Kr) in the gaseous effluents from PUREX (Table D.1) will be low enough so that their concentrations in air at the Hanford Site boundary will be at or below the guidelines for offsite air concentrations set forth in DOE Order 5480.1A. Radioactive releases from PUREX operations dominate releases from other site activities.

PUREX Liquid Emissions. Liquid and solid wastes contain a broad spectrum of radionuclides, but concentrations vary depending on the age and type of irradiated fuel. The base case examined in this EIS is for 180-day cooled 12 percent ^{240}Pu irradiated fuel or equivalent which is a worst case.

The amounts of low-level radioactive liquids released to the environment (cribs and ponds) in 1972, the most recent year of PUREX plant operation, are summarized in Table D.8. The table also includes estimated maximum annual releases from a 3000 MT/yr PUREX operation. Changes in process flowsheet and improved radionuclide controls since the 1972 shutdown have been used in the estimates. The releases for the more likely processing rates of 1050 and 2100 MT/yr are summarized in Table D.9.

During previous PUREX operation sorption of radionuclides in the soil columns beneath certain cribs was relied upon to reduce the concentration released into the groundwater aquifer. In the future, less reliance on this mechanism will be required, because the concentration of major radionuclides (^{239}Pu, ^{90}Sr, ^{137}Cs, ^{106}Ru, ^{60}Co) in the effluents will be reduced by at least 98 percent from the pre-1972 values. Since the effluents will be chemically similar to the pre-1972 effluents, but contain a much lower concentration of radionuclides, the migration of radionuclides through the soil column would be expected to be similar to or less than that described in ERDA-1538 as causing no measurable environmental impact.

TABLE 5.4. Potential Radiation Doses to Members of the General Public from Routine Releases from the PUREX Plant, 3000 MT/yr Processing Rate

Pathway, Dominant Nuclide and Organ	Maximum Individual Dose (rem)			Population Dose (man-rem)[d]		
	1-yr Release/ 1-yr Accumulation[a]	1-yr Release/ 70-yr Accumulation[b]	16-yr Release/ 70-yr Accumulation[c]	1-yr Release/ 1-yr Accumulation	1 yr Release/ 70-yr Accumulation	16-yr Release/ 70-yr Accumulation
Air Submersion (^{85}Kr)[e]						
All Organs	2.9×10^{-5}	2.9×10^{-5}	4.6×10^{-4}	3.4×10^{0}	3.4×10^{0}	5.4×10^{1}
Inhalation (^{90}Sr, ^{239}Pu, ^{129}I, ^{131}I)[e]						
Total Body	3.2×10^{-7}	2.7×10^{-6}	4.3×10^{-5}	5.1×10^{-2}	4.4×10^{-1}	6.9×10^{0}
Bone	1.4×10^{-6}	3.9×10^{-5}	6.2×10^{-4}	2.2×10^{-1}	6.3×10^{0}	9.9×10^{1}
Lungs	1.2×10^{-6}	4.7×10^{-6}	7.6×10^{-5}	1.9×10^{-1}	7.6×10^{-1}	1.2×10^{1}
Thyroid	2.0×10^{-6}	2.9×10^{-6}	4.6×10^{-5}	3.2×10^{-1}	4.6×10^{-1}	7.3×10^{0}
GI-LLI[f]	1.9×10^{-8}	1.9×10^{-8}	3.1×10^{-7}	3.0×10^{-3}	3.1×10^{-3}	4.9×10^{-2}
Ground Deposition (^{129}I)[e]						
All Organs	4.6×10^{-8}	4.6×10^{-8}	4.6×10^{-5}	4.9×10^{-3}	4.9×10^{-3}	4.9×10^{0}
Ingestion (^{3}H, ^{129}I, ^{131}I, ^{90}Sr)[e] (fruit and vegetables)						
Total Body	3.7×10^{-6}	1.2×10^{-5}	1.7×10^{-3}	2.8×10^{-1}	8.8×10^{-1}	1.1×10^{2}
Bone	4.5×10^{-6}	3.6×10^{-5}	6.3×10^{-3}	3.4×10^{-1}	2.5×10^{0}	3.8×10^{2}
Lungs	3.0×10^{-6}	3.1×10^{-6}	5.0×10^{-5}	2.2×10^{-1}	2.3×10^{-1}	3.6×10^{0}
Thyroid	2.5×10^{-4}	3.8×10^{-4}	1.9×10^{-2}	2.7×10^{1}	4.1×10^{1}	1.7×10^{3}
GI-LLI	3.7×10^{-6}	3.8×10^{-6}	1.9×10^{-4}	2.7×10^{-1}	2.8×10^{-1}	1.2×10^{1}
Totals from all Pathways						
Total Body	3.3×10^{-5}	4.4×10^{-5}	2.2×10^{-3}	3.7×10^{0}	4.7×10^{0}	1.8×10^{2}
Bone	3.5×10^{-5}	1.0×10^{-4}	7.4×10^{-3}	4.0×10^{0}	1.2×10^{1}	5.4×10^{2}
Lungs	3.3×10^{-5}	3.7×10^{-5}	6.3×10^{-4}	3.8×10^{0}	4.4×10^{0}	7.4×10^{1}
Thyroid	2.8×10^{-4}	4.1×10^{-4}	2.0×10^{-2}	3.1×10^{1}	4.5×10^{1}	1.8×10^{3}
GI-LLI	3.3×10^{-5}	3.3×10^{-5}	7.0×10^{-4}	3.7×10^{0}	3.7×10^{0}	7.1×10^{1}

(a) A 1-yr Release/1-yr Accumulation is the dose received in the first year from exposure in that year.
(b) A 1-yr Release/70-yr Accumulation is the dose received over a 70-year lifetime from exposure in the first year. For external exposure, it is equal to the 1-yr Release/1-yr Accumulation dose.
(c) A 16-year Release/70-yr Accumulation is the total dose accrued over a lifetime of continuous exposure to residual radiation both during and after the 16 years of PUREX plant operation.
(d) The population dose is for an estimated 1990 population of 417,000. All local population doses in this EIS are based on this population distribution within a 80-km (50-mile) radius from the Hanford Meteorological Station located at about the center of the Hanford Site.
(e) Primary radionuclides contributiong to dose.
(f) Gastro-intestinal tract--lower large intestine.

Based on the data in Table D.8, ^3H is a radionuclide of concern when considering potential environmental consequences from the PUREX operation. About 95 percent of the tritium is discharged to cribs as tritiated water, a small fraction of which will eventually reach the Columbia River. The hydrology of the area has been described in Section 4.3.4. The addition of large volumes of sanitary, process, cooling, and steam condensate water to the ground has been practiced at Hanford since 1945 and has altered the hydrology significantly. This large volume of water is delivered to the 200-Area plateau from the Columbia River. This addition has created two groundwater mounds, one under the 200 West Area with a rise of about 26 m (85 ft) and, one under the 200 East Area with a rise of 8.5 m (28 ft) above pre-operation conditions. These mounds, combined with the geologic characteristics of the region determine the direction and rate of groundwater movement. Details of the geology and a discussion of the unconfined aquifer hydrology can be found in ERDA-1538 (USERDA 1975, Vol. 2, II.3-B).

The projected disposal of water to cribs and ponds from PUREX/UO_3 operations on the 200-Area plateau will have a small effect on the paths and travel times of ^3H from the site to the river. One way to estimate the impact of ^3H is to compare it with the impact experienced from historical disposal. The mounds created by water addition from early operations of the entire Hanford facility (including PUREX/UO_3) and by pumping during operational standby have stabilized at about 67 m (220 ft) below the 200 West Area and 86 m (282 ft) below B-Pond. Thus, without significant long-term changes in water disposal to the ground, streamlines of flow and travel times to the river will remain about the same. Projected increases of water addition if PUREX were operated would cause the mounds to slowly increase in height, increasing the gradient and slightly decreasing the travel time to the river.

The travel time of ^3H, from the process condensate crib (the most significant source) to the river would be about equal to the travel time of the water. The Site monitoring program has shown that the leading edge of the ^3H front has reached the river. The concentration of ^3H present in the groundwater where the plume enters the river is between 30 and 300 pCi/mℓ. Assuming the source of ^3H to be primarily the PUREX plant cribs that received waste in 1957, the measured travel time is about 23 years[a] (Eddy and Wilbur 1980). The travel time is equivalent to two half-lives of ^3H decay. Since the groundwater concentrations are further diluted by a factor of about 1000 when they enter the river, the actual river concentration measurements show that there is no apparent, statistically significant difference between upstream and downstream concentrations of ^3H at the Hanford Site (Eddy and Wilbur 1980, Sula and Blumer 1981).

Discharges of water from resumed PUREX/UO_3 operations at 3000 MT/yr would be about 3 times those of the pre-1972 operation. The maximum quantity of ^3H to be discharged may be up to 7 times that of previous operation.[b] The impact of ^3H in groundwater would exceed that already identified from the former operation of PUREX but would still be within acceptable guidelines. Differences in ^3H concentrations upriver and downriver from the Hanford Site would still show no significant statistical difference by direct measurement.

PUREX Solid Waste. Based on data presented earlier in Table 3.3, the impacts of solid waste storage and disposal would be greater for storage of future PUREX transuranic wastes than from previous operating campaigns. This increase would be due to the incorporation of the plutonium oxide production system in the PUREX plant, and to the inclusion of the PUREX burial boxes with the TRU waste data. Impacts from future non-transuranic wastes would be approximately the same as those from previous operating campaigns, which are insignificant.

(a) Travel times from 200 East boundary to the river by the shortest path (east-northeast toward Hanford townsite) is predicted to be 27 years (Friedrichs et al. 1977). The difference between this travel time for the water and the observed value is within the uncertainties of modeling accuracy.

(b) Table D.8 shows the estimated tritium discharge in a typical operating year as approximately 7 times that of 1972 (last year of PUREX operation). This difference is due to projecting the maximum probable amount for the operating year and the assumed higher burnup of the fuel as opposed to calculated average values from actual data for 1972. More typical expected values are given in Appendix D (Table D.9) for processing rates of 1050 and 2100 MT/yr.

UO_3 Environmental Emissions. The capacity of the Uranium Oxide plant (36 MT/day) is large enough that it can process an entire year's PUREX plant output (assumed maximum of 3000 MT/yr) in a 14-week operating period.

Liquid effluents from UO_3 plant operations are cooling water, steam condensate, and chemical sewer waste sent to the pond and process condensate sent to the crib. Effluent compositions during 1972 and projected subsequent annual compositions are given in Tables D.10 and D.11. Radioactive gaseous effluents during 1972 and the projected annual effluents are given in Tables D.3 and D.4 along with corresponding onsite and offsite release guide limits. Projected solid waste generation from UO_3 facilities was listed as 63 m^3/yr in Chapter 3.0. The environmental impacts of these projected gaseous and liquid effluents and of solid waste will be within acceptable guidelines (DOE 5480.1) at the Site boundary.

Table 5.5 presents the estimated dose commitments[a] from proposed UO_3 plant operation. The doses from the UO_3 facility are so low that they do not contribute significantly to the total dose to the maximum individual or the general public.

5.1.1.3 Radiological Impacts of PUREX Current Acid Waste Treatment

The operation of the PUREX/UO_3 plants will generate current acid waste[b] (CAW) that needs to be treated. Two options for the treatment of CAW are described in Chapter 3.0: 1) direct neutralization and 2) process through B-Plant. The waste management consequences of these two options have been previously evaluated in ERDA-1538. This section provides a summary description of the environmental consequences for each option.

Direct Neutralization of CAW

In this waste management option, the CAW would be neutralized and piped directly to the tank farms, specific facilities designed for storage of boiling waste. B-Plant came into use for cesium and strontium removal in 1968. Prior to that time, PUREX CAW was neutralized and stored in the tank farm as boiling waste. The environmental impacts described for this option are based on past operation of the tank farm, which was addressed in ERDA-1538.

Gaseous emissions from the 200 Areas in 1972, from roof vents and stacks, released 1.0 Ci of ^{90}Sr to the atmosphere (USERDA 1975). Total ^{90}Sr release in 1972 from the tank farms (including boiling waste tank) was 3.0×10^{-4} Ci (USERDA 1975, II.1-C-72). Although the concentrations of strontium and cesium are greater in the directly neutralized waste than the waste processed through B-Plant, the atmospheric emissions will not be increased because the offgases from these tanks are condensed and filtered.

Accidents were postulated for failure of double-shell tanks in both ERDA-1538 (ERDA 1975) and in DOE/EIS-0063 (DOE 1980b). The worst case accident postulated was the failure of the tank ventilation exhaust filters with the conclusion that the resulting 70-yr accumulated total body and bone doses to the maximum individual[c] would be about 0.7 mrem (USDOE 1980b). A 3000 m^3 tank leak similar to that for waste processed through B-Plant was postulated in ERDA-1538 (USERDA 1975 III.2-3) with a current acid waste inventory that included cesium and strontium present in the directly neutralized CAW. The analysis indicated that because of the high sorptive capacity of the soil, the cesium and strontium would remain in the soil column close to the source of the leak and would not contribute significantly to the dose to the maximum individual or the general public. The resulting dose to the maximum individual from this hypothetical event would be expected to be similar to that postulated for this event in ERDA-1538. The estimated total body dose was 1.4×10^{-4} rem and the dose to the critical organ (G.I. tract) 4.0×10^{-4} rem. The accident itself is not considered credible and is included to provide the reader with a perspective of the relative safety associated with the use of double-shell tanks for storage of CAW. The engineered design, barriers, leak detection and pumping system virtually make it impossible for such an accident to occur.

(a) Dose commitments (population exposure) were calculated on the basis of an estimated 1990 population of 417,000 within an 80-km radius of the Hanford Meteorological Station.

(b) Defined as waste generated in the first solvent extraction cycle (Figure 3.3), 2.5×10^3 m^3/yr and containing about 30 megacuries each of ^{137}Cs and ^{90}Sr.

(c) Refer to Appendix C for definition of the maximum individual.

TABLE 5.5. Potential Radiation Doses to Members of the General Public from Routine Releases from the UO_3 Plant, 3000 MT/yr Processing Rate

Pathway, Dominant Nuclide and Organ	Maximum Individual Dose (rem)			Population Dose (man-rem)[d]		
	1-yr Release/ 1-yr Accumulation[a]	1-yr Release/ 70-yr Accumulation[b]	16-yr Release/ 70-yr Accumulation[c]	1-yr Release/ 1-yr Accumulation	1 yr Release/ 70-yr Accumulation	16-yr Release/ 70-yr Accumulation
Air Submersion (^{106}Ru)						
All	4.2×10^{-14}	4.2×10^{-14}	6.7×10^{-13}	4.8×10^{-9}	4.8×10^{-9}	7.7×10^{-8}
Inhalation (^{238}U)						
Total Body	4.8×10^{-13}	5.3×10^{-13}	8.5×10^{-12}	7.8×10^{-8}	8.5×10^{-8}	1.4×10^{-6}
Bone	3.7×10^{-12}	4.5×10^{-12}	7.2×10^{-11}	5.9×10^{-7}	7.2×10^{-7}	1.2×10^{-5}
Lungs	1.5×10^{-11}	6.4×10^{-11}	1.0×10^{-9}	2.4×10^{-6}	1.0×10^{-5}	1.6×10^{-4}
Thyroid	--[e]	--	--	--	--	--
GI-LLI	2.7×10^{-12}	2.7×10^{-12}	4.4×10^{-11}	4.4×10^{-7}	4.4×10^{-7}	7.0×10^{-6}
Ground Deposition (^{106}Ru)						
All	1.9×10^{-12}	1.9×10^{-12}	6.2×10^{-11}	2.1×10^{-7}	2.1×10^{-7}	6.6×10^{-6}
Ingestion (^{106}Ru)						
Total Body	1.2×10^{-13}	1.3×10^{-13}	2.3×10^{-12}	7.3×10^{-9}	8.2×10^{-9}	1.4×10^{-7}
Bone	9.1×10^{-13}	1.3×10^{-12}	2.4×10^{-11}	5.7×10^{-8}	8.0×10^{-8}	1.5×10^{-6}
Lungs	--	--	--	--	--	--
Thyroid	--	--	--	--	--	--
GI-LLI	5.9×10^{-11}	5.9×10^{-11}	9.7×10^{-10}	3.6×10^{-6}	3.6×10^{-6}	5.9×10^{-5}
Total from All Pathways						
Total body	2.5×10^{-12}	2.6×10^{-12}	7.4×10^{-11}	3.0×10^{-7}	3.1×10^{-7}	8.2×10^{-6}
Bone	6.6×10^{-12}	7.7×10^{-12}	1.6×10^{-10}	8.6×10^{-7}	1.0×10^{-6}	2.0×10^{-5}
Lungs	1.8×10^{-11}	6.7×10^{-11}	1.1×10^{-9}	2.6×10^{-6}	1.0×10^{-5}	1.7×10^{-4}
Thyroid	1.9×10^{-12}	1.9×10^{-12}	6.3×10^{-11}	2.2×10^{-7}	2.2×10^{-7}	6.7×10^{-6}
GI-LLI	6.4×10^{-11}	6.4×10^{-11}	1.1×10^{-9}	4.3×10^{-6}	4.3×10^{-6}	7.3×10^{-5}

(a) A 1-yr Release/1-yr Accumulation is the dose received in the first year from exposure in that year.
(b) A 1-yr Release/70-yr Accumulation is the dose received over a 70-year lifetime from exposure in the first year. For external exposure, it is equal to the 1-yr Release/1-yr Accumulation dose.
(c) A 16-year Release/70-yr Accumulation is the total dose accrued over a lifetime of continuous exposure to residual radiation both during and after the 16 years of PUREX plant operation.
(d) The population dose is for an estimated 1990 population of 417,000. All local population doses in this EIS are based on this population distribution within a 80-km (50-mile) radius from the Hanford Meteorological Station located at about the center of the Hanford Site.
(e) Dash (--) indicates nuclides do not contribute significantly to this organ.

Process CAW through B-Plant

The environmental impacts of processing CAW through B-Plant were described and evaluated in ERDA-1538. Impacts associated with the use of double-shell tanks which store the HLW resulting from the separation of ^{137}Cs and ^{90}Sr from the current acid waste, were addressed in ERDA-1538 and DOE/EIS-0063. Both of these documents indicate that the impacts from this waste management option are within acceptable limits as elaborated below.

B-Plant processing operations for CAW would generate the volumes of liquid wastes identified in Table 3.1. Of these wastes, the steam and process condensate streams are sent to cribs, the chemical sewer and cooling water are sent to a trench and pond respectively. Onsite discharges of radioactive liquids to liquid disposal sites are controlled such that the resulting dose to onsite personnel and offsite populations are well below the amount allowable under DOE Order 5480.1A, Radiation Protection Standards. Except for the ^{90}Sr and ^{137}Cs contained in the process condensate stream, the concentration of radionuclides in these liquids would be sufficiently low that they could meet criteria for direct discharge to a public sanitary sewer system (see Section 6.1 and DOE 5480.1A, Table I, Column 2). The process condensate would contain 3.6×10^{-4} μCi/ml of ^{90}Sr and 1.3×10^{-3} μCi/ml of ^{137}Cs. Based on the maximum projected volume of B-Plant process condensate (3.8×10^5 m^3 over 16 years), the amount of ^{90}Sr discharged will be 129 Ci and ^{137}Cs, 499 Ci. These amounts represent about 2 percent of the ^{90}Sr and 10 percent of the ^{137}Cs inventory that were projected to be disposed of in all the cribs in the 200 Areas in 1972 (USERDA 1975, p. II.1-67). This addition to the existing inventory is not expected to contribute to the radiation exposure to the general public. All other waste streams from B-Plant will be stored in underground double-shell tanks. [As detailed in Section 3.1.1.3 (Table 3.2), if fuel is processed at a maximum rate of 3000 MT/yr for 16 years, 27 new double-shell storage tanks for high level waste would be required. At lower processing rates, fewer tanks would be necessary]. The environmental consequences of double-shell tank storage were addressed in ERDA-1538 and DOE/EIS-0063 (USDOE 1980b).

Approximately 170 m^3/yr (220 yd^3/yr) of low-level solid waste would be generated. This would be equivalent to about 6 percent of the solid waste volume disposed of in 1974 or less than 1 percent of the cumulative solid waste disposed of in the 200 Areas from all Hanford operations up to 1974.

Radioactive gaseous emissions from operation of B-Plant in 1972 were approximately 0.16 Ci (USERDA 1975). Total emissions from the tank farms, which stored the HLW generated from B-Plant processing from 1968 to 1972, were 0.0021 Ci in 1972 (USERDA 1975, p. II.1-35). Annual gaseous emissions from future operation of the boiling waste tanks would contain 1×10^{-4} Ci total α and 5.4×10^{-3} Ci total β. Liquid emissions (condensates) from the boiling waste tanks would contain 5.5 Ci total β (Hawkins 1981d). These radioactive releases are expected to have no measurable impact on the environment.

Accidents postulated for B-Plant operations were treated in ERDA-1538. Accidents postulated for double-shell tank operations were discussed in ERDA-1538 and DOE/EIS-0063. The accident postulated to have the most significant impact for B-Plant (worst case) was a fire in the ventilation filter which would yield a total body dose (first year dose) to the maximum individual of 2.5×10^{-3} rem and a dose to the lung (critical organ) of 4.3×10^{-2} rem (USERDA 1975, III.2-16). The dose calculated to the maximum individual from a hypothetical 3000 m^3 (800,000 gal) tank leak was 8.5×10^{-6} rem to the total body and 1.1×10^{-3} rem to the thyroid (critical organ) (USDOE 1980b). All of the calculated doses are substantially below the guidelines for population exposures. None of the accidents postulated was estimated to have significant effects on the public. Both of those accidents are considered to be highly unlikely.

5.1.2 Nonradiological Impacts, Normal Operation

The operation of the PUREX/UO_3 facilities would result in discharges of nonradiological pollutants as gaseous, liquid, and solid effluents. However, the impact of these emissions on either the population or the environment is negligible because of the relatively low rates of release and the long distance to population centers. The concentration of materials released with gaseous emissions is diluted and dispersed before

reaching the nearest point of public access.[a] A detailed discussion of potential impacts from gaseous effluents follows in Section 5.1.2.1. Liquid effluents are discharged to the ground only and never directly into the Columbia River from either the PUREX or UO_3 processes. The volume, composition, and potential impact of liquid discharges is discussed in Section 5.1.2.2. Nonradiological solid wastes (Section 5.1.2.3) from the processes are insignificant in quantity and composition, and require only a small area of land for disposal. The raw water requirement for the PUREX/UO_3 operations at the maximum processing rate of 3000 MT/yr is approximately 4.2×10^7 m^3/year. This water is withdrawn from the Columbia River and represents approximately 0.03 percent of the 1.07×10^{11} m^3/yr average annual flow of the Columbia River at Hanford (USERDA 1975, pp. II.3-13). At the more likely processing rate in the range of 1050 to 2100 MT/yr, water withdrawal would be approximately 0.01 percent of the average annual flow of the Columbia River. No impacts from water withdrawal have been observed from past operations and none are anticipated for future operations.

5.1.2.1 Nonradiological Gaseous Emissions

The estimated volumes of total gaseous emissions from the operation of the PUREX and UO_3 plants are 3.4×10^9 m^3/yr (1.2×10^{11} ft^3/yr) and 1.7×10^8 m^3/yr (6.0×10^9 ft^3/yr), respectively. Ambient air concentrations at the Site boundary were calculated (Table 5.6) assuming a processing rate of 3000 MT/yr. These calculations indicate that the ambient air concentrations of gaseous emissons will be within permissible limits at the Site boundary.

Ground-level gaseous pollutant concentrations resulting from operation of the PUREX/UO_3 plants were estimated using the EPA Climatological Dispersion Model (USEPA 1973), under conservative modeling assumptions including neutral and unstable atmospheric conditions. Based on this model, the maximum ground-level concentration of NO_x from all major sources in the plant would be about 15 $\mu g/m^3$.[b] The mean annual NO_x concentration, including a mean natural background NO_x level of approximately 20 $\mu g/m^3$, will be approximately 35 $\mu g/m^3$ (USEPA 1980b). The maximum ground-level concentration of 15 $\mu g/m^3$, at a distance of about 600 m (2000 ft) southeast of the plant, is expected to decrease rapidly to less than 2 $\mu g/m^3$ at the nearest point of public access (USEPA 1980b). The maximum average annual ambient air concentration is estimated to be 0.3 $\mu g/m^3$ at a distance of about 600 m (2000 ft) southeast of the PUREX plant and is expected to be below 0.02 $\mu g/m^3$ at the nearest point of public access. The maximum average annual ambient air concentration from the UO_3 plant is estimated at about 0.04 $\mu g/m^3$ about 600 m (2000 ft) southeast of the plant and is expected to be below 0.005 $\mu g/m^3$ at the nearest point of public access. Therefore, the ambient air concentrations of the only nonradiological gaseous pollutant of significance, oxides of nitrogen (NO_x), will be less than the permissible ambient air concentration limit of 100 $\mu g/m^3$ (Table 5.6) according to the Washington Air Polution Control Regulations (WAPCR 1980), at the Site boundary.

Occupational exposure levels to NO_x are less than the threshold limit value (TLV) of 5 ppm/8 hr. The UO_3 facility, which emits NO_x in the highest concentrations at Hanford, would not exceed the TLV in a 24-hour period.

The emission of NO_x has also been evaluated for its effect on air quality. The DOE and EPA have reviewed the problem and have established a total annual emission limit of 424 MT of NO_x for PUREX and 50 MT for the UO_3 facility operating under a Prevention of Significant Deterioration (PSD) Permit (USEPA 1980a).[c] The Benton-Franklin-Walla Walla County Air Pollution Control Authority (APCA) has adopted the EPA limits as an alternative to the 20 percent opacity standard. The annual operating emissions, 385 MT for PUREX and 50 MT for UO_3, estimated for an assumed 3000 MT/yr processing rate would not exceed the EPA tonnage limits established under the PSD permit approved by EPA in 1980 (see Appendix D).

(a) The nearest point of public access is Highway 240, approximately 8 km (5 miles) southwest of the 200 Areas.

(b) In comparison, the largest measured ground-level-concentration of NO_x above the natural background was 14 $\mu g/m^3$ (USEPA 1980b).

(c) Part C, Title 1 of the Clean Air Act, Prevention of Significant Deterioration of Air Quality (PSD), limits emissions in clean air areas to certain increments even though the ambient air quality standards are not being exceeded.

TABLE 5.6. Nonradiological Pollutant Air Concentrations from PUREX/UO_3 Operations, 3000 MT/yr Processing Rate

Pollutant	Averaging Period	Washington[a] State Standard	Ambient Air Concentration[b] At Site Boundary ($\mu g/m^3$) PUREX	UO_3
Nitrogen Oxides	Annual arithmetic mean.	100 $\mu g/m^3$	2×10^{-2}	5×10^{-3}
Hydrocarbons	Maximum 3-hr concentration not to be exceeded more	160 $\mu g/m^3$	6×10^{-4}	4×10^{-5}
Ammonia[c]	--	60 $\mu g/m^3$	1×10^{-3}	0
Particulates	Annual geometric mean: Maximum 24-hr concentration not to be exceeded more than once per year.	1×10^{-6} 150 $\mu g/m^3$ (24 hr conc.)	1.6×10^{-7}	
Carbon Monoxide[c]	Maximum 8-hr concentration not to be exceeded more than once per year.	10 mg/m^3	1×10^{-4}	0

(a) Equal to or more restrictive than U.S. Standards.
(b) Concentrations assume continuous release over an entire year and are based on the EPA Climatological Dispersion Model (USEPA 1973). Dispersion values are for the nearest point of public access which is approximately 5 miles southwest of the 200 Areas on Highway 240.
(c) Ammonia Threshold Limiting Value (TLV) is 25 ppm/8 hr. Carbon Monoxide TLV is 50 ppm/8 hr.
Sources: (40CFR50; WAPCR 1980; ACGIH 1979; Hawkins 1980d,e, 1981c).

At the levels listed in Table 5.6 for NO_x, the National Ambient Air Quality Standards (NAAQS) will not be exceeded. The use of hydrogen peroxide absorption system in the PUREX process (see Chapter 3.0) represents the best available control technology for NO_x (USEPA 1980b).

5.1.2.2 Nonradiological Liquid Effluents

Operation of the PUREX/UO_3 facilities for the assumed maximum processing rate of 3000 MT of irradiated fuel/yr would result in the discharge of approximately 2.9×10^7 m^3/year (7.6×10^9 gal/yr) of liquid effluents (Hawkins 1981b). The nonradiological composition and annual volumes of liquid discharges are given in Table D.12.

The largest contribution to the total liquid effluent discharge is the cooling water. Under normal operations this cooling water is free of any radioactive contamination. Additionally, about 4.9×10^4 m^3/yr (1.3×10^7 gal/yr) of sanitary wastes are discharged to a septic tank disposal area.

No liquid effluent stream from the PUREX/UO_3 facilities is directly discharged to the Columbia River, which is approximately 10 km from the 200 East Area at the closest point (USERDA 1975).

Investigations of the effects of PUREX/UO_3 nonradiological liquid discharges during past operations show that except for nitrates, no significant migration occurred from the discharge of industrial chemicals to the ground via cribs, ponds and sanitary tile field (USERDA 1975). A detectable groundwater plume of nitrates,[a] described in ERDA-1538, was attributed to past operations of PUREX/UO_3 and other facilities and resulted in the contamination of groundwater in some areas on the Hanford Site to levels in excess of permissible drinking water standards. Current groundwater monitoring has not detected nitrate concentrations from 200 Area discharges in excess of background at the Site boundaries (Sula 1975). The same paths would be expected to be followed by future discharges, with insignificant effects offsite.

Discharges into ponds represent a potential source of impact to biota from contaminated liquid effluents. Studies of biota using these ponds, which are also fed by other effluent streams, have not revealed any radiological or nonradiological effects attributable to these ponds (USERDA 1975 p. III.1-30).

5.1.2.3 Nonradiological Solid Wastes

Nonradiological solid wastes consist of trash and normal industrial solid wastes. It is compacted by a factor of three and disposed of in a central sanitary landfill. The combined solid waste of PUREX/UO_3, approximately 396 m^3/yr (14,000 ft^3/yr), is about four percent of the 10,200 m^3/yr (360,000 ft^3/yr), predicted for the entire Hanford Site (USERDA 1975). These materials are generally nontoxic and, other than land committed for burial, present no environmental effects.

5.1.3 Impacts of Routine Transportation of Nuclear Materials

This section analyzes the impacts from the four major material shipments associated with the operation of the PUREX/UO_3 facilities. These shipments include: 1) irradiated fuel from N-Reactor to PUREX, 2) uranyl nitrate hexahydrate (UNH) from the PUREX plant to the UO_3 Plant for processing, 3) plutonium dioxide (PuO_2) from PUREX to Z Plant for storage, and 4) uranium oxide (UO_3) from the UO_3 Plant to Fernald, Ohio. Table 5.7 summarizes these shipments. Traffic, fuel consumption, non-radiological effects, and radiological effects are analyzed for the shipping operations. The shipment of PuO_2 offsite is not analyzed. PuO_2 shipments to offsite locations are presently being made and will continue independent of PUREX operations. While these shipments are not considered a part of the proposed action, a general discussion of such shipments is given in Section 5.1.4.6.

(a) Another feature shown by the contamination plumes is that residual nitrate contamination remains from pre-Hanford agriculture operations north of Gable Mountain (USERDA 1975).

TABLE 5.7. Shipments of Nuclear Material Associated with Operation of the PUREX Facility, at a 3000 MT/yr Processing Rate

Material	Form	No. of Shipments/year	Transport Mode	Origin	Destination	Total Distance/yr[a]
Irradiated Fuel	Solid	1125	Railcar	N-Reactor	PUREX	21,600 km (13,400 mi)
Uranyl Nitrate Hexahydrate	Liquid	630	Truck Tank Trailers	PUREX	UO_3 Plant	5,040 km (3,130 mi)
Plutonium Dioxide	Solid Powder	360	Diesel Truck	PUREX	Z Plant Storage	3,331 km (2,070 mi)
Uranium Oxide	Solid Powder	60	Railcar	UO_3 Plant	Fernald, OH	230,400 km (143,000 mi)

(a) All distances are one-way.

5.1.3.1 Nonradiological Effects of Transportation

Gaseous effluents will result from the transportation of nuclear materials associated with the operation of PUREX/UO_3 facilities at Hanford. Detailed calculations of fuel consumption and resultant gaseous pollutant emissions, not repeated here, were made for the 3000 MT/yr case, assuming the number of trips estimated in Table 5.7. Estimated annual diesel fuel consumption is 189,000 ℓ onsite and 1,290,000 ℓ offsite. Estimated emissions from this fuel consumption totaled about 5.4 MT/yr for particulates, and 11 to 16 MT/yr each for SO_2, CO, hydrocarbons, and NO_x. The environmental consequences of these are insignificant.

5.1.3.2 Radiological Effects of Transportation

Two sources of radiation exposure from transportation of radioactive materials are associated with operation of the PUREX/UO_3 plants: the exposure from the external penetrating radiation as a result of proximity to normally operating transportation systems, and potential exposure resulting from radionuclide releases caused by transportation accidents (transportation accidents are considered in Section 5.1.4.5). Because of the physical characteristics of UNH and UO_3, no appreciable external dose would be caused by their shipment. Shipments of PuO_2 associated with the PUREX operation are made under Hanford operational procedures that limit external radiation at the surface of the shipping container to 5 mrem/hr. Under normal operating conditions, none of these shipments would create any identified occupational or public radiation hazard.

5.1.4 Potential Accident Impacts

This section presents the radiological effects from potential accidents (abnormal operating conditions) whose occurrence is considered credible in the operation of the PUREX/UO_3 facilities. Also, impacts from potential transportation accidents for onsite (Section 5.1.4.5) and offsite (Section 5.1.4.6) events are discussed. Physical events of a highly disruptive nature such as meteor impact, volcanic action, catastrophic floods, etc. are not considered since the effects of the events themselves would be far worse than the possible radionuclide release. In addition, the probability (10^{-9} to 10^{-13}/yr) of any of these events occurring in the time span of PUREX/UO_3 operation is so low that detailed analysis is not considered. Other less catastrophic natural force accidents such as earthquakes, wind and tornados, minor floods, and snow loads are briefly discussed in Section 5.1.4.4.

The accidents considered in this section are believed to represent the worst consequences that would result from accidents that could occur in the PUREX/UO_3 facilities. The accident scenarios are based on the best available projections and estimations. These scenarios are not predictions that any one or more of these accidents will occur in the future. The accidents, rather, represent credible system accidents projected from the empirical data set from 17 years of previous PUREX/UO_3 experience and engineering predictions. Based on these data, the worst accidents (in terms of consequences) that could be reasonably postulated are analyzed.

The approach used to develop the accident analysis and subsequent dose evaluation was: 1) to identify potential accidents and release mechanisms, 2) to determine accidents that could breach the radionuclide containment systems and could provide a radionuclide pathway to the biosphere, 3) to estimate the fraction of radionuclides that would be released, (the source term), 4) to calculate doses (consequences) resulting from the estimated release using established conservative models as described in this section, and 5) to consider significant mitigating factors.

The analyses in the following sections are believed to provide reasonable and credible estimates of the maximum radionuclide release that could occur at the PUREX/UO_3 facilities if these accidents were to occur.

5.1.4.1 Potential Credible Accidents

Five accidents have been selected as having potential to result in relatively significant population doses. Because of administrative and operational controls designed to prevent their occurrence, the probability that these radiological accidents would cause

significant consequence to the public or the operating staff is small. Nevertheless, the effects of potentially significant radiological accidents must be estimated. No accidents of significance were identified for the UO_3 facility. A description of the dose model used and the dose estimates for each accident follow in Sections 5.1.4.2 and 5.1.4.3, respectively. The five radiological accidents evaluated for offsite acute and chronic doses are:

1. Dissolution of Short-Cooled Fuel (worst case accident)--The PUREX dissolver offgas system is not designed to retain short-lived fission product gases. Therefore, the accidental dissolution of short-cooled (25 days) fuel elements would result in the discharge of these gases with consequent release of radioactivity to the environment. This accident was selected based on historic records since this type of accident actually occurred in 1963 while PUREX was operating. Details of the accident assumptions and potential accident emissions are presented in Appendix B. Appendix B also provides additional information on the derivation of the source term and isotopes contributing to dose. A single batch of accidentally dissolved short-cooled fuel would discharge about 1.9×10^4 Ci of radioactivity to the atmosphere (1.0×10^4 Ci are ^{133}Xe which does not significantly contribute to the dose). Mitigating measures have been put in place to prevent this accident from occurring and to lessen its consequences if it could occur. These measures include administrative controls at the N-Reactor basin and radiation and heat monitoring to detect short-cooled fuel.

2. Uranium Metal Fire in Dissolver--Uranium metal fuel is assumed to become uncovered in the dissolver. The uncovered uranium metal spontaneously ignites resulting in the release of radionuclides from the fuel itself and from the remaining dissolver solution which is boiled off. Details of the accident and accident source terms are provided in Appendix B. One uranium metal fire incident would release about 800 Ci of radioactivity (740 Ci are ^{85}Kr which could be released during normal fuel dissolution).

3. Solvent Fire in H Cell--The PUREX process uses a solution of tributyl phosphate in a normal paraffin hydrocarbon diluent (similar to kerosene) as the organic extractant. A fire in H cell could occur as a result of a postulated leak from the extraction column to the H cell sump. A percentage of the radionuclides vaporized by the fire would escape through the exhaust filter and the stack to the environment. Details of the accident assumptions and accident source terms are provided in Appendix B. A single incident could release about 11 Ci of radioactivity to the environment.

4. Explosion in F Cell--The waste solution containing fission products and actinides undergoes concentration and volume reduction in F cell. Two events can be postulated which would involve explosions in F cell: 1) a red oil explosion in the waste concentrator, and 2) a hydrogen explosion in one of the tanks. The red oil explosion provides a greater energy source term than the hydrogen explosion, thereby causing greater consequences.

   The source terms (the release of radioactivity) for this accident result: 1) from the explosion, 2) from spilled liquid, and 3) from entrainment in circulating air. Details of the accident and the accident source terms are provided in Appendix B. An explosion in F Cell could release about 6 Ci of radioactivity.

5. Criticality Accident in 1BX Column in J Cell--Several precautions are used to monitor plutonium concentration in the 1BX column. The assumption used for this accident description is that the plutonium concentration increases by approximately a factor of nine resulting in a criticality event. The criticality event is assumed to consist of three 0.5 second bursts of 10^{18} fissions each, occurring within a 30-minute period. Additional information on the accident assumptions and accident source terms are provided in Appendix B. A criticality accident could release 2.7×10^4 Ci of radioactivity (primarily xenon isotopes, ^{137}Xe and ^{138}Xe, which do not contribute appreciably to the dose).

Because of operational controls and administrative control procedures that would be in place, the simultaneous occurrence of any of these accidents is not considered credible.

5.1.4.2 Dose Model Description

Computerized mathematical models for simulating the behavior of radionuclides in the environment and for estimating dose consequences to humans have been developed at Hanford over a period of years. The underlying assumptions, methodologies, and descriptions of the models used for dose consequence calculations for this EIS are described in Appendix C.

5.1.4.3 Dose Consequences

Doses were estimated from each of the five accidents described in Section 5.1.4.1. For each accident, an estimate of the dose attributable to air submersion, inhalation, ingestion, and ground deposition/ground shine has been calculated. Tables 5.8 through 5.13 present the results of the dose calculations.[a] Both 1-year and 70-year doses are shown for the maximum individual and the general population.

Of the five accidents, the most severe is dissolution of shortcooled fuel. This accident has the potential of resulting in the highest dose to both the maximum individual and the general population (Table 5.8). Enforcing administrative controls on consumption of regionally ^{131}I-contaminated milk and vegetables for a period of about 3 months after the accident (Table 5.9) would reduce the 70-year maximum individual thyroid dose to 0.19 rem compared to the 10 rem values[b] computed in Table 5.8 without such controls. The 0.19 rem dose is a more realistic estimate since such controls would immediately be implemented if an accident of this magnitude occurred. In the computation of the dose, credit for ^{131}I decrease in the PUREX backup acid absorption tower and the silver reactors was taken. The calculations show that the population dose (1 yr release, 70 yr accumulation) would be reduced from 40,000 man-rem to 1500 man-rem by using administrative controls. In comparison, population dose from the average background radiation rate of 100 mrem/yr, would be about 41,700 man-rem/yr; the 70-yr dose for an individual would be about 7 rem. With administrative controls the first-year critical organ dose to the maximum individual (1.9×10^{-1} rem--thyroid) would be approximately 700 times higher than the dose from normal PUREX/UO_3 operations (2.8×10^{-4} rem--thyroid).

One principal reason for selecting this example as a probable accident is that this type of accident actually occurred at the PUREX facility in 1963. The historical accident involved a charge of approximately 2.7 tons of irradiated fuel cooled for only 25 days rather than the usual 135 days (usual cooling period employed in 1963) and resulted in a release of 62 Ci of ^{131}I (half-life = 8 days) versus the postulated release of 84 Ci of ^{131}I for a charge of 318 kg (700 lb.) of 25-day cooled fuel. Thus the conservatism in the dose calculations is valid.

The following new factors would lower significantly the probability for recurrence of this type of accident:

- The fuel is retained under administrative control in the N-Reactor basin for a minimum of 150 days before shipment to PUREX.
- N-Reactor is now the only potential source of short-cooled fuel at Hanford, as compared to 8 operating reactors in 1963.
- The reactor fuel shipment rate will be reduced from that of 1963.
- Monitors to detect the higher radiation levels from short-cooled fuels have been installed at both N-Reactor and PUREX.
- Cask car thermometers have been installed and are monitored to indicate any temperature increase caused by short-cooled fuel.

(a) Dose commitments were calculated on the basis of an estimated 1990 population of 417,000 within a 80-km radius of the Hanford Meteorological Station.

(b) This is dose to adults. Infants (0-1 years old) would receive seven times, children (1-11 years old) 3 times, and teenagers (11-17 years old) 1.2 times as much dose to the thyroid from radioiodine (^{131}I).

TABLE 5.8. Potential Radiation Doses[a] to Members of the General Public, Dissolving Short-Cooled Fuel (Accident 1—no mitigation)

Pathway, Dominant Nuclide and Organ	Maximum Individual (rem)			Population (man-rem)		
	1-yr Dose/ 1-yr Accumulation[b]	70-yr Dose/ 1-yr Accumulation[c]	70-yr Dose/ 70-yr Accumulation[d]	1-yr Dose/ 1-yr Accumulation	70-yr Dose/ 1-yr Accumulation	70-yr Dose/ 70-yr Accumulation
Air Submersion (^{85}Kr)[e]						
All	3.8×10^{-4}	3.8×10^{-4}	3.8×10^{-4}	3.0×10^{0}	3.0×10^{0}	3.0×10^{0}
Inhalation (^{3}H, ^{129}I)[e]						
Total Body	3.2×10^{-4}	3.2×10^{-4}	3.2×10^{-4}	2.6×10^{0}	2.6×10^{0}	2.6×10^{0}
Bone	3.5×10^{-4}	3.5×10^{-4}	3.5×10^{-4}	2.8×10^{0}	2.8×10^{0}	2.8×10^{0}
Lungs	3.7×10^{-3}	3.7×10^{-3}	3.7×10^{-3}	3.0×10^{1}	3.0×10^{1}	3.0×10^{1}
Thyroid	1.8×10^{-1}	1.8×10^{-1}	1.8×10^{-1}	1.4×10^{3}	1.4×10^{3}	1.4×10^{3}
GI-LLI	9.1×10^{-5}	9.1×10^{-5}	9.1×10^{-5}	7.3×10^{-1}	7.3×10^{-1}	7.3×10^{-1}
Ground Deposition (^{129}I)[e]						
All	1.4×10^{-8}	1.4×10^{-8}	9.8×10^{-7}	7.8×10^{-5}	7.8×10^{-5}	5.4×10^{-3}
Ingestion (^{3}H, ^{131}I)[e] (vegetables and milk)						
Total Body	2.3×10^{-2}	2.4×10^{-2}	2.4×10^{-2}	8.8×10^{1}	9.1×10^{1}	9.1×10^{1}
Bone	2.1×10^{-2}	2.2×10^{-2}	2.2×10^{-2}	8.1×10^{1}	8.3×10^{1}	8.3×10^{1}
Lungs	5.6×10^{-3}	5.9×10^{-3}	5.9×10^{-3}	2.2×10^{1}	2.3×10^{1}	2.3×10^{1}
Thyroid	9.8×10^{0}	1.0×10^{1}	1.0×10^{1}	3.8×10^{4}	3.9×10^{4}	3.9×10^{4}
GI-LLI	1.5×10^{-2}	1.5×10^{-2}	1.5×10^{-2}	5.7×10^{1}	5.7×10^{1}	5.7×10^{1}
Totals from all Pathways						
Total Body	2.4×10^{-2}	2.5×10^{-2}	2.5×10^{-2}	9.4×10^{1}	9.7×10^{1}	9.7×10^{1}
Bone	2.2×10^{-2}	2.3×10^{-2}	2.3×10^{-2}	8.7×10^{1}	8.9×10^{1}	8.9×10^{1}
Lungs	9.7×10^{-3}	1.0×10^{-2}	1.0×10^{-2}	5.5×10^{1}	5.6×10^{1}	5.6×10^{1}
Thyroid	1.0×10^{1}	1.0×10^{1}	1.0×10^{1}	3.9×10^{4}	4.0×10^{4}	4.0×10^{4}
GI-LLI	1.5×10^{-2}	1.5×10^{-2}	1.5×10^{-2}	6.1×10^{1}	6.1×10^{1}	6.1×10^{1}

(a) All doses are calculated from an acute release.
(b) Dose received in one year from an acute release in that year.
(c) Dose received over a 70-yr lifetime from an acute exposure in the first year.
(d) Accumulated 70-yr dose from an acute release in the first year, and 70 years' exposure to residual radiation in the environment.
(e) Primary radionuclides contributing to dose.

TABLE 5.9. Potential Radiation Doses to Members of the General Public Dissolving Short-Cooled Fuel Accident 1—with Mitigation

Pathway, Dominant Nuclide and Organ	Doses from Immediate and Long-Term Exposure[a]					
	Maximum Individual (rem)			Population (man-rem)		
	1-yr Dose/ 1-yr Accumulation	70-yr Dose/ 1-yr Accumulation	70-yr Dose/ 70-yr Accumulation	1-yr Dose/ 1-yr Accumulation	70-yr Dose/ 1-yr Accumulation	70-yr Dose/ 70-yr Accumulation
Air Submersion (^{85}Kr)[b]						
All	3.8×10^{-4}	3.8×10^{-4}	3.8×10^{-4}	3.0×10^{0}	3.0×10^{0}	3.0×10^{0}
Inhalation (^{3}H, ^{129}I)[b]						
Total Body	3.2×10^{-4}	3.2×10^{-4}	3.2×10^{-4}	2.6×10^{0}	2.6×10^{0}	2.6×10^{0}
Bone	3.5×10^{-4}	3.5×10^{-4}	3.5×10^{-4}	2.8×10^{0}	2.8×10^{0}	2.8×10^{0}
Lungs	3.7×10^{-3}	3.7×10^{-3}	3.7×10^{-3}	3.0×10^{1}	3.0×10^{1}	3.0×10^{1}
Thyroid	1.8×10^{-1}	1.8×10^{-1}	1.8×10^{-1}	1.4×10^{3}	1.4×10^{3}	1.4×10^{3}
GI-LLI	9.1×10^{-5}	9.1×10^{-5}	9.1×10^{-5}	7.3×10^{-1}	7.3×10^{-1}	7.3×10^{-1}
Ground Deposition (^{129}I)[b]						
All	1.4×10^{-8}	1.4×10^{-8}	9.8×10^{-7}	7.8×10^{-5}	7.8×10^{-5}	5.4×10^{-3}
Ingestion (^{3}H, ^{131}I)[b] (vegetables and milk)[c]						
Total Body	5.6×10^{-3}	5.8×10^{-3}	5.8×10^{-3}	2.2×10^{1}	2.2×10^{1}	2.2×10^{1}
Bone	1.1×10^{-5}	1.1×10^{-5}	1.1×10^{-5}	6.0×10^{-2}	6.1×10^{-2}	6.2×10^{-1}
Lungs	5.6×10^{-3}	5.8×10^{-3}	5.8×10^{-3}	2.2×10^{1}	2.2×10^{1}	2.2×10^{1}
Thyroid	1.1×10^{-2}	1.1×10^{-2}	1.1×10^{-2}	5.0×10^{1}	5.2×10^{1}	5.3×10^{1}
GI-LLI	5.6×10^{-3}	5.8×10^{-3}	5.8×10^{-3}	2.2×10^{1}	2.2×10^{1}	2.2×10^{1}
Totals from all Pathways						
Total Body	6.3×10^{-3}	6.5×10^{-3}	6.5×10^{-3}	2.8×10^{1}	2.8×10^{1}	2.8×10^{1}
Bone	7.4×10^{-4}	7.4×10^{-4}	7.4×10^{-4}	5.9×10^{0}	5.9×10^{0}	6.4×10^{0}
Lungs	9.7×10^{-3}	9.9×10^{-3}	9.9×10^{-3}	5.5×10^{1}	5.5×10^{1}	5.5×10^{1}
Thyroid	1.9×10^{-1}	1.9×10^{-1}	1.9×10^{-1}	1.4×10^{3}	1.5×10^{3}	1.5×10^{3}
GI-LLI	6.1×10^{-3}	6.3×10^{-3}	6.3×10^{-3}	2.6×10^{1}	2.6×10^{1}	2.6×10^{1}

(a) Doses are given for acute releases; see footnotes Table 5.8 for definitions.
(b) Primary radionuclides contributing to dose.
(c) Ingestion doses calculated assuming 3-month interdiction (enforcing proper administrative controls on consumption of regional ^{131}I-contaminated milk and vegetables for a period of 3 months) of locally produced vegetable and milk production.

TABLE 5.10. Potential Radiation Dose to Members of the General Public, U Fire in Dissolver (Accident 2)

Pathway, Dominant Nuclide and Organ	Doses from Immediate and Long-Term Exposure[a]					
	Maximum Individual (rem)			Population (man-rem)		
	1-yr Dose/ 1-yr Accumulation	70-yr Dose/ 1-yr Accumulation	70-yr Dose/ 70-yr Accumulation	1-yr Dose/ 1-yr Accumulation	70-yr Dose/ 1-yr Accumulation	70-yr Dose/ 70-yr Accumulation
Air Submersion (^{85}Kr)[b]						
All	4.1×10^{-5}	4.1×10^{-5}	4.1×10^{-5}	3.2×10^{-1}	3.2×10^{-1}	3.2×10^{-1}
Inhalation (^{106}Ru, ^{144}Ce)[b]						
Total Body	3.4×10^{-3}	6.7×10^{-3}	6.7×10^{-3}	2.6×10^{1}	5.2×10^{1}	5.2×10^{1}
Bone	1.5×10^{-2}	7.6×10^{-2}	7.6×10^{-2}	1.2×10^{2}	6.0×10^{2}	6.0×10^{2}
Lungs	8.0×10^{-2}	1.1×10^{-1}	1.1×10^{-1}	6.3×10^{2}	9.0×10^{2}	9.0×10^{2}
Thyroid	9.0×10^{-5}	9.1×10^{-5}	9.1×10^{-5}	6.9×10^{-1}	6.9×10^{-1}	6.9×10^{-1}
GI-LLI	3.8×10^{-3}	3.8×10^{-3}	3.8×10^{-3}	2.9×10^{1}	3.0×10^{1}	3.0×10^{1}
Ground Deposition (^{137}Cs)[b]						
All	4.0×10^{-3}	4.0×10^{-3}	1.2×10^{-1}	2.1×10^{1}	2.1×10^{1}	6.2×10^{2}
Ingestion (^{137}Cs, ^{90}Sr)[b] (vegetables and milk)[c]						
Total Body	3.4×10^{-2}	5.2×10^{-2}	8.6×10^{-2}	1.5×10^{2}	2.4×10^{2}	3.4×10^{2}
Bone	2.5×10^{-2}	5.4×10^{-2}	1.7×10^{-1}	1.2×10^{2}	2.5×10^{2}	5.9×10^{2}
Lungs	1.5×10^{-2}	1.9×10^{-2}	1.9×10^{-2}	6.0×10^{1}	7.6×10^{1}	7.9×10^{1}
Thyroid	1.7×10^{-2}	1.8×10^{-2}	2.0×10^{-2}	6.2×10^{1}	6.6×10^{1}	7.3×10^{1}
GI-LLI	3.1×10^{-2}	3.1×10^{-2}	3.4×10^{-2}	1.1×10^{2}	1.1×10^{2}	1.2×10^{2}
Totals from all Pathways						
Total Body	4.1×10^{-2}	6.3×10^{-2}	2.1×10^{-1}	2.0×10^{2}	3.1×10^{2}	1.0×10^{3}
Bone	4.4×10^{-2}	1.3×10^{-1}	3.7×10^{-1}	2.6×10^{2}	8.7×10^{2}	1.8×10^{3}
Lungs	9.9×10^{-2}	1.3×10^{-1}	2.5×10^{-1}	7.1×10^{2}	1.0×10^{3}	1.6×10^{3}
Thyroid	2.1×10^{-2}	2.2×10^{-2}	1.4×10^{-1}	8.4×10^{1}	8.8×10^{1}	6.9×10^{2}
GI-LLI	3.9×10^{-2}	3.9×10^{-2}	1.6×10^{-1}	1.6×10^{2}	1.6×10^{2}	7.7×10^{2}

(a) Doses are given for an acute release; see footnotes Table 5.8 for definitions.
(b) Primary radionuclides contributing to dose.
(c) Ingestion doses are provided assuming no administrative controls on local food products. The dose from this pathway could be reduced or eliminated through proper controls on farm products.

TABLE 5.11. Potential Radiation Dose to Members of the General Public, H-Cell Solvent Fire (Accident 3)

Pathway, Dominant Nuclide and Organ	Doses from Immediate and Long-Term Exposure[a]					
	Maximum Individual (rem)			Population (man-rem)		
	1-yr Dose/ 1-yr Accumulation	70-yr Dose/ 1-yr Accumulation	70-yr Dose/ 70-yr Accumulation	1-yr Dose/ 1-yr Accumulation	70-yr Dose/ 1-yr Accumulation	70-yr Dose/ 70-yr Accumulation
Air Submersion (^{95}Nb, ^{95}Zr)[b]						
All	2.5×10^{-6}	2.5×10^{-6}	2.5×10^{-6}	2.4×10^{-2}	2.4×10^{-2}	2.4×10^{-2}
Inhalation (^{106}Ru, ^{144}Ce)[b]						
Total Body	1.9×10^{-4}	7.3×10^{-4}	7.3×10^{-4}	1.8×10^{0}	7.0×10^{0}	7.0×10^{0}
Bone	2.0×10^{-3}	1.2×10^{-2}	1.2×10^{-2}	1.9×10^{1}	1.2×10^{2}	1.2×10^{2}
Lungs	1.2×10^{-2}	1.7×10^{-2}	1.7×10^{-2}	1.1×10^{2}	1.6×10^{2}	1.6×10^{2}
Thyroid	2.2×10^{-5}	2.2×10^{-5}	2.2×10^{-5}	2.0×10^{-1}	2.0×10^{-1}	2.0×10^{-1}
GI-LLI	5.5×10^{-4}	5.5×10^{-4}	5.5×10^{-4}	5.3×10^{0}	5.3×10^{0}	5.3×10^{0}
Ground Deposition (^{137}Cs, ^{106}Ru)[b]						
All	1.5×10^{-4}	1.5×10^{-4}	1.9×10^{-3}	9.3×10^{-1}	9.3×10^{-1}	1.2×10^{1}
Ingestion (^{90}Sr)[b] (vegetables and milk)[c]						
Total Body	2.2×10^{-3}	3.4×10^{-3}	1.2×10^{-2}	1.1×10^{1}	1.6×10^{1}	4.7×10^{1}
Bone	8.7×10^{-4}	4.2×10^{-3}	3.7×10^{-2}	4.4×10^{0}	2.1×10^{1}	1.3×10^{2}
Lungs	1.8×10^{-3}	1.9×10^{-3}	1.9×10^{-3}	8.0×10^{0}	8.6×10^{0}	8.6×10^{0}
Thyroid	2.8×10^{-3}	2.9×10^{-3}	2.9×10^{-3}	1.3×10^{1}	1.3×10^{1}	1.3×10^{1}
GI-LLI	4.4×10^{-3}	4.5×10^{-3}	5.2×10^{-3}	1.8×10^{1}	1.9×10^{1}	2.1×10^{1}
Totals from all Pathways						
Total Body	2.5×10^{-3}	4.3×10^{-3}	1.5×10^{-2}	1.4×10^{1}	2.4×10^{1}	6.6×10^{1}
Bone	3.0×10^{-3}	1.6×10^{-2}	5.1×10^{-2}	2.4×10^{1}	1.4×10^{2}	2.6×10^{2}
Lungs	1.4×10^{-2}	1.9×10^{-2}	2.1×10^{-2}	1.2×10^{2}	1.7×10^{2}	1.8×10^{2}
Thyroid	3.0×10^{-3}	3.1×10^{-3}	4.8×10^{-3}	1.4×10^{1}	1.4×10^{1}	2.5×10^{1}
GI-LLI	5.1×10^{-3}	5.2×10^{-3}	7.6×10^{-3}	2.4×10^{1}	2.5×10^{1}	3.8×10^{1}

(a) Doses are given for an acute release; see footnotes Table 5.8 for definitions.
(b) Primary radionuclides contributing to dose.
(c) Ingestion doses are provided assuming no administrative controls on local food products. The dose from this pathway could be reduced or eliminated through proper controls on farm products.

TABLE 5.12. Potential Radiation Dose to Members of the General Public, F-Cell Explosion (Accident 4)

Pathway, Dominant Nuclide and Organ	Doses from Immediate and Long-Term Exposure[a]					
	Maximum Individual (rem)			Population (man-rem)		
	1-yr Dose/ 1-yr Accumulation	70-yr Dose/ 1-yr Accumulation	70-yr Dose/ 70-yr Accumulation	1-yr Dose/ 1-yr Accumulation	70-yr Dose/ 1-yr Accumulation	70-yr Dose/ 70-yr Accumulation
Air Submersion (^{106}Ru, ^{95}Nb)[b]						
All	1.5×10^{-6}	1.5×10^{-6}	1.5×10^{-6}	1.3×10^{-2}	1.3×10^{-2}	1.3×10^{-2}
Inhalation (^{106}Ru)[b]						
Total Body	7.5×10^{-5}	1.3×10^{-4}	1.3×10^{-4}	6.5×10^{-1}	1.1×10^{0}	1.1×10^{0}
Bone	7.3×10^{-4}	1.5×10^{-3}	1.5×10^{-3}	6.4×10^{0}	1.3×10^{1}	1.3×10^{1}
Lungs	1.3×10^{-2}	1.9×10^{-2}	1.9×10^{-2}	1.2×10^{2}	1.7×10^{2}	1.7×10^{2}
Thyroid	5.9×10^{-6}	5.9×10^{-6}	5.9×10^{-6}	5.2×10^{-2}	5.2×10^{-2}	5.2×10^{-2}
GI-LLI	6.3×10^{-4}	6.3×10^{-4}	6.3×10^{-4}	5.5×10^{0}	5.5×10^{0}	5.5×10^{0}
Ground Deposition (^{106}Ru, ^{137}Cs)[b]						
All	8.2×10^{-5}	8.2×10^{-5}	2.2×10^{-4}	4.8×10^{-1}	4.8×10^{-1}	1.3×10^{0}
Ingestion (^{90}Sr, ^{3}H, ^{106}Ru)[b] (vegetables and milk)[c]						
Total Body	2.3×10^{-2}	2.5×10^{-2}	2.6×10^{-2}	9.5×10^{1}	1.0×10^{2}	1.1×10^{2}
Bone	2.1×10^{-4}	7.9×10^{-4}	6.6×10^{-3}	8.4×10^{-1}	3.3×10^{0}	2.2×10^{1}
Lungs	2.3×10^{-2}	2.4×10^{-2}	2.4×10^{-2}	9.5×10^{1}	9.9×10^{1}	9.9×10^{1}
Thyroid	2.3×10^{-2}	2.4×10^{-2}	2.4×10^{-2}	9.5×10^{1}	9.9×10^{1}	9.9×10^{1}
GI-LLI	2.8×10^{-2}	2.9×10^{-2}	2.9×10^{-2}	1.1×10^{2}	1.1×10^{2}	1.1×10^{2}
Totals from all Pathways						
Total Body	2.3×10^{-2}	2.5×10^{-2}	2.6×10^{-2}	9.6×10^{1}	1.0×10^{2}	1.1×10^{2}
Bone	1.0×10^{-3}	2.4×10^{-3}	8.3×10^{-3}	7.7×10^{0}	1.7×10^{1}	3.6×10^{1}
Lungs	3.6×10^{-2}	4.3×10^{-2}	4.3×10^{-2}	2.2×10^{2}	2.7×10^{2}	2.7×10^{2}
Thyroid	2.3×10^{-2}	2.4×10^{-2}	2.4×10^{-2}	9.6×10^{1}	1.0×10^{2}	1.0×10^{2}
GI-LLI	2.9×10^{-2}	3.0×10^{-2}	3.0×10^{-2}	1.2×10^{2}	1.2×10^{2}	1.2×10^{2}

(a) Doses are given for an acute release; see footnotes Table 5.8 for definitions.
(b) Primary radionuclides contributing to dose.
(c) Ingestion doses are provided assuming no administrative controls on local food products. The dose from this pathway could be reduced or eliminated through proper controls on farm products.

TABLE 5.13. Potential Radiation Dose to Members of the General Public, Criticality in Process Cell (Accident 5)

Pathway, Dominant Nuclide and Organ	Doses from Immediate and Long-Term Exposure[a]					
	Maximum Individual (rem)			Population (man-rem)		
	1-yr Dose/ 1-yr Accumulation	70-yr Dose/ 1-yr Accumulation	70-yr Dose/ 70-yr Accumulation	1-yr Dose/ 1-yr Accumulation	70-yr Dose/ 1-yr Accumulation	70-yr Dose/ 70-yr Accumulation
Air Submersion (^{137}Cs from ^{137}Xe)[b]						
All	8.1×10^{-4}	8.1×10^{-4}	8.1×10^{-4}	4.8×10^{-1}	4.8×10^{-1}	4.8×10^{-1}
Inhalation (^{137}Cs from ^{137}Xe)[b]						
Total Body	1.0×10^{-4}	1.0×10^{-4}	1.0×10^{-4}	3.3×10^{-1}	3.3×10^{-1}	3.3×10^{-1}
Bone	2.1×10^{-3}	2.1×10^{-3}	2.1×10^{-3}	8.4×10^{0}	8.4×10^{0}	8.4×10^{0}
Lungs	2.1×10^{-3}	2.1×10^{-3}	2.1×10^{-3}	6.4×10^{0}	6.4×10^{0}	6.4×10^{0}
Thyroid	1.4×10^{-2}	1.4×10^{-2}	1.4×10^{-2}	3.8×10^{1}	3.8×10^{1}	3.8×10^{1}
GI-LLI	1.5×10^{-4}	1.5×10^{-4}	1.5×10^{-4}	5.3×10^{-1}	5.3×10^{-1}	5.3×10^{-1}
Ground Deposition (^{134}I, ^{133}I)[b]						
All	2.3×10^{-4}	2.3×10^{-4}	2.5×10^{-4}	6.3×10^{-1}	6.3×10^{-1}	6.8×10^{-1}
Ingestion (^{131}I, ^{89}Sr)[b] (vegetables and milk)[c]						
Total Body	3.7×10^{-4}	3.9×10^{-4}	3.9×10^{-4}	5.5×10^{-1}	6.0×10^{-1}	6.0×10^{-1}
Bone	2.1×10^{-3}	2.6×10^{-3}	2.6×10^{-3}	3.9×10^{0}	4.7×10^{0}	4.7×10^{0}
Lungs	5.3×10^{-7}	9.9×10^{-7}	1.1×10^{-6}	1.4×10^{-3}	2.5×10^{-3}	2.7×10^{-3}
Thyroid	1.7×10^{-1}	1.7×10^{-1}	1.7×10^{-1}	2.5×10^{2}	2.6×10^{2}	1.6×10^{2}
GI-LLI	9.9×10^{-4}	9.9×10^{-4}	9.9×10^{-4}	1.3×10^{0}	1.3×10^{0}	1.3×10^{0}
Totals from all Pathways						
Total Body	1.5×10^{-3}	1.5×10^{-3}	1.6×10^{-3}	2.0×10^{0}	2.0×10^{0}	2.1×10^{0}
Bone	5.2×10^{-3}	5.7×10^{-3}	5.8×10^{-3}	1.3×10^{1}	1.4×10^{1}	1.4×10^{1}
Lungs	3.1×10^{-3}	3.1×10^{-3}	3.2×10^{-3}	7.5×10^{0}	7.5×10^{0}	7.6×10^{0}
Thyroid	1.9×10^{-1}	1.9×10^{-1}	1.9×10^{-1}	2.9×10^{2}	3.0×10^{2}	2.0×10^{2}
GI-LLI	2.2×10^{-3}	2.2×10^{-3}	2.2×10^{-3}	2.9×10^{0}	2.9×10^{0}	3.0×10^{0}

(a) Doses are given for an acute release; see footnotes Table 5.8 for definitions.
(b) Primary radionuclides contributing to dose.
(c) Ingestion doses are provided assuming no administrative controls on local food products. The dose from this pathway could be reduced or eliminated through proper controls on farm products.

Dose consequences from a potential uranium fire in a dissolver (Table 5.11) generally rank second in severity. For purposes of comparison, the dose to the offsite maximum individual is less than the permissible quarterly dose for persons routinely employed in radiation-related work. The first-year critical organ dose to the maximum individual (2.1×10^{-2} rem—thyroid) would be approximately 100 times higher than the dose from normal PUREX/UO_3 operations (2.8×10^{-4} rem—thyroid).

The other three accidents result in minor offsite doses to the maximum individual and the general public (Tables 5.11, 5.12, and 5.13).

The radiation dose to man from ingestion, inhalation, or external exposure to specified quantities of radionuclides were calculated using standard procedures designed to assure that dose is not underestimated (see Appendix C). The relationship of dose to "health effects" is not well defined. Although the dose rate is low, the population exposed is large and the resulting population dose is large. The uncertainties involved in using health effects data from high dose and high dose rate exposures to estimate the effects for low doses and low dose rates are discussed in Appendix C. Because of these uncertainties, the relationship between low radiation exposures and health effects is estimated and is expressed as a range of values. The lower end of the range may be considered more appropriate for comparison with the estimated risks from other industrial technologies. The upper range may be more appropriate for radiation protection considerations.[a] The estimated health effects from routine operation of the PUREX/UO_3 plants, from the potential worst case operating accident at the PUREX plant and from natural background are compared in Table 5.14. The radiological health effects data include the estimated present generation fatal cancers and genetic effects in future generations (see Table C.2, Appendix C).

TABLE 5.14. Comparison of Health Effects from Routine Operation and Potential Operating Accidents for PUREX/UO_3 Operations[a]

	Total Body Dose	Health Effects
Background Radiation	4.2×10^4 man-rem/yr[b]	4–33
Routine PUREX/UO_3 Operations[c]	1.8×10^2 man-rem[d]	<1
Worst Case Operating Accident		
(no mitigation)	9.7×10^1 man-rem[e]	<1
(with mitigation)	2.8×10^1 man-rem[e]	essentially zero

(a) The range of 100–800 health effects per 1×10^6 man-rem for total-body exposure (see Appendix C) was used to estimate health effects.
(b) Assumes a 1990 population of 417,000 and an annual background radiation rate of 100 mrem/yr.
(c) For the alternatives of either constructing a new fuel processing plant at Hanford or processing fuel at SRP, the health effects from routine operations are estimated to be less than one. It is estimated that between 0 and 3 health effects would result from the dose to the general public and crew from routine transport of N-Reactor fuel to SRP.
(d) This dose assumes a 16-yr release and 70-yr accumulation.
(e) This dose assumes a 70-yr accumulation.

5.1.4.4 Impacts of Natural Force Accidents

Recent studies have been performed to evaluate the resistance of the PUREX plant to earthquake, wind and tornado, floods, snow loads, and stresses to foundations. These studies show that of the natural forces evaluated, only a seismic event or a tornado has the potential to disrupt operation.

(a) The lower end of the range is more representative of actual risks. The upper end of the range is more a conservative estimate of risk, and therefore suitable for radiation protection standards and guidelines.

Seismic analyses evaluated the potential effects on the PUREX plant for both the 0.10 g Hanford Regional Historical Earthquake and the 0.25 g Safe Shutdown Earthquake. These analyses indicate that the PUREX facility would be damaged by ground accelerations of 0.10 g or greater (Blume et al. 1976a,b; 1977; 1981a,b). It was determined that in the event of a damaging earthquake, the potential sources for major radionuclide releases would be from a uranium metal fire in a dissolver or a solvent fire in the cells. As indicated in Table 5.15 upgrading seismic resistance of the fire suppression system, and the drown tanks to ensure that the system is accessible and functional in the event of a damaging earthquake would significantly reduce the potential dose to the maximum individual. Based on the results of the seismic analysis, the Department of Energy has determined that these upgrades would be made prior to operation of the PUREX facilities.

The potential dose to the maximum individual resulting from tornado damage is shown in Table 5.15. Since the potential dose is small and the probability of a damaging tornado is extremely low (six chances in a million for any given year, USERDA 1975, p. II.3-E-23), no upgrades to mitigate tornado damage at the PUREX facility are considered necessary.

5.1.4.5 Postulated Transportation Accidents

Onsite transportation of irradiated N-Reactor fuel, plutonium dioxide, and uranyl nitrate hexahydrate is required for PUREX/UO_3 operations. The uranium oxide (UO_3) product is shipped offsite. Even though accidents involving these onsite shipments are highly unlikely, an estimate has been made of what is considered to be the worst accident that could occur.

Onsite Irradiated Fuel Shipment Accident. This postulated accident assumes that a loaded N-Reactor fuel cask car is involved in a collision with a petroleum fuel transport truck at the rail crossing near the northwest corner of the 200 East Area. The total weight of car, cask, irradiated fuel, and water is approximately 182,000 kg (400,000 lb) making it unlikely that a broadside impact by the truck would overturn the rail car, but the impact could cause derailment which could then be followed by overturning of the cask. Forces resulting from the cask overturning, plus the weight of the lid, and the weight of fuel (2,700 kg or 6,000 lb) in the cask were estimated to be great enough to cause at least one of the lid hasps to fail, with the result that the lid would open and some of the fuel elements spill to the ground (RHO 1979).

For the purpose of this accident analysis, the assumption is made that some of the fuel elements would burn as the result of loss of water from the car well and cask followed by immersion in burning gasoline or diesel fuel from the truck. Also, 90 kg (0.1 ton) of the fuel is assumed to burn in 1 hour before the fire is extinguished. Radionuclides would be released directly into the environment at the scene of the collision.

Based on assumptions of radionuclide source term, particle sizes of the radionuclide oxides formed in the fire, rates of suspension and dispersion of the particles in the thermal plume, meteorological conditions and other variables, estimates of radiation doses were made (RHO 1979). The dose to the maximum individual (offsite) is approximately 2 rem (lungs) which is less than the 5 rem designated as limits set by the Federal government for radiation workers (DOE 5480.1A). An accident of this magnitude would have serious consequences onsite including higher doses to onsite personnel and significant land contamination. Source terms for this accident are presented in Appendix B, Section B.2.6.

Administrative controls make the occurrence of this accident extremely unlikely. Present controls regulate train speeds at rail crossings, and require fuel transport trucks to stop at all rail crossings. Also traffic is stopped at all rail crossings during rail transport of N-Reactor fuel. A collision with a truck not carrying petroleum fuels has a far less chance of causing the fuel elements to burn and would cause an appreciably smaller release (RHO 1979, p III-54). With enforcement of controls, this accident is not credible. Even without administrative controls the probability of any accident involving the transportation of irradiated N-Reactor fuel to PUREX is low. The probability of occurrence of an accident of the type described above is even lower. The probability that this accident will occur is estimated by multiplying the probability that the cask car will be involved in an accident (8×10^{-5} per shipment) by the probability that the accident will involve fire (0.016 per shipment) (Dennis 1978) and the probability that the fire will last one hour (0.2 per shipment) (Dennis 1978). This yields a maximum frequency for this accident of 2.6×10^{-7} per shipment or one accident in about 4 million shipments.

TABLE 5.15. Lifetime Dose to the Maximum Individual Due to Postulated Natural Forces Accidents Compared to Dose from Normal Operations

Affected Organ	Resulting from Seismic Damage: Without Upgrades (rem)	Resulting from Seismic Damage: With Upgrades (rem)	Resulting from Tornado Damage, Without Upgrades (rem)	Normal PUREX/UO_3 Operations 16-yr Release 70-yr Accumulation
Total Body	36	5.0	1	2.2×10^{-3}
Bone	190	55	4	7.4×10^{-3}
Lung	65	17	1	6.3×10^{-4}

Onsite PuO_2 Shipment Accident. Plutonium oxide shipments onsite are conducted with great care. The probability of an accident is very low. Double-canned plutonium dioxide is shipped onsite by truck in a Department of Transportation approved container. This shipping is conducted under controlled conditions with extensive supervision and security precautions. Nuclear criticality safety is maintained by safe geometry of the containers.

A plutonium oxide shipment is very unlikely to be involved in an accident of the magnitude described for N-Reactor fuel. Convoy transport minimizes the chance of interference of other vehicles. In the analysis presented in DOE/EIS-0046 (USDOE 1980a, Section 7.4.1), it was determined that no credible PuO_2 release from this type of accident could occur; therefore, there would be no consequences.

Onsite UNH Shipment Accident. UNH has been shipped at the rate of about 133 shipments per year for seventeen years (2261 shipments). Only one minor accident with a small spill of UNH has occurred during these shipments. The upper bound on the probability of an accident is 5.2×10^{-4} per shipment, or one accident in 1740 shipments. Radioactivity levels of UNH are very low. Large quantities of UNH would have to enter the body and be retained there to result in an appreciable radiation exposure. No accident mechanisms can be foreseen that would produce the conditions that would be required for these large accumulations of UNH to occur.

Offsite UO_3 Shipment Accident. Uranium oxide powder is loaded into hoppers at the UO_3 Plant. Ten hoppers are secured on a flatbed railcar, which is then transported offsite. The railcar becomes part of a freight train and is delivered to National Lead, Fernald, Ohio.

Sandia (1978) has estimated freight train accident rates. "Accident" as used in their analysis includes events associated with the operation or movement of trains, locomotives, or cars that result in railroad equipment, track, or roadbed damage in excess of $750. Using this definition of accident, the freight train accident rate is 1×10^{-5} accident per mile.

Uranium oxide would be shipped a total of 230,400 km/yr (143,000 mi/yr in 60 separate shipments). The accident rate for freight trains traveling this distance is 1.4/yr. About 12 cars on the average are involved in any derailment. Derailments account for over 80 percent of the accidents and this proportion can be used to estimate the accident rate of the railcar carrying the UO_3. This rate is 0.07/yr, 3.0×10^{-3} per shipment or one accident in 335 shipments. Less than 10 percent of these accidents would be expected to release any UO_3 from the hoppers. Even if an accident to the railcar did occur and the UO_3 were spilled, no radiological consequences are expected. A recent study of the risks of transporting uranium ore concentrates (which are primarily UO_3) found that no public consequences would result in a severe accident that released several thousand pounds of UO_3 (Geffen 1981).

5.1.4.6 Impacts of Transporting Special Nuclear Materials Offsite

The special nuclear materials extracted from processing of irradiated fuels are shipped to various locations in the country to be used for national defense and research purposes.

The environmental consequences from transportation of plutonium oxide resulting from the operation of the PUREX plant would be bracketed by those addressed in the U.S. Nuclear Regulatory Commission Final Environmental Statement on the Transport of Radioactive Material by Air and Other Modes (USNRC 1977) and in a DOE report, The Environmental Aspects of Commercial Radioactive Waste Management (USDOE 1980a). Transport of plutonium is an ongoing operation, independent of the operation of the PUREX plant. Plutonium oxide from previous production campaigns is presently stored in the Z-Plant and is shipped offsite as needed. Therefore the consequences will not be re-examined in detail here.

In the analysis performed by NRC, several serious accidents were postulated and the release of radioactive material was assumed. However, the consequences of most events were determined to be not severe. The most serious postulated accident results in one early fatality and exposure of 60 persons to significant levels of radiation. The probability of such an event was estimated to be less than 3×10^{-9}/yr for shipping rates in 1975 and is expected to decrease further due to more stringent shipping requirements which have been initiated or are planned (see USNRC 1977 for detailed discussion).

5.1.4.7 Historical Accidents

Accidents, or abnormal operations, are defined as events which result from the malfunction of systems, improper operating conditions or operator error. A variety of accidents have occurred during the 17 operational years of the PUREX plant, UO_3 plant, and Z-Plant[a] which have resulted in radiological and nonradiological impacts both onsite and offsite. As described in Section 5.1.4, the worst case potential accident was modeled after an accident which actually occurred at the PUREX plant when it was operating in 1963. The radiological impacts of these accidents to the general public have been insignificant; the exposure of PUREX plant workers has been low as described below.

Accidents or abnormal operations which have occurred at Hanford can be grouped into six categories (defined in Appendix B):

- breach of containment
- confinement barrier failure, compromise or circumvention
- uncontrolled chemical reactions
- nuclear safety compromise
- extrinsic occurrences affecting plant operation
- industrial hazards.

A number of fuel processing accidents involving workers and nuclear radiation have been historically recorded at the Hanford Site (Hawkins 1980a). No major accidents have occurred in the PUREX facility and the historical data are mentioned only as examples of past accidents.

In over 30 years of Hanford fuel processing operations (REDOX, PUREX, etc.), only four fuel processing employees have received more than the maximum permissible body burden of plutonium, primarily from inhalation. Of these four employees, two received between 1 and 2 body burdens, one received between 2 and 3 body burdens, and one received between 10 and 15 body burdens of plutonium. There have been no clinically diagnosed effects from these exposures.

During the early years of fuel processing at Hanford in the period spanning the REDOX process and the early years of the PUREX process, occasional problems were encountered with release of radioactive particulate matter from the tall (61 m) stacks. These were overcome by design and operational procedure modifications. Sand or deepbed fiberglass filters were installed in the exhaust systems (see Section 3.1.2.1) to remove small radioactive particles. Silver reactors (see Section A.1.5.4) were installed and fuels were cooled for a longer period before processing to reduce ^{131}I releases. Ammonia-bearing streams were rerouted to minimize the formation of ammonium nitrate deposits on the wall of the main stack, which scavenged radioactive materials from the gas streams, and lead to subsequent release of the contaminated ammonium nitrate. Equipment to wash down the interior stack wall were installed, and routine flushing prevented accumulation of ammonium nitrate deposits.

(a) Z-Plant is no longer operating and will not be operated to convert plutonium nitrate to plutonium oxide, because the plutonium oxide conversion system will be included in the PUREX Plant.

5.1.4.8 Other Postulated Accidents

In determining the accidents chosen as most likely accidents, a variety of situations was postulated. Personnel exposures and environmental impacts were then estimated based on past experience of similar events and the overall understanding of PUREX-related operations.

Postulated accidents were put into the same six categories as in Section 5.1.4.7, namely: breach of containment; confinement barrier failure, compromise or circumvention; uncontrolled chemical reactions; nuclear safety compromise; extrinsic occurrences; and industrial hazards. Tables B.1-B.3 in Appendix B present the accidents, or abnormal operations, considered (Hawkins 1980a).

5.1.4.9 Nonradiological Accidents

Normal operation of the PUREX and UO_3 facilities may result in lost work days, injuries, and fatalities from accidents. Statistical data compiled by the National Safety Council for similar facilities project approximately 4 cases per year involving lost work-days from accidents for the combined PUREX/UO_3 work force of 382 (National Safety Council 1980a). The projected death rate for this same type work force, based on chemical and allied industry statistics, would be 0.019 deaths per year (National Safety Council 1980b). These adverse impacts may be reduced somewhat because historically, accidents, injuries, and fatalities in the nuclear industry have been below national averages for industry in general.

Since the PUREX process uses substantial quantities of industrial chemicals (see Section 5.7) the potential exists for those chemicals to be involved in a transportation accident either onsite or offsite. The risk to the public is no greater than from any significant industrial chemical user. No accidents could be identified which would provide any significant nonradiological consequences to the general public.

5.1.4.10 Safeguards and Security

The Safeguards and Security program for the PUREX plant is specifically designed to prevent the loss, theft or diversion of nuclear materials; to protect classified information and to protect against damage, theft, loss or other harm to government property. The Safeguards and Security function includes: physical security, nuclear material control and accountability, and emergency preparedness.

The Safeguards and Security program is an integrated plan intended to prevent a breach of security. Furthermore, the program is designed such that the consequences of a security breach would be minimized.

5.1.5 Unavoidable Adverse Impacts

The PUREX proposed operations would expose workers to normal industrial accidents, to radiation doses comparable to previous experience, and possibly some of them to exposure to hazardous chemicals. These unavoidable impacts, though adverse, are all within accepted industrial operation limits, and are comparable to normal industrial accident experience.

Operation of PUREX would require the moderate consumption of some nonrenewable resources, none of which are considered scarce, and would also result in the generation of high-level waste which must be properly managed. The adverse impacts of storage of high-level waste were earlier shown to be acceptable (USDOE 1980b).

Finally, a small increase in radiation exposure of the general population would be associated with ongoing PUREX operation. In general, the unavoidable adverse impacts would be few in number and limited in extent.

5.2 ALTERNATIVES TO PROPOSED ACTION

Environmental consequences from adoption of three reasonable alternatives to the proposed action, operation of the PUREX/UO_3 facilities at the Hanford Site, are described in this section. As described in Chapter 3.0, the alternatives are: 1) construct a new PUREX plant at Hanford, 2) ship irradiated fuel offsite for processing, and 3) no action, defined as the continuation of present action.

5.2.1 Construct a New Fuel Processing Plant at Hanford

This section discusses the environmental consequences that can be expected if the alternative of constructing a new PUREX fuel processing plant at Hanford using current technology were adopted (see Section 3.2). Since the new plant is conceptual, no detailed design or details of operation are currently available. The following is a discussion of the environmental consequences of this alternative and a comparison of the consequences with those of the proposed action.

5.2.1.1 Potential Reduction of Environmental Consequences

Constructing a new processing plant at the Hanford Site (described earlier in Section 3.2) could reduce certain kinds of environmental impacts, primarily by reducing the effluents. The potential reductions are, however, not large and would not significantly reduce the already low impacts resulting from a resumption of PUREX/UO_3 operations as described in Section 5.1. Radiological impacts from accidents at a new fuel processing plant are expected to be essentially identical to those analyzed for the proposed action (Section 5.1.4.3).

Extensive research and development efforts could reduce ^{85}Kr, ^{14}C, ^{131}I and ^{3}H emissions to lower levels. It has been shown (Mellinger 1980) that the practice of collection of ^{85}Kr could lead to increased occupational doses as well as the possibility of accidental release from stored inventories. A conclusion of this study is that it makes little difference to the magnitude of the world population dose whether ^{85}Kr is captured and stored or routinely released to the atmosphere.

If the ^{85}Kr from a new plant were captured and stored and the ^{14}C, ^{129}I, and ^{131}I emissions to air were reduced to technically achievable levels, the dose to the maximum individual and the general public would be as shown in Table 5.16. These values should be compared to the values given in Table 5.4 for the proposed action. The reduction in dose from the capture of ^{85}Kr, ^{14}C, ^{129}I and ^{131}I is approximately one order of magnitude for most cases; however, the dose from either alternative is not significant when compared to the natural background dose of approximately 100 mrem. The dose to the maximum individual for the critical organ (thyroid) based on a 16-year release, 70-year accumulation is 20 mrem for the proposed action and 1.3 mrem for the new plant. There is essentially no difference of any consequence in these numbers when compared to the 70 year natural dose accumulation of 7000 mrem. The population dose shows similar results for the 16-year release, 70-year accumulation case. Dose for the critical organ (thyroid) for the proposed action is 1800 man-rem and 110 man-rem for the new plant. Although the dose to the critical organ (thyroid) decreases, the dose to the lung and GI tract for the maximum individual will increase slightly since, in the new plant design, the ^{3}H is discharged to the atmosphere rather than to the cribs as is the present practice (compare Tables 5.4 and 5.16). At present there is no known technology to reduce ^{3}H levels.

A new plant could be designed to withstand the higher seismic stresses specified in current standards (0.25 g maximum horizontal ground acceleration versus the estimated ability of the existing PUREX plant to withstand 0.10 g). The potential for an earthquake of this magnitude (i.e, 0.25 g) at the Hanford Site is extremely low.

5.2.1.2 Occupational Accident Impacts

Construction of a new fuel processing plant would be expected to result in approximately 135 lost workdays per year from industrial type accidents and injuries during the peak construction years, in line with construction experience (National Safety Council 1980a). This type of accident is essentially absent from the proposed PUREX/UO_3

TABLE 5.16. Potential Radiation Dose to Members of the General Public from Routine Releases from a New PUREX Plant at the Hanford Site, 3000 MT/yr Processing Rate

Alternative 1 - Construct a New PUREX Plant at Hanford Site

Pathway, Dominant Nuclide and Organ	Doses from Immediate and Long-Term Exposure[a]					
	Maximum Individual (rem)			Population (man-rem)[c]		
	1-yr Release/ 1-yr Accumulation	1-yr Release/ 70-yr Accumulation	16-yr Release/ 70-yr Accumulation	1-yr Release/ 1-yr Accumulation	1-yr Release/ 70-yr Accumulation	16-yr Release/ 70-yr Accumulation
Air Submersion (^{85}Kr)[b]						
All	3.3×10^{-6}	3.3×10^{-6}	5.3×10^{-5}	3.8×10^{-1}	3.8×10^{-1}	6.1×10^{0}
Inhalation (^{90}Sr, ^{239}Pu)[b]						
Total Body	5.0×10^{-6}	5.2×10^{-6}	8.4×10^{-5}	8.1×10^{-1}	8.4×10^{-1}	1.3×10^{1}
Bone	3.7×10^{-8}	4.0×10^{-8}	6.4×10^{-7}	5.9×10^{-3}	6.4×10^{-3}	1.0×10^{-1}
Lung	5.0×10^{-6}	5.3×10^{-6}	8.4×10^{-5}	8.1×10^{-1}	8.4×10^{-1}	1.3×10^{1}
Thyroid	5.1×10^{-6}	5.3×10^{-6}	8.4×10^{-5}	8.1×10^{-1}	8.4×10^{-1}	1.4×10^{1}
GI-LLI	2.7×10^{-8}	2.7×10^{-8}	4.4×10^{-7}	4.4×10^{-3}	4.4×10^{-3}	7.0×10^{-2}
Ground Deposition (^{129}I)[b]						
All	2.0×10^{-8}	2.0×10^{-8}	1.3×10^{-6}	2.1×10^{-3}	2.1×10^{-3}	1.4×10^{-1}
Ingestion (^{90}Sr, ^{129}I)[b]						
Total Body	5.3×10^{-5}	5.5×10^{-5}	8.8×10^{-4}	3.8×10^{0}	4.0×10^{0}	6.4×10^{1}
Bone	3.7×10^{-8}	4.3×10^{-8}	8.3×10^{-7}	2.8×10^{-3}	3.3×10^{-3}	6.2×10^{-2}
Lung	5.3×10^{-5}	5.5×10^{-5}	8.8×10^{-4}	3.8×10^{0}	4.0×10^{0}	6.4×10^{1}
Thyroid	5.6×10^{-5}	6.0×10^{-5}	1.2×10^{-3}	4.2×10^{0}	4.5×10^{0}	8.7×10^{1}
GI-LLI	5.4×10^{-5}	5.6×10^{-5}	8.9×10^{-4}	3.9×10^{0}	4.0×10^{0}	6.4×10^{1}
Totals From All Pathways						
Total Body	6.1×10^{-5}	6.4×10^{-5}	1.0×10^{-3}	5.0×10^{0}	5.2×10^{0}	8.3×10^{1}
Bone	3.4×10^{-6}	3.4×10^{-6}	5.6×10^{-5}	3.9×10^{-1}	3.9×10^{-1}	6.4×10^{0}
Lung	6.1×10^{-5}	6.4×10^{-5}	1.0×10^{-3}	5.0×10^{0}	5.2×10^{0}	8.3×10^{1}
Thyroid	6.4×10^{-5}	6.9×10^{-5}	1.3×10^{-3}	5.4×10^{0}	5.7×10^{0}	1.2×10^{2}
GI-LLI	5.7×10^{-5}	5.9×10^{-5}	9.4×10^{-4}	4.3×10^{0}	4.4×10^{0}	7.0×10^{1}

(a) All doses are given for chronic releases; see footnotes Table 5.4 for definitions.
(b) Primary radionuclides contributing to dose.
(c) The population dose is for an estimated 1990 population of 417,000. All local population doses in this EIS are based on this population distribution within an 80-km (50-mile) radius from the Hanford Meteorological Station located at about the center of the Hanford Site.

facilities operation. In addition, the projected death rate from this same type of work would be 1.4 deaths per year during peak construction years (National Safety Council 1980b).

The design of a totally new plant would incorporate the experience of 17 years of operation of the PUREX plant and this could be anticipated to minimize accident-susceptible design features. In addition, incorporation of current safety standards and improved safety and processing equipment should reduce the number and severity of occupational accidents.

5.2.1.3 Unavoidable Adverse Impacts

The building of a new plant would be accompanied by impacts from noise, fugitive dust, accidents and injuries, etc. and, depending on when this and other construction in the area takes place, socioeconomic impacts upon the surrounding communities (see Section 5.3.2). An additional commitment of natural resources including concrete, steel, copper, zinc, aluminum, lumber and water (see Section 3.2.2) would be required. Energy in the form of propane, diesel fuel, gasoline and electricity would also be required. A new plant would require approximately 40 ha (100 acres) for the facilities and an additional 60 ha (150 acres) for support facilities. The new plant would most likely be located in an area already committed to processing activities, and no major site-related impacts are judged likely. These items are quantified in Section 3.2.2. These resources required are only a small fraction of current national supply for these materials and would have little effect on the national level. None of the materials are considered critical or in short supply at the present time. Water and chemical resource requirements for operating the new plant would be essentially identical to the proposed action case (see Section 5.7). A rather significant unavoidable adverse impact would be the eventual need to decontaminate and decommission both the existing PUREX/UO_3 facilities and the new processing facilities, if constructed.

The capital costs to implement this alternative would be high; as indicated in Section 3.2.2, the estimated cost for construction of a new PUREX plant employing existing state-of-the-art technology would be about $1.5 billion (1981 dollars) plus $270 million for construction of new storage facilties, with little significant benefit to be obtained in reducing environmental impact or in overall improvement in the process operations.

5.2.2 Processing Fuel Offsite

The candidate site for offsite processing is assumed to be the DOE Savannah River Plant (SRP) near Aiken, South Carolina. Significant plant modifications would be required at SRP to process N-Reactor fuel as discussed in Section 3.3. The PUREX process is also used at SRP and the environmental impacts from processing would be similar to those incurred from processing at Hanford. The greater population surrounding the SRP increases the expected population dose. The biological and radiological transport paths at SRP are more direct than at Hanford due to the presence of surface water and the greater biological productivity of the area.

Adoption of this alternative would change the environmental consequences in the following ways:

- Any environmental impacts of fuel processing would be transferred from the Hanford Site to the alternative site. These impacts are essentially the same as those that would be expected at Hanford.
- This alternative introduces impacts associated with conventional traffic accidents, consumption of fuels and associated materials, and increased transportation.
- The waste products from fuel processing would be disposed of at SRP (essentially the same quantity as at Hanford).
- Fission products that would have been released at Hanford during processing would be released at SRP.
- There would be some small construction impacts and resource commitments from the fabrication of suitable shipping casks.

- Construction and modification of the SRP facility and associated upgrades would be required (see Section 3.3).

- Radiation dose to the population would be increased because of exposure along the shipping route.

- New waste storage tanks would be required at SRP (similar tanks would be required for processing at Hanford).

The estimated consequences (dose) of shipping irradiated fuel to SRP for processing are discussed in the next two sections.

5.2.2.1 Processing Impacts at SRP

Using methods similar to those utilized for the dose calculation at Hanford (Appendix C and Napier 1981), certain critical parameters were modified to better reflect the physical situation at SRP. Annual average unit concentration ($\overline{X}/Q'$) and maximum individual definitions were obtained from USERDA 1977b and the population estimates were obtained from USDOE 1978b.

SRP has a direct release to local surface waters as outlined in USDOE 1979b. This reference was used to estimate average dilution factors, decay time to maximum individual, and travel time for exposure to the general public. USDOE 1979b also provided the necessary information for estimates of the local crops and ingestion characteristics. Values for liquid pathway were applied only to a limited downstream population of 50,000 persons. Since source term information was not readily available at SRP, source terms equivalent to those at Hanford were used (Hawkins 1980a), based on the similarities of processes.

Doses calculated from the above assumptions are presented in Table 5.17. In comparison to the Hanford results, the population doses from air submersion and inhalation at SRP, while still insignificant, are about two to sixty times higher. This is due to the higher projected population (660,000 versus 417,000),[a] more direct pathway, and to the distribution of people closer to SRP than to the Hanford site. Doses from crop ingestion are also greater and the addition of fish and drinking water pathways increases the dose to both the maximum individual and the general population.

The dose to the critical organ (thyroid) of the maximum individual for a 16-year release, 70-year accumulation is 20 mrem for processing at Hanford and 46 mrem at SRP. Although the dose at SRP is projected to be higher, the numbers are small when compared to the 7000 mrem dose accumulation (70 years) from natural background sources.

The population dose shows similar results for the 16 year release, 70-year accumulation case. Dose for the critical organ (thyroid) for Hanford is 1.8×10^3 man-rem and 4.6×10^3 man-rem (thyroid) for processing at SRP.

5.2.2.2 Transportation Impacts

Transportation of irradiated N-Reactor fuel to an offsite processing plant would introduce an additional environmental impact which onsite processing (proposed action) does not introduce. The question of domestic transportation of spent fuel is considered at some length in a report by USDOE (1979a). Spent fuel has been shipped in the United States for over 30 years. Massive, heavily-shielded shipping casks have been employed for both truck and rail transport of high-burnup (long exposure in the nuclear reactor) fuel from current generation reactors. (Most of this commercial reactor fuel has burnups vastly greater than short-time exposure N-Reactor fuel, and radiation and heat-removal problems are accordingly much more severe.) These shipments have not resulted in accidents or incidents that were accompanied by significant releases of radioactive material (ONWI 1980).

(a) SRP population figures were only available for 1980. Hanford's population is based on a 1990 projection. Population doses are expected to increase slightly for SRP 1990 population.

TABLE 5.17. Potential Radiation Doses to Members of the General Public from Routine Releases from Processing 3000 MT/yr of N-Reactor Fuel at SRP

Alternative 2 - Processing Irradiated Fuel at SRP

Pathway, Dominant Nuclide and Organ	Doses from Immediate and Long-Term Exposure[a]					
	Maximum Individual (rem)			Population (man-rem)[c]		
	1-yr Release/ 1-yr Accumulation	1-yr Release/ 70-yr Accumulation	16-yr Release/ 70-yr Accumulation	1-yr Release/ 1-yr Accumulation	1-yr Release/ 70-yr Accumulation	16-yr Release/ 70-yr Accumulation
Air Submersion (^{85}Kr)[b]						
All	7.3×10^{-5}	7.3×10^{-5}	1.2×10^{-3}	1.4×10^{1}	1.4×10^{1}	2.2×10^{2}
Inhalation (^{90}Sr, ^{239}Pu)[b]						
Total Body	1.1×10^{-5}	1.5×10^{-5}	2.3×10^{-4}	2.9×10^{0}	3.8×10^{0}	6.0×10^{1}
Bone	1.1×10^{-6}	5.1×10^{-5}	7.8×10^{-4}	3.0×10^{-1}	1.3×10^{1}	2.0×10^{2}
Lung	1.5×10^{-5}	2.7×10^{-5}	4.4×10^{-4}	3.8×10^{0}	7.1×10^{0}	1.1×10^{2}
Thyroid	1.6×10^{-5}	1.9×10^{-5}	3.0×10^{-4}	4.1×10^{0}	4.9×10^{0}	7.9×10^{1}
GI-LLI	2.0×10^{-8}	2.0×10^{-8}	3.2×10^{-7}	5.1×10^{-3}	5.2×10^{-3}	8.3×10^{-2}
Ground Deposition (^{129}I)[b]						
All	2.0×10^{-7}	2.0×10^{-7}	2.0×10^{-4}	3.7×10^{-2}	3.7×10^{-2}	3.7×10^{1}
Ingestion of Farm Crops (^{90}Sr, ^{129}I)[b]						
Total Body	5.0×10^{-5}	5.6×10^{-5}	1.3×10^{-3}	5.6×10^{0}	6.2×10^{0}	1.4×10^{2}
Bone	5.4×10^{-6}	1.9×10^{-5}	1.7×10^{-3}	6.3×10^{-1}	2.1×10^{0}	1.7×10^{2}
Lung	4.9×10^{-5}	5.1×10^{-5}	8.1×10^{-4}	5.5×10^{0}	5.7×10^{0}	9.1×10^{1}
Thyroid	7.1×10^{-4}	1.1×10^{-3}	3.7×10^{-2}	7.5×10^{1}	1.2×10^{2}	4.3×10^{3}
GI-LLI	4.9×10^{-5}	5.1×10^{-5}	8.5×10^{-4}	5.5×10^{0}	5.7×10^{0}	9.5×10^{1}
External Exposure to Contaminated Water and Sediment (^{137}Cs, ^{60}Co, ^{106}Ru)[b]						
All	3.1×10^{-5}	3.1×10^{-5}	7.2×10^{-3}	1.5×10^{-2}	1.5×10^{-2}	3.6×10^{0}
Ingestion of Fish and Drinking Water (^{3}H, ^{137}Cs)[b]						
Total Body	1.2×10^{-3}	2.1×10^{-3}	3.3×10^{-2}	6.3×10^{0}	1.1×10^{1}	1.8×10^{2}
Bone	1.2×10^{-3}	2.5×10^{-3}	4.0×10^{-2}	6.5×10^{0}	1.5×10^{1}	2.4×10^{2}
Lung	2.0×10^{-4}	3.6×10^{-4}	5.8×10^{-3}	1.2×10^{0}	2.0×10^{0}	3.2×10^{1}
Thyroid	4.7×10^{-6}	4.9×10^{-6}	7.9×10^{-5}	2.3×10^{-1}	2.4×10^{-1}	3.9×10^{0}
GI-LLI	5.2×10^{-4}	5.2×10^{-4}	8.4×10^{-3}	1.6×10^{1}	1.6×10^{1}	2.5×10^{2}
Totals From All Pathways						
Total Body	1.4×10^{-3}	2.3×10^{-3}	4.3×10^{-2}	2.9×10^{1}	3.5×10^{1}	6.4×10^{2}
Bone	1.3×10^{-3}	2.7×10^{-3}	5.1×10^{-2}	2.1×10^{1}	4.4×10^{1}	8.7×10^{2}
Lung	3.7×10^{-4}	5.4×10^{-4}	1.6×10^{-2}	2.5×10^{1}	2.9×10^{1}	4.9×10^{2}
Thyroid	8.3×10^{-4}	1.2×10^{-3}	4.6×10^{-2}	9.3×10^{1}	1.4×10^{2}	4.6×10^{3}
GI-LLI	6.7×10^{-4}	6.8×10^{-4}	1.8×10^{-2}	3.6×10^{1}	3.6×10^{1}	6.1×10^{2}

(a) All doses are given for chronic releases; see footnotes Table 5.4 for definitions.
(b) Primary radionuclides contributing to dose.
(c) The population dose is for an estimated 1980 population of 660,000.

Shipments of spent fuel are subject to radiation dose rate limitations set by the U.S. Department of Transportation; in closed vehicles the maximum allowable radiation level at the external surface of the vehicle is 200 mr/hr, and 2 mr/hr at any normally occupied position in the vehicle. In actual experience, the corresponding radiation levels of transported fuel have rarely exceeded 60 mr/hr and 0.2 mr/hr, respectively (USDOE 1979a). N-Reactor fuel would be expected to produce only a fraction of these high-burnup fuel radiation levels, with negligible environmental consequences.

Estimated annual radiation doses to members of the general public and crew from routine transport of N-Reactor fuel to the SRP are presented in Table 5.18, based on assumed shipment of about 700 MT/year. If the shipping rate were to be increased, the resulting dose impacts would be essentially linear with the shipping rate; i.e., doubling the shipping rate would double the dose values given in Table 5.18. Additional casks (and associated materials) would be required as discussed in Section 3.3.3. If a higher shipping rate were to be adopted, the DOE would perform an appropriate environmental review. Cask types and other parameters are discussed in Section 3.3.2. Doses are presented for shipment of irradiated fuel either by rail or by truck. If the irradiated fuel were shipped by both modes, radiation doses would be proportional to the quantity shipped in each. In Table 5.18 doses are given for shipping crew members (e.g., truck drivers or brakemen); for persons on the shipping line, either highway travelers or train passengers;[a] for persons residing near the shipping line, along either the highway or railroad right-of-way[b], and for persons in truck stops or rail switch yards (stops). An additional category, the maximum individual, is defined as a person who is regularly exposed to every shipment. This could be someone living within 15 m of the main shipping line from Hanford.

Casks for both rail and truck transport of spent fuel are designed and constructed to retain shielding and containment integrity in virtually all transport accident situations. Several transportation accidents have been reported in which Type B truck casks[c] have been subjected to severe physical conditions, including fire. None of these accidents have resulted in a release of package contents or in excessive external radiation levels (USDOE 1979a).

An accident assuming a severe impact followed by fire has been analyzed for truck and rail casks carrying N-Reactor fuel offsite. This differs greatly from the onsite transportation accident (5.1.4.5) since totally different cask concepts are used for the two different types of transportation. (Onsite transportation is controlled administratively to a degree that is not possible for offsite transportation, and is restricted to locations that are well isolated from the general public. Use of offsite shipping casks for onsite transportation is not practical since it would require significant construction at the fuel storage basins for cask loadout facilities, and also at PUREX for cask receiving and unloading.)

An individual in the vicinity of such an accident could be exposed to escaping radioactive gases and volatile fission products as well as to direct radiation. Since accidents can happen in cities, suburbs, or open country, population doses were analyzed in each of these possibilities. Potential radiation doses to individuals and population groups from a severe transport accident are given in Table 5.19 for both truck and rail options. Doses are given for radionuclide inventories derived for relatively high burnup N-Reactor Mark 1A fuel. Doses would be slightly smaller for casks containing lower burnup Mark IV fuel. Doses are higher for rail accidents because of the larger fuel inventory per cask and the increased forces that could potentially be involved.

In summary, since the same mode of transport and level of technology applied to shipment of commercial reactor oxide fuels would be applicable to N-Reactor fuels, the probability of this type of accident would be comparable. The calculated probability (based on number of shipments—10,000 for truck and 1000 for train—and 4,800 km traveled per shipment) of an accident which would result in the consequences described above is 1.5×10^{-5} for a truck accident and 8.2×10^{-6} for a rail accident.

(a) On-line population.
(b) Off-line population.
(c) Casks capable of withstanding the hypothetical accident conditions specified in Appendix B, 10 CFR Part 71, Packaging of Radioactive Material for Transport and Transportation Under Certain Conditions (10 CFR 1980).

TABLE 5.18. Estimated Radiation Doses to the General Public and Crew From Routine Offsite Transport of N-Reactor Fuel

Exposed Group	Annual Radiation Dose	
	Truck Shipments	Rail Shipment
Crew	2.3×10^2 man-rem	NC[a]
On-line Population	1.8×10^2 man-rem	2.6×10^{-1} man-rem
Off-line Population	4.0×10^2 man-rem	6.9×10^0 man-rem
During Stops	2.5×10^3 man-rem	4.1×10^3 man-rem
Totals	3.3×10^3 man-rem	4.1×10^3 man-rem
Maximum Individual	3.0×10^{-3} rem	3.0×10^{-4} rem

(a) Not calculated, essentially zero due to isolation of crew from casks.

TABLE 5.19. Potential Radiation Doses from a Severe Accident in Transporting N-Reactor Fuel

Exposed Group	Annual Radiation Dose	
	Truck Shipments	Rail Shipment
Urban Population	1150 man-rem	2300 man-rem
Suburban Populations	150 man-rem	350 man-rem
Rural Population	1.2 man-rem	2.9 man-rem
Maximum Individual	0.76 rem	0.9 rem

5.2.3 No Action (Continue Present Action)

If environmental impacts are defined as changes from the baseline, i.e., from the existing situation, then by definition the no-action alternative has no incremental environmental impacts. However, to continue the present action indefinitely without change is impractical; with time, certain subalternatives must be adopted.

For example, the continued maintenance of the PUREX plant in standby would necessitate the storage of all irradiated fuel discharged from N-Reactor. Currently, existing storage basins are being employed, but if this alternative is adopted, additional storage capacity must be provided. This would require significant capital investment in additional storage capacity, and postpone the time of decision for the proposed action or one of the other alternatives. Under this alternative, the total dose to the public would remain at essentially the 0.01 to 0.5 mrem/year currently regarded as the average dose to a member of the general public (USERDA 1975, p. III.1-14; Houston and Blumer 1980a,b). The dose from continued storage of irradiated fuel has been calculated and shown to be insignificant (Table 5.20).

5.3 SOCIOECONOMIC EFFECTS

This section discusses the availability of labor and the effects on the community brought about by the project development, the indirect effects of secondary employment in surrounding communities, and the physical and institutional requirements to supply the needs of additional workers coming into the region. Indirect effects are generally proportional to the direct effects unless the influx of manpower puts significant stress upon local support resources and institutions. Increases of less than 5 percent of the present work force have been determined to have little effect on an existing community (USDHUD 1976). No significant immigration is expected as a result of resumption of the PUREX/UO_3 operations.

TABLE 5.20. Potential Doses to Members of the General Public from the No-Action Option at Hanford

Alternative 3 - Continue Present Action

Pathway, Dominant Nuclide and Organ	Doses from Immediate and Long-Term Exposure[a]					
	Maximum Individual (rem)			Population (man-rem)[c]		
	1-yr Release/ 1-yr Accumulation	1-yr Release/ 70-yr Accumulation	16-yr Release/ 70-yr Accumulation	1-yr Release/ 1-yr Accumulation	1-yr Release/ 70-yr Accumulation	16-yr Release/ 70-yr Accumulation
Air Submersion (^{85}Kr)[b]						
All	4.1×10^{-10}	4.1×10^{-10}	6.6×10^{-9}	4.6×10^{-5}	4.6×10^{-5}	7.4×10^{-4}
Inhalation (^{90}Sr, ^{3}H)[b]						
Total Body	4.9×10^{-11}	1.1×10^{-9}	1.7×10^{-8}	7.8×10^{-6}	1.7×10^{-4}	2.7×10^{-3}
Bone	6.8×10^{-10}	1.6×10^{-8}	2.5×10^{-7}	1.1×10^{-4}	2.6×10^{-3}	4.1×10^{-2}
Lung	1.0×10^{-11}	1.0×10^{-11}	1.7×10^{-10}	1.6×10^{-6}	1.7×10^{-6}	2.7×10^{-5}
Thyroid	3.7×10^{-12}	4.1×10^{-12}	6.5×10^{-11}	5.9×10^{-7}	6.5×10^{-7}	1.0×10^{-5}
GI-LLI	7.8×10^{-12}	7.8×10^{-12}	1.3×10^{-10}	1.2×10^{-6}	1.2×10^{-6}	2.0×10^{-5}
Ground Deposition (^{129}I)[b]						
All	1.5×10^{-14}	1.5×10^{-14}	1.5×10^{-11}	1.6×10^{-9}	1.5×10^{-9}	1.6×10^{-6}
Ingestion (^{90}Sr)[b]						
Total Body	2.2×10^{-10}	4.4×10^{-9}	8.4×10^{-7}	1.5×10^{-5}	3.0×10^{-4}	5.0×10^{-2}
Bone	6.9×10^{-10}	1.6×10^{-8}	3.1×10^{-6}	4.8×10^{-5}	1.1×10^{-3}	1.9×10^{-1}
Lung	3.3×10^{-11}	3.4×10^{-11}	5.5×10^{-10}	2.4×10^{-6}	2.5×10^{-6}	3.9×10^{-5}
Thyroid	1.2×10^{-10}	1.6×10^{-10}	6.9×10^{-9}	1.1×10^{-5}	1.6×10^{-5}	5.9×10^{-4}
GI-LLI	3.5×10^{-10}	3.6×10^{-10}	7.0×10^{-8}	2.5×10^{-5}	2.5×10^{-5}	4.1×10^{-3}
Totals From All Pathways						
Total Body	6.8×10^{-10}	5.9×10^{-9}	8.6×10^{-7}	6.9×10^{-5}	5.2×10^{-4}	5.3×10^{-2}
Bone	1.8×10^{-9}	3.2×10^{-8}	3.4×10^{-6}	2.0×10^{-4}	3.7×10^{-3}	2.3×10^{-1}
Lung	4.5×10^{-10}	4.5×10^{-10}	7.3×10^{-9}	5.0×10^{-5}	5.0×10^{-5}	8.1×10^{-4}
Thyroid	5.3×10^{-10}	5.7×10^{-10}	1.4×10^{-8}	5.8×10^{-5}	6.3×10^{-5}	1.3×10^{-3}
GI-LLI	7.7×10^{-10}	7.8×10^{-10}	7.7×10^{-8}	7.2×10^{-5}	7.2×10^{-5}	4.9×10^{-3}

(a) All doses given are for chronic releases; see footnotes Table 5.4 for definitions.
(b) Primary radionuclides contributing to dose.
(c) The population dose is for an estimated 1990 population of 417,000. All local population doses in this EIS are based on this population distribution within an 80-km (50-mile) radius from the Hanford Meteorological Station located at about the center of the Hanford Site.

5.3.1 Socioeconomic Effects of the Proposed Action

Activities to maintain the facility in a safe standby condition and to maintain operational viability have been underway since the plants were placed in standby in 1972. Upgrading continues at an increasing rate. Changes to the effluent systems and other safety and security modifications will have required approximately 400 to 500 man-years of effort by 1984. Work being done at the facilities is contracted to a local construction company which provides the necessary manpower. This effort, spread over 12 years has required a small influx of temporary workers; however, their number is not of such a magnitude as to cause socioeconomic concern. Essentially no increase in the total number of workers would occur because of resumption of operation of the PUREX/UO_3 facilities.

PUREX startup is proposed for fiscal 1984. Work force requirements for operation of PUREX/UO_3 facilities are given in Table 5.21. These may be compared to the no-action alternative requirements also listed in Table 5.21. Training of PUREX operators has been in progress and would intensify 1 year prior to hot startup. Sequential operation of the PUREX and UO_3 plants would permit drawing upon this same pool of trained and experienced manpower.

The manpower levels identified for this action and the proportion of construction and technical personnel brought into the area for project purposes are not of sufficient magnitude to measurably affect the surrounding community. The permanent workforce required for operation of plant facilities constitutes less than 1 percent of the area's total employment, and less than 3 percent of those employed at the Hanford Site. Implementation of the proposed action does not involve the dedication of additional land or facilities and has no effect on community land use plans.

5.3.2 Socioeconomic Effects of the Alternatives to the Proposed Action

Three alternatives to the proposed action (construct a new fuel processing plant, offsite processing, and no action) have been examined. These alternatives are discussed below.

5.3.2.1 Construction of a New Fuel Processing Plant

In contrast to the other alternatives under consideration, a decision to construct a new fuel processing plant at Hanford could have a significant effect on the local economy, housing availability, the provision of health and public services, and the ability of primary Hanford feeder roads to handle increased traffic to and from the Hanford Site. Determination of the level of socioeconomic costs and benefits of the project construction is largely dependent upon the degree to which manpower requirements conflict with other major construction projects on and off the Hanford Site. The ability of the surrounding communities to absorb the extra labor force of a still uncertain magnitude is discussed as follows. Based on an early date of 1990 set for a new plant startup, the construction schedule, depicted in Figure 3.9, and the manpower schedule, given in Figure 3.10, establish mid-1984 or 1985 as an early date to begin construction. Under this timetable a conflict could occur with the manpower requirements for other major Hanford projects, most notably the proposed Puget Power Consortium construction of two nuclear power plants at Hanford. (Construction on the first of two nuclear power plants could begin as early as 1983, the second 1 year later.) The sequencing of Puget Power's escalating labor demands with that of the new fuel processing plant (reaching a peak labor force of 2700 for the new processing plant by 1987 or 1988) would in large part determine demands on the locally available labor supply and the size of the influx of temporary and permanent construction laborers into the area. Under certain conditions, the employment impact of construction of a new fuel processing plant may be significant and beneficial.

5.3.2.2 Processing Fuel Offsite

Shipping fuel offsite for processing requires a Hanford work force of approximately 10 to 15 operators to prepare and ship the fuel. This work force can easily be met out of the area's existing labor pool. The length of employment would extend 8 to 12 months beyond shutdown of N-Reactor. No modification to the existing Hanford road pattern is envisioned. Any other potential modifications of Hanford Site facilities related to implementation of this alternative would not involve a major construction effort and would not significantly affect the local communities.

TABLE 5.21. Estimated Manpower Requirements

	Proposed Action		No Action	
	PUREX	UO_3	PUREX	UO_3
Radiation Zone Workers	220	36	80	0
Nonradiation Zone Workers	100	12	100	4
Transportation/Shipping Workers	10	4	Not Required	Not Required
TOTAL	330	52	180	4

SOURCE: Hawkins 1981c.

5.3.2.3 No Action

Implementation of the no-action alternative (continuation of present action) would entail maintenance of the PUREX/UO_3 plant facilities in standby. Manpower requirements (Table 5.17) would not involve any change from present levels. Continuation of the no-action alternative would require eventual dedication of additional land and facilities at Hanford for irradiated fuel storage. Any socioeconomic effects of this alternative would arise out of the impact that a decision not to operate PUREX would have on storage facilities for N-Reactor fuel. Minor construction impacts would occur related to the storage basin construction. No major socioeconomic effect is expected.

5.4 CUMULATIVE EFFECTS

A review was made of the existing and planned future facilities at the Hanford Site to determine any cumulative or synergistic effects resulting from the proposed resumption of operation of the PUREX/UO_3 facilities at Hanford or from the other alternatives. The most significant potential for cumulative effect would result in the socioeconomic area if the alternative of construction of a new fuel processing facility were to be adopted. As detailed in this EIS (Sections 4.4 and 5.3) the socioeconomic impacts are expected to be small and within the ability of the community to absorb the impact. The actual impact is highly dependent on the schedule and the magnitude of other construction projects planned at or near the Hanford Site for the next decade. The present uncertain status of nuclear power development at the Hanford site is likely to be the most important factor in determining the magnitude of any potential impact.

Radiological impacts for current and planned nuclear facilities are also small and well within applicable standards (Sula 1981). PUREX/UO_3 operation will cause an incremental change in the levels of radionuclides and radiation attributable to Hanford operations as detailed below (Section 5.4.2); however, this increment is small and the total cumulative effect is not significant when compared to natural background radiation and is well within all applicable standards.

Nonradiological releases will also be within applicable standards and due to the isolation of the area and the large distance to the site boundary, the incremental impacts on air quality from PUREX/UO_3 will be well within ambient air quality standards for Washington State.

5.4.1 Description of Nearby Facilities

As discussed in Chapter 4, the Hanford Site is a DOE facility originally selected as a site for nuclear reactor and chemical separation activities for the production and purification of plutonium for use in nuclear weapons. A total of eight graphite-moderated reactors as well as a more recent dual-purpose reactor (N-reactor) were constructed on the site along the Columbia River. Currently, N-Reactor is the only plutonium production reactor in operation at Hanford and is the source of irradiated fuel for the PUREX/UO_3 facilities.

A number of government-owned and commercial nuclear facilities are located on the Hanford Site. Government installations include production and waste management facilities, research laboratories, and nuclear material storage areas. In addition to the N-reactor, there is presently a fast flux test facility (FFTF) which began operation in 1980. The eight original graphite-moderated reactors, formerly used for production of nuclear materials, are now retired and shut down. Commercial nuclear facilities onsite include a low-level waste burial area, and two commercial nuclear power stations that are presently under construction by WPPSS. Construction on a third station has been discontinued. Only one of these reactors is presently planned to be operational within the near future. An Exxon Nuclear Corporation fuel fabrication plant is located near the Site boundary. Research and development studies for isolation of radioactive waste in basalt formation on the Hanford Site are underway.

5.4.2 Cumulative Effects of Proposed Action and Alternatives

The total cumulative potential radiological effects from the proposed operation of the PUREX/UO_3 facilities at Hanford and from the other considered alternatives[a] are presented in Table 5.22 for the maximum individual and in Table 5.23 for population exposure. These exposures are imperceptible against the background radiation dose.

The values for the existing Hanford Site were taken from Sula (1981) and include all the facilities as described in Section 5.4.1. The doses to the maximum individual are small for all alternatives when compared to the 100 mrem/year background radiation levels from natural background and would cause no significant impact. The population doses are also small when compared to the approximate 2.9×10^6 man-rem dose from natural radiation over 70 years.

The principally known potentially significant cumulative impact is in the socioeconomic area if a new fuel processing plant were to be constructed as outlined in Section 5.3.2.1.

The major impacts for this alternative will result from competition for very similar labor skills if all planned projects in the region peak during the same period as projected for a new fuel processing facility. The sequencing of nuclear power plant construction in the area could very well overlap the new processing facility construction schedule and would result in large demands on the local labor supply and could result in an influx of temporary and permanent construction laborers into this area. The socioeconomic impact of the proposed action or the other alternatives would have little or no cumulative impact on the community.

5.5 DECONTAMINATION AND DECOMMISSIONING

The eventual decontamination and decommissioning of the existing PUREX/UO_3 facilities may require an appropriate specific environmental assessment or impact statement when that decision point is reached. However, that decision is independent of a resumption of PUREX/UO_3 operations.[b] The assessment of the environmental impacts associated with decontamination and decommissioning is not further addressed in this EIS. The current status of decontamination and decommissioning is discussed in ANSI (1975) and Cohen et al. (1977). The alternative of building a new plant at Hanford would compound the decontamination and decommissioning problem by eventually requiring two contaminated facilities to be decontaminated and decommissioned.

5.6 RELATIONSHIP BETWEEN SHORT-TERM USE OF THE ENVIRONMENT AND ENHANCEMENT OF LONG-TERM PRODUCTIVITY

The short-term use of the environment for the past operation of the PUREX/UO_3 facilities has already committed an area of the Hanford Site to long-term use. This

(a) The alternatives of processing at SRP and no action are not included since if either of these alternatives were adopted, there would be no incremental impact at Hanford.
(b) The decontamination and decommissioning is independent of a resumption of PUREX/UO_3 operation because regardless of whether the proposed action is adopted, the present facilities would still require some degree of decontamination and then decommissioning.

TABLE 5.22. Total Cumulative Radiological Impacts to the Maximum Individual From the Resumed PUREX/UO_3 Operation and Alternatives

Total From All Pathways	Maximum Individual Dose (rem)					
	Existing Hanford Site[a]		Total (Existing and Resumed PUREX/UO_3)[d]		Total (Existing and New Fuel Processing Plant)[f]	
	1-Yr Release/ 1-Yr Accumulation[b]	1-Yr Release/ 50-Yr Accumulation[c]	1-Yr Release/ 1-Yr Accumulation	1-Yr Release 70-Yr Accumulation[e]	1-Yr Release/ 1-Yr Accumulation	1-Yr Release/ 70-Yr Accumulation
Total Body	1.0×10^{-5}	1.0×10^{-4}	4.3×10^{-5}	1.4×10^{-4}	7.1×10^{-5}	1.6×10^{-4}
Bone	4.0×10^{-5}	3.9×10^{-4}	9.5×10^{-5}	4.0×10^{-4}	4.3×10^{-5}	4.2×10^{-4}
Lungs	$<1.0 \times 10^{-5}$	$<1.0 \times 10^{-5}$	4.3×10^{-5}	4.7×10^{-5}	7.1×10^{-5}	7.1×10^{-5}
Thyroid	1.6×10^{-4}	1.7×10^{-4}	4.4×10^{-4}	5.8×10^{-4}	2.0×10^{-4}	2.4×10^{-4}
GI-LLI	2.0×10^{-5}	2.0×10^{-5}	5.3×10^{-5}	5.3×10^{-5}	7.7×10^{-5}	7.9×10^{-5}

(a) Sula 1981.
(b) A 1-yr release/1-yr accumulation is the dose received in the first year from exposure in that year.
(c) A 1-yr release/50-yr accumulation is the dose received over a 50 year lifetime from exposure in the first year.
(d) Resumed PUREX/UO_3 values from Table 5.4.
(e) Values using a 70-yr accumulation base are not significantly different from using a 50-yr base.
(f) New fuel reprocessing plant values from Table 5.16.

TABLE 5.23. Total Cumulative Radiological Impacts to the Population From the Resumed PUREX/UO_3 Operation and Alternatives

Totals From All Pathways	Population Dose (man-rem)		
	Existing Hanford Site[a] 1-Yr Release/50-Yr Accumulation	Total (Existing and Resumed PUREX/UO_3)[b] 1-Yr Release/70-Yr Accumulation[c]	Total (Existing and New Fuel Processing Plant)[d] 1-Yr Release/70-Yr Accumulation
Total Body	1.2	5.9	6.4
Bone	0.9	12.9	1.3
Lungs	2.6	7.0	7.8
Thyroid	0.7	45.7	6.4
GI-LLI	3.8	7.5	8.2

(a) Value from Sula (1981) adjusted to population used in this EIS for 1990 (258,000 vs 417,000).
(b) Resumed PUREX/UO_3 values from Table 5.4 (population dose, 1-Yr Release/70-Yr Accumulation column) were added to the existing Hanford Site values to obtain the total cumulative dose.
(c) Values using a 70-yr accumulation base are not significantly different from using a 50-yr base.
(d) New fuel processing plant values from Table 5.16 (population dose, 1-Yr Release/70-Yr Accumulation column) were added to the existing Hanford Site values to obtain the total cumulative dose.

commitment effectively removed this land from contributing to the very limited natural productivity of the region and has precluded its use for non-nuclear related activities. However, the loss of this land should be put into the proper context. The Savannah River Site has also committed an area to long-term use for nuclear activities.

The Hanford Site contains 148,000 ha (570 mi^2 or 365,000 acres) in the Pasco Basin (a portion of the Columbia Plateau) which is composed of large quantities of basalt overlain by thick layers of sedimentary material. While numerous plant and animal species suited to the semi-arid environment have been noted (see Chapter 4), the productivity of naturally-occurring biota is relatively low (USERDA 1975). All of the major facilities occupy only about 6 percent of the Site; the surrounding environment is relatively unaffected by these facilities. The Savannah River site has similar land commitments, although the surrounding environment is considerably different.

The PUREX/UO_3 facilities and waste storage areas in the 200 Areas occupy only about 1.4 percent or 2,065 ha (5,100 acres) of the Site. As stated previously, past operations have removed this area from non-nuclear related use for the long-term. Current plans for operation of the PUREX/UO_3 facilities will not significantly add to this commitment of resources.

The restoration of this land to its natural or original state would be impractical and is not cost-effective from the point of view of other potential land-uses. While the continued operation of the 200 Areas, containing PUREX/UO_3 and related facilities, for waste management commits this area for a long-term use and thus eliminates it from agricultural production, the value of the facility to the national nuclear programs and the socioeconomic benefits to the region far outweigh the relatively insignificant loss from lack of biological productivity.

Future plans for the Hanford and Savannah River Sites call for their continued use as areas dedicated primarily to energy and defense activities. Thus, the use of man's environment at these sites is planned to be long-term. Nuclear-related activities will continue at these sites for the foreseeable future. Over the long-term, additional Site land may be dedicated to other nuclear or other energy facilities or activities. To partially balance this usage, some current activities will cease, possibly releasing some areas for future use. The direct net effect will probably be a slightly increased encroachment upon the environment over the long-term.

5.7 RELATIONSHIP OF PROPOSED ACTION TO LAND-USE PLANS, POLICIES, AND CONTROLS

The continued operation of the Hanford facilities, including the operation of the PUREX/UO_3 facilities discussed in this EIS, will not conflict with national, state, or local programs. Implementation of the plans set forth in this EIS will not significantly alter the lands which have already been committed by past PUREX/UO_3 operation. All of this land is currently dedicated to this use. All land is and will continue to be managed in conformance with appropriate federal regulations to assure the safety and well-being of the public.

The establishment of the National Environmental Research Park (NERP) at the Hanford Site has made available most of the land for research. Consistent with DOE's nuclear energy and research and development activities, the operating and waste management areas on the Site are specifically excluded from the NERP areas.

Archeological sites at Hanford have been discussed in Section 4.4.7. Additional information is in USERDA 1975 (p. III.3-8 and p. II.3-A-14). No archaeological sites would be affected by the proposed action or any of the alternatives.

5.8 IRREVERSIBLE AND IRRETRIEVABLE COMMITMENTS OF RESOURCES

The irreversible and irretrievable commitment of resources to the resumption of operation of the PUREX/UO_3 and associated facilities (proposed action) are: 1) land and materials for containing or storing waste products and 2) production materials such as fuels, water, and chemicals. No additional land commitments are needed for the facilities

except for additional underground double-shell tanks for interim storage of high-level liquid radioactive waste (from 6 to 27 tanks). Construction of 27 tanks would require approximately 18 ha (45 acres) of land within the 200 areas, which are already dedicated to waste management and other nuclear-related activities. No expansion of the 200 Areas would be necessary for tank construction.

Process needs for PUREX/UO_3 operations at a level of 3000 MT/yr would require steam generated by the consumption of approximately 96,000 MT/yr (105,000 tons/yr) of coal. Electrical requirements would be 27 million kWh/yr. A list of chemicals consumed by the processes is given in Table 5.24. The raw water requirement would be approximately 4.2×10^7 m^3/yr, which is approximately 0.03 percent of the 1.07×10^{11} m^3/yr average annual flow of the Columbia River at Hanford (USERDA 1975, p. II.3-13). A small volume, 1155 m^3/yr of petroleum distillates (mostly gasoline and diesel) would also be required. Small quantities of concrete and steel would also be required to maintain and upgrade the facility.

Constructing a new fuel processing plant at Hanford would require large quantities of construction materials and energy as described in Section 3.2.2. Land requirements for the new plant would be similar to those of the existing plant [approximately 40 ha (100 acres) for the facilities and an additional 60 ha (150 acres) for support facilities]. The new plant could be located in the areas already committed to processing/storage activities. Although a detailed study has not been conducted, the commitment of resources for operating it would be similar to those of the existing plant.

If the alternative of shipping the irradiated fuel offsite were adopted, consumption of resources onsite would continue at present levels until a decision to completely phase out the existing facility was made. Consumption of resources equivalent to those for operating PUREX would occur at the offsite location (Savannah River). In addition, gasoline or diesel fuel would be consumed to transport the irradiated fuel to the offsite location, and additional materials for the construction of the transportation casks would be required as detailed in Section 3.3.3. Consumption of resources at the present level would continue if the no-action alternative were selected.

TABLE 5.24. Chemical Consumption in PUREX/UO_3 Facilities, 3000 MT/yr Processing Rate

Chemical Used	Amount, MT/yr
Aluminum Nitrate	625
Ammonium Fluoride-Ammonium Nitrate	875
Cadmium Nitrate	5
Ferrous Sulfamate	41
Hydrazine	4
Hydroxylamine Nitrate	9
Nitric Acid	1000
Normal Paraffin Hydrocarbon	22
Oxalic Acid	14
Potassium Hydroxide	340
Potassium Permanganate	4
Silver Nitrate	1
Sodium Carbonate	26
Sodium Hydroxide	940
Sodium Nitrite	25
Sugar (Sucrose)	170
Sulfamic Acid	53
Sulfuric Acid	6
Tartaric Acid	3
Tributyl Phosphate	13

SOURCE: (Hawkins 1981c).

6.0 DESCRIPTION OF APPLICABLE REGULATIONS AND GUIDELINES

This chapter provides a short discussion of the guidelines and regulations that govern emissions from the PUREX/UO_3 facilities.

6.1 DOE ORDER 5480.1A, CHAPTER XI

This chapter establishes radiation protection standards and requirements for DOE and DOE contractor operations. It establishes radiation protection standards for occupationally related external and internal exposure (Table 6.1) and standards for exposure to members of the public in uncontrolled areas (Table 6.2). The chapter provides guidance on maintaining exposures to radiation at levels as low as reasonably achievable.

Concentration Guides

Concentration guides (CG's) have been developed by various national and international organizations to establish allowable upper limits of radioisotope concentrations in air and water, above natural background levels. (These are sometimes also known as Maximum Permissible Concentrations [MPC's].) These organizations have included the International Commission on Radiological Protection (ICRP), the U.S. National Council on Radiation Protection (NCRP), and the Federal Radiation Council (FRC). The CG's were derived for the most part from the standards shown in Tables 6.1 and 6.2.

DOE's predecessor agency, ERDA, adopted these CG's as Manual Chapter XI (0524), which subsequently became DOE Order 5480.1A.

The CG's (MPC's) are divided into two main categories, (Table I and Table II), the first of which for controlled areas (Table I) is applicable to radiation workers; it assumes exposure during a 40-hr work week. The second category, for uncontrolled areas (Table II), which has much lower values, is applicable to the general public, and assumes continuous exposure (168-hr week). Column 1 in each table applies to concentrations in air, while column 2 applies to water. There are different values for each radioisotope, depending on whether it is in a soluble or insoluble form. The CG's for selected radioisotopes are given in Table 6.3.

The values in Table I, Column 1 should be used in evaluating the adequacy of health protection measures against airborne radioactivity in occupied areas exposed to radiation.

The values in Table I, Column 2 are applicable to the discharge of liquid effluents to sanitary sewage systems. Drinking water concentrations in controlled areas shall be maintained within the concentration guides specified in Table II, Column 2.

The Table I, Column 2, concentration guide for discharge of liquid effluents to sanitary sewage systems are sometimes used as a simple tool to comparatively analyze the level of radioactive liquid effluents discharged to chemical sewers and other liquid waste disposal facilities in controlled areas, since effluents within the concentration guides established for sanitary sewer systems result in radiation exposure levels well below the standards set forth in the chapter. However, the chapter does not require that such discharges be within the concentration guides but rather that the radiation protection standards be met even when levels above the Table I, Column 2, levels are discharged to waste management facilities.

TABLE 6.1. Radiation Protection Standards for Occupationally-Related External and Internal Exposure

Type of Exposure	Exposure Period	Dose Equivalent (Dose or Dose Commitment)[a] (rem)
Whole body, head and trunk, gonads, lens of the eye,[b] red bone marrow, active blood-forming organs.	Year	5[c]
	Calendar Quarter	3
Unlimited areas of the skin (except hands and forearms). Other organs, tissues, and organ systems (except bone).	Year	15
	Calendar Quarter	5
Bone.	Year	30
	Calendar Quarter	10
Forearms.[d]	Year	30
	Calendar Quarter	10
Hands[d] and feet.	Year	75
	Calendar Quarter	25

(a) To meet the above dose commitment standards, operations must be conducted in such a manner that it would be unlikely that an individual would assimilate in a critical organ, by inhalation, ingestion, or absorption, a quantity of a radionuclide or mixture of radionuclides that would commit the individual to an organ dose that exceeds the limits specified in the above table.
(b) A beta exposure below a maximum energy of 700 KeV will not penetrate the lens of the eye; therefore, the applicable limit for these energies would be that for the skin (15 rem/yr).
(c) In special cases, with the approval of the Director, DOE Division of Operational and Environmental Safety, a worker may exceed 5 rem/yr, provided his or her average exposure per year since age 18 will not exceed 5 rem/yr. This does not apply to emergency situations.
(d) All reasonable effort shall be made to keep exposures of forearms and hands to the general limit for the skin.

TABLE 6.2. Radiation Protection Standards for External and Internal Exposure to Members of the Public

Type of Exposure	Annual Dose Equivalent or Dose Commitment, (rem)[a]: Based on Dose to Individuals at Points of Maximum Probable Exposure, (rem)	Annual Dose Equivalent or Dose Commitment, (rem)[a]: Based on Average Dose to a Suitable Sample of the exposed Population,[b] (rem)
Whole body, gonads, or bone marrow	0.5	0.17
Other organs	1.5	0.5

(a) In keeping with Department of Energy policy on lowest practicable exposures, exposures to the public shall be limited to as small a fraction of the respective annual dose limits as is reasonably achievable.
(b) See Paragraph 5.4, Federal Radiation Council Report No. 1, for discussion on concept of suitable sample of exposed population.

TABLE 6.3. Concentrations in Air and Water Above Natural Background, Excerpts from DOE Order 5480.1A

Element (atomic number)	Isotope, Soluble (S); Insoluble (I)			Table I Controlled Area Column 1 Air (μc/ml)	Table I Controlled Area Column 2 Water (μc/ml)	Table II Uncontrolled Area Column 1 Air (μc/ml)	Table II Uncontrolled Area Column 2 Water (μc/ml)
Carbon (6)	C	14	S	4×10^{-6}	2×10^{-2}	1×10^{-7}	8×10^{-4}
Cesium (55)	Cs	137	S	6×10^{-8}	4×10^{-4}	2×10^{-9}	2×10^{-5}
Cobalt (37)	Co	60	I	9×10^{-9}	1×10^{-3}	3×10^{-10}	3×10^{-5}
Hydrogen (1)	H	3	S	5×10^{-6}	1×10^{-1}	2×10^{-7}	3×10^{-3}
Iodine (53)	I	129	S	8×10^{-10}	5×10^{-5}	2×10^{-11}	6×10^{-8}
	I	131	S	4×10^{-9}	3×10^{-5}	1×10^{-10}	3×10^{-7}
Krypton (36)	Kr	85	Sub[a]	1×10^{-5}		3×10^{-7}	
Plutonium (94)	Pu	239	S	2×10^{-12}	1×10^{-4}	6×10^{-14}	5×10^{-6}
Ruthenium (44)	Ru	106	I	6×10^{-9}	3×10^{-4}	2×10^{-10}	1×10^{-5}
Strontium (38)	Sr	90	S	1×10^{-9}	1×10^{-5}	3×10^{-11}	3×10^{-7}
Uranium (92)	U	238	S	7×10^{-11}	1×10^{-3}	3×10^{-12}	4×10^{-5}

(a) "Sub" means that values given are for submersion in a semispherical infinite cloud of airborne materials.

6.2 40 CFR 50 (NATIONAL PRIMARY AND SECONDARY AMBIENT AIR QUALITY STANDARDS)

This regulation contains the national primary and secondary ambient air quality standards. National primary ambient air quality standards define levels of air quality judged by the EPA to be necessary to protect the public health.

National secondary ambient air quality standards define levels of air quality judged by the EPA to be necessary to protect the public welfare from any known or anticipated adverse effects of a pollutant.

Standards are for: sulfur oxides, particulates, carbon monoxide, photochemical oxidants, hydrocarbon, and nitrogen oxides.

States may establish air quality standards which are more stringent than the national standards.

6.3 40 CFR 52 (PREVENTION OF SIGNIFICANT DETERIORATION OF AIR QUALITY)

EPA regulations for the Prevention of Significant Deterioration of Air Quality (PSD) are set forth in Title 40, Code of Federal Regulations, Part 52.

These regulations require that any operation that has the potential to emit more than 250 tons/year of nitrogen oxides (NO_x) is subject to review for this pollutant. This policy was incorporated into the Clean Air Act to limit increases in clean air areas to specific increments even though the ambient air standards are being met. The PSD permit assures that the air quality will not deteriorate and that the best available control technology is being applied and that the smallest increment of pollutant is released.

The Department of Energy, Richland Operations Office, has received a PSD permit (PSD-X80-14, September 24, 1980) to operate the PUREX/UO_3 facilities. The limitations applying to PUREX are listed in Table 6.4.

TABLE 6.4. NO_x Emission Limitations

Source	Concentration Volume Percent, dry basis	kg/day	Mass Emission Rate, metric tons/year
PUREX Plant			
NO_x Absorber Exit	2.0	1160	
Main Stack	-	2250	424
Uranium Oxide Plant			
Exit of final condenser (upstream of dilution air addition)	4.0	858	50

6.4 WASHINGTON ADMINISTRATIVE CODE, TITLE 18 AND TITLE 173 (Washington State Air Pollution Control Regulations)

The Washington Air Pollution Control Regulations contain the air quality standards established to obtain and maintain the cleanest air possible, consistent with the highest and best practicable control technology.

Standards are for: suspended particulates, fluorides, sulfur oxides, carbon monoxide, ozone, and nitrogen dioxide.

7.0 LIST OF REVIEWERS AND PREPARERS

The following table indicates reviewers and preparers for this EIS.

Reviewers	Affiliation
R. M. Carosino	DOE-RL[a]
O. J. Elgert	DOE-RL
R. L. Hames	DOE-RL
G. J. Miskho	DOE-RL
J. V. Robinson	PNL[a]
M. W. Shupe	DOE-RL
M. J. Zamorski	DOE-RL

Preparers	Affiliation	Chapter/Appendix
R. M. Carosino	DOE-RL	2.0
R. A. Ewing	BCL[a]	3.1, 5.0, D
D. K. Landstrom	BCL	4.0, 5.0
K. S. Murthy	PNL	1.0. 3.1 (Project Manager)
J. K. Soldat	PNL	5.0, C
S. L. Stein	PNL	5.0, 6.0
L. A. Stout	PNL	3.1, 6.0, A, B, D
H. H. Van Tuyl	PNL	3.2, 3.3, 3.4, 3.5, 3.6
M. J. Zamorski	DOE-RL	2.0

Technical Assistance	Affiliation	Chapter/Appendix
T. L. Anderson	BCL	4.0, 5.0
J. J. Dorian	UNC[a]	3.2, 3.3, 3.4
A. R. Hawkins	RHO[a]	3.1, A, B
W. M. Hayward	RHO	3.1, A, B
L. L. Morgan	BCL	4.0
B. A. Napier	PNL	3.0, 5.0, C, E
R. C. Stupka	RHO	3.1, A, B
R. L. Walser	RHO	3.1, A, B
K. R. Yates	BCL	5.0

(a) BCL—Battelle Columbus Laboratory, Columbus, OH 43201
DOE-RL—Department of Energy, Richland Operations Office, Richland, WA 99352
PNL—Pacific Northwest Laboratory, Richland, WA 99352
RHO—Rockwell Hanford Operations, Richland, WA 99352
UNC—UNC Nuclear Industries, Richland, WA 99352

Educational backgrounds of the major contributors (preparers) and technical staff members follow in this section.

7.1 PACIFIC NORTHWEST LABORATORY

KESH S. MURTHY — Research Leader, Environmental Evaluation and Risk Assessment Section, Radiological Sciences Department,

B.S., Physics, Chemistry and Mathematics, University of Mysore, India, 1958.
B.S.Ch.E., Indian Institute of Chemical Engineers, Calcutta, India, 1966.
M.S., Environmental Engineering, University of Cincinnati, 1974.

BRUCE A. NAPIER — Research Scientist, Environmental Analysis Section, Ecological Sciences Department

B.S., Nuclear Engineering, Kansas State University, 1975
M.S., Nuclear Engineering, Kansas State University, 1977

JOSEPH K. SOLDAT — Staff Environmental Scientist, Environmental Analysis Section, Ecological Sciences Department

B.S., Chemical Engineering, University of Colorado, 1948.
Postgraduate courses in Radiological Sciences, University of Washington.

STEVEN L. STEIN — Research Scientist, Environmental and Risk Assessment Section, Radiological Sciences Department

B.S., Geology, Washington State University, 1978

LESLIE A. STOUT — Research Scientist, Environmental and Risk Assessment Section, Radiological Sciences Department

B.A., Chemistry, Oregon State University
M.S., Chemical Engineering, Oregon State University

HAROLD H. VAN TUYL — Manager, Nuclear Fuel Cycle Chemistry Section Chemical Technology Department

B.S., Chemistry, Texas A M, 1948
Several graduate courses, University of Washington Center for Graduate Studies, Richland, WA, 1948-1960

7.2 BATTELLE, COLUMBUS LABORATORIES

THOMAS L. ANDERSON — Researcher, Bio-Environmental Sciences Section

B.S., Botany, The Ohio State University

ROBERT A. EWING — Senior Research Engineer, Energy Systems and Environmental Systems Assessment Section

B.S., Chemical Engineering (1936), The Ohio State University
M.S., Chemical Engineering (1937), The Ohio State University

D. KARL LANDSTROM Principal Research Scientist, Energy and Thermal Technology Section

B.S., Physics, Massachusetts Institute of Technology
Graduate Studies at The Ohio State University, Franklin University

LAURA L. MORGAN Researcher, Economics, Planning and Policy Analysis Section

B.A., Political Science, cum laude, The Ohio State University
M.A., Economics, Indiana University

KENNETH R. YATES Principal Research Scientist, Nuclear Materials Technology Section

B.S., Physics, Westminster College
M.S., Chemical Engineering, Ohio University
Presently pursuing Doctoral Studies, Nuclear Engineering, The Ohio State University

7.3 ROCKWELL HANFORD OPERATIONS

ALBERT R. HAWKINS Manager, Environmental Reports Group

B.S., Chemical Engineering, University of Washington, 1970
M.B.A., Washington State University, 1975

RICHARD C. STUPKA Senior Engineer, Environmental Reports Group

B.S., Biology, Northern Illinois University, 1971
M.S., Vertebrate Ecology, Northern Illinois University, 1975

RONALD L. WALSER Staff Engineer, Separations Process Technology

B.S., Chemical Engineering, Oregon State University, 1961

8.0 GLOSSARY

Abbreviations, terms, definitions, and symbols directly related to PUREX/UO_3 operations are defined and explained in this section. The section is divided into two parts with the first part containing abbreviations and symbols, and the second part containing terms and definitions (including those used in special context for this study). Common terms covered adequately in standard dictionaries are not included.

8.1 ABBREVIATIONS AND SYMBOLS

Abbreviations

AEC	Atomic Energy Commission
AFR	Away From Reactor
ALARA	As Low As Reasonably Achievable[a]
ANSI	American National Standards Institute
ASHRAE	American Society of Heating, Refrigerating and Air-Conditioning Engineers
CAW	Current Acid Waste
CFR	Code of Federal Regulations
Ci	Curie[a]
DF	Decontamination Factor[a]
DOE	Department of Energy
DOT	Department of Transportation
ECMP	East Crane Maintenance Platform
EPA	Environmental Protection Agency
FSAR	Final Safety Analysis Report
HEPA	High Efficiency Particulate Air (filters)[a]
HLLW	High-Level Liquid Waste
HLW	High-Level Waste
HRHE	Hanford Regional Historical Earthquake
HVAC	Heating, Ventilation, and Air Conditioning System
ICRP	International Commission on Radiological Protection
(ℓ)	Liquid (when used in a chemical equation)
LLW	Low-Level Waste
LWR	Light Water Reactor
MCi	Megacuries (million curies)
MPC	Maximum Permissible Concentration[a]
MT	Metric Ton[a]
MW	Megawatts
NCRP	National Council on Radiation Protection and Measurement
NFS	Nuclear Fuel Services
NO_x	Nitrogen Oxides
NRC	Nuclear Regulatory Commission
P&O Gallery	Pipe and Operating Gallery
PUREX	Plutonium Uranium Extraction
SNM	Special Nuclear Material[a]
SRP	Savannah River Plant
SSE	Safe Shutdown Earthquake
TBP	Tributyl Phosphate
TLD	Thermoluminescent Dosimeter
TLV	Threshold Limit Valve
TRU	Transuranic[a]
UBC	Uniform Building Code
UNH	Uranyl Nitrate Hexahydrate
WESF	Waste Encapsulation Storage Facility

(a) Also included in Section 8.2.

Symbols

α	Alpha Radiation[a]
β	Beta Radiation[a]
γ	Gamma Radiation[a]
Q'	Release Rate of Radioactive Material, Ci/sec

8.2 GLOSSARY DEFINITIONS

Absorption:	A process in which a gas mixture is contacted with a liquid for the purpose of preferentially dissolving one or more of the gaseous components and to provide a solution of these in the liquid.
Accumulated Dose:	The total radiation dose accumulated over a stated period by individuals or populations as a result of continued exposure to radioactive materials in the environment. For example, a 70-year accumulated dose is the summation of radiation doses received from radionuclides present in the environment and in the body in each of 70 years. It represents the total dose that would be recorded by a dosimeter if one could be implanted in the body for 70 years. (See also dose commitment.)
Actinides:	A series of heavy radioactive metallic elements of increasing atomic number (Z) beginning with actinium (89) or thorium (90) through element hahnium of atomic number 105.
Activity:	A measure of the rate at which radioactive material is emitting radiation; usually given in terms of the number of nuclear disintegrations occurring in a given quantity of material over a unit of time. The special unit of activity is the curie (Ci).
Adsorption:	Adhesion of ions or molecules to the surface of liquids or solid bodies with which they come in contact, adhering to a surface.
Airborne Radioactive Material:	Radioactive particulates, mists, fumes, and/or gases in air.
ALARA:	A philosophy to maintain exposure to radiation As Low As Reasonably Achievable.
Alpha Decay:	Radioactive decay in which an alpha particle is emitted from the nucleus of an atom.
Alpha Particle:	A positively charged particle made up of two neutrons and two protons emitted by certain radionuclides.
Aqueous Phase:	In solvent extraction, the water containing layer, as differentiated from the organic phase. (Also called the Aqueous Fraction or Aqueous Stream.)
Aquifer:	A subsurface formation containing sufficient saturated permeable material to yield significant quantities of water.
Atomic Number:	The number of protons within an atomic nucleus.
Atomic Weight:	The mass of an atom relative to other atoms.

(a) Also included in Section 8.2.

Background Radiation:	The radiation in man's natural and undisturbed environment. It results from cosmic rays and from the naturally radioactive elements of the earth, including those from within the human body.
Beta Decay:	Radioactive decay in which a beta particle is emitted from the nucleus of an atom.
Beta Particle:	An electron or positron that has been emitted by an atomic nucleus during radioactive decay.
Biosphere:	The life zone of the earth, including the lower part of the atmosphere, the hydrosphere, soil, and the lithosphere to a depth of about 2 kilometers.
Blanket Assemblies:	Natural uranium fuel assemblies which are arranged around a reactor core for the purpose of absorbing excess neutrons escaping from the core.
Bottoms:	The concentrated liquid which remains after evaporation (also called Bottoms Liquor).
Campaign:	The time frame and series of events associated with a period of active or continuous operation of a facility.
Cask:	A heavily shielded shipping container for radioactive materials.
Cladding Hulls:	That part of the Zircaloy fuel cladding which is not destroyed through either the dissolution process or the shear-leach process. It is a solid, radioactive waste.
Clearwell:	An underground concrete reservoir used for the storage of filtered water.
Concentration Guide:	The average concentration of a radionuclide in air or water to which a worker or member of the general public may be continuously exposed without exceeding radiation dose standards.
Contact Maintenance:	"Hands-on" maintenance performed by direct contact of personnel with the equipment. It includes maintenance with protective equipment or clothing, such as through gloves in gloveboxes. Most nonradioactive maintenance is contact maintenance.
Corrosion Allowance:	The additional thickness of steel plate or piping, above the thickness needed for structural integrity, which takes into account the metal losses caused by corrosion over the lifetime of the equipment.
Crib:	A porous underground structure for disposal of low-level liquid wastes.
Critical:	A condition wherein a medium is capable of sustaining a nuclear chain reaction.
Critical Mass:	The mass of fissionable material that will support a self-sustaining nuclear chain reaction.
Criticality:	State of being critical; a self-sustaining neutron chain reaction (where the rates of production and loss of neutrons are exactly equal and there is no other neutron source.)

Curie (Ci):	A unit of radioactivity defined as that quantity of any radioactive nuclide which has 3.7×10^{10} disintegrations per second.
Decommissioning:	Preparations taken for retirement from active service of nuclear facilities, accompanied by the execution of programs to reduce or stabilize radioactive contamination. The objective of decommissioning is to place the facility in such a condition that future risk to public safety from the facility is within acceptable bounds.
Decontamination:	The selective removal of radioactive material from a surface or from within another material.
Decontamination Factor (DF):	The ratio of the initial concentration of an undesired material to the final concentration resulting from a treatment process. The term may also be used as a ratio of quantities.
Denitration:	The removal of nitric acid, nitro groups, or nitrogen oxides.
Design Basis Accident:	A postulated accident believed to have the most severe expected impacts on a facility. It is used as the basis for safety analysis and structural design.
Dismantling:	As a minimum, all radioactive components and materials which exceed the criteria for unrestricted release are removed from the site. In addition, nonradioactive components may be removed, structures dismantled, and the area prepared for alternative use.
Dispersion:	A process of mixing one material within a larger quantity of another. For example, the mixing of material released to the atmosphere with air causes a reduction in concentration with distance from the source.
Disposal (radioactive waste):	The disposition of materials with the intent that they will not enter man's environment in sufficient amounts to cause a significant health hazard.
Dose:	Also referred to as dose equivalent. Expressed in units of rem, implies a consistent basis for estimates of consequential health risk, regardless of rate, quantity, source, or quality of the radiation exposure.
Dose Commitment:	The dose commitment normally refers to the radiation dose received during some period of exposure (normally either the duration of an acute, accidental release of radionuclides to the environment, or for one year of a chronic release) plus the dose resulting from radionuclides deposited within the body during the exposure period. It does not include dose received because of continuing exposure to environmental contamination present after the stated exposure period ends.
Dose Rate:	The radiation dose delivered per unit time and measured, for instance, in rems per hour.
Double-Shell Slurry:	A thixotropic mixture of fine solids suspended in a viscous liquid medium. The suspended solids, primarily sodium nitrate, experience extremely long settling times, and are almost totally soluble upon dissolution.
Enrichment:	The ratio (usually expressed as a percentage) of fissile isotope to the total amount of the element (e.g., the percent of ^{235}U in uranium)

Entrainment:	The carrying of liquid droplets, gas bubbles, or fine solid particles by liquid or gaseous streams.
Environmental Surveillance:	A program to monitor changes in a surrounding region.
Evapotranspiration:	The loss of water from the ground by both evaporation from the soil and from the surfaces of vegetation.
Exposure:	A measure of the ionization produced in air by x-ray or gamma radiation. It is the sum of the electrical charges on all ions of one sign produced in air when all electrons liberated by photons in a volume element of air are completely stopped in air, divided by the mass of air in the volume element. The special unit of exposure is the roentgen.
Feed Solution:	A solution produced in the dissolution step and containing uranyl, plutonium, and neptunium nitrates. The feed solution is the input stream to solvent extraction in PUREX.
Fission:	The splitting of an atomic nucleus resulting in the release of large amounts of energy.
Fissionable Material:	Actinides capable of undergoing fission by interaction with neutrons of all energies.
Fission Product:	Any radioactive or stable nuclide resulting from nuclear fission, including both primary fisson fragments and their radioactive decay products.
Fuel Burnup:	In a fuel element, that fraction of the fissionable uranium that has been transformed during the nuclear reaction.
Fuel Element:	A rod, tube, or other form into which nuclear fuel is fabricated for use in a reactor.
Fuel, Mark I-A:	A type of N-Reactor fuel with an enrichment of 1.25%.
Fuel, Mark IV:	A type of N-Reactor fuel with an enrichment of 0.95% ^{235}U.
Fuel Processing Plant:	Plant where irradiated fuel elements are dissolved, waste materials removed, and reusable materials are segregated for reuse.
Gamma Ray:	Electromagnetic radiation, similar in nature to x-rays, emitted by the nuclei of some radioactive substances during radioactive decay.
Geometry:	Dimensions and shape of a system as they effect criticality; favorable geometry indicates the shape and size of the system is such that neutrons readily escape, improving nuclear safety.
Groundwater:	Water that exists or flows below the earth's surface (within the zone of saturation).
Half-life:	The time required for one-half of a given material to undergo physical or chemical change. The time interval required for one-half of any quantity of identical radioactive atoms to undergo radioactive decay. Also known as radioactive half-life, half-time.
Half-life Effective:	The time required for a radionuclide contained in a biological system, such as a man or an animal, to reduce its radioactivity by half as a combined result of radioactive decay and biological elimination.

Heel:	The amount left in a vessel or container after the bulk of the contents has been removed.
High-Level Liquid Waste (HLLW):	The aqueous waste resulting from operation of the first cycle solvent extraction system (or its equivalent) in a facility for processing irradiated reactor fuels as well as concentrated wastes from subsequent cycles.
High-Level Waste (HLW):	In this document this term refers to high-level liquid waste, cladding waste, solvent wash waste, and concentrated bottoms liquor.
Heavy Metal:	Metals with atomic numbers of 90 and greater.
High Efficiency Particulate Air (HEPA) Filters	A filter capable of removing from an air stream at least 99.97 percent of the radioactive particulate material that is greater than 0.3 microns in diameter.
Hydrology:	The science dealing with the waters of the earth, their distribution on the surface and underground, and the cycle involving precipitation, flow to the seas, evaporation, etc.
Intrusion Alarm:	A means of detecting intrusions of individuals into a protected area using an electromechanical, electro-optical, electronic, mechanical or similar device with a visible or audible alarm signal.
Ion Exchange:	A chemical process involving the selective absorption or desorption of various chemical ions in a solution onto a solid material, usually a plastic or resin. The process is used to separate and purify chemicals, such as fission products from plutonium.
Isotope:	One of two or more atoms having the same atomic number but different mass number.
Man-rem:	A measure of collective radiation dose (see Population Dose).
Maximum Individual:	The hypothetical individual whose location and habits tend to maximize his radiation dose, resulting in a dose higher than that received by other more typical individuals in the general population. In this document the maximum individual is located offsite.
Maximum Permissible Concentration (MPC):	An accepted upper limit for the concentration of a specific radionuclide in air or water, such that occupational exposure for the working lifetime of an individual to the MPC values would not result in radiation doses exceeding the standards recommended by competent authorities.
Metathesis:	Reaction of two compounds involving the displacement and replacement of two elements, molecules, or radicals, and resulting in the formation of two new compounds.
Metric Ton (MT):	1000 kilograms, or 2205 pounds.
Moles/Liter:	Gram molecular weight of a substance contained in one liter of solution.
Monitoring:	Making measurements or observations for recognizing the status or adequacy of, or significant changes in, conditions or performance of a facility or area.
Non-Contact Cooling Water:	Cooling water which does not come in contact with radioactive material under normal operating conditions.

Normal Operating Conditions:	Operation (including startup, shutdown, and maintenance of systems) within the normal range of facility operating parameters.
Nuclear Reaction:	A reaction involving a change in an atomic nucleus, such as fission, fusion, particle capture, or radioactive decay.
Offsite:	The area surrounding the Hanford Site.
Operational Standby:	The condition where a facility is placed in a non-operating condition, but is maintained in readiness for subsequent operations.
Organic:	The term generally refers to the solvent and hydrocarbon diluent used in solvent extraction, i.e., 30 weight percent TBP in normal paraffin hydrocarbon.
Organic Phase:	In solvent extraction, the solvent (organic) containing layer, as differentiated from the aqueous phase. (Also called the Organic Fraction or Organic Stream.)
Parent Nuclide:	A radionuclide that upon disintegration yields a specified nuclide, either directly or as a later member of a radioactive decay series.
Partitioning:	The separation of one element from others; e.g., in processing operations, the separation of plutonium from uranium.
Population Dose:	(Often referred to as collective dose or collective dose equivalent.) The summation of the radiation dose (in rem) received by all individuals in a population group. Its use is principally for total body dose where it has units of man-rem (or person-rem). When the technique is extended for other organs, for example the thyroid, it is often given in units of man-thyroid-rem (person-thyroid-rem) to distinguish it from the collective total body dose.
Process Cells:	Shielded rooms housing (radioactive) processing systems.
Process Equipment:	The functional equipment items or systems associated directly with the operation of a chemical or mechanical operation.
Protective Storage:	The facility is prepared to be left in place safely for an extended period which might range from decades to centuries. Often this mode will require engineered improvements to augment the containment of contamination for the duration of protective storage.
PUREX Process:	A solvent extraction process that has been demonstrated to individually separate the uranium and plutonium from the accompanying fission products contained in the irradiated fuel.
Quality Assurance:	The systematic procedures necessary to adequately document how a particular product, process, or data were generated.
Quality Control:	The quality assurance actions that control the attributes of the material, process, component, system, or facility in accordance with predetermined quality requirements.
Rad:	A unit of absorbed dose. The energy imparted to matter by ionizing radiation per unit mass of irradiated material at the place of interest. One rad equals 0.01 joule/kilogram (100 ergs/gram) of absorbing material.

Radiation:	1) The emission and propagation of radiant energy: for instance, the emission and propagation of electromagnetic waves, or of sound and elastic waves. 2) The energy propagated through space or through a material medium: for example, energy in the form of alpha, beta, and gamma emissions from radioactive nuclei.
Radioactive Material:	Any material or combination of materials which spontaneously emits ionizing radiation and which has a specific radioactivity in excess of 2 nanocuries per gram of material (see 40 CFR 173.389(e)).
Radioactivity:	The property of certain nuclides of spontaneously emitting particles or electromagnetic radiation or of undergoing spontaneous fission. The quantity of radioactivity, usually shortenened to "activity," is the number of nuclear transformations occurring in a given quantity of material per unit time (see also Curie).
Radioactivity, Natural:	The property of radioactivity exhibited by more than fifty naturally occurring radionuclides.
Radiological Protection:	Protection against the effects of internal and external exposure to radiation and radioactive materials.
Red Oil:	Combination of metal (usually uranium) with the degradation products from a TBP-organic system in some form of an organic complex; the material is a heavy, oily substance which is explosive at temperatures above 130°C.
Rem:	A unit of dose equivalent. The dose equivalent in rem is numerically equal to the absorbed dose in rad multiplied by the Quality Factor, (Q) which varies with the type and energy of the radiation.
Repository:	A facility designed to isolate or dispose of radioactive wastes.
Remote Maintenance:	Maintenance by remote means, i.e., the operator is separated by a shielding wall from the item being maintained.
Restricted Area:	Any area to which access is controlled for protection of individuals from exposure to radiation and radioactive materials.
Rework Materials:	Materials that will be processed again.
Roentgen:	A unit of air exposure to electromagnetic radiation (gamma or x-rays). One roentgen equals 2.58×10^{-4} coulombs per kilogram of air (also see Exposure).
Salt Cake:	The damp solid formed when the liquid fraction of the high-level waste is removed through the use of an evaporation crystallizer.
Scenario:	A sequence of events, assumed to occur, which form the basis for the given result, calculation, etc.
Silver Reactor:	Equipment used for removal of the radioactive iodine; a vessel packed with an inert substrate coated with silver nitrate, through which offgases containing radioiodine must pass.

Solid Radioactive Waste:	Material that is essentially solid and dry, but may contain sorbed radioactive fluids in sufficiently small amounts as to be immobile.
Sorption:	A general term used to encompass the processes of absorption, adsorption, ion exchange, ion retardation, chemisorption, and dialysis.
Source Terms:	The quantity of radioactive material (or other pollutant) released to the environment at its point of release (source).
Sparger:	Perforated pipe or ring at the bottom of a tank through which air, steam, or gas is introduced so that the bubbling action of the fluid coming from the sparger agitates the solution in the tank.
Special Nuclear Material (SNM):	Plutonium, ^{233}U, uranium containing more than the natural abundance of the isotope ^{235}U or any material artificially enriched with the foregoing substances. SNM does not include source material.
Spike Fuel:	A fuel element whose outer cylinder is enriched to 1.25 percent ^{235}U, whose inner cylinder is enriched to 0.947 percent ^{235}U, yielding an average enrichment of 1.15 percent ^{235}U. The function of the enriched uranium is to increase the neutron flux of the system.
Stripping:	In the PUREX solvent extraction process, the transfer of product from the organic phase back into the aqueous phase.
Surveillance:	Those activities necessary to ensure that the Site remains in a safe condition (including inspection and monitoring of the Site, maintenance of access barriers to radioactive materials left on the Site, and prevention of activities on the Site that might impair these barriers).
Transuranic (TRU) Elements:	Elements with atomic number greater than 92. They include, among others, neptunium, plutonium, americium, and curium.
Trench:	A ditch used for the disposal of solid radioactive waste or low-level liquid waste.
Two Person Rule:	Procedures to assure the observation of an area containing SNM by at least two security-cleared and authorized persons who may be doing other work, but who can give an alarm in time to prevent the unauthorized removal of SNM.
Waste Immobilization:	Process of converting waste to a stable, solid and relatively insoluble form.
Waste, Low-Level Solid:	Solid waste generated in contact areas which contains small amounts of radioactivity. These wastes are placed in cardboard cartons or drums for shallow-land burial. They have greater than 200 dpm β-γ contamination per 100 cm^2 and less than 20,000 dpm α/100 cm^2.
Waste Management:	The planning, execution and surveillance of essential functions related to the control of radioactive (and nonradioactive) waste, including treatment, transportation, storage, surveillance, and isolation.
Wastes, Radioactive:	Equipment and materials (from nuclear operations) that are radioactive and have no further known use.

Waste, Primary:	Wastes that are generated as a part of the principal operation of a facility. Secondary wastes are generated from supporting operations, such as waste treatment.
Waste, Secondary:	Forms and quantities of all wastes that result from treatment of primary waste or effluents.
Waste, Solvent Wash:	The depleted solution of sodium carbonate and potassium permanganate used to wash (regenerate) the organic used in the solvent extraction process.
Waste, Transuranic:	Any waste material measured or assumed to contain more than a specified concentration of transuranic elements. Presently this concentration is 10 nanocuries of transuranics alpha activity per gram of waste.
Water Table:	The upper boundary of an unconfined aquifer below which saturated groundwater occurs. Defined by the levels at which water stands in wells that barely penetrate the aquifer.
Worst Case Processing Rate:	The processing rate which would result in the greatest dose to the public. The worst case processing rate is processing 3000 MT/yr of 180-day cooled, 12 percent ^{240}Pu irradiated N-Reactor fuel.

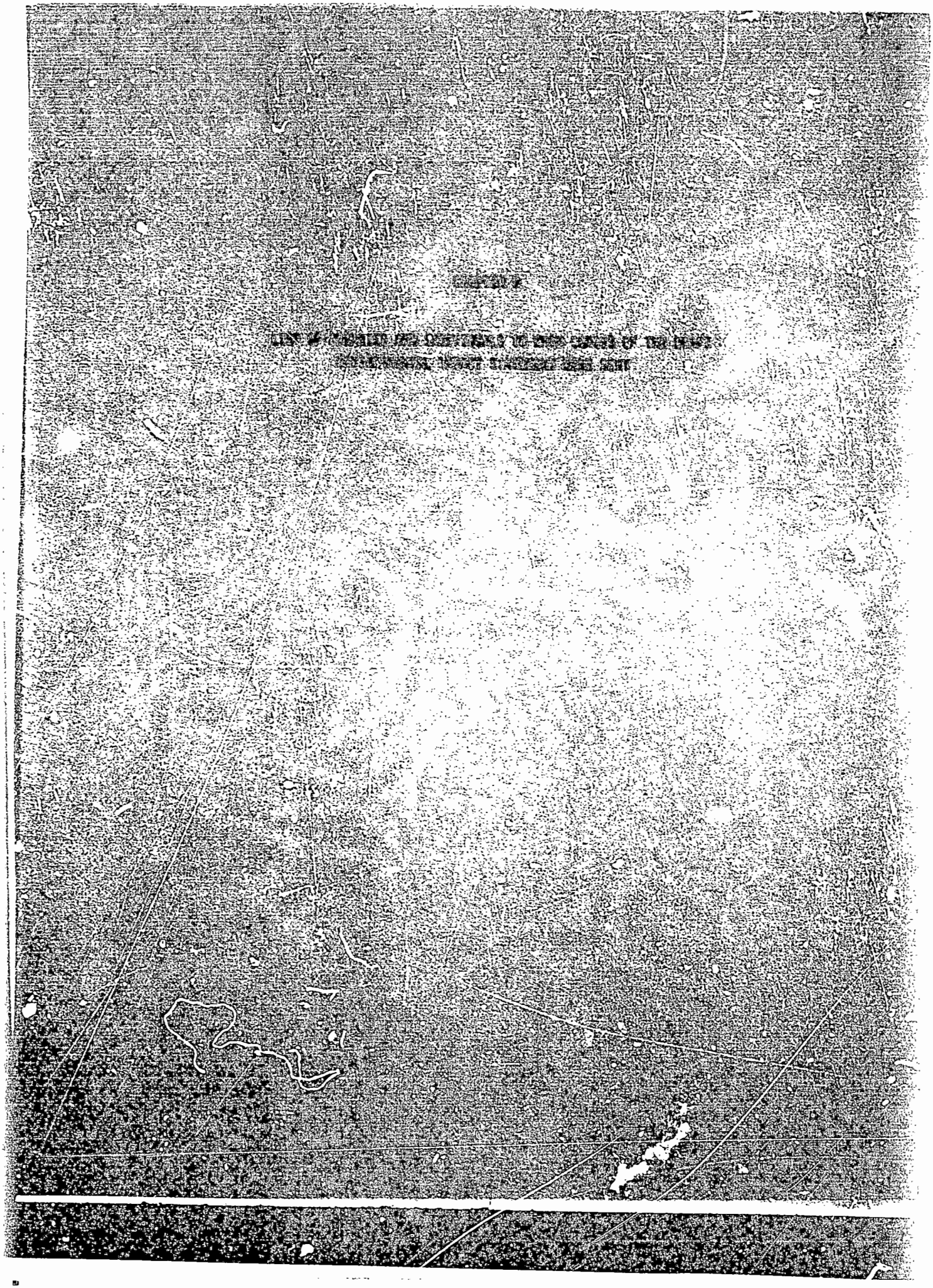

9.0 LIST OF AGENCIES AND INDIVIDUALS TO WHOM COPIES OF THE DRAFT ENVIRONMENTAL IMPACT STATEMENT WERE SENT

FEDERAL AGENCIES

Environmental Protection Agency (5)
Environmental Protection Agency, Seattle Regional Office (5)
Department of Commerce
Department of Defense
Department of Health and Human Services (3)
Department of Interior (18)
Department of Interior, Seattle Regional Office
Department of Transportation
National Science Foundation (2)
National Academy of Sciences
Nuclear Regulatory Commission (3)
Office of Management and Budget

CONGRESS

Committee on Appropriations, United States Senate
Committee on Armed Services, United States Senate
Committeeon Commerce,Science and Transportation, United States Senate
Energy and Natural Resources Committee, United States Senate
Committee on Appropriations, House of Representatives
Committee on Armed Services, House of Representatives
Energy and Commerce Committee, United States House of Representatives
Honorable Henry M. Jackson
Honorable Slade Gorton
Honorable Sid Morrison
Honorable Tom Foley

STATES

State of Washington (A-95 Clearinghouse) (10)
State of Idaho (A-95 Clearinghouse) (5)
State of Oregon (A-95 Clearinghouse) (10)
State of Washington Governor's Office
State of Idaho Governor's Office
State of Oregon Governor's Office

ENVIRONMENTAL AND CONSUMER GROUPS

Natural Resources Defense Council, Inc.
Friends of the Earth
Sierra Club
Environmentalists, Inc.
National Wildlife Federation
People Against Nuclear Power
Public Interest Law Center of Philadelphia
Fellowship of Reconciliation Program
American Friends Service Committee
Jesuit Centre, Toronto, Canada
Nuclear Issues Committee

RICHLAND, WASHINGTON LOCAL AGENICES AND ORGANIZATIONS

Yakima Indian Nation
Benton County Planning Department
Tri City Nuclear Industrial Council
Cith of Kennewick
City of Richland
City of Pasco
City of West Richland
Franklin County Planner
Grant County
Adams County

Kathryn M. Studwell
City of Kennewick
Civic Center
210 West 6th
P.O. Box 6108
Kennewick, WA 99336

Elaine Douglass
29 Hancock Street
Somerville, MA 02144

Friends of the Earth
P.O. Box A474
Sydney South
Australia

Idaho State Clearinghouse
Division of Economic and
Community Affairs
State Capital Building
Boise, ID 83720

Mike Jendrzejczyk
Fellowship of Reconcilation Program
Box 271
Nyack, NY 10960

Rosalie Bertell, Ph.D., G.N.S.H.
Jesuit Centre
947 Queen Street East
Toronto, Canada
M4M1J9

Howard Morland
3240 Fessenden N.W.
Washington, DC 20008

Luke J. Danielson
National Wildlife Federation
National Resource Clinic
Fleming Law Building
Boulder, CO 80309

M. A. Meier
Reference Librarian
Richland Public Library
Swift and Northgate
Richland, WA 99352

Patrick T. Glennon
200 Marietta Avenue
Passaic, NJ 07055

Doreen Nepom
2852 S.E. Sherrett
Milwaukie, OR 97222

Bruce W. von Zellen, Ph. D.
Northern Illinois University
Department of Biological Sciences
DeKalb, IL 60155

Oregon State Clearinghouse
Intergovernmental Relations Division
155 Cottage Street S.E.
Salem, OR 97310

People Against Nuclear Power
944 Market Street 808
San Francisco, CA 94102

Jean Tonkinson
PILCOP
1315 Walnut Street
16th Floor
Philadelphia, PA 19107

Steven Rubin
13612 N.E. 80th Street
Redmond, WA 98052

James Sanchez
P.O. Box 1431
Tucson, AZ 85702

Pam Solo
American Friends Service
Committee Program Director
1660 Lafayette, Suite D
Denver, CO 80218

United States Department of
the Interior
Northwest Region
915 Second Avenue
Room 990
Seattle, WA 98174

Marvin Lewis
6504 Bradford Te
Philadelphia, PA 19149

Norman Solomon
P.O. Box 42384
Portland, OR 97242

Eileen Buller
1703 W. 15th Street
Kennewick, WA 99336

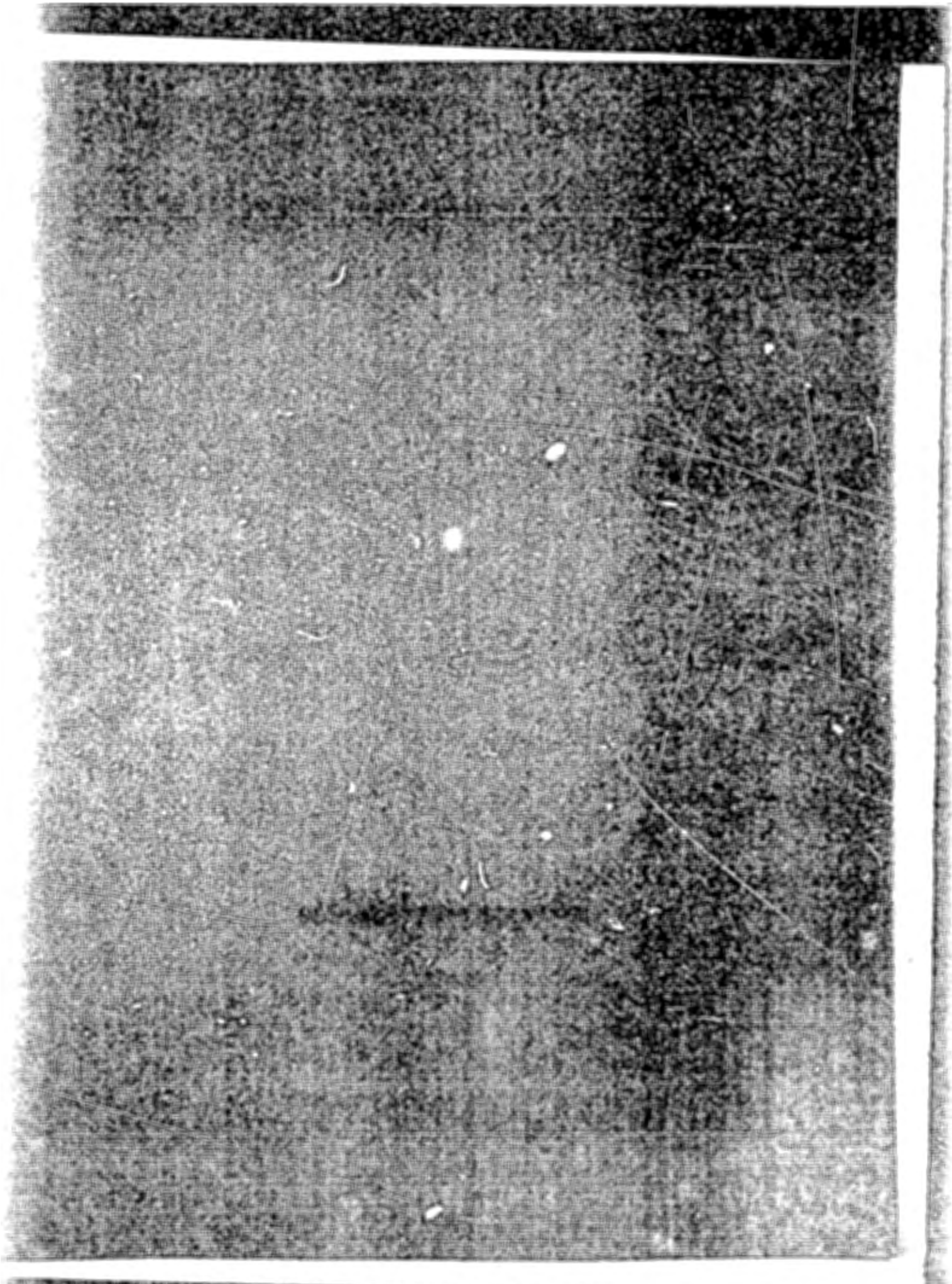

APPENDIX A

DETAILED DESCRIPTION OF PROPOSED ACTION

The proposed action is to operate the PUREX/UO_3 facilities after completion of modifications. The proposed action is discussed in Section 3.1 of the text and is described in detail in this Appendix. Also included are descriptions of the existing facilities and the planned modifications.

A.1 PROCESS DESCRIPTION

Descriptions of the PUREX and UO_3 processes including fuel dissolution, solvent extraction and separations, product concentration, waste treatment and disposal, solvent and acid recovery, and uranium oxide preparation are given. Schematic diagrams of the processes are given in Figures 3.2 and 3.3 of the EIS.

A.1.1 Transport of Fuel Elements

The irradiated fuel elements from the N-Reactor, after cooling for at least 180 days in reactor basin storage, are placed in canisters which are inserted into casks and delivered to the PUREX plant in water-filled tanks on special, heavily shielded railroad cars. Shipments, made on a regular schedule during operating periods, may contain up to six cars, but generally include only enough fuel for one dissolver charge (three cars).

In this transaction between two Hanford contractors (UNC Nuclear Industries and Rockwell), the responsibilities are clearly defined to achieve safe handling and positive identification of the fuel being transferred. Positive identification contributes to the safe and efficient operation of the PUREX plant; it helps in planning the dissolver charge sizes and other operating criteria. The information describing the fuels in reactor basin storage is required in advance of any shipment to Rockwell, and includes the following:

- ^{235}U enrichment level
- date of discharge from the reactor (180 days of cooling time are required prior to PUREX processing to allow for decay of short-lived fission products)
- basin storage position
- number of pieces per canister
- uranium content of each piece
- net weight of each canister
- total exposure of the fuels.

Plant input accountability is provided by this information and is used as a check against the dissolver solution analysis.

A.1.2 Dissolver Charging

Preliminary checks are made to verify that process steps in the previous fuel dissolution cycle have been completed and to verify that the status of routings, equipment, and chemical makeups are correct.

The solution volume in the dissolver is adjusted to 5,540 ℓ (3,140 ℓ for spike fuel) by adding water or by evaporation with the tower condensate being routed to the ammonia scrubber catch tank. The liquid in the dissolver is then cooled. An equal volume (5,540 ℓ) of 11.2M ammonium fluoride--1.0M ammonium nitrate (AFAN) decladding solution is added to the dissolver in several steps with the air spargers on.

The dispatcher coordinates charging activities between the crane operator, process operator, and supervisor to assure the outside tunnel door is closed, the correct dissolver is prepared, the lid is removed; and the opening of the overhead ventilation cover door to the tunnel is approved by the supervisor. During charging, the dissolver is cooled as much as possible with maximum water flow to the cooling coil and the spargers are turned off.

The crane operator unloads and charges canisters to one of the three dissolvers as directed by the shift supervisor. The charge size is limited to comply with applicable criticality prevention specifications. (For criticality prevention, processing of the higher enriched spike fuel requires a dissolver charge of approximately half that of the regular fuel.) During removal from the casks, the canisters are monitored by a radiation detection chamber that activates an alarm if the radiation level exceeds that of fuel cooled for 180 days. This operating procedure, plus use of a similar detector in the reactor storage basin, should preclude inadvertent processing of inadequately aged fuel. Following the charging operation, the empty canisters are returned to the casks; the tank covers are closed; and the cars are inspected for contamination, cleaned if necessary, and released to the train crew.

If any metal is visible above the solution level, the dissolver operator is instructed to add water until the metal is covered, to prevent the possibility of a zirconium metal fire. The dissolver lid and cell cover block are replaced. Water is added to the dissolver lid seal as needed to adjust the dissolver vacuum. If decladding is not scheduled to start immediately, the dissolver is cooled and held at about 25°C.

A.1.3 Cladding Removal and UF_4 Metathesis

A flow diagram of the cladding removal process and equipment is given in Figure A.1. The figure shows process routes and the major pieces of equipment, including the offgas treatment systems. The dissolving equipment consists of three independent systems, each containing an annular dissolver and an offgas system which includes a downdraft condenser (dissolver tower), an ammonia scrubber, steam and electric heaters, a silver reactor, and two offgas filters in series.

Cladding waste is discharged from the dissolvers to a common 19 m^3 (5000-gal) receiver tank, from which the solution can be transferred to a centrifuge feed tank, two parallel centrifuges, a cladding waste catch tank, and the recovered Zirflex product tank. The centrifuges overflow to the cladding waste catch tank during operation.

Metathesis solution is stored in a 19 m^3 tank with routes available to the cladding waste receiver and the dissolvers.

A.1.3.1 Fuel Element Decladding

Dissolution of the fuel element cladding is started by slowly bringing the dissolver solution to boiling while controlling the offgas evolution rates. Sparging with both air and steam is used for agitation, however the air sparge is stopped when boiling occurs to avoid oxidizing the uranium.

In the dissolver, the zirconium cladding reacts with ammonium fluoride of the AFAN[a] solution:

$$Zr(s) + 6(NH_4)F(\ell) \rightarrow (NH_4)_2ZrF_6(\ell) + 4NH_3(g) + 2H_2(g).$$

(a) Ammonium fluoride-ammonium nitrate.

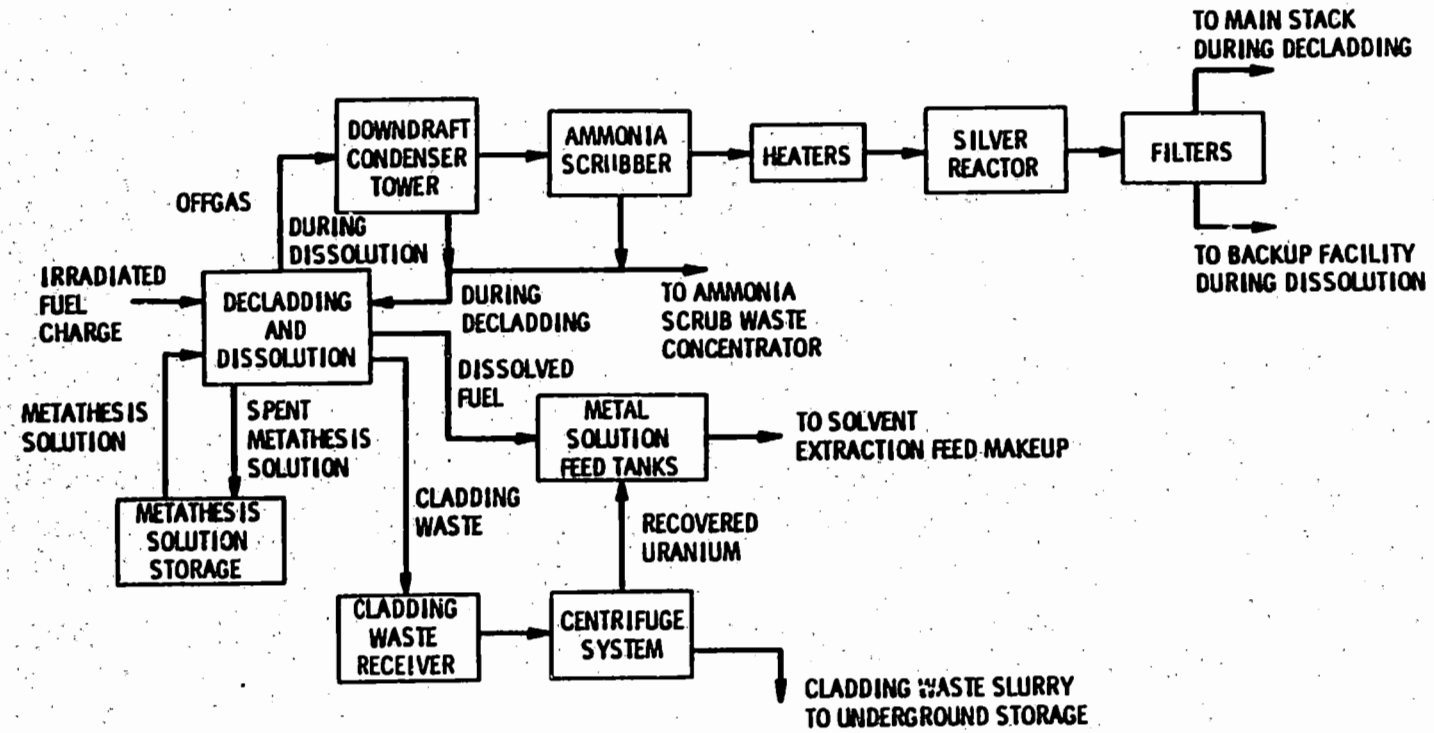

FIGURE A.1. Cladding Removal and Uranium Dissolution Process Flow Diagram

The hydrogen and ammonia evolved during decladding present a potential combustion and explosion hazard. Therefore, hydrogen is converted to ammonia by reaction with ammonium nitrate present in the AFAN solution:

$$4H_2(g) + NH_4NO_3(\ell) \rightarrow 2NH_3(g) + 3H_2O(\ell).$$

Also, an air bleed is used to dilute the dissolver atmosphere, thereby maintaining a hydrogen concentration of <2 volume percent. The dissolver is also steam sparged to remove the ammonia generated, as its presence would decrease the reaction rate.

The cladding waste solution is transferred to the waste receiver tank and the dissolver is rinsed with water which is also sent to the waste receiver tank. The dissolver now contains the unclad fuel and a small amount (approximately 1 percent) of uranium tetrafluoride (UF_4) formed through reaction of the fuel with the ammonium fluoride.

A.1.3.2 Metathesis of UF_4

The UF_4 solids in the dissolver are metathesized to hydrous uranium dioxide ($UO_2 \cdot 2H_2O$) by the addition of 7M potassium hydroxide (KOH). The metathesis process also produces potassium fluoride (KF) which is soluble. Trace amounts of plutonium, which also formed fluorides, undergo similar chemical reactions and are recovered with the uranium.

$$UF_4(s) + 4\ KOH(\ell) \rightarrow UO_2 \cdot 2H_2O(s) + 4\ KF(\ell)$$

The used metathesis solution is returned to the metathesis storage tank without agitating the dissolver, which leaves most of the $UO_2 \cdot 2H_2O$ solids behind in the dissolver. To prepare the now-declad fuel elements and these $UO_2 \cdot 2H_2O$ solids for nitric acid dissolution, the dissolver is rinsed and the residual fluoride ion complexed with a 1.6M aluminum nitrate nonahydrate (ANN) solution to reduce corrosion of the dissolver. Sufficient ANN is added so that the overall aluminum-to-fluoride mole ratio is greater than three.

A.1.3.3 Uranium Recovery

Because of the significant uranium content of the cladding waste solution, in the form of entrained UF_4 solids, this solution is processed for uranium recovery. The solution is centrifuged to separate the UF_4 solids which are then metathesized as above to $UO_2 \cdot 2H_2O$. Centrifuging removes the metathesis solution from the uranium solids which are transferred to a storage tank for future dissolution.

The spent metathesis solution is sampled for accountability purposes and then sent to an underground storage tank. Fresh KOH is added to the metathesis storage tank in preparation for treating the next cladding waste heel.

Following the centrifugation of the $UO_2 \cdot 2H_2O$, the solids are slurried in an aluminum nitrate solution and tranferred to the recovered Zirflex product tanks. There they are dissolved in 12.2M nitric acid (HNO_3) according to a combination of the two reactions:

$$3UO_2(s) + 8HNO_3(\ell) \rightarrow 3UO_2(NO_3)_2(\ell) + 2NO(g) + 4H_2O(\ell)$$

$$UO_2(s) + 4HNO_3(\ell) \rightarrow UO_2(NO_3)_2(\ell) + 2NO_2(g) + 2H_2O(\ell)$$

The solution is also sampled to assure the correct aluminum-to-fluoride mole ratio of 3:1 before transfer to the uranium metal solution feed tanks. Complexing of the residual fluoride ions with aluminum is very important at this point in order to minimize corrosion and to avoid fluoride complexing of plutonium in the first solvent extraction column, which would result in high plutonium losses to the aqueous waste stream.

A.1.3.4 Cladding Waste Treatment and Disposal

Cladding waste and cladding waste dissolver rinse solutions are reacted with caustic in the waste receiver tank. This reaction generates ammonia which is handled by an independent system consisting of an ammonia scrubber and a scrub waste catch tank (A.1.5.2). The cladding waste-caustic reaction also generates a slurry containing up to 50 volume percent solids (primarily hydrated zirconium oxide), and requires agitation for solid suspension in order to transfer the slurry to underground storage tanks.

A.1.4 Uranium Dissolution and Feed Preparation

Dissolution of the uranium metal and feed preparation for solvent extraction is described in this section. Figure A.1 gives the process flow diagram of the uranium dissolution system which includes three independent annular dissolvers with parallel offgas systems (also used for cladding removal), a feed makeup tank, and three storage tanks. The offgas systems include the downdraft condensers (dissolver towers), steam and electric heaters, silver reactors, and two offgas filters per system.

A.1.4.1 Uranium Dissolution

The declad fuel elements are dissolved in nitric acid to produce uranyl and plutonium(IV) nitrates. The equation for uranium indicates the competitive reactions occurring when concentrated acid (>8M HNO_3) is used, while that for plutonium is a simplified statement of the reaction:

$$U(s) + 4.5HNO_3(\ell) \rightarrow UO_2(NO_3)_2(\ell) + 1.55NO(g) + 0.85NO_2(g) + 0.05N_2(g) + 2.25H_2O(\ell)$$

$$Pu(s) + 8HNO_3(\ell) \rightarrow Pu(NO_3)_4(\ell) + 4NO_2(g) + 4H_2O(\ell).$$

Dissolution is started with addition of 10.4M nitric acid to the dissolver and slowly raising the temperature using the steam coils. After 30 minutes, the steam is shut off to monitor the rate of initial reaction. An excessive reaction rate (inability to maintain at least 0.98 kPa (4 in. H_2O) vacuum in the dissolver) is controlled by lowering the solution temperature with the cooling coil. When the reaction rate is acceptable, the steam flow is gradually increased again to bring the solution to boiling. After about 2 hours of digestion, additional nitric acid is added at a controlled rate to maintain the desired nitric acid concentration and an effective dissolution rate.

As the metal dissolution progresses, the specific gravity of the solution increases. The first cut is terminated when the specific gravity reaches 1.66, or when the specific gravity fails to rise 0.02 unit in 1 hour. The dissolution reaction is stopped by cooling the solution to 60°C, and then transferring it to the metal solution feed storage tanks. This first cut generally contains about 60 percent of the uranium charged to the dissolver.

Nitric acid and ANN are again added to the dissolver and the reaction continues as before. The second cut is terminated at a specific gravity of 1.72. This solution, which has a slightly higher concentration of UNH and nitric acid than the first cut, is transferred to the metal solution feed storage tanks. The dissolver is rinsed to remove any uranium metal compounds adhering to the walls, and the rinse water is also transferred to the feed storage tanks.

Uranium dissolution of spike fuel is completed in a single step. Because of the smaller batch, less ANN is needed to complex the residual fluoride ions in the dissolver.

A.1.4.2 Metal Storage and Feed Preparation

Uranium recovered from the cladding waste solution (Section A.1.3.3) is blended with the feed metal solution in the storage tank. This feed solution is then sampled for input accountability before it is pumped to the feed makeup tank.

If necessary, final feed adjustments are made depending on the accountability sample analyses. Adjustments are made by adding rework materials, demineralized water, and/or nitric acid. When the solution has the desired concentration, it is transferred to the feed tank for the HA solvent extraction column.

A.1.5 Offgas Treatment

As mentioned previously, potentially hazardous gases, hydrogen and ammonia, are evolved in the decladding process along with some volatile fission products and nitrogen oxides released during uranium dissolution. The methods and equipment for treating these and other gases are described in this section.

A.1.5.1 Dissolver Offgas System—Cladding Removal

During cladding removal, the downdraft dissolver towers function as first-stage offgas scrubbers, removing some ammonia and fission products with the condensate. The condensate stream is routed to the ammonia scrubber catch tank to be combined with ammonia scrubber waste.

An ammonia scrubber, located downstream from the dissolver tower, removes ammonia from the offgas stream to a maximum ammonia content of 0.06 wt percent. Ammonia scrubber waste (ASW) is routed to an individual catch tank for each scrubber, then to the ASW concentrator feed tank. Ammonia scrubber offgas from each dissolver is routed to the main stack via the heaters, the silver reactor used for iodine removal, and the two filters in series.

A.1.5.2 Offgases from Cladding Waste Treatment

Ammonia is also generated during the treatment of Zirflex cladding waste with sodium hydroxide (NaOH). The cell in which this operation occurs, E cell, has an offgas system consisting of a single ammonia scrubber and scrub waste catch tank. The catch tank liquid is routed directly to the ASW concentrator feed tank. Offgas from this scrubber is routed to the ammonia stack.

A.1.5.3 Ammonia Scrubber Waste Concentration System

The ASW concentration system evaporates ammonia scrubber waste from the three dissolver ammonia scrubbers and the E cell scrubber. The specific gravity of the ammonia scrubber waste concentrator bottoms is monitored and allowed to increase to a predetermined level before shutdown, cooling, and transfer to the waste receiver. A radioactivity (^{95}Zr, ^{95}Nb, ^{106}Ru) concentration limit for the bottoms is also a criterion for emptying the concentrator. From the waste receiver, the concentrated bottoms solution is sent to underground storage tanks.

A condenser liquifies the vapor from the concentrator and subcools the condensate produced. Because of its affinity for cool water, nearly all of the ammonia is absorbed in the subcooled condensate which is then pumped to a crib.

A.1.5.4 Dissolver Offgas System—Uranium Dissolution

As described in Section A.1.4, each dissolver offgas system includes a dissolver tower, gas heaters, silver reactor, and filters, as shown in Figure A.1. The downdraft dissolver towers, which are actually water-cooled condensers, are primarily designed for nitric acid recovery during uranium dissolution. Condensate from the towers contains some radionuclides, and is routed back to the dissolver during dissolution. The tower gaseous effluent is routed to the offgas heaters and silver reactor via the ammonia scrubber, although the scrubber itself is not functioning since no ammonia is evolved during dissolution.

Offgases generated during uranium dissolution are rich in nitrogen oxides, which are partially removed and recovered as nitric acid by the condensers and the backup facility (see A.1.5.5). The volatile fission products released during uranium dissolution are ^{85}Kr, ^{133}Xe, ^{129}I, ^{131}I, ^{14}C, and a small amount of ^{3}H. The krypton, xenon, and tritium, are quantitatively discharged to the outside atmosphere via the main stack.

The silver reactors remove the radioiodine (^{131}I and ^{129}I) from the offgas through reaction of the iodine with the silver nitrate ($AgNO_3$) coating on the reactor packing. Solid silver iodide (AgI) is formed and remains in the silver reactor. Overall iodine decontamination factors, based on ^{131}I release and measured from the dissolver through the backup facility decrease from 1000 to 100, as the reactors lose their efficiency after extended use. The silver reactors are regenerated periodically with fresh $AgNO_3$, but the reactors are not flushed (i.e., dissolution of the AgI coating and disposal to underground storage), to ensure that the iodine remains on the reactor bed. When a reactor can no longer be effectively regenerated, it is replaced and sent to solid waste burial.

A.1.5.5 Backup Facility

The backup facility, consisting of two acid absorber towers in series, removes most of the remaining nitrogen oxides that were not absorbed in the downdraft condensers. Nitrogen oxides in the offgases are absorbed into the tower scrub water forming nitric acid, which is routed to the acid recovery system and is eventually returned to the PUREX process. The facility also removes radioiodine, contributing a decontamination factor of ten.

Preliminary tests indicate the acid recovery can be increased to above 90 percent by adding a controlled amount of hydrogen peroxide to the top tray of each tower. The equipment necessary to implement this system will be installed prior to startup.

A.1.6 Solvent Extraction

After adjustment of the concentration and acidity of the uranyl nitrate solution from the fuel element dissolution, the solution proceeds to the solvent extraction step, which is the key operation of the PUREX process. It separates the uranium, plutonium, and neptunium from associated fission products and from each other, and produces purified nitrate solutions of these products. A series of extraction-stripping sequences accomplishes the separation and purification. The process is characterized by numerous recycle streams as less pure streams are recycled to the process.

The organic solvent used in the solvent extraction process is a 30 volume percent solution of tributyl phosphate (TBP) in a normal paraffin hydrocarbon diluent. All solvent extraction operations are conducted in pulse columns containing perforated plates.

The following three major process systems make up the solvent extraction process:

- first decontamination and partition cycle
- final uranium cycle
- final plutonium cycles.

These three systems are discussed in this section. The second neptunium cycle solvent extraction process is described in Section A.1.8.

A.1.6.1 First Decontamination and Partition Cycle

Figure A.2 is a process flow diagram of the first decontamination and partition cycle, showing the major equipment pieces and the normal process routes.

The purpose of the first decontamination cycle is to separate the bulk of the fission products from the uranium, plutonium, and neptunium. This is accomplished in the lower section of the HA (first extraction) column where the uranium, plutonium, and neptunium are extracted from the aqueous feed into an organic stream of tributyl phosphate and paraffin hydrocarbons. A sodium nitrite stream is added to the column to oxidize the neptunium to an extractable ionic state. In the top of the HA column, the product-bearing organic stream is scrubbed with a nitric acid solution to remove any fission products extracted by the organic stream.

The aqueous waste stream, containing greater than 99 percent of the fission products fed to the column, flows to the waste concentration-acid recovery equipment (A.1.11). The organic stream is routed to the partition cycle.

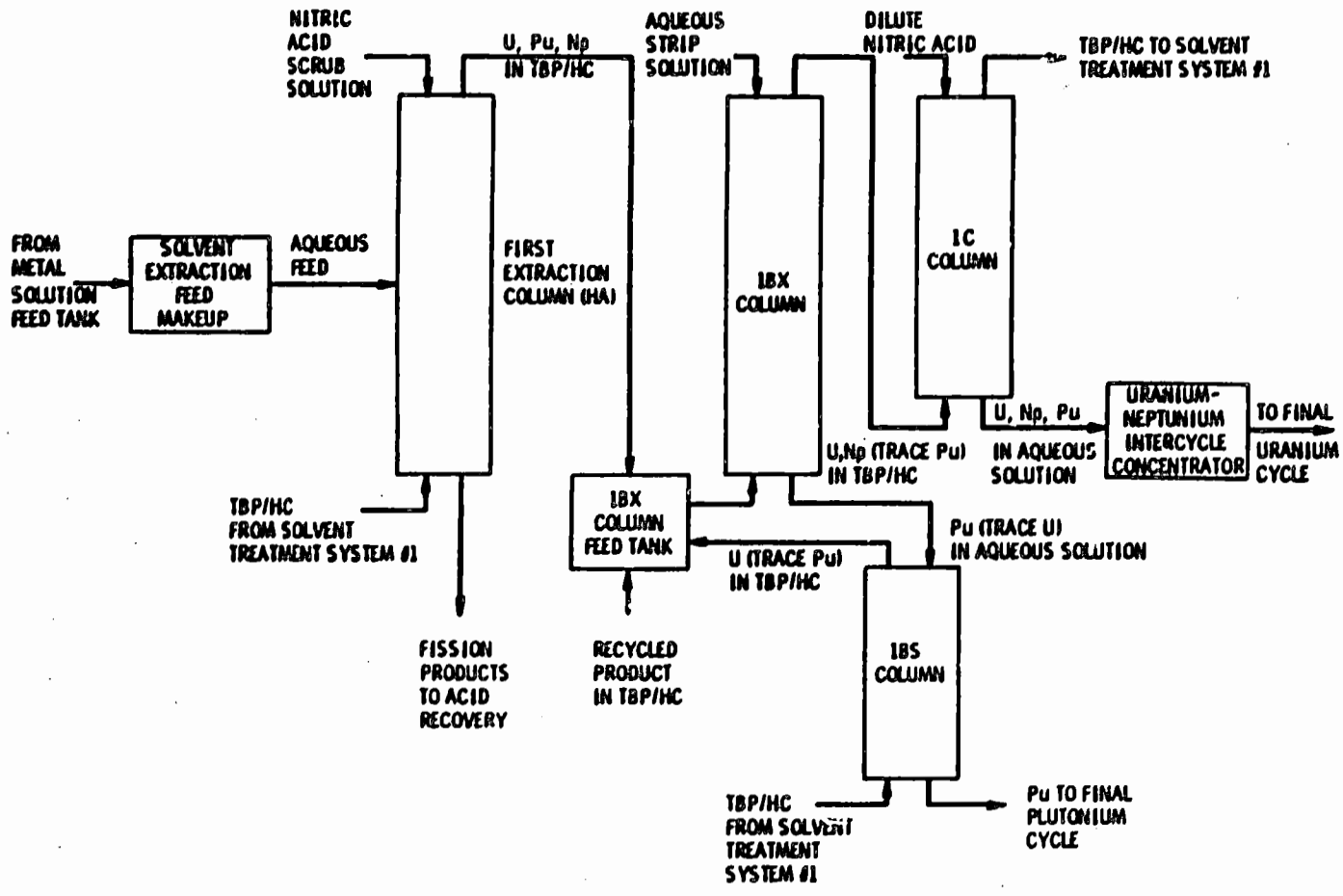

FIGURE A.2. First Decontamination and Partition Cycle Process Flow Diagram

In the partitioning cycle, plutonium is separated from uranium and neptunium. The partition process equipment includes three solvent extraction columns (1BX, 1BS, and 1C) and the uranium-neptunium intercycle concentrator.

The organic stream from the HA column is mixed with four organic recycle streams, and this solution is then fed to the 1BX column. The aqueous 1BX extraction solution is dilute nitric acid with ferrous sulfamate. The ferrous ion reduces the plutonium which causes it to be partitioned from the organic stream into the aqueous stream. Although it has not been reduced, 4 to 5 percent of the uranium is removed along with the plutonium. The plutonium-bearing aqueous stream flows to the 1BS column, and the organic stream containing most of the uranium and neptunium, and a small amount of plutonium, flows to the 1C column.

In the 1BS column, the uranium is removed from the plutonium containing aqueous stream with organic solvent. The organic stream, bearing the uranium and about 6 to 10 percent of the plutonium, is recycled to the 1BX column. The aqueous plutonium-bearing stream is routed to a feed tank for chemical adjustment before entering the final plutonium cycle.

In the 1C column, the uranium, neptunium, and plutonium are removed from the organic stream by a dilute nitric acid solution. The organic waste stream is sent to the Solvent Treatment System No. 1 feed tank (see Section A.1.10). The uranium containing aqueous stream is transferred to the uranium-neptunium intercycle concentrator. There the aqueous solution is concentrated by a factor of seven before it is transferred to the final uranium cycle feed tank.

A.1.6.2 Final Uranium Cycle

In the final uranium cycle, uranium is separated from the neptunium, plutonium, and residual fission products and then concentrated to meet product specifications. This requires two extraction columns (2D and 2E shown in Figure A.3) and a concentration system.

Before it is fed to the 2D column, the nitric acid concentration of the uranium-neptunium solution is increased to 1.5M. A solution of hydrazine is also added to react with any nitrite ion present in the feed tank.

Extraction of the uranium occurs in the lower half of the 2D column through the use of organic solvent. In the upper half of the column, the uranium-saturated organic stream contacts two scrub solutions. One, containing hydroxylamine nitrate reduces the plutonium and removes it, and the other, demineralized water, removes any nitric acid present.

The aqueous stream, containing 5 to 7 percent of the uranium and essentially all of the neptunium, plutonium, and fission products, is routed to the backcycle waste tank for concentration and recycle to the solvent extraction column. The organic stream containing the purified uranium flows to the 2E column.

The 2E column is identical to the 1C column and removes the uranium from the organic stream with a dilute nitric acid solution. The organic waste stream is sent to the receiver tank for Solvent Treatment System No. 2. The aqueous product stream, containing all but 0.0009 percent of the entering uranium, is routed to the uranium concentrator.

The aqueous product stream is concentrated by a factor of about 7 to give a solution of 2.12M uranium. After sampling, analysis, and volume measurement, the uranium product, uranyl nitrate hexahydrate (UNH), is transferred to storage tanks. These tanks have a capacity of 390 m^3 (100,000 gal) and are enclosed by concrete dikes. From storage, the UNH is pumped into tanker-trailers for shipment to the UO_3 plant.

A.1.6.3 Final Plutonium Cycles

The final plutonium cycles consist of the second and third plutonium solvent extraction cycles plus plutonium product concentration. The second cycle uses two extraction columns (2A and 2B) as does the third cycle (3A and 3B). The flow diagram for the final plutonium cycles is shown in Figure A.4.

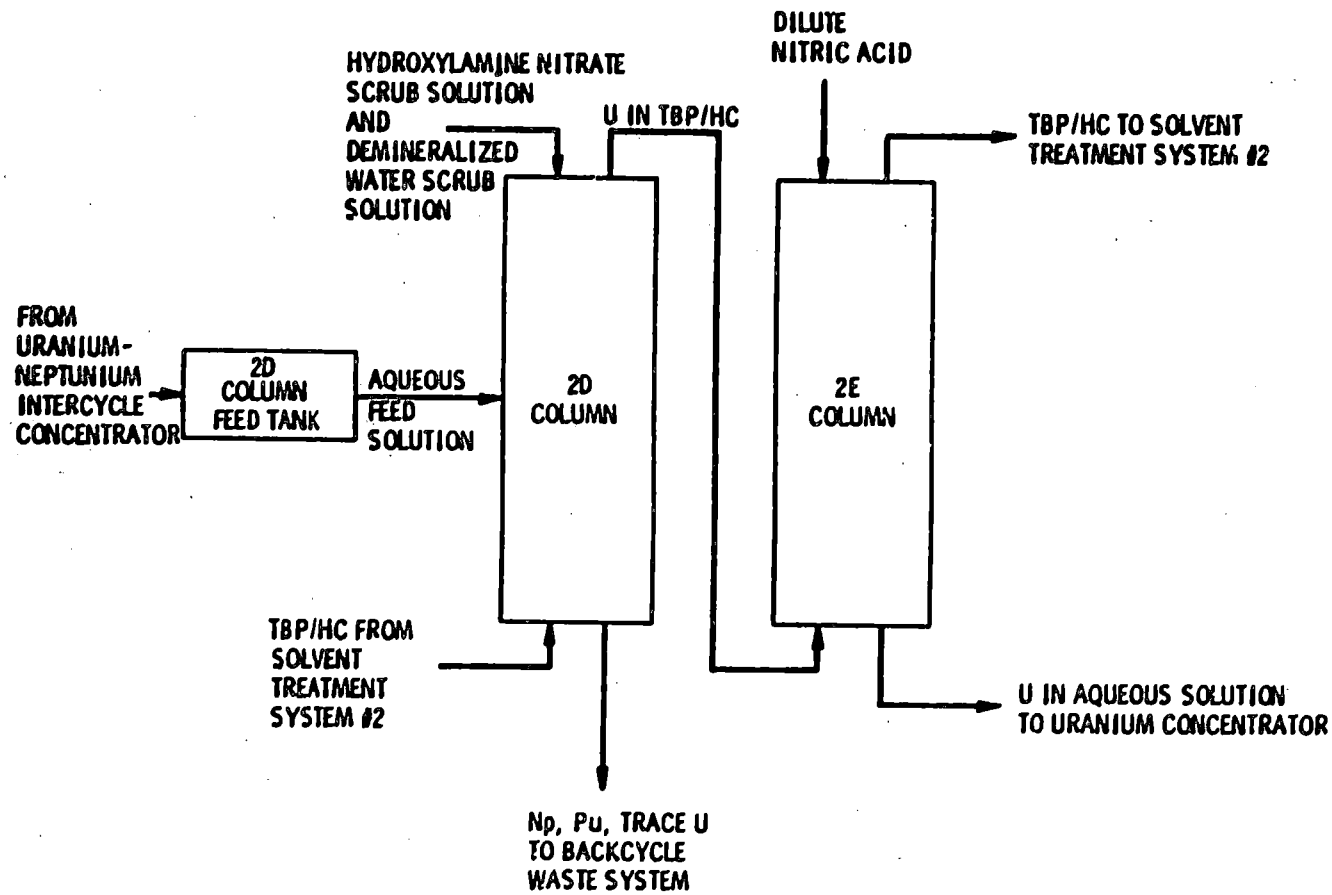

FIGURE A.3. Final Uranium Cycle Process Flow Diagram

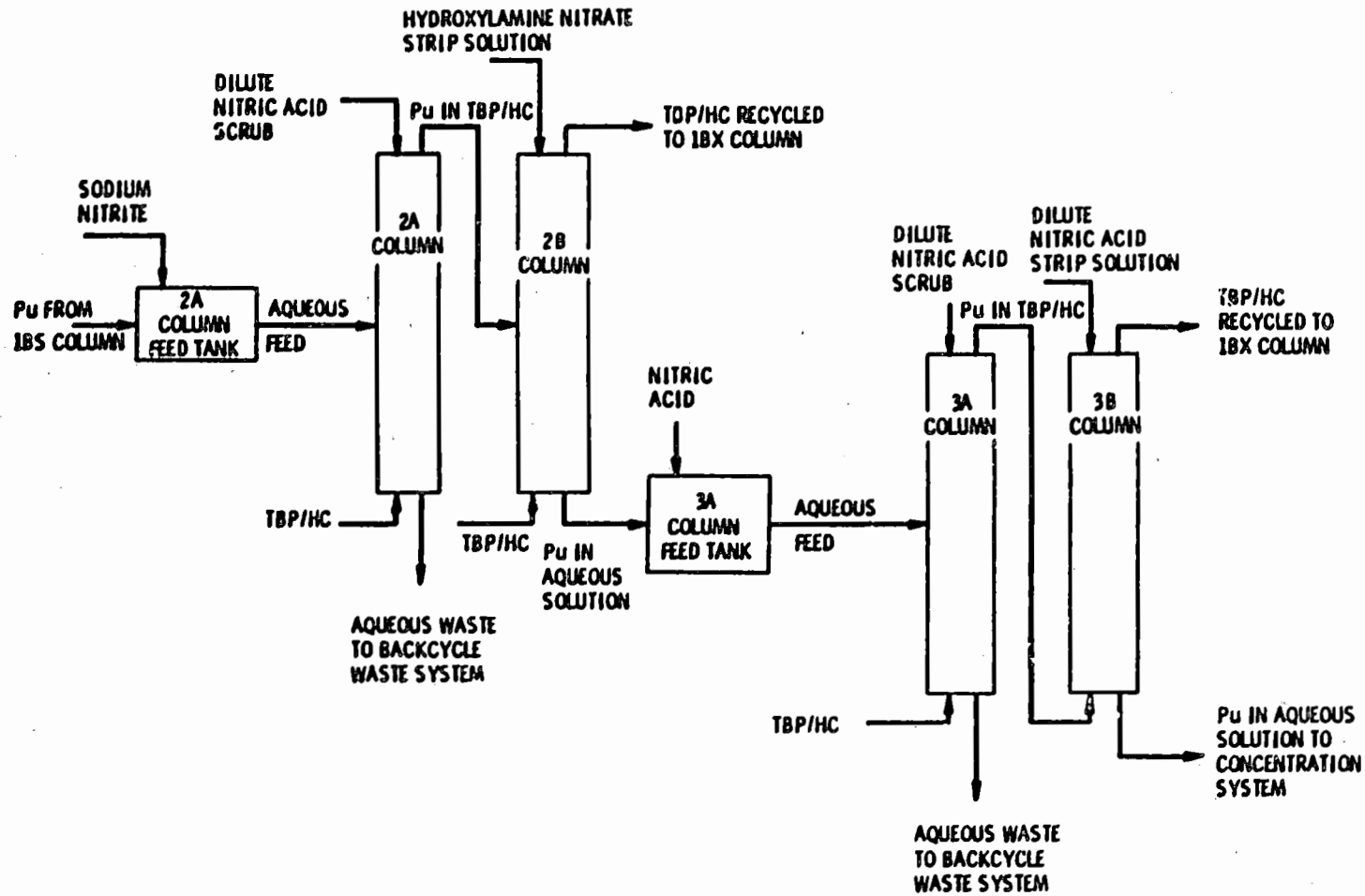

FIGURE A.4. Final Plutonium Cycles Process Flow Diagram

Sodium nitrite is added to the plutonium-bearing aqueous stream (from the 1BS column) before it is fed to the 2A column. This is to oxidize the plutonium back to a state where it can be extracted by the organic solvent. The extraction occurs in the lower half of the 2A column while in the upper half the plutonium-bearing organic stream is scrubbed with dilute nitric acid to remove most of the fission products. The organic stream then flows to the 2B column. The aqueous waste stream containing about 0.7 percent of the entering plutonium plus most of the fission products is routed to the backcycle waste feed tank for recycle to the process.

The aqueous strip solution in the 2B column contains hydroxylamine nitrate. This again reduces the plutonium to remove it from the organic stream into the aqueous stream. As the plutonium-bearing aqueous stream flows down the lower portion of the column, it is scrubbed with organic solvent to remove any uranium which may be present. The aqueous stream then flows to the feed tank for the third plutonium cycle. The organic stream, containing uranium, fission products and 0.04 percent of the entering plutonium, is recycled to the 1BX column feed tank.

The nitric acid added to the aqueous plutonium stream in the 3A feed tank is sufficient to oxidize the plutonium to the state where it is again extracted into the organic solvent in the 3A column. In the scrub section of the column, dilute nitric acid removes most of the remaining traces of fission products from the organic stream. The aqueous waste stream, containing about 0.3 percent of the entering plutonium, is routed to the backcycle waste tank for recycle to the process. The organic stream containing the purified plutonium flows to the 3B column.

The 3B column uses a dilute nitric acid stream to remove the plutonium from the organic stream. The organic waste stream, containing about 0.1 percent of the entering plutonium, is recycled to the 1BX feed tank. The plutonium product stream is routed to the plutonium stripper, where any traces of solvent are removed and the plutonium solution is concentrated by a factor of five. To prevent plutonium polymer formation during concentration, concentrated nitric acid is added to the feed stream of the stripper. The stripper product flows to another concentrator for further concentration by an additional factor of two. The concentrator product flows into the receiver tank, from which the product is periodically vacuum-transferred to the product receiver room sample tank. Final processing of the plutonium nitrate to plutonium oxide is described later in Section A.3.

A.1.7 Backcycle Waste System

The aqueous waste streams from the second plutonium cycle, the final uranium cycle, and the neptunium recovery system plus excess acid recovery condensates and the vent system condensates from L and Q cells are all concentrated and recycled via the backcycle waste system. This system consists of a concentrator and condenser along with a feed tank and concentrated waste receiver. The waste is concentrated by a factor of about five before flowing to the waste receiver. The aqueous waste from the third plutonium cycle is routed directly to the waste receiver. From the waste receiver, about 60 percent of the solution is pumped to the HA column, and about 40 percent is pumped to the neptunium recovery cycle when it is in Phase I operation. The concentrated waste is routed exclusively to the HA column during Phases II and III of neptunium recovery.

A.1.3 Neptunium Recovery and Purification

The operation of the neptunium recovery cycle is a three-part sequential process. The cycle serves to accumulate neptunium from the backcycle waste streams during Phase I operation. Neptunium is separated from fission products, uranium, and plutonium during Phase II operations, and a feed stream is provided for the neptunium ion exchange purification process conducted in Phase III. All three of these phases use the same equipment, two solvent extraction columns (2N and 2P), shown in Figure A.5.

During Phase I, about 40 percent of the backcycle waste stream is routed to the 2N column. There the neptunium and uranium are extracted from the aqueous stream into the organic stream which is then routed to the 2P column. The plutonium remains in the aqueous stream due to the presence of ferrous sulfamate and hydrazine which reduce the plutonium to an inextractable state. The aqueous waste stream is routed to the backcycle waste feed tanks.

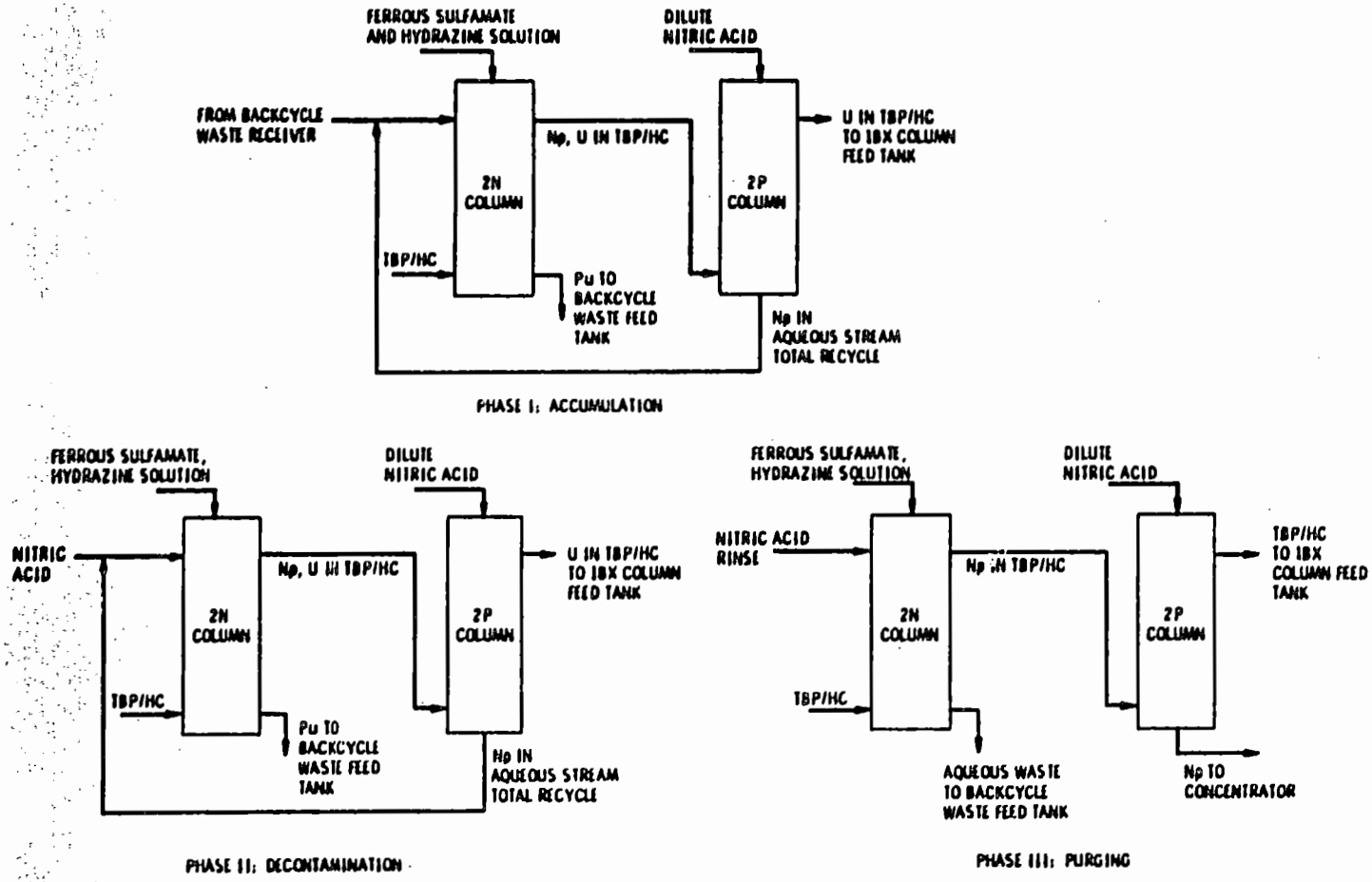

FIGURE A.5. Neptunium Recovery Cycle--Phase I, II, III Operation Flow Diagram

In column 2P, the neptunium is stripped into a dilute nitric acid aqueous stream, leaving most of the uranium in the organic phase which is recycled to the 1BX column feed tank. The aqueous stream containing the neptunium is routed back to the 2N column feed tank where it mixes with the incoming backcycle waste stream.

During Phase I operation, plutonium exits the system in the 2N waste stream and uranium exits in the 2P waste stream, while the neptunium accumulates and recycles through the system. This procedure continues until a specified amount of neptunium is accumulated in the system; then a final decontamination process, Phase II, is initiated.

Phase II operation is similar to Phase I, except the backcycle waste stream to the 2N column feed tank is discontinued and replaced by a nitric acid stream. This allows the amount of plutonium, uranium, and fission products in the system to gradually decrease. When the uranium concentration is less than 6 g/ℓ (0.05 lb/gal) and plutonium concentration is less than 1 gram plutonium per 1000 grams neptunium, Phase II neptunium decontamination is complete and Phase III operation begins.

During Phase III, the neptunium product stream from column 2P is transferred to the concentrator feed tank instead of being recycled to column 2N. A 30 wt percent nitric acid stream is fed to column 2N as a rinse solution. This continues until the neptunium concentration of the stream leaving the column is less than 0.26 g/ℓ.

Neptunium purification consists of concentrating the solution from the neptunium recovery system and ion exchange to remove the residual impurities. The equipment for this process is shown in Figure A.6.

The solution from the neptunium recovery system is concentrated by a factor of about 4.5. The concentrated neptunium solution flows to the ion exchange column feed tank where chemical adjustments are made. The acid concentration is adjusted to 6.3M by addition of nitric acid, and the neptunium ionic state is optimized by addition of hydrazine.

The resin (Amberlite IRA-97) in the ion exchange column is pretreated by passing 6M nitric acid containing 0.1M hydrazine through the column to prepare the resin for adsorption of the next neptunium batch. Immediately before the neptunium is loaded, the resin bed is degassed to eliminate air pockets. As the feed solution is pumped downward through the column, the resin retains the neptunium through the ion exchange mechanism.

Any plutonium retained by the resin is removed by a scrub solution which contains ferrous sulfamate and hydrazine in a 6.7M nitric acid solution. The strong acid is necessary to prevent neptunium elution losses during the plutonium scrub. Similarly, any fission products absorbed by the resin are removed by a scrub solution which is 7M nitric acid and also contains fluoride. Again the high acid content prevents neptunium losses. This fission product scrub leaves fluoride residue on the ion exchange column, and this is scrubbed with an 8M nitric acid solution containing hydrazine. The pretreatment, loading, plutonium scrub, fission product scrub, and fluoride scrub wastes containing neptunium lost during purification are returned to the backcycle waste system for recycling through the solvent extraction system.

Product neptunium is removed from the resin bed with a 0.35M nitric acid solution. Neptunium concentration is controlled by adjusting the product eluent volume to the quantity of neptunium on the resin, and no further product concentration step is required. The initial and final portions of the eluted solution are too dilute in neptunium to be used in the final product and are, therefore, recycled to the concentrator feed tanks.

Neptunium purification process safety is an important consideration due to its potential for an ion exchange resin explosion, which exists under certain conditions of temperature, pressure, and acidity. To minimize or eliminate these conditions, significant process parameters are carefully controlled and care is taken to preclude the standing of loaded resin columns for prolonged periods of time.

A.1.9 Sampling and Rework of Nitrate Product Solutions

Uranyl nitrate hexahydrate (UNH) waste solution or out-of-specification solution from the UO_3 plant is concentrated to a specific gravity of 1.54 for recycle to the PUREX

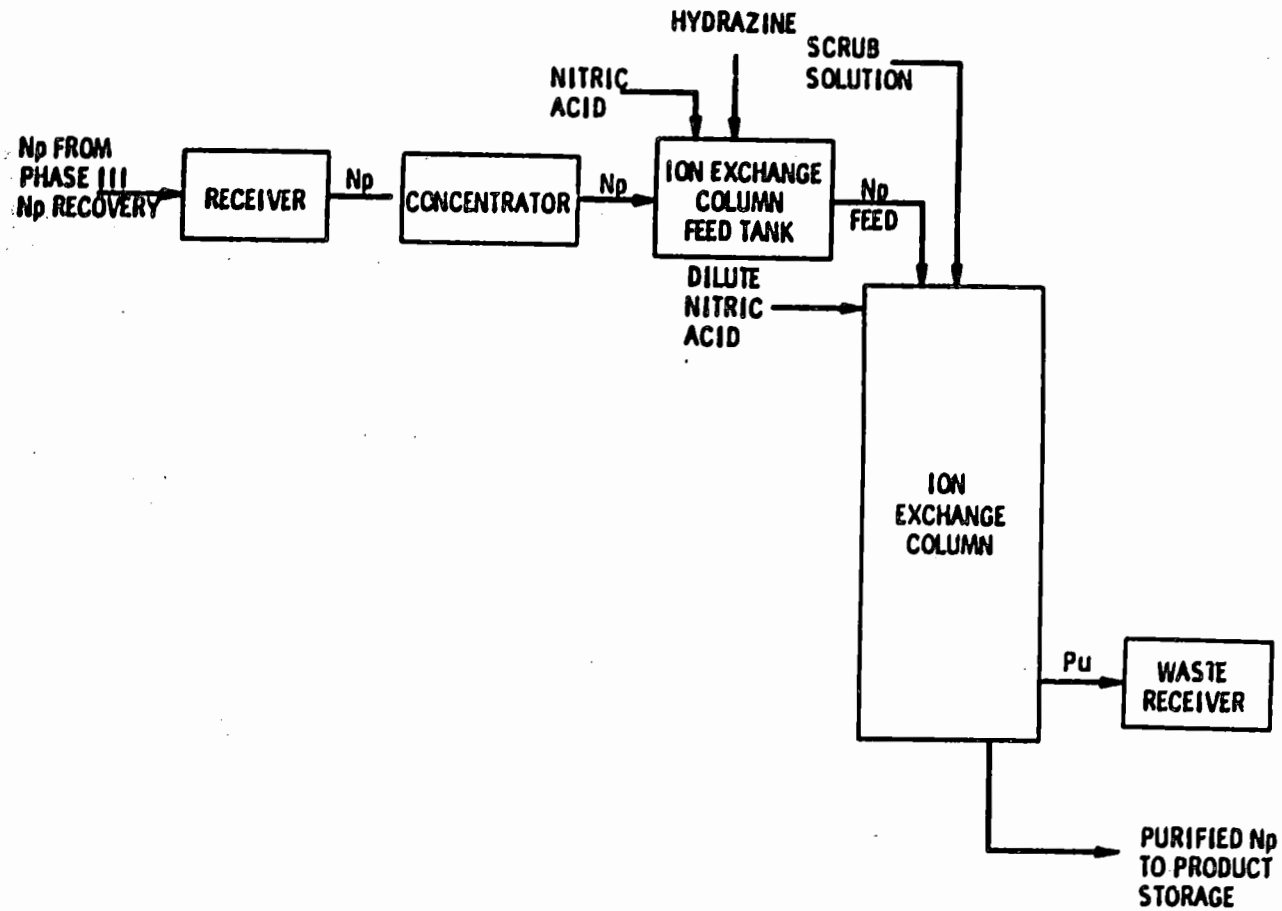

FIGURE A.6. Neptunium Purification Process Flow Diagram

process. The tank used for this concentration is equipped with an offgas treatment system consisting of a condenser, de-entrainer, filter, and steam ejector. The condensate is routed to the waste tank during concentration, and is returned to the concentration tank when wastes suspected of containing solvent are boiled under reflux to eliminate organics. Reworked UNH may be transferred to the extraction process from the concentration tank or any of the product storage tanks. Transfers to process are frequently made to provide cold (unirradiated) feed for plant shutdown or startup, and sometimes for plutonium dilution.

Concentrated plutonium nitrate products from the third plutonium cycle is handled in the product removal (PR) room, which contains specially designed vessels for nuclear safety. There the plutonium nitrate is sampled to assay the solution before further processing or to reroute plutonium-bearing liquids for rework through solvent extraction. Along with liquids from the PR room, other plutonium rework solutions include those from process cell sumps, out-of-specification products, and flushes from the plutonium recovery equipment. These solutions are routed to the HA column feed makeup tank for rework.

The neptunium product receiver tank is equipped with a temperature control system plus weight factor and specific gravity instrumentation. The neptunium product solution is sampled for neptunium, plutonium, uranium, and nitric acid content, and is then transferred to storage. Alternatively, the neptunium oxidation state is adjusted and the product is transferred to containers for shipment. The oxidation state must be adjusted to preclude formation of any gases which would subsequently pressurize the product containers.

A.1.10 Solvent Treatment

With continued use, the organic solvent used in PUREX solvent extraction (30 volume percent tributyl phosphate in a normal paraffin hydrocarbon diluent) becomes contaminated with fission products and chemically degrades, decreasing the efficiency of chemical separations. Before reuse, the solvent is treated as described in this section.

Regeneration of all the organics used in the PUREX solvent extraction process, except that from the second uranium cycle, is accomplished in Solvent Treatment System 1. Solvent used in the final uranium cycle has a separate treatment system (System 2) to minimize the contamination of the uranium product by impurities in the solvent. The treatment process consists of an alkaline-permanganate wash followed by a nitric acid wash. Figure A.7 schematically shows the equipment and streams comprising Systems 1 and 2.

The sodium carbonate-potassium permanganate wash takes place in a semi-batch washing tank where most of the contaminants in the organic stream are removed. The wash solution, which is continuously recycled, accumulates fission products, plutonium, uranium, and dissolved organic impurities and must be replaced periodically. The depleted wash solution from System 1 is sent to an underground waste storage tank, while that from System 2 can also be sent to underground storage or it can be used as replacement wash solution in System 1.

After the organic stream is contacted with the alkaline-permanganate wash solution it flows to the scrub column. The dilute nitric acid solution removes entrained carbonate and manganese dioxide from the organic. This wash solution is also recirculated through the column until it becomes contaminated. The nitric acid waste solution is made basic and also sent to underground storage, or that from System 2 can be reused in System 1.

A.1.11 Acid Recovery and Liquid Waste Disposal

In the PUREX facility, treatment of high-level radioactive liquid waste is part of the nitric acid recovery process. Highly radioactive waste solutions are treated before being sent to storage in underground tanks. In addition to acid recovery, the waste treatment process reduces the volume of material which must be processed through the waste management facilities and eventually stored. A flow diagram of the waste concentration and denitration equipment is shown in Figure A.8.

In the acid fractionator, dilute waste nitric acid streams are concentrated to a uniform product suitable for reuse in the plant.

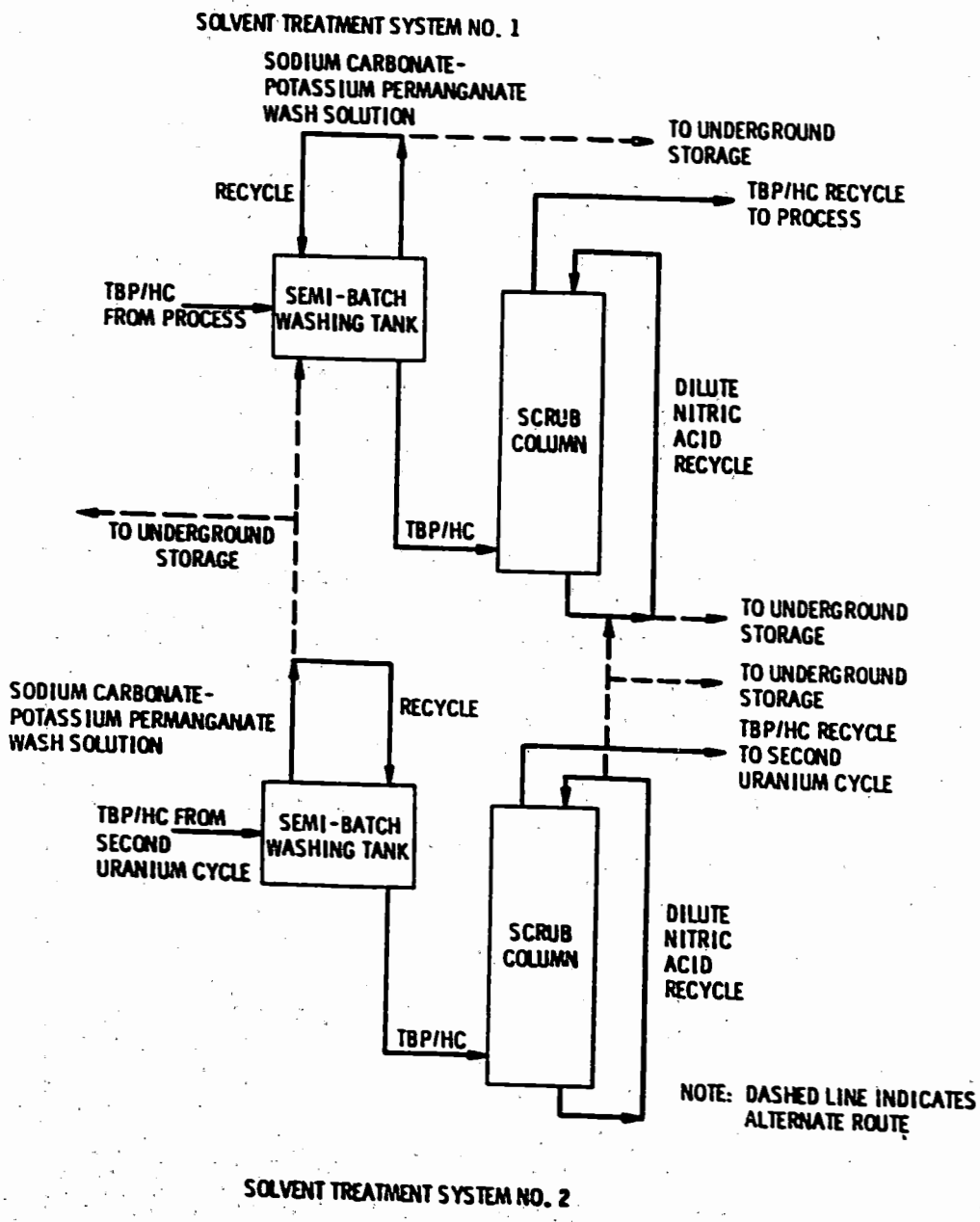

FIGURE A.7. Solvent Treatment Systems 1 and 2—Process Flow Diagrams

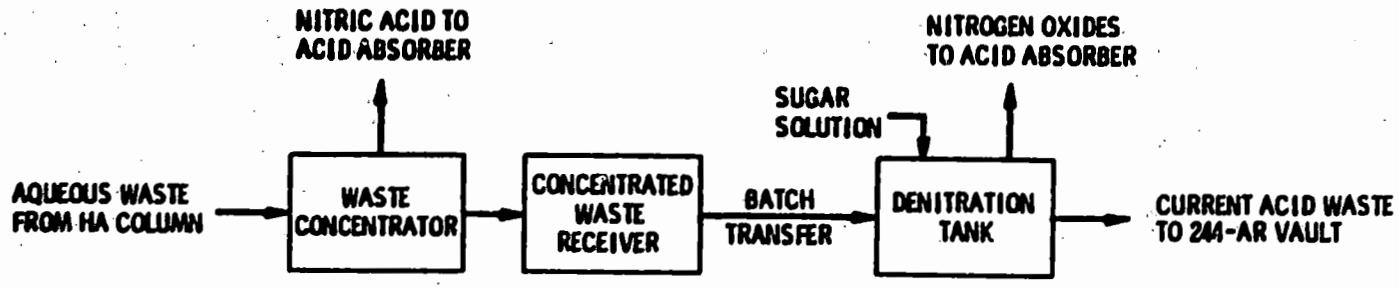

FIGURE A.8. Waste Concentration and Handling Flow Diagram

Liquid wastes containing radioactive concentrations within allowable release limits (e.g., condensates) are routed to surface ponds or cribs, where the liquid disperses into the soil.

A.1.11.1 Acid Recovery

The PUREX facility is provided with equipment for the recovery of the nitric acid used in the solvent extraction operations. More than 80 percent of the nitric acid present in the aqueous waste streams from the solvent extraction batteries is reclaimed in reusable form. This is accomplished through concentration and sugar denitration of the high-level liquid waste.

The aqueous acidic waste from the HA column contains nearly all of the fission products, about 0.002 percent of the uranium, and about 0.02 percent of the plutonium, from the fuel dissolution process. This waste is evaporated in the waste concentrator to reduce the volume of liquid which must be processed through the waste management facilities and stored.

The vapors (water and nitric acid) from the boiling waste in the concentrator pass upward through a series of two mist eliminators before going on to the nitric acid recovery equipment. These two mist eliminators effectively decontaminate the offgas stream from fission products. The condensate formed in the upper mist eliminator is returned to the solution section of the concentrator.

The concentrated high-level waste flows to a waste receiver tank where it is cooled before it is moved batchwise to the sample and denitration tank. There sugar denitration of the waste is carried out to increase the acid recovery.

A 22 percent sugar solution is added to the heated waste until sufficient sugar has been added to decrease the nitric acid concentration to less than one molar. The sugar and nitric acid in the waste react through a chemical digestion process to form carbon and nitrogen oxides, which are exhausted through the waste concentrator tower to the acid absorber. The denitrated high-level waste is cooled and transferred to another tank for acid analysis. From there the waste (called current acid waste) is routed to the 244-AR Vault, with subsequent transfer to the waste management facilities.

The acid and water vapor exiting the waste concentrator are routed to the acid absorber where nitric acid is recovered as an 18 wt percent product. The offgas from the absorber, depleted of nitric acid, passes through a condenser where the water vapor is condensed and recycled to various locations or sent to a crib.

The product acid from the absorber is routed to the absorber receiver tank. There it is mixed with nitric acid from the dissolver backup facility absorbers (about 12 wt percent). This solution is fed to the vacuum fractionator which concentrates the solution to give a 50 wt percent nitric acid stream for reuse in the PUREX facility. The condensed overhead vapors, consisting of 99.5 wt percent steam, are returned to the fractionator or routed to the backup facility for use in the absorbers.

A.1.11.2 Waste Treatment and Disposal

There are three distinct groups of liquid process wastes from the PUREX facility, and special waste handling and disposal procedures are employed for each of these waste groups. The high-level waste handling has been described in the preceding section. Other liquid wastes include various low-level process wastes, including some which may require rework for product recovery, and very low-activity aqueous wastes, such as condenser and vessel jacket cooling water.

Treatment and Disposal of Low-Level Process Wastes. Liquids from the 291 Area (stack condensate, main filter drainage, cooler water, sump accumulations from the 293-A Building) along with miscellaneous laboratory wastes and 206-A sump wastes are routed to collecting tanks. When a batch is accumulated, it is sampled for uranium, plutonium, and acid content. The batch is made basic with caustic and transferred to underground storage tanks.

A sump waste receiver tank is used for accumulation of head-end and central canyon sump waste plus drainage from various sources such as the condenser vent, vessel vent, sampler drain headers, and ammonia scrubber waste. When a waste batch is accumulated, it is sampled and the contents are either made basic and sent to underground storage, or transferred to the waste rework tank, depending on the amount of product in the liquid and the waste source.

Light Water used in the fire prevention system has been shown to be detrimental to the PUREX process, and causes extremely excessive foaming during concentration unless previously diluted with a large volume of other solution. The Light Water collected in the sump waste receiver tank as a result of the fire prevention system being activated is made basic and sent to underground storage.

Aqueous Effluents Disposal. Aqueous discharges from the PUREX facility include the following six categories: cooling water, chemical sewer, steam condensate, process condensate, ammonia scrubber waste condensate, and 203-A Area discharge. Table A.1 summarizes the type of flow measurement, sampling, and radiation monitoring for each discharge stream. Each of these streams is sampled and monitored for radionuclide content. If the content is too high based on the DOE 5480.1A guidelines, the stream is either diverted to a lined retention basin or held in the accumulation tank where it is sampled and analyzed. Then the liquid is either pumped back to the building for further processing or to the appropriate disposal area, which may be a pond, crib, or underground storage tank. Further detail is included in Section A.2.2.

Modifications in this area include recycling of three process condensate streams which were formerly sent to a crib. Also, the ammonia scrubber waste (ASW) is now concentrated with only the condensate routed to the crib rather than the waste itself as was formerly done. As a result, the quantities of radionuclides released to the cribs are, except for tritium, reduced by at least 50 percent (on a per metric ton of fuel basis) . The concentrated ASW is sent to underground storage.

A.1.12 Solid Waste Disposal

Solid wastes generated at the PUREX plant are divided into the three categories: nonradioactive wastes, low-level wastes, and transuranic (TRU) wastes. Solid waste effluents (excluding those handled remotely) are monitored by beta-gamma and alpha instruments to determine radiation levels. A neutron monitor is used to measure the plutonium content of dry waste containers. Collection and packaging of the three types of wastes for disposal to various burial sites is described below.

Solid nonradioactive wastes, consisting of ordinary trash originating outside of contaminated areas, are collected in trash cans, plastic bags, cardboard boxes, etc. which are emptied into a dumpster. The waste is compacted to approximately one-third volume and buried in the Hanford Site central sanitary landfill. Uncontaminated asbestos waste is double-bagged, wetted and labeled before being placed in a separate dumpster designated "Asbestos Only."

Solid low-level radioactive wastes of small bulk are collected and placed in cardboard cartons or drums for shallow-land burial in a designated area. In 1972, approximately 450 m^3 (16,000 ft^3) of low-level waste from PUREX was buried in the 200 East Area industrial burial ground. The annual volume is expected to be 1.2×10^3 m^3 (42,000 ft^3) following startup.

Transuranic wastes of small bulk and relatively low levels of activity are placed in 55-gallon drums of distinctive colors to identify the type and amount of waste contained. These drums are placed in 20-year retrievable storage in the 200 West Area. In 1972, approximately 190 m^3 (6700 ft^3) of transuranic waste was transferred from PUREX to retrievable storage. Future TRU waste volumes, including drums and burial boxes, are projected to be 1.1×10^3 m^3 (39,000 ft^3).

Large waste items from the canyon suitable for immediate disposal are placed in wood, concrete, or metal boxes and buried in a 200 East Area burial ground. Those items too radioactive for immediate burial are put on railroad flatcars and moved into the PUREX

TABLE A.1. PUREX Plant Aqueous Effluents

Discharge Stream	Flow Measurement	Sampling	Diversion	Radiation Monitoring	Emergency Sampling
Cooling Water (Gable Mountain Pond)	1) Weir 2) Dip Tube 3) Flow Integrator/ Totalizer	1) EMV Sampler 2) Tank Drain Sample	Retention Basin (Automatic)	Single Probe (non-redundant) (non-failsafe)	None
Chemical Sewer (to Pond 216-B-3)	1) Parshall Flume 2) Flow Integrator/ Totalizer	Proportional	Retention Basin (Automatic)	Single Probe (Validated periodically by automatically actuated check source)	Automatic Verification Sample
Steam Condensate (to Crib 216-A-30)	1) Magnetic Flowmeter 2) Integrator/ Totalizer	1) EMV Sampler 2) Jug Pour Sample	Retention Basin (Automatic)	Single Probe (non-redundant) (non-failsafe)	Automatic Verification Sample
Process Condensate (to Crib 216-A-10)	1) Magnetic Flowmeter 2) Integrator/ Totalizer	Proportional	None	Single Probe (Validated periodically by automatically actuated check source)	Automatic Verification Sample
Ammonia Scrubber Waste Condensate (to Crib 216-A-36B)	1) Magnetic Flowmeter 2) Integrator/ Totalizer	Proportional	None	Single Probe (Validated periodically by automatically actuated check source)	Automatic Verification Sample
203A Discharge (to Pond 216-B-3)	Collection Tank Volume Measurements	1) P-Tank Condensate Line Sample 2) Sump Sample 3) Waste Pump Tank (TK-P5) Sample	Capability for Recycle to 202A Tanks in E or K Cells Depending on U Conc. and Purity, or to TK-F18 for Disposal to Underground Storage	Not Required (Collection Tank Sample Analysis)	Not Required

equipment Burial Tunnel 2 for storage. Failed equipment pieces are thoroughly flushed to reduce the plutonium content prior to removal from the canyon process area.

A.1.13 Process Chemicals

The processing of 10 MT of uranium fuel per day through the PUREX Facility requires the handling of over 760 m^3 (200,000 gal) of aqueous chemical solutions each day. Approximately one-half of this volume now consists of recycled process condensate which replaces demineralized water in several streams.

In the aqueous makeup area, over 20 "standard" chemical process streams and, occasionally, a few additional solutions for decontamination flushes or special processing operations are prepared and distributed. The neptunium purification cell has its own aqueous makeup facility which is intended to make the cell independent of the remaining PUREX facility.

Solutions used in large volume, including 57 percent nitric acid, 50 percent sodium hydroxide, aluminum nitrate, potassium hydroxide, ammonium fluoride-ammonium nitrate, and demineralized water, are pumped directly from the 211-A tank farm.

Water for process use is obtained from the 200 East Area filtered water supply. The water must be demineralized in ion-exchange columns before it is suitable for use in the PUREX facility. High purity water required for plutonium product purification is obtained by distillation of demineralized water.

A.1.14 Process Ventilation Systems

The PUREX process ventilation systems exhaust gaseous wastes from the process vessels, remove condensible vapors, and filter out radioactive particulate matter entrained in the exhaust air. In addition, these systems maintain a slightly negative pressure in all process vessels, as compared to the cells and canyon, to minimize the spread of contamination. The canyon process vent system is supplied by three header subsystems which vent various process vessels and condensers. The offgases from these three headers enter a common manifold and pass through a condenser, steam heater, silver reactor, and offgas filter before entering the building ventilation air tunnel which leads to the main stack. The purposes of this vent system are to remove corrosive and radioactive vapors from the canyon vessels, remove radioactive iodine, and return process condensate to the process.

Radioiodine is removed from the heated offgas in the silver reactor by the combination of the iodine with silver nitrate coating on a heated bed of packing. These reactors lose their efficiency after extended use and must be regenerated with silver nitrate. Chloride, introduced to the system as an impurity in process chemicals, also reacts with the silver nitrate and speeds up the loss of efficiency of the silver reactors.

All gaseous wastes from contaminated areas within the PUREX facility are filtered to remove radioactive particulate matter. Most are discharged to the 61-m (200-ft) main stack which contains an internal free-standing stainless steel liner. The stack is periodically flushed to remove any particulate matter or other solids that may have accumulated on the walls of the stack liner.

As the neptunium purification cell is isolated from the rest of PUREX, it has a separate process vent system which provides a source of vacuum for the process vessels to prevent contamination spread, and to remove any vapors from tanks and concentrators. Contamination of the cell is prevented by maintaining the vessels internal pressure lower than the pressure in the surrounding cell.

A separate exhaust system for the ammonia removal equipment and the ammonia waste concentrator is provided to eliminate the possibility of ammonium salt depositing on the building ventilation exhaust filter. Offgas from this equipment is routed through a steam heater followed by prefilters and HEPA filters before exiting through a 24-m (80-ft) stack.

A.1.15 UO_3 Process Description

Conversion of purified uranyl nitrate solution to UO_3 is performed at the Uranium Oxide Plant, located in the 200 West Area, approximately 8 km (5 miles) west of the PUREX plant.

The uranium product from the PUREX facility, an aqueous solution of approximately 60 wt percent uranyl nitrate hexahydrate (UNH), is transported to the UO_3 plant in tanker-trailers. This material is sufficiently free of both radioactive and nonradioactive contaminants to require no further purification before concentration and calcination to uranium oxide, UO_3. This is the final uranium product that is loaded into containers for offsite shipment.

The UNH solution is concentrated in evaporators from the 60 wt percent solution to approximately 100 wt percent UNH. The overhead vapors are collected, condensed, analyzed, and either discarded to crib, or diverted to the waste concentrator or to the 100 wt percent UNH storage tanks depending on the uranium content. A portion of this condensate is used for nitric acid absorber water.

The concentrated product solution flows from the concentrator to a holding tank from which it is fed to the calciners located in the 224-UA Building. Conversion of UNH solution into UO_3 is a thermal decomposition process. As the UNH is decomposed by the heat, oxides of nitrogen are driven off and are drawn through the vent piping to the acid recovery tower for recovery of nitric acid.

The UO_3 powder, as it is formed, overflows the weir in the calciner and flows to a pickup bin from which it is routed through a cyclone separator. The air leaving the cyclone separator flows through two sets of filter bags in a series, then through a glass fiber filter and out to the atmosphere. The UO_3 powder, produced in the form of small spherical pellets, is loaded into steel containers for shipment.

A.1.15.1 Acid Recovery. During calcination of UNH to UO_3 powder, large quantities of nitrogen oxides are released. These are carried from the calciner to an acid recovery system consisting of wet scrubbers to remove entrained UO_3, a vapor cooler, an absorber tower, and a system of reflux water addition. The recovered nitric acid, at approximately 50 wt percent concentration, is sent to storage for reuse in the PUREX process.

A.1.15.2 Waste Handling. Uranium solutions and solids that escape from the process equipment (e.g. floor flushings, equipment flushes, dissolved scrap powder, dust from filters) are retrieved and returned for decontamination and salvage. They are concentrated through evaporation until the solution reaches 480 grams of uranium per liter. The concentrated solution is filtered through a diatomaceous earth bed and then transferred to a holding tank for storage and subsequent return to the PUREX plant for cleanup and recovery.

The cooling water, steam condensate, and chemical sewer waste streams are collected in a detention basin for sampling. Then they are sent to a pond or crib depending on the radionuclide content. Process condensate is sent to the crib.

Approximately 1.4×10^8 m^3 (4.9×10^9 ft^3) of gases are discharged to the atmosphere from the UO_3 plant annually, containing an average (total) of 9×10^{-5} Ci of fission products and 1.4×10^{-7} Ci of alpha-emitting radionuclides. The radionuclides are essentially all ^{106}Ru and uranium, respectively.

Gaseous process effluents from the UNH concentrators, concentrated feed receiver tanks, and certain process vessels are routed through a condenser, then vented to the atmosphere through a 24-m stack. The acid recovery unit and the six calciners are also vented through this stack.

In calendar year 1972, approximately 21 m^3 (740 ft^3) of solid waste contaminated with traces of mixed fission products (<1 Ci total) from the Uranium Oxide Plant was buried in the 200 West Area industrial burial ground. Future plant operations will produce the same type of solid waste with amounts in proportion to production.

A.2 DESCRIPTION OF EXISTING FACILITIES

A.2.1 PUREX Plant Facilities

The PUREX Building (202-A) and supporting facilities are briefly described in Section 3.1.2.1 of the text. Additional detail is provided here with emphasis on utility services and other areas not previously covered.

The processing area is a canyon containing a single row of 12 process cells. Running nearly the full length of the canyon building is a craneway for three gantry-type maintenance cranes that are used to: 1) handle cell cover blocks, 2) remove and replace process cell equipment remotely, and 3) charge irradiated fuel into the dissolvers.

For shielding purposes, a thick concrete wall separates the cells from the galleries. The cabway for the two master cranes is also shielded by this wall. The third crane is a slave crane, which may be operated either directly or remotely from the master crane controls.

Casks containing the fuel are brought into the canyon through a railroad tunnel near the storage basin. The tunnel, which is also the route for removing and delivering process equipment, connects to a railroad spur outside the 202-A Building.

A "hot" pipe trench contains an array of pipe headers connecting the cells. This permits intercell solution transfers, and also provides piping for transfers to and from cells to facilities external to the 202-A Building.

Through an air tunnel, air from the cells is drawn to the ventilation exhaust filters and the 61-m main stack.

A.2.1.1. PUREX Processing Capabilities

Based on a 72 percent time operating efficiency and a fuel mix of 83 percent Mark IV (0.947 percent ^{235}U) and 17 percent Mark I-A (spike) fuel, the PUREX processing rate is currently limited by E Cell waste handling operations to approximately 2300 MT/yr. Engineering studies indicate the maximum capacity might be increased to approximately 3100 MT/yr if proposed modifications were made in the current flowsheet. In the proposed flowsheet, solids recovered from the cladding waste and spent metathesis solutions are combined, slurried to the receiver tank, routed to the metathesis feed tank, and then to a dissolver during the next metathesis operation. Most of these solids are retained in the dissolver following metathesis and are dissolved during the following uranium dissolution. This scheme eliminates a metathesis operation, centrifugation of the metathesized solids, transfer of the solids slurry, and solids dissolution from the current flowsheet for the centrifuge system. The proposed flowsheet modifications would require changing a tank agitator and piping jumpers. These changes could be made remotely using the canyon crane and would not increase occupational dose rates or industrial accident frequencies.

Alternatively, using the current flowsheet, the processing capacity could be increased to approximately 2600 MT/yr by restoring the second centrifuge in E Cell to operation at a cost of about $200,000. The 2600 MT/yr limitation is due to a lack of space to install the desired additional centrifuge feed and receiver tanks in E Cell. Further increasing the capacity to 3000 MT/yr may be possible by extensively relocating equipment in E Cell or by placing some of the needed new equipment in F Cell at a total cost of about $7,000,000. Again these changes would be made using the canyon crane and would not increase occupational dose rates or industrial accident frequencies; however, this alternative has not been studied in detail.

In both cases, achieving the maximum rate would require strict adherence to processing time schedules.

A.2.1.2 Remote Process Cells

The function and contents of the 12 process cells (Cells A, B, C, D, E, F, G, H, J, K, L, and M) located in the canyon and four other cells (Cells N, Q, R, and U), not in the canyon, are briefly described as follows:

- Cells A, B, and C are used to declad and dissolve irradiated fuel. Each cell contains essentially identical equipment for dissolution, offgas treatment, ammonia scrubbers and absorber, steam and electric heaters, silver reactor for iodine removal, and filters.
- Cells D and E are used to prepare metal solution feed for solvent extraction columns. Also, E Cell contains a centrifuge and caustic reactor, ammonia scrubber, and centrifuge cake metathesis reactor.
- F Cell is used to recover nitric acid, treat aqueous high-heat waste, and concentrate ammonia scrubber wastes.
- G Cell is used for washing spent TBP solvent so that it can be reused.
- H, J, K, L Cells contain tanks, pulse columns, concentrators, and auxiliaries for continuous countercurrent solvent extraction.
- M Cell is used for equipment decontamination. A portion will be partitioned off for use in a plutonium oxide conversion system.
- N Cell is being modified for use as a calcination facility for preparing PuO_2 from $Pu(NO_3)_4$.
- Q Cell is the neptunium purification facility and contains a control room, shielded hot cell, a maintenance room with shielded access gloveboxes, a product loadout room and aqueous makeup area.
- R Cell contains Solvent Treatment System No. 2. The solvent in R Cell contains very low levels of radioactivity. Therefore, R Cell is called the "cold" solvent building.
- U Cell has four large tanks, two for collecting and sampling low-activity laboratory waste, and two for storage of recovered nitric acid.

A.2.1.3 Canyon Piping

Short intracell transfers between adjacent pieces of equipment are made by direct jumper piping connections within the cell. Longer transfers require jumpers to the pipe trench wall. The pipe trench also contains "hot" process and servicing headers for the equipment in the cells. The pipe trench contains spare piping systems in addition to the spare process line intended for occasional use.

A.2.1.4 Cell Washdown Nozzles

Washdown nozzles are installed in the cells for decontamination of the cell interior. Equipment with relatively high potentials for contamination have separate, specially located nozzles for specific use with that equipment. Flows from these special nozzles are controlled separately from those of the main washdown nozzles.

A.2.1.5 Vessel and Condenser Vent Systems

Canyon vessels not used for boiling or denitration are vented to the vessel vent header which runs the length of the pipe trench. Boilup and denitration tanks for acid recovery and waste treatment in F Cell are exhausted through a condenser to a process vent system. All other tanks used for boiling solutions in the canyon are vented through condensers to the condenser vent header in the pipe trench. The jets on all three vent systems discharge to a condenser in F Cell where condensate is removed from the vent stream.

A.2.1.6 Galleries

The storage, sample, pipe and operating, and crane cab galleries are located at different levels, one above the other. The storage gallery area is used primarily for storage of dry chemicals and spare equipment.

The sample gallery contains remote equipment for taking process solution samples from the cell equipment. Samples are sent to the sample receiving room in the analytical laboratory. A shielded pipe chase located in the sample gallery contains headers for recovered nitric acid, organic solvent, sampler drains, and sampler lines to and from cell equipment. Spares for the acid and solvent headers are also installed in the pipe chase. Unshielded lines bearing recovered solvent and process condensate are located on the wall above the pipe chase.

The pipe and operating gallery (P and O gallery) provides space for the electrical switchgear, instrument racks, nonradioactive piping, and associated gang valves which serve the in-cell equipment. A few batch chemical addition tanks are located in this gallery.

The crane cab gallery is the corridor of travel for the two master crane cabs. The wall of the craneway shields the cabs and cab operators from canyon radiation. Crane maintenance platforms are located at both ends of the gallery.

A.2.1.7 Laboratory

The PUREX analytical and control laboratory is located in the east service annex. The first floor contains the laboratory work area and change rooms and the second floor houses the ventilation equipment and service piping.

Packaged solid waste from the laboratory is stored in a small rectangular vault from which it is transferred to a vehicle for transportation to the waste burial grounds. Laboratory sink drainage is collected in stainless steel tanks. The tank solution is sampled, made alkaline, and sent to underground tank storage for ultimate evaporation in the 242-A Waste Concentrator. "Hot" liquid wastes are routed to the acid waste accumulation tank in the backcycle waste system.

A.2.1.8 Utilities

Utilities available to the PUREX facilities including steam, compressed air, raw water, filtered water, and power supply are discussed in this section.

Steam. Steam is supplied to the PUREX exclusion area through overhead lines at various line pressures, depending on the service. An emergency exhaust turbine-driven fan is supplied by high pressure steam. The steam turbine and offgas heaters have first priority on high-pressure steam.

While the plant is operating, about 85 percent of the PUREX steam consumption is directly related to processing activities and is discharged as condensate to the crib via a radiation-monitored tank. The remaining 15 percent is consumed in space and water heating with condensate discharged to the chemical sewer.

Compressed Air. Process air is used for purging jet transfer lines, operating vent jets, purging tank jackets, coils, and steam sparge lines, and operating sampler jets. Process air is provided by three air compressors. While two of the compressors are operated, the third is maintained in standby in case of malfunction of one of the others.

Instrument air is provided by a water-sealed compressor. A second compressor is maintained in standby. The air flows from the compressors through water separators into a receiver and then passes through one of two regenerative-type air dryers containing activated alumina absorbent. From the dryer, the air flows to a header in the P&O gallery. Subheaders furnish instrument air to the aqueous makeup area and to facilities outside the building.

Breathing air for mask use is provided by a water-sealed rotary compressor. The compressed air passes through a water separator into a receiver tank and then through a

filter to service headers. Outlets and branch lines from these headers provide breathing air at atmospheric pressure to various locations throughout the PUREX Plant.

Raw Water. Raw water is used at PUREX for process cooling, process air and compressor cooling, fire fog supply, and cell washdown. Water for the PUREX plant is drawn from the Columbia River and pumped to the 282-E Building in 200 East Area. Dual supply mains are also available on this system, which supplies both the 200 East Area and the 200 West Area.

Raw water requirements for the PUREX plant are about 91,000 m^3 (240 million gal) per month. Essentially all raw water used at PUREX is discarded to the Gable Mountain Pond (Disposal Site 216-A-25), and to B-Pond (216-B-3).

Filtered Water. Filtered, sanitary, chlorinated water is used at the PUREX plant for safety showers, fire protection, drinking and toilet facilities, operating area washdown, and for making demineralized water.

Since this water is the source of domestic supply to the area, care must be taken to avoid contamination of the system by backup flow from a raw water system or introduction of harmful chemicals. The major headers are equipped with antisiphon valves, and connections to process systems or potentially contaminated services are avoided.

An elevated tank, 2901-A, provides an emergency supply of filtered water in the event of a filter plant failure or a rupture in the distribution system.

Seven fire hydrants are located on the filtered water line around the PUREX building.

Power Supply. Electric power is supplied via a Substation, located about 8 km (5 miles) northwest of the PUREX area. Incoming power to the substation is supplied by the Bonneville Power Administration. At the substation, the power is reduced and sent in two overhead lines to a switching station where it is reduced again. Current is delivered to substations where transformers convert the voltage supply to 480 volts. Emergency power is available from the 284-E powerhouse steam turbine generator.

A.2.1.9 Fire Protection System

In the PUREX building, most of the canyon cells, especially those containing large inventories of organic solvent (i.e., G, R, H, J, and K Cells), are equipped with a temperature-activated automatic sprinkler foam system using the Light Water Aqueous Film Forming Foam system which simultaneously applies foam to the adjoining ventilation tunnel. Detection of fire in these cells is by rate-compensated thermal detectors that sound alarms locally and at the Hanford Site central fire station located between 200 East and 200 West Areas.

Fire protection in the other canyon process cells is provided by a system of peripherally mounted spray nozzles controlled by manual gate valves.

Manual activation of the system is dependent upon the detection of abnormal conditions by "Fireye" photoelectric flame detectors which activate alarms in the central control room and in the dispatcher's office. These detectors are also tested and will be replaced, if they fail, with Fenwal "Detect-a-fire" elements, which activate alarms when the elements reach 135°C.

Fire detectors are also installed in the canyon cranes. The detectors sound an alarm in the central control room and in the central fire station. The crane electrical panels are enclosed and are provided with a Halon-1301 extinguishing system connected to the fire alarm system.

Automatic sprinkler protection on standard wet and dry pipe systems is installed in the hot shop and the storage portion of the storage gallery in the canyon building. In addition, N Cell, Q Cell, and the plutonium storage area have automatic wet-pipe sprinklers with both local and 200 Area central fire station alarms. All sprinkler installations are low-temperature closed-head systems.

Automatic sprinkler protection, using standard wet and dry pipe systems, is also installed in the 202-A annex, including the laboratories, laboratory storage area, aqueous makeup area, offices, and shops.

A.2.1.10 Ventilation

The ventilation system in the 202-A Building is designed and operated to keep normal work areas free of radioactive contamination by maintaining airflow from zones with no radionuclide content into zones of progressively greater contamination potential. The ventilation air is supplied by four systems: canyon, sample gallery, service area, and laboratory.

Ventilation System 1. This system serves the areas of greatest radioactivity (the canyon and process cells), including all process vessel vents except the metal dissolvers, the ammonia scrubber waste concentrator, and all E Cell vessels except the HA column feed makeup tank.

Air which has been filtered, washed, humidified, and temperature-adjusted is supplied into the canyon at ceiling level. The air then flows down to the canyon deck where it is drawn down through the cell cover blocks into each of the cells. From the cells, the air is exhausted through ports into the air tunnel, then through the 291-A Filter to the main ventilating stack.

The exhaust side of the system from the canyon air tunnel consists of two fiberglass filters and one standby high efficiency particulate air (HEPA) filter in parallel, three electric exhaust fans and a steam turbine fan for emergency standby, which exhaust to the main ventilating stack. In addition, the vent flow from the dissolver offgas treatment facilities is discharged to the stack.

The vent system is designed to maintain safe differential pressures between the process area and the personnel-entry portions of the building, even in the event of a power failure or loss of instrument air.

Ventilation System 2. This system services the areas of the building which are routinely occupied or entered by the work force, but are regulated because of a potential for contamination. The areas serviced by this system include the sample gallery, regulated shop, canyon lobby, PR room and corridor, N Cell, R Cell (276-A vault), Q Cell, and U Cell.

The supply air is filtered, water-washed, and temperature-adjusted, before delivery to the sample gallery. This system is exhausted through HEPA filters in five streams. From the fans, the streams are vented to the atmosphere through 21-m stacks outside the building. Radiation monitoring capability will be installed in the PR room, the east sample gallery hood, and the west sample gallery hood exhausts.

Ventilation System 3. This system services the areas considered to be uncontaminated and to have the least potential for becoming contaminated. These areas include the pipe and operating gallery, the storage gallery, the pulser motor-generator room (PIV room), the aqueous makeup levels, and the service areas (shops, offices, lunchroom, etc.) except for the analytical laboratory.

The supply air is filtered, water-washed, humidity-adjusted, and delivered by two air-handling systems. The exhaust side of the system contains several individual fans. All exhaust streams are presently unfiltered. However, a single stage of HEPA filters will be installed in the White Room exhaust air duct from a portion of the P&O gallery prior to plant startup. Radiation detection devices, which will automatically close the air vents if radioactive material is entrained in the exhaust air, will also be installed along the wall near the other exhausts of the P&O gallery.

Ventilation System 4. System 4 services the PUREX laboratory and is largely independent of other building ventilation systems. The supply air is filtered, water-washed, humidified, and delivered by two air-handling systems. A portion of this air is used for makeup of constant-humidity air to replenish losses from the supply (furnished by two refrigeration air conditioners) to the laboratory counting room and instrument shop.

The exhaust side of the system consists of two parts. The air from all offices and shops is exhausted into the corridor which in turn is exhausted through the rooms with open-faced hoods. The decontamination room, laboratory hood rooms, and sample storage room are exhausted through high-efficiency filters by two fans to a separate 21-m stack. These fans are operated together, and are both connected to the emergency power supply. If the normal power supply is interrupted, one of the fans will be automatically switched to emergency power.

A.2.1.11 Vacuum Air Sampling System

The vacuum system supplies the vacuum for a network of 150 air samplers positioned through the canyon proper, the sample and operating galleries, unregulated service areas, laboratories, and the 202-A Building vent stacks (excluding the main ventilation exhaust stack). Because the air samplers monitor the air for radionuclide content, the vacuum pumps are connected to the emergency electrical supply.

A.2.2 Auxiliary Facilities

In the vicinity of the 202-A Building are facilities for air filtration, chemical storage, solid and liquid waste disposal, cask loading, acid recovery, uranium product storage and shipping, and office space. Adjacent buildings which have important functions are discussed below:

- Building 291-A houses the main ventilation exhaust facility for the PUREX Building and contains air tunnels, glass fiber filters, fans, and the base of the 61-m stack. This building is discussed in detail in the following Subsection, A.2.2.1.
- 292-A Building houses stack sampling equipment.
- 293-A Building houses two absorption towers to remove oxides of nitrogen from dissolver offgases. The building also contains two storage/recycle pumps and equipment for nitric acid recovery.
- 294-A Building houses filters to provide secondary filtration and cleanup of dissolver offgases.
- 203-A Tank Farm is used for storage and shipping of uranyl nitrate hexahydrate (UNH) product from PUREX.
- 206-A Building houses the vacuum fractionator and associated equipment to concentrate nitric acid recovered from PUREX and UO_3 plants.
- 211-A Tank Farm is used for storage of bulk liquid chemicals to be transferred to the PUREX aqueous area via pumps located in the adjacent 211-A Building.
- 2714-A Building contains some chemicals used in PUREX.

A.2.2.1 Air Ventilation System, 291-A

The 291-A facility discharges filtered process ventilation air and gases from PUREX to the atmosphere. The equipment includes the ventilation air filters, fans, stack, and stack sample house.

Ventilation Air Filters. Three ventilation air filters (two in-line and one standby) remove solids from PUREX process air before it is discharged to the atmosphere. A sprinkler system is provided in the main ventilation tunnel for fire protection of the filters.

In recent tests, these filters were found to have efficiencies greater than 99.9 percent for removal of particles with mean aerodynamic diameters ranging from 0.3- to 0.7-micron. Similar tests will be conducted annually. The two in-line filters, operated in parallel, are similar in design but have significant differences. Each has two fiberglas bed sections—the prefilter and the cleanup filter. In Filter 1, the prefilter is packed with 115-K Fiberglas (Owens-Corning Fiberglas Company, Inc.), while in Filter 2, the prefilter consists of five separate layers, each packed with a different density of

Fiberglas. The airflow direction is downward through Filter 1 and upward through Filter 2. The cleanup filter in each unit consists of 132 American Air Filter Company "Deep Bed Filter" units.

A third filter (Filter 3), which could operate in parallel with the other two filters, will be put into standby service. The filter cell, which is below grade, is equipped with two banks of 85 percent ASHRAE bag-type prefilters and three banks of HEPA filters, all in series. The two prefilter banks and the first bank of HEPA filters are designed to permit the upper quarter of the banks to be lowered while the remaining three-quarters of the banks stay in place. This feature permits bypassing of a bank or banks of filters in case an excessive pressure drop from particulate loading occurs across one or more of the filter banks.

Fire screens are installed in the inlet duct to the new filter cell and in front of all the filters except the final HEPA bank. A water seal, which when filled with water will stop airflow, is in the exit air duct. The seal is automatically filled by gravity discharge from a water storage tank when fire is detected by a sensing element located in the filter cell inlet duct, or by a manually operated switch.

Instrumentation is provided to monitor differential pressure across the filter, the individual filter banks, and the fire screen in the filter inlet duct. Differential pressures in excess of established limits are indicated in the control room.

Process Stack 291-A-1. Located immediately south of the southeast corner of the 202-A Building is the main process ventilation stack. The exhaust air rises through a free-standing stainless steel liner. The top of the stack is capped to cover the annulus between the stack and the liner. The bottom of the liner has a dished head which drains to a collection tank. The inlet breeching for the ventilation air is baffled and is welded to the liner at an angle of 45° upward.

Six 20-cm (8-in.) diameter nozzles enter the liner below the ventilation air breeching; three are for routing dissolver offgas to the stack, while the other three are spares.

Stack gas sampling points are located approximately at the 20-, 23-, 27-, and 60-m levels of the stack. Radiological sampling and monitoring equipment is located in the adjacent sample house. The stack is also equipped with flow rate and totalizing instrumentation. A wash system including a booster pump is installed to flush the inside wall of the liner.

With the exception of ^{85}Kr, the radionuclide concentrations in this main exhaust stream discharged through the existing main filters, are routinely at or below the levels permitted in restricted areas but above the levels permitted in offsite populated areas. However, the radionuclide concentrations at the Site boundary resulting from this main exhaust stream are routinely below the level permissible in air in offsite populated areas.

A.2.2.2 Ponds

Cooling water and chemical sewer liquids are usually uncontaminated and are discharged to surface ponds. Cooling water is routed through a diversion station with capability for emergency discharge to a covered, lined trench in case the liquid is radioactively contaminated. Normal flow goes to a second diversion box where flow can be directed to the Gable Mountain Pond, 216-A-25, or to the 216-B-3 Pond. Gable Mountain Pond is a man-made lake occupying about 29 ha (71 acres) and located 4 km north of the PUREX facilities. The 216-B-3 Pond, which also receives chemical sewer waste, is a man-made lake covering several hectares about 1.6 km northeast of the PUREX facilities. Chemical sewer waste is routed through a diversion station with capability for proportional sampling, radiation monitoring, and emergency routing to a lined trench for further treatment.

A.2.2.3 Cribs

Steam and process condensates and ammonia scrubber waste condensate, which are low-activity liquids, are sent to rock-filled dry-wells located in various sites in the vicinity of the PUREX facilities. Typically, a crib consists of a perforated pipe laid at a slight slope on a bed of coarse rock covered with layers of gravel and sand. This bed is

covered with paper or plastic sheeting to prevent silt from seeping into and plugging the gravel bed. The upper portion of the crib is backfilled to grade with dirt. The distributor pipe is vented to the surface through a r[illegible] pipe in the end of the distributor. Liquid waste entering the distributor pi[illegible] out through the perforations and disperses throughout the porous bed. A percolation [illegible]e of 8 m^3/day-m^2 (200 gal/day-ft^2) of crib is estimated for this disposal method.

Process condensate from the final uranium cycle is sampled, monitored for radioactivity (alarm sounds if preset limits are exceeded) and discharged through a 20-cm (8-in.) diameter stainless steel pipe to the 216-A-10 Crib. The distributor pipe is 68 m (222 ft) long and is buried 9 m (30 ft) below grade.

Steam condensate from PUREX is continuously checked for radioactivity with an in-line monitor and is automatically diverted to a covered, lined retention trench (216-A-42) if radioactivity is detected. Crib 216-A-30, used for disposal of steam condensate, contains two distributor pipes arranged so that either or both ends of the crib can be used. One pipe made of 38-cm (15-in) diameter, perforated, corrugated, galvanized steel extends for 213 m (700 ft) along the center of the crib. Another 41 cm (16-in.) steel pipe parallels the first pipe for 210 m, then angles across to the centerline of the crib and extends another 210 m down the center of the crib. For the final 210 m, this pipe is made of corrugated, 38 cm diameter steel, and is perforated for water drainage. Because of the uneven surface of the crib, the pipes are buried beneath 1.2 to 5.5 m of fill.

Ammonia scrubber waste condensate is sent to a crib (216-A-36B). In this routing there is a sampling station with a radioactivity monitor which alarms when preset limits are exceeded. The active portion of this crib is 150-m (500 ft) long. The front 30-m portion of the crib was deactivated soon after initial operation when it became too radioactively contaminated for further use. (The radionuclide content of this waste stream was significantly reduced after the location of the offgas discharge from the then-new annular dissolvers was changed.) Liquid is discharged through a perforated 10-cm (4-in.) stainless steel distributor pipe which is inserted into the original 15-cm (6-in.) pipe used for distribution prior to deactivation of the front section of the crib. In the deactivated section, no holes exist in the inner pipe, thus preventing liquid leakage to this portion of the crib. The pipe lies about 7 m (23 ft) below grade.

A.2.3 Uranium Oxide Plant Facilities

The uranium oxide plant facilities are briefly described in Section 3.1.2.2 of the text. Additional detail is provided here with emphasis on facilities and utility services not previously covered.

A.2.3.1 Facilities

The function and content of buildings adjacent to the Uranium Oxide Plant are discussed briefly below:

- 203-U facility receives and stores uranyl nitrate hexahydrate.
- 272-U facility contains service and repair shops for equipment.
- 224-UA Building holds six calciners and contains powder handling equipment and weighing facilities.
- 224-U Building contains offices, service areas, chemical makeup tanks, utility supply piping, process operation control centers, and Cells A through F. Cell A is for nitric acid recovery; B for equipment decontamination facilities and feed pumps; C for recovered acid receiving and distribution, waste UNH evaporator and process condensate collection; D for UNH concentration; E is a spare cell not normally used, and F for recovery of UO_3 digest bag filters.
- 211-U Tank Farm receives, stores and disburses bulk process chemicals. It also contains tanks for storage of recovered nitric acid.

- 275-UR Building is used for UO_3 product storage.
- 207-U basin retains process cooling water for analysis before water is discarded to a surface pond.
- UO_3 storage consists of a series of fenced concrete pads used to store UO_3 containers awaiting shipment.

A.2.3.2 Utilities

Utilities available to the UO_3 plant including water, power supply, compressed air, and steam are discussed in this section.

Water. Raw water is supplied to the Uranium Oxide Plant directly from the 282-W Water Reservoir Building and also by a line extending from the REDOX Plant main water line. This water is used as cooling water in the process condensers, the acid absorber tower and gas cooler; for reflux water in the absorber tower if needed to supplement the process condensate; deluge water for the three UNH concentrators and other miscellaneous services. Average use during normal plant operations is 950 ℓ/min. (250 gpm).

Potable water is supplied from the 283-W Water Treatment Building for safety showers, drinking fountains, toilets and fire hydrants. Average demand for sanitary water during normal plant operations is 190 ℓ/min. (50 gpm).

Power Supply. Electric power sufficient to operate all the equipment in the UNH (224-U) Building is supplied through a transformer in the substation west of the building. Emergency power supplied by the 284-W Powerhouse steam turbine-operated generator starts automatically if the main incoming power is lost. Emergency batteries are in place to maintain emergency switching capability.

The electrical power for the UO_3 (224-UA) Building is supplied through two transformers. The system is designed so that either side will carry the load through an automatic bus tie that switches power from the remaining incoming line to pick up the load.

There are two main switch gear rooms in the 224-U Building, and one switch gear room in the 224-UA Building which is the largest and most complex as its transformers are needed for the calciner furnaces. There are 54 transformers serving the heating elements in the calciners plus regulators for these circuits which are needed for precise control of the electrical current to obtain the required calciner heating patterns.

Compressed Air. Compressed air is supplied to the 224-U Building and to the 224-UA Building where it is used to keep the UO_3 powder out of the calciner agitator shaft packing glands and to clear the calciner feed points after process shutdown.

Instrument air is supplied from the main air supply through a separate line. The breathing air system has a separate air pump and storage tank that meet Mine Safety Appliance specifications. The principal uses for fresh air masks are to protect personnel in areas containing uranium oxide dust or near welding being done in potentially contaminated areas.

An emergency diesel engine-driven compressor is available to supply process and instrument air if the building compressor fails.

Steam. Steam is delivered from the 284-W Powerhouse as superheated steam. A second line from the powerhouse can furnish steam to the 224-U Area if required.

Steam is used at different pressures in the plant, ranging from 1550 kPa (225 psi) for the vacuum jets, to 862 kPa (125 psi) for the UNH concentrators, to 100 kPa (15 psi) used primarily as a heating agent to prevent solutions from freezing in jacketed tanks and in jacketed feed lines, and calciner feed points. During normal operations, total steam use averages about 4500 kg (10,000 lb) per hour.

A.2.3.3 Fire Protection Systems

The Uranium Oxide Plant is served by three fire hydrants, two on the sanitary water line and one on the raw water line. The various buildings in the plant complex are not equipped with automatic fire extinguishing equipment, but hoses and manual fire extinguishers are available. The 224-UA Building and some of the auxiliary buildings are covered by fixed-temperature automatic fire detection systems, with alarms in the buildings and in the 200 Area central fire station. These systems will be upgraded prior to startup to provide automatic sprinkler protection as listed in Section 3.1.5.6.

A.2.3.4 Ventilation

The 224-U Building ventilation air supply is routed to A, B, C and D Process Cells and to the nonradioactive zones of the building. The air flowing into the cells is then exhausted unfiltered to the atmosphere by roof fans. The flow of air is controlled by maintaining static pressure slightly above atmospheric pressure in the occupied areas and under a slight vacuum in the process cells.

Exhaust gases and vapors from the UNH concentrators, concentrated feed receiver tanks, and all C Cell vessels are vented via steam jet through a condenser and to the atmosphere through the 24-m stack on the roof of the building. The acid recovery unit and the six calciners are also vented to the atmosphere through this same stack; total effluent flow from this release point is about 110 m^3/min (4000 cfm).

The 224-UA Building is supplied by a blower unit. Air is fed to all parts of the building and is exhausted by seven roof vent fans. The nonradioactive zone of the building is slightly pressurized to maintain direction of air flow and prevent contamination of the radionuclide-free areas. Above the second level, all the floors in the five-story UA tower are made of grating which allows a free flow of air up the entire tower to the top floor from which the air is exhausted to the atmosphere through HEPA filters along with the calciner cell exhaust.

Parallel equipment is provided in the 224-UA Building powder handling system to allow flexibility for maintenance, cleaning, or replacement. The operating system consists of a cyclone separator, primary bag filter, two of the three primary exhausters, secondary bag filter, fiberglass filter, HEPA filter, and secondary exhauster. The cyclone separators and primary bag filters discharge UO_3 solids to a single storage hopper for subsequent loading into containers. The secondary exhausters discharge air to the atmosphere via a vent stack located on the lower 224-UA Building roof. The point of discharge is about 12 m (40 ft) above ground level.

Effluents are sampled by an inventory method, with sampling time intervals determined by the specific location and the potential for air contamination in the part of the process operations area.

A.2.3.5 Liquid Effluent Disposal Facilities

Cooling water, steam condensates, and chemical sewer wastes are collected in the 207-U Retention Basin, sampled, analyzed, and routed to the 216-U-10 Pond. Process condensates are sampled prior to transfer to the 216-U-12 Crib.

The 216-U-10 Pond is a man-made lake covering about 8.9 ha (22 acres) of the southwest corner of the 200 West Area. This pond also receives cooling water and steam condensates from other 200 West Area facilities.

The 216-U-12 Crib is a rock filled dry-well similar in construction to the one shown in Figure A.9. This crib is located about 460 m (1500 ft) south of the plant and used exclusively for process condensate disposal. The bottom area of the crib is about 90 m^2 (1000 ft^2).

A.2.4 Completed Facility Modifications

A.2.4.1 Modifications in Liquid Effluent Control ($1,460,000)

A system was installed to routinely recycle and re-evaporate the process condensates from the acid absorber, the acid fractionator, the backcycle waste concentrator, and the first uranium cycle concentrator. This leaves only the condensate from the final uranium cycle that is discharged to a crib.

The ammonia scrubber waste was rerouted to an evaporator rather than to a crib. The concentrated waste from the evaporator goes to an underground storage tank; the condensate (lower in radionuclide content than the former waste) goes to a crib. The offgases from the evaporator and condenser will go through a newly installed HEPA filter and a new exhaust stack to the atmosphere.

The condensate discharged from the acid fractionator has been rerouted for recycle to the fractionator and as absorber water in the backup facility. The excess condensate is routed to the backcycle waste system. Formerly, this condensate was discharged to the chemical sewer.

A.2.4.2 Gaseous Effluent Control Modifications ($2,800,000)

To protect against accidental releases of radioactive particulate materials to the environment caused by abnormal events, a single-stage HEPA filtration system was installed on the exhaust air from R Cell, U Cell, and the sample gallery of the 202-A Building. Effluents from these areas are now expected to meet the levels permissible in air in unrestricted areas.

A second stage of HEPA filtration was added to the filter effluent from the product removal room. This will reduce further the routine radionuclide releases, to levels permissible in air in unrestricted areas, and provide protection against accidental releases. The new filter also provides a third stage of HEPA filtration for the N and Q Cell exhaust streams. N Cell is being modified as part of the PuO_2 production system, and Q Cell contains the neptunium purification system.

A new offgas handling system was provided for the cladding waste treatment cell ammonia scrubber. This modification reduces both the radionuclide content of the effluent and the amount of ammonia entering the main ventilation exhaust filters.

A third filter on the main stack has been installed and will be put in standby (backup) mode shortly before plant operation is resumed (see Figure D.1).

A.2.4.3 Improved Fire Protection ($1,030,000)

Three systems were installed to improve fire protection:

- independent detectors and Light Water[a] foam generation systems for the cells which contain the principal inventories of organic solvent
- a fire protection system (that includes Light Water foam systems) in three other process cells containing lesser amounts of organic solvent, an organic solvent storage tank in the pipe and operating gallery, and wet pipe sprinkler systems in other process and service areas in the 202-A Building
- a sprinkler system in the main ventilation tunnel to protect the main filters, fire doors and dampers, electrical system fire detectors, fire protection screens for hoods and glovebox exhaust filters, and fire protection between transformer banks.

(a) The Light Water system uses a synthetic foam-forming liquid and is designed for use with sea water, brackish water, or fresh water. When proportioned with water, it may be used to control and extinguish Class B flammable fuel fires.

A.2.4.4 New Criticality Alarm System ($300,000)

New nuclear criticality incident alarms were installed in the PUREX plant that meet current criteria for Nuclear Criticality Safety (DOE Order 5480.1). Installation was completed in May 1979.

A.2.4.5 Upgrading Accountability Measurement System ($350,000)

The main accountability tank sampling system and the associated shielding were upgraded. Improvements have been made in the input measurement system particularly in analytical techniques and representative sampling procedures. This permits stricter control of plutonium inventories in the facility.

A.2.5 Planned Facility Modifications

In addition to the mitigative measures provided by plant modifications already completed, additional ones are planned to further reduce emissions from routine operations, reduce the possibility and/or consequences of abnormal operation, and to improve safeguards. These modifications will reduce environmental impacts from plant operations and from onsite transportation of intermediate products.

A.2.5.1 Planned PUREX Liquid Effluent Control Modifications ($4,550,000)

The following liquid effluent controls are planned for the PUREX plant prior to the resumption of operation:

- sampling, monitoring, flow totalizing, and automatic diversion for the steam condensate and cooling water streams
- sampling, monitoring, and flow totalizing for the PUREX plant ammonia scrubber waste condensate effluent
- sampling, monitoring, flow totalizing, and diversion capability for the PUREX plant chemical sewer line discharge
- sampling, monitoring, and flow totalizing for the process condensate discharge
- modifications to the effluent discharge system of the UNH storage area that will provide the capability to process contaminated waste
- encased waste transfer lines from PUREX to the AW tank farm.

A.2.5.2 Planned PUREX Gaseous Effluent Control Modifications ($3,330,000)

Gaseous effluent controls are planned:

- upgrading the present main stack sampling system and adding stack flow totalizing and monitoring
- upgrading the record sampler, monitor sampling, and adding a new stack flow totalizing system on the PUREX product removal room stack
- providing HEPA filtration for exhaust air from the white room[a] of the pipe and operating (P&O) gallery
- providing the capability to divert gaseous effluents from the P&O gallery to a filtered exhaust

(a) The white room is a contaminated area of the P&O gallery where protective clothing must be worn.

- providing a system for reducing the NO_x concentration leaving the PUREX stack. The planned system will use hydrogen peroxide (H_2O_2) to scrub the NO_x from the stack emissions and will result in a 63 percent decrease in the amount of NO_x released to the atmosphere.

A.2.5.3 Upgrading PUREX Ventilation System ($700,000)

The ventilation systems will be upgraded with the following modifications:

- improved control systems to maintain a positive pressure zone in those uncontaminated areas of the 202-A Building that are constantly occupied by personnel, and in three control zones with decreasing pressure as the potential for contamination increases

- additional local and power control room sensors with alarms to warn of pressure changes in the different control zones so that appropriate corrective actions can be taken to prevent the spread of radioactive contamination in the event of an accidental release.

A.2.5.4 Waste Transfer Facilities ($2,600,000)

Install three new encased waste transfer lines from 202-A Building to the AW tank farm.

A.2.5.5 Planned Modifications for UO_3 Plant ($2,620,000)

Three specific modifications are planned:

- Gaseous effluent improvements to provide HEPA filtration and improved monitoring and sampling capability for certain ventilation exhaust streams in the 224-UA Building.

- UO_3 plant fire protection system that will include an automatic sprinkler system with appropriate tie-ins to alarms in most areas of the UO_3 plant.

- better UO_3 loadout room dust control that will be achieved by upgrading the operability of the UO_3 loadout system and by controlling UO_3 powder contamination to operating personnel.

A.2.5.6 Upgrading of the PUREX Plant for Natural Forces Resistance ($830,000)

The original PUREX structural design was in conformity with the Uniform Building Code (UBC), 1952 Edition, according to the original plant design criteria (General Electric 1952).

In preparation for the proposed 1984 resumption of PUREX operations, recent evaluations of the natural forces resistance for PUREX structures, safety systems, and vital equipment were conducted. The facilities which were evaluated included:

- The 202-A Building (main PUREX processing building) canyon.

- The 202-A Building east crane maintenance platform (ECMP).

- The 202-A Building R-Cell for final solvent cleanup and storage.

- The 202-A Building service annex, or non-canyon portion.

- The 291-A exhaust ventilation system for the 202-A canyon including the filter cells, air tunnels, plenum, exposed fans, motors and metal ducts, and stack.

- PUREX vital equipment, components, utilities and services which present potential natural forces hazards to the safe confinement of radionuclides.

Seismic Resistance

The original design criteria specified that earthquake resistance be provided in accordance with Zone 2 regulations of the 1952 UBC. These criteria required that structures have the lateral resistance to withstand a 0.10 g static force.

The recent seismic analyses (Blume and Associates 1976a,b; 1977, 1981a,b; Hawkins 1981a) considered both 0.25 g Safe Shutdown Earthquake (SSE) ground motions (Hanford SDC 4.1 1974) and 0.10 g Hanford Regional Historical Earthquake (HRHE) motions (Blume and Associates 1981b). The work included the development of structural upgrades, with cost estimates, that would be required to withstand both earthquakes. The summary of these PUREX seismic studies results are:

- The 202-A Building canyon, service annex, and R-Cell have sufficient elastic strength to resist the HRHE.
- The 291-A ventilation system, including the concrete stack, are able to withstand the HRHE.
- The 202-A Building ECMP would require upgrades to resist the HRHE; the upgrades would have to be more extensive for SSE resistance.
- Structural upgrades for the 291-A ventilation system stack would be required for SSE resistance. Also, to preclude any ingestion of soil into the 291-A ventilation system in the event of the SSE, lead sheet barriers would be installed around the air tunnels at bends and junctions, plus over the filter cell cover blocks.
- The 202-A Building canyon and service annex would require upgrades to resist the SSE.
- The HRHE and SSE have the potential to disrupt utilities (water, electrical, steam, and telephone), plus major equipment and services.

The potential sources for major radionuclide releases from the PUREX plant, without structural upgrading, in the event of a damaging earthquake were determined to be a uranium metal fire in a dissolver and a solvent fire in H-J Cells. Plans to upgrade PUREX safety systems, components, and equipment in order to limit releases from the plant due to seismic ground motions to within Hanford operational guidelines implementing DOE Order 5481.1A have been developed. Trade-offs between the costs for such upgrading to enhance the seismic resistance and the risks encountered without the modifications were utilized for determining the upgrades to be required for resumption of PUREX plant operation. The study indicated that the consequences of an HRHE or SSE could be minimized by ensuring that the dissolver drown tanks and the Light Water fire supression system to H-J Cell are undamaged and functional. Because both of these systems are located in the Pipe and Operating (P&O) Gallery, a recommendation has been made that the gallery and associated equipment be modified to ensure operability of the equipment after an earthquake. These required P&O Gallery upgrades for seismic resistance enhancement would include the following major items (Hawkins 1981a):

- protection of the three dissolver drown tanks and their discharge piping to the canyon, providing water until a recovery plan is implemented;
- providing a dedicated seismic resistant light-water fire protection system tank, its water supply, and its discharge piping to the canyon for H-J Cell.

The Department of Energy will incorporate these two upgrades to the P&O Gallery prior to operation of the PUREX/UO_3 facilities.

The probability of a 0.25 g earthquake (SSE) occurring cannot be defined because there is an unlimited time span per occurrence; the probability of a 0.10 g earthquake (HRHE) is 8.6×10^{-3} for sixteen years of operation (USERDA-1975).

Wind and Tornado Resistance

Because tornado design criteria were not specified in the 1952 Uniform Building Code, they were not included in the original design criteria. Therefore, recent tornado analyses of the PUREX facilities have been conducted. The studies analyzed the effects of credible tornado conditions for the Hanford Site (Hawkins 1981a) and the results of their evaluations are listed below:

- The 202-A Building canyon and R Cell could resist the 280 km/hr (175 mph) tornado, whose probability is estimated to be 6×10^{-6}/year (USERDA 1975, p. III.2-33)
- The 202-A Building east crane maintenance platform and service annex would require structural upgrades to resist the 280 km/hr tornado.
- The 291-A reinforced concrete stack would require structural upgrades to withstand the 280 km/hr tornado; also, the exposed 291-A ventilation system fans, motors, and metal ducts would require tornado protection.
- The 280 km/hr tornado could disrupt utilities and some services.

The consequences of a tornado at the PUREX facility are presented in Table 5.15. Also, the probability of such a tornado is very low. Therefore, structural modifications for tornado resistance are not considered necessary for resumption of PUREX operations (Hawkins 1981a).

Other Natural Forces

The design criteria and assumptions (UBC 1952, Hanford SDC 1952) for the PUREX facility which pertain to snow loadings, flooding, and subsurface hydrostatic loading are still applicable. No upgrades to withstand these natural forces are considered necessary.

A.3 PLUTONIUM OXIDE CONVERSION SYSTEM

The PUREX plutonium oxide conversion system, currently under construction, is located within the PUREX facility near the final plutonium nitrate purification processing area. The plutonium is thus removed from the PUREX facility as an oxide.

A.3.1 Process Description

The plutonium oxide conversion system would be operated using the oxalate precipitation process. The process flow diagram is shown in Figure A.9.

A.3.1.1 Feed Preparation

Feed is transferred by vacuum from the product receiver tank to one of the M Cell storage vessels. Acid molarity and batch size are recorded for the feed transferred, and from these numbers the required acid addition is calculated to bring the solution to the 7M HNO_3 feed specification. Either 12M or 1.2M HNO_3 is added as required to the vessel and the solution is thoroughly mixed before sampling. After feed specifications are met, the feed is stored in M Cell until needed.

A.3.1.2 Oxalate Precipitation

The batch portion of the process is started by transferring 12 liters of solution from any one of the storage vessels through an intermediate tank to the pre-reduction vessel where hydrogen peroxide is added to reduce any Pu^{+6} to Pu^{+4}.

After the reduction step is complete, feed flows by gravity to the feed tank from which it is continuously pumped to the precipitator at a controlled flow, setting the product production rate. Oxalic acid is simultaneously pumped to the precipitator at a rate designed to maintain a constant plutonium to oxalic acid mole ratio in the precipitator. The correct mole ratio is critical to minimize waste losses and produce a precipitate that is easily filtered out of the slurry.

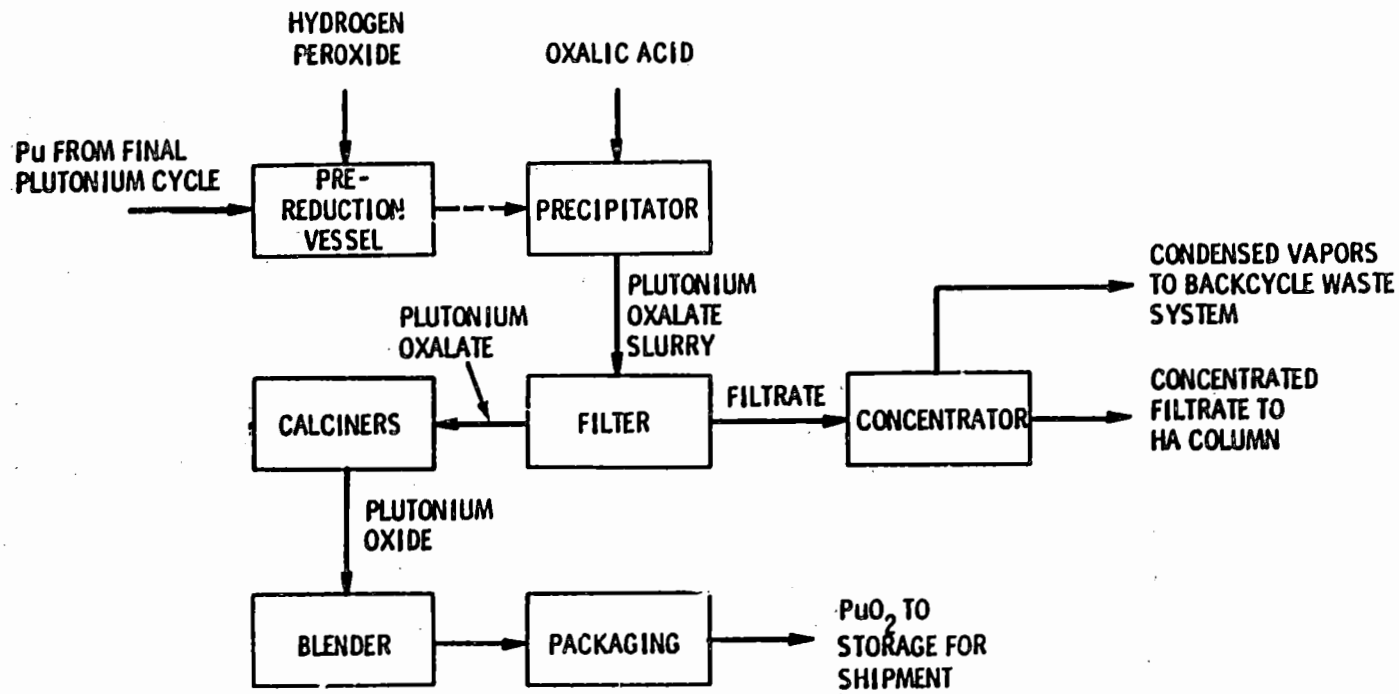

FIGURE A.9. Plutonium Oxide Conversion Process Flow Diagram

The plutonium oxalate slurry formed in the precipitator continuously overflows into the vacuum drum filter pan. The vacuum filter drum rotating in the slurry separates the plutonium oxalate solid from the filtrate liquid by building up a filter cake on the drum surface. Plutonium oxalate is continuously shaved off of the rotating drum by the doctor blade and the filter cake drops down a chute into the first stage calciner.

A.3.1.3 Calcination and Powder Handling

In the first stage calciner, solid feed from the oxalate precipitation process is converted to partially dry powder which drops by gravity into the second stage calciner. The second stage calciner completes the calcination of plutonium to plutonium dioxide and drys the powder to meet process specifications. The powder drops out of the second stage calciner directly onto a vibrating screen where product powder passes through the screen directly into a double cone blender. Oversize material bounces down the inclined screen and collects in a transparent sleeve where it is manually removed for recycle.

After powder is collected in the blender, valves are closed to isolate the blender from the screen powder chute and seal the blender. The blender is then lowered and transported on a dolly to a position adjacent to the rotation stand. A second empty blender is moved into position and attached to the screen powder chute and valves opened to allow processing to continue without interruption.

An overhead hoist is used to lift the loaded blender into the rotation stand after which the blender is rotated to achieve a homogeneous powder. After blending, the blender is lifted by hoist out of the rotating stand and is placed in position on top of the can filling machine. The blender is fastened in place, valves are opened and powder can loading is ready to begin.

Slip lid powder cans and tape are placed in the glovebox, tare weighed and passed one-at-a-time to the can filling machine where the can is filled with PuO_2 powder. The lid is taped in place on the filled can which is returned to the scale for weighing. Tare weight, filled can weight and powder weight are all printed out for permanent record. The filled can is next placed into the bagging tube and then bagged out of the product loadout glovebox. There the bag is "smeared for contamination" (wiped with a tissue which is then held near the probe of an alpha detecting instrument) and cleaned as needed prior to placing it into the outer can. The outer can is sealed, smeared for contamination, and cleaned as needed. The safeguards seal is then applied and the can is weighed. The completed container is placed in a shipping container to await shipment from the PUREX plant.

A.3.1.4 Filtrate Processing

Filtrate is vacuum transferred from the filter drum to the filtrate receiver and is continuously pumped to the concentrator. The filtrate is concentrated to 9M HNO_3 and continuously overflows to two tanks where it is held at near the boiling point to complete the nitric acid destruction of oxalate. The concentrated filtrate is thoroughly mixed by the recirculation pump and sampled to confirm complete oxalate destruction before it is pumped to the HA column feed tank for recycle into the PUREX process.

Vapors from the concentrator overhead are routed to the scrubber/condenser where they are condensed and continuously overflow to two receiving tanks. The condensate is mixed and sampled prior to routing to the backcycle waste system for recycle back into the PUREX process.

A.3.1.5 Liquid Effluents

No liquid effluents are discharged from the process. Concentrated filtrate, process condensate and steam condensate are all recycled back into the PUREX process. The cooling system is a closed loop with circulating 1.2M HNO_3 as the primary coolant. This primary coolant will be recycled back to the PUREX process if the system becomes radioactively contaminated and needs to be emptied. The primary coolant is

cooled in heat exchangers by raw water that is discharged into the PUREX cooling water drain header. Seal water for the vacuum pump is circulated through a closed loop system and will be recycled back to PUREX when necessary. The seal water is cooled in a heat exchanger by raw water. The raw water is discharged into the PUREX cooling water drain header.

A.3.1.6 Gaseous Effluents

Air from the vessel vent system and from the vacuum system passes through steam heaters and two stages of HEPA filtration prior to discharge to the PUREX air tunnel upstream of the PUREX fiberglass filter. Air from the room surrounding the storage vessels is also routed to the PUREX air tunnel.

All glovebox air exhausts through one stage of HEPA filtration at the gloveboxes and discharges through the PR room exhaust system to the PUREX ventilation system.

Room air exhausts through one stage of HEPA filtration just outside N Cell and discharges through the West Sample Gallery exhaust system to the PUREX ventilation system for filtration and discharge through the main ventilation stack.

A.3.2 Criticality Prevention

All vessels and equipment within the gloveboxes are designed to be geometrically favorable (wet or dry) by individual dimensions and spacing between other vessels and equipment except the vessel vent and vacuum vent system filters. These filters are geometrically favorable for dry plutonium oxide powder loading and devices are installed to prevent liquid entry.

All wet gloveboxes are provided with overflow piping to the L Cell floor which is geometrically favorable. The M Cell and pipe chase floors are also geometrically safe in case a vessel should empty to the floor. However, interlock systems are provided to contain solutions within the vessels by stopping solution transfers before vessels are overfilled and starting standby pumps and vent blowers when on-line equipment fails to perform satisfactorily.

APPENDIX B

ACCIDENT SAFETY ANALYSIS

The accident safety analysis includes descriptions of abnormal operations, worst case accidents, and events that have occurred at processing plants. The abnormal operations are grouped into six categories based on the type of potential hazards. Postulated abnormal operations are presented for PUREX, the UO_3 plant, and the appropriate plutonium conversion system. The five accidents judged to have the greatest potential for offsite dose delivery have been outlined in the worst case accident section. Also included in this section is an outline of the worst case onsite and offsite transportation accident. The barriers or procedures which must be circumvented in order for the accident to occur are detailed along with the resultant radioactivity which would be released to the environs. Finally, events which have occurred at processing plants are briefly described and the radioactive consequences stated.

The implication of this analysis is that abnormal operations and/or accidents will occur at a processing facility. However, only a minor portion of these occurrences result in personnel exposure beyond the allowable working limits, and even fewer have the potential for exposure to the general public.

B.1 DESCRIPTION OF ABNORMAL OPERATIONS

Abnormal operations are defined as events which result from malfunctions of systems, improper operating conditions, or operator error. These events in turn result in injury to operating personnel, abnormal radiation exposure of operating personnel, contamination spreads within the facility proper, or the interruption of continuity of operations. Though minor releases to the immediate plant environs may be associated with the occurrences, no incremental risk is entailed to the offsite population over and above normal plant releases.

In this report, abnormal operations are grouped into six categories, which are defined below. Postulated abnormal operations for PUREX, the plutonium oxide production system, and the UO_3 plant are presented.

B.1.1 Breach of Containment

Containment is taken to mean an absolute barrier which prevents escape of contamination. Containment in a fuels processing facility differs from containment in a nuclear power plant where a physical structure is often implied. At PUREX, containment commonly is not absolute due to vents and sampling penetrations. Examples of containment barriers are the facility structural shell, tanks, piping, tube bundles, and product containers. Breach of containment is defined as transport of radioactive contamination through a containment barrier. Barrier failure may occur as the result of age, deterioration, design flaws, corrosion, or mechanical disruption.

B.1.2 Loss of Confinement Barriers

Confinement barriers are those barriers which are less than absolute. Examples include offgas filter systems, liquid waste monitoring and diversion systems, and pressure differentials such as those maintained in ventilation systems to control the direction in which radioactive contaminants may travel. Using an offgas filter as an example, failure would consist of disruption of the filter media with resultant loss of efficiency.

B.1.3 Uncontrolled Chemical Reactions

The PUREX process requires that a number of potentially violent chemical reactions occur under controlled conditions. Further, large inventories of chemicals with high energy

potentials, such as solvent and nitric acid, are necessary for plant and process operation. Certain chemical reaction byproducts (such as hydrogen) may be formed and controls must be in place either to preclude formation or to preclude violent side reactions. Finally, a variety of combustible materials (e.g., protective clothing) exist in the plant, as well as incompatible chemicals such as oxidants and reductants. Controls are in place to assure segregation and isolation to preclude fires.

Lapse of control consists of both loss of control of normal process chemical reactions and the occurrence of unwanted chemical reactions (including fires).

B.1.4 Nuclear Safety Compromised

Although the presence of fissile plutonium provides a potential for a nuclear chain reaction, nuclear criticality has not occurred in the PUREX plant. Prevention of criticality is based on the philosophy that at least two unlikely, independent and concurrent equipment failures or changes in operating conditions must occur before a criticality accident is possible. These conditions would have to occur in those parts of the plant where heavy shielding is provided to mitigate the personnel dose from a criticality event to an acceptable level. In the absence of such shielding, at least three failures or changes must occur before a criticality accident is possible. Violations of this policy, which allow one of the independent failures or changes to occur, are considered to be abnormal occurrences.

B.1.5 Extrinsic Occurrences Affecting Plant Operation

These are defined as those event sequences initiated external to the plant and processes but affecting plant containment and confinement barriers, and plant continuity of operations. Two classes of occurrences are considered; loss or impairment of utilities and services and natural forces events. In general, interruption of utilities and services is considered to be one consequence of severe natural forces events.

B.1.6 Industrial Hazards

Industrial hazards are those which are inherent to storing, handling and use of chemicals and other process materials; from operating and maintenance of electrical, instrumentation, ventilation, water, steam, and compressed gas systems; and from equipment operation and repair, and other similar operations.

B.1.7 Postulated Abnormal Operations

Tables B.1, B.2, and B.3 present postulated abnormal operations in the PUREX plant, the new plutonium oxide production system, and the UO_3 plant, respectively. The tables indicate the type of hazard as defined in Sections B.1.1 through B.1.6; description of the occurrence; possible causes of the occurrence; and the consequences including contamination of the facilities, personnel exposure, and discharge to the environment. Personnel exposure resulting from releases within the plant have been estimated using past experience of the same type or of similar events that have occurred at PUREX or at Hanford.

B.2 WORST CASE ACCIDENTS

An accident is defined as a credible situation which creates demands on the system beyond the possible capability of the process, equipment, or confinement features, whether or not mitigated by operation of standby or engineered protection features. This section describes those accidents which have been judged to have the greatest potential for offsite dose delivery. The description includes a statement of the cause of the accident and a calculation of the radioactive source term.

B.2.1 Dissolving of Short-Cooled Fuel

In this accident, it is assumed that Mark IV (0.947 percent ^{235}U) fuel, cooled only 25 days after discharge, is shipped to the PUREX plant in a caskload of properly cooled

TABLE B.1. Postulated Abnormal Operations for PUREX Plant

Type of Hazard	Occurrence	Consequences: Contamination of Facility	Consequences: Exposure of Personnel	Consequences: Discharge to Environment	Cause
Breach of Containment	Process vessel overflows spilling solution on the cell flow. Possible suspension or evaporation may release aerosol through canyon exhaust	10^5 Ci mixed fission products and actinides spilled to cell floor	None	Release of small amounts through canyon exhaust	Procedural error, instrumentation failure, equipment failure
	Process line leaks spilling solution on the cell floor. Possible suspension or evaporation may release aerosol through canyon exhaust	10^5 Ci mixed fission products and actinides spilled to cell floor	None	Release of small amounts through canyon exhaust	Damaged jumper, gasket failure
	Process solution leaked to the cell floor may leak through expansion joint to the soil or to the storage gallery	Contamination confined to controlled area	None	Contamination confined to soil beneath building	Protective curb around expansion joint was removed to make space for another vessel
	Tube bundle or vessel coil failure along with loss of backpressure causes contamination discharge to disposal header	Contamination diverted to retention basin	None	None	Vessel or bundle failure plus loss of utility backpressure
	Retention basin leaks solution to soil	Discharge of abnormally contaminated solution to diversion basin	None	Release to ground of up to 1000 Ci mixed fission products	Faulty seam or penetration in basin liner
	Waste disposal line leaks in a direct buried line. Cooling water, steam condensate or process condensate leaks to ground	None	None	Subsurface fractional release. Large leak may result in surface contamination	Line failure due to corrosion, thermal, or mechanical stress
	Waste disposal line leaks in line routing waste to underground storage tank	Solution released to encasement. Collected in diverter catch tank	None	None	Line failure due to corrosion, thermal, or mechanical stress
	Encasement around waste disposal lines leaks solution to the ground	None	None	Subsurface ground release up to 1000 Ci mixed fission products. Massive leak may result in surface contamination	Cracks in encasement or plugged drains
	Plutonium product container spills plutonium nitrate solution (100-400 g/l Pu) into jacket from which it also leaks	Contamination of controlled zone with up to 40 g plutonium (100 ml of solution)	Contamination and/or radiation exposure may occur	None	Procedural error, failure of transport carrier

TABLE B.1. (Contd)

Type of Hazard	Occurrence	Consequences: Contamination of Facility	Consequences: Exposure of Personnel	Consequences: Discharge to Environment	Cause
Loss of Confinement Barriers	Vessel pressurization may produce a surge of contaminated liquid or gas into Pipe & Operating (P&O) gallery piping	High dose rates in vicinity of pipe	None	None	Procedural error, pressure relief system failure
	Suckback of contaminated liquid into P&O gallery piping caused by steam collapse in the transfer line	High dose rates in vicinity of pipe	None	None	Failure of prevention equipment
	In-cell transfer could be misrouted with resultant transport of contaminated solution into P&O gallery piping	High dose rates in vicinity in pipe	None	None	Procedural error
	Contaminated solutions in P&O gallery piping leak into the gallery	Localized contamination in area of leak	None	None	Gasket or piping failure, open line
	Transfer jet forms contaminated aerosol in canyon	None	None	Slight increase in stack radioactivity - negligible release	Transfer jet gases out or is not shut off
	Built-up radioactive material on stack liner spalls off and is released to environment	None	None	Local contamination around stack up to 10,000 cpm/100 cm^2 of mixed fission products	Procedural error, improper maintenance
	Personnel enter railroad tunnel during fuel charging, or fail to detect fuel elements dropped in the tunnel	None	Potential exposure approaching or exceeding DOE occupational guidelines	None	Procedural error, lack of communication
	Contaminated individual leaves radiation controlled area transporting contamination to uncontrolled areas	Contamination spread along route of individual	Potential for contaminating others	None	Procedural error
Uncontrolled Chemical Reaction	Packaged solid wastes may ignite from spontaneous combustion or external sources	Contamination confined to control zones	None	None	Procedural error or spontaneous combustion
	Solvent may be inadvertently transferred to a concentrator where conditions result in the degradation of the solvent	Possibility of out-of-specification product and/or "red oil" exist			Pulse column upset or agitation of a solvent containing feed tank

TABLE B.1. (Contd)

Type of Hazard	Occurrence	Consequences: Contamination of Facility	Consequences: Exposure of Personnel	Consequences: Discharge to Environment	Cause
Uncontrolled Chemical Reaction	Hydrogen explosion in feed or waste processing vessel	Solution may spill to cell floor	None	None	Failure of vessel venting, ignition source
	Excessive rate of uranium dissolution causes pressurization of dissolver, foaming, and spillage of dissolver solution to cell floor	Solution may spill to cell floor	None	None	Procedural error or failure or temperature control system
	Uncontrolled reaction during sugar denitration results in tank pressurization	Waste spilled to cell floor	None	None	Failure of temperature control or addition of excess sugar solution
Nuclear Safety Compromised	Excess fissile material is charged to dissolver	None	None	None	Procedural error
	Tank containing fissile material overflows to cell floor. Situation is not detected until ~380 ℓ have been spilled	Fissile material spilled to cell floor	None	None	Pump failure, instrumentation failure
	During plutonium product container handling, plutonium nitrate solution is spilled into the carrier annulus and soaked up by the vermiculite packing	Less than 40 g Pu released to controlled area	None	None	Procedural error
Loss of Utilities and Services	Loss of electrical power	Minimal contamination spread within controlled zones	None	None	Substation outage, disruption of supply lines, area-wide grid disruption
	Loss of steam	Minimal contamination spread within controlled zones	None	Potential for release to environs if suck-backs into Pipe & Operating gallery occur	Power plant outage, line failure
	Loss of raw water	None	None	None	Area-wide power failure plus loss of diesel pumps, line failure
	Loss of canyon ventilation	Minor loss of contamination control in controlled access zones		None	Loss of electrical power plus loss of steam. Water leak into water seal of 3rd main filter when other two filters in bypass conditions

TABLE B.1. (Contd)

Type of Hazard	Occurrence	Consequences: Contamination of Facility	Consequences: Exposure of Personnel	Consequences: Discharge to Environment	Cause
Loss of Utilities and Services	Loss of compressed air	Minor spread of contamination within controlled zones	None	None	All three compressors shut down simultaneously
Natural Forces	Winds with peak gusts to 115 km/hr impact on PUREX facility	None	None	None	
	Lightning strike shuts down 200 East electrical power	None	None	None	
	Severe cold may affect outside facilities; may be coupled with freezing rain	None	None	None	
Industrial Hazards	Major leak of nitric acid occurs in Pipe & Operating gallery. Spray and fumes attack rack supports, instrument lines, and concrete	Acid attack of instrumentation and equipment	Inhalation hazard, corrosive hazard to skin, a general irritant	None	Piping failure
	Personnel injury	None	Potential for radioactive deposition in wound if it occurs in a contaminated zone	None	
	Compressed gas cylinder dropped, valve stem broken off	None	Cylinder behaves like missile with potential for personnel injury	None	Procedural error
	Steam or air line ruptures with high pressure gas release and potential pipe whip	None	Potential injury to personnel in vicinity	None	Line failure, possible lack of maintenance
	Chemical fire or solid waste fire while in storage	None	None	None	Procedural error

TABLE B.2. Postulated Abnormal Operations for PuO_2 Production System

Type of Hazard	Occurrence	Consequences: Contamination of Facility	Consequences: Exposure of Personnel	Consequences: Discharge to Environment	Cause
Breach of Containment Barrier	Calciner liner or flange failure could result in a loss of PuO_2	None	Additional radiation exposure due to high Pu in inventory	None	Liner or flange failure
	Due to leaking lines, pumps, vessels or flanges, plutonium nitrate solution could accumulate	Solution spills to overflow tank	None	None	Leak in system
	Leakage from solid waste package caused by damage during handling or transport	Potential for plutonium contamination of PUREX Building	Potential for plutonium exposure of personnel	Potential for plutonium release to environs	Procedural error
	Pressurization of plutonium oxide container causes rupture in storage	Contamination spread in storage vault	None	None	Failure of dry air system or incorporation of overly moist oxide powder
Loss of Confinement Barriers	Vacuum drum filter overflows to overflow tank, then to floor of hood	Contamination of hood area	None	None	Failure of filter or loss of vacuum
	Hood glove damaged or ripped from glove port seal	Plutonium contamination of room	Contamination via damaged glove or lost seal	None	Glove damaged, e.g., by entanglement in blender
	Fire in glovebox destroys or plugs HEPA filter	None	None	Low-level atmospheric discharge	Filter failure
	Accumulated particulates discharge from stack when new filters not properly sealed in holders	None	None	Low-level atmospheric discharge	Procedural error
	Contaminated individual leaves radiation controlled area transporting contamination to uncontrolled areas	Contamination spread along route of individual	Potential for contaminating others	None	Procedural error
Uncontrolled Chemical Reaction	Nitric acid soaked paper or rags in glovebox may spontaneously ignite	Potential for contamination spread	None	None	Procedural error
	Combustibles left on or near the calciner could ignite	Potential for contamination spread	None	None	Procedural error

TABLE B.2. (Contd)

Type of Hazard	Occurrence	Consequences: Contamination of Facility	Consequences: Exposure of Personnel	Consequences: Discharge to Environment	Cause
Uncontrolled Chemical Reaction	Nitric soaked material in waste drums can spontaneously ignite	Potential for contamination spread	None	Potential environmental release if drums stored outside	Procedural error
	Plutonium polymer forms and plates out in piping	None	Abnormal radiation fields cause additional operator exposure	None	Procedural error
	Pu(VI) oxalate routed to calciner where it decomposes explosively	Contamination spread	None	None	Procedural error
	Packaged solid waste may ignite from spontaneous combustion or external source	Contamination confined to controlled access zone	None	None	Procedural error
	Hydrogen formed in plutonium product container ignites/explodes during preparation for unloading of product	Potential for gross contamination of equipment and facility	Potential for gross contamination of personnel	None	Procedural error
Nuclear Safety Compromised	Contents of blender, ~10 kg of plutonium oxide, spill into the glovebox	Glovebox highly contaminated, may require replacement	Exposure during cleanup operations	None	Failure of lid seal or valve mechanism
	Inlet to first stage calciner plugs and plutonium oxalate builds up on hood floor	Above normal contamination of the hood	None	None	Plug in piping
Industrial Hazards	Glovebox operator punctures a glove and contaminates wound	None	Personnel contamination	None	Procedural error
	Failure of sample containment, failure of protective clothing	None	Personnel contamination	None	Failure of protective equipment
	Major leak of nitric acid occurs in make-up area or in transfer piping	Acid attack of lines in vicinity	Personnel subject to inhalation hazards and burns	None	Piping failure
	Hydrogen peroxide spills from drum or leaks from transfer piping	None	Personnel subject to extreme irritation of nose and throat and/or severe burns	None	Piping failure, procedural error

TABLE B.2. (Contd)

Type of Hazard	Occurrence	Consequences: Contamination of Facility	Consequences: Exposure of Personnel	Consequences: Discharge to Environment	Cause
Industrial Hazards	Personnel exposed to oxalic acid	None	Personnel subject to irritation of nasal passages, prolonged exposure causes gangrene of the skin	None	Procedural error
	Steam or air line ruptures with high pressure gas release and potential pipe whip	None	Potential injury to personnel in vicinity	None	Line failure, possible lack of maintenence

TABLE B.3. Postulated Abnormal Operations for UO_3 Plant

Type of Hazard	Occurrence	Consequences: Contamination of Facility	Consequences: Exposure of Personnel	Consequences: Discharge to Environment	Cause
Breach of Containment	Leak of uranium solution from storage tanks or transfer line	Contamination confined to enclosure	None	Minor leakage to the soil	Faulty valves or connections, corrosion failure
Loss of Confinement Barriers	Failure of a primary exhauster bag filter in the UO_3 powder handling system	None	None	Release of a few pounds of finely divided UO_3 dust to the atmosphere	Split seams in the bag or loosening of mounting
	Maloperation of nitric acid absorber	None	Ground level NO_x concentrations above working limits	Tenfold increase in NO_2 to atmosphere for a short period	Low flow of cooling water or absorber tower water
Uncontrolled Chemical Reaction	"Red oil" explosion in 100% uranyl nitrate concentrator results in ejection of entire volume of uranyl nitrate	Contamination of cell to greater than normal levels	Potential for exposure if uranium is released through personnel access door to the cell	Release of up to 45 kg of uranium to the atmosphere. Little spread beyond plant environs	Failure of procedural controls

elements (minimum 180 days) and partially dissolved. As the PUREX dissolver offgas system is not designed to retain short-lived fission product gases, the dissolving of these short-cooled fuel elements would result in the release of gaseous radioactivity to the environment.

B.2.1.1 Cause of Accident

The following barriers which prevent the accident must fail:

- administrative procedural controls which prevent the shipment of short-cooled fuel to the PUREX plant;
- heat sensor in the railcar carrier which would register the higher temperatures associated with short-cooled fuel;
- radiation monitor verification of fuel age (before shipment from loadout basin and after arrival at PUREX).

B.2.1.2 Source Term of Accident

It is assumed that 320 kg of 25-day cooled fuel is mixed with 9900 kg of at least 180-day cooled fuel and charged to the dissolver. In the three hours required to detect and stop the dissolution, 210 kg of the short-cooled fuel and 5600 kg of the aged fuel are dissolved.

Column 2 of Table B.4 presents conservative values of the radionuclide inventory in the dissolved fuel. It is estimated that 50 percent of the total iodine content of the fuel would remain in the dissolver solution, that 40 percent would be retained in the plant offgas system including the backup facility, and that 10 percent would be released to the environs if the silver reactors were not in use. However, this is a pessimistic assumption, and if the silver reactors were in use, they would contribute a decontamination factor between 100 and 10 (see Section A.1.5.4). It is also estimated that 100 percent of the noble gases and 5 percent of the tritium in the dissolved metal would be released. The source term for the accident is presented in Table B.4.

B.2.2 Uranium Metal Fire in the Dissolver

In this accident, it is assumed that uranium metal in the dissolver becomes uncovered and the overheating of the uncovered uranium is not corrected allowing the metal to spontaneously ignite and burn for 2 hours.

B.2.2.1 Cause of Accident

Normally, the metal is kept completely immersed in either water or one of the process solutions. However, the metal can become uncovered when emptying the tank after decladding or between the first and second dissolving cuts.

Since the dissolving process is under surveillance, poor attention and failure to carry out procedures would be the most important causes for the occurrence of the accident. The following equipment failures could also be important contributors:

- solution supply system, due to the clogging of distribution piping or valve failure, resulting in an inability to cover the uranium metal in the dissolvers;
- temperature sensor in the dissolver which would indicate overheating;
- drown tank for the dissolver, due to a valve failure or a shortage of fluid, resulting in an inability to extinguish the fire promptly.

B.2.2.2. Source Term of Accident

It is assumed that the fuel charged to the dissolver is Mark IV (0.947 percent ^{235}U) fuel which has been cooled 180 days after discharge from the reactor. It is

TABLE B.4. Source Term for Dissolving of Short-Cooled Fuel at PUREX[a]

Nuclide[b]	Total Quantity Dissolved, Ci[c]	Fraction Released from Plant	Quantity Released to Environs, Ci
^{131m}Xe	8.9×10^{2}	1	8.9×10^{2}
^{133}Xe	1.0×10^{4}	1	1.0×10^{4}
^{133m}Xe	1.7×10^{1}	1	1.7×10^{1}
^{129}I	1.3×10^{-2}	0.01[d]	1.3×10^{-4}
^{131}I	8.4×10^{3}	0.01[d]	8.4×10^{1}
^{85}Kr	7.5×10^{3}	1	7.5×10^{3}
^{3}H	2.0×10^{2}	0.05	1.0×10^{1}

(a) Mark IV fuel (0.947 percent ^{235}U initial enrichment) irradiated at 11 MWd/t to 2435 MWd/t; cooled 25 days after discharge.
(b) All other radionuclides are nonvolatile under dissolving conditions and remain in dissolver.
(c) Estimated two-thirds of 320 kg charge dissolved in 3 hr.
(d) Assumes the silver reactors are in use and contribute a decontamination factor of 10.

further assumed that the fire burns uniformly for 2 hours before being extinguished, and consumes uranium metal fuel at a rate of 270 kg/hr (0.3 ton/hr). Therefore, the fire burns 540 kg of uranium metal and the associated fission products contained in the fuel. An additional 185 kg of fuel is also dispersed when the dissolver heel from the previous dissolution cycle evaporates, releasing the radionuclides contained in it. Consequently, a total of 725 kg of fuel is available for release from the dissolver. The quantity of radionuclides associated with this amount of fuel is listed in Column 2 of Table B.5.

Release factors from the dissolver at the estimated maximum temperature range of 1300-1400°C are estimated to be 1.0 for the noble gases, tritium, and iodine; 0.1 for the isotopes tellurium, cesium, and ruthenium; and 0.01 for all others. Table B.5 lists the release factors, the fractions of the radionuclides released from the plant after having passed through the dissolver offgas system, and the total quantity of radioactivity released to the environs.

B.2.3 Solvent Fire in Solvent Extraction Cell

In this accident, it is assumed that 6580 of solution (4880 organic, 1700 aqueous) from the first extraction column leak into the cell sump, ignite, and burn until all the solvent is consumed (maximum of about 5 hr).

B.2.3.1 Cause of Accident

In order for this accident to occur, a source of ignition such as sparking or solvent overheating is necessary. Also, the following barriers against the fire must fail:

- administrative controls over the amount of material in the sump which is determined from a weight factor recorder equipped with a high-level alarm;
- fire suppression system due to sensor failure, valve failure, or loss of water supply.

TABLE B.5. Source Terms for PUREX Dissolver Uranium Fire[a]

Nuclide	Total Quantity Available, Ci[b]	Dissolver Release Factor	Fraction Released from Plant	Quantity Released to Environs, Ci
^{95}Nb	1.04×10^{5}	0.01	0.005	5.2
^{144}Ce	1.04×10^{5}	0.01	0.005	5.2
^{95}Zr	6.16×10^{4}	0.01	0.005	3.1
^{91}Y	4.16×10^{4}	0.01	0.005	2.1
^{89}Sr	2.40×10^{4}	0.01	0.005	1.2
^{103}Ru	1.20×10^{4}	0.1	0.005	6.0
^{147}Pm	1.76×10^{4}	0.01	0.005	8.8×10^{-1}
^{106}Ru	2.24×10^{4}	0.1	0.005	1.1×10^{1}
^{141}Ce	9.60×10^{3}	0.01	0.005	4.8×10^{-1}
^{137}Cs	6.40×10^{3}	0.1	0.005	3.2×10^{1}
^{90}Y	5.52×10^{3}	0.01	0.005	2.8×10^{-1}
^{90}Sr	5.52×10^{3}	0.01	0.005	2.8×10^{-1}
^{134}Cs	1.92×10^{3}	0.1	0.005	9.6×10^{-1}
^{127m}Te	8.00×10^{2}	0.1	0.005	4.0×10^{-1}
^{129m}Te	7.20×10^{2}	0.1	0.005	3.6×10^{-1}
^{85}Kr	7.44×10^{2}	1.0	1	7.4×10^{2}
^{131}I	6.40×10^{-2}	1.0	0.5	3.2×10^{-2}
^{129}I	1.60×10^{-3}	1.0	0.5	8.0×10^{-4}
^{3}H	2.00×10^{1}	1.0	1	2.0×10^{1}
^{238}Pu	2.72×10^{1}	0.01	0.005	1.4×10^{-3}
^{239}Pu	8.80×10^{1}	0.01	0.005	4.4×10^{-3}
^{240}Pu	5.12×10^{1}	0.01	0.005	2.6×10^{-3}
^{241}Pu	5.76×10^{3}	0.01	0.005	2.9×10^{-1}
^{241}Am	1.04×10^{1}	0.01	0.005	5.2×10^{-4}

(a) Mark IV fuel (0.947 percent ^{235}U initial enrichment) irradiated at 11 MWd/t to 2435 MWd/t, cooled 180 days after discharge from reactor.
(b) Estimated 725 kg (0.8 ton) uranium metal fuel burned or dispersed in 2 hr.

B.2.3.2 Source Term of Accident

Under normal operating conditions, the inventory of radionuclides contained in the solution includes 269 kg uranium, 531 g plutonium, and 14 percent of the fission products contained in 0.9 MT of Mark IV (0.947 percent ^{235}U) fuel.

The heat of the burning solvent will evaporate the 1700 ℓ of aqueous solution very quickly. It can therefore be assumed that in a fire the entire inventory of radioactivity is available for dispersal. This quantity of radionuclides is listed in Column 2 of Table B.6.

The fire release factors, the amount of radioactivity airborne by fire, are estimated to be 1.0 for the iodine isotopes and tritium and 0.005 for all other radionuclides. These release factors, the fraction of radionuclides released from the plant, and the total quantity of radioactivity released to the environs are listed in Table B.6.

TABLE B.6. Source Term for Solvent Fire in Solvent Extraction Cell[a]

Nuclide	Total Quantity Available, Ci[b]	Fire Release Factor	Fraction Released from Plant	Quantity Released to Environs, Ci
^{95}Nb	1.8×10^{4}	0.01	0.005	9.1×10^{-1}
^{144}Ce	1.8×10^{4}	0.01	0.005	9.1×10^{-1}
^{95}Zr	1.1×10^{4}	0.01	0.005	5.4×10^{-1}
^{89}Sr	4.2×10^{3}	0.01	0.005	2.1×10^{-1}
^{103}Ru	2.1×10^{3}	0.1	0.005	1.0
^{91}Y	7.3×10^{3}	0.01	0.005	3.6×10^{-1}
^{147}Pm	3.1×10^{3}	0.01	0.005	1.5×10^{-1}
^{106}Ru	3.9×10^{3}	0.1	0.005	2.0
^{141}Ce	1.7×10^{3}	0.01	0.005	8.4×10^{-2}
^{137}Cs	1.1×10^{3}	0.1	0.005	5.6×10^{-1}
^{90}Y	1.9×10^{3}	0.01	0.005	9.7×10^{-2}
^{90}Sr	1.9×10^{3}	0.01	0.005	9.7×10^{-2}
^{134}Cs	3.4×10^{2}	0.01	0.005	1.7×10^{-1}
^{129m}Te	1.3×10^{2}	0.1	0.005	6.3×10^{-2}
^{127m}Te	1.4×10^{2}	0.1	0.005	7.0×10^{-2}
^{3}H	3.5	1.0	1.0	3.5
^{131}I	1.1×10^{-2}	1.0	1.0	1.1×10^{-2}
^{238}Pu	4.8	0.01	0.005	2.4×10^{-4}
^{239}Pu	15.0	0.01	0.005	7.7×10^{-4}
^{240}Pu	9.0	0.01	0.005	4.5×10^{-4}
^{241}Pu	1×10^{3}	0.01	0.005	5.0×10^{-2}
^{241}Am	1.8	0.01	0.005	9.1×10^{-5}

(a) Mark IV fuel (0.947 percent ^{235}U initial enrichment) irradiated at 11 MWd/t to 2435 MWd/t, cooled 180 days after discharge from reactor.
(b) Estimated inventory of 296 kg uranium, 531 g plutonium, and 14 percent of the fission products contained in 0.9 MT.

B.2.4 Uncontrolled High-Level Waste Release to Volume Reduction Cell

Nearly all of the fission products from the fuel dissolution process are separated from the plutonium and uranium in the first extraction column. The solution containing the fission products is then transferred to vessels in another cell for volume reduction. In this accident, it is assumed that an explosion occurs spilling 8330 ℓ of liquid into the cell and forming an aerosol containing radioactive material. The quantity of radioactivity available for release is listed in Column 2 of Table B.7.

B.2.4.1 Cause of Accident

Two types of explosions are possible, a red oil explosion in the waste concentrator and a hydrogen explosion in the waste denitration tank. The following barriers against a red oil explosion would have to fail:

- administrative controls for operation of the first extraction column to allow the dumping of solvent into the aqueous fission product waste stream;

TABLE B.7. Source Term for Uncontrolled High-Level Waste Release to Cell[a]

Nuclide	Total Quantity Available[b], Ci	Initial Release Factor[c] 0-4.0 hr	Dilute Entrainment Release Factor 4.0-8.0 hr	Fraction Released From Plant	Quantity Released to Environs, Ci 0-4.0 hr	Quantity Released to Environs, Ci 4.0-8.0 hr
^{95}Nb	1.4×10^{6}	4.3×10^{-5}	7.7×10^{-7}	0.005	3.0×10^{-1}	5.4×10^{-3}
^{144}Ce	1.4×10^{6}	4.3×10^{-5}	7.7×10^{-7}	0.005	3.0×10^{-1}	5.4×10^{-3}
^{95}Zr	8.4×10^{5}	4.3×10^{-5}	7.7×10^{-7}	0.005	1.8×10^{-1}	3.2×10^{-3}
^{91}Y	5.7×10^{5}	4.3×10^{-5}	7.7×10^{-7}	0.005	1.2×10^{-1}	2.2×10^{-3}
^{89}Sr	3.3×10^{5}	4.3×10^{-5}	7.7×10^{-7}	0.005	7.1×10^{-2}	1.3×10^{-3}
^{103}Ru	1.6×10^{5}	1.9×10^{-3}	7.7×10^{-7}	0.005	1.5	6.2×10^{-2}
^{141}Ce	1.3×10^{5}	4.3×10^{-5}	7.7×10^{-7}	0.005	2.8×10^{-2}	5.0×10^{-4}
^{147}Pm	2.4×10^{5}	4.3×10^{-5}	7.7×10^{-7}	0.005	5.2×10^{-2}	9.2×10^{-4}
^{106}Ru	3.1×10^{5}	1.9×10^{-3}	7.7×10^{-5}	0.005	3.0	1.2×10^{-1}
^{3}H	2.3×10^{2}	1.9×10^{-1}	7.7×10^{-3}	1.0	4.4×10^{1}	1.8
^{137}Cs	8.7×10^{4}	4.3×10^{-5}	7.7×10^{-7}	0.005	1.9×10^{-2}	3.3×10^{-4}
^{90}Y	7.5×10^{4}	4.3×10^{-5}	7.7×10^{-7}	0.005	1.6×10^{-2}	2.9×10^{-4}
^{90}Sr	7.5×10^{4}	4.3×10^{-5}	7.7×10^{-7}	0.005	1.6×10^{-2}	2.9×10^{-4}
^{129m}Te	9.8×10^{3}	4.3×10^{-5}	7.7×10^{-7}	0.005	2.1×10^{-3}	3.8×10^{-5}
^{134}Cs	2.6×10^{4}	4.3×10^{-5}	7.7×10^{-7}	0.005	5.6×10^{-3}	1.0×10^{-4}
^{127m}Te	1.1×10^{4}	4.3×10^{-5}	7.7×10^{-7}	0.005	2.4×10^{-3}	4.2×10^{-5}
^{239}Pu	2.8×10^{-1}	4.3×10^{-5}	7.7×10^{-7}	0.005	4.3×10^{-8}	7.7×10^{-10}
^{241}Am	4.1×10^{1}	4.3×10^{-5}	7.7×10^{-7}	0.005	8.8×10^{-6}	1.6×10^{-7}
^{242}Cm	3.6×10^{1}	4.3×10^{-5}	7.7×10^{-7}	0.005	7.7×10^{-6}	1.4×10^{-7}

(a) Mark IV fuel (0.947 percent ^{235}U initial enrichment) irradiated at 11 MWd/t to 2435 MWd/t, cooled 180 days after discharge from reactor.
(b) Inventory of radionuclides in 8330 ℓ of high-level aqueous waste from the first extraction column.
(c) Sum of the explosion, evaporation, and entrainment release factors for the 0 to 4.0 hour time span.

- specific gravity controls, which would allow the evaporator bottoms product to become substantially over concentrated;

- steam pressure and temperature interlocks, causing the evaporation level to exceed 135°C and enabling an explosive reaction to occur.

The following barriers against a hydrogen explosion would have to fail:

- administrative controls to provide air dilution to the tank atmosphere, which would allow the hydrogen concentration to reach an explosive level;

- measures to prevent sparking of equipment, which would provide a source of ignition.

B.2.4.2 Source Term of Accident

The source term is postulated to have three components: 1) release of radioactivity resulting from the explosion, 2) release of radioactivity resulting from evaporation of the spilled liquid, 3) release of radioactivity resulting from entrainment in the circulating air.

The explosion release factor is defined as the fraction of radioactivity in the aerosol resulting from the explosion and has a value of 2.4×10^{-5} for all radionuclides.

It is assumed that the spilled liquid is initially at 100°C and cools down to 25°C during the first hour. The evaporation release factor is estimated to be 1.34×10^{-5} for nonvolatile radionuclides, 1.34×10^{-3} for ruthenium, and 1.34×10^{-1} for tritium.

The entrainment release factor applies between 1 and 4 hours after the accident when cleaning without dilution is used by first vacuuming up most of the solution. This activity causes small droplets of solution to be entrained in the cell air. The release factors per hour are estimated to be 1.92×10^{-6} for nonvolatile radionuclides, 1.92×10^{-4} for ruthenium, and 1.92×10^{-2} for tritium. The entrainment release factors for cleaning during 4 to 8 hours after the accident assume a 10:1 dilution of the solution remaining in the cell.

The initial release factors listed in Table B.7 are the sum of the explosion, evaporation, and entrainment release factors for the 0 to 4-hour time span. The diluted entrainment release factors for the 4 to 8 hour time span are also listed along with the fraction released from the plant and the total quantity of radioactivity released during the two time spans.

B.2.5 Criticality Accidents

In this accident, it is assumed that a criticality occurs within a process vessel.

B.2.5.1 Cause of Accident

Criticality accidents could occur in several process vessels; these have been listed in Table B.8 along with the cause of the accident and the barriers against such an accident occurring.

B.2.5.2 Source Term for Criticality

The entire criticality event is assumed to consist of three 0.5 sec bursts of 10^{18} fissions each, occurring within a 30-minute period. In a criticality accident, the radioactive nuclides of importance are the noble gases and the iodines. The amounts of these nuclides change rapidly during the first half-hour after fission, growing in some cases and decaying in others. The quantities which would be released during this interval are estimated to be 50 percent of the iodines and 100 percent of the noble gases calculated to be present at 15-minutes decay time. Of the iodine,

TABLE B.8. Significant Postulated Criticality Accidents

Criticality Location Accident	Cause of Accident	Barrier Against
Plutonium Column Extraction	Plutonium concentration has to increase accidentally by a factor of 9 above normal flow sheet concentration.	1. Process stream flow rates and plutonium concentration are continuously adjusted and controlled. 2. Chemical solution preparations are under administrative and laboratory controls. 3. Three external, vertically arranged neutron monitors are in place to survey 1BX column.
Fuel Dissolvers	Criticality is postulated to occur in these tanks via precipitation of plutonium. The precipitated plutonium is not transferred to other tanks. Eventually, enough plutonium accumulates to form a critical mass.	1. Administrative and laboratory controls are in place. 2. Double lock and key system in place for potassium hydroxide addition to dissolver.
Declad Fuel Storage Tank	Same as for dissolvers.	1. Administrative and laboratory controls are in place. 2. Double lock and key system in place for addition of solution.
Metal Solution Feed Makeup Tank	Same as for dissolvers.	1. Procedures limit transfers of Pu rework solutions to feed makeup tank plus a laboratory analysis is required. 2. Criticality limits for tanks require at least double batching to create a criticality. 3. Cadmium nitrate is required for transfer of concentrated plutonium solution from Pu rework tank to feed makeup tank.
Waste Receiver Tank	Waste receiver tank collects liquid waste from various sumps. If there is a significant amount of plutonium leakage into these sumps coupled with excessive sodium hydroxide in the receiver tank, precipitation and subsequent criticality of the plutonium could occur.	1. Control leaks in the sample piping by maintenance. 2. Caustic addition to the waste receiver tank is prohibited until laboratory analyses are known.

50 percent would be deposited on surfaces contacted and in the exhaust and vent filters. Thus, only 25 percent of the iodines formed in the three bursts would be released to the environment.

The source term for this accident was derived by summing the quantities released for the three 0.5 sec bursts. The resulting amounts are listed in Table B.9.

TABLE B.9. Source Terms for Postulated Nuclear Criticality

Radionuclides Released	Quantity Released to Environs, Ci[a]
^{83m}Kr	1.1×10^{1}
^{85m}Kr	4.8×10^{1}
^{85}Kr	4.6×10^{-4}
^{87}Kr	3.0×10^{2}
^{88}Kr	1.9×10^{2}
^{89}Kr	1.2×10^{4}
^{129}I	1.7×10^{-10}
^{131}I	5.5×10^{-1}
^{132}I	2.0
^{133}I	1.1×10^{1}
^{134}I	1.4×10^{2}
^{135}I	3.7×10^{1}
^{131m}Xe	1.2×10^{-3}
^{133m}Xe	1.6×10^{-1}
^{133}Xe	3.9
^{135m}Xe	3.3×10^{1}
^{135}Xe	4.7×10^{1}
^{137}Xe	1.1×10^{4}
^{138}Xe	3.6×10^{3}

(a) Total from three, 0.5 sec bursts of 10^{18} fissions each occurring in 30 min, assuming 100 percent release of noble gases and 25 percent release of iodines from the plant.

B.2.6 Onsite Transportation Accident

In this accident, a loaded N-Reactor fuel cask car is hit broadside by a petroleum fuel transport truck at the rail crossing near the northwest corner of the 200 East Area.

B.2.6.1 Cause of Onsite Transportation Accident

For this accident to occur, administrative controls would have to be either consciously contravened, ignored, or misinterpreted. Controls are such that this accident is extremely unlikely.

The assumption is made that the broadside impact of the truck would derail the cask car, causing the cask to overturn. Resultant forces have been estimated to be great enough

to cause at least one of the lid hasps on the cask to fail. The lid would be lost and fuel elements would be spilled to the ground. All of the fuel elements spilled to the ground would contribute to a direct radiation dose to onsite personnel in the immediate vicinity of the accident. Some of the fuel elements are assumed to burn as a result of loss of the water from the car well and cask, followed by immersion in burning gasoline or diesel fuel from the truck.

B.2.6.2 Source Term for the Onsite Transportation Accident

The assumption is made that during the accident, 0.09 MT (0.1 ton) of Mark I-A 150-day cooled fuel would be consumed during the one hour burn before the fire would be extinguished. The source term for the radionuclides released is given in Table B.10.

TABLE B.10. Source Term for Onsite Transportation Accident

Nuclide	Total Quantity Available, Ci[a]	Release Factor	Quantity Released to Environs, Ci
^{95}Nb	2.8×10^{4}	0.01	2.8×10^{2}
^{144}Pr	1.9×10^{4}	0.01	1.9×10^{2}
^{144}Ce	1.9×10^{4}	0.01	1.9×10^{2}
^{95}Zr	1.5×10^{4}	0.01	1.5×10^{2}
^{91}Y	1.1×10^{4}	0.01	1.1×10^{2}
^{89}Sr	7.2×10^{3}	0.01	7.2×10^{1}
^{103m}Rh	3.9×10^{3}	0.01	3.9×10^{1}
^{103}Ru	3.9×10^{3}	0.1	3.9×10^{2}
^{147}Pm	3.4×10^{3}	0.01	3.4×10^{1}
^{106}Rh	3.3×10^{3}	0.01	3.3×10^{1}
^{137}Cs	1.1×10^{3}	0.1	1.1×10^{2}
^{137m}Ba	9.9×10^{2}	0.01	9.9×10^{0}
^{90}Sr	9.4×10^{2}	0.01	9.4×10^{0}
^{95m}Nb	1.9×10^{2}	0.01	1.9×10^{0}
^{134}Cs	1.6×10^{2}	0.1	1.6×10^{1}
^{129m}Te	1.3×10^{2}	0.1	1.3×10^{1}
^{127m}Te	1.3×10^{2}	0.1	1.3×10^{1}
^{127}Te	1.2×10^{2}	0.1	1.2×10^{1}
^{85}Kr	1.1×10^{2}	1.0	1.1×10^{2}
^{148m}Pm	1.1×10^{2}	0.01	1.1×10^{0}
^{238}Pu	3.4×10^{0}	0.01	3.4×10^{-2}
^{239}Pu	1.1×10^{1}	0.01	1.1×10^{-1}
^{240}Pu	6.4×10^{0}	0.01	6.4×10^{-2}
^{241}Pu	7.2×10^{2}	0.01	7.2×10^{0}
^{242}Pu	2.5×10^{1}	0.01	2.5×10^{-1}
^{241}Am	1.3×10^{0}	0.01	1.3×10^{-2}
^{242}Cm	1.5×10^{1}	0.01	1.5×10^{-1}

(a) Mark I-A fuel, irradiated at 11 MW/MT to 3,000 MWd/MT cooled 150 days after discharge; 0.09 MT of fuel is assumed to be burned in one hour.

Release factors from the burning irradiated fuel are estimated to be 1.0 for the noble gases, iodine, and tritium; 0.1 for isotopes of ruthenium, cesium, and tellurium; and 0.01 for all others. The isotopes are released directly to the atmosphere in the plume caused by the burning fuel, and contribute to an inhalation dose.

B.2.7 Offsite Transportation Accident

In this accident a truck or railcar transporting a cask of Mark I-A, 150-day cooled N-Reactor fuel is involved in a severe accident, and the cask is involved in extreme thermal conditions caused by burning petroleum fuel. However, the N-Reactor fuel does not ignite and burn.

B.2.7.1 Cause of Offsite Transportation Accident

Because shipments of fuels offsite cannot be administratively controlled to the same degree as onsite shipments, cask designs are more stringent. Even in extremely severe accident conditions, the cask would not sustain a major breach that would permit fuel rods to spill to the ground. The assumption is made for this accident that a valve or penetration to the cask interior fails during the accident. The cask seal also fails, and a small breach occurs. A severe breach is not credible. Some of the fuel rods would rupture from impact. Because of thermal conditions, some of the fuel cladding would balloon and rupture. These ruptures would permit diffusion of noble gases into the cask interior and to the environment through the cask breach. Water, used to cool the cask, would also leak and leach some radionuclides from the ruptured fuel rods. Some of this contaminated water would leak through the cask breach into the environment. No oxidation of the fuel would occur.

B.2.7.2 Source Term for the Offsite Transportation Accident

The assumption is made that truck casks can transport 1 MT of N-Reactor fuel and that rail casks can transport 10 MT of fuel. The source term for the radionuclides released is given in Table B.11. All noble gases are assumed to be released from the fuel, and 0.1 of their inventory is released to the environment. Release factors are also listed in Table B.11.

TABLE B.11. Source Term for Offsite Transportation Accident

Nuclide	Total Quantity Available, Ci[a]		Release Factor	Quantity Released to the Environment, Ci	
	Truck	Train		Truck	Train
^{85}Kr	1.2×10^{3}	1.2×10^{4}	1.0×10^{-1}	1.2×10^{2}	1.2×10^{3}
^{134}Cs	1.8×10^{3}	1.8×10^{4}	3.0×10^{-4}	5.4×10^{-1}	5.4×10^{0}
^{137}Cs	1.2×10^{4}	1.2×10^{5}	3.0×10^{-4}	3.6×10^{0}	3.6×10^{1}
^{129}I	2.8×10^{-3}	2.8×10^{-2}	4.0×10^{-4}	1.1×10^{-6}	1.1×10^{-5}
^{90}Sr	1.0×10^{4}	1.0×10^{5}	4.0×10^{-6}	4.0×10^{-2}	4.0×10^{-1}
Ru and other f.p.	2.0×10^{6}	2.0×10^{7}	1.0×10^{-6}	2.0×10^{0}	2.0×10^{1}
Actinides	8.6×10^{3}	8.6×10^{4}	3.0×10^{-6}	2.6×10^{-2}	2.6×10^{-1}

(a) Mark I-A fuel, irradiated at 11 MWd/MT to 3,000 MWd/MT cooled 150 days after discharge.

APPENDIX C

METHOD FOR CALCULATING RADIATION DOSE AND CONVERTING TO HEALTH EFFECTS

The computer programs and input data used in calculating potential radiation doses to members of the general public from startup and operation of the PUREX facility are discussed below. All of these programs have been separately documented and only a brief summary will be presented here. No direct releases of radioactive liquid effluents from PUREX to accessible surface water are planned. Therefore, the following discussion will address only release of gaseous effluents to the atmosphere.

Releases of radionuclides to the atmosphere from the PUREX facility can be either low-level releases that continue for a relatively long period of time, as occur during normal operations, or as abrupt, usually accidental, releases. In addition to direct exposure to airborne material and to foods contaminated during the period of release, exposure will result from residual soil contamination.

Information is also provided in this appendix to enable the reader to convert calculated dose to health effects in the population surrounding Hanford.

COMPUTER PROGRAMS

The computer programs used to calculate potential radiation doses from atmospheric releases at PUREX are summarized in Table C.1; their interrelation is illustrated in Figures C.1 and C.2.

Computer programs used to calculate dose to a maximally-exposed individual and to the regional population from a chronic atmospheric release are shown in Figure C.1. The programs KRONIC (Strenge and Watson 1973) and DACRIN (Houston et al. 1974, Strenge 1975) take information about meteorology and population distribution and calculate air submersion and inhalation doses, respectively, for a given release term. A population weighted value of the annual average air concentration per unit release of radionuclides ($\overline{\chi}/Q'$) calculated as a byproduct of KRONIC is used by the program PABLM (Napier et al. 1980) along with information on crops grown locally to calculate an accumulated dose from terrestrial pathways.

Figure C.2 illustrates the programs used to calculate doses from acute atmospheric releases of radionuclides. The program HADOC (Strenge and Peloquin 1980) uses meteorology

TABLE C.1. Computer Programs Used to Calculate Potential Radiation Doses from Effluents Released at PUREX

Program	Type of Dose	Reference
KRONIC	One-year air submersion dose from chronic releases, individual and collective	Strenge and Watson 1973
HADOC	One-year individual and collective air submersion and inhalation dose commitments from acute releases (semi-infinite cloud model for external doses)	Strenge and Peloquin 1980
DACRIN	Individual and collective inhalation doses from chronic or acute releases, one-year doses, dose commitments, and accumulated doses	Houston et al. 1974 Strenge 1975
PABLM	Individual and collective doses from contaminated farm products, from either air deposition or irrigation, one-year dose, dose commitment, and accumulated dose	Napier et al. 1980
	Individual and collective doses from contaminated water and aquatic foods and aquatic recreation, one-year dose, dose commitment, and accumulated dose	

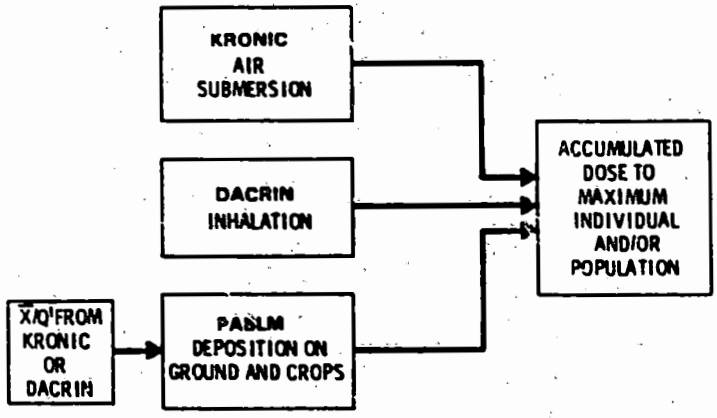

FIGURE C.1. Computer Programs for Calculating Public Doses from Routine Airborne Releases of Radionuclides

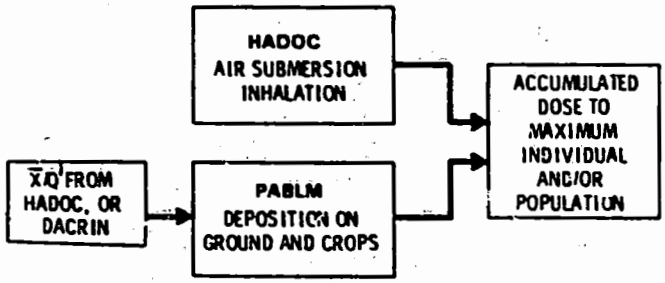

FIGURE C.2. Computer Programs for Calculating Public Doses from Accidental Airborne Releases of Radionuclides

and population data to calculate air submersion and inhalation doses. The inhalation doses are based on dose commitment factors precalculated using DACRIN. The program PABLM calculates the accumulated doses resulting from an acute deposition on crops and from residual environmental contamination.

STANDARD HANFORD METEOROLOGICAL PARAMETERS

Meteorological data have been collected at the Hanford Meteorological Station, near 200 West Area, for the past 30 years. Values of $\bar{X}/Q'$ in sec/m^3 are available in Hanford Annual Reports for the 61 m release height. Population distributions around the Hanford meteorological tower are available in the 1979 Hanford Annual Report (Houston and Blumer 1980a) and in Sommer et al. (1981).

Because the PUREX/UO_3 facilities are located a significant distance from the nearest residence, a special set of assumptions is usually used to determine the location of the maximally-exposed individual for accidental releases. For purposes of inhalation and submersion calculations, the maximum individual is assumed to be traveling on Highway 240, 8.8 km (5.5 miles) southwest of the 200 Areas; but for ingestion dose calculations, he is

assumed to farm at Ringold, 24 km (15.5 miles) downwind in the east-southeast direction to the 200 Areas. For chronic releases, the maximum individual is assumed to live continuously on the farm at Ringold for all pathway calculations.

For acute ground-level releases, the E/Q at the Hanford Highway 240 is 3.0×10^{-5} sec/m^3, and at Ringold it is 7.6×10^{-6} sec/m^3. For acute elevated releases the E/Q is 1.6×10^{-5} and 6.1×10^{-6} sec/m^3 at the highway and Ringold, respectively. The $\bar{X}/Q'$ values at Ringold from chronic releases are 7.4×10^{-8} sec/m^3 for ground level and 4.5×10^{-9} sec/m^3 for elevated releases.

STANDARD HANFORD EXPOSURE PARAMETERS

Data required for the dose programs includes dietary and recreational preferences and habits in the general population, as well as agricultural practices in the general region. The standard Hanford terrestrial pathway data are given in Houston and Blumer 1980a. The growing period, yield, and irrigation rate reflect agricultural practices in the Columbia River Basin. The parameters for the average member of the population, reflect the dietary habits of Tri-Cities' residents. Values used for the maximally-exposed individual were selected to represent a worst-case individual supporting himself and his family with a large garden and farm animals. Standardized input for Hanford Environmental Impact Statements is summarized in a recent publication (Napier 1981).

RADIOLOGICALLY RELATED HEALTH EFFECTS

The potential radiological impact on persons residing in the environs of the Hanford Reservation from the operation of the PUREX/UO_3 facilities is given in this statement as radiation dose to individual and population groups. These calculated doses were converted to health effects for routine operations, the worst case operating accident for the PUREX/UO_3 plants and for background are provided in Table 5.14. The following information is provided if the reader desires to make additional conversions. Most of this discussion is taken from the detailed discussion of radiologically related health effects found in Appendix E of the Final Environmental Impact Statement on Management of Commercially Generated Radioactive Waste, DOE/EIS-0046 F, Vol. 2 (US DOE 1980a).

The radiation dose to man from ingestion, inhalation, or external exposure to specified quantities of radionuclides can be calculated with reasonable confidence. The relationship of dose to so-called "health effects" is less well defined.

The usual practice in making these estimates is that if an error is to be made, it will be made in a way that will over-estimate the number of Health Effects that might occur.

Because expected releases of radioactive materials are small, and the radiation dose to any individual is small, the effects considered are long-delayed somatic and genetic effects; these will occur, if at all, in a very small fraction of the persons exposed. Except as a consequence of the unusually severe accident involving larger doses, no possibility exists for an acute radiation effect. The effects that must be considered are 1) cancers that may result from whole-body exposures, and more specifically, from radioactive materials deposited in lung, bone, and thyroid; and 2) genetic effects that are reflected in future generations because of exposure of the germ cells.

Knowledge of these delayed effects of low doses of radiation is necessarily indirect. This is because their incidence is too low to be observed against the much higher background incidence of similar effects from other causes. Thus, for example, it is not possible to attribute any specific number of human cancers to the radionuclides present in everyone's body from weapons-test fallout, because such cancers are known to be caused by other materials present in much more hazardous concentrations, and because cancers occurred before there were any man-made radionuclides. Even in controlled studies with experimental animals, one reaches a low incidence of effect that cannot be distinguished from the level of effect in unexposed animals, at exposure levels far higher than those predicted to result from PUREX/UO_3 activities. Hence, one can only estimate a relationship between health effect and radiation dose, basing this estimate upon observations made at very much higher exposure levels, where effects have been observed in man, and carefully studied animal

experiments. In this context the National Council on Radiation Protection and Measurements has said "The NCRP wishes to caution governmental policy-making agencies of the unreasonableness of interpreting or assuming 'upper limit' estimates of carcinogenic risks at low radiation levels derived by linear extrapolation from data obtained at high doses and dose rates, as actual risks, and of basing unduly restrictive policies on such interpretation or assumption" (NCRP 1975, p. 4).

A range encompassing commonly used cancer risk factors is given in Table C.2. At the same time the possibility of zero risk at very low exposure levels is not excluded by the available data. The lower range of risk estimates in Table C.2 may be considered more appropriate for comparison with other risks. The upper part of the range may be more appropriate for radiation protection considerations.

A range of 50 to 300 specific genetic effects to all generations per million man-rem is also listed in the table. As in the case of the somatic (principally cancer) risk estimates, the lower end of the range may be considered more appropriate for comparative risk evaluations, while the upper end of the range may be appropriate to radiation protection considerations.

TABLE C.2. Health Effects Risk Factors Recommended in DOE/EIS-0046F (US DOE 1980a)

Type of Risk	Predicted Incidence per 10^6 man-rem
Fatal cancers from:	
Total body exposure	50 to 500
Lung exposure (5 to 50)	
Bone exposure (2 to 10)	
Thyroid exposure (3 to 15)	
Specific genetic effects to all generations from total body exposure	50 to 300
Total	100 to 800

The range of 100-800 health effects per 10^6 man-rem for total-body exposure from Table C.2 was used to estimate potential health effects from the proposed action and alternatives (Table 5.14). The conversion factor was applied to collective (worker and public) total-body doses from routine operation and accident situations discussed in Chapter 5. Other conversion factors may be found in the literature. Some would indicate more effects and others less, not excluding zero health effects.

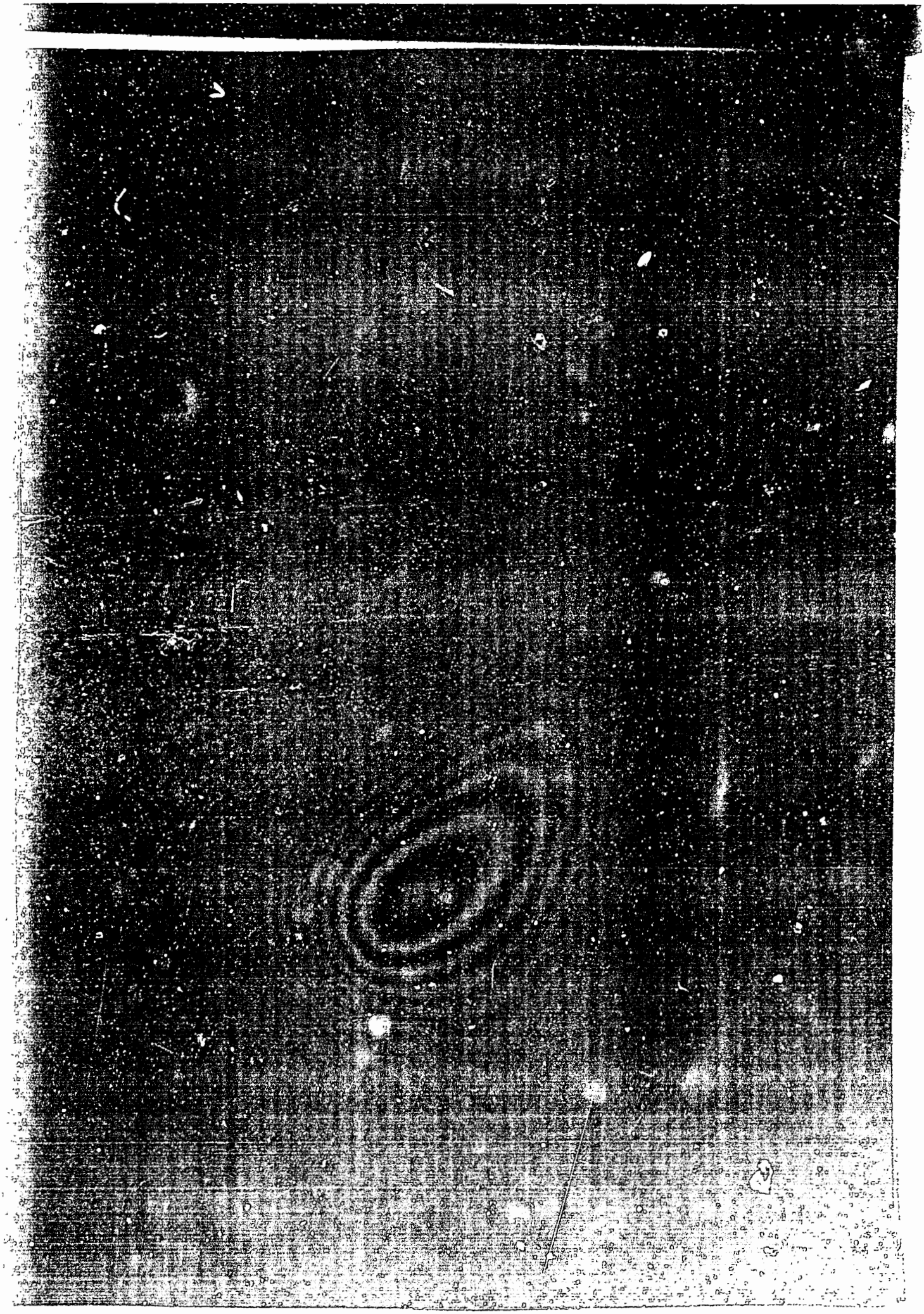

APPENDIX D

COMPARISON OF PROCESS EFFLUENTS AND CONSEQUENCES AT VARYING PROCESSING RATES

In this EIS the environmental consequences of processing irradiated reactor fuel in the PUREX/UO_3 facilities at Hanford at three different processing rates are considered. The low rate, 1050 MT/yr, is regarded as the lowest probable near-term rate, and, in fact, approximates the rate at which the facility last operated in 1972 (1013 MT). This rate can be considered to bound the potential environmental effects on the low side.

An intermediate rate twice this, 2100 MT/yr, approaches the nominal design capacity of the existing PUREX plant without modification, and is a second possible operating rate.

With some equipment modifications (see Section 3.1.3), the Hanford PUREX plant could process fuel at a maximum rate of up to 3000 MT/yr, and this rate has also been evaluated in order to establish the upper boundary of potential environmental effects. These calculations assume the processing of 3000 MT/yr of irradiated N-Reactor fuel, cooled 180 days, and with a plutonium isotopic composition of 12 percent ^{240}Pu. Conservative estimates of potential radiation doses result from assuming that this rate is continued throughout a 16-yr processing period, mid-1984 to 2000. This case is extremely conservative, and does not necessarily represent actual or probable operating conditions, as do the 1050 and 2100 MT/yr cases. However, this case is broad enough to include the potential environmental impacts of processing (at the Hanford Site) other alternative fuels of comparable characteristics.

Comparative data for the 2100 MT/yr case are available for the existing PUREX plant (proposed action) and are presented, but for the alternative actions, only the upper and lower limiting rates, 1050 and 3000 MT/yr, have been evaluated.

The scenario for the 1050 MT/yr case assumes that the 1050 MT are comprised of 350 MT each of 1/2-year, 1-1/2 year, and 3-year cooled, 12 percent ^{240}Pu irradiated fuel. For the 2100 MT/yr case, the feed is comprised of 350 MT each of 1/2, 2, 3, 4-1/2, 6, and 7-1/2 year cooled fuel.

D.1 RESUMPTION OF PUREX/UO_3 OPERATIONS AT HANFORD (PROPOSED ACTION)

In the operation of a complex chemical process plant such as PUREX, there are inevitably process effluents. These may be totally nonradioactive, or they may vary from slightly to highly radioactive. Discharges above permissible levels, which could endanger offsite populations, are not permitted; radioactivity levels of effluents are reduced to practical minimums before discharge.

D.1.1 Gaseous Effluents

The PUREX process ventilation systems exhaust gaseous wastes from process vessels, remove condensible vapors, and filter out radioactive particulate matter entrained in the exhaust air. As described elsewhere (see Section A.1.14), iodine radioisotopes are removed by passage through silver reactors. These gases, after treatment, are discharged to the atmosphere through a 61-m (200-ft) main ventilation stack located adjacent to the PUREX process building. The principal gaseous discharge points from the PUREX facility are illustrated in Figure D.1. All effluent streams normally containing radionuclides are analyzed for radioactivity. Effluent samples from the main stack are analyzed for specific radionuclides.

During 1972, the last year of plant operation, approximately 3.4×10^9 m^3 (1.2×10^{11} ft^3) of gaseous effluents were discharged from the PUREX plant and contained 0.6 Ci of particulate fission products and transuranic nuclides, 0.3 Ci of radioiodine isotopes, 0.7 Ci of ^{14}C, 4.1×10^5 Ci of ^{85}Kr, plus approximately 1000 Ci of ^3H.

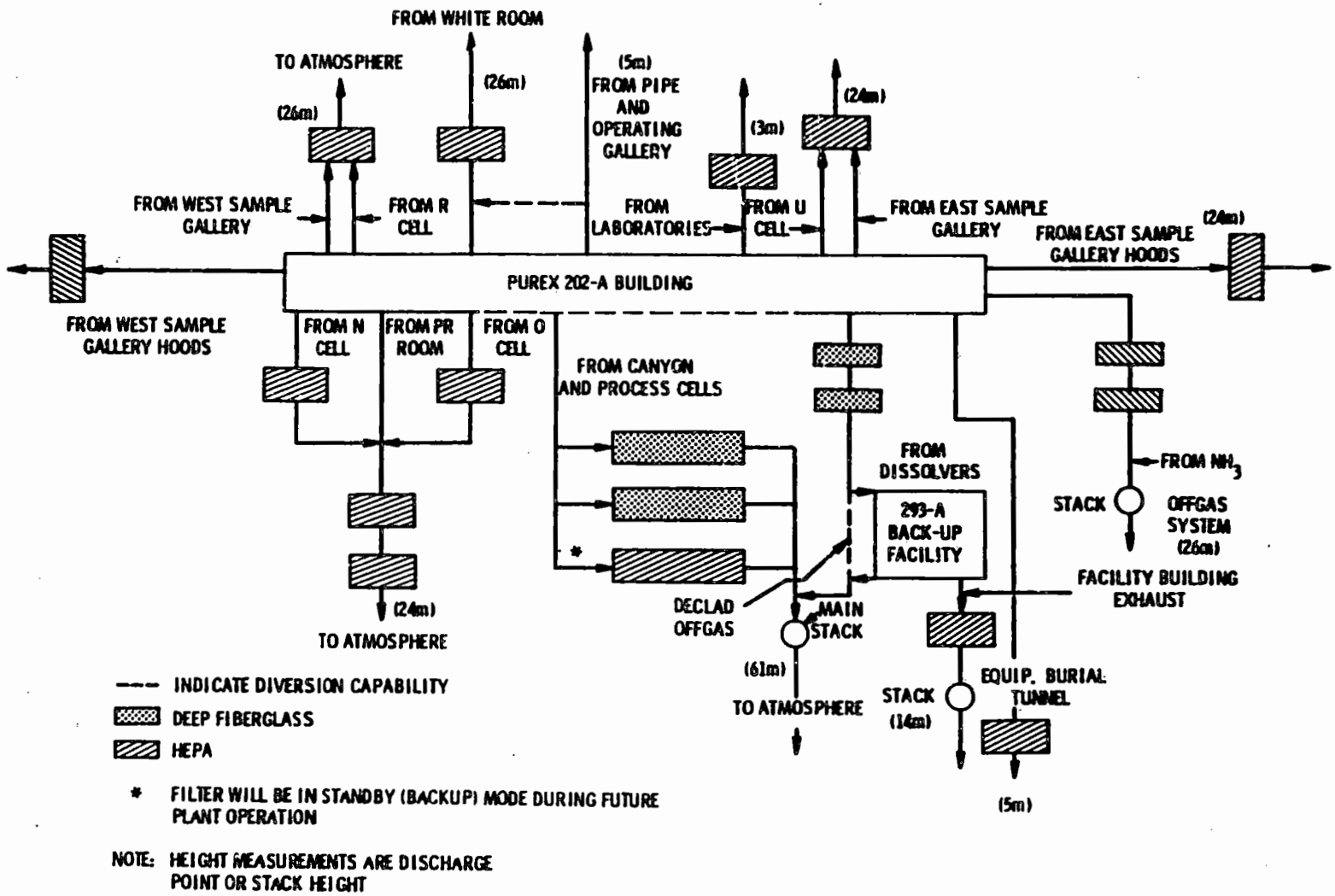

FIGURE D.1. Principal Gaseous Waste Discharge Points from the PUREX Facility

These discharges were from processing 1013 MT of irradiated fuel, of which approximately one-half contained only 3.5 percent ^{240}Pu, hence radionuclide content was lower than that called for by the present scenario. Estimated maximum annual gaseous discharges for the 3000 MT/yr case are presented in Table D.1; comparable estimates for the 1050 MT/yr and 2100 MT/yr cases are given in Table D.2.

Gaseous effluents from the UO_3 plant for 1972 were estimated to be 3.6×10^7 m^3 (1.2×10^9 ft^3). They had the radionuclide content shown in Table D.3. Estimated maximum annual discharges for the 3000 MT/yr case (Table D.3) indicate that average concentrations will be well below the level permissible in air for offsite populated areas at Hanford Site boundary (DOE 5480.1A Guidelines). Estimated discharges for 1050 and 2100 MT/yr are shown in Table D.4.

Chemical pollutants expected in gaseous effluents for the 3000 MT/yr case are listed in Table D.5; analogous estimates for the 1050 and 2100 MT/yr cases are shown in Table D.6. It will be noted that maximum estimated concentrations are the same for all three cases, for both the PUREX and UO_3 plants. Maximum emission concentrations for PUREX are based on maximum daily throughput of 9 MT/day; at a lower processing rate, concentrations will be below these. Similarly, increased UO_3 output is attained by longer operating campaigns rather than by increasing throughput, so that effluent concentrations remain constant.

Neither facility produces sulfur oxides or photochemical oxidants. The gaseous chemical pollutant of principal concern is NO_x, generated during PUREX fuel dissolution, and from UNH denitration at the UO_3 plant. A significant reduction in NO_x emissions from PUREX would be achieved in future operations by the addition of hydrogen peroxide. With this improvement an NO_x concentration at the stack of approximately 200 ppm would be achieved.

There would also be gaseous effluents from the transportation associated with the operation of the Hanford PUREX/UO_3 facilities. Shipments associated with a processing rate of 3000 MT/yr were summarized in Table 5.7. Using these estimates, fuel consumption and air pollutant emissions have been estimated.

Onsite transportation would include rail movement of irradiated fuel and truck movement of UNH. Diesel fuel consumption from these totals 180,000 ℓ/yr (rail) and 9,300 ℓ/yr (truck).

Offsite shipments of UO_3 would consist of 60 railcar shipments per year traveling a total of 230,400 km. These shipment-kilometers would be insignificant when compared with the total rail traffic throughout the nation. If the UO_3 shipment comprises one-eightieth of an entire freight train (freight trains average 80 cars one of which would carry the UO_3), one-eightieth of the diesel fuel used to pull the train can be attributed to the UO_3. A survey of operating railroads provided data from which the fuel consumption attributed to shipment of UO_3 is 1,290,000 ℓ/yr, which would be an insignificant fraction of the 1×10^{10} ℓ of fuel consumed moving freight in the country in 1980.

The chemical effluents that would result from burning the total amount of truck fuel (9280 ℓ), all of the onsite train fuel (180,000 ℓ) and the fuel offsite for train shipments (1,290,000 ℓ) are given in Table D.7. These effluents are based on data given in ERDA-1541 (1976).

The environmental consequences of nonradiological pollutants, addressed in Chapter 5.0, are shown to be insignificant.

D.1.2 Liquid Effluents

Liquid effluents from PUREX/UO_3 operation include the following categories:

- process and scrubber waste
- steam condensates
- cooling water from heat exchangers (non-contact)
- chemical sewer waste.

TABLE D.1. Radionuclide Content of Annual Gaseous Effluents from the PUREX Plant, 3000 MT/yr Processing Rate

Radionuclides	DOE Order 5480.1A, Chapter XI		1972 Actual[a]		3000 MT/yr Processing Rate[b]		Concentration at the Site Boundary μCi/mℓ
	Offsite Concentration Guide, μCi/mℓ	Onsite Concentration Guide, μCi/mℓ	Average Concentration at the Source,[c] μCi/mℓ	Annual Curies	Average Concentration at the Source,[c][f] μCi/mℓ	Annual Curies	
Total α (as ^{239}Pu)	6×10^{-14}	2×10^{-12}	1.3×10^{-12}	4.3×10^{-3}	2.6×10^{-12}[g]	9.0×10^{-3}	1.3×10^{-18}
Total β (as ^{90}Sr)[d]	3×10^{-11}	1×10^{-9}	1.7×10^{-10}	5.9×10^{-1}	3.5×10^{-10}	1.2×10^{0}	1.7×10^{-16}
^{129}I	2×10^{-11}	8×10^{-10}	7.8×10^{-11}	1.4×10^{-1}	1.5×10^{-10}	5.1×10^{-1}	7.3×10^{-17}
^{131}I	1×10^{-10}	4×10^{-9}	1.2×10^{-10}	2.1×10^{-1}	8.8×10^{-11}	3.0×10^{-1}	4.3×10^{-17}
^{85}Kr	3×10^{-7}	1×10^{-5}	2.3×10^{-4}	4.1×10^{5}[e]	9.7×10^{-4}[g]	3.3×10^{6}	4.8×10^{-10}
^{3}H	2×10^{-7}	5×10^{-6}	5.6×10^{-7}	1×10^{3}[e]	8.8×10^{-7}	3.0×10^{3}	4.3×10^{-13}
^{14}C	1×10^{-7}	4×10^{-6}	3.9×10^{-10}	7×10^{-1}[e]	2.6×10^{-9}	9.0×10^{0}	1.4×10^{-15}

(a) 1972 emissions are based on processing a total of 1013 MT of fuel including about 525 MT of 3.5 percent ^{240}Pu weapons grade irradiated fuel.
(b) Estimated projected emissions are based on processing 3000 MT of 180-day cooled 12 percent ^{240}Pu irradiated fuel, 20 percent of which is spike fuel.
(c) These values were determined by dividing the annual curies by the total effluent volume (3.4×10^{9} m^3/yr). These numbers are statistically derived and are given for comparison purposes only.
(d) As particulate material.
(e) Calculated values; gas streams were not sampled and analyzed for these elements.
(f) Source concentration is the concentration at the stack exit point which is 61 m (200 ft) above ground level. To compare these source concentration values with the concentration guide values, the effect of dilution by atmospheric dispersion should be considered. The average annual dispersion factor, $\bar{X}/Q$, is 4.5×10^{-9} sec/m^3 and is calculated from meteorological data collected at Hanford from 1955 to 1970.
(g) As indicated in footnote (f), these are the concentrations at the stack exit. When the plume reaches an "occupied area" such as the base of the stack, the concentrations will have decreased through dilution and dispersion. The onsite concentration guides are concerned with those concentrations which reach the occupied areas (see Section 6.1).

TABLE D.2. Radionuclide Content of Annual Gaseous Effluents from the PUREX Plant, 1050 and 2100 MT/yr Processing Rates

Radionuclides	1050 MT/yr Processing Rate[a] Total Annual Curies	2100 MT/yr Processing Rate[b] Total Annual Curies
Total α (as ^{239}Pu)	3.1×10^{-3}	6.3×10^{-3}
Total β (as ^{90}Sr)[c]	2.7×10^{-1}	4.6×10^{-1}
^{129}I	2.0×10^{-2}	4.0×10^{-2}
^{131}I	2.9×10^{-1}	2.9×10^{-1}
^{85}Kr	1.0×10^{6}	1.3×10^{6}
^{3}H	1.3×10^{3}	2.2×10^{3}
^{14}C	3.5	6.9

(a) Based on processing 1050 MT of 12 percent ^{240}Pu irradiated fuel, 20 percent of which is spike fuel. The 1050 MT of fuel is the sum of 350 MT of 180-day cooled fuel, 350 MT of 1-1/2-year cooled fuel, and 350 MT of 3-year cooled fuel.
(b) Based on processing 2100 MT of 12 percent ^{240}Pu irradiated fuel, 20 percent of which is spike fuel. The 2100 MT of fuel is the sum of six equal portions weighing 350 MT each with cooling times of 1/2, 2, 3, 4-1/2, 6, and 7-1/2 years.
(c) As particulate material.

TABLE D.3. Radionuclide Content of Annual Gaseous Effluents from the UO_3 Plant, 3000 MT/yr Processing Rate

	DOE Order 5480.1A, Ch. XI		1972 Actual		3000 MT/yr Processing Rate	
Radionuclides	Offsite Concentration Guide, μCi/ml	Onsite Concentration Guide, μCi/ml	Average Concentration at the Source,[b] μCi/ml	Annual Curies	Average Concentration at the Source,[b] μCi/ml	Annual Curies[a]
Total α (as uranium particulates)	3×10^{-12}	7×10^{-11}	2.6×10^{-12}	9×10^{-5}	8.2×10^{-16}	1.4×10^{-7}
Total β (as ^{106}Ru particulates)	3×10^{-9}	8×10^{-8}	1.8×10^{-10}	6×10^{-3}	5.3×10^{-13}	9.0×10^{-5}

(a) These values were calculated based on 1972 data and an assumed efficiency of 99.95 percent for planned filter additions. They represent the probable annual maximum assuming 3000 MT fuel processed per year.
(b) These values were determined by dividing the annual curies by the total effluent volume, 1.7×10^{8} m^3 for 105 operating days. These numbers are statistically derived and are given for comparison purposes only.

TABLE D.4. Radionuclide Content of Annual Gaseous Effluents from the UO_3 Plant, 1050 and 2100 MT/yr Processing Rates

Radionuclides[a]	1050 MT/yr Processing Rate Total Annual Curies	2100 MT/yr Processing Rate Total Annual Curies
Total alpha (as uranium particles)	4.5×10^{-8}	9.0×10^{-8}
Total beta (as Ru-106 particles)	3×10^{-5}	6×10^{-5}

(a) These values were calculated based on 1972 data and an assumed efficiency of 99.95 percent for planned filter additions.

TABLE D.5. Estimated Annual Nonradioactive Gaseous Effluents from PUREX/UO_3 Plants, 3000 MT/yr Processing Rate

Pollutant	Source[a]	Washington State Standard (Offsite) ($\mu g/m^3$)	Annual Quantity Limit (MT)	Concentration at Site Boundary ($\mu g/m^3$)	Annual Quantity (MT)
Nitrogen Oxides	PUREX	100	424	2×10^{-2}	385
	UO_3		50	5×10^{-3}	50
Hydrocarbons	PUREX	160		6×10^{-4}	12
	UO_3			4×10^{-5}	0.4
Carbon Monoxide	PUREX	10 mg/m^3		1×10^{-4}	2
Ammonia	PUREX	60		1×10^{-3}	18
Total Suspended Particulates	PUREX	150		1×10^{-6}	0.02
	UO_3			6×10^{-7}	0.006

(a) Discharged from 61-m main ventilation and 26-m ammonia stacks at PUREX; from 26-m main stack at UO_3 plant.

TABLE D.6. Estimated Annual Nonradioactive Gaseous Effluents from PUREX/UO_3 Plants, 1050 and 2100 MT/yr Processing Rate

Pollutant	Source[a]	1050 MT/yr Processing Rate Annual Quantity (MT)	2100 MT/yr Processing Rate Annual Quantity (MT)
Nitrogen Oxides	PUREX	135	270
	UO_3	16	30
Hydrocarbons	PUREX	4	8
	UO_3	0.1	0.2
Carbon Monoxide	PUREX	0.6	1
Ammonia	PUREX	6	12
Total Suspended Particulates	PUREX	0.006	0.01
	UO_3	0.002	0.004

(a) Discharged from 61-m main ventilation and 26-m ammonia stacks at PUREX; from 26-m main stack at UO_3 plant.

TABLE D.7. Gaseous Effluents from Transportation of Major PUREX Materials, 3000 MT/yr Processing Rate

Pollutant	Annual Quantity Released (MT) Rail (1.4×10^6 ℓ/yr)	Truck (9.3×10^3 ℓ/yr)
Particulates	5.4	1.8×10^{-2}
SO_2	13.9	3.8×10^{-2}
CO	15.0	3.1×10^{-1}
Hydrocarbons	10.7	5.3×10^{-2}
Nitrogen Oxides	16.1	5.3×10^{-2}

Current acid waste (CAW) would be directly neutralized before going to interim storage in underground tanks, and is not considered an effluent.

Table D.8 lists the radionuclide content of the liquid effluents generated in 1972 and estimated maximum annual discharges for the 3000 MT/yr case; analogous estimates for the 1050 and 2100 MT/yr cases are presented in Table D.9.

It should be noted that even though the scenarios used are based on higher burnup of the fuel than that processed in 1972, modifications which have been incorporated into the PUREX plant, reducing the radionuclide content of condensates, will measurably reduce the amounts of $^{90}Sr^{a}$, ^{106}Ru, and ^{137}Cs discharged to the cribs.

Heat exchanger cooling water and the chemical sewer are also considered liquid effluents from the PUREX operation. Because the radionuclide content of these liquids is very low, they are discharged to man-made ponds. The radionuclide content of these discharges to the ponds is also listed in Tables D.8 and D.9.

Liquids discharged from the UO_3 plant include cooling water, steam condensate, chemical sewer waste (compressor cooling water, spilled chemicals, etc.), and process condensate. The first three effluent streams are sent to a pond while the last is sent to a crib. Radionuclide contents of these discharges are shown in Table D.10; estimates for the 1050 and 2100 MT/yr cases are shown in Table D.11. The total liquid effluents from the UO_3 plant contain less than 10 percent of the actinides and less than 50 percent of the total β curies routinely discharged to the ponds/cribs in the 200 West Area. (Other liquid discharges are from waste management facilities.) These contribute essentially zero radiation dose to the general public (RHO 1979).

Table D.12 lists the composition of all liquid effluents from the PUREX/UO_3 facilities containing nonradiological pollutants for the 3000 MT/yr case. The proportionally smaller quantities for 1050 and 2100 MT/yr processing rates are summarized in Table D.13. The chemical content of sewer effluent is based on an estimated loss of one percent of the chemicals used in the PUREX/UO_3 facilities.

D.1.3 Radiation Dose Comparison

Estimated average annual occupational dose rates for employees for an assumed processing rate of 3000 MT/yr are shown in Table D.14. These are proportionally lower for 1050 and 2100 MT/yr processing rates, assuming the same size labor force, as summarized in Table D.15. As the table indicates, these doses would be within DOE Order 5480.1A Guidelines.

Estimated annual average radiation doses for the maximum individual and for the general public for an assumed 3000 MT/yr processing rate were presented in Section 5.1.1.2 (Tables 5.4 and 5.5) for the PUREX and UO_3 plants. Corresponding estimates for 1050 and 2100 MT/yr processing rates are shown for PUREX in Tables D.16 and D.17, and for the UO_3 plant in Tables D.18 and D.19.

The doses which would be received from potential accidents would be unchanged because the amount of radioactive material available for release from the facilities at any one time would not change. The possibility of an onsite transportation accident occurring would remain very small. Non-radiological occupational hazards for the PUREX/UO_3 facilities would be similar to other chemical and allied industries.

TABLE D.8. Radionuclide Content of Annual Liquid Discharges from the PUREX Plant to Cribs and Ponds, 3000 MT/yr Processing Rate

Radionuclides	DOE Order 5480.1A Chapter XI Table I, Column 2 (c) Onsite Concentration Guide, μCi/mℓ	1972 Actual(a) Average Concentration at the Source,(d) μCi/mℓ	1972 Actual(a) Annual Curies	3000 MT/yr Processing Rate(b) Average Concentration at the Source,(d,e) μCi/mℓ	3000 MT/yr Processing Rate(b) Annual Curies
Discharges to Cribs					
^{239}Pu	1×10^{-4}	1.9×10^{-5}	4.3(f)	6.3×10^{-7}	3.9×10^{-1}
^{238}U	1×10^{-3}	6.1×10^{-9}	1.4×10^{-3}(f)	3.2×10^{-9}	2.0×10^{-3}
^{3}H	1×10^{-1}	1.4×10^{-1}	7.0×10^{3}(g)	8.1×10^{-2}	5.0×10^{4}(h)
^{90}Sr	1×10^{-5}	6.5×10^{-4}	1.5×10^{2}	7.7×10^{-6}	4.8
^{137}Cs	4×10^{-4}	7.4×10^{-4}	1.7×10^{2}	5.3×10^{-6}	3.3
^{106}Ru	3×10^{-4}	3.5×10^{-3}	8.1×10^{2}	2.1×10^{-5}	1.3×10^{1}
^{60}Co(f)	1×10^{-3}	8.3×10^{-5}	1.9×10^{1}(f)	2.9×10^{-7}	1.8×10^{-1}
Discharges to Ponds					
^{239}Pu	1×10^{-4}	2.6×10^{-8}	4.4×10^{-1}(f)	1.4×10^{-8}	4.0×10^{-1}
^{238}U	1×10^{-3}	1.1×10^{-9}	1.9×10^{-2}(f)	1.1×10^{-9}	3.0×10^{-2}
^{3}H	1×10^{-1}	Not Analyzed	Not Analyzed	2.9×10^{-6}	8.0×10^{1}
^{90}Sr	1×10^{-5}	1.8×10^{-8}	0.3(f)	1.2×10^{-8}	3.3×10^{-1}
^{137}Cs	4×10^{-4}	1.1×10^{-7}	1.8(f)	4.9×10^{-8}	1.6
^{106}Ru	3×10^{-4}	2.9×10^{-7}	4.9(f)	7.2×10^{-8}	2.4
^{60}Co	1×10^{-3}	5.9×10^{-8}	1.0(f)	4.3×10^{-8}	1.2

(a) 1972 emissions are based on processing a total of 1013 MT of fuel including about 525 MT of 3.5 percent ^{240}Pu weapons grade irradiated fuel.
(b) Projected emissions are based on processing 3000 MT of 12 percent ^{240}Pu irradiated fuel, 20 percent of which is spike fuel; the fuel is assumed to be cooled only 180 days.
(c) Table I, Column 2 concentration guides are set forth here for comparison purposes only. They set forth concentrations of radionuclides which may be discharged directly to a public sanitary sewer system (see Section 6.1 and DOE Order 5480.1A).
(d) These values were determined by dividing the annual curies by the total effluent volume 6.2×10^{5} m^3/yr to cribs and 2.8×10^{7} m^3/yr to ponds.. These numbers are statistically derived and are given for comparison purposes only.
(e) The PUREX effluent is discharged to an onsite radiation disposal facility, but the comparison with Table I, Column 2 values shows that the concentrations of all the radionuclides would meet criteria for direct discharge to a public sanitary sewer system.
(f) Values are the sum of 12 composite samples. The detection limit varied depending on the sample size and counting time.
(g) Calculated from previous sample results.
(h) Estimates higher than 1972 data are based on higher exposure rates, i.e., 12 percent ^{240}Pu, and correspondingly higher ^{3}H content.

TABLE D.9. Radionuclide Content of Annual Liquid Discharges from the PUREX Plant to Cribs and Ponds, 1050 and 2100 MT/yr Processing Rates

Radionuclides	1050 MT/yr Processing Rate[a] Total Annual Curies	2100 MT/yr Processing Rate[b] Total Annual Curies
Discharges to Cribs		
^{239}Pu	1.3×10^{-1}	2.7×10^{-1}
^{238}U	6.8×10^{-4}	1.4×10^{-3}
^{3}H	1.9×10^{4}	3.4×10^{4}
^{90}Sr	2.8	6.0
^{137}Cs	1.0	1.8
^{106}Ru	1.7	2.4
^{60}Co	5.5×10^{-2}	8.4×10^{-2}
Discharges to Ponds		
^{239}Pu	1.4×10^{-1}	2.7×10^{-1}
^{238}U	1.0×10^{-2}	2.0×10^{-2}
^{3}H	3.4×10^{1}	6.1×10^{1}
^{90}Sr	2.0×10^{-1}	4.3×10^{-1}
^{137}Cs	5.4×10^{-1}	1.0
^{106}Ru	8.0×10^{-1}	1.1
^{60}Co	3.7×10^{-1}	5.7×10^{-1}

(a) Based on processing 1050 MT of 12 percent ^{240}Pu irradiated fuel, 20 percent of which is spike fuel. The 1050 MT of fuel is the sum of 350 MT of 180-day cooled fuel, 350 MT of 1-1/2 year cooled fuel, and 350 MT of 3-year cooled fuel.
(b) Based on processing 2100 MT of 12 percent ^{240}Pu irradiated fuel, 20 percent of which is spike fuel. The 2100 MT of fuel is the sum of six equal portions weighing 350 MT each with cooling times of 1/2, 2, 3, 4-1/2, 6, and 7-1/2 years.

TABLE D.10. Radionuclide Content of Annual Liquid Discharges from the UO_3 Plant, 3000 MT/yr Processing Rate

Radionuclides	DOE Order 5480.1A Chapter XI Table I Column 2 (a) Onsite Concentration Guide, μCi/mℓ	1972 Actual: Average Concentration at the Source,[b] μCi/mℓ	1972 Actual: Total Annual Curies	3000 MT/yr Processing Rate: Average Concentration at the Source,[b] μCi/mℓ	3000 MT/yr Processing Rate: Total Annual Curies
Total uranium	5×10^{-4}	4.8×10^{-9}	2.2×10^{-3}	2.5×10^{-8}	4.2×10^{-3}
Total β	1×10^{-5}	3.5×10^{-6}	1.6[b]	2.6×10^{-5}[d]	4.5

(a) Table I, Column 2 concentration guides are set forth here for comparison purposes only. They set forth concentrations of radionuclides which may be discharged directly to a public sanitary sewer system (see Section 6.1 and DOE order 5480.1A).
(b) These values were determined by dividing the annual curies by the total effluent volume, 1.9×10^{5} m^3/yr. These numbers are statistically derived and are given for comparison purposes only.
(c) This value is the sum of 12 composite samples. The detection limit varied depending on the sample size and counting time.
(d) This concentration will not exceed the radiation protection standards of DOE Order 5480.1A, see discussion in Section 6.1

TABLE D.11. Radionuclide Content of Annual Liquid Discharges from the UO_3 Plant, 1050 and 2100 MT/yr Processing Rates

Radionuclides	Total Annual Curies: 1050 MT/yr Processing Rate	Total Annual Curies: 2100 MT/yr Processing Rate
Total uranium	1.4×10^{-3}	2.8×10^{-3}
Total β	1.5	3.0

TABLE D.12. Nonradioactive Chemicals in Liquid Effluents from PUREX and UO_3 Plants, 3000 MT/yr Processing Rate[a]

Effluent Stream Source	Annual Volume (m^3)	Pollutant	Concentration (moles/liter)	Annual Quantity (MT)	Discharge Site
PUREX Plant					
Process condensate	2.7×10^4	Nitric acid	0.01	1.8×10^1	Crib
Steam condensate	5.4×10^5	Dearborn chemical Super Filmeen 14 (Octyldecylamine)	10-15 ppm	6.9	Crib
Ammonia condensate	6.6×10^4	Ammonium hydroxide	0.3	6.9×10^1	Crib
Cooling water	2.7×10^7	None			Gable Mountain Pond and B-Plant Pond
Chemical sewer[b]	2.7×10^6	Ammonium fluoride/ Ammonium nitrate	3.6×10^{-6}	7.8	P-Plant Pond
		Potassium hydroxide	1.9×10^{-5}	3.0	B-Plant Pond
		Nitric acid	5.3×10^{-5}	9.3	B-Plant Pond
		Ferrous sulfamate	6×10^{-6}	4.2×10^{-1}	B-Plant Pond
		Sulfamic acid	2×10^{-6}	5.4×10^{-1}	B-Plant Pond
		Sugar (sucrose)	1.6×10^{-5}	1.5	B-Plant Pond
		Sodium hydroxide	8×10^{-5}	8.7	B-Plant Pond
		Sodium carbonate	9.4×10^{-5}	2.7×10^{-1}	B-Plant Pond
		Aluminum nitrate	1.0×10^{-5}	5.7	B-Plant Pond
UO_3 Plant					
Process condensate	1.8×10^3	Nitric acid	0.077	8.7	Crib
Cooling water	1.7×10^5	None			
Chemical sewer	1.1×10^4	Nitric acid	~0.001 M	7.2×10^{-1}	U Pond
		Sulfuric acid	$\sim 7.0 \times 10^{-6}$	7.8×10^{-3}	U Pond

(a) Under normal operating conditions.
(b) Based on estimated loss of one percent of chemicals used in the PUREX plant.
Sources: Hawkins 1980a,e, 1981b.

TABLE D.13. Nonradioactive Chemicals in Liquid Effluents from PUREX and UO_3 Plants, 1050 and 2100 MT/yr Processing Rates[a]

Pollutant	Source	1050 MT/yr Processing Rate: Average Concentration at Source (moles/liter)	1050 MT/yr Processing Rate: Annual Quantity (MT)	2100 MT/yr Processing Rate: Average Concentration at Source (moles/liter)	2100 MT/yr Processing Rate: Annual Quantity (MT)
PUREX Plant					
Nitric Acid	Process Condensate	0.01	5.9	0.01	11.8
Dearborn Chemical Super Filmeen 14	Steam Condensate	10-15 ppm	2.3	10-15 ppm	4.6
Ammonium Hydroxide	Ammonia Condensate	0.3	23	0.3	46
Ammonium Fluoride/ Ammonium Nitrate	Chemical Sewer[a]	3.6×10^{-6}	2.6	3.6×10^{-6}	5.2
Potassium Hydroxide	Chemical Sewer[a]	1.9×10^{-5}	1.0	1.9×10^{-5}	2.0
Nitric Acid	Chemical Sewer[a]	5.3×10^{-5}	3.1	5.3×10^{-5}	6.2
Ferrous Sulfamate	Chemical Sewer[a]	6×10^{-6}	0.14	6×10^{-6}	0.28
Sulfamic Acid	Chemical Sewer[a]	2×10^{-6}	0.18	2×10^{-6}	0.36
Sugar (sucrose)	Chemical Sewer[a]	1.6×10^{-5}	0.51	1.6×10^{-5}	1.02
Sodium Hydroxide	Chemical Sewer[a]	8×10^{-5}	2.9	8×10^{-5}	5.8
Sodium Carbonate	Chemical Sewer[a]	9.4×10^{-5}	0.09	9.4×10^{-5}	0.18
Aluminum Nitrate	Chemical Sewer[a]	1.0×10^{-5}	1.9	1.0×10^{-5}	3.8
UO_3 Plant					
Nitric Acid	Process Condensate	0.077	2.9	0.077	5.8
Nitric Acid	Chemical Sewer	0.001	0.24	0.001	0.48
Sulfuric Acid	Chemical Sewer	7×10^{-6}	0.003	7×10^{-6}	0.005

(a) Based on estimated loss of one percent of chemicals used in the PUREX plant.

TABLE D.14. Average Annual Occupational Doses for Employees in the PUREX and UO_3 Plants, 3000 MT/yr Processing Rate

	Number of Workers	Skin Dose (rem/yr)	Total Body Gamma (rem/yr)
For PUREX (excluding PuO_2 Workers)			
Radiation Zone Workers	190	3.6	2.4
Non-radiation Zone Workers	90	0.6	0.3
For PUREX PuO_2 Workers			
Radiation Zone Workers[a]	30	4.5	0.7
Non-radiation Zone Workers	20	0.6	0.3
For UO_3 Facilities			
Radiation Zone Workers	28	2.4	1.5
Non-radiation Zone Workers	16	0.6	0.3
Standards (5480.1A)			
Radiation Zone Workers	—	15	5.0
Members of the General Public	—	1.5	0.5

(a) These radiation zone workers could receive a dose up to 0.4 rem/yr from neutrons from plutonium.

TABLE D.15. Average Annual Occupational Doses for Employees in the PUREX and UO_3 Plants, 1050 and 2100 MT/yr Processing Rates[a]

	DOE Order 5480.1A, Chapter XI		1050 MT/yr Processing Rate		2100 MT/yr Processing Rate	
	Skin Dose (rem)	Whole Body (rem)	Skin Dose (rem)	Whole Body (rem)	Skin Dose (rem)	Whole Body (rem)
For PUREX (excluding PuO_2 workers)						
Radiation Zone Workers	15.0	5.0	1.2	0.8	2.4	1.6
Non-radiation Zone Workers	1.5	0.5	0.2	0.1	0.4	0.2
For PUREX PuO_2 Workers						
Radiation Zone Workers[b]	15.0	5.0	1.5	0.2	3.0	0.5
Non-radiation Zone Workers	1.5	0.5	0.2	0.1	0.4	0.2
For UO_3 Plant						
Radiation Zone Workers	15.0	5.0	0.8	0.5	1.6	1.0
Non-radiation Zone Workers	1.5	0.5	0.2	0.1	0.4	0.2

(a) The doses are based on the expected ratio of 6 percent ^{240}Pu to 12 percent ^{240}Pu processed by PUREX. The doses shown are per worker and assume no increase in work force.
(b) These radiation zone workers could receive a dose of up to 0.4 rem/yr from neutrons from plutonium.

TABLE D.16. Radiation Doses to Members of the General Public from Routine Releases from the PUREX Plant, 1050 MT/yr Processing Rate

Pathway and Organ	Maximum Individual Dose (rem)			Population Dose (man-rem)[d]		
	1-yr Release/[a] 1-yr Accumulation	1-yr Release/[b] 70-yr Accumulation	16-yr Release/[c] 70-yr Accumulation	1-yr Release/ 1-yr Accumulation	1-yr Release/ 70-yr Accumulation	16-yr Release/ 70-yr Accumulation
Air Submersion						
All Organs	1.0×10^{-5}	1.0×10^{-5}	1.6×10^{-4}	1.2×10^{0}	1.2×10^{0}	1.9×10^{1}
Inhalation						
Total Body	1.0×10^{-7}	6.9×10^{-7}	1.1×10^{-5}	1.6×10^{-2}	1.1×10^{-1}	1.7×10^{0}
Bone	3.2×10^{-7}	9.7×10^{-6}	1.5×10^{-4}	5.0×10^{-2}	1.6×10^{0}	2.4×10^{1}
Lung	4.2×10^{-7}	1.6×10^{-6}	2.6×10^{-5}	6.7×10^{-2}	2.6×10^{-1}	4.2×10^{0}
Thyroid	4.6×10^{-7}	5.1×10^{-7}	8.1×10^{-6}	7.4×10^{-2}	8.1×10^{-2}	1.3×10^{0}
GI-LLI	4.7×10^{-9}	4.8×10^{-9}	7.6×10^{-8}	7.6×10^{-4}	7.6×10^{-4}	1.2×10^{-2}
Ground Deposition						
All Organs	1.8×10^{-9}	1.8×10^{-9}	1.8×10^{-6}	1.9×10^{-4}	1.9×10^{-4}	1.9×10^{-1}
Ingestion						
Total Body	1.2×10^{-6}	3.1×10^{-6}	4.0×10^{-4}	8.9×10^{-2}	2.2×10^{-1}	2.4×10^{1}
Bone	1.4×10^{-6}	8.5×10^{-6}	1.4×10^{-3}	1.0×10^{-1}	6.0×10^{-1}	8.5×10^{1}
Lung	1.1×10^{-6}	1.1×10^{-6}	1.8×10^{-5}	7.9×10^{-2}	8.2×10^{-2}	1.3×10^{0}
Thyroid	2.8×10^{-5}	3.4×10^{-5}	1.1×10^{-3}	2.5×10^{0}	3.1×10^{0}	9.0×10^{1}
GI-LLI	1.2×10^{-6}	1.3×10^{-6}	4.9×10^{-5}	9.1×10^{-2}	9.4×10^{-2}	3.2×10^{0}
Total from all Pathways						
Total Body	1.1×10^{-5}	1.4×10^{-5}	5.7×10^{-4}	1.3×10^{0}	1.5×10^{0}	4.5×10^{1}
Bone	1.2×10^{-5}	2.8×10^{-5}	1.7×10^{-3}	1.4×10^{0}	3.4×10^{0}	1.3×10^{2}
Lung	1.2×10^{-5}	1.3×10^{-5}	2.1×10^{-4}	1.3×10^{0}	1.5×10^{0}	2.5×10^{1}
Thyroid	3.8×10^{-5}	4.5×10^{-5}	1.3×10^{-3}	3.8×10^{0}	4.4×10^{0}	1.1×10^{2}
GI-LLI	1.1×10^{-5}	1.1×10^{-5}	2.1×10^{-4}	1.3×10^{0}	1.3×10^{0}	2.2×10^{1}

(a) A 1-yr Release/1-yr Accumulation is the dose received in the first year from exposure in that year.
(b) A 1-yr Release/70-yr Accumulation is the dose received over a 70-year lifetime from exposure in the first year. For external exposure, it is equal to the 1-yr Release/1-yr Accumulation dose.
(c) A 16-year Release/70-yr Accumulation is the total dose accrued over a lifetime of continuous exposure to residual radiation both during and after the 16 years of PUREX plant operation.
(d) The population dose is for an estimated population (1990) of 417,000. All local population doses in this EIS are based on this population distribution within a 80-km (50-mile) radius from the Hanford Meteorological Station located at about the center of the Hanford Site.

TABLE D.17. Potential Radiation Doses to Members of the General Public from Routine Releases from the PUREX Plant, 2100 MT/yr Processing Rate

Pathway and Organ	Maximum Individual Dose (rem)			Population Dose (man-rem)(d)		
	1-yr Release/(a) 1-yr Accumulation	1-yr Release/(b) 70-yr Accumulation	16-yr Release/(c) 70-yr Accumulation	1-yr Release/ 1-yr Accumulation	1-yr Release/ 70-yr Accumulation	16-yr Release/ 70-yr Accumulation
Air Submersion						
All Organs	1.3×10^{-5}	1.3×10^{-5}	2.1×10^{-4}	1.5×10^{0}	1.5×10^{0}	2.4×10^{1}
Inhalation						
Total Body	2.0×10^{-7}	1.2×10^{-6}	1.9×10^{-5}	3.2×10^{-2}	2.0×10^{-1}	3.0×10^{0}
Bone	5.4×10^{-7}	1.7×10^{-5}	2.7×10^{-4}	8.6×10^{-2}	2.8×10^{0}	4.3×10^{1}
Lung	8.5×10^{-7}	3.3×10^{-6}	5.3×10^{-5}	1.4×10^{-1}	5.3×10^{-1}	8.5×10^{0}
Thyroid	6.0×10^{-7}	6.8×10^{-7}	1.1×10^{-5}	9.6×10^{-2}	1.1×10^{-1}	1.7×10^{0}
GI-LLI	8.3×10^{-9}	8.4×10^{-9}	1.3×10^{-7}	1.3×10^{-3}	1.3×10^{-3}	2.1×10^{-2}
Ground Deposition						
All Organs	3.6×10^{-9}	3.6×10^{-9}	3.6×10^{-6}	3.8×10^{-4}	3.8×10^{-4}	3.8×10^{-1}
Ingestion						
Total Body	2.4×10^{-6}	5.6×10^{-6}	6.8×10^{-4}	1.7×10^{-1}	4.0×10^{-1}	4.1×10^{1}
Bone	2.6×10^{-6}	1.5×10^{-5}	2.4×10^{-3}	2.0×10^{-1}	1.0×10^{0}	1.5×10^{2}
Lung	2.2×10^{-6}	2.2×10^{-6}	3.6×10^{-5}	1.6×10^{-1}	1.6×10^{-1}	2.6×10^{0}
Thyroid	3.9×10^{-5}	5.0×10^{-5}	1.8×10^{-3}	3.6×10^{0}	4.8×10^{0}	1.5×10^{2}
GI-LLI	2.4×10^{-6}	2.5×10^{-6}	8.9×10^{-5}	1.8×10^{-1}	1.8×10^{-1}	5.8×10^{0}
Total from all Pathways						
Total Body	1.6×10^{-5}	2.0×10^{-5}	9.1×10^{-4}	1.7×10^{0}	2.1×10^{0}	6.8×10^{1}
Bone	1.6×10^{-5}	4.5×10^{-5}	2.9×10^{-3}	1.8×10^{0}	5.3×10^{0}	2.2×10^{2}
Lung	1.6×10^{-5}	1.9×10^{-5}	3.0×10^{-4}	1.8×10^{0}	2.2×10^{0}	3.5×10^{1}
Thyroid	5.3×10^{-5}	6.4×10^{-5}	2.0×10^{-3}	5.2×10^{0}	6.4×10^{0}	1.8×10^{2}
GI-LLI	1.5×10^{-5}	1.6×10^{-5}	3.0×10^{-4}	1.7×10^{0}	1.7×10^{0}	3.0×10^{1}

(a) A 1-yr Release/1-yr Accumulation is the dose received in the first year from exposure in that year.
(b) A 1-yr Release/70-yr Accumulation is the dose received over a 70-year lifetime from exposure in the first year. For external exposure, it is equal to the 1-yr Release/1-yr Accumulation dose.
(c) A 16-year Release/70-yr Accumulation is the total dose accrued over a lifetime of continuous exposure to residual radiation both during and after the 16 years of PUREX plant operation.
(d) The population dose is for an estimated population (1990) of 417,000. All local population doses in this EIS are based on this population distribution within a 80-km (50-mile) radius from the Hanford Meteorological Station located at about the center of the Hanford Site.

TABLE D.18. Potential Radiation Doses to Members of the General Public from Routine Releases from the UO_3 Plant, 1050 MT/yr Processing Rate

Pathway and Organ	Maximum Individual Dose (rem)			Population Dose (man-rem)[d]		
	1-yr Release/[a] 1-yr Accumulation	1-yr Release/[b] 70-yr Accumulation	16-yr Release/[c] 70-yr Accumulation	1-yr Release/ 1-yr Accumulation	1-yr Release/ 70-yr Accumulation	16-yr Release/ 70-yr Accumulation
Air Submersion						
All Organs	1.4×10^{-14}	1.4×10^{-14}	2.2×10^{-13}	1.6×10^{-9}	1.6×10^{-9}	2.6×10^{-8}
Inhalation						
Total Body	1.6×10^{-13}	1.8×10^{-13}	2.8×10^{-12}	2.6×10^{-8}	2.8×10^{-8}	4.5×10^{-7}
Bone	1.2×10^{-12}	1.5×10^{-12}	2.4×10^{-11}	2.0×10^{-7}	2.4×10^{-7}	3.9×10^{-6}
Lung	5.0×10^{-12}	2.2×10^{-11}	3.5×10^{-10}	8.1×10^{-7}	3.5×10^{-6}	5.6×10^{-5}
Thyroid	—[e]	—	—	—	—	—
GI-LLI	9.1×10^{-13}	9.1×10^{-13}	1.5×10^{-12}	1.5×10^{-7}	1.5×10^{-7}	2.3×10^{-6}
Ground Deposition						
All Organs	6.4×10^{-13}	6.4×10^{-13}	2.1×10^{-11}	6.9×10^{-8}	6.9×10^{-8}	2.2×10^{-6}
Ingestion						
Total Body	3.9×10^{-14}	4.4×10^{-14}	7.8×10^{-13}	2.7×10^{-9}	2.7×10^{-9}	4.9×10^{-8}
Bone	3.1×10^{-13}	4.2×10^{-13}	8.0×10^{-12}	1.9×10^{-8}	2.7×10^{-8}	5.0×10^{-7}
Lung	—	—	—	—	—	—
Thyroid	—	—	—	—	—	—
GI-LLI	2.0×10^{-11}	2.0×10^{-11}	3.2×10^{-10}	1.2×10^{-6}	1.2×10^{-6}	2.0×10^{-5}
Total from all Pathways						
Total Body	8.5×10^{-13}	8.8×10^{-13}	2.5×10^{-11}	9.9×10^{-8}	1.0×10^{-7}	2.7×10^{-6}
Bone	2.2×10^{-12}	2.6×10^{-12}	5.3×10^{-11}	2.9×10^{-7}	3.4×10^{-7}	6.6×10^{-6}
Lung	5.7×10^{-12}	2.3×10^{-11}	3.7×10^{-10}	8.8×10^{-7}	3.6×10^{-6}	5.8×10^{-5}
Thyroid	6.5×10^{-13}	6.5×10^{-13}	2.1×10^{-11}	7.1×10^{-8}	7.1×10^{-8}	2.2×10^{-6}
GI-LLI	2.2×10^{-11}	2.2×10^{-11}	3.4×10^{-10}	1.4×10^{-6}	1.4×10^{-6}	2.5×10^{-5}

(a) A 1-yr Release/1-yr Accumulation is the dose received in the first year from exposure in that year.
(b) A 1-yr Release/70-yr Accumulation is the dose received over a 70-year lifetime from exposure in the first year. For external exposure, it is equal to the 1-yr Release/1-yr Accumulation dose.
(c) A 16-year Release/70-yr Accumulation is the total dose accrued over a lifetime of continuous exposure to residual radiation both during and after the 16 years of PUREX plant operation.
(d) The population dose is for an estimated population (1990) of 417,000. All local population doses in this EIS are based on this population distribution within a 80-km (50-mile) radius from the Hanford Meteorological Station located at about the center of the Hanford Site.
(e) Dash (—) indicates nuclides do not contribute significantly to this organ.

TABLE D.19. Potential Radiation Doses to Members of the General Public from Routine Releases from the UO_3 Plant, 2100 MT/yr Processing Rate

Pathway and Organ	Maximum Individual Dose (rem)			Population Dose (man-rem)[d]		
	1-yr Release/[a] 1-yr Accumulation	1-yr Release/[b] 70-yr Accumulation	16-yr Release/[c] 70-yr Accumulation	1-yr Release/ 1-yr Accumulation	1-yr Release/ 70-yr Accumulation	16-yr Release/ 70-yr Accumulation
Air Submersion						
All Organs	2.8×10^{-14}	2.8×10^{-14}	4.5×10^{-13}	3.2×10^{-9}	3.2×10^{-9}	5.1×10^{-8}
Inhalation						
Total Body	3.2×10^{-13}	3.5×10^{-13}	5.7×10^{-12}	5.2×10^{-8}	5.7×10^{-8}	9.1×10^{-7}
Bone	2.5×10^{-12}	3.0×10^{-12}	4.8×10^{-11}	4.0×10^{-7}	4.8×10^{-7}	7.7×10^{-6}
Lung	9.5×10^{-12}	4.1×10^{-11}	6.6×10^{-10}	1.5×10^{-6}	6.6×10^{-6}	1.1×10^{-4}
Thyroid	—[e]	—	—	—	—	—
GI-LLI	1.8×10^{-12}	1.8×10^{-12}	2.9×10^{-11}	2.9×10^{-7}	2.9×10^{-7}	4.7×10^{-6}
Ground Deposition						
All Organs	1.3×10^{-12}	1.3×10^{-12}	4.1×10^{-11}	1.4×10^{-7}	1.4×10^{-7}	4.4×10^{-6}
Ingestion						
Total Body	7.8×10^{-14}	8.6×10^{-14}	1.5×10^{-12}	4.8×10^{-9}	5.4×10^{-9}	9.5×10^{-8}
Bone	6.0×10^{-13}	8.3×10^{-13}	1.6×10^{-11}	3.7×10^{-8}	5.3×10^{-8}	9.8×10^{-7}
Lung	—	—	—	—	—	—
Thyroid	—	—	—	—	—	—
GI-LLI	3.9×10^{-11}	3.9×10^{-11}	6.5×10^{-10}	2.4×10^{-6}	2.4×10^{-6}	3.9×10^{-5}
Total from all Pathways						
Total Body	1.7×10^{-12}	1.8×10^{-12}	4.9×10^{-11}	2.0×10^{-7}	2.1×10^{-7}	5.5×10^{-6}
Bone	4.4×10^{-12}	5.2×10^{-12}	1.1×10^{-10}	5.8×10^{-7}	6.8×10^{-7}	1.3×10^{-5}
Lung	1.1×10^{-11}	4.2×10^{-11}	7.0×10^{-10}	1.6×10^{-6}	6.7×10^{-6}	1.1×10^{-4}
Thyroid	1.3×10^{-12}	1.3×10^{-12}	4.1×10^{-11}	1.4×10^{-7}	1.4×10^{-7}	4.5×10^{-6}
GI-LLI	4.2×10^{-11}	4.2×10^{-11}	7.2×10^{-10}	2.8×10^{-6}	2.8×10^{-6}	4.8×10^{-5}

(a) A 1-yr Release/1-yr Accumulation is the dose received in the first year from exposure in that year.
(b) A 1-yr Release/70-yr Accumulation is the dose received over a 70-year lifetime from exposure in the first year. For external exposure, it is equal to the 1-yr Release/1-yr Accumulation dose.
(c) A 16-year Release/70-yr Accumulation is the total dose accrued over a lifetime of continuous exposure to residual radiation both during and after the 16 years of PUREX plant operation.
(d) The population dose is for an estimated population (1990) of 417,000. All local population doses in this EIS are based on this population distribution within a 80-km (50-mile) radius from the Hanford Meteorological Station located at about the center of the Hanford Site.
(e) Dash (—) indicates nuclides do not contribute significantly to this organ.

D.2 CONSTRUCT NEW FUEL PROCESSING PLANT AT HANFORD

Effluents from a new PUREX plant would be considerably different than those from the existing plant, as indicated by the following discussion.

D.2.1 Gaseous Effluents

Incorporation of ^{85}Kr recovery into the process flowsheet would reduce ^{85}Kr emissions dramatically. Estimated concentrations and quantities for both a 3000 and 1050 MT/yr processing rate are summarized in Table D.20. Calculations of site boundary concentrations would require identification of a definite site; assuming a site located similarly to the existing plant, site boundary concentrations can be approximated from those in Table D.1 by a ratioing process, after correction for the reduced ^{85}Kr content.

The only significantly large nonradioactive gaseous pollutant emitted from the PUREX process, NO_x, would be essentially eliminated as a byproduct of ^{85}Kr recovery, since this has to be removed from the dissolver gas effluent stream before the ^{85}Kr can be recovered. Other nonradioactive PUREX emissions would be expected to be much the same as indicated by Tables D.5 and D.6.

D.2.2 Liquid Effluents

No liquid process effluents would be released from a new plant. Any excess water above that which can be recycled in the plant is released by evaporation (see Section 3.2.6). It is assumed that there would be the same nominal releases to a tile field of (non-process) sanitary wastes, as in the present plant.

D.2.3 Radiation Dose Comparison

No estimates of occupational dose are available for a new PUREX plant at Hanford; as an approximation it can be assumed that they would not exceed those given in Tables D.14 and D.15, and would probably be slightly lower.

Estimated annual radiation doses for the maximum individual and for the general public from a new PUREX plant are presented in Table 5.16 for an assumed 3000 MT/yr processing rate; analogous doses for a 1050 MT/yr processing rate are given in Table D.21.

TABLE D.20. Estimated Radionuclide Content of Annual Gaseous Releases from a New PUREX Plant, 3000 and 1050 MT/yr Processing Rates

Nuclide	Concentration,[a] Ci/m^3	Annual Quantity, Ci: 3000 MT/yr Processing Rate	Annual Quantity, Ci: 1050 MT/yr Processing Rate
^{3}H	1.2×10^{-3}	6.9×10^{4}	2.4×10^{4}
^{14}C	4.2×10^{-8}	9.3×10^{-2}	3.5×10^{-2}
^{85}Kr	1.5×10^{-1}	3.3×10^{5}	1.0×10^{5}
^{106}Ru	4.1×10^{-7}	8.6×10^{-1}	3.0×10^{-1}
^{129}I	3.3×10^{-9}	7.2×10^{-3}	2.6×10^{-3}
Other β	3.4×10^{-12}	1.0×10^{-5}	5.0×10^{-6}
Total α	1.8×10^{-17}	3.9×10^{-11}	1.3×10^{-11}

(a) This concentration does not take into account any dilution by the ventilation air.

TABLE D.21. Potential Radiation Doses to Members of the General Public from Routine Releases from a New PUREX Plant, 1050 MT/yr Processing Rate

Pathway and Organ	Maximum Individual Dose (rem)			Population Dose (man-rem)[d]		
	1-yr Release/[a] 1-yr Accumulation	1-yr Release/[b] 70-yr Accumulation	16-yr Release/[c] 70-yr Accumulation	1-yr Release/ 1-yr Accumulation	1-yr Release/ 70-yr Accumulation	16-yr Release/ 70-yr Accumulation
Air Submersion						
All Organs	1.0×10^{-6}	1.0×10^{-6}	1.6×10^{-5}	1.2×10^{-1}	1.2×10^{-1}	1.9×10^{0}
Inhalation						
Total Body	1.8×10^{-6}	1.8×10^{-6}	2.9×10^{-5}	2.8×10^{-1}	2.9×10^{-1}	4.7×10^{0}
Bone	1.2×10^{-8}	1.3×10^{-8}	2.1×10^{-7}	2.0×10^{-3}	2.1×10^{-3}	3.4×10^{-2}
Lung	1.8×10^{-6}	1.8×10^{-6}	2.9×10^{-5}	2.8×10^{-1}	2.9×10^{-1}	4.7×10^{0}
Thyroid	1.8×10^{-6}	1.8×10^{-6}	2.9×10^{-5}	2.8×10^{-1}	2.9×10^{-1}	4.7×10^{0}
GI-LLI	9.1×10^{-9}	9.1×10^{-9}	1.5×10^{-7}	1.5×10^{-3}	1.5×10^{-3}	2.3×10^{-2}
Ground Deposition						
All Organs	6.7×10^{-9}	6.7×10^{-9}	4.4×10^{-7}	7.1×10^{-4}	7.1×10^{-4}	4.7×10^{-2}
Ingestion						
Total Body	1.8×10^{-5}	1.9×10^{-5}	3.1×10^{-4}	1.3×10^{0}	1.4×10^{0}	2.2×10^{1}
Bone	1.4×10^{-8}	1.6×10^{-8}	2.9×10^{-7}	1.1×10^{-3}	1.2×10^{-3}	2.2×10^{-2}
Lung	1.8×10^{-5}	1.9×10^{-5}	3.1×10^{-4}	1.3×10^{0}	1.4×10^{0}	2.2×10^{1}
Thyroid	2.0×10^{-5}	2.1×10^{-5}	4.0×10^{-4}	1.5×10^{0}	1.6×10^{0}	3.0×10^{1}
GI-LLI	1.9×10^{-5}	1.9×10^{-5}	3.1×10^{-4}	1.3×10^{0}	1.4×10^{0}	2.2×10^{1}
Total from all Pathways						
Total Body	2.1×10^{-5}	2.2×10^{-5}	3.6×10^{-4}	1.7×10^{0}	1.8×10^{0}	2.9×10^{1}
Bone	1.0×10^{-6}	1.0×10^{-6}	1.7×10^{-5}	1.2×10^{-1}	1.2×10^{-1}	2.0×10^{0}
Lung	2.1×10^{-5}	2.2×10^{-5}	3.6×10^{-4}	1.7×10^{0}	1.8×10^{0}	2.9×10^{1}
Thyroid	2.3×10^{-5}	2.4×10^{-5}	4.5×10^{-4}	1.9×10^{0}	2.0×10^{0}	3.7×10^{1}
GI-LLI	2.0×10^{-5}	2.0×10^{-5}	3.3×10^{-4}	1.4×10^{0}	1.5×10^{0}	2.4×10^{1}

(a) A 1-yr Release/1-yr Accumulation is the dose received in the first year from exposure in that year.
(b) A 1-yr Release/70-yr Accumulation is the dose received over a 70-year lifetime from exposure in the first year. For external exposure, it is equal to the 1-yr Release/1-yr Accumulation dose.
(c) A 16-year Release/70-yr Accumulation is the total dose accrued over a lifetime of continuous exposure to residual radiation both during and after the 16 years of PUREX plant operation.
(d) The population dose is for an estimated population (1990) of 417,000. All local population doses in this EIS are based on this population distribution within a 80-km (50-mile) radius from the Hanford Meteorological Station located at about the center of the Hanford Site.

D.3 SHIP FUEL OFFSITE FOR PROCESSING

The estimates of gaseous and liquid effluents and the concomitant radiation doses for the alternative involving shipment of fuel to SRP for processing are considerably more speculative. The estimation is complicated by the fact that other processing operations, as large or larger are carried on at SRP, and characterization of irradiated fuel processing's contribution to the total impact is difficult in the absence of specific data. However, since the PUREX process is also employed at SRP it can be assumed, as an approximation, that emissions would be reasonably comparable, for a given processing rate.

D.3.1 Gaseous Effluents

Estimated radionuclide emissions in gas streams are shown in Table D.22, for 3000 and 1050 MT/yr processing rates.

D.3.2 Liquid Effluents

Estimated radionuclide content of liquid discharges resulting from the processing of N-Reactor fuel at SRP at processing rates of 3000 and 1050 MT/yr are presented in Table D.23.

D.3.3 Radiation Dose Comparison

No estimates of occupational dose are available for fuel processing at SRP, but, as in the new PUREX plant alternative, these would be expected to be comparable to those associated with processing in the existing Hanford PUREX/UO_3 facility (see Table D.14).

Estimated incremental annual radiation doses for the maximum individual and for the general public from the processing of N-Reactor fuel at SRP (1050 MT/yr) are presented in Table D.24. As indicated in Section 5.2.2.1, these are comparatively somewhat greater than those for processing at Hanford due to the fact that there is a direct liquid discharge to local surface waters and the larger total population affected.

TABLE D.22. Estimated Radionuclide Content of Annual Gaseous Releases from Processing N-Reactor Fuels at SRP, 3000 and 1050 MT/yr Processing Rates

	Annual Release, Curies			
	Processing N-Reactor Fuels			
Nuclide	3000 MT/yr Processing Rate	1050 MT/yr Processing Rate	Processing SRP Fuels	Other SRP Releases
^{3}H	6.9×10^{4}	2.4×10^{4}	6.5×10^{3}	4.8×10^{5}
^{14}C	9.3×10^{0}	3.5×10^{0}	1.3×10^{1}	5.3×10^{1}
^{85}Kr	3.3×10^{6}	1.0×10^{6}	2.6×10^{5}	2.6×10^{5}
^{129}I	7.2×10^{-1}	2.7×10^{-1}	7.0×10^{-2}	7.0×10^{-2}
^{131}I	5.0×10^{-3}	5.4×10^{-2}	1.4×10^{-2}	1.1×10^{-1}
Other β	4.3×10^{-1}	1.5×10^{-1}	4.0×10^{-2}	1.0×10^{-1}
Total α	1.4×10^{-2}	4.8×10^{-3}	4.8×10^{-3}	2.4×10^{-3}

TABLE D.23. Estimated Radionuclide Content of Liquid Discharges from Processing N-Reactor Fuels at SRP, 3000 and 1050 MT/yr Processing Rates

	Annual Release, Curie			
	Processing N-Reactor Fuels			
Nuclide	3000 MT/yr Processing Rate	1050 MT/yr Processing Rate	Processing SRP Fuels	Other SRP Releases
^{3}H	1.7×10^{3}	6.1×10^{2}	1.6×10^{2}	9.2×10^{4}
^{90}Sr	1.3	4.6×10^{-1}	1.2×10^{-1}	1.9
^{137}Cs	1.1×10^{1}	3.8	9.9×10^{-1}	7.1
^{106}Ru	4.3×10^{1}	1.5×10^{1}	4.0	2.4
Other β	2.0×10^{1}	6.9	1.8	1.1×10^{1}
^{239}Pu	6.0×10^{-2}	2.1×10^{-2}	2.1×10^{-2}	2.8×10^{-2}
^{238}U	3.4×10^{-1}	1.2×10^{-1}	1.2×10^{-1}	4.6×10^{-1}

TABLE D.24. Potential Radiation Doses to Members of the General Public from Processing 1050 MT/yr of N-Reactor Fuel at SRP

	Doses from Immediate and Long-Term Exposure					
	Maximum Individual (rem)			Population (man-rem)		
Pathway, Dominant Nuclide and Organ	1-yr Release/ 1-yr Accumulation	1-yr Release/ 70-yr Accumulation	16-yr Release/ 70-yr Accumulation	1-yr Release/ 1-yr Accumulation	1-yr Release/ 70-yr Accumulation	16-yr Release/ 70-yr Accumulation
Air Submersion (^{85}Kr)[a]						
All	2.2×10^{-5}	2.2×10^{-5}	3.5×10^{-4}	4.3×10^{0}	4.3×10^{0}	6.9×10^{1}
Inhalation (^{90}Sr, ^{239}Pu)[a]						
Total Body	3.9×10^{-6}	5.1×10^{-6}	8.0×10^{-5}	1.0×10^{0}	1.3×10^{0}	2.1×10^{1}
Bone	4.0×10^{-7}	1.8×10^{-5}	2.7×10^{-4}	1.0×10^{-1}	4.6×10^{0}	7.0×10^{1}
Lung	5.0×10^{-6}	9.4×10^{-6}	1.5×10^{-4}	1.3×10^{0}	2.4×10^{0}	3.9×10^{1}
Thyroid	5.7×10^{-6}	6.9×10^{-6}	1.1×10^{-4}	1.5×10^{0}	1.8×10^{0}	2.9×10^{1}
GI-LLI	7.1×10^{-9}	7.2×10^{-9}	1.1×10^{-7}	1.8×10^{-3}	1.9×10^{-3}	3.0×10^{-2}
Ground Deposition (^{129}I)[a]						
All	7.6×10^{-8}	7.6×10^{-8}	7.6×10^{-5}	1.4×10^{-2}	1.4×10^{-2}	1.9×10^{0}
Ingestion of Farm Crops (^{90}Sr, ^{129}I)[a]						
Total Body	1.7×10^{-5}	2.0×10^{-5}	4.5×10^{-4}	1.9×10^{0}	2.2×10^{0}	3.8×10^{1}
Bone	2.0×10^{-6}	6.9×10^{-6}	5.9×10^{-4}	2.4×10^{-1}	7.5×10^{-1}	2.3×10^{1}
Lung	1.7×10^{-5}	1.8×10^{-5}	2.8×10^{-4}	1.9×10^{0}	2.0×10^{0}	3.2×10^{1}
Thyroid	2.7×10^{-4}	4.2×10^{-4}	1.4×10^{-3}	2.9×10^{1}	4.4×10^{1}	8.1×10^{2}
GI-LLI	1.7×10^{-5}	1.8×10^{-5}	3.0×10^{-4}	1.9×10^{0}	2.0×10^{0}	3.2×10^{1}
External Exposure to Contaminated Water and Sediment (^{137}Cs, ^{60}Co, ^{106}Ru)[a]						
All	1.1×10^{-5}	1.1×10^{-5}	2.5×10^{-3}	5.3×10^{-3}	5.3×10^{-3}	1.2×10^{0}
Ingestion of Fish and Drinking Water (^{3}H, ^{137}Cs)[a]						
Total Body	4.2×10^{-4}	7.2×10^{-4}	1.2×10^{-2}	2.2×10^{0}	3.8×10^{0}	6.1×10^{1}
Bone	4.3×10^{-4}	8.7×10^{-4}	1.4×10^{-2}	2.2×10^{0}	5.2×10^{0}	8.2×10^{1}
Lung	6.8×10^{-5}	1.2×10^{-4}	2.0×10^{-3}	4.1×10^{-1}	6.9×10^{1}	1.1×10^{1}
Thyroid	1.7×10^{-6}	1.8×10^{-6}	2.8×10^{-5}	8.3×10^{-2}	8.7×10^{-2}	1.4×10^{0}
GI-LLI	1.8×10^{-4}	1.8×10^{-4}	2.9×10^{-3}	5.5×10^{0}	5.5×10^{0}	8.7×10^{1}
Totals From All Pathways						
Total Body	4.7×10^{-4}	7.8×10^{-4}	1.6×10^{-2}	9.4×10^{0}	1.2×10^{1}	1.9×10^{2}
Bone	4.6×10^{-4}	9.3×10^{-4}	1.8×10^{-2}	6.9×10^{0}	1.5×10^{1}	2.5×10^{2}
Lung	1.2×10^{-4}	1.8×10^{-4}	5.4×10^{-3}	7.9×10^{0}	9.4×10^{0}	1.5×10^{2}
Thyroid	3.1×10^{-4}	4.6×10^{-4}	1.7×10^{-2}	3.5×10^{1}	5.0×10^{1}	9.1×10^{2}
GI-LLI	2.3×10^{-4}	2.3×10^{-4}	6.1×10^{-3}	1.2×10^{1}	1.2×10^{1}	1.9×10^{2}

(a) Major radionuclide contributing to dose.

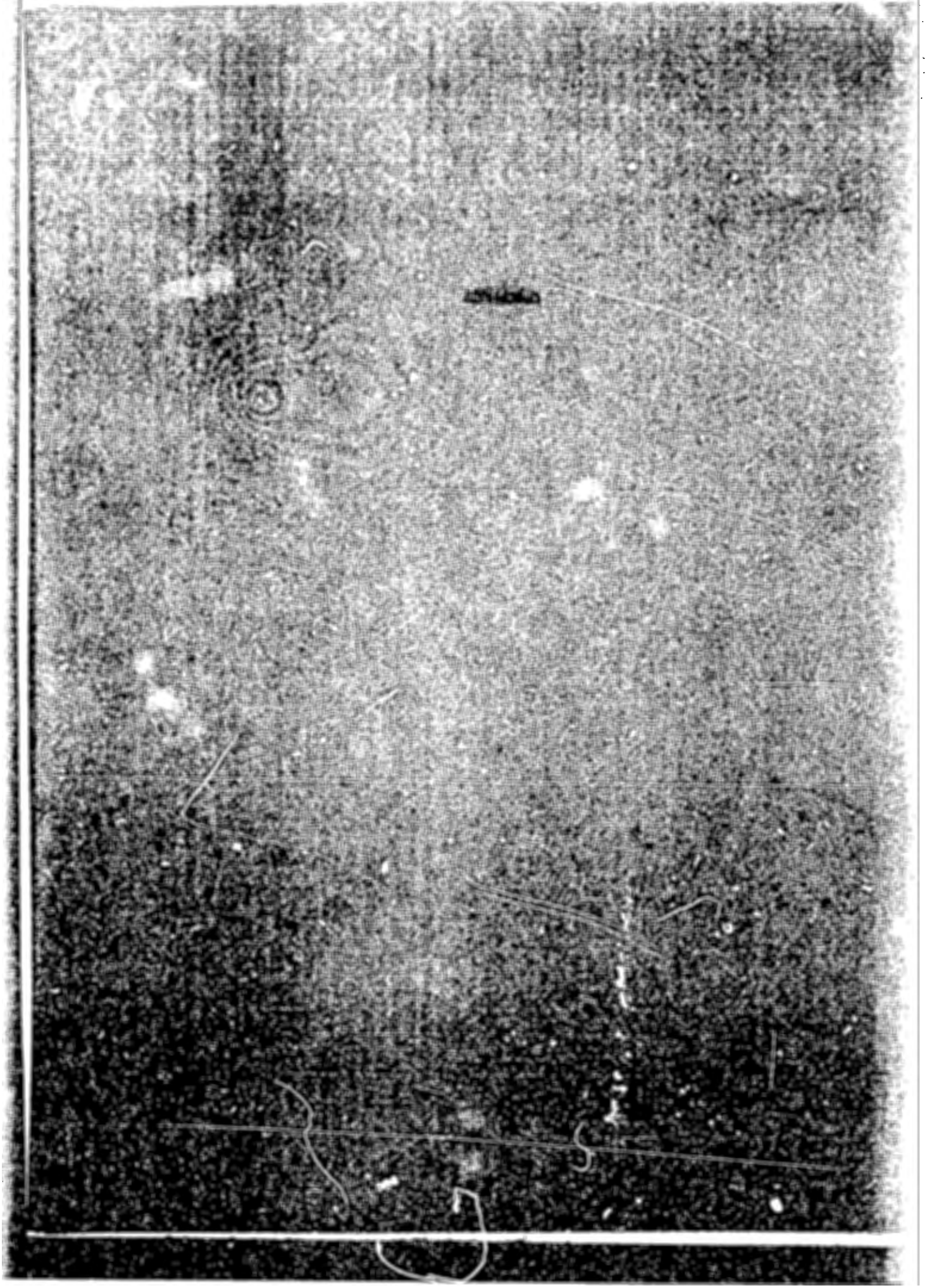

REFERENCES

Abrams, L. A. 1969. Reactor and Fuel-Processing Technology, 12 p. 181.

Air Pollution Control Authority, Benton-Franklin-Walla Walla Counties. 1975. General Regulation 75-7 of the Benton-Franklin-Walla Walla Counties Air Pollution Control Authority, June 16, 1975. Richland, Washington.

Algermissen, S. T. 1969. "Seismic Risk Studies in the United States." Proceedings of the Fourth World Conference on Earthquake Engineering. Santiago, Chile.

Algermissen, S. T., and D. M. Perkins. 1976. A Probabilistic Estimate of Maximum Acceleration in Rock in the Contiguous United States. U.S. Geological Survey. Open File Report 74-416.

American Conference of Governmental Industrial Hygienists. 1979. TLVs, Threshhold Limit Values for Chemical Substances in Workroom Air. Cincinnati, Ohio.

American National Standards Institute, Incorporated. 1975. ANSI Standard N300.

American Physical Society. 1977. Nuclear Fuel Cycles and Waste Management, Chapter IV, p. 23. American Physical Society. New York, NY.

Atlantic Richfield Hanford Company. 1976. Preliminary Feasibility Study on Storage of Radioactive Wastes in Columbia River Basalts, (2 volumes), ARH-SI-137. Atlantic Richfield Hanford Company. Richland, Washington.

Baker, V. R. 1973. Paleohydrology and Sedimentology of Lake Missoula Flooding in Eastern Washington. Geological Society of America, Special Paper 144.

Becker, C. D. 1973. Aquatic Bioenvironmental Studies in the Columbia River at Hanford 1945-1971, A Bibliography with Abstracts, BNWL-1734. Pacific Northwest Laboratory. Richland, Washington.

Blume, J. A. and Associates. 1976a. Seismic Review of Buiding 291-A Filter Cells 1 and 2, ARH-R-216. San Francisco, California.

Blume, J. A. and Associates. 1976b. Seismic Analysis of the PUREX Facility Process Building, ARH-R-220. San Francisco, California.

Blume, J. A. and Associates. 1977. Additional Seismic Analyses of the PUREX Facility Process Building, RHO-R-3. San Francisco, California.

Blume, J. A. and Associates. 1981a. Review of Soil-Structure Interaction and Analysis Criteria for PUREX Facility Process Building, RHO-R-33. San Francisco, California.

Blume, J. A. and Associates. 1981b. Geologic and Seismic Investigation of the PUREX Building Site Near Richland, Washington, RHO-R-34. San Francisco, California.

Cline, J. F., D. W. Vresh, and W. H. Rickard. 1977. "Plants and Soil of a Sagebrush Community on the Hanford Reservation." Northwest Science, 51:6-70.

Coffman, J. L. and C. A. Von Hake. 1973. Earthquake History of the United States. U.S. Department of Commerce Publication 41-1. Washington, D.C.

Cohen, J. J. et al. 1977. Determination of Performance Criteria for High-Level Solidified Nuclear Waste, NUREG-0279, U.S. Nuclear Regulatory Commission. Washington, D.C.

Commerce Business Daily. March 3, 1980.

Committee on the Biological Effects of Ionizing Radiations. 1980. The Effects on Populations of Exposure to Low Levels of Ionizing Radiation. Division of Medical Science, National Research Council, National Academy of Sciences. Washington, D.C.

Curtiss, D. H. 1974. Special Request for Cost Information - SRP Processing N-Reactor Fuel, UNI-239, Rev 2, UNC Nuclear Industries. Richland, Washington.

Daubenmire, R. 1970. "Steppe Vegetation of Washington," Technical Bulletin 62. Experimental Station, Washington State University. Pullman, Washington.

Dennis, A. W., J. T. Foley, W. F. Hartman, and D. W. Larson. 1979. Severities of Transportation Accidents Involving Large Packages, SAND 77-0001. Sandia Laboratories. Albuquerque, New Mexico.

Duckworth, J. P. 1969. Quarterly Report for April 1, 1969 through June 30, 1969, DOCKET 50201-15, Nuclear Fuel Services, Inc. West Valley, New York.

Duckworth, J. P. 1970. Nuclear Fuel Services, Inc., West Valley Reprocessing Plant Quarterly Report for July 1, 1970 through September 30, 1970, DOCKET 50201-5J, Nuclear Fuel Services, Inc. West Valley, New York.

Eddy, P. A. and J. S. Wilbur. 1980. Radiological Status of the Ground Water Beneath the Hanford Project, January-December 1979, PNL-3346 (latest in this series). Pacific Northwest Laboratory. Richland, Washington.

Fecht, K. R. 1978. Geology of Gable Mountain-Gable Butte Area, RHO-BWI-LD-5. Rockwell Hanford Operations, Rockwell Hanford Operations. Richland, Washington.

Federal Home Loan Bank of Seattle. 1980. Tri-Cities Real Estate Research Report. Seattle, Washington.

Federal Radiation Council. 1961. Background Material for the Development of Radiation Standards, Report No. 2, FRC. Washington, D.C.

Federal Register. 1980. Volume 45, p. 20694. "Compliance with the National Environmental Policy Act; Final Guidelines."

Fitzner, R. E. and K. R. Price. 1973. The Use of Hanford Waste Ponds and Waterfowl and Other Birds, BNWL-1738. Pacific Northwest Laboratory. Richland, Washington.

Fitzner, R. E. and W. H. Rickard. 1975. Avifauna of Waste Ponds, ERDA Hanford Research, Benton County, Washington, BNWL-1885, Pacific Northwest Laboratory. Richland, Washington.

Friedrichs, D. R., C. R. Cole, and R. C. Arnett. 1977. Hanford Pathline Calculational Program - Theory, Error Analysis, and Applications, ARH-ST-149, Atlantic Richfield Hanford Company. Richland, Washington.

Geffen, C. A. et al. 1981. An Analysis of the Risk of Transporting Uranium Ore Concentrates by Truck, PNL-3463. Pacific Northwest Laboratory. Richland, Washington.

General Electric Company. 1952. Architectural and Structural Design Criteria, PUREX Facility. Project CA-513.

Geoscience Research Consultants. 1978. Geology of the Southwestern Pasco Basin, RHO-BWI-C-25. Moscow, Idaho.

Gephart, R. E. et al. 1979. Hydrology Studies Within the Columbia Plateau, Washington - An Integration of Current Knowledge, RHO-BWI-ST-5, Rockwell Hanford Operations. Richland, Washington.

Goff, F. E. 1977. "Stratigraphy and Tectonics of East Watanum Ridge, South Central Washington," Abstract, EOS (Transactions) American Geophysical Union, Vol. 58.

Hajek, B. F. 1966. Soil Survey, Hanford Project in Benton County, Washington, BNWL-243, Pacific Northwest Laboratory. Richland, Washington.

Hanford Standard Design Criteria, SDC 4.1. 1974. Design Loads for Structures.

Hanson, A. S., H. Katz, and J. A. Lieberman. 1979. Trans. Amer. Nucl. Soc. 32, pp. 416-418.

Harty, H. 1979. The Effects of the Ben Franklin Dam on the Hanford Site, PNL-2821, Pacific Northwest Laboratory. Richland, Washington.

Hawkins, A. R. to S. L. Stein. 1980a. Letter of transmittal, July 2, 1980. Rockwell Hanford Operations. Richland, Washington.

Hawkins, A. R. to S. L. Stein. 1980b. Letter of transmittal, No. 72130-80-117. Rockwell Hanford Operations. Richland, Washington.

Hawkins, A. R. to S. L. Stein. 1980c. Letter of transmittal, No. R80-2518. Rockwell Hanford Operations. Richland, Washington.

Hawkins, A. R. to S. L. Stein. 1980d. Letter of transmittal, No. R80-2571. Rockwell Hanford Operations. Richland, Washington.

Hawkins, A. R. to K. S. Murthy. 1980e. Letter of transmittal, No. R80-3327. Rockwell Hanford Operations. Richland, Washington.

Hawkins, A. R. to K. S. Murthy. 1981a. Letter of transmittal, No. R81-1728. Rockwell Hanford Operations. Richland, Washington.

Hawkins, A. R. to K. S. Murthy. 1981b. Letter of transmittal, No. R81-2885. Rockwell Hanford Operations. Richland, Washington.

Hawkins, A. R. to K. S. Murthy. 1981c. Letter of transmittal, No. R81-2953. Rockwell Hanford Operations. Richland, Washington.

Hawkins, A. R. to K. S. Murthy. 1981d. Letter of transmittal, No. R81-3124, Rockwell Hanford Operations. Richland, Washington.

Houston, J. R. and P. J. Blumer. 1978. Environmental Surveillance at Hanford for CY-1977, PNL-2614, Pacific Northwest Laboratory. Richland, Washington.

Houston, J. R. and P. J. Blumer. 1979a. Environmental Surveillance at Hanford for CY-1978, PNL-2932, Pacific Northwest Laboratory. Richland, Washington.

Houston, J. R. and P. J. Blumer. 1979b. Environmental Status of the Hanford Site for CY-1978, PNL-2933, Pacific Northwest Laboratory. Richland, Washington.

Houston, J. R. and P. J. Blumer. 1980a. Environmental Surveillance at Hanford for CY-1979, PNL-3283, Pacific Northwest Laboratory. Richland, Washington.

Houston, J. R. and P. J. Blumer. 1980b. Environmental Status of the Hanford Site for CY-1979, PNL-3284, Pacific Northwest Laboratory. Richland, Washington.

Houston, J. R., D. L. Strenge and E. C. Watson. 1974. DACRIN--A Computer Program for Calculating Organ Dose from Acute or Chronic Radionuclide Inhalation. BNWL-B-389, Pacific Northwest Laboratory. Richland, Washington.

Jones, M. G. and R. D. Landon. 1978. Geology of the Nine Canyon Map Area, RHO-BWI-LD-6, Rockwell Hanford Operations. Richland, Washington.

King, F. D. 1979. Trans. Amer. Nucl. Soc. 32, pp. 414-415.

Lewis, W. H. 1969. Nuclear Fuel Services, Inc., West Valley Reprocessing Plant, Quarterly Report for January 1, 1969 through March 31, 1969. Docket 50201-14.

Macklin, L. 1976. "Spent Fuel Transport - Available as Needed," in Proceedings of the First Pacific Basin Conference on Nuclear Power Development and the Fuel Cycle, Ruth Farmakes, Ed., Interstate Printers. Danville, Illinois.

McClusky, J. K. to G. J. Miskho. 1981. Letter of transmittal, No. 16487-R4. Rockwell Hanford Operations. Richland, Washington.

McNeece, J. P. 1975. Isotopic Composition of Mark IV and Mark 1A Fuel, UNI-436, UNC Nuclear Industries. Richland, Washington.

Mellinger, P. J. et al. 1980. Kr-85 Management Tradeoffs, A Perspective to Total Radiation Dose Commitment, PNL-3176. Pacific Northwest Laboratory. Richland, Washington.

Moffitt, R. L. 1978a. Safety Analysis Report, Handling and Storage of Irradiated N Reactor Fuel in 105-Ke Storage Facility, Supplement 7, Use of a Sand Filter System. UNI-341, Sup. 7, Rev. 1, UNC Nuclear Industries. Richland, Washington.

Moffitt, R. L. 1978b. Safety Analysis Report, Handling and Storage of Irradiated N-Reactor Fuel in 105-KW Fuel Storage Facility, UNI-1072, UNC Nuclear Industries. Richland, Washington.

Myers, C. W. and S. M. Price, et al. 1979. Geologic Studies of the Columbia Plateau - A Status Report, RHO-BWI-ST-4, Rockwell Hanford Operations. Richland, Washington.

Napier, B. A., W. E. Kennedy, Jr. and J. K. Soldat. 1980. PABLM—A Computer Program to Calculate Accumulated Radiation Dose from Radionuclides in the Environment. PNL-3209, Pacific Northwest Laboratory. Richland, Washington.

Napier, B. A. 1981. Standardized Input for Hanford Environmental Impact Statements, Part I, PNL-3509 PT 1. Pacific Northwest Laboratory. Richland, Washington.

National Academy of Science. 1978. Radioactive Wastes at the Hanford Reservation. Washington, D.C.

National Council on Radiation Protection and Measurements. 1975. Review of the Current State of Radiation Protection Philosophy, Report No. 43. Washington, D.C.

National Safety Council. 1980a. Accident Facts. Chicago, Illinois.

National Safety Council. 1980b. Work Injury and Illness Rates. Chicago, Illinois.

Office of Nuclear Waste Isolation. 1980. Can Nuclear Wastes be Transported Safely (Brochure), ONWI. Columbus, Ohio.

Pacific Northwest Laboratories. 1975. An Assessment of the Risk of Transporting Plutonium Oxide and Liquid Plutonium Nitrate by Truck, BNWL-1846. Richland, Washington.

Raab, G. J. and W. C. Schmidt. 1978. Uranium Trioxide Plant Chemical Flowsheet, RHO-CD-519, Rockwell Hanford Operations. Richland, Washington.

Reidel, S. P. 1978. Geology of the Saddle Mountains Between Sentinel Gap and 119 30' Longitude, RHO-BWI-LD-4, Rockwell Hanford Operations. Richland, Washington.

Rice, D. G. 1968a. Archaeological Reconnaissance - Ben Franklin Reservoir Area, 1968. Laboratory of Anthropology, Washington State University. Pullman, Washington.

Rice, D. G. 1968b. Archaeological Reconnaissance - Hanford Atomic Works, Laboratory of Anthropology, Washington State University. Pullman, Washington.

Rockwell Hanford Operations. 1979. Environmental Report of PUREX Plant and Uranium Oxide Plant—Hanford Reservation, RHO-CD-742, Rockwell Hanford Operations. Richland, Washington.

Rollins, J. 1976. "Transportation of Irradiated Fuel," pp. 359-380 of Nuclear Power Safety, James H. Rust and Lynn E. Weaver, ed., Pergamon Press. New York.

Routson, R. C. 1973. A Review of Studies of Soil-Water Relationships on the Hanford Reservation from 1944 to 1967, BNWL-1464. Pacific Northwest Laboratory. Richland, Washington.

Routson, R. C. and K. R. Fecht. 1979. Soil (Sediment) Properties of Twelve Hanford Wells with Geologic Interpretation, RHO-LD-82, Rockwell Hanford Operations. Richland, Washington.

Sandia Laboratories. 1978. Severities of Transportation Accidents Involving Large Packages, SAND 77-0001.

Schulz, W. W. 1972. Shear-Leach Processing of N-Reactor Fuel—Cladding Fires, ARH-2351, Atlantic Richfield Hanford Company. Richland, Washington.

Schneider, K. J., and C. E. Jenkins. Trans. Amer. Nucl. Soc. 28, pp. 366-367, 1978.

Sewell, D. C. 1979. Letter to Hon. Strom Thurmond, March 6, 1979.

Sommer, D. J., R. G. Rau and D. C. Robinson. 1981. Population Estimates for the Areas Within a 50-Mile Radius of Four Reference Points on the Hanford Site. PNL-4010, Pacific Northwest Laboratory. Richland, Washington. In press.

Speer, D. R., J. J. Fix, and P. J. Blumer. 1976. Environmental Surveillance at Hanford for CY-1975, PNL-1979, Revised. Pacific Northwest Laboratory. Richland, Washington.

Stone, W. A. et al. 1972. Climatography of the Hanford Area, BNWL-1605, Pacific Northwest Laboratory. Richland, Washington.

Strenge, D. L. and E. C. Watson. 1973. KRONIC—A Computer Program for Calculating Annual Average External Doses from Chronic Atmospheric Releases of Radionuclides. BNWL-B-264, Pacific Northwest Laboratory. Richland, Washington.

Strenge, D. L. 1975. DACRIN—Modification for Gastrointestinal Tract Dose. BNWL-B-399, SUPP, Pacific Northwest Laboratory. Richland, Washington.

Strenge, D. L. and R. A. Peloquin. 1980. HADOC—A Computer Code for Calculation of External and Inhalation Doses from Acute Radionuclide Releases. Draft PNL-3503, Pacific Northwest Laboratory. Richland, Washington.

Sula, M. J. and P. J. Blumer. 1981. Environmental Surveillance of Hanford for CY-1980, PNL-3728. Pacific Northwest Laboratory. Richland, Washington.

Swanson, D. A. et al. 1977. Reconnaissance Geologic Map of the Columbia River Basalt Group, Pullman and Walla Walla Quadrangles, Southeast Washington and Adjacent Idaho, U.S. Geological Survey Open File Map 77-100.

Tallman, A. M. et al. 1979. Geology of the Separation Areas, Hanford Site, South-Central Washington, RHO-ST-23, Rockwell Hanford Operations. Richland, Washington.

Tri-Cities School Administrators. 1980. Interviews with Kennewick, Richland, and Pasco School Administrators by L. Morgan of Battelle Columbus Laboratories, October 1980. Richland, Washington.

Uniform Building Code. 1952. Pacific Coast Building Officials' Conference.

United Nations. 1962. Radiation from Natural Sources, Annex E. Report of the United Nations Scientific Committee on the Effects of Atomic Radiation, 17th Session, Supplement 16, p. 207, UN Document A/5216.

United Nuclear Industries. 1978. N-Reactor Updated Safety Analysis Report, UNI-M-90, UNC Nuclear Industries. Richland, Washington.

U.S. Army Corps of Engineers. 1981. Hanford Reach Study Report: Impact of Ben Franklin Dam, U.S. Corps of Engineers, Seattle District. Seattle, Washington.

U.S. Army Corps of Engineers. 1969. Lower Columbia River Standard Project Flood and Probable Maximum Flood, U.S. Corps of Engineers, North Pacific Division. Portland, Oregon.

U.S. Atomic Energy Commission. 1972. Studies in Workmen's Compensation and Radiation Injury, RS2-379, Vol. VI. Washington, D.C.

U.S. Code of Federal Regulations. 1980. Title 10, Part 71. Appendix B, "Hypothetical Accident Conditions."

U.S. Code of Federal Regulations. 1980. Title 10, Part 100. "Reactor Site Criteria."

U.S. Code of Federal Regulations. 1979. Title 40, Part 50. "National Primary and Secondary Ambient Air Quality Standards."

U.S. Code of Federal Regulations. Title 40, Part 190.01. "Environmental Radiation Protection Standards for Nuclear Power Operations."

U.S. Code of Federal Regulations. Title 40, Parts 1500-1508. "Preparation of Environmental Impact Statements: Guidelines."

U.S. Department of Energy. 1979a. Technology of Commercial Radioactive Waste Management, DOE/ET-0028. Washington, D.C.

U.S. Department of Energy. 1979b. Final Environmental Impact Statement, Long-Term Management of Defense High-Level Radioactive Wastes Savannah River Plant, Aiken, South Carolina, DOE/EIS-0023. Washington, D.C.

U.S. Department of Energy. 1979c. Environmental Aspects of Commercial Radioactive Waste Management, DOE/ET-0029. Washington, D.C.

U.S. Department of Energy. 1980a. Final Environmental Impact Statement, Management of Commercially Generated Radioactive Waste, DOE/EIS-0046. Washington, D.C.

U.S. Department of Energy. 1980b. Final Environmental Impact Statement, Hanford Site, Double-Shell Tanks Defense High-Level Waste Storage, DOE/EIS-0063. Washington, D.C.

U.S. Department of Energy. Order 5480.1A, Chapter XI. Environmental Protection, Safety, and Health Protection Programs for DOE Operations, Washington, D.C.

U.S. Department of Housing and Urban Development. 1976. Rapid Growth from Energy Projects, Ideas for State and Local Action, Report 203-068/6231. Washington, D.C.

U.S. Department of the Interior. 1979. "National Register of Historic Places, 1979 Annual Listing," Federal Register, Part II, February 6, 1979.

U.S. Energy Research and Development Administration. 1975. Final Environmental Statement Waste Management Operations, Hanford Reservation, Richland, Washington, (2 volumes), ERDA-1538. Washington, D.C.

U.S. Energy Research and Development Administration. 1976a. Final Environmental Statement, Light Water Breeder Reactor Program, ERDA-1541. Washington, D.C.

U.S. Energy Research and Development Administration. 1976b. Evaluation of Impact of Potential Flooding Criteria on the Hanford Project, ERDA-RLO-76-4. Richland, Washington.

U.S. Energy Research and Development Administration. 1977a. Alternatives for Long-Term Management of Defense High-Level Radioactive Waste, Hanford Reservation, Richland, Washington, ERDA-77-44. Washington, D.C.

U.S. Energy Research and Development Administration. 1977b. Final Environmental Impact Statement, Waste Management Operations, Savannah River Plant, ERDA-1537. Aiken, South Carolina.

U.S. Energy Research and Development Administration. 1978. Manual Chapter 0530, Nuclear Criticality Safety. Washington, D.C.

U.S. Environmental Protection Agency. 1973. EPA-RA-73-024, Climatological Dispersion Model. Washington, D.C.

U.S. Environmental Protection Agency. 1980a. PSD-X80-14, Approval of Application to Construct, September 9, 1980, USEPA Region 10. Seattle, Washington.

U.S. Environmental Protection Agency. 1980b. Technical Analysis for Prevention of Significant Deterioration Department of Energy - Hanford PUREX and Uranium Oxide Plants. USEPA 10. Seattle, Washington.

U.S. Nuclear Regulatory Commission. 1977. Final Environmental Statement on the Transportation of Radioactive Material by Air and Other Modes, NUREG-0170. Washington, D.C.

Wallace, R. W. et al. 1980. Topical Report on Release Scenario Analysis of Long-Term Management of High-Level Defense Waste at the Hanford Site. PNL-3363, Pacific Northwest Laboratory. Richland, Washington.

Washington Air Pollution Control Regulations. 1980. Washington Administrative Code, Title 18 and Title 173.

Washington State Employment Security Department. 1980a. Annual Planning Report: Richland-Kennewick-Pasco SMSA. Olympia, Washington.

Washington State Employment Security Department. 1980b. Labor Area Summary: Richland-Kennewick-Pasco SMSA. Olympia, Washington.

Wilkinson, W. D. 1962. Uranium Metallurgy, Vol. II, Interscience. New York.

Yandon, K. E. 1976. Population Distribution in 90 Mile Radius of Hanford Meteorological Station and Projection to Year 2300 by Compass Sector and 10 Mile Radii, BNWL-2178, Pacific Northwest Laboratory. Richland, Washington.

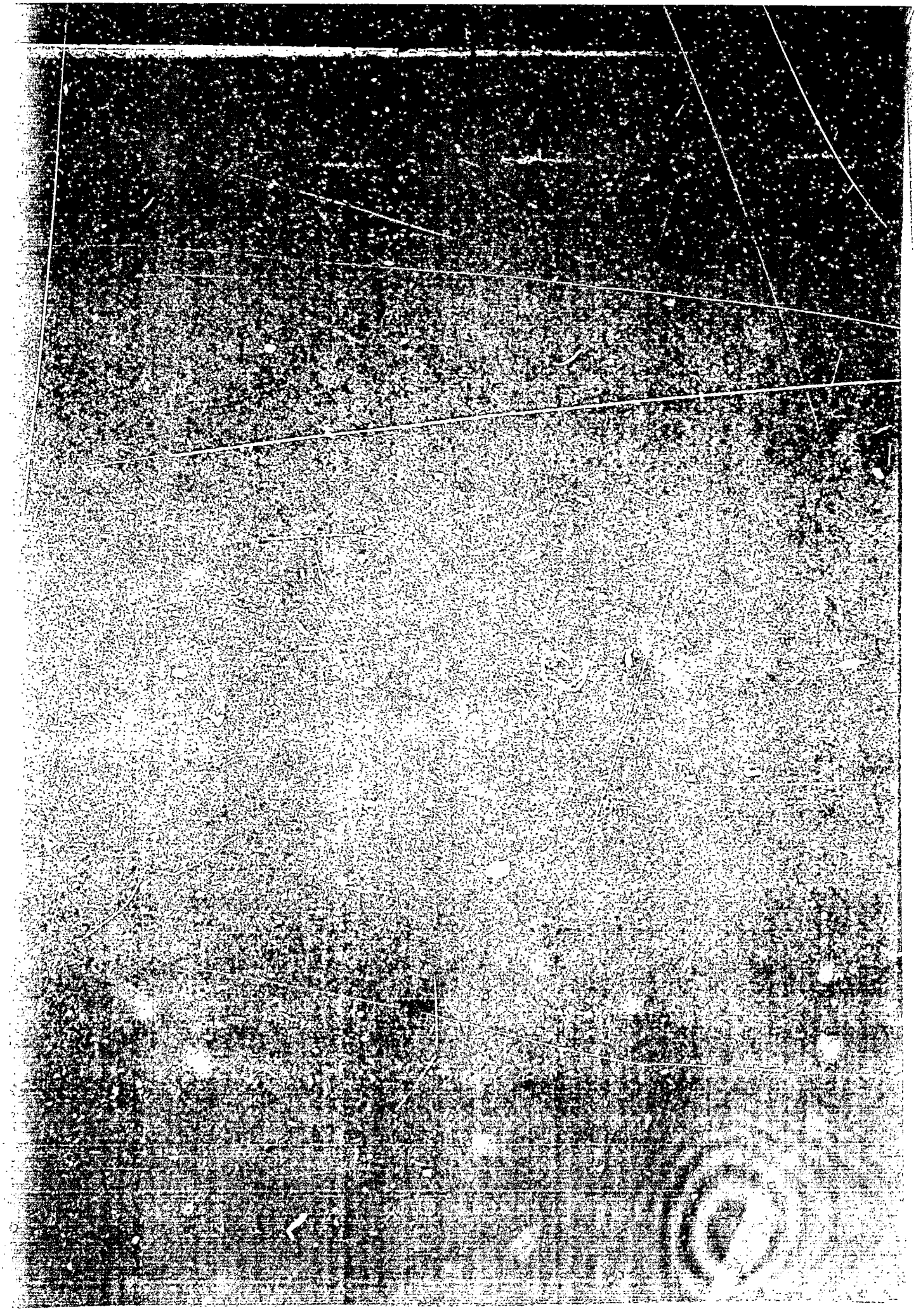

INDEX

Accident Safety Analysis, B.1
Historical Accidents, 5.18, 5.29
  Natural Forces, 5.26
  Potential Credible, 5.18, B.2-B.10, B.11-B.20
  Transportation, 5.27, 5.34-5.36

Alternatives, 3.1
  Comparison of Alternatives, 3.32-3.37
  Construct New PUREX Processing Facility at Hanford, 1.5, 3.19-3.24
  Resumption of PUREX/UO_3 Operation, 1.3, 3.2-3.19
  Process Fuel Offsite 1.5, 3.24-3.29
  No Action, 1.6, 3.29-3.32

Background Radiation Dose, 4.8, 4.14

B-Plant Operations, 3.8

Cask Selection, 3.26

CAW Management, 3.7-3.9

Clearwell Modifications, 3.30

Columbia River
  Flow Rate, 4.13
  Water Use, 4.13
  Hydrology, 4.5

Comparison of Alternatives, 1.7, 3.32-3.37

Cost Estimates, 3.20, 3.28, 3.30, 3.37

Decommissioning, 5.41

Dose:
  Occupational, 5.3, 5.5-5.7, 5.36, D.11, 12
  Maximum Individual and General Population, 5.6, 5.12, 5.19, 5.27, 5.31, 5.34, 5.37, 5.41, D.14-D.16, D.18, D.20
  Model Description, C.1

Double-Shell Tanks, 3.9, 5.10, 5.12

Effluents: (Also See Impacts)
  Gaseous, 3.11-3.13, 3.22-3.23, 3.27, 3.31, 5.7, 5.13, D.1, D.3
  Liquid, 3.11, 3.12, 3.27-3.28, 5.7, 5.15, D.3, D.8-D.11
  Solid, 3.13, 3.23, 5.9, 5.15

Effluent Regulations, 6.3-6.4

Environmental Consequences, 1.10, 5.1
  Comparison of Alternatives, 1.7, 3.32-3.37, 5.2-5.4, 5.40

Environmental Effects:
  Proposed Action, 3.18
  Construct New Processing Facility, 3.24
  Processing Offsite, 3.28
  No Action, 3.31

Environment, Description, 1.7, 4.1
  Agriculture, 4.3, 4.13
  Aquatic Ecology, 4.8
  Archeology, 4.13
  Background Radiation, 4.8, 4.14
  Climatology, 4.4-4.5
  Community Services, 4.12
  Ecology, 4.6-4.8
  Education, 4.11-4.12
  Environmental Monitoring Program, 4.8
  Geology-Topography, 4.3-4.4
  Historical Sites and National Landmarks, 4.13
  Housing, 4.10-4.11
  Hydrology, 4.5
  Industry, 4.3
  Labor Force, 4.9
  Population, 4.1, 4.9-4.10
  Savannah River Site, 4.13-4.15
  Seismicity, 4.4
  Site Activities, 4.1, 4.2
  Socioeconomics, 4.8-4.13
  Surrounding Communities, 4.2-4.3, 4.10
  Transportation, 4.3
  Vegetation, 4.6
  Wildlife, 4.6-4.8

Environmental Surveillance and Monitoring, 5.1

Facilities, Modifications, 3.15-3.17
  A.34-A.38
  Accountability Measurement System, A.35
  Criticality Alarm System, A.35
  Fire Protection, A.34
  Gaseous Effluent Controls, A.34, A.35
  Liquid Effluent Controls, A.34, A.35
  UO_3 Plant, A.36
  Ventilation System, A.36
  Waste Transfer Facilities, A.36

Facilities, PUREX
  (see PUREX Facilities, Description of), 3.14

Facilities, UO_3
  (see UO_3 Facilities, Description of)

Fuel Handling Requirements, 3.26

Fuel Processing Rates, 3.2

Hanford Regional Historical Earthquake, 3.18, 5.26, A.37

Hanford Site
History, 4.1
Location, 4.1-4.3

Health Effects, C.3

Impacts:
Accidents, 5.17-5.31, 5.36
Offsite, 5.28, 5.36
Onsite, 5.17-5.28, 5.30
Nonradiological, Normal Operation:
Gaseous Emission, 5.12-5.14
D.3, D.6
Liquid Effluents, 5.15, D.7,
D.10-D.11
Solid Waste, 5.15
Radiological, Accidents:
Historical, 5.29
Natural Forces, 5.26
Potential Credible, 5.17, B.2-B.10,
B.11-B.19
Transportation, 5.27-5.29, 5.34-5.36,
Radiological, Normal Operation: 5.5
Gaseous Emission, 5.7
Liquid Effluents, 5.7, 5.9
Solid Waste, 5.9
Occupational Exposure, 5.5
Population Exposure, 5.6
Waste Management, 5.10
Unavoidable Adverse:
Alternatives to the Proposed
Action, 5.33
Proposed Action, 5.30

Irradiated Fuel, Storage, 3.21, 3.30

Land Use, 4.13, 5.41

Land Use Policies, 5.44

Modifications, PUREX/UO_3
Facilities, 3.2, 3.15-3.17,
A.34-A.38

Natural Forces Resistance
of PUREX/UO_3 Facilities, 3.17

N-Reactor Fuel Production Rates, 3.1

Plutonium Oxide Conversion System, A.38-A.40

Population
Doses (see Dose, Consequences), 5.6,
5.20-25, 5.31, 5.35, 5.40-5.41
Estimates, 4.1, 4.9-4.10

Processing:
New PUREX Plant at Hanford, 3.19
Offsite Processing, 3.27
Proposed Action, 3.5-3.11, A.1-A.23

Proposed Action, Description Of, 1.1
3.2, 5.5, A.1

PSD Permit, 6.3-6.4

PUREX Facilities, Description of 3.14,
A.24-A.33
Aerial View of the PUREX Facility, 3.4

PUREX Process, Description of, 3.1, A.1-A.23

Purpose and Need, 1.1, 2.1

Radiation Monitoring Program, 5.1

Radiological Effluents, 5.7-5.10

Rail Transport of Nuclear Materials, 5.27,
5.34

Regulations and Guidelines, 6.1

Resources Commitments, 5.44

Safeguards and Security, 3.17, 5.30

Safe Shutdown Earthquake, 3.18

Savannah River Plant, Site Characterization,
4.13-4.15

Seismic Resistance of PUREX Facilities,
5.26

Socioeconomic Effects, 5.39-5.40

Summary, 1.1

Transportation:
Accidents, 5.27-5.29, 5.34-5.36
Potential Impacts, 5.28

Transportation of Irradiated Fuel:
Offsite Transport, 3.26, 5.34
Accidents, 5.34
Radiological Effects, 5.34
Shipping, 3.27, 5.28, 5.34
Onsite Transport, 5.15-5.16
Accidents, 5.27-5.29
Nonradiological Effects, 5.17
Radiological Effects, 5.17, 5.34
Shipping, 5.15

Truck Transport of Nuclear Materials, 5.27,
5.34

UO_3:
Facilities Description, 3.14

Waste Treatment and Management, 5.10, 5.12

Water Use, Incremental, 4.13