UNCLASSIFIED

UNC NUCLEAR INDUSTRIES

Subsidiary of United Nuclear Corporation
A UNC RESOURCES Company
P.O. Box 490
Richland, Washington 99352

PREPARED FOR THE
UNITED STATES DEPARTMENT OF ENERGY
UNDER CONTRACT NUMBER DE-AC06-76RL01857

Document No. 009251
UNI-1007 REV1

Date: March 15, 1983
Copy No. 24

Supersedes issue dated: December 8, 1980

RECORD CENTER FILE
REFERENCE COPY
RECEIVED
APR 05 1983
UNC NUCLEAR INDUSTRIES
DOCUMENT CONTROL CENTER

Title: 108-F PROJECT DECOMMISSIONING PLAN

Author: R. A. Paasch/E. W. Powers

DISTRIBUTION

NAME	BLDG.	NAME	BLDG.	NAME	BLDG.
DOE-RL					
1. JP Collins	Fed.	17. RA Paasch	108-F		
2. JD White	Fed.	18. MA Payne	1101-N		
		19. EW Powers	108-F		
PNL		20. JW Stiffler	1101-N		
		21. VR Richards	1114-N		
3. CD Corbit	520	22. RA Winship	Fed.		
		23. UNC File			
UNC		24. UNC Record			
		25-35 Extra			
4. JA Adams	M/W				
5. JR Bolliger	1117-N				
6. PA Carlson	1114-N				
7. RN Coy	Fed.				
8. LL Crass	1115-N				
9. HL Debban	1101-N				
10. TE Dabrowski	Fed.				
11. LE Denton	1720-K				
12. TL Deobald	1105-N				
13. JJ Dorian	1114-N				
14. JT Irish	108-F				
15. RJ Kobelski	1114-N				
16. MW Marquard	108-F				

JUN 1990
RECEIVED
EDMC

ROUTE TO	PAYROLL NO.	LOCATION	FILES ROUTE DATE	SIGNATURE AND DATE
UNC Record				

UNCLASSIFIED

BM-5100-184 (11-79)

108-F PROJECT DECOMMISSIONING PLAN

APPROVED BY: _____ Date: 3/23/83

R. A. Paasch, Manager
Decommissioning Operations

APPROVED BY: _____ Date: 3/24/83

R. A. Winship, Manager
Decommissioning Services Section
Decommissioning Programs Department

APPROVED BY: _____ Date: _____

T. E. Dabrowski, Director
Decommissioning Programs Department
Operations Division

APPROVED BY: _____ Date: 3/28/83

FOR J. D. White, Director
Surplus Facilities Management
Program Office
U.S. Department of Energy

PREFACE

Revision 1 to UNI-1007 was written to update the 108-F Project Decommissioning Plan to reflect necessary changes since the original plan was written. Changes to the plan are briefly described below:

Page	
i	REV1 Approvals Changed.
ii	Preface to UNI-1007 REV1 Added.
iii	Index Added.
iv	List of Tables and Figures Added.
8	100 Area Decommissioning Section name changed to Decommissioning Operations, and Document Control Center removed as a controlling group.
9	100 Area Decommissioning changed to Decommissioning Operations.
15	Cost revised to reflect current estimates.
16	108-F Decommissioning Milestone Schedule changed to reflect 1983 schedule.
C-1	Updated example of Detailed Work Procedure.

INDEX

Page

i Approvals
ii Preface
iii Index
iiii Tables and Figures
1.0 Introduction ---------- 1

2.0 Scope ---------- 1

3.0 Activity Descriptions---------- 2

3.1 Engineering and Planning---------- 2
3.2 Site Preparation---------- 2
3.3 Laboratory Confinement---------- 3
3.4 Hood, Sink, and Cabinet Removal---------- 3
3.5 Piping Removal---------- 5
3.6 Exhaust Duct Removal---------- 5
3.7 Ventilation System Removal---------- 6
3.8 Decontamination of Building Structures---------- 6
3.9 Waste Packaging-Transportation and Burial---------- 7
3.10 Final Survey and Sampling ---------- 8
3.11 Demolition of Building/Restoration of Site---------- 8

4.0 Detailed Work Procedures (DWP) Radiation Work Procedure (RWP)---- 8

4.1 Detailed Work Procedures---------- 8
4.2 Radiation Work Procedures---------- 9

5.0 Waste Management

5.1 Volume and Categories (Type)---------- 9
5.2 Packaging----------10
5.3 Transportation and Burial----------12

6.0 Cost and Schedule----------12

6.1 Cost Estimate ----------12
6.2 Work Breakdown Structure----------12
6.3 108-F Decommissioning Milestone Schedule----------12

7.0 Personnel Exposure----------17

7.1 Radiation and Contamination Status----------17
7.2 Radiological Safety ----------17
7.3 Radiological Training ----------18

Appendices----------18

A. Radiological Survey and Sample Analysis
B. Work Breakdown Structure (WBS) Dictionary
C. Detailed Work Procedure (DWP)
D. Job Safety Analysis

TABLES

Page

15 Table 6.1, 108-F Decommissioning Cost Estimate

FIGURES

Page

4 Figure 3.1, 108-F Building Site Preparation Work

11 Figure 7.1, Contaminated Waste Volume Estimates

13 Figure 6.2

14 Figure 4.2, LSA Waste Container

16 Figure 6.3, 100-F Decommissioning - FY 1983 Milestones

1.0 INTRODUCTION

This 108-F Project Decommissioning Plan provides engineering direction and outlines the operations procedures necessary to decommission the 108-F facility. This activity is part of the larger 100-F Area Decommissioning Project. Due to a reduction of funds and a subsequent rescheduling of activities, the 108-F facility will be decommissioned as a separate activity. Performance of this activity marks the start of the 100-F Area decommissioning operations.

For detailed information on the 108-F Building, see UNI-1001 "100-F Site Facilities Description," Section 4.

2.0 SCOPE

The main objective of this project is to decontaminate the 108-F Facility, in accordance with UNI-M-30 "Unrestricted Release Levels" Table 5-1, leaving the building uncontaminated for demolition by conventional means.

The scope of the decommissioning of the 108-F Facility consists of the following activities:

- Engineering and Planning.
- Procurement of Waste Containers
- Radiation surveys and sampling
- Site preparation - which involves restoring services and construction of security fence
- Development of methods and procedures for removal of equipment and decontamination of structures
- Final site survey and sampling
- Preparation of a final project close-out report

After all remaining 100-F area activities are completed, the 108-F Building will be demolished using standard methods, and the area returned to a condition compatible with the surrounding terrain.

3.0 ACTIVITY DESCRIPTIONS

The 108-F Decommissioning Project has been divided into the following 11 discrete, manageable activities:

- Engineering and Planning
- Site Preparation
- Laboratory Confinement
- Hoods, Sinks, and Cabinet Removal
- Piping Removal
- Exhaust Duct Removal
- Ventilation Systems Removal
- Decontamination of Structures
- Waste Packaging, Transportation and Burial
- Final Site Survey and Sampling
- Demolition of Building/Restoration of Site

3.1 Engineering and Planning

The decontamination of the 108-F Building, which is a part of the 100-F Area Decommissioning Project, will begin with a review and update of the existing radiation survey. This survey will characterize the contamination status of the 33 laboratories, 30 hoods and associated sinks, ducts, piping, drains, and other equipment items. The proper means of dismantlement and disposal of each will thereby be determined.

3.2 Site Preparation

Specifications, instructions, and work orders will be prepared for all site preparation work.

NOTE: J.A. Jones Construction Services Company must perform all site preparation work, as dictated by Plant Forces Work Review.

Tasks already completed under this activity are:

- The installation of a security fence around the 108-F Building, see Figure 3-1.

- The electrical power hook-up for services and lighting.
  - A 480V - 3 Phase line for equipment and heaters.
  - A 110V - Single-Phase line for all temporary lighting service.

- The installation of 3 showers, 4 toilets, 5 sinks and a hot water tank.

3.3 Laboratory Confinement

This activity involves the isolation, sealing, ventilation, filtration system, and the controlled access to those labs that warrant such control requirements. (Three labs are known.)

To control contamination the labs will be sealed with plastic sheets and tape. A vacuum unit will be attached to the sealed lab with an exhaust through an HEPA filter. This will provide a negative pressure on the lab and thereby minimize the chance for any contamination spread.

3.4 Hood, Sink, and Cabinet Removal

This activity involves the foaming, disassembly, wrapping and handling of hoods and sinks until loaded into burial containers.

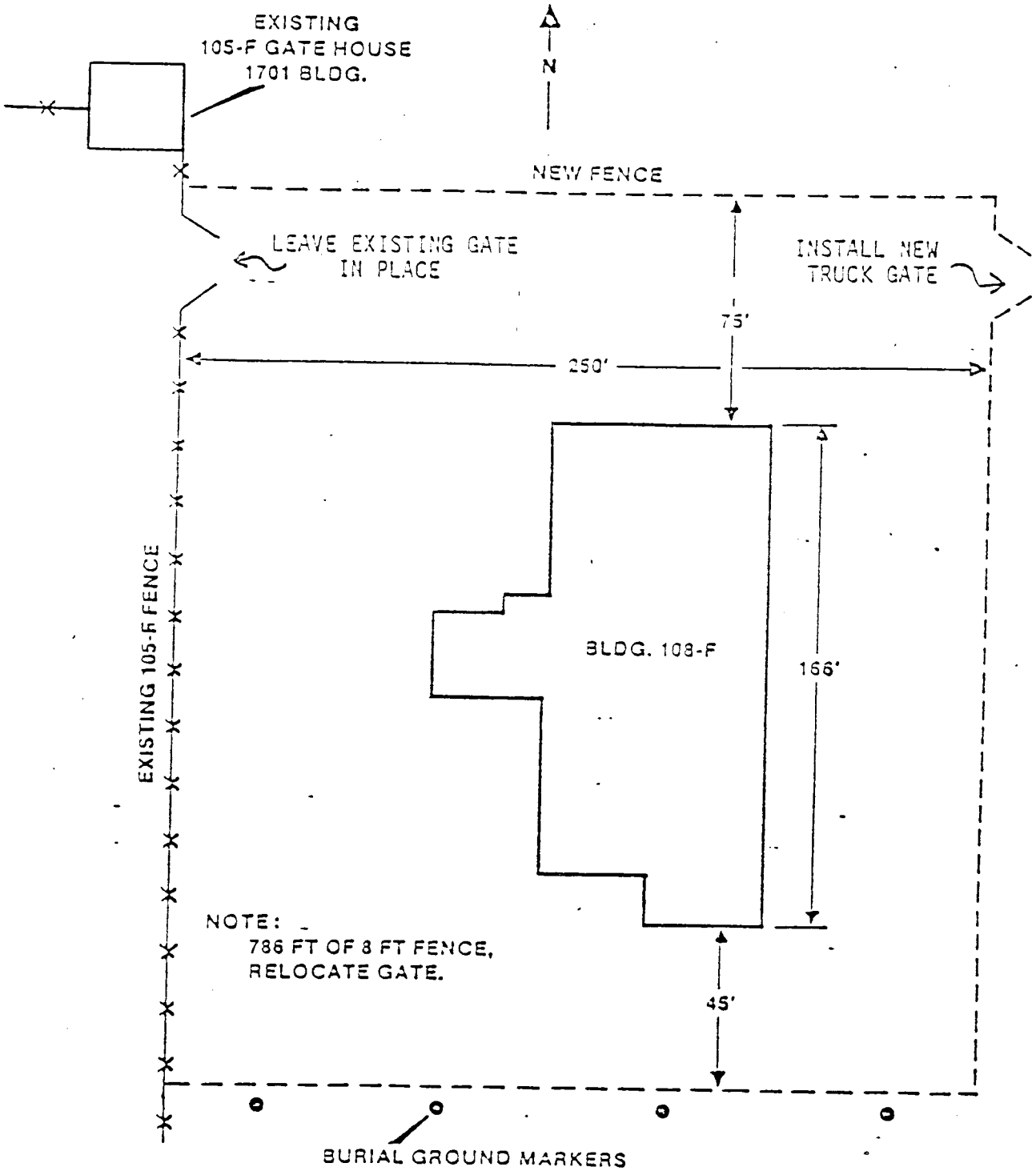

FIGURE 3-1

108-F BLDG SITE PREPARATION WORK

Hoods contaminated with plutonium will be coated with paint to fix the contamination. The hood may then be partially disassembled as required. The hood and sink components will only be removed from a lab after being completely wrapped in plastic and sealed with tape. The hoods will then be loaded into shipping containers in preparation for burial at 200 Areas.

The estimated waste volume is 1080 Ft.^{3} (30.1 m^3). This will be packaged in approximately 9 containers.

NOTE: Preparation for removal of the contaminated hoods will consist of first removing a lesser contaminated hood, or possibly even a clean hood, while treating it as contaminated. This will provide actual experience for workers as well as verification of the detailed work procedures.

3.5 Piping Removal

This activity involves the cutting, sealing of open ends, and removal of all piping and tubing from a lab, including wrapping and handling until loaded into burial containers.

Whenever any ductwork or piping is opened, it will be surveyed and immediately covered with plastic and sealed with tape.

The estimated waste volume is 640 Ft.^{3} (18 m^3). This will be packaged in approximately 5½ containers.

3.6 Exhaust Duct Removal

This activity involves the fixing, dismantling or cutting, and sealing of the ductwork each time it is opened; and the removal from the side of the building including the hoisting and rigging equipment, and the eventual sectioning, wrapping, handling until loaded into burial containers.

The interior of the ductwork on the roof of the 108-F Building will be painted, if determined necessary, then cut into manageable sections. The roof portion will be separated from the portion attached to the east wall. The ductwork will be disconnected from the hoods inside the building and sealed. After disconnection from all anchor points, the ductwork will be removed from the side of the building and lowered to the ground intact. If the ductwork is contaminated, it will be coated with paint prior to cutting up for disposal. Whenever any ductwork is opened it will be surveyed and immediately covered with plastic and sealed with tape.

The estimated waste volume is 340 Ft.^{3} (23.6 m^3). This will be packaged in approximately 7 containers.

3.7 Ventilation System Removal

This activity involves the cutting, sealing, compacting, and wrapping of the ventilation ductwork that is found to be contaminated.

The ventilation ducts will be detached from its structure. Any ducting that is opened will be surveyed and immediately covered with plastic or caps and sealed with tape. The activity includes all handling until loading into burial containers.

The estimated waste volume is included in the estimated work volume mentioned in Section 3.6 (above).

3.8 Decontamination of Building Structures

This activity involves the removal of contamination from building surfaces. Many techniques will be used in the decontamination effort. Some of the techniques include:

- Removal of wall partitions.
- Surface spalling concrete floors with rock-jack, grinding wheel, chipping hammers, scabbler and others.
- Use strippable coating.
- Where necessary, as with chipping and grinding, a contamination control envelope will be set up.

The estimated waste volume is 1280 Ft.^{3} (36.2 m^3). This will be packaged in approximately 11 containers.

3.9 Waste Packaging-Transportation and Burial

A light weight steel container was designed for packaging waste material. Three prototype containers were purchased and tested to DOT-7A criteria and Rockwell Hanford Operations (RHO) waste disposal requirements.

All radioactive waste from the 108-F decommissioning project will be packaged and transported in compliance with the regulations and requirements described in UNI-M-29 "Shipment of Radioactive and Other Hazardous Materials".

Loaded shipping containers will be surveyed and transported by truck approximately 25 miles to the 200 Area burial grounds. All waste will be buried in accordance with RHO disposal criterion.

All contaminated wastes will be buried in the Hanford 200 Area burial grounds. There is no salvageable equipment in 108-F that could be excessed or released to other agencies.

Pre-decommissioning surveys and sampling and sample analysis by U.S. Testing, Co. indicates that all 108-F project waste will be below the levels requiring TRU/retrievable storage disposition. More details of this activity are given, in Section 5.0 "Waste Management" below.

3.10 Final Survey and Sampling

This activity involves the surveys, samples, and testing requirements required to attain the unrestricted release of the building for demolition.

A detailed work procedure (DWP) will be prepared for this task, which will detail the survey techniques to be used and identify the instruments. It will also include statistical sampling instructions required to assure the unrestricted release criteria described in Section 2.0 of this plan.

3.11 Demolition of Building/Restoration of Site

When completely decontaminated, the 108-F Building will be demolished using standard demolition methods, and the area returned to a condition compatible with the surrounding terrain.

4.0 DETAILED WORK PROCEDURES (DWP) RADIATION WORK PROCEDURE (RWP)

4.1 Detailed Work Procedures

Detailed Work Procedures will be prepared for activities 3.3 through 3.10 described in Section 3 of this plan. These procedures will be applicable to all like equipment; this will eliminate the necessity of preparing repetitious procedures for equipment in each laboratory on every building floor.

NOTE: The Detailed Work Procedures (DWP) will be issued and controlled through the Decommissioning Operations.

The DWP will be prepared by the Engineer, Decommissioning Operations and will be reviewed and approved by the Manager, Decommissioning Operations and by the Manager, Environmental and Occupational Safety.

Any changes to the DWP will require the same signatures for approval.

A Detailed Work Procedure (DWP) format and instruction for completing each section is included as Appendix C.

4.2 Radiation Work Procedures

Radiation work procedures will be prepared to assure that all activities are carried out consistent with the accepted radiation work practices. The radiation work procedures will specify the protective clothing and respiratory protection required and will identify any special procedures or equipment needs to assure that radiological safety of operating personnel.

5.0 WASTE MANAGEMENT

All radioactive waste from the 108-F decommissioning project will be packaged and transported in compliance with the requirements in UNI-M-29 "Shipment of Radioactive and Other Hazardous Materials".

A waste management specialist will be assigned the responsibility for the disposition of all waste generated from the project.

5.1 Volume and Categories (Type)

- All radioactive waste from the 108-F Facility will meet the criteria for the Department of Transportation (DOT) Low Specific Activity (LSA) category.

- Figure 7.1 presents the estimated waste volume and container requirements.

- Type of Waste
  The major portion of the contaminated components are contaminated with plutonium. Calculations, based on comprehensive radiation surveys and sample analysis, indicate that less than 0.2 grams of plutonium exists in the entire facility and that all waste will be below the requirements for 20-year retrievable TRU.

Other contamination consists of 90Sr, 137Cs, and 60Co. Sample analysis results indicate a maximum concentration of any of the above three isotopes to be 2,500 pci/gram.

5.2 Packaging

Waste handling, packaging, shipping, and control will be the responsibility of one individual.

The intent is to either spray equipment/components/building materials before removal or upon removal immediately wrap the item in plastic. This will minimize the potential for contamination spread during handling.

- A light weight steel container was designed for packaging waste material. Three prototype containers were purchased and tested to DOT-7A criteria and Rockwell Hanford Operations (RHO) waste disposal requirements. The container met all test requirements and has been approved by RHO for use as a disposal container.

FIGURE 7.1

ITEM	REF. DWG	QTY.	VOLUME FT^3	VOLUME FT^3
HOODS	H-1-2022	16	24	384
SINK, HOOD	H-1-2022	16	6	96
HOOD, CEILING	H-1-2064	16	16.6	266
SINK, LAB.	H-1-1936 SHT. 5	40	2	80
EXHAUST DUCT - ROOF	H-1-2092	TOTAL		785
EXHAUST DUCT - EAST WALL				50
PIPING - EACH FLOOR		5	128	640
CONTAMINATED TILE & WALL BOARD - EACH FLOOR		5	256	1,280
COLBALT HANDLING EQUIPMENT		1	128	256
TOTAL VOLUME				3,847
NO. OF SHIPPING CONTAINERS (4' X 4' X 8') REQUIRED				30

CONTAMINATED WASTE VOLUME ESTIMATES

A supply of these containers have been purchased and received by UNC. Figure 4.2 shows the container.

5.3 Transportation and Burial

Loaded shipping containers will be surveyed and transported by truck approximately 25 miles to the 200 Area burial grounds.

All contaminated wastes will be buried in the Hanford 200 Area burial grounds. There is no salvageable equipment that could be excessed or released to other agencies.

All property from the 108-F Facility will be disposed of in compliance with procedures detailed in UNI-M-16 Rev. 3 "UNC Property Management Manual."

6.0 COST AND SCHEDULE

6.1 The cost estimate for the 108-F Decommissioning is shown in Table 6.1.

6.2 A Work Breakdown Structure (WBS) Chart is presented in Figure 6.2. A WBS dictionary for elements of Activity I "108-F Decommissioning" is included as Appendix A.

6.3 The 108-F Decommissioning Milestone Schedule is shown in Figure 6.3.

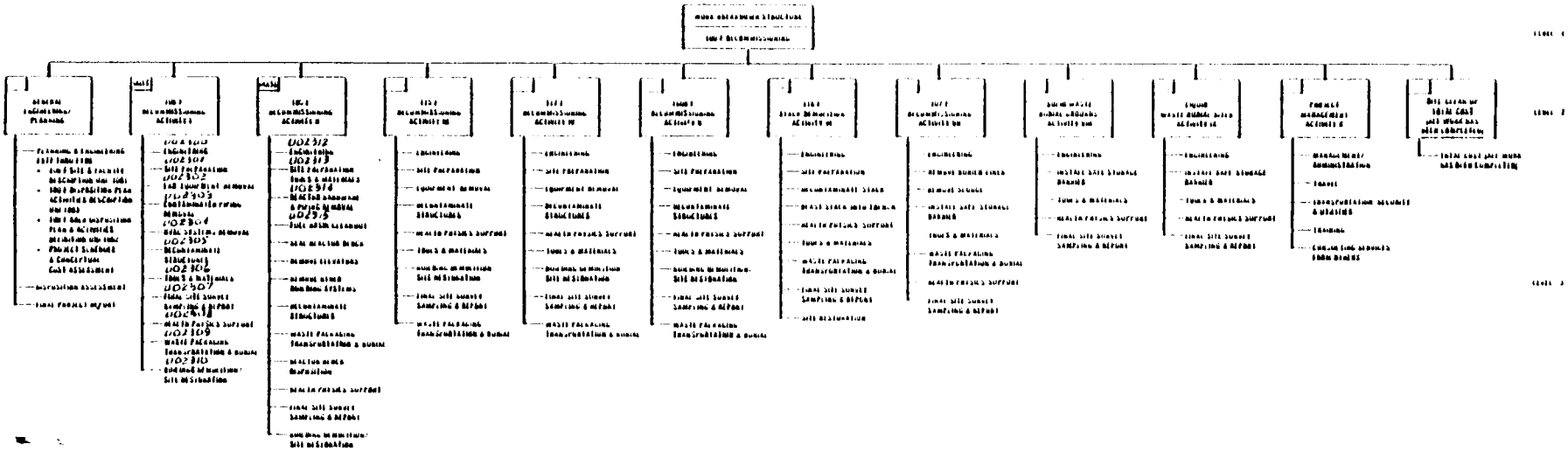

NOTE: Revisions will be made to this WBS for work in structures other than 108-F.

FIGURE 6.2

UNI-4476

LSA WASTE CONTAINER

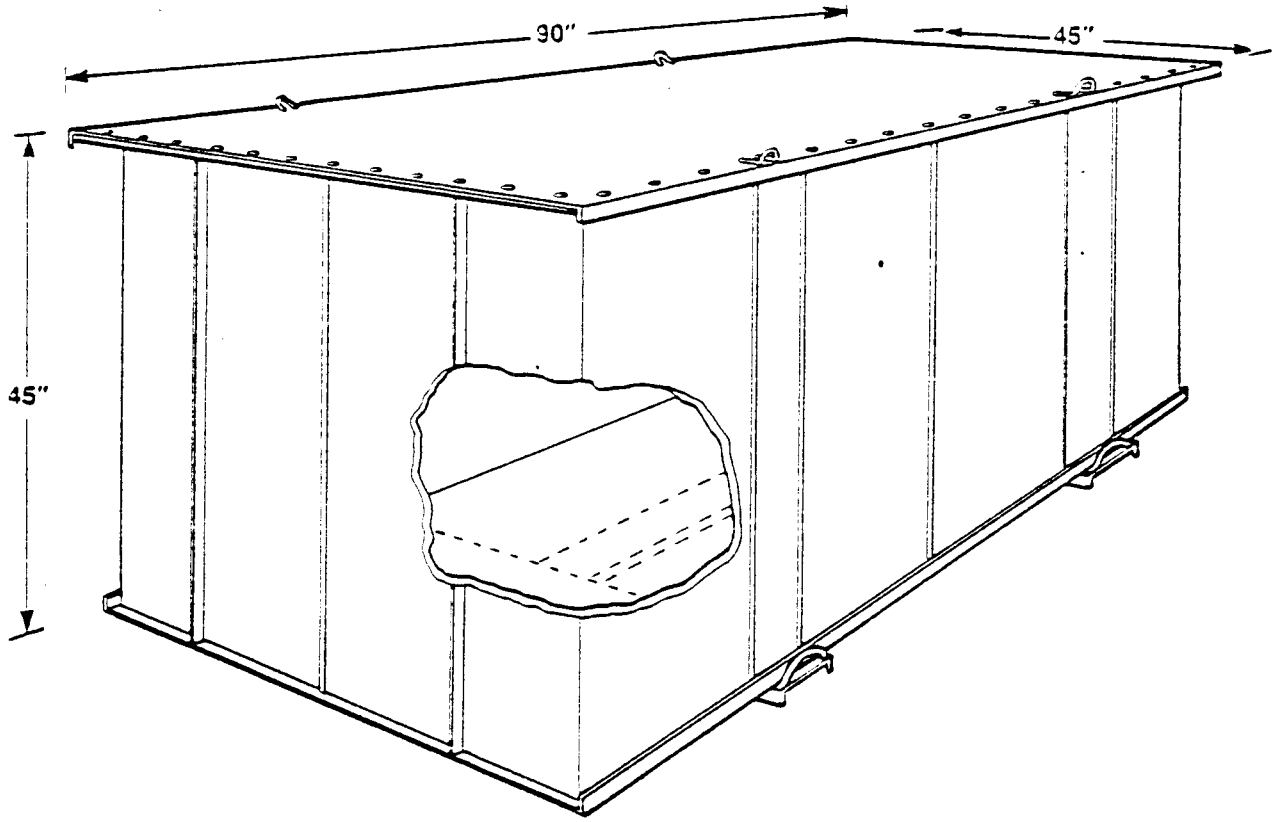

FIGURE 4.2

TABLE 10.2

108-F DECOMMISSIONING COST ESTIMATE

(Revised)

(This reflects FY 1983 Cost Estimates only.)

• Engineering and Planning	
Site preparation specifications; Management Plan; Project Plan; Detailed Work Procedures.	$ 80,000
• Site Preparation	
Office Facilities; Shower Facilities; Electrical and Water Services; Contaminated Waste Loadout Area.	30,000
• Procurement	
Materials; Tools; Equipment and Services.	70,000
• Equipment Removal and Decontamination	
Labor and Supervision.	230,000
• Contaminated Waste Disposal	
Containers; Transportation and Burial.	65,000
• Project Closeout	
Photographs; Final Report.	25,000
	$500,000*

* Includes overheads.

100-F ANCILLARY FACILITIES

MILESTONE SCHEDULE

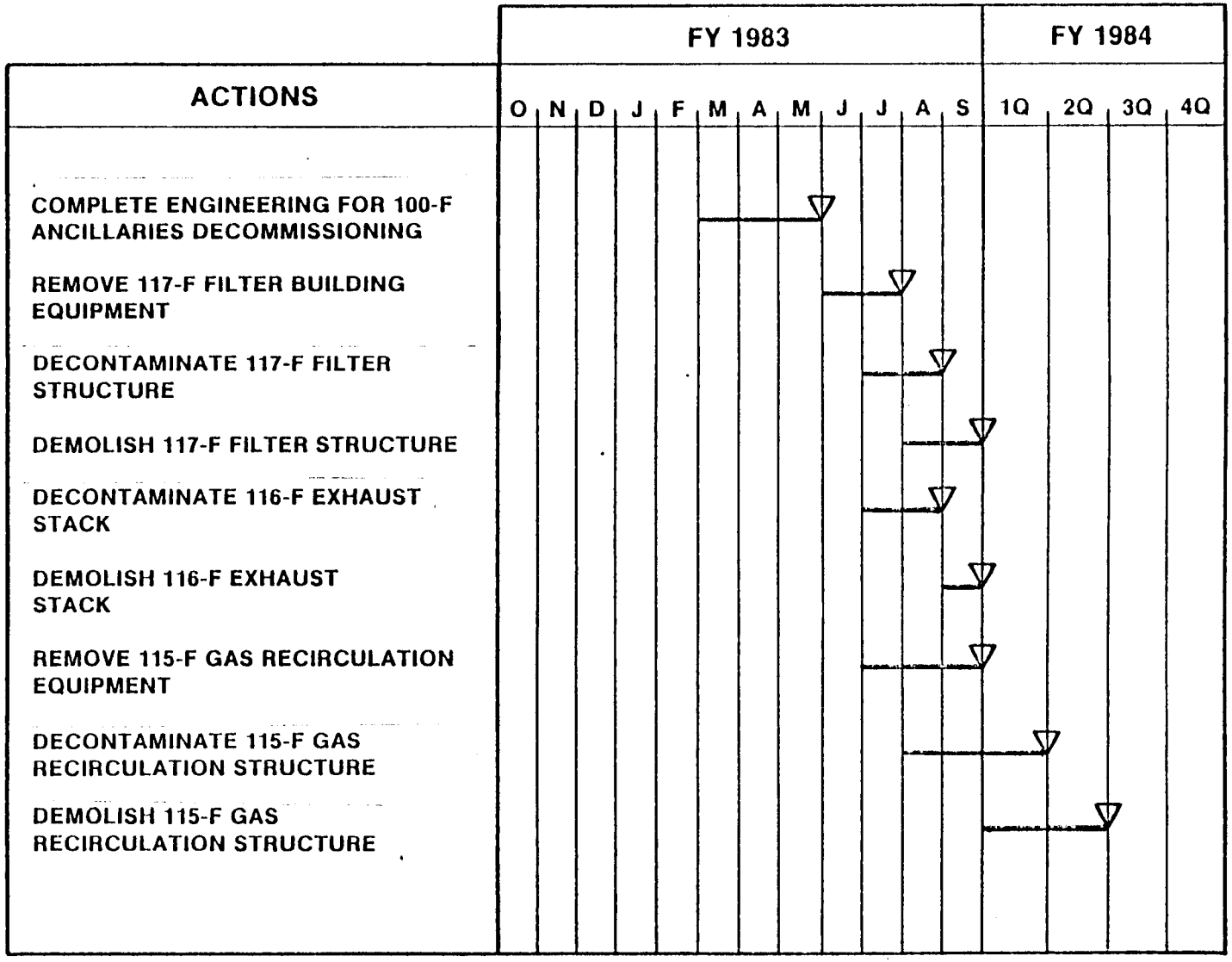

7.0 PERSONNEL EXPOSURE

7.1 Radiation and Contamination Status

In November 1977, a number of radiation surveys were performed in the 108-F Building in connection with a housekeeping type program being conducted in the building. These surveys provide a good indication of the radiation and contamination status of the building.

In general, the large majority of the building is open to unrestricted entry. A limited number of rooms are contaminated and therefore, are on controlled entry status. The overall background exposure rate to personnel working in the building is less than 1 mr/hr.

The following listed Radiation Survey Reports, which describe the present radiological condition of the facility are included as Appendix B.

Survey Report Number	Date
001052	10-05-77
001053	10-06-77
001057	10-11-77
001061	10-13-77

7.2 Radiological Safety

- The only identifiable radiological hazards are personnel contamination and release of contamination to the environment.

- All work will be performed in strict compliance with requirements in UNI-M-30, "Radiation Control Manual."

7.3 Radiological Training

- The training requirements for all UNC Radiation zone workers are described in detail in UNI-M-30 "Radiation Control Manual" Section 4.0 (Training). All work on this project will be performed in compliance with the requirements of UNI-M-30 Rev. 1.

APPENDICES

A. Radiological Survey and Sample Analysis

B. Work Breakdown Structure (WBS) Dictionary

C. Detailed Work Procedure (DWP)

D. Job Safety Analysis

APPENDIX A
RADIATION SURVEY REPORTS
& SAMPLE ANALYSIS RESULTS

UNCLASSIFIED A-1 UNI-1007 REV1

UNITED NUCLEAR INDUSTRIES, INC.

RADIATION SURVEY REPORT

NUMBER 001052 DATE 10-5-77

TIME PERIOD 0830AM TO 4:00PM | BUILDING 108-F | LOCATION 4TH FLOOR

DESCRIPTION OF JOB

MONITOR FOR JAT TO CLEAN OFFICES & LABS PUT TRASH IN BOXES FOR BURIAL AND NON CONTAMINATED TRASH IN CLEAR WELL AT 100-H

MEASUREMENTS MADE

NO.	ITEM OR LOCATION	DOSE RATES OBSERVED: DISTANCE & SOURCE SIZE	β mrad/hr	γ mr/hr	c/s or d/m	CONTAMINATION LEVELS: mrad/hr AT 3"	INCL mr/hr AT (DIST)
1	ROOM 401 + 402 SINKS + DRAINS				1,000 c/m	10,000 d/m ALPHA	
2	ROOM 403 HOOD				<200 c/m	1,000 d/m ALPHA	
3	ROOM 404 AIR CONDIS.				1,000 c/m	50,000 d/m ALPHA	
4	ROOM 405 SINKS + DRAINS				1,000 c/m	5,000 d/m ALPHA	
5	ROOM 406 SINKS + DRAINS				1,000 c/m	NO ALPHA	
6	ROOM 407 HOOD				1,000 c/m	NO ALPHA	
7	ROOM 408 HOOD				<200 c/m	40,000 d/m ALPHA	
8	OFFICES DIRECT SCAN + SMEARS				<200 c/m	<500 d/m ALPHA	
9	DIRECT SCAN AND SMEARS OF ROOMS 401 TO 408				<200 c/m	<500 d/m ALPHA	
10	DIRECT SCAN AND SMEARS OF HALL + STAIRS				<200 c/m	<500 d/m ALPHA	

INSTRUMENTS USED: GM (MWG-M) CP JUNO OTHER: PAM | NEUTRON ALLOWANCE NONE mrem/hr

DOSE RATES TO PERSONNEL

PHASE OF WORK	BASED ON MEASUREMENTS #	AVERAGE TRUE LIMITING DOSE RATE	LIMIT APPLYING	ANNOUNCED DOSE RATE (TIMEKEEPING UNITS)
SAME AS ABOVE	ALL	<1	WBP	<1

TIMEKEEPER PROVIDED: YES (NO) | GAS CLOUD INVOLVED: NOBLE GAS REACTOR GAS (NONE) | RESP. PROT. WORN: SUPPLIED AIR FILTER (NONE) | EYE PROTECTION WORN: YES (NO)

WORK WAS PERFORMED ON SWP RWP NUMBER _____ | DID THE WHOLE BODY γ DOSE RATE EXCEED THE WHOLE BODY β DOSE RATE? YES (NO)

COMMENTS

ALL TRASH PUT INTO BOXES FOR BURIAL <1000 c/m
NO ALPHA CONTAMINATION
PERSONNEL SURVEYS <200 c/m <500 d/m
EQUIPMENT SURVEYS <200 c/m <500 d/m

ACTION TAKEN

4TH FLOOR RELEASED NO SMEARABLE CONTAMINATION OR FIXED ON FLOOR

REFERENCES | MAX. PERS. DOSE RATE (TIMEKEEPING UNITS) <1 | MAX. DOSE RATE OBSERVED <1 | SIGNED [illegible]

54-3500-004 (7-73)

UNITED NUCLEAR INDUSTRIES, INC.

RADIATION SURVEY REPORT

NUMBER 001053 DATE 10-6-77

TIME PERIOD 0830 AM TO 4:00 PM BUILDING 108-F LOCATION 3RD FLOOR

DESCRIPTION OF JOB

MONITOR FOR IAT TO CLEAN OFFICES + LABS, PUT TRASH IN BOXES FOR BURIAL AT 200-W, NON CONTAMINATED TRASH PUT IN CLEAR WELL AT 200-H

MEASUREMENTS MADE

NO.	ITEM OR LOCATION	DOSE RATES OBSERVED: DISTANCE & SOURCE SIZE	3 mrad/hr	γ mr/hr	CONTAMINATION LEVELS: c/s or d/s	mrad/hr AT 3" (INCL)	mr/hr AT (DIST)
RM 301	DRAIN PIPES				1,000 c/m	1,000 c/m ALPHA	
RM 302	CONTAMINATED FLOOR SMEARABLE				<200 c/m	5,000 c/m ALPHA	
RM 303	1 HOOD				<200 c/m	50,000 c/m ALPHA	
" "	DRAIN PIPES				1,000 c/m	1,000 c/m ALPHA	
RM 304	CONTAMINATE FLOOR SMEARABLE				1,000 c/m	5,000 c/m ALPHA	
RM 305	DRAIN PIPES				1,000 c/m	<500 c/m ALPHA	
RM 306	1 HOOD				2,000 c/m	10,000 c/m ALPHA	
RM 307	1 HOOD				<200 c/m	1,000 c/m ALPHA	
RM 308	2 HOODS				<200 c/m	6,000 c/m ALPHA	
RM 309	2 HOODS				<200 c/m	3,000 c/m + 500 c/m ALF	

INSTRUMENTS USED: GM MWO-M CP JUNO OTHER: PAM NEUTRON ALLOWANCE N/A mres/hr

DOSE RATES TO PERSONNEL

PHASE OF WORK	BASED ON MEASUREMENTS #	AVERAGE TRUE LIMITING DOSE RATE	LIMIT APPLYING	ANNOUNCED DOSE RATE (TIMEKEEPING UNITS)
SAME AS ABOVE	ALL	<1	WBP	<1

TIMEKEEPER PROVIDED YES (NO) GAS CLOUD INVOLVED NOBLE GAS REACTOR GAS (ONE) RESP. PROT. WORN SUPPLIED AIR FILTER (ONE) EYE PROTECTION WORN YES (NO)

WORK WAS PERFORMED ON SWP RWP NUMBER _____ DID THE WHOLE BODY γ DOSE RATE EXCEED THE WHOLE BODY β DOSE RATE? YES (NO)

COMMENTS SINKS IN RM 308 READING 1,000 c/m
DIRECT SCAN + SMEARS OF ROOMS 301, 303, 305-309 <200 c/m <500 c/m
DIRECT SCAN + SMEARS OF HALLS + OFFICES <200 c/m <500 c/m
PERSONNEL SURVEYS <200 c/m <500 c/m
EQUIPMENT SURVEYS <200 c/m <500 c/m

ACTION TAKEN 3RD FLOOR RELEASED NO SMEARABLE CONTAMINATION IN OFFICES + HALLS

REFERENCES MAX. PERS. DOSE RATE (TIMEKEEPING UNITS) <1 MAX. DOSE RATE OBSERVED <1 SIGNED [illegible]

54-5300-004 (7-73)

UNCLASSIFIED A-3 UNI-1007 REV1

UNITED NUCLEAR INDUSTRIES, INC.

RADIATION SURVEY REPORT

NUMBER 001057

DATE 10-11-77

TIME PERIOD 0830 AM TO 4:00 PM

BUILDING 108-F

LOCATION 2ND FLOOR

DESCRIPTION OF JOB

MONITOR FOR TAT TO CLEAN UP OF TRASH
AND PUT INTO BOXES FOR BURIAL AT 200-W
NON CONTAMINATED TRASH PUT IN CLEAR WELL
AT 100-H

MEASUREMENTS MADE

NO.	ITEM OR LOCATION	DOSE RATES OBSERVED: DISTANCE & SOURCE SIZE	β mrad/hr	γ mr/hr	CONTAMINATION LEVELS: c/m or d/m	mrad/hr AT 5 INCL	mr/hr AT (DIST)
1	Rm 201 DRAINS	1 1/2"			1,000 c/m	<500 d/m	ALPHA
2	Rm 202 DRAINS	"			1,000 c/m	<500 d/m	ALPHA
3	Rm. 203 1 HOOD	"			<200 c/m	7,000 d/m	ALPHA
4	Rm 204 SINKS & DRAINS	"			1,000 c/m	3,000 d/m	ALPHA
5	Rm 205 SINKS & DRAINS	"			1,000 c/m	3,000 d/m	ALPHA
6	Rm 206 1 HOOD	"			5,000 c/m	20,000 d/m	ALPHA
7	Rm 207 1 HOOD	"			1,000 c/m	5,000 d/m	ALPHA
8	Rm 207 1 HOOD	"			<200 c/m	100,000 d/m	ALPHA
9	Rm 208 1 HOOD	"			1,000 c/m	5,000 d/m	ALPHA
10	Rm 208 1 HOOD	"			1,000 c/m	10,000 d/m	ALPHA

INSTRUMENTS USED: GM MWG-M CP JUNO OTHER: PAM

NEUTRON ALLOWANCE N/A mrem/hr

DOSE RATES TO PERSONNEL

PHASE OF WORK	BASED ON MEASUREMENTS	AVERAGE TRUE LIMITING DOSE RATE	LIMIT APPLYING	ANNOUNCED DOSE RATE (TIMEKEEPING UNITS)
SAME AS ABOVE	ALL	<1	WBP	<1

TIMEKEEPER PROVIDED YES NO

GAS CLOUD INVOLVED NOBLE GAS REACTOR GAS NONE

RESP. PROT. WORN SUPPLIED AIR FILTER NONE

EYE PROTECTION WORN YES NO

WORK WAS PERFORMED ON SWP RWP NUMBER

DID THE WHOLE BODY γ DOSE RATE EXCEED THE WHOLE BODY β DOSE RATE? YES NO

COMMENTS

RM. 206 2 HOODS WITH NO DETECTABLE CONTAMINATION
OUT IN HALL WAY 2 HOODS WITH NO DETECTABLE CONTAMINATION
PERSONNEL SURVEYS <500 d/m <200 c/m
SMEARS OF FLOORS IN LABS <500 c/m <200 c/m
SMEARS OF HALLS <500 d/m <200 c/m

ACTION TAKEN

2ND FLOOR RELEASED NO SMEARABLE CONTAMINATION

REFERENCES

MAX. PERS. DOSE RATE (TIMEKEEPING UNITS) <1

MAX. DOSE RATE OBSERVED <1

SIGNED [signature]

54-5500-004 (7-73)

UNCLASSIFIED A-4 UNI-1007-REV1

UNITED NUCLEAR INDUSTRIES, INC.

RADIATION SURVEY REPORT

NUMBER 001061 DATE 10-13-77

TIME PERIOD 0830 AM TO 400PM BUILDING 108-F LOCATION 1ST FLOOR

DESCRIPTION OF JOB

MONITOR FOR IAT TO CLEAN UP LABS AND PUT TRASH INTO BOXES FOR BURIAL AT 200-W NON-CONTAMINATED TRASH PUT IN CLEAR WELL AT 100-H

MEASUREMENTS MADE

NO.	ITEM OR LOCATION	DOSE RATES OBSERVED: DISTANCE & SOURCE SIZE	β mrad/hr	γ mr/hr	CONTAMINATION LEVELS: c/m OF β/γ	mrad/hr AT 3"	NCL	mr/hr AT (DIST)
Rooms 1	101 TO 106 DIRECT + SMEARS	1" + S			<200 c/m	<500 d/m ALPHA		
2	ROOMS 108 + 109 DIRECT + SMEARS	1" + S			<200 c/m	<500 d/m ALPHA		
3	ROOM 107 IS NOT CLEAN YET FLOOR SMEARS				<200 c/m	50,000 d/m ALPHA		
4	101 TO 109 DRAINS + SINKS	1" + 1/4"			1,000 c/m	5000 d/m ALPHA		
5	DIRECT + SMEARS OF HALLS	1" + S			<200 c/m	<500 d/m ALPHA		
6	DIRECT SCAN + SMEARS OF BASEMENT				<200 c/m	<500 d/m ALPHA		
7	ROOM 105 (HOOD)	1" + 1/4"			4000 c/m	10,000 d/m ALPHA		
8	EQUIPMENT SURVEYS	F			<200 c/m	<500 d/m ALPHA		
9	PERSONNEL SURVEYS	F			<200 c/m	<500 d/m ALPHA		
10								

INSTRUMENTS USED: GM MWG-M CP JUNO OTHER - PAM NEUTRON ALLOWANCE N/A mrem/hr

DOSE RATES TO PERSONNEL

PHASE OF WORK	BASED ON MEASUREMENTS	AVERAGE TRUE LIMITING DOSE RATE	LIMIT APPLYING	ANNOUNCED DOSE RATE (TIMEKEEPING UNITS)
SAME AS ABOVE	ALL	<1	WBP	<1

TIMEKEEPER PROVIDED YES NO (NO) GAS CLOUD INVOLVED NOBLE GAS REACTOR GAS NONE (NONE) RESP. PROT. WORN SUPPLIED AIR FILTER NONE (NONE) EYE PROTECTION WORN YES NO (NO)

WORK WAS PERFORMED ON SWP RWP NUMBER ____ DID THE WHOLE BODY γ DOSE RATE EXCEED THE WHOLE BODY β DOSE RATE? YES NO (NO)

COMMENTS 108-F IS RELEASED NO SMEARABLE CONTAMINATION IN LABS, OFFICES + HALLS ALL VENTS + DRAINS TAPED AND SEALED FIXED CONTAMINATION IN SINKS

ACTION TAKEN ROOMS THAT ARE STILL CONTAMINATED ARE SEALED AND MARKED (ONLY 3 ROOMS)

REFERENCES MAX. PERS. DOSE RATE (TIMEKEEPING UNITS) <1 MAX. DOSE RATE OBSERVED <1 SIGNED C. COMPESTINE

54-5500-004 (7-73)

FROM U.S. TESTING

May 1980

RADIOLOGICAL CHARACTERIZATION
108-F AFTER CLEAN UP AND A LITTLE DECON.

108-F J Rm. 107 Concrete (hot area) floor by # hood
Pu 238 - 1.3 E 1 pCi/gram
239 - 1.2 EØ pCi/gram
Sr 90 - 8.5 E-1 pCi/gram

108-F K Rm. 107 Concrete @ floor center of room (bkg. no readings)
Pu 238 - 7.0 E-1 pCi/gram
239 - 6.6 E-1 pCi/gram
SR 90 - 2.5 EØ pCi/gram

108-F L Rm. 205 Concrete @ floor front of 3 hoods (no readings)
Pu 238 - 9.2 E-2
239 - 1.8 E-1
Sr 90 - 1.1 E-1

108-F M Rm. 206 Concrete from beneath sink (direct 2,000 c/m no alpha)
Pu 238 - 8.3 E-1
239 - 6.3 E-1
Sr 90 - 1.8 E 1

108-F N Rm. 206 several pieces of tile (2,000 c/m no alpha)
Pu 238 - 1.6 EØ
239 - 3.5 E-1
Sr 90 - 1.7 E 2

RADIOLOGICAL CHARACTERIZATION
108-F INITIAL CHARACTERIZATION (Sept. 1976)
(smears/100 Cm^2)

108-F G Rm. 128 Cobalt source room.
smear - metal plate on floor surrounding cave source access hole. 100/500 c/m (a)

Cs 137 - 5.0 E 2 pCi/100 cm^2
Co 60 - 2.4 E 3 pCi/100 cm^2
Pu 238 - 2.3 E 1 pCi/100 cm^2
239 - 7.8 E 1 pCi/100 cm^2
Sr 90 - 2.1 E 2 pCi/100 cm^2

108-F H Cobalt Source Handling Tool 45 mr/hr. at contact uncorrected.

Sr 90 - 1.1 E 2 pCi/100 cm^2
Pu 238 - 9.9 EØ pCi/100 cm^2
239 - 3.7 E 1 pCi/100 cm^2

108-F A Rm. 107 Exterior surface of hood - direct 8,000 d/m (a)
Pu 238 - 1.1 E 3 pCi/100 cm^2
239 - 1.4 E 1 pCi/100 cm^2
Sr 90 - 1.7 E 1 pCi/100 cm^2

108-F B Rm. 107 Foor next to #2 hood - direct 60,000 d/m (a)
Pu 238 - 4.4 E 3 pCi/100 cm^2
239 - 7.3 E 1 pCi/100 cm^2
gross alpha 2.0 E 3 pCi/100 cm^2
Sr 90 - 8.2 E 1 pCi/100 cm^2

108-F C Rm. 107 Wall next to hood (no readings/incl. smear)
Pu 238 - 8.8 EØ pCi/100 cm^2
239 - 1.1 EØ pCi/100 cm^2
Sr 90 - 6.5 EØ pCi/100 cm^2

108-F D Rm. 402 Sink (direct 10,000 d/m (a))
Pu 238 - 9.1 E 1 pCi/100 cm^2
239 - 3.6 E 2 pCi/100 cm^2
Sr 90 - * (ND) pCi/100 cm^2

108-F E Rm. 403 Open drain line (removed sink) direct 50,000 d/m
Pu 238 - 3.5 E 1 pCi/100 cm^2
239 - 1.2 E 3
gross alpha - 1.1 E 3
Sr 90 - * (ND)

108-F F Rm. 304 Liquid waste disposal funnel direct 500 d/m (a)
Pu 238 - 1.1 E 2 pCi/100 cm^2
239 - 2.1 E-1 pCi/100 cm^2
Sr 90 - * (ND)

108-F G Rm. 128 Cobalt Source Rm.
108-F H Rm. 128 Cobalt Source Rm.

Page 1

108-F I Roof Main exhaust duct (direct 500 d/m) (a)
Pu-238 - 5.3 E 1
239 - 5.8 E 1
Sr 90 - * (ND)

Samples analyzed for gamma emitter using a Ge-(Li) detector and 4,000 channel analyzer.

Pu and Sr results from UST.

APPENDIX B

WORK BREAKDOWN STRUCTURE DICTIONARY FOR 100-F DECOMMISSIONING - ACTIVITY I - "108-F DECOMMISSIONING"

_____ 1 Engineering

This WBS element includes the development of criteria and instructions for site preparation work, preparation of a Project Decommissioning Plan, Project Management Plan, eight Detailed Work Procedures, identification of tools and preparation of a Readiness Review Package.

_____ 2 Site Preparation

Work performed by J.A. Jones Construction Services includes construction of a security fence, preparation of restrooms and a change room. The building's electrical service will also be upgraded.

_____ 3 Laboratory Equipment Removal

This WBS element includes sealing lab rooms to prevent contamination spread and removal and packaging of hoods, sinks and cabinets.

_____ 4 Contaminated Piping Removal

Includes the removal, segmentation and packaging of all contaminated piping.

_____ 5 Ventilation Exhaust (GVAC) Systems Removal

This element includes coating inside surfaces with a fixative or foam, and segmenting and packaging all contaminated ventilation systems.

_____ 6 Decontamination of Structures

Includes the decontamination of the 108-F building to unrestricted use levels.

_____ 7 Tools and Materials

Includes the purchase or rental of all tools used in the decommissioning of the 108-F facility and the purchase of all materials used.

_____ 8 Final Site Survey, Sampling and Report

Includes a comprehensive survey, statistical sampling, sampling analysis and final site radiological condition report.

_____ 9 Health Physics Support

Radiological Chemical technicians and supervisor provided by The Environmental and Occupational Safety Department (E&OS) by work order.

_____ 10 Waste Packaging, Transportation, and Burial

This WBS element consists of container cost, transportation to the 200 West Area and disposal in RHO burial ground.

_____ 11 Building Demolition/Site Restoration

This element consists of the work required to demolish the building and restore the site. Work is planned to be completed during FY 1984-1985.

A UNC structural engineer will certify the integrity of the structure of the 108-F Building during and after the decontamination.

APPENDIX C
DETAILED WORK PROCEDURE

UNC NUCLEAR INDUSTRIES OFFICE OF SURPLUS FACILITIES MANAGEMENT DECOMMISSIONING OPERATIONS **DETAILED WORK PROCEDURE**	PROCEDURE NO. DWP XXX-X FACILITY 108-F DATE ISSUED
PROJECT 108-F Decommissioning Project	SUPERSEDES ISSUE DATE
ACTIVITY Task	ISSUED BY E. W. Powers
APPROVED BY MANAGER DECOMMISSIONING OPERATIONS	APPROVED BY MANAGER ENVIRON. & OCCUP. SAFETY
REVIEWED BY (SERVICING ORGANIZATION)	

ANY DEVIATION FROM THIS PROCEDURE SHALL BE APPROVED BY ALL PERSONS RESPONSIBLE FOR APPROVAL OF THE ORIGINAL PROCEDURE.

1.0 PURPOSE

The purpose of the detailed work procedure is to provide the detail instructions for performing the task identified in the Activity Descriptions.

2.0 PREREQUISITES

The prerequisites provide a list of work to be completed or documents to be prepared before work in the specific area covered by the DWP can begin.

3.0 EQUIPMENT REQUIRED

The equipment required list is not meant to be all inclusive, but indicate the equipment that may be necessary to perform the work in a safe and efficient manner.

4.0 PERSONNEL

The Personnel Section lists the personnel required to perform the work outlined above.

DETAILED WORK PROCEDURE

TITLE
OUTLINE

5.0 HEALTH & SAFETY REQUIREMENTS

5.1 Radiological Controls

Radiological Controls identifies the list of documents and standards necessary to do the work. It also includes a Radiation Work Procedure. The RWP identifies the protective clothing and respiratory protection requirements for all decommissioning personnel. Survey and air sampling requirements are also identified. If changing field conditions dictate, additional RWPs will be issued.

5.2 INDUSTRIAL SAFETY

Industrial Safety requirements specify special or unusual safety hazards and/or conditions which may exist and detail the action required to eliminate or protect against them.

A Job Safety Analysis is performed. (See Appendix D)

6.0 INITIAL LABORATORY CONDITION

This identifies the special conditions prior to starting this task. The information or instructions may have to do with any aspect of the job-tooling, industrial or radiological safety, personnel, etc.

7.0 PROCEDURE

The Procedure describes in a step by step detailed way, how the job is to be accomplished and in what sequence. The steps will be signed and dated after completion.

APPENDIX D
JOB SAFETY ANALYSIS

JOB SAFETY ANALYSIS	JOB DESCRIPTION	JHB NUMBER
	COMPONENT	BUILDING
REVIEWED BY INDUSTRIAL SAFETY	PREPARED BY	DATE
DATE / INITIALS	REVIEW DATES	

SAFETY EQUIPMENT REQUIRED	TOOLS & EQUIPMENT REQUIRED	JOB PREPARATION

HAZARDOUS MATERIALS	RELATED REQUIREMENTS		
	RADIATION WORK PROCEDURE	YES ☐	NO ☐
	NUCLEAR SAFETY SPEC.	YES ☐	NO ☐

JOB STEP	HAZARD	SAFETY RULES AND SAFE PRACTICES

THE JOB SAFETY ANALYSIS

WILL BE PREPAIRED FOR EACH PROCEDURE TASK

PAGE 1 OF ____

JOB STEP	HAZARD	SAFETY RULES AND SAFE PRACTICES

OBSOLETE AS OF MAY 25 1983

DON'T SAY IT --- *Write It!*

DAT

TO Distribution FROM R. A. Paasc

Please remove from UNI-1007 REV1 pages A-5, A-6 and A-7 unda

with the attached pages A-5, A-6 and A-7 dated.

Distribution

JA Adams	RJ Kobelski
JR Bolliger	MW Marquard
PA Carlson	MA Payne
RN Coy	EW Powers
LL Crass	JW STiffler
HL Debban	VR Richards
TE Dabrowski	RA Winship
LE Denton	Document Control
TL Deobald	
JJ Dorian	
JT Irish	

"TO MAKE LIFE LAST, PUT SAFETY FIRST"

FROM U.S. TESTING

May 1980

RADIOLOGICAL CHARACTERIZATION
108-F AFTER CLEAN UP AND A LITTLE DECON.

108-F J Rm. 107 Concrete (hot area) floor by # hood
Pu 238 - 1.3 E-1 pCi/gram
239 - 1.2 EØ1 pCi/gram
Sr 90 - 3.5 E-1 pCi/gram

108-F K Rm. 107 Concrete @ floor center of room (blg. no readings)
Pu 238 - 7.0 E-1 pCi/gram
239 - 6.6 E-1 pCi/gram
SR 90 - 2.5 EØ pCi/gram

108-F L Rm. 205 Concrete @ floor front of 3 hoods (no readings)
Pu 238 - 9.2 E-2
239 - 1.8 E-1
Sr 90 - 1.1 E-1

108-F M Rm. 206 Concrete from beneath sink (direct 2,000 c/m no alpha)
Pu 238 - 8.3 E-1
239 - 6.3 E-1
Sr 90 - 1.8 E-1

108-F N Rm. 206 several pieces of tile (2,000 c/m no alpha)
Pu 238 - 1.6 EØ
239 - 3.5 E-1
Sr 90 - 1.7 E-2

OBSOLETE AS OF MAY 25 1983

108-F C Rm. 107 Wall next to hood (no readings/incl. smear)
Pu 238 - 8.8 EØ pCi/100 cm^2
239 - 1.1 EØ pCi/100 cm^2
Sr 90 - 6.5 EØ pCi/100 cm^2

108-F D Rm. 402 Sink (direct 10,000 d/m (a))
Pu 238 - 9.1 E-1 pCi/100 cm^2
239 - 3.6 E-2 pCi/100 cm^2
Sr 90 - * (ND) pCi/100 cm^2

108-F E Rm. 403 Open drain line (removed sink) direct 50,000 d/m
Pu 238 - 3.5 E-1 pCi/100 cm^2
239 - 1.2 E-3
gross alpha - 1.1 E-3
Sr 90 - * (ND)

108-F F Rm. 304 Liquid waste disposal funnel direct 500 d/m (a)
Pu 238 - 1.1 E-2 pCi/100 cm^2
239 - 2.1 E-1 pCi/100 cm^2
Sr 90 - * (ND)

108-F G Rm. 124 Cobalt Source Rm. Page 1
108-F H Rm. 124 Cobalt Source Rm.

108-F I Roof Main exhaust duct (direct 500 d/m) (a)
Pu-238 - 5.3 E-1
239 - 5.8 E-1
Sr 90 - * (ND)

Samples analyzed for gamma emitter using a Ge-(Li) detector and 4,000 channel analyzer.

Pu and Sr results from WST.