START

0034404

35

ENGINEERING CHANGE NOTICE

Page 1 of 2

1. ECN № 171183

Proj. ECN

2. ECN Category (mark one)	3. Originator's Name, Organization, MSIN, and Telephone No.		4. Date
Supplemental []	W. E. Davis, B Plant Environmental Engineering, S6-70, 2-0014 16410		11/16/92
Direct Revision [X]	5. Project Title/No./Work Order No.	6. Bldg./Sys./Fac. No.	7. Impact Level
Change ECN []	D6T11	N/A	3EQ
Temporary []	8. Document Numbers Changed by this ECN (includes sheet no. and rev.)	9. Related ECN No(s).	10. Related PO No.
Standby []	WHC-SD-WM-PLN-037, Rev. 1	N/A	N/A
Supersedure []			
Cancel/Void []			

11a. Modification Work	11b. Work Package No.	11c. Modification Work Complete	11d. Restored to Original Condition (Temp. or Standby ECN only)
[] Yes (fill out Blk. 11b)	N/A	N/A	N/A
[X] No (NA Blks. 11b, 11c, 11d)		Cog. Engineer Signature & Date	Cog. Engineer Signature & Date

12. Description of Change

See Record of Revision

FEB 1994 RECEIVED EDMC

13a. Justification (mark one)							
		Criteria Change	[]	Design Improvement	[X]	Environmental	[]
As-Found	[]	Facilitate Const.	[]	Const. Error/Omission	[]	Design Error/Omission	[]

13b. Justification Details

Reflect review comments and to conform with PFP and U03 SAPs

14. Distribution (include name, MSIN, and no. of copies)

See distribution sheet

RELEASE STAMP

34

OFFICIAL RELEASE BY WHC

DATE DEC 02 1992

Sta #2

9413149.0566

A-7900-013-1 (11/88)

ENGINEERING CHANGE NOTICE

1. ECN (use no. from pg. 1) 171183

15. Design Verification Required	16. Cost Impact				17. Schedule Impact (days)	
	ENGINEERING		CONSTRUCTION			
[] Yes	Additional	[] $ N/A	Additional	[] $ N/A	Improvement	[] N/A
[X] No	Savings	[] $	Savings	[] $	Delay	[]

18. Change Impact Review: Indicate the related documents (other than the engineering documents identified on Side 1) that will be affected by the change described in Block 12. Enter the affected document number in Block 19.

SDD/DD	[]	Seismic/Stress Analysis	[]	Tank Calibration Manual	[]
Functional Design Criteria	[]	Stress/Design Report	[]	Health Physics Procedure	[]
Operating Specification	[]	Interface Control Drawing	[]	Spares Multiple Unit Listing	[]
Criticality Specification	[]	Calibration Procedure	[]	Test Procedures/Specification	[]
Conceptual Design Report	[]	Installation Procedure	[]	Component Index	[]
Equipment Spec.	[]	Maintenance Procedure	[]	ASME Coded Item	[]
Const. Spec.	[]	Engineering Procedure	[]	Human Factor Consideration	[]
Procurement Spec.	[]	Operating Instruction	[]	Computer Software	[]
Vendor Information	[]	Operating Procedure	[]	Electric Circuit Schedule	[]
OM Manual	[]	Operational Safety Requirement	[]	ICRS Procedure	[]
FSAR/SAR	[]	IEFD Drawing	[]	Process Control Manual/Plan	[]
Safety Equipment List	[]	Cell Arrangement Drawing	[]	Process Flow Chart	[]
Radiation Work Permit	[]	Essential Material Specification	[]	Purchase Requisition	[]
Environmental Impact Statement	[]	Fac. Proc. Samp. Schedule	[]		[]
Environmental Report	[]	Inspection Plan	[]		[]
Environmental Permit	[]	Inventory Adjustment Request	[]		[]

19. Other Affected Documents: (NOTE: Documents listed below will not be revised by this ECN.) Signatures below indicate that the signing organization has been notified of other affected documents listed below.

Document Number/Revision	Document Number/Revision	Document Number Revision

20. Approvals

	Signature	Date		Signature	Date
OPERATIONS AND ENGINEERING			ARCHITECT-ENGINEER		
Cog Engineer	W. E. Haines	11/16/92	PE		
Cog. Mgr.	D. Halgren	11/16/92	QA		
QA	D McAfee	11/16/92	Safety		
Safety			Design		
Security			Environ.		
Environ.	S. A. Burns	11/16/92	Other		
Projects/Programs					
Tank Waste Remediation System					
Facilities Operations			DEPARTMENT OF ENERGY		
Restoration & Remediation			Signature or Letter No.		
Operations & Support Services					
IRM			ADDITIONAL		
Other					

9413149.0567

SUPPORTING DOCUMENT

1. Total Pages 32

2. Title

B Plant Cooling Water Sampling and Analysis Plan

3. Number

WHC-SD-WM-PLN-037

4. Rev No.

2

5. Key Words

Cooling Water, Sampling, Chemical, and Radiological Analysis

APPROVED FOR PUBLIC RELEASE 11/23/92 V. Birkland

6. Author

Name: William E. Davis

William E. Davis

Signature

Organization/Charge Code

16410/D607B

7. Abstract

A sampling and analysis plan for B Plant Cooling Water is described. The purpose of the plan is to characterize chemical and radiological content of the liquid effluent and to confirm the streams designation as not a dangerous waste.

8. PURPOSE AND USE OF DOCUMENT - This document was prepared for use within the U.S. Department of Energy and its contractors. It is to be used only to perform, direct, or integrate work under U.S. Department of Energy contracts. This document is not approved for public release until reviewed.

PATENT STATUS - This document copy, since it is transmitted in advance of patent clearance, is made available in confidence solely for use in performance of work under contracts with the U.S. Department of Energy. This document is not to be published nor its contents otherwise disseminated or used for purposes other than specified above before patent approval for such release or use has been secured, upon request, from the Patent Counsel, U.S. Department of Energy Field Office, Richland, WA.

DISCLAIMER - This report was prepared as an account of work sponsored by an agency of the United States Government. Neither the United States Government nor any agency thereof, nor any of their employees, nor any of their contractors, subcontractors or their employees, makes any warranty, express or implied, or assumes any legal liability or responsibility for the accuracy, completeness, or any third party's use or the results of such use of any information, apparatus, product, or process disclosed, or represents that its use would not infringe privately owned rights. Reference herein to any specific commercial product, process, or service by trade name, trademark, manufacturer, or otherwise, does not necessarily constitute or imply its endorsement, recommendation, or favoring by the United States Government or any agency thereof or its contractors or subcontractors. The views and opinions of authors expressed herein do not necessarily state or reflect those of the United States Government or any agency thereof.

9. Impact Level 3EQ

10. RELEASE STAMP

OFFICIAL RELEASE BY WHC 34

DATE DEC 02 1992

Sta #2

9413149.0568

WHC-SD-WM-PLN-037
Rev 2

TRADEMARK DISCLAIMER

Reference herein to any specific commercial product, process, or service by trade name, trademark, manufacturer, or otherwise, does not necessarily constitute or imply its endorsement, recommendation, or favoring by the United States Government or any agency thereof or its contractors or subcontractors.

This report has been reproduced from the best available copy.

Printed in the United States of America

DISCLM-4.CHP (1-91)

9413146.0549

RECORD OF REVISION

(1) Document Number: WHC-SD-WM-PLN-037

Page a

(2) Title: B Plant Cooling Water Sampling and Analysis Plan

CHANGE CONTROL RECORD

(3) Revision	(4) Description of Change - Replace, Add, and Delete Pages	Authorized for Release (5) Cog. Engr.	(6) Cog. Mgr. Date
	(7)		
	EDT 157167 04/16/92		
RS 2	Complete revision with response added from regulators.	W C Davis	12/2/92
	Revised per ECN-171183		

9413149.0570

A-7320-005 (08/91) (EF) WEF168

WHC-SD-WM-PLN-037, Rev. 2

B PLANT
COOLING WATER
SAMPLING AND ANALYSIS PLAN

November, 1992

PREPARED BY

W. E. Davis

B Plant Environmental Engineering

WESTINGHOUSE HANFORD COMPANY
HANFORD OPERATIONS AND ENGINEERING CONTRACTOR
FOR THE
U.S. DEPARTMENT OF ENERGY

9413146.0571

9413149.0572

TABLE OF CONTENTS

A. BACKGROUND 1

B. SITE DESCRIPTION 2

C. RESPONSIBILITIES 12

D. SAMPLING LOCATION AND FREQUENCY 13

E. SAMPLE IDENTIFICATION 15

F. SAMPLING EQUIPMENT AND PROCEDURES 15

G. SAMPLE HANDLING AND ANALYSIS 17

H. REFERENCES 21

APPENDIX 22

ACRONYMS/ABBREVIATIONS

ASTM	American Society for Testing Material
BCE	B Plant Chemical Sewer
CBC	B Plant Cooling Water
CFR	Code of Federal Regulations
DOE	Department of Energy
EDMC	Environmental Data Management Center
EPA	U.S. Environmental Protection Agency
QAPP	Quality Assurance Program Plan
SAP	Sampling and Analysis Plan
WAC	Washington Administrative Code
WESF	Waste Encapsulation and Storage Facility
WHC	Westinghouse Hanford Company
WM	Waste Management

9413149.0573

A. BACKGROUND

A.1 Introduction

The Sampling and Analysis Plan (SAP) is designed to document the requirements and procedures for implementing the Liquid Effluent Sampling Program for B Plant Cooling Water (CBC). This CBC SAP will be revised as necessary to ensure that it will document any changes in sampling and analysis requirements for the CBC effluent.

The requirements in this document are in addition to those in the Liquid Effluent Sampling Quality Assurance Program Plan (QAPP) (WHC 1992b). The QAPP provides the Hanford Site requirements for liquid effluent characterization sampling activities. These include: overall scope and direction to the sampling activities, the control of samples, the laboratory analyses, the processing of data, the control of data, the quality assurance requirements, and corrective actions.

The SAP is a facility specific document for describing how the requirements of the QAPP shall be implemented for sampling activities at the facility. The SAP provides a general description of the facility and the liquid effluent to be characterized and it identifies procedures that will be used to execute the work needed to implement the QAPP requirements. In addition, the SAP describes how the liquid effluent characterization samples and data will be integrated with an existing liquid effluent monitoring program.

The QAPP was written to allow each facility some flexibility in accommodating its requirements in surveying radiation sources and choosing analytes for analysis. The primary reason for this flexibility is because of differences in procedures used for surveying radiation sources at each facility and the differing makeup of chemicals used in each facility. This SAP identifies facility specific exceptions to the QAPP, which include changes to the required list of analytes. However, the QAPP requirements for chain-of-custody, laboratory analysis, validation of data, control of records, and corrective actions are not modified by this SAP.

The SAP may affect the routine liquid effluent monitoring program. The routine monitoring program was implemented to meet the requirements of the Department of Energy (DOE) Order 5400:1. The DOE Order requires each facility develop a Facility Effluent Monitoring Plan (WHC 1991c). The routine monitoring program complies with the requirements in the Quality Assurance Program Plan for the Facility Effluent Monitoring Plan, WHC-EP-0446. The existing routine monitoring plans and procedures will not be altered unless the liquid effluent characterization sampling in this SAP has a significant discrepancy in analyte concentration data as compared to the data obtained from routine monitoring.

9413149.0574

From 1992 to 1995 the B-Plant Chemical Sewer (BCE) effluent is combined with the CBC effluent. A separate sampling plan has addressed sampling the BCE effluent (WHC 1992a). However, since the two effluent streams are combined and are monitored as a combined stream, the sampling plans for both effluent will be coordinated to extract the maximum information on the chemical and radiological content of each effluent and the combined effluents by sampling the two streams at the same time.

A.2 Sampling Objectives

This sampling plan provides information on how the B Plant Cooling Water liquid effluent will be sampled and analyzed to accomplish the following:

1. Provide characterization data for the CBC liquid effluent stream during different facility operational configurations.

2. Determine the waste designation for the B Plant Cooling Water per WAC 173-303-070.

In addition, the data collected by this sampling plan will be available for use: to provide confirmatory data for the WAC 173-240 Engineering Report to support the Best Available Technology-Economically Achievable evaluations and liquid effluent treatment system design, and to provide data on chemical and radiological constituents in order to determine loading and rate of migration to support the assessment of impacts on continued discharge.

Quality Assurance objectives associated with the sampling characterization for this sampling plan are described in the Liquid Effluent Sampling Quality Assurance Program Plan (QAPP) (WHC 1992b).

B. SITE DESCRIPTION

This section describes the B Plant Facility that produces the CBC liquid effluent, the CBC liquid effluent stream and its sources, and the disposal site receiving the CBC liquid effluent.

B.1 B Plant Facility Description

The B Plant Facility is located in the 200 East area at Hanford. This facility contains two major operating system areas, the Waste Encapsulation and Storage Facility (WESF) located in the 225-B Building and the 221-B Building. Both operating system areas are required to carry out B Plant Facilities's mission which is to ensure safe storage and management of radiological inventories. In 225-B the inventory consist of Strontium and Cesium capsules while the 221-B Building has a substantial radiological inventory remaining from previous production campaigns. Although no production activities are currently taking place at this facility, several operating systems are required to accomplish the B Plant Facility mission.

The major operating systems contributing to the CBC liquid effluent from the B Plant Facility are the systems for cooling the 221-B Process Tanks and WESF Pool Cells, and the deep well emergency backup pumps.

B.2 Stream Description

The CBC is an active stream and receives the majority of the effluent from raw water discharge from a single pass through the B Plant Process Tanks cooling coils and 225-B Pool Cells heat exchangers. In addition, the CBC receives raw water from the testing of deep well emergency backup pumps and steam condensate from minor contributors. This effluent stream produces a flowrate of approximately 1750 gpm (WHC 1990c). However, from 1992 to 1995 the B Plant Chemical Sewer (BCE) effluent with a flowrate of approximately 190 gpm (WHC 1990c) is joined to the CBC to produce a combined flowrate of approximately 1940 gpm that is discharged to the 216-B-3 Pond. The majority of this combined effluent, approximately 70%, is from the single pass-through cooling water through heat exchangers in the 225-B Pool Cells.

Raw water is supplied to B Plant from two sources: a reservoir in 200 East and an emergency source from two emergency wells. The raw water from the Columbia River is pumped to the 282-E Pumphouse and reservoir in the 200 East Area. From the reservoir, the water is pumped north to a backflow preventer building, 294-B (Figure 1, Page 4). North of 294-B the raw water header separates with a 10-in.-dia. header leg going west and a 12-in.-dia. header leg going north. The raw water leg routed west passes south of the 222-B and 224-B Buildings then turns north passing west of the 224-B and 225-B Buildings and then turns east north of the 221-B and 225-B Buildings. From this header three smaller supply headers, a 3-in., 4-in., and 10-in.-dia. enter 225-B on the north, east, and west sides respectively. Also from this header, a 10" supply header enters the northwest corner of 221-B Building. This 221-B header enters the west end of the 221-B Electrical Gallery near Cell 40.

9413146.0576

Figure 1. CBC and BCE Effluents

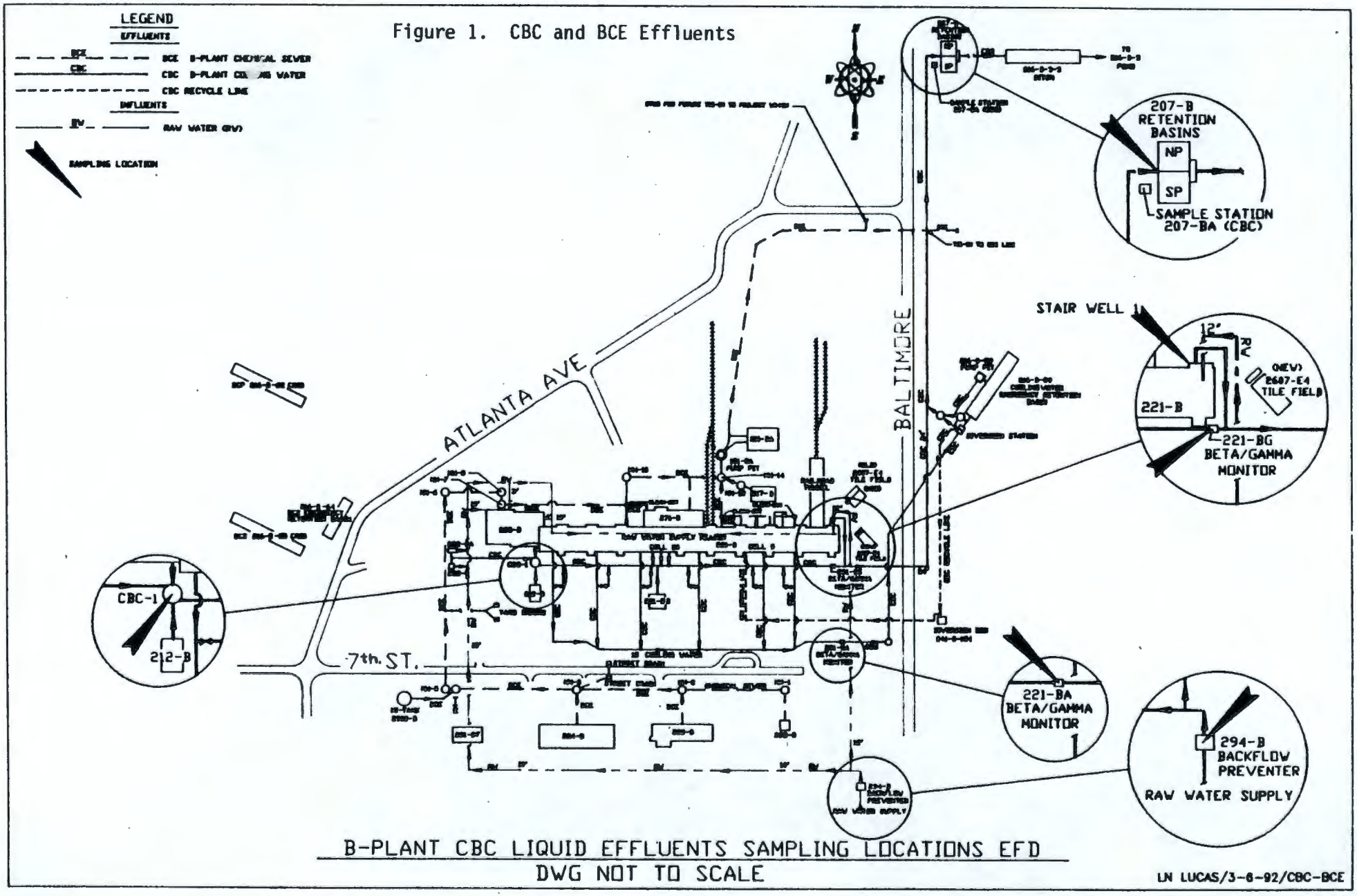

The raw water leg routed north from 294-B enters the northeast corner of 221-B Building in the Pipe Gallery. This header then reduces from 12-in-dia. to a 10-in.-dia. header in the Operating Gallery. The header runs the entire length of the 221-B Building and supplies cooling water to the process cell vessels cooling coils. This header is a common header with the 10-in-dia. raw water header that enters the west end of the Electric Gallery of the 221-B Building.

In the event of loss of raw water supplied from the 282-E Facility reservoir, two emergency wells located west of 225-B in 282-B and 282-BA can supply sufficient raw water for cooling to the 221-B and 225-B Buildings.

Two CBC discharge lines serve 225-B and 221-B Buildings, a 24-in.-dia. and a 15-in.-dia. lines running parallel south of B Plant. The cooling water from the heat exchangers in 225-B Pool Cells and in the closed loop cooling system, water from 212-B drains, raw water from testing the pumps on the two emergency wells, condensate from three condensers; E-20-3, E-22-4, and E-24-4, and some small miscellaneous sources discharge to the 24-in.-dia. line.

The cooling water from the Process Tank cooling coils in 221-B normally discharges to the 15-in-dia. line. However, this discharge can be diverted to the 24-in-dia. line. Valves located on lines draining the subheaders from the 221-B Building can be opened to divert the effluent to the 24-in.-dia. line (see Figure 2, pages 7 & 8).

Both the 24-in. and the 15-in.-dia. lines route the effluent east and then to the north east of B Plant where the 15-in.-dia. joins the 24-in.-dia. line just north of the 216-B-59 Crib (see Figure 1, page 4). This line continues north where it is joined with the B Plant Chemical Sewer (BCE) liquid effluent. The combined stream, BCE and CBC, discharges into the 207-B Retention Basin. From the Retention Basin the effluent is discharged to the 216-B-3 Pond via the 216-B-3-3 Ditch. (Note: The BCE liquid effluent sampling plan is described in the B Plant Chemical Sewer Sampling and Analysis Plan (WHC 1992a) and sampling the BCE will not be covered in this sampling plan).

Portions of the CBC liquid effluent stream have the potential for radiological contamination. Possible contamination of the effluent could occur in the 225-B Pool Cell heat exchangers and in the cooling water coils for the Process Tanks cooling coils in 221-B (Figure 3 and 4, pages 9 & 10). To minimize possible contamination of the CBC effluent, these cooling streams are pressurized with respect to the possibly contaminated solutions. If a leak occurs in the pressurized line, the cooling water in the heat exchanger or coils would leak out into a pool cell or process vessel.

The major contributors to the 15-in-dia. line have a single barrier, the pressurized coils, between the raw water and radiological fluids in the tanks. However, the major contributor to the 24-in-dia. line has three barriers between the radiological material stored in the capsules and the cooling water. The first two barriers are the inner and outer walls of the capsules. The third is pressurized water in the pool cell heat exchangers.

However, should the CBC stream become contaminated, on line Beta and Gamma monitors located on the 24-in.-dia. line in 221-BG and on the 15-in.-dia. line in 221-BA would detect the contamination. The 24-in-dia line would be diverted to either the north or south basin in 207-B while the 15-in.-dia would be diverted to the 216-B-59 Emergency Retention Basin (Figure 1, page 4). Contaminated water in 207-B basins could either be diverted to 216-B-63 ditch or be trucked back to B Plant. Current procedures allow contaminated water in the 216-B-59 Retention Basin to be diverted back to B Plant.

The volume of the combined CBC and BCE effluent is approximately 2.9×10^6 gal/d (WHC 1990a and 1990b), 1,940 gpm, with approximately 90% of the volume from the CBC effluent and 10% from the BCE effluent. The major contributor to the combined effluent is the cooling water for WESF pool cells, 70% (Table 1). The second major contributor, 15% of the volume, is from the cooling water for the Process Tanks cooling coils in 221-B. The remaining 5% is from miscellaneous sources.

9413149.0579

Figure 2. CBC Stream Flow Schematic

a) 24-in.-dia Line

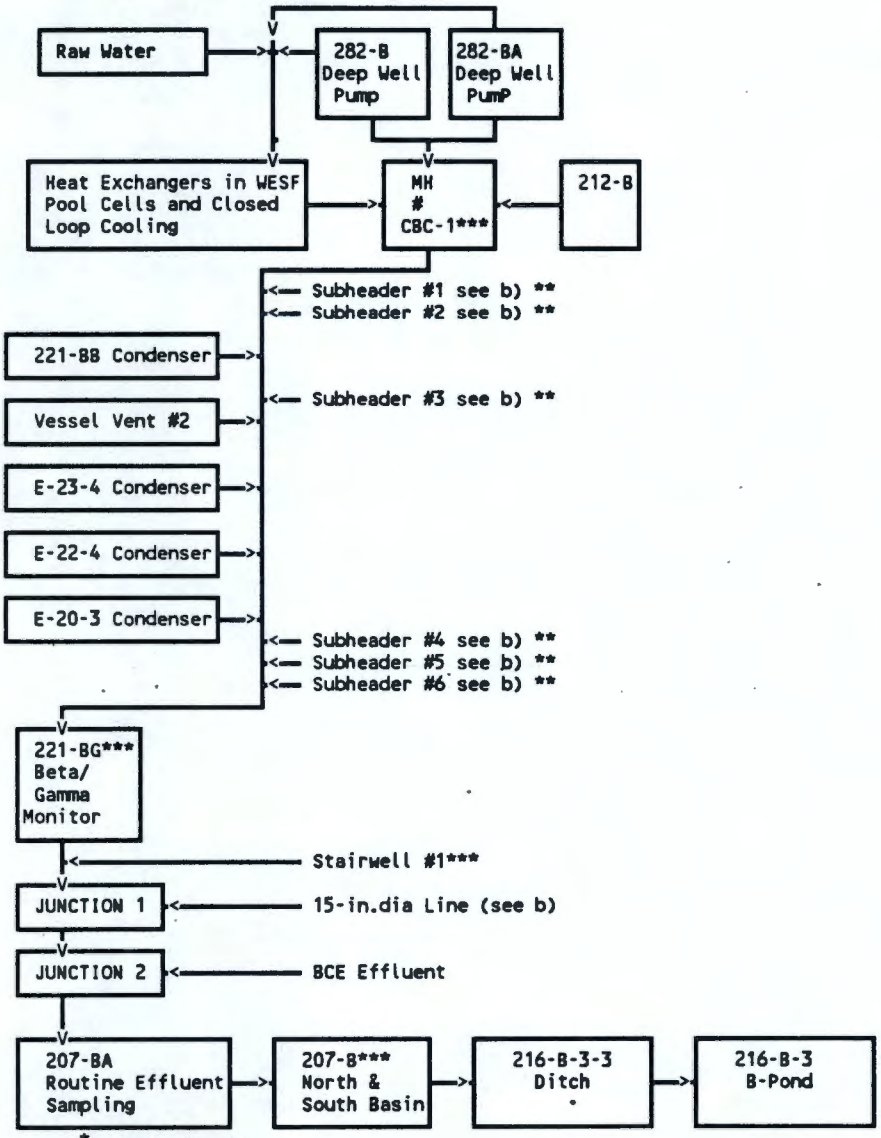

* Manhole-MH
** Normally diverted to the 15-in-dia. line
*** Sampling Site

Figure 2 continued on next page

9413149.0580

b) 15-in.-dia Header

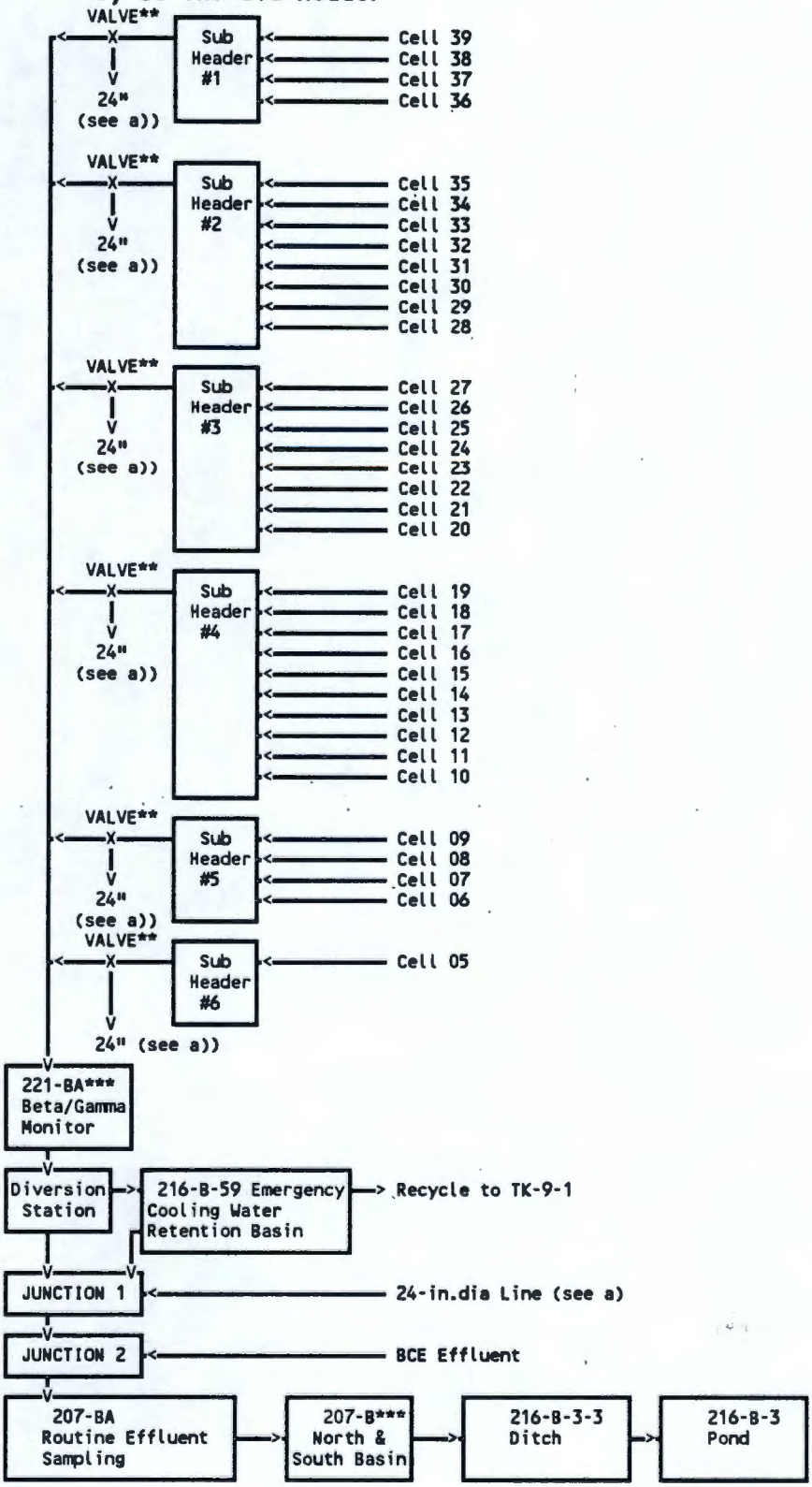

** Normally diverted to 15-in-dia. line
*** Sampling Site

9413149.0581

Figure 3. WESF Pool Cell Heat Exchanger

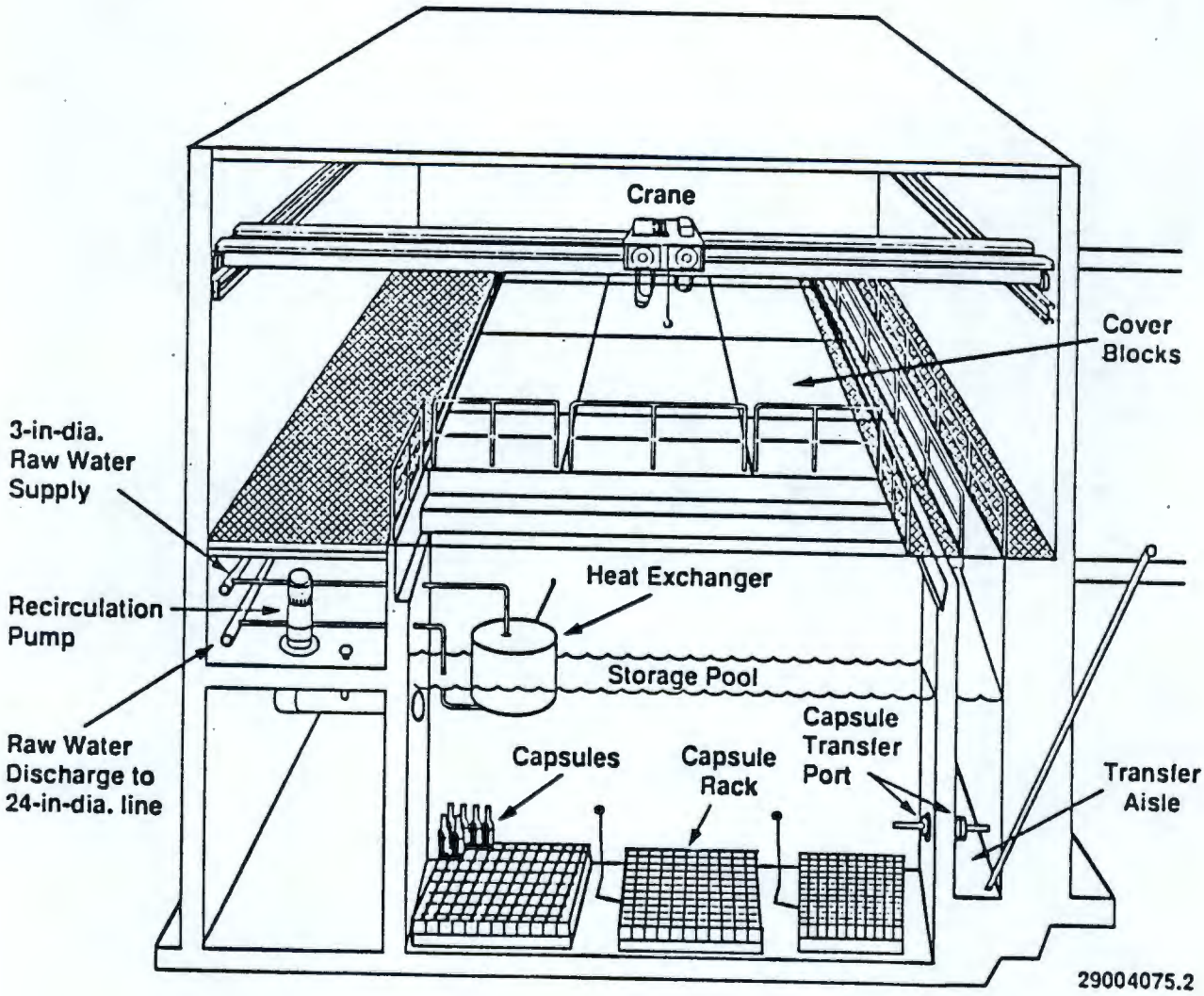

9413149.0582

Figure 4. B Plant Process Vessel Cooling Coils

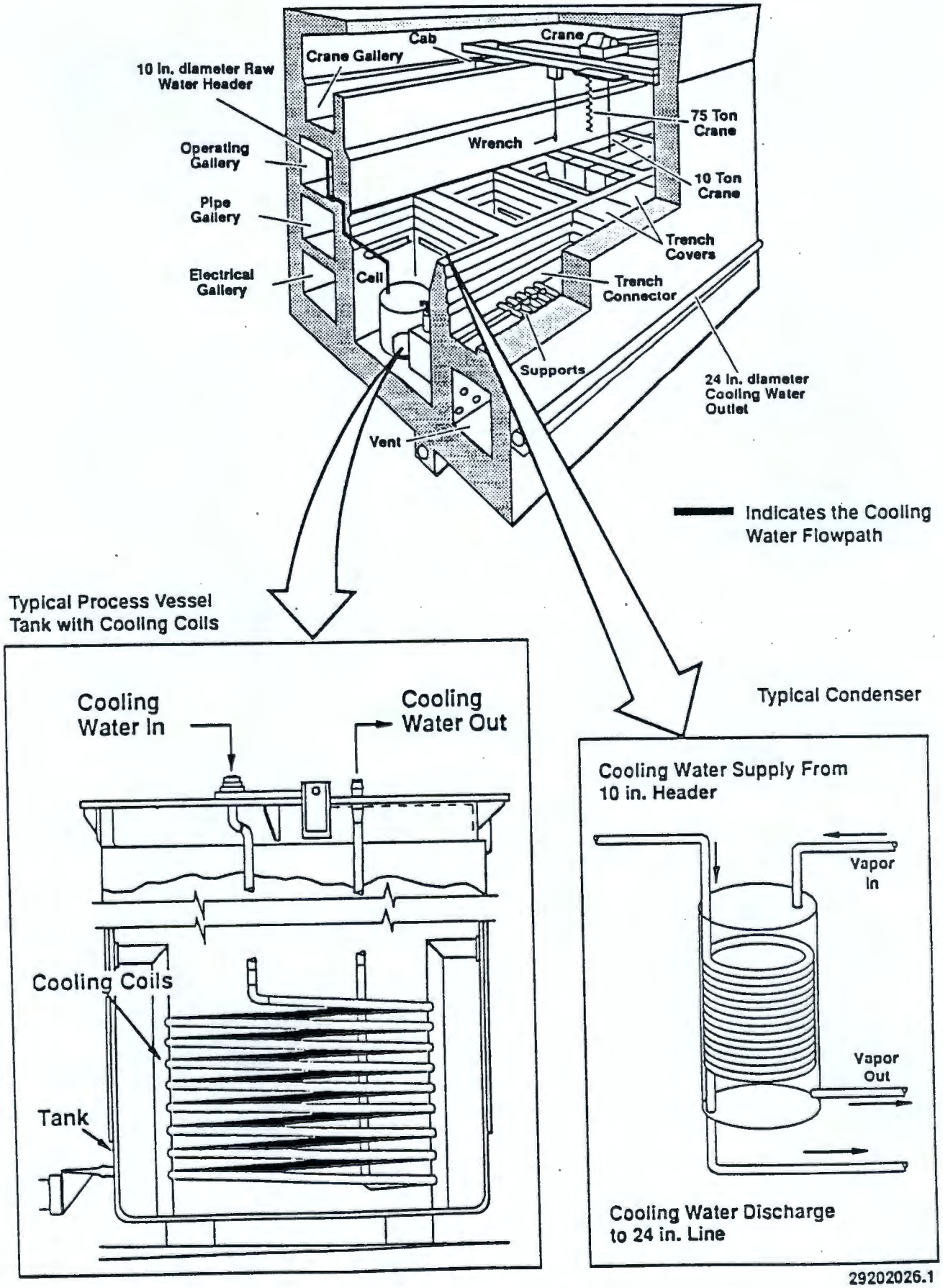

9413149.0583

Table 1. Major Volume Contributors to The Combined CBC and BCE

Contributors	Present Per Cent of Total Volume (Estimated)
225-B Cooling Water For Pool Cells Heat Exchangers and Closed Loop Cooling	70
BCE Liquid Effluent	10
Cell 20, 22, and 23 Condensers	<1
Raw Water From Testing The 282-B/BA Emergency Raw Water Wells	<1
Cooling Water For Process Tanks Coils	15
Miscellaneous	5
TOTAL =	100

9413149.0584

B.3 207-B Retention Basin, 216-B-3-3 Ditch and 216-B-3 Pond Description

After the BCE effluent combines with the CBC effluent, the combined effluent discharges into the 207-B retention basins, North or South Basin, and then into a 4000' 22" underground polyethylene pipe to a concrete diversion. From the diversion the waste stream travels 1000' in a 22" underground polyethylene pipe to the 216-B-3-3 Ditch. This ditch discharges into the 216-B-3 Pond, B Pond.

The 216-B-3 Pond, the first lobe, was placed into service in 1945 and covers a surface area of approximately 35 acres with a depth from 2 to 20 ft deep. Overflow from this first lobe runs into the second lobe, 216-B-3A or A lobe. This lobe covers approximately 11 acres and is about 2.0 ft deep. Overflow from A lobe runs into C lobe, which has a designed surface area of 41 acres. This lobe has eight, parallel trenches, approximately 8 to 14 ft wide and 4 ft deep, cut into the bottom of it to increase percolation into the soil. At the present time, water covers about 1/3 the trench area within the lobe.

Flow between the ponds or lobes is via galvanized, corrugated, steel pipes, and is controlled by downward-opening slide gates. Liquid levels within the ponds are measured with staff gages while the flowrate in the 216-B-3-3 Ditch is measured with a flume and flowmeter. The pond liquid levels, gate settings, and cumulative flowmeter readings are recorded daily while the flowrate data from the 216-B-3-3 Ditch is recorded on a stripchart.

A network of groundwater monitoring wells has been established around the B Pond System to measure water levels, obtain groundwater samples, and evaluate aquifer properties.

C. RESPONSIBILITIES

The responsibility descriptions below are related to activities occurring at B Plant. Overall responsibilities covering other areas are the same as found in the QAPP.

B Plant Environmental Engineering will:

- Prepare and revise the Sampling and Analysis Plan.
- Ensure procedures are updated to support the sampling activities.
- Provide the Sampling Task Leader.
- Initiate scheduling of personnel required for sampling.
- Provide technical support for sampling activities.
- Review data logs and sampling activities.
- Surveil chain-of-custody activities.
- Review liquid effluent grab sampling data for completeness and consistency.
- Ensure liquid effluent grab sampling data and flow information are transferred to the Effluent Treatment Programs for filing with Environmental Data Management Center (EDMC).
- File routine sample data at B Plant and the EDMC.

B Plant Operations will:

- Provide a trained operator for escort during liquid effluent characterization sampling.
- Provide sampling and transportation of routine samples.
- Complete sample log sheets for routine samples.
- Assist in moving liquid effluent characterization samples through radiation zone barriers.

B Plant Health Physics will:

- Provide a Health Physics Technician for radiation surveying of liquid effluent characterization sample packages.
- Provide the Radiation Work Permit instructions for zone entry.
- Verify radiation worker training requirements of sampling personnel.

B Plant Facility Quality Assurance will:

- Provide surveillance of the liquid effluent characterization sampling program.

9413149.0585

Office of Sampling Management will:

- Identify and approve the contracted laboratory to perform analysis of samples.
- Monitor the contracted laboratory for quality performance.
- Act as interface between the Sampling Task Leader and the contracted laboratory.
- Verify that all laboratory results are received.
- Validate contracted laboratory data packages.

Sampling and Mobile Laboratories will:

- Provide one sampler with a WHC Certificate of Qualification from the Sampling and Mobile Laboratories Organization. The certified sampler shall direct liquid effluent characterization sampling, packaging, and shipping.
- Prepare the Plant liquid effluent characterization sampling procedure.
- Document sampling activities in a log book.
- Transport liquid effluent characterization samples to laboratory or shipping center.
- Initiate "Chain-of-Custody" documentation for liquid effluent characterization samples.
- Package liquid effluent characterization samples for shipping.
- Ensure copies of field logs and other sampling data sheets are filed with Sampling Task Leader.

D. SAMPLING LOCATION AND FREQUENCY

This section describes sampling location and frequency of characterization sampling for the CBC effluent stream.

D.1 Sampling Location

The characterization grab sampling of the combined BCE and CBC effluent will be performed at the 207-B Basin, since this location is downstream from all contributors. In addition, two samples are necessary to document the 24-in-dia. effluent and the 15-in-dia. effluent. A sample representative of the 24-in-dia. effluent will be taken at 221-BG or manhole CBC-1 (see Figure 1, page 4, and appendix A, page 23-26) while a sample taken at 221-BA will represent the 15-in-dia. effluent. The alternate sampling location for the 24-in-dia. effluent at manhole CBC-1 can be used only when the condensers E-23-4, E-22-4, E-20-3 and the condenser in 221-BB are not operating. Since a sampling position of the combined 24-in-dia. line does not exist downstream of where Stairwell #1 effluent enters the line, a sample will be taken of the Stairwell #1 steam condensate where it enters the drain. However, if no steam condensate is present during the time of sample collection, the stairwell #1 sample will be omitted.

The raw water background characterization grab sample will represent the input raw water stream to B Plant. This characterization grab sample (shown in Table 2) will be taken at 294-B. Since characterization sampling will also be performed for the BCE effluent stream (WHC 1992a) at the same time as the CBC sampling, the raw water background characterization grab sample will represent both streams.

Table 2. Characterization Sampling Locations

Sample	Sample Location	Description
1.	207-B	Combined CBC and BCE effluent stream*
2.*	294-B	Raw Water Supply to B Plant
3.	221-BA or CBC-1	24-in-dia. effluent
4.	221-BG	15-in-dia. effluent
5.**	Stairwell #1	Steam Condensate in Stairwell #1

* The BCE samples specified in B Plant Chemical Sewer Sampling and Analysis Plan (WHC 1992a) will be taken at the same time as CBC samples.

** Flowrate from steam heating is less than 0.1 gpm during winter and essentially 0 gpm in summer.

D.2 Frequency

The set of characterization samples listed in Table 2 will be taken to characterize the effluent stream. Additional characterization samples will be collected, as determined by the CBC cognizant engineer, to obtain data representative of changes in the process operational conditions.

Following the initial characterization of the CBC stream, the additional characterization samples of the inflow raw water at 294-B, at Stairwell #1, 221-BA, and 221-BG will not be performed unless dilution of a source stream is suspected. The characterization sample characterizing the CBC and BCE combined effluent will be taken at the same time twice annually. This twice annual sampling will continue for the BCE and CBC until the effluents are separated in 1995.

Characterization sampling will be initiated within 3 months after the regulators (Environmental Protection Agency/Washington State Department of Ecology) approve this plan.

Weekly routine samples to document total beta, total alpha, and pH of the combined CBC and BCE effluent are taken at 207-BA by a flow proportional sampler.

9413149.0587

E. SAMPLE IDENTIFICATION

E.1 Liquid Effluent Characterization Sample Labeling

Sample labels for liquid effluent characterization samples shall be furnished by the sampling team from the Sampling and Mobile Laboratories. The labels will require the following information to be recorded by a member from the sampling team: identification of the person in charge of collecting the sample; unique sample identification number; date and time the sample was collected; the place the sample was collected; the stream identification; preservatives added; and the analysis to be performed on the sample. The unique sample number shall be obtained from the Hanford Environmental Information System. In addition, each bottle shall be identified with a bar code sticker attached to the bottle by the bottle manufacturer. The bar code shall identify the bottle lot number and individual bottle number.

E.2 Routine Sample Labeling

The numbers for the labels are assigned by the laboratory doing the analysis according to Procedure LO-090-304, "Receiving, handling and Disposal of Routine Laboratory Process Samples".

The numbers are assigned as follows:

B - (4 digit serial number)

B = B Plant designator
Serial number = computer generated sequential number

F. SAMPLING EQUIPMENT AND PROCEDURES

F.1 Liquid Effluent Characterization Samples

The liquid effluent characterization sampling will comply with an approved procedure prepared for the sampling of the CBC liquid effluent stream. This procedure will be based on recommended practices found in SW-846, Chapter Nine. This procedure will identify specific sampling requirements including: sample locations, description of the sampling equipment, and specific steps for collecting the sample. Sampling will be surveilled at random by a cognizant Quality Assurance person.

Sample bottles shall be new commercially available certified precleaned containers. The certificate of precleaned condition shall accompany the containers.

Where pipe taps are not available, grab samples will be taken in a manner similar to the ASTM E300-73, EPA-600/4-79-0929, Bottle On A String, an SW-846 (EPA 1990) approved procedure. Grab sampling of the combined CBC and BCE effluent will use a Long Handled Dipstick for lowering the collecting device into the stream. This method of drawing the sample will be substituted for the Bottle On A String method and will be adapted to the sampling point.

Preservative required for liquid effluent characterization samples will be vendor supplied and added to the containers in a laboratory environment prior to being taken to the field. The caps will be sealed to the containers with tamper evident tape.

The samples shall be cleaned and surveyed for surface radioactivity. The samples will packaged in accordance with EII 5.11 "Sample Packaging and Shipping". The samples will be placed in a cooler containing ice. The cooler shall become part of the sample packaging.

Field logs will be completed per the "Environmental Investigations and Site Characterization Manual", WHC-CM-7-7, procedure EII 1.5 "Field Logbooks" at the time of sampling by the sampling team. A field logbook shall be maintained which contains information pertinent to the sampling and the information shall be quality record documents.

Sampling results after validation will be transferred to Work Control and Data Management for inclusion in the EDMC files and to be prepared for public release.

F.2 Routine Samples

B Plant Operations is responsible for collecting the routine samples for the combined BCE and CBC effluent at 207-BA. Operators are trained using WHC procedure BO-018-040, "Perform 207-B Operations and Sampling" and WHC Procedure BO-080-008, "Transport Samples in N-55 Overpack". Two samples are taken using one 100 ml and two 1 liter or four 500 ml new polyethylene bottles.

Labels on the sample bottles contain; sample point identification, a unique sample number, date, and time. The samples are then taken to the designated on-site laboratory for analysis.

A Cooling Water Data Sheet 2 is filled out at the time of sampling with the time of sampling, the date, stream totalizer reading, and the operator's initials. In addition, the flow totalizer reading for the BCE is entered on Chemical Sewer Data Sheet with time, date, stream totalizer reading, and the operator's initials. The completed data sheets are stored by Operations. The samples are analyzed for Total Alpha, Total Beta, and pH. When the results of the complete analysis are received, they are reviewed and checked by B Plant Environmental Engineering for accuracy and completeness.

The reviewed sample results will be sent to Work Control and Data Management for inclusion in the EDMC files, and to Effluent and Emission Monitoring for their compilation in an annual report for the Hanford Site of environmental releases.

G. SAMPLE HANDLING AND ANALYSIS

Characterization samples will be initially analyzed for analytes listed in 40 CFR 264 Appendix IX (EPA 1991) using analytical method , precision and accuracy listed in the QAPP Appendix A, Table A-1 (WHC 1992b). The list of analytes are noted in Table 3.

Table 3. Analytical Methods

Analyte	Method of Analysis
Sulfides	9030
Semivolatile Organics	8270
Volatile Organics	8240
Chlorinated herbicides	8150
Organophosphorus Pesticides	8140
Organochlorine Pesticides and PCBs	8080
Tin	7870
Thallium	7841
Selenium	7740
Mercury	7470
Lead	7421
Chromium	7196
Arsenic	7060
Antimony	7041
Inductively Coupled Plasma	6010
Phenolics	420.1/9065/9066/9067
Total Organic Carbon	415.2/9060
Oil and Grease, total recoverable	413.2/9070/9071
Chemical Oxygen Demand	410.1
Biochemical Oxygen Demand	405.1
Sulfate	375.4
Phosphorus, all forms	365.2
Nitrogen and Nitrite	354.1
Nitrogen, Nitrate, Nitrite	353.3
Ammonia	350.1
Fluoride	300.0
Total Cyanide	335.2
Chloride	300.0
Bromide	300.0
Alkalinity	310.1/310.2
Acidity	305.2

9413149.0590

Analyte	Method of Analysis
Residue	160.2
Total Dissolved Solids	160.1
pH	150.1/9040
Specific Conductance	120.1
Total Alpha	WHC approved laboratory method
Total Beta	WHC approved laboratory method
Gamma Scan	WHC approved laboratory method
Cesium 137	WHC approved laboratory method
Isotopic Uranium	WHC approved laboratory method
Strontium 89/90	WHC approved laboratory method
Uranium Isotopes	WHC approved laboratory method
Total Uranium	WHC approved laboratory method

The above list in Table 3 was selected based partially on process knowledge. Since past routine samples have shown positive values of total alpha and beta, Strontium 90, and Cesium 137, analysis for these will provide information on radionuclide content of the liquid effluent. Also conductivity, anions, total dissolved solids, and metals were selected since they give a good indication of overall water quality. Since no sanitary sewer effluent is present in the CBC, an analysis for coliform was not included. Volatile organics, semi-volatile organics, and total organic carbons analyses were selected to confirm whether these constituents are present in the liquid effluent.

Characterization samples will be collected in commercially available, certified precleaned containers. The sample volumes and number of containers are prescribed by the analytical laboratory and are subject to change. After the sample has been added to the container, their caps will be sealed with tamper proof tape. The sample containers shall be packaged in accordance with EII 5.11 "Sample Packaging and Shipping". The samples will be refrigerated at 4 degrees Celsius until ready to ship when they will be placed and shipped in a cooler containing ice.

Field logs will be completed following the "Environmental Investigations and Site Characterization Manual", WHC-CM-7-7 (WHC 1991a) and procedure EII 1.5 "Field Logbooks" at the time of sampling by the sampling team.

When preservatives are added to a sample container a bottle chain-of-custody form will be filled out. This container is then stored in a cooler with tamper evidence tape and all custody transfers are noted on the bottle chain-of-custody form. When a sample is collected, with or without preservative, a sample chain-of-custody form is initiated. Since a sample may consist of several containers, the sample chain-of-custody form will account for each container. The sample chain-of-custody form follows the sample to the analytical laboratory while the bottle chain-of-custody form is maintained in the sampler's file as a quality record.

Once the sample has been drawn, it must be in the physical control or view of the custodian, locked in an area where it can not be tampered with, or

9413149.0591

prepared for shipping with tamper-proof tape applied. Physical control includes being in the sight of the custodian, being in a room which will signal an alarm when entered, or locked in a cabinet. When more than one person is involved in sampling, one person shall be designated the custodian and only the custodian signs as sampler. This person remains the custodian until the samples are transferred to another location or group when the custodian signs over to the designated receiver the released samples. EII 5.1 (WHC 1991a) contains a copy of the sample chain-of-custody form to be used. A private carrier used to transport the samples and chain-of-custody documentation shall be bonded.

The characterization samples will be transported to an approved Westinghouse Hanford Company participant contractor or subcontractor laboratory for analysis.

Duplicate sampling will be performed in coordination with the BCE sampling with a single duplicate sample taken at 207-B of the combined CBC and BCE stream. In addition, a field blank, an equipment blank if required, and a trip blank will be taken (WHC 1992b). Table 4 lists the analysis to be performed on the duplicate and blanks.

9413149.0592

Table 4. Analytical Schedule for Field Quality Control Samples

Parameter Group	Sample Type			
	Duplicate	Field Blank	Equipment Blank*	Trip Blank
Volatile Organics	X	X	X	X
Semivolatile Organics	X		X	
Pesticides and PCBs	X			
Herbicides	X			
Metals	X			
Radionuclides	X			
Field Parameters: pH, Temperature, and Conductivity	X			

* Will only be taken if equipment other than collection bottles is used.

The duplicate sample taken at 207-B will be taken with the same sampling equipment and sampling technique and will be placed into identically prepared and preserved containers. The duplicate will be analyzed to verify the repeatability or reproducibility of analytical data.

Preservative for volatile organics are added to the field blank container in the laboratory. Then pure deionized water is transferred into the sample container at the sampling site. The field blank will be used for a check on the environmental and reagent contamination.

If chemically deconned equipment is used, an equipment blank will be taken by transferring deionized water using the sampling equipment to a sample

container before sampling. This sample will be preserved for volatile and semi-volatile organics. If sample bottles are used for collecting all of the samples, no equipment blank will be taken.

The trip blank is pure deionized water that is transferred into the sample container before the trip to the sampling site and it is preserved for volatile organics. A single trip blank will be collected. The trip blank will be used for a check on the environmental and reagent contamination.

The data from the analysis of the samples will be considered representative so long as at least 90 percent of the data points meet the established requirements in the laboratory contract for precision and accuracy. Data will be reviewed and validated (Level C, WHC 1990d) by the Office of Sample Management. Data will be flagged during validation if any QC requirements are not met. If necessary, data that has been flagged may require corrective action to take place in accordance with QAPP (WHC 1992b) which could require repeating the sampling and analysis activity.

9413149.0593

H. REFERENCES

EPA, 1990, *Test Methods For Evaluating Solid Waste*, Physical/Chemical Methods, SW-846, 3rd Edition Update I (latest revision will be used).

EPA, 1991, *Code of Federal Regulations*, 40 CFR 264, Appendix IX, US Environmental Protection Agency, Wash. D.C.

WHC, 1988, *Quality Assurance*, WHC-CM-4-2.

WHC, 1990a, *B Plant Cooling Water Stream Specific Report*, WHC-EP-0342 Addendum 22.

WHC, 1990b, *B Plant Chemical Sewer Stream Specific Report*, WHC-EP-0342 Addendum 6.

WHC, 1990c, *Westinghouse Hanford Company Effluent Discharges and Solid Waste Management Report for Calendar Year 1989: 200/600 Areas*, WHC-EP-0141-2.

WHC-1990d, *Sample Management and Administration*, WHC-CM-5-3.

WHC, 1991a, *Environmental Investigations and Site Characterization Manual*, WHC-CM-7-7.

WHC, 1991b, *Environmental Release Report For Calendar Year 1990*, WHC-EP-0527.

WHC, 1991c, *Facility Effluent Monitoring Plan for the B Plant*, WHC-EP-0467.

WHC, 1992a, *B Plant Chemical Sewer Sampling and Analysis Plan*, WHC-SD-WM-PLN-029, Rev 0.

WHC, 1992b, *Liquid Effluent Sampling Quality Assurance Program Plan*, WHC-SD-WM-QAPP-011, Rev 2A.

APPENDIX

B PLANT COOLING WATER SAMPLING AND ANALYSIS PLAN

A description of the contributing streams and the effluent flow path is presented.

A.1 Contributing Streams

Table A-1 Contributing Streams to B Plant Cooling Water

Building	System	Contributor	Flowrate(gal/d) Average Variation
225-B	Pool Heat Exchanger	Raw Water	2,000,000
225-B	Closed Loop Heat Exchanger	Raw Water	150,000
B Plant Chemical Sewer	BCE	Effluent	190,000
221-B	Cooling Coils Process Tanks	Raw Water	145,000-600,000
282-B	Emergency Deep Well Raw Water Pump	Raw Water	<18,000
282-BA	Emergency Deep Well Raw Water Pump	Raw Water	<18,000
Miscellaneous			
	Condensers* (E-20-3, E-22-4, E-23-4),	Raw Water	<18,000
	Stairwell #1, 212-B** and 221-BB**	Steam Condensate	<18,000
		Approximate Total	2,800,000

* At present the condensers are not operating.
** 212-B and 221-BB are currently not contributing.

A.2 Description of the CBC Flow Path

The following is a description of individual contributors to the CBC in the sequence of the flow chart shown in Figure 2.

a) 24-in.-dia. Header

MANHOLE CBC-1

Manhole CBC-1 receives effluent from the 212-Cask Station, raw water from the testing of the emergency well pumps, and the cooling water from the WESF Pool Cells heat exchangers (see Figure 2, page 7 & 8). The heat exchangers are maintained with a positive pressure differential between the coolant and process solution to minimize the potential for contamination of the coolant through any leaks. The cooling water from the WESF heat exchanger contributes about 1,000 to 1,400 gal/min to the 24-in.-dia. header.

Manhole CBC-1 is an alternate sampling site for the 24-in-dia. line (see Figure 1, page 4 and Table 2, page 13).

221-BG

221-BG receives the effluent from Manhole CBC-1, 221-BB, and condensers E-20-3, E-22-4, and E-23-4. In 221-BG the stream form the 24-in.-dia. header is monitored for gamma/beta contamination and if contaminated the stream is diverted to one of the retention basins in 207-B. The contaminated water would be trucked to the 200-E Tank Farm.

221-BG is an alternate sampling site for the 24-in-dia. line (see Figure 1, page 4 and Table 2, page 13).

JUNCTION 1

Junction 1 receives the effluent 221-BG, Stairwell #1, and the effluent from the 15-in.-dia. line to form the combined CBC effluent.

JUNCTION 2

The CBC effluent from line Junction 1 is joined with the effluent from the BCE at Junction 2.

207-BA

The combined effluent from CBC and BCE is received at 207-BA. At 207-BA routine sampling is taken of the combined CBC and BCE effluent stream.

207-B

The combined effluent from CBC and BCE is received from 207-BA into the 207-B retention basin. The basin is divided into a north and south basin. Either of these basins can be used to store the effluent if monitoring of the CBC at 221-BG or a monitor on the BCE stream shows the stream to be contaminated.

207-B is a sampling site of the combined effluent from the CBC and BCE (see Figure 1, page 4 and Table 2, page 13).

216-B-3-3 DITCH

The 216-B-3-3 ditch receives the combined BCE and CBC effluent from 207-B.

216-B-3 POND

The 216-B-3 Pond receives the BCE and CBC effluent from the 216-B-3-3 ditch.

b) 15-in.-dia. Header

SUBHEADER 1

The effluent enters Header 1 from the cooling coils in cells 36 through 39. The effluent from Header 1 joins the 15-in.-dia. CBC line. However, the effluent can be diverted to the 24-in-dia. line.

SUBHEADER 2

The effluent enters Subheader 2 from the cooling coils in cells 28 through 35. The effluent from Subheader 2 joins the 15-in.-dia. CBC line. However, the effluent can be diverted to the 24-in-dia. line.

SUBHEADER 3

The effluent enters Subheader 1 from the cooling coils in cells 20 through 27. The effluent from Subheader 3 joins the 15-in.-dia. CBC line. However, the effluent can be diverted to the 24-in-dia. line.

SUBHEADER 4

The effluent enters Subheader 2 from the cooling coils in cells 10 through 19. The effluent from Subheader 4 joins the 15-in.-dia. CBC line. However, the effluent can be diverted to the 24-in-dia. line.

SUBHEADER 5

The effluent enters Subheader 5 from the cooling coils in cells 06 through 09. The effluent from Subheader 5 joins the 15-in.-dia. CBC line. However, the effluent can be diverted to the 24-in-dia. line.

SUBHEADER 6

The effluent enters Subheader 6 from the cooling coils in cell 05. The effluent from Subheader 6 joins the 15-in.-dia. CBC line. However, the effluent can be diverted to the 24-in-dia. line.

221-BA

221-BA receives effluent from Subheaders 1 through 6. Monitoring of gamma/beta radiation of the 15-in-dia. line is performed in 221-BA. If the stream is contaminated, a diverter valve in the diversion station is tripped and the effluent is sent to 216-B-59, Emergency Cooling Water Retention Basin.

221-BA is a sampling site for the 15-in-dia. line (see Figure 1, page 4 and Table 2, page 13).

DIVERSION STATION

The Diversion Station receives effluent from 221-BA. If the effluent is uncontaminated, it is diverted NW to joint the 24-in-dia. effluent. If the stream is contaminated, a signal from the radiation monitor in 221-BA will trip the valve diverting the effluent to the 216-B-59 Emergency Cooling Water Retention Basin. If sampling of 216-B-59 determine that the effluent is contaminated, the diverter station can divert the effluent from the 216-B-59 Basin back to TK-9-1 in 221-B Building.

JUNCTION 1

Junction 1 receives the effluent from the Diversion Station, 221-BG, and Stairwell #1 to form the combined CBC effluent.

JUNCTION 2

The CBC effluent from line Junction 1 is joined with the effluent from the BCE at Junction 2.

207-BA

The combined effluent from CBC and BCE is received at 207-BA. At 207-BA routine sampling is made of the combined CBC and BCE effluent stream.

207-B

The combined effluent from CBC and BCE is received from 207-BA into the 207-B retention basin. The basin is divided into a north and south basin. Either of these basins can be used to store the effluent if monitoring of the CBC at 221-BG or a monitor on the BCE stream shows the stream to be contaminated.

216-B-3-3 DITCH

The 216-B-3-3 ditch receives the combined BCE and CBC effluent from 207-B.

216-B-3 POND

The 216-B-3 Pond receives the BCE and CBC effluent from the 216-B-3-3 ditch.

9413146.0550

Date Received: 11/23/92

INFORMATION RELEASE REQUEST

Reference: WHC-CM-3-4

Complete for all Types of Release

Purpose

[] Speech or Presentation
- [] Full Paper
- [] Summary
- [] Abstract
- [] Visual Aid

(Check only one suffix)

[] Speakers Bureau
[] Poster Session
[] Videotape

[] Reference
[X] Technical Report
[] Thesis or Dissertation
[] Manual
[] Brochure/Flier
[] Software/Database
[] Controlled Document
[] Other

ID Number (include revision, volume, etc.) (ECN 171183)

List attachments. WHC-SD-WM-PLN-037, Rev. 2

Date Release Required 11/18/92

Title B Plant Cooling Water Sampling and Analysis Plan

Unclassified Category UC-

Impact Level 3E Q

New or novel (patentable) subject matter? [X] No [] Yes
If "Yes", has disclosure been submitted by WHC or other company?
[] No [] Yes Disclosure No(s).

Information received from others in confidence, such as proprietary data, trade secrets, and/or inventions?
[X] No [] Yes (Identify)

Copyrights? [X] No [] Yes
If "Yes", has written permission been granted?
[] No [] Yes (Attach Permission)

Trademarks?
[X] No [] Yes (Identify)

Complete for Speech or Presentation

Title of Conference or Meeting

Group or Society Sponsoring

Date(s) of Conference or Meeting

City/State

Will proceedings be published? [] Yes [] No
Will material be handed out? [] Yes [] No

Title of Journal

CHECKLIST FOR SIGNATORIES

Review Required per WHC-CM-3-4	Yes	No	Reviewer - Signature Indicates Approval: Name (printed)	Signature	Date
Classification/Unclassified Controlled Nuclear Information	[]	[X]			
Patent - General Counsel	[X]	[]	SW BERGLIN	SW Berglin	11/19/92
Legal - General Counsel	[X]	[]			
Applied Technology/Export Controlled Information or International Program	[]	[X]			
WHC Program/Project	[X]	[]	DWAYNE Speer	Dwayne Speer	11-17-92
Communications	[]	[X]			
RL Program/Project	[X]	[]	L.S. MAMIET	L.S. May	11/18/92
Publication Services	[X]	[]	For Publications Review Marilyn Turner	Marilyn Turner	11-17-92
Other Program/Project	[X]	[X]	L. Ramine	Tony Ramine	11-20-92

Information conforms to all applicable requirements. The above information is certified to be correct.

	Yes	No
References Available to Intended Audience	[X]	[]
Transmit to DOE-HQ/Office of Scientific and Technical Information	[]	[X]

Author/Requestor (Printed/Signature) Date
W. E. Davis W E Davis 11/16/92

Intended Audience
[] Internal [] Sponsor [X] External

Responsible Manager (Printed/Signature) Date
D. L. Halgren D L Halgren 11/16/92

INFORMATION RELEASE ADMINISTRATION APPROVAL STAMP

Stamp is required before release. Release is contingent upon resolution of mandatory comments.

APPROVED FOR RELEASE
OFFICIAL DOCUMENT
V.D.
11/23/92

Date Cancelled

Date Disapproved

9413149.0600