START

92

0026135

9312865210 40

MEETING MINUTES

Subject: Expedited Response Action Weekly Interface

TO: Distribution BUILDING: 740 Stevens Building

FROM: W. L. Johnson CHAIRMAN: G. C. Henckel

Dept-Operation-Component	Area	Shift	Meeting Dates	Number Attending
Environmental Engineering	3000	Day	February 1, 1993	19

Distribution

State of Washington Department of Ecology

J. Donnelly* fax
L. Goldstein
D. Goswami*
R. L. Hibbard
J. Phillips*
D. D. Teel*
N. Uziemblo*
J. Yokel
T. Wooley*

U.S. Army Corps of Engineers

J. T. Stewart A5-20

U.S. Department of Energy, Richland Field Office

H. L. Chapman A5-19
J. K. Erickson A5-19
E. D. Goller* A5-19
R. G. McLeod A5-19
P. M. Pak A5-19
R. K. Stewart A5-19

U.S. Environmental Protection Agency

P. R. Beaver B5-01
D. R. Einan
D. A. Faulk*
L. E. Gadbois*
P. S. Innis
D. R. Sherwood

Westinghouse Hanford Company

L. D. Arnold B2-35
M. V. Berriochoa B3-30
S. K. DeMers* N1-06
H. D. Downey H6-27
D. R. Ellingson* B1-35
J. G. Field* H6-05
W. F. Heine B2-35
G. C. Henckel* H6-04
W. L. Johnson H6-04
N. R. Kerr* N1-75
J. Kojandi* G2-02
C. D. Kramer* H6-04
M. J. Monthey* G2-03
J. K. Patterson H6-27
R. C. Roos* H6-04
D. L. Sickle H6-27
C. R. Webb* H6-04
T. M. Wintczak H6-27
EDMC H6-08
ERAG Route H6-04
GCH File/LB

FEB 1993 RECEIVED EDMC

*Attendees

The weekly interface meetings was dedicated to statusing the 618-11 Burial Ground ERA. The topics discussed included nuclear safety orders, packaging and transportation, site characterization, and wells in the vicinity of the burial ground.

THIS PAGE INTENTIONALLY
LEFT BLANK

Attachment I
Agenda

9 3 1 2 8 6 5 2 1 4 1

WEEKLY ERA INTERFACE AGENDA

SUBJECT: STATUS OF THE EXPEDITED RESPONSE ACTIONS

DATE: February 1, 1993

- GENERAL ISSUES
  - ERA Interface Action Item review
- INDIVIDUAL PROJECT STATUS
  - 618-11
    - o Briefing on 618-11 ERA status
- OTHER ISSUE
  - Discussion of other ERAs - if time allows
    Note: Please read weekly for status
- SUMMARY OF ACTION ITEMS
- SIGN-OFF ON ANY DECISIONS, AGREEMENTS, OR COMMITMENTS

9 3 1 2 8 6 5 2 1 4 2

Attachment II
Action Item List

9 3 1 2 8 6 5 2 1 4 3

EXPEDITED RESPONSE ACTION INTERFACE MEETING

-ACTION ITEMS-
February 1, 1993

ORGANIZATION	ACTION ITEM
WHC	WHC will provide RL, EPA, and Ecology copies of the GPR reports for the Riverland ERA site when it becomes available. (open) North Slope, Sodium Dichromate, and Pickling Acid reports have been provided. (open)
WHC	Provide a more detailed schedule; listing of wells; status of nuclear safety; incorporation of 618-10 as demonstration site; new home packaging. (*closed*)
EPA	Provide information on passive emissions for CCl_4. (open)
EPA	Develop procedure for inclusion in TPA handbook for transmittal of field information and sample data obtained by regulators during split sampling activities. (open)
EPA/Ecology	EPA & Ecology will provide clarification of the wording on the M-14 settlement. (open)
WHC	WHC will provide a briefing on data from the Anti-Aircraft sites. (open)
DOE-HQ	DOE-HQ will provide information regarding sanitary landfill Record of Decisions and risk assessment screening related to federal activities. (open)

9 3 1 2 8 6 5 2 1 4 4

Attachment III
Decisions, Agreements & Commitments

9 3 1 2 8 6 5 2 1 4 5

EXPEDITED RESPONSE ACTION INTERFACE MEETING

-DECISIONS, AGREEMENTS, & COMMITMENTS-
February 1, 1993

DECISIONS:

AGREEMENTS: No significant activity to report

COMMITMENTS:

DOE Representative

EPA Representative

ECOLOGY Representative

WHC Representative

Attachement IV
Expedited Response Action Weekly Report
Week Ending 1/31/93

9 3 1 2 8 6 5 2 1 4 7

Weekly Report, Week Ending January 31, 1993
EXPEDITED RESPONSE ACTIONS
Technical and Management Contact - Wayne L. Johnson, 376-1721
Environmental Division

North Slope Expedited Response Action - Backhoe sampling will be rescheduled for after February 10, 1993, due to the paperwork not being reviewed by the Plant Forces Work Review Committee. Preparation of the ERA Proposal continues. Data continues to arrive from the analytical labs. Initial review of the data indicates no elevated levels of contaminants.

A geophysical survey was performed at Nike Missile Launch site H-83-L The results of this survey should be available the week of February 1, 1993.

N-Springs Expedited Response Action - Preparation of the ERA proposal continues and is on schedule. Documents describing the modeling used in support of the Engineering Evaluation/Cost Assessment (EE/CA) were supplied to RL for their review. The modeling results will be provided to the regulatory agencies once RL has approved of how the modeling results are being utilized in developing the EE/CA.

White Bluffs Pickling Acid Crib Expedited Response Action - Preparation of the proposal will continue after lab data is received.

Riverland Railroad Site Expedited Response Action - The analytical lab data is now anticipated to be received after February 8, 1993. Upon receipt of the data the draft proposal will be finalized.

Sodium Dichromate Expedited Response Action - Public comments were provided to DOE and WHC on January 11, 1993. No change in status, the EPA and Ecology are developing responses to public comments and will prepare the action memorandum in accordance internal procedures.

618-11 Expedited Response Action - PNL employees continue to review 325 lab logbooks for preparation of a letter report regarding 325's contribution to what is buried at 618-10 & -11. Briefing material for the February 1, 1993, presentation was prepared and reviewed. USRADS Survey of the site was delayed due to weather. Plans are to incorporated metal detection with the survey system if conditions allow.

200 West Carbon Tetrachloride Expedited Response Action -

GAC Release and Regeneration - Results of the sampling effort have been evaluated. The letter to DOE-HQ requesting a waiver for shipping the waste off-site has been forwarded to RL.

Current Vapor Extraction System (VES) Operations - The VES unit has been restarted and 24 hour/day operations are underway.

Upgrade Existing System to 1000 cfm - Work is proceeding with procuring and installing necessary equipment (i.e. motors) to upgrade the existing 500 cfm unit to 1000 cfm. Completion of the upgrades are expected to be completed by March 31, 1993.

Leased 500 cfm Vapor Extraction System - Fabrication of the Process Control trailer was completed and delivered to the Z-9 operations area on Friday, January 22. A work package is currently being developed to install a back-up/temporary vacuum blower on this trailer to support operations in February.

9 3 1 2 8 6 5 2 1 4 8

1500 cfm unit - The 1500 cfm unit is scheduled to be delivered March 1, 1993, and operations of this unit are to be initiated on March 31, 1993.

9312865214 9

THIS PAGE INTENTIONALLY
LEFT BLANK

Attachment V
618-11 Burial Ground ERA FY 93 Schedule

9 3 1 2 8 6 5 2 1 5 0

618-11 Burial Ground ERA FY93

Printed: February 1, 1993

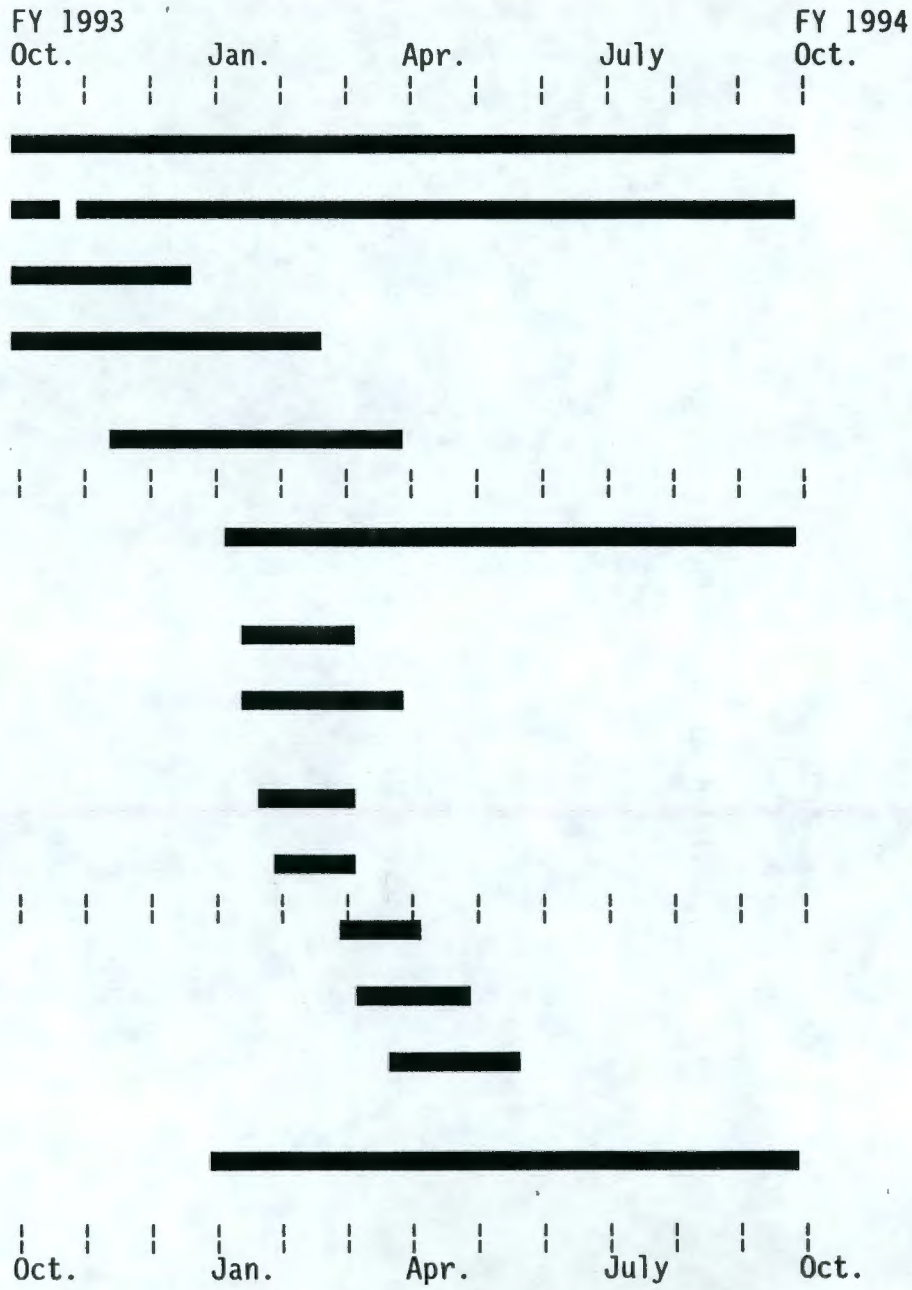

Attachment VI
Predecisional Draft - ERSS

9 3 1 2 8 6 5 2 1 5 2

9 3 1 2 8 6 5 2 1 5 3

- PREDECISIONAL DRAFT -

ENVIRONMENTAL RESTORATION SAFETY SUPPORT (ERSS)

APPROACH TO

SAFETY ANALYSIS FOR 618-10/11 BURIAL GROUND REMEDIATION

February 1993

TYPICAL LAYOUT 618-10/11

PIPE STORAGE, CAISSONS, AND TRENCHES

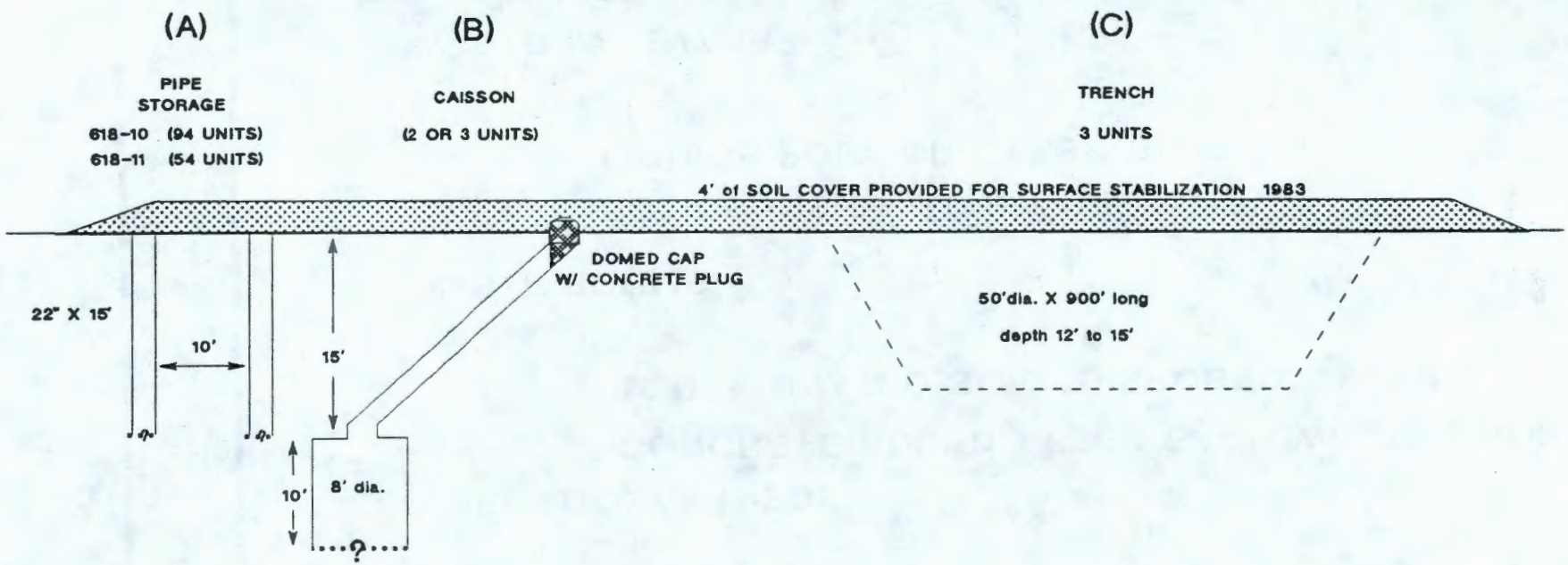

INVENTORIES:

- GENERAL AREA CORE DRILLINGS: Ra 226, Pb 214, Bi 214, Bi 212, Tl 208, Ac 228, Cs 137
- PIPE STORAGE UNITS: SEGMENTS OF IRRADIATED FUEL ELEMENTS IN "CANS", OTHER HIGH ACTIVITY WASTES
- CAISSONS: CARDBOARD CARTONS & METAL CANS OF HIGH ACTIVITY WASTE
- TRENCHES: MOSTLY LLW, POSSIBLY SOME DRAG OFF BURIAL (CONCRETE BOXES) HIGH ACTIVITY WASTES

PUBLISHED TOTALS (? AS CURRENTLY IDENTIFIED): ~1 KG Pu 239, ~2000 Ci ß, ~96 Ci TRU

INVESTIGATION TO DATE INDICATES TOTALS MAY INCREASE

618-10 / 11 REMEDIATION DEMO

PIPE UNIT COMPOSITION

(NOT TO SCALE)

OPERATIONAL INFO:

CONCRETE ADDED AFTER EACH WASTE DROP

CONTAMINATED SOIL "DISPOSED" IN PIPE

WASTE FORMS

SOLIDS INSIDE ALUMINUM CANS

LIQUIDS POLY OR GLASS BOTTLES

WASTE INVENTORY:

TRU	KILOGRAMS
RAD	KILOCURIES

CHEMICALS AND SOLVENTS POSSIBLE

618-10 / 11 PIPE STORAGE UNIT ER DEMO

(PLANNING / INVESTIGATIVE PHASE)

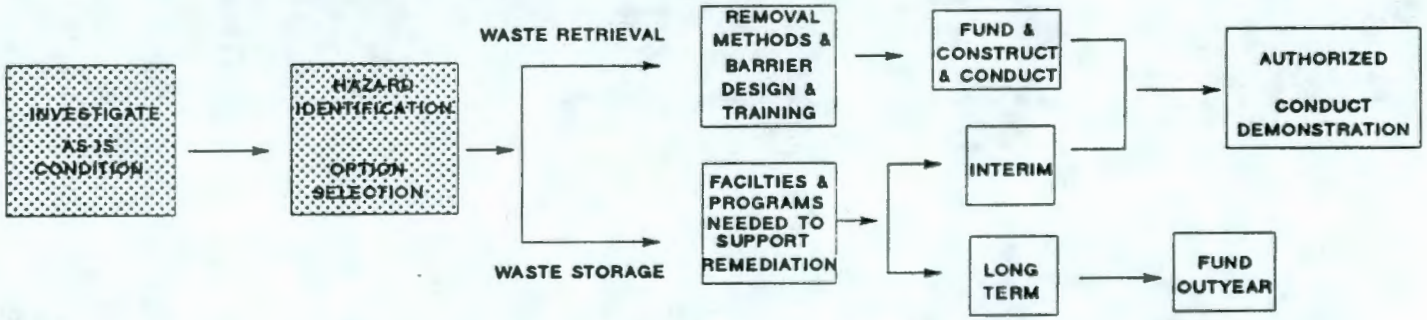

PIPE UNIT

INVESTIGATION TO DATE:

DOSE: 10^2 TO 10^5 RADS/HR

LARGE VARIANCE DUE TO DISTRIBUTION BETWEEN 148 UNITS AND UNCERTAINTY IN EACH UNITs COMPOSITION

FORMS: (REPORTED TO BE EMBEDDED IN CONCRETE)

- LARGE SOLIDS
- FINELY DIVIDED SOLIDS
- LIQUIDS ORIGINALLY
- GASES POSSIBLE

ENERGIES:

- WIND
- OPERATING EQUIPMENT
- CHEMICAL REACTIONS
- FIRE (?)
- CRITICALITY (?)
- PRESSURIZED CONTAINERS (?)

LIKELY SAFETY FUNCTIONS:

- SHIELDING
- CONFINEMENT
- ALARMS / WARNING
- MONITORING
- CRITICALITY PREVENTION
- EMERGENCY PLANS

618-10/11 PIPE STORAGE UNIT DEMO

CHARACTERIZATION / HAZARD:

- Concrete matrix constitutes change in waste form
- If there and complete, concern for confinement and criticality is reduced
- Concrete creates characterization and sorting difficulties

618-10/11 PIPE STORAGE UNIT DEMO

DESIGN:

- Single design for worst case; multiple designs for gradation
- Transport, interim storage, and long-term/final destination

OPERATION:

- Excavation - collapse of soil; shielding adjacent pipe
- Shielding and confinement during excavation operations
- Confinement tent - modular or singular structure

618-10/11 PIPE STORAGE UNIT DEMO

RESOLUTION APPROACH

- Team discussion
- Additional (focused) investigation
- Contingency Designs

SAFETY BASIS / SAFETY ANALYSIS / SAR

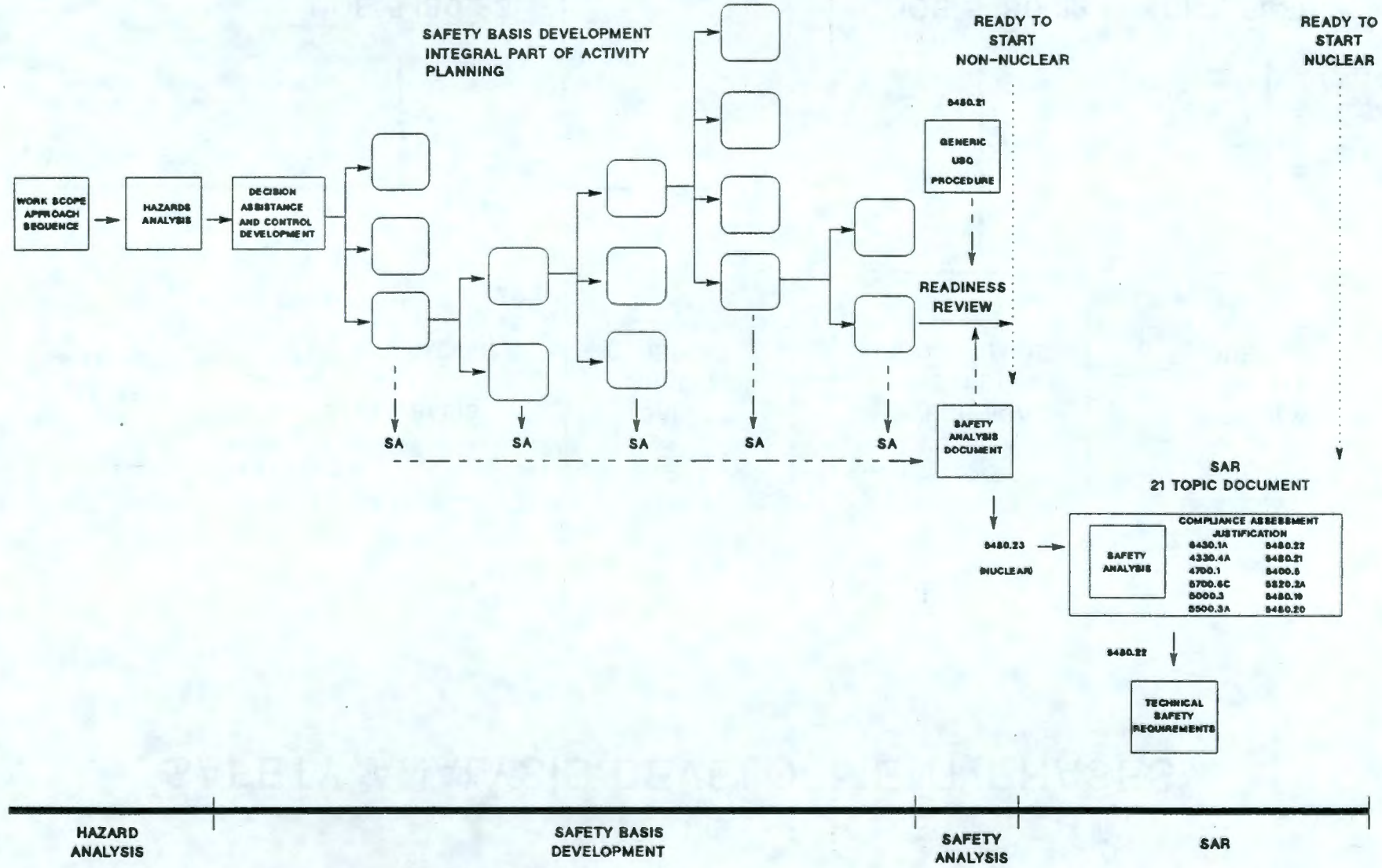

SAFETY ANALYSIS DEVELOPMENT PHASES

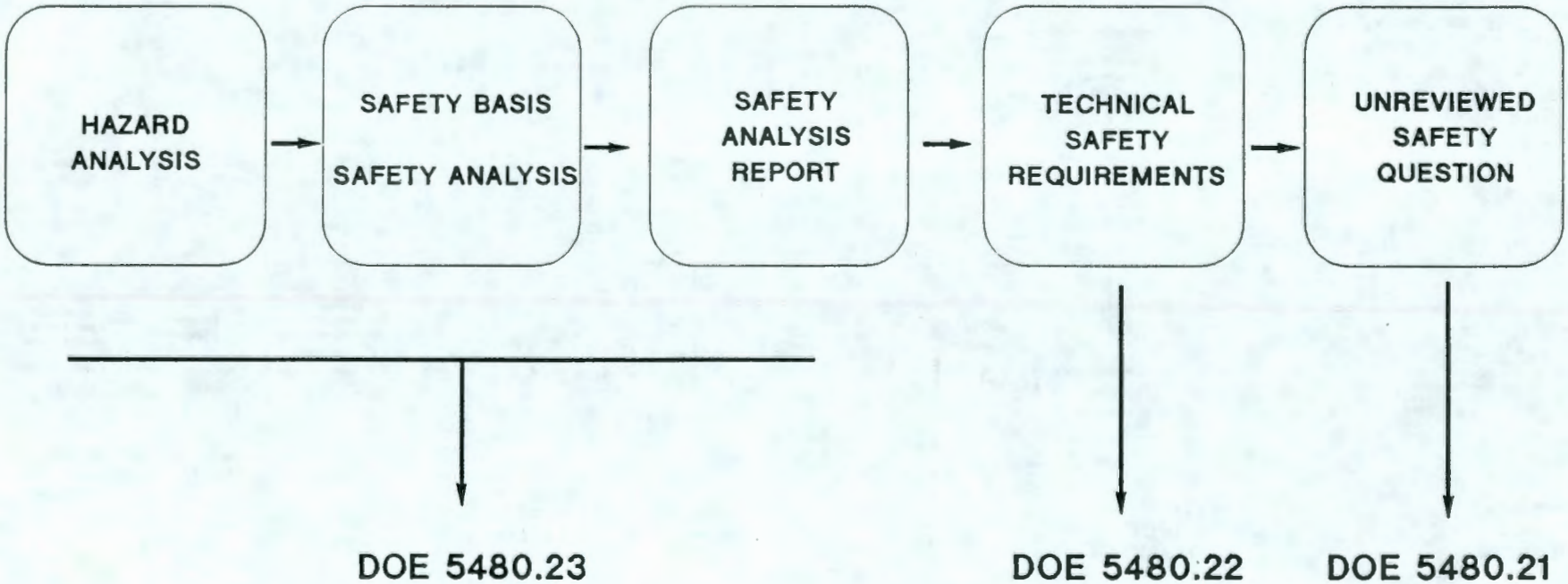

SAFETY ANALYSIS DEVELOPMENT PHASES

DOE 5480.23

HAZARD ANALYSIS:

- IDENTIFIES WHAT MATERIAL IS PRESENT THAT COULD HARM PEOPLE OR THE ENVIRONMENT
- HAZARD IS MATERIAL QUANTITY, FORM AND ENERGY AVAILABLE TO TRANSMIT TO TARGET
- UNDERGOES SEVERAL ITERATIONS OF REVISION / REFINEMENT AS WORK PROGRESSES
- UNDERGOES CONSTANT REVIEW THROUGH ALL PHASES INCLUDING OPERATION (USQ)

SAFETY ANALYSIS DEVELOPMENT PHASES

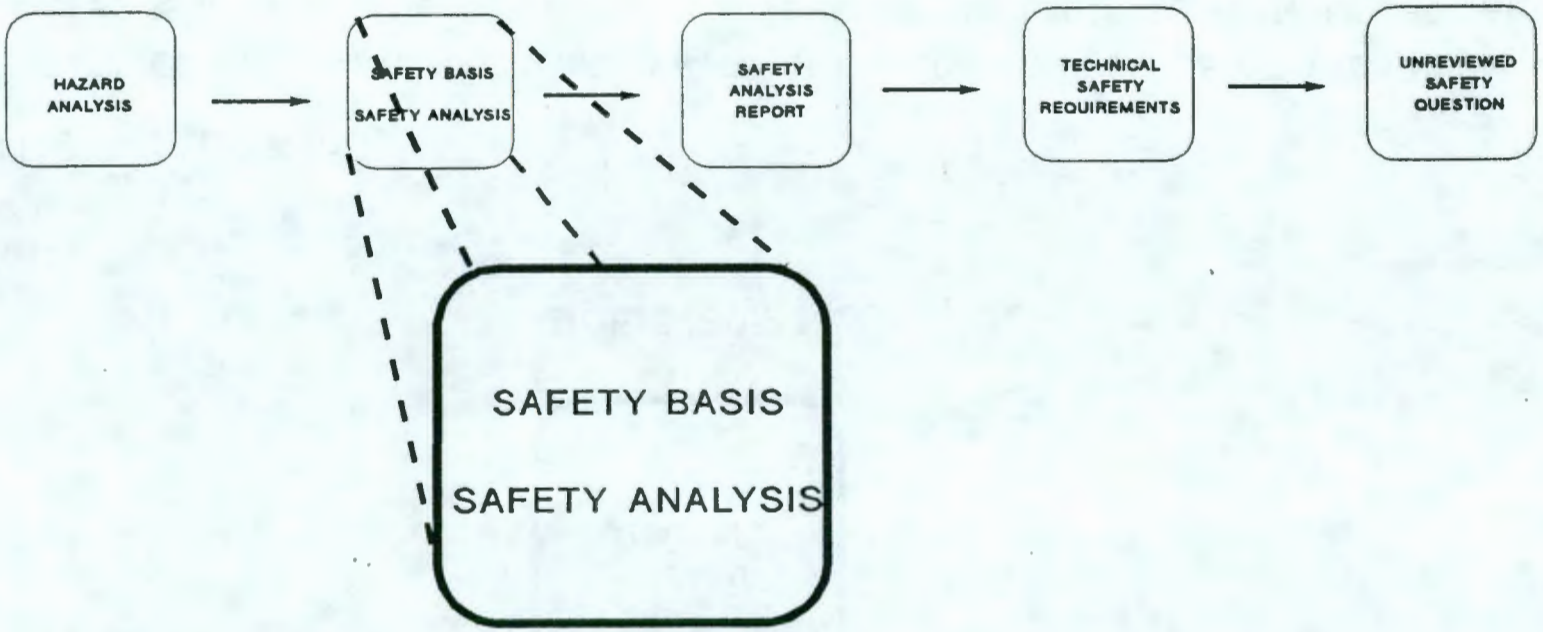

DOE 5480.23

SAFETY BASIS / SAFETY ANALYSIS (SA)

- SAFETY BASIS IS THE PROCESS OF SELECTING CONTROLS TO MITIGATE HAZARDS
- SAFETY BASIS INCLUDES DESIGN, ENGINEERING ANALYSIS AND ADMINISTRATIVE CONTROLS
- SAFETY ANALYSIS IS THE DOCUMENTATION OF THE SAFETY BASIS
- IF AN END PRODUCT, SA MUST BE KEPT UP-TO-DATE AND AUDITABLE

SAFETY ANALYSIS DEVELOPMENT PHASES

DOE 5480.23

SAFETY ANALYSIS REPORT (SAR)

- EXPANDS ON THE SAFETY ANALYSIS TO INCLUDE DISCUSSION OF 21 TOPICS
- PROVIDES CONSISTENT REPORT FOR REVIEWERS, PROGRAM OFFICIALS AND APPROVERS
- PROVIDES FOR A "GRADED APPROACH" TO ANALYSES
- SEPARATES SAFETY BASIS FROM CONTROLS. CONTROLS BECOME SEPARATE DOCUMENT.
- REQUIRES A SEPARATE SAFETY EVALUATION REPORT (SER) TO DEFEND APPROVAL

SAFETY ANALYSIS DEVELOPMENT PHASES

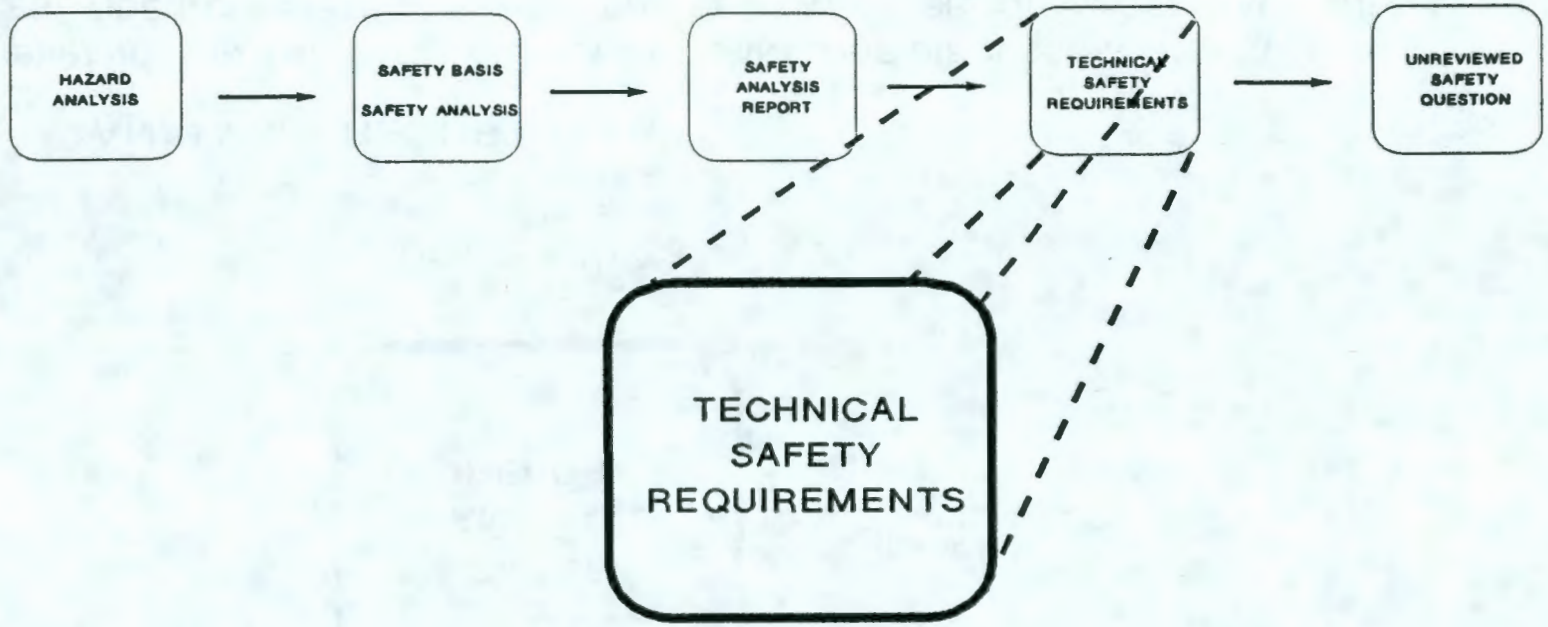

DOE 5480.22

TECHNICAL SAFETY REQUIREMENTS (TSR)

- THE DOCUMENT CONTAINING THE SEPARATE NUCLEAR SAFETY CONTROLS
- INCLUDES BOTH DESIGN AND ADMINISTRATIVE CONTROLS NEEDED FOR NUCLEAR SAFETY
- DOCUMENT REQUIRED TO FOLLOW PRESCRIBED FORMAT
- UNDERGOES SAME LEVEL OF REVIEW AND APPROVAL AS THE SAR

SAFETY ANALYSIS DEVELOPMENT PHASES

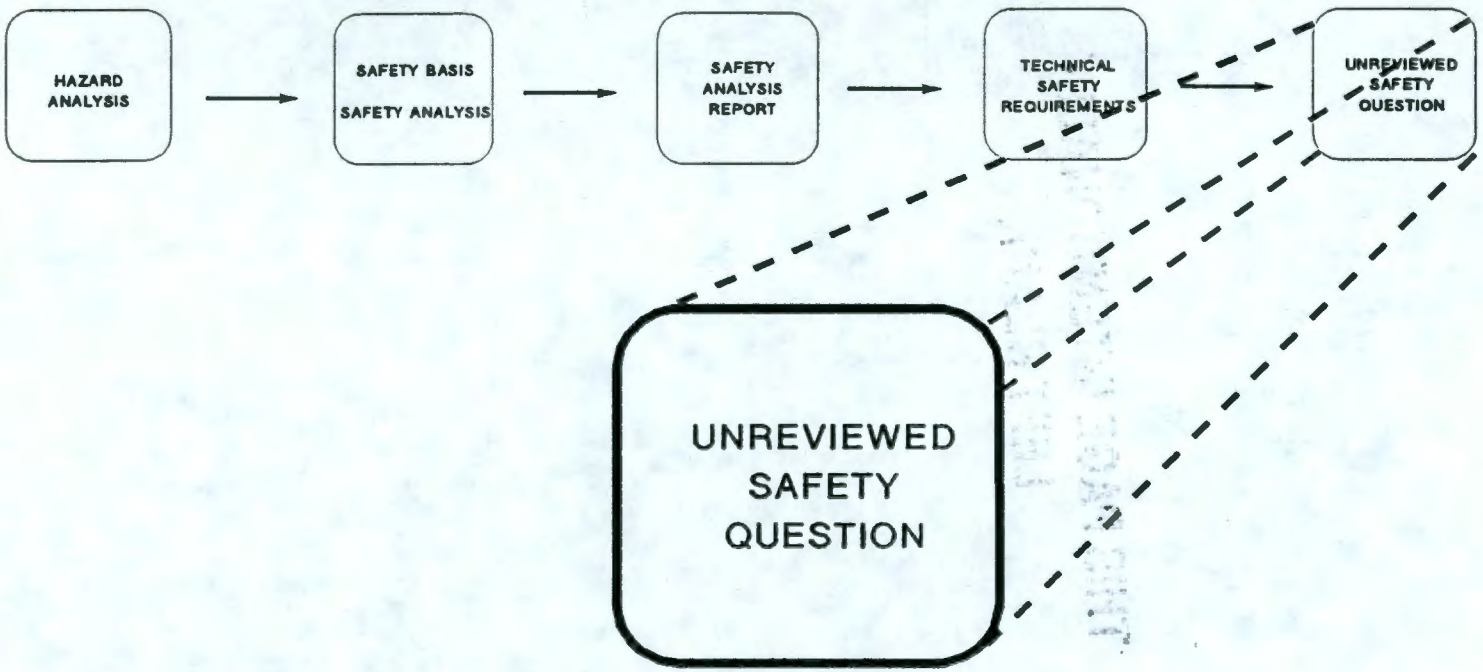

DOE 5480.21

UNREVIEWED SAFETY QUESTION (USQ)

- REVIEW, INVESTIGATE AND EVALUATE TO ASSURE OPERATION IS WITHIN SAFETY BASIS
- APPLIES TO ALL CHANGES AND/OR DISCOVERIES NOT ANALYZED IN SAR
- APPLIES TO TEMPORARY AND/OR PERMANENT FACILITIES, CHANGES, EXPERIMENTS, ETC.

THIS PAGE INTENTIONALLY
LEFT BLANK

Attachment VII
List of Wells

9 3 1 2 8 6 5 2 1 6 7

LIST OF WELLS[1]

List 4

NAME	ZONE MONITORED (WELLDOX Database)	FORMER NAME (Hanford Wells 1989)
699-6-1	Shot Hole	
699-6-2		
699-6-2A	Upper Unconfined	BH-137
699-6-2B	Shot Hole	
699-6-2C	Shot Hole	
699-6-6	Shot Hole	
699-6-E6	Shot Hole	
699-7-3	Shot Hole	
699-7-6	Shot Hole	
699-7-E1A	Shot Hole	
699-7-E1B	Shot Hole	
699-7-E2	Shot Hole	
699-7-E6	Shot Hole	
699-8-5	Shot Hole	
699-8-E1	Shot Hole	
699-8-E2A	Shot Hole	
699-8-E2B	Shot Hole	
699-8-E3A	Shot Hole	
699-8-E3B	Shot Hole	
699-8-E3C	Shot Hole	
699-9-3	Shot Hole	
699-9-4	Shot Hole	
699-9-E1	Shot Hole	
*699-9-E2	Upper Unconfined	6-9-E4
699-9-E4A	Upper Unconfined	DB-18
699-9-E4B	Shot Hole	
699-9-E5A		BH-138 OR 6-9-E5
699-9-E5B	Shot Hole	
699-9-E5C	Shot Hole	
699-10-0	Shot Hole	
699-10-1	Upper Unconfined	B-24
699-10-2	Upper Unconfined	B-23
699-10-3A	Upper Unconfined	B-36
699-10-3B	Upper Unconfined	1A-SP-8
699-10-3C	Upper Unconfined	
699-10-3D	Upper Unconfined	
699-10-3E	Upper Unconfined	
699-10-3F	Upper Unconfined	
699-10-4	Shot Hole	

[1] Wells names reflect their location. See the attached numbering explanation. This list is comprised of 600 area wells, 699-x-y by protocol, where 17 ≥ x ≥ 6 and 6 ≥ y ≥ E6, ie. generally within Hanford plant coordinates N17500, N5500, W6500, and E6500. Plot plan H-6-930 lists the approximate NW corner of 618-11 as N12478, W3562; the SE corner as N12103, W2562.

9 3 1 2 8 6 5 2 1 6 8

699-10-5A		
699-10-5B		
699-10-6	Shot Hole	
699-10-E3A	Destroyed	DB-3
699-10-E3B	Destroyed	DB-11
699-10-E3C	Upper Unconfined	DB-17
699-10-E4A	Upper Unconfined	DB-4
699-10-E4B	Upper Unconfined	1B-SP-13
699-10-E4C	Upper Unconfined	DB-7
699-10-E4D	Destroyed	DB-8
699-10-E4E	Destroyed	DB-8A
699-10-E4F	Destroyed	DB-8A Redrill
699-10-E4G	Upper Unconfined	DB-9
699-10-E4H	Destroyed	DB-10
699-10-E4J	Destroyed	DB-10A
699-10-E5A	Shot Hole	(DB-19)
699-10-E5B	Destroyed	1C-SP-6
699-10-E6	Shot Hole	
699-10-E7	Shot Hole	
*699-11-0A	Upper Unconfined	CONS#3WPPSS2
699-11-0B	Destroyed	B-16
*699-11-1A	Upper Unconfined	CONS#2WPPSS2
699-11-1B	Upper Unconfined	B-14
699-11-1C	Upper Unconfined	B-15
699-11-1D	Destroyed	B-19
699-11-1E	Upper Unconfined	B-22
699-11-1H	Upper Unconfined	B-33
699-11-1J	Destroyed	B-34
699-11-1K	Upper Unconfined	B-17
699-11-2	Destroyed	B-21
699-11-3	Upper Unconfined	B-18
699-11-4	Shot Hole	
699-11-5	Shot Hole	
699-11-6	Shot Hole	
699-11-E3A	Destroyed	DB-13
699-11-E3B	Destroyed	DB-13A
699-11-E3C	Destroyed	DB-15
699-11-E3D	Destroyed	DB-12
699-11-E4A	Shot Hole	
699-11-E4B	Shot Hole	
699-11-E4C	Destroyed	DB-14
699-11-E4D	Destroyed	DB-16
699-11-E4E	Destroyed	DB-1, BH-140
699-11-E5	Shot Hole	
699-12-1A	Upper Unconfined	B-12, CONS.#1 WPPSS 2
699-12-1B	Destroyed	B-1
699-12-1C	Destroyed	B-2
699-12-1D	Destroyed	B-3
699-12-1E	Destroyed	B-4
699-12-1F	Destroyed	B-5
699-12-1G	Destroyed	B-6
699-12-1H	Destroyed	B-7

9 3 1 2 8 6 5 2 1 6 9

699-12-1J	Destroyed	B-8
699-12-1K	Destroyed	B-9
699-12-1L	Destroyed	B-10
699-12-1P	Destroyed	B-29
699-12-1Q	Destroyed	B-30
699-12-1R	Destroyed	B-31
699-12-1S	Destroyed	B-32
699-12-2A	Upper Unconfined	B-SP-6, 6-12-2
699-12-2B	Shot Hole	(B-13)
699-12-3	Shot Hole	
*699-12-4A	Shot Hole	(6-12-4)
*699-12-4B	Shot Hole	(1D-SP-3)
699-12-4C	Shot Hole	
699-12-4D	Upper Unconfined[2]	
699-12-E3	Upper Unconfined	CB-16
699-12-E4	Shot Hole	
699-13-0	Shot Hole	
699-13-1	Shot Hole	
*699-13-1A	Upper Unconfined	WPPSS2 #1
*699-13-1B	Upper Unconfined	WPPSS2 #2
*699-13-1C		
699-13-2A	Upper Unconfined	
699-13-2B	Upper Unconfined	B-35
699-13-2C	Destroyed	1D-SP-5
699-13-5	Shot Hole	
699-13-E2A	Destroyed	CB-5
699-13-E2C	Upper Unconfined	CB-14
699-13-E2D	Destroyed	
699-13-E3A	Destroyed	CB-3
699-13-E3B	Destroyed	CB-3AA
699-13-E3C	Destroyed	CB-3A
699-13-E3D	Upper Unconfined	CB-4
699-13-E3E	Destroyed	CB-8
699-13-E3F	Destroyed	CB-11
699-13-E3G	Destroyed	CB-12
699-13-E3H	Upper Unconfined	CB-15
699-13-E3J	Upper Unconfined	CB-17
699-13-E4A	Upper Unconfined	CB-18
699-13-E4B	Upper Unconfined	1C-SP-10
699-13-E4C	Destroyed	1C-SP-17
699-14-1A	Upper Unconfined	
699-14-1B	Shot Hole	
699-14-3	Shot Hole	
699-14-5	Shot Hole	
699-14-E1A	Shot Hole	
699-14-E1B	Shot Hole	
699-14-E1C	Shot Hole	
699-14-E2A	Upper Unconfined	CB-7
699-14-E2B	Upper Unconfined	CB-6

[2] Based upon min-max perf. data in Hanford Wells 1989.

9 3 1 2 8 6 5 2 1 7 0

699-14-E3A	Destroyed	CB-2
699-14-E3B	Destroyed	CB-9
699-14-E3C	Destroyed	CB-10
699-14-E3D	Upper Unconfined	CB-19
699-14-E3E	Upper Unconfined	CB-1, BH-142
699-14-E4	Shot Hole	
*699-14-E6P		
*699-14-E6Q		
*699-14-E6R		
*699-14-E6S		
*699-14-E6T		
699-15-0	Upper Unconfined	B-SP-9
699-15-3	Upper Unconfined	R2-SP-6
699-15-4	Upper Unconfined	R2-SP-7
699-15-E2A	Shot Hole	
699-15-E2B	Shot Hole	
699-15-E2C	Shot Hole	
699-15-E3A		BH-144, 6-15-E3
699-15-E3B	Shot Hole	
699-15-E3C	Shot Hole	
699-15-E4A	Shot Hole	
699-15-E4B	Shot Hole	
699-16-5	Shot Hole	
699-16-E1	Shot Hole	
699-16-E3A	Upper Unconfined	1C-SP-14
699-16-E3B	Shot Hole	
699-16-E4A	Upper Unconfined	BH-139A, 6-16-E4
699-16-E4B	Shot Hole	
699-16-E4C	Shot Hole	
699-16-E4D	Shot Hole	
699-16-E4E	Shot Hole	
699-16-E5	Shot Hole	
699-17-3	Shot Hole	B-20
*699-17-5	Upper Unconfined	USGS NO.9 17.4-4.5
699-17-E3A	Shot Hole	
699-17-E3B	Shot Hole	
699-17-E5	Shot Hole	
699-17-E6	Shot Hole	

* Denotes a well that has been or is on a PNL &/or WHC routine ground-water sampling schedule according to *Hanford Wells*, PNL-6907 (McGhan 1989).

9 3 1 2 8 6 5 2 1 7 1

A.1 WELL NUMBERING SYSTEM

A detailed description of the Hanford Site well numbering system is given in McGhan et al. (1985). Slightly different numbering systems are used, depending on the area in which the well is located. However, all well numbers use a three-part designation beginning with a three- or four-digit prefix of the form "X99-." The "X" corresponds to the Hanford Site area (i.e., 1 = 100 Area, 2 = 200 Area, 3 = 300 Area, 4 = 400 Area, 6 = 600 Area, 11 = 1100 Area, and 30 = 3000 Area) and the "99" identifies it as a well. The various schemes for each area are summarized below.

A.1.1 100 AND 200 AREA WELLS

Wells located in the 100 and 200 Areas are named using the form "X99-Ynn-N" (e.g., 299-E25-19). The "X" is a "1" for a 100 Area well and a "2" for a 200 Area well. The "Y" specifies the subarea in which the well is located (i.e., B = 100-B, D = 100-D, F = 100-F, H = 100-H, K = 100-K, N = 100-N, E = 200 East Area, and W = 200 West Area). The number "nn" is blank for 100 Area wells and for 200 Area wells is the map sheet on which the well is located as defined in McGhan et al. (1985). The final number "N" generally corresponds to the position of the well in the drilling sequence for wells in that map sheet. If "N" is less than 50, the well was drilled to the groundwater, otherwise it was a dry well. For example, well 299-E25-19 is the 19th well drilled to the groundwater in the area covered by map sheet 25 in 200 East Area.

A.1.2 300 AREA WELLS

Wells located in the 300 Area are named using the form "399-nn-N" (e.g., 3-2-1). The naming scheme is the same as in the 100 and 200 Areas except that no subarea letter is used.

A.1.3 400, 600, 1100, AND 3000 AREA WELLS

Wells located in the 400, 600, 1100, and 3000 Areas are named using the form "X99-N-W" (e.g., 699-53-48B). The "X" corresponds to the area as described above. The "N" and "W" are the north and west coordinates, respectively, of the well, rounded to the nearest thousand. Hanford plant coordinates are used for 400 and 600 Area wells, while Richland coordinates are generally used in the 1100 and 3000 Areas. Both of these coordinate systems use feet as the unit of measure. When more than one well has the same coordinate (rounded to a thousand), a letter is appended to the name. Wells located south or east of the coordinate origin (near the 400 Area for plant coordinates) have an "S" or an "E", respectively, preceding the coordinate. For example, well 699-53-48B is located in the 600 Area and has coordinates 52,868 ft north and 47,729 ft west.

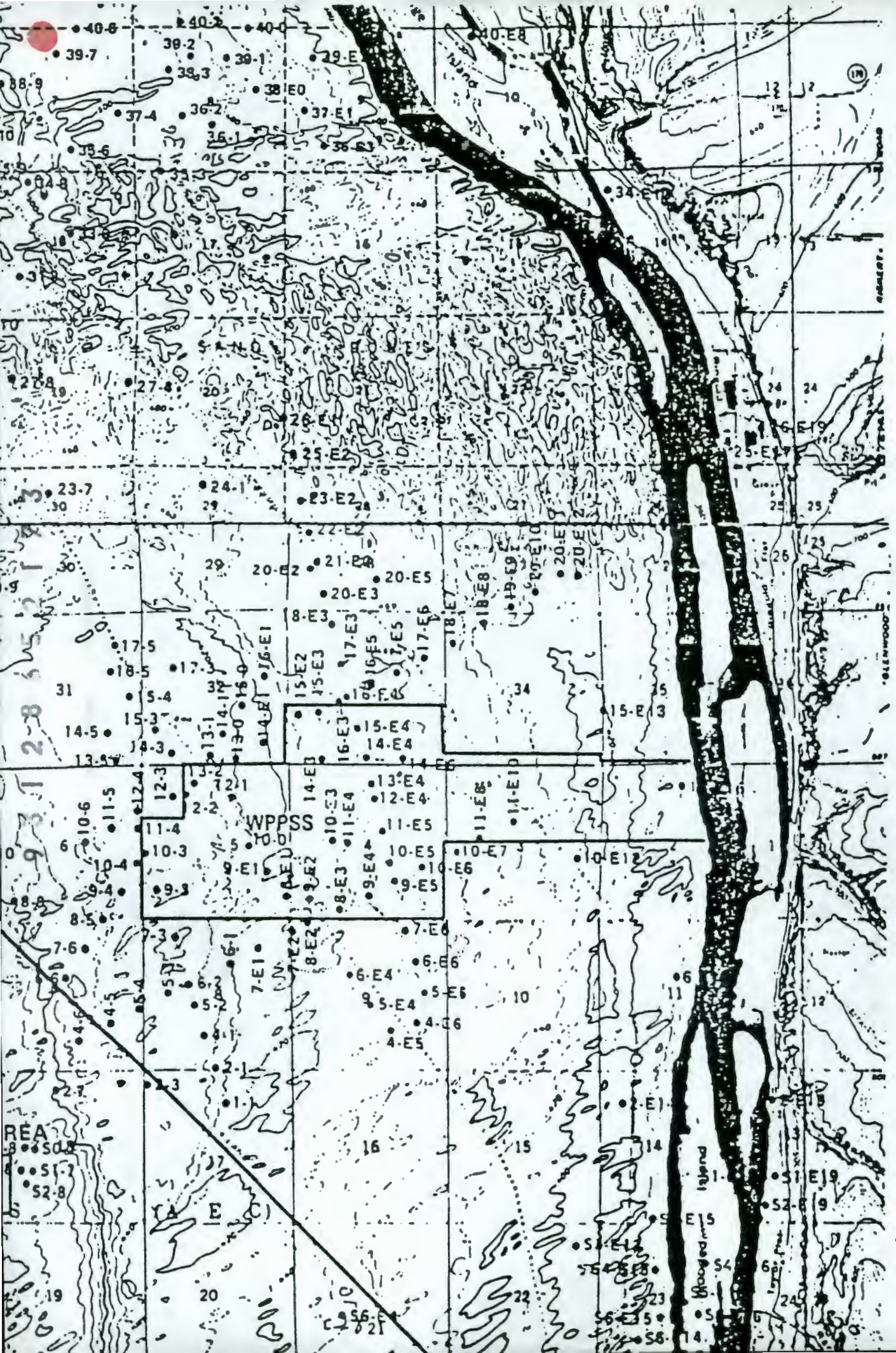
40,000
30,000
20,000
10,000
0
WPPSS
REA
Island

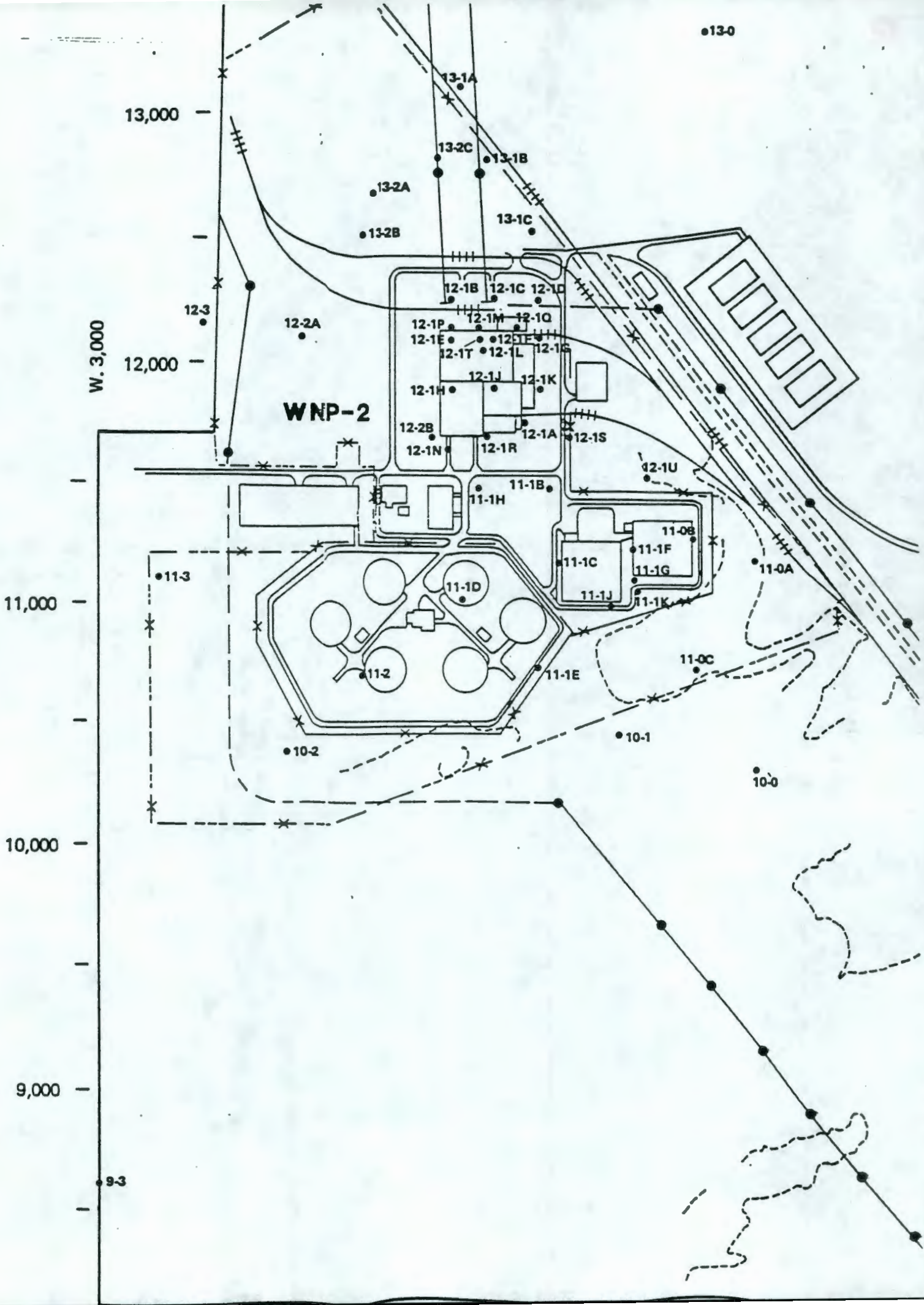

9 3 1 2 8 6 5 2 1 7 4

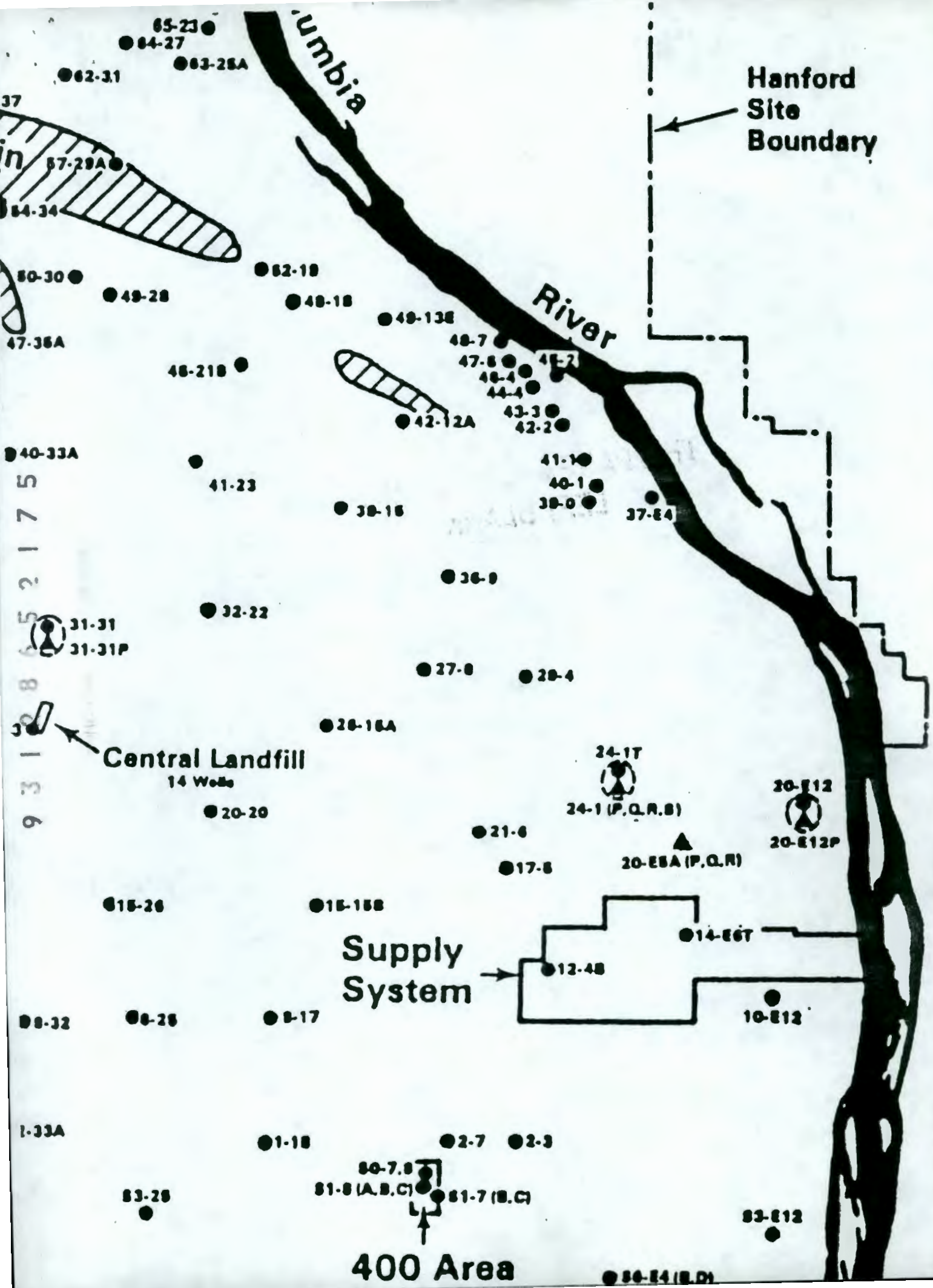
Hanford Site Boundary
River
Central Landfill
14 Wells
Supply System
400 Area
65-23
64-27
63-25A
62-31
57-29A
54-34
50-30
49-28
52-18
49-18
49-13E
48-7
47-6
46-4
44-4
43-3
42-2
42-12A
48-21B
47-36A
40-33A
41-23
41-1
40-1
39-0
37-E4
39-15
36-9
32-22
31-31
31-31P
27-8
28-4
26-15A
24-1T
24-1 (P,Q,R,S)
20-E12
20-E12P
20-20
21-6
20-E5A (P,Q,R)
17-5
15-26
15-15B
14-E6T
12-4B
10-E12
8-32
8-26
8-17
1-33A
1-18
2-7
2-3
50-7,8
51-8 (A,B,C)
51-7 (B,C)
53-26
53-E12
56-E4 (B,D)

THIS PAGE INTENTIONALLY
LEFT BLANK

Attachment VIII
Radiological Scrap & Waste Facility - INEL

9 3 1 2 8 6 5 2 1 7 6

RADIOLOGICAL SCRAP AND WASTE FACILITY
INEL

* FACILITY CONSISTS OF A 4 ACRE SITE - OPERATION BEGAN IN 1965
  CONTAINS LINED VERTICAL SHAFTS FOR STORAGE OF ACCOUNTABLE NUCLEAR MATERIAL

* 27 ROWS EACH CONTAINING 50 COLUMNS / THE LAST ROW WAS NOT USED

* ORIGINAL LINERS WERE MADE OF SCHEDULE 40 CARBON STEEL WITH A 1/2 INCH STEEL PLATE BOTTOM

* CONTENTS INCLUDE IRRADIATED NAVAL WASTES (SUBMARINE PUMPS, ETC)

* RECENTLY RECEIVED WASTES CAN HAVE A DOSE RATE UP TO 50,000 R/HR
  OLDER WASTES CAN STILL READ NEAR 2000 R/HR

****

* IT WAS LEARNED THAT THE ORIGINAL CARBON STEEL LINERS WERE CORRODING FROM THE OUTSIDE - IN DUE TO THE ALKALINE IDAHO SOIL

* THE LINERS IN THE PREVIOUSLY UNUSED ROW WERE RETRIEVED AND DISCARDED
  NEW LINERS OF A SLIGHTLY LARGER DIAMETER WERE FABRICATED AND EQUIPPED WITH CATHODIC PROTECTION AND PLACED IN THE HOLES

* A CRANE WITH A 40 FOOT BOOM LIFTS LINERS FROM THE ORIGINAL HOLES AND PLACES THEM INTO THE NEW LINERS

* IF DOSE RATES EXCEED 300 R/HR THE ORIGINAL LINERS ARE RETRIEVED INTO A VERTICALLY POSITIONED CASK. THE CASK IS MOVED TO THE NEW LOCATION AND THE CRANE IS USED TO LOWER THE CONTAINER INTO THE NEW HOLE

Attachment IX
Project 618-10/11 -
Onsite Transfer of Radioactive Material

9 3 1 2 8 6 5 2 1 7 8

9 3 1 2 8 6 5 2 1 7 9

PROJECT 618-10/11

ONSITE TRANSFER OF RADIOACTIVE MATERIAL

J. Khojandi
Packaging Safety Engineering

February 1, 1993

PURPOSE

This presentation provides an overview of issues concerning packaging, onsite transfer, and storage of wastes described. The overview is general in nature and includes assumptions regarding the contents/payload, packaging selection criteria, and packaging concepts.

I. Packaging and Storage Issues

II. Package Selection
- ***Safety***
- ***Cost***

III. Packaging Concepts
- ***Trench Wastes***
- ***Pipes and Caisson Wastes***

I. PACKAGING AND STORAGE ISSUES

Assumptions:

- ***Transfer to take place from the 600 Area to the 200 West Area.***
- ***Onsite Transfer - Public access roads are closed during transfer.***

I. PACKAGING AND STORAGE ISSUES

Radioactive Contents/Payload:

- ***Packaging requirements are determined by the quantity, type, and form of radioactive material.***
- ***Wastes are not fully characterized; making packaging selection difficult.***

For 20-30 years decay time, it may be assumed:

- ***Trench - Contents may be Type B, TRU, organics (low activity mixed waste).***
- ***Pipes and Caissons: Fissile, HRCQ, Pyrophoric, organics (high activity mixed waste).***

I. PACKAGING AND STORAGE ISSUES

Other Hazards:

- ***Storage: Criticality, off-gasing, pyrophoric***
- ***Transportation: Can be alleviated by placement of operational controls***

I. PACKAGING AND STORAGE ISSUES

Packaging Need Based On Payload Characteristics Involve:

- ***Trench Type Wastes - Payloads are small, involve lower hazards, more flexible for packaging, and may be vented for storage; heavy shielding may not be needed.***

- ***Pipe and Caisson Wastes - Payloads are large and vented for storage; heavy shielding is probably required.***

I. PACKAGING AND STORAGE ISSUES

Customer Needs For Packaging:

- ***To be used for onsite transfer.***
- ***To provide ten years storage life.***
- ***To be available in two years.***

II. PACKAGING AND STORAGE ISSUES

Selection of packaging is based on:

A. Safety

B. Cost

II.A. PACKAGING SAFETY

- ***The purpose is to protect the public and the environment during transport of radioactive material. Package protection is commensurate with the level of hazards presented.***

- ***Safety is engineered in packaging design or ensured by limiting the contents of the package.***

II.A. PACKAGING SAFETY

Safety Criteria: Type B, Normal and Accident Conditions

1. ***Provide adequate CONTAINMENT of radioactive material.***

2. ***Maintain nuclear SUBCRITICALITY for fissile contents.***

3. ***Provide shielding.***

II.A. PACKAGING SAFETY

Packaging is designed, manufactured, tested, maintained, and used in accordance with provisions of the following regulating federal agencies.

- ***U.S. Department of Transportation (DOT)***

  49 CFR 173 - ***For Type A and LSA packagings.***
  - ***For normal conditions of transport.***

- ***U.S. Nuclear Regulatory Commission (NRC)***

  10 CFR 71 - ***For Type B and Fissile packagings (commerce).***
  - ***Both normal and accident conditions.***

II.A. PACKAGING SAFETY

- ***U.S. Department of Energy (DOE) (DOT, 49 CFR 173.7(d))***

  DOE Order 5480.3 ***- For Type B and Fissile packagings (DOE).***
  - Both normal and accident conditions.

- ***The U.S. Department of Energy, Richland Field Office (RL) Order 5480.1, Change 1, Chapter III (Hanford Site)***

  Equivalent Safety - Technical and economical basis. For normal and credible accident conditions based on risk assessment.

II.B. PACKAGING COST

Existing Onsite Packaging:

- ***Facility interface***
- ***Operating and maintenance procedures, and training***
- ***Availability***
- ***Purchase costs***
- ***SARP***

DOE Packagings

Offsite Vendor

Design New Packaging - Time Constraint

III. PACKAGING CONCEPTS

1. ***Trench Wastes: TMB Box, TRU Drums - Onsite Type B packagings.***

   Advantage: ***Cost and Availability, Vented, 20 year Storage Life***

   Disadvantage: ***No Shielding***

III. PACKAGING CONCEPTS

2. Pipes and Caissons Wastes: Shielded Casks

- ***NUHOMS***

Advantage:	*A good transportation and storage system (10 CFR 72).*
Disadvantage:	*Incompatible with contents, expensive, disposal costs for both the canisters and the storage facility. Cost is 77.5 million dollars for 150 units.*

III. PACKAGING CONCEPTS

- ***Concrete Shielded Casks***

Advantage:	***Packaged waste is transported and stored. Less handling.***
Disadvantage:	***Expensive, cost of disposal, handling equipment. Approximately 15 million for the packaging cost.***

III. PACKAGING CONCEPTS

- ***Modified NUHOMS***

Advantage:	-	***Built on NUHOMS concept, methods, and standards.***
	-	***Compatible with the payload, costs 1/10 of the original. Will be available in two years, provides 50 year storage life.***
Disadvantage:	-	***May require more review/approval effort.***

ACTION ITEMS

I. Conduct a national and international search to:

- *Determine if a similar project has been done somewhere else.*
- *Find a similar or suitable packaging system.*

II. Evaluate available systems, system modifications and new system options.

III. Provide packaging recommendations based on comparison of alternatives.

THIS PAGE INTENTIONALLY
LEFT BLANK

Attachment X
Calvert Cliffs Independent
Spent Fuel Storage Installation

9 3 1 2 8 6 5 2 1 9 7

BALTIMORE GAS AND ELECTRIC

Calvert Cliffs Independent Spent Fuel Storage Installation

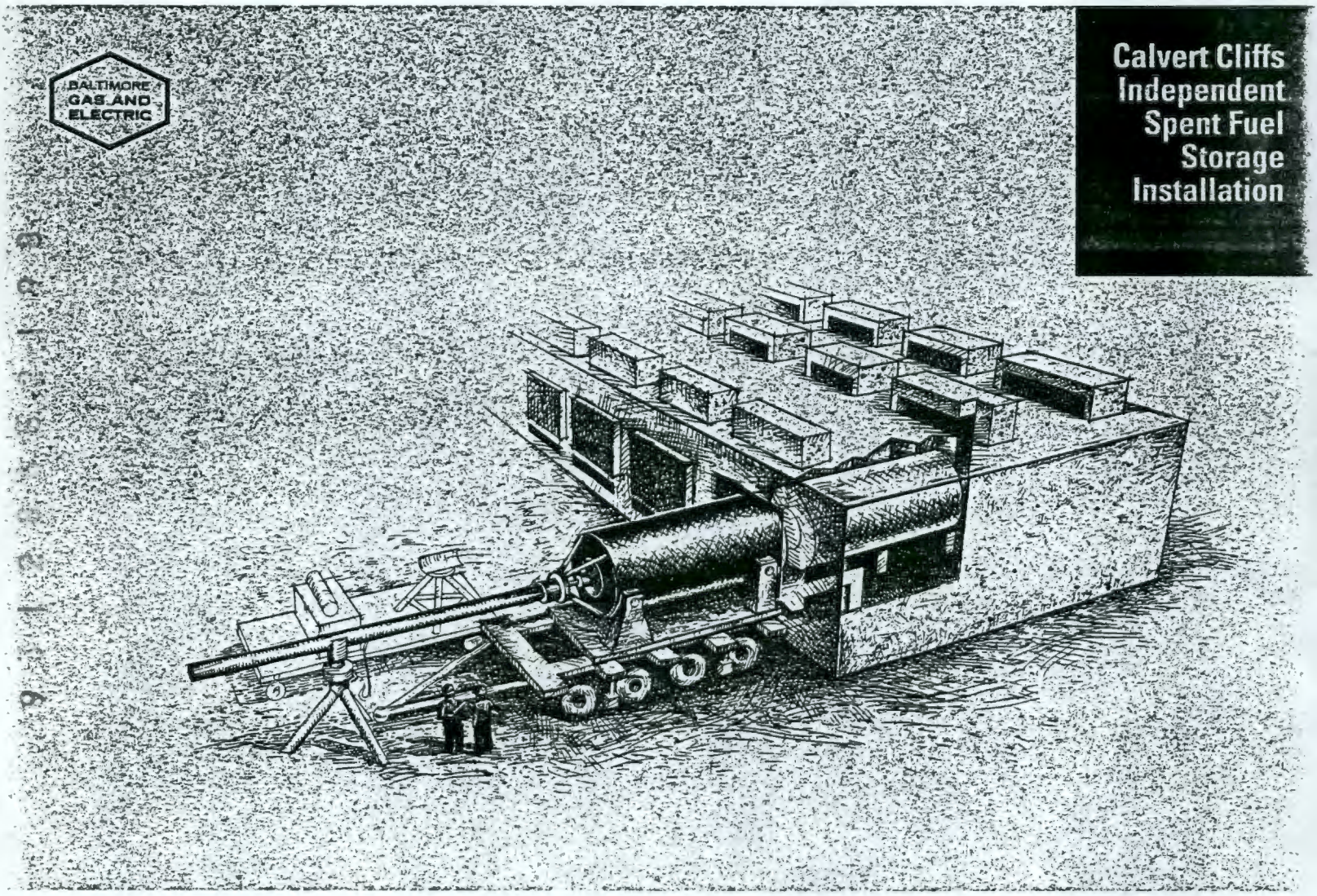

I. PROBLEM

Spent Fuel Storage-in the beginning

The technology and thinking on long-term storage of spent nuclear fuel have come a long way.

When the Calvert Cliffs Nuclear Power Plant began operations in the mid-1970s, the Baltimore Gas & Electric Company's spent fuel storage strategy was this: store the spent fuel for a short period in the plant's spent fuel pool, then transport it to an off-site reprocessing facility where the remaining fissionable material could be recovered for use.

The plant's original spent fuel racks were designed with that strategy in mind, and provided for storage of only 400 assemblies.

But the industry and the strategy changed.

The first major long-term storage change occurred in 1977 when the federal government banned the commercial reprocessing of spent nuclear fuel. Faced with limited storage space, Calvert Cliffs adjusted by fitting the pool with new racks, increasing the pool's capacity to 1830 fuel assemblies by 1983. That capacity was sufficient to allow a full core off-load capability (full core reserve-FCR) until 1992.

In the Middle

The Federal Government began seeking legislative solutions to the disposal issue. In January 1983, that research produced the Nuclear Waste Policy Act of 1982, which spelled out a program to develop, license, and operate a geological repository for spent fuel.

BG&E joined EPRI, Northeast Utilities, Combustion Engineering and later the Department of Energy in a cooperative program to demonstrate fuel consolidation technology at Northeast Utilities' Millstone Unit 2 power plant.

The consolidation work was a

9 3 1 2 8 6 5 2 1 9 9

glimpse of the short term future of spent fuel storage—reconfiguring fuel rods from assemblies, allowing storage of the rods in a close-packed array.

By reconfiguring the rods, it would be possible to store more fuel in a given number of storage locations than would be possible if the fuel were left in its original form. This new technique would have allowed BG&E to store all spent fuel in the spent fuel pool until the government's repository open—scheduled in 1998.

In summary, the strategy in 1982-1983 was based on the repository date established by the newly-enacted NWPA and the possibility of applying the consolidation technology being developed under the EPRI program.

Due to equipment design issues and ultimate achievable pool capacity (compared to needs once the repository program began to slip) consolidation was eliminated as an option. The repository program got off to a slow start, due to a combination of litigation and inertia. A 1985 EPRI study compared the repository program to a nuclear power plant construction program and concluded that the latter was a comparatively simple undertaking. Late in 1987, the Nuclear Waste Policy Amendments Act was passed, naming Nevada as the primary repository site for investigation and tying any MRS to the repository schedule. Proponents hope that this legislation can get the repository program back on track, but the remaining truth for the utilities is that there is no reliable date on which we can rely in formulating on-site storage strategy, certainly not 1998, 2003, or even the latest scheduled date, 2010.

Calvert Cliffs' new strategy is:

1. Accommodate on-site life-of-plant storage if needed.
2. Allow capacity expansion to proceed incrementally; if off-site storage becomes available, the cost will be minimized.
3. Maintain compatibility (minimize impact on fuel handling operations) with any feasible final disposal scenario.

In developing that strategy, consideration was given to all available storage options and choosing the one that best suits BG&E's needs. Since the pool already has high density racks and consolidation technology is still developing, the following dry storage options were investigated:

1. Metal Cask Storage.
2. Modular Vault Dry Storage.
3. NUHOMS (Nutech Horizontal Modular Storage).

In selecting the option that best fit the needs of BG&E, the major considerations were:

9312865220 1

II. SOLUTION

1. Licensing History/Status.
2. Operating Experience.
3. Impact on Plant (fuel handling, modifications, land use).
4. Compatibility with final disposal scenarios.
5. Total cost and schedule.

After thoroughly evaluating competitive proposals from eleven vendors, the NUHOMS-24P System was selected as the spent fuel storage capacity expansion option for Calvert Cliffs. The NUHOMS System provides an economical, modular facility for long-term dry storage of spent nuclear fuel assemblies. (The primary components and equipment of the NUHOMS-24P System are shown in Figures 1 and 2.) The System uses a reinforced concrete Horizontal Storage Module (HSM) to store the spent fuel which is confined in a stainless steel Dry Shielded Canister (DSC). The HSM provides radiological shielding and physical protection for the DSC and has internal air flow passages to provide natural circulation cooling for decay heat removal. The DSC is a pressure vessel for the confinement of radioactive materials and provides an inert environment to ensure integrity of the fuel rods.

In addition to the HSM and the DSC, the NUHOMS-24P System will utilize a transfer cask, cask skid and alignment system, transport trailer, and hydraulic ram system. The equipment provided for use in the Auxiliary Building includes a cask lifting yoke, a vacuum drying system, and a remote welding system utilized for canister closure.

Minimum cooling times for fuel assemblies prior to dry storage will be determined based on initial enrichment and burn-up, and will typically vary from five to ten years.

9 3 1 2 8 6 5 2 2 0 2

III. PRESENT STATUS

The design of the NUHOMS-24P System includes consideration of normal and off-normal operating conditions, and worst case postulated accidents. The system is designed in accordance with the requirements of 10 CFR Part 72 as well as Regulatory Guide 3.54, ANSI/ANS 57.9-1984, the ASME Code, Section III, and ACI-349-85 as well as other applicable specifying documents, as described in the NUHOMS-24P Topical Report.

The Independent Spent Fuel Storage Installation (ISFSI) is a proven design that has been selected and is currently being used by other utilities:

1) Carolina Power & Light - Has constructed, tested and put into operation a NUHOMS-7P ISFSI at H. B.Robinson.
2) Duke Power - Has constructed, tested, and put into operation a NUHOMS-24P ISFSI at Oconee.

The ISFSI required the preparation of a 10 CFR 72 License Application, Safety Analysis Report, Environmental Report, and a Security Plan for NRC review and approval. The license material was prepared and submitted to the NRC in December, 1989.

Construction of the ISFSI west of the plant began in April 1991 after approval of the Environmental Report by the NRC. (For additional schedule information see the Milestone Schedule, Section IX.)

IV. SYSTEM

NUHOMS-24P ISFSI: The Calvert Cliffs Independent Spent Fuel Storage Installation (ISFSI) has been designed as a life-of-plant storage facility. The ISFSI will have the capacity to store all spent fuel discharged from Calvert Cliffs Units 1 and 2, beyond the spent fuel pool capacity, up to the 40-year plant life if necessary. Since the exact capacity needed is uncertain, and to limit capital investment until necessary, the ISFSI will be constructed in up to five phases. Phases I and II, to be completed by the third quarter of 1992, will consist of the following:

- Facility Installation, inclusive of: site clearing, grading, utilities, lighting and security perimeter for life-of-plant storage, i.e., space for 120 Horizontal Storage Modules (HSMs) in five sets of 2X12 arrangement.
- Construction of 48 Horizontal Storage Modules (HSMs). (1 Dry Shielded Canister is stored in each HSM)
- Procurement of 42 Dry Shielded Canisters (DSCs). (24 Fuel Assemblies are stored in each DSC)
- All balance of plant work, including site access road and in-plant modifications.
- Auxiliary Building Crane Upgrade to Single Failure Proof.
- On-site transfer cask, trailer and alignment system.
- Automatic welding and inspection system.
- Welding mock-up.
- Facility scale model for the Calvert Cliffs' Visitors Center.
- Tractor to pull transfer trailer.
- 10 CFR 72 license for life-of-plant storage (120 HSMs).
- 10 CFR 50 License amendments for in-plant fuel movement.
- 13 KV Line Relocation
- Radiological Monitoring System

9 3 1 2 8 6 5 2 2 0 3

9 3 1 2 8 6 5 2 2 0 4

V. COMPONENTS

• "Dry Run" of System to approved procedures.

Phases I and II, now under construction, will expand Calvert Cliffs' spent fuel storage capacity out to at least the year 2003. The need for future phases (three through five) will depend on the DOE repository program schedule.

NUHOMS-24P Dry Shielded Canister (DSC):

The NUHOMS DSC for Calvert Cliffs is a 5/8" thick, high integrity stainless steel welded pressure vessel that provides confinement of radioactive materials, and encloses the spent fuel in a inert helium atmosphere. Together with the transfer cask, the DSC provides biological shielding during sealing and transfer operations and during storage in the HSM. The DSC shell, and the top shield plug and cover plate assemblies enclose a basket assembly which serves as the structural support for the fuel assemblies. The DSC basket assembly for Calvert Cliffs is designed to hold 24 intact fuel assemblies.

The NUHOMS-24P internal basket assembly is designed to provide criticality control during worst case wet loading operations including optimum moderator density conditions. Control methods for prevention of criticality consist of the material and characteristics of the fuel itself, the precise geometry of the DSC basket assembly, and the inherent neutron absorption capability of the stainless steel guide sleeve assemblies.

Subcriticality with a Keff <0.95 for all conditions has been demonstrated.

To ensure high integrity and a consistent, industry accepted methodolo-

gy, the DSCs for Calvert Cliffs will be designed, fabricated, and inspected in accordance with the ASME Code rules for Class 1 vessels (Section III, Subsection NB); however, an N-stamp is not required.

NUHOMS-24P Horizontal Storage Module (HSM):

The NUHOMS-24P HSM for Calvert Cliffs will be constructed of reinforced concrete and structural steel.The HSMs will be constructed on an engineered load bearing foundation within a fenced-in controlled access area. The HSMs provide protection against all postulated worst case natural phenomena, and provide highly effective biological shielding sufficient to maintain an average contact dose rate of 15 mrem/hr or less with a maximum localized dose rate of 75 mrem/hr or less. Each HSM is capable of storing 1 DSC.

Like the DSC, to ensure high integrity and a consistent industry accepted methodology, the proposed reinforced concrete HSMs are designed in accordance with the ACI-349 Code and constructed in accordance with ACI-318 Code for safety-related structures. The DSC support structure and other miscellaneous structural steel for the HSMs are designed, fabricated, and constructed in accordance with the AISC Code.

The HSM design includes a passive ventilation system for the removal of spent fuel decay heat through natural draft convection. The HSM ventilation system has a heat removal capacity of at least 16 Kw per DSC.

The HSM includes a DSC support system with machined, hard surfaced support rails to facilitate DSC transfer to and from the NUHOMS transfer cask. Together with the HSM's support system for the DSC and the NUHOMS transfer equipment and procedures an

9 3 1 2 8 6 5 5 2 2 0 5

9 3 1 2 8 6 5 2 2 0 6

VI. EQUIPMENT

integral system is formed which provides a reliable, safe means of transferring the DSC to and from the HSM. Actual fuel loading operations at Carolina Power and Light's H. B. Robinson Nuclear Power Plant and Duke Power's Oconee Plant, utilizing the NUHOMS System, have demonstrated the viability of the NUHOMS System.

NUHOMS-24P Transfer Cask:

The NUHOMS-24P transfer cask for Calvert Cliffs is constructed of heavy steel plate and forgings, lead, and a solid neutron shield. The transfer Cask's purpose is to facilitate transfer of the DSC from the spent fuel pool and cask laydown area following fuel loading, to the ISFSI site. The transfer cask is designed and licensed for on-site use, in accordance with 10 CFR 72. The cask provides protection for the DSC against all postulated worst case natural phenomena and postulated cask drop accidents. The transfer cask also provides biological shielding to minimize personnel radiation dose during DSC transfer operations. The transfer cask is designed to be operationally efficient and maintenance free. All exposed surfaces are constructed with a smooth finish and as a result, are easily decontaminated. Upper lifting trunnions are provided for cask handling and lower support trunnions are provided to reorient the cask from the vertical to horizontal position on the transfer cask support skid. Bolted cover plates, with assists for handling and alignment, are provided. A drain port and auxiliary pressure port are provided, with quick connect fittings compatible with existing plant equipment. A seal between the DSC and cask is provided to preclude contami-

9 3 1 2 8 6 5 5 2 2 0 7

nation during fuel loading in the pool. The transfer cask is designed to be compatible with the HSM access opening docking collar and the hydraulic ram system to minimize the potential for radiation streaming effects.

To ensure high integrity and a consistent, industry accepted methodology, the transfer cask for Calvert Cliffs are designed, fabricated, and inspected in accordance with the ASME Boiler and Pressure Vessel Code rules for Class 2 vessels (Section III, Subsection NC). In addition, the lifting trunnions for the transfer cask are designed and tested in accordance with the ANSI N14.6 requirements for critical lifts so that the cask can be handled in the plant's fuel building with compatible lifting equipment, in compliance with NUREG-0612 requirements. The transfer cask will also include a lifting yoke to be used for all handling operations.

RAM:

The Ram System is utilized at the ISFSI site to push DSCs from the Transfer Cask into the HSMs, it includes: (1) A hydraulic cylinder with a capacity of 40 tons and a stroke of 21 feet. (2) A hydraulically-operated grapple assembly mounted on the end of the cylinder which engages the DSC grapple ring to facilitate DSC transfer. (3) A cask mounting frame to facilitate alignment of the hydraulic ram with the transfer cask. (4) A tripod support with jack screws and a clevis arrangement that simplifies alignment of the hydraulic ram with the transfer cask.

TRANSFER TRAILER:

The Transfer Trailer is used to transport the transfer cask to and from the ISFSI site. It has eight wheel sets, on four axle lines, with a total of 32 pneumatic tires. It is suitable for use on an engineered heavy-haul roadway.

9312865220 8

It has a hydraulic suspension with an adjustable deck height. Each wheel set of the trailer can be made steerable with a minimum inside turning radius of 8'-6".

The Transfer Trailer has a capacity of 125 tons. Lubrite bearing plates are mounted to the trailer frame to allow horizontal positioning of the transfer cask support skid at the HSM. Vertical jacks are used to stabilize the trailer during loading and unloading operations. The trailer is designed and constructed in accordance with commercial industry standards and is non-safety related.

Remote Welding System:

To substantially reduce occupational exposure during DSC closure, a remote welding and examination system will be used. The remote welder will accomplish the seal welds on the DSC shield plug and top cover plate. The remote welding machine is designed for quick placement and can be set up in a few minutes, after which most welding and inspection operations are remotely performed. The remote welder also produces a more uniform, higher quality weld than is attainable by manual means, offering significant advantages in quality control.

Cask Support Skid:

The skid sits on the transfer trailer and allows for alignment of the cask with the HSM by hydraulic during fuel transfer operations. The skid is constructed of structural steel and is designed and fabricated in accordance with AISC Code and is non-safety related.

Vacuum Drying System:

After the fuel assemblies are loaded into the DSC and the lead plug is

welded into place, the water is drained out of the DSC. This is accomplished by forcing the water out through the DSC siphon tube with helium gas. When all the water has been drained from the DSC, the vacuum drying system (VDS) is activated and the DSC is evacuated. As the DSC is evacuated, the DSC and its internals are heated by the fuel's decay heat and water is vaporized and removed by the VDS. The combination of low pressure and elevated temperature will remove essentially all of the water vapor.

9 3 1 2 8 6 5 2 2 0 9

VII. UPGRADES

ISFSI Site Access Road:

To accommodate the approximately 125 ton transfer cask, skid and trailer, the existing road between the north side of the OTF and the ISFSI site, has been upgraded to serve as a heavy-haul road.

Auxiliary Building Cask Handling Crane:

In order to handle the 115 ton NUHOMS-24P transfer cask over the spent fuel pool in compliance with NUREG-0612, the Auxiliary Building crane will be upgraded to the single-failure proof requirements of NUREG-0554. This will involve replacing the existing trolley of the Auxiliary Building crane with a new trolley that meets NUREG-0554 single-failure proof requirements.

Auxiliary Building Modifications:

Modifications required to support the NUHOMS-24P System will include:

- Vacuum Drying System power and connection to the Rad waste System
- A helium supply for DSC backfill
- Electrical power for welding operations
- DSC drainage back to the spent fuel pool
- Semi-permanent scaffolding in the cask washdown pit to support transfer cask decontamination.

VIII. OPERATION

Fuel Handling:

NUHOMS fuel handling operations consist of two basic activities; loading fuel into the DSC and DSC insertion into the HSM. Loading of the DSC in the pool is a procedure very similar to that of loading any shipping cask in the pool. The DSC loading operation is broken into discrete steps as shown in Figures 3 and 4. At the conclusion of the DSC loading and sealing procedures, the DSC is prepared for storage. (Figure 5)

After the final sealing operation is performed on the DSC, the NUHOMS transfer trailer is towed to the ISFSI site and backed into approximate alignment with the HSM. The alignment and insertion steps are shown in Figure 5. The cask alignment operation uses optical tooling to determine the position of the cask and DSC relative to the centerline of the DSC position on the support rails of the HSM. Optical tooling provides a very accurate position readout. Redundant optical targets on the cask and HSM outer surfaces provide reference points for alignment prior to and during the DSC insertion. The cask position is monitored continuously during DSC insertion.

Radiological Protection Features:

Every operational aspect of the NUHOMS System, from canister loading through drying, sealing, transport, and transfer has been designed to assure that exposure to occupational personnel is as low as reasonably achievable (ALARA).

A DSC is loaded to capacity with spent nuclear fuel, then a heavy shield plug is placed over its opening prior to removal from the spent fuel pool. Following are several important design features of the loading operation:

- A shielded transfer cask provides

radiation protection in the radial direction.

- Large shield plugs on the ends of the DSC reduce axial exposure to workers performing the drying and sealing operations.
- Double seal welds on the DSC provide containment for radioactive materials.
- The DSC/Cask annulus is filled with demineralized water and sealed prior to pool immersion to preclude DSC exterior contamination.
- Water is allowed to remain in the DSC/Cask annulus during welding operations as a shield for streaming radiation.
- Water is allowed to remain in the DSC cavity during the shield plug sealing operations to further reduce operational exposure.
- A recessed Cask/HSM docking ring provides a shielding labyrinth to reduce radiation streaming during DSC transfer.

The passive nature and concrete construction features of the NUHOMS System provided the lowest possible on-site collective exposure by eliminating the need for routine maintenance, and minimizing periodic inspection requirements. NUHOMS adds little to existing off-site radiation levels since it is carefully designed to minimize direct, streaming, and "skyshine" radiation.

Following are design features that maintain on and off-site radiation levels:

- Thick concrete HSM walls and roof provide radiation attenuation during the storage term.
- A composite steel/concrete door provides shielding at the front of the HSM.
- Convection cooling air inlet and outlet ducts are engineered to reduce scattered radiation levels to a minimum.
- No process instrumentation or controls are necessary. The NUHOMS

System is completely passive.

• A continuous monitoring system for area radioactivity levels has been installed.

System Start-up and Training:

Start-up of the NUHOMS System involves three tasks: preparation and approval of operating and surveillance procedures, training of personnel, and conducting a "dry run" of DSC loading and retrieval from the HSM. After the procedures have been approved, training of all personnel is required. This training will include a general overview course to all personnel involved in the DSC loading process and HSM surveillance. Extensive training of personnel for individual tasks and on individual pieces of equipment will be conducted following the general overview training.

Once training of the personnel has been completed, a "dry run" of loading and retrieval of the DSC will be performed. This exercise will consist of simulating an actual fuel loading operation, using a DSC loaded with test weights, loading the DSC into the HSM, retrieving the DSC and returning it to the cask decontamination area, and then demonstrating inpool cask handling and shield plug placement. This "dry run" will provide personnel with hands-on training, ensure all equipment is operating correctly, and ensure the operating procedures are adequate.

9 3 1 2 8 6 5 2 2 1 3

IX. ISFSI MILESTONE SCHEDULE

File License Application with NRC	December 1989
Award DSC and TC Contracts (Pacific Nuclear)	June 1990
Award Crane Upgrade Purchase Order	July 1990
Award Construction Contract	August 1990
Environmental Report Approval	March 1991
Calvert County Building Permit	September 1990
Begin Facility Construction	April 1991
Award Transfer Equipment Contract (Pacific Nuclear)	October 1990
Safety Analysis Report Approval	March 1992
Delivery of SFP Crane Trolley	March 1992
Delivery of Transfer Cask, Equipment & First DSC	January 1992

9312865221 4

Complete Crane Upgrade	August 1992
Complete Facility Construction	October 1992
Complete Pre-Operational Testing	October 1992
ISFSI In-Service	October 1992

9 3 1 2 8 6 5 2 2 1 5

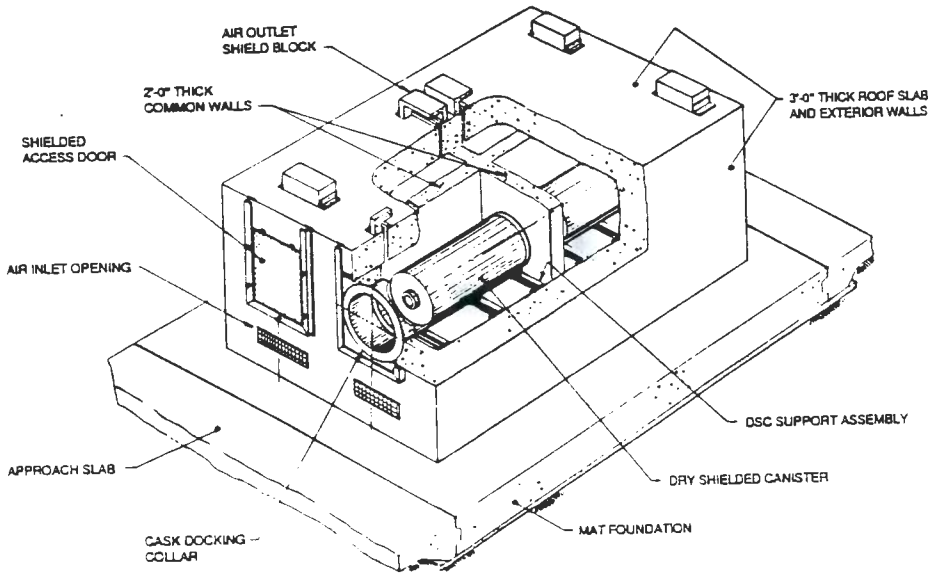

THE NUHOMS® SPENT FUEL STORAGE SYSTEM

PACIFIC NUCLEAR SYSTEMS

Figure 1

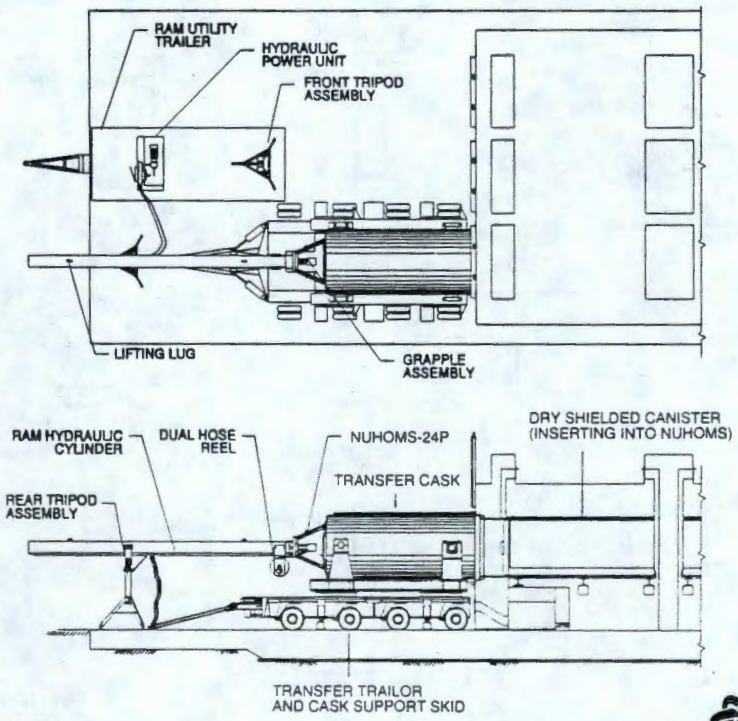

Figure 2

PACIFIC NUCLEAR SYSTEMS

9 3 1 2 8 6 5 2 2 1 7

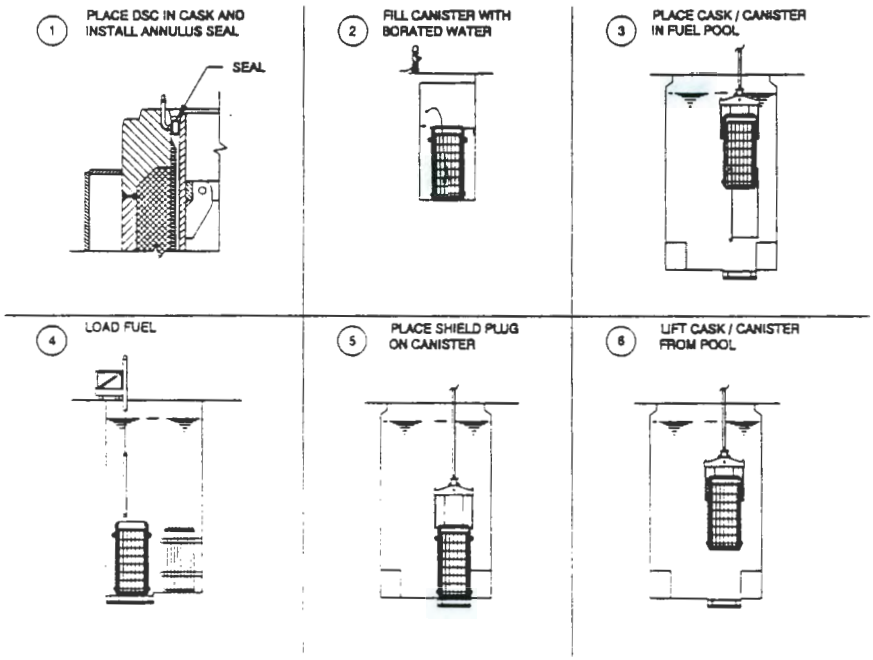

CANISTER FUEL LOADING

PACIFIC NUCLEAR SYSTEMS

Figure 3

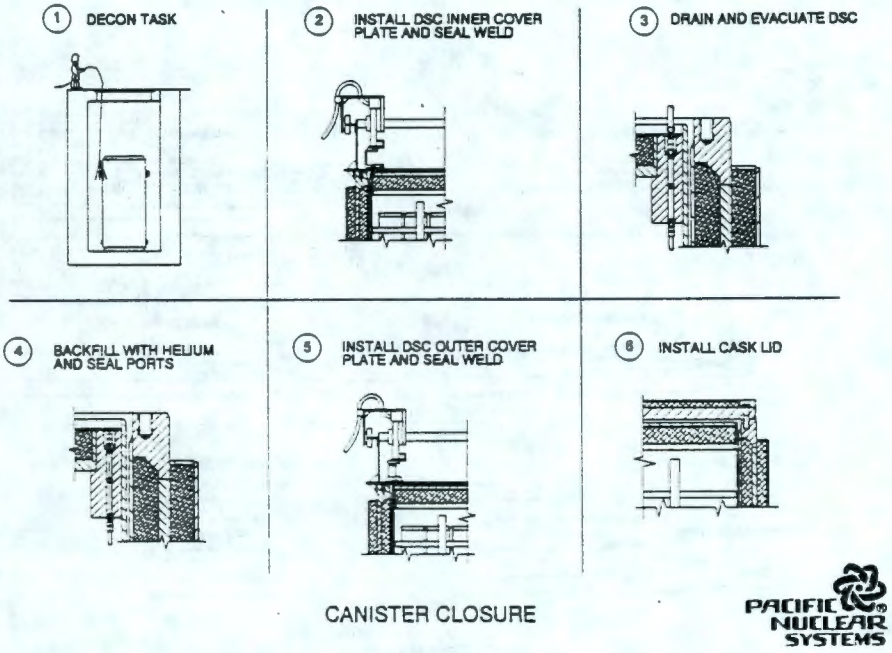

Figure 4

9 3 1 2 8 6 5 2 2 1 9

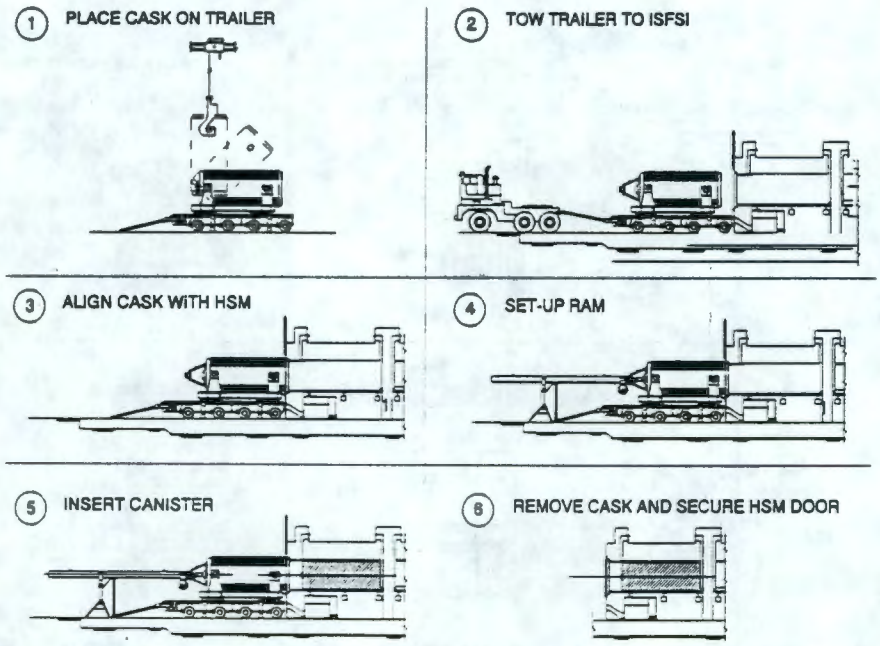

DSC TRANSFER

PACIFIC NUCLEAR SYSTEMS

Figure 5

9 3 1 2 8 6 5 2 2 2 0
22

Dry Shielded Canister

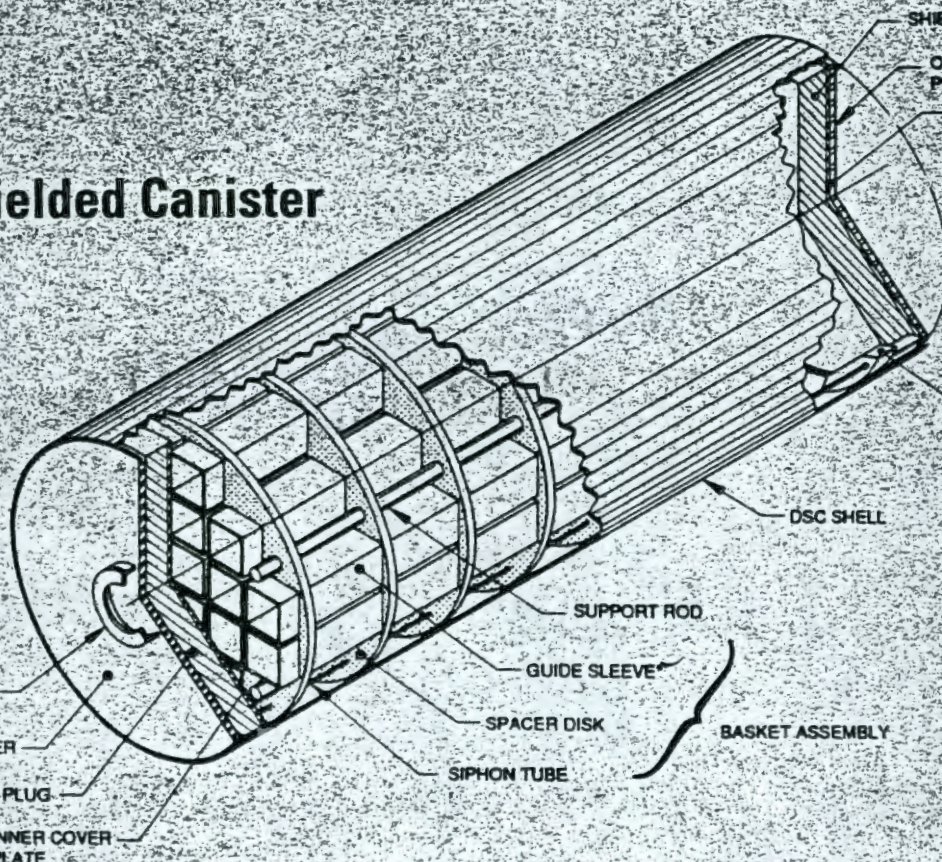

THIS PAGE INTENTIONALLY
LEFT BLANK