**Department of Energy**
Richland Operations Office
P.O. Box 550
Richland, Washington 99352

0062526

AUG 5 2004

04-AMCP-0398

RECEIVED
AUG 24 2004
EDMC

Mr. Nicholas Ceto, Program Manager
Office of Environmental Cleanup
Hanford Project Office
U.S. Environmental Protection Agency
712 Swift Boulevard, Suite 5
Richland, Washington 99352

Dear Mr. Ceto:

APPROVAL REQUEST FOR K BASIN INTERIM REMEDIAL ACTION DESIGN CHANGES FOR HOSE-IN-HOSE TRANSFER AND K WEST SLUDGE CONSOLIDATION CONTAINERS

The purpose of this letter is to request U. S. Environmental Protection Agency (EPA) approval of the change in the remedial design associated with the removal of sludge from the K Basins, pursuant to Section 4.3 of the Remedial Design Report and Remedial Action Work Plan for the K Basins Interim Remedial Action (RDR/RAWP), DOE/RL-99-89, Revision 1. This remedial design change consists of:

1. Constructing a hose-in-hose transfer system for transferring the K East Basin sludge to the K West Basin;

2. adding underwater sludge consolidation containers in the K West Basin; and

3. constructing a sludge pumping system in the K West Basin that will transfer floor and pit sludge to the sludge consolidation containers.

The underwater sludge consolidation containers in the 105 K West Basin will be used to hold the sludge transferred from the 105 K East Basin, as well as K West Basin floor and pit sludge with the exception of the west bay. The west bay sludge in K West Basin being metal rich will be vacuumed directly into the Integrated Water Treatment System to be collected in the knockout pots, strainers, and settler tanks.

Attachment 1 is a description of the design change and Attachment 2 is a proposed assessment as to the significance, pursuant to Section 4.3 of the RDR/RAWP. The basis for the proposed non-significant determination is that the design change does not impact the requirements of the Record of Decision and is similar with the design approach originally defined in the RDR/RAWP, i.e., use of an underwater interim staging tank for sludge. In comparison, the remedial design change associated with the fuel transfer system that transferred spent nuclear fuel

from the K East Basin to the K West Basin was determined to be non-significant. This letter is provided for:

1. Outlining the remedial design change;

2. requesting EPA approval that this change is "non-significant;" and

3. documenting the remedial design change in the Administrative Record for the 100-KR-2 Operable Unit.

If there are any questions, please contact me, or your staff may contact Matt McCormick, Assistant Manager for the Central Plateau, on (509) 373-9971, or Joel Hebdon, Director, Office of Environmental Services, on (509) 376-6657.

Sincerely,

Keith A. Klein,
Manager

AMCP:DCS

Attachments

cc w/attachs:
L. D. Crass, FHI
L. J. Cusack, Ecology
L. E. Gadbois, EPA
S. Harris, CTUIR
R. Jim, YN
T. M. Martin, HAB
E. J. Murphy-Fitch, FHI
K. Niles, ODOE
J. K. Perry, FHI
R. E. Piippo, FHI
G. D. Roosendaal, FHI
F. A. Ruck, FHI
S. M. Sax, WSMS
P. Sobotta, NPT
D. J. Watson, FHI
M. A. Wilson, Ecology
R. T. Winward, FHI
Administrative Record (100-KR-2)
Environmental Portal

**ATTACHMENT 1**

# K Basins
# Sludge Retrieval and Disposition Project

**Remedial Design Report Change Description for:**

1. **K East to K West Transfer System**
2. **K West Underwater Sludge Consolidation System**
3. **K West Sludge Pumping System**

# 1.0 INTRODUCTION

This Remedial Design Report Change Description describes the design for three systems associated with the management of sludge in the K East and K West Basins. These three systems are:

1. K East to K West Sludge Transfer System transferring the K East Basin sludge to the K West Basin.

2. Underwater sludge consolidation system consisting of containers in the K West Basin.

3. Sludge pumping system in the K West Basin that will transfer floor sludge to the sludge consolidation containers.

# 2.0 BACKGROUND

The *Remedial Design Report and Remedial Action Work Plan for the K Basins Interim Remedial Action* (RDR/RAWP), DOE/RL-99-89, Revision 1 described the design of the sludge retrieval and removal systems. There have been changes to that design which are described below which are proposed to be "nonsignificant" from a remedial action change management perspective as described in Section 4.3 of the RDR/RAWP. The design change does not impact the requirements of the Record of Decision and is similar with the design approach originally defined in the RDR/RAWR, i.e. use of an underwater interim staging tank for sludge.

# 3.0 REMEDIAL DESIGN CHANGE DESCRIPTION

This section of this Change Description Document is broken down into the three systems mentioned above and will be presented in the same order as listed above.

The exact arrangements of the pumps, skids, and consolidation containers as well as the pipe routing is only conceptual and pump selection and arrangement and routes are subject to change but are expected not to create additional environmental impacts.

## 3.1 K East to K West Sludge Transfer System

### 3.1.1 Overview

This system consists of the equipment and operations to perform the following functions:

- Retrieve K East Basin sludge from the four consolidation containers located in the K East Basin
  - Retrieve from bottom of containers (Option to recirculate)
  - Retrieve from top of containers

- Transfer the K East Basin sludge to K West Basin via a hose-in-hose transfer line (HIHTL)

- Off-load the K East Basin sludge from the HIHTL to one of five consolidation containers in K West Basin

- Return excess basin water from K West Basin to K East Basin via the HIHTL

- Monitor operations

The site plan, shown in Figure 1, provides the relative locations of systems and equipment in the K East Basin, the K West Basin, and the HIHTL between the basins.

Local control stations are located in each of the basins as well as adjacent to the HIHTL. These control stations serve to pump sludge and water and monitor system parameters (e.g. pressure) to preclude system over-pressurization. In the event of an off-normal occurrence, the control stations are hardwired interlock for safe shutdown of the system.

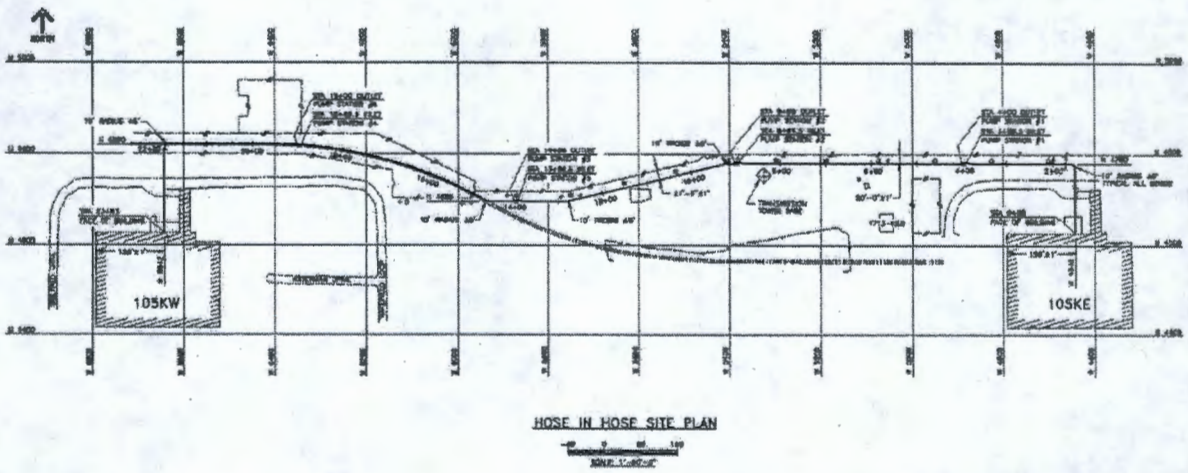


**Site Plan Hose In Hose Transfer – East to West**
**Figure 1**

### 3.1.1.1 General Arrangement of Major System Components in K East Basin

The next figure shows the layout of the major system components in the K East Basin.

The four K East Basin consolidation containers (labeled storage tanks) are located in the weasel pit, the entrance to the weasel pit, and the two entrances to the tech view pit on the east end of the K East Basin. The in-basin sludge retrieval system equipment is situated in the east bay of the K East Basin, directly adjacent to the weasel and tech view pits.

Retrieved sludge is transferred via hose and it is pumped through a leak detection box just above the surface of the pool water. The transfer hose from the retrieval system is joined to the HIHTL in this box, which is provided with leak detection equipment. The sludge is then transported to the K West Basin via the HIHTL

During sludge removal sparging wands and/or a temporary cover may be used.

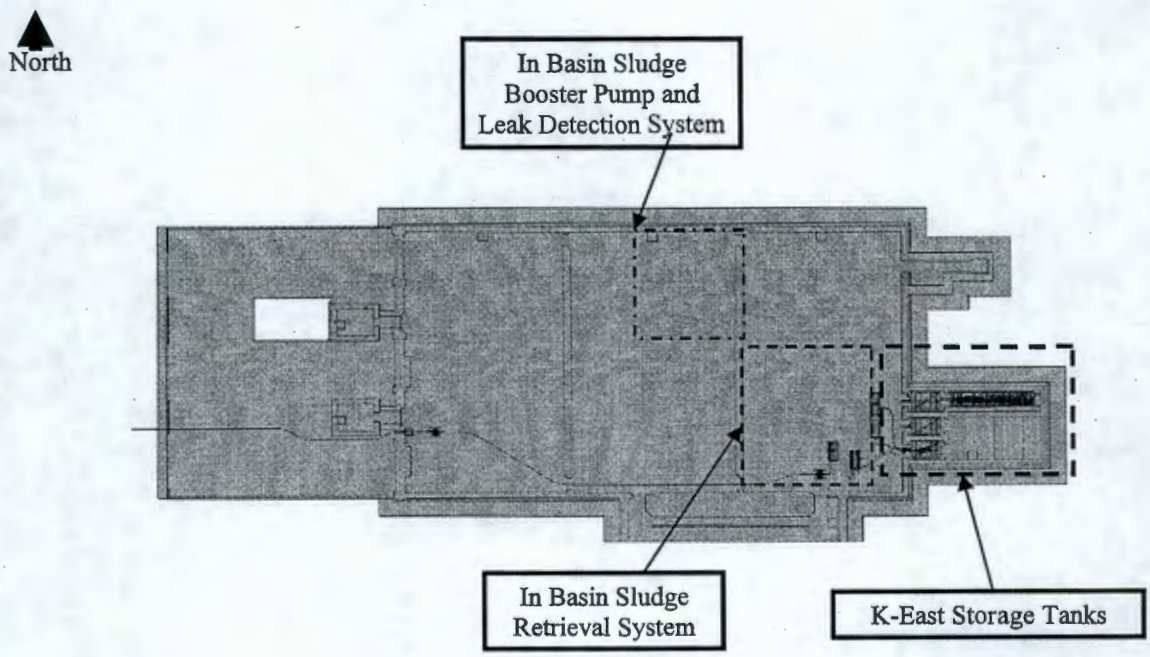


**K-East General Arrangement**
**Hose In Hose Transfer - East to West**
Figure 2

### 3.1.2 K East Sludge Retrieval System

The K East Basin sludge retrieval system includes equipment designed to retrieve sludge from the connection at the bottom of the consolidation containers as well as equipment to retrieve sludge through the top of the containers. Sludge retrieval will be done using either or both of these systems as needed to complete container cleanout.

System Components include:

- Consolidation containers
- Recirculation pump (optional)
- Retrieval pumps
- Dilution pumps
- Booster pumps - (located in K East, west bay)
- Piping and hoses of varying diameters

Sludge will be retrieved from all four consolidation tanks. Because the largest container, is located behind one of the smaller containers, retrieval from that container is slightly different from the other three containers. See the following figures for illustrations.

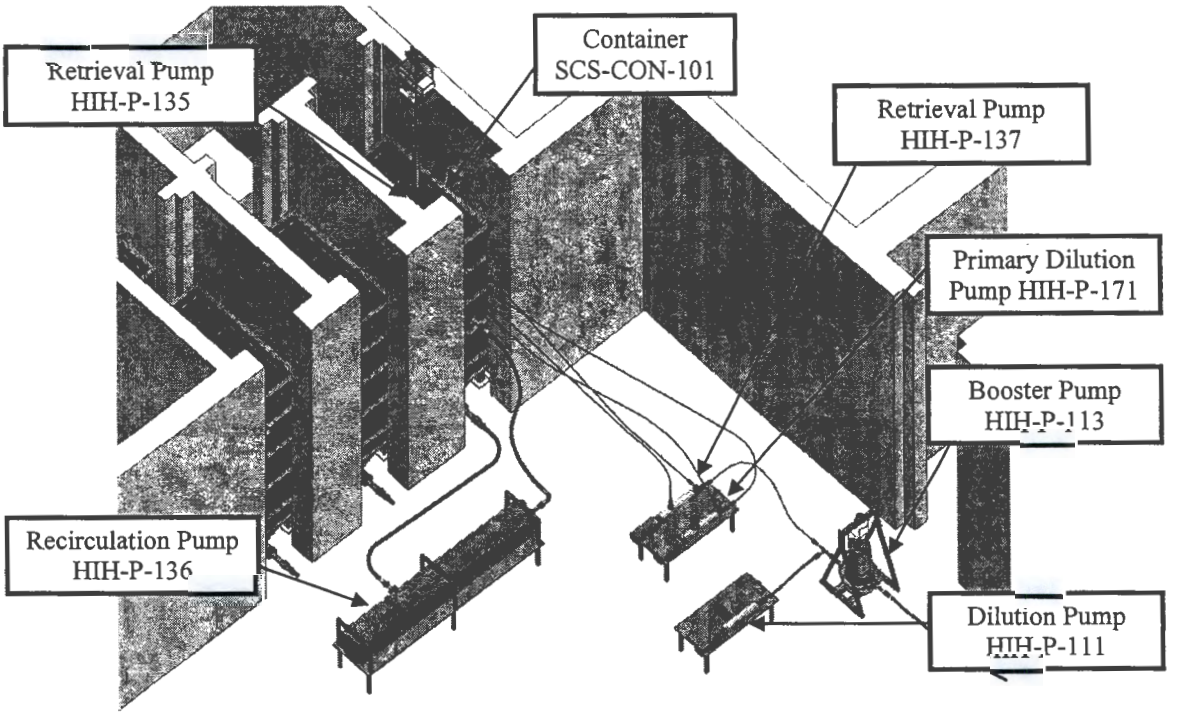


**K East Sludge Retrieval System**
**Sludge Retrieval from a Tech View Container**
**Figure 3**

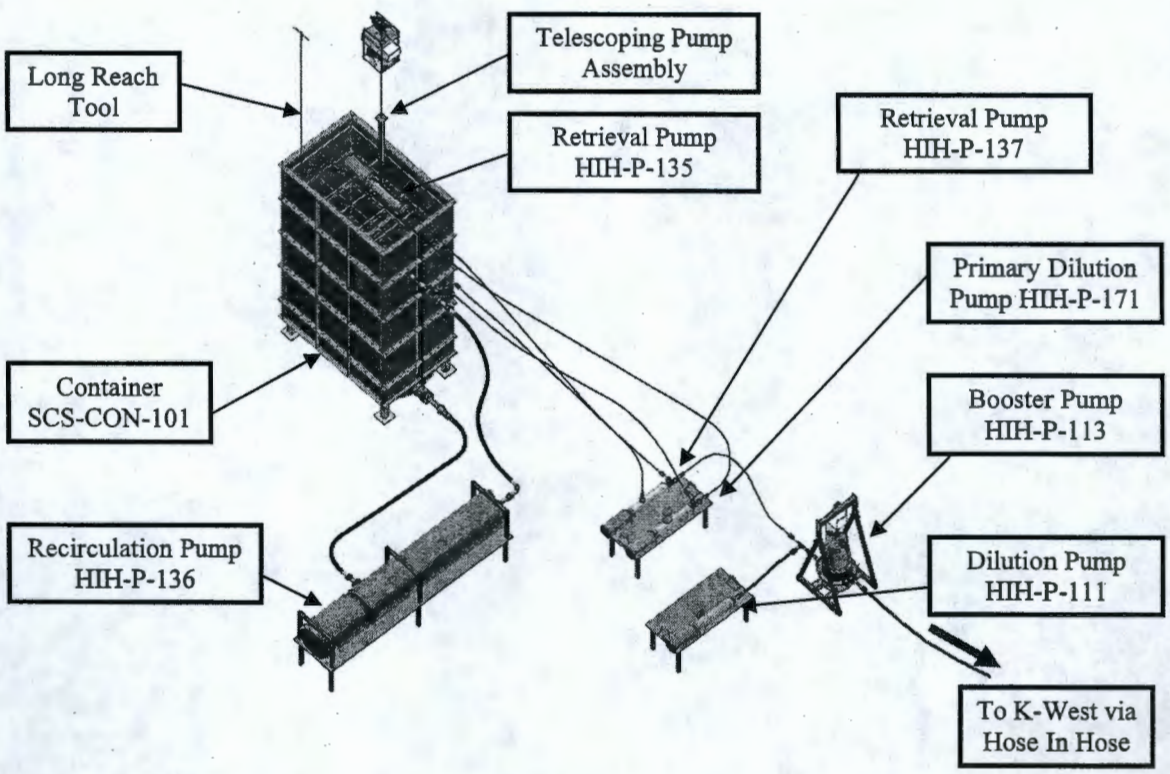


**K East Sludge Retrieval System**
**Sludge Retrieval from a Container**
**Figure 4**

**K East**

Figure 5 shows the sludge retrieval hose as it leaves the basin water and connects to the HIHTL.

After the sludge is diluted, it flows through a booster pump. Prior to leaving the pool, the sludge slurry enters a booster pump. This pump moves the slurry to the water surface where the retrieval hose is coupled to the HIHTL.

The connection point for the retrieval hose and the HIHTL is housed in a metal enclosure, which is equipped with leak detection instrumentation.

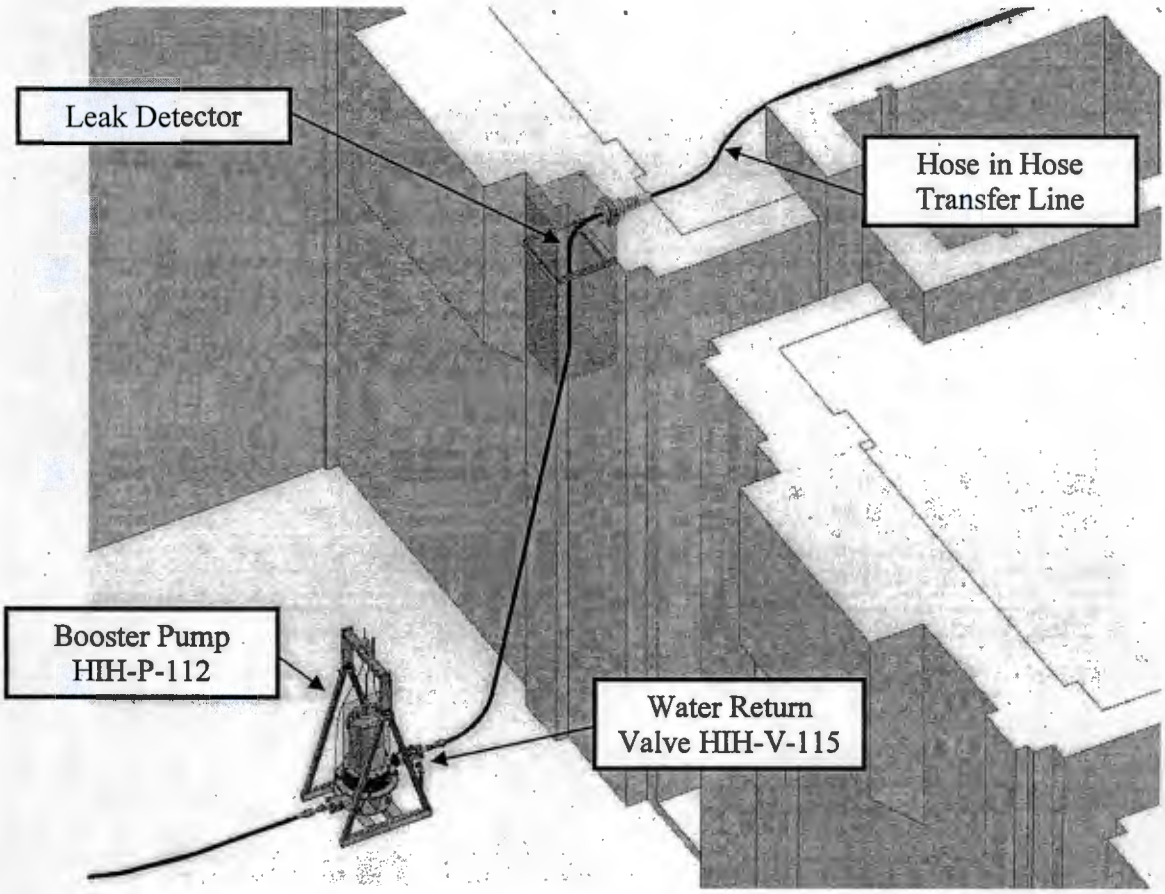


**K East Sludge Retrieval Sludge Transport to K West – Hose-in-Hose**
**Figure 5**

### 3.1.3 Hose-In-Hose Transfer System

Figure 6 shows a cross section through the hose-in-hose line.

The inner hose, through which the sludge slurry travels, has an inner diameter of 1.25 inches and an outer diameter of two inches. The inner hose is also wrapped with heat trace wire for the purpose of freeze protection.

The inner hose lies on the bottom of the outer hose. The annular space between the inner and outer hoses is filled with air, which is open at both ends.

The outer hose has an inner diameter of four inches and an outer diameter of 4.9 inches. It is surrounded by a one-inch thick layer of insulation.

Both hoses are made of EPDM material. They are double reinforced for load rating. These hoses are expected to be the same as the hoses used at Hanford for Tank Farm waste transfers except for the diameter of the hoses.

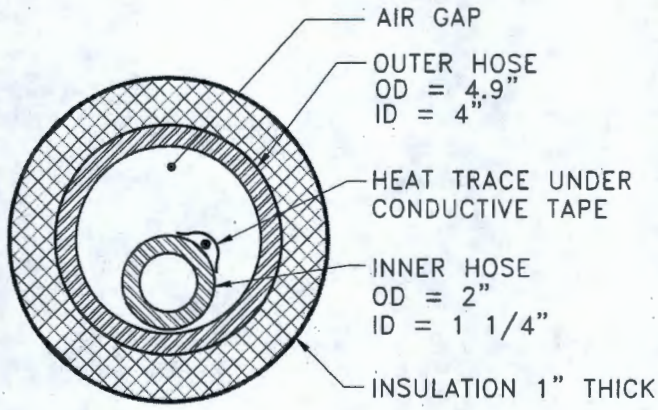


TECHNICAL DATA

| | |
|---|---|
| TEMPERATURE: | 180°F MAX |
| VACUUM: | -6" WATER |
| WORKING PRESSURE: | |
| INNER HOSE: | 375 PSI |
| OUTER HOSE: | 170 PSI |
| BURSTING PRESSURE: | |
| INNER HOSE: | 1500 PSI |
| OUTER HOSE: | 850 PSI |

**Hose-In-Hose Cross Section**
**Figure 6**

Along the approximately 2500 feet between the basins, the sludge is moved through booster pump stations

Each station is housed within a containment box and contains leak detection equipment. In the event of a leak, both visible and audible local alarms are triggered.

Each of these pumps is activated manually.

Pump controls are interlocked so that all associated pumps are shut off at once in the event an off-normal situation (such as a leak) is detected.

Rupture disks will be provided in compliance with code requirements for over pressure protection.

Figure 5 provides a view of the leak detection system used at the retrieval hose – HIHTL connection point in K East.

The same system is also used when the HIHTL enters the K West Basin and connects with the sludge hose for filling the K West Basin storage containers.

### 3.1.4 K West Sludge Receiving and Storage System

Figure 7 shows the general arrangement of sludge transfer and storage equipment within the K West Basin. The subsequent figure focuses specifically on the center and east bays, where the sludge transfer and storage equipment is located.

The HIHTL enters the K West Basin and connects with the sludge hose used to transport the sludge to the underwater storage containers in a leak detection box identical to the one previously described for sludge leaving the basin water in K East Basin.

Once the hose has entered the basin pool, a booster pump moves the sludge through a flocculent metering skid. Note that there may be two identical skids: one in the center bay and one in the east bay.

The flocculent metering skid contains a meter that determines the amount of flocculent to be added at the flocculent addition skid. Flocculent is pumped to the addition skid from the flocculent tank located at the side of the basin.

The flocculated sludge is then routed to one of the sludge storage containers in the center bay or in the east bay.

### 3.1.5 K West to K East Water Return System

In addition to showing the general arrangement for sludge receipt and storage, the next two figures also show the equipment used for return of basin water to the K East Basin.

Because the sludge is diluted to a slurry containing a low weight percent of solids (one-four percent), a great deal of water is transported with the sludge as it is transported to K West Basin. This necessitates the return of water to the K East Basin to maintain water levels within the two basins within established limits.

The HIHTL is also used for basin water return. When water is to be returned, a valve just before the final sludge booster pump is positioned to allow basin water to enter the HIHTL.

The water return pump provides the motive force for water movement. Booster pumps are bypassed by manual valves for this water transport.

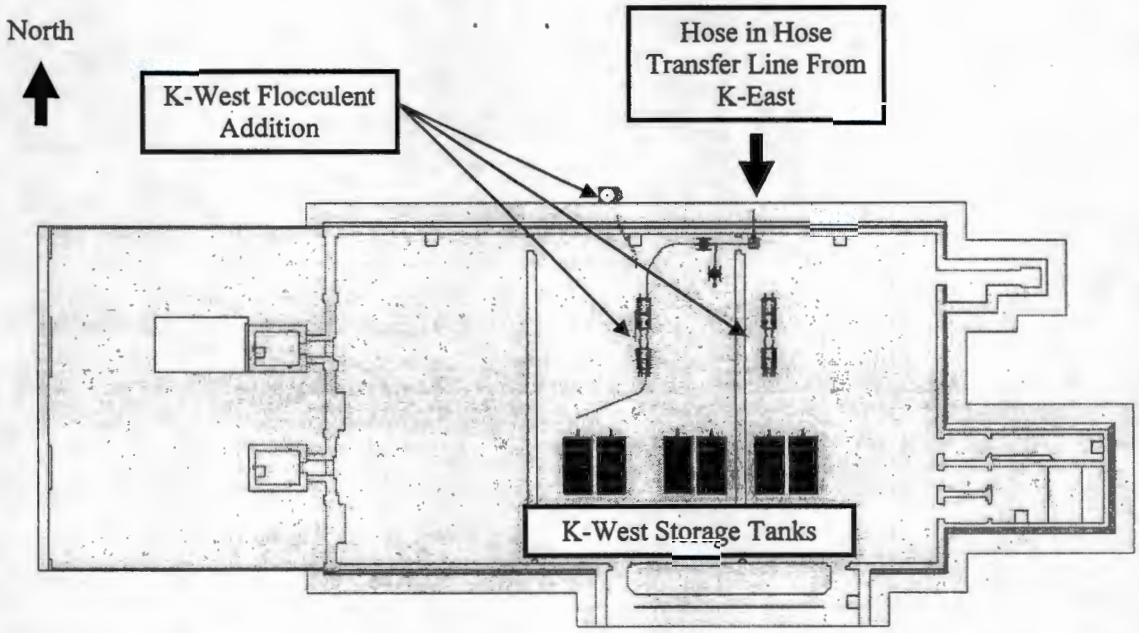


**K West General Arrangement**
**Figure 7**

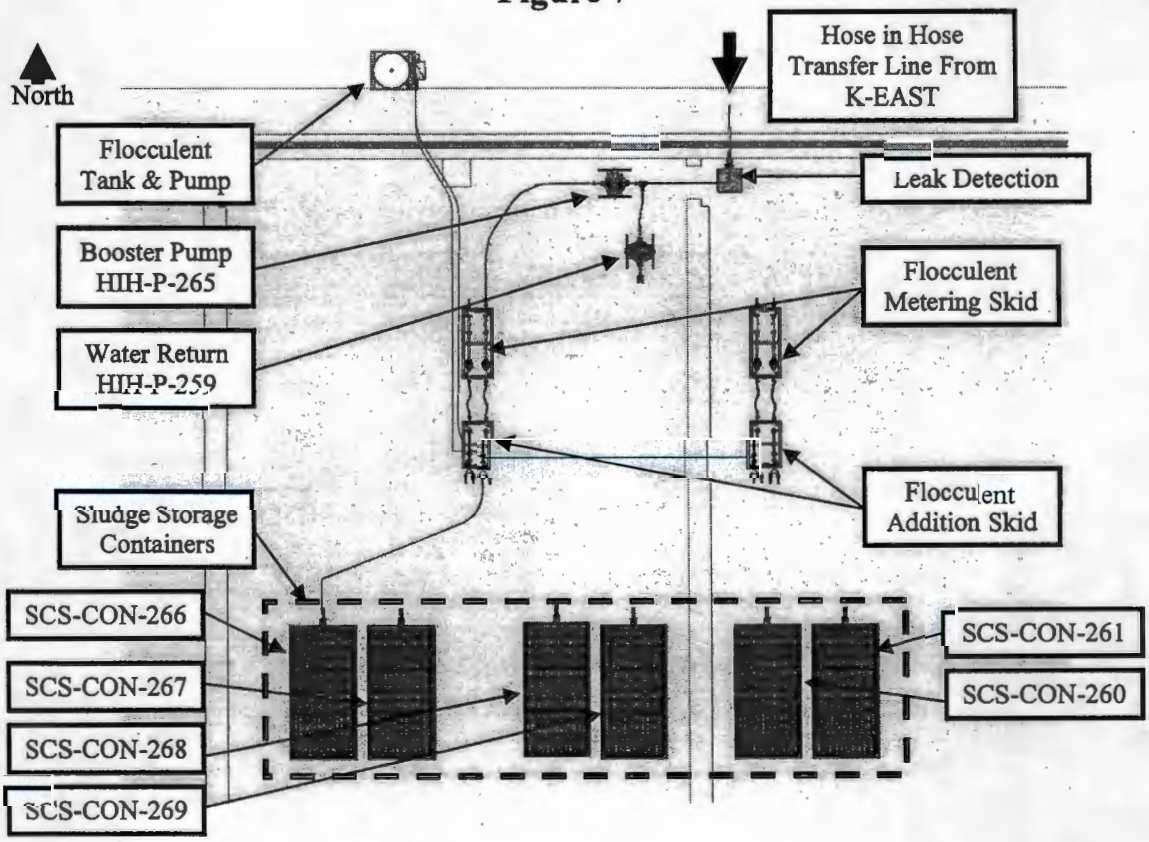


**K West Sludge Storage**
**Figure 8**

## 3.2 K West Underwater Sludge Consolidation System

Figure 9 shows the system for sludge receipt and storage in K West Basin. For the K West Basin storage container, the basin walls have been omitted so that the system can be seen more easily.

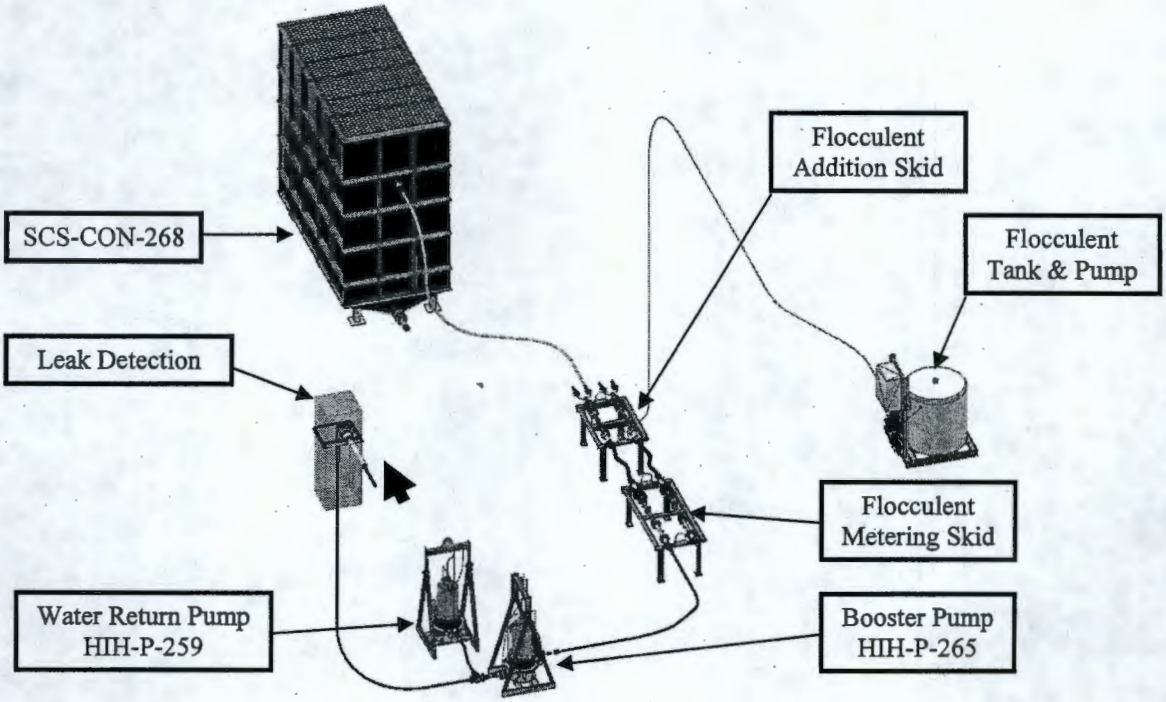


**K West Sludge Storage Container**
**Figure 9**

The storage containers in K West Basin have different dimensions than those in the K East Basin, but they have the same basic design.

The sludge containers in the K West Basin are shorter than those in K East Basin to preclude the need to add any supplemental shielding beyond that provided by the basin water.

Sludge is collected in the open-topped, free-standing stainless steel container. Container bottoms are sloped to aid in the future retrieval of the sludge from storage.

Sludge enters the container through the header and is distributed to the container via slurry distribution nozzles. The purpose of this distributor is to symmetrically disperse the flow from the header so that the resulting upward fluid velocity is controlled.

The heavier sludge particles settle out quickly. Settling of the lighter sludge particles is enhanced by the inclined tube settlers installed in the top section of the container. The tube settlers are open–ended tubes arranged in a honeycomb pattern. Sludge collects on the lower surfaces of each tube and filters down the tubes to settle on the bottom of the containers.

Clear water is returned to the basin by flowing over the top of the container.

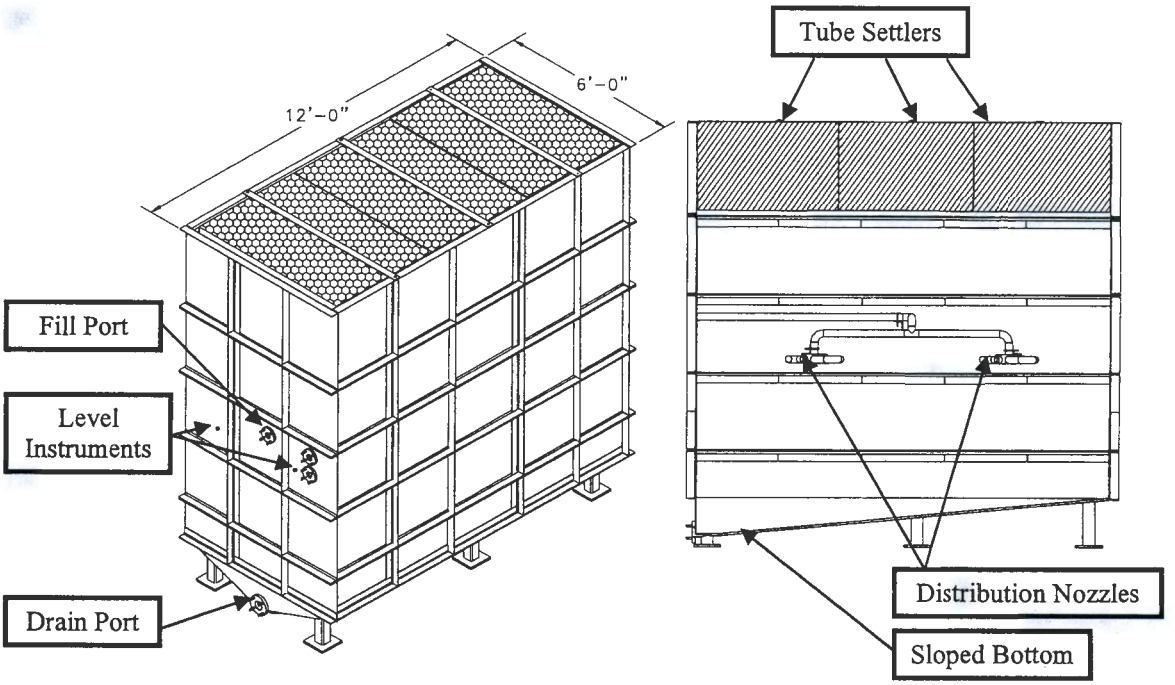


**K West Sludge Storage Containers**
**Figure 10**

## 3.3 K West Sludge Pumping Station

The K West Basin sludge pumping system includes equipment designed to retrieve floor and pit sludge in the basin and transfer that sludge to either the sludge consolidation containers (Figures 8, 10) or the Integrated Water Treatment System (Figure 13) in the case of retrieving sludge in the west bay of K West Basin.

System components include:

- Pump skids (Figure 11)
- Suction wand (Figure 12)
- Tie in to IWTS (Figure 14)
- Sludge consolidation containers in K West Basin for K East and K West Basins sludge (Figure 10)

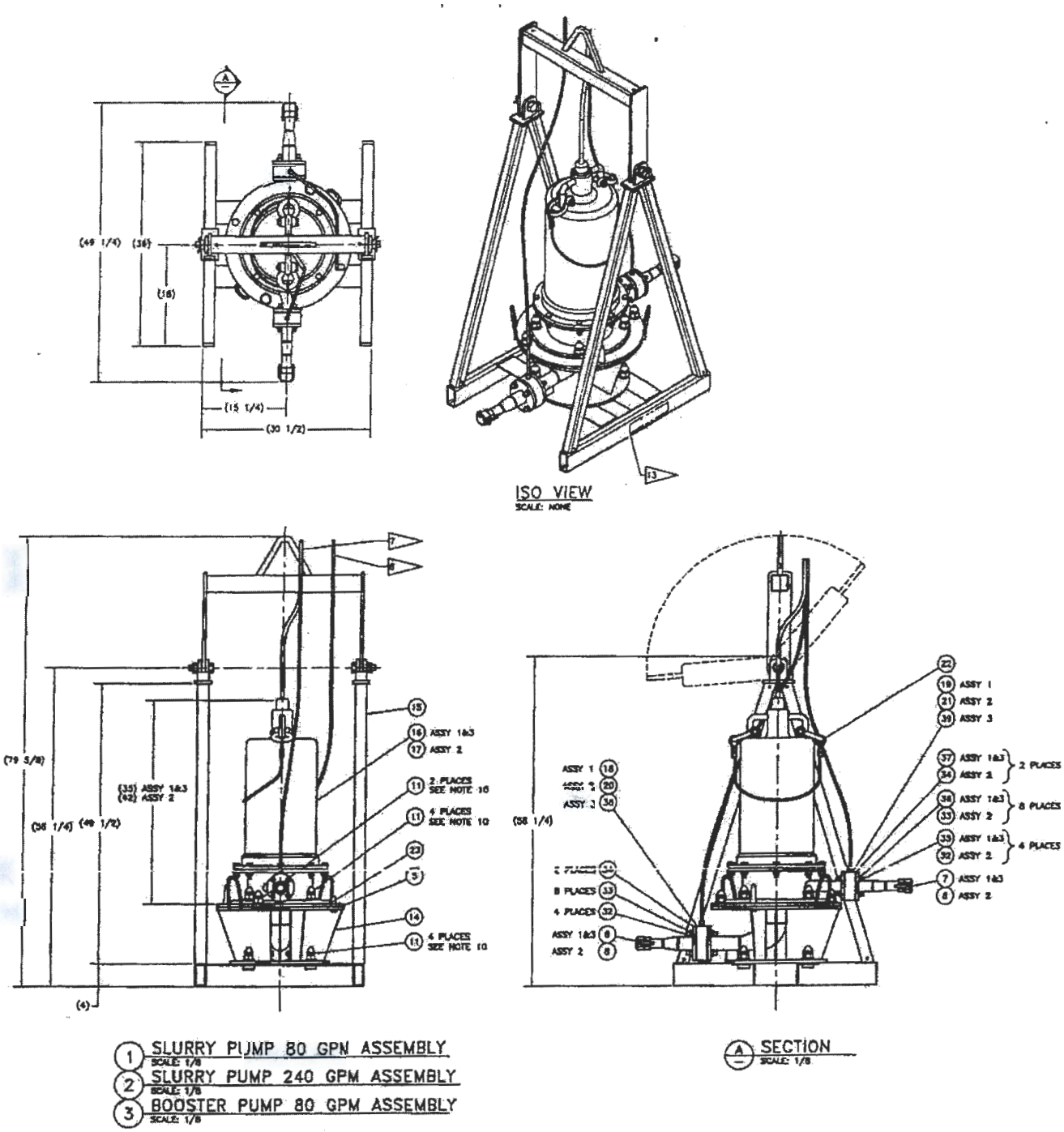
ISO VIEW
SCALE: NONE
SECTION
SCALE: 1/8
1 SLURRY PUMP 80 GPM ASSEMBLY
SCALE: 1/8
2 SLURRY PUMP 240 GPM ASSEMBLY
SCALE: 1/8
3 BOOSTER PUMP 80 GPM ASSEMBLY
SCALE: 1/8

**Figure 11**

### 3.3.1 Side Elevation View of the Suction Wand and Floor Sludge Retrieval System to be used in K West

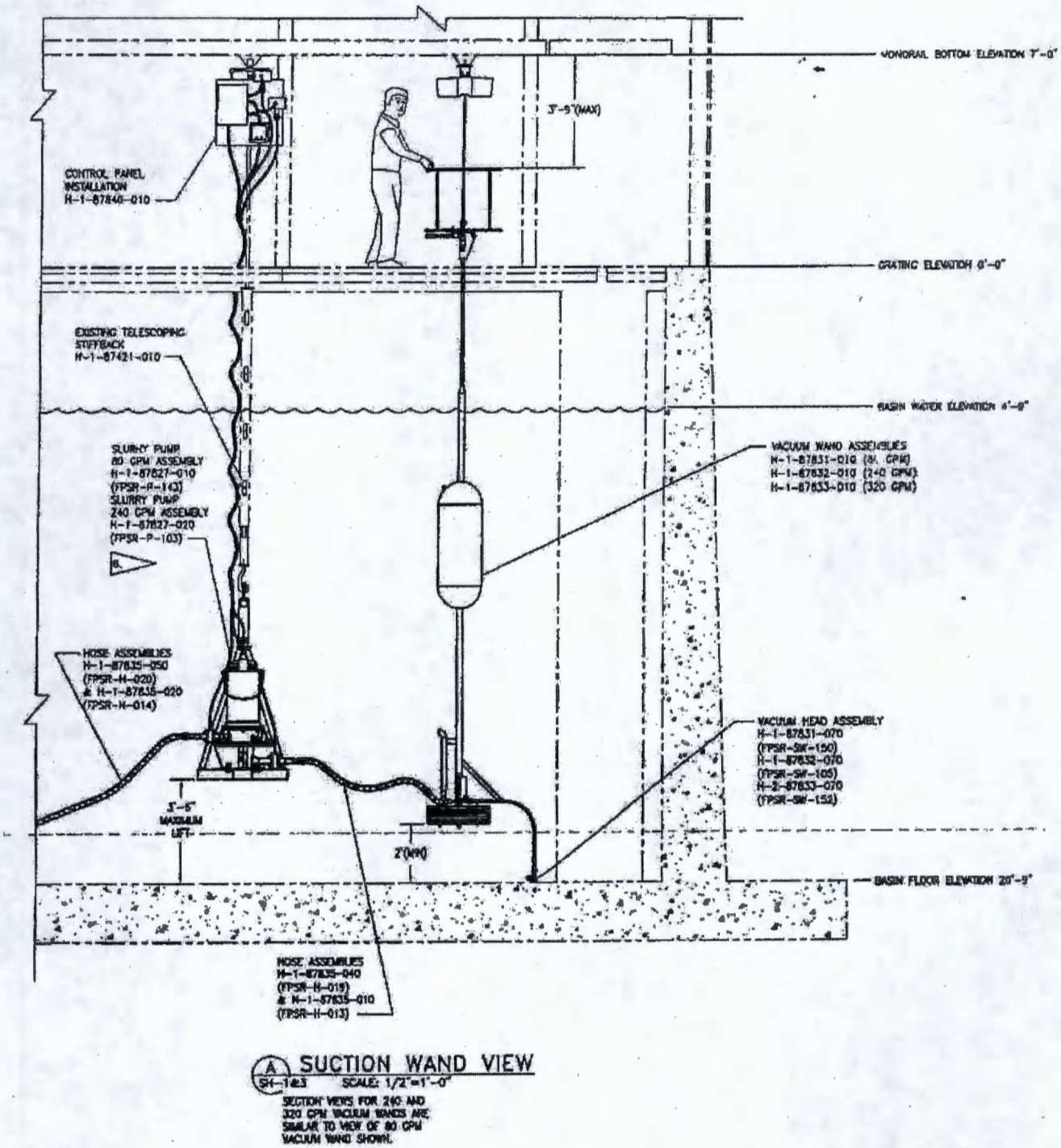


**Figure 12**

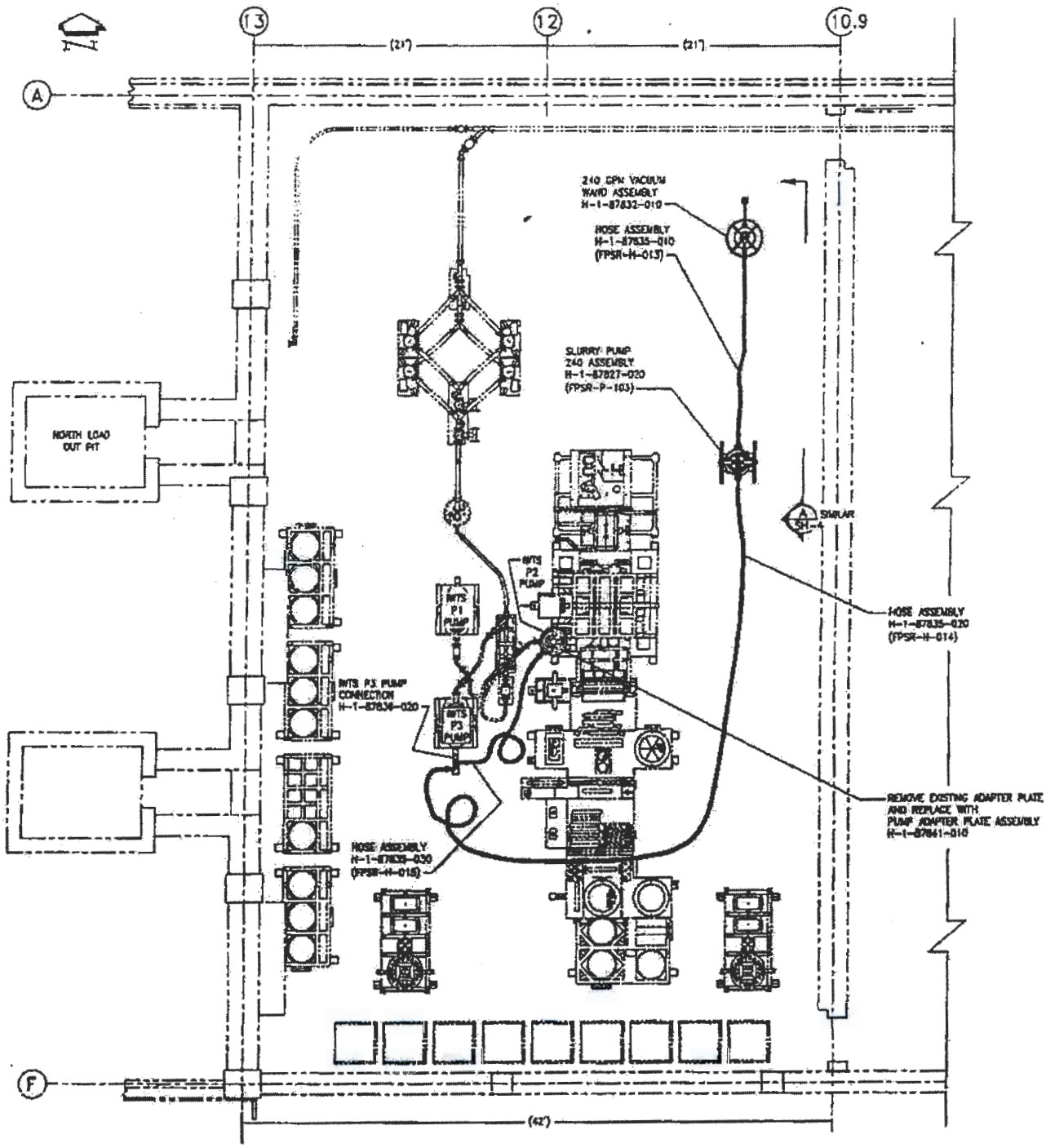


GENERAL ARRANGMENT FOR 240 GPM WEST BAY FLOOR RETRIEVAL
SCALE: 1/4"=1'-0"

**Figure 13**

# ATTACHMENT 2

## Remedial Design Report
## DOE/RL-99-89, Rev. 1

## SLUDGE REMEDIAL DESIGN CHANGE SUMMARY
## for
## K East to K West Transfer System
## K West Underwater Sludge Consolidation System
## K West Sludge Pumping System

| As described in the Remedial Design Report | As currently planned |
|---|---|
| K East Basin sludge to be vacuumed into large diameter containers (LDCs) using a specified ratio of floor and canister sludge and shipped to T Plant for interim storage. | K East Basin sludge is being containerized in the tech view and weasel pits. This sludge is then going to be transferred to the K West Basin via a hose in hose system and placed into containers in the K West Basin. |
| K West Basin sludge and water system will perform the same function as the sludge and water system in the K East Basin. | The K West floor, pit and container sludge (except for the west bay) will be vacuumed into consolidation containers in K West Basin. The west bay sludge will be vacuumed directly into the Integrated Water Treatment System and be collected in knockout pots, strainers and settler tanks. From this point the K East and K West Basins sludge in these containers in the K West Basin will be removed and treated and packaged for disposal |
| The K Basin sludge will be managed for treatment with other Hanford waste streams having similar characteristics consistent with Tri-Party Agreement Milestone M-91-00 | The K Basin sludge will be removed, treated, and packaged into a form suitable for WIPP disposal. ROD amendment pending. |