Attachment 51 – Appendix 8.4
Pretreatment Building
General Arrangement Drawings

Where information regarding treatment, management, and disposal of the radioactive source, byproduct material, and/or special nuclear components of mixed waste (as defined by the Atomic Energy Act of 1954, as amended) has been incorporated into this permit, it is not incorporated for the purpose of regulating the radiation hazards of such components under the authority of this permit and chapter 70.105 RCW. In the event of any conflict between Permit Condition III.10.A. and any statement relating to the regulation of source, special nuclear, and byproduct material contained in portions of the permit application that are incorporated into this permit, Permit Condition III.10.A. will prevail.

Additional appendices will be added to this appendix as new information is incorporated into this permit.

Drawings and Documents

Attachment 51 – Appendix 8.4
Pretreatment Building
General Arrangement Drawings

The following drawings have been incorporated into Appendix 8.4 and can be viewed at the Ecology Richland Office. **New drawings are in bold lettering.**

24590-PTF-P1-P01T-P0001, Rev 5	General Arrangement Plan E1.0
24590-PTF-P1-P01T-P0002, Rev 3	General Arrangement Plan El. 28
24590-PTF-P1-P01T-P0003, Rev 0	General Arrangement Plan El. 56
24590-PTF-P1-P01T-00004, Rev 3	**General Arrangement Plan El. 77**
24590-PTF-P1-P01T-P0006, Rev 2	General Arrangement Plan El. -45
24590-PTF-P1-P01T-P0007, Rev 6	General Arrangement Section A-A
Reserved	Reserved

24590-PTF-P1-P01T-P0006

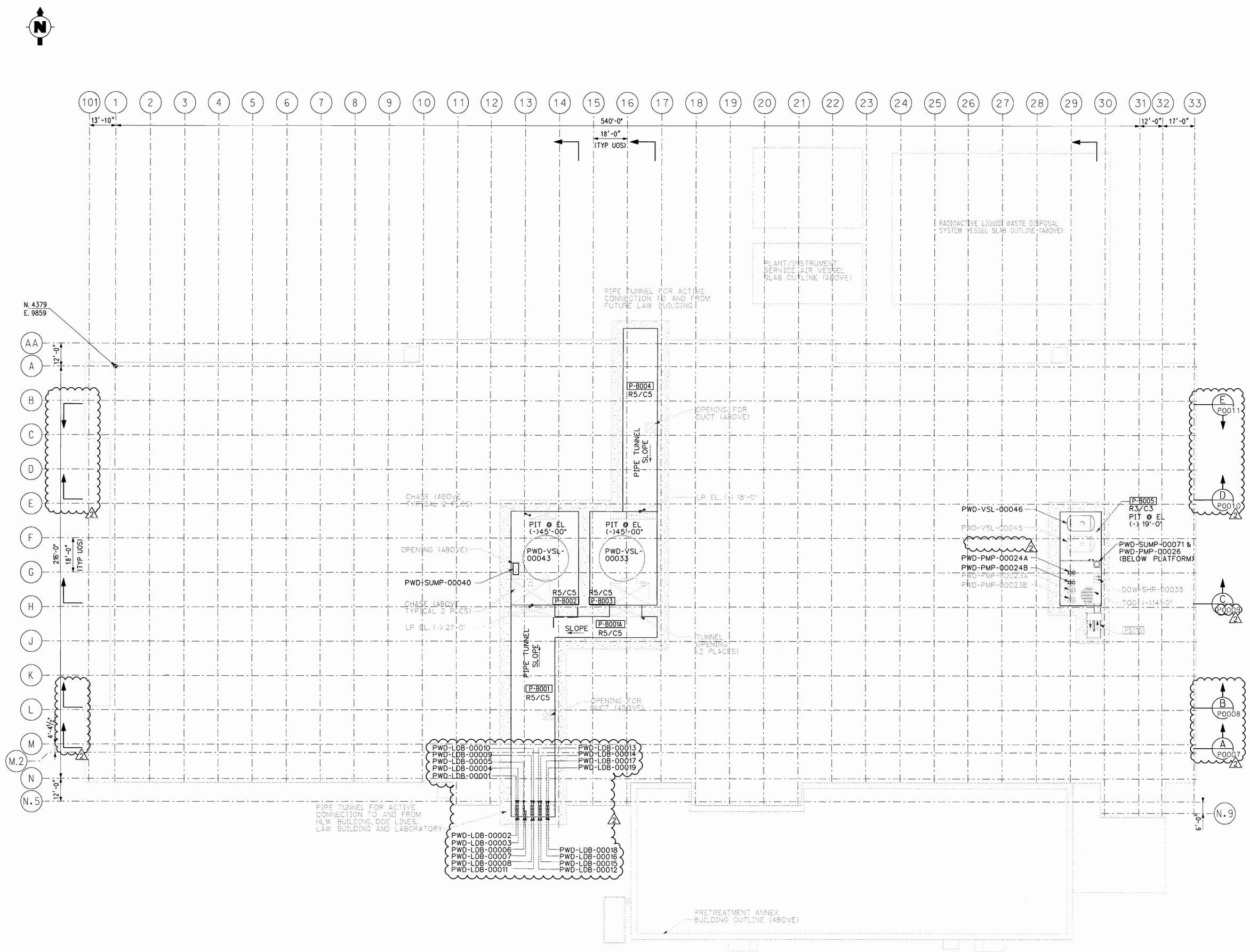

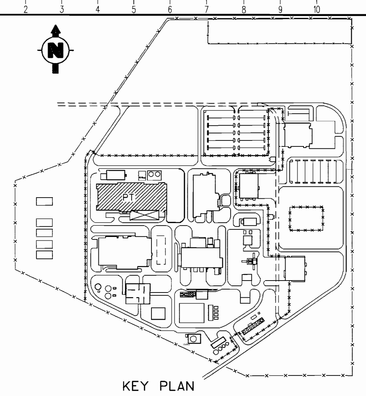

GENERAL NOTES:

1. DELETED.
2. ALL OPERATING AREAS ARE DESIGNATED R2/C2 UNLESS NOTED OTHERWISE.
3. ALL SUB-CHANGE ROOMS ARE DESIGNATED R2/C2/C3 UNLESS NOTED OTHERWISE.
4. DELETED.
5. DELETED.
6. DELETED.
7. DELETED.
8. CONTENTS OF THIS DOCUMENT ARE DANGEROUS WASTE PERMIT AFFECTING.
9. THE PORTIONS OF THIS DRAWING SHOWN IN PHANTOM ARE CONSIDERED NON-PERMIT AFFECTING AND ARE NOT SUBJECT TO THE REGULATORY REQUIREMENTS OF THE WAC CODE FOR THE DANGEROUS WASTE PERMIT TO THE EXTENT THAT THOSE PORTIONS DO NOT IMPACT DANGEROUS WASTE AREAS/OPERATIONS.

LEGEND:

CA	CONTROLLED ACCESS
EE	EMERGENCY EXIT
FDR	FIRE DOOR
TOG	TOP OF GRATING
P-#	ROOMS/CELLS/TUNNELS
PA #	ANNEX NUMBERING
PC #	CORRIDORS & CONNECTING VESTIBULES
PCH #	CHASES
PM #	MEZZANINES
PST #	STAIRS
	EQUIPMENT REMOVAL/LAY DOWN AREA
	OPENING
	CONCRETE
	EMERGENCY SHOWER/EYEWASH (PLAN VIEW)
	EMERGENCY SHOWER/EYEWASH (ELEVATION VIEW)
	EXTERIOR SIDING
	GRATING
	GYPSUM WALLBOARD

PLEASE NOTE THAT SOURCE, SPECIAL NUCLEAR AND BYPRODUCT MATERIALS, AS DEFINED IN THE ATOMIC ENERGY ACT OF 1954 (AEA), ARE REGULATED AT THE U.S. DEPARTMENT OF ENERGY (DOE) FACILITIES EXCLUSIVELY BY DOE ACTING PURSUANT TO ITS AEA AUTHORITY. DOE ASSERTS, THAT PURSUANT TO THE AEA, IT HAS SOLE AND EXCLUSIVE RESPONSIBILITY AND AUTHORITY TO REGULATE SOURCE, SPECIAL NUCLEAR, AND BYPRODUCT MATERIAL AT DOE-OWNED NUCLEAR FACILITIES. INFORMATION CONTAINED HEREIN ON RADIONUCLIDES IS PROVIDED FOR PROCESS DESCRIPTION PURPOSES ONLY.

DICK SHAN TUANG, STATE OF WASHINGTON, 40251, REGISTERED PROFESSIONAL ENGINEER
EXPIRES: 07/09/04

REV	DESCRIPTION	ORG	CHKD	RVWD	APVD	DATE
2	ISSUED FOR PERMITTING USE	RT	CKB	SWM	DT	3/24/04
1	ISSUED FOR PERMITTING USE	CKB	JM	MM	SCF	8/12/02
0	ISSUED FOR PERMITTING USE	CKB	JM	MM	SCF	6/10/02

REVISION HISTORY

ISSUED BY RPP-WTP PDC
INIT DATE
ISSUE STAMP

PROJECT No.	24590
SITE	HANFORD
AREA	200E
BUILDING No.	10

	BY	DATE
ORIGINATOR	CK BERNEY	6/10/02
CHECKER	JOE MCDOWELL	6/10/02
APPROVER	M. MYATT/SC. FOLBER	6/10/02
REVIEWER		

CONTENT APPLICABLE TO ALARA? X YES ___ NO
ADR NO. N/A REV: N/A

BECHTEL

RIVER PROTECTION PROJECT
WASTE TREATMENT PLANT
2435 STEVENS CENTER PLACE
RICHLAND, WA 99352

CONTRACT No: DE-AC27-01RV14136

PRETREATMENT FACILITY GENERAL ARRANGEMENT PLAN AT EL. (-)45'-0"

SCALE: 1"-20'-0"

24590-PTF-P1-P01T-P0006

REV 2

FORM E_SDN.DGN 02/2003

'E' SIZE - 44x34
COMPUTER GENERATED - MANUAL CHANGES NOT PERMITTED

03/22/2004 10:30:16 AM
PLOTTED BY: rmcmas
e:\work\rmc07329\p1p01te0006.dgn

R10274229

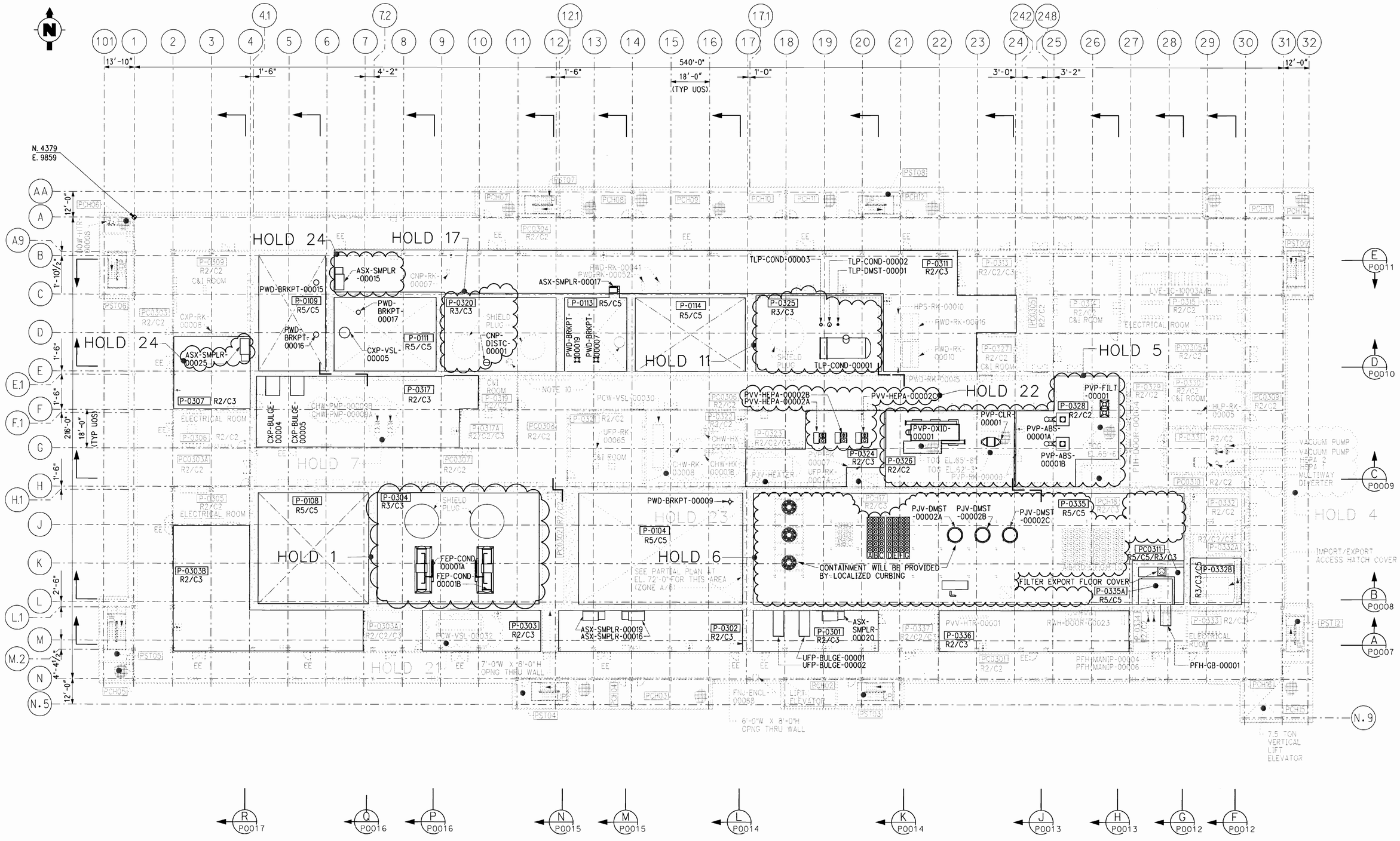

PLAN AT EL. 56'-0"

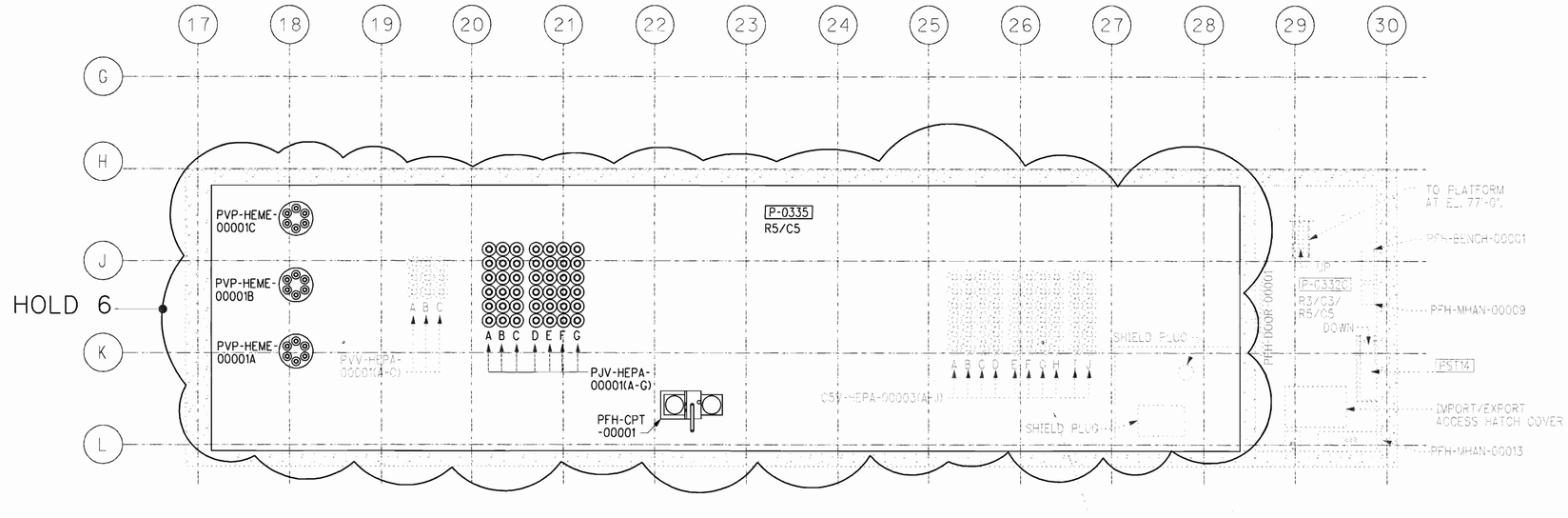

PARTIAL PLAN AT EL. 72'-0"

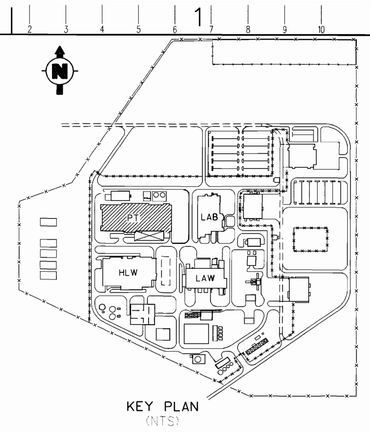

KEY PLAN
(NTS)

GENERAL NOTES:

1. DELETED.
2. ALL OPERATING AREAS ARE DESIGNATED R2/C2 UNLESS NOTED OTHERWISE.
3. ALL SUB-CHANGE ROOMS ARE DESIGNATED R2/C2/C3 UNLESS NOTED OTHERWISE.
4. DELETED.
5. DELETED
6. DELETED.
7. DELETED.
8. CONTENTS OF THIS DOCUMENT ARE DANGEROUS WASTE PERMIT AFFECTING.
9. DELETED.
10. RESERVED EQUIPMENT SPACE.
11. THE PORTIONS OF THIS DRAWING SHOWN IN PHANTOM ARE CONSIDERED NON-PERMIT AFFECTING AND ARE NOT SUBJECT TO THE REGULATORY REQUIREMENTS OF THE WAC CODE FOR THE DANGEROUS WASTE PERMIT TO THE EXTENT THAT THOSE PORTIONS DO NOT IMPACT DANGEROUS WASTE AREAS/OPERATIONS.

LEGEND:

CA	CONTROLLED ACCESS
EE	EMERGENCY EXIT
FDR	FIRE DOOR
TOG	TOP OF GRATING
P-#	ROOMS/CELLS/TUNNELS
PA #	ANNEX NUMBERING
RC #	CORRIDORS & CONNECTING VESTIBULES
PCH #	CHASES
PM #	MEZZANINES
PST #	STAIRS
	EQUIPMENT REMOVAL/LAY DOWN AREA
	OPENING
	CONCRETE
	EMERGENCY SHOWER/EYEWASH (PLAN VIEW)
	EMERGENCY SHOWER/EYEWASH (ELEVATION VIEW)
	EXTERIOR SIDING
	GRATING
	GYPSUM WALLBOARD

HOLDS:

1. PENDING VENDOR DATA - EVAPORATOR SYSTEM (FEP)
4. PENDING VENDOR DATA - SAMPLE SYSTEM
5. PENDING FURTHER DESIGN DEVELOPMENT - PVP SYSTEM
6. PENDING FURTHER DESIGN DEVELOPMENT - FILTER CAVE
7. PENDING FURTHER DESIGN DEVELOPMENT - CHW SYSTEM, BOOSTER PUMPS ON HOLD PENDING "PEND/DOC" APPROVAL.
11. PENDING VENDOR DATA - EVAPORATOR SYSTEM (TLP)
17. PENDING VENDOR DATA - EVAPORATOR SYSTEM (CNP)
21. PENDING FURTHER DESIGN DEVELOPMENT - PCW SYSTEM
22. PENDING FURTHER DESIGN DEVELOPMENT - PVV HEPA
23. PENDING FURTHER DESIGN DEVELOPMENT - PJV HEPA
24. PENDING FURTHER VENDOR & MAINTENANCE DEVELOPMENT - ASX SAMPLER SYSTEM

PLEASE NOTE THAT SOURCE, SPECIAL NUCLEAR AND BYPRODUCT MATERIALS, AS DEFINED IN THE ATOMIC ENERGY ACT OF 1954 (AEA), ARE REGULATED AT THE U.S. DEPARTMENT OF ENERGY (DOE) FACILITIES EXCLUSIVELY BY DOE ACTING PURSUANT TO ITS AEA AUTHORITY. DOE ASSERTS, THAT PURSUANT TO THE AEA, IT HAS SOLE AND EXCLUSIVE RESPONSIBILITY AND AUTHORITY TO REGULATE SOURCE, SPECIAL NUCLEAR, AND BYPRODUCT MATERIAL AT DOE-OWNED NUCLEAR FACILITIES. INFORMATION CONTAINED HEREIN ON RADIONUCLIDES IS PROVIDED FOR PROCESS DESCRIPTION PURPOSES ONLY.

DICK SHAN HEANG — STATE OF WASHINGTON — 40251 — REGISTERED PROFESSIONAL ENGINEER — EXPIRES 07/07/04

REV	DESCRIPTION	ORG	CHKD	RVWD	APVD	DATE
0	ISSUED FOR PERMITTING USE	KT	CKD			3/22/04

REVISION HISTORY

ISSUED BY RPP-WTP PDC — INIT / DATE — ISSUE STAMP

PROJECT No.	24590
SITE	HANFORD
AREA	200E
BUILDING No.	10

	BY	DATE
ORIGINATOR		3/22/04
CHECKER		3/22/04
APPROVER		3/22/04
REVIEWER		3/22/04

CONTENT APPLICABLE TO ALARA? [X] YES [ ] NO
ADR NO. N/A REV: N/A

BECHTEL

RIVER PROTECTION PROJECT
WASTE TREATMENT PLANT
2435 STEVENS CENTER PLACE
RICHLAND, WA 99352

CONTRACT No: DE-AC27-01RV14136

PRETREATMENT FACILITY GENERAL ARRANGEMENT PLAN AT EL 56'-0"

SCALE: 1"-20'-0"

24590-PTF-P1-P01T-P0003

REV 0

'E' SIZE - 44x34
COMPUTER GENERATED - MANUAL CHANGES NOT PERMITTED

03/22/2004 10:30:19 AM

PLOTTED BY: rmturowes
c:\work\dms07329\ptfp1p01tp0003.dgn

FORM E_SDN.DGN 02/2003

R10274228

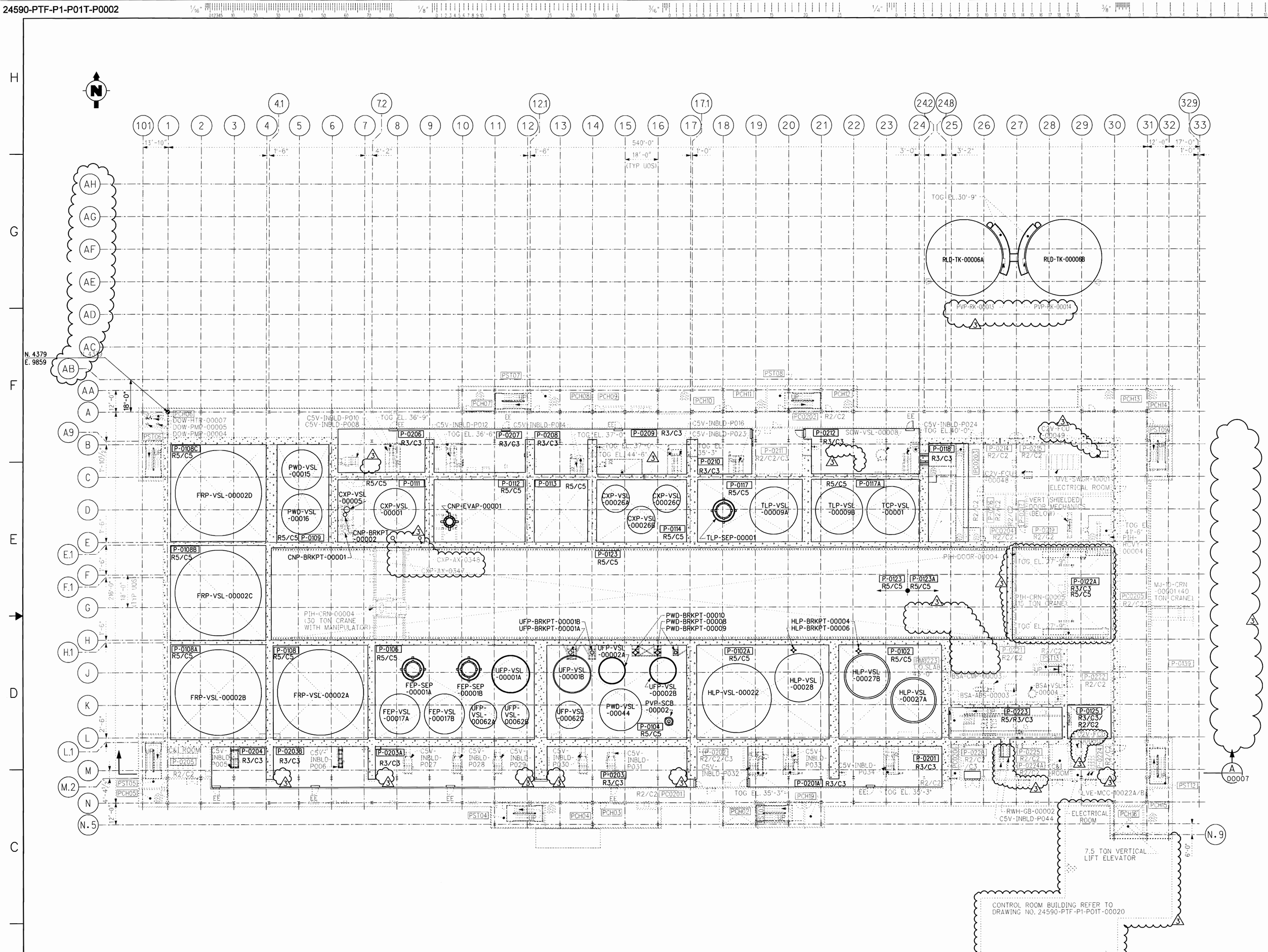

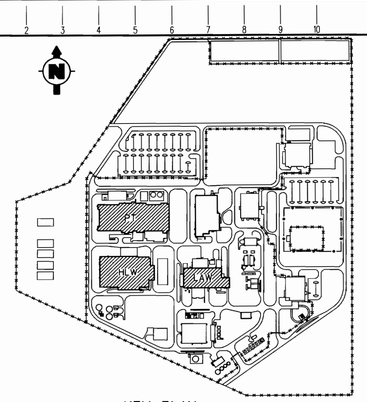

KEY PLAN
(NTS)

GENERAL NOTES:

1. FOR REFERENCE, SEE PLOT PLAN DRAWING No. 24590-BOF-P1-50-00001.
2. ALL OPERATING AREAS ARE DESIGNATED R2/C2 UNLESS NOTED OTHERWISE.
3. ALL SUB-CHANGE ROOMS ARE DESIGNATED R2/C2/C3 UNLESS NOTED OTHERWISE.
4. DELETED.
5. REFER TO DRAWING No. 24590-BOF-C2-C12T-00002 FOR CONVERSIONS FROM PT FACILITY TO SITE ELEVETIONS. PT FACILITY ELEVATION 0'-0" EQUALS SITE ELEVATION 678'-0" ABOVE SEA LEVEL.
6. FOR ELECTRICAL AND C&I EQUIPMENT TAG AND LOCATION, REFER TO INDEX KEY PLAN DRAWING No. 24590-PTF-(LATER).
7. FOR ROOM NUMBERS AND DESCRIPTION, REFER TO DRAWING No. 24590-PTF-P1-P23T-01000.
8. **CONTENTS OF THIS DOCUMENT ARE DANGEROUS WASTE PERMIT AFFECTING.**
9. REFER TO PTF/ANNEX EQUIPMENT LOCATION INDEX KEY PLAN DRAWING No. 24590-PTF-P1-P23T-00001 LISTING AREA DRAWINGS THAT PROVIDE A MORE DETAILED IDENTIFICATION OF EQUIPMENT.
10. DELETED.
11. ALL CONTROL BLDG ROOMS ARE DESIGNATED R1/C1 UNLESS NOTED OTHERWISE.
12. FOR RADIOLOGICAL CLASSIFICATION, REFER TO DOCUMENT No. 24590-WTP-GPP-SRAD-002.
13. **THE PORTIONS OF THIS DRAWING SHOWN IN PHANTOM ARE CONSIDERED NON-PERMIT AFFECTING AND ARE NOT SUBJECT TO THE REGULATORY REQUIREMENTS OF THE WAC CODE FOR THE DANGEROUS WASTE PERMIT TO THE EXTENT THAT THOSE PORTIONS DO NOT IMPACT DANGEROUS WASTE AREAS/OPERATIONS.**

LEGEND:

CA	CONTROLLED ACCESS
EE	EMERGENCY EXIT
FDR	FIRE DOOR
TOG	TOP OF GRATING
P-#	ROOMS/CELLS/TUNNELS
PA #	ANNEX NUMBERING
PC #	CORRIDORS & CONNECTING VESTIBULES
PCH #	CHASES
PM #	MEZZANINES
PST #	STAIRS
	EQUIPMENT REMOVAL/LAY DOWN AREA
	OPENING
	CONCRETE
	EMERGENCY SHOWER/EYEWASH (PLAN VIEW)
	EMERGENCY SHOWER/EYEWASH (ELEVATION VIEW)
	EXTERIOR SIDING
	GRATING
	GYPSUM WALLBOARD

HOLDS:

PLEASE NOTE THAT SOURCE, SPECIAL NUCLEAR AND BYPRODUCT MATERIALS, AS DEFINED IN THE ATOMIC ENERGY ACT OF 1954 (AEA), ARE REGULATED AT THE U.S. DEPARTMENT OF ENERGY (DOE) FACILITIES EXCLUSIVELY BY DOE ACTING PURSUANT TO ITS AEA AUTHORITY. DOE ASSERTS, THAT PURSUANT TO THE AEA, IT HAS SOLE AND EXCLUSIVE RESPONSIBILITY AND AUTHORITY TO REGULATE SOURCE, SPECIAL NUCLEAR, AND BYPRODUCT MATERIAL AT DOE-OWNED NUCLEAR FACILITIES. INFORMATION CONTAINED HEREIN ON RADIONUCLIDES IS PROVIDED FOR PROCESS DESCRIPTION PURPOSES ONLY.

DICK SHAN HUANG — STATE OF WASHINGTON — 40251 — REGISTERED PROFESSIONAL ENGINEER
EXPIRES: 07/09/06

REV	DESCRIPTION	ORG	CHKD	RVWD	APVD	DATE
3	ISSUED FOR PERMITTING USE	CKP	LAL	DSH	NLR	3/9/06
2	ISSUED FOR PERMITTING USE	RT	CKB	JRM	SG	3/24/04
1	ISSUED FOR PERMITTING USE	GJ	MC	SS	RV	6/17/03
0	ISSUED FOR PERMITTING USE	CKB	MSG	SCF	MM	10/25/02

REVISION HISTORY

ISSUED BY RPP-WTP PDC

ISSUE STAMP

PROJECT No.	24590	
SITE	HANFORD	
AREA	200E	
BUILDING No.	10	
	BY	DATE
ORIGINATOR	BERNEY, CASSANDRA	10/24/02
CHECKER	GUTHRIE, MICHAEL	10/24/02
APPROVER	MYATT, MARK	10/24/02
REVIEWER	FOELBER, STEVEN	10/25/02

CONTENT APPLICABLE TO ALARA? [X] YES [ ] NO
ADR NO. N/A REV: N/A
SAFETY SCREEN REQUIRED? [ ] YES [X] NO EMAS INITIAL IF YES

BECHTEL

RIVER PROTECTION PROJECT
WASTE TREATMENT PLANT
2435 STEVENS CENTER PLACE
RICHLAND, WA 99354

CONTRACT No: DE-AC27-01RV14136

PRETREATMENT FACILITY GENERAL ARRANGEMENT PLAN AT EL. 28'-0"

SCALE: 1"-20'-0"

24590-PTF-P1-P01T-P0002

REV 3

SAFETY SCREEN IS REQUIRED FOR DRAWING TYPES IDENTIFIED IN 24590-WTP-GPP-SREG-002

"E" SIZE - 44x34
COMPUTER GENERATED - MANUAL CHANGES NOT PERMITTED

R10667553

03/09/2006 07:11:59 AM

PLOTTED BY: ckberney
C:\Work\dms07329\PTFPP01TP0002.DGN

FORM E_SDN.DGN 02/2003

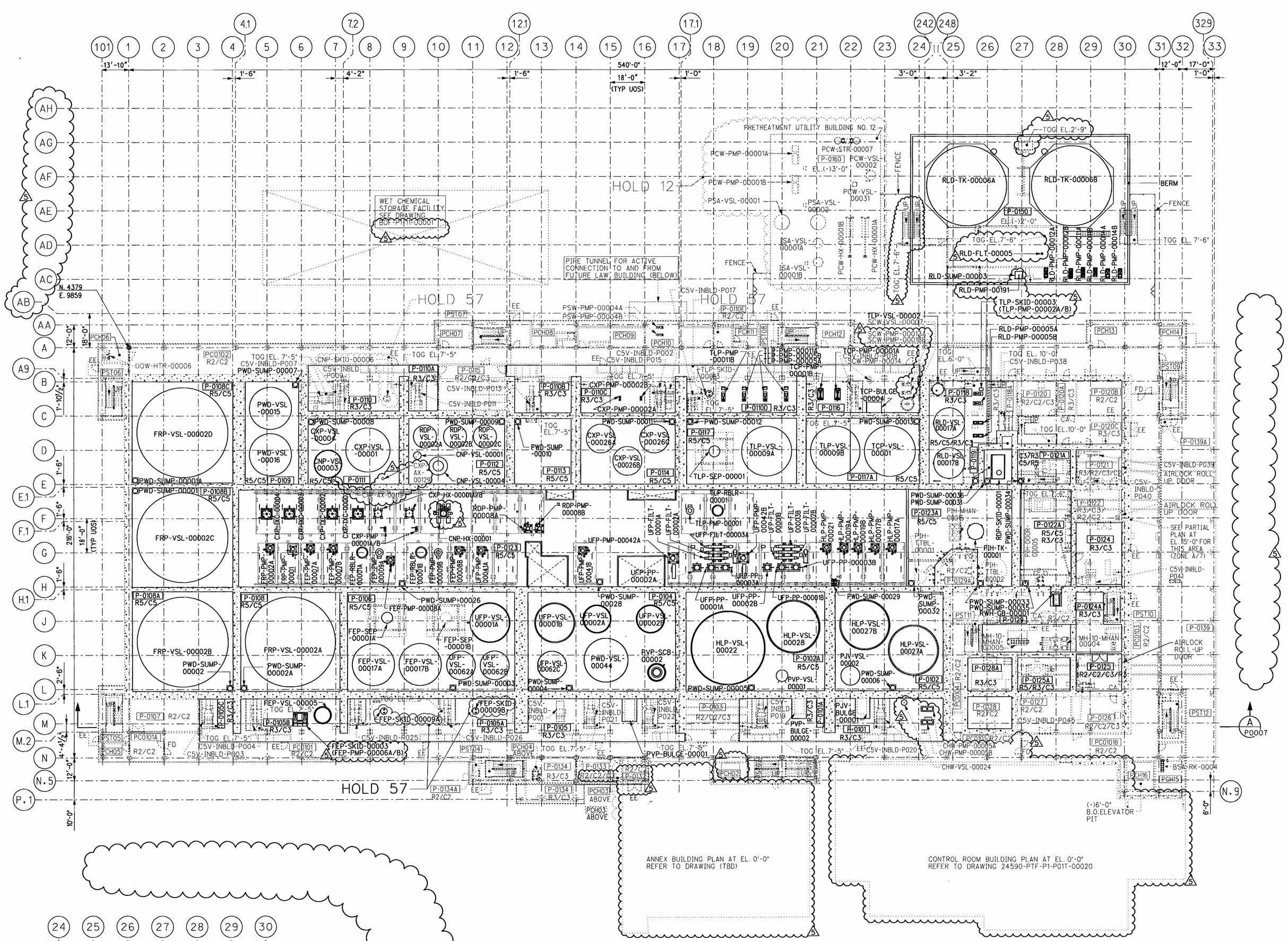

PLAN AT EL. 0'-0"

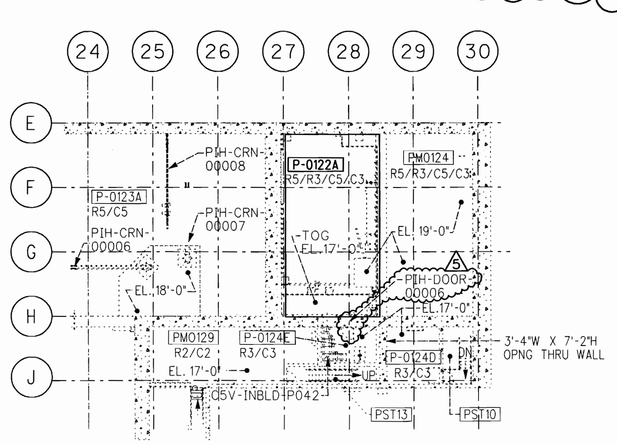

PARTIAL PLAN AT EL. 15'-0"

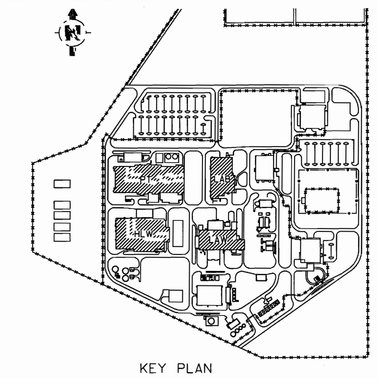

KEY PLAN

GENERAL NOTES:

1. FOR REFERENCE, SEE PLOT PLAN DRAWING No. 24590-BOF-P1-50-00001.
2. ALL OPERATING AREAS ARE DESIGNATED R2/C2 UNLESS NOTED OTHERWISE.
3. ALL SUB-CHANGE ROOMS ARE DESIGNATED R2/C2/C3 UNLESS NOTED OTHERWISE.
4. DELETED.
5. REFER TO DRAWING No. 24590-BOF-C2-C12T-00002 FOR CONVERSIONS FROM PT FACILITY TO SITE ELEVETIONS. PT FACILITY ELEVATION 0'-0" EQUALS SITE ELEVATION 678'-0", ABOVE SEA LEVEL.
6. FOR ELECTRICAL AND C&I EQUIPMENT TAG AND LOCATION, REFER TO INDEX KEY PLAN DRAWING No. 24590-PTF-(LATER).
7. FOR ROOM NUMBERS AND DESCRIPTION, REFER TO DRAWING No. 24590-PTF-P1-P23T-01000.
8. **CONTENTS OF THIS DOCUMENT ARE DANGEROUS WASTE PERMIT AFFECTING.**
9. REFER TO PTF/ANNEX EQUIPMENT LOCATION INDEX KEY PLAN DRAWING No. 24590-PTF-P1-P23T-00001 LISTING AREA DRAWINGS THAT PROVIDE A MORE DETAILED IDENTIFICATION OF EQUIPMENT.
10. DELETED.
11. ALL CONTROL BLDG ROOMS ARE DESIGNATED R1/C1 UNLESS NOTED OTHERWISE.
12. FOR RADIOLOGICAL CLASSIFICATION, REFER TO DOCUMENT No. 24590-WTP-GPP-SRAD-002.
13. **THE PORTIONS OF THIS DRAWING SHOWN IN PHANTOM ARE CONSIDERED NON-PERMIT AFFECTING AND ARE NOT SUBJECT TO THE REGULATORY REQUIREMENTS OF THE WAC CODE FOR THE DANGEROUS WASTE PERMIT TO THE EXTENT THAT THOSE PORTIONS DO NOT IMPACT DANGEROUS WASTE AREAS/OPERATIONS.**

LEGEND:

CA	CONTROLLED ACCESS
EE	EMERGENCY EXIT
FD	FIRE DOOR
TOG	TOP OF GRATING
P-#	ROOMS/CELLS/TUNNELS
PA #	ANNEX NUMBERING
PC #	CORRIDORS & CONNECTING VESTIBULES
PCH #	CHASES
PM #	MEZZANINES
PST #	STAIRS
	EQUIPMENT REMOVAL/LAY DOWN AREA
	OPENING
	CONCRETE
	EMERGENCY SHOWER/EYEWASH (PLAN VIEW)
	EMERGENCY SHOWER/EYEWASH (ELEVATION VIEW)
	GRATING
	GYPSUM WALLBOARD

HOLDS:

12. PENDING FURTHER DESIGN DEVELOPMENT - PCW SYSTEM

57. PENDING FURTHER VENDOR DESIGN INFORMATION ON FEP, CNP, TLP SKIDS.

PLEASE NOTE THAT SOURCE, SPECIAL NUCLEAR AND BYPRODUCT MATERIALS, AS DEFINED IN THE ATOMIC ENERGY ACT OF 1954 (AEA), ARE REGULATED AT THE U.S. DEPARTMENT OF ENERGY (DOE) FACILITIES EXCLUSIVELY BY DOE ACTING PURSUANT TO ITS AEA AUTHORITY. DOE ASSERTS, THAT PURSUANT TO THE AEA, IT HAS SOLE AND EXCLUSIVE RESPONSIBILITY AND AUTHORITY TO REGULATE SOURCE, SPECIAL NUCLEAR, AND BYPRODUCT MATERIAL AT DOE-OWNED NUCLEAR FACILITIES. INFORMATION CONTAINED HEREIN ON RADIONUCLIDES IS PROVIDED FOR PROCESS DESCRIPTION PURPOSES ONLY.

REV	DESCRIPTION	ORG	CHKD	RVWD	APVD	DATE
5	ISSUED FOR PERMITTING USE	CKB	LAL	WTPA		5/18/06
4	ISSUED FOR PERMITTING USE	RT	FA	JRM	RV	9/21/04
3	ISSUED FOR PERMITTING USE	RT	CKB	JRM	SG	3/24/04
2	ISSUED FOR PERMITTING USE	GJ	JM	SCF	SS	1/13/04
0	ISSUED FOR PERMITTING USE	CKB	JM	SCF	JRM	9/17/02

REVISION HISTORY

ISSUED BY RPP-WTP PDC

ISSUE STAMP

PROJECT No.	24590	
SITE	HANFORD	
AREA	200E	
BUILDING No.	10	
	BY	DATE
ORIGINATOR	BERNEY, CASSANDRA	9/12/02
CHECKER	MCDOWELL, JOE	9/12/02
APPROVER	MILLER, JEFFREY	9/12/02
REVIEWER	FOELBER, STEVEN	9/17/02

CONTENT APPLICABLE TO ALARA? [X] YES [ ] NO

ADR NO. N/A REV: N/A

SAFETY SCREEN REQUIRED? [ ] YES [X] NO EMS INITIAL IF YES

BECHTEL

RIVER PROTECTION PROJECT
WASTE TREATMENT PLANT
2435 STEVENS CENTER PLACE
RICHLAND, WA 99354

CONTRACT No: DE-AC27-01RV14136

PRETREATMENT FACILITY GENERAL ARRANGEMENT PLAN AT EL. 0'-0"

SCALE: 1"-20'-0"

24590-PTF-P1-P01T-P0001

REV 5

SAFETY SCREEN IS REQUIRED FOR DRAWING TYPES IDENTIFIED IN 24590-WTP-GPP-SREG-002

2

"E" SIZE - 44x34
COMPUTER GENERATED - MANUAL CHANGES NOT PERMITTED

R10682769

05/15/2006 09:45:17 AM

PLOTTED BY: cbberney
C:\Work\dms07329\PTFP01T\P0001.DGN

FORM E_SDN.DGN 02/2003

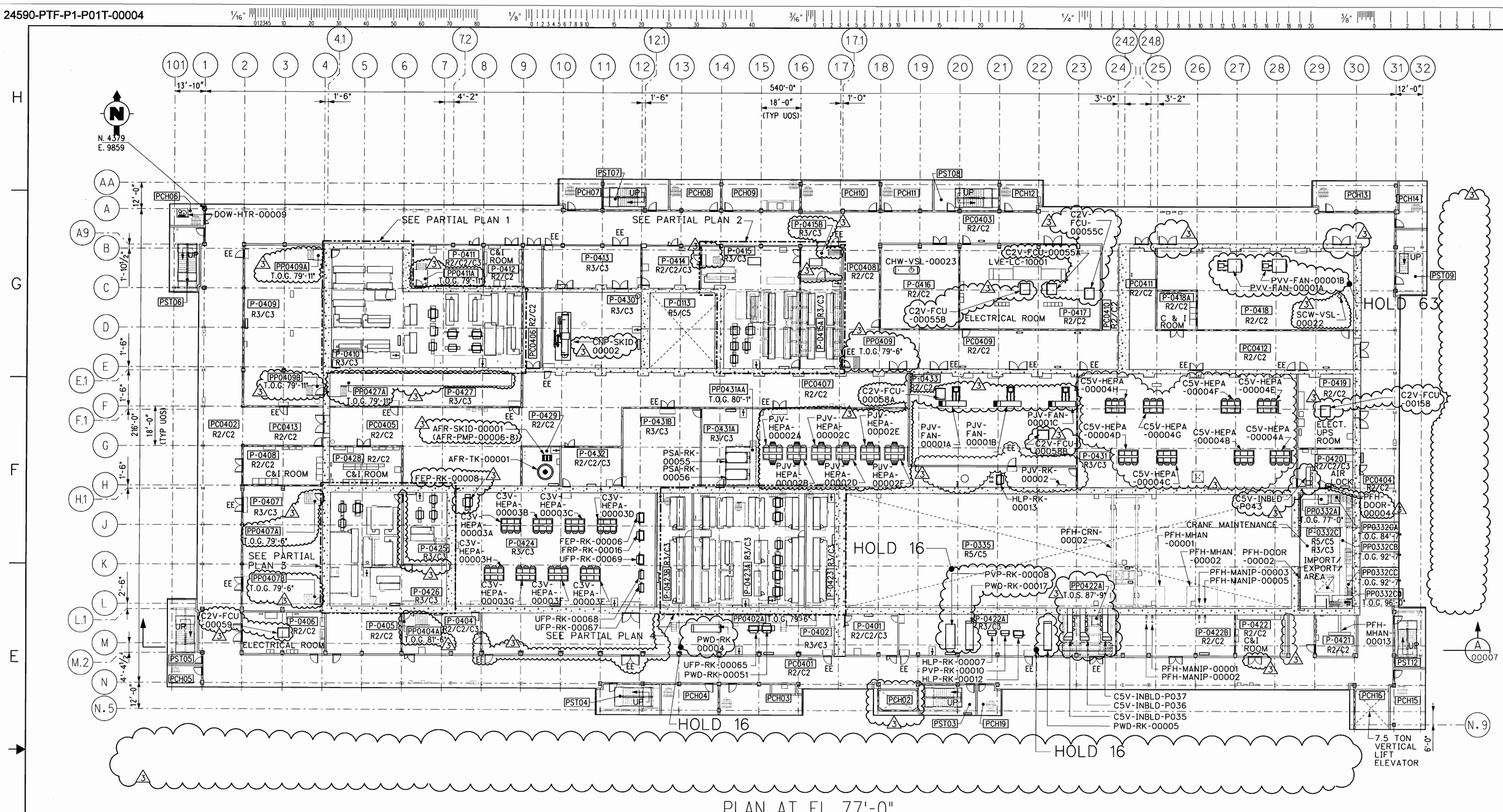

PLAN AT EL. 77'-0"

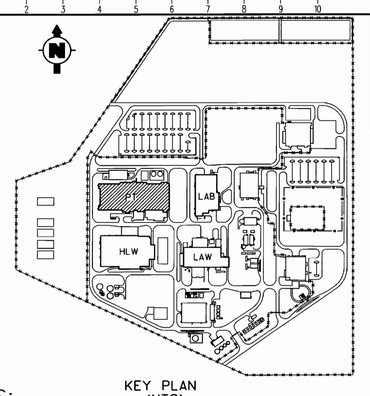

KEY PLAN (NTS)

GENERAL NOTES:

1. FOR REFERENCE, SEE PLOT PLAN DRAWING 24590-BOF-P1-50-00001.
2. ALL OPERATING AREAS ARE DESIGNATED R2/C2 UNLESS NOTED OTHERWISE.
3. ALL SUB-CHANGE ROOMS ARE DESIGNATED R2/C2/C3 UNLESS NOTED OTHERWISE.
4. FOR RADIOLOGICAL CLASSIFICATION REFER TO DOCUMENT 24590-WTP-GPP-SRAD-002.
5. REFER TO DWG. No. 24590-BOF-C2-C12T-00002 FOR CONVERSIONS ROOM PTF FACILITY TO SITE ELEVATIONS. PTF FACILITY ELEVATION 0'-0" EQUALS SITE ELEVATION 678'-0", ABOVE SEA LEVEL.
6. FOR ELECTRICAL AND C&I EQUIPMENT TAG AND LOCATION REFER TO INDEX KEY PLAN DRAWING NO. 24590-PTF-(LATER).
7. FOR ROOM NUMBERS AND DESCRIPTION REFER TO DRAWING NO. 24590-PTF-P1-P23T-01001.
8. CONTENTS OF THIS DOCUMENT ARE DANGEROUS WASTE PERMIT AFFECTING.
9. REFER TO PRETREATMENT FACILITY/ANNEX EQUIPMENT LOCATION INDEX KEY PLAN DWG NO. 24590-PTF-P1-P23T-00001 LISTING AREA DWGS THAT PROVIDE A MORE DETAILED IDENTIFICATION OF EQUIPMENT.
10. DELETED.

LEGEND:

CA	CONTROLLED ACCESS
EE	EMERGENCY EXIT
FDR	FIRE DOOR
TOG	TOP OF GRATING
P-#	ROOMS/CELLS/TUNNELS
PA #	ANNEX NUMBERING
PC #	CORRIDORS & CONNECTING VESTIBULES
PCH #	CHASES
PM #	MEZZANINES
PST #	STAIRS
	EQUIPMENT REMOVAL/LAY DOWN AREA
	OPENING
	CONCRETE
	EMERGENCY SHOWER/EYEWASH (PLAN VIEW)
	EMERGENCY SHOWER/EYEWASH (ELEVATION VIEW)
	EXTERIOR SIDING
	GRATING
	GYPSUM WALLBOARD

HOLDS:

16. PENDING FURTHER RACK DESIGN DEVELOPMENT.
44. DELETED
45. DELETED
46. DELETED
47. DELETED
63. PENDING ADEQUATE MAINTENANCE ACCESS CONFIGURATION.

REVISION 3 NOTE:

1. INCORPORATED DCN'S 24590-PTF-P1N-P01T-00082, 24590-PTF-P1N-P01T-00086, 24590-PTF-P1N-P01T-00088, 24590-PTF-P1N-P01T-00089, AND 24590-PTF-P1N-P01T-00095. UPDATED ADR REVISION NUMBER AND ADDED SAFETY SCREENING REQUIREMENT.
2. DELETED SECTIONS B THRU R AND PERSONNEL ELEVATOR IN PCH02; DELETED HOLDS 44, 45, 46 & 47.
3. RELOCATED DOOR IN ROOM P-0411; FEP-RK-00008 FROM ROOM P-0425 TO ROOM P-0424. ADJUSTED RACKS IN ROOMS P-0410, P-0425 AND P-0426; RELOCATED DOOR IN CORRIDOR PC0409; RELOCATED WEST WALL OF ROOM P-0433 TO THE WEST; C5V-INBLD-P043 AND DOOR ON WEST WALL IN ROOM P-0420.
4. ADDED C2V-FCU-00158 TO ROOM P-0419; C2V-FCU-00055A, B & C TO ROOM P-0417; C2V-FCU-00059 TO ROOM P-0406; PLATFORM PP0425A & B TO ROOM P-0425; PLATFORM PP0426A & B TO ROOM P-0426; ASX-DISP-00001 TO ROOM P-0415 AND ASX-DISP-00002 TO ROOM P-0415B; CNP-SKID-00002 TO ROOM P-0430; AFR-SKID-00001 TO ROOM P-0429; PP0427A TO ROOM P-0427. C2V-FCU-00058B TO ROOM P-0433; ADDED HOLDS 16 & 63; ADDED PP0409A & B TO ROOM P-0409; PP0407A & B TO ROOM P-0407; PP0404A TO ROOM P-0404; PP0411A TO ROOM P-0411; STAIRS IN ROOM P-0415; PP0409 TO PC0409; ADDED WALL & DOOR TO P-0415A TO MAKE NEW ROOM, P-0415B, ADDED STAIRS IN ROOM P-0415B; C2V-FCU-00058A TO ROOM P-0433; SCW-VSL-00022 IN ROOM P-0418; ADDED PP0415D TO ROOM P-0415; PP0415BA TO P-0415B; PP0415AC TO P-0415A.

REV	DESCRIPTION	ORG	CHKD	RVWD	APVD	DATE
3	SEE REVISION 3 NOTE AT DWG ZONE C/2	TLO	CKI	SSL	[illegible]	1/29/07
2	SEE REVISION 2 NOTE AT DWG ZONE B/2	FA	TD	JM	RV.R	09/22/04
0	-DCA-HV-02-002 REV 0, 24590-PTF-DCA-M-02					
	-020 REV 0, 24590-PTF-DCA-PR-03-004 REV 0.	FA	KS	SS	RV	06/4/03

REVISION HISTORY

ISSUED BY RPP-WTP PDC		
PROJECT No.	24590	
SITE	HANFORD	
AREA	200E	
BUILDING No.	10	
	BY	DATE
ORIGINATOR	F. ALMEIDA	06/03/03
CHECKER	K. SMITH	06/03/03
APPROVER	R. VOKE	6/4/03
REVIEWER	S. SKILES	6/3/03

ISSUE STAMP

CONTENT APPLICABLE TO ALARA? [X] YES [ ] NO
ADR NO. 24590-PTF-ADR-RAD-04-0001 REV: 3

SAFETY SCREENING REQUIRED? [ ] NO [X] YES
SAFETY SCREENING DOCUMENTS OR DRAWING TYPES IDENTIFIED IN 24590-WTP-GPP-SREG-002

BECHTEL

RIVER PROTECTION PROJECT
WASTE TREATMENT PLANT
2435 STEVENS CENTER PLACE
RICHLAND, WA 99354

CONTRACT No: DE-AC27-01RV14136

PRETREATMENT FACILITY GENERAL ARRANGEMENT PLAN AT EL. 77'-0"

SCALE: 1"=20'-0"

24590-PTF-P1-P01T-00004

REV 3

SIZE - 44x34
COMPUTER GENERATED - MANUAL CHANGES NOT PERMITTED

R10746391

/18/2007 01:45:14 PM

PLOTTED BY: jlonell
C:\Work\dms06427\PTF\P01T00004.DGN

FORM E_SDN.DGN 02/2003

24590-PTF-P1-P01T-P0007

NOTES:

1. FOR GENERAL NOTES & LEGEND REFER TO DRAWINGS 24590-PTF-P1-P01T-P0001 THRU -P0006.
2. CONTENTS OF THIS DOCUMENT ARE DANGEROUS WASTE PERMIT AFFECTING.
3. DELETED.
4. THE PORTIONS OF THIS DRAWING SHOWN IN PHANTOM ARE CONSIDERED NON-PERMIT AFFECTING AND ARE NOT SUBJECT TO THE REGULATORY REQUIREMENTS OF THE WAC CODE FOR THE DANGEROUS WASTE PERMIT TO THE EXTENT THAT THOSE PORTIONS DO NOT IMPACT DANGEROUS WASTE AREAS/OPERATIONS.

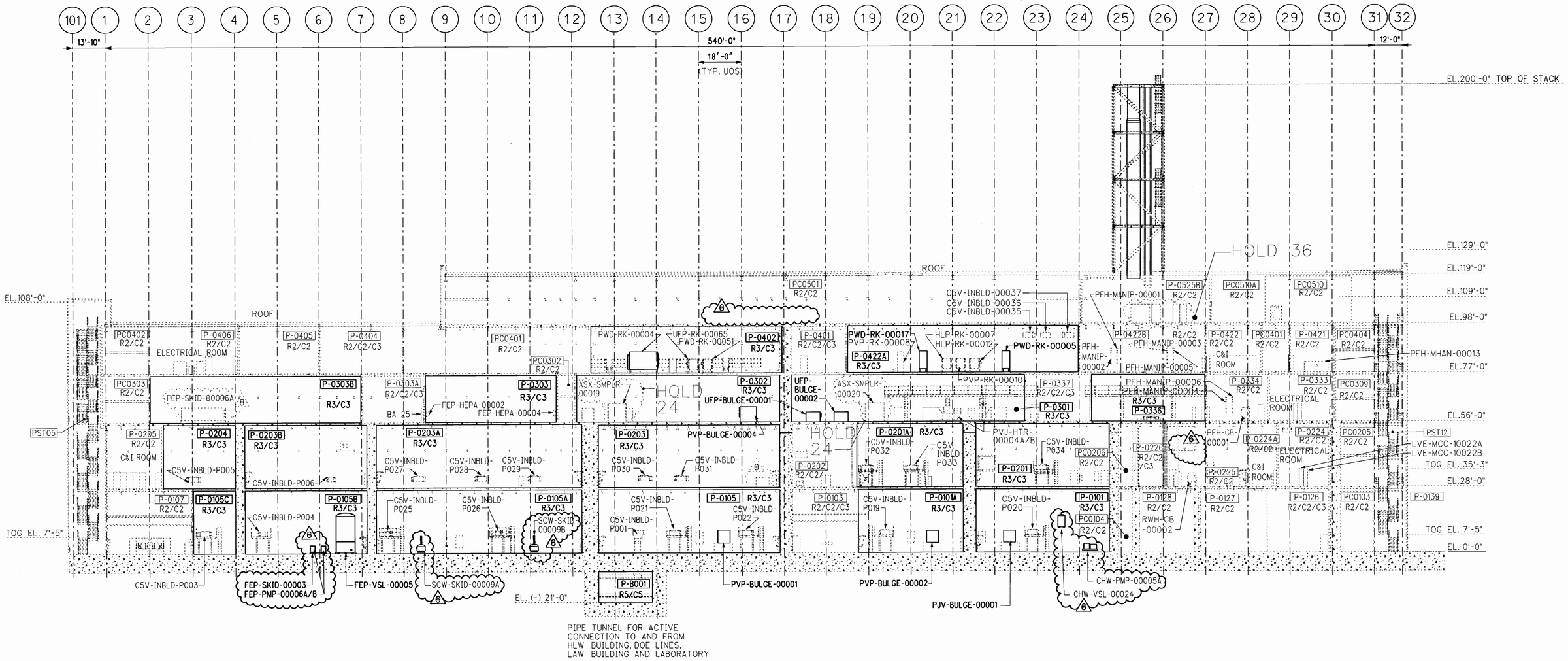

SECTION A
LOOKING NORTH
P0001 THRU P0006

HOLDS:

24. PENDING FURTHER VENDOR & MAINTENANCE DEVELOPMENT - ASX SAMPLER SYSTEM
27. DELETED
32. DELETED
36. PENDING VENDOR INFORMATION - RAD MONITORING SYST.
54. PENDING DESIGN DEVELOPMENT

PLEASE NOTE THAT SOURCE, SPECIAL NUCLEAR AND BYPRODUCT MATERIALS, AS DEFINED IN THE ATOMIC ENERGY ACT OF 1954 (AEA), ARE REGULATED AT THE U.S. DEPARTMENT OF ENERGY (DOE) FACILITIES EXCLUSIVELY BY DOE ACTING PURSUANT TO ITS AEA AUTHORITY. DOE ASSERTS, THAT PURSUANT TO THE AEA, IT HAS SOLE AND EXCLUSIVE RESPONSIBILITY AND AUTHORITY TO REGULATE SOURCE, SPECIAL NUCLEAR, AND BYPRODUCT MATERIAL AT DOE-OWNED NUCLEAR FACILITIES. INFORMATION CONTAINED HEREIN ON RADIONUCLIDES IS PROVIDED FOR PROCESS DESCRIPTION PURPOSES ONLY.

REV	DESCRIPTION	ORG	CHKD	RVWD	APVD	DATE
6	ISSUED FOR PERMITTING USE	CKB	LAL	WTM	RES	5/18/06
5	ISSUED FOR PERMITTING USE	RT	DRC	JRM	RES	5/13/04
4	ISSUED FOR PERMITTING USE	RT	CKB	JRM	SG	3/24/04
3	ISSUED FOR PERMITTING USE	GJ	MC	SS	RV	6/17/03
0	ISSUED FOR PERMITTING USE	CKB	JM	SCF	JRM	9/17/02

REVISION HISTORY

ISSUED BY NPP-WTP PDC

ISSUE STAMP

PROJECT No.	24590	
SITE	HANFORD	
AREA	200E	
BUILDING No.	10	
	BY	DATE
ORIGINATOR	BERNEY, CASSANDRA	9/12/02
CHECKER	MCDOWELL, JOE	9/12/02
APPROVER	MILLER, JEFFREY	9/12/02
REVIEWER	FOELBER, STEVEN	9/17/02

CONTENT APPLICABLE TO ALARA? [X] YES [ ] NO
ADR NO. N/A REV: N/A
SAFETY SCREEN REQUIRED? [ ] YES [X] NO EMS INITIAL IF YES ____

BECHTEL

RIVER PROTECTION PROJECT
WASTE TREATMENT PLANT
2435 STEVENS CENTER PLACE
RICHLAND, WA 99352

CONTRACT No: DE-AC27-01RV14136

PRETREATMENT FACILITY GENERAL ARRANGEMENT SECTION A-A

SCALE: 1"=20'-0"

24590-PTF-P1-P01T-P0007

REV 6

'E' SIZE - 44x34
COMPUTER GENERATED - MANUAL CHANGES NOT PERMITTED

R10682768

05/17/2006 08:26:04 AM

PLOTTED BY: cberney
C:\Work\dms0732\PTFPP01P0007.DGN

FORM E_SDN.DGN 02/2003

Attachment 51 – Appendix 8.5
Pretreatment Building
Civil, Structural, and Architectural Criteria and Typical Design Details

Where information regarding treatment, management, and disposal of the radioactive source, byproduct material, and/or special nuclear components of mixed waste (as defined by the Atomic Energy Act of 1954, as amended) has been incorporated into this permit, it is not incorporated for the purpose of regulating the radiation hazards of such components under the authority of this permit and chapter 70.105 RCW. In the event of any conflict between Permit Condition III.10.A. and any statement relating to the regulation of source, special nuclear, and byproduct material contained in portions of the permit application that are incorporated into this permit, Permit Condition III.10.A. will prevail.

Additional appendices will be added to this appendix as new information is incorporated into this permit.

Drawings and Documents

Attachment 51 – Appendix 8.5
Pretreatment Building
Civil, Structural, and Architectural Criteria and Typical Design Details

The following drawings have been incorporated into Appendix 8.5 and can be viewed at the Ecology Richland Office. **New drawings are in bold lettering.**

Drawing/Document Number	**Description**
24590-PTF-PER-M-02-003, Rev 1	Underground Pipe Protection
24590-PTF- PER-M-02-006, Rev 5	Sump Data for PT Facility
24590-PTF- PER-M-03-002, Rev 0	Sump & Drain Data at 28 Ft Level for PT Facility
24590-PTF-PER-M-04-002, Rev 0	Sump & Drain Data at 56 ft. Level for PT Facility
24590-PTF-PER-M-04-0004, Rev 0	Sump & Drain Data at 77 ft. Level for PT Facility
24590-PTF-PER-M-04-0006, Rev 0	Leak Detection for Underground Transfer lines for PT Facility
24590-PTF-PER-M-04-0009, Rev 0	Sump Data for PT Facility - Room P-0150
RESERVED	RESERVED

R10104550

DOCUMENT INFORMATION

The following information is required when submitting a document to PDC for issuance.	**Correspondence (CCN) No:** _____
	Document No: 24590-PTF-PER-M-02-003
	Rev: 1

Project Information (Check Applicable Box)

☐ Balance of Facilities ☐ HLW Vitrification ☐ Analytical Laboratory ☐ Across all areas

☒ Pretreatment ☐ LAW Vitrification ☐ External Interfaces

Document is applicable to ALARA (as determined by the originator)? ☐ Yes ☒ No

Applicability to ALARA means that the item has the potential to affect doses, contamination levels, or releases to the environment. (See 24590-WTP-GPP-SRAD-002, *Application of ALARA in the Design Process*, sections 4.1 and 4.2 for more information.)

Subject code(s): _____ (for correspondence only)

ACTION ITEM INFORMATION (for correspondence other than meeting minutes)

Commitments: ☐ Yes ☒ No (if yes, brief description below)

_____

_____

Tracked by RITS

Commitment Owed to: NA Due Date: _____

Actionee(s)			

Tracked by PADC

Written Response Required: ☐ Yes ☒ No

Owed to: _____ Due Date: _____

This correspondence closes action on Correspondence Number _____

☐ Subcontract Files _____ Copies

☐ PAAA Coordinator MS14-4B

☐ Contains SENSITIVE Information

Additional Departmental Info (to facilitate keyword search)

Internal ☐ DNFSB ☐ ORP ☐ OSR ☐ WDOE ☐ WDOH ☐ Other _____

Special Instructions for PDC

8/4/07

☒ Processed Data Entry ☐ Copied QA ☐ Scanned ☐ Filed

to

Document title: **Underground Pipe Protection**

Contract number: DE-AC27-01RV14136

Department: Mechanical Systems

Author(s): JR Divine
Certified Corrosion Specialist, #867

ISSUED BY
RPP-WTP PDC
DM 8/4/03
INIT DATE

Principal author signature:

Document number: 24590-PTF-PER-M-02-003 , Rev 1

Checked by: HM Krafft

Checker Signature

Date of issue: 7/31/03

Issue status: Approved

Approved by: SW Vail

Approver's position: Materials/Metallurgy & Compliance Supervisor

Approver signature:

STEVEN WAKEMAN VAIL
STATE OF WASHINGTON
39250
REGISTERED
PROFESSIONAL ENGINEER
EXPIRES: 12/07/03

7/31/03

This bound document contains a total of 7 sheets

River Protection Project
Waste Treatment Plant
2435 Stevens Center Place
Richland, WA 99352
United States of America
Tel: 509 371 2000

Notice

Please note that source, special nuclear, and byproduct materials, as defined in the Atomic Energy Act of 1954 (AEA), are regulated at the US Department of Energy (DOE) facilities exclusively by DOE acting pursuant to its AEA authority. DOE asserts, that pursuant to the AEA, it has sole and exclusive responsibility and authority to regulate source, special nuclear, and byproduct materials at DOE-owned nuclear facilities. Information contained herein on radionuclides is provided for process description purposes only.

History Sheet

Rev	Date	Reason for revision	Revised by
0	10/28/02	Issued for Permitting	JR Divine
1	7/31/03	Added AEA statement, updated regulatory citation, added clarification, clarifications per CCN 065377, and reissued for permitting use	JR Divine

Contents

Notice ii
History Sheet iii
1 Introduction 1
2 Applicable Documents 1
3 Description 1
4 Conclusions 3

1 Introduction

The Waste Treatment and Immobilization Plant (WTP) meets the intent of the requirements of the Washington Administrative Code (WAC), Chapter 173-303-640(3)(a)(iii) to mitigate pipeline corrosion and to protect the environment. The WAC requires a determination, by a corrosion expert, of factors affecting the potential for corrosion where the tank or tank system components are in direct contact with soil or water. This requirement is satisfied by the determination of the WTP corrosion expert that the WTP Project shall use cathodic protection, as appropriate, for underground lines containing dangerous waste. This determination is based on both experience and personal knowledge of the 200 Areas.

An independent corrosion expert (ICE) will review this report, as well as design documentation, to determine whether additional corrosion protection may be required. The owner or operator is required to provide the type and degree of corrosion protection recommended by the ICE. The field installation of all corrosion protection systems will be supervised by an ICE (WAC 173-303-640(3)(g)).

2 Applicable Documents

- Washington Administrative Code (as amended) (WAC) 173-303. *Dangerous Waste Regulations.*
- NACE RP-0169. 1996. Standard Recommended Practice: *Control of External Corrosion on Underground or Submerged Metallic Piping Systems*, NACE International, Houston, Texas, USA
- NACE RP-0285. 1995. Standard Recommended Practice: *Corrosion Control of Underground Storage Tank Systems by Cathodic Protection*, NACE International, Houston, Texas, USA
- API Recommended Practice 1632. 1996. *Cathodic Protection of Underground Petroleum Storage Tanks and Piping Systems*, American Petroleum Institute, Washington, District of Columbia, USA

3 Description

The following design details are used to provide the corrosion protection needed to mitigate potential corrosion factors:

- The primary containment pipe is 304L stainless steel for the line from the Hanford Tank Farms. The primary containment pipe for interplant pipelines will use 316L stainless steel to provide added corrosion resistance when less alkaline solutions are being transported. These material selections were made to provide the necessary corrosion resistance to the proposed fluid contents. The primary pipelines shall be flushed with inhibited water after each use.
- The secondary containment piping and associated leak detection system provides the means to detect leaks from the primary line and contain them. Further, it is sufficiently corrosion resistant to ensure that a leak can be detected and isolated during its 40 year design life.
- The interplant secondary containment pipe, which contacts the soil, will be coated and cathodically protected, using an impressed current system, in accordance with NACE International Recommended Practices.

Considerations:
The following factors, taken from WAC 173-303-640(3)(a)(iii)(A)(I-VIII), are used in determining the corrosion protection needed to protect waste process piping in contact with soil.
"(A) Factors affecting the potential for corrosion, including but not limited to:

I. Soil moisture content;
II. Soil pH;
III. Soil sulfides level;
IV. Soil resistivity;
V. Structure to soil potential;
VI. Influence of nearby underground metal structures (e.g., piping);
VII. Existence of stray electric current;
VIII. Existing corrosion-protection methods (e.g., coating, cathodic protection)."

Discussion:
The above 8 factors are used when the corrosion expert is determining the type of corrosion protection needed. Because the WTP Project shall use coatings and cathodic protection, or equivalent, for the underground metal piping system corrosion protection and because the WTP Project is located in a remote area with no unknown underground structures or stray currents, the certified corrosion staff have determined further evaluation of the above factors is not required.

There are 2 designs for underground pipelines that will be connected to, or are within, the WTP's facilities that contain a dangerous waste. Both designs have an inner stainless steel pipe and an outer fusion bonded epoxy (FBE) coated carbon steel secondary pipe. In one design, the FBE coated carbon steel directly contacts the "soil" (duplex). The duplex pipe has cathodic protection. In the second design, the secondary pipe is also surrounded by a layer of insulation (1 to 2 inches thick) and a protective polymer outer shell (triplex). Because of its isolation from water intrusion, the triplex pipe does not need to be cathodically protected; however, it is connected to cathodically protected piping at both ends and therefore may receive some cathodic protection within those areas termed the "zone of influence".

The likelihood of significant corrosion of the secondary containment pipe due to liquid in the annular space is small because the leak detection system will quickly detect and allow isolation of leaks, reducing exposure time. Similarly, the use of the tertiary barrier in the triplex line isolates the secondary containment from external sources of moisture; therefore corrosion of the secondary will not occur.

The following items can impact the long-term effectiveness of the protective coating:

- *Temperature* – The underground waste transfer lines will operate at 200°F or lower.
- *Radiation* - Details of the 40 year lifetime gamma radiation doses are being evaluated. However, the highest expected 40 year transfer line dose is between the pretreatment facility and high-level waste facility. The estimate 40 year dose for this line is less than 60,000,000 rad and assumes the line is full of waste at all times.
- *pH* - The pH of the Hanford soil is expected to be 6 to 8. Additionally, a controlled density backfill, which has a high pH, is used to bed the line.

The coating to be used on the outer carbon steel pipe is epoxy based. Epoxies are available that have a design temperature of approximately 300°F and are rated for a lifetime dose of approximately 200,000,000 rad. The coating provides corrosion protection and reduces the current requirement of the cathodic protection system.

4 Conclusions

- The WTP will use standard industry practice of coating the pipe exposed to the soil and applying cathodic protection.
- The use of cathodic protection applied to duplex underground piping in accordance with NACE standards reduces the corrosion rate to essentially zero with or without coatings.
- Triplex underground piping does not require cathodic protection because its secondary containment, carbon steel pipe, is isolated from soil moisture. However, because the triplex line from the Hanford Double-Shell Tanks will be attached to cathodically protected components in the WTP, it will have cathodic protection within the zone of influence. This feature will have no useful function and will not reduce the corrosion protection of the system.
- The use of coatings on the duplex piping, combined with cathodic protection, reduces the current requirements and ensures a more uniform current distribution.
- The epoxy coating has sufficient resistance to the radiation and temperature conditions.
- No external corrosion of either the primary or secondary containment is anticipated.

MASTER DISTRIBUTION SCHEDULE

Document Number	Rev
24590-PTF-PER-M-02-003	1

Name	MSIN	Controlled	Uncontrolled	Size						Comments
						Drawings				
				8 ½ × 11 (A)	11 × 17 (B)	C	D	E	As Is	
Anthony Rangus	M24-B2		X						X	
Stephen Vail	MS4-B2		X						X	
Jeff Markillie	MS4-C1		X						X	
Jan Brown	MS12-2A		X						X	

Approver D.L. Adler (*Print Name*) [signature] (*Signature*) 7/31/03 (*Date*)

DOCUMENT INFORMATION

Please complete the following information when submitting a document to PDC.

Correspondence (CCN) No:	**Rev: N/A**
Document No: 24590-PTF-PER-M-02-006	**Rev:** 0

Project Information (Check Applicable Box)

- ☐ Balance of Facilities
- ☐ Pretreatment
- ☐ HLW Vitrification
- ☐ LAW Vitrification
- ☐ Analytical
- ☐ External Interfaces
- ☐ Across all areas

Document is applicable to ALARA? ☐ Yes ☒ No

In general, any record that deals with Radiation, Radioactive Material, Occupational Dose, Dose Reduction, or Dose Rate are considered ALARA Records. (See 24590-WTP-GPP-SRAD-002, *Application of ALARA in the Design Process*, section 4.8 for additional guidance)

Additional Information for Correspondence

Subject Code(s) _____

Action Item Information. (This section does not apply to Meeting Minutes.)

- ☐ No Action Item within the correspondence
- ☐ Action(s): (Give a brief description of actions in the following space [optional])

_____

Due Date: _____ (If no due date is indicated, a 2-week period will be assigned.)

Action Owed to: _____

Actionee(s)

This correspondence closes action on Correspondence Number _____

- ☐ Subcontract Files _____ Copies
- ☐ PAAA Coordinator MSII-B
- ☐ Contains SENSITIVE Information

1-15-03

Processed Data Entry ☒ Copied QA ☐ Scanned ☐ Filed

Document title: **Sump Data for PT Facility**

Contract number: DE-AC27-01RV14136

Department: Mechanical Systems

Author(s): K. Chandrasekaran H. Woodworth E. Holvorson

Principal author signature:

Document number: 24590-PTF-PER-M-02-006, Rev 5

Checked by: J. Julyk

Checker signature:

Date of issue: 1/14/03

Issue status: Issued for Permitting Use

Approved by: M. Hoffmann

Approver's position: Deputy Manager

Approver signature:

ISSUED BY
RPP-WTP PDC
1-15-03
INIT DATE

MARK W. HOFFMANN
STATE OF WASHINGTON
0030952
REGISTERED
PROFESSIONAL ENGINEER

1/14/03

EXPIRES 12/10/04

This bound document contains a total of 6 sheets

Signature 1/14/03 Date

River Protection Project
Waste Treatment Plant
3000 George Washington Way
Richland, WA 99352
United States of America
Tel: 509 371 3500
Fax: 509 371 3504

History Sheet

Rev	Date	Reason for revision	Revised by
0	6/30/02	Issued for Permitting Use	H. Woodworth
1	7/11/02	Revised number of sumps in section 3 and sump materials in Table 1	K. Chandrasekaran
2	7/31/02	Revised number of sumps in Table 1 to reflect below grade sumps	K. Chandrasekaran
3	9/18/02	Revised number of sumps in Table 1 to include zero feet elevation sumps and added Table 2 for drains	K. Chandrasekaran
4	11/11/02	Revised document, Issued for Permitting Use	HR Woodworth
5	~~12/23/02~~ 1/14/03	Revised document, Issued for Permitting Use.	HR Woodworth

Contents

1 Introduction 1
2 Applicable Documents 1
3 Description 1
3.1 Below Grade Level 1
3.2 Elevation 0' 1

Tables

Table 1 PT Sumps 2
Table 2 PT Drains 3

1 Introduction

The Washington Administrative Code, WAC 173-303, requires the use of secondary containment for systems containing dangerous waste. This revision of the document provides a brief description of the secondary containment sumps located below grade and at zero feet level of the Pretreatment facility.

2 Applicable Documents

- Washington Administrative Code, WAC 173-303, Dangerous Waste Regulations

3 Description

3.1 Below Grade Level

There are two sumps located below grade in this facility. One of the sumps is a wet type and the other is a dry type sump.

The dry sump is located in the pit at the (-) 19'-0" level. This dry sump is an epoxy coated sump. The maximum operating volume of this sump is approximately 55 gallons. This sump is equipped with level detection and a pump that will discharge the liquid from the sump to the Floor Drain Collection Vessel (PWD-VSL-00045) located at the same elevation as that of the sump.

The wet sump is located in the pit at the (-) 45'-0" level. The sump is operated wet at all times. The upper edge of this fabricated stainless steel (6Mo) sump interfaces with the cell liner. The maximum operating volume of the sump is less than 235 gallons. The sump has provisions for level detection. This sump is also equipped with two ejectors that will eject the sump contents to Ultimate Overflow Vessel, (PWD-VSL-00033) and the HLW Effluent Transfer Vessel, (PWD-VSL-00043) located at (-) 45'-0" level.

There are no embedded drain lines that form an extension of the secondary containment boundary.

Information on the Pretreatment Facility below grade sumps is given in Table 1.

3.2 Elevation 0'

All hot cell and black cell areas are lined with stainless steel for secondary containment. There are a total of 24 low point sumps. These sumps are located at the low points of the liner and act as catch pots, should any liquid be released into the cell. All sumps are fabricated from stainless steel and are dry type sumps.

Each sump is approximately 30 inches in diameter and 28 inches deep. The upper edge interfaces with the cell liner. The maximum operating volume of each sump is less than 75 gallons. Each sump is equipped with level detection and an ejector that will discharge the liquid from the sump to the Plant Wash Vessel (PWD-VSL-00044) located at 0'-0" level.

Information on the Pretreatment Facility 0' elevation sumps is given in Table 1.
Information on the Pretreatment Facility 0' elevation drains is given in Table 2.

Table 1 PT Sumps

##	Sump PIN	PT Room Number	Maximum Sump Capacity, GAL	Sump Type/Nominal Operating Volume, GAL	Sump Dimensions, Inch	P&ID Number	Leak Detection Type	Material of Fabrication
1	PWD-SUMP-00071	P-B005 (PIT –19)	55.1	Dry Sump	30" O.D. X 18"	24590-PTF-M6-PWD-P00041	Radar	Epoxy coating
2	PWD-SUMP-00040	P-B002 (PIT-45)	233.7	140.3	60" X 30" X 30"	24590-PTF-M6-PWD-P00012	Bubbler	6Mo
3	PWD-SUMP-00001	P-0108B	73.5	Dry Sump	30" Dia. by ~28" deep	24590-PTF-M6-PWD-P00008	Radar	SS 304L
4	PWD-SUMP-00001A	P-0108C	73.5	Dry Sump	30" Dia. by ~28" deep	24590-PTF-M6-PWD-P00010	Radar	SS 304L
5	PWD-SUMP-00002	P-0108A	73.5	Dry Sump	30" Dia. by ~28" deep	24590-PTF-M6-PWD-P00008	Radar	SS 304L
6	PWD-SUMP-00002A	P-0108	73.5	Dry Sump	30" Dia. by ~28" deep	24590-PTF-M6-PWD-P00010	Radar	SS 304L
7	PWD-SUMP-00003	P-0106	73.5	Dry Sump	30" Dia. by ~28" deep	24590-PTF-M6-PWD-P00008	Radar	SS 304L
8	PWD-SUMP-00004	P-0104	73.5	Dry Sump	30" Dia. by ~28" deep	24590-PTF-M6-PWD-P00008	Radar	SS 304L
9	PWD-SUMP-00005	P-0102A	73.5	Dry Sump	30" Dia. by ~28" deep	24590-PTF-M6-PWD-P00008	Radar	SS 304L
10	PWD-SUMP-00006	P-0102	73.5	Dry Sump	30" Dia. by ~28" deep	24590-PTF-M6-PWD-P00008	Radar	SS 304L
11	PWD-SUMP-00007	P-0109	73.5	Dry Sump	30" Dia. by ~28" deep	24590-PTF-M6-PWD-P00009	Radar	SS 304L
12	PWD-SUMP-00008	P-0111	73.5	Dry Sump	30" Dia. by ~28" deep	24590-PTF-M6-PWD-P00009	Radar	SS 304L
13	PWD-SUMP-00009	P-0112	73.5	Dry Sump	30" Dia. by ~28" deep	24590-PTF-M6-PWD-P00009	Radar	SS 304L
14	PWD-SUMP-00010	P-0113	73.5	Dry Sump	30" Dia. by ~28" deep	24590-PTF-M6-PWD-P00009	Radar	SS 304L
15	PWD-SUMP-00011	P-0114	73.5	Dry Sump	30" Dia. by ~28" deep	24590-PTF-M6-PWD-P00009	Radar	SS 304L
16	PWD-SUMP-00012	P-0117	73.5	Dry Sump	30" Dia. by ~28" deep	24590-PTF-M6-PWD-P00009	Radar	SS 304L
17	PWD-SUMP-00013	P-0117A	73.5	Dry Sump	30" Dia. by ~28" deep	24590-PTF-M6-PWD-P00014	Radar	SS 304L
18	PWD-SUMP-00026	P-0123 (Hot Cell)	73.5	Dry Sump	30" Dia. by ~28" deep	24590-PTF-M6-PWD-P00010	Radar	SS 316L
19	PWD-SUMP-00028	P-0123 (Hot Cell)	73.5	Dry Sump	30" Dia. by ~28" deep	24590-PTF-M6-PWD-P00014	Radar	SS 316L
20	PWD-SUMP-00029	P-0123 (Hot Cell)	73.5	Dry Sump	30" Dia. by ~28" deep	24590-PTF-M6-PWD-P00014	Radar	SS 316L
21	PWD-SUMP-00031	P-0119	73.5	Dry Sump	30" Dia. by ~28" deep	24590-PTF-M6-PWD-P00010	Radar	SS 304L
22	PWD-SUMP-00032	P-0123A (Maintenance Cave)	73.5	Dry Sump	30" Dia. by ~28" deep	24590-PTF-M6-PWD-P00010	Radar	SS 316L
23	PWD-SUMP-00033	P-0123A (Maintenance Cave)	73.5	Dry Sump	30" Dia. by ~28" deep	24590-PTF-M6-PWD-P00010	Radar	SS 316L
24	PWD-SUMP-00034	P-0121A	73.5	Dry Sump	30" Dia. by ~28" deep	24590-PTF-M6-PWD-P00012	Radar	SS 304L
25	PWD-SUMP-00035	P-0122A	73.5	Dry Sump	30" Dia. by ~28" deep	24590-PTF-M6-PWD-P00012	Radar	SS 304L
26	PWD-SUMP-00036	P-0118	73.5	Dry Sump	30" Dia. by ~28" deep	24590-PTF-M6-PWD-P00012	Radar	SS 304L

Table 2 PT Drains

###	Drain Line	PT Room Number	Max. Drain Line Capacity (gallons per minute)	Drain Line Size (Pipe diameter, inches)	P&ID Number	Leak Detection Type	Material of Fabrication
1	PWD-ZF-03000-S11B-06	P-0123, Hot Cell , Elevation 0'	939	6	24590-PTF-M6-PWD-P0011	N/A	SS316L
2	PWD-ZF-03001-S11B-06	P-0123, Hot Cell , Elevation 0'	939	6	24590-PTF-M6-PWD-P0011	N/A	SS316L
3	PJV-ZF-00027-S11B-02	P-0101, PJV-BULGE-00001 Drain Elevation 0'	60	2	24590-PTF-M6-PJV-P0002	N/A	SS316L
4	PWD-ZF-00004-S11B-02	P-0105, PVP-BULGE-00001 Drain Elevation 0'	60	2	24590-PTF-M6-PVP-P0003	N/A	SS316L
5	PWD-ZF-00005-S11B-02	P-0101A, PVP-BULGE-00002 Drain Elevation 0'	60	2	24590-PTF-M6-PVP-P0003	N/A	SS316L
6	RDP-ZF-00016-S11B-02	P-0110A, RDP-BULGE-00010 Drain Elevation 0'	60	2	24590-RDP-M6-RDP-P0001	N/A	SS316L
7	TCP-PH-00032-S11B-02	P-0116, TCP-BULGE-00004 Drain Elevation 0'	60	2	24590-PTF-M6-TCP-P0001	N/A	SS316L
8	TEP-ZF-02066-S11B-011/2	P-0110A, TEP-BULGE-00006 Drain Elevation 0'	40	1-1/2	24590-PTF-M6-TEP-P0001	N/A	SS316L
9	TXP-ZF-00022-S11M-011/2	P-0110B, TXP-BULGE-00001 Drain Elevation 0'	40	1-1/2	24590-PTF-M6-TXP-P0001	N/A	SS316L
10	TXP-ZF-00021-S11M-011/2	P-0110C, TXP-BULGE-00002 Drain Elevation 0'	40	1-1/2	24590-PTF-M6-TXP-P0001	N/A	SS316L
11	TXP-ZF-00042-S11M-011/2	P-0110C, TXP-BULGE-00004 Drain Elevation 0'	40	1-1/2	24590-PTF-M6-TXP-P0001	N/A	SS316L
12	TXP-ZF-00019-S11M-011/2	P-0110C, TXP-BULGE-00005 Drain Elevation 0'	40	1-1/2	24590-PTF-M6-TXP-P0004	N/A	SS316L

R10077764

DOCUMENT INFORMATION

The following information is required when submitting a document to PDC for issuance.	**Correspondence (CCN) No:** _____
	Document No: 24590-PTF-PER-M-03-002
	Rev: 0

Project Information (Check Applicable Box)

☐ Balance of Facilities ☐ HLW Vitrification ☐ Analytical Laboratory ☐ Across all areas

☒ Pretreatment ☐ LAW Vitrification ☐ External Interfaces

Document is applicable to ALARA (as determined by the originator)? ☐ Yes ☒ No

Applicability to ALARA means that the item has the potential to affect doses, contamination levels, or releases to the environment. (See 24590-WTP-GPP-SRAD-002, *Application of ALARA in the Design Process*, sections 4.1 and 4.2 for more information.)

Subject code(s): _____ (for correspondence only)

ACTION ITEM INFORMATION (for correspondence other than meeting minutes)

Commitments: ☐ Yes ☒ No (if yes, brief description below)

_____

_____

Tracked by RITS

Commitment Owed to: _____ Due Date: _____

Actionee(s)			

Tracked by PADC

Written Response Required: ☐ Yes ☒ No

Owed to: _____ Due Date: _____

This correspondence closes action on Correspondence Number _____

☐ Subcontract Files _____ Copies

☐ PAAA Coordinator MS14-4B

☐ Contains SENSITIVE Information

Additional Departmental Info (to facilitate keyword search)

Internal ☐ DNFSB ☐ ORP ☐ OSR ☐ WDOE ☐ WDOH ☐ Other _____

Special Instructions for PDC

10/24/03

Processed Data Entry ☐ Copied QA ☐ Scanned ☐ Filed

WO 10/24/03

ISSUED BY
RPP-WTP PDC
pm 6/24/03
INIT DATE

Document title: **Sump and Drain Data at 28 Ft Level for PT Facility**

Contract number: DE-AC27-01RV14136

Department: Mechanical Systems

Author(s): S Arora

Principal author signature:

Document number: 24590-PTF-PER-M-03-002, Rev 0

Checked by: R Stevens

Checker signature:

Date of issue: 16 June 2003

Issue status: Issued for Permitting Use

Approved by: S Grabowski

Approver's position: Area Project Engineering Manager

Approver signature:

MARK W. HOFFMANN
STATE OF WASHINGTON
0030952
REGISTERED
PROFESSIONAL ENGINEER
6/23/03
EXPIRES 12/10/04

This bound document contains a total of 8 sheets

River Protection Project
Waste Treatment Plant
2435 Stevens Center Place
Richland, WA 99352
United States of America
Tel: 509 371 2000

Notice

Please note that source, special nuclear, and byproduct materials, as defined in the Atomic Energy Act of 1954 (AEA), are regulated at the US Department of Energy (DOE) facilities exclusively by DOE acting pursuant to its AEA authority. DOE asserts, that pursuant to the AEA, it has sole and exclusive responsibility and authority to regulate source, special nuclear, and byproduct materials at DOE-owned nuclear facilities. Information contained herein on radionuclides is provided for process description purposes only.

History Sheet

Rev	Date	Reason for revision	Revised by
0	16 June 2003	Issued for Permitting Use	S. Arora

Contents

Notice ii
History Sheet iii
Acronyms v
1 Introduction 1
2 Applicable Documents 1
3 Description 1
3.1 Elevation 28 Ft 1

Tables

Table 1 – Pretreatment Drains 2

Acronyms

AEA	Atomic Energy Act of 1954
CNP	cesium nitric acid recovery process system
DOE	US Department of Energy
PT	pretreatment
PWD	plant wash and disposal
WAC	Washington Administrative Code

1 Introduction

The Washington Administrative Code, WAC 173-303, requires the use of secondary containment for systems containing dangerous waste. This document provides a brief description of the secondary containment sumps and drains located at the 28 ft level of the pretreatment (PT) facility.

2 Applicable Documents

WAC 173-303, *Dangerous Waste Regulations*, Washington Administrative Code.

3 Description

3.1 Elevation 28 Ft

There are no sumps located on the 28 ft elevation in this facility.

Floor drains and curbing, where applicable, are provided in the vicinity of various items of regulated system ancillary equipment. The drains direct any potential leaks or spills from the ancillary equipment and discharge from the fire protection sprinkler system to the C3 floor drain collection vessel (PWD-VSL-00046). Entries to containment areas have drainage trenches immediately in front of them to prevent fire water or other material from flowing into C2 areas.

A drain is also provided from bulge CNP-BULGE-00008 to direct any leaks or spills to the ultimate overflow vessel (PWD-VSL-00033).

Information is given in Table 1 on the PT facility 28 ft elevation drains that form an extension of the secondary containment boundary.

Table 1 – Pretreatment Drains

Item No.	Drain Line/Floor Drain No.	PT Room Number	Max. Drain Line Capacity Gal / min	Drain Line Size Pipe diameter in inches	P&ID Number	Material of Fabrication
1	CNP-ZF-00043-S11B-03	P-0207, CNP-BULGE-00008 Drain Elevation 28 ft	160	3	24590-PTF-M6-CNP-P0002	SS316L
2	PWD-FD-00432	P-0201 Drain Elevation 28 ft	155	6	24590-PTF-M6-PWD-P0044	SS316L
3	PWD-FD-00452	P-0201 Drain Elevation 28 ft	706	8	24590-PTF-M6-PWD-P0044	SS316L
4	PWD-FD-00456	P-0201A Drain Elevation 28 ft	155	6	24590-PTF-M6-PWD-P0044	SS316L
5	PWD-FD-00341	P-0201A Drain Elevation 28 ft	155	6	24590-PTF-M6-PWD-P0044	SS316L
6	PWD-FD-00351A	P-0201A Drain Elevation 28 ft	52	3	24590-PTF-M6-PWD-P0044	SS316L
7	PWD-FD-00451	P-0203 Drain Elevation 28 ft	706	8	24590-PTF-M6-PWD-P0044	SS316L
8	PWD-FD-00339	P-0203 Drain Elevation 28 ft	155	6	24590-PTF-M6-PWD-P0044	SS316L
9	PWD-FD-00450	P-0203 Drain Elevation 28 ft	706	8	24590-PTF-M6-PWD-P0044	SS316L
10	PWD-FD-00450A	P-0203 Drain Elevation 28 ft	155	6	24590-PTF-M6-PWD-P0044	SS316L
11	PWD-FD-00449A	P-0203 Drain Elevation 28 ft	52	3	24590-PTF-M6-PWD-P0044	SS316L
12	PWD-FD-00449	P-0203A Drain Elevation 28 ft	706	8	24590-PTF-M6-PWD-P0044	SS316L
13	PWD-FD-00338	P-0203A Drain Elevation 28 ft	155	6	24590-PTF-M6-PWD-P0044	SS316L
14	PWD-FD-00337	P-0203B Drain Elevation 28 ft	155	6	24590-PTF-M6-PWD-P0044	SS316L
15	PWD-FD-00448	P-0203B Drain Elevation 28 ft	706	8	24590-PTF-M6-PWD-P0044	SS316L
16	PWD-FD-00447A	P-0203B Drain Elevation 28 ft	52	3	24590-PTF-M6-PWD-P0044	SS316L
17	PWD-FD-00447	P-0204 Drain Elevation 28 ft	706	8	24590-PTF-M6-PWD-P0044	SS316L
18	PWD-FD-00336	P-0204 Drain Elevation 28 ft	155	6	24590-PTF-M6-PWD-P0044	SS316L
19	PWD-FD-00397	P-0206 Drain Elevation 28 ft	155	6	24590-PTF-M6-PWD-P0043	SS316L
20	PWD-FD-00443	P-0206 Drain Elevation 28 ft	706	8	24590-PTF-M6-PWD-P0043	SS316L
21	PWD-FD-00398A	P-0207 Drain Elevation 28 ft	52	3	24590-PTF-M6-PWD-P0043	SS316L
22	PWD-FD-00398	P-0207 Drain Elevation 28 ft	155	6	24590-PTF-M6-PWD-P0043	SS316L
23	PWD-FD-00399	P-0208 Drain Elevation 28 ft	155	6	24590-PTF-M6-PWD-P0043	SS316L
24	PWD-FD-00400	P-0209 Drain Elevation 28 ft	52	3	24590-PTF-M6-PWD-P0043	SS316L
25	PWD-FD-00444	P-0209 Drain Elevation 28 ft	706	8	24590-PTF-M6-PWD-P0043	SS316L
26	PWD-FD-00401	P-0209 Drain Elevation 28 ft	155	6	24590-PTF-M6-PWD-P0043	SS316L
27	PWD-FD-00402	P-0210 Drain Elevation 28 ft	155	6	24590-PTF-M6-PWD-P0043	SS316L
28	PWD-FD-00445	P-0210 Drain Elevation 28 ft	706	8	24590-PTF-M6-PWD-P0043	SS316L
29	PWD-FD-00445A	P-0212 Drain Elevation 28 ft	706	8	24590-PTF-M6-PWD-P0043	SS316L
30	PWD-FD-00442	P-0212 Drain Elevation 28 ft	52	3	24590-PTF-M6-PWD-P0043	SS316L
31	PWD-FD-00404	P-0212 Drain Elevation 28 ft	155	6	24590-PTF-M6-PWD-P0043	SS316L

Item No.	Drain Line/Floor Drain No.	PT Room Number	Max. Drain Line Capacity Gal / min	Drain Line Size Pipe diameter in inches	P&ID Number	Material of Fabrication
32	PWD-FD-00404A	P-0212 Drain Elevation 28 ft	155	6	24590-PTF-M6-PWD-P0043	SS316L
33	PWD-FD-00446	P-0212 Drain Elevation 28 ft	706	8	24590-PTF-M6-PWD-P0043	SS316L

MASTER DISTRIBUTION SCHEDULE

Document Number	Rev
24590-PTF-PER-M-03-002	0

Insert rows as necessary using tab key ↑

Name	MSIN	Controlled	Uncontrolled	Size						Comments
						Drawings				
				8 ½ x 11 (A)	11 x 17 (B)	C	D	E	As Is	
Grabowski, Steve	MS9-A		X						X	
Chiaramonte, Jerry	MS9-A		X						X	
Erlandson, Brad	MS4-C1		X						X	
Markillie, Jeff	MS4-C1		X						X	
Normandin, Greg	MS4-C1		X						X	
Julyk, John	MS8-B		X						X	
Hoffmann, Mark	MS4-B2		X						X	
Hendricks, Gerry	MS9-A		X						X	
Stevens, Robert	MS8-B		X						X	
Arora, Sam	MS8-B		X						X	

Approver John Julyk (*Print Name*) — (*Signature*) — 6/17/03 (*Date*)

ISSUED BY
RPP-WTP PDC
TSM 5/26/04
INIT DATE

R10314522

Document title: **Sump and Drain Data at 77 Ft Level for PT Facility**

Contract number: DE-AC27-01RV14136

Department: Mechanical Systems

Author(s): D Reinemann

Principal author signature: D Reinemann

Document number: 24590-PTF-PER-M-04-0004, Rev 0

Checked by: R Stevens

Checker signature: R. E. Stevens

Date of issue: 26 May 2004

Issue status: Issued for Permitting Use

Approved by: R Smith

Approver's position: Area Project Engineering Manager

Approver signature: R E Smith

MARK W. HOFFMANN
STATE OF WASHINGTON
0030952
REGISTERED
PROFESSIONAL ENGINEER
5/26/04
EXPIRES 12/10/04

This bound document contains a total of 8 sheets

River Protection Project
Waste Treatment Plant
2435 Stevens Center Place
Richland, WA 99352
United States of America
Tel: 509 371 2000

Notice

Please note that source, special nuclear, and byproduct materials, as defined in the Atomic Energy Act of 1954 (AEA), are regulated at the US Department of Energy (DOE) facilities exclusively by DOE acting pursuant to its AEA authority. DOE asserts, that pursuant to the AEA, it has sole and exclusive responsibility and authority to regulate source, special nuclear, and byproduct materials at DOE-owned nuclear facilities. Information contained herein on radionuclides is provided for process description purposes only.

History Sheet

Rev	Date	Reason for revision	Revised by
0	5/26/04	Issued for Permitting Use	D. Reinemann

Contents

Notice ii
History Sheet iii
Acronyms and Abbreviations v
1 Introduction 1
2 Applicable Documents 1
3 Description 1
3.1 Elevation 77 Ft 1

Tables

Table 1 Pretreatment Drains 2

Acronyms and Abbreviations

AEA	Atomic Energy Act of 1954
DOE	US Department of Energy
PT	pretreatment
PWD	plant wash and disposal
WAC	Washington Administrative Code

1 Introduction

The Washington Administrative Code, WAC 173-303, requires the use of secondary containment for systems containing dangerous waste. This document provides a brief description of the secondary containment sumps and drains located at the 77 ft level of the pretreatment (PT) facility.

2 Applicable Documents

WAC 173-303, *Dangerous Waste Regulations*, Washington Administrative Code

3 Description

3.1 Elevation 77 Ft

There are no sumps located on the 77 ft elevation in this facility.

For all rooms, floor drains and curbing, where applicable, are provided in the vicinity of various items of regulated system ancillary equipment. The drains direct any potential leaks or spills from the ancillary equipment and discharge from the fire protection sprinkler system to the C3 floor drain collection vessel (PWD-VSL-00046). Entries to containment areas have drainage trenches immediately in front of them to prevent firewater or other material from flowing into C2 areas.

Information is given in Table 1 on the PT facility 77 ft elevation drains that form an extension of the secondary containment boundary.

Table 1 Pretreatment Drains

Item No.	Drain Line/Floor Drain No.	PT Room Number	Max. Drain Line Capacity Gal / min	Drain Line Size Pipe diameter in inches	P&ID Number	Material of Fabrication
1	PWD-FD-00286	P-0407 Drain Elevation 77 ft	655	8	24590-PTF-M6-PWD-P0044	SS304L
2	PWD-FD-00287	P-0407 Drain Elevation 77 ft	140	6	24590-PTF-M6-PWD-P0044	SS304L
3	PWD-FD-00288	P-0407 Drain Elevation 77 ft	140	6	24590-PTF-M6-PWD-P0044	SS304L
4	PWD-FD-00289	P-0407 Drain Elevation 77 ft	655	8	24590-PTF-M6-PWD-P0044	SS304L
5	PWD-FD-00290	P-0407 Drain Elevation 77 ft	140	6	24590-PTF-M6-PWD-P0044	SS304L
6	PWD-FD-00291	P-0426 Drain Elevation 77 ft	140	6	24590-PTF-M6-PWD-P0044	SS304L
7	PWD-FD-00292	P-0426 Drain Elevation 77 ft	140	6	24590-PTF-M6-PWD-P0044	SS304L
8	PWD-FD-00293	P-0426 Drain Elevation 77 ft	140	6	24590-PTF-M6-PWD-P0044	SS304L
9	PWD-FD-00298	P-0425 Drain Elevation 77 ft	140	6	24590-PTF-M6-PWD-P0044	SS304L
10	PWD-FD-00309	P-0402 Drain Elevation 77 ft	655	8	24590-PTF-M6-PWD-P0044	SS304L
11	PWD-FD-00310	P-0402 Drain Elevation 77 ft	140	6	24590-PTF-M6-PWD-P0044	SS304L
12	PWD-FD-00311	P-0402 Drain Elevation 77 ft	140	6	24590-PTF-M6-PWD-P0044	SS304L
13	PWD-FD-00312	P-0402 Drain Elevation 77 ft	655	8	24590-PTF-M6-PWD-P0044	SS304L
14	PWD-FD-00376	P-0415 Drain Elevation 77 ft	655	8	24590-PTF-M6-PWD-P0043	SS304L
15	PWD-FD-00377	P-0415 Drain Elevation 77 ft	140	6	24590-PTF-M6-PWD-P0043	SS304L
16	PWD-FD-00378	P-0415 Drain Elevation 77 ft	140	6	24590-PTF-M6-PWD-P0043	SS304L
17	PWD-FD-00379	P-0415 Drain Elevation 77 ft	140	6	24590-PTF-M6-PWD-P0043	SS304L
18	PWD-FD-00380	P-0415A Drain Elevation 77 ft	140	6	24590-PTF-M6-PWD-P0043	SS304L
19	PWD-FD-00381	P-0415A Drain Elevation 77 ft	140	6	24590-PTF-M6-PWD-P0043	SS304L
20	PWD-FD-00382	P-0415A Drain Elevation 77 ft	655	8	24590-PTF-M6-PWD-P0043	SS304L
21	PWD-FD-00383	P-0415A Drain Elevation 77 ft	140	6	24590-PTF-M6-PWD-P0043	SS304L
22	PWD-FD-00557	P-0430 Drain Elevation 77 ft	140	6	24590-PTF-M6-PWD-P0043	SS304L
23	PWD-FD-00559	P-0430 Drain Elevation 77 ft	655	8	24590-PTF-M6-PWD-P0043	SS304L
24	PWD-FD-00561	P-0430 Drain Elevation 77 ft	140	6	24590-PTF-M6-PWD-P0043	SS304L
25	PWD-FD-00563	P-0411 Drain Elevation 77 ft	655	8	24590-PTF-M6-PWD-P0043	SS304L
26	PWD-FD-00564	P-0411 Drain Elevation 77 ft	140	6	24590-PTF-M6-PWD-P0043	SS304L
27	PWD-FD-00565	P-0410 Drain Elevation 77 ft	655	8	24590-PTF-M6-PWD-P0043	SS304L
28	PWD-FD-00566	P-0410 Drain Elevation 77 ft	655	8	24590-PTF-M6-PWD-P0043	SS304L
29	PWD-FD-00571	P-0410 Drain Elevation 77 ft	140	6	24590-PTF-M6-PWD-P0044	SS304L
30	PWD-FD-00572	P-0410 Drain Elevation 77 ft	140	6	24590-PTF-M6-PWD-P0044	SS304L
31	PWD-FD-00573	P-0410 Drain Elevation 77 ft	140	6	24590-PTF-M6-PWD-P0044	SS304L

Item No.	Drain Line/Floor Drain No.	PT Room Number	Max. Drain Line Capacity Gal / min	Drain Line Size Pipe diameter in inches	P&ID Number	Material of Fabrication
32	PWD-FD-00574	P-0410 Drain Elevation 77 ft	140	6	24590-PTF-M6-PWD-P0044	SS304L
33	PWD-FD-00575	P-0410 Drain Elevation 77 ft	140	6	24590-PTF-M6-PWD-P0044	SS304L
34	PWD-FD-00576	P-0410 Drain Elevation 77 ft	140	6	24590-PTF-M6-PWD-P0044	SS304L
35	PWD-FD-00583	P-0422A Drain Elevation 77 ft	655	8	24590-PTF-M6-PWD-P0044	SS304L
36	PWD-FD-00584	P-0422A Drain Elevation 77 ft	140	6	24590-PTF-M6-PWD-P0044	SS304L
37	PWD-FD-00585	P-0422A Drain Elevation 77 ft	140	6	24590-PTF-M6-PWD-P0044	SS304L
38	PWD-FD-00586	P-0422A Drain Elevation 77 ft	655	8	24590-PTF-M6-PWD-P0044	SS304L
39	PWD-FD-00588	P-0423 Drain Elevation 77 ft	655	8	24590-PTF-M6-PWD-P0044	SS304L
40	PWD-FD-00589	P-0402 Drain Elevation 77 ft	140	6	24590-PTF-M6-PWD-P0044	SS304L
41	PWD-FD-00590	P-0423 Drain Elevation 77 ft	655	8	24590-PTF-M6-PWD-P0044	SS304L
42	PWD-FD-00591	P-0423 Drain Elevation 77 ft	655	8	24590-PTF-M6-PWD-P0044	SS304L
43	PWD-FD-00592	P-0423 Drain Elevation 77 ft	655	8	24590-PTF-M6-PWD-P0044	SS304L
44	PWD-FD-00593	P-0423 Drain Elevation 77 ft	140	6	24590-PTF-M6-PWD-P0044	SS304L
45	PWD-FD-00594	P-0423 Drain Elevation 77 ft	655	8	24590-PTF-M6-PWD-P0044	SS304L
46	PWD-FD-00595	P-0431A Drain Elevation 77 ft	140	6	24590-PTF-M6-PWD-P0044	SS304L
47	PWD-FD-00596	P-0431A Drain Elevation 77 ft	140	6	24590-PTF-M6-PWD-P0044	SS304L
48	PWD-FD-00597	P-0431A Drain Elevation 77 ft	140	6	24590-PTF-M6-PWD-P0044	SS304L
49	PWD-FD-00598	P-0431A Drain Elevation 77 ft	655	8	24590-PTF-M6-PWD-P0044	SS304L
50	PWD-FD-00599	P-0431A Drain Elevation 77 ft	655	8	24590-PTF-M6-PWD-P0044	SS304L
51	PWD-FD-00600	P-0431A Drain Elevation 77 ft	655	8	24590-PTF-M6-PWD-P0044	SS304L
52	PWD-FD-00604	P-0431A Drain Elevation 77 ft	140	6	24590-PTF-M6-PWD-P0044	SS304L
53	PWD-FD-00605	P-0431A Drain Elevation 77 ft	140	6	24590-PTF-M6-PWD-P0044	SS304L
54	PWD-FD-00606	P-0431A Drain Elevation 77 ft	140	6	24590-PTF-M6-PWD-P0044	SS304L
55	PWD-FD-00607	P-0431A Drain Elevation 77 ft	140	6	24590-PTF-M6-PWD-P0044	SS304L
56	PWD-FD-00629	P-0425 Drain Elevation 77 ft	655	8	24590-PTF-M6-PWD-P0044	SS304L
57	PWD-FD-00630	P-0425 Drain Elevation 77 ft	140	6	24590-PTF-M6-PWD-P0044	SS304L

ISSUED BY
RPP-WTP PDC

R10397920

Document title: **Leak Detection for Underground Transfer Lines**

Contract number: DE-AC27-01RV14136

Department: Mechanical Systems

Author(s): G. Chiaramonte

Principal author signature:

Document number: 24590-PTF-PER-M-04-0006, Rev 0

Checked by: J. Julyk

Checker signature:

Date of issue: 23 September 2004

Issue status: Issued for Permitting Use

Approved by: R. Smith

Approver's position: Area Project Engineering Manager

Approver signature:

GERALD RUSSELL CHIARAMONTE
STATE OF WASHINGTON
036043
REGISTERED
PROFESSIONAL ENGINEER

10-6-04

EXPIRES: 11/9/2004

This bound document contains a total of 12 sheets

River Protection Project
Waste Treatment Plant
2435 Stevens Center Place
Richland, WA 99354
United States of America
Tel: 509 371 2000

Notice

Please note that source, special nuclear, and byproduct materials, as defined in the Atomic Energy Act of 1954 (AEA), are regulated at the US Department of Energy (DOE) facilities exclusively by DOE acting pursuant to its AEA authority. DOE asserts, that pursuant to the AEA, it has sole and exclusive responsibility and authority to regulate source, special nuclear, and byproduct materials at DOE-owned nuclear facilities. Information contained herein on radionuclides is provided for process description purposes only.

History Sheet

Rev	Date	Reason for revision	Revised by
0	9/23/04	Issued For Permitting Use	G. Chiaramonte

Contents

Notice ii
History Sheet iii
Acronyms v
1 Summary 1
2 Objective 1
3 Description 1
4 Assumptions 2
5 Analysis 2
6 Detectable Leak Rates 3
7 Bounding Calculations 4
7.1 Methodology 4
7.2 Bounding Calculation 5
8 References 7

Acronyms

AEA	Atomic Energy Act of 1954
DOE	US Department of Energy
ETF	Effluent Treatment Facility
HLW	high-level waste
LAW	low-activity waste
LAB	laboratory facility
LDB	leak detection box
LERF	Liquid Effluent Retention Facility
PT	pretreatment
PWD	plant wash and disposal
TFC	tank farm contractor
WAC	Washington Administrative Code

1 Summary

The minimum leak rates that can be detected within 24 hours are estimated for each of the double-walled underground transfer lines in the WTP facility. There are a total of 21 transfer lines whose encasements range in length from 289 ft to 1078 ft. Eight of the lines have a slope of 1:50, and the remaining 13 lines have a 1:200 slope.

The minimum leak rates (given to three significant figures) that can be detected within a 24 hour period range from 0.034 gal/hr for the shortest line to 0.141 gal/hr for the longest line, assuming that the leak is at the most remote location from the leak detection box.

The leak detection calculations reveal that the largest single component of the minimum detectable flow rate relates to the volume of leaked liquid required to wet the pipe (i.e., pipe holdup). For the longest line, this represents over 80% of the total minimum detectable flow rate. It is believed that holdup time due to wetting would not be significantly influenced by slope. If this is true, then the detectable leak rate varies primarily with the length of the line. Further, since the test data upon which wetting holdup time is based is accurate to only one significant figure, an estimate for the minimum detectable leak rate can be accurate to only one significant figure, i.e., the minimum detectable leak rate $\approx$0.1 gal/hr

2 Objective

This report addresses leak detection capability for all interfacility double-walled underground transfer lines within the WTP.

3 Description

The Preatreatment (PT) facility receives low-activity waste (LAW) feed and high-level waste (HLW) feed from the underground Double-Shell Tank System. This mixed waste feed is pumped through three double-walled underground transfer lines to the PT facility from the Tank Farm Contractor (TFC).

The PT facility pretreats the waste received from the Double-Shell Tank System and pumps it to the LAW vitrification facility through three double-walled underground transfer lines and to the HLW vitrification facility through four double-walled underground transfer lines. Secondary waste from the LAW facility is returned by pumped flow to the PT facility through four lines and by gravity flow from the HLW facility to the PT facility through four lines.

Analytical services are provided to each facility by the Laboratory Facility (LAB). Secondary wastes from the LAB are pumped to the PT facility for treatment and disposal through one double-walled underground transfer line.

Secondary waste is generated within the PT facility and pumped through two double-walled underground transfer lines to the Liquid Effluent Retention Facility (LERF)/Effluent Treatment Facility (ETF).

The regulatory requirements for leak detection are contained in WAC-173-303-640, Tank Systems, Section 4, Containment and Detection of Releases (Ref. 1). The regulatory requirements are restated as follows:

(b) Secondary Containment systems must be:

(ii) Capable of detecting and collecting releases and accumulated liquids until the collected material is removed.

(c) To meet the requirements of (b) of this subsection, secondary containment systems must be at a minimum:

(iii) Provided with a leak detection system that is designed and operated so that it will detect the failure of either the primary or secondary containment structure or the presence of any release of dangerous waste or accumulated liquid in the secondary containment system within twenty-four hours, or at the earliest practicable time if the owner or operator can demonstrate to the department that the existing detection technologies or site conditions will not allow detection of a release within twenty-four hours.

In addition, the Waste Treatment Plant Dangerous Waste Permit (Ref. 2), ID No: DWP-2003-0371, Condition No: III.10.E.9.e.ii requires submittal of:

> Detailed plans and descriptions, demonstrating the leak detection system is operated so that it will detect the failure of either the primary or secondary containment structure or the presence of any release of dangerous and/or mixed waste, or accumulated liquid in the secondary containment system within twenty-four (24) hours. Detection of a leak of at least 0.1 gallons per hour within twenty-four (24) hours is defined as being able to detect a leak within twenty-four (24) hours. Any exceptions to this criteria must be approved by Ecology [WAC 173-303-640(4)(c)(iii), WAC 173-303-806(4)(c)(vii)];

4 Assumptions

Assumptions used for this assessment of underground transfer line leak detection are listed as follows. These assumptions are derived from Ref. 3.

- The liquid leaking is water at a temperature of 100 °F.
- The leak is at a constant rate over the twenty-four hour period.
- The leak is assumed to occur at the farthest point from the leak detection box (LDB).
- No evaporation will occur.
- The liquid does not foam in the LDBs.
- Hold-up in piping will be considered. Hold-up is defined as wetting of the pipe surface. Holdup due to spacers or other desgin features is not considered because. at low flow rates, spacers would not impede flow.
- Level detection instruments will be properly installed and calibrated upon installation. Periodic, normal maintenance and calibration will be performed on level instruments during operation of the facility and the instruments will be maintained in an operable condition.
- Leak detection instruments have not been purchased yet. The purchased unit will have a performance capability of positively detecting the liquid level of ½ inch.

5 Analysis

All underground transfer lines are double-walled pipe containing a 3-inch nominal stainless steel carrier pipe inside a 6-inch nominal carbon steel encasement pipe. All lines except the LERF/ETF lines are

sloped toward the PT facility and the encasements terminate in the LDBs located within the PT facility pipe tunnels. The LERF/ETF lines slope toward the LERF/ETF facility and LDBs are located at the WTP facility boundary. Line slopes are indicated on the piping and instrument diagrams (Ref. 4, 5).

Pipe lengths and slopes are summarized as follows. Pipe lengths include 6 ft of piping to account for the drain portion leading from the encasement pipe to the LDB.

Transfer Line	Number of Lines	Line Length (ft)	Slope (ft/ft) [Ref]
HLW	8	289	1:50 [4]
Tank Farms	3	395	1:200 [4]
LERF/ETF	2	760	1:200 [5]
LAW	7	881	1:200 [5]
LAB	1	1078	1:200 [5]

The leak detection method employs LDBs at the low points of co-axial underground transfer lines in such a way that the outer pipe drains into them in the event that the primary inner pipe leaks. In each of the LDBs is a thermal conductivity type level instrument to detect the leak. There are a total of 19 LDBs within the PT facility servicing lines from the Tank Farms, to and from the HLW Facility, to and from the LAW Facility, and from the LAB Facility. LDBs for the lines to the LERF/ETF lines are located at the WTP facility boundary. Leak detection in secondary containment systems including buried co-axial transfer lines is described in Ref. 6.

6 Detectable Leak Rates

Detectable leak rate is the minimum leak rate that can be detected within 24 hours after the leak starts. As discussed in Section 7, this is primarily driven by the holdup (wetting) in the encasement line because this is a relatively large volume compared to the detectable volume in the LDB. It is believed that holdup time due to wetting would not be significantly influenced by slope. If this is true, then the detectable leak rate varies primarily with the length of the line. Illustration of these relationships are provided in Section 7, Bounding Calculations.

Results of the detectable leak rate analysis for each of the transfer lines, assuming that the leak is at the most remote location from the LDB, are summarized as follows. Note that the leak rates are stated with three significant figure accuracy, whereas the permit criteria (see Section 3) is stated with one significant figure, and test data upon which wetting holdup time is based is accurate to only one significant figure.

Transfer Line	Minimum Leak Rate Detectable Within 24 hours, gallons/hr
HLW	0.034
Tank Farms	0.047
LERF/ETF	0.097
LAW	0.113
LAB	0.141

7 Bounding Calculations

7.1 Methodology

The volume of water from a line leak that is required to accumulate within the transfer line and be detected within the LDB is the sum of three components:

- V_1 is the volume of the liquid (in gallons) which is required to accumulate within the LDB before it is detected by the leak detection instrumentation.
- V_2 is the volume of liquid that is accumulated within the pipe before it reaches the LDB. This is referred to as "holdup" and is the thin film of liquid that wets a small portion of the surface at the bottom of the pipe. This wetting occurs before any liquid is transported to the LDB.
- V_3 is the volume of liquid that is conveyed down the pipe to the leak detector after the pipe is wetted. This volume is based on the length and slope of the pipe.

V_1 is determined by calculating the quantity of liquid in the LDB that is required to trip the detector. This volume is determined from the geometry of the LDB and the assumed depth of liquid. The LDB consists of a 24-inch long section of an 8-in nominal Schedule 40S pipe with 8-inch standard pipe caps welded on each end. Each end cap consists of a straight cylindrical section and a 2:1 semi-ellipsoidal head. The leak detection chamber is isolated from the remainder of the box by a weir that is located 11-inches from one end (measured from the body/cap weld). The minimum quantity of liquid in the LDB that can be detected is based on a depth of liquid of 1/2-inch. The calculation of volume in the LDB involves use of standard handbook formulas for calculating the volumes of a partially filled pipe and the volume of a partially filled 2:1 semi-ellipsoidal head.

V_2, the "wetting" holdup is determined from test results on a 6-inch diameter Schedule 40 carbon steel pipe sloped at 1:400 (Ref. 7). The test results determined that 8 fluid ounces of water was required to wet the bottom of a 25 ft length of pipe (0.32 fluid oz per linear foot) before flow out of the pipe can occur.

$$V_{wet} = 0.32 \frac{oz}{ft}$$

V_2 is calculated by multiplying the quantity (V_{wet}) of liquid that it will take to wet a linear foot of pipe by the total length of the pipe (L).

$$V_2 = \frac{V_{wet} * L}{128} \qquad 1 \text{ gal} = 128 \text{ oz}$$

The flow rate Q_2 in gal/hr is V_2/24 hr, where Q_2 is the flow required to wet the bottom of the pipe in 24 hours.

V_3 is the volume required to "convey" the leaked fluid down the pipe to the leak detector. This component of the flow can be thought of as a thin layer of fluid that is in excess of the quantity of fluid that represents the wetting film (V_2). This component of the flow is a flow boundary layer and is

calculated using the boundary layer theory for uniform flow down an inclined plane. The velocity of flow, u, is determined according to the relationship (Ref. 8):

$$u = \frac{1}{3 * \upsilon}(g * So * d^2) \qquad \text{Equation 7.1}$$

Where u = average flow velocity (ft/sec)
υ = kinematic viscosity (ft^2/sec)
g = gravitational constant (32.17 ft/sec^2)
d = depth of flow (ft)
So = Slope of the incline (dimensionless)

The depth of flow can be found by solving for d

$$d = \sqrt{\frac{3 * \upsilon * u}{g * So}} \qquad \text{Equation 7.2}$$

An initial value for the average flow velocity u is calculated by dividing the pipe length by 24 hours. The depth of flow is then calculated from the above equation; then the cross sectional flow area of the liquid flow is calculated as follows (Ref. 9):

$$A_3 = d * \sqrt{1.766 * D * d - d^2} \qquad \text{Equation 7.3}$$

where D is the inside diameter of the encasement pipe

The boundary layer flow rate Q_3 is calculated as the product of the cross sectional flow area A_3 and the average velocity u.

That is, $Q_3 = A_3 * u$ converted to gal/hr

The flow components Q_2 and Q_3 are added to obtain the total minimum detectable leak rate Q.

The calculation is repeated by adjusting for the time required to activate the leak detection alarm. The activation time is calculated by dividing the volume V_1 by the sum of flow components Q_2 and Q_3. This time is subtracted from 24 hours to calculate a revised average velocity u. Values of d, A_3, and Q_3 are recalculated based on the revised value of u. This iteration procedure is closed when repeatable values of u are calculated. The final sum of flows Q_2, and Q_3 is then the minimum detectable leakage rate in a 24-hour period.

7.2 Bounding Calculation

Using the methodology described in Section 7.1, calculation of the minimum leak rate detected within 24 hours is shown below for the longest line, the LAB transfer line encasement which is 1078 ft in length. Although slope of this transfer line is 1:200, for conservatism, the slope used in the calculation is 1:400, which corresponds to the slope used in the wetting holdup test.

7.2.1 Calculate the LDB Volume Required to Trip the Leak Detector

Using the calculation procedure discussed in Section 7.1, the calculated volume of liquid required to set off the leak detection alarm is determined to be 0.077 gal.

7.2.2 Calculate the Leak Rate Required to Wet the Surface

The component of the leak rate required to wet the surface is calculated as follows.

From the test data, the wetting holdup in the pipe at a 1:400 slope was determined to be 0.32 fluid oz/ft = V_{wet}

L = 1078 ft for the longest line (LAB)

$V_2 = V_{wet} * L / 128 = 2.70$ gal

$Q_2 = V_2/24 = 0.112$ gal/hr

7.2.3 Calculate the Leak Rate Required to Form the Flow Boundary Layer

Determine the component of the flow rate Q_3. This is the uniform flow rate necessary to convey the leakage to the LDB determined using the boundary layer theory for uniform flow on an inclined plane. The boundary layer theory (see Section 7.1) considers the properties of the liquid as well as the slope of the pipe.is the flow required to wet the bottom of the pipe in 24 hours.

Kinematic viscosity, υ, of water at 100F = 7.37E-6 ft^2/sec
Slope, $S_0 = 0.0025$ ft/ft
g = 32.17 ft/sec^2
D = 0.505 ft (inside diameter of encasement)

Equation 7.1 is used to calculate the initial iteration of the average velocity u. Then the first iteration of depth d (using Equation 7.2), the area A3 (using Equation 7.3), and Q3 are calculated. Total leakage rate is then calculated as Q = Q2 + Q3. The time to set off the leak detection alarm in the LDB is calculated as $t = V_1/Q$. This time is subtracted from 24 hours and the velocity u, in ft/sec, adjusted according to u = L/ ((24-t)/3600). Values of d, A3 and Q3 are recalculated until the iterations converge. In the final iteration, Q2 is determined to be 0.115 gal/hr and,

Q = 0.141 gal/hr

Note that the largest portion of the total required leak rate is to satisfy pipe wetting (0.115 gal/hr/0.141 gal/hr) or about 82% of the total flow required. Since the test data upon which wetting holdup time is based is accurate to only one significant figure, an estimate for Q can be accurate to only one significant figure, i.e.,

$Q \approx 0.1$ gal/hr

8 References

1. WAC 173-303, *Dangerous Waste Regulations*, Washington Administrative Code

2. WA 7890008967, *Dangerous Waste Portion of the Hanford Facility Resource Conservation and Recovery Act Permit for the Treatment, Storage, and Disposal of Dangerous, Waste,* Chapter 10 and Attachment 51, "Waste Treatment and Immobilization Plant."

3. CCN 097799, Leak Detection Capability Scope Statement, Revision 6, 8/19/04

4. 24590-PTF-M6-PWD-P0057, Rev 0, P&ID Plant Wash and Disposal System Underground Transfer Lines

5. 24590-PTF-M6-PWD-P0058, Rev. 1, P&ID Plant Wash and Disposal System Underground Transfer Lines

6. 24590-WTP-PER-J-02-002, Rev. 1, *Low Point Leak Detection in Secondary Containment Systems Including Buried Co-Axial Transfer Lines*

7. CCN 093156, Calculation W314-P-039, Rev. 0, "Encasement Leak Detection, " , J.R. Collins, Fluor Daniel Northwest, 10/19/98.

8. Robertson/Crowe, *Engineering Fluid Mechanics,* John Wiley and Sons, Inc., 5th Edition

9. Nayyar, Mohinder L., *Piping Handbook,* Mc-Graw-Hill, 7th Edition

R10538805

ISSUED BY
RPP-WTP PDC

Document title: **Sump Data for PT Facility - Room P-0150**

Contract number: DE-AC27-01RV14136

Department: Mechanical Systems

Author(s): G. Chiaramonte

Principal author signature:

Document number: 24590-PTF-PER-M-04-0009, Rev 0

Checked by: D. Reinemann

Checker signature:

Date of issue: 15 April 2005

Issue status: Issued for Permitting Use

Approved by: R. Smith

Approver's position: Area Project Engineering Manager

Approver signature:

GERALD RUSSEL CHIARAMONTE
STATE OF WASHINGTON
028043
REGISTERED
PROFESSIONAL ENGINEER

4-15-05

EXPIRES. 11/9/2006

River Protection Project
Waste Treatment Plant
2435 Stevens Center Place
Richland, WA 99354
United States of America
Tel: 509 371 2000

Notice

Please note that source, special nuclear, and byproduct materials, as defined in the Atomic Energy Act of 1954 (AEA), are regulated at the US Department of Energy (DOE) facilities exclusively by DOE acting pursuant to its AEA authority. DOE asserts, that pursuant to the AEA, it has sole and exclusive responsibility and authority to regulate source, special nuclear, and byproduct materials at DOE-owned nuclear facilities. Information contained herein on radionuclides is provided for process description purposes only.

History Sheet

Rev	Date	Reason for revision	Revised by
0	4-15-05	Issue for Permitting Use	G. Chiaramonte

Contents

Notice ii
History Sheet iii
Acronyms and Abbreviations v
1 Introduction 1
2 Applicable Documents 1
3 Description 1
3.1 Room P-0150 Sump 1

Tables

Table 1 Room P-0150 Sump 2

Acronyms and Abbreviations

AEA	Atomic Energy Act of 1954
DOE	US Department of Energy
PT	pretreatment
RLD	radioactive liquid disposal
WAC	Washington Administrative Code

1 Introduction

The Washington Administrative Code, WAC 173-303, requires the use of secondary containment for systems containing dangerous waste.

Sump data for rooms within the PT facility have been addressed in prior issued documents. This report specifically addresses sump data for Room P-0150, a tank containment area located outside the PT building, which contains the Radioactive Liquid Disposal (RLD) tanks RLD-TK-00006A and RLD-TK-00006B.

2 Applicable Documents

- Washington Administrative Code, WAC 173-303, Dangerous Waste Regulations

3 Description

3.1 Room P-0150 Sump

Room P-0150 is a concrete containment area located outside the PT building on the northeast side of the building. It provides secondary containment for tanks RLD-TK-00006A/B which are the only tanks within this containment area. The secondary containment includes low point sump (RLD-SUMP-00003). The floor of the containment area also includes a covered trench between each tank and RLD-SUMP-00003. This trench allows the heel in a tank to be drained into the sump prior to accessing the tank internals for maintenance. The floor, sump, and interior walls of the containment area including the trench are treated with a special protective coating (epoxy type). The floor and the trench are sloped towards the sump. The sump is located at the (-) 2' - 0" level. The maximum operating volume of this sump is 583 gallons. This dry type sump is equipped with radar level detection and a pump that will discharge the liquid collected in the sump to RLD-VSL-00017A/B in the PT facility.

Information on the Pretreatment Facility sump in Room P-0150 is summarized given in Table 1.

Table 1 Room P-0150 Sump

##	Sump PIN	PT Room Number	Maximum Sump Capacity, GAL	Sump Type/Nominal Operating Volume, GAL	Sump Dimensions, Inch	P&ID Number	Leak Detection Type	Material of Fabrication
1	RLD-SUMP-00003	P-0150	583	Dry Sump	78" X 48" X 36" deep	24590-PTF-M6-RLD-P0002	Radar	Epoxy coating

R10274747

Document title: **Sump and Drain Data at 56 Ft Level for PT Facility**

Contract number: DE-AC27-01RV14136

Department: Mechanical Systems

Author(s): D Reinemann

Principal author signature: DR Reinemann

ISSUED BY RPP-WTP PDC JC 3/25/04 INIT DATE

Document number: 24590-PTF-PER-M-04-002, Rev 0

Checked by: R Stevens

Checker signature: R. E. Stevens

Date of issue: 25 March 2004

Issue status: Issued for Permitting Use

Approved by: S Grabowski

Approver's position: Area Project Engineering Manager

Approver signature: S. Grabowski

MARK W. HOFFMANN STATE OF WASHINGTON 0030952 REGISTERED PROFESSIONAL ENGINEER 3/24/04

EXPIRES 12/10/04

This bound document contains a total of 9 sheets

River Protection Project
Waste Treatment Plant
2435 Stevens Center Place
Richland, WA 99352
United States of America
Tel: 509 371 2000

Notice

Please note that source, special nuclear, and byproduct materials, as defined in the Atomic Energy Act of 1954 (AEA), are regulated at the US Department of Energy (DOE) facilities exclusively by DOE acting pursuant to its AEA authority. DOE asserts that, pursuant to the AEA, it has sole and exclusive responsibility and authority to regulate source, special nuclear, and byproduct materials at DOE-owned nuclear facilities. Information contained herein on radionuclides is provided for process description purposes only.

History Sheet

Rev	Date	Reason for revision	Revised by
0	03/25/2004	Issued for Permitting Use	D. Reinemann

Contents

Notice ii
History Sheet iii
Acronyms and Abbreviations v
1 Introduction 1
2 Applicable Documents 1
3 Description 1
3.1 Elevation 56 Ft 1

Tables

Table 1 Pretreatment Drains 2

Acronyms and Abbreviations

AEA	Atomic Energy Act of 1954
DOE	US Department of Energy
PT	pretreatment
PWD	plant wash and disposal
WAC	Washington Administrative Code

1 Introduction

The Washington Administrative Code, WAC 173-303, requires the use of secondary containment for systems containing dangerous waste. This document provides a brief description of the secondary containment sumps and drains located at the 56 ft level of the pretreatment (PT) facility.

2 Applicable Documents

WAC 173-303, *Dangerous Waste Regulations*, Washington Administrative Code

3 Description

3.1 Elevation 56 Ft

There are no sumps located on the 56 ft elevation in this facility.

For Room P-0332B, a C5 floor drain is provided to direct any potential leakage or spillage from the ancillary equipment to the ultimate overflow vessel (PWD-VSL-00033).

Room P-0335 has miscellaneous units contained within separate concrete bermed areas lined with stainless steel. Each bermed area has a C5 floor drain to direct any potential leakage or spillage from the ancillary equipment to the ultimate overflow vessel (PWD-VSL-00033).

For all other rooms, floor drains and curbing, where applicable, are provided in the vicinity of various items of regulated system ancillary equipment. The drains direct any potential leaks or spills from the ancillary equipment and discharge from the fire protection sprinkler system to the C3 floor drain collection vessel (PWD-VSL-00046). Entries to containment areas have drainage trenches immediately in front of them to prevent firewater or other material from flowing into C2 areas.

Information is given in Table 1 on the PT facility 56 ft elevation drains that form an extension of the secondary containment boundary.

Table 1 Pretreatment Drains

Item No.	Drain Line/Floor Drain No.	PT Room Number	Max. Drain Line Capacity Gal / min	Drain Line Size Pipe diameter in inches	P&ID Number	Material of Fabrication
1	PWD-FD-00002	P-0335 Drain Elevation 56 ft	255 (Note 1)	4	24590-PTF-M6-PWD-P0011	SS316L
2	PWD-FD-00003	P-0335 Drain Elevation 56 ft	255 (Note 1)	4	24590-PTF-M6-PWD-P0011	SS316L
3	PWD-FD-00313	P-0303B Drain Elevation 56 ft	140	6	24590-PTF-M6-PWD-P0044	SS316L
4	PWD-FD-00314	P-0303B Drain Elevation 56 ft	655	8	24590-PTF-M6-PWD-P0044	SS316L
5	PWD-FD-00315	P-0303B Drain Elevation 56 ft	655	8	24590-PTF-M6-PWD-P0044	SS316L
6	PWD-FD-00316	P-0303B Drain Elevation 56 ft	140	6	24590-PTF-M6-PWD-P0044	SS316L
7	PWD-FD-00317	P-0303B Drain Elevation 56 ft	140	6	24590-PTF-M6-PWD-P0044	SS316L
8	PWD-FD-00318	P-0303B Drain Elevation 56 ft	655	8	24590-PTF-M6-PWD-P0044	SS316L
9	PWD-FD-00319	P-0303B Drain Elevation 56 ft	140	6	24590-PTF-M6-PWD-P0044	SS316L
10	PWD-FD-00322	P-0303 Drain Elevation 56 ft	140	6	24590-PTF-M6-PWD-P0044	SS316L
11	PWD-FD-00323	P-0304 Drain Elevation 56 ft	140	6	24590-PTF-M6-PWD-P0044	SS316L
12	PWD-FD-00324	P-0304 Drain Elevation 56 ft	140	6	24590-PTF-M6-PWD-P0044	SS316L
13	PWD-FD-00325	P-0304 Drain Elevation 56 ft	140	6	24590-PTF-M6-PWD-P0044	SS316L
14	PWD-FD-00326	P-0304 Drain Elevation 56 ft	140	6	24590-PTF-M6-PWD-P0044	SS316L
15	PWD-FD-00327	P-0304 Drain Elevation 56 ft	140	6	24590-PTF-M6-PWD-P0044	SS316L
16	PWD-FD-00328	P-0303 Drain Elevation 56 ft	655	8	24590-PTF-M6-PWD-P0044	SS316L
17	PWD-FD-00329	P-0303 Drain Elevation 56 ft	140	6	24590-PTF-M6-PWD-P0044	SS316L
18	PWD-FD-00333	P-0324 Drain Elevation 56 ft	140	6	24590-PTF-M6-PWD-P0044	SS316L
19	PWD-FD-00334	P-0302 Drain Elevation 56 ft	140	6	24590-PTF-M6-PWD-P0044	SS316L
20	PWD-FD-00335	P-0302 Drain Elevation 56 ft	655	8	24590-PTF-M6-PWD-P0044	SS316L
21	PWD-FD-00384	P-0311 Drain Elevation 56 ft	655	8	24590-PTF-M6-PWD-P0043	SS316L
22	PWD-FD-00385	P-0311 Drain Elevation 56 ft	140	6	24590-PTF-M6-PWD-P0043	SS316L
23	PWD-FD-00386	P-0307 Drain Elevation 56 ft	655	8	24590-PTF-M6-PWD-P0043	SS316L
24	PWD-FD-00387	P-0307 Drain Elevation 56 ft	140	6	24590-PTF-M6-PWD-P0043	SS316L
25	PWD-FD-00388	P-0307 Drain Elevation 56 ft	140	6	24590-PTF-M6-PWD-P0043	SS316L
26	PWD-FD-00389	P-0317 Drain Elevation 56 ft	140	6	24590-PTF-M6-PWD-P0043	SS316L
27	PWD-FD-00390	P-0317 Drain Elevation 56 ft	655	8	24590-PTF-M6-PWD-P0043	SS316L
28	PWD-FD-00391	P-0317 Drain Elevation 56 ft	140	6	24590-PTF-M6-PWD-P0043	SS316L
29	PWD-FD-00392	P-0317 Drain Elevation 56 ft	140	6	24590-PTF-M6-PWD-P0043	SS316L
30	PWD-FD-00393	P-0317 Drain Elevation 56 ft	140	6	24590-PTF-M6-PWD-P0043	SS316L

Item No.	Drain Line/Floor Drain No.	PT Room Number	Max. Drain Line Capacity Gal / min	Drain Line Size Pipe diameter in inches	P&ID Number	Material of Fabrication
31	PWD-FD-00394	P-0317 Drain Elevation 56 ft	140	6	24590-PTF-M6-PWD-P0043	SS316L
32	PWD-FD-00458	P-0324 Drain Elevation 56 ft	140	6	24590-PTF-M6-PWD-P0044	SS316L
33	PWD-FD-00459	P-0324 Drain Elevation 56 ft	140	6	24590-PTF-M6-PWD-P0044	SS316L
34	PWD-FD-00460	P-0324 Drain Elevation 56 ft	655	8	24590-PTF-M6-PWD-P0044	SS316L
35	PWD-FD-00461	P-0302 Drain Elevation 56 ft	140	6	24590-PTF-M6-PWD-P0044	SS316L
36	PWD-FD-00462	P-0302 Drain Elevation 56 ft	140	6	24590-PTF-M6-PWD-P0044	SS316L
37	PWD-FD-00463	P-0302 Drain Elevation 56 ft	655	8	24590-PTF-M6-PWD-P0044	SS316L
38	PWD-FD-00464	P-0301 Drain Elevation 56 ft	655	8	24590-PTF-M6-PWD-P0044	SS316L
39	PWD-FD-00465	P-0301 Drain Elevation 56 ft	140	6	24590-PTF-M6-PWD-P0044	SS316L
40	PWD-FD-00466	P-0301 Drain Elevation 56 ft	140	6	24590-PTF-M6-PWD-P0044	SS316L
41	PWD-FD-00469	P-0336 Drain Elevation 56 ft	140	6	24590-PTF-M6-PWD-P0044	SS316L
42	PWD-FD-00470	P-0336 Drain Elevation 56 ft	655	8	24590-PTF-M6-PWD-P0044	SS316L
43	PWD-FD-00471	P-0336 Drain Elevation 56 ft	140	6	24590-PTF-M6-PWD-P0044	SS316L
44	PWD-FD-00472	P-0336 Drain Elevation 56 ft	140	6	24590-PTF-M6-PWD-P0044	SS316L
45	PWD-FD-00503	P-0332B Drain Elevation 56 ft	104	4	24590-PTF-M6-PWD-P0011	SS316L
46	PWD-FD-00508	P-0311 Drain Elevation 56 ft	140	6	24590-PTF-M6-PWD-P0043	SS316L
47	PWD-FD-00509	P-0311 Drain Elevation 56 ft	655	8	24590-PTF-M6-PWD-P0043	SS316L
48	PWD-FD-00510	P-0311 Drain Elevation 56 ft	140	6	24590-PTF-M6-PWD-P0043	SS316L
49	PWD-FD-00511	P-0311 Drain Elevation 56 ft	140	6	24590-PTF-M6-PWD-P0043	SS316L
50	PWD-FD-00512	P-0320 Drain Elevation 56 ft	140	6	24590-PTF-M6-PWD-P0043	SS316L
51	PWD-FD-00513	P-0320 Drain Elevation 56 ft	140	6	24590-PTF-M6-PWD-P0043	SS316L
52	PWD-FD-00514	P-0320 Drain Elevation 56 ft	140	6	24590-PTF-M6-PWD-P0043	SS316L
53	PWD-FD-00515	P-0325 Drain Elevation 56 ft	140	6	24590-PTF-M6-PWD-P0043	SS316L
54	PWD-FD-00516	P-0325 Drain Elevation 56 ft	140	6	24590-PTF-M6-PWD-P0043	SS316L
55	PWD-FD-00517	P-0325 Drain Elevation 56 ft	655	8	24590-PTF-M6-PWD-P0043	SS316L
56	PWD-FD-00518	P-0311 Drain Elevation 56 ft	140	6	24590-PTF-M6-PWD-P0043	SS316L
57	PWD-FD-00519	P-0311 Drain Elevation 56 ft	655	8	24590-PTF-M6-PWD-P0043	SS316L
58	PWD-FD-00520	P-0311 Drain Elevation 56 ft	140	6	24590-PTF-M6-PWD-P0043	SS316L
59	PWD-FD-00521	P-0311 Drain Elevation 56 ft	655	8	24590-PTF-M6-PWD-P0043	SS316L
60	PWD-FD-00522	P-0311 Drain Elevation 56 ft	140	6	24590-PTF-M6-PWD-P0043	SS316L
61	PWD-FD-00523	P-0311 Drain Elevation 56 ft	655	8	24590-PTF-M6-PWD-P0043	SS316L
62	PWD-FD-00524	P-0311 Drain Elevation 56 ft	140	6	24590-PTF-M6-PWD-P0043	SS316L

Item No.	Drain Line/Floor Drain No.	PT Room Number	Max. Drain Line Capacity Gal / min	Drain Line Size Pipe diameter in inches	P&ID Number	Material of Fabrication
63	PWD-FD-00527	P-0311 Drain Elevation 56 ft	140	6	24590-PTF-M6-PWD-P0043	SS316L
64	PWD-FD-00528	P-0311 Drain Elevation 56 ft	140	6	24590-PTF-M6-PWD-P0043	SS316L

Notes:

1. Items 1 and 2 are special cases due to their location in equipment berms. The capacity for these drain lines is based on a unique bounding case for liquid spillage.

Attachment 51 – Appendix 8.6
Pretreatment Building
Mechanical Drawing

Where information regarding treatment, management, and disposal of the radioactive source, byproduct material, and/or special nuclear components of mixed waste (as defined by the Atomic Energy Act of 1954, as amended) has been incorporated into this permit, it is not incorporated for the purpose of regulating the radiation hazards of such components under the authority of this permit and chapter 70.105 RCW. In the event of any conflict between Permit Condition III.10.A. and any statement relating to the regulation of source, special nuclear, and byproduct material contained in portions of the permit application that are incorporated into this permit, Permit Condition III.10.A. will prevail.

Additional appendices will be added to this appendix as new information is incorporated into this permit.

Drawings and Documents

Attachment 51 – Appendix 8.6
Pretreatment Building
Mechanical Drawings

The following Drawings have been incorporated into Appendix 8.6 and can be viewed at the Ecology Richland Office. **New drawings are in bold lettering**.

Drawing/Document Number	**Description**
24590-PTF-M2-FRP-P0001, Rev 2	Equipment Assembly Drawing for FRP-VSL-00002A
24590-PTF-M2-FRP-P0002, Rev 2	Equipment Assembly Drawing for FRP-VSL-00002B
24590-PTF-M2-FRP-P0003, Rev 2	Equipment Assembly Drawing for FRP-VSL-00002C
24590-PTF-M2-FRP-P0004, Rev 2	Equipment Assembly Drawing for FRP-VSL-00002D
24590-PTF-MED-CNP-P0003, Rev 0	Mechanical Data Sheet for CNP-HX-00002
24590-PTF-MED-CNP-P0004, Rev 1	Mechanical Data Sheet for CNP-HX-00004
24590-PTF-MED-CNP-P0005, Rev 0	Mechanical Data Sheet for CNP-HX-00001
24590-PTF-MED-CNP-P0010, Rev 0	Mechanical Data Sheet for CNP-HX-00003
24590-PTF-MED-FEP-P0003, Rev 0	Mechanical Data Sheet for FEP-COND-00001A
24590-PTF-MED-FEP-P0004, Rev 0	Mechanical Data Sheet for FEP-COND-00001B
24590-PTF-MED-FEP-P0005, Rev 0	Mechanical Data Sheet for FEP-COND-00002A
24590-PTF-MED-FEP-P0006, Rev 0	Mechanical Data Sheet for FEP-COND-00002B
24590-PTF-MED-FEP-P0007, Rev 0	Mechanical Data Sheet for FEP-COND-00003A
24590-PTF-MED-FEP-P0008, Rev 0	Mechanical Data Sheet for FEP-COND-00003B
24590-PTF-MED-FEP-P0009, Rev 0	Mechanical Data Sheet for FEP-RBLR-00001A
24590-PTF-MED-FEP-P0010, Rev 0	Mechanical Data Sheet for FEP-RBLR-00001B
24590-PTF-MED-TLP-P0001, Rev 0	Mechanical Data Sheet for TLP-COND-00001
24590-PTF-MED-TLP-P0002, Rev 0	Mechanical Data Sheet for TLP-COND-00002
24590-PTF-MED-TLP-P0003, Rev 0	Mechanical Data Sheet for TLP-COND-00003
24590-PTF-MED-TLP-P0004, Rev 0	Mechanical Data Sheet for TLP-RBLR-00001
24590-PTF-MKD-PVP-P0002, Rev 2	**Mechanical Data Sheet &Equipment Assembly Drawing for PVP-SCB-00002**
24590-PTF-MLD-UFP-P0007, Rev 1	Mechanical Data Sheet for UFP-FILT-00001A/1B/2A/2B/3A/3B/S1-S6
24590-PTF-MV-CNP-P0001, Rev 0	Equipment Assembly Drawing for CNP-VSL-00003
24590-PTF-MV-CNP-P0002, Rev 1	Equipment Assembly Drawing for CNP-VSL-00004
24590-PTF-MV-CNP-P0005, Rev 0	Equipment Assembly Drawing for CNP-VSL-00001
24590-PTF-MV-CXP-P0001, Rev 0	Equipment Assembly Drawing for CXP-VSL-00001
24590-PTF-MV-CXP-P0002, Rev 0	Equipment Assembly Drawing for CXP-VSL-00004
24590-PTF-MV-CXP-P0003, Rev 0	Equipment Assembly Drawing for CXP-VSL-00005
24590-PTF-MV-CXP-P0008, Rev 0	Equipment Assembly Drawing for CXP-VSL-00026A
24590-PTF-MV-CXP-P0009, Rev 0	Equipment Assembly Drawing for CXP-VSL-00026B
24590-PTF-MV-CXP-P0010, Rev 0	Equipment Assembly Drawings for CXP-VSL-00026C
24590-PTF-MVD-CNP-P0003, Rev 1	Mechanical Data Sheet for CNP-VSL-00003
24590-PTF-MVD-CNP-P0006, Rev 0	Mechanical Data Sheet for CNP-EVAP-00001
24590-PTF-MVD-CNP-P0007, Rev 2	Mechanical Data Sheet for CNP-VSL-00004
24590-PTF-MVD-CNP-P0010, Rev 0	Mechanical Data Sheet for CNP-VSL-00001
24590-PTF-MVD-CXP-P0007, Rev 0	Mechanical Data Sheet for CXP-VSL-00001
24590-PTF-MVD-CXP-P0015, Rev 0	Mechanical Data Sheet for CXP-VSL-00004
24590-PTF-MVD-CXP-P0016, Rev 0	Mechanical Data Sheet for CXP-VSL-00005

Drawing/Document Number	Description
24590-PTF-MVD-CXP-P0021, Rev 1	Mechanical Data Sheet for CXP-VSL-00026A
24590-PTF-MVD-CXP-P0022, Rev 1	Mechanical Data Sheet for CXP-VSL-00026B
24590-PTF-MVD-CXP-P0023, Rev 1	Mechanical Data Sheet for CXP-VSL-00026C
24590-PTF-MVD-FEP-P0001, Rev 2	Mechanical Data Sheet for FEP-VSL-00017A
24590-PTF-MVD-FEP-P0002, Rev 2	Mechanical Data Sheet for FEP-VSL-00017B
24590-PTF-MVD-FEP-P0003, Rev 1	Mechanical Data Sheet for FEP-VSL-00005
24590-PTF-MVD-FEP-P0006, Rev 3	Mechanical Data Sheet for FEP-SEP-00001A
24590-PTF-MVD-FEP-P0007, Rev 2	Mechanical Data Sheet for FEP-SEP-00001B
24590-PTF-MVD-FRP-00005, Rev 10	**Mechanical Data Sheet for FRP-VSL-00002-A**
24590-PTF-MVD-FRP-00006, Rev 10	**Mechanical Data Sheet for FRP-VSL-00002-B**
24590-PTF-MVD-FRP-00007, Rev 10	**Mechanical Data Sheet for FRP-VSL-00002-C**
24590-PTF-MVD-FRP-00008, Rev 10	**Mechanical Data Sheet for FRP-VSL-00002-D**
24590-PTF-MVD-HLP-P0006, Rev 1	Mechanical Data Sheet for HLP-VSL-00022
24590-PTF-MVD-HLP-P0007, Rev 1	Mechanical Data Sheet for HLP-VSL-00027A
24590-PTF-MVD-HLP-P0008, Rev 1	Mechanical Data Sheet for HLP-VSL-00027B
24590-PTF-MVD-HLP-P0009, Rev 1	Mechanical Data Sheet for HLP-VSL-00028
24590-PTF-MVD-PJV-P0003, Rev 0	Mechanical Data Sheet for PJV-VSL-00002
24590-PTF-MVD-PVP-P0001, Rev 0	Mechanical Data Sheet for PVP-VSL-00001
24590-PTF-MVD-PWD-P0001, Rev 3	Mechanical Data Sheet for PWD-VSL-00033
24590-PTF-MVD-PWD-P0002, Rev 3	Mechanical Data Sheet for PWD-VSL-00044
24590-PTF-MVD-PWD-P0003, Rev 2	Mechanical Data Sheet for PWD-VSL-00043
24590-PTF-MVD-PWD-P0010, Rev 1	Mechanical Data Sheet for PWD-VSL-00046
24590-PTF-MVD-PWD-P0011, Rev 3	Mechanical Data Sheet for PWD-VSL-00015
24590-PTF-MVD-PWD-P0012, Rev 3	Mechanical Data Sheet for PWD-VSL-00016
24590-PTF-MVD-RDP-P0005, Rev 1	Mechanical Data Sheet for RDP-VSL-00002A
24590-PTF-MVD-RDP-P0006, Rev 1	Mechanical Data Sheet for RDP-VSL-00002B
24590-PTF-MVD-RDP-P0007, Rev 3	Mechanical Data Sheet for RDP-VSL-00002C
24590-PTF-MVD-RDP-P0008, Rev 0	Mechanical Data Sheet for RDP-VSL-00004
24590-PTF-MVD-RLD-P0005, Rev 3	Mechanical Data Sheet for RLD-VSL-00017A
24590-PTF-MVD-RLD-P0006, Rev 3	Mechanical Data Sheet for RLD-VSL-00017B
24590-PTF-MVD-TCP-P0002, Rev 2	Mechanical Data Sheet for TCP-VSL-00001
24590-PTF-MVD-TLP-P0001, Rev 2	Mechanical Data Sheet for TLP-VSL-00009A
24590-PTF-MVD-TLP-P0002, Rev 2	Mechanical Data Sheet for TLP-VSL-00009B
24590-PTF-MVD-TLP-P0004, Rev 0	Mechanical Data Sheet for TLP-VSL-00002
24590-PTF-MVD-TLP-P0005, Rev 2	Mechanical Data Sheet for TLP-SEP-00001
24590-PTF-MVD-UFP-P0001, Rev 1	Mechanical Data Sheet for UFP-VSL-00001A
24590-PTF-MVD-UFP-P0002, Rev 1	Mechanical Data Sheet for UFP-VSL-00001B
24590-PTF-MVD-UFP-P0005, Rev 1	Mechanical Data Sheet for UFP-VSL-00062A
24590-PTF-MVD-UFP-P0006, Rev 1	Mechanical Data Sheet for UFP-VSL-00062B
24590-PTF-MVD-UFP-P0007, Rev 1	Mechanical Data Sheet for UFP-VSL-00062C
24590-PTF-MVD-UFP-P0014, Rev 0	Mechanical Data Sheet for UFP-VSL-00002A
24590-PTF-MVD-UFP-P0015, Rev 0	Mechanical Data Sheet for UFP-VSL-00002B
24590-PTF-MV-FEP-P0001, Rev 0	Equipment Assembly Drawing for FEP-VSL-00017A
24590-PTF-MV-FEP-P0002, Rev 0	Equipment Assembly Drawing for FEP-VSL-00017B
24590-PTF-MV-HLP-P0003, Rev 0	Equipment Assembly Drawing for HLP-VSL-00022
24590-PTF-MV-HLP-P0004, Rev 0	Equipment Assembly Drawing for HLP-VSL-00028
24590-PTF-MV-HLP-P0005, Rev 0	Equipment Assembly Drawing for HLP-VSL-00027B

Drawing/Document Number	Description
24590-PTF-MV-HLP-P0006, Rev 0	Equipment Assembly Drawing for HLP-VSL-00027A
24590-PTF-MV-PJV-P0001, Rev 0	Equipment Assembly Drawing for PJV-VSL-00002
24590-PTF-MV-PVP-P0002, Rev 0	Equipment Assembly Drawing for PVP-VSL-00001
24590-PTF-MV-PWD-P0010 Rev 1	Equipment Assembly Drawing for PWD-VSL-00044
24590-PTF-MV-PWD-P0001001, Rev 1	Equipment Assembly Drawing for PWD-VSL-00033 (Sheet 1)
24590-PTF-MV-PWD-P0001002, Rev 1	Equipment Assembly Drawing for PWD-VSL-00033 (Sheet 2)
24590-PTF-MV-PWD-P0003001, Rev 1	Equipment Assembly Drawing for PWD-VSL-00043 (Sheet 1)
24590-PTF-MV-PWD-P0003002, Rev 1	Equipment Assembly Drawing for PWD-VSL-00043 (Sheet 2)
24590-PTF-MV-PWD-P0005, Rev 1	Equipment Assembly Drawing for PWD-VSL-00043
24590-PTF-MV-PWD-P0006, Rev 1	Equipment Assembly Drawing for PWD-VSL-00016
24590-PTF-MV-PWD-P0007, Rev 1	Equipment Assembly Drawing for PWD-VSL-00015
24590-PTF-MV-RDP-P0001, Rev 0	Equipment Assembly Drawing for RDP-VSL-00002A
24590-PTF-MV-RDP-P0002, Rev 0	Equipment Assembly Drawing for RDP-VSL-00002B
24590-PTF-MV-RDP-P0003, Rev 0	Equipment Assembly Drawing for RDP-VSL-00002C
24590-PTF-MV-RLD-P0001, Rev 0	Equipment Assembly Drawing for RLD-VSL-00017A
24590-PTF-MV-RLD-P0002, Rev 0	Equipment Assembly Drawing for RLD-VSL-00017B
24590-PTF-MV-TCP-P0002, Rev 1	Equipment Assembly Drawing for TCP-VSL-00001
24590-PTF-MV-TLP-P0001, Rev 1	Equipment Assembly Drawing for TLP-VSL-00009A
24590-PTF-MV-TLP-P0002, Rev 1	Equipment Assembly Drawing for TLP-VSL-00009B
24590-PTF-MV-UFP-P0001, Rev 1	Equipment Assembly Drawing for UFP-VSL-00001A
24590-PTF-MV-UFP-P0002, Rev 2	Equipment Assembly Drawing for UFP-VSL-00001B
24590-PTF-MV-UFP-P0003, Rev 0	Equipment Assembly Drawing for UFP-VSL-00002A
24590-PTF-MV-UFP-P0004, Rev 0	Equipment Assembly Drawing for UFP-VSL-00002B
24590-PTF-MV-UFP-P0005, Rev 0	Equipment Assembly Drawing for UFP-VSL-00062A
24590-PTF-MV-UFP-P0006, Rev 0	Equipment Assembly Drawing for UFP-VSL-00062B
24590-PTF-MV-UFP-P0007, Rev 0	Equipment Assembly Drawing for UFP-VSL-00062C
24590-PTF-MWD-CNP-P0001, Rev 0	Mechanical Data Sheet for CNP-DISTC-00001
RESERVED	RESERVED

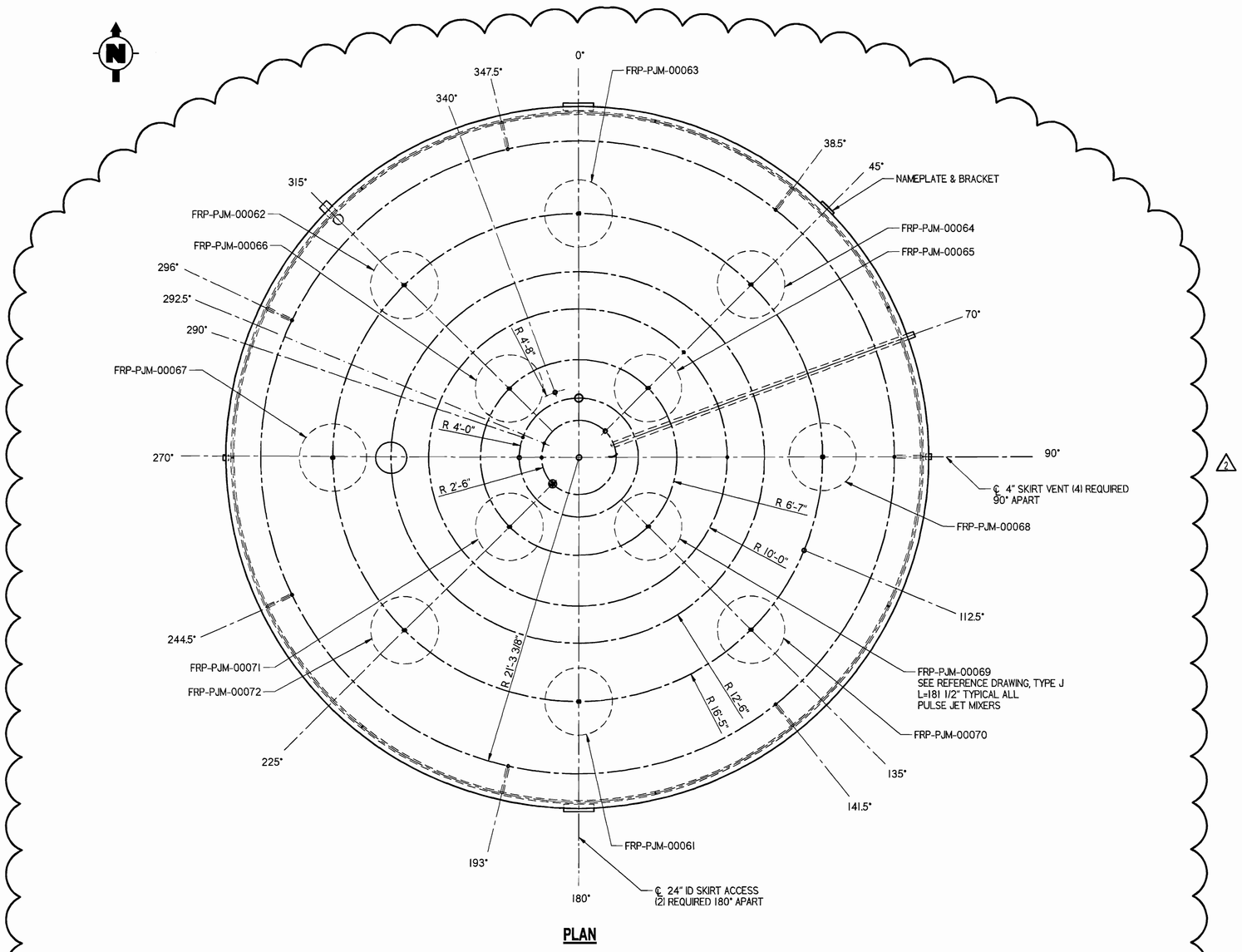

PLAN

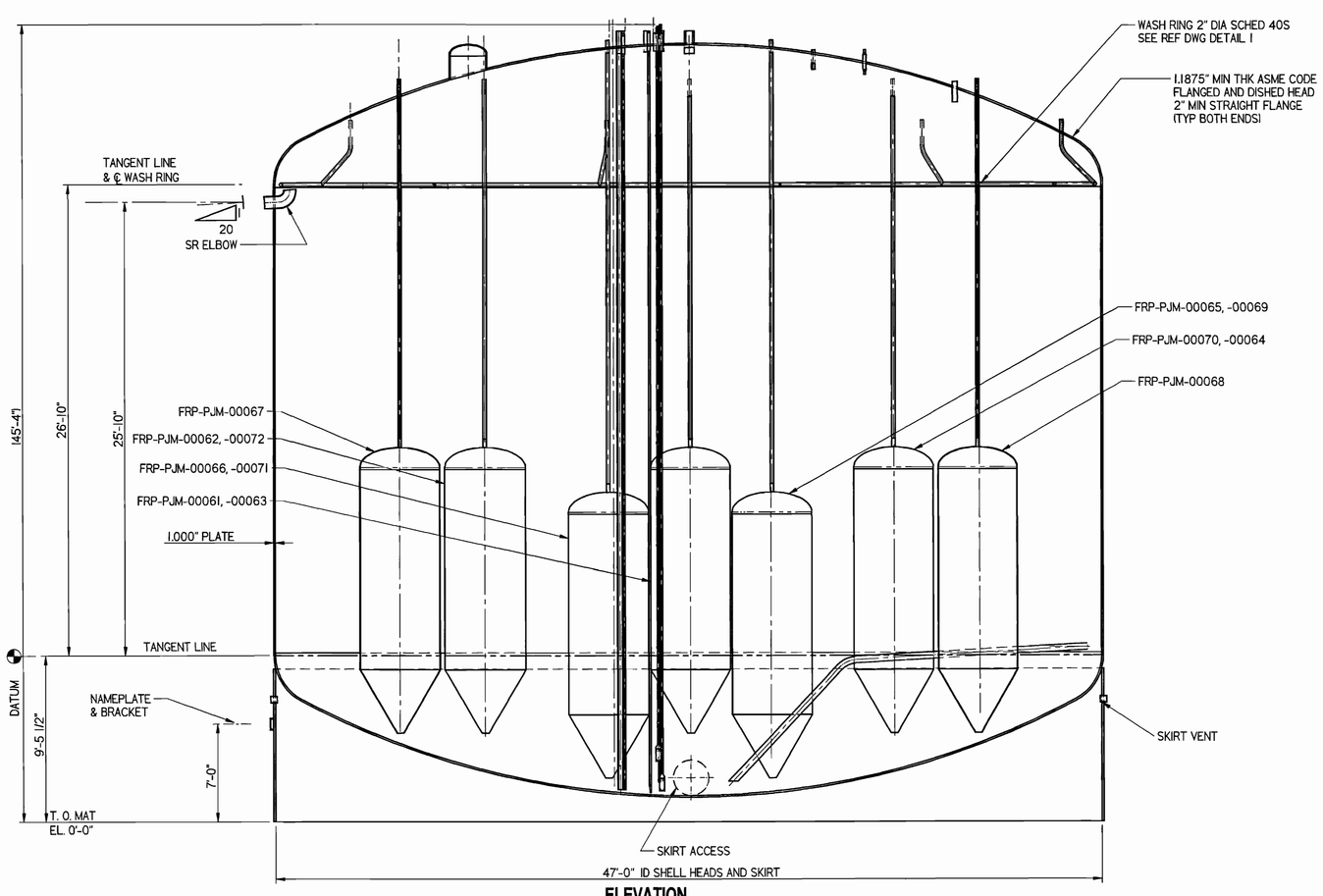

ELEVATION

GENERAL NOTES:

1. DELETED.
2. CONTENTS OF THIS DOCUMENT ARE DANGEROUS WASTE PERMIT AFFECTING.

PLEASE NOTE THAT SOURCE, SPECIAL NUCLEAR AND BYPRODUCT MATERIALS, AS DEFINED IN THE ATOMIC ENERGY ACT OF 1954 (AEA), ARE REGULATED AT THE U.S. DEPARTMENT OF ENERGY (DOE) FACILITIES EXCLUSIVELY BY DOE ACTING PURSUANT TO ITS AEA AUTHORITY. DOE ASSERTS, THAT PURSUANT TO THE AEA, IT HAS SOLE AND EXCLUSIVE RESPONSIBILITY AND AUTHORITY TO REGULATE SOURCE, SPECIAL NUCLEAR, AND BYPRODUCT MATERIALS AT DOE-OWNED NUCLEAR FACILITIES. INFORMATION CONTAINED HEREIN ON RADIONUCLIDES IS PROVIDED FOR PROCESS DESCRIPTION PURPOSES ONLY.

VESSEL COMPONENT QUALITY LEVELS

COMPONENT	QUALITY LEVEL
WASTE FEED RECEIPT VESSEL, SKIRT, ALL NOZZLES	QL-1
ALL INTERNAL SUPPORTS	QL-1
PULSE JET MIXERS AND PIPING	QL-1
INSTRUMENTATION	CM
WASH RINGS AND PIPING	CM

REFERENCE DRAWINGS

DWG NO	REV	TITLE
24590-WTP-MV-M59T-00001	2	PRESSURE VESSEL TOLERANCES STANDARD DETAILS
24590-WTP-MV-M59T-00004		PULSE JET MIXERS STANDARD DETAILS
24590-WTP-MV-M59T-00007		THERMOWELL CONNECTION STANDARD DETAILS
24590-WTP-MV-M59T-00011		WASH RINGS STANDARD DETAILS
24590-WTP-MV-M59T-00016001		VESSEL CONNECTIONS STANDARD DETAILS SHT 1 OF 3
24590-WTP-MV-M59T-00016003		VESSEL CONNECTIONS STANDARD DETAILS SHT 3 OF 3
24590-WTP-MV-M59T-00017		VESSEL INSPECTION MANWAY STANDARD DETAILS
24590-WTP-MV-M59T-00018		VESSEL NAMEPLATE STANDARD DETAIL
24590-PTF-MVD-FRP-P0005		MECHANICAL DATA SHEET
24590-PTF-M6-FRP-P0001		P & ID

MARK W. HOFFMANN, STATE OF WASHINGTON, 36303, REGISTERED PROFESSIONAL ENGINEER
7/12/04
EXPIRES 12/10/04

REV	DESCRIPTION	ORG	CHKD	RVWD	APVD	DATE
2	ISSUED FOR PERMITTING USE			RT	MH	7/12/04
1	ISSUED FOR PERMITTING USE	JS	RS	CS	MH	8/14/03
0	ISSUED FOR PERMITTING USE	JJ	CS	N/A	SK	10/28/02

REVISION HISTORY

Q QUALITY LEVEL

ISSUED BY RPP-WTP PDC INIT DATE
ISSUE STAMP

PROJECT No.	24590	
SITE	HANFORD	
AREA	200-E	
BUILDING No.	10	

	BY	DATE
ORIGINATOR	JESSICA JACKSON	10/22/02
CHECKER	CLIFF SLATER	10/24/02
APPROVER	SUZANNE KIRK	10/28/02
REVIEWER	N/A	

CONTENT APPLICABLE TO ALARA? ☒ YES ☐ NO
ADR NO. N/A REV: 2

BECHTEL

RIVER PROTECTION PROJECT
WASTE TREATMENT PLANT
2435 STEVENS CENTER PLACE
RICHLAND, WA 99352

CONTRACT No: DE-AC27-01RV14136

EQUIPMENT ASSEMBLY WASTE FEED RECEIPT VESSEL FRP-VSL-00002A

SCALE: NONE

24590-PTF-M2-FRP-P0001

REV 2

"E" SIZE - 44x34
COMPUTER GENERATED BY SOLID EDGE-MANUAL CHANGES NOT PERMITTED

WHEN REFERENCING DRAWING AND DIM NUMBERS IN DOCUMENTS, BE SURE TO INCLUDE DASHES BETWEEN ELEMENTS

06/13/2003 2:31 PM

R1203/0228

FORM E_MASTER 03/2003

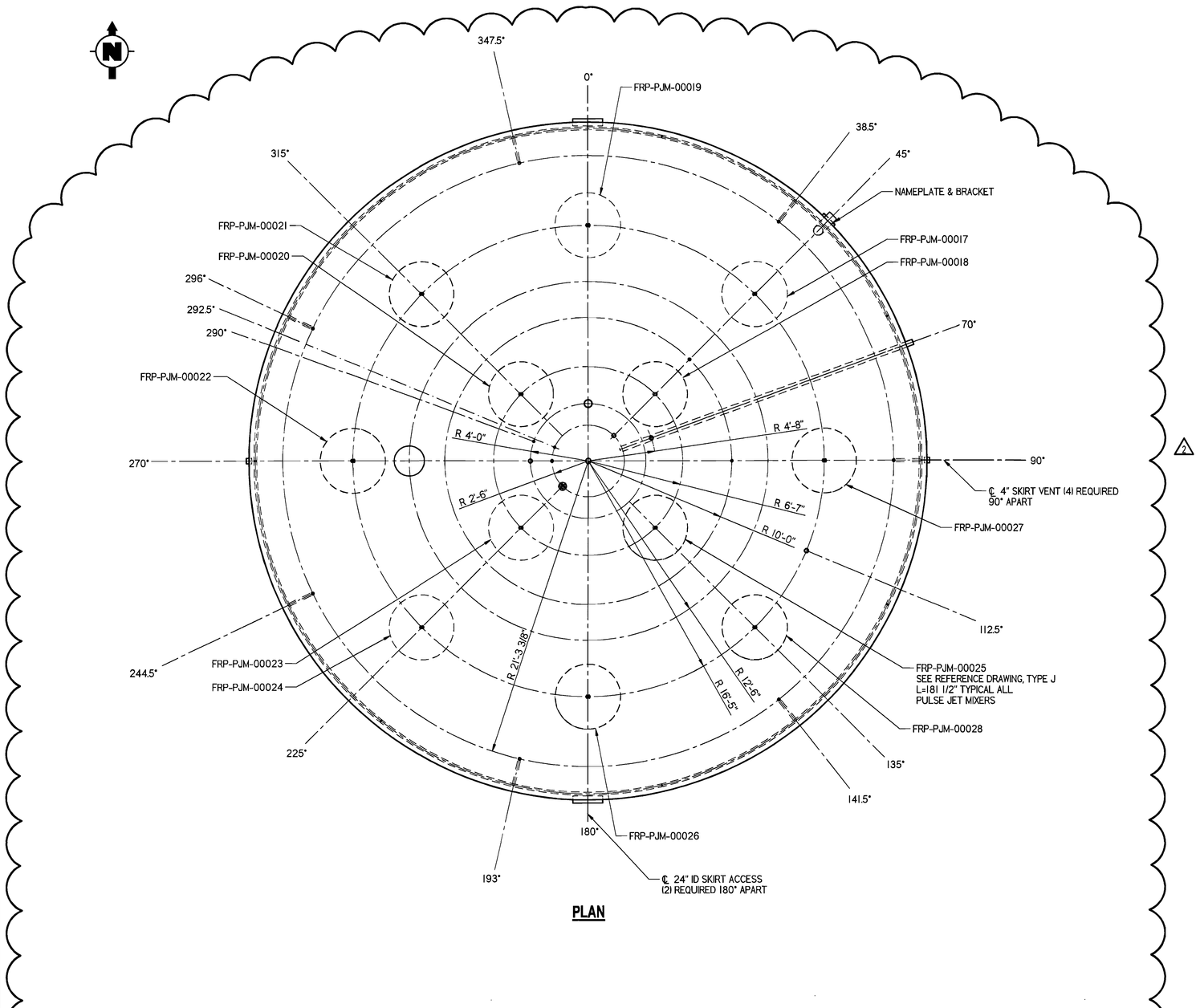

PLAN

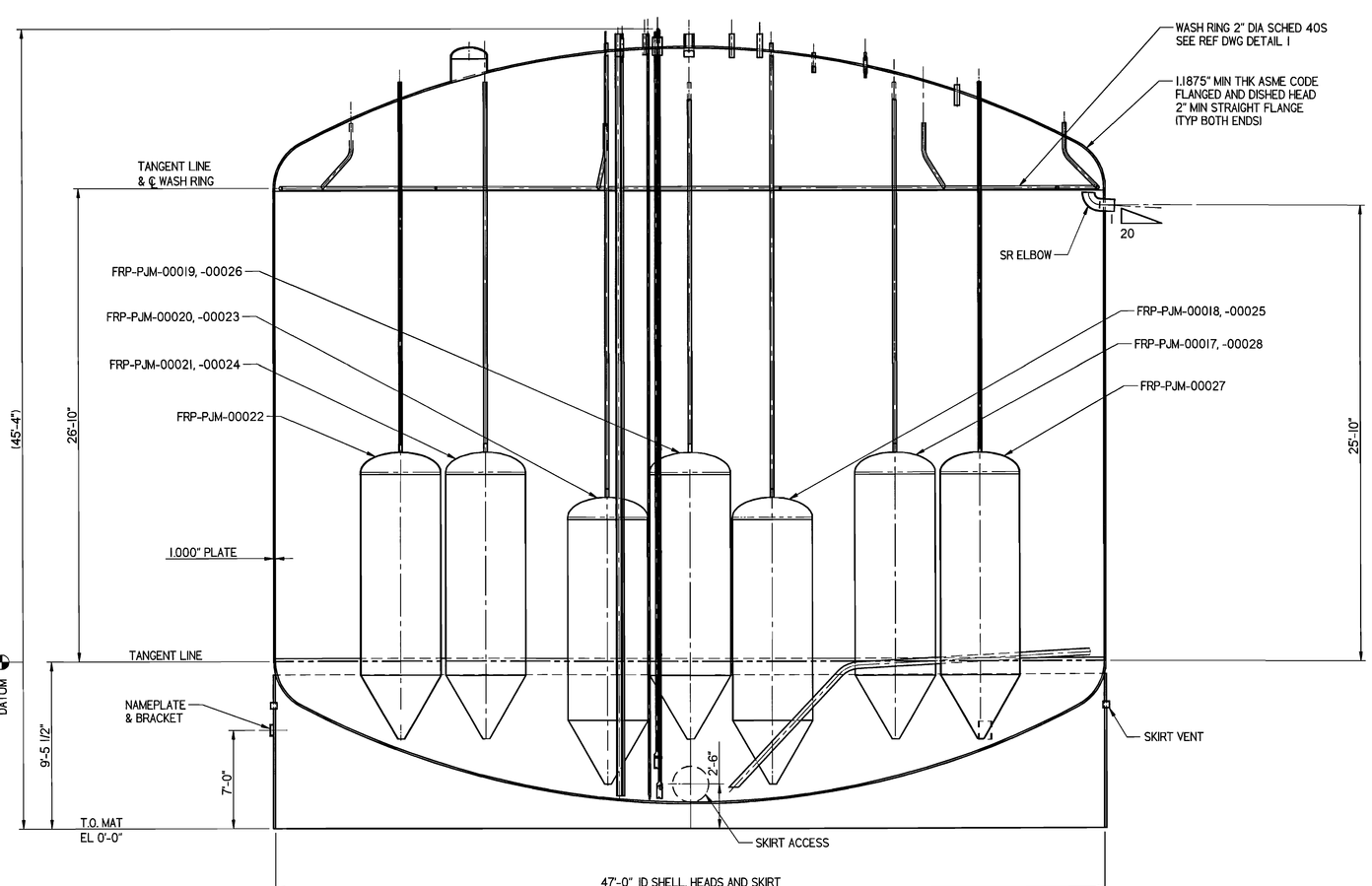

ELEVATION

GENERAL NOTES:

1. DELETED:
2. CONTENTS OF THIS DOCUMENT ARE DANGEROUS WASTE PERMIT AFFECTING.

PLEASE NOTE THAT SOURCE, SPECIAL NUCLEAR AND BYPRODUCT MATERIALS, AS DEFINED IN THE ATOMIC ENERGY ACT OF 1954 (AEA), ARE REGULATED AT THE U.S. DEPARTMENT OF ENERGY (DOE) FACILITIES EXCLUSIVELY BY DOE ACTING PURSUANT TO ITS AEA AUTHORITY. DOE ASSERTS, THAT PURSUANT TO THE AEA, IT HAS SOLE AND EXCLUSIVE RESPONSIBILITY AND AUTHORITY TO REGULATE SOURCE, SPECIAL NUCLEAR, AND BYPRODUCT MATERIALS AT DOE-OWNED NUCLEAR FACILITIES. INFORMATION CONTAINED HEREIN ON RADIONUCLIDES IS PROVIDED FOR PROCESS DESCRIPTION PURPOSES ONLY.

VESSEL COMPONENT QUALITY LEVELS

COMPONENT	QUALITY LEVEL
WASTE FEED RECEIPT VESSEL, SKIRT, ALL NOZZLES	QL-1
ALL INTERNAL SUPPORTS	QL-1
PULSE JET MIXERS AND PIPING	QL-1
INSTRUMENTATION	CM
WASH RINGS AND PIPING	CM

REFERENCE DRAWINGS

DWG NO	REV	TITLE
24590-WTP-MV-M59T-00001		PRESSURE VESSEL TOLERANCES STANDARD DETAILS
24590-WTP-MV-M59T-00004		PULSE JET MIXERS STANDARD DETAILS
24590-WTP-MV-M59T-00007		THERMOWELL CONNECTION STANDARD DETAILS
24590-WTP-MV-M59T-00011		WASH RINGS STANDARD DETAILS
24590-WTP-MV-M59T-00016001		VESSEL CONNECTIONS STANDARD DETAILS SHT 1 OF 3
24590-WTP-MV-M59T-00016003		VESSEL CONNECTIONS STANDARD DETAILS SHT 3 OF 3
24590-WTP-MV-M59T-00017		VESSEL INSPECTION MANWAY STANDARD DETAILS
24590-WTP-MV-M59T-00018		VESSEL NAMEPLATE STANDARD DETAIL
24590-PTF-MVD-FRP-P0006		MECHANICAL DATA SHEET
24590-PTF-M6-FRP-P0001		P & ID

MARK W. HOPEMAN, STATE OF WASHINGTON, 36009, REGISTERED PROFESSIONAL ENGINEER — 7/12/04
EXPIRES 12/10/04

REVISION HISTORY

REV	DESCRIPTION	ORG	CHKD	RVWD	APVD	DATE
2	ISSUED FOR PERMITTING USE			RJT		7/12/04
1	ISSUED FOR PERMITTING USE	JJ	RS	CS	MH	8/14/03
0	ISSUED FOR PERMITTING USE	JJ	CS	N/A	SK	10/28/02

Q QUALITY LEVEL

ISSUED BY RPP-WTP PDC — INIT / DATE — ISSUE STAMP

PROJECT No.	24590
SITE	HANFORD
AREA	200-E
BUILDING No.	10

	BY	DATE
ORIGINATOR	JESSICA JACKSON	10/22/02
CHECKER	CLIFF SLATER	10/22/02
APPROVER	SUZANNE KIRK	10/28/02
REVIEWER	N / A	

CONTENT APPLICABLE TO ALARA? ☒ YES ☐ NO
ADR NO. N/A REV:

BECHTEL

RIVER PROTECTION PROJECT
WASTE TREATMENT PLANT
2435 STEVENS CENTER PLACE
RICHLAND, WA 99352

CONTRACT No: DE-AC27-01RV14136

EQUIPMENT ASSEMBLY WASTE FEED RECEIPT VESSEL FRP-VSL-00002B

SCALE: NONE

24590-PTF-M2-FRP-P0002

REV 2

"E" SIZE - 44x34
COMPUTER GENERATED BY SOLID EDGE-MANUAL CHANGES NOT PERMITTED

WHEN REFERENCING DRAWING AND DIM NUMBERS IN DOCUMENTS, BE SURE TO INCLUDE DASHES BETWEEN ELEMENTS

06/12/2003 4:15 PM

FORM E_MASTER 03/2003

R1203/029

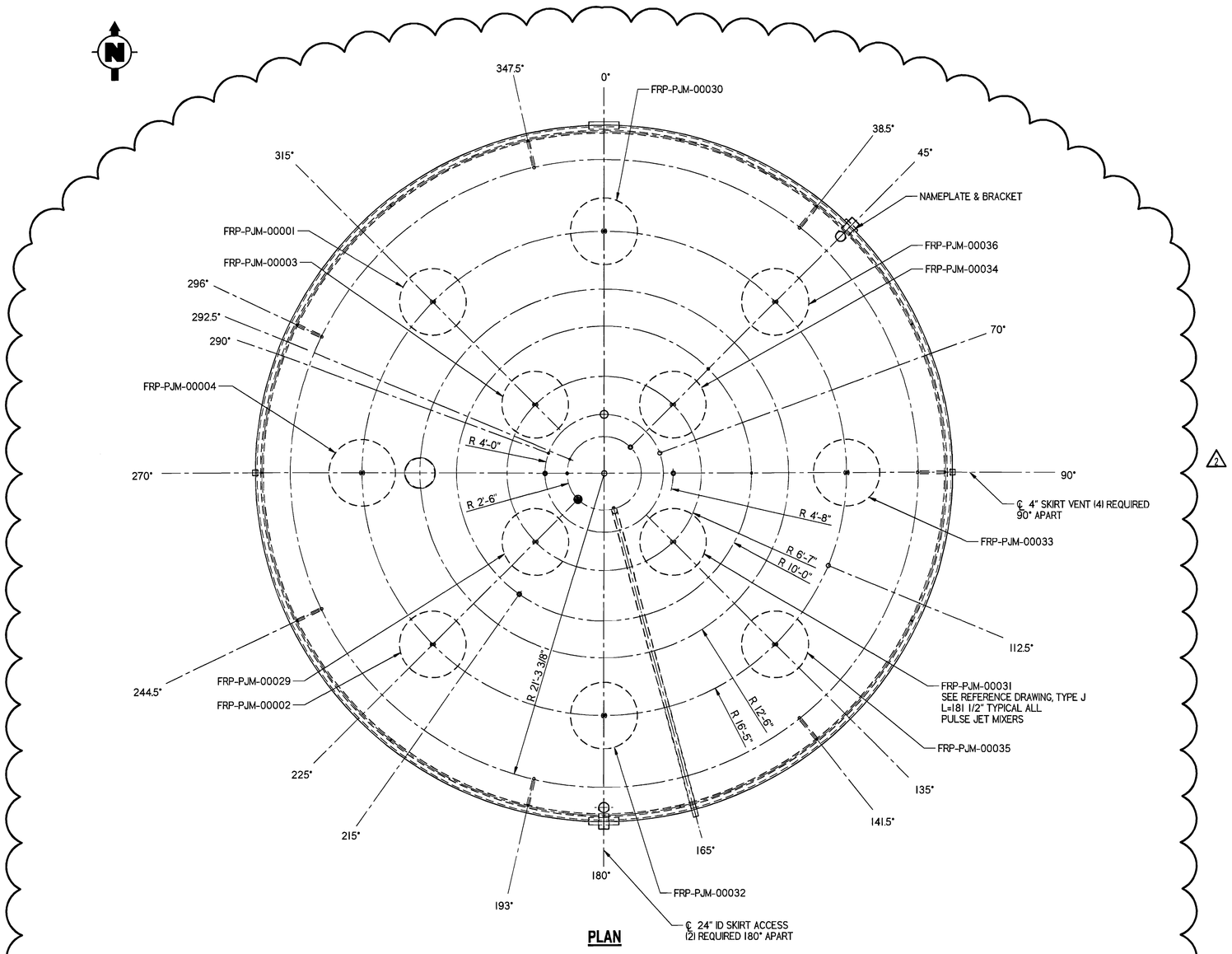

PLAN

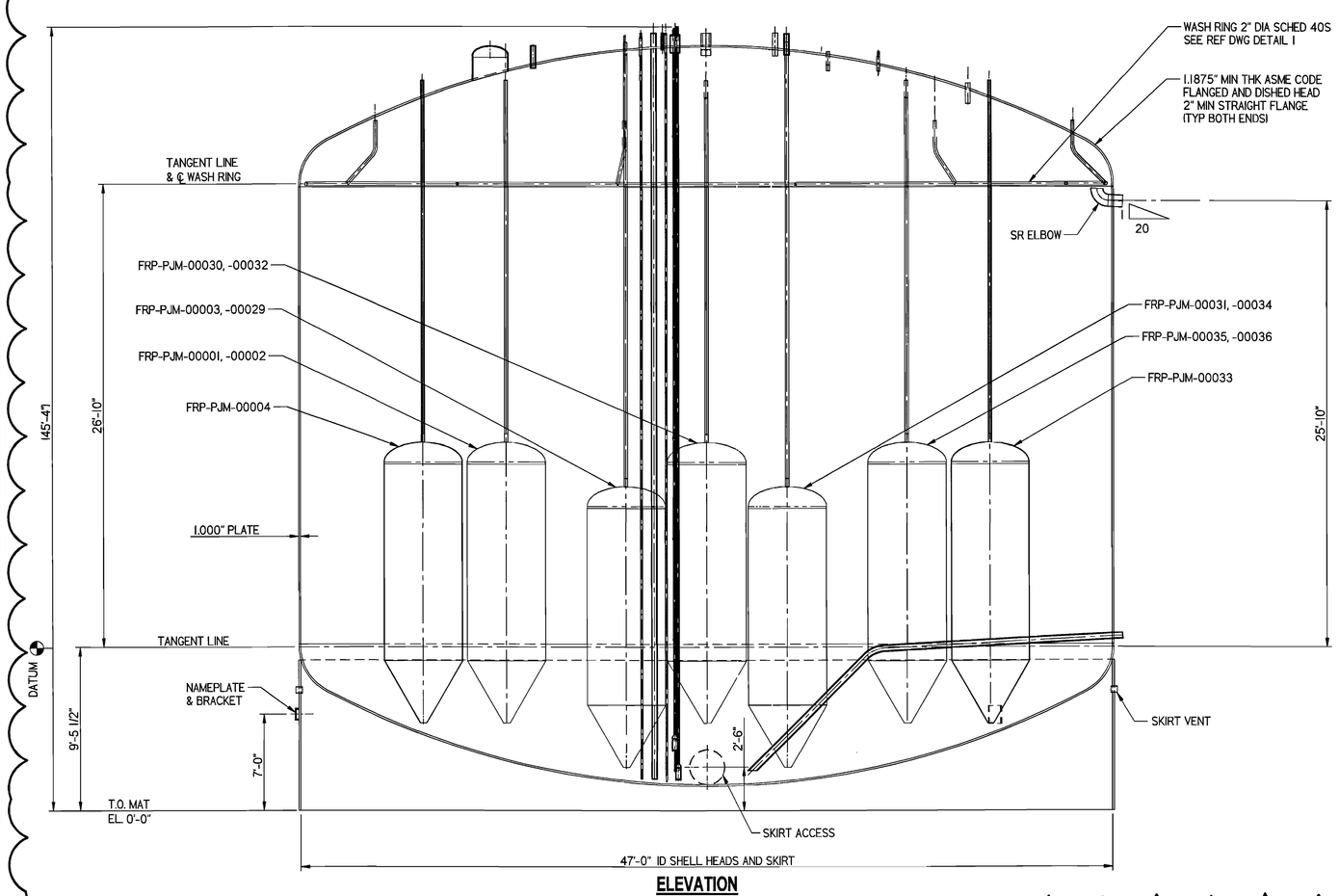

ELEVATION

GENERAL NOTES:

1. DELETED.
2. CONTENTS OF THIS DOCUMENT ARE DANGEROUS WASTE PERMIT AFFECTING.

PLEASE NOTE THAT SOURCE, SPECIAL NUCLEAR AND BYPRODUCT MATERIALS, AS DEFINED IN THE ATOMIC ENERGY ACT OF 1954 (AEA), ARE REGULATED AT THE U.S. DEPARTMENT OF ENERGY (DOE) FACILITIES EXCLUSIVELY BY DOE ACTING PURSUANT TO ITS AEA AUTHORITY. DOE ASSERTS, THAT PURSUANT TO THE AEA, IT HAS SOLE AND EXCLUSIVE RESPONSIBILITY AND AUTHORITY TO REGULATE SOURCE, SPECIAL NUCLEAR, AND BYPRODUCT MATERIALS AT DOE-OWNED NUCLEAR FACILITIES. INFORMATION CONTAINED HEREIN ON RADIONUCLIDES IS PROVIDED FOR PROCESS DESCRIPTION PURPOSES ONLY.

VESSEL COMPONENT QUALITY LEVELS

COMPONENT	QUALITY LEVEL
WASTE FEED RECEIPT VESSEL, SKIRT, ALL NOZZLES	QL-1
ALL INTERNAL SUPPORTS	QL-1
PULSE JET MIXERS AND PIPING	QL-1
INSTRUMENTATION	CM
WASH RINGS AND PIPING	CM

REFERENCE DRAWINGS

DWG NO	REV	TITLE
24590-WTP-MV-M59T-00001	2	PRESSURE VESSEL TOLERANCES STANDARD DETAILS
24590-WTP-MV-M59T-00004		PULSE JET MIXERS STANDARD DETAILS
24590-WTP-MV-M59T-00007		THERMOWELL CONNECTION STANDARD DETAILS
24590-WTP-MV-M59T-00011		WASH RINGS STANDARD DETAILS
24590-WTP-MV-M59T-00016001		VESSEL CONNECTIONS STANDARD DETAILS SHT 1 OF 3
24590-WTP-MV-M59T-00016003		VESSEL CONNECTIONS STANDARD DETAILS SHT 3 OF 3
24590-WTP-MV-M59T-00017		VESSEL INSPECTION MANWAY STANDARD DETAILS
24590-WTP-MV-M59T-00018		VESSEL NAMEPLATE STANDARD DETAIL
24590-PTF-MVD-FRP-P0007		MECHANICAL DATA SHEET
24590-PTF-M6-FRP-P0002		P & ID

MARK W. HOFFMANN
STATE OF WASHINGTON
00 30952
REGISTERED
PROFESSIONAL ENGINEER
7/12/04
EXPIRES 12/10/04

REV	DESCRIPTION	ORG	CHKD	RVWD	APVD	DATE
2	ISSUED FOR PERMITTING USE	KJP	RWS	RT	MW	7/12/04
1	ISSUED FOR PERMITTING USE	JJ	RS	CS	MH	8/14/03
0	ISSUED FOR PERMITTING USE	JJ	CS	N/A	SK	10/28/02

Q QUALITY LEVEL

REVISION HISTORY

ISSUED BY RPP/WTP PDC (12-7-04) INIT DATE
ISSUE STAMP

PROJECT No.	24590	
SITE	HANFORD	
AREA	200-E	
BUILDING No.	10	
	BY	DATE
ORIGINATOR	JESSICA JACKSON	10/22/02
CHECKER	CLIFF SLATER	10/22/02
APPROVER	SUZANNE KIRK	10/28/02
REVIEWER	N/A	

CONTENT APPLICABLE TO ALARA? ☒ YES ☐ NO
ADR NO. N/A REV:

BECHTEL

RIVER PROTECTION PROJECT
WASTE TREATMENT PLANT
2435 STEVENS CENTER PLACE
RICHLAND, WA 99352

CONTRACT No: DE-AC27-01RV14136

EQUIPMENT ASSEMBLY WASTE FEED RECEIPT VESSEL FRP-VSL-00002C

SCALE: NONE

24590-PTF-M2-FRP-P0003

REV 2

"E" SIZE - 44x34
COMPUTER GENERATED BY SOLID EDGE-
MANUAL CHANGES NOT PERMITTED

WHEN REFERENCING DRAWING AND DIM NUMBERS IN DOCUMENTS, BE SURE TO INCLUDE DASHES BETWEEN ELEMENTS

06/13/2003 12:07 PM

FORM E_MASTER 03/2003

R10337030

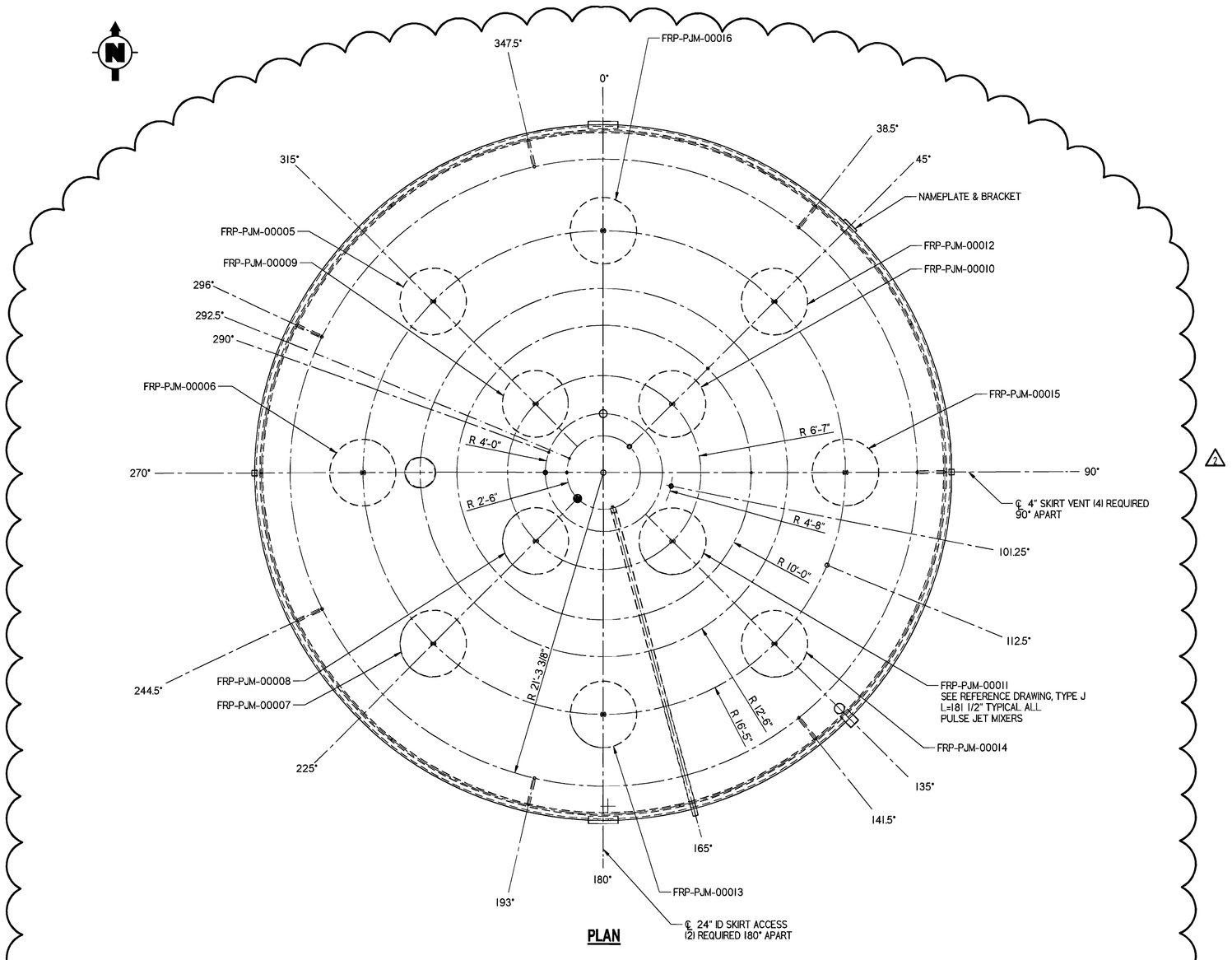

PLAN

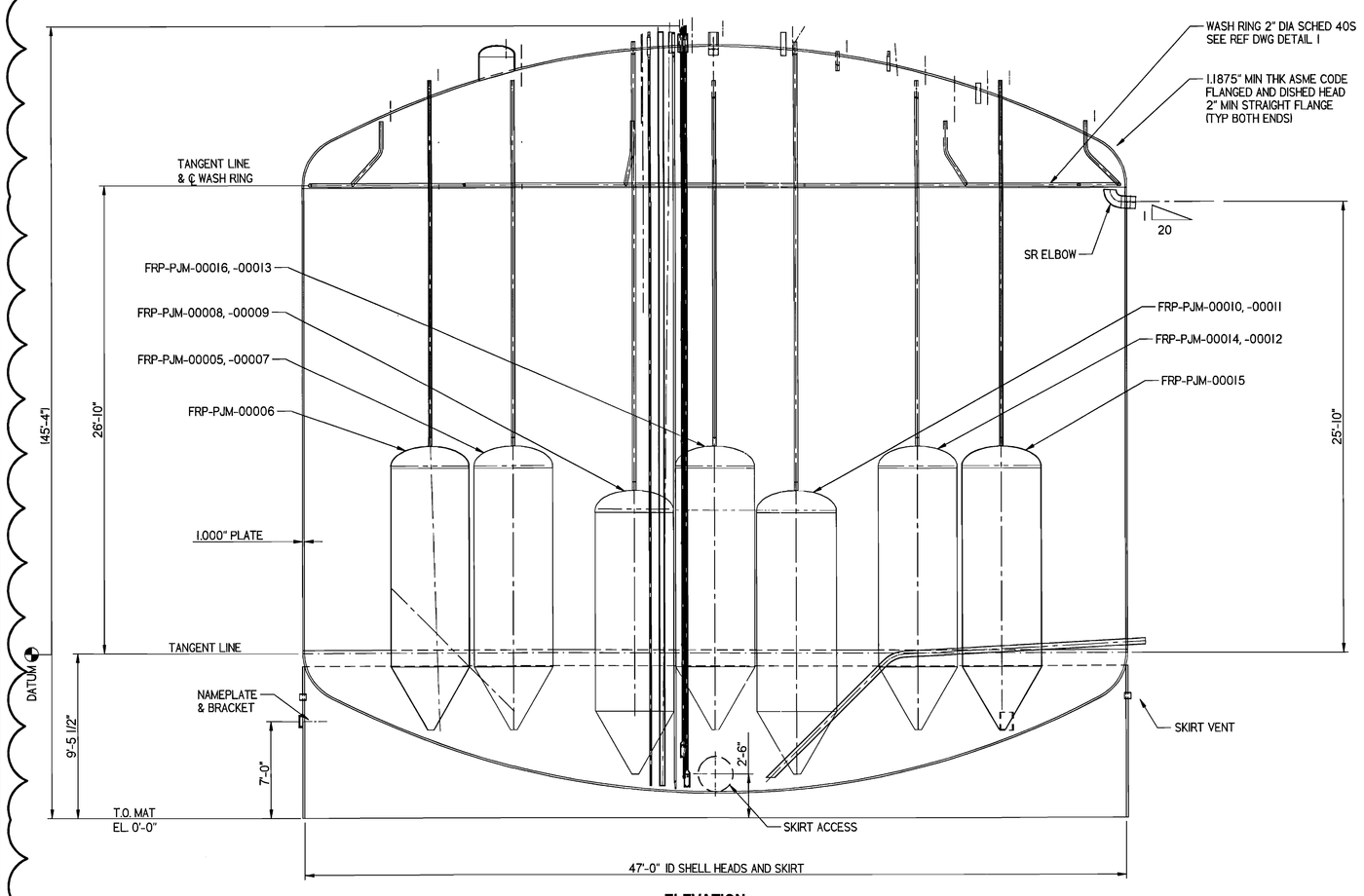

ELEVATION

GENERAL NOTES:

1. DELETED:
2. CONTENTS OF THIS DOCUMENT ARE DANGEROUS WASTE PERMIT AFFECTING.

PLEASE NOTE THAT SOURCE, SPECIAL NUCLEAR AND BYPRODUCT MATERIALS, AS DEFINED IN THE ATOMIC ENERGY ACT OF 1954 (AEA), ARE REGULATED AT THE U.S. DEPARTMENT OF ENERGY (DOE) FACILITIES EXCLUSIVELY BY DOE ACTING PURSUANT TO ITS AEA AUTHORITY. DOE ASSERTS, THAT PURSUANT TO THE AEA, IT HAS SOLE AND EXCLUSIVE RESPONSIBILITY AND AUTHORITY TO REGULATE SOURCE, SPECIAL NUCLEAR, AND BYPRODUCT MATERIALS AT DOE-OWNED NUCLEAR FACILITIES. INFORMATION CONTAINED HEREIN ON RADIONUCLIDES IS PROVIDED FOR PROCESS DESCRIPTION PURPOSES ONLY.

VESSEL COMPONENT QUALITY LEVELS

COMPONENT	QUALITY LEVEL
WASTE FEED RECEIPT VESSEL, SKIRT, ALL NOZZLES	QL-1
ALL INTERNAL SUPPORTS	QL-1
PULSE JET MIXERS AND PIPING	QL-1
INSTRUMENTATION	CM
WASH RINGS AND PIPING	CM

REFERENCE DRAWINGS

DWG NO	REV	TITLE
24590-WTP-MV-M59T-00001	2	PRESSURE VESSEL TOLERANCES STANDARD DETAILS
24590-WTP-MV-M59T-00004		PULSE JET MIXERS STANDARD DETAILS
24590-WTP-MV-M59T-00007		THERMOWELL CONNECTION STANDARD DETAILS
24590-WTP-MV-M59T-00011		WASH RINGS STANDARD DETAILS
24590-WTP-MV-M59T-00016001		VESSEL CONNECTIONS STANDARD DETAILS SHT 1 OF 3
24590-WTP-MV-M59T-00016003		VESSEL CONNECTIONS STANDARD DETAILS SHT 3 OF 3
24590-WTP-MV-M59T-00017		VESSEL INSPECTION MANWAY STANDARD DETAILS
24590-WTP-MV-M59T-00018		VESSEL NAMEPLATE STANDARD DETAIL
24590-PTF-MVD-FRP-P0008		MECHANICAL DATA SHEET
24590-PTF-M6-FRP-P0002		P & ID

MARK W. HOEFMANN, STATE OF WASHINGTON, 20359013, REGISTERED PROFESSIONAL ENGINEER — 7/12/04
EXPIRES 12/10/04

REV	DESCRIPTION	ORG	CHKD	RVWD	APVD	DATE
2	ISSUED FOR PERMITTING USE	KB	DBS	RT	MW	7/12/04
1	ISSUED FOR PERMITTING USE	JJ	RS	CS	MH	8/14/03
0	ISSUED FOR PERMITTING USE	JJ	CS	N/A	SK	10/28/02

REVISION HISTORY

Q QUALITY LEVEL

ISSUED BY RPP-WTP PDC INIT DATE ISSUE STAMP

PROJECT No.	24590	
SITE	HANFORD	
AREA	200-E	
BUILDING No.	10	
	BY	DATE
ORIGINATOR	JESSICA JACKSON	10/22/02
CHECKER	CLIFF SLATER	10/22/02
APPROVER	SUZANNE KIRK	10/28/02
REVIEWER	N/A	

CONTENT APPLICABLE TO ALARA? [X] YES [ ] NO
AOR NO: N/A REV:

BECHTEL
RIVER PROTECTION PROJECT
WASTE TREATMENT PLANT
2435 STEVENS CENTER PLACE
RICHLAND, WA 99352

CONTRACT No: DE-AC27-01RV14136

EQUIPMENT ASSEMBLY WASTE FEED RECEIPT VESSEL FRP-VSL-00002D

SCALE: NONE

24590-PTF-M2-FRP-P0004

REV 2

"E" SIZE - 44x34
COMPUTER GENERATED BY SOLID EDGE-MANUAL CHANGES NOT PERMITTED

WHEN REFERENCING DRAWING AND DIM NUMBERS IN DOCUMENTS, BE SURE TO INCLUDE DASHES BETWEEN ELEMENTS

06/13/2003 1:44 PM

R1032763

FORM E_MASTER 03/2003

MECHANICAL DATA SHEET

SHELL AND TUBE HEAT EXCHANGER

Plant Item No.
24590-PTF-ME-CNP-HX-00002

Data Sheet No.
24590-PTF-MED-CNP-P0003

Project:	***RPP-WTP***	Description:	***Cesium Evaporator Primary Condenser***
Project No:	***24590***	P&ID:	***24590-PTF-M6-CNP-P0010***
Site:	***Hanford***	Process Data Sht:	***24590-PTF-M5D-CNP-00001***
Process flow diagram:	***24590-PTF-M5-V17T-P0014***	Manufacturer Name	•

R10377793

General Data

Quality Level	***QL-1***	TEMA (Class/Type)		***B***	ISSUED BY RPP-WTP PDC
Seismic Category	***SC-I***	Flow Type (Counter current, etc)		*	
Design Code	***ASME VIII, Div 1***	Heat Exchanger Duty	Btu/hr	*	
Code Stamp	***Yes***	Heat Exchanger Area	ft^2	*	
NB Registration	***Yes***	ΔT (LMTD/Corrected LMTD)	°F	*	*

Thermal/Hydraulic Data

		Shell Side		Tube Side	
Fluid Name		***Steam***		***Cooling Water***	
Fluid Quantities: Total	lbm/hr	•		*	
Condensable Vapor (In/Out)		*	*	•	*
Liquid		*	*	•	*
Noncondensable		•	*	*	*
Temperature (In/Out)	°F	*	*	*	•
Specific Gravity		•	•	*	*
Viscosity	cP	•	*	*	*
Molecular Weight, Vapor		*	*	*	*
Molecular Weight, Noncondensable		*	*	*	*
Specific Heat	Btu/lbm-°F	•	*	*	*
Thermal Conductivity	Btu/hr-ft-°F	•	•	*	•
Latent Heat	Btu/lbm @ °F	•		*	
Inlet pressure	psia	*		•	
Tube side Velocity	ft/s	*		*	
Pressure Drop (Actual)	psi	*		*	
Fouling Resistance (Min)	$hr\text{-}ft^2\text{-}°F/Btu$	*		*	

Contents of this document are Dangerous Waste Permit Affecting

Please note that source, special nuclear and byproduct materials, as defined in the Atomic Energy Act of 1954 (AEA), are regulated at the U.S. Department of Energy (DOE) facilities exclusively by DOE acting pursuant to its AEA authority. DOE asserts, that pursuant to the AEA, it has sole and exclusive responsibility and authority to regulate source, special nuclear, and byproduct materials at DOE-owned nuclear facilities. Information contained herein on radionuclides is provided for process description purposes only.

GERALD RUSSEL CHIARAMONTE
STATE OF WASHINGTON
028043
REGISTERED
PROFESSIONAL ENGINEER

9-14-04

EXPIRES. 11/9/ 2004

This bound document contains a total of 2 sheets

REV	DATE	REASON FOR REVISION	PREPARER	CHECKER	REVIEWER	APPROVER
0	9/14/04	Issued for Permitting Use		K.R.Sadler Jr.		

BECHTEL	**MECHANICAL DATA SHEET** **SHELL AND TUBE HEAT EXCHANGER**	***Plant Item No.*** ***24590-PTF-ME-CNP-HX-00002*** ***Data Sheet No.*** ***24590-PTF-MED-CNP-P0003***

Mechanical Data

		Shell Side		*Tube Side*	
Design Pressure (Max/Min)	psig	***50****	***Full vacuum****	***100****	***Full vacuum****
Design Temperature (Max/Min)	°F	***250****	***40****	***125****	***40****
Corrosion Allowance	inch	***0.04***		***0.04***	
Erosion Allowance	inch	*		*	
Shell OD / ID	inch	*		Overall Dimensions (H x W x L) inch	*
Total No. of Tubes		*		Tube OD inch	*

Material Data

Shell	***SA 240 304******	Shell Cover	***SA 240 304******
Channel/Bonnet	***SA 240 304******	Channel Cover	***SA 240 304******
Tube	***SA 269 304******	Floating Head Cover	***SA240 304******
Stationary Tube Sheet	***SA 240 304******	Floating Tube Sheet	***N/A***
Shell Side Gaskets	***N/A***	Tube Side Gaskets	*
Partition Seals	*	Baffles/Supports	*
Insulation	***N/A***	Forgings (Shell side)	***SA 182 F304******
Bolting	***SA194 Grade 8 / SA 193 Grade B8***	Forgings (Channel)	***SA 182 F304******

Construction Data *(To be determined by the supplier when not specified by the buyer)*

Cross Baffle Type	*	% Baffle Cut (Dia.)	*	Spacing (c/c) inch	*
Bypass Seal Arrangement	*	Longitudinal Seal Type	*	Expansion Joint Type	*
Inlet Nozzle ρV^2	*	Bundle Entrance ρV^2	*	Bundle Exit ρV^2	*
Tube Support Type	*	U-bend Support Type	*	Weight of Bundle lbf	*
Operating Weight lbf	*	Full of Water lbf	*	Weight of Shell lbf	*

Notes

**** To be determined by Seller***

******Maximum carbon content of 0.030% for all welded components***

MECHANICAL DATA SHEET

SHELL AND TUBE HEAT EXCHANGER

Plant Item No.
24590-PTF-ME-CNP-HX-00004

Data Sheet No.
24590-PTF-MED-CNP-P0004

R10395950

Project:	**RPP-WTP**	Description:	**Cesium Evaporator After-Condenser**
Project No:	**24590**	P&ID:	**24590-PTF-M6-CNP-P0010**
Site:	**Hanford**	Process Data Sht:	**24590-PTF-M5D-CNP-00001**
Process flow diagram:	**24590-PTF-M5-V17T-P0014**	Manufacturer Name	•

General Data

Quality Level	**QL-1**	TEMA (Class/Type)	**B**	*
Seismic Category	**SC-I**	Flow Type (Counter current, etc)	*	
Design Code	**ASME VIII, Div 1**	Heat Exchanger Duty Btu/hr	*	
Code Stamp	**Yes**	Heat Exchanger Area ft^2	*	
NB Registration	**Yes**	ΔT (LMTD/Corrected LMTD) °F	*	*

ISSUED BY RPP-WTP PDC

Thermal/Hydraulic Data

	Shell Side		Tube Side	
Fluid Name	**Steam**		**Cooling Water**	
Fluid Quantities: Total lbm/hr	•		*	
Condensable Vapor (In/Out)	*	•	*	*
Liquid	*	*	•	*
Noncondensable	*	•	•	*
Temperature (In/Out) °F	*	•	•	•
Specific Gravity	*	*	*	•
Viscosity cP	*	*	*	*
Molecular Weight, Vapor	*	*	*	*
Molecular Weight, Noncondensable	*	*	*	*
Specific Heat Btu/lbm-°F	*	*	*	*
Thermal Conductivity Btu/hr-ft-°F	*	*	*	•
Latent Heat Btu/lbm @ °F	*		*	
Inlet pressure psia	**ATM**		*	
Tube side Velocity ft/s	*		*	
Pressure Drop (Actual) psi	*		*	
Fouling Resistance (Min) hr-ft^2-°F/Btu	*		*	

Contents of this document are Dangerous Waste Permit Affecting.

Please note that source, special nuclear and byproduct materials, as defined in the Atomic Energy Act of 1954 (AEA), are regulated at the U.S. Department of Energy (DOE) facilities exclusively by DOE acting pursuant to its AEA authority. DOE asserts, that pursuant to the AEA, it has sole and exclusive responsibility and authority to regulate source, special nuclear, and byproduct materials at DOE-owned nuclear facilities. Information contained herein on radionuclides is provided for process description purposes only.

GERALD RUSSEL CHARAMONTE
STATE OF WASHINGTON
026043
REGISTERED
PROFESSIONAL ENGINEER

9/30/04

EXPIRES: 11/9/ 2004

This bound document contains a total of 2 sheets

REV	DATE	REASON FOR REVISION	PREPARER	CHECKER	REVIEWER	APPROVER
1	9/29/04	Issued for Permitting Use		K.R. Sadler Jr.	S.Crow	
0	9/14/04	Issued for Permitting Use	J.Hickman	K.Sadler	S.Crow	R.Voke

BECHTEL	**MECHANICAL DATA SHEET** **SHELL AND TUBE HEAT EXCHANGER**	***Plant Item No.*** ***24590-PTF-ME-CNP-HX-00004*** ***Data Sheet No.*** ***24590-PTF-MED-CNP-P0004***

Mechanical Data

		Shell Side		Tube Side	
Design Pressure (Max/Min)	psig	***100****	***Full vacuum****	***100****	***Full vacuum****
Design Temperature (Max/Min)	°F	***378****	***40****	***125****	***40****
Corrosion Allowance	inch	***0.04***		***0.04***	
Erosion Allowance	inch	***N/A***		***N/A***	
Shell OD / ID	inch	*		Overall Dimensions (H x W x L) inch	*
Total No. of Tubes		*		Tube OD inch	*

Material Data

Shell	***SA 240 304*****	Shell Cover	***SA 240 304*****
Channel/Bonnet	***SA 240 304*****	Channel Cover	***SA 240 304*****
Tube	***A 269 304*****	Floating Head Cover	***SA 240 304*****
Stationary Tube Sheet	***SA 240 304*****	Floating Tube Sheet	***N/A***
Shell Side Gaskets	***N/A***	Tube Side Gaskets	*
Partition Seals	*	Baffles/Supports	*
Insulation	***N/A***	Forgings (Shell side)	***SA 182 F304*****
Bolting	***SA 194 Grade 8 / SA 193 Grade B8***	Forgings (Channel)	***SA 182 F304*****

Construction Data *(To be determined by the supplier when not specified by the buyer)*

Cross Baffle Type	*	% Baffle Cut (Dia.)	*	Spacing (c/c) inch	*
Bypass Seal Arrangement	*	Longitudinal Seal Type	*	Expansion Joint Type	*
Inlet Nozzle ρV^2	*	Bundle Entrance ρV^2	*	Bundle Exit ρV^2	*
Tube Support Type	*	U-bend Support Type	*	Weight of Bundle lbf	*
Operating Weight lbf	*	Full of Water lbf	*	Weight of Shell lbf	*

Notes

- ***To be determined by Seller***

****Maximum carbon content of 0.030% for all welded components***

MECHANICAL DATA SHEET

SHELL AND TUBE HEAT EXCHANGER

Plant Item No.
24590-PTF-MB-CNP-HX-00001

Data Sheet No.
24590-PTF-MED-CNP-P0005

Project:	***RPP-WTP***	Description:	***Cesium Evaporator Concentrate Reboiler***
Project No:	***24590***	P&ID:	***24590-PTF-M6-CNP-P0008***
Site:	***Hanford***	Process Data Sht:	***24590-PTF-M5D-CNP-00001***
Process flow diagram:	***24590-PTF-M5-V17T-P0014***	Manufacturer Name	•

R10377794

General Data

Quality Level	***QL-1***	TEMA (Class/Type)	***B****	* ISSUED BY RPP-WTP PDC
Seismic Category	***SC-I***	Flow Type (Counter current, etc)	•	
Design Code	***ASME VIII, Div 1***	Heat Exchanger Duty Btu/hr	•	
Code Stamp	***Yes***	Heat Exchanger Area ft^2	*	
NB Registration	***Yes***	ΔT (LMTD/Corrected LMTD) °F	*	*

Thermal/Hydraulic Data

	Shell Side		Tube Side	
Fluid Name	***Steam***		***Waste Feed Recirculation***	
Fluid Quantities: Total lbm/hr	•		•	
Condensable Vapor (In/Out)	*	•	•	*
Liquid	*	*	•	*
Noncondensable	*	•	*	•
Temperature (In/Out) °F	*	*	*	•
Specific Gravity	*	•	*	*
Viscosity cP	*	*	•	*
Molecular Weight, Vapor	*	*	*	•
Molecular Weight, Noncondensable	*	•	*	•
Specific Heat Btu/lbm-°F	•	*	•	*
Thermal Conductivity Btu/hr-ft-°F	*	*	*	•
Latent Heat Btu/lbm @ °F	*		*	
Inlet pressure psia	*		*	
Tube side Velocity ft/s	*		*	
Pressure Drop (Actual) psi	*		***10****	
Fouling Resistance (Min) hr-ft^2-°F/Btu	*		*	

Contents of this document are Dangerous Waste Permit Affecting.

Please note that source, special nuclear and byproduct materials, as defined in the Atomic Energy Act of 1954 (AEA), are regulated at the U S. Department of Energy (DOE) facilities exclusively by DOE acting pursuant to its AEA authority. DOE asserts, that pursuant to the AEA, it has sole and exclusive responsibility and authority to regulate source, special nuclear, and byproduct materials at DOE-owned nuclear facilities. Information contained herein on radionuclides is provided for process description purposes only.

GERALD RUSSEL CHIARAMONTE
STATE OF WASHINGTON
028043
REGISTERED
PROFESSIONAL ENGINEER

9-14-04

EXPIRES. 11/9/ 2004

This bound document contains a total of 2 sheets

REV	DATE	REASON FOR REVISION	PREPARER	CHECKER	REVIEWER	APPROVER
0	9/14/04	Issued for Permitting Use		K.R.Sadler Jr.		

BECHTEL	**MECHANICAL DATA SHEET** **SHELL AND TUBE HEAT EXCHANGER**	***Plant Item No.*** ***24590-PTF-MB-CNP-HX-00001*** ***Data Sheet No.*** ***24590-PTF-MED-CNP-P0005***

Mechanical Data

		Shell Side		*Tube Side*	
Design Pressure (Max/Min)	psig	***50•***	***Full vacuum****	***50****	***Full vacuum****
Design Temperature (Max/Min)	°F	***325•***	***40****	***250•***	***40****
Corrosion Allowance	inch	***0.04***		***0.04***	
Erosion Allowance	inch	*		*	
Shell OD/ID	inch	*		Overall Dimensions (H x W x L) inch	•
Total No. of Tubes		•		Tube OD inch	• inch

Material Data

Shell	***SA 240 316****	Shell Cover	***SB575 (Hastelloy) UNS N06022*****
Channel/Bonnet	***SB575 (Hastelloy) UNS N06022*****	Channel Cover	***N/A***
Tube	***SB622 (Hastelloy) UNS N06022*****	Floating Head Cover	***N/A***
Stationary Tube Sheet	***SB575 (Hastelloy) UNS N06022*****	Floating Tube Sheet	***N/A***
Shell Side Gaskets	***N/A***	Tube Side Gaskets	***N/A***
Partition	***SB575 (Hastelloy) UNS N06022*****	Baffles/Supports	***SA 240 316****
Insulation	***Heat Conservation***	Forgings (Shell side)	***SA 240 316****
Bolting	***N/A***	Forgings (Channel)	***SB564 (Hastelloy) UNS N06022*****

Construction Data *(To be determined by the supplier when not specified by the buyer)*

Cross Baffle Type	*	% Baffle Cut (Dia.)	*	Spacing (c/c) inch	*
Bypass Seal Arrangement	*	Longitudinal Seal Type	*	Expansion Joint Type	*
Inlet Nozzle ρV^2	*	Bundle Entrance ρV^2	•	Bundle Exit ρV^2	•
Tube Support Type	*	U-bend Support Type	*	Weight of Bundle lbf	•
Operating Weight lbf	*	Full of Water lbf	*	Weight of Shell lbf	•

Notes

**** To be determined by Seller***
***** To be verified by Seller***
******Maximum carbon content of 0.030% for all welded components***
Notes: (1) All welds are continuous to avoid crevices, weld surface finish is descaled as laid.
(2) All welded construction on both tube and shell sides
(3) Tubes welded to the tubesheets with full strength welds.

MECHANICAL DATA SHEET

SHELL AND TUBE HEAT EXCHANGER

Plant Item No.
24590-PTF-ME-CNP-HX-00003

Data Sheet No.
24590-PTF-MED-CNP-P0010

Project:	***RPP-WTP***	Description:	***Cesium Evaporator Inter-Condenser***
Project No:	***24590***	P&ID:	***24590-PTF-M6-CNP-P0010***
Site:	***Hanford***	Process Data Sht:	***24590-PTF-M5D-CNP-00001***
Process flow diagram:	***24590-PTF-M5-V17T-P0014***	Manufacturer Name	*

R10377792

ISSUED BY
* RPP-WTP PDC

General Data

Quality Level	***QL-1***	TEMA (Class/Type)	***B***	
Seismic Category	***SC-I***	Flow Type (Counter current, etc)	*	
Design Code	***ASME VIII, Div 1***	Heat Exchanger Duty Btu/hr	*	
Code Stamp	***Yes***	Heat Exchanger Area ft^2	•	
NB Registration	***Yes***	ΔT (LMTD/Corrected LMTD) °F	*	*

Thermal/Hydraulic Data

	Shell Side		Tube Side	
Fluid Name	***Steam***		***Cooling Water***	
Fluid Quantities: Total lbm/hr	*		*	
Condensable Vapor (In/Out)	*	*	*	•
Liquid	*	*	•	*
Noncondensable	*	*	*	•
Temperature (In/Out) °F	*	*	*	•
Specific Gravity	•	*	*	*
Viscosity cP	*	*	*	*
Molecular Weight, Vapor	*	*	*	*
Molecular Weight, Noncondensable	*	*	•	•
Specific Heat Btu/lbm-°F	*	•	*	•
Thermal Conductivity Btu/hr-ft-°F	*	*	*	*
Latent Heat Btu/lbm @ °F	*		*	
Inlet pressure psia	•		*	
Tube side Velocity ft/s	*		*	
Pressure Drop (Actual) psi	*		*	
Fouling Resistance (Min) hr-ft^2-°F/Btu	*		*	

Contents of this document are Dangerous Waste Permit Affecting.

Please note that source, special nuclear and byproduct materials, as defined in the Atomic Energy Act of 1954 (AEA), are regulated at the U.S. Department of Energy (DOE) facilities exclusively by DOE acting pursuant to its AEA authority. DOE asserts, that pursuant to the AEA, it has sole and exclusive responsibility and authority to regulate source, special nuclear, and byproduct materials at DOE-owned nuclear facilities. Information contained herein on radionuclides is provided for process description purposes only.

GERALD RUSSEL CHIARAMONTE
STATE OF WASHINGTON
028043
REGISTERED
PROFESSIONAL ENGINEER

9-14-04

EXPIRES. 11/9/2004

This bound document contains a total of 2 sheets

REV	DATE	REASON FOR REVISION	PREPARER	CHECKER	REVIEWER	APPROVER
0	9/14/04	Issued for Permitting Use		K.R. Sadler Jr.		

BECHTEL	**MECHANICAL DATA SHEET** **SHELL AND TUBE HEAT EXCHANGER**	***Plant Item No.*** ***24590-PTF-ME-CNP-HX-00003*** ***Data Sheet No.*** ***24590-PTF-MED-CNP-P0010***

Mechanical Data

		Shell Side		Tube Side	
Design Pressure (Max/Min)	psig	***100****	***Full vacuum****	***100****	***Full vacuum****
Design Temperature (Max/Min)	°F	***378****	***40****	***125****	***40****
Corrosion Allowance	inch	***0.04***		***0.04***	
Erosion Allowance	inch	*		*	
Shell OD / ID	inch	•		Overall Dimensions (H x W x L) inch	•
Total No. of Tubes		•		Tube OD inch	*

Material Data

Shell	***SA 240 304****	Shell Cover	***SA 240 304****
Channel/Bonnet	***SA 240 304****	Channel Cover	***SA 240 304****
Tube	***A 269 304****	Floating Head Cover	***SA 240 304****
Stationary Tube Sheet	***SA 240 304****	Floating Tube Sheet	***N/A***
Shell Side Gaskets	***N/A***	Tube Side Gaskets	*
Partition Seals	*	Baffles/Supports	*
Insulation	***N/A***	Forgings (Shell side)	***SA 182 F304****
Bolting	***SA 194 Grade 8 / SA 193 Grade B8***	Forgings (Channel)	***SA 182 F304****

Construction Data *(To be determined by the supplier when not specified by the buyer)*

Cross Baffle Type	*	% Baffle Cut (Dia.)	•	Spacing (c/c) inch	*
Bypass Seal Arrangement	•	Longitudinal Seal Type	*	Expansion Joint Type	*
Inlet Nozzle ρV^2	*	Bundle Entrance ρV^2	•	Bundle Exit ρV^2	•
Tube Support Type	*	U-bend Support Type	•	Weight of Bundle lbf	•
Operating Weight lbf	•	Full of Water lbf	*	Weight of Shell lbf	•

Notes

**** To be determined by Seller***

******Maximum carbon content of 0.030% for all welded components***

MECHANICAL DATA SHEET

SHELL AND TUBE HEAT EXCHANGER

Plant Item No.
24590-PTF-ME-FEP-COND-00001A

Data Sheet No.
24590-PTF-MED-FEP-P0003

R10275202

Project:	***RPP-WTP***	Description:	***Waste Feed Evaporator Primary Condenser***
Project No:	***24590***	P&ID:	***24590-PTF-M6-FEP-P0003***
Site:	***Hanford***	Process Data Sht:	***24590-PTF-MEC-FEP-00001***
Process flow diagram:	***24590-PTF-M5-V17T-P0004002***	Manufacturer Name	***Framatome ANP /Northwest Copper Works, Inc.***

General Data

Quality Level	***QL-1 (note 2)***	TEMA (Class/Type)	***B***	*
Seismic Category	***SC-I***	Flow Type (Counter current, etc)	*	
Design Code	***ASME VIII, Div 1***	Heat Exchanger Duty Btu/hr	*	
Code Stamp	***Yes***	Heat Exchanger Area ft^2	***4270****	
NB Registration	***Yes***	ΔT (LMTD/Corrected LMTD) °F	*	*

ISSUED BY RPP-WTP PDC 3/17/04 INIT DATE

Thermal/Hydraulic Data

	Shell Side		Tube Side	
Fluid Name	***Steam***		***Cooling Water***	
Fluid Quantities: Total lbm/hr	***3968****		***891,278****	
Condensable Vapor (In/Out)	*	*	*	*
Liquid	*	*	*	*
Noncondensable	*	*	*	*
Temperature (In/Out) °F	*	*	***75***	***93***
Specific Gravity	*	*	*	*
Viscosity cP	*	*	*	*
Molecular Weight, Vapor	*	*	*	*
Molecular Weight, Noncondensable	*	*	*	*
Specific Heat Btu/lbm-°F	*	*	*	*
Thermal Conductivity Btu/hr-ft-°F	*	*	*	*
Latent Heat Btu/lbm @ °F	*		*	
Inlet pressure psia	***1.3****		***59.7***	
Tube side Velocity ft/s	*		*	
Pressure Drop (Actual) psi	*		*	
Fouling Resistance (Min) $hr\text{-}ft^2\text{-}°F/Btu$	***0.0015****		***0.0044 ****	

Note: Please note that source, special nuclear and byproduct materials, as defined in the Atomic Energy Act of 1954 (AEA), are regulated at the U.S. Department of Energy (DOE) facilities exclusively by DOE acting pursuant to its AEA authority. DOE asserts, that pursuant to the AEA, it has sole and exclusive responsibility and authority to regulate source, special nuclear, and byproduct materials at DOE-owned nuclear facilities. Information contained herein on radionuclides is provided for process description purposes only.

MARK HOFFMANN STATE OF WASHINGTON 00030952 REGISTERED PROFESSIONAL ENGINEER 3/19/04

EXPIRES 12/10/04

This Bound Document Contains a Total of 2 Pages.

Rev	Description	By	Checked	Approved	Date
0	Issued for Permitting Use	E. Le	D. Reinemann	J. Julyk	3/17/04

BECHTEL	**MECHANICAL DATA SHEET** **SHELL AND TUBE HEAT EXCHANGER**	***Plant Item No.*** ***24590-PTF-ME-FEP-COND-00001A*** ***Data Sheet No.*** ***24590-PTF-MED-FEP-P0003 Rev. 0***

Mechanical Data

		Shell Side		*Tube Side*	
Design Pressure (Max/Min)	psig	***50***	***Full vacuum***	***100***	***Full vacuum***
Design Temperature (Max/Min)	°F	***250***	***49***	***250***	***49***
Corrosion Allowance	inch	***0.04***		***N/A***	
Erosion Allowance	inch	***N/A***		***N/A***	
Shell OD / ID	inch	***50*****		Overall Dimensions (H x W x L) inch	***50x50x276*****
Total No. of Tubes		***1020*****		Tube OD inch	***1*****

Material Data

Shell	***SA 240 316L SS***	Shell Cover	***SA 240 316L SS***
Channel/Bonnet	***SA 240 316L SS***	Channel Cover	***SA 240 316L SS***
Tube	***SA 269 316L SS (0.065" thick)***	Floating Head Cover	***N/A***
Stationary Tube Sheet	***316L SS***	Floating Tube Sheet	***N/A***
Shell Side Gaskets	***N/A***	Tube Side Gaskets	***316 SS spiral wound***
Partition Seals	***N/A***	Baffles/Supports	***SA 240 316L***
Insulation	***N/A***	Forgings (Shell side)	***SA 182 F316L***
Bolting	***SA193B8M***	Forgings (Channel)	***SA 182 F316L***

Construction Data *(To be determined by the supplier when not specified by the buyer)*

Cross Baffle Type	*	% Baffle Cut (Dia.)	*	Spacing (c/c) inch	*
Bypass Seal Arrangement	•	Longitudinal Seal Type	*	Expansion Joint Type	•
Inlet Nozzle ρV^2	*	Bundle Entrance ρV^2	•	Bundle Exit ρV^2	*
Tube Support Type	*	U-bend Support Type	*	Weight of Bundle lbf	*
Operating Weight lbf	*	Full of Water lbf	•	Weight of Shell lbf	*

Notes

• To be determined by Seller
***** To be verified by Seller***

Notes: (1) All welds are continuous to avoid crevices, weld surface finish is descaled as laid.
(2) All welded construction on process side only.
(3) Tube to tubesheet joint shall be strength welded.

MECHANICAL DATA SHEET

SHELL AND TUBE HEAT EXCHANGER

Plant Item No.
24590-PTF-ME-FEP-COND-00001B

Data Sheet No.
24590-PTF-MED-FEP-P0004

R10275203

Project:	**RPP-WTP**	Description:	**Waste Feed Evaporator Primary Condenser**
Project No:	**24590**	P&ID:	**24590-PTF-M6-FEP-P0005**
Site:	**Hanford**	Process Data Sht:	**24590-PTF-MEC-FEP-00001**
Process flow diagram:	**24590-PTF-M5-V17T-P0004002**	Manufacturer Name	**Framatome ANP /Northwest Copper Works, Inc.**

ISSUED BY RPP WTP PDC
INIT DATE

General Data

Quality Level	**QL-1 (note 2)**	TEMA (Class/Type)	**B**	
Seismic Category	**SC-I**	Flow Type (Counter current, etc)	*	
Design Code	**ASME VIII, Div 1**	Heat Exchanger Duty Btu/hr	*	
Code Stamp	**Yes**	Heat Exchanger Area ft^2	**4270****	
NB Registration	**Yes**	ΔT (LMTD/Corrected LMTD) °F	*	*

Thermal/Hydraulic Data

	Shell Side		Tube Side	
Fluid Name	**Steam**		**Cooling Water**	
Fluid Quantities: Total lbm/hr	**3968****		**891,278***	
Condensable Vapor (In/Out)	*	*	*	*
Liquid	*	*	*	*
Noncondensable	*	*	*	*
Temperature (In/Out) °F	*	*	**75**	**93**
Specific Gravity	*	*	*	*
Viscosity cP	*	*	*	*
Molecular Weight, Vapor	*	*	*	*
Molecular Weight, Noncondensable	*	*	*	*
Specific Heat Btu/lbm-°F	*	*	*	*
Thermal Conductivity Btu/hr-ft-°F	*	*	*	*
Latent Heat Btu/lbm @ °F	*		*	
Inlet pressure psia	**1.3****		**59.7**	
Tube side Velocity ft/s	*		*	
Pressure Drop (Actual) psi	*		*	
Fouling Resistance (Min) $hr\text{-}ft^2\text{-}°F/Btu$	**0.0015****		**0.0044 ****	

Note: Please note that source, special nuclear and byproduct materials, as defined in the Atomic Energy Act of 1954 (AEA), are regulated at the U.S. Department of Energy (DOE) facilities exclusively by DOE acting pursuant to its AEA authority. DOE asserts, that pursuant to the AEA, it has sole and exclusive responsibility and authority to regulate source, special nuclear, and byproduct materials at DOE-owned nuclear facilities. Information contained herein on radionuclides is provided for process description purposes only.

MARK W. HOFFMANN
STATE OF WASHINGTON
0030952
REGISTERED PROFESSIONAL ENGINEER
3/19/04
EXPIRES 12/10/04

This Bound Document Contains a Total of 2 Pages.

Rev	Description	By	Checked	Approved	Date
0	Issued for Permitting Use	E. Le	D. Reinemann	J. Julyk	3/17/04

BECHTEL	**MECHANICAL DATA SHEET** **SHELL AND TUBE HEAT EXCHANGER**	***Plant Item No.*** **24590-PTF-ME-FEP-COND-00001B** ***Data Sheet No.*** **24590-PTF-MED-FEP-P0004**

Mechanical Data

		Shell Side		Tube Side	
Design Pressure (Max/Min)	psig	***50***	***Full vacuum***	***100***	***Full vacuum***
Design Temperature (Max/Min)	°F	***250***	***49***	***250***	***49***
Corrosion Allowance	inch	***0.04***		***N/A***	
Erosion Allowance	inch	***N/A***		***N/A***	
Shell OD / ID	inch	***50*****		Overall Dimensions (H x W x L) inch	**50x50x276****
Total No. of Tubes		**1020****		Tube OD inch	**1****

Material Data

Shell	***SA 240 316L SS***	Shell Cover	***SA 240 316L SS***
Channel/Bonnet	***SA 240 316L SS***	Channel Cover	***SA 240 316L SS***
Tube	***SA 269 316L SS (0.065" thick)***	Floating Head Cover	***N/A***
Stationary Tube Sheet	***316L SS***	Floating Tube Sheet	***N/A***
Shell Side Gaskets	***N/A***	Tube Side Gaskets	***316 SS spiral wound***
Partition Seals	***N/A***	Baffles/Supports	***SA 240 316L***
Insulation	***N/A***	Forgings (Shell side)	***SA 182 F316L***
Bolting	***SA193B8M***	Forgings (Channel)	***SA 182 F316L***

Construction Data *(To be determined by the supplier when not specified by the buyer)*

Cross Baffle Type	*	% Baffle Cut (Dia.)	*	Spacing (c/c) inch	*
Bypass Seal Arrangement	*	Longitudinal Seal Type	*	Expansion Joint Type	*
Inlet Nozzle ρV^2	*	Bundle Entrance ρV^2	*	Bundle Exit ρV^2	*
Tube Support Type	*	U-bend Support Type	*	Weight of Bundle lbf	*
Operating Weight lbf	*	Full of Water lbf	*	Weight of Shell lbf	*

Notes

**** To be determined by Seller***
***** To be verified by Seller***

Notes: (1) All welds are continuous to avoid crevices, weld surface finish is descaled as laid.
(2) All welded construction on process side only.
(3) Tube to tubesheet joint shall be strength welded.

MECHANICAL DATA SHEET

SHELL AND TUBE HEAT EXCHANGER

Plant Item No.
24590-PTF-ME-FEP-COND-00002A

Data Sheet No.
24590-PTF-MED-FEP-P0005

R10275204

Project:	***RPP-WTP***	Description:	***Waste Feed Evaporator Inter-Condenser***
Project No:	***24590***	P&ID:	***24590-PTF-M6-FEP-P0003***
Site:	***Hanford***	Process Data Sht:	***N/A***
Process flow diagram:	***24590-PTF-M5-V17T-P0004002***	Manufacturer Name	***Framatome ANP / Northwest Copper Works, Inc.***

General Data

Quality Level	***QL-1 (note 2)***	TEMA (Class/Type)		***B***	
Seismic Category	***SC-I***	Flow Type (Counter current, etc)		*	
Design Code	***ASME VIII, Div 1***	Heat Exchanger Duty	Btu/hr	*	
Code Stamp	***Yes***	Heat Exchanger Area	ft^2	*	
NB Registration	***Yes***	ΔT (LMTD/Corrected LMTD)	°F	*	*

ISSUED BY RPP-WTP PDC 3/19/04 INIT DATE

Thermal/Hydraulic Data

		Shell Side		Tube Side	
Fluid Name		***Steam***		***Cooling Water***	
Fluid Quantities: Total	lbm/hr	*		*	
Condensable Vapor (In/Out)		*	*	*	*
Liquid		*	*	*	*
Noncondensable		*	*	*	*
Temperature (In/Out)	°F	*	*	***75***	*
Specific Gravity		*	*	*	*
Viscosity	cP	*	*	*	*
Molecular Weight, Vapor		*	*	*	*
Molecular Weight, Noncondensable		*	*	*	*
Specific Heat	Btu/lbm-°F	*	*	*	*
Thermal Conductivity	Btu/hr-ft-°F	*	*	*	*
Latent Heat	Btu/lbm @ °F	*		*	
Inlet pressure	psia	*		***59.7***	
Tube side Velocity	ft/s	•		*	
Pressure Drop (Actual)	psi	*		*	
Fouling Resistance (Min)	$hr\text{-}ft^2\text{-}°F/Btu$	***0.0015****		***0.0044****	

Note: Please note that source, special nuclear and byproduct materials, as defined in the Atomic Energy Act of 1954 (AEA), are regulated at the U.S. Department of Energy (DOE) facilities exclusively by DOE acting pursuant to its AEA authority. DOE asserts, that pursuant to the AEA, it has sole and exclusive responsibility and authority to regulate source, special nuclear, and byproduct materials at DOE-owned nuclear facilities. Information contained herein on radionuclides is provided for process description purposes only.

MARK W. HOFFMANN
STATE OF WASHINGTON
0030952
REGISTERED
PROFESSIONAL ENGINEER
3/19/04

EXPIRES 12/10/04

This Bound Document Contains a Total of 2 Pages.

Rev	Description	By	Checked	Approved	Date
0	Issued for Permitting Use	E. Le	D Reinemann	J. Julyk	3/17/04

MECHANICAL DATA SHEET

SHELL AND TUBE HEAT EXCHANGER

Plant Item No.
24590-PTF-ME-FEP-COND-00002A

Data Sheet No.
24590-PTF-MED-FEP-P0005

Mechanical Data

		Shell Side		Tube Side	
Design Pressure (Max/Min)	psig	**50**	**Full vacuum**	**100**	**Full vacuum**
Design Temperature (Max/Min)	°F	**250**	**49**	**250**	**49**
Corrosion Allowance	inch	**0.04**		**N/A**	
Erosion Allowance	inch	**N/A**		**N/A**	
Shell OD / ID	inch	*		Overall Dimensions (H x W x L) inch	*
Total No. of Tubes		*		Tube OD inch	*

Material Data

Shell	**SA 240 316L SS**	Shell Cover	**SA 240 316L SS**
Channel/Bonnet	**SA 240 316L SS**	Channel Cover	**SA 240 316L SS**
Tube	**SA 269 316L SS**	Floating Head Cover	**N/A**
Stationary Tube Sheet	**316L SS**	Floating Tube Sheet	**N/A**
Shell Side Gaskets	**N/A**	Tube Side Gaskets	**316 SS spiral wound**
Partition Seals	**N/A**	Baffles/Supports	**SA 240 316L**
Insulation	**N/A**	Forgings (Shell side)	**SA 182 F316L**
Bolting	**SA193B8M**	Forgings (Channel)	**SA 182 F316L**

Construction Data *(To be determined by the supplier when not specified by the buyer)*

Cross Baffle Type	*	% Baffle Cut (Dia.)	*	Spacing (c/c) inch	*
Bypass Seal Arrangement	*	Longitudinal Seal Type	*	Expansion Joint Type	*
Inlet Nozzle ρV^2	*	Bundle Entrance ρV^2	*	Bundle Exit ρV^2	*
Tube Support Type	*	U-bend Support Type	*	Weight of Bundle lbf	*
Operating Weight lbf	*	Full of Water lbf	*	Weight of Shell lbf	*

Notes

**** To be determined by Seller***
***** To be verified by Seller***

Notes: ***(1) All welds are continuous to avoid crevices, weld surface finish is descaled as laid.***
(2) All welded construction on process side only
(3) Tube to tubesheet joint shall be strength welded.

MECHANICAL DATA SHEET

SHELL AND TUBE HEAT EXCHANGER

Plant Item No.
24590-PTF-ME-FEP-COND-00002B

Data Sheet No.
24590-PTF-MED-FEP-P0006

R10275205

Project:	***RPP-WTP***	Description:	***Waste Feed Evaporator Inter-Condenser***
Project No:	***24590***	P&ID:	***24590-PTF-M6-FEP-P0005***
Site:	***Hanford***	Process Data Sht:	***N/A***
Process flow diagram:	***24590-PTF-M5-V17T-P0004002***	Manufacturer Name	***Framatome ANP / Northwest Copper Works, Inc.***

General Data

Quality Level	***QL-1 (note 2)***	TEMA (Class/Type)	***B***	*
Seismic Category	***SC-I***	Flow Type (Counter current, etc)	*	
Design Code	***ASME VIII, Div 1***	Heat Exchanger Duty Btu/hr	*	
Code Stamp	***Yes***	Heat Exchanger Area ft^2	*	
NB Registration	***Yes***	ΔT (LMTD/Corrected LMTD) °F	*	*

ISSUED BY RPP-WTP PDC
INIT. DATE

Thermal/Hydraulic Data

		Shell Side		Tube Side	
Fluid Name		***Steam***		***Cooling Water***	
Fluid Quantities: Total	lbm/hr	*		*	
Condensable Vapor (In/Out)		•	*	•	*
Liquid		•	•	*	*
Noncondensable		*	*	*	•
Temperature (In/Out)	°F	*	•	***75***	*
Specific Gravity		*	*	*	•
Viscosity	cP	*	*	*	•
Molecular Weight, Vapor		*	•	*	•
Molecular Weight, Noncondensable		*	•	*	*
Specific Heat	Btu/lbm-°F	•	*	*	*
Thermal Conductivity	Btu/hr-ft-°F	•	*	•	*
Latent Heat	Btu/lbm @ °F	*		*	
Inlet pressure	psia	*		***59.7***	
Tube side Velocity	ft/s	•		*	
Pressure Drop (Actual)	psi	*		*	
Fouling Resistance (Min)	$hr\text{-}ft^2\text{-}°F/Btu$	***0.0015****		***0.0044****	

Note: Please note that source, special nuclear and byproduct materials, as defined in the Atomic Energy Act of 1954 (AEA), are regulated at the U.S. Department of Energy (DOE) facilities exclusively by DOE acting pursuant to its AEA authority. DOE asserts, that pursuant to the AEA, it has sole and exclusive responsibility and authority to regulate source, special nuclear, and byproduct materials at DOE-owned nuclear facilities. Information contained herein on radionuclides is provided for process description purposes only.

MARK W. HOFFMANN
STATE OF WASHINGTON
0030952
REGISTERED
PROFESSIONAL ENGINEER
3/19/04

EXPIRES 12/10/04

This Bound Document Contains a Total of 2 Pages.

Rev	Description	By	Checked	Approved	Date
0	Issued for Permitting Use	E. Le	D. Reinemann	J. Julyk	3/17/04

BECHTEL	**MECHANICAL DATA SHEET** **SHELL AND TUBE HEAT EXCHANGER**	***Plant Item No.*** **24590-PTF-ME-FEP-COND-00002B** ***Data Sheet No.*** **24590-PTF-MED-FEP-P0006**

Mechanical Data

		Shell Side		Tube Side	
Design Pressure (Max/Min)	psig	***50***	***Full vacuum***	***100***	***Full vacuum***
Design Temperature (Max/Min)	°F	***250***	***49***	***250***	***49***
Corrosion Allowance	inch	***0.04***		***N/A***	
Erosion Allowance	inch	***N/A***		***N/A***	
Shell OD / ID	inch	*		Overall Dimensions (H x W x L) inch	*
Total No. of Tubes		*		Tube OD inch	*

Material Data

Shell	***SA 240 316L SS***	Shell Cover	***SA 240 316L SS***
Channel/Bonnet	***SA 240 316L SS***	Channel Cover	***SA 240 316L SS***
Tube	***SA 269 316L SS***	Floating Head Cover	***N/A***
Stationary Tube Sheet	***316L SS***	Floating Tube Sheet	***N/A***
Shell Side Gaskets	***N/A***	Tube Side Gaskets	***316 SS spiral wound***
Partition Seals	***N/A***	Baffles/Supports	***SA 240 316L***
Insulation	***N/A***	Forgings (Shell side)	***SA 182 F316L***
Bolting	***SA193B8M***	Forgings (Channel)	***SA 182 F316L***

Construction Data *(To be determined by the supplier when not specified by the buyer)*

Cross Baffle Type	*	% Baffle Cut (Dia.)	*	Spacing (c/c) inch	*
Bypass Seal Arrangement	*	Longitudinal Seal Type	*	Expansion Joint Type	*
Inlet Nozzle ρV^2	*	Bundle Entrance ρV^2	*	Bundle Exit ρV^2	*
Tube Support Type	*	U-bend Support Type	*	Weight of Bundle lbf	*
Operating Weight lbf	*	Full of Water lbf	*	Weight of Shell lbf	*

Notes

**** To be determined by Seller***
***** To be verified by Seller***

Notes: ***(1) All welds are continuous to avoid crevices, weld surface finish is descaled as laid.***
(2) All welded construction on process side only
(3) Tube to tubesheet joint shall be strength welded.

MECHANICAL DATA SHEET

SHELL AND TUBE HEAT EXCHANGER

Plant Item No.
24590-PTF-ME-FEP-COND-00003A

Data Sheet No.
24590-PTF-MED-FEP-P0007

R10275206

Project:	***RPP-WTP***	Description:	***Waste Feed Evaporator After-Condenser***
Project No:	***24590***	P&ID:	***24590-PTF-M6-FEP-P0003***
Site:	***Hanford***	Process Data Sht:	***N/A***
Process flow diagram:	***24590-PTF-M5-V17T-P0004002***	Manufacturer Name	***Framatome ANP / Northwest Copper Works, Inc.***

General Data

Quality Level	***QL-1 (note 2)***	TEMA (Class/Type)	***B***	*
Seismic Category	***SC-I***	Flow Type (Counter current, etc)	*	
Design Code	***ASME VIII, Div 1***	Heat Exchanger Duty Btu/hr	*	
Code Stamp	***Yes***	Heat Exchanger Area ft^2	*	
NB Registration	***Yes***	ΔT (LMTD/Corrected LMTD) °F	*	

ISSUED BY RPP-WTP PDC 3/19/04 INIT DATE

Thermal/Hydraulic Data

		Shell Side		Tube Side	
Fluid Name		***Steam***		***Cooling Water***	
Fluid Quantities: Total	lbm/hr	*		*	
Condensable Vapor (In/Out)		*	*	*	*
Liquid		*	*	*	*
Noncondensable		*	*	*	*
Temperature (In/Out)	°F	*	*	***75***	*
Specific Gravity		*	*	*	*
Viscosity	cP	*	*	*	*
Molecular Weight, Vapor		*	*	*	*
Molecular Weight, Noncondensable		*	*	*	*
Specific Heat	Btu/lbm-°F	*	*	*	*
Thermal Conductivity	Btu/hr-ft-°F	*	*	*	*
Latent Heat	Btu/lbm @ °F	*		*	
Inlet pressure	psia	*		***59.7***	
Tube side Velocity	ft/s	*		*	
Pressure Drop (Actual)	psi	*		*	
Fouling Resistance (Min)	$hr\text{-}ft^2\text{-}°F/Btu$	***0.0015****		***0.0044****	

Note: Please note that source, special nuclear and byproduct materials, as defined in the Atomic Energy Act of 1954 (AEA), are regulated at the U.S. Department of Energy (DOE) facilities exclusively by DOE acting pursuant to its AEA authority. DOE asserts, that pursuant to the AEA, it has sole and exclusive responsibility and authority to regulate source, special nuclear, and byproduct materials at DOE-owned nuclear facilities. Information contained herein on radionuclides is provided for process description purposes only.

MARK W. HOFFMANN
STATE OF WASHINGTON
0030952
REGISTERED
PROFESSIONAL ENGINEER
3/19/04
EXPIRES 12/10/04

This Bound Document Contains a Total of 2 Pages.

Rev	Description	By	Checked	Approved	Date
0	Issued for Permitting Use	E. Le	D. Reinemann	J. Julyk	3/17/04

BECHTEL	**MECHANICAL DATA SHEET** **SHELL AND TUBE HEAT EXCHANGER**	***Plant Item No.*** ***24590-PTF-ME-FEP-COND-00003A*** ***Data Sheet No.*** ***24590-PTF-MED-FEP-00007***

Mechanical Data

		Shell Side		*Tube Side*	
Design Pressure (Max/Min)	psig	***50***	***Full vacuum***	***100***	***Full vacuum***
Design Temperature (Max/Min)	°F	***250***	***49***	***250***	***49***
Corrosion Allowance	inch	***0.04***		***N/A***	
Erosion Allowance	inch	***N/A***		***N/A***	
Shell OD / ID	inch	*		Overall Dimensions (H x W x L) inch	*
Total No. of Tubes		•		Tube OD inch	•

Material Data

Shell	***SA 240 316L SS***	Shell Cover	***SA 240 316L SS***
Channel/Bonnet	***SA 240 316L SS***	Channel Cover	***SA 240 316L SS***
Tube	***SA 269 316L SS***	Floating Head Cover	***N/A***
Stationary Tube Sheet	***316L SS***	Floating Tube Sheet	***N/A***
Shell Side Gaskets	***N/A***	Tube Side Gaskets	***316L SS spiral wound***
Partition Seals	***N/A***	Baffles/Supports	***SA 240 316L***
Insulation	***N/A***	Forgings (Shell side)	***SA 182 F316L***
Bolting	***SA193B8M***	Forgings (Channel)	***SA 182 F316L***

Construction Data *(To be determined by the seller when not specified by the buyer)*

Cross Baffle Type	*	% Baffle Cut (Dia.)	*	Spacing (c/c) inch	*
Bypass Seal Arrangement	*	Longitudinal Seal Type	*	Expansion Joint Type	*
Inlet Nozzle ρV^2	*	Bundle Entrance ρV^2	•	Bundle Exit ρV^2	*
Tube Support Type	•	U-bend Support Type	*	Weight of Bundle lbf	*
Operating Weight lbf	•	Full of Water lbf	*	Weight of Shell lbf	*

Notes

• To be determined by Seller
***** To be verified by Seller***

Notes: (1) All welds are continuous to avoid crevices, weld surface finish is descaled as laid.
(2) All welded construction on process side only.
(3) Tube to tubesheet joint shall be strength welded.

MECHANICAL DATA SHEET

SHELL AND TUBE HEAT EXCHANGER

Plant Item No.
24590-PTF-ME-FEP-COND-00003B

Data Sheet No.
24590-PTF-MED-FEP-P0008

R10275207

Project:	**RPP-WTP**	Description:	**Waste Feed Evaporator After-Condenser**
Project No:	**24590**	P&ID:	**24590-PTF-M6-FEP-P0005**
Site:	**Hanford**	Process Data Sht:	**N/A**
Process flow diagram:	**24590-PTF-M5-V17T-P0004002**	Manufacturer Name	**Framatome ANP / Northwest Copper Works, Inc.**

General Data

Quality Level	**QL-1 (note 2)**	TEMA (Class/Type)	**B**	*
Seismic Category	**SC-I**	Flow Type (Counter current, etc)	*	
Design Code	**ASME VIII, Div 1**	Heat Exchanger Duty Btu/hr	*	
Code Stamp	**Yes**	Heat Exchanger Area ft^2	*	
NB Registration	**Yes**	ΔT (LMTD/Corrected LMTD) °F	*	*

ISSUED BY
RPP-WTP PDC
JB 3/19/04
INIT DATE

Thermal/Hydraulic Data

	Shell Side		Tube Side	
Fluid Name	**Steam**		**Cooling Water**	
Fluid Quantities: Total lbm/hr	*		*	
Condensable Vapor (In/Out)	*	*	*	*
Liquid	*	*	*	*
Noncondensable	*	*	*	*
Temperature (In/Out) °F	*	*	**75**	*
Specific Gravity	*	*	*	*
Viscosity cP	*	*	*	*
Molecular Weight, Vapor	*	*	*	*
Molecular Weight, Noncondensable	*	*	*	*
Specific Heat Btu/lbm-°F	*	*	*	*
Thermal Conductivity Btu/hr-ft-°F	*	*	*	*
Latent Heat Btu/lbm @ °F	*		*	
Inlet pressure psia	*		**59.7**	
Tube side Velocity ft/s	*		*	
Pressure Drop (Actual) psi	*		*	
Fouling Resistance (Min) $hr\text{-}ft^2\text{-}°F/Btu$	**0.0015****		**0.0044****	

Note: Please note that source, special nuclear and byproduct materials, as defined in the Atomic Energy Act of 1954 (AEA), are regulated at the U.S. Department of Energy (DOE) facilities exclusively by DOE acting pursuant to its AEA authority. DOE asserts, that pursuant to the AEA, it has sole and exclusive responsibility and authority to regulate source, special nuclear, and byproduct materials at DOE-owned nuclear facilities. Information contained herein on radionuclides is provided for process description purposes only.

MARK W. HOFFMANN
STATE OF WASHINGTON
0030952
REGISTERED
PROFESSIONAL ENGINEER
3/19/04

EXPIRES 12/10/04

This Bound Document Contains a Total of 2 Pages.

Rev	Description	By	Checked	Approved	Date
0	Issued for Permitting Use	E. Le	D. Reinemann	J. Julyk	3/17/04

BECHTEL	**MECHANICAL DATA SHEET** **SHELL AND TUBE HEAT EXCHANGER**	***Plant Item No.*** ***24590-PTF-ME-FEP-COND-00003B*** ***Data Sheet No.*** ***24590-PTF-MED-FEP-00008***

Mechanical Data

		Shell Side		*Tube Side*	
Design Pressure (Max/Min)	psig	***50***	***Full vacuum***	***100***	***Full vacuum***
Design Temperature (Max/Min)	°F	***250***	***49***	***250***	***49***
Corrosion Allowance	inch	***0.04***		***N/A***	
Erosion Allowance	inch	***N/A***		***N/A***	
Shell OD / ID	inch	*		Overall Dimensions (H x W x L) inch	•
Total No. of Tubes		•		Tube OD inch	*

Material Data

Shell	***SA 240 316L SS***	Shell Cover	***SA 240 316L SS***
Channel/Bonnet	***SA 240 316L SS***	Channel Cover	***SA 240 316L SS***
Tube	***SA 269 316L SS***	Floating Head Cover	***N/A***
Stationary Tube Sheet	***316L SS***	Floating Tube Sheet	***N/A***
Shell Side Gaskets	***N/A***	Tube Side Gaskets	***316L SS spiral wound***
Partition Seals	***N/A***	Baffles/Supports	***SA 240 316L***
Insulation	***N/A***	Forgings (Shell side)	***SA 182 F316L***
Bolting	***SA193B8M***	Forgings (Channel)	***SA 182 F316L***

Construction Data *(To be determined by the seller when not specified by the buyer)*

Cross Baffle Type	•	% Baffle Cut (Dia.)	*	Spacing (c/c) inch	*
Bypass Seal Arrangement	*	Longitudinal Seal Type	*	Expansion Joint Type	*
Inlet Nozzle ρV^2	*	Bundle Entrance ρV^2	*	Bundle Exit ρV^2	•
Tube Support Type	*	U-bend Support Type	*	Weight of Bundle lbf	•
Operating Weight lbf	*	Full of Water lbf	*	Weight of Shell lbf	*

Notes

**** To be determined by Seller***
***** To be verified by Seller***

Notes: (1) All welds are continuous to avoid crevices, weld surface finish is descaled as laid.
(2) All welded construction on process side only.
(3) Tube to tubesheet joint shall be strength welded.

MECHANICAL DATA SHEET

SHELL AND TUBE HEAT EXCHANGER

Plant Item No.
24590-PTF-MB-FEP-RBLR-00001A

Data Sheet No.
24590-PTF-MED-FEP-P0009

R10275208

Project:	***RPP-WTP***	Description:	***Waste Feed Evaporator Reboiler***
Project No.	***24590***	P&ID:	***24590-PTF-M6-FEP-P0002***
Site:	***Hanford***	Process Data Sht:	***24590-PTF-MEC-FEP-00001***
Process flow diagram:	***24590-PTF-M5-V17T-P0004002***	Manufacturer Name	***Framatome ANP / Northwest Copper Works, Inc.***

General Data

ISSUED BY RPP-WTP PDC INIT DATE

Quality Level	***QL-1***	TEMA (Class/Type)		***B***	
Seismic Category	***SC-II***	Flow Type (Counter current, etc)		*	
Design Code	***ASME VIII, Div 1***	Heat Exchanger Duty	Btu/hr	***18,350,000****	
Code Stamp	***Yes***	Heat Exchanger Area	ft^2	***2582****	
NB Registration	***Yes***	ΔT (LMTD/Corrected LMTD)	°F	*	*

Thermal/Hydraulic Data

		Shell Side		Tube Side	
Fluid Name		***Steam***		***Waste Feed Recirculation***	
Fluid Quantities: Total	lbm/hr	***17,012****		*	
Condensable Vapor (In/Out)		*	•	*	•
Liquid		*	*	*	*
Noncondensable		*	*	*	*
Temperature (In/Out)	°F	*	*	*	*
Specific Gravity		*	*	*	***1.50***
Viscosity	cP	*	*	*	***12***
Molecular Weight, Vapor		*	*	*	*
Molecular Weight, Noncondensable		*	*	*	*
Specific Heat	Btu/lbm-°F	*	*	*	*
Thermal Conductivity	Btu/hr-ft-°F	*	*	*	*
Latent Heat	Btu/lbm @ °F	*		*	
Inlet pressure	psia	***7.88****		*	
Tube side Velocity	ft/s	*		*	
Pressure Drop (Actual)	psi	*		*	
Fouling Resistance (Min)	$hr\text{-}ft^2\text{-}°F/Btu$	***0.0015****		***0.007 ****	

Note: Please note that source, special nuclear and byproduct materials, as defined in the Atomic Energy Act of 1954 (AEA), are regulated at the U.S. Department of Energy (DOE) facilities exclusively by DOE acting pursuant to its AEA authority. DOE asserts, that pursuant to the AEA, it has sole and exclusive responsibility and authority to regulate source, special nuclear, and byproduct materials at DOE-owned nuclear facilities. Information contained herein on radionuclides is provided for process description purposes only.

MARK W. HOFFMANN
STATE OF WASHINGTON
0030952
REGISTERED
PROFESSIONAL ENGINEER

EXPIRES 12/10/04

This Bound Document Contains a Total of 2 Pages.

Rev	Description	By	Checked	Approved	Date
0	Issued for Permitting Use	E. Le	D. Reinemann	J Julyk	3/17/04

MECHANICAL DATA SHEET

SHELL AND TUBE HEAT EXCHANGER

Plant Item No.
24590-PTF-MB-FEP-RBLR-00001A

Data Sheet No.
24590-PTF-MED-FEP-P0009

Mechanical Data

		Shell Side		Tube Side	
Design Pressure (Max/Min)	psig	**50**	**Full vacuum**	**50**	**Full vacuum**
Design Temperature (Max/Min)	°F	**311**	**49**	**311**	**49**
Corrosion Allowance	inch	**N/A**		**0.04**	
Erosion Allowance	inch	**N/A**		**N/A**	
Shell OD/ID	inch	**72****		Overall Dimensions (H x W x L) inch	**72x72x180*•**
Total No. of Tubes		**822***		Tube OD inch	**1.5 **** inch

Material Data

Shell	**SA 240 304L SS**	Shell Cover	**SA 240 304L SS**
Channel/Bonnet	**Alloy G-30**	Channel Cover	**Alloy G-30**
Tube	**Alloy G-30 (seamless)**	Floating Head Cover	**N/A**
Stationary Tube Sheet	**Alloy G-30**	Floating Tube Sheet	**N/A**
Shell Side Gaskets	**N/A**	Tube Side Gaskets	**N/A**
Partition Seals	**N/A**	Baffles/Supports	**SA 240 304**
Insulation	**N/A**	Forgings (Shell side)	**SA 182 F304 (max. carbon 0.030%)**
Bolting	**N/A**	Forgings (Channel)	**Alloy G-30**

Construction Data *(To be determined by the supplier when not specified by the buyer)*

Cross Baffle Type	*	% Baffle Cut (Dia.)	*	Spacing (c/c) inch	•
Bypass Seal Arrangement	•	Longitudinal Seal Type	•	Expansion Joint Type	*
Inlet Nozzle ρV^2	*	Bundle Entrance ρV^2	•	Bundle Exit ρV^2	•
Tube Support Type	*	U-bend Support Type	*	Weight of Bundle lbf	*
Operating Weight lbf	*	Full of Water lbf	*	Weight of Shell lbf	•

Notes

**** To be determined by Seller***
***** To be verified by Seller***

Notes: (1) All welds are continuous to avoid crevices, weld surface finish is descaled as laid.
(2) All welded construction on both tube and shell sides
(3) Tubes welded to the tubesheets with full strength welds.

MECHANICAL DATA SHEET

SHELL AND TUBE HEAT EXCHANGER

Plant Item No.
24590-PTF-MB-FEP-RBLR-00001B

Data Sheet No.
24590-PTF-MED-FEP-P0010

R10275209

Project:	***RPP-WTP***	Description:	***Waste Feed Evaporator Reboiler***
Project No:	***24590***	P&ID:	***24590-PTF-M6-FEP-P0004***
Site:	***Hanford***	Process Data Sht:	***24590-PTF-MEC-FEP-00001***
Process flow diagram:	***24590-PTF-M5-V17T-P0004002***	Manufacturer Name	***Framatome ANP / Northwest Copper Works, Inc.***

ISSUED BY RPP-WTP POC
INIT 3/19/04 DATE

General Data

Quality Level	***QL-1***	TEMA (Class/Type)		***B***	
Seismic Category	***SC-II***	Flow Type (Counter current, etc)		*	
Design Code	***ASME VIII, Div 1***	Heat Exchanger Duty	Btu/hr	***18,350,000****	
Code Stamp	***Yes***	Heat Exchanger Area	ft^2	***2582****	
NB Registration	***Yes***	ΔT (LMTD/Corrected LMTD)	°F	*	*

Thermal/Hydraulic Data

		Shell Side		Tube Side	
Fluid Name		***Steam***		***Waste Feed Recirculation***	
Fluid Quantities: Total	lbm/hr	***17,012****		•	
Condensable Vapor (In/Out)		*	•	*	*
Liquid		*	•	*	*
Noncondensable		*	•	*	*
Temperature (In/Out)	°F	•	*	*	*
Specific Gravity		*	•	•	***1.50***
Viscosity	cP	•	*	*	***12***
Molecular Weight, Vapor		•	*	*	*
Molecular Weight, Noncondensable		*	*	*	*
Specific Heat	Btu/lbm-°F	*	•	*	*
Thermal Conductivity	Btu/hr-ft-°F	•	*	*	•
Latent Heat	Btu/lbm @ °F	•		*	
Inlet pressure	psia	***7.88****		*	
Tube side Velocity	ft/s	•		*	
Pressure Drop (Actual)	psi	*		*	
Fouling Resistance (Min)	$hr\text{-}ft^2\text{-}°F/Btu$	***0.0015****		***0.007 ****	

Note: Please note that source, special nuclear and byproduct materials, as defined in the Atomic Energy Act of 1954 (AEA), are regulated at the U.S. Department of Energy (DOE) facilities exclusively by DOE acting pursuant to its AEA authority. DOE asserts, that pursuant to the AEA, it has sole and exclusive responsibility and authority to regulate source, special nuclear, and byproduct materials at DOE-owned nuclear facilities. Information contained herein on radionuclides is provided for process description purposes only.

MARK W. HOFFMANN
STATE OF WASHINGTON
0030952
REGISTERED
PROFESSIONAL ENGINEER
3/19/04

EXPIRES 12/10/04

This Bound Document Contains a Total of 2 Pages.

Rev	Description	By	Checked	Approved	Date
0	Issued for Permitting Use	E. Le	D. Reinemann	J. Julyk	3/17/04

BECHTEL	**MECHANICAL DATA SHEET** **SHELL AND TUBE HEAT EXCHANGER**	***Plant Item No.*** ***24590-PTF-MB-FEP-RBLR-00001B*** ***Data Sheet No.*** ***24590-PTF-MED-FEP-P0010***

Mechanical Data

		Shell Side		Tube Side	
Design Pressure (Max/Min)	psig	***50***	***Full vacuum***	***50***	***Full vacuum***
Design Temperature (Max/Min)	°F	***311***	***49***	***311***	***49***
Corrosion Allowance	inch	***N/A***		***0.04***	
Erosion Allowance	inch	***N/A***		***N/A***	
Shell OD/ID	inch	***72*****		Overall Dimensions (H x W x L) inch	***72x72x180*****
Total No. of Tubes		***822*****		Tube OD inch	**1.5** ** inch

Material Data

Shell	***SA 240 304L SS***	Shell Cover	***SA 240 304L SS***
Channel/Bonnet	***Alloy G-30***	Channel Cover	***Alloy G-30***
Tube	***Alloy G-30 (seamless)***	Floating Head Cover	***N/A***
Stationary Tube Sheet	***Alloy G-30***	Floating Tube Sheet	***N/A***
Shell Side Gaskets	***N/A***	Tube Side Gaskets	***N/A***
Partition Seals	***N/A***	Baffles/Supports	***SA 240 304***
Insulation	***N/A***	Forgings (Shell side)	***SA 182 F304 (max. carbon 0.030%)***
Bolting	***N/A***	Forgings (Channel)	***Alloy G-30***

Construction Data *(To be determined by the supplier when not specified by the buyer)*

Cross Baffle Type	*	% Baffle Cut (Dia.)	*	Spacing (c/c) inch	*
Bypass Seal Arrangement	*	Longitudinal Seal Type	*	Expansion Joint Type	*
Inlet Nozzle ρV^2	*	Bundle Entrance ρV^2	*	Bundle Exit ρV^2	*
Tube Support Type	*	U-bend Support Type	*	Weight of Bundle lbf	*
Operating Weight lbf	*	Full of Water lbf	*	Weight of Shell lbf	*

Notes

**** To be determined by Seller***
***** To be verified by Seller***

Notes: (1) All welds are continuous to avoid crevices, weld surface finish is descaled as laid.
(2) All welded construction on both tube and shell sides
(3) Tubes welded to the tubesheets with full strength welds.

MECHANICAL DATA SHEET

SHELL AND TUBE HEAT EXCHANGER

Plant Item No.
24590-PTF-ME-TLP-COND-00001

Data Sheet No.
24590-PTF-MED-TLP-P0001

R10274733

Project:	***RPP-WTP***	Description:	***Treated LAW Evaporator Primary Condenser***
Project No:	***24590***	P&ID:	***24590-PTF-M6-TLP-P0002***
Site:	***Hanford***	Process Data Sht:	***24590-PTF-MVC-TLP-00002***
Process flow diagram:	***24590-PTF-M5-V17T-P0005***	Manufacturer Name	***Framatome ANP /Northwest Copper Works, Inc.***

General Data

Quality Level	***CM (note 2)***	TEMA (Class/Type)	***B***	*
Seismic Category	***SC-I***	Flow Type (Counter current, etc)	*	
Design Code	***ASME VIII, Div 1***	Heat Exchanger Duty Btu/hr	*	
Code Stamp	***Yes***	Heat Exchanger Area ft^2	***4270****	
NB Registration	***Yes***	ΔT (LMTD/Corrected LMTD) °F	*	*

Thermal/Hydraulic Data

	Shell Side		Tube Side	
Fluid Name	***Steam***		***Cooling Water***	
Fluid Quantities: Total lbm/hr	***3968****		***891,278****	
Condensable Vapor (In/Out)	*	*	*	*
Liquid	*	*	*	*
Noncondensable	*	*	*	*
Temperature (In/Out) °F	*	*	***75***	***93***
Specific Gravity	*	*	*	*
Viscosity cP	*	*	*	*
Molecular Weight, Vapor	*	*	*	*
Molecular Weight, Noncondensable	*	*	*	*
Specific Heat Btu/lbm-°F	*	*	*	*
Thermal Conductivity Btu/hr-ft-°F	*	*	*	*
Latent Heat Btu/lbm @ °F	*		*	
Inlet pressure psia	***1.0****		***59.7***	
Tube side Velocity ft/s	*		*	
Pressure Drop (Actual) psi	*		*	
Fouling Resistance (Min) $hr\text{-}ft^2\text{-}°F/Btu$	***0.0015****		***0.0044 ****	

Note: Please note that source, special nuclear and byproduct materials, as defined in the Atomic Energy Act of 1954 (AEA), are regulated at the U.S. Department of Energy (DOE) facilities exclusively by DOE acting pursuant to its AEA authority. DOE asserts, that pursuant to the AEA, it has sole and exclusive responsibility and authority to regulate source, special nuclear, and byproduct materials at DOE-owned nuclear facilities. Information contained herein on radionuclides is provided for process description purposes only.

MARK W. HOFFMANN
STATE OF WASHINGTON
C030952
REGISTERED PROFESSIONAL ENGINEER
3/24/04

EXPIRES 12/10/04

ISSUED BY
RPP-WTP PDC
JC 3/25/04
INIT DATE

This Bound Document Contains a Total of 2 Pages.

REV	REASON FOR REVISION	PREPARED	CHECKED	APPROVED	DATE
0	Issued for Permitting Use	E. Le	D. Reinemann	J. Julyk	3/24/04

MECHANICAL DATA SHEET

SHELL AND TUBE HEAT EXCHANGER

Plant Item No.
24590-PTF-ME-TLP-COND-00001

Data Sheet No.
24590-PTF-MED-TLP-P0001

Mechanical Data

		Shell Side		Tube Side	
Design Pressure (Max/Min)	psig	**50**	**Full vacuum**	**100**	**Full vacuum**
Design Temperature (Max/Min)	°F	**250**	**49**	**250**	**49**
Corrosion Allowance	inch	**0.04**		**N/A**	
Erosion Allowance	inch	**N/A**		**N/A**	
Shell OD / ID	inch	**50****		Overall Dimensions (H x W x L) inch	**50x50x276****
Total No. of Tubes		**1020****		Tube OD inch	**1****

Material Data

Shell	**SA 240 316L SS**	Shell Cover	**SA 240 316L SS**
Channel/Bonnet	**SA 240 316L SS**	Channel Cover	**SA 240 316L SS**
Tube	**SA 269 316L SS (0.065" thick)**	Floating Head Cover	**N/A**
Stationary Tube Sheet	**316 SS**	Floating Tube Sheet	**N/A**
Shell Side Gaskets	**N/A**	Tube Side Gaskets	**316 SS spiral wound**
Partition Seals	**N/A**	Baffles/Supports	**SA 240 316L**
Insulation	**N/A**	Forgings (Shell side)	**SA 182 F316L**
Bolting	**SA193B8M**	Forgings (Channel)	**SA 182 F316L**

Construction Data *(To be determined by the supplier when not specified by the buyer)*

Cross Baffle Type	*	% Baffle Cut (Dia.)	*	Spacing (c/c) inch	*
Bypass Seal Arrangement	*	Longitudinal Seal Type	*	Expansion Joint Type	*
Inlet Nozzle ρV^2	*	Bundle Entrance ρV^2	*	Bundle Exit ρV^2	*
Tube Support Type	*	U-bend Support Type	*	Weight of Bundle lbf	*
Operating Weight lbf	*	Full of Water lbf	*	Weight of Shell lbf	*

Notes

**** To be determined by Seller***
***** To be verified by Seller***

Notes: (1) All welds are continuous to avoid crevices, weld surface finish is descaled as laid.
(2) All welded construction on process side only.
(3) Tube to tubesheet joint shall be strength welded.

MECHANICAL DATA SHEET

SHELL AND TUBE HEAT EXCHANGER

Plant Item No.
24590-PTF-ME-TLP-COND-00002

Data Sheet No.
24590-PTF-MED-TLP-P0002

R10274734

Project:	***RPP-WTP***	Description:	***Treated LAW Evaporator Inter-Condenser***
Project No:	***24590***	P&ID:	***24590-PTF-M6-TLP-P0002***
Site:	***Hanford***	Process Data Sht:	***N/A***
Process flow diagram:	***24590-PTF-M5-V17T-P0005***	Manufacturer Name	***Framatome ANP / Northwest Copper Works, Inc.***

General Data

Quality Level	***CM (note 2)***	TEMA (Class/Type)	***B***	*
Seismic Category	***SC-III***	Flow Type (Counter current, etc)	*	
Design Code	***ASME VIII, Div 1***	Heat Exchanger Duty Btu/hr	*	
Code Stamp	***Yes***	Heat Exchanger Area ft^2	*	
NB Registration	***Yes***	ΔT (LMTD/Corrected LMTD) °F	*	*

Thermal/Hydraulic Data

	Shell Side		Tube Side	
Fluid Name	***Steam***		***Cooling Water***	
Fluid Quantities: Total lbm/hr	*		*	
Condensable Vapor (In/Out)	*	*	*	*
Liquid	*	*	*	*
Noncondensable	*	*	*	*
Temperature (In/Out) °F	*	*	***75***	*
Specific Gravity	*	*	*	*
Viscosity cP	*	*	*	*
Molecular Weight, Vapor	*	*	*	*
Molecular Weight, Noncondensable	*	*	*	*
Specific Heat Btu/lbm-°F	*	*	*	*
Thermal Conductivity Btu/hr-ft-°F	*	*	*	*
Latent Heat Btu/lbm @ °F	*		*	
Inlet pressure psia	*		***59.7***	
Tube side Velocity ft/s	*		*	
Pressure Drop (Actual) psi	*		*	
Fouling Resistance (Min) $hr\text{-}ft^2\text{-}°F/Btu$	***0.0015****		***0.0044****	

Note: Please note that source, special nuclear and byproduct materials, as defined in the Atomic Energy Act of 1954 (AEA), are regulated at the U.S. Department of Energy (DOE) facilities exclusively by DOE acting pursuant to its AEA authority. DOE asserts, that pursuant to the AEA, it has sole and exclusive responsibility and authority to regulate source, special nuclear, and byproduct materials at DOE-owned nuclear facilities. Information contained herein on radionuclides is provided for process description purposes only.

ISSUED BY
RPP-WTP PDC
JC 3/25/04
INIT DATE

MARK W. HOFFMANN
STATE OF WASHINGTON
0030952
REGISTERED
PROFESSIONAL ENGINEER
3/24/04
EXPIRES 12/10/04

This Bound Document Contains a Total of 2 Pages.

REV	REASON FOR REVISION	PREPARED	CHECKED	APPROVED	DATE
0	Issued for Permitting Use	E. Le	D. Reinemann	J. Julyk	3/24/04

MECHANICAL DATA SHEET

SHELL AND TUBE HEAT EXCHANGER

Plant Item No.
24590-PTF-ME-TLP-COND-00002

Data Sheet No.
24590-PTF-MED-TLP-P0002

Mechanical Data

		Shell Side		Tube Side	
Design Pressure (Max/Min)	psig	**50**	**Full vacuum**	**100**	**Full vacuum**
Design Temperature (Max/Min)	°F	**250**	**49**	**250**	**49**
Corrosion Allowance	inch	**0.04**		**N/A**	
Erosion Allowance	inch	**N/A**		**N/A**	
Shell OD / ID	inch	*		Overall Dimensions (H x W x L) inch	*
Total No. of Tubes		*		Tube OD inch	*

Material Data

Shell	**SA 240 316L SS**	Shell Cover	**SA 240 316L SS**
Channel/Bonnet	**SA 240 316L SS**	Channel Cover	**SA 240 316L SS**
Tube	**SA 269 316L SS**	Floating Head Cover	**N/A**
Stationary Tube Sheet	**316L SS**	Floating Tube Sheet	**N/A**
Shell Side Gaskets	**N/A**	Tube Side Gaskets	**316L SS spiral wound**
Partition Seals	**N/A**	Baffles/Supports	**SA 240 316L**
Insulation	**N/A**	Forgings (Shell side)	**SA 182 F316L**
Bolting	**SA193B8M**	Forgings (Channel)	**SA 182 F316L**

Construction Data *(To be determined by the seller when not specified by the buyer)*

Cross Baffle Type	*	% Baffle Cut (Dia.)	*	Spacing (c/c) inch	*
Bypass Seal Arrangement	*	Longitudinal Seal Type	*	Expansion Joint Type	*
Inlet Nozzle ρV^2	*	Bundle Entrance ρV^2	*	Bundle Exit ρV^2	*
Tube Support Type	*	U-bend Support Type	*	Weight of Bundle lbf	*
Operating Weight lbf	*	Full of Water lbf	*	Weight of Shell lbf	*

Notes

**** To be determined by Seller***
***** To be verified by Seller***

Notes: (1) All welds are continuous to avoid crevices, weld surface finish is descaled as laid.
(2) All welded construction on process side only.
(3) Tube to tubesheet joint shall be strength welded.

MECHANICAL DATA SHEET

SHELL AND TUBE HEAT EXCHANGER

Plant Item No.
24590-PTF-ME-TLP-COND-00003

Data Sheet No.
24590-PTF-MED-TLP-P0003

R10274735

Project:	***RPP-WTP***	Description:	***Treated LAW Evaporator After-Condenser***
Project No:	***24590***	P&ID:	***24590-PTF-M6-TLP-P0002***
Site:	***Hanford***	Process Calculation	***N/A***
Process flow diagram:	***24590-PTF-M5-V17T-P0005***	Manufacturer Name	***Framatome ANP / Northwest Copper Works, Inc.***

General Data

Quality Level	***CM (note 2)***	TEMA (Class/Type)	***B***	*
Seismic Category	***SC-III***	Flow Type (Counter current, etc)	*	
Design Code	***ASME VIII, Div 1***	Heat Exchanger Duty Btu/hr	*	
Code Stamp	***Yes***	Heat Exchanger Area ft^2	*	
NB Registration	***Yes***	ΔT (LMTD/Corrected LMTD) °F	*	*

Thermal/Hydraulic Data

		Shell Side		Tube Side	
Fluid Name		***Steam***		***Cooling Water***	
Fluid Quantities: Total	lbm/hr	*		*	
Condensable Vapor (In/Out)		*	*	*	*
Liquid		*	*	*	*
Noncondensable		*	*	*	*
Temperature (In/Out)	°F	*	*	***75***	*
Specific Gravity		*	*	*	*
Viscosity	cP	*	*	*	*
Molecular Weight, Vapor		*	*	*	*
Molecular Weight, Noncondensable		*	*	*	*
Specific Heat	Btu/lbm-°F	*	*	*	*
Thermal Conductivity	Btu/hr-ft-°F	*	*	*	*
Latent Heat	Btu/lbm @ °F	*		*	
Inlet pressure	psia	*		***59.7***	
Tube side Velocity	ft/s	*		*	
Pressure Drop (Actual)	psi	*		*	
Fouling Resistance (Min)	$hr\text{-}ft^2\text{-}°F/Btu$	***0.0015****		***0.0044****	

Note: Please note that source, special nuclear and byproduct materials, as defined in the Atomic Energy Act of 1954 (AEA), are regulated at the U.S. Department of Energy (DOE) facilities exclusively by DOE acting pursuant to its AEA authority. DOE asserts, that pursuant to the AEA, it has sole and exclusive responsibility and authority to regulate source, special nuclear, and byproduct materials at DOE-owned nuclear facilities. Information contained herein on radionuclides is provided for process description purposes only.

ISSUED BY
RPP-WTP PDC
JC 3/25/04
INIT DATE

MARK W. HOFFMANN
STATE OF WASHINGTON
0030952
REGISTERED
PROFESSIONAL ENGINEER
3/24/04

EXPIRES 12/10/04

This Bound Document Contains a Total of 2 Pages.

REV	REASON FOR REVISION	PREPARED	CHECKED	APPROVED	DATE
0	Issued for Permitting Use	E. Le	D. Reinemann	J. Julyk	3/24/04

MECHANICAL DATA SHEET

SHELL AND TUBE HEAT EXCHANGER

Plant Item No.
24590-PTF-ME-TLP-COND-00003

Data Sheet No.
24590-PTF-MED-TLP-P0003

Mechanical Data

		Shell Side		Tube Side	
Design Pressure (Max/Min)	psig	**50**	**Full vacuum**	**100**	**Full vacuum**
Design Temperature (Max/Min)	°F	**250**	**49**	**250**	**49**
Corrosion Allowance	inch	**0.04**		**N/A**	
Erosion Allowance	inch	**N/A**		**N/A**	
Shell OD / ID	inch	*		Overall Dimensions (H x W x L) inch	*
Total No. of Tubes		*		Tube OD inch	*

Material Data

Shell	**SA 240 316L SS**	Shell Cover	**SA 240 316L SS**
Channel/Bonnet	**SA 240 316L SS**	Channel Cover	**SA 240 316L SS**
Tube	**SA 269 316L SS**	Floating Head Cover	**N/A**
Stationary Tube Sheet	**316L SS**	Floating Tube Sheet	**N/A**
Shell Side Gaskets	**N/A**	Tube Side Gaskets	**316 SS spiral wound**
Partition Seals	**N/A**	Baffles/Supports	**SA 240 316L**
Insulation	**N/A**	Forgings (Shell side)	**SA 182 F316L**
Bolting	**SA193B8M**	Forgings (Channel)	**SA 182 F316L**

Construction Data *(To be determined by the supplier when not specified by the buyer)*

Cross Baffle Type	*	% Baffle Cut (Dia.)	*	Spacing (c/c) inch	*
Bypass Seal Arrangement	*	Longitudinal Seal Type	*	Expansion Joint Type	*
Inlet Nozzle ρV^2	*	Bundle Entrance ρV^2	*	Bundle Exit ρV^2	*
Tube Support Type	*	U-bend Support Type	*	Weight of Bundle lbf	*
Operating Weight lbf	*	Full of Water lbf	*	Weight of Shell lbf	*

Notes

**** To be determined by Seller***
***** To be verified by Seller***

Notes: ***(1) All welds are continuous to avoid crevices, weld surface finish is descaled as laid.***
(2) All welded construction on process side only
(3) Tube to tubesheet joint shall be strength welded.

MECHANICAL DATA SHEET

SHELL AND TUBE HEAT EXCHANGER

Plant Item No.
24590-PTF-MB-TLP-RBLR-00001

Data Sheet No.
24590-PTF-MED-TLP-P0004

R10274732

Project:	**RPP-WTP**	Description:	**Treated LAW Evaporator Reboiler**
Project No:	**24590**	P&ID:	**24590-PTF-M6-TLP-P0003**
Site:	**Hanford**	Process Data Sht:	**24590-PTF-MVC-TLP-00001**
Process flow diagram:	**24590-PTF-M5-V17T-P0005**	Manufacturer Name	**Framatome ANP / Northwest Copper Works, Inc.**

General Data

Quality Level	**CM**	TEMA (Class/Type)		**B**	*
Seismic Category	**SC-III**	Flow Type (Counter current, etc)		*	
Design Code	**ASME VIII, Div 1**	Heat Exchanger Duty	Btu/hr	**18,350,000****	
Code Stamp	**Yes**	Heat Exchanger Area	ft^2	**2582****	
NB Registration	**Yes**	ΔT (LMTD/Corrected LMTD)	°F	*	*

Thermal/Hydraulic Data

		Shell Side		Tube Side	
Fluid Name		**Steam**		**Waste Feed Recirculation**	
Fluid Quantities: Total	lbm/hr	**17,012****		*	
Condensable Vapor (In/Out)		*	*	*	*
Liquid		*	*	*	*
Noncondensable		*	*	*	*
Temperature (In/Out)	°F	*	*	*	*
Specific Gravity		*	*	*	**1.57**
Viscosity	cP	*	*	*	**30**
Molecular Weight, Vapor		*	*	*	*
Molecular Weight, Noncondensable		*	*	*	*
Specific Heat	Btu/lbm-°F	*	*	*	*
Thermal Conductivity	Btu/hr-ft-°F	*	*	*	*
Latent Heat	Btu/lbm @ °F	*		*	
Inlet pressure	psia	**7.88****		*	
Tube side Velocity	ft/s	*		*	
Pressure Drop (Actual)	psi	*		*	
Fouling Resistance (Min)	$hr\text{-}ft^2\text{-}°F/Btu$	**0.0015****		**0.007 ****	

Note: Please note that source, special nuclear and byproduct materials, as defined in the Atomic Energy Act of 1954 (AEA), are regulated at the U.S. Department of Energy (DOE) facilities exclusively by DOE acting pursuant to its AEA authority. DOE asserts, that pursuant to the AEA, it has sole and exclusive responsibility and authority to regulate source, special nuclear, and byproduct materials at DOE-owned nuclear facilities. Information contained herein on radionuclides is provided for process description purposes only.

ISSUED BY
RPP-WTP PDC
JC 3/25/04
INIT DATE

MARK W. HOFFMANN
STATE OF WASHINGTON
0030952
REGISTERED
PROFESSIONAL ENGINEER
3/24/04

EXPIRES 12/10/04

This Bound Document Contains a Total of 2 Pages.

REV	REASON FOR REVISION	PREPARED	CHECKED	APPROVED	DATE
0	Issued for Permitting Use	E. Le	D. Reinemann	J. Julyk	3/24/04

MECHANICAL DATA SHEET

SHELL AND TUBE HEAT EXCHANGER

Plant Item No.
24590-PTF-MB-TLP-RBLR-00001

Data Sheet No.
24590-PTF-MED-TLP-P0004

Mechanical Data

		Shell Side		Tube Side	
Design Pressure (Max/Min)	psig	**50**	**Full vacuum**	**50**	**Full vacuum**
Design Temperature (Max/Min)	°F	**311**	**49**	**311**	**49**
Corrosion Allowance	inch	**N/A**		**0.04**	
Erosion Allowance	inch	**N/A**		**N/A**	
Shell OD/ID	inch	**72****		Overall Dimensions (H x W x L) inch	**72x72x180****
Total No. of Tubes		**822****		Tube OD inch	**1.5 **** inch

Material Data

Shell	**SA 240 304L SS**	Shell Cover	**SA 240 304L SS**
Channel/Bonnet	**Alloy G-30**	Channel Cover	**Alloy G-30**
Tube	**Alloy G-30 (seamless)**	Floating Head Cover	**N/A**
Stationary Tube Sheet	**Alloy G-30**	Floating Tube Sheet	**N/A**
Shell Side Gaskets	**N/A**	Tube Side Gaskets	**N/A**
Partition Seals	**N/A**	Baffles/Supports	**SA 240 304**
Insulation	**N/A**	Forgings (Shell side)	**SA 182 F304 (max. carbon 0.030%)**
Bolting	**N/A**	Forgings (Channel)	**Alloy G-30**

Construction Data *(To be determined by the supplier when not specified by the buyer)*

Cross Baffle Type	*	% Baffle Cut (Dia.)	*	Spacing (c/c) inch	*
Bypass Seal Arrangement	*	Longitudinal Seal Type	*	Expansion Joint Type	*
Inlet Nozzle ρV^2	*	Bundle Entrance ρV^2	*	Bundle Exit ρV^2	*
Tube Support Type	*	U-bend Support Type	*	Weight of Bundle lbf	*
Operating Weight lbf	*	Full of Water lbf	*	Weight of Shell lbf	*

Notes

**** To be determined by Seller***
***** To be verified by Seller***

Notes: (1) All welds are continuous to avoid crevices, weld surface finish is descaled as laid.
(2) All welded construction on both tube and shell sides
(3) Tubes welded to the tubesheets with full strength welds.

ISSUED BY
RPP-WTP PDC

R10679762

BECHTEL

Mechanical Data Sheet:
PTF Vessel Vent Caustic Scrubber

Plant Item Number: 24590-PTF-M6-PVP-SCB-00002

Data Sheet Number: 24590-PTF-MKD-PVP-P0002, Rev 2

Project:	WTP	P&ID	24590-PTF-M6-PVP-P0017
Project No	24590	Calculation	24590-PTF-MEC-PVP-00002, Rev B / 24590-PTF-U0C-10-00010, RevB 2
Project Site	DOE Hanford	Process Data Sheet	None
Area No.	200E		
Building:	PTF	Vessel Drawing	24590-QL-POA-MKAS-00002-02-00011 2
System No.	PVP		

Service Data

Quality Level	Q Ref 1 2	Fabrication Specification	24590-WTP-3PS-MV00-TP001 & 24590-PTF-3PS-MKAS-TP001
Seismic Category	SC-II Ref 1	Design Code	ASME Section VIII Division 1
Service/Contents	Radioactive Liquid	Code Stamp	Yes
Design Specific Gravity	1.04 Ref 2 2	NB Registration	Yes
Max Operating Volume gal	2081 Ref 3 2	Wind Design	None
Total Volume gal	2296 Ref 3	Snow/Ash Design	None
Postweld Heat Treat	Not Required	Seismic Design	24590-WTP-3PS-MV00-TP002
Seismic Base Moment ft*lb	Deleted 2		24590-WTP-3PS-SS90-T0001
Environmental Qualification	All Metal 2		

Design Data

Packed Column Inside Diameter (A)	48" Ref 3 2 2	Floor to Bottom of Sump Vessel (E)	105 1/8" 2 2	Corrosion Allowance	0.04" Note3)Ref 5
Sump Vessel Inside Diameter (B)	108" Ref 3 2	Scrubber Height (F)	630 11/16" Ref 4	Minimum Design temperature for Metal °F	-20
Sump Height	83" min.	Ring Beam Height (G)	18"	Hydrostatic Test Pressure PSIG	Deleted 2
Dimension D	525 9/16" 2	Ring Beam Center-to Center Diameter (H)	108"		

		Vessel Operating	Vessel DesignRef 2	Deleted	Notes
Internal Pressure	PSIG	-1.5 2	-5/+15	Deleted	
External Pressure	PSIG	0	0	Deleted	Deleted
Temperature	°F	120	150	Deleted	

Safety Screening / Evaluation Required? If yes per 24590-WTP-GPP-SREG-002, E&NS Signature Below 2 2 Yes X No

Materials of Construction

Component	Material Ref 5	Containment	Notes
Column Top Head	SA-240 316	Primary	Notes 4 and 8
Column Shell	SA-240 316	Primary	Notes 4 and 8
Sump Vessel Top Head	SA-240 316	Primary	Notes 4 and 8
Sump Vessel Shell	SA-240 316	Primary	Notes 4 and 8
Sump Vessel Bottom Head	SA-240 316	Primary	Notes 4 and 8
Vessel Internals	SA-240 316	N/A	Notes 4, 5 and 8
Dry Packing	UNS N08367/N08926	N/A	0.012" material thickness or maximum standard thickness available
Wet Packing	UNS N08367/N08926	N/A	0.012" material thickness or maximum standard thickness available
Vessel Support	SA-240 304	N/A	Note 4
Deleted			
Pipe	SA-312 TP316	Primary (Note 6)	Notes 4 and 8
Forgings/ Bar stock	SA-182 F316	N/A	Notes 4 and 8
Gaskets	None		
Bolting	None		
Mounting Base	Note 7	N/A	18" high ring beam 2

Miscellaneous Data

Orientation	Vertical
Support Type	Skirt
Insulation Function	None
Insulation Thickness inch	None
Insulation Material	None
External Finish	Welds descaled as laid
Internal Finish	Welds ground smooth

	Dry Weight (lbs)	Dry C G (inches: X,Y,Z)	Operating Weight (lbs)	Operate C G. (inches: X,Y,Z)	Testing Weight (lbs)	Shipping Wt (lbs)
Scrubber	61,242 2	0.351, 0.694, 240.327	80,919	0.265, 0.525, 220.179	NA 2	66,242
Packed Column	18,114 2	0.000, 0.000, 412.096 2	19,137 2	0.000, 0.000, 412.641 2		
Sump Vessel	26,315 2 2	0.000, 0.000, 175.098	44,969 2	0.000, 0.000, 161.762 2		

Note: Please note that source, special nuclear and byproduct materials, as defined in the Atomic Energy Act of 1954 (AEA), are regulated at the U.S Department of Energy (DOE) facilities exclusively by DOE acting pursuant to its AEA authority. DOE asserts, that pursuant to the AEA, it has sole and exclusive responsibility and authority to regulate source, special nuclear, and byproduct materials at DOE-owned nuclear facilities. Information contained herein on radionuclides is provided for process description purposes only.

Contents of this document are Dangerous Waste Permit affecting.

BHARAT V. MAKADIA
STATE OF WASHINGTON
19363
REGISTERED
PROFESSIONAL ENGINEER
2/6/07

EXPIRES: 5/5/2008

This Bound Document Contains a total of 5 sheets

2/6/07

INCORPORATE SDCR # 24590-WTP-SDCR-M-06-00132

Rev.	Reason for Issue	Preparer	Checker	Reviewer	E&NS	Approver	Date
2	Issue for Permitting Use	C. Thompson	D. Rickettson	G. Goolsby	N/A	J. Jolyk	12/8/06
1	Issue for Permitting Use	C. Thompson	D Pease / L. Han	C. Morley	N/A	J. Jolyk	11/28/05
0	Issue for Permitting Use	C Thompson	D Pease	C. Morley	N/A	M. Hollmann	11/18/04

BECHTEL	**Mechanical Data Sheet:** **PTF Vessel Vent Caustic Scrubber**	Plant Item Number 24590-PTF-MK-PVP-SCB-00002 Data Sheet Number 24590-PTF-MKD-PVP-P0002, Rev 2

Notes

Note 1 : Deleted. 2
Note 2 : Deleted. 2
Note 3 : The corrosion allowance of 0.04" shall apply to all surfaces in contact with process fluids except for the dry and wet packings.
Note 4 : Material shall have a carbon content not to exceed 0.030%, dual certified.
Note 5 · Seller shall submit item details for customer review.
Note 6 : Nozzles are primary containment. The spare nozzle shall have a welded cap. See Note 8.
Note 7 · Ring Beam web and top flange shall be SA-240 304L, bottom flange shall be A-572 GR50.
Note 8 : All welds forming part of the primary and auxiliary containments, including the nozzle attachment welds shall be subjected to 100% volumetric examination.
Note 9 . The scrubber is located in a Black Cell. (R5 / C5 area)
Note10: Contents of this document are Dangerous Waste Permit Affecting 2
Note11:References are included for BNI use only and will not be shown with revision triangles - only data being changed will require revision triangles. 2

References (For Internal Use Only) 2

Reference 1	P&ID-PTF Pretreatment Vessel Vent Process System Caustic Scrubber to HEMES, 24590-PTF-M6-PVP-00017, Rev 2
Reference 2	PTF Vessel Cyclic Datasheet inputs, 24590-PTF-MVC-10-00003, Rev B
Reference 3	Data Sheet Page 1 Seller Data, 3/02/05, 24590-QL-POA-MKAS-00002-03-00001, Rev 00E
Reference 4	PTF Vessel Vent Caustic Scrubber Bechtel Job No 24590-PTI shop No C-2600-NQA 1 Assembly & Sections, 24590-QL-POA-MKAS-00002-02-00011, Rev 00D
Reference 5	Corrosion Evaluation, 24590-PTF-N1D-PVP-00001, Rev 6

Notes for Outline Profile of the PTF Vessel Vent Caustic Scrubber

Note 1: See "Design Data" in sheet 1 of 5 for the bounding dimensions of the scrubber.

Note 2: The maximum sump batch volume shall be determined based on given dimensions:
- Seller to provide the batch volume and total time of operation per batch based on runback, maximum expected condensate and caustic makeup.

Note 3: The minimum allowance from maximum sump operating volume to overflow shall satisfy the larger of all three conditions below:
- minimum 2" liquid depth
- at least 2% of maximum operating liquid depth
- change in liquid level equivalent to 5 minutes of maximum liquid accumulation in the scrubber sump

Note 4: Nozzle requirements are as follows:
- Unless noted otherwise, nozzles shall extend 12 inches beyond the vessel.
- Nozzle schedule shall be determined by the Seller, taking into consideration all requirements stated in Buyer document # 24590-WTP-3PS-MV00-TP001, *Engineering Specification for Pressure Vessel Design and Fabrication.*
- All nozzles with connecting pipes shall be end-prepared per Buyer document # 24590-WTP-PW-P30T-00001, *WTP End Prep Detail for Field Butt Welds*, to tie in with the respective connecting pipe size and schedule in note 7 2
- Seller shall confirm size and schedule/wall thickness for all nozzles,specified in note 7 below.

Note 5: Ring Beam Detail
- Refer to Buyer document 24590-WTP-MV-M59T-00001, for ring beam details.
- 2 Ring beam top and bottom flanges shall be 6" wide.
- 2 Ring beam web shall be 3/4" thick.
- 2 The ring beam web to flange weld shall be full penetration.
- 2 Ring beam design per River Protection Project - Waste Treatment Plant, vessel supports at El. 0' and below, 24590-PTF-DDC-S13T-00001.
- 2 NDE requirements shall be in accordance with 24590-WTP-3PS-SS00-T0002, section 11.6 "Additional Examination for Quality Levels 1 and 2 Structural Steel Welds". All welds of Ring beam are critical welds.

  Section 11.6 is mandatory even if the web to flange weld NDE is not indicated on the drawing.

Note 6: Locate inlet nozzle (N01) on the sump vessel and use as inspection manway. Inlet nozzle (N01) must be higher than the overflow nozzle (N12).

Note 7: Nozzle data are as follows:

Nozzle		Connecting Pipe		Function
No.	Size	NPS	Schedule	
N01	24" NPS	24	0.375"	Offgas Inlet
N02	24" NPS	24	0 375"	Offgas Outlet
N03	2" NPS	2	40S	Recirculated Caustic Solution for Mixing (dip pipe) 2
N04	2" NPS	2	40S	Recirculated Caustic Solution for Scrubbing
N05	4" NPS	4	40S	Pump Suction
N06	1" NPS	1	40S	Demineralized Water Inlet
N07	1" NPS	1	40S	Demineralized Water Inlet
N08	1.5" NPS	1.5	40S	Reagent Inlet (5M NaOH)
Deleted				
Deleted				
N11	1" NPS	1	40S	Sample Recirculation Return
N12	6" NPS	6	10S	Scrubber Sump Vessel Overflow
N13	6" NPS	1	40S	Bubbler Type Level Indicator (See Detail 19, Dwg. 24590-WTP-MV-M59T-00016002)
N14	3" NPS			Spare (with welded cap)
N15	2" OD	0.75	40S	Pressure Transmitter Leg (See Detail 6, Dwg 24590-WTP-MV-M59T-00016001)
N16	2" OD	0.75	40S	Pressure Transmitter Leg (See Detail 6, Dwg 24590-WTP-MV-M59T-00016001)
N17	2" OD	0.75	40S	Pressure Transmitter Leg (See Detail 6, Dwg 24590-WTP-MV-M59T-00016001)
N18	2" OD	0.75	40S	Pressure Transmitter Leg (See Detail 6, Dwg 24590-WTP-MV-M59T-00016001)
Deleted				
Deleted				

NPS - Nominal Pipe Size (inch)
OD - Outside Diameter (inch)

BECHTEL	**Mechanical Data Sheet:** **PTF Vessel Vent Caustic Scrubber**	Plant Item Number 24590-PTF-MK-PVP-SCB-00002 Data Sheet Number 24590-PTF-MKD-PVP-P0002, Rev 2

Notes

Note 1 : Deleted. 2
Note 2 : Deleted. 2
Note 3 : The corrosion allowance of 0.04" shall apply to all surfaces in contact with process fluids except for the dry and wet packings
Note 4 : Material shall have a carbon content not to exceed 0.030%, dual certified.
Note 5 : Seller shall submit item details for customer review
Note 6 : Nozzles are primary containment. The spare nozzle shall have a welded cap. See Note 8.
Note 7 : Ring Beam web and top flange shall be SA-240 304L, bottom flange shall be A-572 GR50
Note 8 : All welds forming part of the primary and auxiliary containments, including the nozzle attachment welds shall be subjected to 100% volumetric examination.
Note 9 : The scrubber is located in a Black Cell (R5 / C5 area)
Note10: Contents of this document are Dangerous Waste Permit Affecting 2
Note11:References are included for BNI use only and will not be shown with revision triangles - only data being changed will require revision triangles. 2

References (For Internal Use Only) 2

Reference 1	P&ID-PTF Pretreatment Vessel Vent Process System Caustic Scrubber to HEMES, 24590-PTF-M6-PVP-00017, Rev 2
Reference 2	PTF Vessel Cyclic Datasheet Inputs, 24590-PTF-MVC-10-00003, Rev A
Reference 3	Data Sheet Page 1 Seller Data, 3/02/05, 24590-QL-POA-MKAS-00002-03-00001, Rev 00E
Reference 4	PTF Vessel Vent Caustic Scrubber Bechtel Job No 24590-PTI shop No C-2600-NQA 1 Assembly & Sections, 24590-QL-POA-MKAS-00002-02-00011, Rev 00D
Reference 5	Corrosion Evaluation, 24590-PTF-N1D-PVP-00001, Rev 6

Notes for Outline Profile of the PTF Vessel Vent Caustic Scrubber

Note 1: See "Design Data" in sheet 1 of 5 for the bounding dimensions of the scrubber.

Note 2: The maximum sump batch volume shall be determined based on given dimensions
- Seller to provide the batch volume and total time of operation per batch based on runback, maximum expected condensate and caustic makeup

Note 3 The minimum allowance from maximum sump operating volume to overflow shall satisfy the larger of all three conditions below:
- minimum 2" liquid depth
- at least 2% of maximum operating liquid depth
- change in liquid level equivalent to 5 minutes of maximum liquid accumulation in the scrubber sump

Note 4 Nozzle requirements are as follows:
- Unless noted otherwise, nozzles shall extend 12 inches beyond the vessel.
- Nozzle schedule shall be determined by the Seller, taking into consideration all requirements stated in Buyer document # 24590-WTP-3PS-MV00-TP001, *Engineering Specification for Pressure Vessel Design and Fabrication*
- All nozzles with connecting pipes shall be end-prepared per Buyer document # 24590-WTP-PW-P30T-00001, *WTP End Prep Detail for Field Butt Welds*, to tie in with the respective connecting pipe size and schedule in note 7. 2
- Seller shall confirm size and schedule/wall thickness for all nozzles,specified in note 7 below.

Note 5 Ring Beam Detail
- Refer to Buyer document 24590-WTP-MV-M59T-00001, for ring beam details.
- 2 Ring beam top and bottom flanges shall be 6" wide.
- 2 Ring beam web shall be 3/4" thick.
- 2 The ring beam web to flange weld shall be full penetration.
- 2 Ring beam design per River Protection Project - Waste Treatment Plant, vessel supports at El. 0' and below, 24590-PTF-DDC-S13T-00001
- 2 NDE requirements shall be in accordance with 24590-WTP-3PS-SS00-T0002, section 11 6 "Additional Examination for Quality Levels 1 and 2 Structural Steel Welds". All welds of Ring beam are critical welds.

  Section 11.6 is mandatory even if the web to flange weld NDE is not indicated on the drawing.

Note 6: Locate inlet nozzle (N01) on the sump vessel and use as inspection manway. Inlet nozzle (N01) must be higher than the overflow nozzle (N12).

Note 7 Nozzle data are as follows:

Nozzle		Connecting Pipe		Function
No	Size	NPS	Schedule	
N01	24" NPS	24	0.375"	Offgas Inlet
N02	24" NPS	24	0.375"	Offgas Outlet
N03	2" NPS	2	40S	Recirculated Caustic Solution for Mixing (dip pipe) 2
N04	2" NPS	2	40S	Recirculated Caustic Solution for Scrubbing
N05	4" NPS	4	40S	Pump Suction
N06	1" NPS	1	40S	Demineralized Water Inlet
N07	1" NPS	1	40S	Demineralized Water Inlet
N08	1 5" NPS	1.5	40S	Reagent Inlet (5M NaOH)
Deleted				
Deleted				
N11	1" NPS	1	40S	Sample Recirculation Return
N12	6" NPS	6	10S	Scrubber Sump Vessel Overflow
N13	6" NPS	1	40S	Bubbler Type Level Indicator (See Detail 19, Dwg. 24590-WTP-MV-M59T-00016002)
N14	3" NPS			Spare (with welded cap)
N15	2" OD	0.75	40S	Pressure Transmitter Leg (See Detail 6, Dwg 24590-WTP-MV-M59T-00016001)
N16	2" OD	0.75	40S	Pressure Transmitter Leg (See Detail 6, Dwg 24590-WTP-MV-M59T-00016001)
N17	2" OD	0.75	40S	Pressure Transmitter Leg (See Detail 6, Dwg 24590-WTP-MV-M59T-00016001)
N18	2" OD	0.75	40S	Pressure Transmitter Leg (See Detail 6, Dwg 24590-WTP-MV-M59T-00016001)
Deleted				
Deleted				

NPS - Nominal Pipe Size (inch)
OD - Outside Diameter (inch)

BECHTEL	**Mechanical Data Sheet:** **PTF Vessel Vent Caustic Scrubber**	Plant Item Number **24590-PTF-MK-PVP-SCB-00002** Data Sheet Number **24590-PTF-MKD-PVP-P0002, Rev 2**

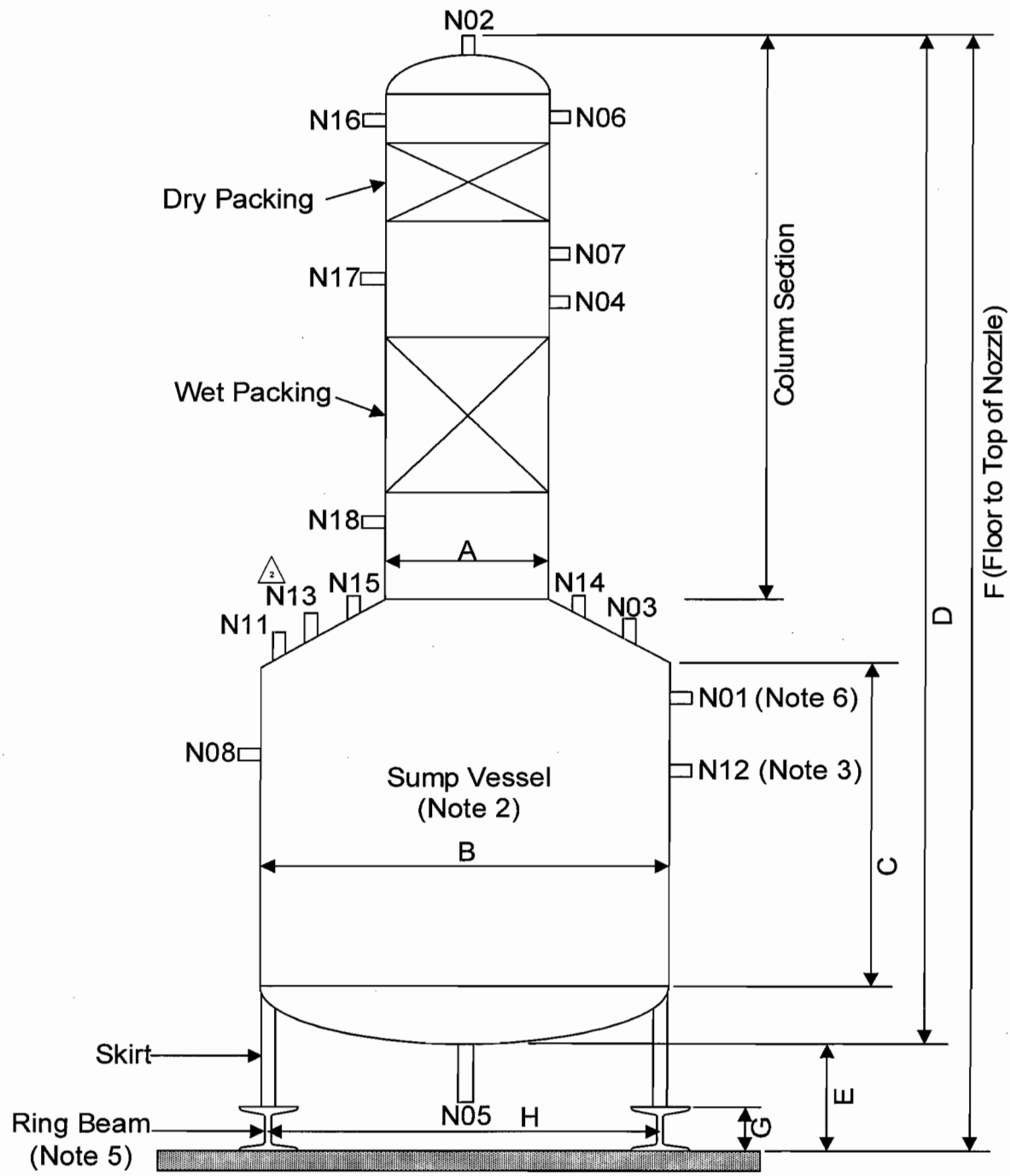

Outline Profile of the PTF Vessel Vent Caustic Scrubber

Mechanical Data Sheet:
PTF Vessel Vent Caustic Scrubber

Plant Item Number
24590-PTF-MK-PVP-SCB-00002

Data Sheet Number
24590-PTF-MKD-PVP-P0002, Rev 2

Description		Instrument Tag	Unit	Operating Lo	Operating Normal	Operating Hi				Remarks
Inlet Offgas	Pressure	PC-0404	W.G.	-40 0" (2)	-35.0" (2)	-10" (2)				
Inlet Offgas	Temperature	TI-0401	°F	113	120	130				
Inlet Offgas	Volume Flow Rate		SCFM	(Note 2)	3600	3600				
Inlet Offgas	Rel. Humidity		%		100	100				
Inlet Offgas	NO_2		ppm vol		130					Dry basis concentration (2)
Inlet Offgas	NO		ppm vol		70					Dry basis concentration (2)
Inlet Offgas	CO_2		ppm vol		330					Dry basis concentration (2)
Scrubber Sump Vessel	Pressure	PI-0408	W.G	-40.0" (2)	-35 0" (2)	-10" (2)				
Scrubber Sump Vessel	Liquid Temperature	TC-0405	°F		111					
Scrubber Sump Vessel	Liquid Level	LI-0409		23 4" (2)	23.4 - 63.3" (2)	63 3" (2)				Overflow is at 66.03" (note 4) (2)
Scrubbing Liquid	pH		pH	7 (2)	7.0 - 7.5 (2)	7.5 (2)				
Scrubbing Liquid (2)	Density	DI-1704	lbs/ft^3	*	62 3 * (2)	*				
Recirc. to sump - mixing	Flow Rate	FI-0461	GPM		60*					
Recirc. to packing - scrubbing	Flow Rate	FI-0444	GPM		60*					
Recirc to packing - scrubbing	Temperature		°F		70					
Deleted										
Deleted										
Deleted										
Deleted										
Deleted										
Packed Section	Pressure Drop	PDI-0406	W.G.		3 0" (2)	6 0"				Max. allowable (Note 1)
Demineralized Water Inlet at Nozzle N06	Flow Rate		GPM	N.A.	22.5 (2)	N.A.				
Dry Packing	Pressure Drop	PDI-0407	W G.		0 2 (2)	1.0"				Max. allowable (Note 1)
Demineralized Water Inlet at Nozzle N07	Flow Rate		GPM	N A.	22 5 (2)	N A.				Mfr. Suggests a periodic flush of 1 GPM/sq. ft. min. (2)
Outlet Offgas	Pressure		W.G.	-47.0" (2)	-42.0" (2)	-17" (2)				
Outlet Offgas	Temperature		°F	77	77	77				
Outlet Offgas	Mass Flow Rate		kg/hr							
Outlet Offgas	Flow Rate		SCFM		3600	3600				
Outlet Offgas	Rel. Humidity		%		100	100				
Outlet Offgas	NO_2		ppm vol		41 (2)					Dry basis concentration (2)
Outlet Offgas	NO		ppm vol		70 (2)					Dry basis concentration (2)
Outlet Offgas	CO_2		ppm vol		329 (2)					Dry basis concentration (2)
DF (minimum) for Nitrogen Oxides			DF		1 8*					
DF (minimum) for Solid Particulates			DF		3.5*					2.0 micron particulates

Notes

* - Seller to verify/provide data

1 - Maximum differential pressure across scrubber in clean condition shall not exceed 8 in-WG. Seller to provide data.

2 - Standard conditions of flow are 77 deg F and 1 atmosphere as dry air (density = 0.074 lb/ft^3) - humidity accounts for additional volume and mass flow

3 - Deleted

4- Dimension is measured from inside bottom of vessel sump to bottom of nozzle N12. (2)

BECHTEL	**Mechanical Data Sheet:** **PTF Vessel Vent Caustic Scrubber**	Plant Item Number [redacted]-PVP-SCB-00002 Data Sheet Number [redacted]-PVP-P0002, Rev 2

2 **Equipment Cyclic Data Sheet** Ref 2

The information below is provisional and envelopes operational duty for fatigue assessment. It is not to be used as operational data.

Design Life	*40 Years*
Component Function and Life Cycle Description	*See Specification 24590-PTF-3PS-MKAS-TP001*

Load Type		Min	Max	Number of Cycles	Comments
Design Pressure	PSIG	*-5*	*+15*	10	*WTP Calculation 24590-PTF-MVC-10-00003*
Operating Pressure 1	PSIG	*-1.5*	*0*	7,000,000	*WTP Calculation 24590-PTF-MVC-10-00003*
Operating Pressure 2	PSIG	*0*	*+2.8*	40	*WTP Calculation 24590-PTF-MVC-10-00003*
Operating Temperature	°F	*120*	*145*	40	*WTP Calculation 24590-PTF-MVC-10-00003*
Contents Spcific Gravity		*1.0*	*1.04*	1,040	*WTP Calculation 24590-PTF-MVC-10-00003*
Contents Level	inch	*23*	*63*	15,000	*WTP Calculation 24590-PTF-MVC-10-00003*
Localized Features					
Nozzles		*N/A*		*WTP Calculation 24590-PTF-MVC-10-00003*	

Notes

1 Cycle increase. The Seller must increase the numbers of operational cycles given above by 10% to account for commissioning duty unless otherwise noted.

ISSUED BY RPP-WTP PDI
INIT DATE

R10156142

Mechanical Systems Data Sheet: Ultrafilter

Plant Item Number:
24590-PTF-MK-UFP-FILT-00001A & 1B, 00002A & 2B, 00003A & 3B, 0000S1, 0000S2, 0000S3, 0000S4, 0000S5, 0000S6. SEE NOTE 1

Project:	RPP-WTP	24590-PTF-3YD-UFP-00001 (1)	System Description (1)
Project No:	24590	Reference Documents	
Project Site:	DOE Hanford	24590-PTF-3PS-MLFP-TP001	Engineering Specification for Ultrafilters
System No:	UFP	CCN: 065607	Rheology Design Basis for Non-Newtonian (1)
Building:	PTF	Associated Drawings	
Quality Level:	QL-2	24590-PTF-M6-UFP-P0002 & -P0003	P&ID PTF Ultrafiltration System Vessel UFP-VSL-00002A & 00002B
Seismic Criteria	SC-III		
Description: 200C			

	Units		
DESIGN DATA			
Minimum Design Pressure	psig	**0**	
Maximum Design Pressure	psig	**200 Tubeside & Shellside**	
Design Delta Pressure	psi	**50**	
Minimum Backpulse Overpressure	psig	**40**	
Maximum Backpulse Overpressure	psig	**180**	
Minimum Design Temperature	°F	**59**	
Maximum Design Temperature	°F	**200** (1)	
Design Velocity	ft/sec	**15**	
Maximum Design Flowrate	gpm	**2400**	
	Units		
PROCESS CONDITIONS			
Process Fluids		**Slurry (Caustic Max pH of 14), 2M Nitric Acid**	
Fluid Temp Normal	°F	**77**	
Flowrate Normal	gpm	**2200**	
Solids Concentration Weight	%	**0 - 25**	
SpG @ Normal Temp		**1.00 - 1.42**	
Minimum Particle Size to be Removed	micron	**0.2**	
Solids SpG		**3.0**	
Fluid Viscosity @ Normal Temp	cP	**1.0 (Newtonian) - 30 (NonNewtonian Consistency Viscosity)** (1)	
Max Available Delta Pressure	psi	**118**	
	Units		
DESIGN SPECIFICATION			
Vessel Support		**pads**	
Vessel Corrosion Allowance	in	**0.04** (1)	
Design Delta Pressure Range	psi	**30 - 70**	
Element Porous Length	in	**96**	
Element Quantity		**241**	**Note 2**
Filter Area	in	**252**	
Shell Outer Diameter	in	**16.75**	**Note 2**
Element OD	in	**0.625**	**Note 2**
Element ID	in	**0.5**	**Note 2**
Filter Media	micron	**0.1**	
Nominal Flux Rate	gpm/sq-ft	**0.03**	
Filter Cleaning Fluids		**2M Nitric Acid/2M Caustic**	

Note: Please note that source, special nuclear and byproduct materials, as defined in the Atomic Energy Act of 1954 (AEA), are regulated at the U.S. Department of Energy (DOE) facilities exclusively by DOE acting pursuant to its AEA authority. DOE asserts, that ppursuant to the AEA, it has sole and exclusive responsibility and authority to regulate source, special nuclear, and byproduct materials at DOE-owned nuclear facilities. Information contained herein on radionuclides is provided for process description purposes only.

W. HOFFMANN OF WASHINGTON
C030952
REGISTERED PROFESSIONAL ENGINEER
12/10/03

EXPIRES 12/10/04

This Bound Document Contains a total of 2 pages

APPROVAL					
Revision	**Description**	**PREPARER**	**CHECKER**	**APPROVER**	**Date**
1	Issued for Permitting Use	M. Askar	P. Avignatore	JJ	12/9/03
0	Issued for Permitting Use	MA	GB	JJ	11/13/2003

12/11/03
12/11/03
Processed Data Entry | Copied QA | Scanned | Filed

BECHTEL	Mechanical Systems Data Sheet: Ultrafilter	**Plant Item Number:** 24590-PTF-MK-UFP-FILT-00001A & 1B, 00002A & 2B, 00003A & 3B, 0000S1, 0000S2, 0000S3, 0000S4, 0000S5, 0000S6 SEE NOTE 1

MATERIALS OF CONSTRUCTION						
Porous Media	**316L SS**					
Element Seal	**Welded**					
Vessel Wetted	**316L SS**					
Tubesheet	**316L SS**					
Vessel Internals	**316L SS**					
Vessel Gaskets	**Welded**					
Element Hardware	**316L SS**					

NOTES

NOTE 1: 24590-PTF-MK-UFP-FILT-0000S1 THROUGH 0000S6 ARE SPARES AND ARE INTERCHANGEBLE WITH ANY PLANT ITEM NO.

Note 2: Seller shall inform the buyer for any deviation.

Note 3: The non-Newtonian slurry is a Bingham plastic with a consistency viscosity of 30 cP and a yield stress of 30 Pa

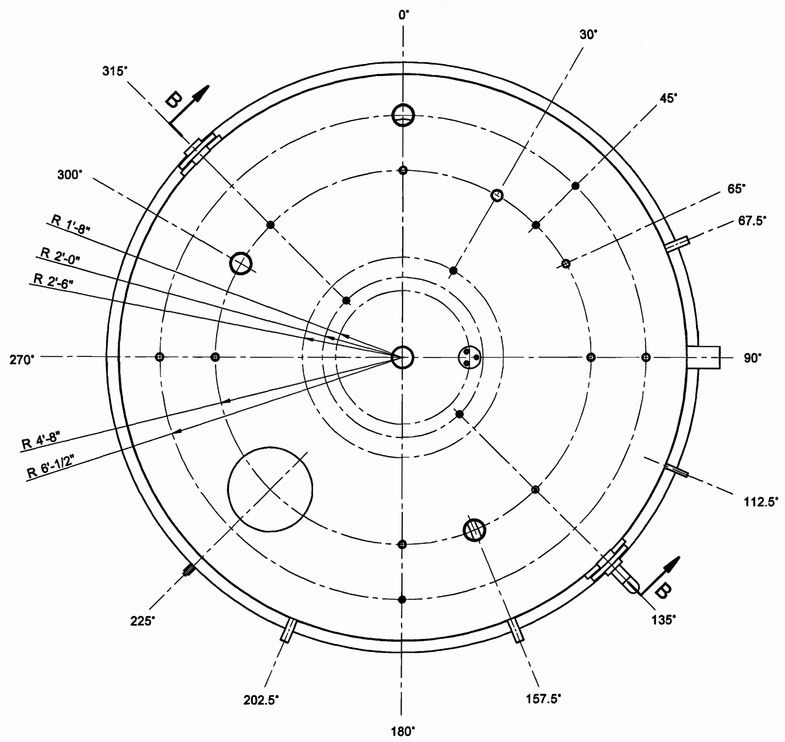

PLAN

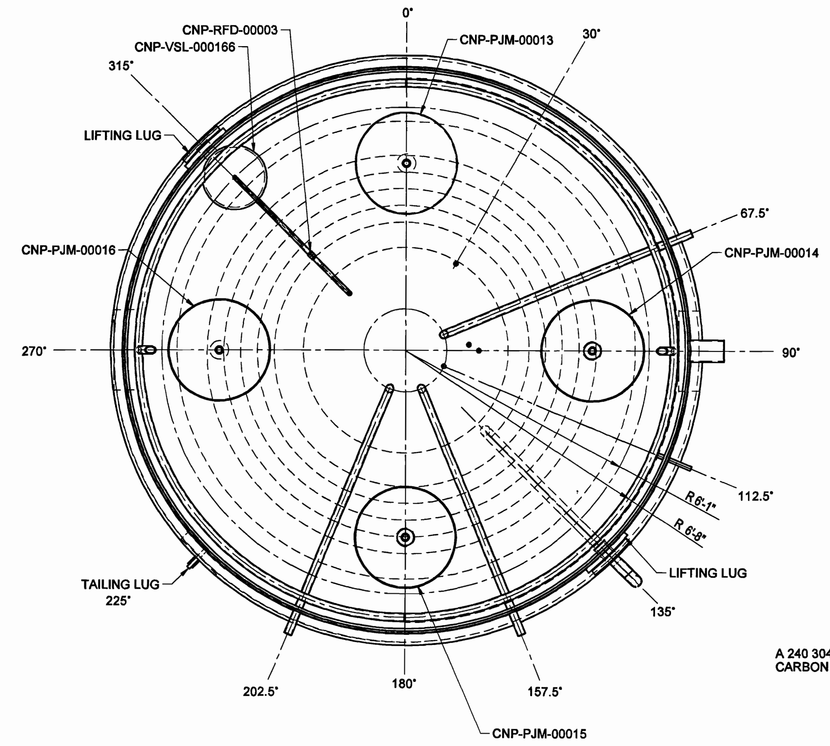

SECTION A-A

GENERAL NOTES:

1. RFD PUMP SHALL BE PROVIDED BY BUYER FOR SELLER TO INSTALL, ALL OTHER INTERNALS SHALL BE DESIGNED , PROVIDED AND INSTALLED BY SELLER.
2. FOR DISTANCE OF DIP PIPES TO BOTTOM HEAD USE 2" CLEARANCE UNLESS OTHERWISE SPECIFIED.
3. DELETED
4. RING BEAM TO BE FABRICATED & SHIPPED AHEAD OF VESSEL TO FIELD CONSTRUCTION FOR INSTALLATION BY OTHERS
5. DELETED
6. DELETED

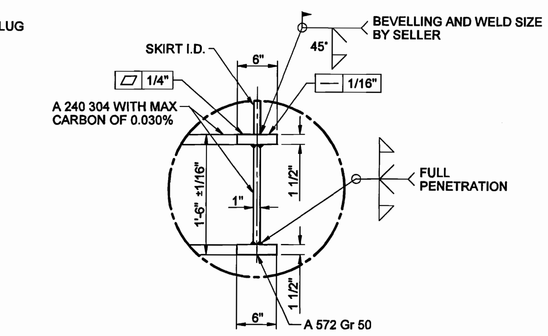

DETAIL 1

HOLDS:

1. INTERNALS PENDING CONFIRMATION BY FLUIDIC GROUP.
2. DELETED
3. LOCATION OF SKIRT VENT & SKIRT ACCESS PENDING INPUT BY PLANT DESIGN.
4. NAMEPLATE & NAMEPLATE BRACKET LOCATION PENDING REVIEW BY PLANT DESIGN.
5. LOCATION OF LIFTING LUGS, TAILING LUG PENDING INPUT FROM CONSTRUCTION.

PLEASE NOTE THAT SOURCE, SPECIAL NUCLEAR AND BYPRODUCT MATERIALS, AS DEFINED IN THE ATOMIC ENERGY ACT OF 1954 (AEA) ARE REGULATED AT THE U.S. DEPARTMENT OF ENERGY (DOE) FACILITIES EXCLUSIVELY BY DOE ACTING PURSUANT TO ITS AEA AUTHORITY. DOE ASSERTS, THAT PURSUANT TO THE AEA, IT HAS SOLE AND EXCLUSIVE RESPONSIBILITY AND AUTHORITY TO REGULATE SOURCE, SPECIAL NUCLEAR, AND BYPRODUCT MATERIALS AT DOE-OWNED NUCLEAR FACILITIES. INFORMATION CONTAINED HEREIN ON RADIONUCLIDES IS PROVIDED FOR PROCESS DESCRIPTION PURPOSES ONLY.

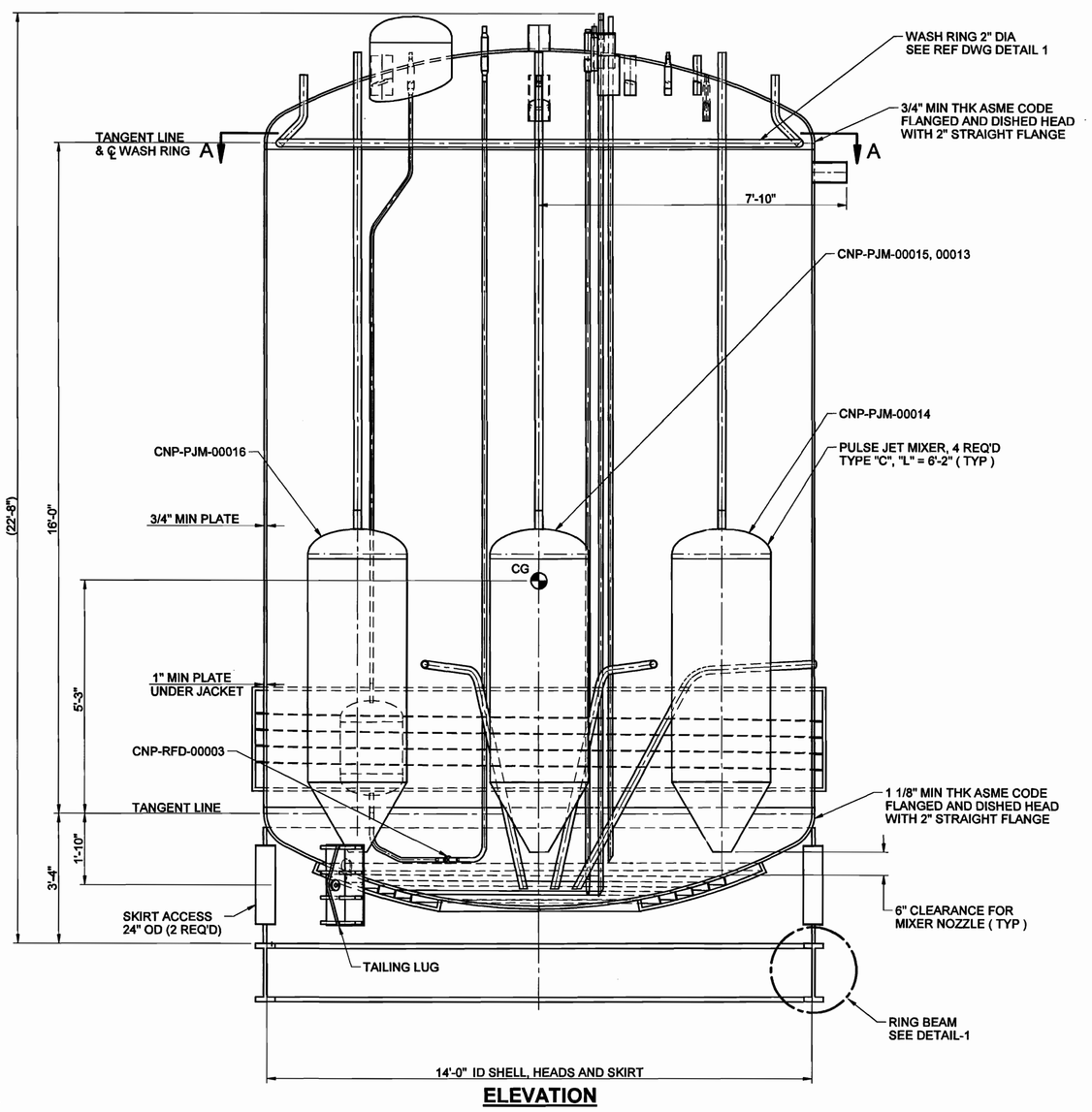

ELEVATION

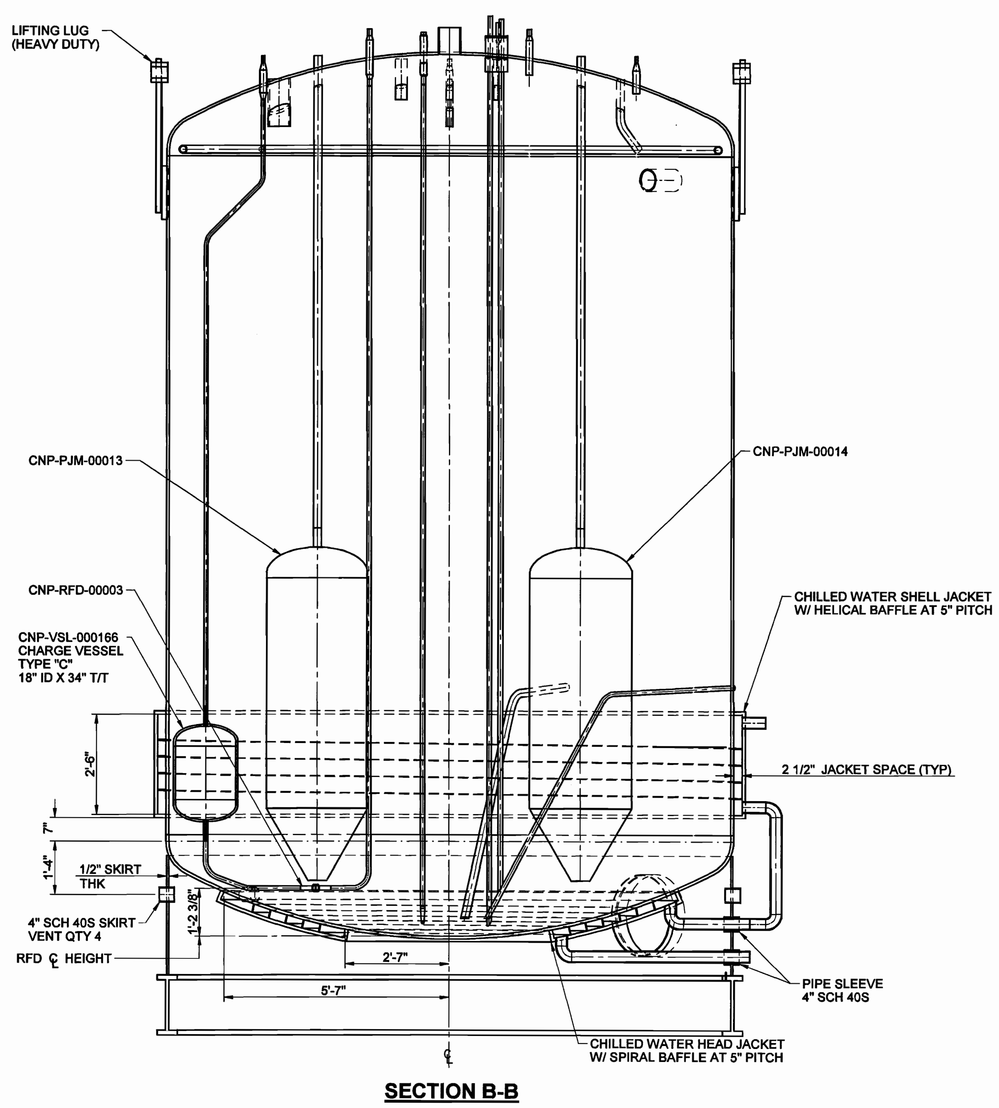

SECTION B-B

THIS DRAWING TO BE READ IN CONJUNCTION WITH THE MECHANICAL DATA SHEET No 24590-PTF-MVD-CNP-P0003

VESSEL COMPONENT QUALITY LEVELS	
COMPONENT	QUALITY LEVEL
VESSEL HEADS AND SHELL	QL-1
PJMs AND PJM PIPING	CM
RFDs, RFD CHARGE VESSEL & RFD PIPING	CM
VESSEL NOZZLES IN UPPER HEAD AND SHELL	QL-1
VESSEL NOZZLES IN COOLING JACKET	QL-1
LIFTING LUGS AND TAILING LUG	CM
VESSEL SKIRT & RING BEAM	QL-1
INTERNAL PIPING	CM
SKIRT SLEEVES & SKIRT ACCESS RINGS	QL-1
COOLING JACKET	QL-1
COOLING JACKET PIPING	QL-2

REFERENCE DRAWINGS		
DWG NO	REV	TITLE
24590-WTP-MV-M69T-00001		PRESSURE VESSEL TOLERANCES STANDARD DETAILS
24590-WTP-MV-M69T-00004		PULSE JET MIXERS STANDARD DETAILS
24590-WTP-MV-M69T-00007		THERMOWELL CONNECTION STANDARD DETAILS
24590-WTP-MV-M69T-00011		WASH RINGS STANDARD DETAILS
24590-WTP-MV-M69T-00016001		VESSEL CONNECTIONS STANDARD DETAILS SHT 1 OF 3
24590-WTP-MV-M69T-00016002		VESSEL CONNECTIONS STANDARD DETAILS SHT 2 OF 3
24590-WTP-MV-M69T-00017		VESSEL INSPECTION MANWAY STANDARD DETAILS
24590-WTP-MV-M69T-00009		LIFTING LUG STANDARD DETAILS
24590-WTP-MV-M69T-00010		TAILING LUG STANDARD DETAILS
24590-WTP-MV-M69T-00013		CHARGE VESSEL STANDARD DETAILS
24590-WTP-MV-M69T-00014		RFD PUMPS DETAIL
24590-WTP-MV-M69T-00018		VESSEL NAME PLATE STANDARD DETAILS

MARK W. HOFFMAN, STATE OF WASHINGTON, 38390, REGISTERED PROFESSIONAL ENGINEER — 6/26/04
EXPIRES 12/10/04

REV	DESCRIPTION	ORG	CHKD	RVWD	APVD	DATE
0	ISSUED FOR PERMITTING USE			R.T.		6/26/04

REVISION HISTORY

Q — QUALITY LEVEL

ISSUED BY RECEIVED PDC 1 1 2004 DATE — ISSUE STAMP

PROJECT No.	24590	
SITE	HANFORD	
AREA	200E	
BUILDING No.	10	

	BY	DATE
ORIGINATOR		6/23/04
CHECKER		6/23/04
APPROVER		6/26/04
REVIEWER		6/24/04

CONTENT APPLICABLE TO ALARA? [X] YES [ ] NO
ADR NO. N/A REV:

BECHTEL

RIVER PROTECTION PROJECT
WASTE TREATMENT PLANT
2435 STEVENS CENTER PLACE
RICHLAND, WA 99352

CONTRACT No: DE-AC27-01RV14136

EQUIPMENT ASSEMBLY ELUATE CONTINGENCY STORAGE VESSEL CNP-VSL-00003

SCALE: NONE

24590-PTF-MV-CNP-P0001

REV 0

R10327826

FORM E_MASTER 03/2003

"E" SIZE - 44x34
COMPUTER GENERATED BY SOLID EDGE-MANUAL CHANGES NOT PERMITTED

WHEN REFERENCING DRAWING AND DIM NUMBERS IN DOCUMENTS, BE SURE TO INCLUDE DASHES BETWEEN ELEMENTS

02/17/2004 8:32 AM

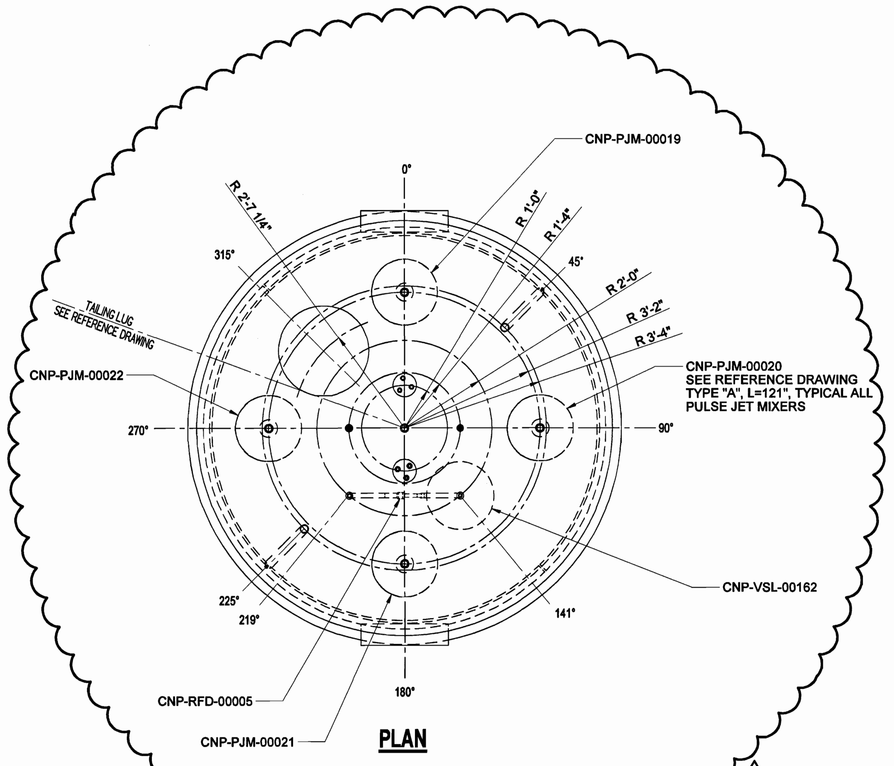

PLAN

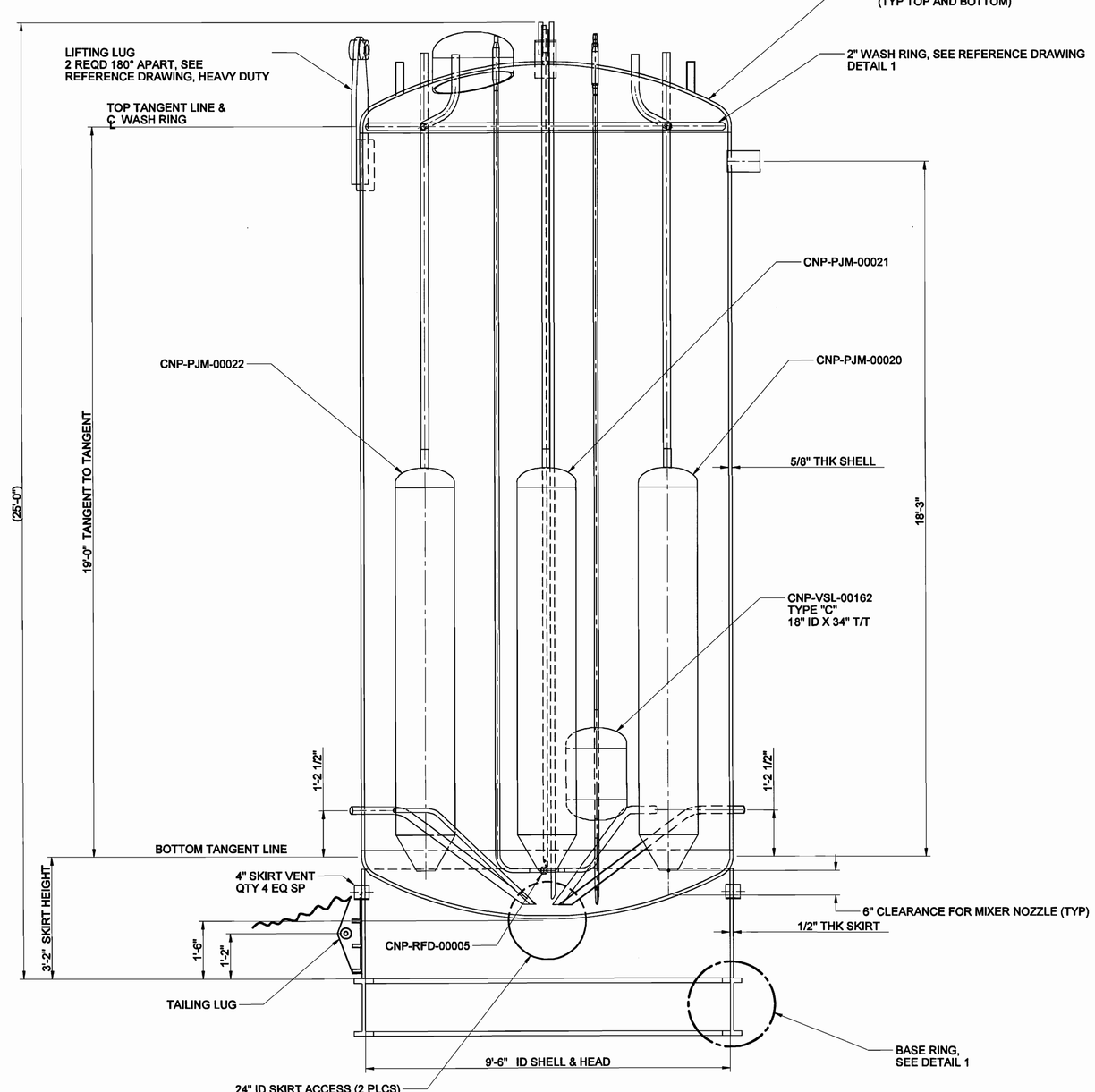

ELEVATION

GENERAL NOTES:

1. RFD PUMP SHALL BE PROVIDED BY BUYER FOR SELLER TO INSTALL. ALL OTHER INTERNALS SHALL BE DESIGNED, PROVIDED AND INSTALLED BY SELLER.
2. FOR DIP LEGS USE 2 INCH BOTTOM HEAD CLEARANCE.
3. DELETED
4. SOME HIDDEN LINES OMITTED FOR CLARITY.
5. BASE PLATE RING BEAM TO BE SHIPPED AHEAD OF VESSEL TO FIELD CONSTRUCTION FOR INSTALLATION BY OTHERS.
6. REVISED/ADDED/DELETED
   a) DELETED
   b) REVISED DETAIL 1
   c) DELETED GROUNDING LUGS & SKIRT DRAIN HOLES.
7. SHOP PREP ALL NOZZLES AND TACK WELD MANWAY COVER.
8. DELETED
9. THE ACCEPTABLE DIAMETRICAL TOLERANCES FOR BOTH THE SKIRT AND THE RING BEAM SHALL BE AS PER ITEM 3 OF THE PROJECT STANDARD DRAWING 24590-WTP-MV-M59T-00001. THE MAXIMUM CENTERLINE DEVIATION OF THE BOTTOM OF THE SKIRT AND THE WEB OF THE RING BEAM AT ANY GIVEN POINT SHALL NOT EXCEED ONE HALF OF THE NORMAL THICKNESS OF THE SKIRT.
10. DELETED
11. FOR THERMOWELL DETAIL 1, 24590-WTP-MV-M59T-00007 MODIFY ID FOR CONNECTING PIPE TO SUIT 3/4"-40S BORE.

HOLDS:

1. CHARGE VESSEL SIZE & RFD TYPE PENDING FINALIZATION BY AEA
2. DELETED
3. LOCATION FOR NAMEPLATE & BRACKET, SKIRT VENTS AND SKIRT OPENINGS PENDING INPUT FROM PLANT DESIGN
4. LOCATION FOR LIFTING LUGS & TAILING LUG PENDING INPUT FROM CONSTRUCTION

THIS DRAWING TO BE READ IN CONJUNCTION WITH MECHANICAL SYSTEMS DATA SHEET 24590-PTF-MVD-CNP-P0007

QUALITY LEVEL DESIGNATION FOR ALL COMPONENTS OF THIS VESSEL IS CM

PLEASE NOTE THAT SOURCE, SPECIAL NUCLEAR AND BYPRODUCT MATERIALS, AS DEFINED IN THE ATOMIC ENERGY ACT OF 1954 (AEA), ARE REGULATED AT THE U.S. DEPARTMENT OF ENERGY (DOE) FACILITIES EXCLUSIVELY BY DOE ACTING PURSUANT TO ITS AEA AUTHORITY. DOE ASSERTS, THAT PURSUANT TO THE AEA, IT HAS SOLE AND EXCLUSIVE RESPONSIBILITY AND AUTHORITY TO REGULATE SOURCE, SPECIAL NUCLEAR, AND BYPRODUCT MATERIALS AT DOE-OWNED NUCLEAR FACILITIES. INFORMATION CONTAINED HEREIN ON RADIONUCLIDES IS PROVIDED FOR PROCESS DESCRIPTION PURPOSES ONLY.

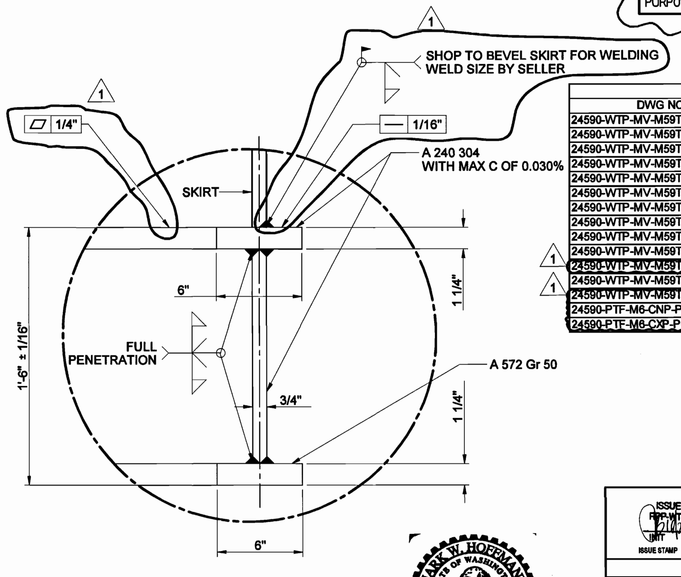

DETAIL 1

REFERENCE DRAWINGS		
DWG NO	REV	TITLE
24590-WTP-MV-M59T-00001	1	PRESSURE VESSEL TOLERANCES STANDARD DETAILS
24590-WTP-MV-M59T-00004		PULSE JET MIXERS STANDARD DETAILS
24590-WTP-MV-M59T-00007		THERMOWELL CONNECTION STANDARD DETAILS
24590-WTP-MV-M59T-00009		LIFTING LUGS STANDARD DETAILS
24590-WTP-MV-M59T-00010		TAILING LUG STANDARD DETAILS
24590-WTP-MV-M59T-00011		WASH RINGS STANDARD DETAILS
24590-WTP-MV-M59T-00013		CHARGE VESSEL STANDARD DETAILS
24590-WTP-MV-M59T-00014		RFD PUMPS DETAIL
24590-WTP-MV-M59T-00016001		VESSEL CONNECTIONS STANDARD DETAILS SHT 1 OF 3
24590-WTP-MV-M59T-00016002		VESSEL CONNECTIONS STANDARD DETAILS SHT 2 OF 3
24590-WTP-MV-M59T-00016003		VESSEL CONNECTIONS STANDARD DETAILS SHT 3 OF 3)
24590-WTP-MV-M59T-00017	1	VESSEL INSPECTION MANWAY STANDARD DETAILS
24590-WTP-MV-M59T-00018		VESSEL NAME PLATE STANDARD DETAILS
24590-PTF-M6-CNP-P0002/P0004		P&ID-PTF CESIUM NITRIC ACID RECOVERY PROCESS SYS RECOVERED NITRIC ACID VESSEL
24590-PTF-M6-CXP-P0007		P&ID-PTF CESIUM NITRIC ACID RECOVERY UTILITY SERVICES HSP RACK

REV	DESCRIPTION	ORG	CHKD	RVWD	APVD	DATE
1	ISSUED FOR PERMITTING USE	JJ	HK	RT	SK	6/25/04
0	ISSUED FOR PERMITTING USE	JJ	CS		SK	10/28/03

REVISION HISTORY

CM
QUALITY LEVEL

ISSUED BY RPP-WTP PDC
ISSUE STAMP

PROJECT No.	24590	
SITE	HANFORD	
AREA	200E	
BUILDING No.	10	
	BY	DATE
ORIGINATOR	JESSICA JACKSON	10/22/03
CHECKER	CLIFF SLATER	10/22/02
APPROVER	SUZANNE KIRK	10/28/03
REVIEWER		6/24/04

CONTENT APPLICABLE TO ALARA? ☒ YES ☐ NO
ADR NO. N/A REV:

RIVER PROTECTION PROJECT
WASTE TREATMENT PLANT
2435 STEVENS CENTER PLACE
RICHLAND, WA 99352

CONTRACT No: DE-AC27-01RV14136

EQUIPMENT ASSEMBLY
Cs EVAPORATOR RECOVERED NITRIC ACID VESSEL
CNP-VSL-00004

SCALE: NONE

24590-PTF-MV-CNP-P0002

REV 1

"E" SIZE - 44x34
COMPUTER GENERATED BY SOLID EDGE-
MANUAL CHANGES NOT PERMITTED

WHEN REFERENCING DRAWING AND DIM NUMBERS IN DOCUMENTS, BE SURE TO INCLUDE DASHES BETWEEN ELEMENTS

05/10/2004 8:42 AM

FORM E_MASTER 03/2003

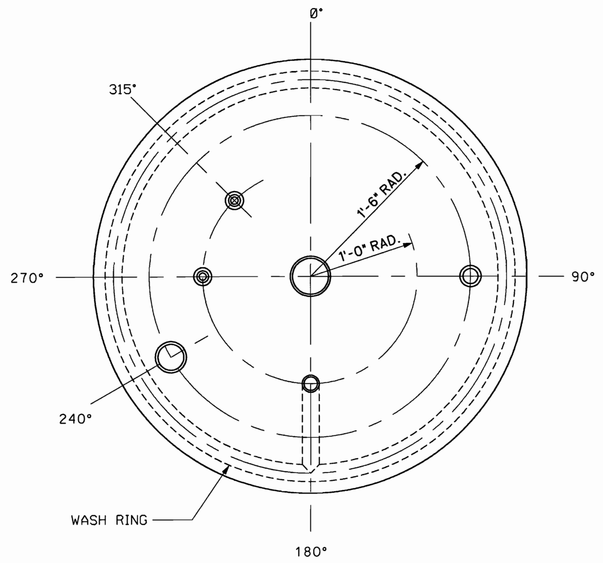

PLAN

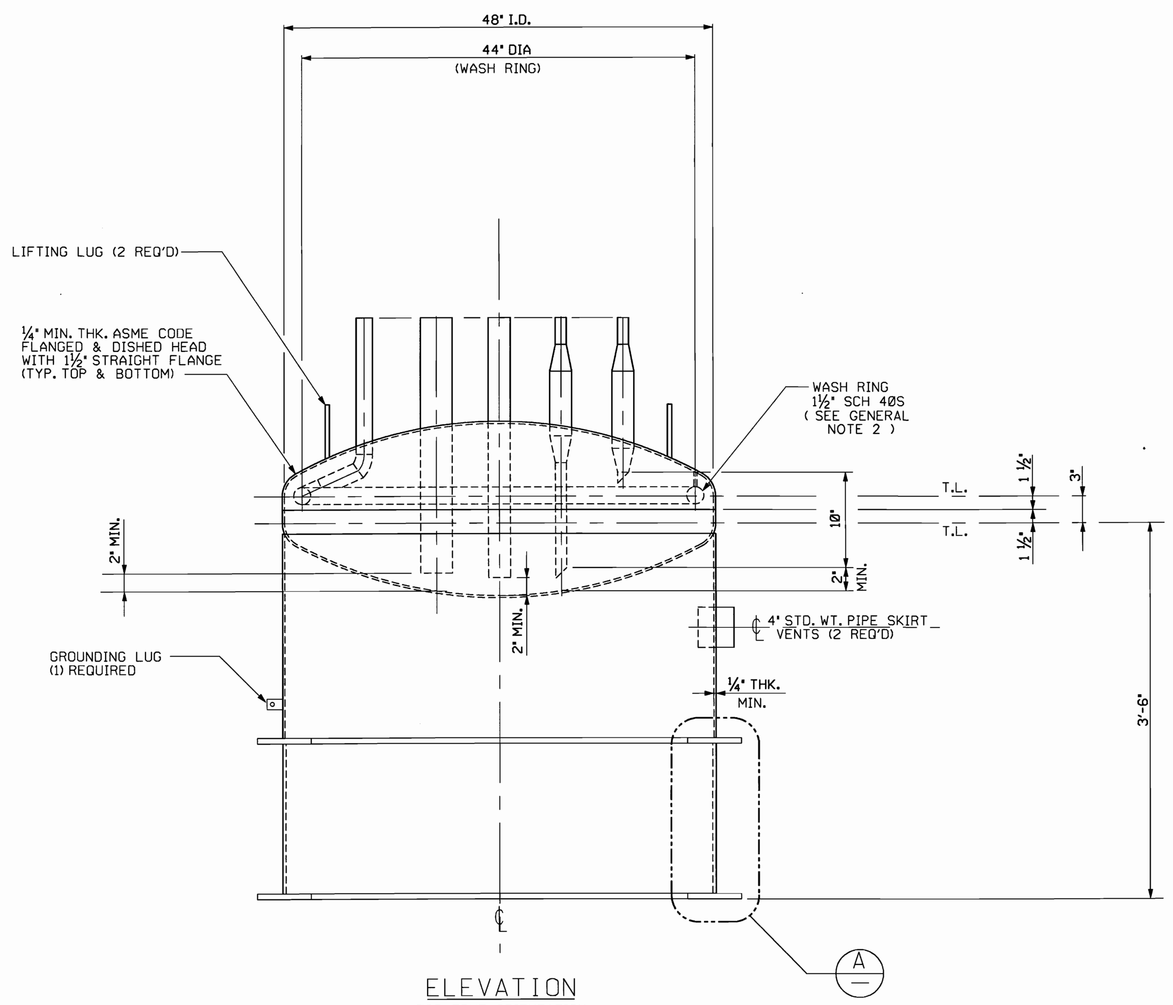

ELEVATION
FOR TRUE ORIENTATION
SEE PLAN

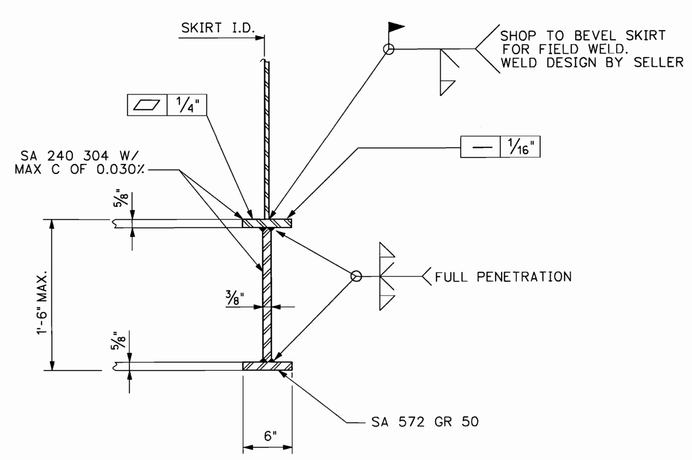

DETAIL A

GENERAL NOTES:

1. DELETED
2. THE WASH RING SHALL BE PROVIDED WITH HOLES PER DETAIL 2 OF REFERENCE DRAWING.
3. VESSEL SUPPORT AND LIFTING LUGS TO BE DESIGNED BY SELLER

HOLDS:

1. FINAL INTERNALS DESIGN, NOZZLE LOCATIONS & SIZE AND NAME PLATE LOCATION PENDING DESIGN BY PLANT DESIGN.
2. LIFTING LUGS AND TAILING LUG LOCATION PENDING REVIEW BY CONSTRUCTION.
3. GROUNDING LUG LOCATION PENDING REVIEW BY ELECTRICAL.

PLEASE NOTE THAT SOURCE, SPECIAL NUCLEAR AND BYPRODUCT MATERIALS, AS DEFINED IN THE ATOMIC ENERGY ACT OF 1954 (AEA), ARE REGULATED AT THE U.S. DEPARTMENT OF ENERGY (DOE) FACILITIES EXCLUSIVELY BY DOE ACTING PURSUANT TO ITS AEA AUTHORITY. DOE ASSERTS, THAT PURSUANT TO THE AEA, IT HAS SOLE AND EXCLUSIVE RESPONSIBILITY AND AUTHORITY TO REGULATE SOURCE, SPECIAL NUCLEAR, AND BYPRODUCT MATERIAL AT DOE-OWNED NUCLEAR FACILITIES. INFORMATION CONTAINED HEREIN ON RADIONUCLIDES IS PROVIDED FOR PROCESS DESCRIPTION PURPOSES ONLY.

VESSEL COMPONENT QUALITY LEVEL	
COMPONENT	QUALITY LEVEL
MAIN VESSEL, SKIRT AND ALL NOZZLES	QL-1
WASH RING AND PIPING	CM
ALL INTERNAL SUPPORTS	QL-1

THIS DRAWING TO BE READ IN CONJUNCTION WITH THE MECHANICAL DATA SHEET NO 24590-PTF-MVD-CNP-P0010

REFERENCE DRAWINGS		
DWG NO	REV	TITLE
24590-WTP-MV-M59T-00001		PRESSURE VESSEL TOLERANCES STANDARD DETAILS
24590-WTP-MV-M59T-00011		WASH RINGS STANDARD DETAILS
24590-WTP-MV-M59T-00012		GROUNDING LUG STANDARD DETAILS
24590-WTP-MV-M59T-00018		VESSEL NAME PLATE STANDARD DETAILS
24590-WTP-MV-M59T-00016001		VESSEL CONNECTIONS STANDARD DETAILS SHT 1 OF 3
24590-WTP-MV-M59T-00016002		VESSEL CONNECTIONS STANDARD DETAILS SHT 2 OF 3
24590-PTF-M6-CNP-P0001		P & I.D.
24590-PTF-M6-CXP-P0007		P & I.D.

MARK W. HOEFMAN, STATE OF WASHINGTON, 36000003, REGISTERED PROFESSIONAL ENGINEER — 6/24/04
EXPIRES 12/16/04

Q QUALITY LEVEL	REVISION HISTORY					
REV	DESCRIPTION	ORG	CHKD	RVWD	APVD	DATE
0	ISSUED FOR PERMITTING USE			RT		6/24/04

PROJECT No.	24590	
SITE	HANFORD	
AREA	200E	
BUILDING No.	10	
	BY	DATE
ORIGINATOR		6/21/04
CHECKER		6/22/04
APPROVER		6/24/04
REVIEWER		6/24/04

ISSUED BY WTP PROJECT ENGINEERING — ISSUE STAMP

CONTENT APPLICABLE TO ALARA? [XX] YES [ ] NO
ADR NO. N/A REV:

BECHTEL

RIVER PROTECTION PROJECT
WASTE TREATMENT PLANT
2435 STEVENS CENTER PLACE
RICHLAND, WA 99352

CONTRACT No: DE-AC27-01RV14136

EQUIPMENT ASSEMBLY CESIUM EVAPORATOR ELUATE LUTE POT CNP-VSL-00001

SCALE: NONE

24590-PTF-MV-CNP-P0005

REV 0

'E' SIZE - 44x34
COMPUTER GENERATED - MANUAL CHANGES NOT PERMITTED

06/21/2004 02:02:18 PM

C:\work\dms05068\PTF\MV\CNP\P0005.DGN

R1202782.5

FORM E_SDN.DGN 02/2003

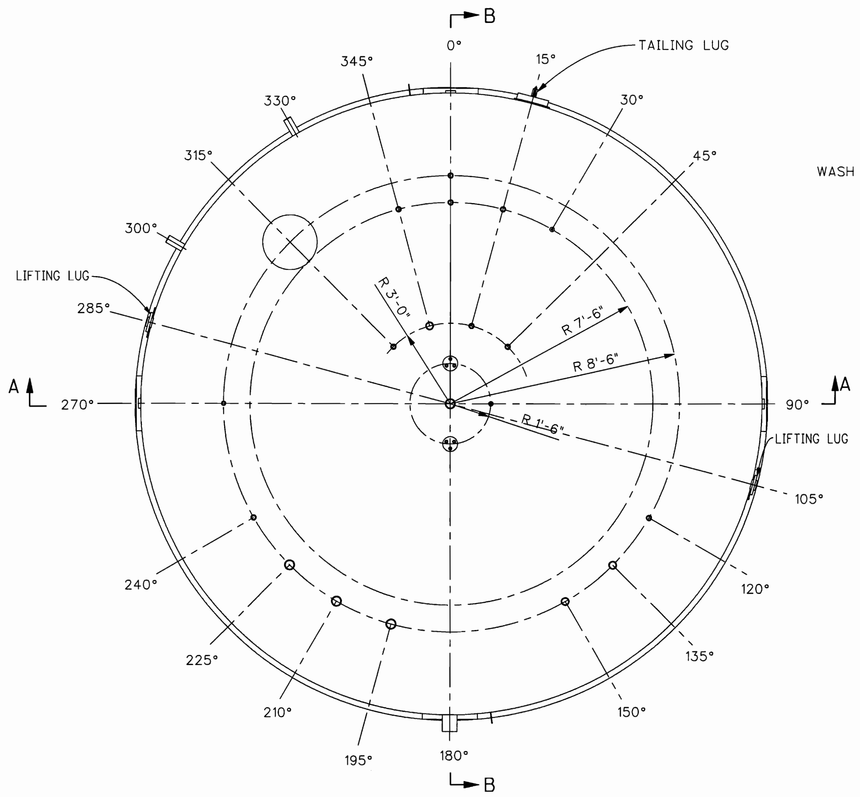

PLAN

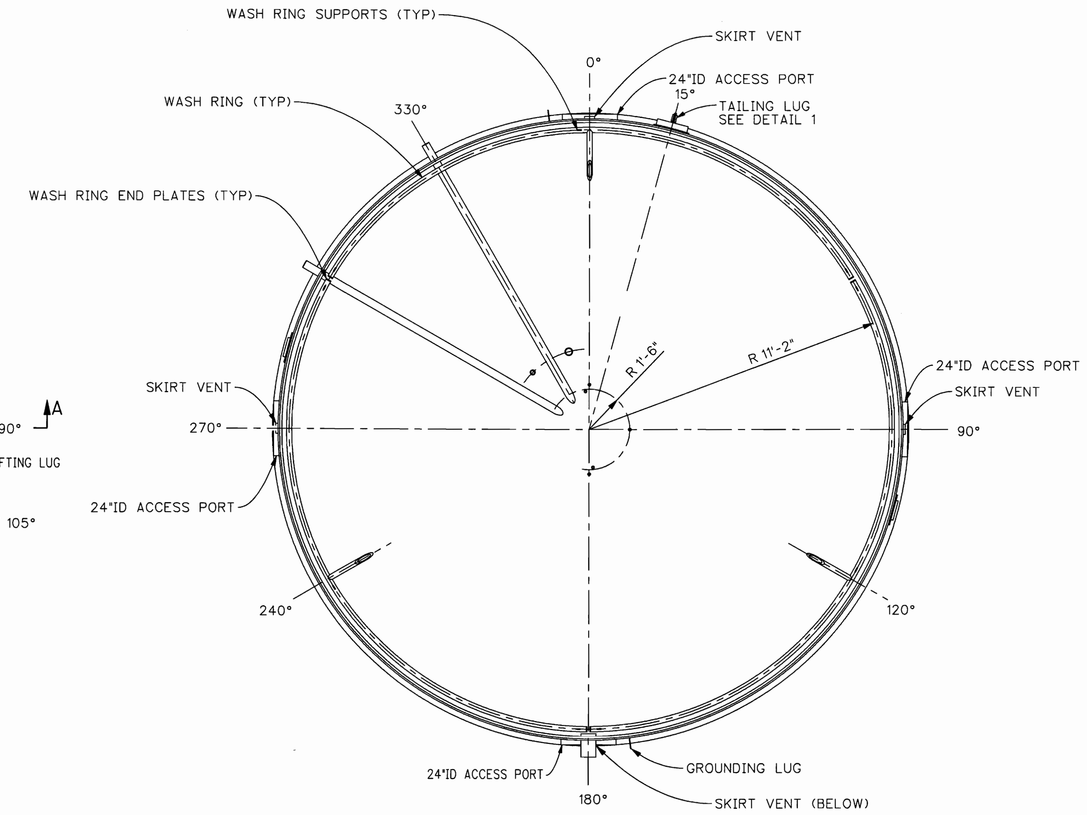

SECTION C-C

GENERAL NOTES :

1. FOR DISTANCE OF DIP PIPES TO BOTTOM HEAD USE 2" CLEARANCE UNLESS OTHERWISE SPECIFIED.
2. DELETED.
3. RING BEAM SHALL BE DELIVERED AHEAD OF VESSEL TO JOB SITE FOR INSTALLATION BY OTHERS.

HOLDS :

1. INTERNALS FINAL DESIGN.
2. DELETED.
3. LOCATION OF DRAIN HOLES ON SKIRT.
4. NAME PLATE AND BRACKET LOCATION.

PLEASE NOTE THAT SOURCE, SPECIAL NUCLEAR AND BYPRODUCT MATERIALS, AS DEFINED IN THE ATOMIC ENERGY ACT OF 1954 (AEA), ARE REGULATED AT THE U.S. DEPARTMENT OF ENERGY (DOE) FACILITIES EXCLUSIVELY BY DOE ACTING PURSUANT TO ITS AEA AUTHORITY. DOE ASSERTS, THAT PURSUANT TO THE AEA, IT HAS SOLE AND EXCLUSIVE RESPONSIBILITY AND AUTHORITY TO REGULATE SOURCE, SPECIAL NUCLEAR, AND BYPRODUCT MATERIAL AT DOE-OWNED NUCLEAR FACILITIES. INFORMATION CONTAINED HEREIN ON RADIONUCLIDES IS PROVIDED FOR PROCESS DESCRIPTION PURPOSES ONLY.

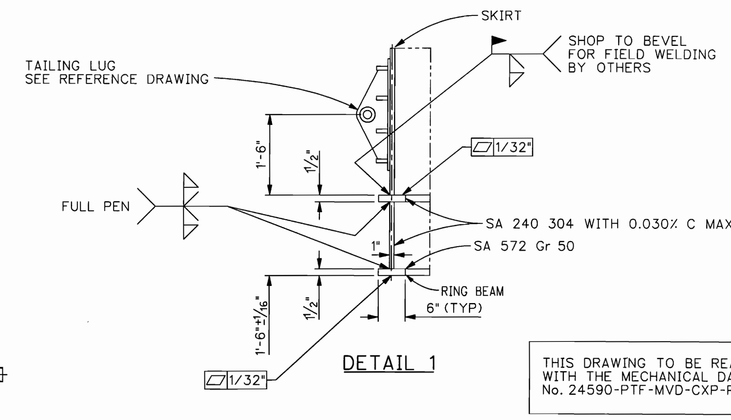

DETAIL 1

THIS DRAWING TO BE READ IN CONJUNCTION WITH THE MECHANICAL DATA SHEET No. 24590-PTF-MVD-CXP-P0007

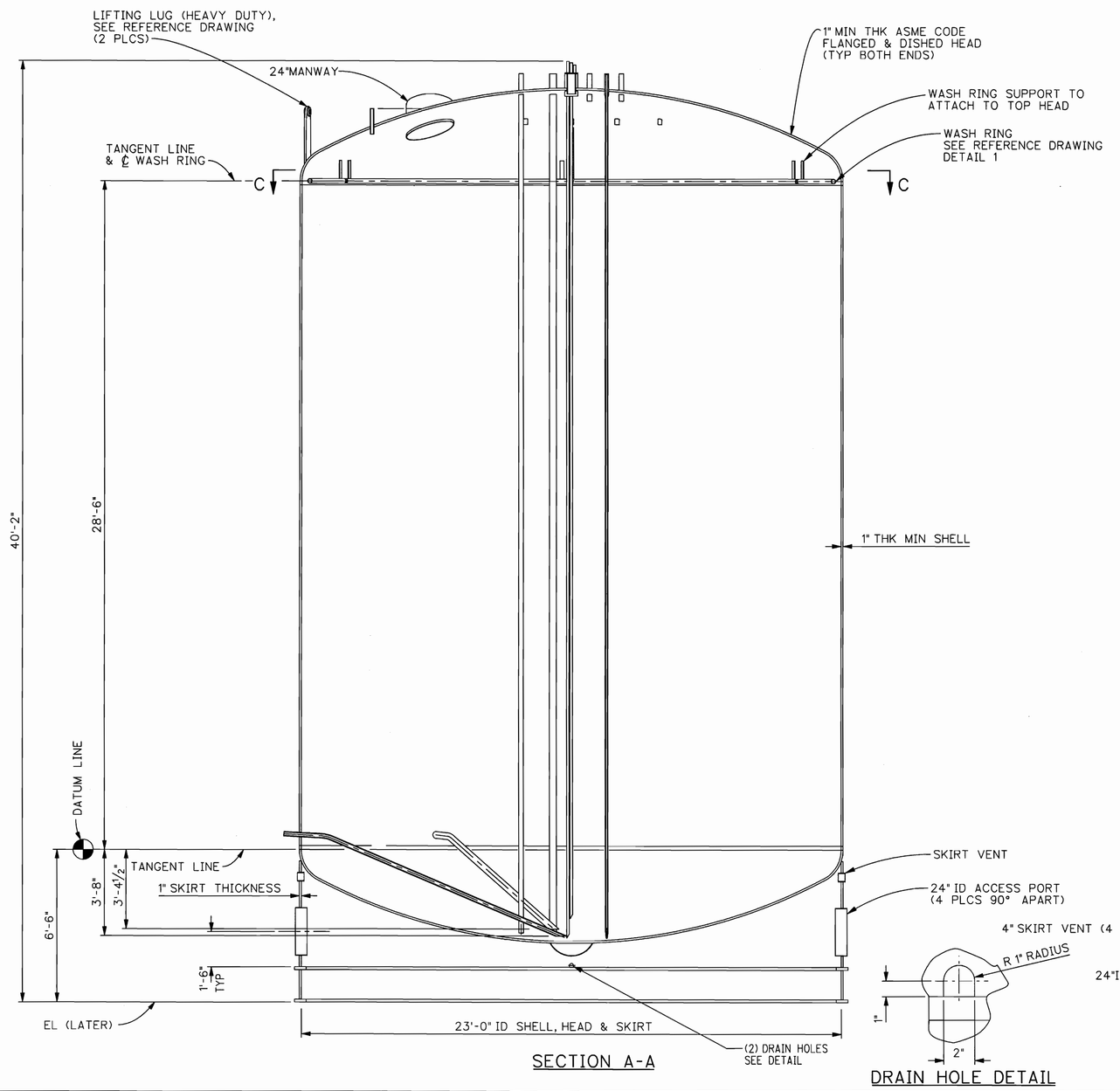

SECTION A-A

DRAIN HOLE DETAIL

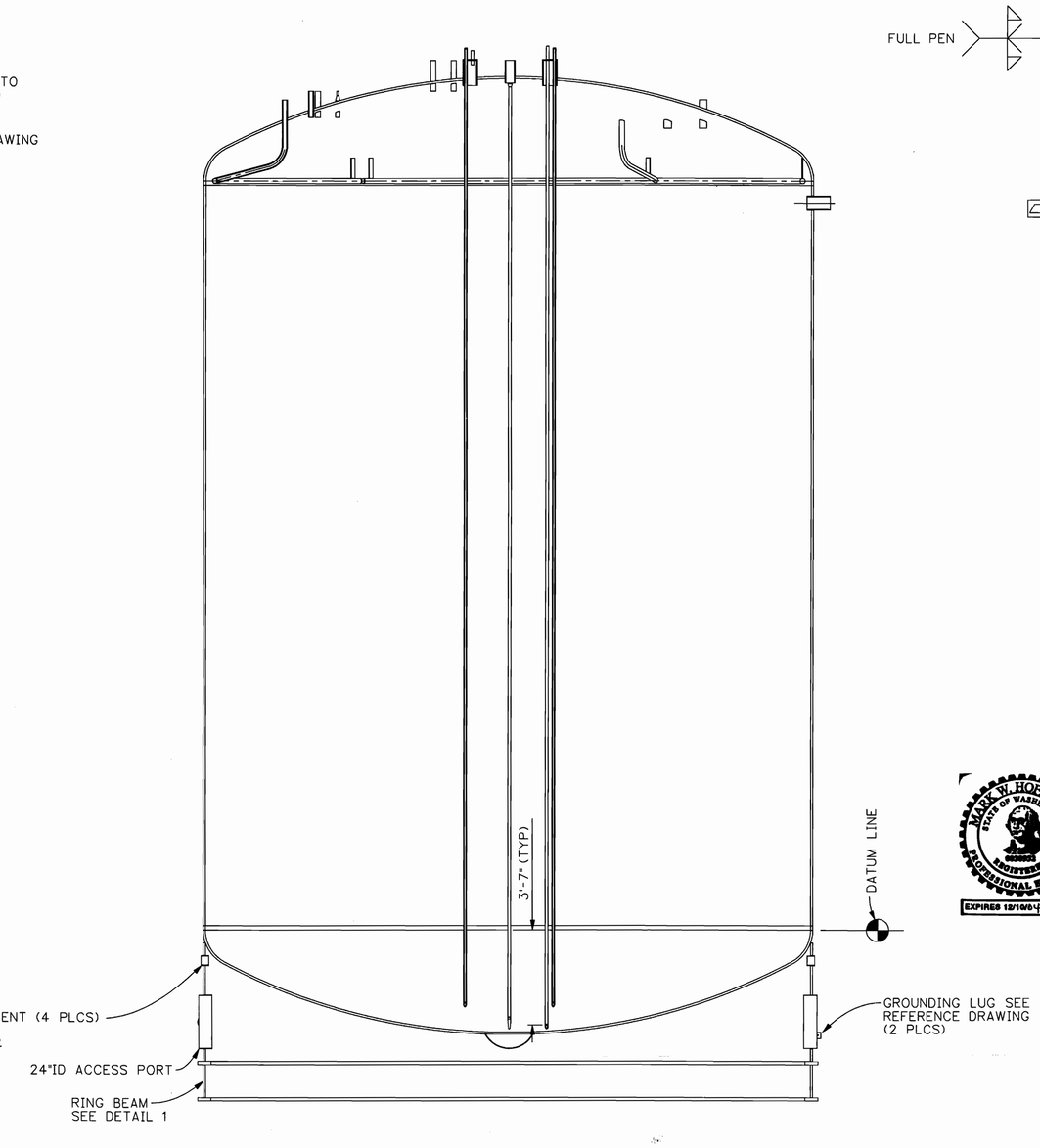

SECTION B-B

VESSEL COMPONENT QUALITY LEVELS	
COMPONENT	QUALITY LEVEL
SHELL, HEAD, SKIRT & ALL NOZZLES	QL-1
ALL INTERNAL SUPPORTS	QL-1
INSTRUMENTATION	CM
WASH RING PIPING	CM
OTHER INTERNAL PIPING	QL-1

REFERENCE DRAWINGS		
DWG NO	REV	TITLE
24590-PTF-M6-CXP-P0001		P&ID-PTF CESIUM ION EXCHANGE PROCESS VESSELS SYS
24590-WTP-MV-M59T-00001		PRESSURE VESSEL TOLERANCES STD DETAILS
24590-WTP-MV-M59T-00007		THERMOWELL CONNECTION STD DETAILS
24590-WTP-MV-M59T-00009		LIFTING LUGS STD DETAILS
24590-WTP-MV-M59T-00010		TAILING LUGS STD DETAILS
24590-WTP-MV-M59T-00011		WASH RINGS STD DETAILS
24590-WTP-MV-M59T-00012		GROUNDING LUG STD DETAILS
24590-WTP-MV-M59T-00016001		VESSEL CONNECTIONS STD DETAILS SH 1 of 2
24590-WTP-MV-M59T-00016002		VESSEL CONNECTIONS STD DETAILS SH 2 of 2
24590-WTP-MV-M59T-00017		VESSEL INSPECTION MANWAY STD DETAILS

MARK W. HOFFMAN, STATE OF WASHINGTON, REGISTERED PROFESSIONAL ENGINEER — 5/26/04 — EXPIRES 12/12/05

REV	DESCRIPTION	ORG	CHKD	RVWD	APVD	DATE
0	ISSUED FOR PERMITTING USE					5/26/04

REVISION HISTORY

Q QUALITY LEVEL

ISSUED BY PROJECT ENGINEER 5/26/04 INIT DATE — ISSUE STAMP

PROJECT No.	24590	
SITE	HANFORD	
AREA	200E	
BUILDING No.	10	
	BY	DATE
ORIGINATOR		5/17/04
CHECKER		5/17/04
APPROVER		5/26/04
REVIEWER		5/19/04

CONTENT APPLICABLE TO ALARA? [XX] YES [ ] NO
ADR NO. N/A REV:

BECHTEL

RIVER PROTECTION PROJECT
WASTE TREATMENT PLANT
2435 STEVENS CENTER PLACE
RICHLAND, WA 99352

CONTRACT No: DE-AC27-01RV14136

EQUIPMENT ASSEMBLY Cs IX VESSEL CXP-VSL-00001

SCALE: NTS

24590-PTF-MV -CXP-P0001

REV 0

'E' SIZE - 44x34
COMPUTER GENERATED - MANUAL CHANGES NOT PERMITTED

05/17/2004 09:43:12 AM

PLOTTED BY: jfwilli3
C:\Work\Gemini5\ptf\mv\cxp\p0001.dgn

R1091511

FORM E_SDN.DGN 02/2003

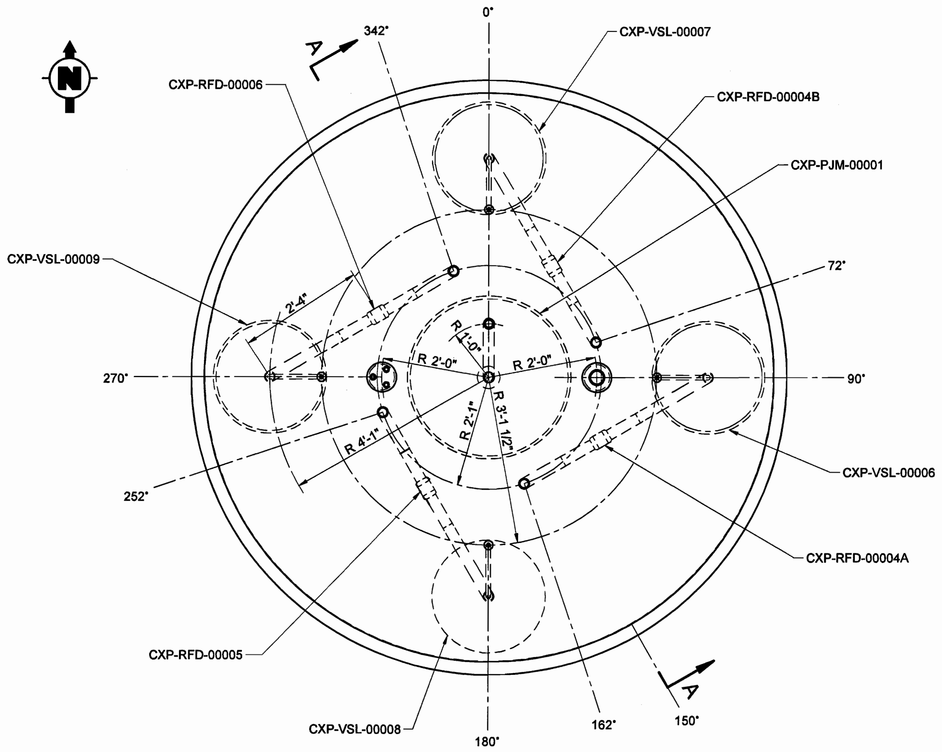

PLAN

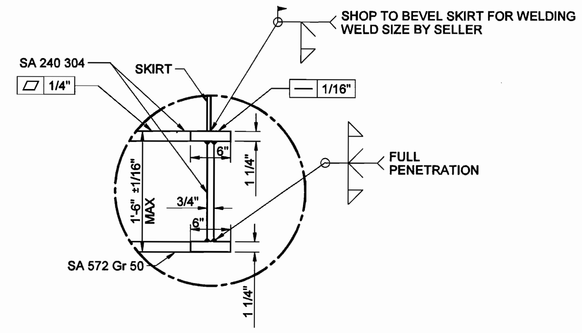

DETAIL-1

GENERAL NOTES:

1. RFD PUMP SHALL BE PROVIDED BY BUYER FOR SELLER TO INSTALL, ALL OTHER INTERNALS SHALL BE DESIGNED , PROVIDED AND INSTALLED BY SELLER.
2. FOR DISTANCE OF DIP PIPES TO BOTTOM HEAD USE 2" CLEARANCE UNLESS OTHERWISE SPECIFIED.
3. DELETED
4. RING BEAM TO BE FABRICATED & SHIPPED AHEAD OF VESSEL TO FIELD CONSTRUCTION FOR INSTALLATION BY OTHERS. (SEE NOTE 6)
5. DELETED
6. THE ACCEPTABLE DIAMETRAL TOLERANCES FOR BOTH THE SKIRT AND THE RING BEAM SHALL BE PER ITEM 3 OF THE PROJECT STANDARD DRAWING 24590-WTP-MV-M59T-00001. THE MAXIMUM CENTERLINE DEVIATION OF THE BOTTOM OF THE SKIRT AND THE WEB OF THE RING BEAM AT ANY GIVEN POINT SHALL NOT EXCEED ONE HALF OF THE NOMINAL THICKNESS OF THE SKIRT.
7. DELETED

HOLDS:

1. FINAL INTERNALS LAYOUT, NOZZLE LOCATIONS, AND NAME PLATE LOCATION PENDING INPUT FROM PLANT DESIGN
2. LIFTING LUG AND TAILING LUG LOCATION PENDING INPUT FROM CONSTRUCTION
3. PJM AND CHARGE VESSEL SIZES PENDING DESIGN BY AEA

THIS DRAWING TO BE READ IN CONJUNCTION WITH THE MECHANICAL DATA

SHEET No 24590-PTF-MVD-CXP-P0015

VESSEL COMPONENT QUALITY LEVELS	
COMPONENT	QUALITY LEVEL
MAIN VESSEL, SKIRT, ALL NOZZLES	QL-1
ALL INTERNAL SUPPORTS	QL-1
PULSE JET MIXERS AND PIPING	QL-1
CHARGE VESSELS, RFD'S AND PIPING	CM
INSTRUMENTATION	CM
WASH RING AND PIPING	CM

PLEASE NOTE THAT SOURCE, SPECIAL NUCLEAR AND BYPRODUCT MATERIALS, AS DEFINED IN THE ATOMIC ENERGY ACT OF 1954 (AEA), ARE REGULATED AT THE U.S. DEPARTMENT OF ENERGY (DOE) FACILITIES EXCLUSIVELY BY DOE ACTING PURSUANT TO ITS AEA AUTHORITY. DOE ASSERTS, THAT PURSUANT TO THE AEA, IT HAS SOLE AND EXCLUSIVE RESPONSIBILITY AND AUTHORITY TO REGULATE SOURCE, SPECIAL NUCLEAR, AND BYPRODUCT MATERIALS AT DOE-OWNED NUCLEAR FACILITIES. INFORMATION CONTAINED HEREIN ON RADIONUCLIDES IS PROVIDED FOR PROCESS DESCRIPTION PURPOSES ONLY.

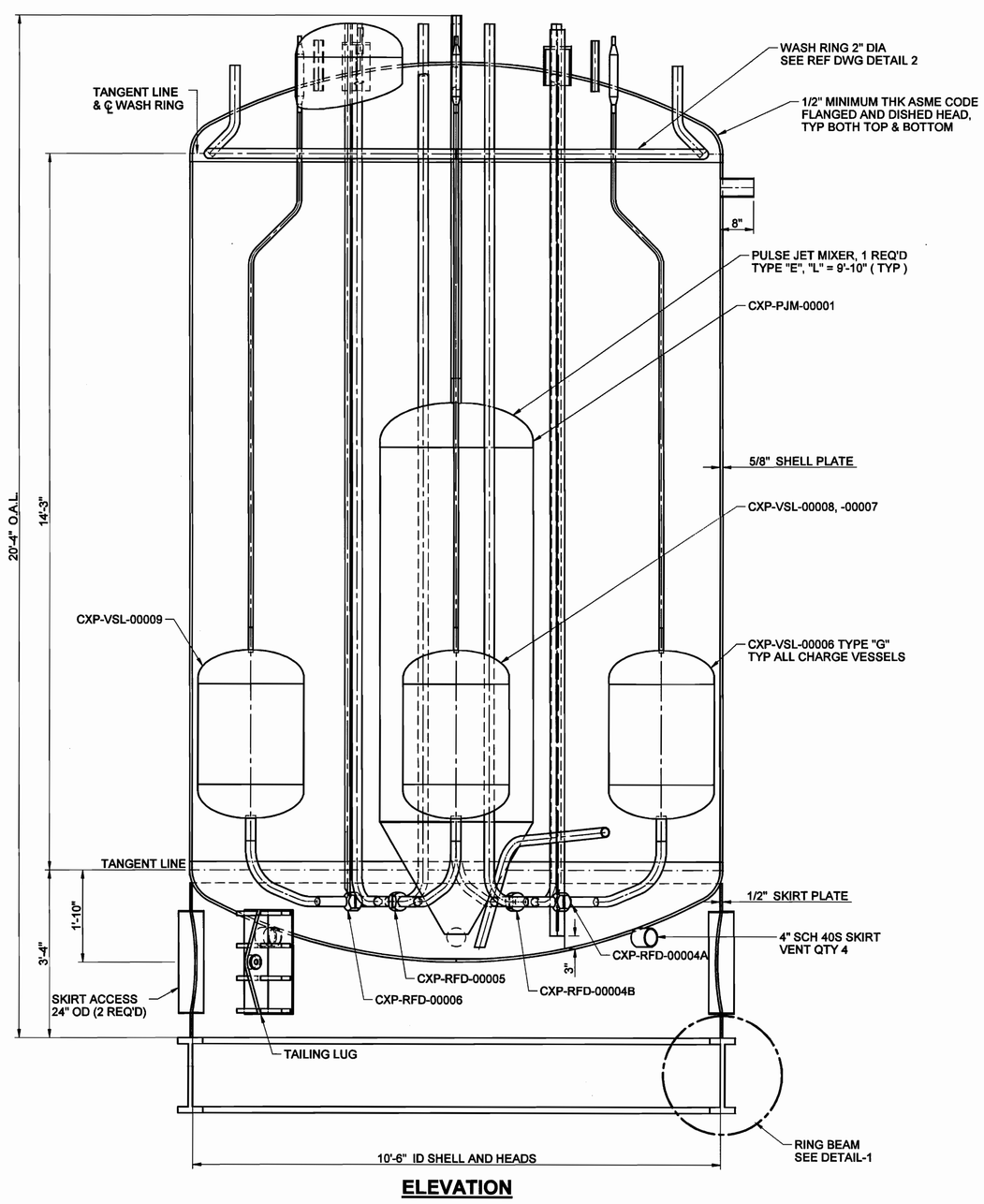

ELEVATION

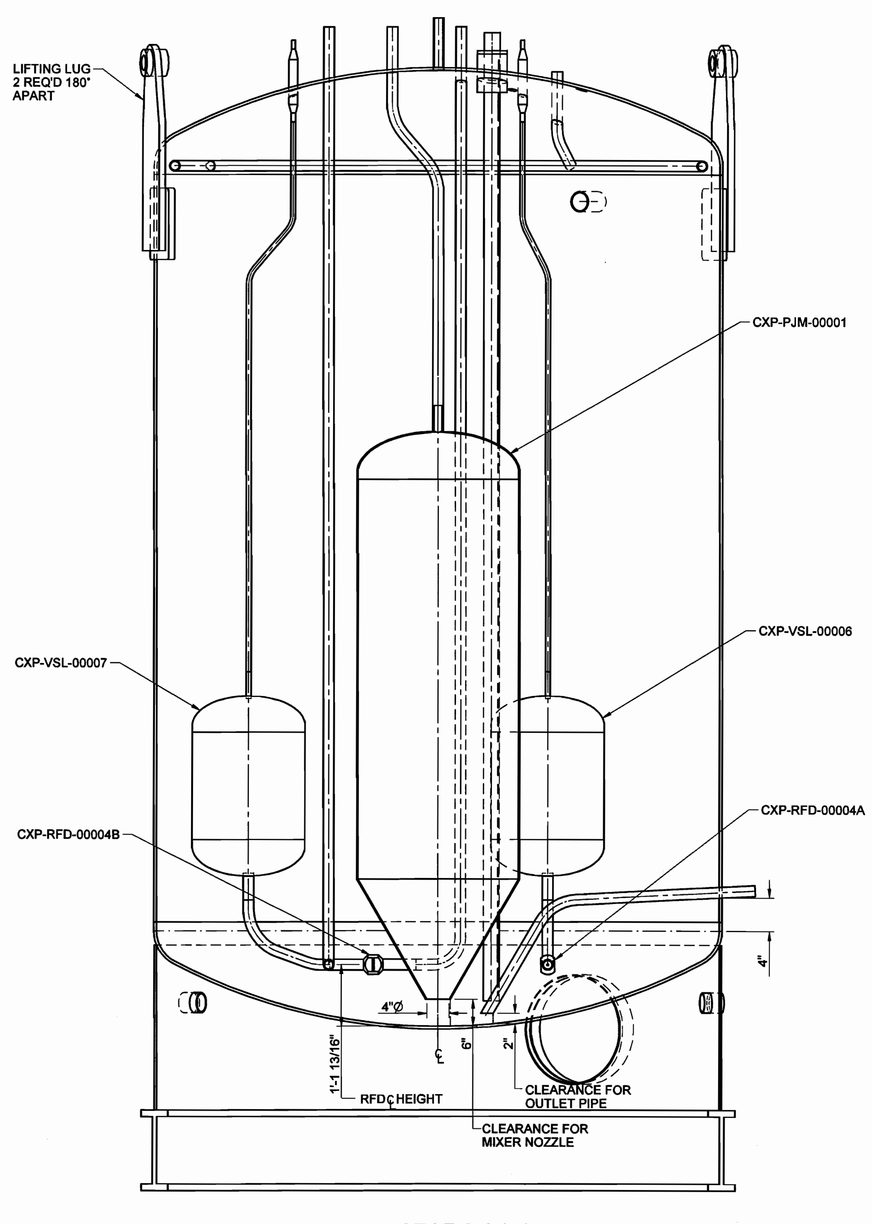

SECTION A-A

REFERENCE DRAWINGS		
DWG NO	REV	TITLE
24590-PTF-MB-CXP-P0001		P&ID
24590-PTF-MB-CXP-P0005		P&ID
24590-PTF-MB-CXP-P0007		P&ID
24590-WTP-MV-M59T-00001		PRESSURE VESSEL TOLERANCES STANDARD DETAILS
24590-WTP-MV-M59T-00004		PULSE JET MIXERS STANDARD DETAILS
		DELETED
24590-WTP-MV-M59T-00009		LIFTING LUG STANDARD DETAILS
24590-WTP-MV-M59T-00010		TAILING LUG STANDARD DETAILS
24590-WTP-MV-M59T-00011		WASH RINGS STANDARD DETAILS
24590-WTP-MV-M59T-00012		GROUNDING LUG STANDARD DETAILS
24590-WTP-MV-M59T-00013		CHARGE VESSEL STANDARD DETAILS
24590-WTP-MV-M59T-00014		RFD PUMPS DETAIL
24590-WTP-MV-M59T-00016001		VESSEL CONNECTIONS STANDARD DETAILS SHT 1 OF 2
24590-WTP-MV-M59T-00016002		VESSEL CONNECTIONS STANDARD DETAILS SHT 2 OF 3
24590-WTP-MV-M59T-00016003		VESSEL CONNECTIONS STANDARD DETAILS SHT 3 OF 3
24590-WTP-MV-M59T-00017		VESSEL INSPECTION MANWAY STANDARD DETAILS
24590-WTP-MV-M59T-00018		VESSEL NAME PLATE STANDARD DETAILS

MARK W. HOBBMANN, STATE OF WASHINGTON, REGISTERED PROFESSIONAL ENGINEER — 5/26/04 — EXPIRES 12/19/04

REVISION HISTORY						
REV	DESCRIPTION	ORG	CHKD	RVWD	APVD	DATE
0	ISSUED FOR PERMITTING USE	KWD	MB	CB	DBF	5/26/04

Q — QUALITY LEVEL

ISSUED BY WTP/TP/PDC — 12/19/04 — INIT | DATE — ISSUE STAMP

PROJECT No.	24590
SITE	HANFORD
AREA	200E
BUILDING No.	10

	BY	DATE
ORIGINATOR	KWD	5/17/04
CHECKER	[illegible]	5/17/04
APPROVER	[illegible]	5/26/04
REVIEWER	[illegible]	5/19/04

CONTENT APPLICABLE TO ALARA? [X] YES [ ] NO

ADR NO. N/A REV:

BECHTEL

RIVER PROTECTION PROJECT
WASTE TREATMENT PLANT
2435 STEVENS CENTER PLACE
RICHLAND, WA 99352

CONTRACT No: DE-AC27-01RV14136

EQUIPMENT ASSEMBLY
CAUSTIC RINSE COLLECTION VESSEL
CXP-VSL-00004

SCALE: NONE

24590-PTF-MV-CXP-P0002

REV 0

"E" SIZE - 44x34
COMPUTER GENERATED BY SOLID EDGE-
MANUAL CHANGES NOT PERMITTED

WHEN REFERENCING DRAWING AND DIM NUMBERS IN DOCUMENTS, BE SURE TO INCLUDE DASHES BETWEEN ELEMENTS

03/05/2004 8:35 AM

FORM E_MASTER 03/2003

R1231518

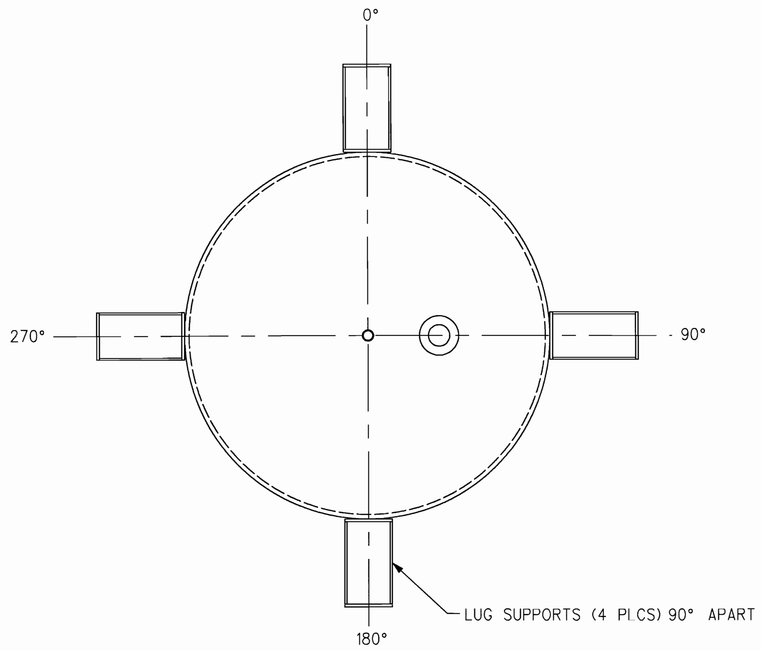

PLAN

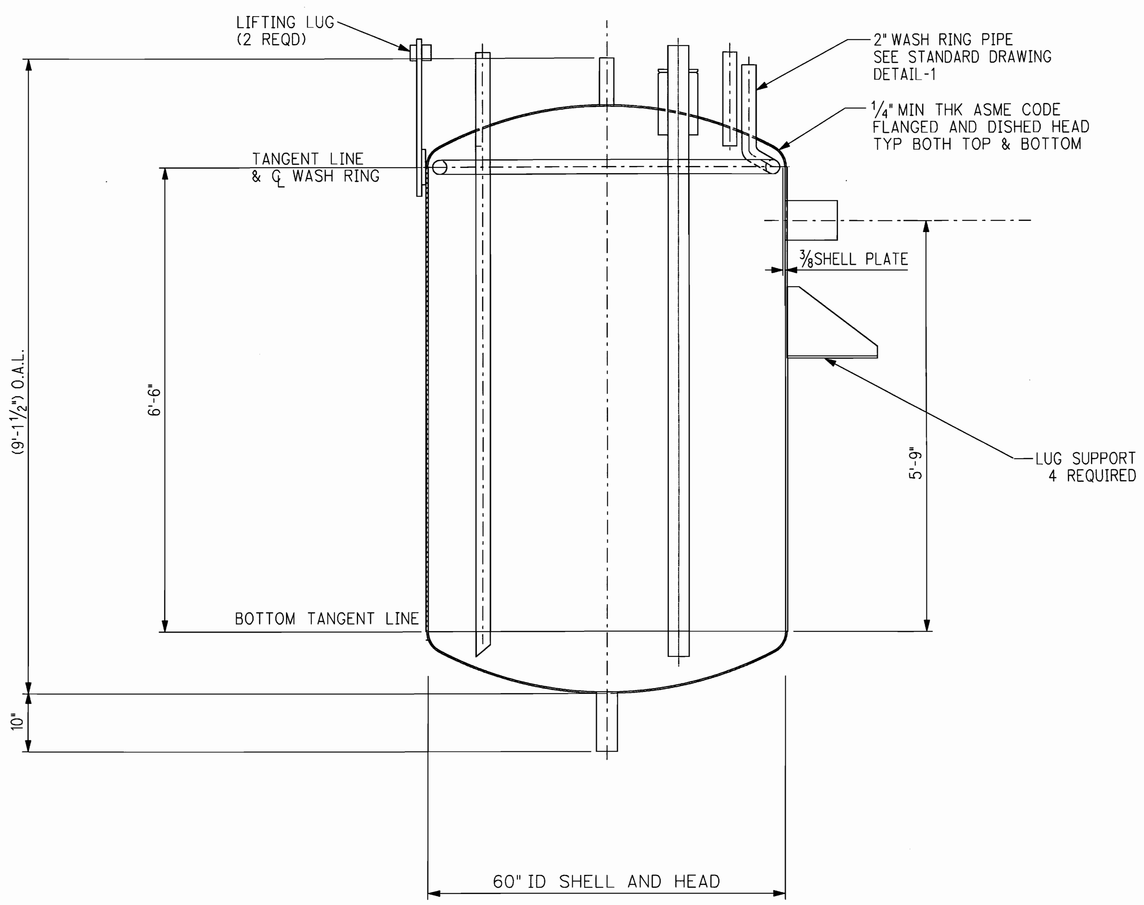

ELEVATION

GENERAL NOTES

1. FOR DISTANCE OF DIP PIPES TO BOTTOM HEAD USE 2" CLEARANCE UNLESS OTHERWISE SPECIFIED
2. DELETED
3. BASE PLATE AND ANCHOR BOLTS DESIGN BY VENDOR
4. DELETED

HOLD:

1. NOZZLE LOCATIONS AND NAME PLATE LOCATION PENDING INPUT FROM PLANT DESIGN.
2. LIFTING LUGS LOCATION PENDING INPUT FROM CONSTRUCTION.

THIS DRAWING TO BE READ IN CONJUNCTION WITH THE MECHANICAL DATA SHEET 24590-PTF-MVD-CXP-P0016

VESSEL COMPONENT QUALITY LEVELS	
MAIN VESSEL, SKIRT, ALL NOZZLES	QL-1
ALL INTERNAL SUPPORTS	QL-1
LEVEL INSTRUMENTS (ITS)	QL-1
INSTRUMENTATION	CM
WASH RING AND PIPING	CM

PLEASE NOTE THAT SOURCE, SPECIAL NUCLEAR AND BYPRODUCT MATERIALS, AS DEFINED IN THE ATOMIC ENERGY ACT OF 1954 (AEA), ARE REGULATED AT THE U.S. DEPARTMENT OF ENERGY (DOE) FACILITIES EXCLUSIVELY BY DOE ACTING PURSUANT TO ITS AEA AUTHORITY. DOE ASSERTS, THAT PURSUANT TO THE AEA, IT HAS SOLE AND EXCLUSIVE RESPONSIBILITY AND AUTHORITY TO REGULATE SOURCE, SPECIAL NUCLEAR, AND BYPRODUCT MATERIAL AT DOE-OWNED NUCLEAR FACILITIES. INFORMATION CONTAINED HEREIN ON RADIONUCLIDES IS PROVIDED FOR PROCESS DESCRIPTION PURPOSES ONLY.

REFERENCE DRAWINGS		
DWG NO	REV	TITLE
24590-PTF-M6-CXP-P0001		P&ID
24590-PTF-M6-CXP-P0007		P&ID
24590-WTP-MV-M59T-00001		PRESSURE VESSEL TOLERANCES STANDARD DETAILS
24590-WTP-MV-M59T-00011		WASH RINGS STANDARD DETAILS
		DELETED
24590-WTP-MV-M59T-00009		LIFTING LUGS STANDARD DETAILS
24590-WTP-MV-M59T-00016001		VESSEL CONNECTIONS STANDARD DETAILS SH 1 of 3
24590-WTP-MV-M59T-00016002		VESSEL CONNECTIONS STANDARD DETAILS SH 2 of 3
24590-WTP-MV-M59T-00016003		VESSEL CONNECTIONS STANDARD DETAILS SH 3 of 3
24590-WTP-MV-M59T-00018		VESSEL NAME PLATE STANDARD DETAIL

MARK W. HOFFMANN, STATE OF WASHINGTON, REGISTERED PROFESSIONAL ENGINEER — EXPIRES 12/13/04 — 5/26/04

REV	DESCRIPTION	ORG	CHKD	RVWD	APVD	DATE
0	ISSUED FOR PERMITTING USE					5/26/04

REVISION HISTORY

Q
QUALITY LEVEL

ISSUED BY: WTP-PTC 5/26/04 INIT DATE

ISSUE STAMP

PROJECT No.	24590	
SITE	HANFORD	
AREA	200E	
BUILDING No.	10	
	BY	DATE
ORIGINATOR		5/17/04
CHECKER		5/17/04
APPROVER		5/26/04
REVIEWER		5/19/04

CONTENT APPLICABLE TO ALARA? [XX] YES [ ] NO
ADR NO. N/A REV:

BECHTEL

RIVER PROTECTION PROJECT
WASTE TREATMENT PLANT
2435 STEVENS CENTER PLACE
RICHLAND, WA 99352

CONTRACT No: DE-AC27-01RV14136

EQUIPMENT ASSEMBLY
CESIUM REAGENT VESSEL
CXP-VSL-00005

SCALE: NONE

24590-PTF-MV-CXP-P0003

REV 0

'E' SIZE - 44x34
COMPUTER GENERATED - MANUAL CHANGES NOT PERMITTED

05/17/2004 09:23:31 AM

PLOTTED BY: jrwilk3
C:\Work\Jobs\50080\PTF\MV\CXP\P0003.dgn

FORM E_SDN.DGN 02/2003

DWG No. 24590-PTF-MV-CXP-P0008

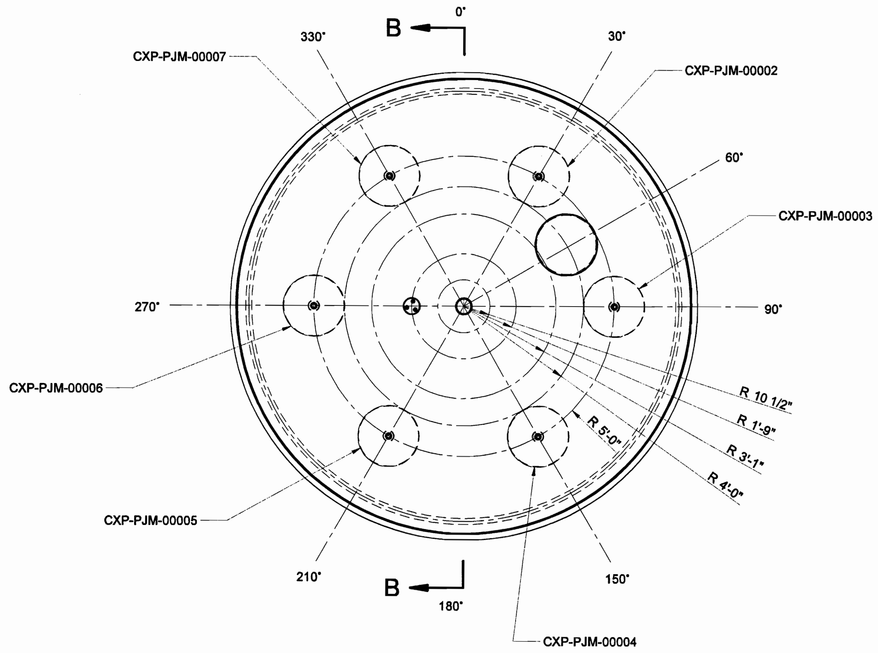

PLAN

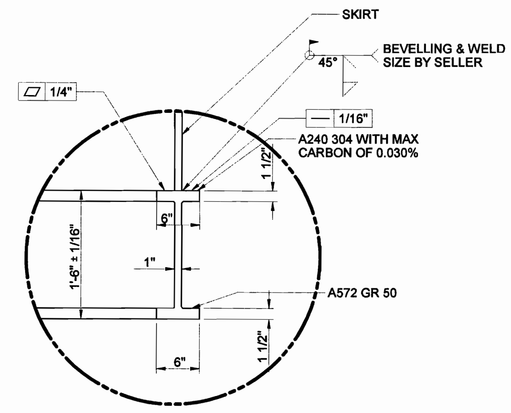

DETAIL-I
BASE RING

GENERAL NOTES:

1. FOR DIP LEGS USE 2" BOTTOM HEAD CLEARANCE.
2. DELETED
3. SOME HIDDEN LINES OMITTED FOR CLARITY.

HOLDS:

1. DELETED
2. LIFTING AND TAILING LUG LOCATIONS PENDING REVIEW BY CONSTRUCTION.
3. DELETED
4. PULSE JET MIXER DESIGN PENDING RELEASE BY FLUIDICS.

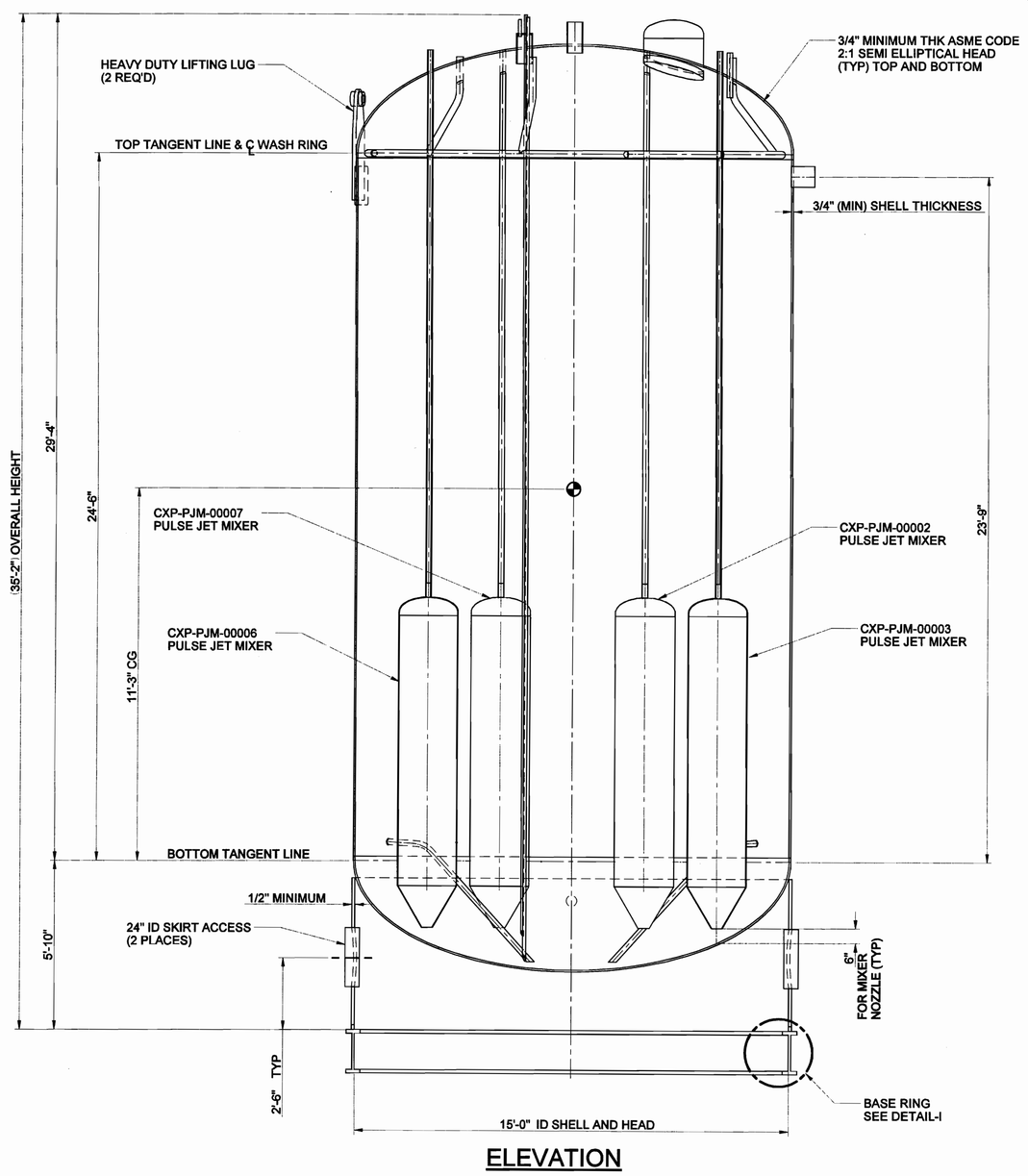

ELEVATION

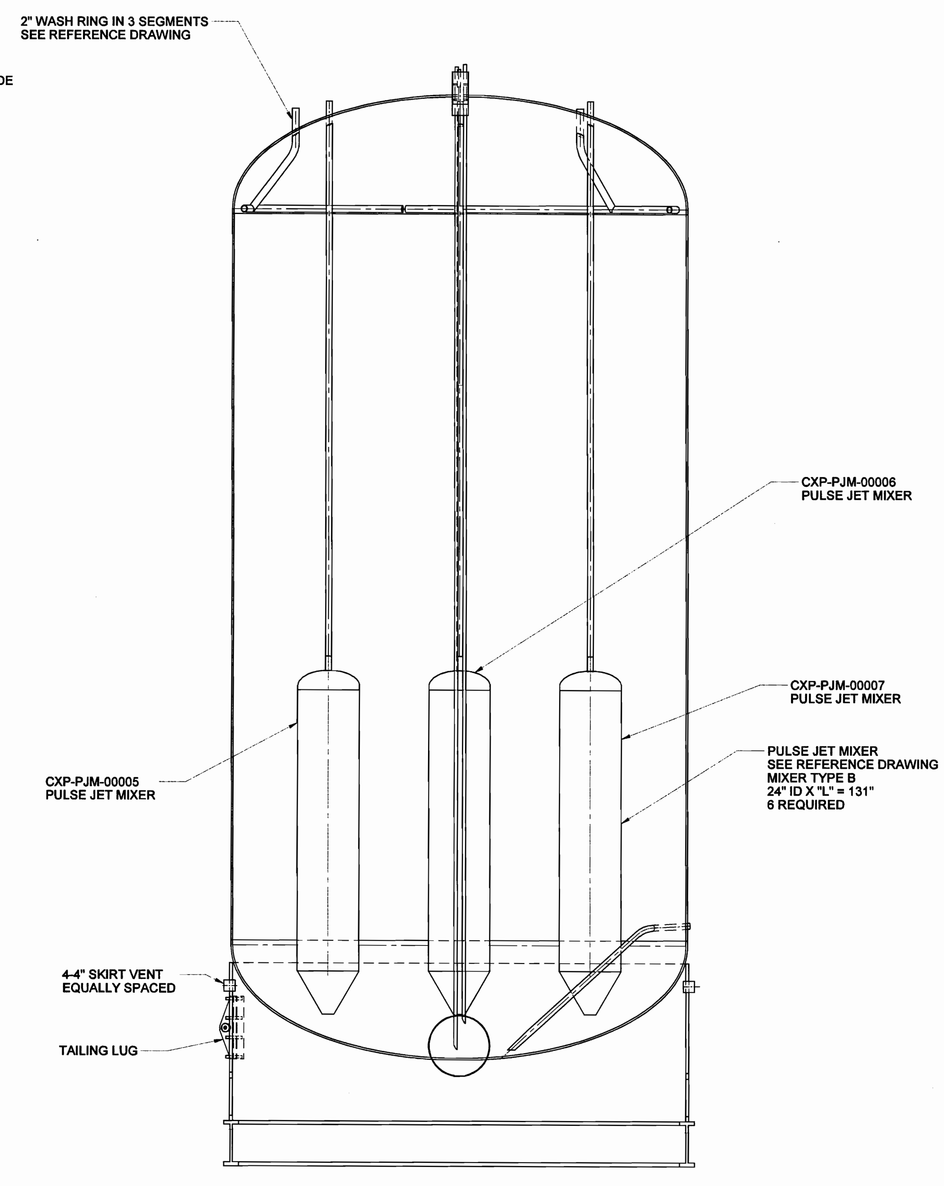

SECTION B-B

THIS DRAWING TO BE READ IN CONJUNCTION WITH MECHANICAL SYSTEMS DATA SHEET 24590-PTF-MVD-CXP-P0021

VESSEL COMPONENT QUALITY LEVELS	
COMPONENTS	QUALITY LEVEL
MAIN VESSEL, SKIRT, ALL NOZZLES	QL-1
ALL INTERNAL SUPPORTS	QL-1
PULSE JET MIXERS AND PIPING	CM
LEVEL INSTRUMENT	CM
OTHER INSTRUMENTATION	CM
WASH RING AND PIPING	CM

PLEASE NOTE THAT SOURCE, SPECIAL NUCLEAR AND BYPRODUCT MATERIALS, AS DEFINED IN THE ATOMIC ENERGY ACT OF 1954 (AEA), ARE REGULATED AT THE U.S. DEPARTMENT OF ENERGY (DOE) FACILITIES EXCLUSIVELY BY DOE ACTING PURSUANT TO ITS AEA AUTHORITY. DOE ASSERTS, THAT PURSUANT TO THE AEA, IT HAS SOLE AND EXCLUSIVE RESPONSIBILITY AND AUTHORITY TO REGULATE SOURCE, SPECIAL NUCLEAR, AND BYPRODUCT MATERIALS AT DOE-OWNED NUCLEAR FACILITIES. INFORMATION CONTAINED HEREIN ON RADIONUCLIDES IS PROVIDED FOR PROCESS DESCRIPTION PURPOSES ONLY.

REFERENCE DRAWINGS		
DWG NO	REV	TITLE
24590-PTF-M6-CXP-P0010		P&ID
24590-PTF-M6-CXP-P0011		P&ID
24590-PTF-M6-CXP-P0012		P&ID
24590-WTP-MV-M59T-00001		PRESSURE VESSEL TOLERANCES STANDARD DETAILS
24590-WTP-MV-M59T-00004		PULSE JET MIXERS STANDARD DETAILS
24590-WTP-MV-M59T-00009		LIFTING LUGS STANDARD DETAILS
24590-WTP-MV-M59T-00010		TAILING LUG STANDARD DETAILS
24590-WTP-MV-M59T-00011		WASH RINGS STANDARD DETAILS
24590-WTP-MV-M59T-00016001		VESSEL CONNECTIONS STANDARD DETAILS SHT 1 OF 3
24590-WTP-MV-M59T-00016002		VESSEL CONNECTIONS STANDARD DETAILS SHT 2 OF 3
24590-WTP-MV-M59T-00017		VESSEL INSPECTION MANWAY STANDARD DETAILS
24590-WTP-MV-M59T-00018		VESSEL NAMEPLATE STANDARD DETAILS

MARK W. HOFFMANN, STATE OF WASHINGTON, REGISTERED PROFESSIONAL ENGINEER — 5/26/04 — EXPIRES 12/12/05

REV	DESCRIPTION	ORG	CHKD	RVWD	APVD	DATE
0	ISSUED FOR PERMITTING USE					5/26/04

REVISION HISTORY

Q QUALITY LEVEL

ISSUED BY PROJECT ENG. 5/26/04 JWT DATE — ISSUE STAMP

PROJECT No.	24590
SITE	HANFORD
AREA	200 E
BUILDING No.	10

	BY	DATE
ORIGINATOR		5/7/04
CHECKER		5/10/04
APPROVER		5/26/04
REVIEWER		5/10/04

CONTENT APPLICABLE TO ALARA? ☒ YES ☐ NO

ADR NO. N/A REV:

BECHTEL

RIVER PROTECTION PROJECT
WASTE TREATMENT PLANT
2435 STEVENS CENTER PLACE
RICHLAND, WA 99352

CONTRACT No: DE-AC27-01RV14136

EQUIPMENT ASSEMBLY
CESIUM ION EXCHANGE
TREATED LAW COLLECTION VESSEL
CXP-VSL-00026A

SCALE: NONE

24590-PTF-MV-CXP-P0008 REV 0

"E" SIZE - 44x34
COMPUTER GENERATED BY SOLID EDGE-MANUAL CHANGES NOT PERMITTED

WHEN REFERENCING DRAWING AND DIM NUMBERS IN DOCUMENTS, BE SURE TO INCLUDE DASHES BETWEEN ELEMENTS

01/29/2004 8:21:22 AM

FORM E_MASTER 03/2003

R2031518

DWG No. 24590-PTF-MV-CXP-P0009

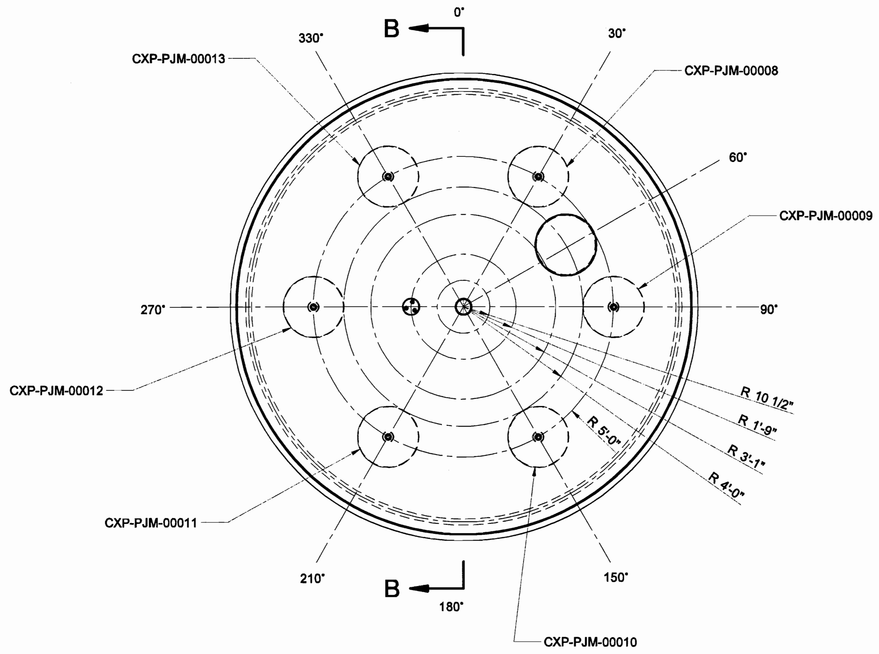

PLAN

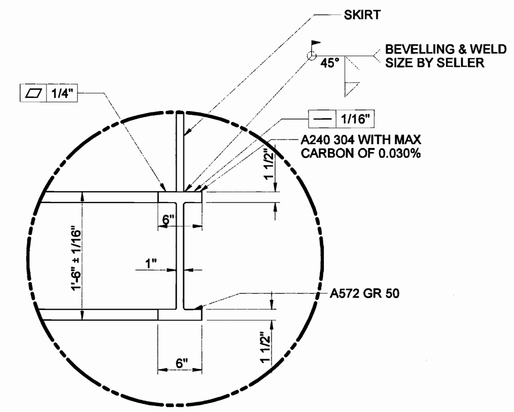

DETAIL-I
BASE RING

GENERAL NOTES:

1. FOR DIP LEGS USE 2" BOTTOM HEAD CLEARANCE.
2. DELETED
3. SOME HIDDEN LINES OMITTED FOR CLARITY.

HOLDS:

1. DELETED
2. LIFTING AND TAILING LUG LOCATIONS PENDING REVIEW BY CONSTRUCTION.
3. DELETED
4. PULSE JET MIXER DESIGN PENDING RELEASE BY FLUIDICS.

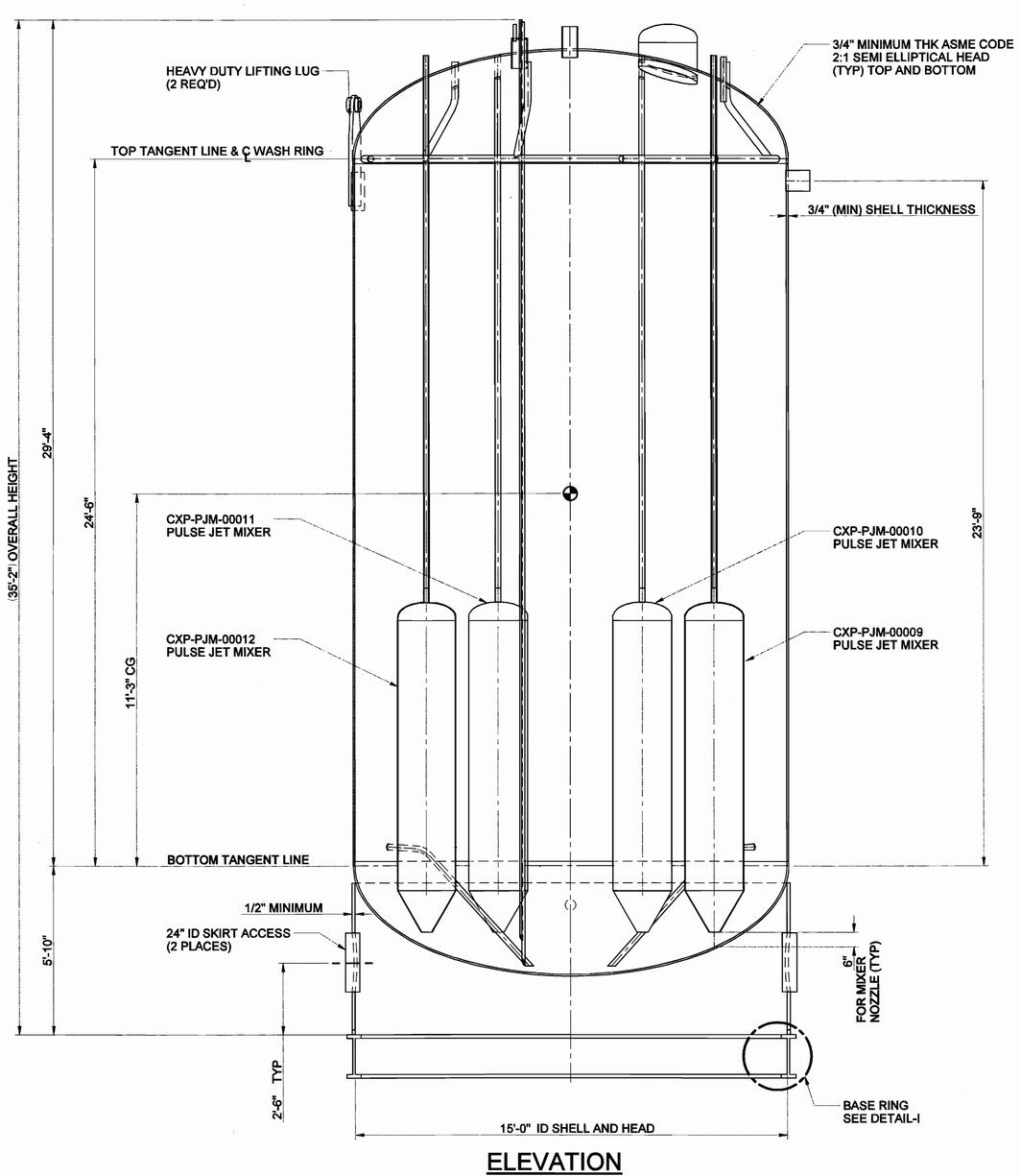

ELEVATION

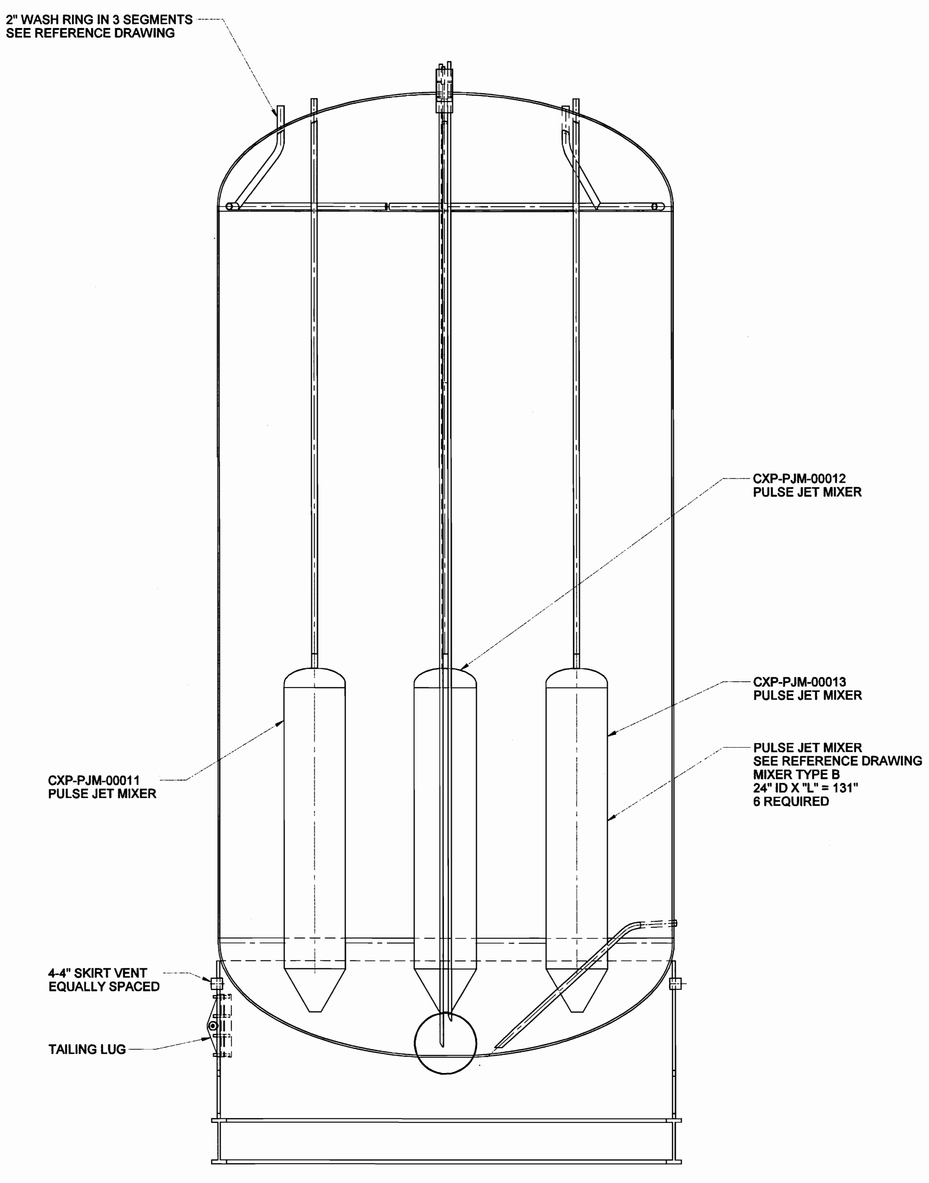

SECTION B-B

THIS DRAWING TO BE READ IN CONJUNCTION WITH MECHANICAL SYSTEMS DATA SHEET 24590-PTF-MVD-CXP-P0022

VESSEL COMPONENT QUALITY LEVELS	
COMPONENTS	QUALITY LEVEL
MAIN VESSEL, SKIRT, ALL NOZZLES	QL-1
ALL INTERNAL SUPPORTS	QL-1
PULSE JET MIXERS AND PIPING	CM
LEVEL INSTRUMENT	CM
OTHER INSTRUMENTATION	CM
WASH RING AND PIPING	CM

PLEASE NOTE THAT SOURCE, SPECIAL NUCLEAR AND BYPRODUCT MATERIALS, AS DEFINED IN THE ATOMIC ENERGY ACT OF 1954 (AEA), ARE REGULATED AT THE U.S. DEPARTMENT OF ENERGY (DOE) FACILITIES EXCLUSIVELY BY DOE ACTING PURSUANT TO ITS AEA AUTHORITY. DOE ASSERTS, THAT PURSUANT TO THE AEA, IT HAS SOLE AND EXCLUSIVE RESPONSIBILITY AND AUTHORITY TO REGULATE SOURCE, SPECIAL NUCLEAR, AND BYPRODUCT MATERIALS AT DOE-OWNED NUCLEAR FACILITIES. INFORMATION CONTAINED HEREIN ON RADIONUCLIDES IS PROVIDED FOR PROCESS DESCRIPTION PURPOSES ONLY.

REFERENCE DRAWINGS		
DWG NO	REV	TITLE
24590-PTF-M6-CXP-P0010		P&ID
24590-PTF-M6-CXP-P0011		P&ID
24590-PTF-M6-CXP-P0012		P&ID
24590-WTP-MV-M59T-00001		PRESSURE VESSEL TOLERANCES STANDARD DETAILS
24590-WTP-MV-M59T-00004		PULSE JET MIXERS STANDARD DETAILS
24590-WTP-MV-M59T-00009		LIFTING LUGS STANDARD DETAILS
24590-WTP-MV-M59T-00010		TAILING LUG STANDARD DETAILS
24590-WTP-MV-M59T-00011		WASH RINGS STANDARD DETAILS
24590-WTP-MV-M59T-00016001		VESSEL CONNECTIONS STANDARD DETAILS SHT 1 OF 3
24590-WTP-MV-M59T-00016002		VESSEL CONNECTIONS STANDARD DETAILS SHT 2 OF 3
24590-WTP-MV-M59T-00017		VESSEL INSPECTION MANWAY STANDARD DETAILS
24590-WTP-MV-M59T-00018		VESSEL NAMEPLATE STANDARD DETAILS

MARK W. HOFFMANN, STATE OF WASHINGTON, REGISTERED PROFESSIONAL ENGINEER — 5/26/04 — EXPIRES 12/16/04

REV	DESCRIPTION	ORIG	CHKD	RVWD	APVD	DATE
0	ISSUED FOR PERMITTING USE					5/26/04

REVISION HISTORY

Q QUALITY LEVEL

ISSUED BY FOR PERMITTING USE — SIGNATURE — DATE — WAIVE STAMP

PROJECT No.	24590
SITE	HANFORD
AREA	200 E
BUILDING No.	10

	BY	DATE
ORIGINATOR		3/17/04
CHECKER		5/6/04
APPROVER		5/26/04
REVIEWER		5/13/04

CONTENT APPLICABLE TO ALARA? ☒ YES ☐ NO

ADR NO. N/A REV:

BECHTEL

RIVER PROTECTION PROJECT
WASTE TREATMENT PLANT
2435 STEVENS CENTER PLACE
RICHLAND, WA 99352

CONTRACT No: DE-AC27-01RV14136

EQUIPMENT ASSEMBLY
CESIUM ION EXCHANGE
TREATED LAW COLLECTION VESSEL
CXP-VSL-00026B

SCALE: NONE

24590-PTF-MV-CXP-P0009 REV 0

R10051120

FORM E_MASTER 03/2003

'E' SIZE - 44x34

COMPUTER GENERATED BY SOLID EDGE- MANUAL CHANGES NOT PERMITTED

WHEN REFERENCING DRAWING AND DIM NUMBERS IN DOCUMENTS, BE SURE TO INCLUDE DASHES BETWEEN ELEMENTS

01/29/2004 9:10:25 AM

DWG No. 24590-PTF-MV-CXP-P0010

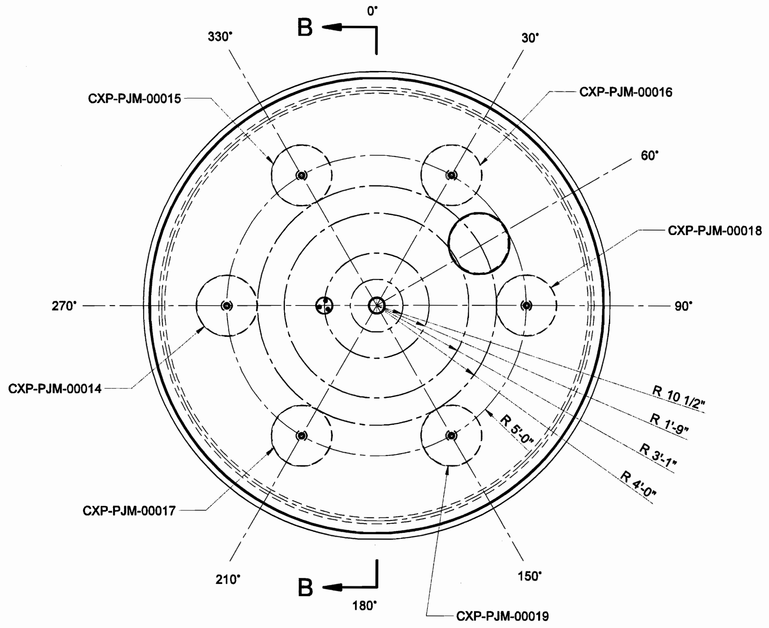

PLAN

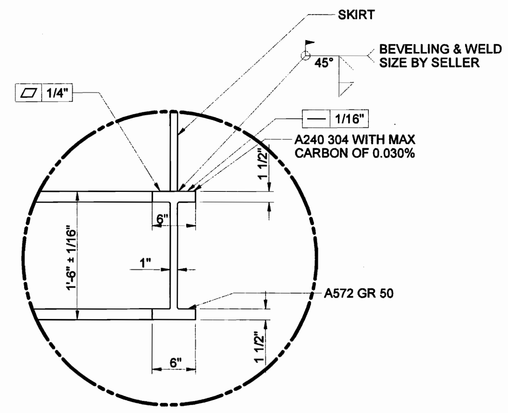

DETAIL-I
BASE RING

GENERAL NOTES:

1. FOR DIP LEGS USE 2" BOTTOM HEAD CLEARANCE.
2. DELETED
3. SOME HIDDEN LINES OMITTED FOR CLARITY.

HOLDS:

1. DELETED
2. LIFTING AND TAILING LUG LOCATIONS PENDING REVIEW BY CONSTRUCTION.
3. DELETED
4. PULSE JET MIXER DESIGN PENDING RELEASE BY FLUIDICS.

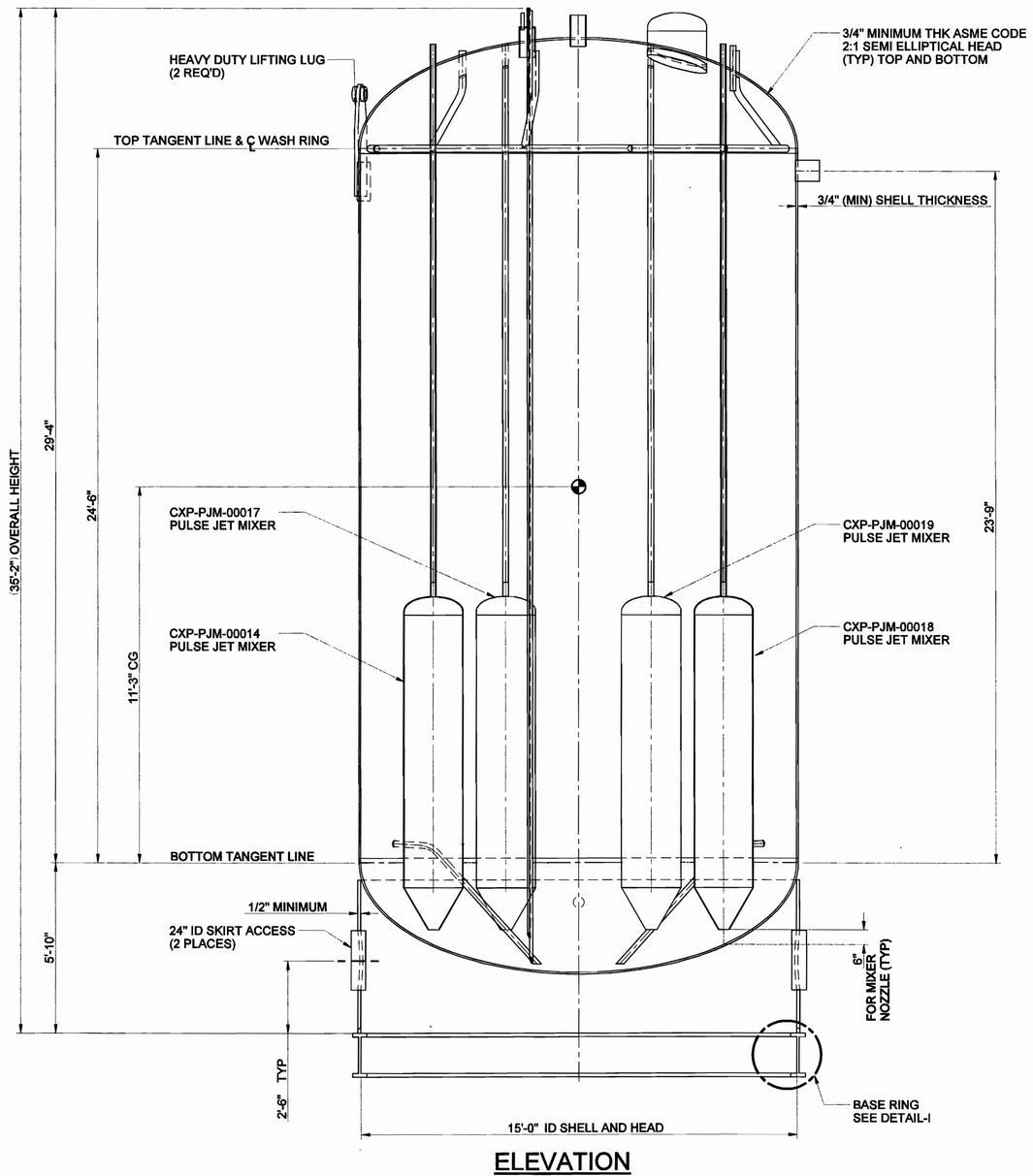

ELEVATION

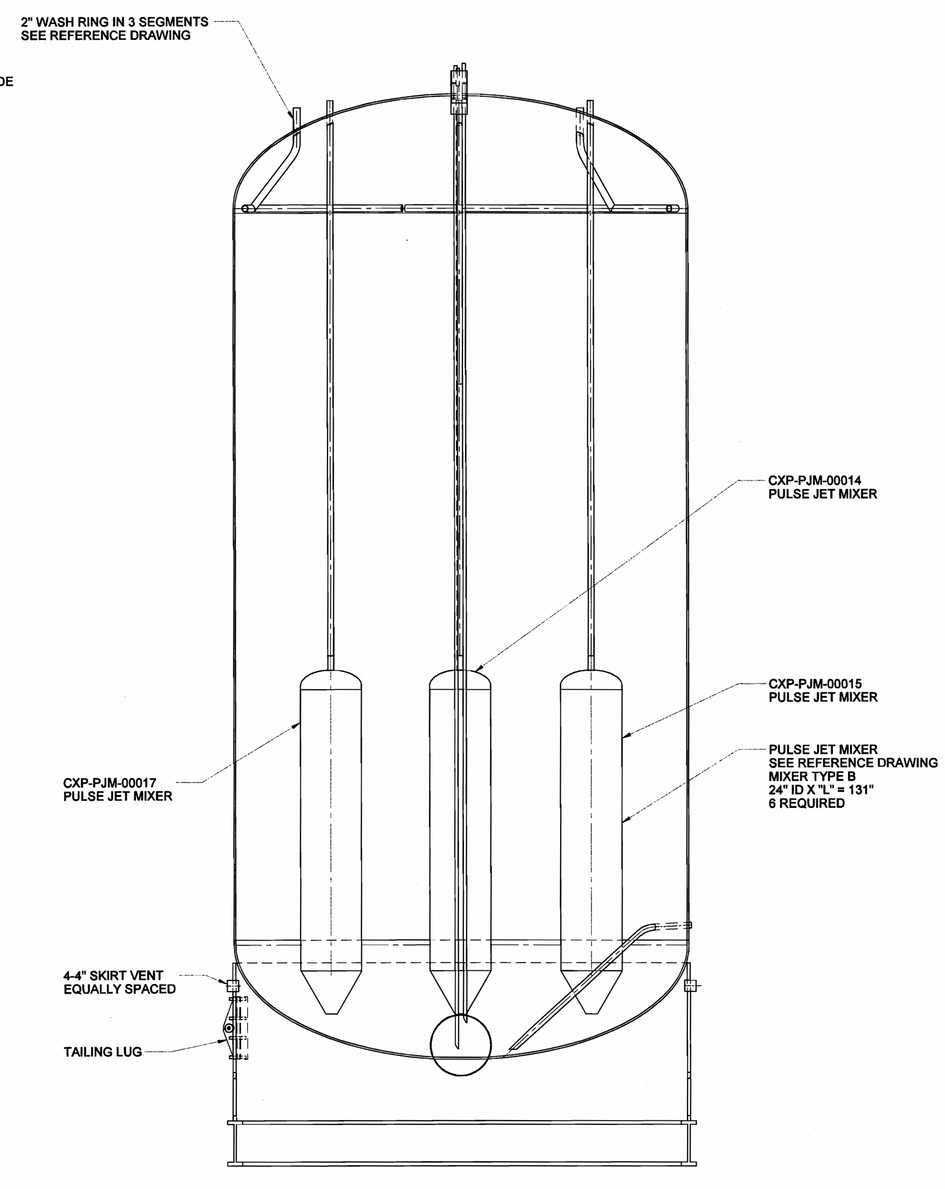

SECTION B-B

THIS DRAWING TO BE READ IN CONJUNCTION WITH MECHANICAL SYSTEMS DATA SHEET 24590-PTF-MVD-CXP-P0023

VESSEL COMPONENT QUALITY LEVELS	
COMPONENTS	QUALITY LEVEL
MAIN VESSEL, SKIRT, ALL NOZZLES	QL-1
ALL INTERNAL SUPPORTS	QL-1
PULSE JET MIXERS AND PIPING	CM
LEVEL INSTRUMENT	CM
OTHER INSTRUMENTATION	CM
WASH RING AND PIPING	CM

PLEASE NOTE THAT SOURCE, SPECIAL NUCLEAR AND BYPRODUCT MATERIALS, AS DEFINED IN THE ATOMIC ENERGY ACT OF 1954 (AEA), ARE REGULATED AT THE U.S. DEPARTMENT OF ENERGY (DOE) FACILITIES EXCLUSIVELY BY DOE ACTING PURSUANT TO ITS AEA AUTHORITY. DOE ASSERTS, THAT PURSUANT TO THE AEA, IT HAS SOLE AND EXCLUSIVE RESPONSIBILITY AND AUTHORITY TO REGULATE SOURCE, SPECIAL NUCLEAR, AND BYPRODUCT MATERIALS AT DOE-OWNED NUCLEAR FACILITIES. INFORMATION CONTAINED HEREIN ON RADIONUCLIDES IS PROVIDED FOR PROCESS DESCRIPTION PURPOSES ONLY.

REFERENCE DRAWINGS		
DWG NO	REV	TITLE
24590-PTF-M6-CXP-P0010		P&ID
24590-PTF-M6-CXP-P0011		P&ID
24590-PTF-M6-CXP-P0012		P&ID
24590-WTP-MV-M59T-00001		PRESSURE VESSEL TOLERANCES STANDARD DETAILS
24590-WTP-MV-M59T-00004		PULSE JET MIXERS STANDARD DETAILS
24590-WTP-MV-M59T-00009		LIFTING LUGS STANDARD DETAILS
24590-WTP-MV-M59T-00010		TAILING LUG STANDARD DETAILS
24590-WTP-MV-M59T-00011		WASH RINGS STANDARD DETAILS
24590-WTP-MV-M59T-00016001		VESSEL CONNECTIONS STANDARD DETAILS SHT 1 OF 3
24590-WTP-MV-M59T-00016002		VESSEL CONNECTIONS STANDARD DETAILS SHT 2 OF 3
24590-WTP-MV-M59T-00017		VESSEL INSPECTION MANWAY STANDARD DETAILS
24590-WTP-MV-M59T-00018		VESSEL NAMEPLATE STANDARD DETAILS

MARK W. HOFFMAN, STATE OF WASHINGTON, REGISTERED PROFESSIONAL ENGINEER — EXPIRES 12/16/04 — 5/26/04

REVISION HISTORY						
REV	DESCRIPTION	ORG	CHKD	RVWD	APVD	DATE
0	ISSUED FOR PERMITTING USE					5/26/04

Q QUALITY LEVEL

ISSUED BY RPP-WTP PDC — BY / DATE — ISSUE STAMP

PROJECT No.	24590
SITE	HANFORD
AREA	200 E
BUILDING No.	10

RIVER PROTECTION PROJECT
WASTE TREATMENT PLANT
2435 STEVENS CENTER PLACE
RICHLAND, WA 99352

CONTRACT No: DE-AC27-01RV14136

	BY	DATE
ORIGINATOR		5/17/04
CHECKER		5/18/04
APPROVER		5/26/04
REVIEWER		5/19/04

CONTENT APPLICABLE TO ALARA? [X] YES [ ] NO

ADR NO. N/A REV:

EQUIPMENT ASSEMBLY CESIUM ION EXCHANGE TREATED LAW COLLECTION VESSEL CXP-VSL-00026C

SCALE: NONE

24590-PTF-MV-CXP-P0010

REV 0

R1031521

FORM E_MASTER 03/2003

"E" SIZE - 44x34 COMPUTER GENERATED BY SOLID EDGE- MANUAL CHANGES NOT PERMITTED

WHEN REFERENCING DRAWING AND DIM NUMBERS IN DOCUMENTS, BE SURE TO INCLUDE DASHES BETWEEN ELEMENTS

01/29/2004 9:28:16 PM

MECHANICAL DATA SHEET: VESSEL

PLANT ITEM No.
24590-PTF-MV-CNP-VSL-00003

R10327822

Project:	***RPP-WTP***	P&ID:	***24590-PTF-M6-CNP-P0001/3 &24590-PTF-M6-CXP-P0007*** 1
Project No:	***24590***	Process calculation	***Deleted***
Project Site:	***Hanford***	Vessel Drawing	***24590-PTF-MV-CNP-P0001***
Description:	***Eluate Contingency Storage Vessel***		

ISSUED BY RPP-WTP PSG 6/28/04 INIT DATE

Reference Data

Charge Vessels (Tag Numbers)	***1 (CNP-VSL-00166)*** 1
Pulsejet Mixers / Agitators (Tag Numbers)	***4 (CNP-PJM-00013, CNP-PJM-00014, CNP-PJM-00015, CNP-PJM-00016)***
RFDs/Pumps (Tag Numbers)	***1 (CNP-RFD-00003)*** 1

Design Data

Quality Level		***QL-1***	Fabrication Specs	***24590-WTP-3PS-MV00-TP001 (PVDF)***		
Seismic Category		***SC-1***	Design Code	***ASME VIII Div 1***		
Service/Contents		***Cs Eluant/Concentrate*** 1	Code Stamp	***Yes***		
Design Specific Gravity		***1.37*** 1	NB Registration	***Yes***		
Maximum Operating Volume	gal	***18,750 (Note 6)*** 1	Weights (lbs)	Empty	Operating	Test
Total Volume	gal	***21,570 (Note 6)*** 1	Estimated	1 ***65,900***	1 ***285,100***	1 ***247,600***
			Actual *			

Inside Diameter	inch	***168***			Wind Design	***Not Required***	
Length/Height (TL-TL)	inch	***192*** 1			Snow Design	***Not Required***	
		Vessel Operating	Vessel Design	Coil/Jacket Design	Seismic Design	***24590-WTP-3PS-MV00-TP002 24590-WTP-3PS-SS90-T0001***	
Internal Pressure	psig	1 ***0 (Note 7)***	***15***	1 ***35***	Seismic Base Moment *	ft*lb	
External Pressure	psig	1 ***0.217***	***FV (Note 4 & 9)*** 1	***FV***	Postweld Heat Treat	***Not Required***	
Temperature	°F	1 ***77 to 230 (Note 8)***	***255***	***255***	Corrosion Allowance	Inch	***0.04 Vessel (Note 5), 0.04 Jacket***
Min. Design Metal Temp.	°F	***40***			Hydrostatic Test Pressure *	psig	

Please note that source, special nuclear and byproduct materials, as defined in the Atomic Energy Act of 1954 (AEA), are regulated at the U.S. Department of Energy (DOE) facilities exclusively by DOE acting pursuant to its AEA authority. DOE asserts, that pursuant to the AEA, it has sole and exclusive responsibility and authority to regulate source, special nuclear, and byproduct materials at DOE-owned nuclear facilities. Information contained herein on radionuclides is provided for process description purposes only. 1

MARK W. HOFFMANN STATE OF WASHINGTON 0030952 REGISTERED PROFESSIONAL ENGINEER 6/26/04

EXPIRES 12/10/04

This bound document contains a total of 6 sheets

REV	DATE	REASON FOR REVISION	PREPARER	CHECKER	REVIEWER	APPROVER
1	6/26/04	Issued for Permitting Use				
0	12/17/02	Issued for Permitting Use	Jessica Jackson	Cliff Slater	N/A	Mark Hoffmann

BECHTEL	**MECHANICAL DATA SHEET: VESSEL**	**PLANT ITEM No.** ***24590-PTF-MV-CNP-VSL-00003***

Materials of Construction

Component	Material	Minimum Thickness / Size	Containment
Top Head	***SA-240 316 (Note 1)*** 1	***See Drawing***	***Auxiliary (see note 10)*** 1
Shell	***SA-240 316 (Note 1)*** 1	***See Drawing***	***Primary (see note 10)*** 1
Bottom Head	***SA-240 316 (Note 1)*** 1	***See Drawing***	***Primary (see note 10)*** 1
Support	***SA-240 304 (Note 1)***	***See Drawing***	***N/A***
Jacket/Coils/Half-Pipe Jacket	***SA-240 316 (Note 1)*** 1	***See Drawing***	***N/A***
Internals 1	***SA-240 316 / SA-312 TP316 (Note 1)***	***See Drawing***	***Thermowells Primary (see note 10)*** 1
Pipe (Seamless) 1	***SA-240 316 / SA-312 TP316 (Note 1)***	***See Drawing***	***Notes 2 and 10*** 1
Forgings/ Bar stock	***SA-182 F316 (Note 1)***	***See Drawing***	***N/A***
Gaskets	***N/A*** 1	***N/A***	***N/A***
Bolting	***N/A*** 1	***N/A***	***N/A***

Miscellaneous Data

Orientation	***Vertical***	Support Type	***Skirt***
Insulation Function	***Not Applicable***	Insulation Material	***Not Applicable***
Insulation Thickness (inch)	***Not Applicable***	Internal Finish	***Descaled as laid***
		External Finish	***Note 3***

Remarks

**** To be determined by the vendor.***

Note 1: Material shall have Carbon Content of 0.030% Max. 1

Note 2: Nozzle necks below normal operating level are Primary, others Auxiliary. See PVDF and vessel drawing for NDT.

Note 3: Shell welds under jacket closure member ground smooth. Others descaled as laid.

Note 4: External design pressure under the jacket shall be rated for the jacket design pressure plus 1 psig internal vacuum in the vessel, to account for ventilation fan pressures. 1

Note 5: Corrosion allowance of 0.04" is also to be added to the external surface of shell under the jacket.

Note 6: Vessel volumes are approximate and do not account for manufacturing tolerances, nozzles, and displacement of internals. 1

Note 7: 0 psig is the maximum internal vessel operating pressure. The normal internal vessel operating pressure will range from –0.07 psig to –0.144 psig. 1

Note 8: 230 °F is the worst case (self-boiling) maximum operating scenario. The normal vessel operating temperature is 77 °F. 1

Note 9: The vessel design external pressure is estimated only and shall be confirmed by the Seller's calculations. 1

Note 10: All welds forming part of the primary and auxiliary containment including nozzle attachment welds shall be subjected to 100% volumetric examination. 1

Note 11: This vessel is located in a Black Cell. 1

Note 12: Contents of this document are Dangerous Waste Permit affecting. 1

Note 13: Internal components and supports natural frequencies shall not be less than 4.0 cycle per second. 1

BECHTEL	**MECHANICAL DATA SHEET: VESSEL**	**PLANT ITEM No.** ***24590-PTF-MV-CNP-VSL-00003***

Equipment Cyclic Data Sheet

Component Plant Item Number:	***CNP-VSL-00003***
Component Description	***Parent Vessel***

The information below is provisional and envelopes operational duty for fatigue assessment. It is not to be used as operational data.

Materials of Construction	***SA-240 316 (Note 1)*** 1
Design Life	***40 Years***
Component Function and Life Cycle Description	***The Eluate Contingency Storage Vessel is used as an off normal vessel designed for 3 purposes; to hold one batch volume of eluant in order to elute a loaded cesium IX column, to hold an emergency elution volume, or to hold Cs concentrate in the event that HLP-VSL-00028 or HLP-VSL-00027B is unable to accept concentrate. It will take 18 days to completely fill and empty CNP-VSL-00003.*** 1

Load Type		Min	Max	Number of Cycles	Comment
Design Pressure	psig	***FV***	***15***	***10*** 1	***Nominal assumption for testing.*** 1
Operating Pressure	psig	***-0.217*** 1	***0*** 1	***N/A***	***This vessel will remain under constant pressure depending upon the HVAC plant.*** 1
Operating Temperature	°F	***41*** 1	***230**** 1	***5*** 1	***Off normal conditions may occur bringing the temperature of process fluid to its boiling point of 230 °F possibly 5 times in the life of the vessel.***
Contents Specific Gravity		1 ***1.015***	1 ***1.37***	***N/A***	***Normally 1.37 without cycling.***
Contents Level	inch	***0***	***206***** 1	***811***** 1	***This vessel will either be full or completely empty (excluding the heel volume).*** 1
Localized Features					
Nozzles				***Off normal conditions may cause superheated steam at 343 °F to enter the vessel through these ejectors (Nozzles N03, N04, and N28), further causing direct steam impingement upon internal vessel walls possibly 5 times in the life of the vessel.*** 1	
Supports					

Notes

- ***Cycle increase: The Seller must increase the numbers of operational cycles given above by 10% to account for commissioning duty unless otherwise noted.***
- 1 ****230°F is the worst case (self-boiling) maximum operating scenario. The normal vessel operating temperature is 77 °F.***
- 1 *****From Inside crown of bottom head.***
- 1 ******Based on 18 days to completely fill and empty CNP-VSL-00003 over a 40 year life of the vessel.***

Hydrodynamic Loading

1

Description	***Pulse jet mixers impose a cyclical hydrodynamic load on all internal components. The components shall be supported against these hydrodynamic loads due to both normal operation and overblow conditions. The following table indicates the hydrodynamic pressure for normal and overblow conditions at ranges of elevations in the vessel and the number of design cycles for each condition. The hydrodynamic forces cycle between the indicated pressure ranges applied across the projected area of the component. Positive hydrodynamic forces act in the radial, outward direction and the vertical, upward direction. Seller shall apply the radial load simultaneously in the radial direction and normal to the radial direction in the horizontal plane.***	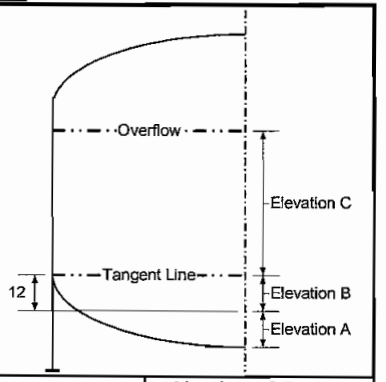

Condition	Hydrodynamic Pressure Range, psi						Number of Cycles
	Elevation A		Elevation B		Elevation C		
	Radial	Vertical	Radial	Vertical	Radial	Vertical	
Normal Operation	***1.10 to -0.50***	***0.80 to -0.00***	***0.16 to -0.16***	***0.80 to -0.00***	***0.16 to -0.16***	***0.30 to -0.00***	***10000***
Overblow	***0 to 2***	***0 to 2***	***0 to 1***	***0 to 1***	***0 to 0.5***	***0 to 0.5***	***100***

BECHTEL	**MECHANICAL DATA SHEET: VESSEL**	**PLANT ITEM No.** ***24590-PTF-MV-CNP-VSL-00003***

Equipment Cyclic Data Sheet

Component Plant Item Number:	***CNP-VSL-00166***
Component Description	***Charge Vessel (Type C, RFD Type 140M)*** 1

The information below is provisional and envelopes operational duty for fatigue assessment. It is not to be used as operational data.

Materials of Construction	***SA-240 316 (Note 1)*** 1
Design Life	***40 Years***
Component Function and Life Cycle Description	***The charge vessel is cyclically loaded using vacuum to fully fill the charge vessel with process liquid and compressed air to fully empty the charge vessel. The charge vessel is contained within a parent vessel with varying liquid level. It shall be designed to cycle between the maximum design pressure and the minimum design pressure plus the external static head imposed by the parent vessel. The charge vessel supports shall be designed to cycle between fully buoyant (charge vessel empty and parent vessel full) and fully loaded (charge vessel full and parent vessel empty).***

Load Type		Min	Max	Number of Cycles	Comment
Design Pressure	psig	***FV***	***80***	***10*** 1	***Nominal assumption for testing.*** 1
Operating Pressure	psig	***FV***	***72.5***	***12.5 X 10^4***** 1	***Assuming the transferring RFD, CNP-RFD-00003, is used 5 times/year.*** 1
Operating Temperature	°F	***41*** 1	***230**** 1	***N/A***	***Normally 77 °F without cycling. Off normal conditions may occur bringing the temperature of process fluid to its boiling point of 230 °F possibly 5 times in the life of the vessel. Temperature will not cycle appreciably with vessel cycling.***
Contents Specific Gravity		1 ***1.015***	1 ***1.37***	***N/A***	***Normally 1.015 without cycling.*** 1
Contents Level	inch	***Empty***	***Flooded***	***12.5 X 10^4***** 1	***Assuming the transferring RFD, CNP-RFD-00003, is used 5 times/year.*** 1
Localized Features					
Nozzles					
Supports					

Notes

- ***Cycle increase: The Seller must increase the numbers of operational cycles given above by 10% to account for commissioning duty unless otherwise noted.***
- 1 ****230°F is the worst case (self-boiling) maximum operating scenario. The normal vessel operating temperature is 77°F.***
- 1 *****Based on a 12,500 gallon batch (parent vessel) volume using a charge vessel dollop volume of 20 gallons for a period of 40 years.***

BECHTEL	**MECHANICAL DATA SHEET: VESSEL**	**PLANT ITEM No.** ***24590-PTF-MV-CNP-VSL-00003***

Equipment Cyclic Data Sheet

Component Plant Item Number:	***CNP-PJM-00013, CNP-PJM-00014, CNP-PJM-00015, CNP-PJM-00016***
Component Description	***Pulse Jet Mixers (PJM Type C)***

The information below is provisional and envelopes operational duty for fatigue assessment. It is not to be used as operational data.

Materials of Construction	***SA-240 316 (Note 1)*** 1
Design Life	***40 Years***
Component Function and Life Cycle Description	***These pulse jet mixers are cyclically loaded using vacuum to fully fill the vessel with process liquid and compressed air to fully empty the vessel. The pulse jet mixers are contained within a parent vessel with varying liquid level. They shall be designed to cycle between the maximum design pressure and the minimum design pressure plus the external static head imposed by the parent vessel. The pulse jet mixer supports shall be designed to cycle between fully buoyant (pulse jet mixer empty and parent vessel full) and fully loaded (pulse jet mixer full and parent vessel empty) in addition to thrust.***

Load Type		Min	Max	Number of Cycles	Comment
Design Pressure	psig	***FV***	***80***	***10*** 1	***Nominal assumption for testing.*** 1
Operating Pressure	psig	***FV***	***72.5***	***10000**** 1	1
Operating Temperature	°F	***41*** 1	***230***** 1	***N/A***	***Normally 77 °F without cycling. Off normal conditions may occur bringing the temperature of process fluid to its boiling point of 230 °F possibly 5 times in the life of the vessel. Temperature will not cycle appreciably with vessel cycling.***
Contents Specific Gravity		***1.015*** 1	***1.37*** 1	***N/A***	***Normally 1.37 without cycling.***
Contents Level	inch	***Empty***	***Flooded***	***10000**** 1	1
1 Thrust	lbf		***353***	***10000****	***See Note below***
Localized Features					
Nozzles					
Supports					

Notes

- ***Cycle increase: The Seller must increase the numbers of operational cycles given above by 10% to account for commissioning duty unless otherwise noted.***
- 1 ****Bounding value for CNP-VSL-00003 which is a contingency vessel and is not normally used.***
- 1 *****230°F is the worst case (self-boiling) maximum operating scenario. The normal vessel operating temperature is 77°F***
- 1 ***The PJM supports shall be designed to cycle between fully buoyant (PJM empty and parent vessel full) and fully loaded (PJM full and parent vessel empty) states. Thrust load shall be applied only to the fully buoyant state. Assume the parent vessel is full for 50% of the number of PJM cycles..***

BECHTEL	**MECHANICAL SYSTEMS DATA SHEET: VESSEL**	**PLANT ITEM No.** ***24590-PTF-ME-CNP-EVAP-00001***

Project	***RPP-WTP***	P&ID	***24590-PTF-M6-CNP-P0008***
Project No	***24590***	Process Data Sheet	***24590-PTF-M5D-CNP-00001***
Project Site	***Hanford***	Vessel Drawing	
Description	***Cesium Evaporator Separator Vessel CNP-EVAP-00001***		

R10377790

ISSUED BY RPP-WTP PDC

Reference Data

Charge Vessels (Tag Numbers)	***None***
Pulsejet Mixers / Agitators (Tag Numbers)	***None***
RFDs/Pumps (Tag Numbers)	***None***

Design Data

Quality Level		***QL-1***	Fabrication Specs	***24590-WTP-3PS-MV00-TP001***		
Seismic Category		***SC-I***	Design Code	***ASME VIII Div 1***		
Service/Contents		***Radioactive Liquid***	Code Stamp	***Yes***		
Design Specific Gravity		***1.37****	NB Registration	***Yes***		
Maximum Operating Volume	gal	*	Weights (lbs)	Empty	Operating	Test
Total Volume	gal	*	Estimated *			
			Actual *			

Inside Diameter	inch	*			Wind Design	***Not Required***	
Length/Height (TL-TL)	inch	*			Snow Design	***Not Required***	
		Vessel Operating	Vessel Design	Coil/Jacket Design	Seismic Design	***24590-WTP-3PS-SS90-T0001 & 24590-WTP-3PS-MV00-TP002***	
Internal Pressure	psig	***-13.4****	***50****	***N/A***	Seismic Base Moment *	ft*lb	
External Pressure	psig	***0****	***15****	***N/A***	Postweld Heat Treat	***Not Required***	
Temperature	°F	***122/140****	***40/250****	***N/A***	Corrosion Allowance	Inch	***0.04***
Min. Design Metal Temp	°F	***40****			Hydrostatic Test Pressure *	psig	

Contents of this document are Dangerous Waste Permit Affecting.

Please note that source, special nuclear and byproduct materials, as defined in the Atomic Energy Act of 1954 (AEA), are regulated at the U.S. Department of Energy (DOE) facilities exclusively by DOE acting pursuant to its AEA authority. DOE asserts, that pursuant to the AEA, it has sole and exclusive responsibility and authority to regulate source, special nuclear, and byproduct materials at DOE-owned nuclear facilities. Information contained herein on radionuclides is provided for process description purposes only.

GERALD RUSSEL CHIARAMONTE
STATE OF WASHINGTON
028043
REGISTERED
PROFESSIONAL ENGINEER

9-14-04

EXPIRES: 11/9/2004

This bound document contains a total of 2 sheets

REV	DATE	REASON FOR REVISION	PREPARER	CHECKER	REVIEWER	APPROVER
0	9/14/04	Issued for Permitting Use		K.R. Sadler Jr.		

BECHTEL	**MECHANICAL SYSTEMS DATA SHEET: VESSEL**	**PLANT ITEM No.** ***24590-PTF-ME-CNP-EVAP-00001***

Materials of Construction

Component	Material	Minimum Thickness / Size	Containment
Top Head	***SB575 (Hastelloy)UNS N06022*****	•	***Auxiliary***
Shell	***SB575 (Hastelloy) UNS N06022*****	*	***Primary***
Bottom Head	***SB575 (Hastelloy) UNS N06022*****	•	***Primary***
Support	***SA240 304 (Note 3)*****	*	***N/A***
Jacket/Coils/Half-Pipe Jacket	***N/A***	***N/A***	***N/A***
Internals	***SB575 (Hastelloy) UNS N06022*****	*	***Instrument Piping Primary***
Pipe	***SB622 (Hastelloy) UNS N06022 (Seamless)*****	•	***See Note 4***
Forgings/ Bar stock (internal)	***SB564 (Hastelloy) UNS N06022*****	*	***As Note 4 for Nozzle Necks***
Gaskets	*	•	***Auxiliary***
Bolting	***SA194 8M/ SA193 B8M***	•	***Auxiliary***

Miscellaneous Data

Orientation	***Vertical***	Support Type	*
Insulation Function	***N/A***	Insulation Material	***N/A***
Insulation Thickness (inch)	***N/A***	Internal Finish	**** (Note 1)***
		External Finish	*

Remarks

• To be determined by Seller.
** To be verified by seller
Note 1: Weld surface finish shall be de-scaled as laid.
Note 2: Design life is 40 years.
Note 3: Maximum carbon content of 0.030% for all welded components
Note 4: Nozzle necks below maximum liquid level are primary, others auxiliary.

R10486410

MECHANICAL DATA SHEET: VESSEL

PLANT ITEM No.
24590-PTF-MV-CNP-VSL-00004

Project:	***RPP-WTP***	P&ID:	***24590-PTF-M6-CNP-P0002/24590-PTF-M6-CNP-P0004/24590-PTF-M6-CXP-P0007***
Project No:	***24590***	Process Calculation	***Deleted*** 2
Project Site:	***Hanford***	Vessel Drawing	***24590-PTF-MV-CNP-P0002***
Description:	***Cs Evaporator Recovered Nitric Acid Vessel***		

ISSUED BY RPP-WTP PDC

Reference Data

Charge Vessels (Tag Numbers)	***CNP-VSL-00162***
Pulsejet Mixers / Agitators (Tag Numbers)	***4 (CNP-PJM-00019, CNP-PJM-00020, CNP-PJM-00021, CNP-PJM-00022)***
RFDs/Pumps (Tag Numbers)	***CNP-RFD-00005***

Design Data

Quality Level		***CM***	Fabrication Specs	***24590-WTP-3PS-MV00-TP001***		
Seismic Category		***SC-III***	Design Code	***ASME VIII Div 1***		
Service/Contents		***Recovered Nitric Acid***	Code Stamp	***Yes***		
Design Specific Gravity		***1.07***	NB Registration	***Yes***		
Maximum Operating Volume	gal	***10,065***	Weights (lbs)	Empty	Operating	Test
Total Volume	gal	***11,115***	Estimated	***29,365***	***121,375***	***123,200***
			Actual *			

Inside Diameter	inch	***114***			Wind Design	***Not Required***	
Length/Height (TL-TL)	inch	***228***			Snow Design	***Not Required***	
		Vessel Operating	Vessel Design	Coil/Jacket Design	Seismic Design	***24590-WTP-3PS-MV00-TP002 24590-WTP-3PS-FB01-T0001***	
Internal Pressure	psig	***0 (Note 8)***	***15***		Seismic Base Moment *	ft*lb	
External Pressure	psig	***0.22***	***FV***		Postweld Heat Treat	***Not Required***	
Temperature	°F	***115-140***	***255 (Note 7)***		Corrosion Allowance	Inch	***0.04***
Min. Design Metal Temp.	°F	***40***			Hydrostatic Test Pressure *	psig	

Note: Please note that source, special nuclear and byproduct materials, as defined in the Atomic Energy Act of 1954 (AEA), are regulated at the U.S. Department of Energy (DOE) facilities exclusively by DOE acting pursuant to its AEA authority. DOE asserts, that pursuant to the AEA, it has sole and exclusive responsibility and authority to regulate source, special nuclear, and byproduct materials at DOE-owned nuclear facilities. Information contained herein on radionuclides is provided for process description purposes only.

MARK W. HOFFMANN
STATE OF WASHINGTON
0030952
REGISTERED
PROFESSIONAL ENGINEER
1/26/05
EXPIRES 12/10/06

This Bound Document Contains a total of 6 sheets.

REV	DATE	REASON FOR REVISION	PREPARER	CHECKER	REVIEWER	APPROVER
2	~~1/26/05~~ 2/7/05	Issued for Permitting Use				
1	6/26/04	Issued for Permitting Use	K. Brightman	H. Khurana	C. Slater	M. Hoffmann
0	12/17/02	Issued for Permitting Use	J. Jackson	C. Slater	N/A	M. Hoffmann

BECHTEL	**MECHANICAL DATA SHEET: VESSEL**	**PLANT ITEM No.** ***24590-PTF-MV-CNP-VSL-00004***

Materials of Construction

Component	Material	Minimum Thickness / Size	Containment
Top Head	***SA 240 304 Note 1***	***See Drawing***	***Auxiliary (See note 5)***
Shell	***SA 240 304 Note 1***	***See Drawing***	***Primary (See note 5)***
Bottom Head	***SA 240 304 Note 1***	***See Drawing***	***Primary (See note 5)***
Support	***SA 240 304 Note 1***	***See Drawing***	***N/A***
Jacket/Coils/Half-Pipe Jacket	***N/A***	***N/A***	***N/A***
Internals	***SA 240 304 Note 1***	***See Drawing***	***Thermowells Primary***
Pipe Nozzles	***SA 312 TP304 Note 1***	***See Drawing***	***Primary (See note 5)***
Forgings/ Bar stock	***SA 182 F304 Note 1***	***See Drawing***	***N/A***
Gaskets	***N/A***	***N/A***	***N/A***
Bolting	***N/A***	***N/A***	***N/A***

Miscellaneous Data

Orientation	***Vertical***	Support Type	***Skirt***
Insulation Function	***N/A***	Insulation Material	***N/A***
Insulation Thickness (inch)	***N/A***	Internal Finish	***Note 3***
		External Finish	***Note 3***

Remarks

• To be determined by the vendor.
Note 1: Max. Carbon Content 0.030%.
Note 2: Deleted
Note 3: Welds descaled as laid.
Note 4: This vessel is in a Black Cell.
Note 5: All welds forming part of the Primary and Auxiliary Containment including nozzle attachment welds shall be subjected to 100% volumetric examination
Note 6: Contents of this document are Dangerous Waste Permit affecting.
Note 7: Max. design temperature kept equal to that of CNP-VSL-00003
Note 8: 0 psig is the maximum internal vessel operating pressure. The internal vessel operating pressure will range from -0.22 psig to 0 psig.
Note 9: Deleted 2
Note 10: All hydrodynamic and overblow loads are for BNI internal use only and are to be disregarded by the seller. 2

Equipment Cyclic Data Sheet

Component Plant Item Number:	***CNP-VSL-00004***
Component Description	***Parent Vessel***

The information below is provisional and envelopes operational duty for fatigue assessment. It is not to be used as operational data.

Materials of Construction	***SA 240 304 with max. carbon of 0.030 %***
Design Life	***40 Years***
Component Function and Life Cycle Description	***The purpose of the Cs Evaporator Recovered Nitric Acid Vessel is to receive eluant (0.5M nitric acid) from the Cs Evaporator Nitric Acid Rectifier and serve as a feed vessel to the Cs Ion Exchange Columns. Filling cycle is based on a 48 hour (every 33 hours for a 15 hour period) elution cycle over 40 years.***

Load Type		Min	Max	Number of Cycles	Comment
Design Pressure	psig	***FV***	***15***	***10***	***Nominal assumption for Testing***
Operating Pressure	psig	***-0.22***	***0***	***N/A***	***The vessel will remain under constant pressure depending upon the plant HVAC***
Operating Temperature	°F	***115***	***140***	***N/A***	***Uniform material temperature range, not between two points.***
Contents Specific Gravity		***1.00***	***1.1***	***N/A***	***Normally 1.02 without cycling.***
Contents Level	inch	***40***	***235***	***7,300***	***Based on a 48 hr elution cycle over 40 years***
Localized Features					
Nozzles					
Supports					

Notes

- ***Cycle increase: The Seller must increase the numbers of operational cycles given above by 10% to account for commissioning duty unless otherwise noted.***

Hydrodynamic Loading 2

In normal operation, pulse jet mixers discharge liquid into the parent vessel imposing a cyclical hydrodynamic load on all internal components. Occasionally, an upset condition designated 'overblow' causes air to be discharged from any single pulse jet mixer. All internal components shall be designed for the combination of the normal operational hydrodynamic loads and overblow loads, and this load combination is also to be assumed to act concurrently with seismic loads.

Hydrodynamic loads acting on a surface vary with the location of the surface within the vessel. The following table indicates the normal hydrodynamic pressure ranges and the number of design cycles. The hydrodynamic forces cycle between the indicated pressure ranges applied across the projected area of the component. Positive hydrodynamic forces act in the radial, outward direction and the vertical, upward direction. Apply the radial load simultaneously in the radial direction and normal to the radial direction in the horizontal plane.

Condition	Hydrodynamic Pressure Range, psi				Number of Cycles
	Between PJM Center and Vessel Wall		Between Vessel Center and PJM Center		
	Radial	Vertical	Radial	Vertical	
Normal Operation	*-0.80 to 0.80*	*-0.80 to 0.40*	*-0.20 to 0.30*	*-0.20 to 0.25*	*7.5×10^6*

Overblow loads vary as a function of the horizontal distance from the center of the overblowing pulse jet mixer nozzle and the elevation 'H' above the overblowing pulse jet mixer nozzle up to the overflow level as plotted:

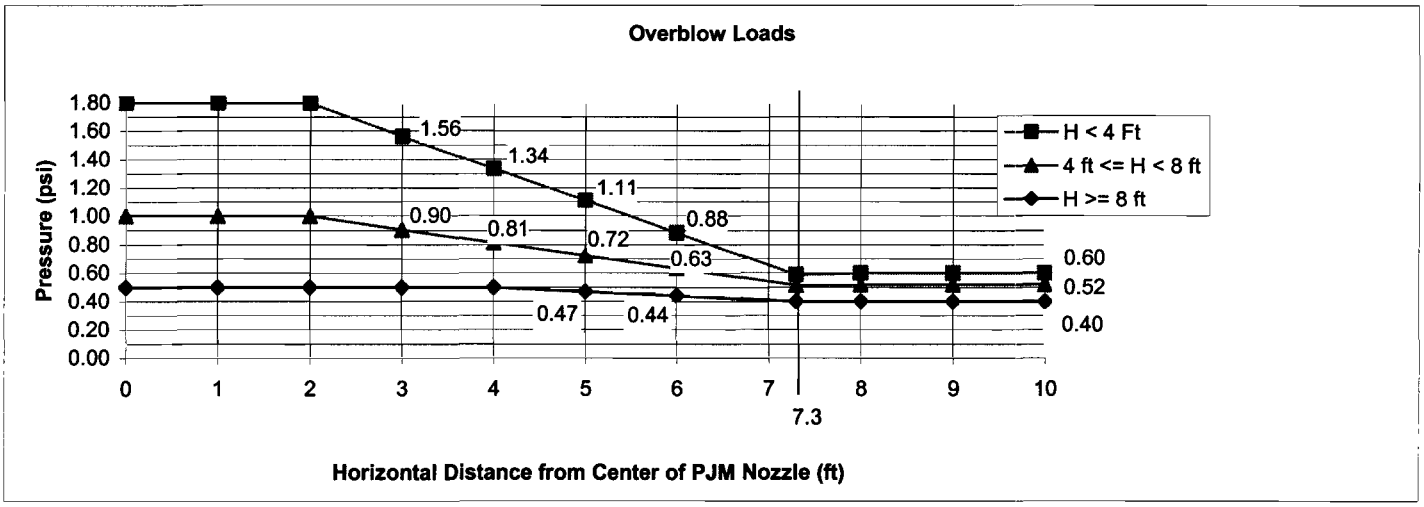

The overblow pressure shall only be applied to the projected area of the overblowing pulse jet mixer in the vertical, upward direction and to all surrounding components in the horizontal plane, radiating from the overblowing pulse jet mixer. Any single pulse jet mixer may overblow 100 cycles. 2

Notes

- ***Cycle increase: Increase the numbers of operational cycles given above by 10% to account for commissioning duty unless otherwise noted.*** 2

BECHTEL	**MECHANICAL DATA SHEET: VESSEL**	**PLANT ITEM No.** ***24590-PTF-MV-CNP-VSL-00004***

Equipment Cyclic Data Sheet

Component Plant Item Number:	***CNP-VSL-00162 and CNP-RFD-00005***
Component Description	***Charge Vessel Type 'C'(Sampling) & RFD Model 125M***

The information below is provisional and envelopes operational duty for fatigue assessment. It is not to be used as operational data.

Materials of Construction	***SA 240 304 with max. carbon of 0.030 %***
Design Life	***40 Years***
Component Function and Life Cycle Description	***The charge vessel is cyclically loaded using vacuum to fully fill the charge vessel with process liquid and compressed air to fully empty the charge vessel. The charge vessel is contained within a parent vessel with varying liquid level. It shall be designed to cycle between the maximum design pressure and the minimum design pressure plus the external static head imposed by the parent vessel. The charge vessel supports shall be designed to cycle between fully buoyant (charge vessel empty and parent vessel full) and fully loaded (charge vessel full and parent vessel empty).***

Load Type		Min	Max	Number of Cycles	Comment
Design Pressure	psig	***FV***	***80***	***10***	***Nominal assumption for Testing***
Operating Pressure	psig	***FV***	***72.5***	***2,400****	
Operating Temperature	°F	***115***	***140***	***N/A***	***Uniform Temperature range, not between two points***
Contents Specific Gravity		***1.00***	***1.1***	***N/A***	***Normally 1.02 without cycling.***
Contents Level	inch	***Empty***	***Flooded***	***2,400****	
Localized Features					
Nozzles					
Supports		***Buoyant/ Loaded***		***2,400****	

Notes

- ***Cycle increase: The Seller must increase the numbers of operational cycles given above by 10% to account for commissioning duty unless otherwise noted.***
- *****Based on 40 year life expectancy. Sampling takes place 12 times/year (Analytical Laboratory Design Requirements: WTP Sampling and Analysis Plan 24590-WTP-PL-PR-01-004 Rev. 2, pg. C-6). To obtain an accurate sample, we assume that each sampling averages 5 attempts.***

BECHTEL	**MECHANICAL DATA SHEET: VESSEL**	**PLANT ITEM No.** ***24590-PTF-MV-CNP-VSL-00004***

Equipment Cyclic Data Sheet

Component Plant Item Number:	***CNP-PJM-00019, CNP-PJM-00020, CNP-PJM-00021, CNP-PJM-00022***
Component Description	***Pulse Jet Mixers (PJM Type A)***

The information below is provisional and envelopes operational duty for fatigue assessment. It is not to be used as operational data.

Materials of Construction	***SA240 304 with 0.030 max. carbon***
Design Life	***40 Years***
Component Function and Life Cycle Description	***These pulse jet mixers (PJMs) are cyclically loaded using vacuum to fully fill the PJM with process liquid and compressed air to fully empty the PJM. The PJMs are contained within a parent vessel with varying liquid level. They shall be designed to cycle between the maximum design pressure and the minimum design pressure plus the external static head imposed by the parent vessel. The PJM supports shall be designed to cycle between fully buoyant (PJM empty and parent vessel full) and fully loaded (PJM full and parent vessel empty) states. Thrust load shall be applied only to the fully buoyant state. Assume the parent vessel is full for 50% of the number of PJM cycles.*** 2

Load Type		Min	Max	Number of Cycles	Comment
Design Pressure	psig	***FV***	***80***	***10***	***Nominal assumption for testing***
Operating Pressure	psig	***FV***	***72.5***	***7.5×10^5***	***Based on 40 year life expectancy***
Operating Temperature	°F	***115***	***140***	***N/A***	***Uniform temperature range, not between two points***
Contents Specific Gravity		***1.00***	***1.1***	***N/A***	***Normally 1.02 without cycling.***
Contents Level	inch	***Empty***	***Flooded***	***7.5×10^5***	
Thrust 2	lbf	***0***	***262***	***7.5×10^5***	
Localized Features					
Nozzles					
Supports		***Buoyant/ Loaded***		***7.5×10^5***	

Notes

- ***Cycle increase: The Seller must increase the numbers of operational cycles given above by 10% to account for commissioning duty unless otherwise noted.***

MECHANICAL DATA SHEET: VESSEL

PLANT ITEM No.
24590-PTF-MV-CNP-VSL-00001

R10327824

Project:	***RPP-WTP***	P&ID:	***24590-PTF-M6-CNP-P0001, 24590-PTF-M6-CXP-P0007***
Project No:	***24590***	Process Data Sheet:	***Deleted***
Project Site:	***Hanford***	Vessel Drawing	***24590-PTF-MV-CNP-P0005***
Description:	***Cesium Evaporator Eluate Lute Pot***		

ISSUED BY RPP-WTP PDC INIT DATE

Reference Data

Charge Vessels (Tag Numbers)	***N/A***
Pulsejet Mixers / Agitators (Tag Numbers)	***N/A***
RFDs/Pumps (Tag Numbers)	***N/A***

Design Data

Quality Level		***QL-1***	Fabrication Specs	***24590-WTP-3PS-MV00-TP001***		
Seismic Category		***SC-I***	Design Code	***ASME VIII Div 1***		
Service/Contents		***Radioactive Liquid***	Code Stamp	***Yes***		
Design Specific Gravity		***1.03***	NB Registration	***Yes***		
Maximum Operating Volume	gal	***108.47***	Weights (lbs)	Empty	Operating	Test
Total Volume	gal	***108.47***	Estimated	***1,000***	***2,020***	***1,910***
			Actual *			

Inside Diameter	inch	***48***			Wind Design	***N/A***	
Length/Height (TL-TL)	inch	***3***			Snow Design	***N/A***	
		Vessel Operating	Vessel Design	Coil/Jacket Design	Seismic Design	***24590-WTP-3PS-MV00-TP002*** ***24590-WTP-3PS-SS90-T0001***	
Internal Pressure	psig	***30***	***40***	***N/A***	Seismic Base Moment *	ft*lb	
External Pressure	psig	***ATM***	***ATM***	***N/A***	Postweld Heat Treat	***Per Spec***	
Temperature	°F	***77***	***237***	***N/A***	Corrosion Allowance	Inch	***0.04***
Min. Design Metal Temp.	°F	***40***			Hydrostatic Test Pressure *	psig	

Please note that source, special nuclear and byproduct materials, as defined in the Atomic Energy Act of 1954 (AEA), are regulated at the U.S. Department of Energy (DOE) facilities exclusively by DOE acting pursuant to its AEA authority. DOE asserts, that pursuant to the AEA, it has sole and exclusive responsibility and authority to regulate source, special nuclear, and byproduct materials at DOE-owned nuclear facilities. Information contained herein on radionuclides is provided for process description purposes only.

MARK W. HOFFMANN
STATE OF WASHINGTON
0030952
REGISTERED
PROFESSIONAL ENGINEER

6/26/04

EXPIRES 12/10/04

This bound document contains a total of 2 sheets

REV	DATE	REASON FOR REVISION	PREPARER	CHECKER	REVIEWER	APPROVER
0	6/26/04	Issued for Permitting Use				

BECHTEL	**MECHANICAL DATA SHEET: VESSEL**	**PLANT ITEM No.** ***24590-PTF-MV-CNP-VSL-00001***

Materials of Construction

Component	Material	Minimum Thickness / Size	Containment
Top Head	***SA240 304 (Note 1)***	***See Drawing***	***Auxiliary (see Note 2)***
Shell	***SA240 304 (Note 1)***	***See Drawing***	***Primary (See Note 2)***
Bottom Head	***SA240 304 (Note 1)***	***See Drawing***	***Primary (See Note 2)***
Support	***SA240 304 (Note 1)***	***See Drawing***	***N/A***
Internal Coils/External Jacket	***N/A***	***N/A***	***N/A***
Internals	***SA240 304 / SA312 TP304 (Note 1)***	***See Drawing***	***N/A***
Pipe	***SA312 TP304 (Note 1)***	***See Drawing***	***See Note 2***
Forgings/ Bar stock	***SA182 F304 (Note 1)***	***See Drawing***	***N/A***
Gaskets	***N/A***	***N/A***	***N/A***
Bolting	***N/A***	***N/A***	***N/A***

Miscellaneous Data

Orientation	***Vertical***	Support Type	***Skirt***
Insulation Function	***None***	Insulation Material	***None***
Insulation Thickness (inch)	***None***	Internal Finish	***Welds descaled as laid***
		External Finish	***Welds descaled as laid***

Remarks

* To be determined by the vendor.

Note 1 : 304 stainless steel materials shall have carbon content of 0.030% maximum, dual certified. Non-welded items are excluded from this requirement.

Note 2 : All welds forming part of the primary and auxiliary containment including nozzle attachment welds shall be subjected to 100% volumetric examination.

Note 3 : Vessel volumes are approximate and do not account for manufacturing tolerances, nozzles, and displacement of internals

Note 4: This vessel is in a Black Cell

Note 5: Contents of this document are Dangerous Waste Permit affecting.

MECHANICAL DATA SHEET: VESSEL

PLANT ITEM No.
24590-PTF-MV-CXP-VSL-00001

R10315127

Project	***RPP-WTP***	P&ID	***24590-PTF-M6-CXP-P0001, 24590-PTF-M6-CXP-P0007***
Project No	***24590***	Process Calculation	***24590-PTF-MVC-CXP-00001***
Project Site	***Hanford***	Vessel Drawing	***24590-PTF-MV-CXP-P0001***
Description	***Cs IX Feed Vessel***		

ISSUED BY RPP-WTP PDC
INIT DATE

Reference Data

Charge Vessels (Tag Numbers)	***Not Applicable***
Pulsejet Mixers / Agitators (Tag Numbers)	***Not Applicable***
RFDs/Pumps (Tag Numbers)	***Not Applicable***

Design Data

Quality Level		***See Vessel Drawing***	Fabrication Specs	***24590-WTP-3PS-MV00-TP001***		
Seismic Category		***SC-1***	Design Code	***ASME VIII Div 1***		
Service/Contents		***Radioactive Liquid***	Code Stamp	***Yes***		
Design Specific Gravity		***1.26***	NB Registration	***Yes***		
Operating Volume	gal	***92,850***	Weights (lbs)	Empty	Operating	Test
Total Volume	gal	***103,350***	Estimated	***166,100***	***1,164,200***	***1,028,300***
			Actual *	***169,000***		***1,000,000***

Inside Diameter	inch	***276***			Wind Design	***Not Required***	
Length/Height (TL-TL)	inch	***342***			Snow Design	***Not Required***	
		Vessel Operating	Vessel Design	Coil/Jacket Design	Seismic Design	***24590-WTP-3PS-SS90-T0001*** ***24590-WTP-3PS-MV00-TP002***	
Internal Pressure	psig	***Atm***	***15***	***N/A***	Seismic Base Moment *	ft*lb	
External Pressure	psig	***0.07***	***10***	***N/A***	Postweld Heat Treat	***Not Required***	
Temperature	°F	***113***	***138***	***N/A***	Corrosion Allowance	Inch	***0.04***
Min. Design Metal Temp.	°F	***40***			Hydrostatic Test Pressure *	Psig	

Please note that source, special nuclear and byproduct materials, as defined in the Atomic Energy Act of 1954 (AEA), are regulated at the U.S. Department of Energy (DOE) facilities exclusively by DOE acting pursuant to its AEA authority. DOE asserts that pursuant to the AEA, it has sole and exclusive responsibility and authority to regulate source, special nuclear, and byproduct materials at DOE-owned nuclear facilities. Information contained herein on radionuclides is provided for process description purposes only.

MARK W. HOFFMANN
STATE OF WASHINGTON
0030952
REGISTERED PROFESSIONAL ENGINEER
5/26/04
EXPIRES 12/10/04

This bound document contains a total of 2 sheets

REV	DATE	REASON FOR REVISION	PREPARER	CHECKER	REVIEWER	APPROVER
0	5/26/04	Issued for Permitting Use				

Materials of Construction

Component	Material	Minimum Thickness / Size	Containment
Top Head	***SA 240 316 with max. Carbon of 0.030%***	***See Drawing***	***Auxiliary (Note 1)***
Shell	***SA 240 316 with max. Carbon of 0.030%***	***See Drawing***	***Primary (Note 1)***
Bottom Head	***SA 240 316 with max. Carbon of 0.030%***	***See Drawing***	***Primary (Note 1)***
Support	***SA 240 304 with max. Carbon of 0.030%***	***See Drawing***	***N/A***
Jacket/Coils/Half-Pipe Jacket	***N/A***	***N/A***	***N/A***
Internals	***SA240 316 with max. Carbon of 0.030%***	***See Drawing***	***Thermowell Primary (Note 1)***
Pipe	***SA312 TP316 Smls with max. Carbon of 0.030%***	***See Drawing***	***Note-1***
Forgings/ Bar stock	***SA182 F316 with max. Carbon of 0.030%***	***See Drawing***	***As Note-1 for Nozzle Necks***
Gaskets	***N/A***	***N/A***	***N/A***
Bolting	***N/A***	***N/A***	***N/A***

Miscellaneous Data

Orientation	***Vertical***	Support Type	***Skirt***
Insulation Function	***N/A***	Insulation Material	***N/A***
Insulation Thickness (inch)	***N/A***	Weld Surface Finish	***De-scaled as laid***

Remarks

* To be determined by the vendor.

Note 1: All welds forming part of the primary and auxiliary containments, including the nozzle attachment welds shall be subjected to 100% volumetric examination.

Note 2: Vessel volumes are approximate and do not account for manufacturing tolerances, nozzles, and displacement of internals.

Note 3: This vessel is located in a Black Cell.

Note 4: Contents of this document are Dangerous Waste Permit affecting.

MECHANICAL DATA SHEET: VESSEL

PLANT ITEM No.
24590-PTF-MV-CXP-VSL-00004

R10315126

HK 05/26/04

Project	***RPP-WTP***	P&ID: Calculation	***24590-PTF-M6-CXP-P0001/24590-PTF-M6-CXP-P0005/24590-PTF-M6-CXP-P0007***
Project No	***24590***	Process ~~Data Sheet~~	~~***24590-PTF-MVD-CXP-00004***~~ 24590-PTF-MVC-CXP-00004 HK 05/26/04
Project Site	***Hanford***	Vessel Drawing	***24590-PTF-MV-CXP-P0002***
Description:	***Cs. IX. Caustic Rinse Collection Vessel.***		

Reference Data

Charge Vessels (Tag Numbers)	***4(CXP-VSL-00006/CXP-VSL-00007/CXP-VSL-00008/CXP-VSL-00009)***
Pulsejet Mixers / Agitators (Tag Numbers)	***CXP-PJM-00001***
RFDs/Pumps (Tag Numbers)	***4(CXP-RFD-00004A/B/CXP-RFD-00005/CXP-RFD-00006)***

ISSUED BY RPP-WTP PDC
INIT DATE

Design Data

Quality Level		***QL-1***	Fabrication Specs	***24590-WTP-3PS-MV00-TP001***		
Seismic Category		***SC-1***	Design Code	***ASME VIII Div 1***		
Service/Contents		***NaOH Rinse***	Code Stamp	***Yes***		
Design Specific Gravity		***1.22***	NB Registration	***Yes***		
Maximum Operating Volume	gal	***9,450***	Weights (lbs)	Empty	Operating	Test
Total Volume	gal	***11,085***	Estimated	***27,150***	***124,100***	***114,600***
			Actual *			

Inside Diameter	inch	***126***			Wind Design	***Not Required***	
Length/Height (TL-TL)	inch	***171***			Snow Design	***Not Required***	
		Vessel Operating	Vessel Design	Coil/Jacket Design	Seismic Design	***24590-WTP-3PS-MV00-TP002 234590-WTP-3PS-FB01-T0001***	
Internal Pressure	psig	***0***	***15***		Seismic Base Moment *	ft*lb	
External Pressure	psig	***0.22***	***FV***		Postweld Heat Treat	***Not Required***	
Temperature	°F	***77***	***138***		Corrosion Allowance	Inch	***0.04***
Min. Design Metal Temp.	°F	***40***			Hydrostatic Test Pressure *	psig	

Note: Please note that source, special nuclear and byproduct materials, as defined in the Atomic Energy Act of 1954 (AEA), are regulated at the U.S. Department of Energy (DOE) facilities exclusively by DOE acting pursuant to its AEA authority. DOE asserts, that pursuant to the AEA, it has sole and exclusive responsibility and authority to regulate source, special nuclear, and byproduct materials at DOE-owned nuclear facilities. Information contained herein on radionuclides is provided for process description purposes only.

MARK W. HOFFMANN
STATE OF WASHINGTON
0030932
REGISTERED
PROFESSIONAL ENGINEER
5/26/04
EXPIRES 12/10/04

This Bound Document Contains a total of 5 pages.

REV	DATE	REASON FOR REVISION	PREPARER	CHECKER	REVIEWER	APPROVER
0	5/26/04	Issued for Permitting Use				

BECHTEL	**MECHANICAL DATA SHEET: VESSEL**	**PLANT ITEM No.** ***24590-PTF-MV-CXP-VSL-00004***

Materials of Construction

Component	Material	Minimum Thickness / Size	Containment
Top Head	***SA 240 304 Note1***	***See Drawing***	***Auxiliary (See Note 7)***
Shell	***SA 240 304 Note1***	***See Drawing***	***Primary (See Note 7)***
Bottom Head	***SA 240 304 Note1***	***See Drawing***	***Primary (See Note 7)***
Support	***SA 240 304 Note1***	***See Drawing***	***N/A***
Jacket/Coils/Half-Pipe Jacket	***N/A***	***N/A***	***N/A***
Internals	***SA 240 304 Note1***	***See Drawing***	
Pipe	***SA 312 TP304 Seamless Note 1***	***See Drawing***	***Primary (See Note 7)***
Forgings/ Bar stock	***SA 182 F304 Note 1***	***See Drawing***	***N/A***
Gaskets	***N/A***	***N/A***	***N/A***
Bolting	***N/A***	***N/A***	***N/A***

Miscellaneous Data

Orientation	***Vertical***	Support Type	***Skirt***
Insulation Function	***Not Applicable***	Insulation Material	***Not Applicable***
Insulation Thickness (inch)	***Not Applicable***	Internal Finish	***Note 3***
		External Finish	***Note 3***

Remarks

**** To be determined by the vendor.***
Note 1. Max. Carbon Content 0.030%
Note 2: Deleted
Note 3. Welds descaled as laid.
Note 4. Vessel volumes are approximate and do not account for manufacturing tolerances, and displacement of internals.
Note 5: Deleted
Note 6: This Vessel is in a Black Cell
Note 7: All Welds Forming Part of the Primary and Auxiliary Containment, including Nozzle Attachment Welds, Shall be Subjected to 100% Volumetric Examination
Note 8: Contents of this document are Dangerous Waste Permit affecting.

BECHTEL	**MECHANICAL DATA SHEET: VESSEL**	**PLANT ITEM No.** ***24590-PTF-MV-CXP-VSL-00004***

Equipment Cyclic Data Sheet

Component Plant Item Number:	***CXP-VSL-00004***
Component Description	***Parent Vessel***

The information below is provisional and envelopes operational duty for fatigue assessment. It is not to be used as operational data.

Materials of Construction	***SA 240 304 with 0.030% max carbon***
Design Life	***40 Years***
Component Function and Life Cycle Description	***The purpose of the Cesium Ion Exchange caustic rinse collection vessel is to serve as a feed and receipt vessel for the cesium ion exchange columns as well as a dilution vessel for Caustic Soda.***

Load Type		Min	Max	Number of Cycles	Comment
Design Pressure	psig	***FV***	***15***	***10***	***Nominal Assumption for testing***
Operating Pressure	psig	***-0.22***	***0***	***N/A***	***This vessel will remain under constant pressure depending upon the plant HVAC system.***
Operating Temperature	°F	***59***	***113***	***N/A***	***Temperature will not cycle appreciably with vessel cycling.***
Contents Specific Gravity		***1.00***	***1.22***	***N/A***	***Normally 1.01 without cycling.***
Contents Level	inch	***34***	***184***	***1.46×10^4***	
Localized Features					
Nozzles					
Supports					

Notes

- ***Cycle increase: The Seller must increase the numbers of operational cycles given above by 10% to account for commissioning duty unless otherwise noted.***

BECHTEL	**MECHANICAL DATA SHEET: VESSEL**	**PLANT ITEM No.** ***24590-PTF-MV-CXP-VSL-00004***

Component Plant Item Number:	***CXP-VSL-00006, - 00007, -0008, 00009***
Component Description	***Charge Vessels (Type G. Typical)***

The information below is provisional and envelopes operational duty for fatigue assessment. It is not to be used as operational data.

Materials of Construction	***SA 240 304 with max. carbon of 0.030 %***
Design Life	***40 Years***
Component Function and Life Cycle Description	***The charge vessel is cyclically loaded using vacuum to fully fill the charge vessel with process liquid and compressed air to fully empty the charge vessel. The charge vessel is contained within a parent vessel with varying liquid level. It shall be designed to cycle between the maximum design pressure and the minimum design pressure plus the external static head imposed by the parent vessel. The charge vessel supports shall be designed to cycle between fully buoyant (charge vessel empty and parent vessel full) and fully loaded (charge vessel full and parent vessel empty).***

Load Type		Min	Max	Number of Cycles	Comment
Design Pressure	psig	***FV***	***80***	***10***	***Nominal assumption for Testing***
Operating Pressure	psig	***FV***	***75***	***1.45×10^7***	***Based on 40 years life expectancy***
Operating Temperature	°F	***59***	***113***	***N/A***	***Uniform Material Temperature Range, not between two points.***
Contents Specific Gravity		***1.00***	***1.20***	***N/A***	***Normally 1.01 without cycling.***
Contents Level	inch	***Empty***	***Flooded***	***1.46×10^4***	
Localized Features					
Nozzles					
Supports		***Buoyant / Loaded***		***1.46×10^4***	

Notes

- ***Cycle increase: The Seller must increase the numbers of operational cycles given above by 10% to account for commissioning duty unless otherwise noted.***

BECHTEL	**MECHANICAL DATA SHEET: VESSEL**	**PLANT ITEM No.** ***24590-PTF-MV-CXP-VSL-00004***

omponent Plant Item Number:	***CXP-PJM-00001***
Component Description	***Pulse Jet Mixer (PJM Type E)***

The information below is provisional and envelopes operational duty for fatigue assessment. It is not to be used as operational data.

Materials of Construction	***SA 240 304 with max. carbon of 0.030 %***
Design Life	***40 Years***
Component Function and Life Cycle Description	***These pulse jet mixers are cyclically loaded using vacuum to fully fill the vessel with process liquid and compressed air to fully empty the vessel. The pulse jet mixers are contained within a parent vessel with varying liquid level. They shall be designed to cycle between the maximum design pressure and the minimum design pressure plus the external static head imposed by the parent vessel. The pulse jet mixer supports shall be designed to cycle between fully buoyant (pulse jet mixer empty and parent vessel full) and fully loaded (pulse jet mixer full and parent vessel empty) in addition to thrust.***

Load Type		Min	Max	Number of Cycles	Comment
Design Pressure	psig	***FV***	***80***	***10***	***Nominal assumption for testing***
Operating Pressure	psig	***FV***	***75***	***7.42×10^7***	***Based on 40 year life expectancy***
Operating Temperature	°F	***59***	***113***	***N/A***	***Uniform Material Temperature range, not between two points***
Contents Specific Gravity		***1.00***	***1.20***	***N/A***	***Normally 1.01 without cycling.***
Contents Level	inch	***Empty***	***Flooded***	***7.42×10^7***	
Localized Features					
Nozzles					
Supports		***Buoyant/ loaded***		***7.42×10^7***	

Notes

- ***Cycle increase: The Seller must increase the numbers of operational cycles given above by 10% to account for commissioning duty unless otherwise noted.***

MECHANICAL DATA SHEET: VESSEL

PLANT ITEM No.
24590-PTF-MV-CXP-VSL-00005

R10315125

Project	RPP-WTP	P&ID	24590-PTF-M6-CXP-P0001/24590-PTF-M6-CXP-P0007
Project No.	24590	Process Calculations.	N/A
Project Site	Hanford	Vessel Drawing	24590-PTF-MV-CXP-P0003
Description.	Cs. Reagent Vessel		

ISSUED BY RPP-WTP PDC
INIT DATE

Reference Data

Charge Vessels (Tag Numbers)	N/A
Pulsejet Mixers / Agitators (Tag Numbers)	N/A
RFDs/Pumps (Tag Numbers)	N/A

Design Data

Quality Level		QL-1	Fabrication Specs	24590-WTP-3PS-MV00-TP001		
Seismic Category		SC-1	Design Code	ASME VIII Div 1		
Service/Contents		$NaOH/H_2O/HNO_3$	Code Stamp	Yes		
Design Specific Gravity		1.22	NB Registration	Yes		
Maximum Operating Volume	gal	882.7	Weights (lbs)	Empty	Operating	Test
Total Volume	gal	1141	Estimated	2352	9578	9224
			Actual *			

Inside Diameter	inch	60			Wind Design	Not Required	
Length/Height (TL-TL)	inch	78			Snow Design	Not Required	
		Vessel Operating	Vessel Design	Coil/Jacket Design	Seismic Design	24590-WTP-3PS-MV00-TP002 24590-WTP-3PS-SS90-T0001	
Internal Pressure	psig	0	15		Seismic Base Moment *	ft*lb	
External Pressure	psig	0.22	FV		Postweld Heat Treat	Not Required	
Temperature	°F	77	138		Corrosion Allowance	Inch	0.04
Min. Design Metal Temp.	°F	40			Hydrostatic Test Pressure *	psig	

Note: Please note that source, special nuclear and byproduct materials, as defined in the Atomic Energy Act of 1954 (AEA), are regulated at the U.S. Department of Energy (DOE) facilities exclusively by DOE acting pursuant to its AEA authority. DOE asserts, that pursuant to the AEA, it has sole and exclusive responsibility and authority to regulate source, special nuclear, and byproduct materials at DOE-owned nuclear facilities. Information contained herein on radionuclides is provided for process description purposes only.

MARK W. HOFFMAN
STATE OF WASHINGTON
21
0030952
REGISTERED
PROFESSIONAL ENGINEER
5/26/04
EXPIRES 12/10/04

This Bound Document Contains a total of 3 pages.

REV	DATE	REASON FOR REVISION	PREPARER	CHECKER	REVIEWER	APPROVER
0	5/26/04	Issued for Permitting Use				

BECHTEL	**MECHANICAL DATA SHEET: VESSEL**	**PLANT ITEM No.** ***24590-PTF-MV-CXP-VSL-00005***

Materials of Construction

Component	Material	Minimum Thickness / Size	Containment
Top Head	***SA 240 304 Note1***	***See Drawing***	***Auxiliary (See Note 5)***
Shell	***SA 240 304 Note1***	***See Drawing***	***Primary (See Note 5)***
Bottom Head	***SA 240 304 Note1***	***See Drawing***	***Primary (See Note 5)***
Support	***SA 240 304 Note1***	***See Drawing***	***N/A***
Jacket/Coils/Half-Pipe Jacket	***N/A***	***N/A***	***N/A***
Internals	***SA 240 304 Note1***	***See Drawing***	***N/A***
Pipe/Nozzles	***SA 312 TP304 Seamless Note 1***	***See Drawing***	***Primary (See Note 5)***
Forgings/ Bar stock	***SA 182 F304 Note 1***	***See Drawing***	***N/A***
Gaskets	***N/A***	***N/A***	***N/A***
Bolting	***N/A***	***N/A***	***N/A***

Miscellaneous Data

Orientation	***Vertical***	Support Type	***Skirt***
Insulation Function	***Not Applicable***	Insulation Material	***Not Applicable***
Insulation Thickness (inch)	***Not Applicable***	Internal Finish	***Note 3***
		External Finish	***Note 3***

Remarks

**** To be determined by the vendor.***
Note 1. Max. Carbon Content 0.030%
Note 2: Deleted
Note 3: Welds descaled as laid.
Note 4: This Vessel is in a Black Cell
Note 5: All Welds Forming Part of the Primary and Auxiliary Containment, Including Nozzle Attachment Welds, Shall be Subjected to 100% Volumetric Examination
Note 6: The contents of this document are Dangerous Waste Permit affecting.

BECHTEL	**MECHANICAL DATA SHEET: VESSEL**	**PLANT ITEM No.** ***24590-PTF-MV-CXP-VSL-00005***

Component Plant Item Number:	***CXP-VSL-00005***
Component Description	***Parent Vessel***

The information below is provisional and envelopes operational duty for fatigue assessment. It is not to be used as operational data.

Materials of Construction	***SA 240 304 with 0.030% max carbon***
Design Life	***40 Years***
Component Function and Life Cycle Description	***The purpose of the Cesium Reagent Tank is to separate a gas stream from process liquid. This vessel is also a feed vessel for Cs. Ion Exchange Columns.***

Load Type		Min	Max	Number of Cycles	Comment
Design Pressure	psig	***FV***	***15***	***10***	***Nominal Assumption for testing***
Operating Pressure	psig	***-0.22***	***0***	***N/A***	***This vessel will remain under constant pressure depending upon the vessel plant HVAC system.***
Operating Temperature	°F	***59***	***113***	***N/A***	***Temperature will not cycle appreciably with vessel cycling.***
Contents Specific Gravity		***1.00***	***1.22***	***N/A***	***Normally 1.01 without cycling.***
Contents Level	inch	***0***	***102***	***1.46×10^4***	***33 hour cycle time***
Localized Features					
Nozzles					
Supports					

Notes

- ***Cycle increase: The Seller must increase the numbers of operational cycles given above by 10% to account for commissioning duty unless otherwise noted.***

R10429490

MECHANICAL DATA SHEET: VESSEL

PLANT ITEM No.
24590-PTF-MV-CXP-VSL-00026A

Project:	***RPP-WTP***	P&ID:	***24590-PTF-M6-CXP-P0010, 24590-PTF-M6-CXP-P0011, 24590-PTF-M6-CXP-P0013***
Project No:	***24590***	Process Calculation:	***Deleted*** 1
Project Site:	***Hanford***	Vessel Drawing	***24590-PTF-MV-CXP-P0008***
Description:	***Cesium Ion Exchange Treated LAW Collection Vessel***		

Reference Data

Charge Vessels (Tag Numbers)	
Pulsejet Mixers / Agitators (Tag Numbers)	***CXP-PJM-00002, CXP-PJM-00003, CXP-PJM-00004, CXP-PJM-00005, CXP-PJM-00006, CXP-PJM-00007***
RFDs/Pumps (Tag Numbers)	

Design Data

Quality Level		***See Vessel Drawing***	Fabrication Specs	***24590-WTP-3PS-MV00-TP001***		
Seismic Category		***SC-I***	Design Code	***ASME VIII Div 1***		
Service/Contents		***Radioactive Liquid***	Code Stamp	***Yes***		
Design Specific Gravity		***1.26***	NB Registration	***Yes***		
Maximum Operating Volume	gal	***34,370 (Note 3)***	Weights (lbs)	Empty	Operating	Test
Total Volume	gal	***39,000 (Note 3)***	Estimated	***81,400***	***447,000***	***407,000***
Environmental Qualification 1		***N/A***	Actual * (lbs) 1	***75,000***	***440,000***	***400,000***

Inside Diameter	inch	***180***			Wind Design	***Not Required***	
Length/Height (TL-TL)	inch	***294***			Snow Design	***Not Required***	
		Vessel Operating	Vessel Design	Coil/Jacket Design	Seismic Design	***24590-WTP-3PS-MV00-TP002 24590-WTP-3PS-SS90-T0001***	
Internal Pressure	psig	***Atm***	***15***	***N/A***	Seismic Base Moment *	ft*lb	
External Pressure	psig	***0.12***	***FV***	***N/A***	Postweld Heat Treat	***Not Required***	
Temperature	°F	***113***	***138***	***N/A***	Corrosion Allowance	inch	***0.04***
Min. Design Metal Temp.	°F	***40***			Hydrostatic Test Pressure *	psig	***20*** 1

Note: Please note that source, special nuclear and byproduct materials, as defined in the Atomic Energy Act of 1954 (AEA), are regulated at the U.S. Department of Energy (DOE) facilities exclusively by DOE acting pursuant to its AEA authority. DOE asserts, that pursuant to the AEA, it has sole and exclusive responsibility and authority to regulate source, special nuclear, and byproduct materials at DOE-owned nuclear facilities. Information contained herein on radionuclides is provided for process description purposes only.

ISSUED BY
RPP-WTP PDC

MARK W. HOFFMANN
STATE OF WASHINGTON
0030952
REGISTERED
PROFESSIONAL ENGINEER
6/2/05
EXPIRES 12/10/05

This Bound Document Contains a total of 5 sheets.

REV	DATE	REASON FOR REVISION	PREPARER	CHECKER	REVIEWER	APPROVER
1	6/2/05	Issued for Permitting Use				
0	5/26/04	Issued for Permitting Use	K. Brightman	R. Simmons	C. Slater	M. Hoffmann

BECHTEL	**MECHANICAL DATA SHEET: VESSEL**	**PLANT ITEM No.** ***24590-PTF-MV-CXP-VSL-00026A***

Materials of Construction

Component	Material	Minimum Thickness / Size	Containment
Top Head	***SA-240 316 (Note 2)***	***See Drawing***	***Auxiliary (Note 1)***
Shell	***SA-240 316 (Note 2)***	***See Drawing***	***Primary (Note 1)***
Bottom Head	***SA-240 316 (Note 2)***	***See Drawing***	***Primary (Note 1)***
Support & Vacuum Ring 1	***SA-240 304 (Note 2)***	***See Drawing***	***N/A***
Jacket/Coils/Half-Pipe Jacket	***N/A***	***N/A***	***N/A***
Internals	***SA-240 316 (Note 2)***	***See Drawing***	***Thermowells Primary (Note 1)***
Pipe	***SA-312 TP316 Seamless (Note 2)***	***See Drawing***	***Note 1***
Forgings/ Bar stock	***SA-182 F316 (Note 2)***	***See Drawing***	***Note 1***
Gaskets	***N/A***	***N/A***	***N/A***
Bolting	***N/A***	***N/A***	***N/A***

Miscellaneous Data

Orientation	***Vertical***	Support Type	***Skirt***
Insulation Function	***Not Applicable***	Insulation Material	***Not Applicable***
Insulation Thickness (inch)	***Not Applicable***	Internal Finish	***Welds Descaled as Laid***
		External Finish	***Welds Descaled as Laid***

Remarks

**** To be determined by the vendor***

Note 1: All welds forming part of the primary and auxiliary containments, including the nozzle attachment welds shall be subjected to 100% volumetric examination.

Note 2: Maximum carbon content of 0.030% for all welded components.

Note 3: Vessel volumes are approximate and do not account for manufacturing tolerances, nozzles, and displacement of internals.

Note 4: This vessel is located in a Black Cell.

Note 5: Contents of this document are Dangerous Waste Permit affecting.

Note 6: Deleted. 1

Equipment Cyclic Data Sheet

Component Plant Item Number:	***24590-PTF-MV-CXP-VSL-00026A***
Component Description	***Parent Vessel***

The information below is provisional and envelopes operational duty for fatigue assessment. It is not to be used as operational data.

Materials of Construction	***SA-240 316***
Design Life	***40 Years***
Component Function and Life Cycle Description	***This vessel receives and stores waste in a batch transfer. It shall be designed to be filled to the maximum content level over a period of 22 hours and emptied in 10 hours to complete a 32 hour cycle. Additionally, this vessel will be subjected to fluid dynamic forces from the operation of the pulse jet mixers during the process of suspending the solids. This vessel is washed down not more than once per year.***

Load Type		Min	Max	Number of Cycles	Comment
Design Pressure	psig	***FV***	***15***	***10***	***Nominal assumption for testing***
Operating Pressure	psig	***-0.12***	***0***	***N/A***	***This vessel will remain under constant pressure depending upon the vessel vent system***
Operating Temperature	°F	***59***	***113***	***N/A***	***Temperature will not cycle appreciably with vessel cycling***
Contents Specific Gravity		***1.00***	***1.26***	***N/A***	***Normally 1.2 without cycling***
Contents Level	inch	***43***	***309***	***3690***	***Liquid level from crown of bottom head***
Localized Features					
Supports				***Same as contents level***	

Notes

- ***Cycle increase: The Seller must increase the numbers of operational cycles given above by 10% to account for commissioning duty unless otherwise noted.***

Hydrodynamic Loading 1

In normal operation, pulse jet mixers discharge liquid into the parent vessel imposing a cyclical hydrodynamic load on all internal components. Occasionally, an upset condition designated 'overblow' causes air to be discharged from any single pulse jet mixer. All internal components shall be designed for the combination of the normal operational hydrodynamic loads and overblow loads, and this load combination is also to be assumed to act concurrently with seismic loads.

The following table indicates the normal hydrodynamic pressure for ranges of elevations in the vessel and the number of design cycles for each condition. The hydrodynamic forces cycle between the indicated pressure ranges applied across the projected area of the component. Positive hydrodynamic forces act in the radial, outward direction and the vertical, upward direction. Seller shall apply the radial load simultaneously in the radial direction and normal to the radial direction in the horizontal plane.

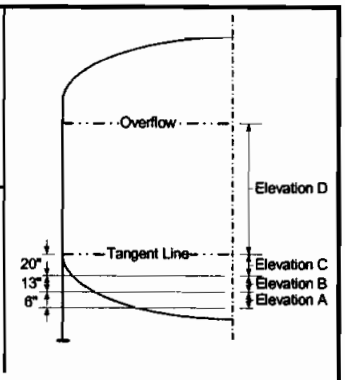

Normal Operation Hydrodynamic Pressure Range, psi								Number of Cycles
Elevation A		Elevation B		Elevation C		Elevation D		
Radial	Vertical	Radial	Vertical	Radial	Vertical	Radial	Vertical	
-0.09 to 0.29	***-0.74 to 0.48***	***-0.02 to 0.22***	***-0.01 to 0.40***	***-0.05 to 0.12***	***-0.01 to 0.40***	***-0.03 to 0.10***	***-0.01 to 0.40***	***21.5×10^6***

Overblow loads vary as a function of the distance from the center of the overblowing pulse jet mixer nozzle and the elevation 'H' above the overblowing pulse jet mixer nozzle up to the overflow level as plotted:

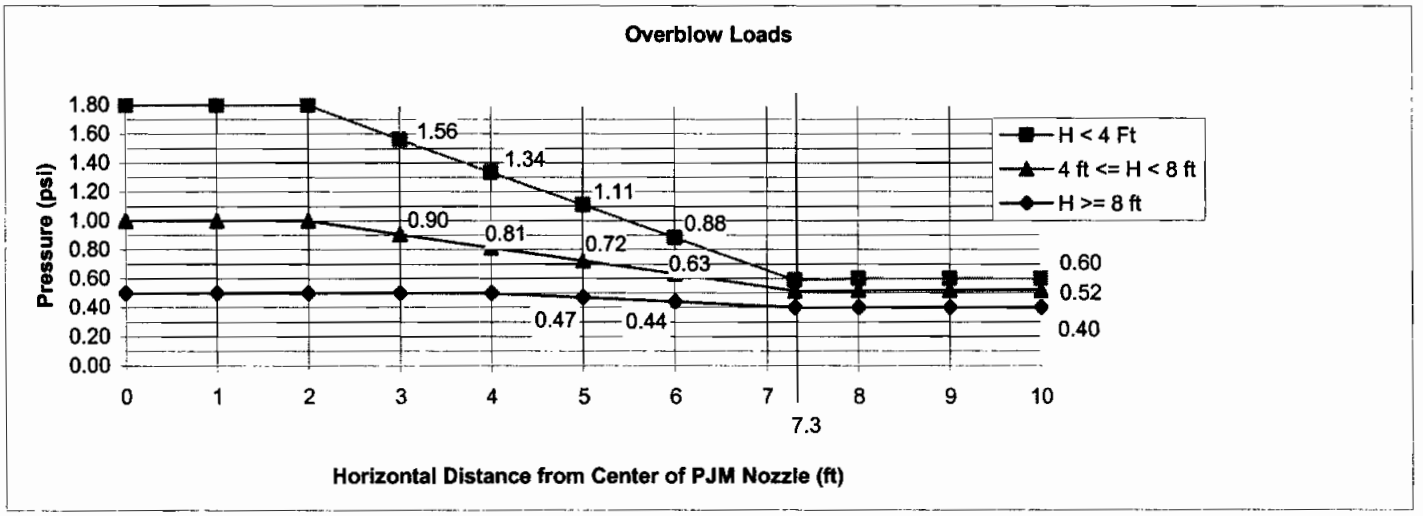

The overblow pressure shall only be applied to the projected area of the overblowing pulse jet mixer in the vertical, upward direction and to all surrounding components in the horizontal plane, radiating from the overblowing pulse jet mixer. Seller shall consider that any single pulse jet mixer may overblow 100 cycles.

Notes

- ***Cycle increase: The Seller must increase the numbers of operational cycles given above by 10% to account for commissioning duty unless otherwise noted.***

Equipment Cyclic Data Sheet

Component Plant Item Number:	***24590-PTF-MV-CXP-PJM-00002, 24590-PTF-MV-CXP-PJM-00003, 24590-PTF-MV-CXP-PJM-00004, 24590-PTF-MV-CXP-PJM-00005, 24590-PTF-MV-CXP-PJM-00006, 24590-PTF-MV-CXP-PJM-00007***
Component Description	***Pulse Jet Mixers***

The information below is provisional and envelopes operational duty for fatigue assessment. It is not to be used as operational data.

Materials of Construction	***SA-240 316***
Design Life	***40 Years***
Component Function and Life Cycle Description	***These pulse jet mixers (PJMs) are cyclically loaded using vacuum to fully fill the PJM with process liquid and compressed air to fully empty the PJM. The PJMs are contained within a parent vessel with varying liquid level. They shall be designed to cycle between the maximum design pressure and the minimum design pressure plus the external static head imposed by the parent vessel. The PJM supports shall be designed to cycle between fully buoyant (PJM empty and parent vessel full) and fully loaded (PJM full and parent vessel empty) states. Thrust load shall be applied only to the fully buoyant state. Assume the parent vessel is full for 50% of the number of PJM cycles.*** 1

Load Type		Min	Max	Number of Cycles	Comment
Design Pressure	psig	***FV***	***80***	***10***	***Nominal assumption for testing***
Operating Pressure	psig	***FV***	***72.5***	***2.15×10^7***	
Operating Temperature	°F	***59***	***113***	***N/A***	***Temperature will not cycle appreciably with vessel cycling.***
Contents Specific Gravity		***1.00***	***1.26***	***N/A***	***Normally 1.2 without cycling***
Contents Level	inch	***Empty***	***Flooded***	***2.15×10^7***	
Thrust 1	lbf	***0***	***314***	***2.15×10^7***	
Localized Features					
Nozzles					
Supports		***Buoyant/Loaded***		***Same as contents level***	

Notes

- ***Cycle increase: The Seller must increase the numbers of operational cycles given above by 10% to account for commissioning duty unless otherwise noted.***

R10429491

MECHANICAL DATA SHEET: VESSEL

PLANT ITEM No.
24590-PTF-MV-CXP-VSL-00026B

Project:	***RPP-WTP***	P&ID:	***24590-PTF-M6-CXP-P0010, 24590-PTF-M6-CXP-P0011, 24590-PTF-M6-CXP-P0013***
Project No:	***24590***	Process Calculation:	***Deleted*** 1
Project Site:	***Hanford***	Vessel Drawing	***24590-PTF-MV-CXP-P0009***
Description:	***Cesium Ion Exchange Treated LAW Collection Vessel***		

Reference Data

Charge Vessels (Tag Numbers)	
Pulsejet Mixers / Agitators (Tag Numbers)	***CXP-PJM-00008, CXP-PJM-00009, CXP-PJM-00010, CXP-PJM-00011, CXP-PJM-00012, CXP-PJM-00013***
RFDs/Pumps (Tag Numbers)	

Design Data

Quality Level		***See Vessel Drawing***	Fabrication Specs	***24590-WTP-3PS-MV00-TP001***		
Seismic Category		***SC-I***	Design Code	***ASME VIII Div 1***		
Service/Contents		***Radioactive Liquid***	Code Stamp	***Yes***		
Design Specific Gravity		***1.26***	NB Registration	***Yes***		
Maximum Operating Volume	gal	***34,370 (Note 3)***	Weights (lbs)	Empty	Operating	Test
Total Volume	gal	***39,000 (Note 3)***	Estimated	***81,400***	***447,000***	***407,000***
Environmental Qualification 1		***N/A***	Actual *(lbs) 1	***75,000***	***440,000***	***400,000***

Inside Diameter	inch	***180***			Wind Design	***Not Required***	
Length/Height (TL-TL)	inch	***294***			Snow Design	***Not Required***	
		Vessel Operating	Vessel Design	Coil/Jacket Design	Seismic Design	***24590-WTP-3PS-MV00-TP002 24590-WTP-3PS-SS90-T0001***	
Internal Pressure	psig	***Atm***	***15***	***N/A***	Seismic Base Moment *	ft*lb	
External Pressure	psig	***0.12***	***FV***	***N/A***	Postweld Heat Treat	***Not Required***	
Temperature	°F	***113***	***138***	***N/A***	Corrosion Allowance	Inch	***0.04***
Min. Design Metal Temp.	°F	***40***			Hydrostatic Test Pressure * 1	psig	***20***

Note: Please note that source, special nuclear and byproduct materials, as defined in the Atomic Energy Act of 1954 (AEA), are regulated at the U.S. Department of Energy (DOE) facilities exclusively by DOE acting pursuant to its AEA authority. DOE asserts, that pursuant to the AEA, it has sole and exclusive responsibility and authority to regulate source, special nuclear, and byproduct materials at DOE-owned nuclear facilities. Information contained herein on radionuclides is provided for process description purposes only.

ISSUED BY
RPP-WTP PDC

MARK W. HOFFMANN
STATE OF WASHINGTON
0030952
REGISTERED
PROFESSIONAL ENGINEER
6/2/05
EXPIRES 12/10/06

This Bound Document Contains a total of 5 sheets.

REV	DATE	REASON FOR REVISION	PREPARER	CHECKER	REVIEWER	APPROVER
1	6/2/05	Issued for Permitting Use				
0	5/26/04	Issued for Permitting Use	K. Brightman	R. Simmons	C. Slater	M. Hoffmann

BECHTEL	**MECHANICAL DATA SHEET: VESSEL**	**PLANT ITEM No.** ***24590-PTF-MV-CXP-VSL-00026B***

Materials of Construction

Component	Material	Minimum Thickness / Size	Containment
Top Head	***SA-240 316 (Note 2)***	***See Drawing***	***Auxiliary (Note 1)***
Shell	***SA-240 316 (Note 2)***	***See Drawing***	***Primary (Note 1)***
Bottom Head	***SA-240 316 (Note 2)***	***See Drawing***	***Primary (Note 1)***
Support & Vacuum Ring 1	***SA-240 304 (Note 2)***	***See Drawing***	***N/A***
Jacket/Coils/Half-Pipe Jacket	***N/A***	***N/A***	***N/A***
Internals	***SA-240 316 (Note 2)***	***See Drawing***	***Thermowells Primary (Note 1)***
Pipe	***SA-312 TP316 Seamless (Note 2)***	***See Drawing***	***Note 1***
Forgings/ Bar stock	***SA-182 F316 (Note 2)***	***See Drawing***	***Note 1***
Gaskets	***N/A***	***N/A***	***N/A***
Bolting	***N/A***	***N/A***	***N/A***

Miscellaneous Data

Orientation	***Vertical***	Support Type	***Skirt***
Insulation Function	***Not Applicable***	Insulation Material	***Not Applicable***
Insulation Thickness (inch)	***Not Applicable***	Internal Finish	***Welds Descaled as Laid***
		External Finish	***Welds Descaled as Laid***

Remarks

**** To be determined by the vendor***

Note 1: All welds forming part of the primary and auxiliary containments, including the nozzle attachment welds shall be subjected to 100% volumetric examination.

Note 2: Maximum carbon content of 0.030% for all welded components.

Note 3: Vessel volumes are approximate and do not account for manufacturing tolerances, nozzles, and displacement of internals.

Note 4: This vessel is located in a Black Cell.

Note 5: Contents of this document are Dangerous Waste Permit affecting.

Note 6: Deleted. 1

Equipment Cyclic Data Sheet

Component Plant Item Number:	***24590-PTF-MV-CXP-VSL-00026B***
Component Description	***Parent Vessel***

The information below is provisional and envelopes operational duty for fatigue assessment. It is not to be used as operational data.

Materials of Construction	***SA-240 316***
Design Life	***40 Years***
Component Function and Life Cycle Description	***This vessel receives and stores waste in a batch transfer. It shall be designed to be filled to the maximum content level over a period of 22 hours and emptied in 10 hours to complete a 32 hour cycle. Additionally, this vessel will be subjected to fluid dynamic forces from the operation of the pulse jet mixers during the process of suspending the solids. This vessel is washed down not more than once per year.***

Load Type		Min	Max	Number of Cycles	Comment
Design Pressure	psig	***FV***	***15***	***10***	***Nominal assumption for testing***
Operating Pressure	psig	***-0.12***	***0***	***N/A***	***This vessel will remain under constant pressure depending upon the vessel vent system***
Operating Temperature	°F	***59***	***113***	***N/A***	***Temperature will not cycle appreciably with vessel cycling***
Contents Specific Gravity		***1.00***	***1.26***	***N/A***	***Normally 1.2 without cycling***
Contents Level	inch	***43***	***309***	***3690***	***Liquid level from crown of bottom head***
Localized Features					
Supports				***Same as contents level***	

Notes

- ***Cycle increase: The Seller must increase the numbers of operational cycles given above by 10% to account for commissioning duty unless otherwise noted.***

Hydrodynamic Loading 1

In normal operation, pulse jet mixers discharge liquid into the parent vessel imposing a cyclical hydrodynamic load on all internal components. Occasionally, an upset condition designated 'overblow' causes air to be discharged from any single pulse jet mixer. All internal components shall be designed for the combination of the normal operational hydrodynamic loads and overblow loads, and this load combination is also to be assumed to act concurrently with seismic loads.

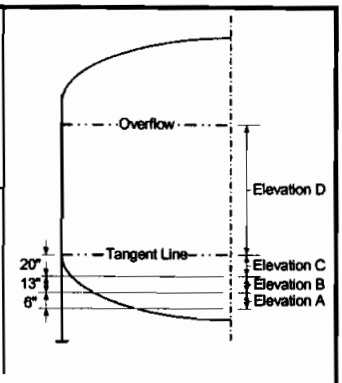

The following table indicates the normal hydrodynamic pressure for ranges of elevations in the vessel and the number of design cycles for each condition. The hydrodynamic forces cycle between the indicated pressure ranges applied across the projected area of the component. Positive hydrodynamic forces act in the radial, outward direction and the vertical, upward direction. Seller shall apply the radial load simultaneously in the radial direction and normal to the radial direction in the horizontal plane.

Normal Operation Hydrodynamic Pressure Range, psi								Number of Cycles
Elevation A		Elevation B		Elevation C		Elevation D		
Radial	Vertical	Radial	Vertical	Radial	Vertical	Radial	Vertical	
-0.09 to 0.29	*-0.74 to 0.48*	*-0.02 to 0.22*	*-0.01 to 0.40*	*-0.05 to 0.12*	*-0.01 to 0.40*	*-0.03 to 0.10*	*-0.01 to 0.40*	*21.5×10^6*

Overblow loads vary as a function of the distance from the center of the overblowing pulse jet mixer nozzle and the elevation 'H' above the overblowing pulse jet mixer nozzle up to the overflow level as plotted:

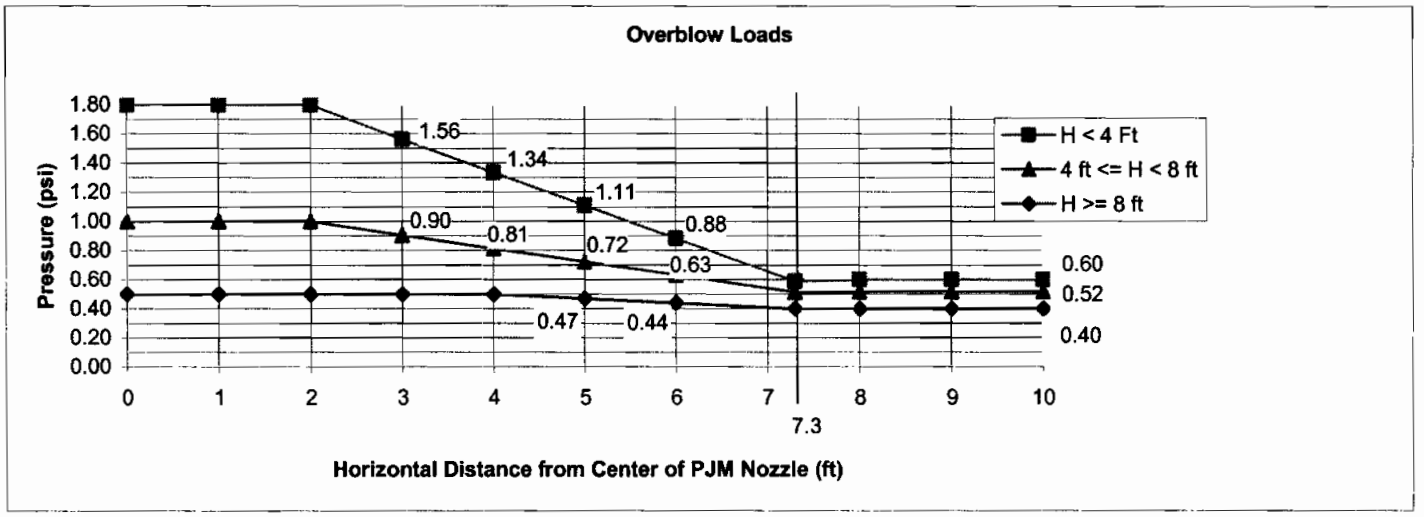

The overblow pressure shall only be applied to the projected area of the overblowing pulse jet mixer in the vertical, upward direction and to all surrounding components in the horizontal plane, radiating from the overblowing pulse jet mixer. Seller shall consider that any single pulse jet mixer may overblow 100 cycles.

Notes

- ***Cycle increase: The Seller must increase the numbers of operational cycles given above by 10% to account for commissioning duty unless otherwise noted.***

BECHTEL	**MECHANICAL DATA SHEET: VESSEL**	**PLANT ITEM No.** ***24590-PTF-MV-CXP-VSL-00026B***

Equipment Cyclic Data Sheet

Component Plant Item Number:	***24590-PTF-MV-CXP-PJM-00008, 24590-PTF-MV-CXP-PJM-00009, 24590-PTF-MV-CXP-PJM-00010, 24590-PTF-MV-CXP-PJM-00011, 24590-PTF-MV-CXP-PJM-00012, 24590-PTF-MV-CXP-PJM-00013***
Component Description	***Pulse Jet Mixers***

The information below is provisional and envelopes operational duty for fatigue assessment. It is not to be used as operational data.

Materials of Construction	***SA-240 316***
Design Life	***40 Years***
Component Function and Life Cycle Description	***These pulse jet mixers (PJMs) are cyclically loaded using vacuum to fully fill the PJM with process liquid and compressed air to fully empty the PJM. The PJMs are contained within a parent vessel with varying liquid level. They shall be designed to cycle between the maximum design pressure and the minimum design pressure plus the external static head imposed by the parent vessel. The PJM supports shall be designed to cycle between fully buoyant (PJM empty and parent vessel full) and fully loaded (PJM full and parent vessel empty) states. Thrust load shall be applied only to the fully buoyant state. Assume the parent vessel is full for 50% of the number of PJM cycles.*** △1

Load Type		Min	Max	Number of Cycles	Comment
Design Pressure	psig	***FV***	***80***	***10***	***Nominal assumption for testing***
Operating Pressure	psig	***FV***	***72.5***	***2.15×10^7***	
Operating Temperature	°F	***59***	***113***	***N/A***	***Temperature will not cycle appreciably with vessel cycling.***
Contents Specific Gravity		***1.00***	***1.26***	***N/A***	***Normally 1.2 without cycling***
Contents Level	inch	***Empty***	***Flooded***	***2.15×10^7***	
Thrust △1	lbf	***0***	***314***	***2.15×10^7***	
Localized Features					
Nozzles					
Supports		***Buoyant/Loaded***		***Same as contents level***	

Notes

- ***Cycle increase: The Seller must increase the numbers of operational cycles given above by 10% to account for commissioning duty unless otherwise noted.***

R10429492

MECHANICAL DATA SHEET: VESSEL

PLANT ITEM No.
24590-PTF-MV-CXP-VSL-00026C

Project:	***RPP-WTP***	P&ID:	***24590-PTF-M6-CXP-P0010, 24590-PTF-M6-CXP-P0012, 24590-PTF-M6-CXP-P0013***
Project No:	***24590***	Process Calculation:	***Deleted*** 1
Project Site:	***Hanford***	Vessel Drawing	***24590-PTF-MV-CXP-P0010***
Description:	***Cesium Ion Exchange Treated LAW Collection Vessel***		

Reference Data

Charge Vessels (Tag Numbers)	
Pulsejet Mixers / Agitators (Tag Numbers)	***CXP-PJM-00014, CXP-PJM-00015, CXP-PJM-00016, CXP-PJM-00017, CXP-PJM-00018, CXP-PJM-00019***
RFDs/Pumps (Tag Numbers)	

Design Data

Quality Level		***See Vessel Drawing***	Fabrication Specs	***24590-WTP-3PS-MV00-TP001***		
Seismic Category		***SC-I***	Design Code	***ASME VIII Div 1***		
Service/Contents		***Radioactive Liquid***	Code Stamp	***Yes***		
Design Specific Gravity		***1.26***	NB Registration	***Yes***		
Maximum Operating Volume	gal	***34,370 (Note 3)***	Weights (lbs)	Empty	Operating	Test
Total Volume	gal	***39,000 (Note 3)***	Estimated	***81,400***	***447,000***	***407,000***
Environmental Qualification	1	***N/A***	Actual * (lbs) 1	***75,000***	***440,000***	***400,000***

Inside Diameter	inch	***180***			Wind Design	***Not Required***	
Length/Height (TL-TL)	inch	***294***			Snow Design	***Not Required***	
		Vessel Operating	Vessel Design	Coil/Jacket Design	Seismic Design	***24590-WTP-3PS-MV00-TP002 24590-WTP-3PS-SS90-T0001***	
Internal Pressure	psig	***Atm***	***15***	***N/A***	Seismic Base Moment *	ft*lb	
External Pressure	psig	***0.12***	***FV***	***N/A***	Postweld Heat Treat	***Not Required***	
Temperature	°F	***113***	***138***	***N/A***	Corrosion Allowance	Inch	***0.04***
Min. Design Metal Temp.	°F	***40***			Hydrostatic Test Pressure * 1	psig	***20***

Note: Please note that source, special nuclear and byproduct materials, as defined in the Atomic Energy Act of 1954 (AEA), are regulated at the U.S. Department of Energy (DOE) facilities exclusively by DOE acting pursuant to its AEA authority. DOE asserts, that pursuant to the AEA, it has sole and exclusive responsibility and authority to regulate source, special nuclear, and byproduct materials at DOE-owned nuclear facilities. Information contained herein on radionuclides is provided for process description purposes only.

ISSUED BY
RPP-WTP PDC

MARK W. HOFFMANN
STATE OF WASHINGTON
0030952
REGISTERED
PROFESSIONAL ENGINEER
6/2/05
EXPIRES 12/10/06

This Bound Document Contains a total of 5 sheets.

REV	DATE	REASON FOR REVISION	PREPARER	CHECKER	REVIEWER	APPROVER
1	6/2/05	Issued for Permitting Use				
0	5/26/04	Issued for Permitting Use	K. Brightman	R. Simmons	C. Slater	M. Hoffmann

BECHTEL	**MECHANICAL DATA SHEET: VESSEL**	**PLANT ITEM No.** ***24590-PTF-MV-CXP-VSL-00026C***

Materials of Construction

Component	Material	Minimum Thickness / Size	Containment
Top Head	***SA-240 316 (Note 2)***	***See Drawing***	***Auxiliary (Note 1)***
Shell	***SA-240 316 (Note 2)***	***See Drawing***	***Primary (Note 1)***
Bottom Head	***SA-240 316 (Note 2)***	***See Drawing***	***Primary (Note 1)***
Support & Vacuum Ring 1	***SA-240 304 (Note 2)***	***See Drawing***	***N/A***
Jacket/Coils/Half-Pipe Jacket	***N/A***	***N/A***	***N/A***
Internals	***SA-240 316 (Note 2)***	***See Drawing***	***Thermowells Primary (Note 1)***
Pipe	***SA-312 TP316 Seamless (Note 2)***	***See Drawing***	***Note 1***
Forgings/ Bar stock	***SA-182 F316 (Note 2)***	***See Drawing***	***Note 1***
Gaskets	***N/A***	***N/A***	***N/A***
Bolting	***N/A***	***N/A***	***N/A***

Miscellaneous Data

Orientation	***Vertical***	Support Type	***Skirt***
Insulation Function	***Not Applicable***	Insulation Material	***Not Applicable***
Insulation Thickness (inch)	***Not Applicable***	Internal Finish	***Welds Descaled as Laid***
		External Finish	***None***

Remarks

**** To be determined by the vendor***

Note 1: All welds forming part of the primary and auxiliary containments, including the nozzle attachment welds shall be subjected to 100% volumetric examination.

Note 2: Maximum carbon content of 0.030% for all welded components.

Note 3: Vessel volumes are approximate and do not account for manufacturing tolerances, nozzles, and displacement of internals.

Note 4: This vessel is located in a Black Cell.

Note 5: Contents of this document are Dangerous Waste Permit affecting.

Note 6: Deleted. 1

Equipment Cyclic Data Sheet

Component Plant Item Number:	***24590-PTF-MV-CXP-VSL-00026C***
Component Description	***Parent Vessel***

The information below is provisional and envelopes operational duty for fatigue assessment. It is not to be used as operational data.

Materials of Construction	***SA-240 316***
Design Life	***40 Years***
Component Function and Life Cycle Description	***This vessel receives and stores waste in a batch transfer. It shall be designed to be filled to the maximum content level over a period of 22 hours and emptied in 10 hours to complete a 32 hour cycle. Additionally, this vessel will be subjected to fluid dynamic forces from the operation of the pulse jet mixers during the process of suspending the solids. This vessel is washed down not more than once per year.***

Load Type		Min	Max	Number of Cycles	Comment
Design Pressure	psig	***FV***	***15***	***10***	***Nominal assumption for testing***
Operating Pressure	psig	***-0.12***	***0***	***N/A***	***This vessel will remain under constant pressure depending upon the vessel vent system***
Operating Temperature	°F	***59***	***113***	***N/A***	***Temperature will not cycle appreciably with vessel cycling***
Contents Specific Gravity		***1.00***	***1.26***	***N/A***	***Normally 1.2 without cycling***
Contents Level	inch	***43***	***309***	***3690***	***Liquid level from crown of bottom head***
Localized Features					
Supports				***Same as contents level***	

Notes

- ***Cycle increase: The Seller must increase the numbers of operational cycles given above by 10% to account for commissioning duty unless otherwise noted.***

Hydrodynamic Loading 1

In normal operation, pulse jet mixers discharge liquid into the parent vessel imposing a cyclical hydrodynamic load on all internal components. Occasionally, an upset condition designated 'overblow' causes air to be discharged from any single pulse jet mixer. All internal components shall be designed for the combination of the normal operational hydrodynamic loads and overblow loads, and this load combination is also to be assumed to act concurrently with seismic loads.

The following table indicates the normal hydrodynamic pressure for ranges of elevations in the vessel and the number of design cycles for each condition. The hydrodynamic forces cycle between the indicated pressure ranges applied across the projected area of the component. Positive hydrodynamic forces act in the radial, outward direction and the vertical, upward direction. Seller shall apply the radial load simultaneously in the radial direction and normal to the radial direction in the horizontal plane.

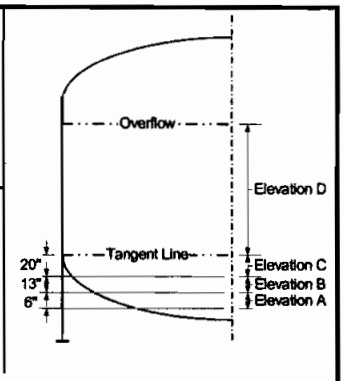

Normal Operation Hydrodynamic Pressure Range, psi								Number of Cycles
Elevation A		Elevation B		Elevation C		Elevation D		
Radial	Vertical	Radial	Vertical	Radial	Vertical	Radial	Vertical	
-0.09 to 0.29	*-0.74 to 0.48*	*-0.02 to 0.22*	*-0.01 to 0.40*	*-0.05 to 0.12*	*-0.01 to 0.40*	*-0.03 to 0.10*	*-0.01 to 0.40*	*21.5×10^5*

Overblow loads vary as a function of the distance from the center of the overblowing pulse jet mixer nozzle and the elevation 'H' above the overblowing pulse jet mixer nozzle up to the overflow level as plotted:

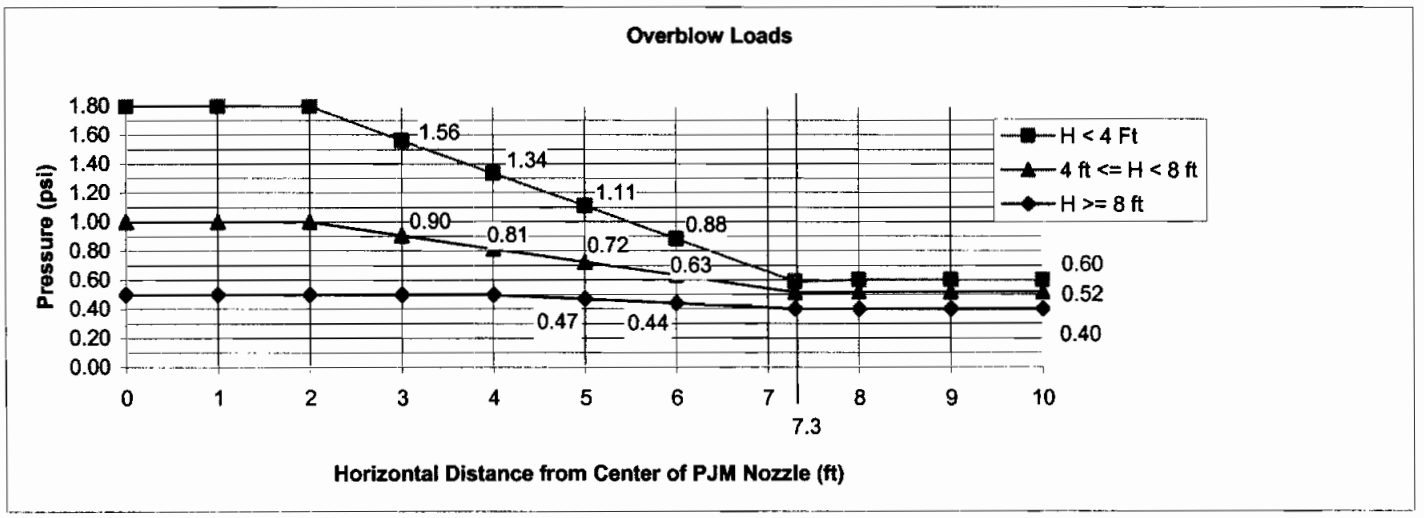

The overblow pressure shall only be applied to the projected area of the overblowing pulse jet mixer in the vertical, upward direction and to all surrounding components in the horizontal plane, radiating from the overblowing pulse jet mixer. Seller shall consider that any single pulse jet mixer may overblow 100 cycles.

Notes

- ***Cycle increase: The Seller must increase the numbers of operational cycles given above by 10% to account for commissioning duty unless otherwise noted.***

BECHTEL	**MECHANICAL DATA SHEET: VESSEL**	**PLANT ITEM No.** ***24590-PTF-MV-CXP-VSL-00026C***

Equipment Cyclic Data Sheet

Component Plant Item Number:	***24590-PTF-MV-CXP-PJM-00014, 24590-PTF-MV-CXP-PJM-00015, 24590-PTF-MV-CXP-PJM-00016, 24590-PTF-MV-CXP-PJM-00017, 24590-PTF-MV-CXP-PJM-00018, 24590-PTF-MV-CXP-PJM-00019***
Component Description	***Pulse Jet Mixers***

The information below is provisional and envelopes operational duty for fatigue assessment. It is not to be used as operational data.

Materials of Construction	***SA-240 316***
Design Life	***40 Years***
Component Function and Life Cycle Description	***These pulse jet mixers (PJMs) are cyclically loaded using vacuum to fully fill the PJM with process liquid and compressed air to fully empty the PJM. The PJMs are contained within a parent vessel with varying liquid level. They shall be designed to cycle between the maximum design pressure and the minimum design pressure plus the external static head imposed by the parent vessel. The PJM supports shall be designed to cycle between fully buoyant (PJM empty and parent vessel full) and fully loaded (PJM full and parent vessel empty) states. Thrust load shall be applied only to the fully buoyant state. Assume the parent vessel is full for 50% of the number of PJM cycles.*** 1

Load Type		Min	Max	Number of Cycles	Comment
Design Pressure	psig	***FV***	***80***	***10***	***Nominal assumption for testing***
Operating Pressure	psig	***FV***	***72.5***	***2.15×10^7***	
Operating Temperature	°F	***59***	***113***	***N/A***	***Temperature will not cycle appreciably with vessel cycling.***
Contents Specific Gravity		***1.00***	***1.26***	***N/A***	***Normally 1.2 without cycling***
Contents Level	inch	***Empty***	***Flooded***	***2.15×10^7***	
Thrust 1	lbf	***0***	***314***	***2.15×10^7***	
Localized Features					
Nozzles					
Supports		***Buoyant/Loaded***		***Same as contents level***	

Notes

- ***Cycle increase: The Seller must increase the numbers of operational cycles given above by 10% to account for commissioning duty unless otherwise noted.***

R10463346

MECHANICAL SYSTEMS DATA SHEET: VESSEL

PLANT ITEM No.
24590-PTF-MV-FEP-VSL-00017A

Project:	***RPP-WTP***	P&ID.	***24590-PTF-M6-FEP-P0001***
Project No:	***24590***	Process Calculation:	***Deleted*** 2
Project Site:	***Hanford***	Vessel Drawing	***24590-PTF-MV-FEP-P0001***
Description.	***Waste Feed Evaporator Feed Vessel***		

~~ISSUED BY RPP-WTP PDC~~

Reference Data

Charge Vessels Tag Numbers	***Deleted***
Pulsejet Mixers / Agitators Tag Numbers	***FEP-PJM-00001 Thru –00007 and FEP-PJM-00017***
RFDs/Pumps Tag Numbers	***Deleted***

Design Data

Quality Level		***QL-1***	Fabrication Specs	***24590-WTP-3PS-MV00-TP001***		
Seismic Category		***SC-I***	Design Code	***ASME VIII Div 1***		
Service/Contents		***Radioactive Liquid***	Code Stamp	***Yes***		
Design Specific Gravity		***1.27***	NB Registration	***Yes***		
Maximum Operating Volume	gal	***71,292***	Weights (lbs)	Empty	Operating	Test
Total Volume	gal	***85,496***	Estimated	***160,000***	***936,000***	***874,000***
			Actual *	***164,200*** 2	***928,700*** 2	***903,700*** 2

Inside Diameter	inch	***264***			Wind Design	***Not Required***	
Length/Height (TL-TL)	inch	***273***			Snow Design	***Not Required***	
		Vessel Operating	Vessel Design	Coil/Jacket Design	Seismic Design	***24590-WTP-3PS-MV00-TP002*** ***24590-WTP-3PS-SS90-T0001***	
Internal Pressure	psig	***Atm*** 2	***15***	***N/A***	Seismic Base Moment *	ft*lb	
External Pressure	psig	***0.123*** 2	***10***	***N/A***	Postweld Heat Treat	***Not Required***	
Temperature	°F	***212***	***237***	***N/A***	Corrosion Allowance	Inch	***0.04 (Notes 9, 10)*** 2
Min. Design Metal Temp.	°F	***40***			Hydrostatic Test Pressure *	psig	

Note: Please note that source, special nuclear and byproduct materials, as defined in the Atomic Energy Act of 1954 (AEA), are regulated at the U.S. Department of Energy (DOE) facilities exclusively by DOE acting pursuant to its AEA authority. DOE asserts, that pursuant to the AEA, it has sole and exclusive responsibility and authority to regulate source, special nuclear, and byproduct materials at DOE-owned nuclear facilities. Information contained herein on radionuclides is provided for process description purposes only.

MARK W. HOFFMANN
STATE OF WASHINGTON
0030952
REGISTERED PROFESSIONAL ENGINEER

1/26/05

EXPIRES 12/10/06

This Bound Document Contains a total of 4 sheets.

REV	DATE	REASON FOR REVISION	PREPARER	CHECKER	REVIEWER	APPROVER
2	~~1/26/05~~ 2/1/05	Issued for Permitting Use				
1	3/19/04	Issued for Permitting Use	K. Brightman	H. Khurana	C. Slater	M. Hoffmann
0	10/29/02	Issued for Permitting Use	J. Jackson	C. Slater	N/A	M. Hoffmann

BECHTEL	**MECHANICAL SYSTEMS DATA SHEET: VESSEL**	**PLANT ITEM No.** ***24590-PTF-MV-FEP-VSL-00017A***

Materials of Construction

Component	Material	Minimum Thickness / Size	Containment
Top Head	***SA 240 316 Note 1***	***See Drawing***	***Primary (See Note 6)***
Shell	***SA 240 316 Note 1***	***See Drawing***	***Primary (See Note 6)***
Bottom Head	***SA 240 316 Note 1***	***See Drawing***	***Primary (See Note 6)***
Support	***SA 240 304 Note 1***	***See Drawing***	***N/A***
Jacket/Coils/Half-Pipe Jacket	***N/A***	***N/A***	***N/A***
Internals	***SA 240 316 Note 1***	***See Drawing***	***Thermowell Primary***
Pipe Nozzles	***SA 312 TP316 Seamless Note 1***	***See Drawing***	***Primary (See Note 6)***
Forgings/ Bar stock	***SA 182 F316 Note 1***	***See Drawing***	***N/A***
Gaskets	***N/A***	***N/A***	***N/A***
Bolting	***N/A***	***N/A***	***N/A***

Miscellaneous Data

Orientation	***Vertical***	Support Type	***Skirt***
Insulation Function	***Not Applicable***	Insulation Material	***Not Applicable***
Insulation Thickness (inch)	***Not Applicable***	Internal Finish	***Note 3***
		External Finish	***Note 3***

Remarks

* To be determined by the vendor.

Note 1: ***Maximum carbon content 0.030 %***

Note 2: ***Deleted***

Note 3: ***Welds descaled as laid.***

Note 4: ***Vessel volumes are approximate and do not account for the manufacturing tolerances, nozzles, and displacement of internals.***

Note 5: ***This vessel is in Black Cell.***

Note 6: ***All welds forming part of the primary and auxiliary containment including nozzle attachment welds shall be subjected to 100% volumetric examination.***

Note 7: ***Contents of this document are Dangerous Waste Permit affecting.***

Note 8: ***Deleted*** 2

Note 9: ***BNI shall ensure that an additional 0.094" is available for erosion in the bottom head and shall report the minimum thickness required for all specified loading conditions, exclusive of erosion and corrosion allowances.*** 2

Note 10: ***BNI shall ensure that an additional 0.060" is available for erosion in the lower 4" of the interior conical surface of the pulse jet mixers.*** 2

Note 11: ***All hydrodynamic and overblow loads are for BNI internal use only and are to be disregarded by the seller.*** 2

BECHTEL	**MECHANICAL SYSTEMS DATA SHEET: VESSEL**	**PLANT ITEM No.** ***24590-PTF-MV-FEP-VSL-00017A***

Equipment Cyclic Data Sheet

Component Plant Item Number	***24590-PTF-MV-FEP-VSL-000017A***
Component Description	***Waste Feed Evaporator Feed Vessel***

The information below is provisional and envelopes operational duty for fatigue assessment. It is not to be used as operational data.

Materials of Construction	***ASME SA240 316 with 0.030 % max. Carbon***
Design Life	***40 years***
Component Function and Life Cycle Description	***This vessel operates with two modes, filling and emptying. It is filled in 6.7 hours and emptied in 16.7 hours. Washdown is once a year.***

Load Type		Min	Max	Number of Cycles	Comment
Design Pressure	psig	*-10*	*15*	*10*	***Nominal assumption***
Operating Pressure	psig	*-0.123* 2	*0*	*15,491*	
Operating Temp	°F	*59*	*212*	*15,491*	***Uniform material temperature range, not between two points.***
Contents Specific Gravity		*1.12*	*1.27*	*15,491*	
Contents Level	inch	*30*	*303*	*15,491*	***Liquid level measured from crown of bottom head***
Localized Features					
Nozzles		***Within 50° F of Vessel operating Temp***	***As above***		

Hydrodynamic Loading 2

In normal operation, pulse jet mixers discharge liquid into the parent vessel imposing a cyclical hydrodynamic load on all internal components. Occasionally, an upset condition designated 'overblow' causes air to be discharged from any single pulse jet mixer. All internal components shall be designed for the combination of the normal operational hydrodynamic loads and overblow loads, and this load combination is also to be assumed to act concurrently with seismic loads.

The following table indicates the normal hydrodynamic pressure at ranges of elevations in the vessel and the number of design cycles for each condition. The hydrodynamic forces cycle between the indicated pressure ranges applied across the projected area of the component. Positive hydrodynamic forces act in the radial, outward direction and the vertical, upward direction. Apply the radial load simultaneously in the radial direction and normal to the radial direction in the horizontal plane.

Normal Operation Hydrodynamic Pressure Range, psi						Number of Cycles
Elevation A		Elevation B		Elevation C		
Radial	Vertical	Radial	Vertical	Radial	Vertical	
-0.15 to 0.25	*-0.15 to 0.15*	*-0.05 to 0.12*	*-0.15 to 0.15*	*-0.03 to 0.10*	*-0.06 to 0.15*	*7.9×10^5*

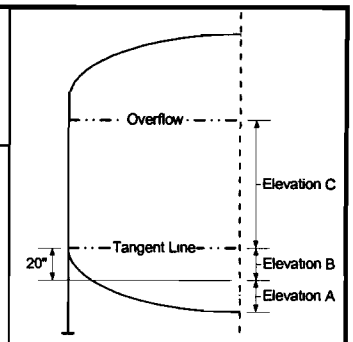

Overblow loads vary as a function of the horizontal distance from the center of the overblowing pulse jet mixer nozzle and the elevation 'H' above the overblowing pulse jet mixer nozzle up to the overflow level as plotted:

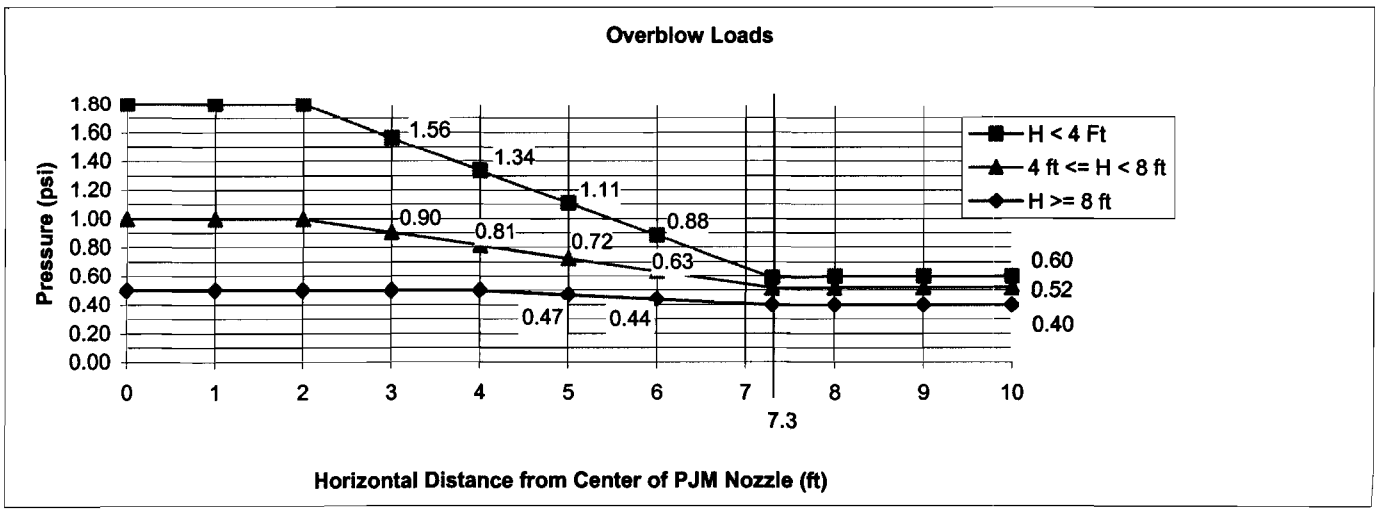

The overblow pressure shall only be applied to the projected area of the overblowing pulse jet mixer in the vertical, upward direction and to all surrounding components in the horizontal plane, radiating from the overblowing pulse jet mixer. Any single pulse jet mixer may overblow 100 cycles. 2

Notes

1. Cycle increase: Increase the numbers of operational cycles given above by 10% to account for commissioning duty unless otherwise noted. 2

BECHTEL	**MECHANICAL SYSTEMS DATA SHEET: VESSEL**	**PLANT ITEM No.** ***24590-PTF-MV-FEP-VSL-00017A***

Equipment Cyclic Data Sheet

Component Plant Item Number	***PTF-MP-FEP-PJM-00001 Thru –00007 and PTF-MP-FEP-PJM-00017***
Component Description	***Pulse Jet Mixers***

The information below is provisional and envelopes operational duty for fatigue assessment. It is not to be used as operational data.

Materials of Construction	***ASME SA240 316 with 0.030 % max. Carbon***
Design Life	***40 years***
Component Function and Life Cycle Description	***These pulse jet mixers (PJMs) are cyclically loaded using vacuum to fully fill the PJM with process liquid and compressed air to fully empty the PJM. The PJMs are contained within a parent vessel with varying liquid level. They shall be designed to cycle between the maximum design pressure and the minimum design pressure plus the external static head imposed by the parent vessel. The PJM supports shall be designed to cycle between fully buoyant (PJM empty and parent vessel full) and fully loaded (PJM full and parent vessel empty) states. Thrust load shall be applied only to the fully buoyant state. Assume the parent vessel is full for 50% of the number of PJM cycles.*** 2

Load Type		Min	Max	Number of Cycles	Comment
Design Pressure	psig	***FV***	***80***	***10***	***Nominal assumption***
Operating Pressure	psig	***FV***	***72.5***	***7.9×10^5***	
Operating Temperature	°F	***59***	***212***	***<100***	***Pressure cycles to be at 212°F and non-coincident with temperature cycles. The range given is uniform material temperature range, not between adjacent points.***
Contents Specific Gravity		***1.12***	***1.27***	***<1000***	
Contents Level	inch	***Empty***	***Flooded***	***7.9×10^5***	
Thrust 2	lbf	***0***	***275***	***7.9×10^5***	
Localized Features					
Nozzles					
Supports		***Buoyant / Loaded***		***7.9×10^5***	

Notes

Cycle increase: The Seller must increase the numbers of operational cycles given above by 10% to account for commissioning duty unless otherwise noted.

MECHANICAL SYSTEMS DATA SHEET: VESSEL

R10463347

PLANT ITEM No.
24590-PTF-MV-FEP-VSL-00017B

Project:	***RPP-WTP***	P&ID:	***24590-PTF-M6-FEP-P0001***
Project No:	***24590***	Process Calculation:	***Deleted*** 2
Project Site:	***Hanford***	Vessel Drawing	***24590-PTF-MV-FEP-P0002***
Description:	***Waste Feed Evaporator Feed Vessel***		

~~ISSUED BY RPP-WTP PDC~~

Reference Data

Charge Vessels Tag Numbers	***Deleted***
Pulsejet Mixers / Agitators Tag Numbers	***FEP-PJM-00008 Thru –00015***
RFDs/Pumps Tag Numbers	***Deleted***

Design Data

Quality Level		***QL-1***	Fabrication Specs	***24590-WTP-3PS-MV00-TP001***		
Seismic Category		***SC-I***	Design Code	***ASME VIII Div 1***		
Service/Contents		***Radioactive Liquid***	Code Stamp	***Yes***		
Design Specific Gravity		***1.27***	NB Registration	***Yes***		
Maximum Operating Volume	gal	***71,292***	Weights (lbs)	Empty	Operating	Test
Total Volume	gal	***85,496***	Estimated	***160,000***	***936,000***	***874,000***
			Actual *	***164,200*** 2	***928,700*** 2	***903,700*** 2

Inside Diameter	inch	***264***			Wind Design	***Not Required***	
Length/Height (TL-TL)	inch	***273***			Snow Design	***Not Required***	
		Vessel Operating	Vessel Design	Coil/Jacket Design	Seismic Design	***24590-WTP-3PS-MV00-TP002*** ***24590-WTP-3PS-SS90-T0001***	
Internal Pressure	psig	***Atm*** 2	***15***	***N/A***	Seismic Base Moment *	ft*lb	
External Pressure	psig	***0.123*** 2	***10***	***N/A***	Postweld Heat Treat	***Not Required***	
Temperature	°F	***212***	***237***	***N/A***	Corrosion Allowance	Inch	***0.04 (Notes 9, 10)*** 2
Min. Design Metal Temp.	°F	***40***			Hydrostatic Test Pressure *	psig	

Note: Please note that source, special nuclear and byproduct materials, as defined in the Atomic Energy Act of 1954 (AEA), are regulated at the U.S. Department of Energy (DOE) facilities exclusively by DOE acting pursuant to its AEA authority. DOE asserts, that pursuant to the AEA, it has sole and exclusive responsibility and authority to regulate source, special nuclear, and byproduct materials at DOE-owned nuclear facilities. Information contained herein on radionuclides is provided for process description purposes only.

MARK W. HOFFMANN
STATE OF WASHINGTON
0030952
REGISTERED PROFESSIONAL ENGINEER
1/26/05
EXPIRES 12/10/06

This Bound Document Contains a total of 4 sheets.

REV	DATE	REASON FOR REVISION	PREPARER	CHECKER	REVIEWER	APPROVER
2	~~1/26/05~~ 2/1/05	Issued for Permitting Use				
1	3/19/04	Issued for Permitting Use	K. Brightman	H. Khurana	C. Slater	M. Hoffmann
0	10/29/02	Issued for Permitting Use	J. Jackson	C. Slater	N/A	M. Hoffmann

BECHTEL	**MECHANICAL SYSTEMS DATA SHEET: VESSEL**	**PLANT ITEM No.** ***24590-PTF-MV-FEP-VSL-00017B***

Materials of Construction

Component	Material	Minimum Thickness / Size	Containment
Top Head	***SA 240 316 Note 1***	***See Drawing***	***Auxiliary (Note 6)***
Shell	***SA 240 316 Note 1***	***See Drawing***	***Primary (Note 6)***
Bottom Head	***SA 240 316 Note 1***	***See Drawing***	***Primary (Note 6)***
Support	***SA 240 304 Note 1***	***See Drawing***	***N/A***
Jacket/Coils/Half-Pipe Jacket	***N/A***	***N/A***	***N/A***
Internals	***SA 240 316 Note 1***	***See Drawing***	***Thermowell Primary***
Pipe	***SA 312 TP316 Note 1***	***See Drawing***	***Primary (Note 6)***
Forgings/ Bar stock	***SA 182 F316 Note 1***	***See Drawing***	***N/A***
Gaskets	***N/A***	***N/A***	***N/A***
Bolting	***N/A***	***N/A***	***N/A***

Miscellaneous Data

Orientation	***Vertical***	Support Type	***Skirt***
Insulation Function	***Not Applicable***	Insulation Material	***Not Applicable***
Insulation Thickness (inch)	***Not Applicable***	Internal Finish	***Note 3***
		External Finish	***Note 3***

Remarks

• To be determined by the vendor.

Note 1: ***Max. Carbon content 0.030 %***

Note 2: ***Deleted***

Note 3: ***Welds descaled as laid.***

Note 4: ***Vessel volumes are approximate and do not account for the manufacturing tolerances, nozzles, and displacement of internals.***

Note 5: ***This vessel is in a Black Cell.***

Note 6: ***All welds forming part of the primary and auxiliary containment including nozzle attachment welds shall be subjected to 100% volumetric examination.***

Note 7: ***Contents of this document are Dangerous Waste Permit affecting.*** 2

Note 8: ***Deleted*** 2

Note 9: ***BNI shall ensure that an additional 0.094" is available for erosion in the bottom head and shall report the minimum thickness required for all specified loading conditions, exclusive of erosion and corrosion allowances.*** 2

Note 10: ***BNI shall ensure that an additional 0.060" is available for erosion in the lower 4" of the interior conical surface of the pulse jet mixers.*** 2

Note 11: ***All hydrodynamic and overblow loads are for BNI internal use only and are to be disregarded by the seller.*** 2

Equipment Cyclic Data Sheet

Component Plant Item Number	***24590-PTF-MV-FEP-VSL-000017B***
Component Description	***Waste Feed Evaporator Feed Vessel***

The information below is provisional and envelopes operational duty for fatigue assessment. It is not to be used as operational data.

Materials of Construction	***ASME SA240 316 with 0.030% max. Carbon***
Design Life	***40 years***
Component Function and Life Cycle Description	***This vessel operates with two modes, filling and emptying. It is filled in 6.0 hours and emptied in 16.7 hours. Washdown is once a year.***

Load Type		Min	Max	Number of Cycles	Comment
Design Pressure	psig	*-10*	*15*	*10*	***Nominal assumption***
Operating Pressure	psig	*-0.123* 2	*0*	*15,491*	
Operating Temperature	°F	*59*	*212*	*15,491*	***Uniform material temperature range, not between two points.***
Contents Specific Gravity		*1.12*	*1.27*	*15,491*	
Contents Level	inch	*30*	*303*	*15,491*	***Liquid level measured from crown of bottom head***
Localized Features					
Nozzles		***Within 50° of vessel operating temp.***	***As above***		

Hydrodynamic Loading 2

In normal operation, pulse jet mixers discharge liquid into the parent vessel imposing a cyclical hydrodynamic load on all internal components. Occasionally, an upset condition designated 'overblow' causes air to be discharged from any single pulse jet mixer. All internal components shall be designed for the combination of the normal operational hydrodynamic loads and overblow loads, and this load combination is also to be assumed to act concurrently with seismic loads.

The following table indicates the normal hydrodynamic pressure at ranges of elevations in the vessel and the number of design cycles for each condition. The hydrodynamic forces cycle between the indicated pressure ranges applied across the projected area of the component. Positive hydrodynamic forces act in the radial, outward direction and the vertical, upward direction. Apply the radial load simultaneously in the radial direction and normal to the radial direction in the horizontal plane.

Normal Operation Hydrodynamic Pressure Range, psi						Number of Cycles
Elevation A		Elevation B		Elevation C		
Radial	Vertical	Radial	Vertical	Radial	Vertical	
-0.15 to 0.25	*-0.15 to 0.15*	*-0.05 to 0.12*	*-0.15 to 0.15*	*-0.03 to 0.10*	*-0.06 to 0.15*	*7.9×10^5*

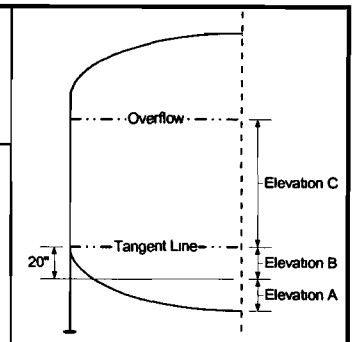

Overblow loads vary as a function of the horizontal distance from the center of the overblowing pulse jet mixer nozzle and the elevation 'H' above the overblowing pulse jet mixer nozzle up to the overflow level as plotted:

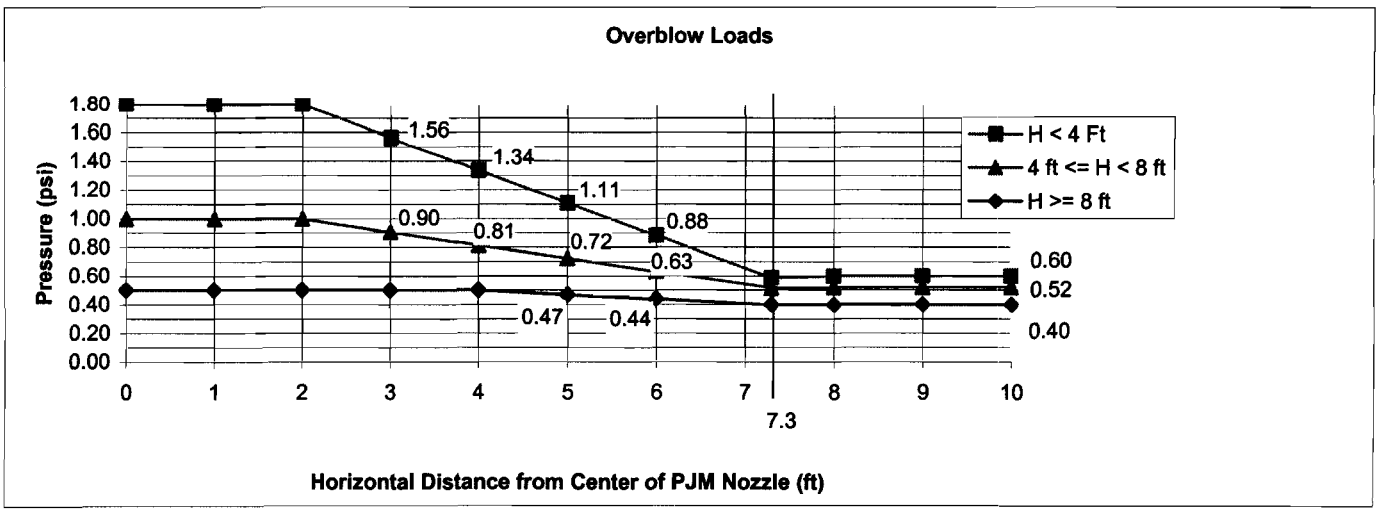

The overblow pressure shall only be applied to the projected area of the overblowing pulse jet mixer in the vertical, upward direction and to all surrounding components in the horizontal plane, radiating from the overblowing pulse jet mixer. Any single pulse jet mixer may overblow 100 cycles. 2

Notes

1. Cycle increase: Increase the numbers of operational cycles given above by 10% to account for commissioning duty unless otherwise noted. 2

BECHTEL	**MECHANICAL SYSTEMS DATA SHEET: VESSEL**	**PLANT ITEM No.** ***24590-PTF-MV-FEP-VSL-00017B***

Equipment Cyclic Data Sheet

Component Plant Item Number	***PTF-MP-FEP-PJM-00008 Thru –00015***
Component Description	***Pulse Jet Mixers***

The information below is provisional and envelopes operational duty for fatigue assessment. It is not to be used as operational data.

Materials of Construction	***ASME SA240 316 with 0.030% max. Carbon***
Design Life	***40 years***
Component Function and Life Cycle Description	***These pulse jet mixers (PJMs) are cyclically loaded using vacuum to fully fill the PJM with process liquid and compressed air to fully empty the PJM. The PJMs are contained within a parent vessel with varying liquid level. They shall be designed to cycle between the maximum design pressure and the minimum design pressure plus the external static head imposed by the parent vessel. The PJM supports shall be designed to cycle between fully buoyant (PJM empty and parent vessel full) and fully loaded (PJM full and parent vessel empty) states. Thrust load shall be applied only to the fully buoyant state. Assume the parent vessel is full for 50% of the number of PJM cycles.*** 2

Load Type		Min	Max	Number of Cycles	Comment
Design Pressure	psig	***FV***	***80***	***10***	***Nominal assumption***
Operating Pressure	psig	***FV***	***72.5***	***7.9×10^5***	
Operating Temperature	°F	***59***	***212***	***<100***	***Pressure cycles to be at 212°F and non-coincident with temperature cycles. The range given is uniform material temperature range, not between adjacent points.***
Contents Specific Gravity		***1.12***	***1.27***	***<1000***	
Contents Level	inch	***Empty***	***Flooded***	***7.9×10^5***	
Thrust 2	lbf	***0***	***275***	***7.9×10^5***	
Localized Features					
Supports		***Buoyant / Loaded***		***7.9×10^5***	

Notes

Cycle increase: The Seller must increase the numbers of operational cycles given above by 10% to account for commissioning duty unless otherwise noted.

BECHTEL	Mechanical Data Sheet: Vessel	Plant Item No. 24590-PTF-MV-FEP-VSL-00005 Data Sheet No. Rev 1 24590-PTF-MVD-FEP-P0003

R101,5141

Project	RPP-WTP	P&IDs	24590-PTF-M6-FEP-P0003
Project No	24590		
Project Site	DOE Hanford	Process Data Sheets	24590-PTF-MEC-FEP-00001
System No	FEP		
Building	PTF	Vessel Drawings	N/A
Description	Waste Feed Evaporator Condensate Vessel FEP-VSL-00005		

ISSUED BY RPP-WTP PDC
INIT DATE 10/20/03

Reference Data

Charge Vessels (Tag Numbers)	N/A
Pulse Jet Mixers / Agitators (Tag Numbers)	N/A
RFDs/Pumps (Tag Numbers)	N/A

Service Data

Quality Level	CM	Fabrication Specification	24590-WTP-3PS-MV00-TP001
Seismic Category	SC-III	Design Code	ASME Section VIII Division 1
Service/Contents	Process Condensate	Code Stamp	Yes
Design Specific Gravity	1.0	NB Registration	Yes
Max Operating Volume gal	4144**	Wind Design	None
Total Volume gal	5022**	Snow/Ash Design	None
Postweld Heat Treat	Not Required	Seismic Design	24590-WTP-3PS-MV00-TP002 24590-WTP-3PS-SS90-T0001
Seismic Base Moment* ft*lb			

Design Data

Inside Diameter inch	96**		Corrosion Allowance inch	0.04	
Length/Height (TL-TL) inch	128**				
	Vessel Operating	Vessel Design	Coil/Jacket Design	Notes	
Internal Pressure PSIG	-0.07	15	N/A		
External Pressure PSIG	0	14.7	N/A		
Temperature °F	110	150	N/A		
Min Design Metal Temp °F	49		Hydrostatic Test Pressure PSIG	22	

Material of Construction

Component	Material	Containment	Notes
Top Head	SA-240 T316L	Auxiliary	1/4" thickness; maximum carbon content of 0.030% for welded components
Shell	SA-240 T316L	Primary	1/4" thickness; maximum carbon content of 0.030% for welded components
Bottom Head	SA-240 T316L	Primary	1/4" thickness; maximum carbon content of 0.030% for welded components
Vessel Support	Stainless Steel	N/A	Maximum carbon content of 0.030% for welded components
Jacket/Coils/Half-Pipe Jacket	N/A	N/A	
Internals	N/A	N/A	
Pipe	SA-312 TP316	Note 1	Maximum carbon content of 0.030% for welded components
Forgings/ Bar stock	SA-182 F316	Note 1	Maximum carbon content of 0.030% for welded components
Gaskets	Flex Spiral Wound		Flexitallic spiral wound
Bolting	A193 GR B7		With 2 hex. Nuts
Other			

Note Please note that source, special nuclear and byproduct materials, as defined in the Atomic Energy Act of 1954 (AEA), are regulated at the U S Department of Energy (DOE) facilities exclusively by DOE acting pursuant to its AEA authority DOE asserts, that pursuant to the AEA, it has sole and exclusive responsibility and authority to regulate source, special nuclear, and byproduct materials at DOE-owned nuclear facilities Information contained herein on radionuclides is provided for process description purposes only

MARK W. HOFFMANN
STATE OF WASHINGTON
0030952
PROFESSIONAL ENGINEER
10/19/03

EXPIRES 12/10/04

This Bound Document Contains a total of 2 pages

REV	REASON FOR REVISION	PREPARER	REVIEWER	APPROVER	Date
1	Issued for Permitting Use	E. Le	G. Butt	M. Hoffmann	10/19/03
0	Issued for Permitting Use	J. Jackson	C. Morley	S. Kirk	10/29/2002

Processed Data Entry ☒ Copied QA ☐ Scanned ☐ Filed ☐
10/29/03

BECHTEL	Mechanical Data Sheet: Vessel	Plant Item No. 24590-PTF-MV-FEP-VSL-00005 Data Sheet No. Rev 1 24590-PTF-MVD-FEP-P0003

Miscellaneous Data

Orientation	***Vertical***
Support Type	***Skirt***
Insulation Function	***None***
Insulation Thickness inch	***None***
Insulation Material	***None***
External Finish	***Welds descaled as laid***
Internal Finish	***Welds ground smooth***

Notes

**** To be determined by Seller.***
***** To be verified bySeller.***
Notes: (1) Nozzles located below the top of the overflow nozzle are primary containment. See 24590-WTP-3PS-MV00-TP001 for NDE requirements.
(2) Nozzle tolerance +/- 1/4"
(3) Support pads shall be high to align vessel overflow nozzle centerline at 15'-5 3/8"
(4) 40 years design life
(5) NDE for this vessel must meet requirements per para. 6.4.2 of specification 24590-WTP-3PS-MV00-TP001

BECHTEL	Mechanical Data Sheet: Vessel	Plant Item No. 24590-PTF-MV-FEP-SEP-00001A Data Sheet No. 24590-PTF-MVD-FEP-P0006

R10637900

Project:	RPP-WTP	P&IDs	24590-PTF-M6-FEP-P0002
Project No:	24590		
Project Site:	DOE Hanford	Process Calculation	24590-PTF-MEC-FEP-00001
System No.	FEP		
Building:	PTF	Vessel Drawings	24590-QL-POA-MEVV-00001-01-194
Description:	Waste Feed Evaporator Separator Vessel FEP-SEP-00001A		

ISSUED BY RPP-WTP PDC

Reference Data

Charge Vessels (Tag Numbers)	N/A
Pulse Jet Mixers / Agitators (Tag Numbers)	N/A
RFDs/Pumps (Tag Numbers)	N/A

Quality Level	QL-1	Fabrication Specification	24590-WTP-3PS-MV00-TP001
Seismic Category	SC-1	Design Code	ASME Section VIII Division 1
Service/Contents	Radioactive Slurry	Code Stamp	U1 Stamp
Design Specific Gravity	1.50	NB Registration	Yes
Max Operating Volume gal	3,341	Wind Design	None
Total Volume gal	13,359	Snow/Ash Design	None
Postweld Heat Treat	Not Required	Seismic Design	24590-WTP-3PS-MV00-TP002 24590-WTP-3PS-SS90-T0001
Seismic Base Moment* ft*lb	N/A		
Environmental Qualification	N/A 3		

Design Data

Inside Diameter** inch	7'6" (Upper), 11'5" (Lower)		Corrosion Allowance inch	0.04
Length/Height** inch	406 3/4			
	Vessel Operating	Vessel Design	Coil/Jacket Design	Notes
Internal Pressure PSIG	-13.4	50	N/A	Vessel operating at 1.3 psia
External Pressure PSIG	0	14.7	N/A	
Temperature °F	129	175	N/A	
Min Design Metal Temp °F	49		Hydrostatic Test Pressure PSIG	65

Materials of Construction

Component	Material	Containment	Notes
Top Head	SA 240 304 SS	Auxiliary (Note 6)	1/2" thickness; maximum carbon content of 0.030% for welded components
Shell	SA 240 304 SS	Primary (Note 6)	1/2" thickness; maximum carbon content of 0.030% for welded components
Bottom Head	SA 240 304 SS	Primary (Note 6)	1/2" thickness; maximum carbon content of 0.030% for welded components
Vessel Support	SA 240 304 SS	N/A	Maximum carbon content of 0.030% for welded components
Jacket/Coils/Half-Pipe Jacket	N/A	N/A	
Internals	SA 240 304 SS	Thermowell Primary (Note 6)	Maximum carbon content of 0.030% for welded components
Pipe	SA 312 304 SS	Note 6	Maximum carbon content of 0.030% for welded components
Forgings/ Bar stock	SA 479 304 SS	Note 1	Maximum carbon content of 0.030% for welded components
Gaskets	304 SS		Flexitallic spiral wound, Graphite Filler
Bolting	Nitronic 60		Dwg. 24590-QL-POA-00001-01-00302 (Captive Bolts) 3
Other (Fittings)	SA 403 WP 304 SS		Maximum carbon content of 0.030% for welded components

Note: Please note that source, special nuclear and byproduct materials, as defined in the Atomic Energy Act of 1954 (AEA), are regulated at the U.S. Department of Energy (DOE) facilities exclusively by DOE acting pursuant to its AEA authority. DOE asserts, that pursuant to the AEA, it has sole and exclusive responsibility and authority to regulate source, special nuclear, and byproduct materials at DOE-owned nuclear facilities. Information contained herein on radionuclides is provided for process description purposes only.

ERIC B. ISERN
STATE OF WASHINGTON
33449
REGISTERED PROFESSIONAL ENGINEER
11/1/05
EXPIRES: 07/28/07

This Bound Document Contains a total of 2 sheets

Rev.	Reason for Revision	Preparer	Checker	Reviewer	Approver	Date
3	Issue for Permitting Use	E. Le	S. Crow	N/A	J. Julyk	11/1/05
2	Issue for Permitting Use	E. Le	S. Crow	N/A	J. Julyk	2/10/2005
1	Issue for Permitting Use	E. Le	D. Reinemann	N/A	J. Julyk	3/17/2004
0	Issue for Permitting Use	J. Jackson	C. Slater	N/A	S. Kirk	10/29/2002

	Mechanical Data Sheet: Vessel	Plant Item No. 24590-PTF-MV-FEP-SEP-00001A Data Sheet No. 24590-PTF-MVD-FEP-P0006

Miscellaneous Data

Orientation	*Vertical*
Support Type	*Stainless steel legs*
Insulation Function	*None*
Insulation Thickness inch	*None*
Insulation Material	*None*
External Finish	*Welds descaled as laid*
Internal Finish	*Welds ground smooth; lower 16'-3 7/16" shell and cone to be #4 polished finish.*

Notes

(1) Nozzles located below the top of the overflow nozzle are primary containment. See 24590-WTP-3PS-MV00-T0001 for NDE requirements.
(2) Nozzle tolerance +/- 1/4"
(3) Material for demister pad is Inconel 625 fine mesh
(4) Non-replaceable 40 years design life (except demister pads section)
(5) NDE for this vessel must meet requirements per para. 6.1, 6.2 and 7.2 of specification 24590-WTP-3PS-MV00-TP001
(6) All welds forming part of the primary and auxiliary containments, including the nozzle attachment welds shall be subjected to 100% volumetric examination.
(7) This vessel is located in a Black Cell.
(8) Vendor to specify all methal thicknesses
(9) Contents of this document are Dangerous Waste Permit affecting 3
(10) All vessel nozzle loads due to thermal expansion are estimated based on the maximum operating temperature of 150 degree F. 3
(11) This vessel is Important-To-Safety (ITS) and must maintain containment post Design Basis Event (DBE). 3
However, Environmental Qualification is not applicable for this vessel since all the materials of construction are metallic (24590-WTP-GPG-ENG-086, Rev. 0) 3

	Mechanical Data Sheet: Vessel	Plant Item No. 24590-PTF-MV-FEP-SEP-00001B Data Sheet No. 24590-PTF-MVD-FEP-P0007

R10637901

Project:	RPP-WTP	P&IDs	24590-PTF-M6-FEP-P0004
Project No:	24590		
Project Site:	DOE Hanford	Process Calculation	24590-PTF-MEC-FEP-00001
System No.	FEP		
Building:	PTF	Vessel Drawings	24590-QL-POA-MEVV-00001-01-195
Description:	Waste Feed Evaporator Separator Vessel FEP-SEP-00001B		

ISSUED BY RPP-WTP PDC

Reference Data

Charge Vessels (Tag Numbers)	N/A
Pulse Jet Mixers / Agitators (Tag Numbers)	N/A
RFDs/Pumps (Tag Numbers)	N/A

Service Data

Quality Level		QL-1	Fabrication Specification	24590-WTP-3PS-MV00-TP001
Seismic Category		SC-1	Design Code	ASME Section VIII Division 1
Service/Contents		Radioactive Slurry	Code Stamp	U1 Stamp
Design Specific Gravity		1.50	NB Registration	Yes
Max Operating Volume	gal	3,341	Wind Design	None
Total Volume	gal	13,359	Snow/Ash Design	None
Postweld Heat Treat		Not Required	Seismic Design	24590-WTP-3PS-MV00-TP002 24590-WTP-3PS-SS90-T0001
Seismic Base Moment*	ft*lb	N/A		
Environmental Qualification		N/A (2)		

Design Data

Inside Diameter**	inch	7'6" (Upper), 11'5" (Lower)		Corrosion Allowance inch	0.04
Length/Height**	inch	406 3/4			
		Vessel Operating	Vessel Design	Coil/Jacket Design	Notes
Internal Pressure	PSIG	-13.4	50	N/A	Vessel operating at 1.3 psia
External Pressure	PSIG	0	14.7	N/A	
Temperature	°F	129	175	N/A	
Min Design Metal Temp	°F	49		Hydrostatic Test Pressure PSIG	65

Materials of Construction

Component	Material	Containment	Notes
Top Head	SA 240 304 SS	Auxiliary (Note 6)	1/2" thickness; maximum carbon content of 0.030% for welded components
Shell	SA 240 304 SS	Primary (Note 6)	1/2" thickness; maximum carbon content of 0.030% for welded components
Bottom Head	SA 240 304 SS	Primary (Note 6)	1/2" thickness; maximum carbon content of 0.030% for welded components
Vessel Support	SA 240 304 SS	N/A	Maximum carbon content of 0.030% for welded components
Jacket/Coils/Half-Pipe Jacket	N/A	N/A	
Internals	SA 240 304 SS	Thermowell Primary (Note 6)	Maximum carbon content of 0.030% for welded components
Pipe	SA 312 304 SS	Note 6	Maximum carbon content of 0.030% for welded components
Forgings/ Bar stock	SA 479 304 SS	Note 1	Maximum carbon content of 0.030% for welded components
Gaskets	304 SS		Flexitallic spiral wound, Graphite Filler
Bolting	Nitronic 60		Dwg. 24590-QL-POA-00001-01-00302 (Captive Bolts) (2)
Other (Fittings) (2)	SA 403 WP 304 SS		Maximum carbon content of 0.030% for welded components

Note: Please note that source, special nuclear and byproduct materials, as defined in the Atomic Energy Act of 1954 (AEA), are regulated at the U.S. Department of Energy (DOE) facilities exclusively by DOE acting pursuant to its AEA authority. DOE asserts, that pursuant to the AEA, it has sole and exclusive responsibility and authority to regulate source, special nuclear, and byproduct materials at DOE-owned nuclear facilities. Information contained herein on radionuclides is provided for process description purposes only.

ERIC B. ISERN
STATE OF WASHINGTON
33449
REGISTERED
PROFESSIONAL ENGINEER
11/1/05
EXPIRES: 07/28/07

This Bound Document Contains a total of 2 sheets

Rev.	Reason for Revision	Preparer	Checker	Reviewer	Approver	Date
2	Issue for Permitting Use		E. Le			11/1/05
1	Issue for Permitting Use	E. Le	S. Crow	N/A	J. Julyk	2/10/2005
0	Issue for Permitting Use	E. Le	D. Reinemann	N/A	J. Julyk	3/17/2004

	Mechanical Data Sheet: Vessel	Plant Item No. 24590-PTF-MV-FEP-SEP-00001B Data Sheet No. 24590-PTF-MVD-FEP-P0007

Miscellaneous Data

Orientation		*Vertical*
Support Type		*Stainless steel legs*
Insulation Function		*None*
Insulation Thickness	inch	*None*
Insulation Material		*None*
External Finish		*Welds descaled as laid*
Internal Finish		*Welds ground smooth; lower 16'-3 7/16" shell and cone to be #4 polished finish.*

Notes

(1) Nozzles located below the top of the overflow nozzle are primary containment. See 24590-WTP-3PS-MV00-TP001 for NDE requirements.
(2) Nozzle tolerance +/- 1/4"
(3) Material for demister pad is Inconel 625 fine mesh
(4) Non-replaceable 40 years design life (except demister pads section)
(5) NDE for this vessel must meet requirements per para. 6.1, 6.2 and 7.2 of specification 24590-WTP-3PS-MV00-TP001
(6) All welds forming part of the primary and auxiliary containments, including the nozzle attachment welds shall be subjected to 100% volumetric examination.
(7) This vessel is located in a Black Cell.
(8) Vendor to specify all metal thicknesses
(9) Contents of this document are Dangerous Waste Permit affecting 2
(10) All vessel nozzle loads due to thermal expansion are estimated based on the maximum operating temperature of 150 degree F. 2
(11) This vessel is Important-To-Safety (ITS) and must maintain containment post Design Basis Event (DBE). 2
However, Environmental Qualification is not applicable for this vessel since all the materials of construction are metallic (24590-WTP-GPG-ENG-086, Rev. 0) 2

R10637275

MECHANICAL DATA SHEET: VESSEL

PLANT ITEM No.
24590-PTF-MV-FRP-VSL-00002A

Project:	***RPP-WTP***	P&ID:	***24590-PTF-M6-FRP-00001***
Project No:	***24590***	Calculations:	***24590-PTF-MVC-FRP-00001, 24590-PTF-MTC-FRP-00001*** 10
Project Site:	***Hanford***	Vessel Drawing	***24590-PTF-M2-FRP-00001***
Description:	***Waste Feed Receipt Vessel***		

ISSUED BY
RPP-WTP PDC

Reference Data

Charge Vessels (Tag Numbers)	
Pulsejet Mixers / Agitators (Tag Numbers)	***FRP-PJM-00061, FRP-PJM-00062, FRP-PJM-00063, FRP-PJM-00064, FRP-PJM-00065, FRP-PJM-00066, FRP-PJM-00067, FRP-PJM-00068, FRP-PJM-00069, FRP-PJM-00070, FRP-PJM-00071, FRP-PJM-00072***
RFDs/Pumps (Tag Numbers)	

Design Data

Quality Level		***See Drawing***	Fabrication Specs	***24590-WTP-3PS-MV00-T0001***		
Seismic Category		***SC-I***	Design Code	***ASME VIII Div 1***		
Service/Contents		***Radioactive Liquid***	Code Stamp	***Yes***		
Design Specific Gravity		***1.46***	NB Registration	***Yes***		
Maximum Design Volume	gal	***406,800 (Note 6)***	Weights (lbs)	Empty	Operating	Test
Total Volume	gal	***474,000 (Note 6)***	Estimated	***592,900***	***5,550,000 (Note 3)***	***4,550,000***
Viscosity	cP	***1.58 min / 21 max***	Actual ** 10	***589,800***	***5,370,000***	***4,540,000***
Environmental Qualification 10		***N/A***				

Inside Diameter	inch	***564***			Wind Design	***Not Required***	
Length/Height (TL-TL)	inch	***322***			Snow Design	***Not Required***	
		Vessel Operating	Vessel Design	Coil/Jacket Design	Seismic Design	***24590-WTP-3PS-SS90-T0001 24590-WTP-3PS-MV00-T0002***	
Internal Pressure	psig	***ATM***	***15***	***NA***	Seismic Base Moment ** 10	ft*lb	***46,070,000***
External Pressure	psig	***0.123***	***2.5***	***NA***	Post weld Heat Treat	***Not Required***	
Temperature	°F	***215***	***240***	***NA***	Corrosion Allowance	inch	***0.04 (Note 11)***
Min. Design Metal Temp.	°F	***5***			Hydrostatic Test Pressure *	psig	***19.5***

Materials of Construction

Component	Material	Minimum Thickness / Size	Containment
Top Head	***SA 240 316 (Note 2)***	***See Drawing***	***Auxiliary (Note 1)***
Shell	***SA 240 316 (Note 2)***	***See Drawing***	***Primary (Note 1)***
Bottom Head	***SA 240 316 (Note 2)***	***See Drawing***	***Primary (Note 1)***
Support (Skirt)	***SA 240 304 (Note 2)***	***See Drawing***	***N/A***
Internals	***SA 240 316 / SA 479 316 (Note 2)***	***See Drawing***	***Thermocouples Primary (Note 1)***
Pipe	***SA 312 TP316 Smls (Notes 2 & 7)***	***See Drawing***	***Note 1***
Forgings/ Bar stock	***SA 182 F316 (Note 2)***	***See Drawing***	***N/A***

Miscellaneous Data

Orientation	***Vertical***	Support Type	***Skirt***
Insulation Function	***Not Applicable***	Insulation Material	***Not Applicable***
Insulation Thickness (inch)	***Not Applicable***	Internal Finish	***Note 4***
		External Finish	***Welds Descaled as Laid***

*** As determined by the vendor.** 10

**** The actual weights and the seismic base moment shown herein are based on the original seismic data and these figures are subject to change, based on the new loads obtained from the seismic redesign.** 10

Remarks

Note 1: All welds forming part of the primary and auxiliary containments, including the nozzle attachment welds shall be subjected to 100% volumetric examination.

Note 2: Maximum carbon content of 0.030% for all welded components.

Note 3: Operating weight includes weight of liquid filled to top of overflow nozzle.

Note 4: Descale all internal welds as laid, grind smooth and blend all starts/stops, high spots, and crevices, finish welds as required for NDE purposes.

Note 5: Revised PJM operating pressure and number of cycles per CCN 053810, specified content viscosity.

Note 6: Vessel volumes are approximate and do not account for manufacturing tolerances, nozzles, and displacement of internals.

Note 7: Welded pipe may be used for 14" NPS PJM supports per 24590-WTP-SDDR-PROC-03-0154.

Note 8: This vessel is located in a Black Cell.

Note 9: Contents of this document are Dangerous Waste Permit affecting (internal use only).

Note 10: Piping and piping support configurations shall be designed to preclude natural frequencies less than 7.0 Hz.

Note 11: Seller shall ensure that an additional 0.044" is available for erosion in the spherical portion of the bottom head and shall report the minimum thickness required for all specified loading conditions, exclusive of erosion and corrosion allowances. 9ND128549 9A10128105

Note 12: Revision 10 of this data sheet incorporates the CCN 129149. The CCN added the words "in the form of overblow pressures", to the note shown above the overblow loads graph and further revised the note below the graph, as noted herein on sheet 3 of 5. Added calculation 24590-PTF-MTC-FRP-00001 and Environmental Qualification on Sheet 1. Added the note identified by ** on sheet 1. (10)

BECHTEL	**MECHANICAL DATA SHEET: VESSEL**	**PLANT ITEM No.** ***24590-PTF-MV-FRP-VSL-00002A***

Equipment Cyclic Data Sheet

Plant Item Number:	***24590-PTF-MV-FRP-VSL-00002A***
Description	***Parent Vessel***

The information below is provisional and envelopes operational duty for fatigue assessment. It is not to be used as operational data.

Materials of Construction	***SA 240 316 with maximum carbon content of 0.030%***
Design Life	***40 years***
Component Function and Life Cycle Description	***This vessel receives and stores waste in a batch transfer from off-site tanks. It shall be designed to be filled to the maximum content level over a period of one day. Additionally, this vessel will be subjected to fluid dynamic forces from the operation of the pulse jet mixers during the process of suspending the solids in the waste feed. This vessel is washed down not more than once per year.***

Load Type		Range		Number of Cycles	Comment
Design Pressure	psig	***-2.5***	***15***	***10***	***Nominal assumption for testing***
Operating Pressure	psig	***-0.123***	***0***	***5100***	
Operating Temperature	°F	***50***	***215***	***5100***	
Contents Specific Gravity		***1.0***	***1.46***	***5100***	
Contents Level	inch	***32***	***402***	***5100***	***Liquid level measured from crown of bottom head***
Localized Features					
Nozzles					
Supports		***Same as vessel***		***Number of cycles same as vessel***	

Hydrodynamic Loading

In normal operation, pulse jet mixers discharge liquid into the parent vessel imposing a cyclical hydrodynamic load on all internal components. Occasionally, an upset condition designated 'overblow' causes air to be discharged from any single pulse jet mixer. All internal components shall be designed for the combination of the normal operational hydrodynamic loads and overblow loads, and this load combination is also to be assumed to act concurrently with seismic loads.

Normal operation imposes a cyclical load ranging between -0.05 and 0.12 psi in the radial direction and -0.01 to 0.10 psi in the vertical direction for 8.0 x 10^6 cycles. The hydrodynamic pressure applies across the projected area of the component. Positive hydrodynamic forces act in the radial, outward direction and the vertical, upward direction. Seller shall apply the radial load simultaneously in the radial direction and normal to the radial direction in the horizontal plane.

Overblow loads vary as a function of the distance from the center of the overblowing pulse jet mixer nozzle and the elevation 'H' above the overblowing pulse jet mixer nozzle up to the overflow level, as plotted in the form of overblow pressures: 10

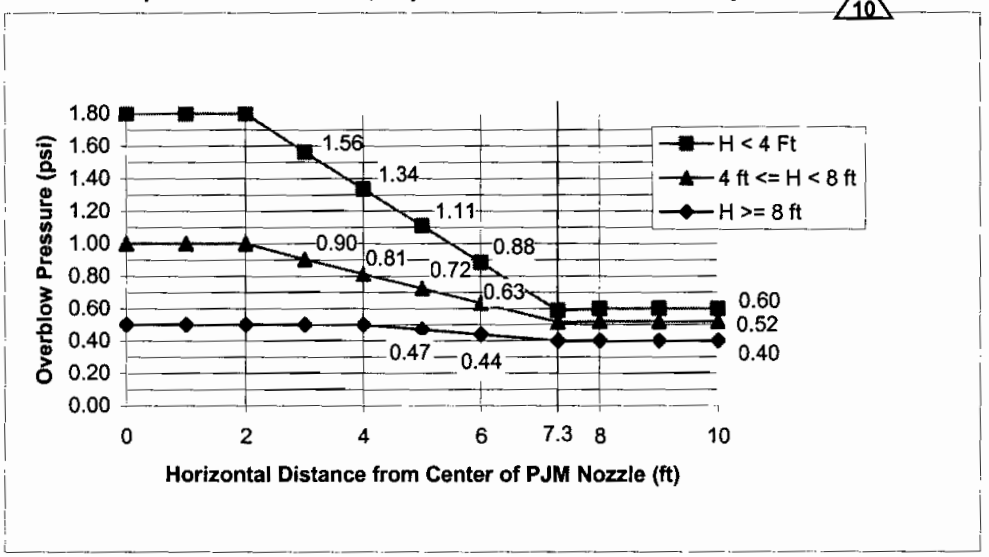

10

For all vessel internal components other than the overblowing pulse jet mixer, the overblow forces shall be applied a) in the vertical direction, and b) in the horizontal direction, radiating from the centerline of the overblowing pulse jet mixer. For the overblowing pulse jet mixer, the force shall be applied in the vertical upward direction only. The overblow force on all components, including the structures and supports, shall be calculated by applying the overblow pressure at the location of the nearest surface of the component and to the projected area of the component, facing the appropriate direction. The normal force component, specified for the normal pulse jet mixer operation condition, is not applicable to the overblow condition. Any single pulse jet mixer may overblow 1000 cycles. Reference CCN 125541 dated 07/27/05.

Notes

Cycle increase: The Seller must increase the numbers of operational cycles given above by 10% to account for commissioning duty unless otherwise noted.

Remarks (Continued From Sheet 1)

Equipment Cyclic Data Sheet

Component Plant Item Number:	***24590-PTF-MV-FRP-PJM-00061, 24590-PTF-MV-FRP-PJM-00062, 24590-PTF-MV-FRP-PJM-00063, 24590-PTF-MV-FRP-PJM-00064, 24590-PTF-MV-FRP-PJM-00065, 24590-PTF-MV-FRP-PJM-00066, 24590-PTF-MV-FRP-PJM-00067, 24590-PTF-MV-FRP-PJM-00068, 24590-PTF-MV-FRP-PJM-00069, 24590-PTF-MV-FRP-PJM-00070, 24590-PTF-FRP-MV-PJM-00071, 24590-PTF-MV-FRP-PJM-00072***
Component Description:	***Pulse Jet Mixer Vessels (PJM)***

The information below is provisional and envelopes operational duty for fatigue assessment. It is not to be used as operational data.

Materials of Construction	***SA 240 316 with maximum carbon content of 0.030%***
Design Life	***40 years***
Component Function and Life Cycle Description	***These PJMs are cyclically loaded using vacuum to fully fill the PJM with process liquid and compressed air to fully empty the PJM. The PJMs are contained within a parent vessel with varying liquid level. They shall be designed to cycle between the maximum pressure and the minimum pressure plus the external static head imposed by the parent vessel.*** ***The PJM supports shall be designed to cycle between the following loading conditions depending on the liquid level in the parent vessel:*** ***Fully Buoyant*** — ***Parent vessel full and PJM empty*** • ***Design for buoyancy + PJM thrust – PJM weight*** ***PJM Weight*** — ***Parent vessel full and PJM full or*** ***Parent vessel nearly empty and PJM empty*** • ***Design for PJM weight*** ***Fully Loaded*** — ***Parent vessel nearly empty and PJM full*** • ***Design for PJM weight + liquid weight***

Load Type		Range		Number of Cycles	Comment
Design Pressure	psig	***FV***	***80***	***10***	***Nominal assumption for testing***
Operating Pressure	psig	***FV***	***30***	***8.0×10^6***	***Operating pressure = 22 psig + 8 psig design margin***
Operating Temp	°F	***50***	***215***	***<100***	
Contents Specific Gravity		***1.0***	***1.46***	***<1000***	
Contents Level	inch	***Empty***	***Flooded***	***8.0×10^6***	
PJM Thrust	lbf	***0***	***330***	***8.0×10^6***	
Localized Features					
Supports		***Fully Buoyant***	***PJM Weight***	***3.31×10^6***	***The parent vessel is operating at greater than 75% capacity and the PJMs are cycling between empty and full for the indicated number of cycles.***
		Fully Buoyant	***Fully Loaded***	***1.38×10^6***	***The parent vessel is operating at between 25 and 50% capacity and the PJMs are cycling between empty and full for the indicated number of cycles.***
		PJM Weight	***Fully Loaded***	***3.31×10^6***	***The parent vessel is operating at less than 25% capacity and the PJMs are cycling between empty and full for the indicated number of cycles.***

Notes

Cycle increase: The Seller must increase the numbers of operational cycles given above by 10% to account for commissioning duty unless otherwise noted.

BECHTEL	**MECHANICAL DATA SHEET: VESSEL**	**PLANT ITEM No.** ***24590-PTF-MV-FRP-VSL-00002A***

Approval

Rev	Description	System Engr	Vessel Engr	Checked	Approved	Date
0	**Issue for Purchase**	**Y. Hovanski**	**R. Simmons**	**C. Slater/CEC**	**S. Kirk**	**4/18/02**
1	**Revised as Noted**	**Y. Hovanski**	**R. Simmons**	**C. Corriveau**	**S. Kirk**	**6/02/02**
2	**Revised Cyclical Data**	**Y. Hovanski**	**R. Simmons**	**C. Slater**	**S. Kirk**	**8/29/02**
3	**Revised as Noted, Deleted Charge Vessels**	**Y. Hovanski**	**R. Simmons**	**CS / JJ**	**M.Hoffmann**	**12/13/02**
4	**Revised per Note 5**	**Y. Hovanski**	**R. Simmons**	**CS / JJ**	**M.Hoffmann**	**5/16/03**
5	**Revised per Note 7**	**Y. Hovanski**	**R. Simmons**	**CS / JJ**	**M.Hoffmann**	**11/3/03**
6	**Added Black Cell Requirements**	**R. Rider**	**R. Simmons**	**YH/CS/JJ**	**M. Hoffmann**	**4/5/04**
7	**Added Material Specification for Internal Supports and Hydrodynamic Loads**	**R. Rider**	**R. Simmons**	**YH/RT/JJ D. Adler**	**M. Hoffmann**	**6/23/04**
8	**Revised Hydrodynamic Loading Criteria**	**R. Rider**	**R. Simmons**	**YH/CS/JJ**	**M. Hoffmann**	**7/13/04**
9	**Revised Hydrodynamic Loading Criteria**	**R. Rider**	**R. Simmons**	**CS/JJ**	**M. Hoffmann**	**7/20/04**
10	**Revised per Note 12 on sheet 2 of 5.**					10/28/05

R10637276

MECHANICAL DATA SHEET: VESSEL

PLANT ITEM No.
24590-PTF-MV-FRP-VSL-00002B

Project:	***RPP-WTP***	P&ID:	***24590-PTF-M6-FRP-00001***
Project No:	***24590***	Calculations:	***24590-PTF-MVC-FRP-00001, 24590-PTF-MTC-FRP-00001*** 10
Project Site:	***Hanford***	Vessel Drawing	***24590-PTF-M2-FRP-00002*** MAS 10/28/05
Description:	***Waste Feed Receipt Vessel***		

ISSUED BY
RPP-WTP PDC

Reference Data

Charge Vessels (Tag Numbers)	
Pulsejet Mixers / Agitators (Tag Numbers)	***FRP-PJM-00017, FRP-PJM-00018, FRP-PJM-00019, FRP-PJM-00020, FRP-PJM-00021, FRP-PJM-00022, FRP-PJM-00023, FRP-PJM-00024, FRP-PJM-00025, FRP-PJM-00026, FRP-PJM-00027, FRP-PJM-00028***
RFDs/Pumps (Tag Numbers)	

Design Data

Quality Level		***See Drawing***	Fabrication Specs	***24590-WTP-3PS-MV00-T0001***		
Seismic Category		***SC-I***	Design Code	***ASME VIII Div 1***		
Service/Contents		***Radioactive Liquid***	Code Stamp	***Yes***		
Design Specific Gravity		***1.46***	NB Registration	***Yes***		
Maximum Design Volume	gal	***406,800 (Note 6)***	Weights (lbs)	Empty	Operating	Test
Total Volume	gal	***474,000 (Note 6)***	Estimated	***592,900***	***5,550,000 (Note 3)***	***4,550,000***
Viscosity	cP	***1.58 min / 21 max***	Actual ** 10	***589,800***	***5,370,000***	***4,540,000***
Environmental Qualification 10		***N/A***				

Inside Diameter	inch	***564***			Wind Design	***Not Required***	
Length/Height (TL-TL)	inch	***322***			Snow Design	***Not Required***	
		Vessel Operating	Vessel Design	Coil/Jacket Design	Seismic Design	***24590-WTP-3PS-SS90-T0001 24590-WTP-3PS-MV00-T0002***	
Internal Pressure	psig	***ATM***	***15***	***NA***	Seismic Base Moment ** 10	ft*lb	***46,070,000***
External Pressure	psig	***0.123***	***2.5***	***NA***	Postweld Heat Treat	***Not Required***	
Temperature	°F	***215***	***240***	***NA***	Corrosion Allowance	Inch	***0.04 (Note 11)***
Min. Design Metal Temp.	°F	***5***			Hydrostatic Test Pressure *	psig	***19.5***

Materials of Construction

Component	Material	Minimum Thickness / Size	Containment
Top Head	***SA 240 316 (Note 2)***	***See Drawing***	***Auxiliary (Note 1)***
Shell	***SA 240 316 (Note 2)***	***See Drawing***	***Primary (Note 1)***
Bottom Head	***SA 240 316 (Note 2)***	***See Drawing***	***Primary (Note 1)***
Support	***SA 240 304 (Note 2)***	***See Drawing***	***N/A***
Internals	***SA 240 316 / SA 479 316 (Note 2)***	***See Drawing***	***Thermocouples Primary (Note 1)***
Pipe	***SA 312 TP316 Smls (Notes 2 & 7)***	***See Drawing***	***Note 1***
Forgings/ Bar stock	***SA 182 F316 (Note 2)***	***See Drawing***	***N/A***

Miscellaneous Data

Orientation	***Vertical***	Support Type	***Skirt***
Insulation Function	***Not Applicable***	Insulation Material	***Not Applicable***
Insulation Thickness (inch)	***Not Applicable***	Internal Finish	***Note 4***
		External Finish	***Welds Descaled as Laid***

*** As determined by the vendor.** 10

**** The actual weights and seismic moment , shown herein are based on the original seismic data and these figures are subject to change, based on the new loads, obtained from the seismic redesign.** 10

Remarks

Note 1: All welds forming part of the primary and auxiliary containments, including the nozzle attachment welds shall be subjected to 100% volumetric examination.

Note 2: Maximum carbon content of 0.030% for all welded components.

Note 3: Operating weight includes weight of liquid filled to top of overflow nozzle.

Note 4: Descale all internal welds as laid, grind smooth and blend all starts/stops, high spots, and crevices, finish welds as required for NDE purposes.

Note 5: Revised PJM operating pressure and number of cycles per CCN 053810, specified content viscosity.

Note 6: Vessel volumes are approximate and do not account for manufacturing tolerances, nozzles, and displacement of internals.

Note 7: Welded pipe may be used for 14" NPS PJM supports per 24590-WTP-SDDR-PROC-03-0154.

Note 8: This vessel is located in a Black Cell.

Note 9: Contents of this document are Dangerous Waste Permit affecting (internal use only).

Note 10: Piping and piping support configurations shall be designed to preclude natural frequencies less than 7.0 Hz.

Note 11: Seller shall ensure that an additional 0.044" is available for erosion in the spherical portion of the bottom head and shall report the minimum thickness required for all specified loading conditions, exclusive of erosion and corrosion allowances. CANP 128549 QA 10/28/05

Note 12: Revision 10 of this data sheet incorporates the CCN 129149. The CCN added the words "in the form of overblow pressures", to the note shown above the overblow loads graph and further revised the note below the graph, as noted herein on sheet 3 of 5. Added calculation 24590-PTF-MTC-FRP-00001 and Environmental Qualification on Sheet 1. Added the note identified by ** on sheet 1.

10

BECHTEL	**MECHANICAL DATA SHEET: VESSEL**	PLANT ITEM No. ***24590-PTF-MV-FRP-VSL-00002B***

Equipment Cyclic Data Sheet

Component Plant Item Number:	***24590-PTF-MV-FRP-VSL-00002B***
Component description	***Parent Vessel***

The information below is provisional and envelopes operational duty for fatigue assessment. It is not to be used as operational data.

Materials of Construction	***SA 240 316 with maximum carbon content of 0.030%***
Design Life	***40 years***
Component Function and Life Cycle Description	***This vessel receives and stores waste in a batch transfer from off-site tanks. It shall be designed to be filled to the maximum content level over a period of one day. Additionally, this vessel will be subjected to fluid dynamic forces from the operation of the pulse jet mixers during the process of suspending the solids in the waste feed. This vessel is washed down not more than once per year.***

Load Type		Min	Max	Number of Cycles	Comment
Design Pressure	psig	***-2.5***	***15***	***10***	***Nominal assumption for testing***
Operating Pressure	psig	***-0.123***	***0***	***5100***	
Operating Temperature	°F	***50***	***215***	***5100***	
Contents Specific Gravity		***1.0***	***1.46***	***5100***	
Contents Level	inch	***32***	***402***	***5100***	***Liquid level measured from crown of bottom head***
Localized Features					
Nozzles					
Supports		***Same as vessel***		***Number of cycles same as vessel***	

Hydrodynamic Loading

In normal operation, pulse jet mixers discharge liquid into the parent vessel imposing a cyclical hydrodynamic load on all internal components. Occasionally, an upset condition designated 'overblow' causes air to be discharged from any single pulse jet mixer. All internal components shall be designed for the combination of the normal operational hydrodynamic loads and overblow loads, and this load combination is also to be assumed to act concurrently with seismic loads.

Normal operation imposes a cyclical load ranging between -0.05 and 0.12 psi in the radial direction and -0.01 to 0.10 psi in the vertical direction for 8.0 x 10^6 cycles. The hydrodynamic pressure applies across the projected area of the component. Positive hydrodynamic forces act in the radial, outward direction and the vertical, upward direction. Seller shall apply the radial load simultaneously in the radial direction and normal to the radial direction in the horizontal plane.

Overblow loads vary as a function of the distance from the center of the overblowing pulse jet mixer nozzle and the elevation 'H' above the overblowing pulse jet mixer nozzle up to the overflow level, as plotted in the form of overblow pressures: 10

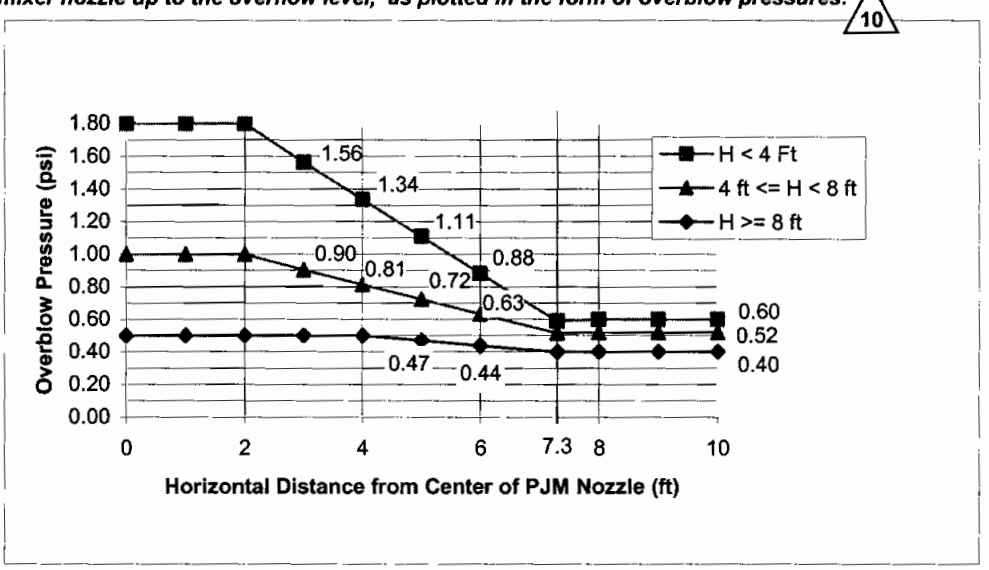

10

For all vessel internal components other than the overblowing pulse jet mixer, the overblow forces shall be applied a) in the vertical direction, and b) in the horizontal direction, radiating from the centerline of the overblowing pulse jet mixer. For the overblowing pulse jet mixer, the force shall be applied in the vertical upward direction only. The overblow force on all components, including the structures and supports, shall be calculated by applying the overblow pressure at the location of the nearest surface of the component and to the projected area of the component, facing the appropriate direction. The normal force component, specified for the normal pulse jet mixer operation condition, is not applicable to the overblow condition. Any single pulse jet mixer may overblow 1000 cycles. Reference CCN 125541 dated 07/27/05.

Notes

Cycle increase: The Seller must increase the numbers of operational cycles given above by 10% to account for commissioning duty unless otherwise noted.

Equipment Cyclic Data Sheet

Component Plant Item Number:	***24590-PTF-MV-FRP-PJM-00017, 24590-PTF-MV-FRP-PJM-00018, 24590-PTF-MV-FRP-PJM-00019, 24590-PTF-MV-FRP-PJM-00020, 24590-PTF-MV-FRP-PJM-00021, 24590-PTF-MV-FRP-PJM-00022, 24590-PTF-MV-FRP-PJM-00023, 24590-PTF-MV-FRP-PJM-00024, 24590-PTF-MV-FRP-PJM-00025, 24590-PTF-MV-FRP-PJM-00026, 24590-PTF-MV-FRP-PJM-00027, 24590-PTF-MV-FRP-PJM-00028***
Component Description	***Pulse Jet Mixers (PJM)***

The information below is provisional and envelopes operational duty for fatigue assessment. It is not to be used as operational data.

Materials of Construction	***SA 240 316 with maximum carbon content of 0.030%***
Design Life	***40 years***
Component Function and Life Cycle Description	***These PJMs are cyclically loaded using vacuum to fully fill the PJM with process liquid and compressed air to fully empty the PJM. The PJMs are contained within a parent vessel with varying liquid level. They shall be designed to cycle between the maximum pressure and the minimum pressure plus the external static head imposed by the parent vessel.*** ***The PJM supports shall be designed to cycle between the following loading conditions depending on the liquid level in the parent vessel:*** ***Fully Buoyant*** ***Parent vessel full and PJM empty*** • ***Design for buoyancy + PJM thrust – PJM weight*** ***PJM Weight*** ***Parent vessel full and PJM full or*** ***Parent vessel nearly empty and PJM empty*** • ***Design for PJM weight*** ***Fully Loaded*** ***Parent vessel nearly empty and PJM full*** • ***Design for PJM weight + liquid weight***

Load Type		Range		Number of Cycles	Comment
Design Pressure	psig	***FV***	***80***	***10***	***Nominal assumption for testing***
Operating Pressure	psig	***FV***	***30***	***8.0×10^6***	***Operating pressure = 22 psig + 8 psig design margin***
Operating Temp	°F	***50***	***215***	***<100***	
Contents Specific Gravity		***1.0***	***1.46***	***<1000***	
Contents Level	inch	***Empty***	***Flooded***	***8.0×10^6***	
PJM Thrust	lbf	***0***	***330***	***8.0×10^6***	
Localized Features					
Supports		***Fully Buoyant***	***PJM Weight***	***3.31×10^6***	***The parent vessel is operating at greater than 75% capacity and the PJMs are cycling between empty and full for the indicated number of cycles.***
		Fully Buoyant	***Fully Loaded***	***1.38×10^6***	***The parent vessel is operating at between 25 and 50% capacity and the PJMs are cycling between empty and full for the indicated number of cycles.***
		PJM Weight	***Fully Loaded***	***3.31×10^6***	***The parent vessel is operating at less than 25% capacity and the PJMs are cycling between empty and full for the indicated number of cycles.***

Notes

Cycle increase: The Seller must increase the numbers of operational cycles given above by 10% to account for commissioning duty unless otherwise noted.

BECHTEL	**MECHANICAL DATA SHEET: VESSEL**	**PLANT ITEM No.** ***24590-PTF-MV-FRP-VSL-00002B***

Approval

Rev	Description	System Engr	Vessel Engr	Checked	Approved	Date
0	**Issue for Purchase**	**Y. Hovanski**	**R. Simmons**	**C. Slater/CEC**	**S. Kirk**	**4/18/02**
1	**Revised as Noted**	**Y. Hovanski**	**R. Simmons**	**C. Corriveau**	**S. Kirk**	**6/02/02**
2	**Revised Cyclical Data**	**Y. Hovanski**	**R. Simmons**	**C. Slater**	**S. Kirk**	**8/29/02**
3	**Revised as Noted, Deleted Charge Vessels**	**Y. Hovanski**	**R. Simmons**	**CS / JJ**	**M.Hoffmann**	**12/13/02**
4	**Revised per Note 5**	**Y. Hovanski**	**R. Simmons**	**CS / JJ**	**M.Hoffmann**	**5/16/03**
5	**Revised per Note 7**	**Y. Hovanski**	**R. Simmons**	**CS / JJ**	**M.Hoffmann**	**11/3/03**
6	**Added Black Cell Requirements**	**R. Rider**	**R. Simmons**	**YH/CS/JJ**	**M. Hoffmann**	**4/5/04**
7	**Added Material Specification for Internal Supports and Hydrodynamic Loads**	**R. Rider**	**R. Simmons**	**YH/RT/JJ D. Adler**	**M. Hoffmann**	**6/23/04**
8	**Revised Hydrodynamic Loading Criteria**	**R. Rider**	**R. Simmons**	**YH/CS/JJ**	**M. Hoffmann**	**7/13/04**
9	**Revised Hydrodynamic Loading Criteria**	**R. Rider**	**R. Simmons**	**CS/JJ**	**M. Hoffmann**	**7/20/04**
10	**Revised per Note 12 on sheet 2 of 5.**					10/28/05

MECHANICAL DATA SHEET: VESSEL

PLANT ITEM No. R10637277
24590-PTF-MV-FRP-VSL-00002C

Project:	**RPP-WTP**	P&ID:	**24590-PTF-M6-FRP-00002**
Project No:	**24590**	Calculations:	**24590-PTF-MVC-FRP-00001, 24590-PTF-MTC-FRP-00001** 10
Project Site:	**Hanford**	Vessel Drawing	**24590-PTF-M2-FRP-00003** MAS 10/28/05
Description:	**Waste Feed Receipt Vessel**		

ISSUED BY RPP-WTP PDC

Reference Data

Charge Vessels (Tag Numbers)	
Pulsejet Mixers / Agitators (Tag Numbers)	**FRP-PJM-00029, FRP-PJM-00030, FRP-PJM-00031, FRP-PJM-00032, FRP-PJM-00033, FRP-PJM-00034, FRP-PJM-00035, FRP-PJM-00036, FRP-PJM-00001, FRP-PJM-00002, FRP-PJM-00003, FRP-PJM-00004**
RFDs/Pumps (Tag Numbers)	

Design Data

Quality Level		**See Drawing**	Fabrication Specs	**24590-WTP-3PS-MV00-T0001**		
Seismic Category		**SC-I**	Design Code	**ASME VIII Div 1**		
Service/Contents		**Radioactive Liquid**	Code Stamp	**Yes**		
Design Specific Gravity		**1.46**	NB Registration	**Yes**		
Maximum Design Volume	gal	**406,800 (Note 6)**	Weights (lbs)	Empty	Operating	Test
Total Volume	gal	**474,000 (Note 6)**	Estimated	**592,900**	**5,550,000 (Note 3)**	**4,550,000**
Viscosity	cP	**1.58 min / 21 max**	Actual ** 10	**589,800**	**5,370,000**	**4,540,000**
Environmental Qualification 10		**N/A**				

Inside Diameter	inch	**564**			Wind Design	**Not Required**	
Length/Height (TL-TL)	inch	**322**			Snow Design	**Not Required**	
		Vessel Operating	Vessel Design	Coil/Jacket Design	Seismic Design	**24590-WTP-3PS-SS90-T0001** **24590-WTP-3PS-MV00-T0002**	
Internal Pressure	psig	**ATM**	**15**	**NA**	Seismic Base Moment ** 10	ft*lb	**46,070,000**
External Pressure	psig	**0.123**	**2.5**	**NA**	Postweld Heat Treat	**Not Required**	
Temperature	°F	**215**	**240**	**NA**	Corrosion Allowance	Inch	**0.04 (Note 11)**
Min. Design Metal Temp.	°F	**5**			Hydrostatic Test Pressure *	psig	**19.5**

Materials of Construction

Component	Material	Minimum Thickness / Size	Containment
Top Head	**SA 240 316 (Note 2)**	**See Drawing**	**Auxiliary (Note 1)**
Shell	**SA 240 316 (Note 2)**	**See Drawing**	**Primary (Note 1)**
Bottom Head	**SA 240 316 (Note 2)**	**See Drawing**	**Primary (Note 1)**
Support (Skirt)	**SA 240 304 (Note 2)**	**See Drawing**	**N/A**
Internals	**SA 240 316 / SA 479 316 (Note 2)**	**See Drawing**	**Thermocouples Primary (Note 1)**
Pipe	**SA 312 TP316 Smls (Notes 2 & 7)**	**See Drawing**	**Note 1**
Forgings/ Bar stock	**SA 182 F316 (Note 2)**	**See Drawing**	**N/A**

Miscellaneous Data

Orientation	**Vertical**	Support Type	**Skirt**
Insulation Function	**Not Applicable**	Insulation Material	**Not Applicable**
Insulation Thickness (inch)	**Not Applicable**	Internal Finish	**Note 4**
		External Finish	**Welds Descaled as Laid**

*** As determined by the vendor.** 10

**** The actual weights and seismic moment , shown herein are based on the original seismic data and these figures are subject to change, based on the new loads, obtained from the seismic redesign.** 10

Remarks

Note 1: ***All welds forming part of the primary and auxiliary containments, including the nozzle attachment welds shall be subjected to 100% volumetric examination.***

Note 2: ***Maximum carbon content of 0.030% for all welded components.***

Note 3: ***Operating weight includes weight of liquid filled to top of overflow nozzle.***

Note 4: ***Descale all internal welds as laid, grind smooth and blend all starts/stops, high spots, and crevices, finish welds as required for NDE purposes.***

Note 5: ***Revised PJM operating pressure and number of cycles per CCN 053810, specified content viscosity.***

Note 6: ***Vessel volumes are approximate and do not account for manufacturing tolerances, nozzles, and displacement of internals.***

Note 7: ***Welded pipe may be used for 14" NPS PJM supports per 24590-WTP-SDDR-PROC-03-0154.***

Note 8: ***This vessel is located in a Black Cell.***

Note 9: ***Contents of this document are Dangerous Waste Permit affecting (internal use only).***

Note 10: ***Piping and piping support configurations shall be designed to preclude natural frequencies less than 7.0 Hz.***

Note 11: ***Seller shall ensure that an additional 0.044" is available for erosion in the spherical portion of the bottom head and shall report the minimum thickness required for all specified loading conditions, exclusive of erosion and corrosion allowances.*** CND 128549 04-10-04/05

Note 12: ***Revision 10 of this data sheet incorporates the CCN 129149. The CCN added the words "in the form of overblow pressures", to the note shown above the overblow loads graph and further revised the note below the graph, as noted herein on sheet 3 of 5.***

10 ***Added calculation 24590-PTF-MTC-FRP-00001 and Environmental Qualification on Sheet 1. Added note identified by ** on sheet 1.***

BECHTEL	**MECHANICAL DATA SHEET: VESSEL**	PLANT ITEM No. ***24590-PTF-MV-FRP-VSL-00002C***

Equipment Cyclic Data Sheet

Component Plant Item Number:	***24590-PTF-MV-FRP-VSL-00002-C***
Component Description	***Parent Vessel***

The information below is provisional and envelopes operational duty for fatigue assessment. It is not to be used as operational data.

Materials of Construction	***SA 240 316 with maximum carbon content of 0.030%***
Design Life	***40 years***
Component Function and Life Cycle Description	***This vessel receives and stores waste in a batch transfer from off-site tanks. It shall be designed to be filled to the maximum content level over a period of one day. Additionally, this vessel will be subjected to fluid dynamic forces from the operation of the pulse jet mixers during the process of suspending the solids in the waste feed. This vessel is washed down not more than once per year.***

Load Type		Range		Number of Cycles	Comment
Design Pressure	psig	***-2.5***	***15***	***10***	***Nominal assumption for testing***
Operating Pressure	psig	***-0.123***	***0***	***5100***	
Operating Temperature	°F	***50***	***215***	***5100***	
Contents Specific Gravity		***1.0***	***1.46***	***5100***	
Contents Level	inch	***32***	***402***	***5100***	***Liquid level measured from crown of bottom head***
Localized Features					
Nozzles					
Supports		***Same as vessel***		***Number of cycles same as vessel***	

Hydrodynamic Loading

In normal operation, pulse jet mixers discharge liquid into the parent vessel imposing a cyclical hydrodynamic load on all internal components. Occasionally, an upset condition designated 'overblow' causes air to be discharged from any single pulse jet mixer. All internal components shall be designed for the combination of the normal operational hydrodynamic loads and overblow loads, and this load combination is also to be assumed to act concurrently with seismic loads.

Normal operation imposes a cyclical load ranging between -0.05 and 0.12 psi in the radial direction and -0.01 to 0.10 psi in the vertical direction for 8.0 x 10^6 cycles. The hydrodynamic pressure applies across the projected area of the component. Positive hydrodynamic forces act in the radial, outward direction and the vertical, upward direction. Seller shall apply the radial load simultaneously in the radial direction and normal to the radial direction in the horizontal plane.

Overblow loads vary as a function of the distance from the center of the overblowing pulse jet mixer nozzle and the elevation 'H' above the overblowing pulse jet mixer nozzle up to the overflow level as plotted in the form of overblow pressures: 10

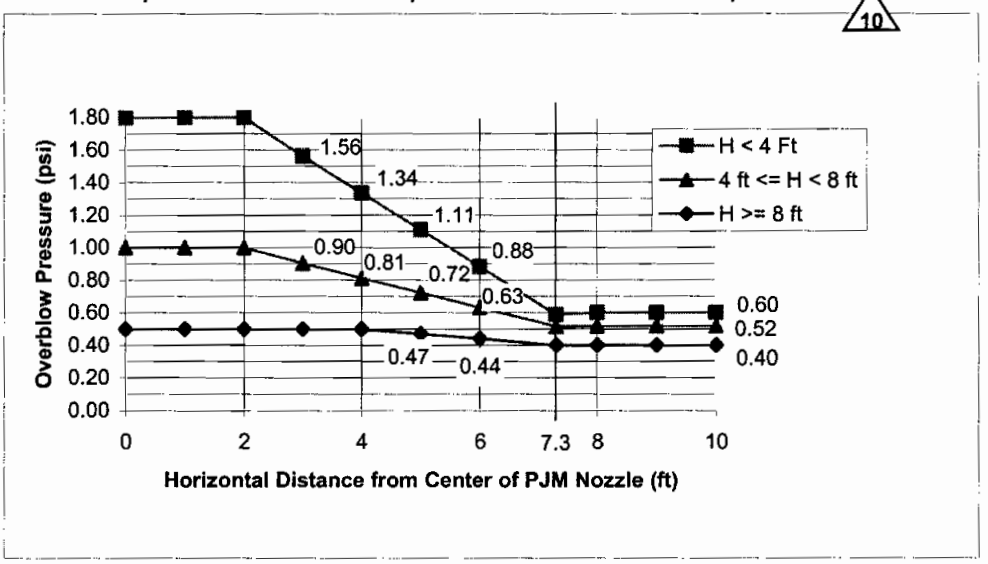

10

For all vessel internal components other than the overblowing pulse jet mixer, the overblow forces shall be applied a) in the vertical direction, and b) in the horizontal direction, radiating from the centerline of the overblowing pulse jet mixer. For the overblowing pulse jet mixer, the force shall be applied in the vertical upward direction only. The overblow force on all components, including the structures and supports, shall be calculated by applying the overblow pressure at the location of the nearest surface of the component and to the projected area of the component, facing the appropriate direction. The normal force component, specified for the normal pulse jet mixer operation condition, is not applicable to the overblow condition. Any single pulse jet mixer may overblow 1000 cycles. Reference CCN 125541 dated 07/27/05.

Notes

Cycle increase: The Seller must increase the numbers of operational cycles given above by 10% to account for commissioning duty unless otherwise noted.

Equipment Cyclic Data Sheet

Component Plant Item Number:	***24590-PTF-MV-FRP-PJM-00001, 24590-PTF-MV-FRP-PJM-00002, 24590-PTF-MV-FRP-PJM-00003, 24590-PTF-MV-FRP-PJM-00004, 24590-PTF-MV-FRP-PJM-00029, 24590-PTF-MV-FRP-PJM-00030, 24590-PTF-MV-FRP-PJM-00031, 24590-PTF-MV-FRP-PJM-00032, 24590-PTF-MV-FRP-PJM-00033, 24590-PTF-MV-FRP-PJM-00034, 24590-PTF-MV-FRP-PJM-00035, 24590-PTF-MV-FRP-PJM-00036***
Component Description	***Pulse Jet Mixers***

The information below is provisional and envelopes operational duty for fatigue assessment. It is not to be used as operational data.

Materials of Construction	***SA 240 316 with maximum carbon content of 0.030%***
Design Life	***40 years***
Component Function and Life Cycle Description	***These PJMs are cyclically loaded using vacuum to fully fill the PJM with process liquid and compressed air to fully empty the PJM. The PJMs are contained within a parent vessel with varying liquid level. They shall be designed to cycle between the maximum pressure and the minimum pressure plus the external static head imposed by the parent vessel.*** ***The PJM supports shall be designed to cycle between the following loading conditions depending on the liquid level in the parent vessel:*** ***Fully Buoyant*** ***Parent vessel full and PJM empty*** • ***Design for buoyancy + PJM thrust – PJM weight*** ***PJM Weight*** ***Parent vessel full and PJM full or*** ***Parent vessel nearly empty and PJM empty*** • ***Design for PJM weight*** ***Fully Loaded*** ***Parent vessel nearly empty and PJM full*** • ***Design for PJM weight + liquid weight***

Load Type		Range		Number of Cycles	Comment
Design Pressure	psig	***FV***	***80***	***10***	***Nominal assumption for testing***
Operating Pressure	psig	***FV***	***30***	***8.0×10^6***	***Operating pressure = 22 psig + 8 psig design margin***
Operating Temp	°F	***50***	***215***	***<100***	
Contents Specific Gravity		***1.0***	***1.46***	***<1000***	
Contents Level	inch	***Empty***	***Flooded***	***8.0×10^6***	
PJM Thrust	lbf	***0***	***330***	***8.0×10^6***	
Localized Features					
Supports		***Fully Buoyant***	***PJM Weight***	***3.31×10^6***	***The parent vessel is operating at greater than 75% capacity and the PJMs are cycling between empty and full for the indicated number of cycles.***
		Fully Buoyant	***Fully Loaded***	***1.38×10^6***	***The parent vessel is operating at between 25 and 50% capacity and the PJMs are cycling between empty and full for the indicated number of cycles.***
		PJM Weight	***Fully Loaded***	***3.31×10^6***	***The parent vessel is operating at less than 25% capacity and the PJMs are cycling between empty and full for the indicated number of cycles.***

Notes

Cycle increase: The Seller must increase the numbers of operational cycles given above by 10% to account for commissioning duty unless otherwise noted.

BECHTEL	**MECHANICAL DATA SHEET: VESSEL**	**PLANT ITEM No.** ***24590-PTF-MV-FRP-VSL-00002C***

Approval

Rev	Description	System Engr	Vessel Engr	Checked	Approved	Date
0	**Issue for Purchase**	**Y. Hovanski**	**R. Simmons**	**C. Slater/CEC**	**S. Kirk**	**4/18/02**
1	**Revised as Noted**	**Y. Hovanski**	**R. Simmons**	**C. Corriveau**	**S. Kirk**	**6/02/02**
2	**Revised Cyclical Data**	**Y. Hovanski**	**R. Simmons**	**C. Slater**	**S. Kirk**	**8/29/02**
3	**Revised as Noted, Deleted Charge Vessels**	**Y. Hovanski**	**R. Simmons**	**CS / JJ**	**M.Hoffmann**	**12/13/02**
4	**Revised per Note 5**	**Y. Hovanski**	**R. Simmons**	**CS / JJ**	**M.Hoffmann**	**5/16/03**
5	**Revised per Note 7**	**Y. Hovanski**	**R. Simmons**	**CS / JJ**	**M.Hoffmann**	**11/3/03**
6	**Added Black Cell Requirements**	**R. Rider**	**R. Simmons**	**YH/CS/JJ**	**M. Hoffmann**	**4/5/04**
7	**Added Material Specification for Internal Supports and Hydrodynamic Loads**	**R. Rider**	**R. Simmons**	**YH/RT/JJ D. Adler**	**M. Hoffmann**	**6/23/04**
8	**Revised Hydrodynamic Loading Criteria**	**R. Rider**	**R. Simmons**	**YH/CS/JJ**	**M. Hoffmann**	**7/13/04**
9	**Revised Hydrodynamic Loading Criteria**	**R. Rider**	**R. Simmons**	**CS/JJ**	**M. Hoffmann**	**7/20/04**
10	**Revised per Note 12 on sheet 2 of 5.**			MASKP		10/28/05

MECHANICAL DATA SHEET: VESSEL

PLANT ITEM No. R10637278

24590-PTF-MV-FRP-VSL-00002D

Project:	**RPP-WTP**	P&ID:	**24590-PTF-M6-FRP-00002**
Project No:	**24590**	Calculations:	**24590-PTF-MVC-FRP-00001, 24590-PTF-MTC-FRP-00001** 10
Project Site:	**Hanford**	Vessel Drawing	**24590-PTF-M2-FRP-00004**
Description:	**Waste Feed Receipt Vessel**		

MAS 10/28/05

Reference Data

ISSUED BY RPP-WTP PDC

Charge Vessels (Tag Numbers)	
Pulsejet Mixers / Agitators (Tag Numbers)	**FRP-PJM-00005, FRP-PJM-00006, FRP-PJM-00007, FRP-PJM-00008, FRP-PJM-00009, FRP-PJM-00010, FRP-PJM-00011, FRP-PJM-00012, FRP-PJM-00013, FRP-PJM-00014, FRP-PJM-00015, FRP-PJM-00016**
RFDs/Pumps (Tag Numbers)	

Design Data

Quality Level		**See Drawing**	Fabrication Specs	**24590-WTP-3PS-MV00-T0001**		
Seismic Category		**SC-I**	Design Code	**ASME VIII Div 1**		
Service/Contents		**Radioactive Liquid**	Code Stamp	**Yes**		
Design Specific Gravity		**1.46**	NB Registration	**Yes**		
Maximum Design Volume	gal	**406,800 (Note 6)**	Weights (lbs)	Empty	Operating	Test
Total Volume	gal	**474,000 (Note 6)**	Estimated	**592,900**	**5,550,000 (Note 3)**	**4,550,000**
Viscosity	cP	**1.58 min / 21 max**	Actual ** 10	**589,800**	**5,370,000**	**4,540,000**
Environmental Qualification 10		**N/A**				

Inside Diameter	inch	**564**			Wind Design	**Not Required**	
Length/Height (TL-TL)	inch	**322**			Snow Design	**Not Required**	
		Vessel Operating	Vessel Design	Coil/Jacket Design	Seismic Design	**24590-WTP-3PS-SS90-T0001** **24590-WTP-3PS-MV00-T0002**	
Internal Pressure	psig	**ATM**	**15**	**NA**	Seismic Base Moment ** 10	ft*lb	**46,070,000**
External Pressure	psig	**0.123**	**2.5**	**NA**	Postweld Heat Treat	**Not Required**	
Temperature	°F	**215**	**240**	**NA**	Corrosion Allowance	Inch	**0.04 (Note 11)**
Min. Design Metal Temp.	°F	**5**			Hydrostatic Test Pressure *	psig	**19.5**

Materials of Construction

Component	Material	Minimum Thickness / Size	Containment
Top Head	**SA 240 316 (Note 2)**	**See Drawing**	**Auxiliary (Note 1)**
Shell	**SA 240 316 (Note 2)**	**See Drawing**	**Primary (Note 1)**
Bottom Head	**SA 240 316 (Note 2)**	**See Drawing**	**Primary (Note 1)**
Support	**SA 240 304 (Note 2)**	**See Drawing**	**N/A**
Internals	**SA 240 316 / SA 479 316 (Note 2)**	**See Drawing**	**Thermocouples Primary (Note 1)**
Pipe	**SA 312 TP316 Smls (Notes 2 & 7)**	**See Drawing**	**Note 1**
Forgings/ Bar stock	**SA 182 F316 (Note 2)**	**See Drawing**	**N/A**

Miscellaneous Data

Orientation	**Vertical**	Support Type	**Skirt**
Insulation Function	**Not Applicable**	Insulation Material	**Not Applicable**
Insulation Thickness (inch)	**Not Applicable**	Internal Finish	**Note 4**
		External Finish	**Welds Descaled as Laid**

*** As determined by the vendor.** 10

**** The actual weights and seismic moment , shown herein are based on the original seismic data and these figures are subject to change, based on the new loads, obtained from the seismic redesign.** 10

Remarks

Note 1: *All welds forming part of the primary and auxiliary containments, including the nozzle attachment welds shall be subjected to 100% volumetric examination.*

Note 2: *Maximum carbon content of 0.030% for all welded components.*

Note 3: *Operating weight includes weight of liquid filled to top of overflow nozzle.*

Note 4: *Descale all internal welds as laid, grind smooth and blend all starts/stops, high spots, and crevices, finish welds as required for NDE purposes.*

Note 5: *Revised PJM operating pressure and number of cycles per CCN 053810, specified content viscosity.*

Note 6: *Vessel volumes are approximate and do not account for manufacturing tolerances, nozzles, and displacement of internals.*

Note 7: *Welded pipe may be used for 14" NPS PJM supports per 24590-WTP-SDDR-PROC-03-0154.*

Note 8: *This vessel is located in a Black Cell.*

Note 9: *Contents of this document are Dangerous Waste Permit affecting (internal use only).*

Note 10: *Piping and piping support configurations shall be designed to preclude natural frequencies less than 7.0 Hz.*

Note 11: *Seller shall ensure that an additional 0.044" is available for erosion in the spherical portion of the bottom head and shall report the minimum thickness required for all specified loading conditions, exclusive of erosion and corrosion allowances.* AND 128549 ff 10/28/05

Note 12: *Revision 10 of this data sheet incorporates the CCN 129149. The CCN added the words "in the form of overblow pressures", to the note shown above the overblow loads graph and further revised the note below the graph, as noted herein on sheet 3 of 5. Added calculation 24590-PTF-MTC-FRP-00001 and Environmental Qualification on Sheet 1. Added the note identified by ** on sheet 1.*

10

BECHTEL	**MECHANICAL DATA SHEET: VESSEL**	PLANT ITEM No. ***24590-PTF-MV-FRP-VSL-00002D***

Equipment Cyclic Data Sheet

Component Plant Item Number:	***24590-PTF-MV-FRP-VSL-00002D***
Component description	***Parent Vessel***

The information below is provisional and envelopes operational duty for fatigue assessment. It is not to be used as operational data.

Materials of Construction	***SA 240 316 with maximum carbon content of 0.030%***
Design Life	***40 years***
Component Function and Life Cycle Description	***This vessel receives and stores waste in a batch transfer from off-site tanks. It shall be designed to be filled to the maximum content level over a period of one day. Additionally, this vessel will be subjected to fluid dynamic forces from the operation of the pulse jet mixers during the process of suspending the solids in the waste feed. This vessel is washed down not more than once per year.***

Load Type		Min	Max	Number of Cycles	Comment
Design Pressure	psig	***-2.5***	***15***	***10***	***Nominal assumption for testing***
Operating Pressure	psig	***-0.123***	***0***	***5100***	
Operating Temperature	°F	***50***	***215***	***5100***	
Contents Specific Gravity		***1.0***	***1.46***	***5100***	
Contents Level	inch	***32***	***402***	***5100***	***Liquid level measured from crown of bottom head***
Localized Features					
Nozzles					
Supports		***Same as Vessel***		***Number of cycles same as vessel***	

Hydrodynamic Loading

In normal operation, pulse jet mixers discharge liquid into the parent vessel imposing a cyclical hydrodynamic load on all internal components. Occasionally, an upset condition designated 'overblow' causes air to be discharged from any single pulse jet mixer. All internal components shall be designed for the combination of the normal operational hydrodynamic loads and overblow loads, and this load combination is also to be assumed to act concurrently with seismic loads.

Normal operation imposes a cyclical load ranging between -0.05 and 0.12 psi in the radial direction and -0.01 to 0.10 psi in the vertical direction for 8.0 x 10^6 cycles. The hydrodynamic pressure applies across the projected area of the component. Positive hydrodynamic forces act in the radial, outward direction and the vertical, upward direction. Seller shall apply the radial load simultaneously in the radial direction and normal to the radial direction in the horizontal plane.

Overblow loads vary as a function of the distance from the center of the overblowing pulse jet mixer nozzle and the elevation 'H' above the overblowing pulse jet mixer nozzle up to the overflow level, as plotted in the form of overblow pressures: 10

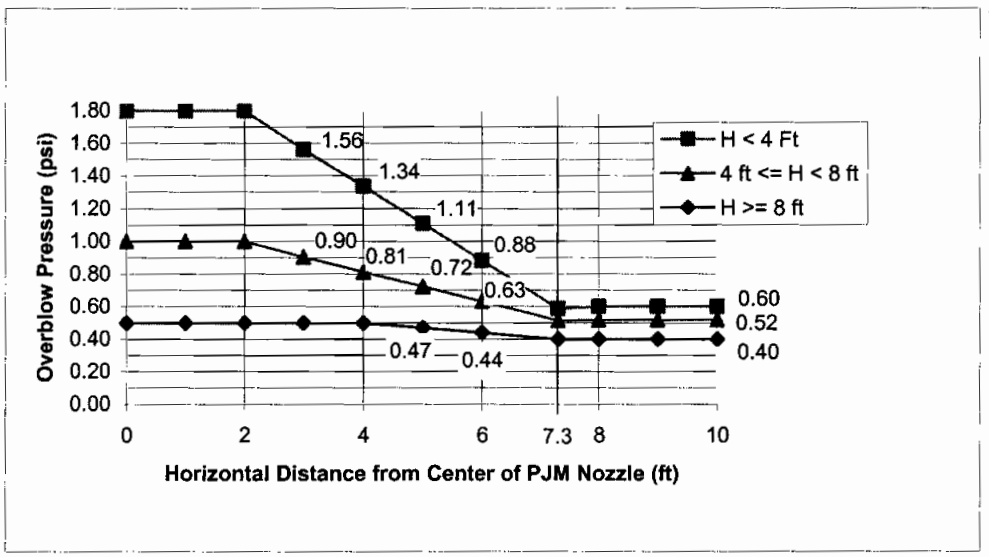

10

For all vessel internal components other than the overblowing pulse jet mixer, the overblow forces shall be applied a) in the vertical direction, and b) in the horizontal direction, radiating from the centerline of the overblowing pulse jet mixer. For the overblowing pulse jet mixer, the force shall be applied in the vertical upward direction only. The overblow force on all components, including the structures and supports, shall be calculated by applying the overblow pressure at the location of the nearest surface of the component and to the projected area of the component, facing the appropriate direction. The normal force component, specified for the normal pulse jet mixer operation condition, is not applicable to the overblow condition. Any single pulse jet mixer may overblow 1000 cycles. Reference CCN 125541 dated 07/27/05.

BECHTEL	**MECHANICAL DATA SHEET: VESSEL**	PLANT ITEM No. ***24590-PTF-MV-FRP-VSL-00002D***

Notes

Cycle increase: The Seller must increase the numbers of operational cycles given above by 10% to account for commissioning duty unless otherwise noted.

Equipment Cyclic Data Sheet

Component Plant Item Number:	***24590-PTF-MV-FRP-PJM-00005, 24590-PTF-MV-FRP-PJM-00006, 24590-PTF-MV-FRP-PJM-00007, 24590-PTF-MV-FRP-PJM-00008, 24590-PTF-MV-FRP-PJM-00009, 24590-PTF-MV-FRP-PJM-00010, 24590-PTF-MV-FRP-PJM-00011, 24590-PTF-MV-FRP-PJM-00012, 24590-PTF-MV-FRP-PJM-00013, 24590-PTF-MV-FRP-PJM-00014, 24590-PTF-MV-FRP-PJM-00015, 24590-PTF-MV-FRP-PJM-00016***
Component Description	***Pulse Jet Mixers***

The information below is provisional and envelopes operational duty for fatigue assessment. It is not to be used as operational data.

Materials of Construction	***SA 240 316 with maximum carbon content of 0.030%***
Design Life	***40 years***
Component Function and Life Cycle Description	***These PJMs are cyclically loaded using vacuum to fully fill the PJM with process liquid and compressed air to fully empty the PJM. The PJMs are contained within a parent vessel with varying liquid level. They shall be designed to cycle between the maximum pressure and the minimum pressure plus the external static head imposed by the parent vessel.*** ***The PJM supports shall be designed to cycle between the following loading conditions depending on the liquid level in the parent vessel:*** ***Fully Buoyant*** — ***Parent vessel full and PJM empty*** • ***Design for buoyancy + PJM thrust – PJM weight*** ***PJM Weight*** — ***Parent vessel full and PJM full or*** ***Parent vessel nearly empty and PJM empty*** • ***Design for PJM weight*** ***Fully Loaded*** — ***Parent vessel nearly empty and PJM full*** • ***Design for PJM weight + liquid weight***

Load Type		Range		Number of Cycles	Comment
Design Pressure	psig	***FV***	***80***	***10***	***Nominal assumption for testing***
Operating Pressure	psig	***FV***	***30***	***8.0×10^6***	***Operating pressure = 22 psig + 8 psig design margin***
Operating Temp	°F	***50***	***215***	***<100***	
Contents Specific Gravity		***1.0***	***1.46***	***<1000***	
Contents Level	inch	***Empty***	***Flooded***	***8.0×10^6***	
PJM Thrust	lbf	***0***	***330***	***8.0×10^6***	
Localized Features					
Supports		***Fully Buoyant***	***PJM Weight***	***3.31×10^6***	***The parent vessel is operating at greater than 75% capacity and the PJMs are cycling between empty and full for the indicated number of cycles.***
		Fully Buoyant	***Fully Loaded***	***1.38×10^6***	***The parent vessel is operating at between 25 and 50% capacity and the PJMs are cycling between empty and full for the indicated number of cycles.***
		PJM Weight	***Fully Loaded***	***3.31×10^6***	***The parent vessel is operating at less than 25% capacity and the PJMs are cycling between empty and full for the indicated number of cycles.***

Notes

Cycle increase: The Seller must increase the numbers of operational cycles given above by 10% to account for commissioning duty unless otherwise noted.

BECHTEL	**MECHANICAL DATA SHEET: VESSEL**	**PLANT ITEM No.** ***24590-PTF-MV-FRP-VSL-00002D***

Approval

Rev	Description	System Engr	Vessel Engr	Checked	Approved	Date
0	**Issue for Purchase**	**Y. Hovanski**	**R. Simmons**	**C. Slater/CEC**	**S. Kirk**	**4/18/02**
1	**Revised as Noted**	**Y. Hovanski**	**R. Simmons**	**C. Corriveau**	**S. Kirk**	**6/02/02**
2	**Revised Cyclical Data**	**Y. Hovanski**	**R. Simmons**	**C. Slater**	**S. Kirk**	**8/29/02**
3	**Revised as Noted, Deleted Charge Vessels**	**Y. Hovanski**	**R. Simmons**	**CS / JJ**	**M.Hoffmann**	**12/13/02**
4	**Revised per Note 5**	**Y. Hovanski**	**R. Simmons**	**CS / JJ**	**M.Hoffmann**	**5/16/03**
5	**Revised per Note 7**	**Y. Hovanski**	**R. Simmons**	**CS / JJ**	**M.Hoffmann**	**11/3/03**
6	**Added Black Cell Requirements**	**R. Rider**	**R. Simmons**	**YH/CS/JJ**	**M. Hoffmann**	**4/5/04**
7	**Added Material Specification for Internal Supports and Hydrodynamic Loads**	**R. Rider**	**R. Simmons**	**YH/RT/JJ D. Adler**	**M. Hoffmann**	**6/23/04**
8	**Revised Hydrodynamic Loading Criteria**	**R. Rider**	**R. Simmons**	**YH/CS/JJ**	**M. Hoffmann**	**7/13/04**
9	**Revised Hydrodynamic Loading Criteria**	**R. Rider**	**R. Simmons**	**CS/JJ**	**M. Hoffmann**	**7/20/04**
10	**Revised per Note 12 on sheet 2 of 5.**					10/28/05

MECHANICAL DATA SHEET: VESSEL

PLANT ITEM No.
24590-PTF-MV-HLP-VSL-00022

Project:	***RPP-WTP***	P&ID:	***24590-PTF-M6-HLP-P0002***
Project No:	***24590***	Process Calculation: 1	***24590-PTF-MVC-HLP-00001***
Project Site:	***Hanford***	Vessel Drawing	***24590-PTF-MV-HLP-P0003***
Description:	***HLW Feed Receipt Vessel***		

ISSUED BY
RPP-WTP PDC
INIT 12-22-03 DATE

R10182255

Reference Data

Charge Vessels (Tag Numbers)	***DELETED***
Pulsejet Mixers / Agitators (Tag Numbers)	***HLP-PJM-00056, HLP-PJM-00057, HLP-PJM-00084, HLP-PJM-00085, HLP-PJM-00086, HLP-PJM-00087, HLP-PJM-00088, HLP-PJM-00089, HLP-PJM-00090, HLP-PJM-00091, HLP-PJM-00092, HLP-PJM-00093***
RFDs/Pumps (Tag Numbers)	***DELETED***

Design Data

Quality Level		***See Vessel Drawing***	Fabrication Specs	***24590-WTP-3PS-MV00-TP001***		
Seismic Category		***SC-I***	Design Code	***ASME VIII Div 1***		
Service/Contents		***Radioactive Liquid***	Code Stamp	***Yes***		
Design Specific Gravity		***1.50***	NB Registration	***Yes***		
Maximum Operating Volume	gal	***234,500***	Weights (lbs)	Empty	Operating	Test
Total Volume	gal	***270,600***	Estimated	***494,900***	***3,453,500***	***2,769,900***
			Actual *			

Inside Diameter	inch	***456***			Wind Design	***Not Required***	
Length/Height (TL-TL)	inch	***290***			Snow Design	***Not Required***	
		Vessel Operating	Vessel Design	Coil/Jacket Design	Seismic Design	***24590-WTP-3PS-MV00-TP002 24590-WTP-3PS-SS90-T0001***	
Internal Pressure	psig	***0*** 1	***15***	***35***	Seismic Base Moment *	ft*lb	
External Pressure	psig	***0.217***	***4.5 (Note 4)***	***15*** 1	Postweld Heat Treat	***Not Required***	
Temperature	°F	***190***	***215***	***215*** 1	Corrosion Allowance	Inch	***0.04 (Note 7)*** 1
Min. Design Metal Temp.	°F	***40***			Hydrostatic Test Pressure *	psig	

Please note that source, special nuclear and byproduct materials, as defined in the Atomic Energy Act of 1954 (AEA), are regulated at the U.S. Department of Energy (DOE) facilities exclusively by DOE acting pursuant to its AEA authority. DOE asserts that pursuant to the AEA, it has sole and exclusive responsibility and authority to regulate source, special nuclear, and byproduct materials at DOE-owned nuclear facilities. Information contained herein on radionuclides is provided for process description purposes only.

MARK W. HOFFMANN
STATE OF WASHINGTON
0030952
REGISTERED PROFESSIONAL ENGINEER
12/22/03

EXPIRES 12/10/04

This Bound Document Contains a total of 4 pages

REV	DATE	REASON FOR REVISION	PREPARER	CHECKER	REVIEWER	APPROVER
1	12/22/03	Issued for Permitting Use				
0	10/3/03	Issued for Permitting Use	Jessica Jackson	Rob Simmons	Cliff Slater	Mark Hoffmann

12/22/03
☒ Processed/ Date Entry ☐ Copied/ QA ☒ Scanned ☐ Filed
12/22/03

BECHTEL	**MECHANICAL DATA SHEET: VESSEL**	**PLANT ITEM No.** ***24590-PTF-MV-HLP-VSL-00022***

Materials of Construction

Component	Material	Minimum Thickness / Size	Containment
Top Head	***SA-240 316 (Note 3)***	***See Drawing***	***Auxiliary***
Shell	***SA-240 316 (Note 3)***	***See Drawing***	***Primary***
Bottom Head	***SA-240 316 (Note 3)***	***See Drawing***	***Primary***
Support	***SA-240 304 (Note 3)***	***See Drawing***	***N/A***
Jacket/Coils/Half-Pipe Jacket	***SA-240 316 (Note 3)***	***See Drawing***	***N/A***
Internals	***SA-240 316 (Note 3)***	***See Drawing***	***Thermowells Primary***
Pipe	***SA-312 TP316 Smls (Note 3)***	***See Drawing***	***Note 1***
Forgings/ Bar stock	***SA-182 F316 (Note 3)***	***See Drawing***	***Note 1***
Wash Ring Pipe 1	***SA-312 TP316 Smls (Note 3)***	***See Drawing***	***N/A***
Bolting/ Gaskets	***N/A***	***N/A***	***N/A***

Miscellaneous Data

Orientation	***Vertical***	Support Type	***Skirt***
Insulation Function	***Not Applicable***	Insulation Material	***Not Applicable***
Insulation Thickness (inch)	***Not Applicable***	Weld Surface Finish 1	***Welds Descaled as Laid (Note 2)***

Remarks

* To be determined by the vendor.

Note 1: Nozzle necks below normal operating level are primary, others auxiliary. See 24590-WTP-3PS-MV00-TP001 and vessel drawing for NDT.

Note 2: Grind smooth shell welds at shell-jacket welds.

Note 3: Maximum carbon content of 0.030% for all welded components.

Note 4: External design pressure under the jacket shall be rated for the jacket design pressure plus 1 psig internal vacuum in the vessel to account for ventilation fan pressures. 1

Note 5: Vessel volumes are approximate and do not account for manufacturing tolerances, nozzles, and displacement of internals.

Note 6: Contents of this document are Dangerous Waste Permit affecting.

Note 7: Corrosion allowance for jacket shall be 0.04 inch. 1

Note 8: The vessel design external pressure is estimated only and shall be confirmed by the Seller's calculations. 1

BECHTEL	**MECHANICAL DATA SHEET: VESSEL**	**PLANT ITEM No.** ***24590-PTF-MV-HLP-VSL-00022***

Equipment Cyclic Data Sheet

Component Plant Item Number	***PTF-MV-HLP-VSL-00022***
Component Description	***Parent Vessel***

The information below is provisional and envelopes operational duty for fatigue assessment. It is not to be used as operational data.

Materials of Construction	***SA-240 316 with maximum carbon content of 0.030%***
Design Life	***40 Years***
Component Function and Life Cycle Description	***This vessel receives and stores waste in a batch transfer from off-site tanks. It shall be designed to be filled to the maximum content level over a period of one day and emptied to complete a 92 day cycle. Additionally, this vessel will be subjected to fluid dynamic forces from the operation of the pulse jet mixers during the process of suspending the solids in the waste feed. This vessel is washed down not more than once per year. The temperature is maintained normally at or below 190°F.*** 1

Load Type		Min	Max	Number of Cycles	Comment
Design Pressure	psig	***-4.5***	***15***	***10***	***Nominal assumption for testing***
Operating Pressure	psig	***-0.217***	***0***	***200***	
Operating Temperature	°F	***50***	***190***	***200***	
Contents Specific Gravity		***1.00***	***1.50***	***200***	***Dependent on fluid properties of waste stream***
Contents Level	inch	***0***	***362***	***200***	***Liquid level measured from crown of bottom head***
Localized Features					
Nozzles		***Within 9°F of operating temperature range.***		***As above***	
Supports					

Notes

- ***Cycle increase: The Seller must increase the numbers of operational cycles given above by 10% to account for commissioning duty unless otherwise noted.***

BECHTEL	**MECHANICAL DATA SHEET: VESSEL**	**PLANT ITEM No.** ***24590-PTF-MV-HLP-VSL-00022***

Equipment Cyclic Data Sheet

Component Plant Item Number	***HLP-PJM-00056, HLP-PJM-00057, HLP-PJM-00084, HLP-PJM-00085, HLP-PJM-00086, HLP-PJM-00087, HLP-PJM-00088, HLP-PJM-00089, HLP-PJM-00090, HLP-PJM-00091, HLP-PJM-00092, HLP-PJM-00093***
Component Description	***Pulse Jet Mixers***

The information below is provisional and envelopes operational duty for fatigue assessment. It is not to be used as operational data.

Materials of Construction	***SA-240 316 with maximum carbon content of 0.030%***
Design Life	***40 Years***
Component Function and Life Cycle Description	***These pulse jet mixers (PJMs) are cyclically loaded using vacuum to fully fill the PJM with process liquid and compressed air to fully empty the PJM. The PJMs are contained within a parent vessel with varying liquid level. They shall be designed to cycle between the maximum design pressure and the minimum design pressure plus the external static head imposed by the parent vessel. The PJM supports shall be designed to cycle between fully buoyant (PJM empty and parent vessel full) and fully loaded (PJM full and parent vessel empty) in addition to thrust.*** 1

Load Type		Min	Max	Number of Cycles	Comment
Design Pressure	psig	***FV***	***80***	***10***	***Nominal assumption for testing***
Operating Pressure	psig	***FV***	***72.5***	***7.9X 10⁶***	
Operating Temperature	°F	***50***	***190***	***200***	***Parent Vessel will be operated normally at a temperature of 190°F.*** 1
Contents Specific Gravity		***1.00***	***1.50***	***200***	***Dependent on fluid properties of waste stream.***
Contents Level	inch	***Empty***	***Flooded***	***7.9 X 10⁶***	
Localized Features					
Nozzles					
Supports					

Notes

- ***Cycle increase: The Seller must increase the numbers of operational cycles given above by 10% to account for commissioning duty unless otherwise noted.***

BECHTEL	**MECHANICAL DATA SHEET: VESSEL**	**PLANT ITEM No.** ***24590-PTF-MV-HLP-VSL-00027A***

Project:	***RPP-WTP***	P&ID:	***24590-PTF-M6-HLP-P0001***
Project No:	***24590***	Process Calculation: 1	***24590-PTF-MVC-HLP-00002***
Project Site:	***Hanford***	Vessel Drawing:	***24590-PTF-MV-HLP-P0006***
Description:	***HLW Lag Storage Vessel***		

ISSUED BY
RPP-WTP PDC
MK 12.22.03
INIT DATE

R10182254

Reference Data

Charge Vessels (Tag Numbers)	***DELETED***
Pulsejet Mixers / Agitators (Tag Numbers)	***HLP-PJM-00060, HLP-PJM-00061, HLP-PJM-00062, HLP-PJM-00063, HLP-PJM-00064, HLP-PJM-00065, HLP-PJM-00066, HLP-PJM-00067***
RFDs/Pumps (Tag Numbers)	***DELETED***

Design Data

Quality Level		***See Vessel Drawing***	Fabrication Specs	***24590-WTP-3PS-MV00-TP001***		
Seismic Category		***SC-I***	Design Code	***ASME VIII Div 1***		
Service/Contents		***Radioactive Slurry***	Code Stamp	***Yes***		
Design Specific Gravity		***1.27***	NB Registration	***Yes***		
Maximum Operating Volume	gal	***112,900***	Weights (lbs)	Empty	Operating	Test
Total Volume	gal	***127,260***	Estimated	***227,050***	***1,458,400***	***1,291,900***
			Actual *			

Inside Diameter	inch	***300***			Wind Design	***Not Required***	
Length/Height (TL-TL)	inch	***354***			Snow Design	***Not Required***	
		Vessel Operating	Vessel Design	Coil/Jacket Design	Seismic Design	***24590-WTP-3PS-SS90-T0001***	
						24590-WTP-3PS-MV00-TP002	
Internal Pressure	psig	***0***	***15***	***35***	Seismic Base Moment *	ft*lb	
External Pressure	psig	***0.217***	***8 (Note 2)***	***15***	Postweld Heat Treat	***Not Required***	
Temperature	°F	***212*** 1	***237*** 1	***237*** 1	Corrosion Allowance	Inch	***0.04 (Note 3)***
Min. Design Metal Temp.	°F	***40***			Hydrostatic Test Pressure *	psig	

Please note that source, special nuclear and byproduct materials, as defined in the Atomic Energy Act of 1954 (AEA), are regulated at the U.S. Department of Energy (DOE) facilities exclusively by DOE acting pursuant to its AEA authority. DOE asserts that pursuant to the AEA, it has sole and exclusive responsibility and authority to regulate source, special nuclear, and byproduct materials at DOE-owned nuclear facilities. Information contained herein on radionuclides is provided for process description purposes only.

MARK W. HOFFMANN
STATE OF WASHINGTON
0030952
REGISTERED PROFESSIONAL ENGINEER

12/22/03

EXPIRES 12/10/04

This Bound Document Contains a total of 4 pages

REV	DATE	REASON FOR REVISION	PREPARER	CHECKER	REVIEWER	APPROVER
1	12/22/03	Issued for Permitting Use				
0	10/3/03	Issued for Permitting Use	Jessica Jackson	Rob Simmons	Cliff Slater	Mark Hoffmann

Processed/ Date Entry ☐ Copied/ QA ☒ Scanned ☐ Filed
12/22/03

BECHTEL	**MECHANICAL DATA SHEET: VESSEL**	**PLANT ITEM No.** ***24590-PTF-MV-HLP-VSL-00027A***

Materials of Construction

Component	Material	Minimum Thickness / Size	Containment
Top Head	***SA 240 316 (Note 7)*** 1	***See Drawing***	***Auxiliary***
Shell	***SA 240 316 (Note 7)*** 1	***See Drawing***	***Primary***
Bottom Head	***SA 240 316 (Note 7)*** 1	***See Drawing***	***Primary***
Support	***SA 240 304 (Note 7)*** 1	***See Drawing***	***N/A***
Jacket/Coils/Half-Pipe Jacket	***SA 240 316 (Note 7)*** 1	***See Drawing***	***N/A***
Internals	***SA 240 316 (Note 7)*** 1	***See Drawing***	***Thermowells Primary***
Pipe	***SA 312 TP316 Smls (Note 7)*** 1	***See Drawing***	***See Note 1***
Forgings/ Bar stock	***SA 182 F316 (Note 7)*** 1	***See Drawing***	***As Note 1 for Nozzle Necks***
Wash Ring Pipe	***SA 312 TP316 Smls (Note 7)*** 1	***See Drawing***	***N/A*** 1
Bolting/ Gaskets	***N/A***	***N/A***	***N/A***

Miscellaneous Data

Orientation	***Vertical***	Support Type	***Skirt***
Insulation Function	***Not Applicable***	Insulation Material	***Not Applicable***
Insulation Thickness (inch)	***Not Applicable***	Weld Surface Finish	***De-scaled as Laid (Note 6)*** 1

Remarks

* To be determined by the Seller.

Note 1: Nozzle necks below the high operating liquid level are Primary, others Auxiliary. See 24590-WTP-3PS-MV00-TP001 and vessel drawing for NDT. 1

Note 2: External design pressure under the jacket shall be rated for the jacket design pressure plus 1 psig internal vacuum in the vessel to account for ventilation fan pressures. 1

Note 3: Corrosion allowance for jacket shall be 0.04 inch.

Note 4: Vessel volumes are approximate and do not account for manufacturing tolerances, nozzles, and displacement of internals.

Note 5: Contents of this document are Dangerous Waste Permit affecting.

Note 6: Grind smooth shell welds at shell-jacket welds. 1

Note 7: Maximum carbon content of 0.030% for all welded components. 1

Note 8: The vessel design external pressure is estimated only and shall be confirmed by the Seller's calculations. 1

BECHTEL	**MECHANICAL DATA SHEET: VESSEL**	**PLANT ITEM No.** ***24590-PTF-MV-HLP-VSL-00027A***

Equipment Cyclic Data Sheet

Plant Item Number	***24590-PTF-MV-HLP-VSL-00027A***
Component Description	***Parent Vessel***

The information below is provisional and envelopes operational duty for fatigue assessment. It is not to be used as operational data.

Materials of Construction	***SA 240 316 with maximum carbon of 0.030 %***
Design Life	***40 years***
Component Function and Life Cycle Description	***This vessel is filled over a period of approximately 35 days. The vessel is also drained over an additional period of 35 days. Contents transferred as a batch to HLP-VSL-00028 (i.e., could be drained in one day). The vessel is drained and the internals are washed yearly. The temperature is maintained normally at or below 212°F.*** 1

Load Type		Min	Max	Number of Cycles	Comment
Design Pressure	psig	*-8*	*15*	*10*	***Nominal assumption for testing***
Operating Pressure	psig	*-0.217*	*0*	*N/A*	***Maximum pressure only achieved if ventilation is lost.***
Operating Temperature	°F	*50*	*212* 1	*N/A*	***Uniform material temperature range, not between two points. Temperature cycling is not required by design.***
Contents Specific Gravity		*1.00*	*1.27*	*880* 1	***Nominal assumption. Coincident with contents level cycles***
Contents Level	inch	***Empty***	*389*	*880* 1	***Contents level measured from center of bottom head***
Localized Features					
Nozzles		***Within 9°F of operating temperature range.***		***As above***	

Notes

- ***Cycle increase: The Seller must increase the numbers of operational cycles given above by 10% to account for commissioning duty unless otherwise noted.***

BECHTEL	**MECHANICAL DATA SHEET: VESSEL**	**PLANT ITEM No.** ***24590-PTF-MV-HLP-VSL-00027A***

Equipment Cyclic Data Sheet

Component Plant Item Number	***HLP-PJM-00060, HLP-PJM-00061, HLP-PJM-00062, HLP-PJM-00063, HLP-PJM-00064, HLP-PJM-00065, HLP-PJM-00066, HLP-PJM-00067***
Component Description	***Pulse Jet Mixers***

The information below is provisional and envelopes operational duty for fatigue assessment. It is not to be used as operational data.

Materials of Construction	***SA 240 316 with maximum carbon of 0.030 %***
Design Life	***40 Years***
Component Function and Life Cycle Description	***These pulse jet mixers (PJMs) are cyclically loaded using vacuum to fully fill the PJM with process liquid and compressed air to fully empty the PJM. The PJMs are contained within a parent vessel with varying liquid level. They shall be designed to cycle between the maximum design pressure and the minimum design pressure plus the external static head imposed by the parent vessel. The PJM supports shall be designed to cycle between fully buoyant (PJM empty and parent vessel full) and fully loaded (PJM full and parent vessel empty) in addition to thrust.*** 1

Load Type		Min	Max	Number of Cycles	Comment
Design Pressure	psig	***FV***	***80***	***10***	***Nominal assumption***
Operating Pressure	psig	***FV***	***72.5***	***$7.9X\ 10^5$***	***Pressure cycles to be at 212° F and non-coincident with temperature cycles*** 1
Operating Temperature	°F	***50***	***212*** 1	***N/A***	***Parent Vessel will be operated normally at a temperature of 212°F.*** 1
Contents Specific Gravity		***1.19***	***1.27***	***880*** 1	***Nominal assumption***
Contents Level	inch	***Empty***	***Flooded***	***$7.9\ X\ 10^5$***	
Localized Features					
Supports		***As above***		***As above with contents level changing coincident with pressure cycles.***	

Notes

- ***Cycle increase: The Seller must increase the numbers of operational cycles given above by 10% to account for commissioning duty unless otherwise noted.***

MECHANICAL DATA SHEET: VESSEL

PLANT ITEM No.
24590-PTF-MV-HLP-VSL-00027B

Project:	RPP-WTP	P&ID:	24590-PTF-M6-HLP-P0001
Project No:	24590	Process Calculation:	1 24590-PTF-MVC-HLP-00002
Project Site:	Hanford	Vessel Drawing	24590-PTF-MV-HLP-P0005
Description:	HLW Lag Storage Vessel		

ISSUED BY
RPP-WTP PDC
INIT DATE 12-22-03

R10182253

Reference Data

Charge Vessels (Tag Numbers)	DELETED
Pulsejet Mixers / Agitators (Tag Numbers)	HLP-PJM-00068, HLP-PJM-00069, HLP-PJM-00070, HLP-PJM-00071, HLP-PJM-00072, HLP-PJM-00073, HLP-PJM-00074, HLP-PJM-00075
RFDs/Pumps (Tag Numbers)	DELETED

Design Data

Quality Level		See Vessel Drawing	Fabrication Specs	24590-WTP-3PS-MV00-TP001		
Seismic Category		SC-I	Design Code	ASME VIII Div 1		
Service/Contents		Radioactive Slurry	Code Stamp	Yes		
Design Specific Gravity		1.27	NB Registration	Yes		
Maximum Operating Volume	gal	112,900	Weights (lbs)	Empty	Operating	Test
Total Volume	gal	127,260	Estimated	227,050	1,458,400	1,291,900
			Actual *			

Inside Diameter	inch	300			Wind Design	Not Required	
Length/Height (TL-TL)	inch	354			Snow Design	Not Required	
		Vessel Operating	Vessel Design	Coil/Jacket Design	Seismic Design	24590-WTP-3PS-SS90-T0001	
						24590-WTP-3PS-MV00-TP002	
Internal Pressure	psig	0	15	35	Seismic Base Moment *	ft*lb	
External Pressure	psig	0.217	8 (Note 2)	15	Postweld Heat Treat	Not Required	
Temperature	°F	212 1	237 1	237 1	Corrosion Allowance	Inch	0.04 (Note 3)
Min. Design Metal Temp.	°F	40			Hydrostatic Test Pressure *	psig	

Please note that source, special nuclear and byproduct materials, as defined in the Atomic Energy Act of 1954 (AEA), are regulated at the U.S. Department of Energy (DOE) facilities exclusively by DOE acting pursuant to its AEA authority. DOE asserts that pursuant to the AEA, it has sole and exclusive responsibility and authority to regulate source, special nuclear, and byproduct materials at DOE-owned nuclear facilities. Information contained herein on radionuclides is provided for process description purposes only.

MARK W. HOFFMANN
STATE OF WASHINGTON
0030952
REGISTERED
PROFESSIONAL ENGINEER
12/22/03

EXPIRES 12/10/04

This Bound Document Contains a total of 4 pages

REV	DATE	REASON FOR REVISION	PREPARER	CHECKER	REVIEWER	APPROVER
1	12/22/03	Issued for Permitting Use				
0	10/3/03	Issued for Permitting Use	Jessica Jackson	Rob Simmons	Cliff Slater	Mark Hoffmann

12/22/03
☒ Processed/ Date Entry ☐ Copied/ QA ☒ Scanned ☐ Filed
12/22/03

BECHTEL	**MECHANICAL DATA SHEET: VESSEL**	**PLANT ITEM No.** ***24590-PTF-MV-HLP-VSL-00027B***

Materials of Construction

Component	Material	Minimum Thickness / Size	Containment
Top Head	***SA 240 316 (Note 8)*** 1	***See Drawing***	***Auxiliary***
Shell	***SA 240 316 (Note 8)*** 1	***See Drawing***	***Primary***
Bottom Head	***SA 240 316 (Note 8)*** 1	***See Drawing***	***Primary***
Support	***SA 240 304 (Note 8)*** 1	***See Drawing***	***N/A***
Jacket/Coils/Half-Pipe Jacket	***SA 240 316 (Note 8)*** 1	***See Drawing***	***N/A***
Internals	***SA 240 316 (Note 8)*** 1	***See Drawing***	***Thermowells Primary***
Pipe	***SA 312 TP316 Smls (Note 8)*** 1	***See Drawing***	***See Note 1***
Forgings/ Bar stock	***SA 182 F316 (Note 8)*** 1	***See Drawing***	***As Note1 for Nozzle Necks***
Wash Ring Pipe	***SA 312 TP316 Smls (Note 8)*** 1	***See Drawing***	***N/A*** 1
Bolting/ Gaskets	***N/A***	***N/A***	***N/A***

Miscellaneous Data

Orientation	***Vertical***	Support Type	***Skirt***
Insulation Function	***Not Applicable***	Insulation Material	***Not Applicable***
Insulation Thickness (inch)	***Not Applicable***	Weld Surface Finish	***De-scaled as Laid (Note 7)*** 1

Remarks

* To be determined by the Seller.

Note 1: Nozzle necks below the high operating liquid level are Primary, others Auxiliary. See 24590-WTP-3PS-MV00-TP001 and vessel drawing for NDT. 1

Note 2: External design pressure under the jacket shall be rated for the jacket design pressure plus 1 psig internal vacuum in the vessel to account for ventilation fan pressures. 1

Note 3: Corrosion allowance for jacket shall be 0.04 inch.

Note 4: Vessel volumes are approximate and do not account for manufacturing tolerances, nozzles, and displacement of internals.

Note 5: Contents of this document are Dangerous Waste Permit affecting.

Note 6: Deleted 1

Note 7: Grind smooth shell welds at shell-jacket welds. 1

Note 8: Maximum carbon content of 0.030% for all welded components. 1

Note 9: The vessel design external pressure is estimated only and shall be confirmed by the Seller's calculations. 1

BECHTEL	**MECHANICAL DATA SHEET: VESSEL**	**PLANT ITEM No.** ***24590-PTF-MV-HLP-VSL-00027B***

Equipment Cyclic Data Sheet

Plant Item Number	***24590-PTF-MV-HLP-VSL-00027B***
Component Description	***Parent Vessel***

The information below is provisional and envelopes operational duty for fatigue assessment. It is not to be used as operational data.

Materials of Construction	***SA 240 316 with max. Carbon of 0.030 %***
Design Life	***40 years***
Component Function and Life Cycle Description	***This vessel is filled over a period of approximately 35 days (batch volume is 83,710 gal). The vessel is also drained over an additional period of 35 days. The vessel is drained and the internals washed yearly. The temperature is maintained normally at or below 212°F.*** 1

Load Type		Min	Max	Number of Cycles	Comment
Design Pressure	psig	***-8***	***15***	***10***	***Nominal assumption for testing***
Operating Pressure	psig	***-0.217***	***0***	***N/A***	***Maximum pressure only achieved if ventilation is lost.***
Operating Temperature	°F	***50***	***212*** 1	***N/A***	***Uniform material temperature range, not between two points. Temperature cycling is not required by design.***
Contents Specific Gravity		***1.00***	***1.27***	***880*** 1	***Nominal assumption. Coincident with contents level cycles***
Contents Level	inch	***Empty***	***389***	***880*** 1	***Contents level measured from center of bottom head***
Localized Features					
Nozzles		***Within 9°F of operating temperature range.***		***As above.***	

Notes

- ***Cycle increase: The Seller must increase the numbers of operational cycles given above by 10% to account for commissioning duty unless otherwise noted.***

BECHTEL	**MECHANICAL DATA SHEET: VESSEL**	**PLANT ITEM No.** ***24590-PTF-MV-HLP-VSL-00027B***

Equipment Cyclic Data Sheet

Component Plant Item Number	***HLP-PJM-00068, HLP-PJM-00069, HLP-PJM-00070, HLP-PJM-00071, HLP-PJM-00072, HLP-PJM-00073, HLP-PJM-00074, HLP-PJM-00075***
Component Description	***Pulse Jet Mixers***

The information below is provisional and envelopes operational duty for fatigue assessment. It is not to be used as operational data.

Materials of Construction	***SA 240 316 with max. Carbon of 0.030 %***
Design Life	***40 Years***
Component Function and Life Cycle Description	***These pulse jet mixers (PJMs) are cyclically loaded using vacuum to fully fill the PJM with process liquid and compressed air to fully empty the PJM. The PJMs are contained within a parent vessel with varying liquid level. They shall be designed to cycle between the maximum design pressure and the minimum design pressure plus the external static head imposed by the parent vessel. The PJM supports shall be designed to cycle between fully buoyant (PJM empty and parent vessel full) and fully loaded (PJM full and parent vessel empty) in addition to thrust.*** 1

Load Type		Min	Max	Number of Cycles	Comment
Design Pressure	psig	***FV***	***80***	***10***	***Nominal assumption***
Operating Pressure	psig	***FV***	***72.5***	***$7.9X\ 10^5$***	***Pressure cycles to be at 212° F and non-coincident with temperature cycles*** 1
Operating Temperature	°F	***50***	***212*** 1	***N/A***	***Parent Vessel will be operated normally at a temperature of 212°F.*** 1
Contents Specific Gravity		***1.19***	***1.27***	***880*** 1	***Nominal assumption***
Contents Level	inch	***Empty***	***Flooded***	***$7.9\ X\ 10^5$***	
Localized Features					
Supports		***As above***		***As above with contents level changing coincident with pressure cycles.***	

Notes

- ***Cycle increase: The Seller must increase the number of operational cycles given above by 10% to account for commissioning duty unless otherwise noted.***

MECHANICAL DATA SHEET: VESSEL

PLANT ITEM No.
24590-PTF-MV-HLP-VSL-00028

Project:	***RPP-WTP***	P&ID:	***24590-PTF-M6-HLP-P0003***
Project No:	***24590***	Process Calculation: 1	***24590-PTF-MVC-HLP-00009***
Project Site:	***Hanford***	Vessel Drawing	***24590-PTF-MV-HLP-P0004***
Description:	***HLW Feed Blending Vessel***		

ISSUED BY RPP-WTP PDC
INIT DATE 12-22-03

R10182256

Reference Data

Charge Vessels (Tag Numbers)	***DELETED***
Pulsejet Mixers / Agitators (Tag Numbers)	***HLP-PJM-00076, HLP-PJM-00077, HLP-PJM-00078, HLP-PJM-00079, HLP-PJM-00080, HLP-PJM-00081, HLP-PJM-00082, HLP-PJM-00083***
RFDs/Pumps (Tag Numbers)	***DELETED***

Design Data

Quality Level	***See Vessel Drawing***	Fabrication Specs	***24590-WTP-3PS-MV00-TP001***		
Seismic Category	***SC-I***	Design Code	***ASME VIII Div 1***		
Service/Contents	***Radioactive Slurry***	Code Stamp	***Yes***		
Design Specific Gravity	***1.27***	NB Registration	***Yes***		
Maximum Operating Volume gal	***125,430***	Weights (lbs)	Empty	Operating	Test
Total Volume gal	***142,200***	Estimated	***242,200***	***1,610,300***	***1,432,000***
		Actual *			

Inside Diameter	inch	***318***			Wind Design	***Not Required***	
Length/Height (TL-TL)	inch	***348***			Snow Design	***Not Required***	
		Vessel Operating	Vessel Design	Coil/Jacket Design	Seismic Design	***24590-WTP-3PS-SS90-T0001***	
						24590-WTP-3PS-MV00-TP002	
Internal Pressure	psig	***0***	***15***	***35***	Seismic Base Moment *	ft*lb	
External Pressure	psig	***0.217***	***8 (Note 2)***	***15***	Postweld Heat Treat	***Not Required***	
Temperature	°F	***212*** 1	***237*** 1	***237*** 1	Corrosion Allowance	Inch	***0.04 (Note 3)***
Min. Design Metal Temp.	°F	***40***			Hydrostatic Test Pressure *	psig	

Please note that source, special nuclear and byproduct materials, as defined in the Atomic Energy Act of 1954 (AEA), are regulated at the U.S. Department of Energy (DOE) facilities exclusively by DOE acting pursuant to its AEA authority. DOE asserts that pursuant to the AEA, it has sole and exclusive responsibility and authority to regulate source, special nuclear, and byproduct materials at DOE-owned nuclear facilities. Information contained herein on radionuclides is provided for process description purposes only.

MARK W. HOFFMANN
STATE OF WASHINGTON
0030952
REGISTERED PROFESSIONAL ENGINEER
12/22/03

EXPIRES 12/10/04

This Bound Document Contains a total of 4 pages

REV	DATE	REASON FOR REVISION	PREPARER	CHECKER	REVIEWER	APPROVER
1	12/22/03	Issued for Permitting Use				
0	10/3/03	Issued for Permitting Use	Jessica Jackson	Rob Simmons	Cliff Slater	Mark Hoffmann

12/22/03
☒ Processed/Date Entry ☐ Copied/QA ☒ Scanned ☐ Filed
12/22/03

BECHTEL	**MECHANICAL DATA SHEET: VESSEL**	**PLANT ITEM No.** ***24590-PTF-MV-HLP-VSL-00028***

Materials of Construction

Component	Material	Minimum Thickness / Size	Containment
Top Head	***SA 240 316 (Note 8)*** 1	***See Drawing***	***Auxiliary***
Shell	***SA 240 316 (Note 8)*** 1	***See Drawing***	***Primary***
Bottom Head	***SA 240 316 (Note 8)*** 1	***See Drawing***	***Primary***
Support	***SA 240 304 (Note 8)*** 1	***See Drawing***	***N/A***
Jacket/Coils/Half-Pipe Jacket	***SA 240 316 (Note 8)*** 1	***See Drawing***	***N/A***
Internals	***SA 240 316 (Note 8)*** 1	***See Drawing***	***Thermowells Primary***
Pipe	***SA312 TP316 Smls (Note 8)*** 1	***See Drawing***	***See Note 1***
Forgings/ Bar stock	***SA 182 F316 (Note 8)*** 1	***See Drawing***	***As Note 1 for Nozzle Necks***
Wash Ring Pipe	***S 312 TP316 Smls (Note 8)*** 1	***See Drawing***	***N/A*** 1
Bolting/ Gaskets	***N/A***	***N/A***	***N/A***

Miscellaneous Data

Orientation	***Vertical***	Support Type	***Skirt***
Insulation Function	***Not Applicable***	Insulation Material	***Not Applicable***
Insulation Thickness (inch)	***Not Applicable***	Weld Surface Finish	***De-scaled as laid (Note 7)*** 1

Remarks

* To be determined by the Seller.

Note 1: Nozzle necks below the high operating liquid level are Primary, others Auxiliary. See 24590-WTP-3PS-MV00-TP001 and vessel drawing for NDT. 1

Note 2: External design pressure under the jacket shall be rated for the jacket design pressure plus 1 psig internal vacuum in the vessel to account for ventilation fan pressures. 1

Note 3: Corrosion allowance for jacket shall be 0.04 inch.

Note 4: Vessel volumes are approximate and do not account for manufacturing tolerances, nozzles, and displacement of internals

Note 5: Contents of this document are Dangerous Waste Permit affecting.

Note 6: Deleted 1

Note 7: Grind smooth shell welds at shell-jacket welds. 1

Note 8: Maximum carbon content of 0.030% for all welded components. 1

Note 9: The vessel design external pressure is estimated only and shall be confirmed by the Seller's calculations. 1

Equipment Cyclic Data Sheet

Plant Item Number	*24590-PTF-MV-HLP-VSL-00028*
Component Description	*Parent Vessel*

The information below is provisional and envelopes operational duty for fatigue assessment. It is not to be used as operational data.

Materials of Construction	*SA 240 316 with max. Carbon of 0.030 %*
Design Life	*40 years*
Component Function and Life Cycle Description	*This vessel is filled and drained over a period of 30 days. The vessel is drained and the internals are washed yearly. The temperature is maintained normally at or below 212°F.* 1

Load Type		Min	Max	Number of Cycles	Comment
Design Pressure	psig	*-8*	*15*	*10*	*Nominal assumption for testing*
Operating Pressure	psig	*-0.217*	*0*	*N/A*	*Maximum pressure only achieved if ventilation is lost.*
Operating Temperature	°F	*50*	*212* 1	*N/A*	*Uniform material temperature range, not between two points. Temperature cycling is not required by design.*
Contents Specific Gravity		*1.00*	*1.27*	*880* 1	*Nominal assumption. Coincident with contents level cycles*
Contents Level	inch	*Empty*	*386*	*880* 1	*Content level measured from center of bottom head*
Localized Features					
Nozzles		*Within 9°F of operating temperature range.*		*As above*	

Notes

- ***Cycle increase: The Seller must increase the numbers of operational cycles given above by 10% to account for commissioning duty unless otherwise noted.***

BECHTEL	**MECHANICAL DATA SHEET: VESSEL**	**PLANT ITEM No.** ***24590-PTF-MV-HLP-VSL-00028***

Equipment Cyclic Data Sheet

Component Plant Item Number	***HLP-PJM-00076, HLP-PJM-00077, HLP-PJM-00078, HLP-PJM-00079, HLP-PJM-00080, HLP-PJM-00081, HLP-PJM-00082, HLP-PJM-00083***
Component Description	***Pulse Jet Mixers***

The information below is provisional and envelopes operational duty for fatigue assessment. It is not to be used as operational data.

Materials of Construction	***SA 240 316 with max. Carbon of 0.030 %***
Design Life	***40 Years***
Component Function and Life Cycle Description	***These pulse jet mixers (PJMs) are cyclically loaded using vacuum to fully fill the PJM with process liquid and compressed air to fully empty the PJM. The PJMs are contained within a parent vessel with varying liquid level. They shall be designed to cycle between the maximum design pressure and the minimum design pressure plus the external static head imposed by the parent vessel. The PJM supports shall be designed to cycle between fully buoyant (PJM empty and parent vessel full) and fully loaded (PJM full and parent vessel empty) in addition to thrust.*** 1

Load Type		Min	Max	Number of Cycles	Comment
Design Pressure	psig	***FV***	***80***	***10***	***Nominal assumption***
Operating Pressure	psig	***FV***	***72.5***	***$7.9X\ 10^5$***	***Pressure cycles to be at 212° F and non-coincident with temperature cycles*** 1
Operating Temperature	°F	***50***	***212*** 1	***N/A***	***Parent Vessel will be operated normally at a temperature of 212°F.*** 1
Contents Specific Gravity		***1.19***	***1.27***	***880*** 1	***Nominal assumption***
Contents Level	inch	***Empty***	***Flooded***	***$7.9\ X\ 10^5$***	
Localized Features					
Supports		***As above***		***As above with contents level changing coincident with pressure cycles.***	

Notes

- ***Cycle increase: The Seller must increase the numbers of operational cycles given above by 10% to account for commissioning duty unless otherwise noted.***

R10379538

MECHANICAL SYSTEMS DATA SHEET: VESSEL

PLANT ITEM No.
24590-PTF-MV-PJV-VSL-00002

ISSUED BY
RPP-WTP PDC

Project:	***RPP-WTP***	P&ID:	***24590-PTF-M6-PJV-P0002***
Project No:	***24590***	Process Calculation:	***Deleted***
Project Site:	***Hanford***	Vessel Drawing	***24590-PTF-MV-PJV-P0001***
Description:	***PJV Drain Collection Vessel***		

Reference Data

Charge Vessels (Plant Item Numbers)	***None***
Pulsejet Mixers / Agitators (Plant Item Numbers)	***None***
RFD(s)/Pump(s) (Plant Item Numbers)	***None***

Design Data

Quality Level		***QL-2***	*Fabrication Specs*	***24590-WTP-3PS-MV00-TP001***		
Seismic Category		***SC-II***	*Design Code*	***ASME Sec VIII, Div-1***		
Service/Contents		***Process Radioactive Cond.***	*Code Stamp*	***YES***		
Design Specific Gravity		***1.00***	*NB Registration*	***YES***		
Operating Volume	gal	***7408***	Weights (lbs)	Empty	Operating	Test
Total Volume	gal	***8975***	Estimated	***21476***	***85775***	***96748***
			Actual *			

Inside Diameter	inch	***120***			Wind Design	***N/A***	
Length/Height (TL-TL)	inch	***144***			Snow Design	***N/A***	
		Vessel Operating	Vessel Design	Coil/Jacket Design	Seismic Design	***24590-WTP-3PS-MV00-TP002*** ***24590-WTP-3PS-SS90-T0001***	
Internal Pressure	psig	***0***	***15***		Seismic Base Moment *	ft*lb	
External Pressure	psig	***0.22***	***FV***		Postweld Heat Treat	***No***	
Temperature	°F	***113***	***200***		Corrosion Allowance	Inch	***0.04***
Min. Design Metal Temp.	°F	***-20***			Hydrostatic Test Pressure *	Psig	

Please note that source, special nuclear and byproduct materials, as defined in the Atomic Energy Act of 1954 (AEA), are regulated at the U.S. Department of Energy (DOE) facilities exclusively by DOE acting pursuant to its AEA authority. DOE asserts, that pursuant to the AEA, it has sole and exclusive responsibility and authority to regulate source, special nuclear, and byproduct materials at DOE-owned nuclear facilities. Information contained herein on radionuclides is provided for process description purposes only.

MARK W. HOFFMANN
STATE OF WASHINGTON
0030952
REGISTERED
PROFESSIONAL ENGINEER

9/15/04

EXPIRES 12/10/04

This bound document contains a total of 2 sheets

REV	DATE	REASON FOR REVISION	PREPARER	CHECKER	REVIEWER	APPROVER
0	9/15/04	Issued for Permitting Use				

BECHTEL	**MECHANICAL SYSTEMS DATA SHEET: VESSEL**	**PLANT ITEM No.** ***24590-PTF-MV-PJV-VSL-00002***

Materials of Construction

Component	Material	Minimum Thickness / Size	Containment
Top Head	***SA-240-304 (See Note-3)***	***See Drawing***	***Auxiliary (See note 5)***
Shell	***SA-240-304 (See Note-3)***	***See Drawing***	***Primary (See note 5)***
Bottom Head	***SA-240-304 (See Note-3)***	***See Drawing***	***Primary (See note 5)***
Support	***SA-240-304 (See Note-3)***	*	***N/A***
Jacket/Coils/Half-Pipe Jacket	***N/A***	***N/A***	***N/A***
Internals	***SA-240-304 (See Note-3)***	***See Drawing***	***N/A***
Pipe Nozzles	***SA-312-304 (See Note-3)***	***See Drawing***	***Primary (See note 5)***
Forgings/ Bar stock	***SA-182-304 (See Note-3)***	***See Drawing***	
Bolting	***N/A***	***N/A***	***N/A***

Miscellaneous Data

Orientation	***Vertical***	Support Type	***Skirt***
Insulation Function	***NA***	Insulation Material	***NA***
Insulation Thickness (inch)	***NA***	Internal Finish	***Welds descaled as laid***
		External Finish	***Welds descaled as laid***

Remarks

* To be determined by the vendor.

Note 1: Deleted

Note 2: Design life is 40 years

Note 3: Material shall have carbon content of 0.030% Max. Dual certified.

Note 4: This Vessel is in a Black Cell

Note 5: All Welds forming part of the Primary and auxiliary containment including Nozzle attachment welds shall be subjected to 100% Volumetric Examination

R10437931

MECHANICAL DATA SHEET: VESSEL

PLANT ITEM No.
24590-PTF-MV-PVP-VSL-00001

Project:	***RPP-WTP***	P&ID:	***24590-PTF-M6-PVP-~~P~~0018*** 0 11/11/04
Project No:	***24590***	Process Data Sheet:	***Deleted***
Project Site:	***DOE Hanford Site***	Vessel Drawing	***24590-PTF-MV-PVP-P0002***
Description:	***HEME DRAIN COLLECTION VESSEL***		ISSUED BY RPP-WTP PDC

Reference Data

Charge Vessels (Tag Numbers)	***None***
Pulsejet Mixers / Agitators (Tag Numbers)	***None***
RFDs/Pumps (Tag Numbers)	***None***

Design Data

Quality Level		***QL-2***	Fabrication Specs	***24590-WTP-3PS-MV00-TP001***		
Seismic Category		***SC-II***	Design Code	***ASME VIII Div 1***		
Service/Contents		***Radioactive Liquid***	Code Stamp	***Yes***		
Design Specific Gravity		***1.00***	NB Registration	***Yes***		
Maximum Operating Volume	gal	***1650***	Weights (lbs)	Empty	Operating	Test
Total Volume	gal	***1969***	Estimated **	***9700***	***23473***	***26161***
Radiograph		***100% (Note 4)***	Actual **			

Inside Diameter	inch	***72***			Wind Design	***Not Required***	
Length/Height (TL-TL)	inch	***88***			Snow Design	***Not Required***	
		Vessel Operating	Vessel Design	Coil/Jacket Design	Seismic Design	***24590-WTP-3PS-SS90-T0001*** ***24590-WTP-3PS-MV00-TP002***	
Internal Pressure	psig	***0***	***15***	***NA***	Seismic Base Moment **	ft*lb	
External Pressure	psig	***0.58***	***FV***	***NA***	Postweld Heat Treatment	***Not Required***	
Temperature	°F	***113***	***200***	***NA***	Corrosion Allowance	Inch	***0.04***
Min. Design Metal Temp.	°F	***40***			Hydrostatic Test Pressure **	psig	

Please note that source, special nuclear and byproduct materials, as defined in the Atomic Energy Act of 1954 (AEA), are regulated at the U.S. Department of Energy (DOE) facilities exclusively by DOE acting pursuant to its AEA authority. DOE asserts, that pursuant to the AEA, it has sole and exclusive responsibility and authority to regulate source, special nuclear, and byproduct materials at DOE-owned nuclear facilities. Information contained herein on radionuclides is provided for process description purposes only.

MARK W. HOFFMANN
STATE OF WASHINGTON
0030952
REGISTERED PROFESSIONAL ENGINEER

11/11/04

EXPIRES 12/10/04

This bound document contains a total of 2 sheets

REV	DATE	REASON FOR REVISION	PREPARER	CHECKER	REVIEWER	APPROVER
0	11/11/04	Issued for Permitting Use				

BECHTEL	**MECHANICAL DATA SHEET: VESSEL**	**PLANT ITEM No.** ***24590-PTF-MV-PVP-VSL-00001***

Materials of Construction

Component	Material	Minimum Thickness / Size	Containment
Top Head	***SA-240-304 (Note-2)***	***See Drawing***	***Auxiliary (See Note 1)***
Shell	***SA-240-304 (Note-2)***	***See Drawing***	***Primary (See Note 1)***
Bottom Head	***SA-240-304 (Note-2)***	***See Drawing***	***Primary (See Note 1)***
Support (Skirt)	***SA-240-304 (Note-2)***	**	***NA***
Jacket/Coils/Half-Pipe Jacket	***NA***	***NA***	***NA***
Internals	***SA-240-304 (Note-2)***	***See Drawing***	***NA***
Pipe	***SA-312-304 (Note-2)***	***See Drawing***	***See Note-1***
Forgings/ Bar stock	***SA-182-304 (Note-2)***	***See Drawing***	***As Note-1 for Nozzle Necks***
Bolting/Gaskets	***NA***	***NA***	***NA***

Miscellaneous Data

Orientation	***Vertical***	Support Type	***Skirt***
Insulation Function	***NA***	Insulation Material	***NA***
Insulation Thickness (inch)	***NA***	External Finish	***NA***

Remarks

*** To be confirmed by Seller*

Note 1: All welds forming part of the primary and auxiliary containment including nozzle attachment welds shall be subjected to 100% volumetric examination.

Note 2: Material shall have carbon content of 0.030% Max. Dual certified. Non-Welded specialty items are excluded

Note 3 : Vessel volumes are approximate and do not account for manufacturing tolerances, nozzles, and displacement of internals

Note 4: This vessel is located in a Black Cell

R10613725

MECHANICAL SYSTEMS DATA SHEET: VESSEL

PLANT ITEM No. *24590-PTF-MV-PWD-VSL-00033*

Project	*RPP-WTP*	P&ID	*24590-PTF-M6-PWD-P0002*
Project No	*24590*	Calculation 3	*24590-PTF-MVC-PWD-00029, 24590-PTF-MVC-PWD-00021* 3
Project Site	*Hanford*	Vessel Drawing	*24590-PTF-MV-PWD-P0001001*
Description	*Ultimate Overflow Vessel*		

ISSUED BY
RPP-WTP PDC

Reference Data

Charge Vessels (Tag Numbers)	*PWD-VSL-00131, PWD-VSL-00132*
Pulsejet Mixers / Agitators (Tag Numbers)	*PWD-PJM-00031, PWD-PJM-00032, PWD-PJM-00033, PWD-PJM-00034, PWD-PJM-00035, PWD-PJM-00036, PWD-PJM-00037, PWD-PJM-00038*
RFDs/Pumps (Tag Numbers)	*PWD-RFD-00131, PWD-RFD-00132*

Design Data

Quality Level		*QL-1*	Fabrication Specs	*24590-WTP-3PS-MV00-TP001*		
Seismic Category		*SC-I*	Design Code	*ASME VIII Div 1*		
Service/Contents		*Radioactive Liquid*	Code Stamp	*Yes*		
Design Specific Gravity		*1.57*	NB Registration	*Yes*		
Operating Volume	gal	*29,580*	Weights (lbs)	Empty	Operating	Test
Total Volume	gal	*41,650*	Estimated	*115,400*	*503,700*	*465,000*
Environmental Qualifications		*N/A*	Actual ** 3	*129,000*	*517,500* 3	*499,600* 3

Inside Diameter	inch	*288*			Wind Design	*Not Required*	
Length/Height (TL-TL)	inch	*89*			Snow Design	*Not Required*	
		Vessel Operating	Vessel Design	Coil/Jacket Design	Seismic Design	*24590-WTP-3PS-SS90-T0001* *24590-WTP-3PS-MV00-TP002*	
Internal Pressure	psig	*0*	*15*	*N/A*	Seismic Base Moment *	ft*lb	
External Pressure	psig	*0.22*	*FV*	*N/A*	Postweld Heat Treat	*Not Required*	
Temperature	°F	*218*	*225*	*N/A*	Corrosion Allowance	Inch	*0.08 (Notes 7,8)*
Min. Design Metal Temp.	°F	*0*			Hydrostatic Test Pressure *	Psig	*19.5*

* As determined by the vendor. 3
** The actual weights shown herein are based on the original seismic data and these figures are subject to change, based on the new loads, obtained from the seismic redesign. 3

Note: Please note that source, special nuclear and byproduct materials, as defined in the Atomic Energy Act of 1954 (AEA), are regulated at the U.S. Department of Energy (DOE) facilities exclusively by DOE acting pursuant to its AEA authority. DOE asserts, that pursuant to the AEA, it has sole and exclusive responsibility and authority to regulate source, special nuclear, and byproduct materials at DOE-owned nuclear facilities. Information contained herein on radionuclides is provided for process description purposes only.

ERIC B. ISERN
STATE OF WASHINGTON
33449
REGISTERED
PROFESSIONAL ENGINEER
2/13/06
EXPIRES: 07/28/07

This Bound Document Contains a total of 6 sheets

REV	DATE	REASON FOR REVISION	PREPARER	CHECKER	REVIEWER	APPROVER
3	2/26/06	Issued for Permitting Use	C. Thompson	B. Makadia/L. Han	C. Slater	J. Julyk
2	3/28/05	Issued for Permitting Use	C. Thompson	H. Khurana	C. Slater	M. Hoffmann
1	12/22/03	Issued for Permitting Use	J. Jackson	R. Simmons	C. Slater	M. Hoffmann
0	10/03/03	Issued for Permitting Use	J. Jackson	C. Slater	N/A	S. Kirk

BECHTEL	**MECHANICAL SYSTEMS DATA SHEET: VESSEL**	**PLANT ITEM No.** ***24590-PTF-MV-PWD-VSL-00033***

Materials of Construction

Component	Material	Minimum Thickness / Size	Containment
Top Head	***SA 240 316 with max. Carbon of 0.030 %***	***See Drawing***	***Auxiliary (Note 1)***
Shell	***SA 240 316 with max. Carbon of 0.030 %***	***See Drawing***	***Primary (Note 1)***
Bottom Head	***SA 240 316 with max. Carbon of 0.030 %***	***See Drawing***	***Primary (Note 1)***
Support	***SA 240 304 with max. Carbon of 0.030 % (Note 3)***	***See Drawing***	***N/A***
Jacket/Coils/Half-Pipe Jacket	***N/A***	***N/A***	***N/A***
Internals	***SA240 316 with max. Carbon of 0.030 %***	***See Drawing***	***Thermowell Primary (Note 1)***
Pipe	***SA312 TP316 Seamless with max. Carbon of 0.030%***	***See Drawing***	***See Note 1***
Forgings/ Bar stock	***SA182 F316/SA 479 316 with max. Carbon of 0.030%***	***See Drawing***	***As Note-1 for Nozzle Necks***
Gaskets	***N/A***	***N/A***	***N/A***
Bolting	***N/A***	***N/A***	***N/A***

Miscellaneous Data

Orientation	***Vertical***	Support Type	***Skirt***
Insulation Function	***Not Applicable***	Insulation Material	***Not Applicable***
Insulation Thickness (inch)	***Not Applicable***	Weld Surface Finish	***De-scaled as laid***

Remarks

Note 1: All welds forming part of the primary and auxiliary containments, including the nozzle attachment welds shall be subjected to 100% volumetric examination. Radiography is the preferred method of volumetric testing. If it is considered impractical to perform radiographic examination, the Seller may propose ultrasonic examinations.

Note 2: Vessel supports shall be designed to restrain the vessel in a fully buoyant state.

Note 3: Ring beam bottom flange material shall be A 572 Gr. 50.

Note 4: Vessel volumes are approximate and do not account for manufacturing tolerances, nozzles, and displacement of internals.

Note 5: Contents of this document are Dangerous Waste Permit affecting.

Note 6: Deleted per report # 24590-WTP-RPT-M-04-0007 Rev. 0 dated Nov. 1, 2004. 3

Note 7: Seller shall ensure that an additional 0.083" is available for erosion in the bottom head and shall report the minimum thickness required for all specified loading conditions, exclusive of erosion and corrosion allowances. 3

Note 8: Seller shall ensure that an additional 0.053" is available for erosion in the interior conical surface of the pulse jet mixers. 3

Note 9: Required data for thermal stress analysis for nozzles exposed to higher temperatures.

- ***Cell ambient temperature = 113°F***
- ***Headspace temperature or Operating temperature = 218°F***
- ***Ambient and headspace natural convection heat transfer coefficients = 0.895 Btu/hr ft² °F for vessel head and 0.852 Btu/hr ft² °F for vessel shell***
- ***Inlet fluid transfer frequency and mass flow rate for nozzle N39.***

  Steam max temperature = 352°F

  Transfer frequency = 1 transfer/month

  Steam mass flow rate = 1,399 lb/hr

Note 10: Deleted. 3

Note 11: Revision 3 of this data sheet incorporates CCN #'s 129149, 128549 and revises notes 7, 8 and 10 shown above. The CCN's added the words "...in the form of overblow pressures:", to the paragraph above the graph and further revised the note below the graph, as noted herein on sheet 4 of 6. Revised sheet 1 of 6 as noted, revised row 2 to read "Calculation". 3

BECHTEL	**MECHANICAL SYSTEMS DATA SHEET: VESSEL**	**PLANT ITEM No.** ***24590-PTF-MV-PWD-VSL-00033***

Equipment Cyclic Data Sheet

Plant Item Number	***24590-PTF-MV-PWD-VSL-00033***
Component Description	***Parent Vessel***

The information below is provisional and envelopes operational duty for fatigue assessment. It is not to be used as operational data.

Materials of Construction	***SA 240 316 with max. Carbon of 0.030%***
Design Life	***40 years***
Component Function and Life Cycle Description	***The primary function of the Ultimate Overflow Vessel are to:*** • ***Collect gravity drains, and line flushes*** • ***Collect overflows from Pretreatment Facility process vessels.*** • ***Receive pit sump emptying ejector discharge*** ***The vessel is normally emptied once every fifty days. Washdown is not more than once per year.***

Load Type		Min	Max	Number of Cycles	Comment
Design Pressure	psig	***FV***	***15***	***10***	***Nominal assumption***
Operating Pressure	psig	***-0.22***	***0***	***292***	
Operating Temperature	°F	***59***	***218***	***292***	***Uniform material temperature range, not between two points***
Contents Specific Gravity		***1.0***	***1.57***	***NA***	
Contents Level	inch	***Empty***	***Flooded***	***292***	***Coincident with pressure cycles***
Localized Features					
Nozzles		***Within 50°F of operating temperature range***		***As above***	

Hydrodynamic Loading

In normal operation, pulse jet mixers discharge liquid into the parent vessel imposing a cyclical hydrodynamic load on all internal components. Occasionally, an upset condition designated 'overblow' causes air to be discharged from any single pulse jet mixer. All internal components shall be designed for the combination of the normal operational hydrodynamic loads and overblow loads, and this load combination is also to be assumed to act concurrently with seismic loads.

The following table indicates the normal hydrodynamic pressure at ranges of elevations in the vessel and the number of design cycles for each condition. The hydrodynamic forces cycle between the indicated pressure ranges applied across the projected area of the component. Positive hydrodynamic forces act in the radial, outward direction and the vertical, upward direction. Apply the radial load simultaneously in the radial direction and normal to the radial direction in the horizontal plane.

Normal Operation Hydrodynamic Pressure Range, psi						Number of Cycles
Elevation A		Elevation B		Elevation C		
Radial	Vertical	Radial	Vertical	Radial	Vertical	
-0.15 to 0.25	***-0.15 to 0.15***	***-0.05 to 0.12***	***-0.15 to 0.15***	***-0.03 to 0.10***	***-0.06 to 0.15***	***16.6×10^6***

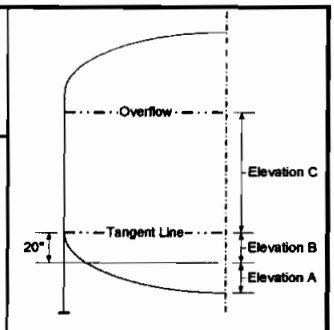

Overblow loads vary as a function of the distance from the center of the overblowing pulse jet mixer nozzle and the elevation 'H' above the overblowing pulse jet mixer nozzle, up to the overflow level, as plotted in the form of overblow pressures: 3

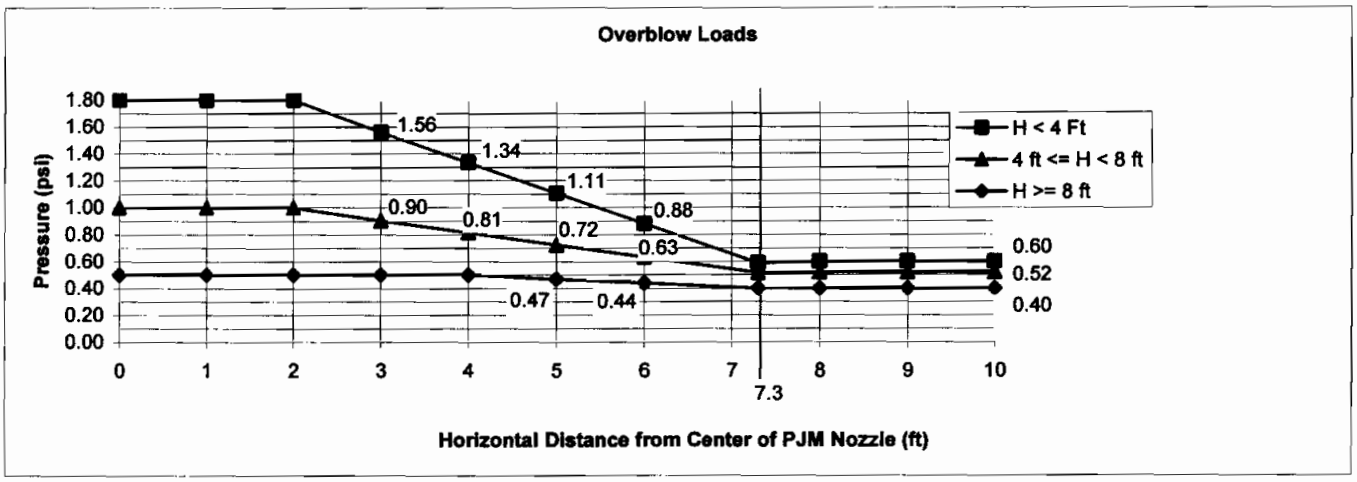

For all vessel internal components other than the overblowing pulse jet mixer, the overblow forces shall be applied a) in the vertical upward direction, and b) in the horizontal direction radiating from the centerline of the overblowing pulse jet mixer. For the overblowing pulse jet mixer, the force shall be applied in the vertical upward direction only. The overblow force on all components, including the structures and supports, shall be calculated by applying the overblow pressure at the location of the nearest surface of the component and to the projected area of the component, facing the appropriate direction. The normal force component, specified for the normal pulse jet mixer operation condition, is not applicable to the overblow condition. Any single pulse jet mixer may overblow 1000 cycles. Reference CCN 125541 dated 07/27/05. 3

Notes

- *Cycle increase: Increase the numbers of operational cycles given above by 10% to account for commissioning duty unless otherwise noted.*
- *Nozzle N39 shall be fatigue assessed/analyzed for 500 temperature/pressure cycles from 0 psig at 59°F to 15 psig at 352°F, the pressure cycles shall coincide with the temperature cycles. See Note 9, on Page 2.*

BECHTEL	**MECHANICAL SYSTEMS DATA SHEET: VESSEL**	**PLANT ITEM No.** ***24590-PTF-MV-PWD-VSL-00033***

Equipment Cyclic Data Sheet

Plant Item Number:	***PWD-VSL-00131, PWD-VSL-00132***
Component Description	***Charge Vessels***

The information below is provisional and envelopes operational duty for fatigue assessment. It is not to be used as operational data.

Materials of Construction	***SA 240 316 with max. Carbon of 0.030 %***
Design Life	***40 years***
Component Function and Life Cycle Description	***These charge vessels are cyclically loaded using vacuum to fully fill the charge vessel with process liquid and compressed air to fully empty the charge vessel. The charge vessels are contained within a parent vessel with varying liquid level. They shall be designed to cycle between the maximum design pressure and the minimum design pressure plus the external static head imposed by the parent vessel. The charge vessel supports shall be designed to cycle between fully buoyant (charge vessel empty and parent vessel full) and fully loaded (charge vessel full and parent vessel empty).***

Load Type		Min	Max	Number of Cycles	Comment
Design Pressure	psig	***FV***	***55***	***10***	***Nominal assumption***
Operating Pressure	psig	***FV***	***30***	***18,100***	
Operating Temperature	°F	***59***	***218***	***292***	***Pressure cycles to be at 218 °F and non-coincident with temperature cycles. The range given is uniform material temperature range, not between adjacent points.***
Contents Specific Gravity		***1.0***	***1.57***	***N/A***	
Contents Level	inch	***Empty***	***Flooded***	***18,100***	***Coincident with pressure cycles***
Localized Features					
Supports		***As above***		***As above with contents level changing coincident with pressure cycles.***	

Notes

- ***Cycle increase: The Seller must increase the numbers of operational cycles given above by 10% to account for commissioning duty unless otherwise noted.***

BECHTEL	**MECHANICAL SYSTEMS DATA SHEET: VESSEL**	**PLANT ITEM No.** ***24590-PTF-MV-PWD-VSL-00033***

Equipment Cyclic Data Sheet

Plant Item Number:	***PWD-PJM-00031, PWD-PJM-00032, PWD-PJM-00033, PWD-PJM-00034, PWD-PJM-00035, PWD-PJM-00036, PWD-PJM-00037, PWD-PJM-00038***
Component Description	***Pulse Jet Mixers***

The information below is provisional and envelopes operational duty for fatigue assessment. It is not to be used as operational data.

Materials of Construction	***SA 240 316 with max. Carbon of 0.030 %***
Design Life	***40 years***
Component Function and Life Cycle Description	***These pulse jet mixers (PJMs) are cyclically loaded using vacuum to fully fill the PJM with process liquid and compressed air to fully empty the PJM. The PJMs are contained within a parent vessel with varying liquid level. They shall be designed to cycle between the maximum design pressure and the minimum design pressure plus the external static head imposed by the parent vessel. The PJM supports shall be designed to cycle between fully buoyant (PJM empty and parent vessel full) and fully loaded (PJM full and parent vessel empty) in addition to thrust.***

Load Type		Min	Max	Number of Cycles	Comment
Design Pressure	psig	***FV***	***85***	***10***	***Nominal assumption***
Operating Pressure	psig	***FV***	***60***	***16.6×10^5***	
Operating Temperature	°F	***59***	***218***	***16.6×10^5***	***Pressure cycles to be at 218 °F and non-coincident with temperature cycles. The range given is uniform material temperature range, not between adjacent points.***
Contents Specific Gravity		***1.0***	***1.57***	***N/A***	***Nominal assumption***
Contents Level	inch	***Empty***	***Flooded***	***16.6×10^5***	***Coincident with pressure cycles***
Thrust Load	lbf	***0***	***262***	***16.6×10^5***	***Coincident with pressure cycles***
Localized Features					
Supports		***As above***		***As above with contents level changing coincident with pressure cycles.***	

Notes

- ***Cycle increase: The Seller must increase the numbers of operational cycles given above by 10% to account for commissioning duty unless otherwise noted.***

MECHANICAL SYSTEMS DATA SHEET: VESSEL

PLANT ITEM No.
24590-PTF-MV-PWD-VSL-00044

R10660652

Project	***RPP-WTP***	P&ID	***24590-PTF-M6-PWD-P0002/P0046*** ***24590-PTF-M6-UFP-P0007/8/9/11***
Project No	***24590***	Calculations:	***24590-PTF-MVC-PWD-00028 / 24590-PTF-MVC-PWD-00020*** 3
Project Site	***Hanford***	Vessel Drawing	***24590-PTF-MV-PWD-P0010***
Description	***Plant Wash Vessel***		ISSUED BY RPP-WTP PDC

Reference Data

Charge Vessels (Tag Numbers)	***PWD-VSL-00121, PWD-VSL-00122, PWD-VSL-00123, PWD-VSL-00124, PWD-VSL-00125***
Pulsejet Mixers / Agitators (Tag Numbers)	***PWD-PJM-00021, PWD-PJM-00022, PWD-PJM-00023, PWD-PJM-00024, PWD-PJM-00025, PWD-PJM-00026, PWD-PJM-00027, PWD-PJM-00028***
RFDs/Pumps (Tag Numbers)	***PWD-RFD-00121, PWD-RFD-00122, PWD-RFD-00123, PWD-RFD-00124, PWD-RFD-00125***

Design Data

Quality Level		***QL-1***	Fabrication Specs	***24590-WTP-3PS-MV00-TP001***		
Seismic Category		***SC-I***	Design Code	***ASME Section VIII, Div. 1***		
Service/Contents		***Radioactive Liquid***	Code Stamp	***YES***		
Design Specific Gravity		***1.27***	NB Registration	***YES***		
Operating Volume	gal	***88,631***	Weights (lbs)	Empty	Operating	Test
Total Volume	gal	***103,024***	Estimated	***227,000***	***1,156,000***	***1,088,000***
Environmental Qualifications		***N/A***	Actual ** 3	***204,600***	***1,127,100***	***1,064,900***

Inside Diameter	inch	***276***			Wind Design	***Not Required***	
Length/Height (TL-TL)	inch	***306***			Snow Design	***Not Required***	
		Vessel Operating	Vessel Design	Coil/Jacket Design	Seismic Design	***24590-WTP-3PS-MV00-TP002*** ***24590-WTP-3PS-SS90-T0001***	
Internal Pressure	psig	***0.00***	***15***	***N/A***	Seismic Base Moment *	ft*lb	
External Pressure	psig	***0.22***	***8.0***	***N/A***	Postweld Heat Treat	***Not Required***	
Temperature	°F	***212***	***237***	***N/A***	Corrosion Allowance	Inch	***0.08 (Notes 9, 10)***
Min. Design Metal Temp.	°F	***40***			Hydrostatic Test Pressure *	Psig	

Note: Please note that source, special nuclear and byproduct materials, as defined in the Atomic Energy Act of 1954 (AEA), are regulated at the U.S. Department of Energy (DOE) facilities exclusively by DOE acting pursuant to its AEA authority. DOE asserts, that pursuant to the AEA, it has sole and exclusive responsibility and authority to regulate source, special nuclear, and byproduct materials at DOE-owned nuclear facilities. Information contained herein on radionuclides is provided for process description purposes only.

ERIC B. ISERN
STATE OF WASHINGTON
33449
REGISTERED
PROFESSIONAL ENGINEER
12/15/05

EXPIRES: 07/28/07

This Bound Document Contains a total of 5 sheets.

REV	DATE	REASON FOR REVISION	PREPARER	CHECKER	REVIEWER	APPROVER
3	12/27/05	Issued for Permitting Use	C. Thompson	H. Khurana/L. Han	C. Slater	J. Julyk
2	4/7/05	Issued for Permitting Use	C. Thompson	H. Khurana	C. Slater	M. Hoffmann
1	3/19/04	Issued for Permitting Use	J. Jackson	H. Khurana	C. Slater	M. Hoffmann
0	10/29/02	Issued for Permitting Use	J. Jackson	C. Slater	N/A	S. Kirk

BECHTEL	**MECHANICAL SYSTEMS DATA SHEET: VESSEL**	**PLANT ITEM No.** ***24590-PTF-MV-PWD-VSL-00044***

Materials of Construction

Component	Material	Minimum Thickness / Size	Containment
Top Head	***SA 240 316 Note 1***	***See Drawing***	***Auxiliary (See note 6)***
Shell	***SA 240 316 Note 1***	***See Drawing***	***Primary (See note 6)***
Bottom Head	***SA 240 316 Note 1***	***See Drawing***	***Primary (See note 6)***
Support	***SA 240 304 Note 1***	***See Drawing***	***N/A***
Jacket/Coils/Half-Pipe Jacket	***N/A***	***N/A***	***N/A***
Internals	***SA240 316 Note 1***	***See Drawing***	***Thermowell Primary***
Pipe	***SA312 TP316 Note 1***	***See Drawing***	***Primary (See note 6)***
Forgings/ Bar stock	***SA182 F316 Note 1***	***See Drawing***	***N/A***
Gaskets	***N/A***	***N/A***	***N/A***
Bolting	***N/A***	***N/A***	***N/A***

Miscellaneous Data

Orientation	***Vertical***	Support Type	***Skirt***
Insulation Function	***Not Applicable***	Insulation Material	***Not Applicable***
Insulation Thickness (inch)	***Not Applicable***	Internal Finish	***Note 3***
		External Finish	***Note 3***

Remarks

**** To be determined by the vendor.***

*****The actual weights shown herein are based on the original seismic data and these figures are subject to change, based on the new loads, obtained from the seismic redesign.*** 3

Note 1: Max. carbon of 0.030 %

Note 2: Deleted

Note 3: Welds descaled as laid.

Note 4: Vessel volumes are approximate and do not account for the manufacturing tolerances, nozzles, and displacement of internals.

Note 5: This vessel is in a Black cell.

Note 6: All welds forming part of the primary and auxiliary containment including nozzle attachment welds shall be subjected to 100% volumetric examination.

Note 7: Contents of this document are Dangerous Waste Permit affecting.

Note 8: Deleted per report NO. 24590-WTP-RPT-M-04-00007 dated Nov. 01, 2004 3

Note 9: BNI shall ensure that an additional 0.067" is available for erosion in the bottom head and shall report the minimum thickness required for all specified loading conditions, exclusive of erosion and corrosion allowances.

Note 10: BNI shall ensure that an additional 0.043" is available for erosion in the lower 4" of the interior conical surface of the pulse jet mixers.

Note 11: BNI shall include in its Dynamic Analysis, all hydrodynamic and overblow loads as per page 3 of this data sheet. 3

Note12: Revision 3 of this data sheet incorporates CCN 129149 and 128549. These CCN's added the words " in the form of overblow pressures" to the note shown above the overblow graph and further revised the note below the graph as noted herein on sheet 3. 3

Equipment Cyclic Data Sheet

Component	***24590-PTF-MV-PWD-VSL-00044***
Component Description	***Parent Vessel***

The information below is provisional and envelopes operational duty for fatigue assessment. It is not to be used as operational data.

Materials of Construction	***SA 240 316 with max. Carbon of 0.030 %***
Design Life	***40 years***
Component Function and Life Cycle Description	***This is a "batch" vessel and cycle from nearly empty to nearly full. This vessel will be in the fill mode for one day, then in the discharge mode over the next day.***

Load Type		Min	Max	Number of Cycles	Comment
Design Pressure	psig	*-8.0*	*15*	*10*	***Nominal assumption***
Operating Pressure	psig	*-0.22*	*0.00*	*7,300*	
Operating Temperature	°F	*59*	*212*	*7,300*	***Uniform material temperature range, not between two points***
Contents Specific Gravity		*1.00*	*1.27*	*N/A*	
Contents Level	inch	***Empty***	***Flooded***	*7,300*	***Coincident with pressure cycles***
Localized Features					
Nozzles		***Within 50°F of vessel operating range***		***As above***	

Hydrodynamic Loading

In normal operation, pulse jet mixers discharge liquid into the parent vessel imposing a cyclical hydrodynamic load on all internal components. Occasionally, an upset condition designated 'overblow' causes air to be discharged from any single pulse jet mixer. All internal components shall be designed for the combination of the normal operational hydrodynamic loads and overblow loads, and this load combination is also to be assumed to act concurrently with seismic loads.

The following table indicates the normal hydrodynamic pressure at ranges of elevations in the vessel and the number of design cycles for each condition. The hydrodynamic forces cycle between the indicated pressure ranges applied across the projected area of the component. Positive hydrodynamic forces act in the radial, outward direction and the vertical, upward direction. Apply the radial load simultaneously in the radial direction and normal to the radial direction in the horizontal plane.

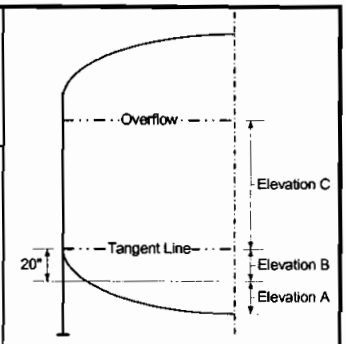

Normal Operation Hydrodynamic Pressure Range, psi						Number of Cycles
Elevation A		Elevation B		Elevation C		
Radial	Vertical	Radial	Vertical	Radial	Vertical	
-0.15 to 0.25	*-0.15 to 0.15*	*-0.05 to 0.12*	*-0.15 to 0.15*	*-0.03 to 0.10*	*-0.06 to 0.15*	*17.3×10^6*

Overblow loads vary as a function of the horizontal distance from the center of the overblowing pulse jet mixer nozzle and the elevation 'H' above the overblowing pulse jet mixer nozzle up to the overflow level as plotted in the form of overblow pressures: 3

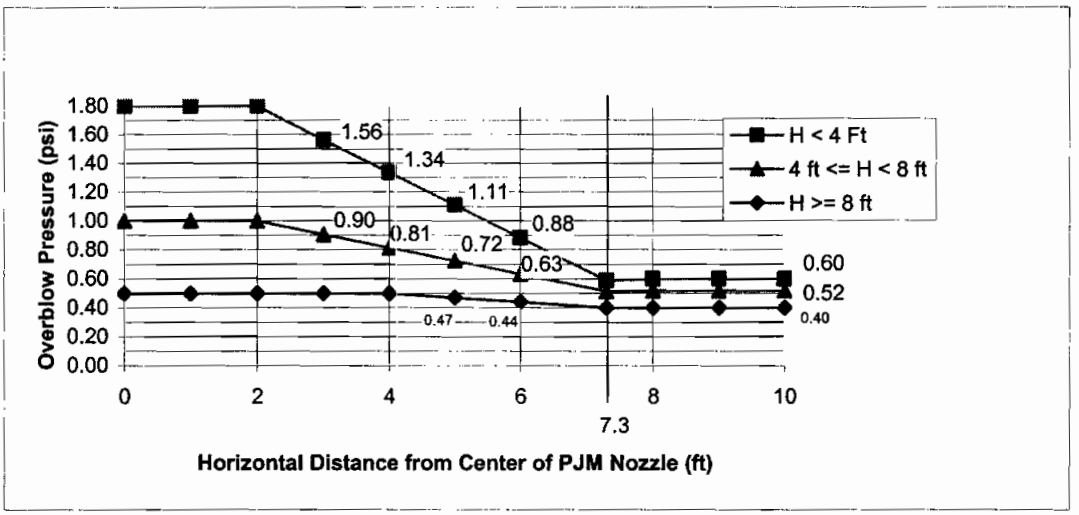

For all vessel internal components other than the overblowing pulse jet mixer, the overblow forces shall be applied a) in the vertical upward direction, and b) in the horizontal direction radiating from the centerline of the overblowing pulse jet mixer. For the overblowing pulse jet mixer, the force shall be applied in the vertical upward direction only. The overblow force on all components, including structures and supports, shall be calculated by applying the overblow pressure at the location of the nearest surface of the component and to the projected area of the component, facing the appropriate direction. The normal force component, specified for the normal pulse jet mixer operation condition, is not applicable to the overblow condition. Any single pulse jet mixer may overblow 1000 cycles. Reference CCN 125541 dated 07/27/05. 3

Notes

- ***Cycle increase: Increase the numbers of operational cycles given above by 10% to account for commissioning duty unless otherwise noted.***

Equipment Cyclic Data Sheet

Component	*PWD-VSL-00121, PWD-VSL-00122, PWD-VSL-00123, PWD-VSL-00124, PWD-VSL-00125*
Component Description	*Charge Vessels*

The information below is provisional and envelopes operational duty for fatigue assessment. It is not to be used as operational data.

Materials of Construction	*SA 240 316 with max. Carbon of 0.030 %*
Design Life	*40 years*
Component Function and Life Cycle Description	*These charge vessels are cyclically loaded using vacuum to fully fill the charge vessel with process liquid and compressed air to fully empty the charge vessel. The charge vessels are contained within a parent vessel with varying liquid level. They shall be designed to cycle between the maximum design pressure and the minimum design pressure plus the external static head imposed by the parent vessel. The charge vessel supports shall be designed to cycle between fully buoyant (charge vessel empty and parent vessel full) and fully loaded (charge vessel full and parent vessel empty).*

Load Type		Min	Max	Number of Cycles	Comment
Design Pressure	psig	*FV*	*55*	*10*	*Nominal assumption*
Operating Pressure	psig	*FV*	*30*	*1.8×10^6*	
Operating Temperature	°F	*59*	*212*	*7,300*	*Pressure cycles to be at 212° F and non-coincident with temperature cycles. The range given is uniform material temperature range, not between adjacent points.*
Contents Specific Gravity		*1.00*	*1.27*	*N/A*	
Contents Level	inch	*Empty*	*Flooded*	*1.8×10^6*	*Coincident with pressure cycles*
Localized Features					
Supports		*As above*		*As above with contents level changing coincident with pressure cycles.*	

Notes

Cycle increase: The Seller must increase the numbers of operational cycles given above by 10% to account for commissioning duty unless otherwise noted.

BECHTEL	**MECHANICAL SYSTEMS DATA SHEET: VESSEL**	**PLANT ITEM No.** ***24590-PTF-MV-PWD-VSL-00044***

Equipment Cyclic Data Sheet

Plant Item Number	***PWD-PJM-00021, PWD-PJM-00022, PWD-PJM-00023, PWD-PJM-00024, PWD-PJM-00025, PWD-PJM-00026, PWD-PJM-00027, PWD-PJM-00028***
Component Description	***Pulse Jet Mixers***

The information below is provisional and envelopes operational duty for fatigue assessment. It is not to be used as operational data.

Materials of Construction	***SA 240 316 with max. Carbon of 0.030 %***
Design Life	***40 years***
Component Function and Life Cycle Description	***These pulse jet mixers (PJMs) are cyclically loaded using vacuum to fully fill the PJM with process liquid and compressed air to fully empty the PJM. The PJMs are contained within a parent vessel with varying liquid level. They shall be designed to cycle between the maximum design pressure and the minimum design pressure plus the external static head imposed by the parent vessel. The PJM supports shall be designed to cycle between fully buoyant (PJM empty and parent vessel full) and fully loaded (PJM full and parent vessel empty) states. Thrust load shall be applied only to the fully buoyant state. Assume the parent vessel is full for 50% of the number of PJM cycles.***

Load Type		Min	Max	Number of Cycles	Comment
Design Pressure	psig	***FV***	***85***	***10***	***Nominal assumption***
Operating Pressure	psig	***FV***	***60***	***1.73×10^7***	
Operating Temperature	°F	***59***	***212***	***1.73×10^7***	***Pressure cycles to be at 212° F and non-coincident with temperature cycles. The range given is uniform material temperature range, not between adjacent points.***
Contents Specific Gravity		***1.00***	***1.27***	***N/A***	
Contents Level	inch	***Empty***	***Flooded***	***1.73×10^7***	***Coincident with pressure cycles***
Thrust	lbf	***0***	***264***	***1.73×10^7***	
Localized Features					
Supports		***As above***		***As above with contents level changing coincident with pressure cycles.***	

Notes

- ***Cycle increase: The Seller must increase the numbers of operational cycles given above by 10% to account for commissioning duty unless otherwise noted.***

MECHANICAL SYSTEMS DATA SHEET: VESSEL

PLANT ITEM No.
24590-PTF-MV-PWD-VSL-00043

Project	***RPP-WTP***	P&ID	***24590-PTF-M6-PWD-P0002***
Project No	***24590***	Process Calculation	***DELETED*** 2
Project Site	***Hanford***	Vessel Drawing	***24590-PTF-MV-PWD-P0003001***
Description	***HLW Effluent Transfer Vessel***		

ISSUED BY RPP-WTP PDC

Reference Data

Charge Vessels (Tag Numbers)	***PWD-VSL-00141, PWD-VSL-00142***
Pulsejet Mixers / Agitators (Tag Numbers)	***PWD-PJM-00041, PWD-PJM-00042, PWD-PJM-00043, PWD-PJM-00044, PWD-PJM-00045, PWD-PJM-00046, PWD-PJM-00047, PWD-PJM-00048***
RFDs/Pumps (Tag Numbers)	***PWD-RFD-00141, PWD-RFD-00142***

Design Data

Quality Level		***QL-1***	Fabrication Specs	***24590-WTP-3PS-MV00-T0001***		
Seismic Category		***SC-I***	Design Code	***ASME VIII Div 1***		
Service/Contents		***Radioactive Liquid***	Code Stamp	***Yes***		
Design Specific Gravity		***1.57***	NB Registration	***Yes***		
Operating Volume	gal	***29,580***	Weights (lbs)	Empty	Operating	Test
Total Volume	gal	***41,650***	Estimated	***115,400***	***503,700***	***465,000***
Environmental Qualifications 2		***N/A***	Actual *	***129,000*** 2	***517,300*** 2	***499,400*** 2

Inside Diameter	inch	***288***			Wind Design	***Not Required***	
Length/Height (TL-TL)	inch	***89***			Snow Design	***Not Required***	
		Vessel Operating	Vessel Design	Coil/Jacket Design	Seismic Design	***24590-WTP-3PS-SS90-T0001*** ***24590-WTP-3PS-MV00-T0002***	
Internal Pressure	psig	***0***	***15***	***N/A***	Seismic Base Moment *	ft*lb	
External Pressure	psig	***0.22***	***FV***	***N/A***	Postweld Heat Treat	***Not Required***	
Temperature	°F	***218*** 2	***225*** 2	***N/A***	Corrosion Allowance	Inch	***0.08 (Notes 7,8)*** 2
Min. Design Metal Temp.	°F	***0***			Hydrostatic Test Pressure *	Psig	***19.5*** 2

Note: Please note that source, special nuclear and byproduct materials, as defined in the Atomic Energy Act of 1954 (AEA), are regulated at the U.S. Department of Energy (DOE) facilities exclusively by DOE acting pursuant to its AEA authority. DOE asserts, that pursuant to the AEA, it has sole and exclusive responsibility and authority to regulate source, special nuclear, and byproduct materials at DOE-owned nuclear facilities. Information contained herein on radionuclides is provided for process description purposes only.

MARK W. HOFFMANN
STATE OF WASHINGTON
0030952
REGISTERED
PROFESSIONAL ENGINEER
3/28/05
EXPIRES 12/10/06

This Bound Document Contains a total of 6 sheets.

REV	DATE	REASON FOR REVISION	PREPARER	CHECKER	REVIEWER	APPROVER
2	3/28/05	Issued for Permitting Use				
1	3/27/03	Issued for Permitting Use	J. Jackson	C. Slater	N/A	M. Hoffmann
0	9/17/02	Issued for Permitting Use	J. Jackson	C. Slater	N/A	S. Kirk

R10523239

BECHTEL	**MECHANICAL SYSTEMS DATA SHEET: VESSEL**	**PLANT ITEM No.** ***24590-PTF-MV-PWD-VSL-00043***

Materials of Construction

Component	Material	Minimum Thickness / Size	Containment
Top Head	***SA 240 316 with max. Carbon of 0.030 %***	***See Drawing***	***Auxiliary (Note 1)*** 2
Shell	***SA 240 316 with max. Carbon of 0.030 %***	***See Drawing***	***Primary (Note 1)*** 2
Bottom Head	***SA 240 316 with max. Carbon of 0.030 %***	***See Drawing***	***Primary (Note 1)*** 2
Support	***SA 240 304 with max. Carbon of 0.030 % (Note 3)*** 2	***See Drawing***	***N/A***
Jacket/Coils/Half-Pipe Jacket	***N/A***	***N/A***	***N/A***
Internals	***SA240 316 with max. Carbon of 0.030 %***	***See Drawing***	***Thermowell Primary (Note 1)*** 2
Pipe	***SA312 TP316 Seamless with max. Carbon of 0.030%***	***See Drawing***	***See Note 1***
Forgings/ Bar stock	***SA182 F316/SA 479 316 with max. Carbon of 0.030%***	***See Drawing***	***As Note 1 for Nozzle Necks***
Gaskets	***N/A***	***N/A***	***N/A***
Bolting	***N/A***	***N/A***	***N/A***

Miscellaneous Data

Orientation	***Vertical***	Support Type	***Skirt***
Insulation Function	***Not Applicable***	Insulation Material	***Not Applicable***
Insulation Thickness (inch)	***Not Applicable***	Weld Surface Finish	***De-scaled as laid***

Remarks

* To be determined by the vendor.

Note 1: All welds forming part of the primary and auxiliary containments, including the nozzle attachment welds shall be subjected to 100% volumetric examination. Radiography is the preferred method of volumetric testing. If it is considered impractical to perform radiographic examination, the Seller may propose ultrasonic examinations. 2

Note 2: Vessel supports shall be designed to restrain the vessel in a fully buoyant state.

Note 3: Ring Beam bottom flange material shall be A 572 Gr. 50.

Note 4: Vessel volumes are approximate and do not account for manufacturing tolerances, nozzles, and displacement of internals. 2

Note 5: Contents of this document are Dangerous Waste Permit affecting. 2

Note 6: Deleted. 2

Note 7: BNI shall ensure that an additional 0.123" is available for erosion in the bottom head and shall report the minimum thickness required for all specified loading conditions, exclusive of erosion and corrosion allowances. 2

Note 8: BNI shall ensure that an additional 0.078" is available for erosion in the interior conical surface of the pulse jet mixers. 2

Note 9: Required data for thermal stress analysis for nozzles exposed to higher temperatures. 2

- ***Cell ambient temperature = 113°F***
- ***Headspace temperature or Operating temperature = 218°F***
- ***Ambient and headspace natural convection heat transfer coefficients = 0.895 Btu/hr ft² °F for vessel head and 0.797 Btu/hr ft² °F for vessel shell***
- ***Inlet fluid transfer frequency and mass flow rate for nozzle N36.***

  Steam max temperature = 352°F

  Transfer frequency = 1 transfer/month

  Steam mass flow rate = 1,399 lb/hr

Note 10: All hydrodynamic and overblow loads are for BNI internal use only and are to be disregarded by the seller. 2

Equipment Cyclic Data Sheet

Plant Item Number:	***24590-PTF-MV-PWD-VSL-00043***
Component Description	***Parent Vessel***

The information below is provisional and envelopes operational duty for fatigue assessment. It is not to be used as operational data.

Materials of Construction	***SA 240 316 with max. Carbon of 0.030 %***
Design Life	***40 years***
Component Function and Life Cycle Description	• ***Receive and store waste from HLW Vitrification Plant, pit sump (PWD-SUMP-00040), and various line drains.*** • ***Transfer waste to Plant Wash Vessel (PWD-VSL-00044)*** ***HLW Effluent Transfer Vessel operates at normal operating level for a ventilation seal between facilities. It's Charge Vessels discharge liquid during normal operation and equal volumes of liquid are received into the vessel. The vessel is normally emptied once per day. Washdown is not more than once per year.***

Load Type		Min	Max	Number of Cycles	Comment
Design Pressure	psig	***FV***	***15***	***10***	***Nominal assumption***
Operating Pressure	psig	***-0.22***	***0***	***14,600***	
Operating Temperature	°F	***59***	***218*** 2	***14,600***	***Uniform material temperature range, not between two points***
Contents Specific Gravity		***1.0***	***1.57***	***N/A***	
Contents Level	inch	***Empty***	***Flooded***	***14,600***	***Coincident with pressure cycles***
Localized Features					
Nozzles		***Within 50°F of vessel operating range***		***As above***	

Hydrodynamic Loading 2

In normal operation, pulse jet mixers discharge liquid into the parent vessel imposing a cyclical hydrodynamic load on all internal components. Occasionally, an upset condition designated 'overblow' causes air to be discharged from any single pulse jet mixer. All internal components shall be designed for the combination of the normal operational hydrodynamic loads and overblow loads, and this load combination is also to be assumed to act concurrently with seismic loads.

The following table indicates the normal hydrodynamic pressure at ranges of elevations in the vessel and the number of design cycles for each condition. The hydrodynamic forces cycle between the indicated pressure ranges applied across the projected area of the component. Positive hydrodynamic forces act in the radial, outward direction and the vertical, upward direction. Apply the radial load simultaneously in the radial direction and normal to the radial direction in the horizontal plane.

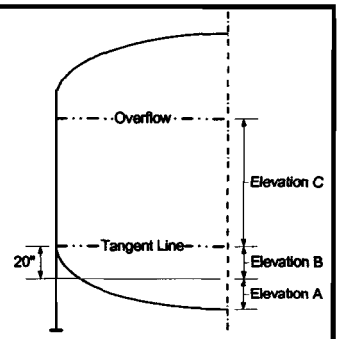

Normal Operation Hydrodynamic Pressure Range, psi						Number of Cycles
Elevation A		Elevation B		Elevation C		
Radial	Vertical	Radial	Vertical	Radial	Vertical	
-0.15 to 0.25	***-0.15 to 0.15***	***-0.05 to 0.12***	***-0.15 to 0.15***	***-0.03 to 0.10***	***-0.06 to 0.15***	***5.1×10^5***

Overblow loads vary as a function of the distance from the center of the overblowing pulse jet mixer nozzle and the elevation 'H' above the overblowing pulse jet mixer nozzle up to the overflow level as plotted:

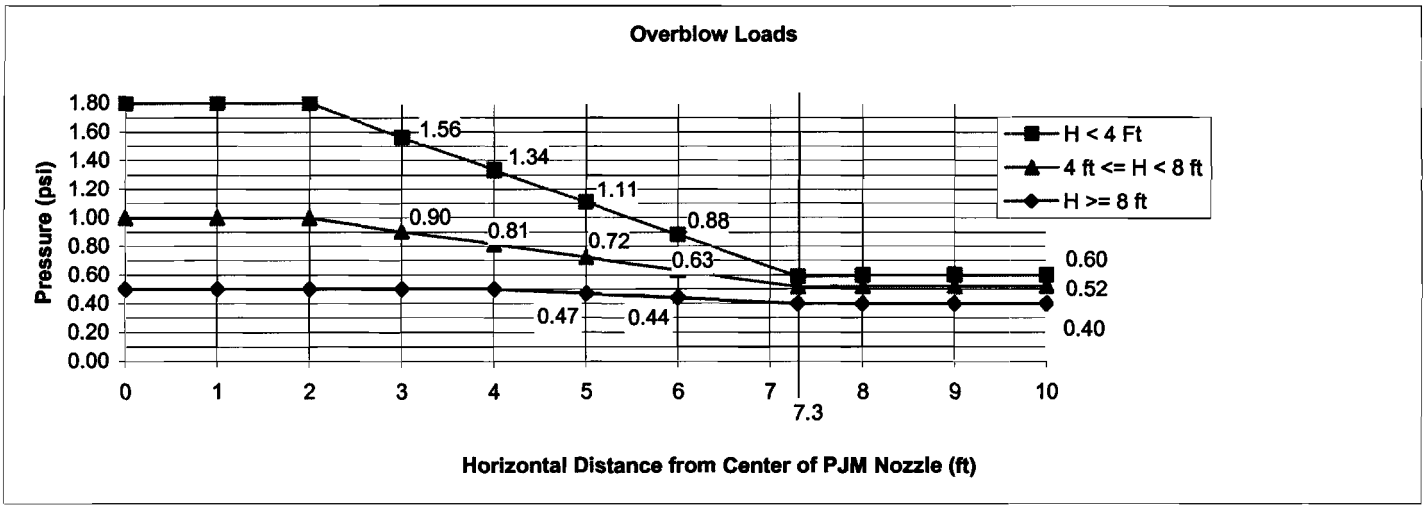

The overblow pressure shall only be applied to the projected area of the overblowing pulse jet mixer in the vertical, upward direction and to all surrounding components in the horizontal plane, radiating from the overblowing pulse jet mixer. Any single pulse jet mixer may overblow 100 cycles. 2

Notes

- ***Cycle increase: Increase the numbers of operational cycles given above by 10% to account for commissioning duty unless otherwise noted.*** 2
- ***Nozzle N36 shall be fatigue assessed/analyzed for 500 temperature/pressure cycles from 0 psig at 59°F to 15 psig at 352 °F, the pressure cycles shall coincide with the temperature cycles. See Note 9, on Page 2.*** 2

Equipment Cyclic Data Sheet

Plant Item Number:	***PWD-VSL-00141, PWD-VSL-00142***
Component Description	***Charge Vessels***

The information below is provisional and envelopes operational duty for fatigue assessment. It is not to be used as operational data.

Materials of Construction	***SA 240 316 with max. Carbon of 0.030 %***
Design Life	***40 years***
Component Function and Life Cycle Description	***These charge vessels are cyclically loaded using vacuum to fully fill the vessel with process liquid and compressed air to fully empty the charge vessel. The charge vessels are contained within a parent vessel with varying liquid level. They shall be designed to cycle between the maximum design pressure and the minimum design pressure plus the external static head imposed by the parent vessel. The charge vessel supports shall be designed to cycle between fully buoyant (charge vessel empty and parent vessel full) and fully loaded (charge vessel full and parent vessel empty).***

Load Type		Min	Max	Number of Cycles	Comment
Design Pressure	psig	***FV***	***55***	***10***	***Nominal assumption***
Operating Pressure	psig	***FV***	***30***	***761,000***	
Operating Temperature	°F	***59***	***218*** △2	***14,600***	***Pressure cycles to be at 218 °F and non-coincident with temperature cycles. The range given is uniform material temperature range, not between adjacent points.*** △2
Contents Specific Gravity		***1.0***	***1.57***	***N/A***	
Contents Level	inch	***Empty***	***Flooded***	***761,000***	***Coincident with pressure cycles***
Localized Features					
Supports		***As above***		***As above with contents level changing coincident with pressure cycle***	

Notes

- ***Cycle increase: The Seller must increase the numbers of operational cycles given above by 10% to account for commissioning duty unless otherwise noted.***

Equipment Cyclic Data Sheet

Plant Item Number:	*PWD-PJM-00041, PWD-PJM-00042, PWD-PJM-00043, PWD-PJM-00044, PWD-PJM-00045, PWD-PJM-00046, PWD-PJM-00047, PWD-PJM-00048*
Component Description	*Pulse Jet Mixers*

The information below is provisional and envelopes operational duty for fatigue assessment. It is not to be used as operational data.

Materials of Construction	*SA 240 316 with max. Carbon of 0.030 %*
Design Life	*40 years*
Component Function and Life Cycle Description	*These pulse jet mixers (PJMs) are cyclically loaded using vacuum to fully fill the PJM with process liquid and compressed air to fully empty the PJM. The PJMs are contained within a parent vessel with varying liquid level. They shall be designed to cycle between the maximum design pressure and the minimum design pressure plus the external static head imposed by the parent vessel. The PJM supports shall be designed to cycle between fully buoyant (PJM empty and parent vessel full) and fully loaded (PJM full and parent vessel empty) in addition to thrust.* 2

Load Type		Min	Max	Number of Cycles	Comment
Design Pressure	psig	*FV*	*85*	*10*	*Nominal assumption*
Operating Pressure	psig	*FV*	*60*	*5.1×10^5*	
Operating Temperature	°F	*59*	*218* 2	*5.1×10^5*	*Pressure cycles to be at 218 °F and non-coincident with temperature cycles. The range given is uniform material temperature range, not between adjacent points.* 2
Contents Specific Gravity		*1.0*	*1.57*	*N/A*	
Contents Level	inch	*Empty*	*Flooded*	*5.1×10^5*	*Coincident with pressure cycles*
Thrust Load 2	lbf	*0*	*264*	*5.1×10^5*	*Coincident with pressure cycles*
Localized Features					
Supports		*As above*		*As above with contents level changing coincident with pressure cycles.*	

Notes

- ***Cycle increase: The Seller must increase the numbers of operational cycles given above by 10% to account for commissioning duty unless otherwise noted.***

MECHANICAL DATA SHEET: VESSEL

PLANT ITEM No. R10045226
24590-PTF-MV-PWD-VSL-00046

Project.	RPP-WTP	P&ID:	24590-PTF-M6-PWD-P0043
Project No:	24590	Process Data Sheet	N/A
Project Site	Hanford	Vessel Drawing	24590-PTF-MV-PWD-P0005
Description.	C3 Floor Drain Collection Vessel (1)		

SSUED BY RPP-WTP PDC 3/27/03 DATE

Reference Data

Charge Vessels (Plant Item Numbers)	None
Pulsejet Mixers / Agitators (Plant Item Numbers)	None
RFD(s)/Pump(s) (Plant Item Numbers)	None

Design Data

Quality Level		CM	Fabrication Specs	24590-WTP-3PS-MV00-TP001		
Seismic Category		SC-IV	Design Code	ASME VIII Div 1		
Service/Contents		C3 Drain Fluids	Code Stamp	Yes		
Design Specific Gravity		1.12	NB Registration	Yes		
Operating Volume	gal	4792	Weights (lbs)	Empty	Operating	Test
Total Volume	gal	4982	Estimated	9500 lbs	57800 lbs	53000 lbs
			Actual *			

Inside Diameter	inch	96			Wind Design	Not Required	
Length/Height (TL-TL)	inch	126			Snow Design	Not Required	
		Vessel Operating	Vessel Design	Coil/Jacket Design	Seismic Design	24590-WTP-3PS-MV00-TP002 24590-WTP-3PS-FB01-T0001	
Internal Pressure	psig	58	68	N/A	Seismic Base Moment *	ft*lb	
External Pressure	psig	4.5	FV	N/A	Postweld Heat Treat	Not Required	
Temperature	°F	200	225	N/A	Corrosion Allowance	Inch	0.040
Min Design Metal Temp.	°F	20			Hydrostatic Test Pressure *	Psig	

MARK W. HOFFMANN
STATE OF WASHINGTON
0030952
REGISTERED PROFESSIONAL ENGINEER
3/27/03
EXPIRES 12/10/04

This Bound Document Contains a total of 2 pages

REV	DATE	REASON FOR REVISION	PREPARER	CHECKER	APPROVER
1	3/27/03	Revised to Reflect Current Datasheet, Issued for Permitting Use	Jessica Jackson	Cliff Slater	Suzanne Kirk
0	9/17/02	Issued for Permitting Use	Jessica Jackson	Cliff Slater	Suzanne Kirk

Processed Data Entry [X] Copied QA [ ] Scanned [ ] Filed [ ]

BECHTEL	**MECHANICAL DATA SHEET: VESSEL**	**PLANT ITEM No.** ***24590-PTF-MV-PWD-VSL-00046***

Materials of Construction

Component	Material	Minimum Thickness / Size	Containment
Shell	***SA 240 316 with max. Carbon of 0.030 %***	***See Drawing***	***Primary***
Head	***SA 240 316 with max. Carbon of 0.030 %***	***See Drawing***	***Primary***
Support	***SA 240 304 with max. Carbon of 0.030 %***	***See Drawing***	***Not Applicable***
Jacket/Coils/Half-Pipe Jacket	***Not Applicable***	***Not Applicable***	***Not Applicable***
Internals	***SA240 316 with max. Carbon of 0.030 %***	***See Drawing***	***Dip Pipe Primary***
Pipe	***SA312 TP316 Seamless with max. Carbon of 0.030 %***	***See Drawing***	***See Note-1***
Forgings/ Bar stock/ Flange	***SA182 F316 with max. Carbon of 0.030 %***	***See Drawing***	***See Note-1***
Gaskets (for Blind Flange only)	***See Note-4***	***See Drawing***	***Auxiliary***
Bolting (for Blind Flange only)	***SA193 B8***	***See Drawing***	***Not Applicable***

Miscellaneous Data

Orientation	***Horizontal***	Support Type	***Saddles***
Insulation Function	***Not Applicable***	Insulation Material	***Not Applicable***
Insulation Thickness (inch)	***Not Applicable***	Internal Finish	***Note 3***
		External Finish	***Note 3***

Remarks

* To be determined by the vendor.

Note 1: Nozzle necks and flanges below the high operating liquid level are Primary, others Auxiliary

Note 2: Vessel supports shall be designed to restrain the vessel in a fully buoyant state

Note 3: Welds surface shall be de-scaled as laid

Note 4: Spiral Wound with 316L inner & outer ring, 316L winding with flexible graphite filler, Class 150 per ASME B16.20 (to suit ASME B16.5 flange)

MECHANICAL SYSTEMS DATA SHEET: VESSEL

PLANT ITEM No.
24590-PTF-MV-PWD-VSL-00015

R10452766

Project	***RPP-WTP***	P&ID	***24590-PTF-M6-PWD-P0003, 24590-PTF-M6-PWD-P0023/24*** 3
Project No	***24590***	Process Calculation	***Deleted***
Project Site	***Hanford***	Vessel Drawing	***24590-PTF-MV-PWD-P0007*** ISSUED BY ~~RPP-WTP PDC~~
Description	***Acidic/Alkaline Effluent Vessel***		

Reference Data

Charge Vessels (Tag Numbers)	***PWD-VSL-00101, PWD-VSL-00102, PWD-VSL-000103, PWD-VSL-00104, PWD-VSL-00105***
Pulsejet Mixers / Agitators (Tag Numbers)	***PWD-PJM-00001, PWD-PJM-00002, PWD-PJM-00003, PWD-PJM-00004, PWD-PJM-00005, PWD-PJM-00006, PWD-PJM-00007, PWD-PJM-00008***
RFDs/Pumps (Tag Numbers)	***PWD-RFD-00101, PWD-RFD-00102, PWD-RFD-00103, PWD-RFD-00104, PWD-RFD-00105***

Design Data

Quality Level		***QL-1***	Fabrication Specs	***24590-WTP-3PS-MV00-TP001***		
Seismic Category		***SC-I***	Design Code	***ASME VIII Div 1***		
Service/Contents		***Radioactive Liquid***	Code Stamp	***Yes***		
Design Specific Gravity		***1.52***	NB Registration	***Yes***		
Operating Volume	gal	***105,850***	Weights (lbs)	Empty	Operating	Test
Total Volume	gal	***119,150***	Estimated	***281,000***	***1,640,000***	***1,285,000***
			Actual *			

Inside Diameter	inch	***264***			Wind Design	***Not Required***	
Length/Height (TL-TL)	inch	***415***			Snow Design	***Not Required***	
		Vessel Operating	Vessel Design	Coil/Jacket Design	Seismic Design	***24590-WTP-3PS-SS90-T0001 24590-WTP-3PS-MV00-TP002***	
Internal Pressure	psig	***Atm***	***15***	***N/A***	Seismic Base Moment *	ft*lb	
External Pressure	psig	***0.22***	***10***	***N/A***	Postweld Heat Treat	***Not Required***	
Temperature	°F	***212***	***237***	***N/A***	Corrosion Allowance	Inch	***0.08 (Notes 7, 8)***
Min. Design Metal Temp.	°F	***0***			Hydrostatic Test Pressure *	Psig	

Note: Please note that source, special nuclear and byproduct materials, as defined in the Atomic Energy Act of 1954 (AEA), are regulated at the U.S. Department of Energy (DOE) facilities exclusively by DOE acting pursuant to its AEA authority. DOE asserts, that pursuant to the AEA, it has sole and exclusive responsibility and authority to regulate source, special nuclear, and byproduct materials at DOE-owned nuclear facilities. Information contained herein on radionuclides is provided for process description purposes only.

MARK W. HOFFMANN
STATE OF WASHINGTON
0030952
REGISTERED
PROFESSIONAL ENGINEER

12/29/04 4
12/29/04

EXPIRES 12/10/06

This Bound Document Contains a total of 5 sheets.

REV	DATE	REASON FOR REVISION	PREPARER	CHECKER	REVIEWER	APPROVER
3	12/29/04	Issued for Permitting Use				
2	11/17/04	Issued for Permitting Use	C. Thompson	H. Khurana	C. Slater	M. Hoffmann
1	2/24/04	Issued for Permitting Use	J. Jackson	S. Suharto	C. Slater	M. Hoffmann
0	09/17/02	Issued for Permitting Use	J. Jackson	C. Slater	N/A	S. Kirk

Materials of Construction

Component	Material	Minimum Thickness/Size	Containment
Top Head	***SA 240 316 with max. Carbon of 0.030%***	***See Drawing***	***Auxiliary (Note 1)***
Shell	***SA 240 316 with max. Carbon of 0.030%***	***See Drawing***	***Primary (Note 1)***
Bottom Head	***SA 240 316 with max. Carbon of 0.030%***	***See Drawing***	***Primary (Note 1)***
Support	***SA 240 304 with max. Carbon of 0.030%***	***See Drawing***	***N/A***
Jacket/Coils/Half-Pipe Jacket	***N/A***	***N/A***	***N/A***
Internals	***SA240 316 with max. Carbon of 0.030%***	***See Drawing***	***Thermowell Primary (Note 1)***
Pipe	***SA312 TP316 Smls with max. Carbon of 0.030%***	***See Drawing***	***Note 1***
Forgings/ Bar stock	***SA182 F316 / SA479 316 with max. Carbon of 0.030%***	***See Drawing***	***As Note 1 for Nozzle Necks***
Gaskets	***N/A***	***N/A***	***N/A***
Bolting	***N/A***	***N/A***	***N/A***

Miscellaneous Data

Orientation	***Vertical***	Support Type	***Skirt***
Insulation Function	***Not Applicable***	Insulation Material	***Not Applicable***
Insulation Thickness (inch)	***Not Applicable***	Weld Surface Finish	***De-scaled as laid***

Remarks

* To be determined by the vendor.

Note 1: ***All welds forming part of the primary and auxiliary containments, including the nozzle attachment welds shall be subjected to 100% volumetric examination.***

Note 2: ***Radiography for this vessel shall be per para. 6.2 of specification 24590-WTP-3PS-MV00-TP001. Nozzle repads shall not be used.***

Note 3: ***Vessel volumes are approximate and do not account for manufacturing tolerances, nozzles, and displacement of internals.***

Note 4: ***Contents of this document are Dangerous Waste Permit affecting.***

Note 5: ***This vessel is located in a Black Cell.***

Note 6: ***Deleted***

Note 7: ***BNI shall ensure that an additional 0.093" is available for erosion in the bottom head and shall report the minimum thickness required for all specified loading conditions, exclusive of erosion and corrosion allowances.*** 3

Note 8: ***BNI shall ensure that an additional 0.065" is available for erosion in the interior conical surface of the pulse jet mixers.*** 3

Note 9. ***All Hydrodynamic loads are for BNI internal use only and are to be disregarded by the seller.*** 3

Equipment Cyclic Data Sheet

Plant Item Number	*24590-PTF-MV-PWD-VSL-00015*
Component Description	*Parent Vessel*

The information below is provisional and envelopes operational duty for fatigue assessment. It is not to be used as operational data.

Materials of Construction	*SA 240 316 with max. Carbon of 0.030 %*
Design Life	*40 years*
Component Function and Life Cycle Description	*This is a "batch" vessel and cycle from nearly empty to nearly full every six days.*

Load Type		Min	Max	Number of Cycles	Comment
Design Pressure	psig	*-10*	*15*	*10*	*Nominal assumption*
Operating Pressure	psig	*-0.22*	*0.00*	*2,450*	
Operating Temperature	°F	*59*	*212*	*2,450*	*Uniform material temperature range, not between two points*
Contents Specific Gravity		*1.00*	*1.52*	*N/A*	
Contents Level	inch	*Empty*	*Flooded*	*2,450*	*Coincident with pressure cycles*
Localized Features					
Nozzles		*Within 50°F of vessel operating range*		*As above*	

Hydrodynamic Loading

In normal operation, pulse jet mixers discharge liquid into the parent vessel imposing a cyclical hydrodynamic load on all internal components. Occasionally, an upset condition designated 'overblow' causes air to be discharged from any single pulse jet mixer. All internal components shall be designed for the combination of the normal operational hydrodynamic loads and overblow loads, and this load combination is also to be assumed to act concurrently with seismic loads.

The following table indicates the normal hydrodynamic pressure for at ranges of elevations in the vessel and the number of design cycles for each condition. The hydrodynamic forces cycle between the indicated pressure ranges applied across the projected area of the component. Positive hydrodynamic forces act in the radial, outward direction and the vertical, upward direction. Seller shall apply the radial load simultaneously in the radial direction and normal to the radial direction in the horizontal plane.

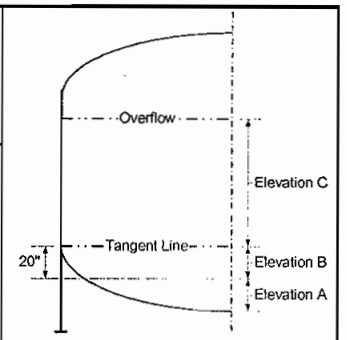

Normal Operation Hydrodynamic Pressure Range, psi						Number of Cycles
Elevation A		Elevation B		Elevation C		
Radial	Vertical	Radial	Vertical	Radial	Vertical	
-0.15 to 0.25	*-0.15 to 0.15*	*-0.05 to 0.12*	*-0.15 to 0.15*	*-0.03 to 0.05*	*-0.06 to 0.15*	*14.1×10^6*

Overblow loads vary as a function of the distance from the center of the overblowing pulse jet mixer nozzle and the elevation 'H' above the overblowing pulse jet mixer nozzle up to the overflow level as plotted:

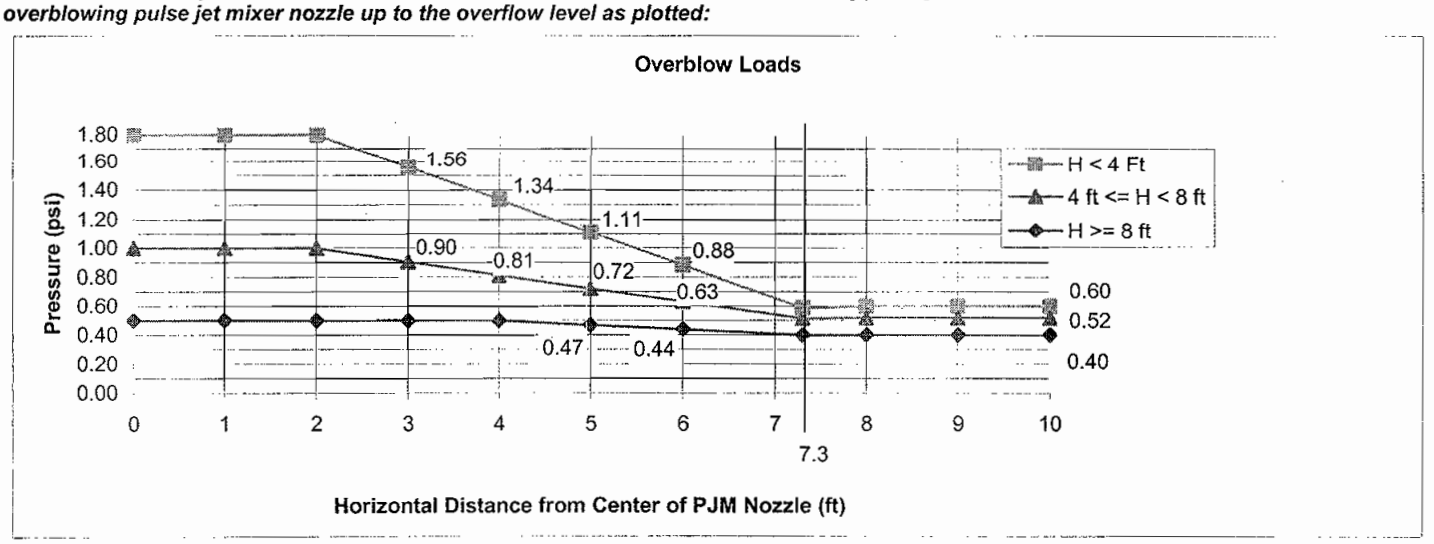

The overblow pressure shall only be applied to the projected area of the overblowing pulse jet mixer in the vertical, upward direction and to all surrounding components in the horizontal plane, radiating from the overblowing pulse jet mixer. Seller shall consider that any single pulse jet mixer may overblow 100 cycles.

Notes

- *Cycle increase: The Seller must increase the numbers of operational cycles given above by 10% to account for commissioning duty unless otherwise noted.*

Equipment Cyclic Data Sheet

Plant Item Number	*PWD-VSL-00101, PWD-VSL-00102, PWD-VSL-000103, PWD-VSL-00104, PWD-VSL-00105, ~~PWD-VSL-00106~~* 3
Component Description	*Charge Vessels*

The information below is provisional and envelopes operational duty for fatigue assessment. It is not to be used as operational data.

Materials of Construction	*SA 240 316 with max. Carbon of 0.030 %*
Design Life	*40 years*
Component Function and Life Cycle Description	***These charge vessels are cyclically loaded using vacuum to fully fill the charge vessel with process liquid and compressed air to fully empty the charge vessel. The charge vessels are contained within a parent vessel with varying liquid level. They shall be designed to cycle between the maximum design pressure and the minimum design pressure plus the external static head imposed by the parent vessel. The charge vessel supports shall be designed to cycle between fully buoyant (charge vessel empty and parent vessel full) and fully loaded (charge vessel full and parent vessel empty).***

Load Type		Min	Max	Number of Cycles	Comment
Design Pressure	psig	*FV*	*55*	*10*	*Nominal assumption*
Operating Pressure	psig	*FV*	*30*	*391,000*	
Operating Temperature	°F	*59*	*212*	*2,450*	*Pressure cycles to be at 212° F and non-coincident with temperature cycles. The range given is uniform material temperature range, not between adjacent points.*
Contents Specific Gravity		*1.00*	*1.52*	*N/A*	
Contents Level	inch	*Empty*	*Flooded*	*391,000*	*Coincident with pressure cycles*
Localized Features					
Supports		*As above*		*As above with contents level changing coincident with pressure cycles.*	

Notes

- ***Cycle increase: The Seller must increase the numbers of operational cycles given above by 10% to account for commissioning duty unless otherwise noted.***

Equipment Cyclic Data Sheet

Plant Item Number	*PWD-PJM-00001, PWD-PJM-00002, PWD-PJM-00003, PWD-PJM-00004, PWD-PJM-00005, PWD-PJM-00006, PWD-PJM-00007, PWD-PJM-00008*
Component Description	*Pulse Jet Mixers*

The information below is provisional and envelopes operational duty for fatigue assessment. It is not to be used as operational data.

Materials of Construction	*SA 240 316 with max. Carbon of 0.030 %*
Design Life	*40 years*
Component Function and Life Cycle Description	***These pulse jet mixers (PJMs) are cyclically loaded using vacuum to fully fill the PJM with process liquid and compressed air to fully empty the PJM. The PJMs are contained within a parent vessel with varying liquid level. They shall be designed to cycle between the maximum design pressure and the minimum design pressure plus the external static head imposed by the parent vessel. The PJM supports shall be designed to cycle between fully buoyant (PJM empty and parent vessel full) and fully loaded (PJM full and parent vessel empty) in addition to thrust.***

Load Type		Min	Max	Number of Cycles	Comment
Design Pressure	psig	*FV*	*85*	*10*	*Nominal assumption*
Operating Pressure	psig	*FV*	*60*	*14.1×10^6*	
Operating Temperature	°F	*59*	*212*	*14.1×10^6*	*Pressure cycles to be at 212° F and non-coincident with temperature cycles. The range given is uniform material temperature range, not between adjacent points.*
Contents Specific Gravity		*1.00*	*1.52*	*N/A*	
Contents Level	inch	*Empty*	*Flooded*	*14.1×10^6*	*Coincident with pressure cycles*
Thrust	lbf	*0*	*280*	*14.1×10^6*	
Localized Features					
Supports		*As above*		*As above with contents level changing coincident with pressure cycles.*	

Notes

- ***Cycle increase: The Seller must increase the numbers of operational cycles given above by 10% to account for commissioning duty unless otherwise noted.***

MECHANICAL SYSTEMS DATA SHEET: VESSEL

PLANT ITEM No.
24590-PTF-MV-PWD-VSL-00016

R10452767

Project	***RPP-WTP***	P&ID	***24590-PTF-M6-PWD-P0003, 24590-PTF-M6-PWD-P0024/25*** 3
Project No	***24590***	Process Calculation	***Deleted***
Project Site	***Hanford***	Vessel Drawing	***24590-PTF-MV-PWD-P0006*** ISSUED BY RPP-WTP PDC
Description	***Acidic/Alkaline Effluent Vessel***		

Reference Data

Charge Vessels (Tag Numbers)	***PWD-VSL-00111, PWD-VSL-00112, PWD-VSL-000113, PWD-VSL-00114, PWD-VSL-00115***
Pulsejet Mixers / Agitators (Tag Numbers)	***PWD-PJM-00011, PWD-PJM-00012, PWD-PJM-00013, PWD-PJM-00014, PWD-PJM-00015, PWD-PJM-00016, PWD-PJM-00017, PWD-PJM-00018***
RFDs/Pumps (Tag Numbers)	***PWD-RFD-00111, PWD-RFD-00112, PWD-RFD-00113, PWD-RFD-00114, PWD-RFD-00115***

Design Data

Quality Level		***QL-1***	Fabrication Specs	***24590-WTP-3PS-MV00-TP001***		
Seismic Category		***SC-I***	Design Code	***ASME VIII Div 1***		
Service/Contents		***Radioactive Liquid***	Code Stamp	***Yes***		
Design Specific Gravity		***1.52***	NB Registration	***Yes***		
Operating Volume	gal	***105,850***	Weights (lbs)	Empty	Operating	Test
Total Volume	gal	***119,150***	Estimated	***281,000***	***1,640,000***	***1,285,000***
			Actual *			

Inside Diameter	inch	***264***			Wind Design	***Not Required***	
Length/Height (TL-TL)	inch	***415***			Snow Design	***Not Required***	
		Vessel Operating	Vessel Design	Coil/Jacket Design	Seismic Design	***24590-WTP-3PS-SS90-T0001 24590-WTP-3PS-MV00-TP002***	
Internal Pressure	psig	***Atm***	***15***	***N/A***	Seismic Base Moment *	ft*lb	
External Pressure	psig	***0.22***	***10***	***N/A***	Postweld Heat Treat	***Not Required***	
Temperature	°F	***212***	***237***	***N/A***	Corrosion Allowance	Inch	***0.08 (Notes 7, 8)***
Min. Design Metal Temp.	°F	***0***			Hydrostatic Test Pressure*	Psig	

Note: Please note that source, special nuclear and byproduct materials, as defined in the Atomic Energy Act of 1954 (AEA), are regulated at the U.S. Department of Energy (DOE) facilities exclusively by DOE acting pursuant to its AEA authority. DOE asserts, that pursuant to the AEA, it has sole and exclusive responsibility and authority to regulate source, special nuclear, and byproduct materials at DOE-owned nuclear facilities. Information contained herein on radionuclides is provided for process description purposes only.

MARK W. HOFFMANN
STATE OF WASHINGTON
0030952
REGISTERED PROFESSIONAL ENGINEER
12/29/04
EXPIRES 12/10/06

This Bound Document Contains a total of 5 sheets.

REV	DATE	REASON FOR REVISION	PREPARER	CHECKER	REVIEWER	APPROVER
3	12/29/04	Issued for Permitting Use				
2	11/17/04	Issued for Permitting Use	C. Thompson	H. Khurana	C. Slater	M. Hoffmann
1	2/24/04	Issued for Permitting Use	J. Jackson	S. Suharto	C. Slater	M. Hoffmann
0	09/17/02	Issued for Permitting Use	J. Jackson	C. Slater	N/A	S. Kirk

Materials of Construction

Component	Material	Minimum Thickness/Size	Containment
Top Head	***SA 240 316 with max. Carbon of 0.030%***	***See Drawing***	***Auxiliary (Note 1)***
Shell	***SA 240 316 with max. Carbon of 0.030%***	***See Drawing***	***Primary (Note 1)***
Bottom Head	***SA 240 316 with max. Carbon of 0.030%***	***See Drawing***	***Primary (Note 1)***
Support	***SA 240 304 with max. Carbon of 0.030%***	***See Drawing***	***N/A***
Jacket/Coils/Half-Pipe Jacket	***N/A***	***N/A***	***N/A***
Internals	***SA240 316 with max. Carbon of 0.030%***	***See Drawing***	***Thermowell Primary (Note 1)***
Pipe	***SA312 TP316 Smls with max. Carbon of 0.030%***	***See Drawing***	***See Note 1***
Forgings/ Bar stock	***SA182 F316/SA479 316 with max. Carbon of 0.030%***	***See Drawing***	***As Note 1 for Nozzle Necks***
Gaskets	***N/A***	***N/A***	***N/A***
Bolting	***N/A***	***N/A***	***N/A***

Miscellaneous Data

Orientation	***Vertical***	Support Type	***Skirt***
Insulation Function	***Not Applicable***	Insulation Material	***Not Applicable***
Insulation Thickness (inch)	***Not Applicable***	Weld Surface Finish	***De-scaled as laid***

Remarks

* To be determined by the vendor.

Note 1: ***All welds forming part of the primary and auxiliary containments, including the nozzle attachment welds shall be subjected to 100% volumetric examination.***

Note 2: ***Radiography for this vessel shall be per para. 6.2 of specification 24590-WTP-3PS-MV00-TP001. Nozzle repads shall not be used.***

Note 3: ***Vessel volumes are approximate and do not account for manufacturing tolerances, nozzles, and displacement of internals***

Note 4: ***Contents of this document are Dangerous Waste Permit affecting***

Note 5: ***This vessel is located in a Black Cell.***

Note 6: ***Deleted.***

Note 7: ***BNI shall ensure that an additional 0.077" is available for erosion in the bottom head and shall report the minimum thickness required for all specified loading conditions, exclusive of erosion and corrosion allowances.*** 3

Note 8: ***BNI shall ensure that an additional 0.054" is available for erosion in the interior conical surface of the pulse jet mixers.*** 3

Note 9 ***All Hydrodynamic loads are for BNI internal use and are to be disregarded by the seller.*** 3

Equipment Cyclic Data Sheet

Plant Item Number	*24590-PTF-MV-PWD-VSL-00016*
Component Description	*Parent Vessel*

The information below is provisional and envelopes operational duty for fatigue assessment. It is not to be used as operational data.

Materials of Construction	***SA 240 316 with max. Carbon of 0.030 %***
Design Life	***40 years***
Component Function and Life Cycle Description	***This is a "batch" vessel and cycle from nearly empty to nearly full every six days.***

Load Type		Min	Max	Number of Cycles	Comment
Design Pressure	psig	*-10*	*15*	*10*	***Nominal assumption***
Operating Pressure	psig	*-0.22*	*0.00*	*2,450*	
Operating Temperature	°F	*59*	*212*	*2,450*	***Uniform material temperature range, not between two points***
Contents Specific Gravity		*1.00*	*1.52*	*N/A*	
Contents Level	inch	*Empty*	*Flooded*	*2,450*	***Coincident with pressure cycles***
Localized Features					
Nozzles		***Within 50°F of vessel operating range***		***As above***	

Hydrodynamic Loading

In normal operation, pulse jet mixers discharge liquid into the parent vessel imposing a cyclical hydrodynamic load on all internal components. Occasionally, an upset condition designated 'overblow' causes air to be discharged from any single pulse jet mixer. All internal components shall be designed for the combination of the normal operational hydrodynamic loads and overblow loads, and this load combination is also to be assumed to act concurrently with seismic loads.

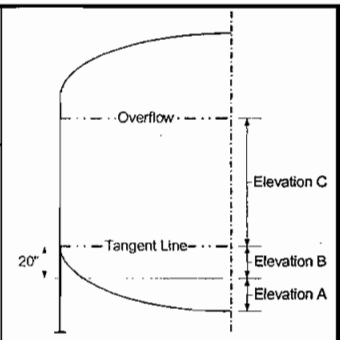

The following table indicates the normal hydrodynamic pressure for at ranges of elevations in the vessel and the number of design cycles for each condition. The hydrodynamic forces cycle between the indicated pressure ranges applied across the projected area of the component. Positive hydrodynamic forces act in the radial, outward direction and the vertical, upward direction. Seller shall apply the radial load simultaneously in the radial direction and normal to the radial direction in the horizontal plane.

Normal Operation Hydrodynamic Pressure Range, psi						Number of Cycles
Elevation A		Elevation B		Elevation C		
Radial	Vertical	Radial	Vertical	Radial	Vertical	
-0.15 to 0.25	*-0.15 to 0.15*	*-0.05 to 0.12*	*-0.15 to 0.15*	*-0.03 to 0.05*	*-0.06 to 0.15*	*14.1×10^6*

Overblow loads vary as a function of the distance from the center of the overblowing pulse jet mixer nozzle and the elevation 'H' above the overblowing pulse jet mixer nozzle up to the overflow level as plotted:

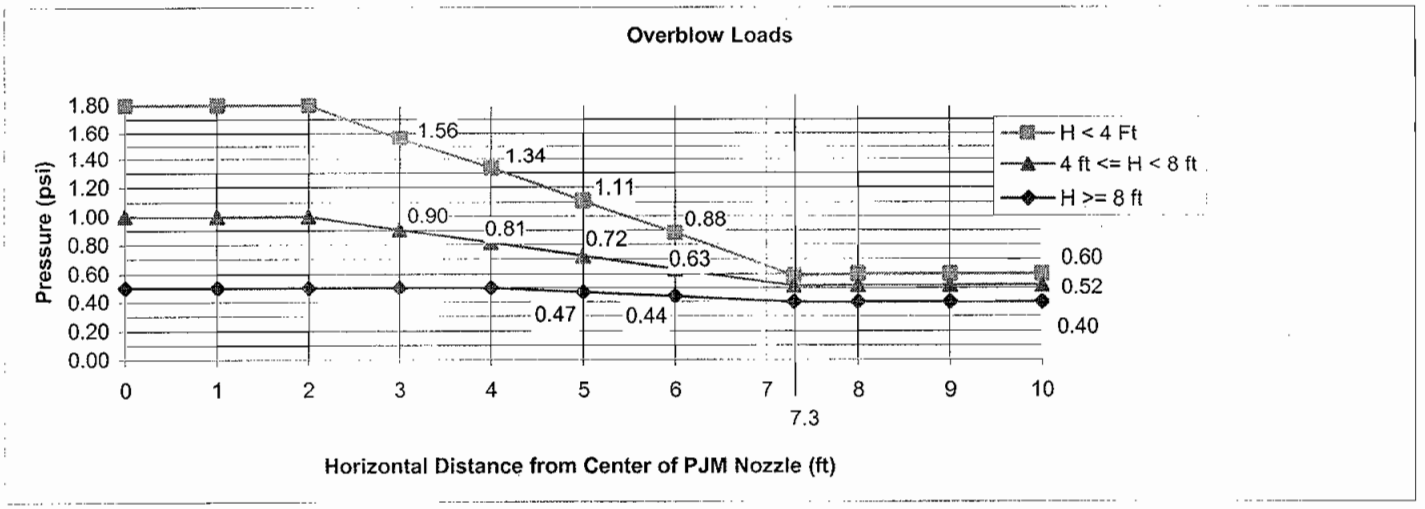

The overblow pressure shall only be applied to the projected area of the overblowing pulse jet mixer in the vertical, upward direction and to all surrounding components in the horizontal plane, radiating from the overblowing pulse jet mixer. Seller shall consider that any single pulse jet mixer may overblow 100 cycles.

Notes

- ***Cycle increase: The Seller must increase the numbers of operational cycles given above by 10% to account for commissioning duty unless otherwise noted.***

Equipment Cyclic Data Sheet

Plant Item Number	*PWD-VSL-00111, PWD-VSL-00112, PWD-VSL-000113, PWD-VSL-00114, PWD-VSL-00115, ~~PWD-VSL-00116~~* 3
Component Description	*Charge Vessels*

The information below is provisional and envelopes operational duty for fatigue assessment. It is not to be used as operational data.

Materials of Construction	***SA 240 316 with max. Carbon of 0.030 %***
Design Life	***40 years***
Component Function and Life Cycle Description	***These charge vessels are cyclically loaded using vacuum to fully fill the charge vessel with process liquid and compressed air to fully empty the charge vessel. The charge vessels are contained within a parent vessel with varying liquid level. They shall be designed to cycle between the maximum design pressure and the minimum design pressure plus the external static head imposed by the parent vessel. The charge vessel supports shall be designed to cycle between fully buoyant (charge vessel empty and parent vessel full) and fully loaded (charge vessel full and parent vessel empty).***

Load Type		Min	Max	Number of Cycles	Comment
Design Pressure	psig	*FV*	*55*	*10*	***Nominal assumption***
Operating Pressure	psig	*FV*	*30*	*391,000*	
Operating Temperature	°F	*59*	*212*	*2,450*	***Pressure cycles to be at 212° F and non-coincident with temperature cycles. The range given is uniform material temperature range, not between adjacent points.***
Contents Specific Gravity		*1.00*	*1.52*	*N/A*	
Contents Level	inch	*Empty*	*Flooded*	*391,000*	***Coincident with pressure cycles***
Localized Features					
Supports		*As above*		*As above with contents level changing coincident with pressure cycles.*	

Notes

- ***Cycle increase: The Seller must increase the numbers of operational cycles given above by 10% to account for commissioning duty unless otherwise noted.***

Equipment Cyclic Data Sheet

Plant Item Number	*PWD-PJM-00011, PWD-PJM-00012, PWD-PJM-00013, PWD-PJM-00014, PWD-PJM-00015, PWD-PJM-00016, PWD-PJM-00017, PWD-PJM-00018*
Component Description	*Pulse Jet Mixers*

The information below is provisional and envelopes operational duty for fatigue assessment. It is not to be used as operational data.

Materials of Construction	*SA 240 316 with max. Carbon of 0.030 %*
Design Life	*40 years*
Component Function and Life Cycle Description	*These pulse jet mixers (PJMs) are cyclically loaded using vacuum to fully fill the PJM with process liquid and compressed air to fully empty the PJM. The PJMs are contained within a parent vessel with varying liquid level. They shall be designed to cycle between the maximum design pressure and the minimum design pressure plus the external static head imposed by the parent vessel. The PJM supports shall be designed to cycle between fully buoyant (PJM empty and parent vessel full) and fully loaded (PJM full and parent vessel empty) in addition to thrust.*

Load Type		Min	Max	Number of Cycles	Comment
Design Pressure	psig	*FV*	*85*	*10*	*Nominal assumption*
Operating Pressure	psig	*FV*	*60*	*14.1×10^6*	
Operating Temperature	°F	*59*	*212*	*14.1×10^6*	*Pressure cycles to be at 212° F and non-coincident with temperature cycles. The range given is uniform material temperature range, not between adjacent points.*
Contents Specific Gravity		*1.00*	*1.52*	*N/A*	
Contents Level	inch	*Empty*	*Flooded*	*14.1×10^6*	*Coincident with pressure cycles*
Thrust	lbf	*0*	*280*	*14.1×10^6*	
Localized Features					
Supports		*As above*		*As above with contents level changing coincident with pressure cycles.*	

Notes

- ***Cycle increase: The Seller must increase the numbers of operational cycles given above by 10% to account for commissioning duty unless otherwise noted.***

R10308202

MECHANICAL DATA SHEET: VESSEL

PLANT ITEM No.
24590-PTF-MV-RDP-VSL-00002A

Project	RPP-WTP	P&ID	24590-PTF-M6-RDP-P0001, 24590-PTF-M6-RDP-P0006, 24590-PTF-MV-CNP-P0005 (1)
Project No	24590	Process Data Sheet	24590-PTF-MVC-RDP-00001 (1)
Project Site	Hanford	Vessel Drawing	24590-PTF-MV-RDP-P0001
Description	Spent Resin Slurry Vessel.		

ISSUED BY RPP-WTP PDC INT DATE 4/30/04

Reference Data

Charge Vessels (Tag Numbers)	N/A
Pulsejet Mixers / Agitators (Tag Numbers)	RDP-PJM-00001-00002-00003-00004 (1)
RFDs/Pumps (Tag Numbers)	(1)

Design Data

Quality Level		QL-1	Fabrication Specs	24590-WTP-3PS-MV00-TP001		
Seismic Category		SC-I	Design Code	ASME VIII Div 1		
Service/Contents		Resin Slurry (Radioactive) (1)	Code Stamp	Yes		
Design Specific Gravity		1.22	NB Registration	Yes		
Maximum Operating Volume	gal	12,688 (1)	Weights (lbs)	Empty	Operating	Test
Total Volume	gal	15,230 (1)	Estimated	36,500	168,000	164,000
			Actual *			

Inside Diameter	inch	144			Wind Design	Not Required	
Length/Height (TL-TL)	inch	168			Snow Design	Not Required	
		Vessel Operating	Vessel Design	Coil/Jacket Design	Seismic Design	24590-WTP-3PS-MV00-TP002 24590-WTP-3PS-SS90-T0001 (1)	
Internal Pressure	psig	(1) 0	15	N/A	Seismic Base Moment *	ft*lb	
External Pressure	psig	(1) 0.22	FV	N/A	Postweld Heat Treat	Not Required	
Temperature	°F	113	138		Corrosion Allowance	Inch	0.04
Min. Design Metal Temp.	°F	30			Hydrostatic Test Pressure *	psig	

Note: Please note that source, special nuclear and byproduct materials, as defined in the Atomic Energy Act of 1954 (AEA), are regulated at the U.S. Department of Energy (DOE) facilities exclusively by DOE acting pursuant to its AEA authority. DOE asserts, that pursuant to the AEA, it has sole and exclusive responsibility and authority to regulate source, special nuclear, and byproduct materials at DOE-owned nuclear facilities. Information contained herein on radionuclides is provided for process description purposes only. (1)

MARK W. HOFFMANN
STATE OF WASHINGTON
0030932
REGISTERED PROFESSIONAL ENGINEER
4/28/04
EXPIRES 12/10/04

This Bound Document Contains a total of 4 pages.

REV	DATE	REASON FOR REVISION	PREPARER	CHECKER	REVIEWER	APPROVER
1	4/28/04	Issued for Permitting Use				
0	12/18/03	Issued for Permitting Use	J Jackson	C. Slater	N/A	M. Hoffmann

BECHTEL	**MECHANICAL DATA SHEET: VESSEL**	**PLANT ITEM No.** ***24590-PTF-MV-RDP-VSL-00002A***

Materials of Construction

Component	Material	Minimum Thickness / Size	Containment
Top Head	***SA 240 316 Note 1***	***See Drawing***	***Auxiliary (See Note 5)*** 1
Shell	***SA 240 316 Note 1***	***See Drawing***	***Primary (See Note 5)*** 1
Bottom Head	***SA 240 316 Note 1***	***See Drawing***	***Primary (See Note 5)*** 1
Support	***SA 240 304 Note 1***	***See Drawing***	***N/A***
Jacket/Coils/Half-Pipe Jacket	***N/A***	***N/A***	***N/A***
Internals	***SA 240 316 Note 1***	***See Drawing***	***N/A***
Pipe	***SA 312 TP 316 Note 1 (Seamless)***	***See Drawing***	***Primary (See Note 5)*** 1
Forgings/ Bar stock	***SA 182 F316 Note 1***	***See Drawing***	***N/A***
Gaskets	***N/A***	***N/A***	***N/A***
Bolting	***N/A***	***N/A***	***N/A***

Miscellaneous Data

Orientation	***Vertical***	Support Type	***Skirt***
Insulation Function	***Not Applicable***	Insulation Material	***Not Applicable***
Insulation Thickness (inch)	***Not Applicable***	Internal Finish	***Note 3*** 1
		External Finish	***Note 3*** 1

Remarks

**** To be determined by the vendor.***
Note 1: Max. Carbon content 0.030%
Note 2: Deleted 1
Note 3: Welds de-scaled as laid
Note 4: This Vessel is in a Black Cell 1
Note 5: All Welds Forming Part of the Primary and Auxiliary Containment, including Nozzle Attachment Welds, Shall be Subjected to 100% Volumetric Examination 1

BECHTEL	**MECHANICAL DATA SHEET: VESSEL**	**PLANT ITEM No.** ***24590-PTF-MV-RDP-VSL-00002A***

Equipment Cyclic Data Sheet

Component Plant Item Number:	***RDP-VSL-00002A***
Component Description	***Parent Vessel***

The information below is provisional and envelopes operational duty for fatigue assessment. It is not to be used as operational data.

Materials of Construction	***SA 240 316 with 0.03% max. carbon***
Design Life	***40 Years***
Component Function and Life Cycle Description	***The purpose of the Spent Resin Slurry Vessel is to receive and hold one batch of spent resin.***

Load Type		Min	Max	Number of Cycles	Comment
Design Pressure	psig	***FV***	***15***	***10***	***Nominal Assumption***
Operating Pressure	psig	***-0.22***	***0***	***N/A***	***This vessel will remain under constant pressure depending upon the vessel plant HVAC system.***
Operating Temperature	°F	***59***	***113°F***	***N/A***	***Temperature will not cycle appreciably with vessel cycling.***
Contents Specific Gravity		****1.00***	***1.22***	***N/A***	****The value given is for the pure liquid phase of vessel contents. The vessel will normally contain slurry of resin particles with particle density of approximately 1.4g/cc. The slurry solids content will be between 0 and 35 % by volume.***
\Contents Level	inch	***0***	***139***	***1.66×10^4***	
Localized Features					
Nozzles					
Supports					

Notes

- ***Cycle increase: The seller must increase the numbers of operational cycles given above by 10% to account for commissioning duty unless otherwise noted.***

BECHTEL	**MECHANICAL DATA SHEET: VESSEL**	**PLANT ITEM No.** ***24590-PTF-MV-RDP-VSL-00002A***

Equipment Cyclic Data Sheet

Component Plant Item Number:	***24590-PTF-MV-RDP-PJM-00001, 00002, 00003 & 00004***
Component Description	***Pulse Jet Mixers***

The information below is provisional and envelopes operational duty for fatigue assessment. It is not to be used as operational data.

Materials of Construction	***SA 240 316 with 0.03% max. carbon***
Design Life	***40 Years***
Component Function and Life Cycle Description	***These pulse jet mixers are cyclically loaded using vacuum to fully fill the vessel with process liquid and compressed air to fully empty the vessel. The pulse jet mixers are contained within a parent vessel with varying liquid level. They shall be designed to cycle between the maximum design pressure and the minimum design pressure plus the external static head imposed by the parent vessel. The pulse jet mixer supports shall be designed to cycle between fully buoyant (pulse jet mixer empty and parent vessel full) and fully loaded (pulse jet mixer full and parent vessel empty) in addition to thrust.***

Load Type		Min	Max	Number of Cycles	Comment
Design Pressure	psig	***FV***	***80***	***$6.2x10^6$***	***Based upon 168 sec cycle time, assuming that the parent vessel will be used 200 times in 40 years for 2 months at a time.***
Operating Pressure	psig	***FV***	***72.5***	***$6.2x10^6$***	
Operating Temperature	°F	***59***	***113***	***N/A***	***Temperature will not cycle appreciably with vessel cycling.***
Contents Specific Gravity		***1.00***	***1.22***	***N/A***	***The value given is for the pure liquid phase of vessel contents. The vessel will normally contain slurry of resin particles with particle density of approximately 1.4g/cc. The slurry solids content will be between 0 and 35 % by volume.***
\Contents Level	inch	***Empty***	***Flooded***	***$6.2x10^6$***	***Based upon 168 sec cycle time, assuming that the parent vessel will be used 200 times in 40 years for 2 months at a time.***
Localized Features					
Nozzles					
Supports					

Notes

- ***Cycle increase: The seller must increase the numbers of operational cycles given above by 10% to account for commissioning duty unless otherwise noted.***

R10308204

MECHANICAL DATA SHEET: VESSEL

PLANT ITEM No. *24590-PTF-MV-RDP-VSL-00002B*

Project	*RPP-WTP*	P&ID	*24590-PTF-M6-RDP-P0001, 24590-PTF-M6-RDP-P0006, 24590-PTF-M~~X~~-CNP-P0005* 1
Project No	*24590*	Process Data Sheet	*24590-PTF-MVC-RDP-00001* 1
Project Site:	*Hanford*	Vessel Drawing	*24590-PTF-MV-RDP-P0002*
Description:	*Spent Resin Slurry Vessel.*		

6 MB 4/28/04

ISSUED BY RPP-WTP PDC 4/28/04 INIT DATE

Reference Data

Charge Vessels (Tag Numbers)	*N/A*
Pulsejet Mixers / Agitators (Tag Numbers)	*RDP-PJM-00005-00006-00007-00008* 1
RFDs/Pumps (Tag Numbers)	1

Design Data

Quality Level		*QL-1*	Fabrication Specs	*24590-WTP-3PS-MV00-TP001*		
Seismic Category		*SC-I*	Design Code	*ASME VIII Div 1*		
Service/Contents		*Resin Slurry (Radioactive)* 1	Code Stamp	*Yes*		
Design Specific Gravity		*1.22*	NB Registration	*Yes*		
Maximum Operating Volume	gal	*12,688* 1	Weights (lbs)	Empty	Operating	Test
Total Volume	gal	*15,230* 1	Estimated	*36,500*	*168,000*	*164,000*
			Actual *			

Inside Diameter	inch	*144*			Wind Design	*Not Required*	
Length/Height (TL-TL)	inch	*168*			Snow Design	*Not Required*	
		Vessel Operating	Vessel Design	Coil/Jacket Design	Seismic Design	*24590-WTP-3PS-MV00-TP002* *24590-WTP-3PS-SS90-T0001* 1	
Internal Pressure	psig	1 *0*	*15*	*N/A*	Seismic Base Moment *	ft*lb	
External Pressure	psig	1 *0.22*	*FV*	*N/A*	Postweld Heat Treat	*Not Required*	
Temperature	°F	*113*	*138*		Corrosion Allowance	Inch	*0.04*
Min Design Metal Temp	°F	*30*			Hydrostatic Test Pressure *	psig	

Note: Please note that source, special nuclear and byproduct materials, as defined in the Atomic Energy Act of 1954 (AEA), are regulated at the U.S. Department of Energy (DOE) facilities exclusively by DOE acting pursuant to its AEA authority. DOE asserts, that pursuant to the AEA, it has sole and exclusive responsibility and authority to regulate source, special nuclear, and byproduct materials at DOE-owned nuclear facilities. Information contained herein on radionuclides is provided for process description purposes only. 1

MARK W. HOFFMANN STATE OF WASHINGTON 0030952 REGISTERED PROFESSIONAL ENGINEER 4/28/04

EXPIRES 12/10/04

This Bound Document Contains a total of 4 pages.

REV	DATE	REASON FOR REVISION	PREPARER	CHECKER	REVIEWER	APPROVER
1	4/25/04	Issued for Permitting Use				
0	12/18/03	Issued for Permitting Use	J. Jackson	C. Slater	NA	M. Hoffmann

BECHTEL	**MECHANICAL DATA SHEET: VESSEL**	**PLANT ITEM No.** ***24590-PTF-MV-RDP-VSL-00002B***

Materials of Construction

Component	Material	Minimum Thickness / Size	Containment
Top Head	***SA 240 316 Note 1***	***See Drawing***	***Auxiliary (See Note 5)*** 1
Shell	***SA 240 316 Note 1***	***See Drawing***	***Primary (See Note 5)*** 1
Bottom Head	***SA 240 316 Note 1***	***See Drawing***	***Primary (See Note 5)*** 1
Support	***SA 240 304 Note 1***	***See Drawing***	***N/A***
Jacket/Coils/Half-Pipe Jacket	***N/A***	***N/A***	***N/A***
Internals	***SA 240 316 Note 1***	***See Drawing***	***N/A***
Pipe	***SA 312 TP 316 Note 1 (Seamless)***	***See Drawing***	***Primary (See Note 5)*** 1
Forgings/ Bar stock	***SA 182 F316 Note 1***	***See Drawing***	***N/A***
Gaskets	***N/A***	***N/A***	***N/A***
Bolting	***N/A***	***N/A***	***N/A***

Miscellaneous Data

Orientation	***Vertical***	Support Type	***Skirt***
Insulation Function	***Not Applicable***	Insulation Material	***Not Applicable***
Insulation Thickness (inch)	***Not Applicable***	Internal Finish	***Note 3*** 1
		External Finish	***Note 3*** 1

Remarks

**** To be determined by the vendor.***
Note 1: Max. Carbon content 0.030%
Note 2: Deleted 1
Note 3: Welds de-scaled as laid
Note 4: This Vessel is in a Black Cell 1
Note 5: All Welds Forming Part of the Primary and Auxiliary Containment, including Nozzle Attachment Welds, Shall be Subjected to 100% Volumetric Examination 1

BECHTEL	**MECHANICAL DATA SHEET: VESSEL**	**PLANT ITEM No.** ***24590-PTF-MV-RDP-VSL-00002B***

Equipment Cyclic Data Sheet

Component Plant Item Number:	***RDP-VSL-00002B***
Component Description	***Parent Vessel***

The information below is provisional and envelopes operational duty for fatigue assessment. It is not to be used as operational data.

Materials of Construction	***SA 240 316 with 0.03% max. carbon***
Design Life	***40 Years***
Component Function and Life Cycle Description	***The purpose of the Spent Resin Slurry Vessel is to receive and hold one batch of spent resin.***

Load Type		Min	Max	Number of Cycles	Comment
Design Pressure	psig	***FV***	***15***	***10***	***Nominal Assumption***
Operating Pressure	psig	***-0.22***	***0***	***N/A***	***This vessel will remain under constant pressure depending upon the vessel plant HVAC system.***
Operating Temperature	°F	***59***	***113***	***N/A***	***Temperature will not cycle appreciably with vessel cycling.***
Contents Specific Gravity		****1.00***	***1.22***	***N/A***	****The value given is for the pure liquid phase of vessel contents. The vessel will normally contain slurry of resin particles with particle density of approximately 1.4g/cc. The slurry solids content will be between 0 and 35 % by volume.***
\Contents Level	inch	***0***	***139***	***1.66×10^4***	
Localized Features					
Nozzles					
Supports					

Notes

- ***Cycle increase: The seller must increase the numbers of operational cycles given above by 10% to account for commissioning duty unless otherwise noted.***

BECHTEL	**MECHANICAL DATA SHEET: VESSEL**	**PLANT ITEM No.** ***24590-PTF-MV-RDP-VSL-00002B***

Equipment Cyclic Data Sheet

Component Plant Item Number:	***24590-PTF-MV-RDP-PJM-00005, 00006, 00007, 00008***
Component Description	***Pulse Jet Mixers***

The information below is provisional and envelopes operational duty for fatigue assessment. It is not to be used as operational data.

Materials of Construction	***SA 240 316 with 0.03% max. carbon***
Design Life	***40 Years***
Component Function and Life Cycle Description	***These pulse jet mixers are cyclically loaded using vacuum to fully fill the vessel with process liquid and compressed air to fully empty the vessel. The pulse jet mixers are contained within a parent vessel with varying liquid level. They shall be designed to cycle between the maximum design pressure and the minimum design pressure plus the external static head imposed by the parent vessel. The pulse jet mixer supports shall be designed to cycle between fully buoyant (pulse jet mixer empty and parent vessel full) and fully loaded (pulse jet mixer full and parent vessel empty) in addition to thrust.***

Load Type		Min	Max	Number of Cycles	Comment
Design Pressure	psig	***FV***	***80***	***$6.2x10^6$***	***Based upon 168 sec cycle time, assuming that the parent vessel will be used 200 times in 40 years for 2 months at a time.***
Operating Pressure	psig	***FV***	***72.5***	***$6.2x10^6$***	
Operating Temperature	°F	***59***	***113***	***N/A***	***Temperature will not cycle appreciably with vessel cycling.***
Contents Specific Gravity		****1.00***	***1.22***	***N/A***	****The value given is for the pure liquid phase of vessel contents. The vessel will normally contain slurry of resin particles with particle density of approximately 1.4g/cc. The slurry solids content will be between 0 and 35 % by volume.***
\Contents Level	inch	***Empty***	***Flooded***	***$6.2x10^6$***	***Based upon 168 sec cycle time, assuming that the parent vessel will be used 200 times in 40 years for 2 months at a time.***
Localized Features					
Nozzles					
Supports					

Notes

- ***Cycle increase: The seller must increase the numbers of operational cycles given above by 10% to account for commissioning duty unless otherwise noted.***

R10523237

ISSUED BY
RPP-WTP PDC

MECHANICAL DATA SHEET: VESSEL

PLANT ITEM No.
24590-PTF-MV-RDP-VSL-00002C

Project:	***RPP-WTP***	P&ID:	***24590-PTF-M6-RDP-P0001, 24590-PTF-M6-RDP-P0006, 24590-PTF-M6-CNP-P0005***
Project No:	***24590***	Process Calculation:	***Deleted***
Project Site:	***Hanford***	Vessel Drawing	***24590-PTF-MV-RDP-P0003***
Description:	***Spent Resin Slurry Vessel***		

Reference Data

Charge Vessels (Tag Numbers)	***N/A***
Pulsejet Mixers / Agitators (Tag Numbers)	***RDP-PJM-00009-00010-00011-00012***
RFDs/Pumps (Tag Numbers)	

Design Data

Quality Level		***QL-1***		Fabrication Specs	***24590-WTP-3PS-MV00-TP001***		
Seismic Category		***SC-I***		Design Code	***ASME VIII Div 1***		
Service/Contents		***Resin Slurry***		Code Stamp	***Yes***		
Design Specific Gravity		***1.22***		NB Registration	***Yes***		
Maximum Operating Volume	gal	***12,688***		Weights (lbs)	Empty	Operating	Test
otal Volume	gal	***15,230***		Estimated	***36,500***	***168,000***	***164,000***
				Actual *			

Inside Diameter	inch	***144***			Wind Design	***Not Required***	
Length/Height (TL-TL)	inch	***168***			Snow Design	***Not Required***	
		Vessel Operating	Vessel Design	Coil/Jacket Design	Seismic Design	***24590-WTP-3PS-MV00-TP002 24590-WTP-3PS-SS90-T0001***	
Internal Pressure	psig	***0***	***15***	***N/A***	Seismic Base Moment *	ft*lb	
External Pressure	psig	***0.22***	***FV***	***N/A***	Postweld Heat Treat	***Not Required***	
Temperature	°F	***113***	***138***		Corrosion Allowance	Inch	***0.04 (Notes 8, 9)***
Min. Design Metal Temp.	°F	***30***			Hydrostatic Test Pressure *	psig	

Note: Please note that source, special nuclear and byproduct materials, as defined in the Atomic Energy Act of 1954 (AEA), are regulated at the U.S. Department of Energy (DOE) facilities exclusively by DOE acting pursuant to its AEA authority. DOE asserts, that pursuant to the AEA, it has sole and exclusive responsibility and authority to regulate source, special nuclear, and byproduct materials at DOE-owned nuclear facilities. Information contained herein on radionuclides is provided for process description purposes only.

MARK W. HOFFMANN
STATE OF WASHINGTON
0030952
REGISTERED
PROFESSIONAL ENGINEER
3/28/05
EXPIRES 12/10/06

This Bound Document Contains a total of 5 sheets.

REV	DATE	REASON FOR REVISION	PREPARER	CHECKER	REVIEWER	APPROVER
3	3/28/05	Issued for Permitting Use				
2	1/25/05	Issued for Permitting Use	C. Thompson	H. Khurana	C. Slater	M. Hoffmann
1	4/28//04	Issued for Permitting Use	K. Brightman	H. Khurana	C. Slater	M. Hoffmann
0	12/18/02	Issued for Permitting Use	J. Jackson	C. Slater	N/A	S. Kirk

BECHTEL	**MECHANICAL DATA SHEET: VESSEL**	PLANT ITEM No. ***24590-PTF-MV-RDP-VSL-00002C***

Materials of Construction

Component	Material	Minimum Thickness / Size	Containment
Top Head	***SA 240 316 Note 1***	***See Drawing***	***Auxiliary (See Note 5)***
Shell	***SA 240 316 Note 1***	***See Drawing***	***Primary (See Note 5)***
Bottom Head	***SA 240 316 Note 1***	***See Drawing***	***Primary (See Note 5)***
Support	***SA 240 304 Note 1***	***See Drawing***	***N/A***
Jacket/Coils/Half-Pipe Jacket	***N/A***	***N/A***	***N/A***
Internals	***SA 240 316 Note 1***	***See Drawing***	***N/A***
Pipe/Nozzles	***SA 312 TP 316 Note 1 (Seamless)***	***See Drawing***	***Primary (See Note 5)***
Forgings/ Bar stock	***SA 182 F316 Note 1***	***See Drawing***	***N/A***
Gaskets	***N/A***	***N/A***	***N/A***
Bolting	***N/A***	***N/A***	***N/A***

Miscellaneous Data

Orientation	***Vertical***	Support Type	***Skirt***
Insulation Function	***Not Applicable***	Insulation Material	***Not Applicable***
Insulation Thickness (inch)	***Not Applicable***	Internal Finish	***Note 3***
		External Finish	***Note 3***

Remarks

**** To be determined by the vendor.***
Note 1: Max. Carbon content 0.030%
Note 2: Deleted
Note 3: Welds de-scaled as laid
Note 4: This vessel is in a Black Cell
Note 5: All welds forming part of the Primary and Auxiliary Containment, including nozzle attachment welds, shall be subjected to 100% volumetric examination
Note 6: Contents of this document are Dangerous Waste Permit affecting.
Note 7: Deleted.
Note 8 : Seller shall ensure that an additional 0.060" is available for erosion in the bottom head and shall report the minimum thickness required for all specified loading conditions, exclusive of erosion and corrosion allowances.
Note 9: Seller shall ensure that an additional 0.038" is available for erosion in the lower 4" of the interior conical surface of the pulse jet mixers.

BECHTEL	**MECHANICAL DATA SHEET: VESSEL**	PLANT ITEM No. ***24590-PTF-MV-RDP-VSL-00002C***

Equipment Cyclic Data Sheet

Component Plant Item Number:	***RDP-VSL-00002C***
Component Description	***Parent Vessel***

The information below is provisional and envelopes operational duty for fatigue assessment. It is not to be used as operational data.

Materials of Construction	***SA 240 316 with 0.03% max. carbon***
Design Life	***40 Years***
Component Function and Life Cycle Description	***The purpose of the Spent Resin Slurry Vessel is to receive and hold one batch of spent resin.***

Load Type		Min	Max	Number of Cycles	Comment
Design Pressure	psig	***FV***	***15***	***10***	***Nominal Assumption***
Operating Pressure	psig	***-0.22***	***0***	***N/A***	***This vessel will remain under constant pressure depending upon the vessel plant HVAC system.***
Operating Temperature	°F	***59***	***113 °F*** (3)	***N/A***	***Temperature will not cycle appreciably with vessel cycling.***
Contents Specific Gravity		****1.00***	***1.22***	***N/A***	**** The value given is for the pure liquid phase of vessel contents. The vessel will normally contain slurry of resin particles with particle density of approximately 1.4g/cc. The slurry solids content will be between 0 and 35 % by volume.***
\Contents Level	inch	***0***	***139***	***1.66×10^4***	
Localized Features					
Nozzles					
Supports					

Notes

- ***Cycle increase: The seller must increase the numbers of operational cycles given above by 10% to account for commissioning duty unless otherwise noted.***

Hydrodynamic Loading

In normal operation, pulse jet mixers discharge liquid into the parent vessel imposing a cyclical hydrodynamic load on all internal components. Occasionally, an upset condition designated 'overblow' causes air to be discharged from any single pulse jet mixer. All internal components shall be designed for the combination of the normal operational hydrodynamic loads and overblow loads, and this load combination is also to be assumed to act concurrently with seismic loads.

Hydrodynamic loads acting on a surface vary with the location of the surface within the vessel. The following table indicates the normal hydrodynamic pressure ranges and the number of design cycles. The hydrodynamic forces cycle between the indicated pressure ranges applied across the projected area of the component. Positive hydrodynamic forces act in the radial, outward direction and the vertical, upward direction. Seller shall apply the radial load simultaneously in the radial direction and normal to the radial direction in the horizontal plane.

Condition	Hydrodynamic Pressure Range, psi				Number of Cycles
	Between PJM Center and Vessel Wall		Between Vessel Center and PJM Center		
	Radial	Vertical	Radial	Vertical	
Normal Operation	*-0.80 to 0.80*	*-0.80 to 0.40*	*-0.20 to 0.30*	*-0.20 to 0.25*	*6.2×10^6*

Overblow loads vary as a function of the distance from the center of the overblowing pulse jet mixer nozzle and the elevation 'H' above the overblowing pulse jet mixer nozzle up to the overflow level as plotted:

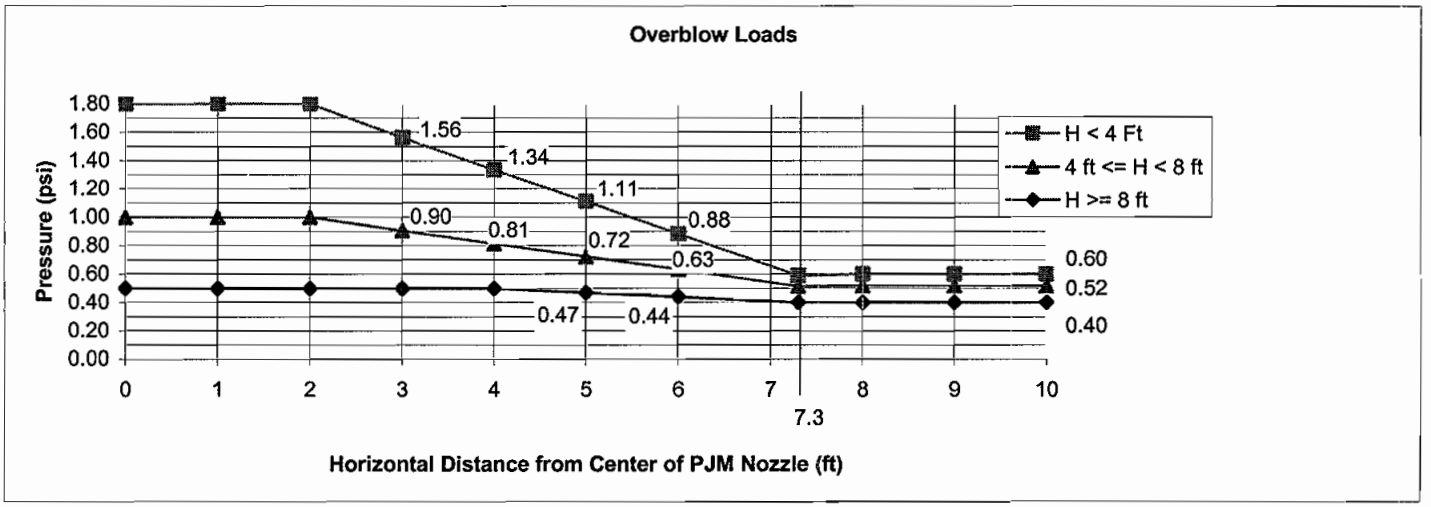

The overblow pressure shall only be applied to the projected area of the overblowing pulse jet mixer in the vertical, upward direction and to all surrounding components in the horizontal plane, radiating from the overblowing pulse jet mixer. Seller shall consider that any single pulse jet mixer may overblow 100 cycles.

Notes

- ***Cycle increase: The Seller must increase the numbers of operational cycles given above by 10% to account for commissioning duty unless otherwise noted.***

BECHTEL	**MECHANICAL DATA SHEET: VESSEL**	**PLANT ITEM No.** ***24590-PTF-MV-RDP-VSL-00002C***

Equipment Cyclic Data Sheet

Component Plant Item Number:	***24590-PTF-MV-RDP-PJM-00009, 00010, 00011, 00012***
Component Description	***Pulse Jet Mixers***

The information below is provisional and envelopes operational duty for fatigue assessment. It is not to be used as operational data.

Materials of Construction	***SA 240 316 with 0.03% max. carbon***
Design Life	***40 Years***
Component Function and Life Cycle Description	***These pulse jet mixers are cyclically loaded using vacuum to fully fill the pulse jet mixer with process liquid and compressed air to fully empty the pulse jet mixer. The pulse jet mixers are contained within a parent vessel with varying liquid level. They shall be designed to cycle between the maximum operating pressure and the minimum operating pressure plus the external static head imposed by the parent vessel. The pulse jet mixer supports shall be designed to cycle between fully buoyant (pulse jet mixer empty and parent vessel full) and fully loaded (pulse jet mixer full and parent vessel empty) in addition to thrust. Thrust load shall be applied only to the fully Buoyant state. Assume the parent vessel is full for 50% of number of cycles of PJM.***

Load Type		Min	Max	Number of Cycles	Comment
Design Pressure	psig	***FV***	***80***	***$6.2x10^6$***	***Based upon 168 sec cycle time, assuming that the parent vessel will be used 200 times in 40 years for 2 months at a time.***
Operating Pressure	psig	***FV***	***72.5***	***$6.2x10^6$***	
Operating Temperature	°F	***59***	***113***	***N/A***	***Temperature will not cycle appreciably with vessel cycling.***
Contents Specific Gravity		****1.00***	***1.22***	***N/A***	****The value given is for the pure liquid phase of vessel contents. The vessel will normally contain slurry of resin particles with particle density of approximately 1.4g/cc. The slurry solids content will be between 0 and 35 % by volume.***
Contents Level	inch	***Empty***	***Flooded***	***$6.2x10^6$***	***Based upon 168 sec cycle time, assuming that the parent vessel will be used 200 times in 40 years for 2 months at a time.***
Thrust		***0***	***262***	***$6.2x10^6$***	
Localized Features					
Nozzles					
Supports					

MECHANICAL SYSTEMS DATA SHEET: VESSEL

Plant Item No.
24590-PTF-ME-RDP-VSL-00004

Data Sheet No.
24590-PTF-MVD-RDP-P0008

R10330981

Project:	RPP-WTP	Description:	Spent Resin Dewatering Moisture Separation
Project No:	24590	P&ID:	24590-PTF-M6-RDP-P0002
Site:	Hanford	Process Data Sht:	24590-PTF-MEC-RDP-00001
Process flow diagram:	24590-PTF-M5-V17T-P0020	Manufacturer Name	RWE NUKEM

ISSUED BY RPP-WTP PDC
INIT DATE

Reference Data

Charge Vessels (Tag Numbers)	N/A
Pulsejet Mixers / Agitators (Tag Numbers)	N/A
RFDs/Pumps (Tag Numbers)	N/A

Design Data

Quality Level		CM	Fabrication Specs	24590-WTP-3PS-MV00-TP001		
Seismic Category		SC-III	Design Code	ASME VIII Div 1		
Service/Contents		Radioactive Water	Code Stamp	Yes		
Design Specific Gravity		1.00	NB Registration	Yes		
Maximum Operating Volume	gal	79.67	Weights (lbs)	Empty	Operating	Test
Total Volume (Calculated)	gal	101.34	Estimated*	663	1509	*
			Actual *	After Fabrication*	After Fabrication*	*

Inside Diameter	inch	23.5			Wind Design	Not Required	
Length/Height (Overall)	inch	59.375			Snow Design	Not Required	
		Vessel Operating	Vessel Design	Coil/Jacket Design	Seismic Design	24590-WTP-3PS-FB01-T0001 & 24590-WTP-3PS-MV00-TP002	
Internal Pressure	psig	2	15	N/A	Seismic Base Moment *	ft*lb	1938
External Pressure	psig	0	FV	N/A	Postweld Heat Treat	Not Required	
Temperature	°F	60	300	N/A	Corrosion Allowance	Inch	0.125
Min. Design Metal Temp.	°F	-10			Hydrostatic Test Pressure *	psig	22.5

Contents of this document are Dangerous Waste Permit Affecting.

Note: Please note that source, special nuclear and byproduct materials, as defined in the Atomic Energy Act of 1954 (AEA), are regulated at the U.S. Department of Energy (DOE) facilities exclusively by DOE acting pursuant to its AEA authority. DOE asserts, that pursuant to the AEA, it has sole and exclusive responsibility and authority to regulate source, special nuclear, and byproduct materials at DOE-owned nuclear facilities. Information contained herein on radionuclides is provided for process description purposes only.

GERALD RUSSEL CHIARAMONTE
STATE OF WASHINGTON
028043
REGISTERED
PROFESSIONAL ENGINEER

7-22-04

EXPIRES: 11/9/2004

This Bound Document Contains a Total of 2 Pages.

Rev	Description	By	Checked	Approved	Date
0	Issued for Permitting Use	J. Hickman	G. Butt 6/28/04	~~J Chiaramonte~~ J. Julyk	6/28/04

MECHANICAL SYSTEMS DATA SHEET: VESSEL

Plant Item No.
24590-PTF-ME-RDP-VSL-00004

Data Sheet No.
24590-PTF-MVD-RDP-P0008

Materials of Construction

Component	Material	Minimum Thickness / Size	Containment
Top Head	***SA-240 UNS S31603 (Max 0.030% C; Dual Certified)***	***1/2****	***Auxiliary***
Shell	***SA-240 UNS S31603 (Max 0.030% C; Dual Certified)***	***1/4****	***Primary***
Bottom Head	***SA-240 UNS S31603 (Max 0.030% C; Dual Certified)***	***5/8****	***Primary***
Support	***SA-240 UNS S31603 (Max 0.030% C; Dual Certified)***	***Skid mounted (RDP-SKID-00001)***	***N/A***
Jacket/Coils/Half-Pipe Jacket	***N/A***	***N/A***	***N/A***
Internals	***SA-312 304 UNS S30403 (Max 0.030% C; Dual Certified)***	***.065 in Wall 1/2 in Tube**** ***.065 in Wall 3/4 in Tube****	***Instrument Piping Primary***
Pipe	***SA-312 TP316L UNS S31603 (Max 0.030% C; Dual Certified)***	***.154 in/ 2 in SCHED 40S**** ***.237 in/4 in SCHED 40S****	***See Note 2***
Forgings/ Bar stock	***SA-479 UNS S31603 (Max 0.030% C; Dual Certified)***	***1 in Round Stock***	***As Note 2 for Nozzle Necks***
Gaskets	***Neoprene***	***1/8 in Gasket***	***Auxiliary***
Bolting	***SA 194 8M/SA 193 B8M***	***3/4 in Fasteners***	***Auxiliary***

Miscellaneous Data

Orientation	***Vertical***	Support Type	***Mounted on Equipment Skid (RDP-SKID-00001)***
Insulation Function	***N/A***	Insulation Material	***N/A***
Insulation Thickness (inch)	***N/A***	Internal Finish	***After Fabrication***
		External Finish	***After Fabrication***

Remarks

****To Be Determined By Seller***
Note 1: Design Life is 40 years.
Note 2: Nozzle necks below maximum liquid level are primary, others auxiliary.

ISSUED BY
RPP-WTP PDC

R10684941

MECHANICAL DATA SHEET: VESSEL

PLANT ITEM No.
24590-PTF-MV-RLD-VSL-000017A

Project:	**RPP-WTP**	P&ID:	**24590-PTF-M6-RLD-P0003**
Project No:	**24590**	Process Calculation:	**24590-PTF-MVC-RLD-00004** 3
Project Site:	**Hanford**	Vessel Drawing	**24590-PTF-MV-RLD-P0001**
Description:	**Alkaline Effluent Vessel**		

Reference Data

Charge Vessels Tag Numbers	**N/A**
Pulsejet Mixers / Agitators Tag Numbers	**RLD-MXR-00001**
RFDs/Pumps Tag Numbers	**N/A**

Design Data

Quality Level		**CM**	Fabrication Specs	**24590-WTP-3PS-MV00-TP001**		
Seismic Category		**SC-III**	Design Code	**ASME Sec. VIII Div 1**		
Service/Contents		**Alkaline Effluent**	Code Stamp	**Yes**		
Design Specific Gravity		**1.10**	NB Registration	**Yes**		
Maximum Operating Volume	gal	**28,072**	Weights (lbs)	Empty	Operating	Test
Total Volume	gal	**34,340**	Estimated	**87,300**	**354,500**	**373,900**
			Actual *	**93,580**	**380,180**	**355,910**

Inside Diameter	inch	**192**			Wind Design	**Not Required**	
Length/Height (TL-TL)	inch	**210**			Snow Design	**Not Required**	
		Vessel Operating	Vessel Design	Coil/Jacket Design	Seismic Design	**24590-WTP-3PS-FB01-T0001**	
						24590-WTP-3PS-MV00-TP002	
Internal Pressure	psig	**0**	**15**	**N/A**	Seismic Base Moment *	ft*lb	
External Pressure	psig	**0.22**	**FV** 3	**N/A**	Postweld Heat Treat	**Not Required**	
Temperature	°F	**155**	**180**	**N/A**	Corrosion Allowance	Inch	**0.08**
Min. Design Metal Temp.	°F	**40**			Hydrostatic Test Pressure *	psig	

Note: Please note that source, special nuclear and byproduct materials, as defined in the Atomic Energy Act of 1954 (AEA), are regulated at the U.S. Department of Energy (DOE) facilities exclusively by DOE acting pursuant to its AEA authority. DOE asserts, that pursuant to the AEA, it has sole and exclusive responsibility and authority to regulate source, special nuclear, and byproduct materials at DOE-owned nuclear facilities. Information contained herein on radionuclides is provided for process description purposes only.

BHARAT V. MAKADIA
STATE OF WASHINGTON
19363
REGISTERED PROFESSIONAL ENGINEER

REV. 3 6/13/06

EXPIRES: 5/5/08

This Bound Document Contains a total of 3 sheets.

REV	DATE	REASON FOR REVISION	PREPARER	CHECKER	REVIEWER	APPROVER
3	6/12/06	Issued for Permitting Use	C. Thompson	C. Chung / L. Han	B. Makadia	J. Julyk
2	1/25/05	Issued for Permitting Use	C. Thompson	C. Chung	C. Slater	M. Hoffmann
1	2/24/04	Issued for Permitting Use	K. Brightman	C. Chung	C. Slater	M. Hoffmann
0	12/18/02	Issued for Permitting Use	J. Jackson	C. Slater	N/A	M. Hoffmann

BECHTEL	**MECHANICAL DATA SHEET: VESSEL**	PLANT ITEM No. ***24590-PTF-MV-RLD-VSL-000017A***

Materials of Construction

Component	Material	Minimum Thickness / Size	Containment
Top Head	***SA 240 304 with max. Carbon of 0.030 %***	***See Drawing***	***Auxiliary***
Shell	***SA 240 304 with max. Carbon of 0.030 %***	***See Drawing***	***Primary***
Bottom Head	***SA 240 304 with max. Carbon of 0.030 %***	***See Drawing***	***Primary***
Support (Skirt)	***SA 240 304 with max. Carbon of 0.030 %***	***See Drawing***	***N/A***
Jacket/Coils/Half-Pipe Jacket	***N/A***	***N/A***	***N/A***
Internals	***SA 240 304 with max. Carbon of 0.030 %***	***See Drawing***	***Thermowell Primary***
Pipe	***SA312 TP304 Seamless with max. Carbon of 0.030%***	***See Drawing***	***See Note-1***
Forgings/ Bar stock	***SA182 F304 with max. Carbon of 0.030 %***	***See Drawing***	***As Note-1 for Nozzle Necks***
Gaskets	***Spiral Wound, 304L Winding with Flexible Graphite Filler***	***See Drawing***	***As Note-1 for Nozzle Necks***
Bolting	***Austenitic SS type 304L***	***See Drawing***	***N/A***

Miscellaneous Data

Orientation	***Vertical***	Support Type	***Skirt***
Insulation Function	***Not Applicable***	Insulation Material	***Not Applicable***
Insulation Thickness (inch)	***Not Applicable***	Welds Surface Finish	***De-scaled as laid***

Remarks

* To be determined by the vendor.

Note 1: Nozzle necks below the high operating liquid level are Primary, others Auxiliary.

Note 2: NDE for this vessel must meet requirements per para. 6.4.2 of specification no. 24590-WTP-3PS-MV00-TP001.

Note 3: Vessel volumes are approximate and do not account for manufacturing tolerances, nozzles, and displacement of internals.

Note 4: Contents of this document are Dangerous Waste Permit affecting.

Note 5: Datasheet was revised to incorporate process requirements from CCN 068472 3

BECHTEL	**MECHANICAL DATA SHEET: VESSEL**	PLANT ITEM No. ***24590-PTF-MV-RLD-VSL-000017A***

Equipment Cyclic Data Sheet

Plant Item Number	***24590-PTF-MV-RLD-VSL-00017A***
Component Description	***Parent Vessel***

The information below is provisional and envelopes operational duty for fatigue assessment. It is not to be used as operational data.

Materials of Construction	***SA 240 304 with max. Carbon of 0.030 %***
Design Life	***40 years***
Component Function and Life Cycle Description	***This is a "batch" vessel and cycles from nearly empty to nearly full. The vessel will be in the fill mode for two days, then in the discharge mode over the next two days.***

Load Type		Min	Max	Number of Cycles	Comment
Design Pressure	psig	***FV***	***15***	***10***	***Nominal assumption***
Operating Pressure	psig	***-0.22***	***0***	***3500***	
Operating Temperature	°F	***59***	***155***	***3500***	***Uniform material temperature range, not between two points***
Contents Specific Gravity		***1.1***	***1.1***	***N/A***	
Contents Level	inch	***Empty***	***Flooded***	***3500***	***Coincident with pressure cycles***
Localized Features					
Nozzles		***Within 50°F of vessel operating range***		***As above***	

Notes

Cycle increase: The Seller must increase the numbers of operational cycles given above by 10% to account for commissioning duty unless otherwise noted.

R10684942

ISSUED BY
RPP-WTP PDC

MECHANICAL DATA SHEET: VESSEL

PLANT ITEM No.
24590-PTF-MV-RLD-VSL-000017B

Project:	**RPP-WTP**	P&ID:	**24590-PTF-M6-RLD-P0003**
Project No:	**24590**	Process Calculation:	**24590-PTF-MVC-RLD-00004** 3
Project Site:	**Hanford**	Vessel Drawing	**24590-PTF-MV-RLD-P0002**
Description:	**Alkaline Effluent Vessel**		

Reference Data

Charge Vessels Tag Numbers	**N/A**
Pulsejet Mixers / Agitators Tag Numbers	**RLD-MXR-00002**
RFDs/Pumps Tag Numbers	**N/A**

Design Data

Quality Level		**CM**	Fabrication Specs	**24590-WTP-3PS-MV00-TP001**		
Seismic Category		**SC-III**	Design Code	**ASME Sec. VIII Div 1**		
Service/Contents		**Alkaline Effluent**	Code Stamp	**Yes**		
Design Specific Gravity		**1.10**	NB Registration	**Yes**		
Maximum Operating Volume	gal	**28,072**	Weights (lbs)	Empty	Operating	Test
Total Volume	gal	**34,340**	Estimated	**87,300**	**354,500**	**373,900**
			Actual *	**93,580**	**380,180**	**355,910**

Inside Diameter	inch	**192**			Wind Design	**Not Required**	
Length/Height (TL-TL)	inch	**210**			Snow Design	**Not Required**	
		Vessel Operating	Vessel Design	Coil/Jacket Design	Seismic Design	**24590-WTP-3PS-FB01-T0001**	
						24590-WTP-3PS-MV00-TP002	
Internal Pressure	psig	**0**	**15**	**N/A**	Seismic Base Moment *	ft*lb	
External Pressure	psig	**0.22**	**FV** 3	**N/A**	Postweld Heat Treat	**Not Required**	
Temperature	°F	**155**	**180**	**N/A**	Corrosion Allowance	Inch	**0.08**
Min. Design Metal Temp.	°F	**40**			Hydrostatic Test Pressure *	psig	

Note: Please note that source, special nuclear and byproduct materials, as defined in the Atomic Energy Act of 1954 (AEA), are regulated at the U.S. Department of Energy (DOE) facilities exclusively by DOE acting pursuant to its AEA authority. DOE asserts, that pursuant to the AEA, it has sole and exclusive responsibility and authority to regulate source, special nuclear, and byproduct materials at DOE-owned nuclear facilities. Information contained herein on radionuclides is provided for process description purposes only.

BHARAT V. MAKADIA
STATE OF WASHINGTON
19383
REGISTERED
PROFESSIONAL ENGINEER

REV. 3 6/13/06

EXPIRES: 5/5/08

This Bound Document Contains a total of 3 sheets.

REV	DATE	REASON FOR REVISION	PREPARER	CHECKER	REVIEWER	APPROVER
3	6/12/06	Issued for Permitting Use	C. Thompson	C. Chung / L. Han	B. Makadia	J. Julyk
2	1/25/05	Issued for Permitting Use	C. Thompson	C. Chung	C. Slater	M. Hoffmann
1	2/24/04	Issued for Permitting Use	K. Brightman	C. Chung	C. Slater	M. Hoffmann
0	12/18/02	Issued for Permitting Use	J. Jackson	C. Slater	N/A	M. Hoffmann

BECHTEL	**MECHANICAL DATA SHEET: VESSEL**	PLANT ITEM No. ***24590-PTF-MV-RLD-VSL-000017B***

Materials of Construction

Component	Material	Minimum Thickness / Size	Containment
Top Head	***SA 240 304 with max. Carbon of 0.030 %***	***See Drawing***	***Auxiliary***
Shell	***SA 240 304 with max. Carbon of 0.030 %***	***See Drawing***	***Primary***
Bottom Head	***SA 240 304 with max. Carbon of 0.030 %***	***See Drawing***	***Primary***
Support (Skirt)	***SA 240 304 with max. Carbon of 0.030 %***	***See Drawing***	***N/A***
Jacket/Coils/Half-Pipe Jacket	***N/A***	***N/A***	***N/A***
Internals	***SA 240 304 with max. Carbon of 0.030 %***	***See Drawing***	***Thermowell Primary***
Pipe	***SA312 TP304 Seamless with max. Carbon of 0.030%***	***See Drawing***	***See Note-1***
Forgings/ Bar stock	***SA182 F304 with max. Carbon of 0.030 %***	***See Drawing***	***As Note-1 for Nozzle Necks***
Gaskets	***Spiral Wound, 304L Winding with Flexible Graphite Filler***	***See Drawing***	***As Note-1 for Nozzle Necks***
Bolting	***Austenitic SS type 304L***	***See Drawing***	***N/A***

Miscellaneous Data

Orientation	***Vertical***	Support Type	***Skirt***
Insulation Function	***Not Applicable***	Insulation Material	***Not Applicable***
Insulation Thickness (inch)	***Not Applicable***	Welds Surface Finish	***De-scaled as laid***

Remarks

* To be determined by the vendor.

Note 1: Nozzle necks below the high operating liquid level are Primary, others Auxiliary.

Note 2: NDE for this vessel must meet requirements per para. 6.4.2 of specification no. 24590-WTP-3PS-MV00-TP001.

Note 3: Vessel volumes are approximate and do not account for manufacturing tolerances, nozzles, and displacement of internals.

Note 4: Contents of this document are Dangerous Waste Permit affecting.

Note 5: Datasheet was revised to incorporate process requirements from CCN 068472. 3

BECHTEL	**MECHANICAL DATA SHEET: VESSEL**	PLANT ITEM No. ***24590-PTF-MV-RLD-VSL-000017B***

Equipment Cyclic Data Sheet

Plant Item Number	***24590-PTF-MV-RLD-VSL-00017B***
Component Description	***Parent Vessel***

The information below is provisional and envelopes operational duty for fatigue assessment. It is not to be used as operational data.

Materials of Construction	***SA 240 304 with max. Carbon of 0.030 %***
Design Life	***40 years***
Component Function and Life Cycle Description	***This is a "batch" vessel and cycles from nearly empty to nearly full. The vessel will be in the fill mode for two days, then in the discharge mode over the next two days.***

Load Type		Min	Max	Number of Cycles	Comment
Design Pressure	psig	***FV***	***15***	***10***	***Nominal assumption***
Operating Pressure	psig	***-0.22***	***0***	***3500***	
Operating Temperature	°F	***59***	***155***	***3500***	***Uniform material temperature range, not between two points***
Contents Specific Gravity		***1.1***	***1.1***	***N/A***	
Contents Level	inch	***Empty***	***Flooded***	***3500***	***Coincident with pressure cycles***
Localized Features					
Nozzles		***Within 50°F of vessel operating range***		***As above***	

Notes

Cycle increase: The Seller must increase the numbers of operational cycles given above by 10% to account for commissioning duty unless otherwise noted.

MECHANICAL DATA SHEET: VESSEL

PLANT ITEM No.
24590-PTF-MV-TCP-VSL-00001

Project:	***RPP-WTP***	P&ID:	***24590-PTF-M6-TCP-P0001***
Project No:	***24590***	Process Calculation	***Deleted*** 2
Project Site:	***Hanford***	Vessel Drawing	***24590-PTF-MV-TCP-P0002***
Description:	***Treated LAW Concentrate Storage Vessel***		

Reference Data

Charge Vessels Tag Numbers	***Not Applicable***
Pulsejet Mixers / Agitators Tag Numbers	***TCP-PJM-00001, TCP-PJM-00002, TCP-PJM-00003, TCP-PJM-00004, TCP-PJM-00005, TCP-PJM-00006, TCP-PJM-00007, TCP-PJM-00008***
RFDs/Pumps Tag Numbers	***Not Applicable***

Design Data

Quality Level		***CM***	Fabrication Specs	***24590-WTP-3PS-MV00-TP001***		
Seismic Category		***SC-III***	Design Code	***ASME VIII Div 1***		
Service/Contents		***Radioactive Liquid***	Code Stamp	***Yes***		
Design Specific Gravity		***1.57*** 2	NB Registration	***Yes***		
Maximum Operating Volume	gal	***129,963*** 2	Weights (lbs)	Empty	Operating	Test
Total Volume	gal	***146,740***	Estimated	***240,500***	***2,005,100***	***1,469,300***
			Actual *			

Inside Diameter	inch	***318***			Wind Design	***Not Required***	
Length/Height (TL-TL)	inch	***362***			Snow Design	***Not Required***	
		Vessel Operating	Vessel Design	Coil/Jacket Design	Seismic Design	***24590-WTP-3PS-FB01-T0001***	
						24590-WTP-3PS-MV00-TP002	
Internal Pressure	psig	***0***	***15***	***N/A***	Seismic Base Moment *	ft*lb	
External Pressure	psig	***0.22*** 2	***8***	***N/A***	Postweld Heat Treat	***Not Required***	
Temperature	°F	***212*** 2	***237*** 2	***N/A***	Corrosion Allowance	Inch	***0.04 (Notes 7 & 8)*** 2
Min. Design Metal Temp.	°F	***40***			Hydrostatic Test Pressure *	psig	

Note: Please note that source, special nuclear and byproduct materials, as defined in the Atomic Energy Act of 1954 (AEA), are regulated at the U.S. Department of Energy (DOE) facilities exclusively by DOE acting pursuant to its AEA authority. DOE asserts, that pursuant to the AEA, it has sole and exclusive responsibility and authority to regulate source, special nuclear, and byproduct materials at DOE-owned nuclear facilities. Information contained herein on radionuclides is provided for process description purposes only.

MARK W. HOFFMANN
STATE OF WASHINGTON
0030952
REGISTERED
PROFESSIONAL ENGINEER
1/27/05

EXPIRES 12/10/06

This Bound Document Contains a total of 5 Sheets.

REV	DATE	REASON FOR REVISION	PREPARER	CHECKER	REVIEWER	APPROVER
2	1/27/05	Issued for Permitting Use				
1	9/13/03	Issued for Permitting Use	Jessica Jackson	S. Suharto	Cliff Slater	Mark Hoffmann
0	12/17/03	Issued for Permitting Use	Jessica Jackson	Cliff Slater	N/A	Mark Hoffmann

ISSUED BY
RPP-WTP PDC

R10461388

BECHTEL	**MECHANICAL DATA SHEET: VESSEL**	**PLANT ITEM No.** ***24590-PTF-MV-TCP-VSL-00001***

Materials of Construction

Component	Material	Minimum Thickness / Size	Containment
Top Head	***SA 240 316 with max. Carbon of 0.030 %***	***See Drawing***	***Auxiliary (See Note 1)***
Shell	***SA 240 316 with max. Carbon of 0.030 %***	***See Drawing***	***Primary (See Note 1)***
Bottom Head	***SA 240 316 with max. Carbon of 0.030 %***	***See Drawing***	***Primary (See Note 1)***
Support (Skirt)	***SA 240 304 with max. Carbon of 0.030 %***	***See Drawing***	***N/A***
Jacket/Coils/Half-Pipe Jacket	***N/A***	***N/A***	***N/A***
Internals	***SA240 316 with max. Carbon of 0.030 %***	***See Drawing***	***Thermowell Primary (See Note 1)***
Pipe	***SA312 TP316 Seamless with max. Carbon of 0.030 %*** **; SB622 UNS N10276 (only for nozzle neck and dip pipe for Nozzle N02)**	***See Drawing***	***See Note-1***
Forgings/ Bar stock	***SA182 F316 with max. Carbon of 0.030 %***	***See Drawing***	***As Note-1 for Nozzle Necks***
Gaskets	***N/A***	***N/A***	***N/A***
Bolting	***N/A***	***N/A***	***N/A***

Miscellaneous Data

Orientation	***Vertical***	Support Type	***Skirt***
Insulation Function	***Not Applicable***	Insulation Material	***Not Applicable***
Insulation Thickness (inch)	***Not Applicable***	Welds Surface Finish	***De-scaled as laid***

Remarks

* To be determined by the vendor.

Note 1: All welds forming part of the primary and auxiliary containment including nozzle attachment welds shall be subjected to 100% volumetric examination. 2

Note 2: Deleted.

Note 3: Vessel volumes are approximate and do not account for manufacturing tolerances, nozzles, and displacement of internals.

Note 4: Contents of this document are Dangerous Waste Permit affecting.

Note 5: This vessel is in a Black Cell. 2

Note 6: Deleted 2

Note 7: BNI shall ensure that an additional 0.164" is available for erosion in the bottom head and the Seller shall report the minimum thickness required for all specified loading conditions, exclusive of erosion and corrosion allowances. 2

Note 8: BNI shall ensure that an additional 0.113" is available for erosion in the lower 4" of the interior conical surface of the pulse jet mixers. 2

Note 9: All hydrodynamic loads are for BNI internal use only and are to be disregarded. 2

BECHTEL	**MECHANICAL DATA SHEET: VESSEL**	**PLANT ITEM No.** ***24590-PTF-MV-TCP-VSL-00001***

Equipment Cyclic Data Sheet

Plant Item Number	***24590-PTF-MV-TCP-VSL-00001***
Component Description	***Parent Vessel***

The information below is provisional and envelopes operational duty for fatigue assessment. It is not to be used as operational data.

Materials of Construction	***SA 240 316 with max. Carbon of 0.030 %***
Design Life	***40 years***
Component Function and Life Cycle Description	***This vessel receives and stores treated LAW concentrate. It suspends solids for transfer and to facilitate heat transfer. It maintains a minimum temperature to avoid precipitation of concentrate. Vessel is emptied every six days. Washdown is once per year.***

Load Type		Min	Max	Number of Cycles	Comment
Design Pressure	psig	***-8***	***15***	***10***	***Nominal assumption***
Operating Pressure	psig	***-0.22*** 2	***0***	***2500***	
Operating Temperature	°F	***77***	***212*** 2	***2500***	***Uniform material temperature range, not between two points***
Contents Specific Gravity		***1.0***	***1.57*** 2	***2080***	***Nominal assumption***
Contents Level	inch	***24***	***399***	***2500***	***Coincident with pressure cycles***
Localized Features					
Nozzles		***Within 50°F of vessel operating range***		***As above***	

Hydrodynamic Loading (Notes 6 & 9) 2

In normal operation, pulse jet mixers discharge liquid into the parent vessel imposing a cyclical hydrodynamic load on all internal components. Occasionally, an upset condition designated 'overblow' causes air to be discharged from any single pulse jet mixer. All internal components shall be designed for the combination of the normal operational hydrodynamic loads and overblow loads, and this load combination is also to be assumed to act concurrently with seismic loads.

The following table indicates the normal hydrodynamic pressure for at ranges of elevations in the vessel and the number of design cycles for each condition. The hydrodynamic forces cycle between the indicated pressure ranges applied across the projected area of the component. Positive hydrodynamic forces act in the radial, outward direction and the vertical, upward direction. Seller shall apply the radial load simultaneously in the radial direction and normal to the radial direction in the horizontal plane.

Normal Operation Hydrodynamic Pressure Range, psi						Number of Cycles
Elevation A		Elevation B		Elevation C		
Radial	Vertical	Radial	Vertical	Radial	Vertical	
-0.15 to 0.25	*-0.15 to 0.15*	*-0.05 to 0.12*	*-0.15 to 0.15*	*-0.03 to 0.05*	*-0.06 to 0.15*	*3.9×10^8*

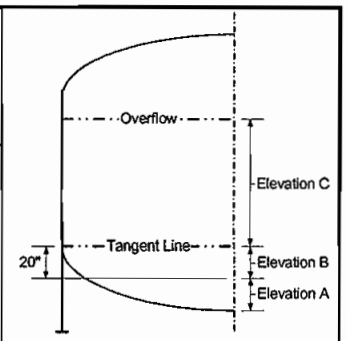

Overblow loads vary as a function of the distance from the center of the overblowing pulse jet mixer nozzle and the elevation 'H' above the overblowing pulse jet mixer nozzle as plotted:

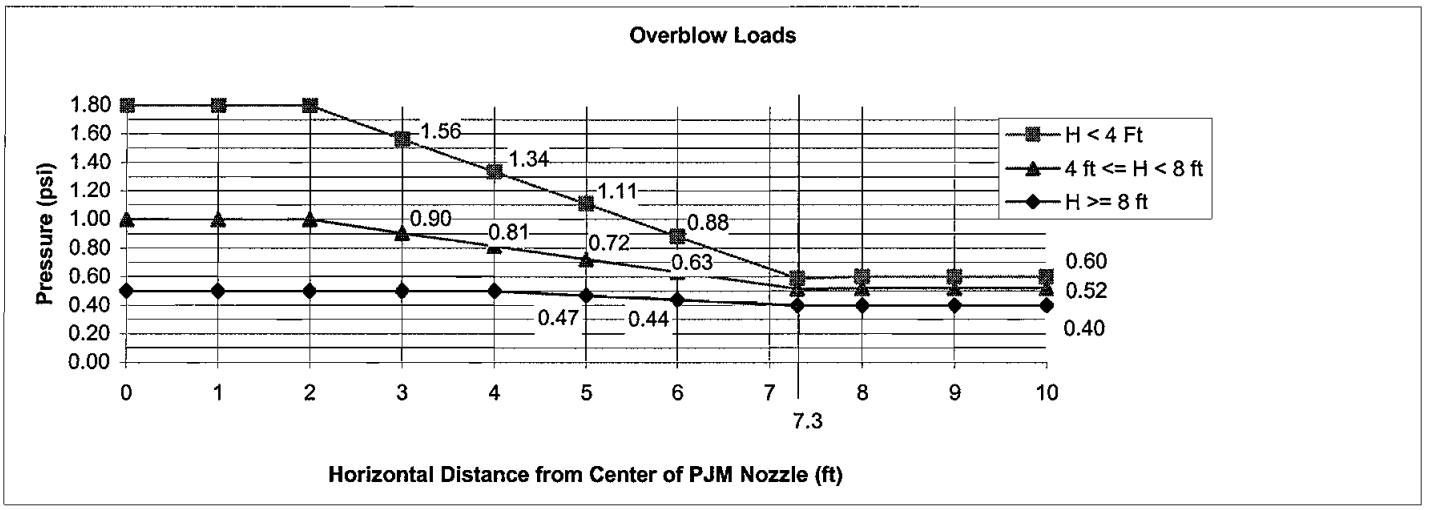

The overblow pressure shall only be applied to the projected area of the overblowing pulse jet mixer in the vertical, upward direction and to all surrounding components in the horizontal plane, radiating from the overblowing pulse jet mixer. Seller shall consider that any single pulse jet mixer may overblow 100 cycles.

Notes

- ***Cycle increase: The Seller must increase the numbers of operational cycles given above by 10% to account for commissioning duty unless otherwise noted.***
- ***Nozzle N02 and the associated dip pipe shall be fatigue assessed/analyzed for 2500 temperature/pressure cycles from 0 psig at 59°F to 15 psig at 353 °F, the pressure cycles shall coincide with the temperature cycles.*** 2

BECHTEL	**MECHANICAL DATA SHEET: VESSEL**	**PLANT ITEM No.** ***24590-PTF-MV-TCP-VSL-00001***

Equipment Cyclic Data Sheet

Plant Item Number	***TCP-PJM-00001, TCP-PJM-00002, TCP-PJM-00003, TCP-PJM-00004, TCP-PJM-00005, TCP-PJM-00006, TCP-PJM-00007, TCP-PJM-00008***
Component Description	***Pulse Jet Mixers***

The information below is provisional and envelopes operational duty for fatigue assessment. It is not to be used as operational data.

Materials of Construction	*SA 240 316 with max. Carbon of 0.030 %*
Design Life	***40 years***
Component Function and Life Cycle Description	***These pulse jet mixers (PJMs) are cyclically loaded using vacuum to fully fill the PJMs with process liquid and compressed air to fully empty the PJMs. The pulse jet mixers are contained within a parent vessel with varying liquid level. They shall be designed to cycle between the maximum design pressure and the minimum design pressure plus the external static head imposed by the parent vessel. The pulse jet mixer supports shall be designed to cycle between fully buoyant (pulse jet mixer empty and parent vessel full) and fully loaded (pulse jet mixer full and parent vessel empty) in addition to thrust.***

Load Type		Min	Max	Number of Cycles	Comment
Design Pressure	psig	***FV***	***83***	***10***	***Nominal assumption***
Operating Pressure	psig	***FV***	***58***	***3.9×10^6***	
Operating Temperature	°F	***77***	***212*** (2)	***3.9×10^6***	***Pressure cycles to be at 212° F and non-coincident with temperature cycles. The range given is uniform material temperature range, not between adjacent points.***
Contents Specific Gravity		***1.0***	***1.57*** (2)	***2080***	***Nominal assumption***
Contents Level	inch	***Empty***	***Flooded***	***3.9×10^6***	***Coincident with pressure cycles***
Localized Features					
Supports		***As above***		***As above with contents level changing coincident with pressure cycles.***	

Notes

- ***Cycle increase: The Seller must increase the numbers of operational cycles given above by 10% to account for commissioning duty unless otherwise noted.***

BECHTEL	**MECHANICAL DATA SHEET: VESSEL**	**PLANT ITEM No.** ***24590-PTF-MV-TLP-VSL-00009A***

Project:	***RPP-WTP***	P&ID:	***24590-PTF-M6-TLP-P0001***
Project No:	***24590***	Process Calculation:	***Deleted*** 2
Project Site:	***Hanford***	Vessel Drawing	***24590-PTF-MV-TLP-P0001***
Description:	***LAW SBS Condensate Receipt Vessel***		

Reference Data

Charge Vessels (Tag Numbers)	***Not Applicable***
Pulsejet Mixers / Agitators (Tag Numbers)	***TLP-PJM-00001, TLP-PJM-00002, TLP-PJM-00003, TLP-PJM-00004, TLP-PJM-00005, TLP-PJM-00006, TLP-PJM-00007, TLP-PJM-00008***
RFDs/Pumps (Tag Numbers)	***Not Applicable***

Design Data

Quality Level		***CM***	Fabrication Specs	***24590-WTP-3PS-MV00-TP001***		
Seismic Category		***SC-III***	Design Code	***ASME VIII Div 1***		
Service/Contents		***Radioactive Liquid***	Code Stamp	***Yes***		
Design Specific Gravity		***1.6***	NB Registration	***Yes***		
Maximum Operating Volume	gal	***114,060***	Weights (lbs)	Empty	Operating	Test
Total Volume	gal	***130,010***	Estimated	***218,400***	***1,769,100***	***1,303,300***
			Actual *			

Inside Diameter	inch	***312***			Wind Design	***Not Required***	
Length/Height (TL-TL)	inch	***328***			Snow Design	***Not Required***	
		Vessel Operating	Vessel Design	Coil/Jacket Design	Seismic Design	***24590-WTP-3PS-FB01-T0001***	
						24590-WTP-3PS-MV00-TP002	
Internal Pressure	psig	***0***	***15***	***N/A***	Seismic Base Moment *	ft*lb	
External Pressure	psig	***0.22***	***8***	***N/A***	Postweld Heat Treat	***Not Required***	
Temperature	°F	***167***	***192***	***N/A***	Corrosion Allowance	Inch	***0.04 (Note 7 & 8)*** 2
Min. Design Metal Temp.	°F	***40***			Hydrostatic Test Pressure *	psig	

Note: Please note that source, special nuclear and byproduct materials, as defined in the Atomic Energy Act of 1954 (AEA), are regulated at the U.S. Department of Energy (DOE) facilities exclusively by DOE acting pursuant to its AEA authority. DOE asserts, that pursuant to the AEA, it has sole and exclusive responsibility and authority to regulate source, special nuclear, and byproduct materials at DOE-owned nuclear facilities. Information contained herein on radionuclides is provided for process description purposes only.

MARK W. HOFFMANN
STATE OF WASHINGTON
0030952
REGISTERED
PROFESSIONAL ENGINEER
1/27/05
EXPIRES 12/10/06

This Bound Document Contains a total of 5 Sheets.

REV	DATE	REASON FOR REVISION	PREPARER	CHECKER	REVIEWER	APPROVER
2	1/27/05	Issued for Permitting Use				
1	3/25/04	Issued for Permitting Use	Kathy Brightman	Chan Chung	Cliff Slater	Mark Hoffmann
0	12/18/02	Issued for Permitting Use	Jessica Jackson	Cliff Slater	N/A	Mark Hoffmann

ISSUED BY
RPP-WTP PDC

R10461386

BECHTEL	**MECHANICAL DATA SHEET: VESSEL**	**PLANT ITEM No.** ***24590-PTF-MV-TLP-VSL-00009A***

Materials of Construction

Component	Material	Minimum Thickness / Size	Containment
Top Head	***UNS N08367***	***See Drawing***	***Auxiliary (See Note 1)***
Shell	***UNS N08367***	***See Drawing***	***Primary (See Note 1)***
Bottom Head	***UNS N08367***	***See Drawing***	Primary (See Note 1)
Support (Skirt)	***SA 240 304 with max. Carbon of 0.030 %***	***See Drawing***	N/A
Jacket/Coils/Half-Pipe Jacket	***N/A***	***N/A***	N/A
Internals	***UNS N08367***	***See Drawing***	Thermowell Primary (See Note 1)
Pipe	***UNS N08367 Seamless or N10276***	***See Drawing***	See Note-1
Forgings/ Bar stock	***UNS N08367***	***See Drawing***	***As Note-1 for Nozzle Necks***
Gaskets	***N/A***	***N/A***	***N/A***
Bolting	***N/A***	***N/A***	***N/A***

Miscellaneous Data

Orientation	***Vertical***	Support Type	***Skirt***
Insulation Function	***Not Applicable***	Insulation Material	***Not Applicable***
Insulation Thickness (inch)	***Not Applicable***	Welds Surface Finish	***De-scaled as laid***

Remarks

* To be determined by the vendor.

Note 1: All welds forming part of the primary and auxiliary containment including nozzle attachment welds shall be subjected to 100% volumetric examination.

Note 2: Deleted

Note 3: Vessel volumes are approximate and do not account for manufacturing tolerances, nozzles, and displacement of internals

Note 4: Contents of this document are Dangerous Waste Permit affecting.

Note 5: This vessel is in a Black Cell.

Note 6: Deleted 2

Note 7: BNI shall ensure that an additional 0.056" is available for erosion in the bottom head and the Seller shall report the minimum thickness required for all specified loading conditions, exclusive of erosion and corrosion allowances. 2

Note 8: BNI shall ensure that an additional 0.036" is available for erosion in the lower 4" of the interior conical surface of the pulse jet mixers. 2

Note 9: All hydrodynamic loads are for BNI internal use only and are to be disregarded by the Seller. 2

Equipment Cyclic Data Sheet

Plant Item Number	***24590-PTF-TLP-VSL-00009A***
Component Description	***Parent Vessel***

The information below is provisional and envelopes operational duty for fatigue assessment. It is not to be used as operational data.

Materials of Construction	***UNS N08367***
Design Life	***40 years***
Component Function and Life Cycle Description	***This vessel receives intermittently LAW SBS condensate, off-spec effluent, and treated LAW concentrate. The vessel is emptied manually whenever it gets filled to the high level. Washdown is once per year.***

Load Type		Min	Max	Number of Cycles	Comment
Design Pressure	psig	***-8***	***15***	***10***	***Nominal assumption***
Operating Pressure	psig	***-0.22***	***0***	***5700***	
Operating Temperature	°F	***68***	***167***	***5700***	***Uniform material temperature range, not between two points***
Contents Specific Gravity		***1.0***	***1.6***	***2080***	***Nominal assumption***
Contents Level	inch	***28***	***358***	***5700***	***Coincident with pressure cycles***
Localized Features					
Nozzles		***Within 50°F of operating temperature range***		***As above***	

Hydrodynamic Loading (Notes 6 & 9) △2

In normal operation, pulse jet mixers discharge liquid into the parent vessel imposing a cyclical hydrodynamic load on all internal components. Occasionally, an upset condition designated 'overblow' causes air to be discharged from any single pulse jet mixer. All internal components shall be designed for the combination of the normal operational hydrodynamic loads and overblow loads, and this load combination is also to be assumed to act concurrently with seismic loads.

The following table indicates the normal hydrodynamic pressure for at ranges of elevations in the vessel and the number of design cycles for each condition. The hydrodynamic forces cycle between the indicated pressure ranges applied across the projected area of the component. Positive hydrodynamic forces act in the radial, outward direction and the vertical, upward direction. Seller shall apply the radial load simultaneously in the radial direction and normal to the radial direction in the horizontal plane.

Normal Operation Hydrodynamic Pressure Range, psi						Number of Cycles
Elevation A		Elevation B		Elevation C		
Radial	Vertical	Radial	Vertical	Radial	Vertical	
-0.15 to 0.25	*-0.15 to 0.15*	*-0.05 to 0.12*	*-0.15 to 0.15*	*-0.03 to 0.05*	*-0.06 to 0.15*	*3.7×10^6*

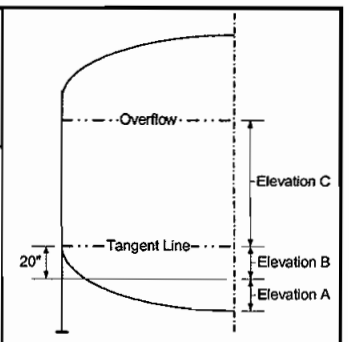

Overblow loads vary as a function of the distance from the center of the overblowing pulse jet mixer nozzle and the elevation 'H' above the overblowing pulse jet mixer nozzle as plotted:

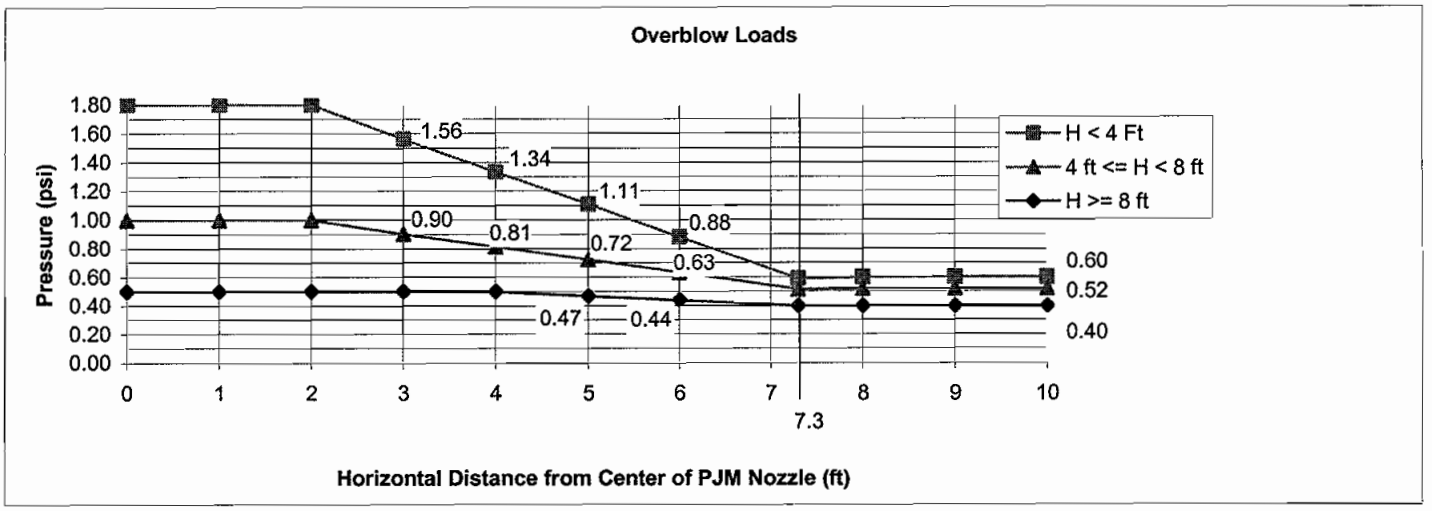

The overblow pressure shall only be applied to the projected area of the overblowing pulse jet mixer in the vertical, upward direction and to all surrounding components in the horizontal plane, radiating from the overblowing pulse jet mixer. Seller shall consider that any single pulse jet mixer may overblow 100 cycles.

Notes

- ***Cycle increase: The Seller must increase the numbers of operational cycles given above by 10% to account for commissioning duty unless otherwise noted.***

BECHTEL	**MECHANICAL DATA SHEET: VESSEL**	**PLANT ITEM No.** ***24590-PTF-MV-TLP-VSL-00009A***

Equipment Cyclic Data Sheet

Plant Item Number	*TLP-PJM-00001, TLP-PJM-00002, TLP-PJM-00003, TLP-PJM-00004, TLP-PJM-00005, TLP-PJM-00006, TLP-PJM-00007, TLP-PJM-00008*
Component Description	***Pulse Jet Mixers***

The information below is provisional and envelopes operational duty for fatigue assessment. It is not to be used as operational data.

Materials of Construction	***UNS N08367***
Design Life	***40 years***
Component Function and Life Cycle Description	***These pulse jet mixers are cyclically loaded using vacuum to fully fill the vessel with process liquid and compressed air to fully empty the vessel. The pulse jet mixers are contained within a parent vessel with varying liquid level. They shall be designed to cycle between the maximum design pressure and the minimum design pressure plus the external static head imposed by the parent vessel. The pulse jet mixer supports shall be designed to cycle between fully buoyant (pulse jet mixer empty and parent vessel full) and fully loaded (pulse jet mixer full and parent vessel empty) in addition to thrust.***

Load Type		Min	Max	Number of Cycles	Comment
Design Pressure	psig	***FV***	***83***	***10***	***Nominal assumption***
Operating Pressure	psig	***FV***	***58***	***3.7×10^6***	
Operating Temperature	°F	***68***	***167***	***3.7×10^6***	***Pressure cycles to be at 167° F and non-coincident with temperature cycles. The range given is uniform material temperature range, not between adjacent points.***
Contents Specific Gravity		***1.0***	***1.6***	***2080***	***Nominal assumption***
Contents Level	inch	***Empty***	***Flooded***	***3.7×10^6***	***Coincident with pressure cycles***
Localized Features					
Supports		***As above***		***As above with contents level changing coincident with pressure cycles.***	

Notes

- ***Cycle increase: The Seller must increase the numbers of operational cycles given above by 10% to account for commissioning duty unless otherwise noted.***

BECHTEL	**MECHANICAL DATA SHEET: VESSEL**	**PLANT ITEM No.** ***24590-PTF-MV-TLP-VSL-00009B***

Project:	***RPP-WTP***	P&ID:	***24590-PTF-M6-TLP-P0001***
Project No:	***24590***	Process Calculation:	***Deleted*** 2
Project Site:	***Hanford***	Vessel Drawing	***24590-PTF-MV-TLP-P0002***
Description:	***LAW SBS Condensate Receipt Vessel***		

Reference Data

Charge Vessels (Tag Numbers)	***Not Applicable***
Pulsejet Mixers / Agitators (Tag Numbers)	***TLP-PJM-00009, TLP-PJM-00010, TLP-PJM-00011, TLP-PJM-00012, TLP-PJM-00013, TLP-PJM-00014, TLP-PJM-00015, TLP-PJM-00016***
RFDs/Pumps (Tag Numbers)	***Not Applicable***

Design Data

Quality Level		***CM***	Fabrication Specs	***24590-WTP-3PS-MV00-TP001***		
Seismic Category		***SC-III***	Design Code	***ASME VIII Div 1***		
Service/Contents		***Radioactive Liquid***	Code Stamp	***Yes***		
Design Specific Gravity		***1.6***	NB Registration	***Yes***		
Maximum Operating Volume	gal	***114,060***	Weights (lbs)	Empty	Operating	Test
Total Volume	gal	***130,010***	Estimated	***218,400***	***1,769,100***	***1,303,300***
			Actual *			

Inside Diameter	inch	***312***			Wind Design	***Not Required***	
Length/Height (TL-TL)	inch	***328***			Snow Design	***Not Required***	
		Vessel Operating	Vessel Design	Coil/Jacket Design	Seismic Design	***24590-WTP-3PS-FB01-T0001***	
						24590-WTP-3PS-MV00-TP002	
Internal Pressure	psig	***0***	***15***	***N/A***	Seismic Base Moment *	ft*lb	
External Pressure	psig	***0.22***	***8***	***N/A***	Postweld Heat Treat	***Not Required***	
Temperature	°F	***167***	***192***	***N/A***	Corrosion Allowance	Inch	***0.04 (Notes 7 & 8)*** 2
Min. Design Metal Temp.	°F	***40***			Hydrostatic Test Pressure *	psig	

Note: Please note that source, special nuclear and byproduct materials, as defined in the Atomic Energy Act of 1954 (AEA), are regulated at the U.S. Department of Energy (DOE) facilities exclusively by DOE acting pursuant to its AEA authority. DOE asserts, that pursuant to the AEA, it has sole and exclusive responsibility and authority to regulate source, special nuclear, and byproduct materials at DOE-owned nuclear facilities. Information contained herein on radionuclides is provided for process description purposes only.

MARK W. HOFFMANN
STATE OF WASHINGTON
0030952
REGISTERED
PROFESSIONAL ENGINEER
1/27/05
EXPIRES 12/10/06

This Bound Document Contains a total of 5 Sheets.

REV	DATE	REASON FOR REVISION	PREPARER	CHECKER	REVIEWER	APPROVER
2	1/27/05	Issued for Permitting Use				
1	9/13/03	Issued for Permitting Use	Jessica Jackson	Chan Chung	Cliff Slater	Mark Hoffmann
0	12/17/03	Issued for Permitting Use	Jessica Jackson	Cliff Slater	N/A	Mark Hoffmann

ISSUED BY
RPP-WTP PDC

R10461385

BECHTEL	**MECHANICAL DATA SHEET: VESSEL**	**PLANT ITEM No.** ***24590-PTF-MV-TLP-VSL-00009B***

Materials of Construction

Component	Material	Minimum Thickness / Size	Containment
Top Head	***UNS N08367***	***See Drawing***	***Auxiliary (See Note 1)***
Shell	***UNS N08367***	***See Drawing***	***Primary (See Note 1)***
Bottom Head	***UNS N08367***	***See Drawing***	Primary (See Note 1)
Support (Skirt)	***SA 240 304 with max. Carbon of 0.030 %***	***See Drawing***	N/A
Jacket/Coils/Half-Pipe Jacket	***N/A***	***N/A***	N/A
Internals	***UNS N08367***	***See Drawing***	Thermowell Primary (See Note 1)
Pipe	***UNS N08367 Seamless or N10276*** 2	***See Drawing***	See Note-1
Forgings/ Bar stock	***UNS N08367***	***See Drawing***	***As Note-1 for Nozzle Necks***
Gaskets	***N/A***	***N/A***	***N/A***
Bolting	***N/A***	***N/A***	***N/A***

Miscellaneous Data

Orientation	***Vertical***	Support Type	***Skirt***
Insulation Function	***Not Applicable***	Insulation Material	***Not Applicable***
Insulation Thickness (inch)	***Not Applicable***	Welds Surface Finish	***De-scaled as laid***

Remarks

* To be determined by the vendor.

Note 1: All welds forming part of the primary and auxiliary containment including nozzle attachment welds shall be subjected to 100% volumetric examination.

Note 2: Deleted

Note 3: Vessel volumes are approximate and do not account for manufacturing tolerances, nozzles, and displacement of internals

Note 4: Contents of this document are Dangerous Waste Permit affecting.

Note 5: This vessel is in a Black Cell.

Note 6: Deleted. 2

Note 7: BNI shall ensure that an additional 0.056" is available for erosion in the bottom head and the Seller shall report the minimum thickness required for all specified loading conditions, exclusive of erosion and corrosion allowances. 2

Note 8: BNI shall ensure that an additional 0.036" is available for erosion in the lower 4" of the interior conical surface of the pulse jet mixers. 2

Note 9: All hydrodynamic loads are for BNI internal use only and are to be disregarded by the Seller. 2

BECHTEL	**MECHANICAL DATA SHEET: VESSEL**	**PLANT ITEM No.** ***24590-PTF-MV-TLP-VSL-00009B***

Equipment Cyclic Data Sheet

Plant Item Number	***24590-PTF-TLP-VSL-00009B*** 2
Component Description	***Parent Vessel***

The information below is provisional and envelopes operational duty for fatigue assessment. It is not to be used as operational data.

Materials of Construction	***UNS N08367***
Design Life	***40 years***
Component Function and Life Cycle Description	***This vessel receives intermittently LAW SBS condensate, off-spec effluent, and treated LAW concentrate. The vessel is emptied manually whenever it gets filled to the high level. Washdown is once per year.***

Load Type		Min	Max	Number of Cycles	Comment
Design Pressure	psig	***-8***	***15***	***10***	***Nominal assumption***
Operating Pressure	psig	***-0.22***	***0***	***5700***	
Operating Temperature	°F	***68***	***167***	***5700***	***Uniform material temperature range, not between two points***
Contents Specific Gravity		***1.0***	***1.6***	***2080***	***Nominal assumption***
Contents Level	inch	***28***	***358***	***5700***	***Coincident with pressure cycles***
Localized Features					
Nozzles		***Within 50°F of operating temperature range***		***As above***	

Hydrodynamic Loading (Notes 6 & 9) 2

In normal operation, pulse jet mixers discharge liquid into the parent vessel imposing a cyclical hydrodynamic load on all internal components. Occasionally, an upset condition designated 'overblow' causes air to be discharged from any single pulse jet mixer. All internal components shall be designed for the combination of the normal operational hydrodynamic loads and overblow loads, and this load combination is also to be assumed to act concurrently with seismic loads.

The following table indicates the normal hydrodynamic pressure for at ranges of elevations in the vessel and the number of design cycles for each condition. The hydrodynamic forces cycle between the indicated pressure ranges applied across the projected area of the component. Positive hydrodynamic forces act in the radial, outward direction and the vertical, upward direction. Seller shall apply the radial load simultaneously in the radial direction and normal to the radial direction in the horizontal plane.

Normal Operation Hydrodynamic Pressure Range, psi						Number of Cycles
Elevation A		Elevation B		Elevation C		
Radial	Vertical	Radial	Vertical	Radial	Vertical	
-0.15 to 0.25	*-0.15 to 0.15*	*-0.05 to 0.12*	*-0.15 to 0.15*	*-0.03 to 0.05*	*-0.06 to 0.15*	*3.7×10^5*

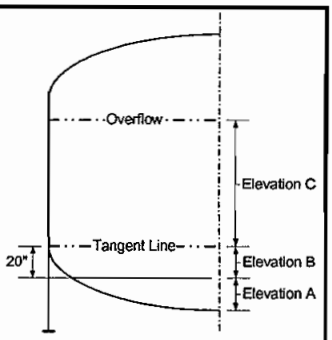

Overblow loads vary as a function of the distance from the center of the overblowing pulse jet mixer nozzle and the elevation 'H' above the overblowing pulse jet mixer nozzle as plotted:

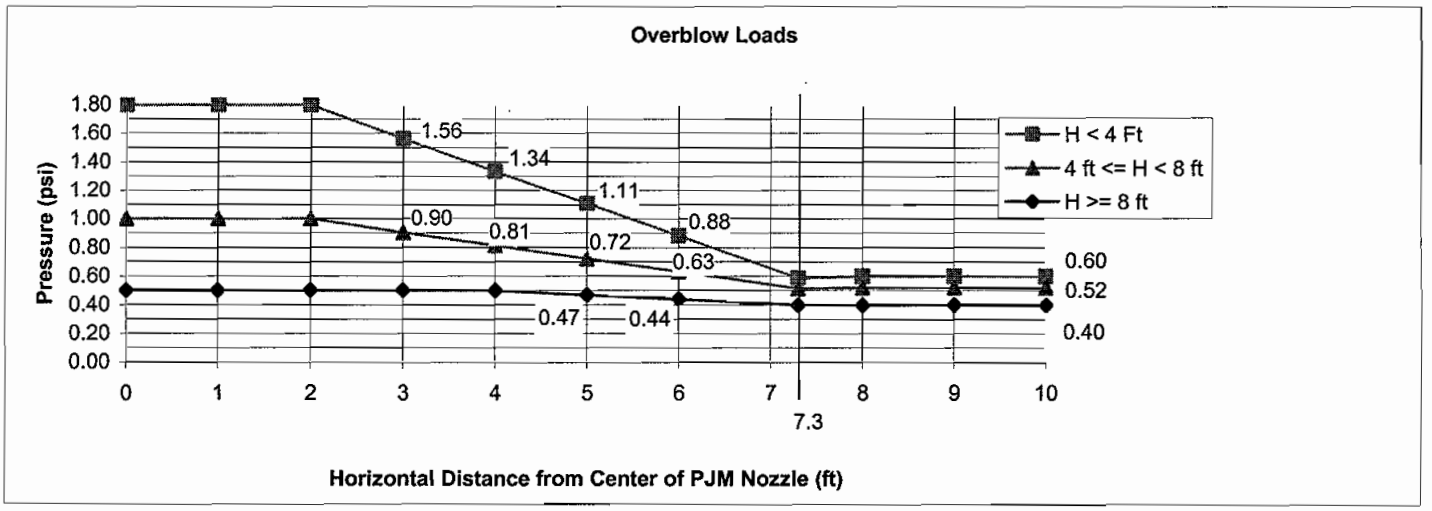

The overblow pressure shall only be applied to the projected area of the overblowing pulse jet mixer in the vertical, upward direction and to all surrounding components in the horizontal plane, radiating from the overblowing pulse jet mixer. Seller shall consider that any single pulse jet mixer may overblow 100 cycles.

Notes

- ***Cycle increase: The Seller must increase the numbers of operational cycles given above by 10% to account for commissioning duty unless otherwise noted.***

BECHTEL	**MECHANICAL DATA SHEET: VESSEL**	**PLANT ITEM No.** ***24590-PTF-MV-TLP-VSL-00009B***

Equipment Cyclic Data Sheet

Plant Item Number	*TLP-PJM-00009, TLP-PJM-00010, TLP-PJM-00011, TLP-PJM-00012, TLP-PJM-00013, TLP-PJM-00014, TLP-PJM-00015, TLP-PJM-00016*
Component Description	***Pulse Jet Mixers***

The information below is provisional and envelopes operational duty for fatigue assessment. It is not to be used as operational data.

Materials of Construction	***UNS N08367***
Design Life	***40 years***
Component Function and Life Cycle Description	***These pulse jet mixers are cyclically loaded using vacuum to fully fill the vessel with process liquid and compressed air to fully empty the vessel. The pulse jet mixers are contained within a parent vessel with varying liquid level. They shall be designed to cycle between the maximum design pressure and the minimum design pressure plus the external static head imposed by the parent vessel. The pulse jet mixer supports shall be designed to cycle between fully buoyant (pulse jet mixer empty and parent vessel full) and fully loaded (pulse jet mixer full and parent vessel empty) in addition to thrust.***

Load Type		Min	Max	Number of Cycles	Comment
Design Pressure	psig	***FV***	***83***	***10***	***Nominal assumption***
Operating Pressure	psig	***FV***	***58***	***3.7×10^6***	
Operating Temperature	°F	***68***	***167***	***3.7×10^6***	***Pressure cycles to be at 167° F and non-coincident with temperature cycles. The range given is uniform material temperature range, not between adjacent points.***
Contents Specific Gravity		***1.0***	***1.6***	***2080***	***Nominal assumption***
Contents Level	inch	***Empty***	***Flooded***	***3.7×10^6***	***Coincident with pressure cycles***
Localized Features					
Supports		***As above***		***As above with contents level changing coincident with pressure cycles.***	

Notes

- ***Cycle increase: The Seller must increase the numbers of operational cycles given above by 10% to account for commissioning duty unless otherwise noted.***

BECHTEL	Mechanical Data Sheet: Vessel	Plant Item No. 24590-PTF-MV-TLP-VSL-00002 Data Sheet No. 24590-PTF-MVD-TLP-P0004

R10274731

Project:	RPP-WTP	P&IDs	24590-PTF-M6-TLP-P0002
Project No:	24590		
Project Site:	DOE Hanford	Process Data Sheets	24590-PTF-MVC-TLP-00002
System No.	TLP		
Building:	PTF	Vessel Drawings	N/A
Description:	Treated LAW Evaporator Condensate Vessel TLP-VSL-00002		

Reference Data

Charge Vessels (Tag Numbers)	N/A
Pulse Jet Mixers / Agitators (Tag Numbers)	N/A
RFDs/Pumps (Tag Numbers)	N/A

Service Data

Quality Level		CM	Fabrication Specification	24590-WTP-3PS-MV00-TP001
Seismic Category		SC-III	Design Code	ASME Section VIII Division 1
Service/Contents		Process Condensate	Code Stamp	Yes
Design Specific Gravity		1.0	NB Registration	Yes
Max Operating Volume	gal	1916**	Wind Design	None
Total Volume	gal	2304**	Snow/Ash Design	None
Postweld Heat Treat		Not Required	Seismic Design	24590-WTP-3PS-MV00-TP002 24590-WTP-3PS-SS90-T0001
Seismic Base Moment*	ft*lb			

Design Data

Inside Diameter	inch	72**		Corrosion Allowance inch	0.04
Length/Height (TL-TL)	inch	107**			
		Vessel Operating	Vessel Design	Coil/Jacket Design	Notes
Internal Pressure	PSIG	-0.07	15	N/A	
External Pressure	PSIG	0	14.7	N/A	
Temperature	°F	100	150	N/A	
Min Design Metal Temp	°F	49		Hydrostatic Test Pressure PSIG	22

Material of Construction

Component	Material	Containment	Notes
Top Head	SA-240 TP 304L	Auxiliary	1/4" thickness; maximum carbon content of 0.030% for welded components
Shell	SA-240 TP 304L	Primary	1/4" thickness; maximum carbon content of 0.030% for welded components
Bottom Head	SA-240 TP 304L	Primary	1/4" thickness; maximum carbon content of 0.030% for welded components
Vessel Support	Stainless Steel	N/A	Maximum carbon content of 0.030% for welded components
Jacket/Coils/Half-Pipe Jacket	N/A	N/A	
Internals	N/A	N/A	
Pipe	SA-312 TP316	Note 1	Maximum carbon content of 0.030% for welded components
Forgings/ Bar stock	SA-182 F316	Note 1	Maximum carbon content of 0.030% for welded components
Gaskets	Flex Spiral Wound		Flexitallic spiral wound
Bolting	A193 GR B7		With 2 hex. Nuts
Other			

Note: Please note that source, special nuclear and byproduct materials, as defined in the Atomic Energy Act of 1954 (AEA), are regulated at the U.S. Department of Energy (DOE) facilities exclusively by DOE acting pursuant to its AEA authority. DOE asserts, that pursuant to the AEA, it has sole and exclusive responsibility and authority to regulate source, special nuclear, and byproduct materials at DOE-owned nuclear facilities. Information contained herein on radionuclides is provided for process description purposes only.

ISSUED UT
RPP-WTP/PDC
JC 3/29/04
INIT DATE

MARK W. HOFFMANN
STATE OF WASHINGTON
0030952
REGISTERED
PROFESSIONAL ENGINEER
3/24/04

EXPIRES 12/10/04

This Bound Document Contains a total of 2 pages.

REV	REASON FOR REVISION	PREPARED	CHECKED	APPROVED	DATE
0	Issued for Permitting Use	E. Le	D. Reinemann	J. Julyk	3/24/04

3/24/04

Miscellaneous Data

Orientation		***Vertical***
Support Type		***Support legs***
Insulation Function		***None***
Insulation Thickness	inch	***None***
Insulation Material		***None***
External Finish		***Welds descaled as laid***
Internal Finish		***Welds ground smooth***

Notes

**** To be determined by Seller.***
***** To be verified bySeller.***
Notes: (1) Nozzles located below the top of the overflow nozzle are primary containment. See 24590-WTP-3PS-MV00-TP001 for NDE requirements.
(2) Nozzle tolerance +/- 1/4"
(3) Support pads shall be high to align vessel overflow nozzle centerline at 17'-5 7/8"
(4) 40 years design life
(5) NDE for this vessel must meet requirements per para. 6.4.2 of specification 24590-WTP-3PS-MV00-TP001

BECHTEL	Mechanical Data Sheet: Vessel	Plant Item No. 24590-PTF-MV-TLP-SEP-00001 Data Sheet No. 24590-PTF-MVD-TLP-P0005

R10637902

Project:	RPP-WTP	P&IDs	24590-PTF-M6-TLP-P0003
Project No:	24590		
Project Site:	DOE Hanford	Process Calculation	24590-PTF-MEC-TLP-00002
System No.	TLP		
Building:	PTF	Vessel Drawings	24590-QL-POA-MEVV-00001-01-196
Description:	Treated LAW Evaporator Separator Vessel TLP-SEP-00001		

ISSUED BY RPP-WTP PDC

Reference Data

Charge Vessels (Tag Numbers)	N/A
Pulse Jet Mixers / Agitators (Tag Numbers)	N/A
RFDs/Pumps (Tag Numbers)	N/A

Service Data

Quality Level	QL-1	Fabrication Specification	24590-WTP-3PS-MV00-TP001
Seismic Category	SC-1	Design Code	ASME Section VIII Division 1
Service/Contents	Radioactive Slurry	Code Stamp	U1 Stamp
Design Specific Gravity	1.57	NB Registration	Yes
Max Operating Volume gal	3,341	Wind Design	None
Total Volume gal	13,359	Snow/Ash Design	None
Postweld Heat Treat	Not Required	Seismic Design	24590-WTP-3PS-MV00-TP002 24590-WTP-3PS-SS90-T0001
Seismic Base Moment* ft*lb	N/A		
Environmental Qualification	N/A 2		

Design Data

Inside Diameter** inch	7'6" (Upper), 11'5" (Lower)	Corrosion Allowance inch	0.04
Length/Height** inch	406 3/4		

		Vessel Operating	Vessel Design	Coil/Jacket Design	Notes
Internal Pressure	PSIG	-13.4	50	N/A	Vessel operating at 1.3 psia
External Pressure	PSIG	0	14.7	N/A	
Temperature	°F	135 2	175	N/A	
Min Design Metal Temp	°F	49		Hydrostatic Test Pressure PSIG	65

Materials of Construction

Component	Material	Containment	Notes
Top Head	SA 240 304 SS	Auxiliary (Note 6)	1/2" thickness; maximum carbon content of 0.030% for welded components
Shell	SA 240 304 SS	Primary (Note 6)	1/2" thickness; maximum carbon content of 0.030% for welded components
Bottom Head	SA 240 304 SS	Primary (Note 6)	1/2" thickness; maximum carbon content of 0.030% for welded components
Vessel Support	SA 240 304 SS	N/A	Maximum carbon content of 0.030% for welded components
Jacket/Coils/Half-Pipe Jacket	N/A	N/A	
Internals	SA 240 304 SS	Thermowell Primary (Note 6)	Maximum carbon content of 0.030% for welded components
Pipe	SA 312 304 SS	Note 6	Maximum carbon content of 0.030% for welded components
Forgings/ Bar stock	SA 479 304 SS	Note 1	Maximum carbon content of 0.030% for welded components
Gaskets	304 SS		Flexitallic spiral wound, Graphite Filler
Bolting	Nitronic 60		Dwg. 24590-QL-POA-00001-01-00302 (Captive Bolts) 2
Other (Fittings) 2	SA 403 WP 304 SS		Maximum carbon content of 0.030% for welded components

Note: Please note that source, special nuclear and byproduct materials, as defined in the Atomic Energy Act of 1954 (AEA), are regulated at the U.S. Department of Energy (DOE) facilities exclusively by DOE acting pursuant to its AEA authority. DOE asserts, that pursuant to the AEA, it has sole and exclusive responsibility and authority to regulate source, special nuclear, and byproduct materials at DOE-owned nuclear facilities. Information contained herein on radionuclides is provided for process description purposes only.

ERIC B. ISERN
STATE OF WASHINGTON
33449
REGISTERED
PROFESSIONAL ENGINEER
11/1/05
EXPIRES: 07/28/07

This Bound Document Contains a total of 2 sheets

Rev.	Reason for Revision	Preparer	Checker	Reviewer	Approver	Date
2	Issue for Permitting Use					11/1/05
1	Issue for Permitting Use	E. Le	S. Crow	N/A	J. Julyk	2/10/2005
0	Issue for Permitting Use	E. Le	D. Reinemann	N/A	J. Julyk	3/17/2004

	Mechanical Data Sheet: Vessel	Plant Item No. 24590-PTF-MV-TLP-SEP-00001
		Data Sheet No. 24590-PTF-MVD-TLP-P0005

Miscellaneous Data

Orientation	*Vertical*
Support Type	*Stainless steel legs*
Insulation Function	*None*
Insulation Thickness inch	*None*
Insulation Material	*None*
External Finish	*Welds descaled as laid*
Internal Finish	*Welds ground smooth; lower 16'-3 7/16" shell and cone to be #4 polished finish.*

Notes

(1) Nozzles located below the top of the overflow nozzle are primary containment. See 24590-WTP-3PS-MV00-TP001 for NDE requirements.
(2) Nozzle tolerance +/- 1/4"
(3) Material for demister pad is Inconel 625 fine mesh
(4) Non-replaceable 40 years design life (except demister pads section)
(5) NDE for this vessel must meet requirements per para. 6.1, 6.2 and 7.2 of specification 24590-WTP-3PS-MV00-TP001
(6) All welds forming part of the primary and auxiliary containments, including the nozzle attachment welds shall be subjected to 100% volumetric examination.
(7) This vessel is located in a Black Cell.
(8) Vendor to specify all metal thicknesses
(9) Contents of this document are Dangerous Waste Permit affecting 2
(10) All vessel nozzle loads due to thermal expansion are estimated based on the maximum operating temperature of 150 degree F. 2
(11) Environmental Qualification is not applicable since this vessel is not important-to-Safety (non-ITS) and all the materials of construction are metallic (24590-WTP-GPG-ENG-086, Rev. 0) 2

MECHANICAL SYSTEMS DATA SHEET: VESSEL

PLANT ITEM No.
24590-PTF-MV-UFP-VSL-00001A

Project:	***RPP-WTP***	P&ID:	***24590-PTF-M6-UFP-P0001/P0007/P0008/P0015*** 1
Project No:	***24590***	Process Calculation:	***DELETED*** 1
Project Site:	***Hanford***	Vessel Drawing	***24590-PTF-MV-UFP-P0001***
Description:	***Ultrafiltration Feed Preparation Vessel***		

Reference Data

Charge Vessels (Tag Numbers)	***DELETED***
Pulsejet Mixers / Agitators (Tag Numbers)	***UFP-PJM-00001, UFP-PJM-00002, UFP-PJM-00003, UFP-PJM-00004, UFP-PJM-00044, UFP-PJM-00053, UFP-PJM-00105, UFP-PJM-00106***
RFDs/Pumps (Tag Numbers)	***DELETED***

Design Data

Quality Level		***QL-1***		Fabrication Specs	***24590-WTP-3PS-MV00-TP001***		
Seismic Category		***SC-I***		Design Code	***ASME VIII Div 1***		
Service/Contents		***Radioactive Liquid***		Code Stamp	***Yes***		
Design Specific Gravity		***1.32***		NB Registration	***Yes***		
Maximum Operating Volume	gal	***64,626***		Weights (lbs)	Empty	Operating	Test
Total Volume	gal	***75,593***		Estimated	***184,000***	***934,000***	***822,000***
Environmental Qualification	1	***N/A***		Actual *	***223,240*** 1	***970,440*** 1	***887,140*** 1

Inside Diameter	inch	***240***			Wind Design	***Not Required***	
Length/Height (TL-TL)	inch	***306***			Snow Design	***Not Required***	
		Vessel Operating	Vessel Design	Coil/Jacket Design	Seismic Design	***24590-WTP-3PS-MV00-TP002*** ***24590-WTP-3PS-SS90-T0001***	
Internal Pressure	psig	***ATM***	***15***	***35***	Seismic Base Moment *	ft*lb	
External Pressure	psig	***0.217***	***12*** 1 ***(Note 3,4)***	***0.0***	Postweld Heat Treat	***Not Required***	
Temperature	°F	***122***	***150***	***150*** 1	Corrosion Allowance	Inch	***0.040 (Note 12)*** 1
Min. Design Metal Temp.	°F	***40***			Hydrostatic Test Pressure *	psig	

Note: Please note that source, special nuclear and byproduct materials, as defined in the Atomic Energy Act of 1954 (AEA), are regulated at the U.S. Department of Energy (DOE) facilities exclusively by DOE acting pursuant to its AEA authority. DOE asserts, that pursuant to the AEA, it has sole and exclusive responsibility and authority to regulate source, special nuclear, and byproduct materials at DOE-owned nuclear facilities. Information contained herein on radionuclides is provided for process description purposes only.

MARK W. HOFFMANN
STATE OF WASHINGTON
0030952
REGISTERED PROFESSIONAL ENGINEER
5/1/05
EXPIRES 12/10/06

This Bound Document Contains a total of 4 sheets.

REV	DATE	REASON FOR REVISION	PREPARER	CHECKER	REVIEWER	APPROVER
1	5/1/05	Issued for Permitting Use				
0	10/8/03	Issued for Permitting Use	J. Jackson	H. Khurana	C. Slater	M. Hoffmann

ISSUED BY
RPP-WTP PDC

R10554037

BECHTEL	**MECHANICAL SYSTEMS DATA SHEET: VESSEL**	**PLANT ITEM No.** ***24590-PTF-MV-UFP-VSL-00001A***

Materials of Construction

Component	Material		Minimum Thickness / Size	Containment
Top Head	***SA 240 316***	***Note 1***	***See Drawing***	***Auxiliary (see Note 8)*** 1
Shell	***SA 240 316***	***Note 1***	***See Drawing***	***Primary (see Note 8)*** 1
Bottom Head	***SA 240 316***	***Note 1***	***See Drawing***	***Primary (see Note 8)*** 1
Support	***SA 240 304***	***Note 1***	***See Drawing***	***N/A***
Jacket/Coils/Half-Pipe Jacket	***SA 240 316***	***Note 1***	***See Drawing***	***N/A***
Internals	***SA 240 316***	***Note 1***	***See Drawing***	***Thermowells Primary***
Pipe Nozzles	***SA 312 TP316***	***Note 1***	***See Drawing***	***Primary (see Note 8)*** 1
Forgings/ Bar stock	***SA 182 F316***	***Note 1***	***See Drawing***	***N/A***
Wash Ring Pipe	***SA 312 TP316***	***Note 1***	***See Drawing***	***N/A***
Bolting/Gaskets	***N/A***		***N/A***	***N/A***
Wear Plates	***SA 240 316***	***Note 1***	***See Drawing***	***N/A***

Miscellaneous Data

Orientation	***Vertical***	Support Type	***Skirt***
Insulation Function	***Not Applicable***	Insulation Material	***Not Applicable***
Insulation Thickness (inch)	***Not Applicable***	Internal Finish	***Note 2***
		External Finish	***Note 2***

Remarks

* To be determined by the vendor.

Note 1. ***Maximum 0.030% carbon.***

Note 2. ***Welds de-scaled as laid.***

Note 3. ***External design pressure under the jacket shall be rated for the jacket design pressure plus 1 psig internal vacuum in the vessel to account for ventilation fan pressure.***

Note 4. ***The vessel design external pressure is estimated only and shall be confirmed by the Seller's calculations***

Note 5. ***Deleted***

Note 6. ***Vessel volumes are approximate and do not account for the manufacturing tolerances, nozzles, and displacement of internals.*** 1

Note 7. ***This vessel is in a Black Cell.*** 1

Note 8. ***All welds forming part of the primary and auxiliary containment including nozzle attachment welds shall be subjected to 100% volumetric examination.***

Note 9. ***Contents of this document are Dangerous Waste Permit affecting.*** 1

Note 10. ***Deleted*** 1

Note 11. ***Deleted.*** 1

Note 12. ***BNI shall ensure that an additional 0.087" is available for erosion in the lower 4" of the interior conical surface of the pulse jet mixers.*** 1

Note 13. ***Seller shall provide wear plates for erosion control on the bottom head.*** 1

Note 14. ***All hydrodynamic and overblow loads are for BNI internal use only and are to be disregarded by the seller.*** 1

Note 15. ***Required data for thermal stress analysis for nozzles exposed to higher temperatures.*** 1

- ***Cell ambient temperature = 113 °F***
- ***Headspace temperature or Operating temperature = 122 °F***
- ***Ambient and headspace natural convection heat transfer coefficients = 0.703 Btu/hr ft² F***
- ***Inlet fluid transfer frequency and mass flow rate for nozzles N15 and N55.***

  Steam max temperature = 212 °F

  Transfer frequency = 1 transfer/9 days for 1.5 hrs.

  Steam mass flow rate = 2885 lb/hr

BECHTEL	**MECHANICAL SYSTEMS DATA SHEET: VESSEL**	**PLANT ITEM No.** ***24590-PTF-MV-UFP-VSL-00001A***

Equipment Cyclic Data Sheet

Component Plant Item Number:	*24590-PTF-MV-UFP-UFP-VSL-00001A*
Component Description	*Ultrafiltration Feed Preparation Vessel*

The information below is provisional and envelopes operational duty for fatigue assessment. It is not to be used as operational data.

Materials of Construction	*ASME SA240 316 with 0.030 % max. Carbon*
Design Life	*40 Years*
Component Function and Life Cycle Description	*The system receives waste feed from the Waste Feed Evaporation Process System (FEP), and HLW Feed Receipt Vessel (HLP). The vessel is filled over a period of approximately in 48 hours. If necessary, the vessel cools the waste prior to ultrafiltration operations. The precipitation of Sr/TRU compounds occurs in this vessel. The main transfer from this vessel occurs through a centrifugal pump to the Ultrafiltration Feed Vessels.*

Load Type		Min	Max	Number of Cycles	Comment
Design Pressure	psig	*-12*	*15*	*10*	*Nominal assumption for testing*
Operating Pressure	psig	*-0.217*	*0*	*N/A*	*The vessel will remain under constant pressure depending upon the HVAC plant.*
Operating Temp	°F	*50*	*122*	*3650*	
Contents Specific Gravity		*1.0*	*1.32*	*3650*	
Contents Level	Inch	*28*	*350*	*3650*	
Localized Features					
Nozzles		*Within 9°F of operating temperature range.*		*As above*	

Hydrodynamic Loading 1

In normal operation, pulse jet mixers discharge liquid into the parent vessel imposing a cyclical hydrodynamic load on all internal components. Occasionally, an upset condition designated 'overblow' causes air to be discharged from any single pulse jet mixer. All internal components shall be designed for the combination of the normal operational hydrodynamic loads and overblow loads, and this load combination is also to be assumed to act concurrently with seismic loads.

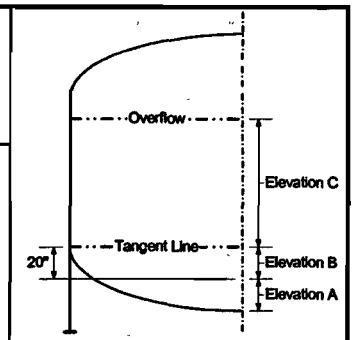

The following table indicates the normal hydrodynamic pressure at ranges of elevations in the vessel and the number of design cycles for each condition. The hydrodynamic forces cycle between the indicated pressure ranges applied across the projected area of the component. Positive hydrodynamic forces act in the radial, outward direction and the vertical, upward direction. Apply the radial load simultaneously in the radial direction and normal to the radial direction in the horizontal plane.

Normal Operation Hydrodynamic Pressure Range, psi						Number of Cycles
Elevation A		Elevation B		Elevation C		
Radial	Vertical	Radial	Vertical	Radial	Vertical	
-0.15 to 0.25	*-0.15 to 0.15*	*-0.05 to 0.12*	*-0.15 to 0.15*	*-0.03 to 0.10*	*-0.06 to 0.15*	*16.4 X 10^6*

Overblow loads vary as a function of the horizontal distance from the center of the overblowing pulse jet mixer nozzle and the elevation 'H' above the overblowing pulse jet mixer nozzle up to the overflow level as plotted:

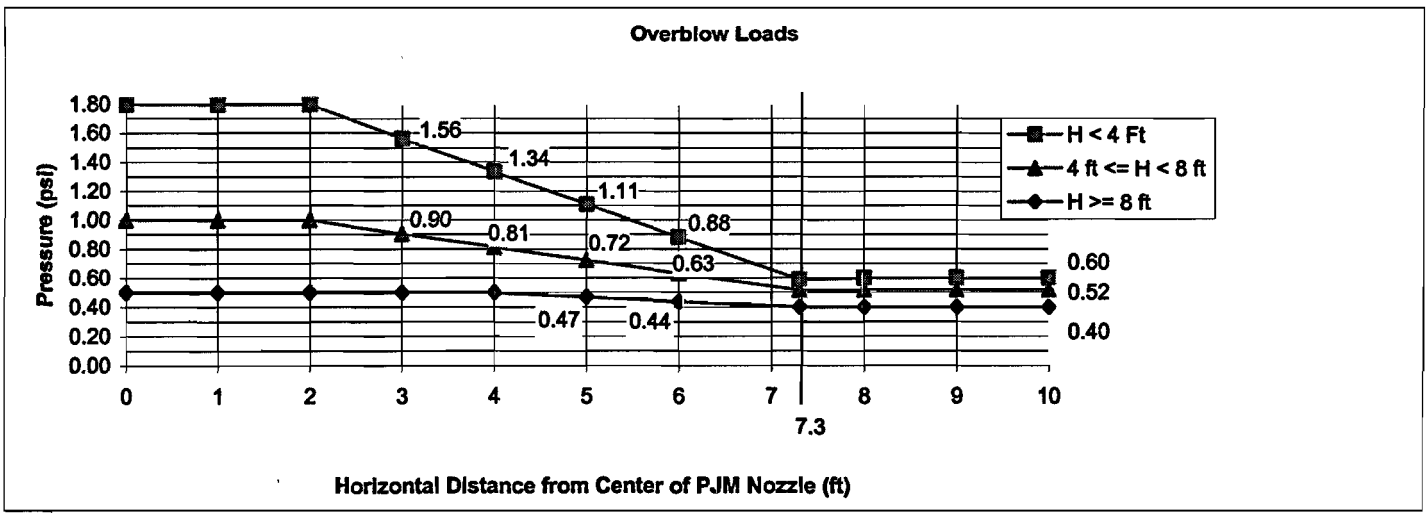

The overblow pressure shall only be applied to the projected area of the overblowing pulse jet mixer in the vertical, upward direction and to all surrounding components in the horizontal plane, radiating from the overblowing pulse jet mixer. Any single pulse jet mixer may overblow 100 cycles 1

Notes

- ***Cycle Increase: Increase the numbers of operational cycles given above by 10% to account for commissioning duty unless otherwise noted.*** 1
- ***Nozzles N18 and N55 shall be fatigue assessed/analyzed for 3650 temperature/pressure cycles from 0 psig at 59°F to 15 psig at 212°F, the pressure cycle shall coincide with the temperature cycle. See note 15 on page 2.*** 1

Equipment Cyclic Data Sheet

Component Plant Item Number:	***UFP-PJM-00001, UFP-PJM-00002, UFP-PJM-00003, UFP-PJM-00004, UFP-PJM-00044, UFP-PJM-00053, UFP-PJM-00105, UFP-PJM-00106***
Component Description	***Pulse Jet Mixers***

The information below is provisional and envelopes operational duty for fatigue assessment. It is not to be used as operational data.

Materials of Construction	***ASME SA240 316 with 0.03 % max. Carbon***
Design Life	***40 Years***
Component Function and Life Cycle Description	***These pulse jet mixers (PJMs) are cyclically loaded using vacuum to fully fill the PJM with process liquid and compressed air to fully empty the PJM. The PJMs are contained within a parent vessel with varying liquid level. They shall be designed to cycle between the maximum design pressure and the minimum design pressure plus the external static head imposed by the parent vessel. The PJM supports shall be designed to cycle between fully buoyant (PJM empty and parent vessel full) and fully loaded (PJM full and parent vessel empty) states. Thrust load shall be applied only to the fully buoyant state. Assume the parent vessel is full for 50% of the number of PJM cycles.*** 1

Load Type		Min	Max	Number of Cycles	Comment
Design Pressure	psig	***FV***	***80***	***10***	***Nominal assumption for testing***
Operating Pressure	psig	***FV***	***72.5***	***1.64x10⁷***	
Operating Temperature	°F	***68***	***122***	***3650***	***Parent vessel will be operating normally at a temperature of 77 °F***
Contents Specific Gravity		***1.00***	***1.32***	***3650***	
Contents Level	inch	***Empty***	***Flooded***	***1.64 X 10⁷***	
Thrust 1	lbf	***0***	***330***	***1.64 X 10⁷***	
Localized Features					
Nozzles		***Within 9°F of operating temperature range.***		***As above***	
Supports		***Buoyant***	***Loaded***	***1.64 X 10⁷***	

Notes

- ***Cycle Increase: The Seller must increase the numbers of operational cycles given above by 10% to account for commissioning duty unless otherwise noted.***
- ***DELETED***

MECHANICAL SYSTEMS DATA SHEET: VESSEL

PLANT ITEM No.
24590-PTF-MV-UFP-VSL-00001B

R10523257

Project:	RPP-WTP	P&ID:	24590-PTF-M6-UFP-P0001/P0007/P0008 & 24590-PTF-M6-PWD-P0046 (1)
Project No:	24590	Process Calculation:	DELETED (1)
Project Site:	Hanford	Vessel Drawing	24590-PTF-MV-UFP-P0002
Description:	Ultrafiltration Feed Preparation Vessel (1)		

Reference Data

Charge Vessels (Tag Numbers)	DELETED
Pulsejet Mixers / Agitators (Tag Numbers)	UFP-PJM-00045, UFP-PJM-00046, UFP-PJM-00047, UFP-PJM-00048, UFP-PJM-00049, UFP-PJM-00050, UFP-PJM-00101, UFP-PJM-000102
RFDs/Pumps (Tag Numbers)	DELETED

Design Data

Quality Level		QL-1	Fabrication Specs	24590-WTP-3PS-MV00-TP001		
Seismic Category		SC-I	Design Code	ASME VIII Div 1		
Service/Contents		Radioactive Liquid	Code Stamp	Yes		
Design Specific Gravity		1.32	NB Registration	Yes		
Maximum Operating Volume	gal	64,626	Weights (lbs)	Empty	Operating	Test
Total Volume	gal	75,593	Estimated	184,000	934,000	822,000
Environmental Qualification		N/A (1)	Actual *	223,240 (1)	970,440 (1)	887,140 (1)

Inside Diameter	inch	240			Wind Design	Not Required	
Length/Height (TL-TL)	inch	306			Snow Design	Not Required	
		Vessel Operating	Vessel Design	Coil/Jacket Design	Seismic Design	24590-WTP-3PS-MV00-TP002 24590-WTP-3PS-SS90-T0001	
Internal Pressure	psig	ATM	15	35	Seismic Base Moment *	ft*lb	
External Pressure	psig	0.217	12 (1) (Note 3,4)	0.0	Postweld Heat Treat	Not Required	
Temperature	°F	122	150	150 (1)	Corrosion Allowance	Inch	0.040 (See Notes 12) (1)
Min. Design Metal Temp.	°F	40			Hydrostatic Test Pressure *	psig	

Note: Please note that source, special nuclear and byproduct materials, as defined in the Atomic Energy Act of 1954 (AEA), are regulated at the U.S. Department of Energy (DOE) facilities exclusively by DOE acting pursuant to its AEA authority. DOE asserts, that pursuant to the AEA, it has sole and exclusive responsibility and authority to regulate source, special nuclear, and byproduct materials at DOE-owned nuclear facilities. Information contained herein on radionuclides is provided for process description purposes only.

ISSUED BY
RPP-WTP PDC

MARK W. HOFFMANN
STATE OF WASHINGTON
0030952
REGISTERED
PROFESSIONAL ENGINEER
3/28/05
EXPIRES 12/10/06

This Bound Document Contains a total of 4 sheets.

REV	DATE	REASON FOR REVISION	PREPARER	CHECKER	REVIEWER	APPROVER
1	3/28/05	Issued for Permitting Use				
0	10/8/03	Issued for Permitting Use	J. Jackson	H. Khurana	C. Slater	M. Hoffmann

BECHTEL	**MECHANICAL SYSTEMS DATA SHEET: VESSEL**	**PLANT ITEM No.** ***24590-PTF-MV-UFP-VSL-00001B***

Materials of Construction

Component	Material	Minimum Thickness / Size	Containment
Top Head	***SA 240 316 Note 1***	***See Drawing***	***Auxiliary (See Note 8)*** 1
Shell	***SA 240 316 Note 1***	***See Drawing***	***Primary (See Note 8)*** 1
Bottom Head	***SA 240 316 Note 1***	***See Drawing***	***Primary (See note 8)*** 1
Support	***SA 240 304 Note 1***	***See Drawing***	***N/A***
Jacket/Coils/Half-Pipe Jacket	***SA 240 316 Note 1***	***See Drawing***	***N/A***
Internals	***SA 240 316 Note 1***	***See Drawing***	***Thermowells Primary***
Pipe Nozzles	***SA 312 TP316 Note 1***	***See Drawing***	***Primary (See note 8)*** 1
Forgings/ Bar stock	***SA 182 F316 Note 1***	***See Drawing***	***N/A***
Wash Ring Pipe	***SA 312 TP316 Note 1***	***See Drawing***	***N/A***
Bolting/Gaskets	***N/A***	***N/A***	***N/A***
Wear Plates	***SA 240 316 Note 1***	***See Drawing***	***N/A***

Miscellaneous Data

Orientation	***Vertical***	Support Type	***Skirt***
Insulation Function	***Not Applicable***	Insulation Material	***Not Applicable***
Insulation Thickness (inch)	***Not Applicable***	Internal Finish	***Note 2*** 1
		External Finish	***Note 2*** 1

Remarks

* To be determined by the vendor.

Note 1. ***Maximum 0.030% carbon.***

Note 2. ***Welds de-scaled as laid.***

Note 3. ***External design pressure under the jacket shall be rated for the jacket design pressure plus 1 psig internal vacuum in the vessel to account for ventilation fan pressure.*** 1

Note 4. ***The vessel design external pressure is estimated only and shall be confirmed by the Seller's calculations.*** 1

Note 5. ***DELETED*** 1

Note 6. ***Vessel volumes are approximate and do not account for the manufacturing tolerances, nozzles, and displacement of internals.*** 1

Note 7. ***This vessel is in a Black Cell.*** 1

Note 8. ***All welds forming part of the primary and auxiliary containment including nozzle attachment welds shall be subjected to 100% volumetric examination.*** 1

Note 9. ***Contents of this document are Dangerous Waste Permit affecting.*** 1

Note 10. ***DELETED*** 1 1

Note 11. ***DELETED*** 1

Note 12. ***BNI shall ensure that an additional 0.087" is available for erosion in the lower 4" of the interior conical surface of the pulse jet mixers.*** 1

Note 13. ***Seller shall provide wear plates for erosion control on the bottom head.***

Note 14. ***All hydrodynamic and overblow loads are for BNI internal use only and are to be disregarded by the seller.*** 1

Note 15. ***Required data for thermal stress analysis for nozzles exposed to higher temperatures.*** 1

- ***Cell ambient temperature = 113 °F***
- ***Headspace temperature or Operating temperature = 122 °F***
- ***Ambient and headspace natural convection heat transfer coefficients = 0.703 Btu/hr ft^2 F***
- ***Inlet fluid transfer frequency and mass flow rate for nozzles N15 and N55.***

  Fluid max temperature = 212 °F

  Transfer frequency = 1 transfer/9 days for 1.5 hrs.

  Steam mass flow rate = 2885 lb/hr

BECHTEL	**MECHANICAL SYSTEMS DATA SHEET: VESSEL**	**PLANT ITEM No.** ***24590-PTF-MV-UFP-VSL-00001B***

Equipment Cyclic Data Sheet

Component Plant Item Number:	***24590-PTF-MV-UFP-UFP-VSL-00001B***
Component Description	***Ultrafiltration Feed Preparation Vessel***

The information below is provisional and envelopes operational duty for fatigue assessment. It is not to be used as operational data.

Materials of Construction	***ASME SA240 316, max. Carbon content 0.030 %***
Design Life	***40 Years***
Component Function and Life Cycle Description	***The system receives waste feed from the Waste Feed Evaporation Process System (FEP), and HLW Feed Receipt Vessel (HLP). The vessel is filled over a period of approximately 48 hours. If necessary, the vessel cools the waste prior to ultrafiltration operations. The precipitation of Sr/TRU compounds occurs in this vessel for Envelope C. The main transfer from this vessel occurs through a centrifugal pump to the Ultrafiltration Feed Vessels.*** 1

Load Type		Min	Max	Number of Cycles	Comment
Design Pressure	psig	*-12*	*15*	*10*	***Nominal assumption for testing***
Operating Pressure	psig	*-0.217*	*0*	*N/A*	***The vessel will remain at constant pressure depending upon the HVAC plant***
Operating Temp	°F	*50*	*122*	*3650*	
Contents Specific Gravity		*1.00*	*1.32*	*3650*	
Contents Level	inch	*28*	*350*	*3650*	
Localized Features					
Nozzles		***Within 9°F of operating temperature range***			

Hydrodynamic Loading 1

In normal operation, pulse jet mixers discharge liquid into the parent vessel imposing a cyclical hydrodynamic load on all internal components. Occasionally, an upset condition designated 'overblow' causes air to be discharged from any single pulse jet mixer. All internal components shall be designed for the combination of the normal operational hydrodynamic loads and overblow loads, and this load combination is also to be assumed to act concurrently with seismic loads.

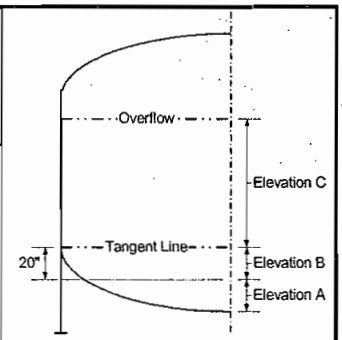

The following table indicates the normal hydrodynamic pressure at ranges of elevations in the vessel and the number of design cycles for each condition. The hydrodynamic forces cycle between the indicated pressure ranges applied across the projected area of the component. Positive hydrodynamic forces act in the radial, outward direction and the vertical, upward direction. Apply the radial load simultaneously in the radial direction and normal to the radial direction in the horizontal plane.

Normal Operation Hydrodynamic Pressure Range, psi						Number of Cycles
Elevation A		Elevation B		Elevation C		
Radial	Vertical	Radial	Vertical	Radial	Vertical	
-0.15 to 0.25	*-0.15 to 0.15*	*-0.05 to 0.12*	*-0.15 to 0.15*	*-0.03 to 0.10*	*-0.06 to 0.15*	*16.4×10^6*

Overblow loads vary as a function of the horizontal distance from the center of the overblowing pulse jet mixer nozzle and the elevation 'H' above the overblowing pulse jet mixer nozzle up to the overflow level as plotted:

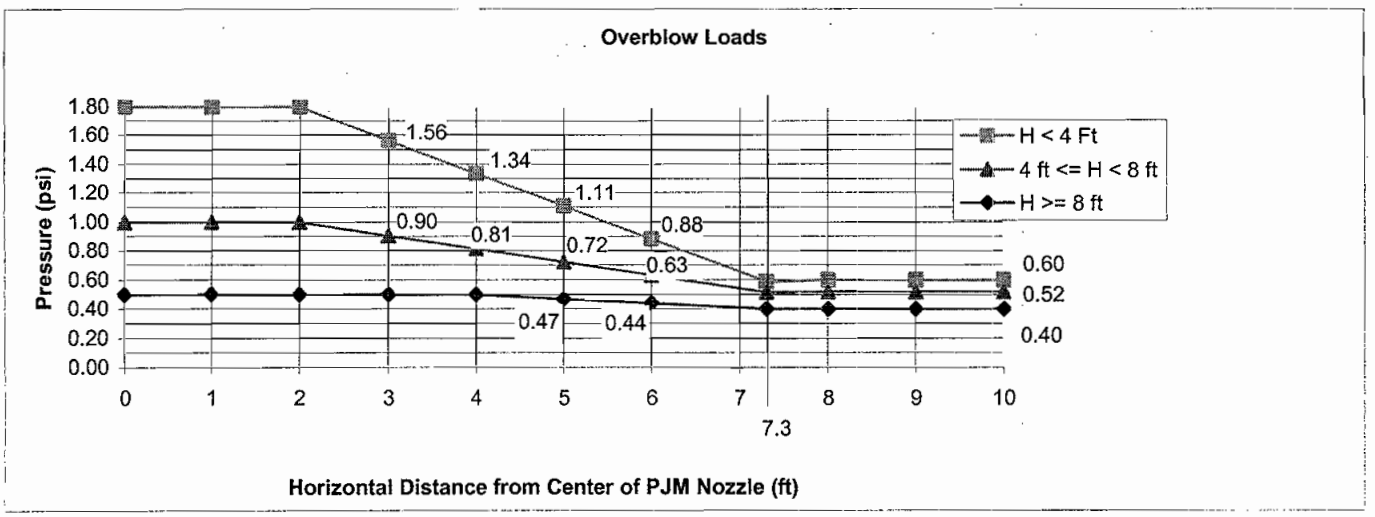

The overblow pressure shall only be applied to the projected area of the overblowing pulse jet mixer in the vertical, upward direction and to all surrounding components in the horizontal plane, radiating from the overblowing pulse jet mixer. Any single pulse jet mixer may overblow 100 cycles.

Notes

- *Cycle increase: Increase the numbers of operational cycles given above by 10% to account for commissioning duty unless otherwise noted.* 1
- *Nozzles N18 and N55 shall be fatigue assessed/analyzed for 3650 temperature/pressure cycles from 0 psig at 59°F to 15 psig at 212°F, the pressure cycle shall coincide with the temperature cycle. See note 15 on page 2.* 1

Equipment Cyclic Data Sheet

Component Plant Item Number:	*UFP-PJM-00045, UFP-PJM-00046, UFP-PJM-00047, UFP-PJM-00048, UFP-PJM-00049, UFP-PJM-00050, UFP-PJM-00101, UFP-PJM-00102*
Component Description	*Pulse Jet Mixers*

The information below is provisional and envelopes operational duty for fatigue assessment. It is not to be used as operational data.

Materials of Construction	*ASME SA240 316 with max. carbon content of 0.030 % carbon*
Design Life	*40 Years*
Component Function and Life Cycle Description	*These pulse jet mixers (PJMs) are cyclically loaded using vacuum to fully fill the PJM with process liquid and compressed air to fully empty the PJM. The PJMs are contained within a parent vessel with varying liquid level. They shall be designed to cycle between the maximum design pressure and the minimum design pressure plus the external static head imposed by the parent vessel. The PJM supports shall be designed to cycle between fully buoyant (PJM empty and parent vessel full) and fully loaded (PJM full and parent vessel empty) states. Thrust load shall be applied only to the fully buoyant state. Assume the parent vessel is full for 50% of the number of PJM cycles.* 1

Load Type		Min	Max	Number of Cycles	Comment
Design Pressure	psig	*FV*	*80*	*10*	*Nominal assumption for testing*
Operating Pressure	psig	*FV*	*72.5*	*1.64×10^7*	
Operating Temperature	°F	*68*	*122*	*3650*	*Parent vessel will operate normally at a temperature of 77 °F*
Contents Specific Gravity		*1.00*	*1.32*	*3650*	
Contents Level	inch	*Empty*	*Flooded*	*1.64×10^7*	
Thrust 1	lbf	*0*	*330*	*1.64×10^7*	
Localized Features					
Nozzles		*Within 9°F of operating temperature range.*		*As above*	
Supports		*Buoyant*	*Loaded*	*1.64×10^7*	

Notes

- *Cycle increase: The Seller must increase the numbers of operational cycles given above by 10% to account for commissioning duty unless otherwise noted.*
- *DELETED*

BECHTEL	**MECHANICAL SYSTEMS DATA SHEET: VESSEL**	**PLANT ITEM No.** R10486408 ***24590-PTF-MV-UFP-VSL-00062A***

Project:	***RPP-WTP***	P&ID:	***24590-PTF-M6-UFP-P0004 /P0005/00006/P0015***
Project No:	***24590***	Process Calculation:	***DELETED*** 1
Project Site:	***Hanford***	Vessel Drawing	***24590-PTF-MV-UFP-P0005***
Description:	***Ultrafilter Permeate Collection Vessel*** 1		ISSUED BY RPP-WTP PDC

Reference Data

Charge Vessels (Tag Numbers)	***UFP-VSL-00032, UFP-VSL-00033, UFP-VSL-00034, UFP-VSL-00072, UFP-VSL-00073, UFP-VSL-00082***
Pulsejet Mixers / Agitators (Tag Numbers)	***UFP-PJM-00018, UFP-PJM-00019, UFP-PJM-00020, UFP-PJM-00021, UFP-PJM-00022, UFP-PJM-00052***
RFDs/Pumps (Tag Numbers)	***UFP-RFD-00027, UFP-RFD-00028, UFP-RFD-00030, UFP-RFD-00037, UFP-RFD-00038, UFP-RFD-00049***

Design Data

Quality Level		***QL-1***	Fabrication Specs	***24590-WTP-3PS-MV00-TP001*** 1		
Seismic Category		***SC-I***	Design Code	***ASME VIII Div 1***		
Service/Contents		***Radioactive Liquid***	Code Stamp	***Yes***		
Design Specific Gravity		***1.26***	NB Registration	***Yes***		
Maximum Operating Volume	gal	***30,072***	Weights (lbs)	Empty	Operating	Test
Total Volume	gal	***34,700***	Estimated	***95,300***	***417,000***	***385,000***
			Actual *	***100,000*** 1	***427,800*** 1	***398,100*** 1

Inside Diameter	inch	***180***			Wind Design	***Not Required***	
Length/Height (TL-TL)	inch	***255***			Snow Design	***Not Required***	
		Vessel Operating	Vessel Design	Coil/Jacket Design	Seismic Design	***24590-WTP-3PS-MV00-TP002*** ***24590-WTP-3PS-SS90-T0001***	
Internal Pressure	psig	***ATM***	***15***	***N/A***	Seismic Base Moment *	ft*lb	
External Pressure	psig	***0.217*** 1	***10.29***	***N/A***	Postweld Heat Treat	***Not Required***	
Temperature	°F	***86***	***120***	***N/A***	Corrosion Allowance	Inch	***0.04***
Min. Design Metal Temp.	°F	***40***			Hydrostatic Test Pressure *	psig	

Note: Please note that source, special nuclear and byproduct materials, as defined in the Atomic Energy Act of 1954 (AEA), are regulated at the U.S. Department of Energy (DOE) facilities exclusively by DOE acting pursuant to its AEA authority. DOE asserts, that pursuant to the AEA, it has sole and exclusive responsibility and authority to regulate source, special nuclear, and byproduct materials at DOE-owned nuclear facilities. Information contained herein on radionuclides is provided for process description purposes only.

MARK W. HOFFMANN
STATE OF WASHINGTON
0030952
REGISTERED
PROFESSIONAL ENGINEER
1/25/05
EXPIRES 12/10/06

This Bound Document Contains a total of 6 sheets.

REV	DATE	REASON FOR REVISION	PREPARER	CHECKER	REVIEWER	APPROVER
1	2/17/05	Issued for Permitting Use				
0	10/8/03	Issued for Permitting Use	J. Jackson	C. Slater	C. Slater	M. Hoffmann

BECHTEL	**MECHANICAL SYSTEMS DATA SHEET: VESSEL**	**PLANT ITEM No.** ***24590-PTF-MV-UFP-VSL-00062A***

Materials of Construction

Component	Material		Minimum Thickness / Size	Containment
Top Head	***SA 240 316***	***Note 1***	***See Drawing***	***Auxiliary (See Note 6)*** 1
Shell	***SA 240 316***	***Note 1***	***See Drawing***	***Primary (See Note 6)*** 1
Bottom Head	***SA 240 316***	***Note 1***	***See Drawing***	***Primary (See Note 6)*** 1
Support	***SA 240 304***	***Note 1***	***See Drawing***	***N/A***
Jacket/Coils/Half-Pipe Jacket	***N/A***		***N/A***	***N/A***
Internals	***SA 240 316***	***Note 1***	***See Drawing***	***Thermowells Primary***
Pipe Nozzles	***SA 312 TP316***	***Note 1***	***See Drawing***	***Primary (See Note 6)*** 1
Forgings/ Bar stock	***SA 182 F316***	***Note 1***	***See Drawing***	***N/A***
Wash Ring Pipe	***SA 312 TP316***	***Note 1***	***See Drawing***	***N/A***
Bolting/ Gaskets	***N/A***		***N/A***	***N/A***

Miscellaneous Data

Orientation	***Vertical***	Support Type	***Skirt***
Insulation Function	***Not Applicable***	Insulation Material	***Not Applicable***
Insulation Thickness (inch)	***Not Applicable***	Internal Finish	***Note 3***
		External Finish	***Note 3***

Remarks

* To be determined by the vendor.

Note 1. Maximum 0.030% carbon.

Note 2. Deleted

Note 3. Welds de-scaled as laid.

Note 4. Vessel volumes are approximate and do not account for the manufacturing tolerances, nozzles, and displacement of internals.

Note 5. This vessel is in a Black Cell. 1

Note 6. All welds forming part of the primary and auxiliary containment including nozzle attachment welds shall be subjected to 100% volumetric examination. 1

Note 7. Contents of this document are Dangerous Waste Permit affecting. 1

Note 8. Deleted 1

Note 9. All hydrodynamic and overblow loads are for BNI internal use only and are to be disregarded by the seller. 1

Equipment Cyclic Data Sheet

Component Plant Item Number:	*PTF-MV-UFP-VSL-00062A*
Component Description	*Ultrafilter Permeate Collection Vessel (Parent Vessel)* 1

The information below is provisional and envelopes operational duty for fatigue assessment. It is not to be used as operational data.

Materials of Construction	*ASME SA 240 316 with max. Carbon of 0.030%*
Design Life	*40 Years*
Component Function and Life Cycle Description	*This vessel collects permeate from the Ultrafiltration tube units. The permeate is transferred from this vessel to the Cesium Ion Exchange Process System, vessel CXP-VSL-00001, for further processing. The permeate is also sampled to check for solids in this vessel. The vessel is filled over a period of approximately 32 hours. An operating cycle for this vessel, filled then emptied, in approximately 48 hours.*

Load Type		Min	Max	Number of Cycles	Comment
Design Pressure	psig	*-10.29*	*15*	*10*	*Nominal assumption for testing*
Operating Pressure	psig	*-0.217*	*0.000*	*N/A*	*The vessel will remain under constant pressure depending upon the HVAC plant.*
Operating Temp	°F	*68*	*86*	*10,400*	
Contents Specific Gravity		*1.00*	*1.26*	*10,400*	
Contents Level	inch	*27*	*288*	*10,400*	
Localized Features					
Nozzles		*Within 9 °F of operating temperature range.*		*As above*	

Notes

- ***Cycle increase: The Seller must increase the numbers of operational cycles given above by 10% to account for commissioning duty unless otherwise noted.***
- ***DELETED***

Hydrodynamic Loading 1

In normal operation, pulse jet mixers discharge liquid into the parent vessel imposing a cyclical hydrodynamic load on all internal components. Occasionally, an upset condition designated 'overblow' causes air to be discharged from any single pulse jet mixer. All internal components shall be designed for the combination of the normal operational hydrodynamic loads and overblow loads, and this load combination is also to be assumed to act concurrently with seismic loads.

The following table indicates the normal hydrodynamic pressure at ranges of elevations in the vessel and the number of design cycles for each condition. The hydrodynamic forces cycle between the indicated pressure ranges applied across the projected area of the component. Positive hydrodynamic forces act in the radial, outward direction and the vertical, upward direction. Apply the radial load simultaneously in the radial direction and normal to the radial direction in the horizontal plane.

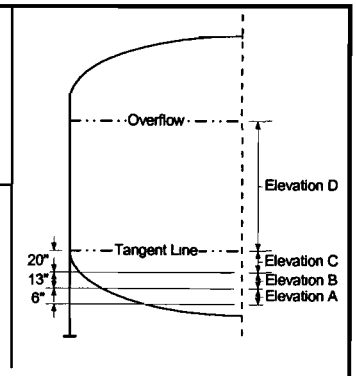

Normal Operation Hydrodynamic Pressure Range, psi								Number of Cycles
Elevation A		Elevation B		Elevation C		Elevation D		
Radial	Vertical	Radial	Vertical	Radial	Vertical	Radial	Vertical	
-0.09 to 0.29	*-0.74 to 0.48*	*-0.02 to 0.22*	*-0.01 to 0.40*	*-0.05 to 0.12*	*-0.01 to 0.40*	*-0.03 to 0.10*	*-0.01 to 0.40*	*20.7×10^5*

Overblow loads vary as a function of the horizontal distance from the center of the overblowing pulse jet mixer nozzle and the elevation 'H' above the overblowing pulse jet mixer nozzle up to the overflow level as plotted:

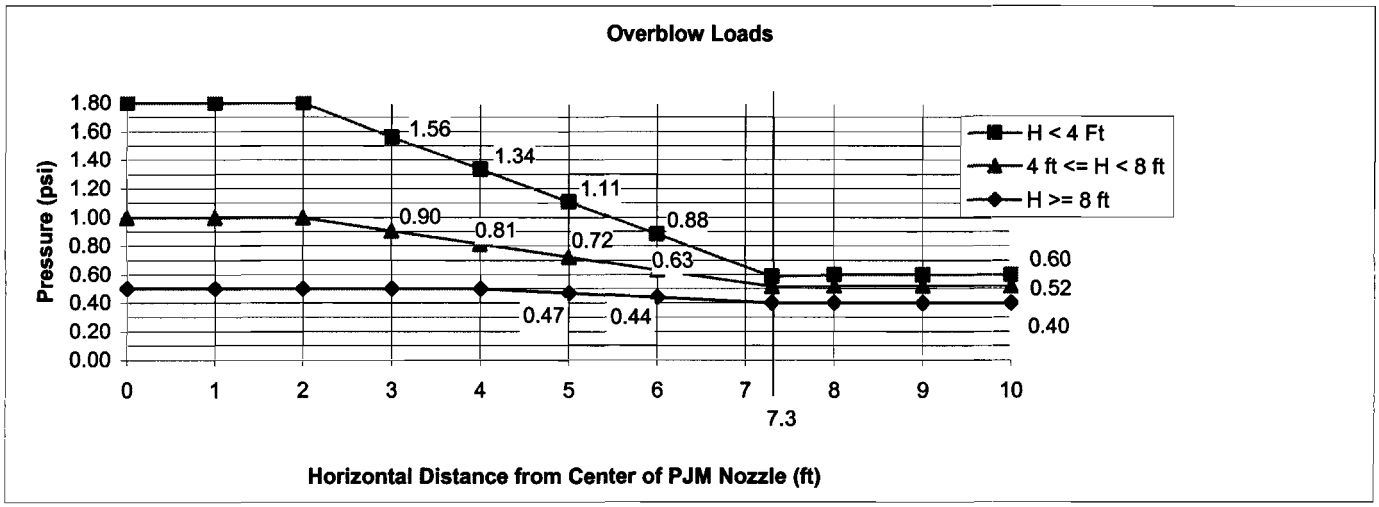

The overblow pressure shall only be applied to the projected area of the overblowing pulse jet mixer in the vertical, upward direction and to all surrounding components in the horizontal plane, radiating from the overblowing pulse jet mixer. Any single pulse jet mixer may overblow 100 cycles. 1

Notes

- ***Cycle increase: Increase the numbers of operational cycles given above by 10% to account for commissioning duty unless otherwise noted*** 1

BECHTEL	**MECHANICAL SYSTEMS DATA SHEET: VESSEL**	**PLANT ITEM No.** ***24590-PTF-MV-UFP-VSL-00062A***

Equipment Cyclic Data Sheet

Component Plant Item Number:	***PTF-MV-UFP-VSL-00032, PTF-MV-UFP-VSL-00033, PTF-MV-UFP-VSL-00034, PTF-MV-UFP-VSL-00072, PTF-MV-UFP-VSL-00073, PTF-MV-UFP-00082***
Component Description	***Charge Vessels for the following RFDs UFP-RFD-00027, UFP-RFD-00028, UFP-RFD-00030, UFP-RFD-00037, UFP-RFD-00038 , UFP-RFD-00049***

The information below is provisional and envelopes operational duty for fatigue assessment. It is not to be used as operational data.

Materials of Construction	***ASME SA 240 316 with max. Carbon of 0.030%***
Design Life	***40 Years***
Component Function and Life Cycle Description	***These charge vessels are cyclically loaded using vacuum to fully fill the charge vessel with process liquid and compressed air to fully empty the charge vessel. The charge vessels are contained within a parent vessel with varying liquid level. They shall be designed to cycle between the maximum design pressure and the minimum design pressure plus the external static head imposed by the parent vessel. The charge vessel supports shall be designed to cycle between fully buoyant (charge vessel empty and parent vessel full) and fully loaded (charge vessel full and parent vessel empty)*** 1

Load Type		Min	Max	Number of Cycles	Comment
Design Pressure	psig	***FV***	***80***	***10***	***Nominal assumption for testing***
Operating Pressure	psig	***FV***	***72.5***	***10,400***	
Operating Temperature	°F	***68***	***86***	***10,400***	***Parent vessel will be operating normally at a temperature of 77°F***
Contents Specific Gravity		***1.00***	***1.26***	***10,400***	
Contents Level	inch	***Empty***	***Flooded***	***10,400***	
Localized Features					
Nozzles		***Within 9°F of operating temperature range.***		***As above***	
Supports		***Buoyant***	***Loaded***	***10,400***	

Notes

- ***Cycle increase: The Seller must increase the numbers of operational cycles given above by 10% to account for commissioning duty unless otherwise noted.***
- ***DELETED***

Equipment Cyclic Data Sheet

Component Plant Item Number:	***UFP-PJM-00018, UFP-PJM-00019, UFP-PJM-00020, UFP-PJM-00021, UFP-PJM-00022, UFP-PJM-00052***
Component Description	***Pulse Jet Mixers***

The information below is provisional and envelopes operational duty for fatigue assessment. It is not to be used as operational data.

Materials of Construction	***ASME SA 240 316 with max. Carbon of 0.030%***
Design Life	***40 Years***
Component Function and Life Cycle Description	***These pulse jet mixers (PJMs) are cyclically loaded using vacuum to fully fill the PJM with process liquid and compressed air to fully empty the PJM. The PJMs are contained within a parent vessel with varying liquid level. They shall be designed to cycle between the maximum design pressure and the minimum design pressure plus the external static head imposed by the parent vessel. The PJM supports shall be designed to cycle between fully buoyant (PJM empty and parent vessel full) and fully loaded (PJM full and parent vessel empty) states. Thrust load shall be applied only to the fully buoyant state. Assume the parent vessel is full for 50% of the number of PJM cycles.*** 1

Load Type		Min	Max	Number of Cycles	Comment
Design Pressure	psig	***FV***	***80***	***10***	***Nominal assumption for testing***
Operating Pressure	psig	***FV***	***72.5***	***$2.07X10^7$*** 1	
Operating Temperature	°F	***68***	***86***	***10,400***	***Parent vessel will operating normally at a temperature of 77 °F***
Contents Specific Gravity		***1.0***	***1.26***	***$2.07X10^7$*** 1	
Contents Level	inch	***Empty***	***Flooded***	***$2.07X10^7$***	
Thrust 1	lbf	***0***	***330***	***$2.07X10^7$***	
Localized Features					
Nozzles		***Within 9°F of operating temperature range.***		***As above***	
Supports		***Buoyant***	***Loaded***	***$2.07X10^7$***	

Notes

- ***Cycle increase: The Seller must increase the numbers of operational cycles given above by 10% to account for commissioning duty unless otherwise noted.***
- ***DELETED***

BECHTEL	**MECHANICAL SYSTEMS DATA SHEET: VESSEL**	**PLANT ITEM No.** R10486409 ***24590-PTF-MV-UFP-VSL-00062B***

Project:	***RPP-WTP***	P&ID:	***24590-PTF-M6-UFP-P0004/P0005/P0006/P0015***
Project No:	***24590***	Process Calculation:	***DELETED*** 1
Project Site:	***Hanford***	Vessel Drawing	***24590-PTF-MV-UFP-P0006***
Description:	***Ultrafilter Permeate Collection Vessel*** 1		ISSUED BY RPP-WTP PDC

Reference Data

Charge Vessels (Tag Numbers)	***UFP-VSL-00035, UFP-VSL-00036, UFP-VSL-00075, UFP-VSL-00037, UFP-VSL-00051, UFP-VSL-00083***
Pulsejet Mixers / Agitators (Tag Numbers)	***UFP-PJM-00039, UFP-PJM-00040, UFP-PJM-00041, UFP-PJM-00042, UFP-PJM-00043, UFP-PJM-00051***
RFDs/Pumps (Tag Numbers)	***UFP-RFD-00031, UFP-RFD-00032, UFP-RFD-00033, UFP-RFD-00034, UFP-RFD-00039, UFP-RFD-00047***

Design Data

Quality Level		***QL-1***	Fabrication Specs	***24590-WTP-3PS-MV00-TP001*** 1		
Seismic Category		***SC-I***	Design Code	***ASME VIII Div 1***		
Service/Contents		***Radioactive Liquid***	Code Stamp	***Yes***		
Design Specific Gravity		***1.26***	NB Registration	***Yes***		
Maximum Operating Volume	gal	***30,072***	Weights (lbs)	Empty	Operating	Test
Total Volume	gal	***34,700***	Estimated	***95,300***	***417,000***	***385,000***
			Actual *	***100,000*** 1	***427,800*** 1	***398,100*** 1

Inside Diameter	inch	***180***			Wind Design	***Not Required***	
Length/Height (TL-TL)	inch	***255***			Snow Design	***Not Required***	
		Vessel Operating	Vessel Design	Coil/Jacket Design	Seismic Design	***24590-WTP-3PS-MV00-TP002*** ***24590-WTP-3PS-SS90-T0001***	
Internal Pressure	psig	***ATM***	***15***	***N/A***	Seismic Base Moment *	ft*lb	
External Pressure	psig	***0.217*** 1	***10.29***	***N/A***	Postweld Heat Treat	***Not Required***	
Temperature	°F	***86***	***120***	***N/A***	Corrosion Allowance	Inch	***0.04***
Min. Design Metal Temp	°F	***40***			Hydrostatic Test Pressure *	psig	

Note: Please note that source, special nuclear and byproduct materials, as defined in the Atomic Energy Act of 1954 (AEA), are regulated at the U.S. Department of Energy (DOE) facilities exclusively by DOE acting pursuant to its AEA authority. DOE asserts, that pursuant to the AEA, it has sole and exclusive responsibility and authority to regulate source, special nuclear, and byproduct materials at DOE-owned nuclear facilities. Information contained herein on radionuclides is provided for process description purposes only.

MARK W. HOFFMANN
STATE OF WASHINGTON
0030952
REGISTERED
PROFESSIONAL ENGINEER
1/25/05
EXPIRES 12/10/06

This Bound Document Contains a total of 6 sheets.

REV	DATE	REASON FOR REVISION	PREPARER	CHECKER	REVIEWER	APPROVER
1	2/17/05	Issued for Permitting Use				
0	10/8/03	Issued for Permitting Use	J. Jackson	C. Slater	C. Slater	M. Hoffmann

BECHTEL	**MECHANICAL SYSTEMS DATA SHEET: VESSEL**	**PLANT ITEM No.** ***24590-PTF-MV-UFP-VSL-00062B***

Materials of Construction

Component	Material	Minimum Thickness / Size	Containment
Top Head	***SA 240 316 Note 1***	***See Drawing***	***Auxiliary (See Note 6)*** 1
Shell	***SA 240 316 Note 1***	***See Drawing***	***Primary (See Note 6)*** 1
Bottom Head	***SA 240 316 Note 1***	***See Drawing***	***Primary (See Note 6)*** 1
Support	***SA 240 304 Note 1***	***See Drawing***	***N/A***
Jacket/Coils/Half-Pipe Jacket	***N/A***	***N/A***	***N/A***
Internals	***SA 240 316 Note 1***	***See Drawing***	***Thermowells Primary***
Pipe Nozzles	***SA 312 TP316 Note 1***	***See Drawing***	***Primary (See Note 6)*** 1
Forgings/ Bar stock	***SA 182 F316 Note1***	***See Drawing***	***N/A***
Wash Ring Pipe	***SA 312 TP316 Note 1***	***See Drawing***	***N/A***
Bolting/ Gaskets	***N/A***	***N/A***	***N/A***

Miscellaneous Data

Orientation	***Vertical***	Support Type	***Skirt***
Insulation Function	***Not Applicable***	Insulation Material	***Not Applicable***
Insulation Thickness (inch)	***Not Applicable***	Internal Finish	***Note 2*** 1
		External Finish	***Note 2*** 1

Remarks

* To be determined by the vendor.

Note 1. Maximum 0.030% carbon.

Note 2. Welds de-scaled as laid.

Note 3. Deleted

Note 4. Vessel volumes are approximate and do not account for the manufacturing tolerances, nozzles, and displacement of internals.

Note 5. This vessel is in a Black Cell. 1

Note 6. All welds forming part of the primary and auxiliary containment including nozzle attachment welds shall be subjected to 100% volumetric examination. 1

Note 7. Contents of this document are Dangerous Waste Permit affecting. 1

Note 8. Deleted 1

Note 9. All hydrodynamic and overblow loads are for BNI internal use only and are to be disregarded by the seller. 1

Equipment Cyclic Data Sheet

Component Plant Item Number:	***PTF-MV-UFP-VSL-00062B***
Component Description	***Ultrafilter Permeate Collection Vessel (Parent Vessel)*** 1

The information below is provisional and envelopes operational duty for fatigue assessment. It is not to be used as operational data.

Materials of Construction	***ASME SA 240 316 with max. carbon of 0.030%***
Design Life	***40 Years***
Component Function and Life Cycle Description	***This vessel collects permeate from the Ultrafiltration modules. The permeate is transferred from this vessel to the Cesium Ion Exchange Process System, vessel CXP-VSL-00001, for further processing. The permeate is also sampled to check for solids in this vessel. The vessel is filled over a period of approximately 32 hours. An operating cycle for this vessel, filled then emptied, is approximately 48 hours.***

Load Type		Min	Max	Number of Cycles	Comment
Design Pressure	psig	***-10.29***	***15***	***10***	***Nominal assumption for testing***
Operating Pressure	psig	***-0.217***	***0.000***	***N/A***	***The vessel will remain under constant pressure depending upon the HVAC plant***
Operating Temp	°F	***68***	***86***	***10,400***	
Contents Specific Gravity		***1.00***	***1.26***	***10,400***	
Contents Level	inch	***27***	***288***	***10,400***	
Localized Features					
Nozzles		***Within 9°F of operating temperature range.***		***As above***	

Notes

- ***Cycle increase: The Seller must increase the numbers of operational cycles given above by 10% to account for commissioning duty unless otherwise noted.***
- ***DELETED***

Hydrodynamic Loading 1

In normal operation, pulse jet mixers discharge liquid into the parent vessel imposing a cyclical hydrodynamic load on all internal components. Occasionally, an upset condition designated 'overblow' causes air to be discharged from any single pulse jet mixer. All internal components shall be designed for the combination of the normal operational hydrodynamic loads and overblow loads, and this load combination is also to be assumed to act concurrently with seismic loads.

The following table indicates the normal hydrodynamic pressure at ranges of elevations in the vessel and the number of design cycles for each condition. The hydrodynamic forces cycle between the indicated pressure ranges applied across the projected area of the component. Positive hydrodynamic forces act in the radial, outward direction and the vertical, upward direction. Apply the radial load simultaneously in the radial direction and normal to the radial direction in the horizontal plane.

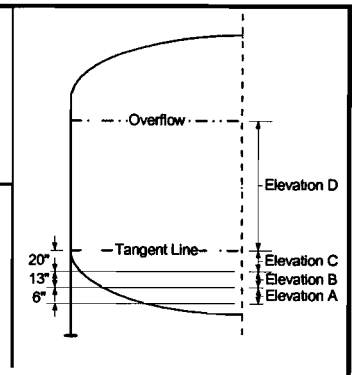

Normal Operation Hydrodynamic Pressure Range, psi								Number of Cycles
Elevation A		Elevation B		Elevation C		Elevation D		
Radial	Vertical	Radial	Vertical	Radial	Vertical	Radial	Vertical	
-0.09 to 0.29	*-0.74 to 0.48*	*-0.02 to 0.22*	*-0.01 to 0.40*	*-0.05 to 0.12*	*-0.01 to 0.40*	*-0.03 to 0.10*	*-0.01 to 0.40*	*20.7×10^5*

Overblow loads vary as a function of the horizontal distance from the center of the overblowing pulse jet mixer nozzle and the elevation 'H' above the overblowing pulse jet mixer nozzle up to the overflow level as plotted:

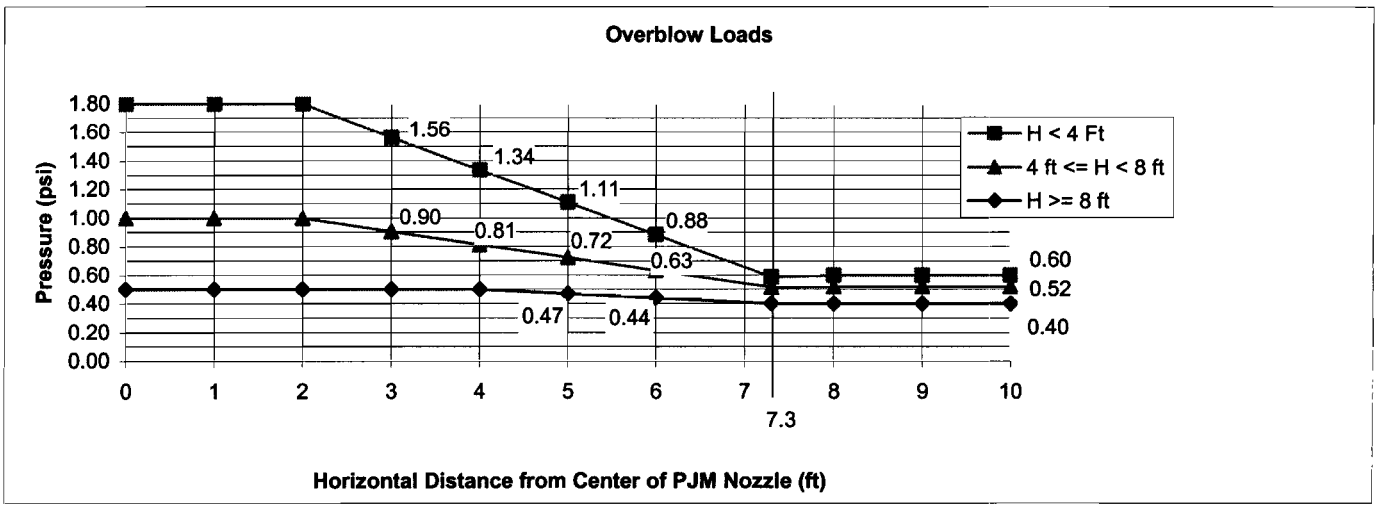

The overblow pressure shall only be applied to the projected area of the overblowing pulse jet mixer in the vertical, upward direction and to all surrounding components in the horizontal plane, radiating from the overblowing pulse jet mixer. Any single pulse jet mixer may overblow 100 cycles. 1

Notes

- ***Cycle increase: Increase the numbers of operational cycles given above by 10% to account for commissioning duty unless otherwise noted.*** 1

Equipment Cyclic Data Sheet

Component Plant Item Number:	***PTF-MV-UFP-VSL-00035, PTF-MV-UFP-VSL-00036, PTF-MV-UFP-VSL-00037, PTF-MV-UFP-VSL-00051, PTF-MV-UFP-VSL-00075, PTF-MV-UFP-VSL-00083***
Component Description	***Charge Vessels for the following RFDs UFP-RFD-00031, UFP-RFD-00032, UFP-RFD-00033, UFP-RFD-00034, UFP-RFD-00039, UFP-RFD-00047***

The information below is provisional and envelopes operational duty for fatigue assessment. It is not to be used as operational data.

Materials of Construction	***ASME SA240 316 with max. Carbon of 0.030%*** 1
Design Life	***40 Years***
Component Function and Life Cycle Description	***These charge vessels are cyclically loaded using vacuum to fully fill the charge vessel with process liquid and compressed air to fully empty the charge vessel. The charge vessels are contained within a parent vessel with varying liquid level. They shall be designed to cycle between the maximum design pressure and the minimum design pressure plus the external static head imposed by the parent vessel. The charge vessel supports shall be designed to cycle between fully buoyant (charge vessel empty and parent vessel full) and fully loaded (charge vessel full and parent vessel empty).*** 1

Load Type		Min	Max	Number of Cycles	Comment
Design Pressure	psig	***FV***	***80***	***10***	***Nominal assumption for testing***
Operating Pressure	psig	***FV***	***72.5***	***10,400***	
Operating Temperature	°F	***68***	***86***	***10,400***	***Parent vessel will be operating normally at a temperature of 77°F***
Contents Specific Gravity		***1.00***	***1.26***	***10,400***	
Contents Level	inch	***Empty***	***Flooded***	***10,400***	
Localized Features					
Nozzles		***Within 9°F of operating temperature range.***		***As above.***	
Supports		***Buoyant***	***Loaded***	***10,400***	

Notes

- ***Cycle increase: The Seller must increase the numbers of operational cycles given above by 10% to account for commissioning duty unless otherwise noted.***
- ***DELETED***

Equipment Cyclic Data Sheet

Component Plant Item Number:	***UFP-PJM-00039, UFP-PJM-00040, UFP-PJM-00041, UFP-PJM-00042, UFP-PJM-00043, UFP-PJM-00051***
Component Description	***Pulse Jet Mixers***

The information below is provisional and envelopes operational duty for fatigue assessment. It is not to be used as operational data.

Materials of Construction	***ASME SA240 316 with max. Carbon of 0.030%*** 1
Design Life	***40 Years***
Component Function and Life Cycle Description	***These pulse jet mixers (PJMs) are cyclically loaded using vacuum to fully fill the PJM with process liquid and compressed air to fully empty the PJM. The PJMs are contained within a parent vessel with varying liquid level. They shall be designed to cycle between the maximum design pressure and the minimum design pressure plus the external static head imposed by the parent vessel. The PJM supports shall be designed to cycle between fully buoyant (PJM empty and parent vessel full) and fully loaded (PJM full and parent vessel empty) states. Thrust load shall be applied only to the fully buoyant state. Assume the parent vessel is full for 50% of the number of PJM cycles.*** 1

Load Type		Min	Max	Number of Cycles	Comment
Design Pressure	psig	***FV***	***80***	***10***	***Nominal assumption for testing***
Operating Pressure	psig	***FV***	***72.5***	***2.07×10^7*** 1	
Operating Temperature	°F	***68***	***86***	***10,400***	***Parent Vessel will operating normally at a temperature of 77 °F***
Contents Specific Gravity		***1.0***	***1.26***	***2.07×10^7*** 1	
Contents Level	inch	***Empty***	***Flooded***	***2.07×10^7*** 1	
Thrust 1	lbf	***0***	***330***	***2.07×10^7***	
Localized Features					
Nozzles		***Within 9°F of operating temperature range.***		***As above***	
Supports		***Buoyant***	***Loaded***	***2.07×10^7***	

Notes

- ***Cycle increase: The Seller must increase the numbers of operational cycles given above by 10% to account for commissioning duty unless otherwise noted.***
- ***DELETED***

BECHTEL	**MECHANICAL SYSTEMS DATA SHEET: VESSEL**	**PLANT ITEM No.** R10507393 ***24590-PTF-MV-UFP-VSL-00062C***

24590-PTF-M6-PWD-P0046

Project:	***RPP-WTP***	P&ID:	***24590-PTF-M6-UFP-P0004 /P0009/~~P00044/P0046~~*** 1
Project No:	***24590***	Process Calculation:	***DELETED*** 1 P0011 3/17/05
Project Site:	***Hanford***	Vessel Drawing	***24590-PTF-MV-UFP-P0007***
Description:	***Ultrafilter Permeate Collection Vessel*** 1		

Reference Data

Charge Vessels (Tag Numbers)	***UFP-VSL-00023, UFP-VSL-00024, UFP-VSL-00025, UFP-VSL-00069, UFP-VSL-00070, UFP-VSL-00084***
Pulsejet Mixers / Agitators (Tag Numbers)	***UFP-PJM-00070, UFP-PJM-00073, UFP-PJM-00076, UFP-PJM-00077, UFP-PJM-00078, UFP-PJM-00107***
RFDs/Pumps (Tag Numbers)	***UFP-RFD-00042, UFP-RFD-00043, UFP-RFD-00044, UFP-RFD-00045, UFP-RFD-00046, UFP-RFD-00048***

Design Data

Quality Level		***QL-1***	Fabrication Specs	***24590-WTP-3PS-MV00-TP001*** 1		
Seismic Category		***SC-I***	Design Code	***ASME VIII Div 1***		
Service/Contents		***Radioactive Liquid***	Code Stamp	***Yes***		
Design Specific Gravity		***1.26***	NB Registration	***Yes***		
Maximum Operating Volume	gal	***30,072***	Weights (lbs)	Empty	Operating	Test
Total Volume	gal	***34,700***	Estimated	***95,300***	***417,000***	***385,000***
			Actual *	***100,000*** 1	***427,800*** 1	***398,100*** 1

Inside Diameter	inch	***180***			Wind Design	***Not Required***	
Length/Height (TL-TL)	inch	***255***			Snow Design	***Not Required***	
		Vessel Operating	Vessel Design	Coil/Jacket Design	Seismic Design	***24590-WTP-3PS-MV00-TP002*** ***24590-WTP-3PS-SS90-T0001***	
Internal Pressure	psig	***ATM***	***15***	***N/A***	Seismic Base Moment *	ft*lb	
External Pressure	psig	***0.217*** 1	***10.29***	***N/A***	Postweld Heat Treat	***Not Required***	
Temperature	°F	***86***	***120***	***N/A***	Corrosion Allowance	Inch	***0.04***
Min. Design Metal Temp.	°F	***40***			Hydrostatic Test Pressure *	psig	

Note: Please note that source, special nuclear and byproduct materials, as defined in the Atomic Energy Act of 1954 (AEA), are regulated at the U.S. Department of Energy (DOE) facilities exclusively by DOE acting pursuant to its AEA authority. DOE asserts, that pursuant to the AEA, it has sole and exclusive responsibility and authority to regulate source, special nuclear, and byproduct materials at DOE-owned nuclear facilities. Information contained herein on radionuclides is provided for process description purposes only.

ISSUED BY RPP-WTP PDC

MARK W. HOFFMANN
STATE OF WASHINGTON
0030952
REGISTERED PROFESSIONAL ENGINEER
3/14/05
EXPIRES 12/10/06

This Bound Document Contains a total of 6 sheets.

REV	DATE	REASON FOR REVISION	PREPARER	CHECKER	REVIEWER	APPROVER
1	3/14/05	Issued for Permitting Use				
0	10/8/03	Issued for Permitting Use	J. Jackson	H. Khurana	C. Slater	M. Hoffmann

BECHTEL	**MECHANICAL SYSTEMS DATA SHEET: VESSEL**	**PLANT ITEM No.** ***24590-PTF-MV-UFP-VSL-00062C***

Materials of Construction

Component	Material	Minimum Thickness / Size	Containment
Top Head	***SA 240 316 Note 1***	***See Drawing***	***Auxiliary (See Note 6)*** 1
Shell	***SA 240 316 Note 1***	***See Drawing***	***Primary (See Note 6)*** 1
Bottom Head	***SA 240 316 Note 1***	***See Drawing***	***Primary (See Note 6)*** 1
Support	***SA 240 304 Note1***	***See Drawing***	***N/A***
Jacket/Coils/Half-Pipe Jacket	***N/A***	***N/A***	***N/A***
Internals	***SA 240 316 Note 1***	***See Drawing***	***Thermowells Primary***
Pipe	***SA 312 TP316 Note 1***	***See Drawing***	***Primary (See Note 6)*** 1
Forgings/ Bar stock	***SA 182 F316 Note 1***	***See Drawing***	***N/A***
Wash Ring Pipe	***SA 312 TP316 Note 1***	***See Drawing***	***N/A***
Bolting/ Gaskets	***N/A***	***N/A***	***N/A***

Miscellaneous Data

Orientation	***Vertical***	Support Type	***Skirt***
Insulation Function	***Not Applicable***	Insulation Material	***Not Applicable***
Insulation Thickness (inch)	***Not Applicable***	Internal Finish	***Note 3***
		External Finish	***Note 3***

Remarks

* To be determined by the vendor.

Note 1: ***Maximum 0.030% carbon.***

Note 2: ***Deleted*** 1

Note 3: ***Welds descaled as laid.***

Note 4: ***Vessel volumes are approximate and do not account for the manufacturing tolerances, nozzles, and displacement of internals.***

Note 5: ***This vessel is in a Black Cell.*** 1

Note 6: ***All welds forming part of the primary and auxiliary containment including nozzle attachment welds shall be subjected to 100% volumetric examination.*** 1

Note 7: ***Contents of this document are Dangerous Waste Permit affecting.*** 1

Note 8: ***Deleted*** 1

Note 9: ***All hydrodynamic and overblow loads are for BNI internal use only and are to be disregarded by the seller.*** 1

BECHTEL	**MECHANICAL SYSTEMS DATA SHEET: VESSEL**	**PLANT ITEM No.** ***24590-PTF-MV-UFP-VSL-00062C***

Equipment Cyclic Data Sheet

Component Plant Item Number:	***PTF-MV-UFP-VSL-00062C***
Component Description	***Ultrafilter Permeate Collection Vessel (Parent Vessel)*** 1

The information below is provisional and envelopes operational duty for fatigue assessment. It is not to be used as operational data.

Materials of Construction	***ASME SA240 316 with max. Carbon of 0.030%***
Design Life	***40 Years***
Component Function and Life Cycle Description	***This vessel collects permeate from the Ultrafiltration modules. The permeate is transferred from this vessel to the Cesium Ion Exchange Process System, vessel CXP-VSL-00001, for further processing. The permeate is also sampled to check for solids in this vessel. The vessel is filled over a period of approximately 32 hours. An operating cycle for this vessel, filled then emptied, is approximately 48 hours.***

Load Type		Min	Max	Number of Cycles	Comment
Design Pressure	psig	***-10.29***	***15***	***10***	***Nominal assumption for testing***
Operating Pressure	psig	***-0.217***	***0.000***	***N/A***	***The vessel will remain under constant pressure depending upon the HVAC plant.***
Operating Temp	°F	***68***	***86***	***10,400***	
Contents Specific Gravity		***1.00***	***1.26*** 1	***10,400***	
Contents Level	inch	***27***	***288***	***10,400***	
Localized Features					
Nozzles		***Within 9° F of operating temperature range.***		***As above***	

Notes

- ***Cycle increase: Increase the numbers of operational cycles given by 10% to account for commissioning duty unless otherwise noted*** 1
- ***DELETED***

Hydrodynamic Loading 1

In normal operation, pulse jet mixers discharge liquid into the parent vessel imposing a cyclical hydrodynamic load on all internal components. Occasionally, an upset condition designated 'overblow' causes air to be discharged from any single pulse jet mixer. All internal components shall be designed for the combination of the normal operational hydrodynamic loads and overblow loads, and this load combination is also to be assumed to act concurrently with seismic loads.

The following table indicates the normal hydrodynamic pressure for at ranges of elevations in the vessel and the number of design cycles for each condition. The hydrodynamic forces cycle between the indicated pressure ranges applied across the projected area of the component. Positive hydrodynamic forces act in the radial, outward direction and the vertical, upward direction. Seller shall apply the radial load simultaneously in the radial direction and normal to the radial direction in the horizontal plane.

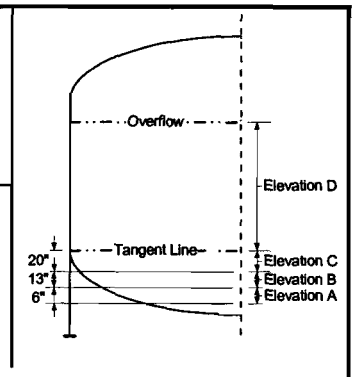

Normal Operation Hydrodynamic Pressure Range, psi								Number of Cycles
Elevation A		Elevation B		Elevation C		Elevation D		
Radial	Vertical	Radial	Vertical	Radial	Vertical	Radial	Vertical	
-0.09 to 0.29	*-0.74 to 0.48*	*-0.02 to 0.22*	*-0.01 to 0.40*	*-0.05 to 0.12*	*-0.01 to 0.40*	*-0.03 to 0.10*	*-0.01 to 0.40*	*20.7×10^5*

Overblow loads vary as a function of the horizontal distance from the center of the overblowing pulse jet mixer nozzle and the elevation 'H' above the overblowing pulse jet mixer nozzle up to the overflow level as plotted:

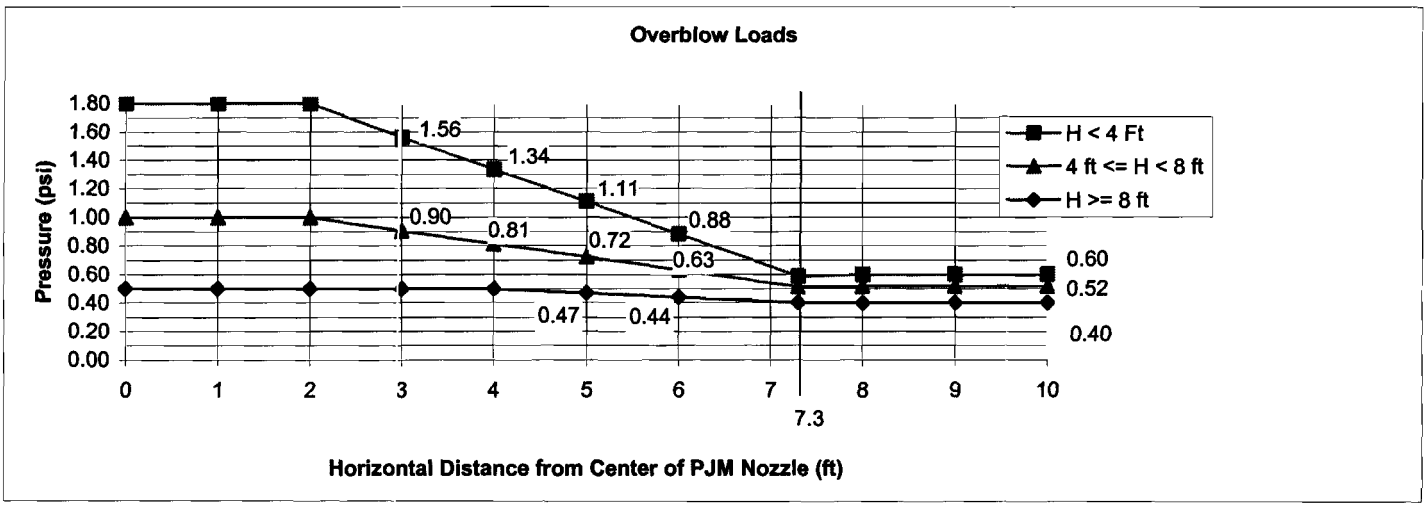

The overblow pressure shall only be applied to the projected area of the overblowing pulse jet mixer in the vertical, upward direction and to all surrounding components in the horizontal plane, radiating from the overblowing pulse jet mixer. Seller shall consider that any single pulse jet mixer may overblow 100 cycles.

Notes

- *Cycle increase: The Seller must increase the numbers of operational cycles given above by 10% to account for commissioning duty unless otherwise noted.*

BECHTEL	**MECHANICAL SYSTEMS DATA SHEET: VESSEL**	**PLANT ITEM No.** ***24590-PTF-MV-UFP-VSL-00062C***

Equipment Cyclic Data Sheet

Component Plant Item Number:	***PTF-MV-UFP-VSL-00023, PTF-MV-UFP-VSL-00024, PTF-MV-UFP-VSL-00025, PTF-MV-UFP-VSL-00069, PTF-MV-UFP-VSL-00070, PTF-MV-UFP-VSL-00084***
Component Description	***Charge Vessels for the following RFDs UFP-RFD-00042, UFP-RFD-00043, UFP-RFD-00044, UFP-RFD-00045, UFP-RFD-00046, UFP-RFD-00048***

The information below is provisional and envelopes operational duty for fatigue assessment. It is not to be used as operational data.

Materials of Construction	***ASME SA240 316 with max. Carbon of 0.030%***
Design Life	***40 Years***
Component Function and Life Cycle Description	***These charge vessels are cyclically loaded using vacuum to fully fill the charge vessel with process liquid and compressed air to fully empty the charge vessel. The charge vessels are contained within a parent vessel with varying liquid level. They shall be designed to cycle between the maximum design pressure and the minimum design pressure plus the external static head imposed by the parent vessel. The charge vessel supports shall be designed to cycle between fully buoyant (charge vessel empty and parent vessel full) and fully loaded (charge vessel full and parent vessel empty).*** 1

Load Type		Min	Max	Number of Cycles	Comment
Design Pressure	psig	***FV***	***80***	***10***	***Nominal assumption for testing***
Operating Pressure	psig	***FV***	***72.5***	***10,400***	
Operating Temperature	°F	***68***	***86***	***10,400***	***Parent vessel will be operating normally at a temperature of 77°F***
Contents Specific Gravity		***1.00***	***1.26***	***10,400***	
Contents Level	inch	***Empty***	***Flooded***	***10,400***	
Localized Features					
Nozzles		***Within 9°F of operating temperature range.***		***As above***	
Supports		***Buoyant***	***Loaded***	***10,400***	

Notes

- ***Cycle increase: The Seller must increase the numbers of operational cycles given above by 10% to account for commissioning duty unless otherwise noted.***
- ***DELETED***

Equipment Cyclic Data Sheet

Component Plant Item Number:	*UFP-PJM-00073, UFP-PJM-00070, UFP-PJM-00076, UFP-PJM-00077, UFP-PJM-00078, UFP-PJM-000107*
Component Description	*Pulse Jet Mixers*

The information below is provisional and envelopes operational duty for fatigue assessment. It is not to be used as operational data.

Materials of Construction	*ASME SA240 316 with max. Carbon of 0.030%*
Design Life	*40 Years*
Component Function and Life Cycle Description	*These pulse jet mixers (PJMs) are cyclically loaded using vacuum to fully fill the PJM with process liquid and compressed air to fully empty the PJM. The PJMs are contained within a parent vessel with varying liquid level. They shall be designed to cycle between the maximum design pressure and the minimum design pressure plus the external static head imposed by the parent vessel. The PJM supports shall be designed to cycle between fully buoyant (PJM empty and parent vessel full) and fully loaded (PJM full and parent vessel empty) states. Thrust load shall be applied only to the fully buoyant state. Assume the parent vessel is full for 50% of the number of PJM cycles.* 1

Load Type		Min	Max	Number of Cycles	Comment
Design Pressure	psig	*FV*	*80*	*10*	*Nominal assumption for testing*
Operating Pressure	psig	*FV*	*72.5*	*2.07×10^7* 1	
Operating Temperature	°F	*68*	*86*	*10,400*	*Parent Vessel will operating normally at a temperature of 77 °F*
Contents Specific Gravity		*1.00*	*1.26*	*2.07×10^7* 1	
Contents Level	inch	*Empty*	*Flooded*	*2.07×10^7* 1	
Thrust 1	lbf	*0*	*330*	*2.07×10^7* 1	
Localized Features					
Nozzles		*Within 9°F of operating temperature range.*		*As above*	
Supports		*Buoyant*	*Loaded*	*2.07×10^7* 1	

Notes

- *Cycle increase: The Seller must increase the numbers of operational cycles given above by 10% to account for commissioning duty unless otherwise noted.*
- *DELETED*

MECHANICAL SYSTEMS DATA SHEET: VESSEL

PLANT ITEM No.
24590-PTF-MV-UFP-VSL-00002A

R10146464

Project:	RPP-WTP	P&ID:	24590-PTF-M6-UFP-P0002/P0010/P0015
Project No:	24590	Process Data Sheet:	24590-PTF-MVC-UFP-00002
Project Site:	Hanford	Vessel Drawing	24590-PTF-MV-UFP-P0003
Description:	Ultrafiltration Feed Vessel		

ISSUED BY
RPP-WTP PDC
INIT 10/21/03 DATE

Reference Data

Charge Vessels (Tag Numbers)	Deleted
Pulse jet Mixers / Agitators (Tag Numbers)	UFP-PJM-00006, UFP-PJM-00007, UFP-PJM-00008, UFP-PJM-00009, UFP-PJM-00010, UFP-PJM-00011
RFDs/Pumps (Tag Numbers)	Deleted

Design Data

Quality Level		QL-1	Fabrication Specs	24590-WTP-3PS-MV00-TP001		
Seismic Category		SC-1	Design Code	ASME VIII Div 1		
Service/Contents		Radioactive Liquid	Code Stamp	Yes		
Design Specific Gravity		1.42	NB Registration	Yes		
Maximum Operating Volume	gal	36,561	Weights (lbs)	Empty	Operating	Test
Total Volume	gal	40,783	Estimated	121,500	584,000	462,000
			Actual *			

Inside Diameter	inch	168			Wind Design	Not Required	
Length/Height (TL-TL)	inch	369			Snow Design	Not Required	
		Vessel Operating	Vessel Design	Coil/Jacket Design	Seismic Design	24590-WTP-3PS-MV00-TP002 24590-WTP-3PS-SS90-T0001	
Internal Pressure	psig	ATM	15	35	Seismic Base Moment *	ft*lb	
External Pressure (Note 3	psig	0.217	12	0	Postweld Heat Treat	Not Required	
Temperature	°F	194	225	40	Corrosion Allowance	Inch	0.040
Min. Design Metal Temp.	°F	40			Hydrostatic Test Pressure *	psig	

Note: Please note that source, special nuclear and byproduct materials, as defined in the Atomic Energy Act of 1954 (AEA), are regulated at the U.S. Department of Energy (DOE) facilities exclusively by DOE acting pursuant to its AEA authority. DOE asserts, that pursuant to the AEA, it has sole and exclusive responsibility and authority to regulate source, special nuclear, and byproduct materials at DOE-owned nuclear facilities. Information contained herein on radionuclides is provided for process description purposes only.

MARK W. HOFFMANN
STATE OF WASHINGTON
0030952
REGISTERED PROFESSIONAL ENGINEER
10/8/03

EXPIRES 12/10/04

This Bound Document Contains a total of 4 pages.

REV	DATE	REASON FOR REVISION	PREPARER	CHECKER	REVIEWER	APPROVER
0	10/8/03	Issued for Permitting Use	Jessica Jackson			

10/20/03 Processed Data Entry ☐ Copied QA ☐ 10/21/03 Scanned ☐ Filed

DATA SHEET #: 24590-PTF-MVD-UFP-P0014, Rev 0

BECHTEL	**MECHANICAL SYSTEMS DATA SHEET: VESSEL**	**PLANT ITEM No.** ***24590-PTF-MV-UFP-VSL-00002A***

Materials of Construction

Component	Material		Minimum Thickness / Size	Containment
Top Head	***SA 240 304***	***Note 1***	***See Drawing***	***Auxiliary***
Shell	***SA 240 304***	***Note 1***	***See Drawing***	***Primary***
Bottom Head	***SA 240 304***	***Note 1***	***See Drawing***	***Primary***
Support	***SA 240 304***	***Note 1***	***See Drawing***	***N/A***
Jacket/Coils/Half-Pipe Jacket	***SA 240 304***	***Note 1***	***See Drawing***	***N/A***
Internals	***SA 240 304***	***Note 1***	***See Drawing***	***Thermowell Primary***
Pipe	***SA 312 TP304***	***Note 1***	***See Drawing***	***Note 3.***
Forgings/ Bar stock	***SA 182 F304***	***Note 1***	***See Drawing***	***N/A***
Wash Ring Pipe	***SA 312 TP304***	***Note 1***	***See Drawing***	***N/A***
Bolting/Gaskets	***N/A***		***N/A***	***N/A***

Miscellaneous Data

Orientation	***Vertical***	Support Type	***Skirt***
Insulation Function	***Not Applicable***	Insulation Material	***Not Applicable***
Insulation Thickness (inch)	***Not Applicable***	Internal Finish	***Note 4***
		External Finish	***Note 4***

Remarks

* To be determined by the vendor.

Note 1. Maximum 0.030% carbon. Note 2. Welds descaled as laid.

Note 3. For vessel jacketed portion external design pressure is 35 psi.

Note 4. Shell Nozzle Necks including the overflow nozzle are primary. Others are auxiliary.

Note 5. Vessel volumes are approximate and do not account for the manufacturing tolerances, nozzles, and displacement of internals.

BECHTEL	**MECHANICAL SYSTEMS DATA SHEET: VESSEL**	**PLANT ITEM No.** ***24590-PTF-MV-UFP-VSL-00002A***

Equipment Cyclic Data Sheet

Component Plant Item Number:	***24590-PTF-MV-UFP-UFP-VSL-00002A***
Component Description	***Ultrafiltration Feed Vessel***

The information below is provisional and envelopes operational duty for fatigue assessment. It is not to be used as operational data.

Materials of Construction	***ASME SA240 304 with 0.030 % max carbon***
Design Life	***40 Years***
Component Function and Life Cycle Description	***The system receives waste from Ultrafiltration Feed Preparation Vessels. This vessel is a high solids vessel in the 20% range. The waste will be cooled using the vessel cooling jacket, and solids will be kept suspended using the pulse jet mixers. The cycle time for this vessel is 239.4 hours.***

Load Type		Min	Max	Number of Cycles	Comment
Design Pressure	psig	***-12.0***	***15***	***10***	***Nominal Assumption for testing***
Operating Pressure	psig	***-0.217***	***0***	***N/A***	***The vessel will remain under constant pressure depending upon the HVAC plant***
Operating Temperature	°F	***50***	***194***	***1465***	
Contents Specific Gravity		***1.0***	***1.42***	***1465***	
Contents Level	inch	***27***	***388***	***1465***	***Based on 40 years life expectancy***
Localized Features					
Nozzles		***Within 9°F of operating temperature range.***			
Supports					

Notes

- ***Cycle increase: The Seller must increase the numbers of operational cycles given above by 10% to account for commissioning duty unless otherwise noted.***

BECHTEL	**MECHANICAL SYSTEMS DATA SHEET: VESSEL**	**PLANT ITEM No.** ***24590-PTF-MV-UFP-VSL-00002A***

Equipment Cyclic Data Sheet

Component Plant Item Number:	***UFP-PJM-00006, UFP-PJM-00007, UFP-PJM-00008, UFP-PJM-00009, UFP-PJM-00010, UFP-PJM-00011***
Component Description	***Pulse Jet Mixers***

The information below is provisional and envelopes operational duty for fatigue assessment. It is not to be used as operational data.

Materials of Construction	***ASME SA240 304 with 0.03 % max carbon.***
Design Life	***40 Years***
Component Function and Life Cycle Description	***These pulse jet mixers are cyclically loaded using vacuum to fully fill the vessel with process liquid and compressed air to fully empty the vessel. The pulse jet mixers are contained within a parent vessel with varying liquid level. They shall be designed to cycle between the maximum design pressure and the minimum design pressure plus the external static head imposed by the parent vessel. The pulse jet mixer supports shall be designed to cycle between fully buoyant (pulse jet mixer empty and parent vessel full) and fully loaded (pulse jet mixer full and parent vessel empty) in addition to thrust.***

Load Type		Min	Max	Number of Cycles	Comment
Design Pressure	psig	***FV***	***80***	***10***	***Nominal assumption for testing***
Operating Pressure	psig	***FV***	***72.5***	***8.6×10^6***	
Operating Temperature	°F	***50***	***194***	***1465***	***Parent Vessel will be operating normally at a temperature of 77 °F***
Contents Specific Gravity		***1.00***	***1.42***	***1465***	
Contents Level	inch	***Empty***	***Flooded***	***8.6×10^6***	
Localized Features					
Nozzles		***Within 9°F of operating temperature range.***		***As above.***	
Supports		***Buoyant***	***Loaded***	***8.6×10^6***	

Notes

- ***Cycle increase: The Seller must increase the numbers of operational cycles given above by 10% to account for commissioning duty unless otherwise noted.***

MECHANICAL SYSTEMS DATA SHEET: VESSEL

PLANT ITEM No.
24590-PTF-MV-UFP-VSL-00002B

R1014645

Project:	RPP-WTP	P&ID:	24590-PTF-M6-UFP-P0003/P0011/P0015
Project No:	24590	Process Data Sheet:	24590-PTF-MVC-UFP-00002
Project Site:	Hanford	Vessel Drawing	24590-PTF-MV-UFP-P0004
Description:	Ultrafiltration Feed Vessel		

ISSUED BY RPP-WTP PDC
KC 10/21/03
INIT DATE

Reference Data

Charge Vessels (Tag Numbers)	DELETED
Pulse Jet Mixers / Agitators (Tag Numbers)	UFP-PJM-00012, UFP-PJM-00013, UFP-PJM-00014, UFP-PJM-00015, UFP-PJM-00016, UFP-PJM-00017
RFDs/Pumps (Tag Numbers)	DELETED

Design Data

Quality Level		QL-1	Fabrication Specs	24590-WTP-3PS-MV00-TP001		
Seismic Category		SC-1	Design Code	ASME VIII Div 1		
Service/Contents		Radioactive Liquid	Code Stamp	Yes		
Design Specific Gravity		1.42	NB Registration	Yes		
Maximum Operating Volume	gal	36,561	Weights (lbs)	Empty	Operating	Test
Total Volume	gal	40,783	Estimated	121,500	584,000	462,000
			Actual *			

Inside Diameter	inch	168			Wind Design	Not Required	
Length/Height (TL-TL)	inch	369			Snow Design	Not Required	
		Vessel Operating	Vessel Design	Coil/Jacket Design	Seismic Design	24590-WTP-3PS-MV00-TP002 24590-WTP-3PS-SS90-T0001	
Internal Pressure	psig	ATM	15	35	Seismic Base Moment *	ft*lb	
External Pressure Note 3	psig	0.217	12	0	Postweld Heat Treat	Not Required	
Temperature	°F	194	225	40	Corrosion Allowance	Inch	0.040
Min. Design Metal Temp.	°F	40			Hydrostatic Test Pressure *	psig	

Note: Please note that source, special nuclear and byproduct materials, as defined in the Atomic Energy Act of 1954 (AEA), are regulated at the U.S. Department of Energy (DOE) facilities exclusively by DOE acting pursuant to its AEA authority. DOE asserts, that pursuant to the AEA, it has sole and exclusive responsibility and authority to regulate source, special nuclear, and byproduct materials at DOE-owned nuclear facilities. Information contained herein on radionuclides is provided for process description purposes only.

MARK W. HOFFMANN
STATE OF WASHINGTON
0030952
REGISTERED PROFESSIONAL ENGINEER
10/8/03

EXPIRES 12/10/04

This Bound Document Contains a total of 4 pages.

REV	DATE	REASON FOR REVISION	PREPARER	CHECKER	REVIEWER	APPROVER
0	10/8/03	Issued for Permitting Use	Jessica Jackson			

10/20/03 10/21/03
☑ Processed Data Entry ☐ Copied QA ☑ Scanned ☐ Filed
KC

BECHTEL	**MECHANICAL SYSTEMS DATA SHEET: VESSEL**	**PLANT ITEM No.** ***24590-PTF-MV-UFP-VSL-00002B***

Materials of Construction

Component	Material		Minimum Thickness / Size	Containment
Top Head	***SA 240 304***	***Note 1***	***See Drawing***	***Auxiliary***
Shell	***SA 240 304***	***Note 1***	***See Drawing***	***Primary***
Bottom Head	***SA 240 304***	***Note 1***	***See Drawing***	***Primary***
Support	***SA 240 304***	***Note 1***	***See Drawing***	***N/A***
Jacket/Coils/Half-Pipe Jacket	***SA 240 304***	***Note 1***	***See Drawing***	***N/A***
Internals	***SA 240 304***	***Note 1***	***See Drawing***	***Thermowells Primary***
Pipe	***SA 312 TP304***	***Note 1***	***See Drawing***	***Note 3***
Forgings/ Bar stock	***SA 182 F304***	***Note 1***	***See Drawing***	***N/A***
Wash Ring Pipe	***SA 312 TP304***	***Note 1***	***See Drawing***	***N/A***
Bolting/Gaskets	***N/A***		***N/A***	***N/A***

Miscellaneous Data

Orientation	***Vertical***	Support Type	***Skirt***
Insulation Function	***Not Applicable***	Insulation Material	***Not Applicable***
Insulation Thickness (inch)	***Not Applicable***	Internal Finish	***Note 4***
		External Finish	***Note 4***

Remarks

* To be determined by the vendor.

Note 1. Maximum 0.030% carbon. Note 4. Welds descaled as laid.

Note 3. For vessel jacketed portion, external design pressure is 35 psi.

Note 4. Shell Nozzle Necks including the overflow nozzle are primary. Others are auxiliary.

Note 5. Vessel volumes are approximate and do not account for the manufacturing tolerances, nozzles, and displacement of internals.

BECHTEL	**MECHANICAL SYSTEMS DATA SHEET: VESSEL**	**PLANT ITEM No.** ***24590-PTF-MV-UFP-VSL-00002B***

Equipment Cyclic Data Sheet

Component Plant Item Number:	***24590-PTF-MV-UFP-UFP-VSL-00002B***
Component Description	***Ultrafiltration Feed Vessel***

The information below is provisional and envelopes operational duty for fatigue assessment. It is not to be used as operational data.

Materials of Construction	***ASME SA240 304 with 0.030 % max carbon.***
Design Life	***40 Years***
Component Function and Life Cycle Description	***The system receives waste from Ultrafiltration Feed Preparation Vessels. This vessel is a high solids vessel in the 20% range. The waste will be cooled using the vessel cooling jacket, and solids will be kept suspended using the pulse jet mixers. The cycle time for this vessel is 239.4 hours.***

Load Type		Min	Max	Number of Cycles	Comment
Design Pressure	psig	***-12***	***15***	***10***	***Nominal Assumption***
Operating Pressure	psig	***-0.217***	***0***	***N/A***	***The vessel will remain under constant pressure depending upon the plant HVAC***
Operating Temperature	°F	***50***	***194***	***1465***	
Contents Specific Gravity		***1.0***	***1.42***	***1465***	
Contents Level	inch	***27***	***395***	***1465***	***Based on 40 years life expectancy***
Localized Features					
Nozzles		***Within 9°F of operating temperature range.***			
Supports					

Notes

- ***Cycle Increase: The Seller must increase the numbers of operational cycles given above by 10% to account for commissioning duty unless otherwise noted.***

BECHTEL	**MECHANICAL SYSTEMS DATA SHEET: VESSEL**	**PLANT ITEM No.** ***24590-PTF-MV-UFP-VSL-00002B***

Equipment Cyclic Data Sheet

Component Plant Item Number:	***UFP-PJM-00012, UFP-PJM-00013, UFP-PJM-00014, UFP-PJM-00015, UFP-PJM-00016, UFP-PJM-00017***
Component Description	***Pulse Jet Mixers***

The information below is provisional and envelopes operational duty for fatigue assessment. It is not to be used as operational data.

Materials of Construction	***ASME SA240 304 with 0.030 % max carbon.***
Design Life	***40 Years***
Component Function and Life Cycle Description	***These pulse jet mixers are cyclically loaded using vacuum to fully fill the vessel with process liquid and compressed air to fully empty the vessel. The pulse jet mixers are contained within a parent vessel with varying liquid level. They shall be designed to cycle between the maximum design pressure and the minimum design pressure plus the external static head imposed by the parent vessel. The pulse jet mixer supports shall be designed to cycle between fully buoyant (pulse jet mixer empty and parent vessel full) and fully loaded (pulse jet mixer full and parent vessel empty) in addition to thrust.***

Load Type		Min	Max	Number of Cycles	Comment
Design Pressure	psig	***FV***	***80***	***10***	***Nominal assumption for testing***
Operating Pressure	psig	***FV***	***72.5***	***8.6×10^6***	
Operating Temperature	°F	***50***	***194***	***1465***	***Parent Vessel will be operating normally at a temperature of 77 °F***
Contents Specific Gravity		***1.00***	***1.42***	***1465***	
Contents Level	inch	***Empty***	***Flooded***	***8.6×10^6***	
Localized Features					
Nozzles		***Within 9°F of operating temperature range.***		***As above.***	
Supports		***Buoyant***	***Loaded***	***8.6×10^6***	

Notes

- ***Cycle increase: The Seller must increase the numbers of operational cycles given above by 10% to account for commissioning duty unless otherwise noted.***

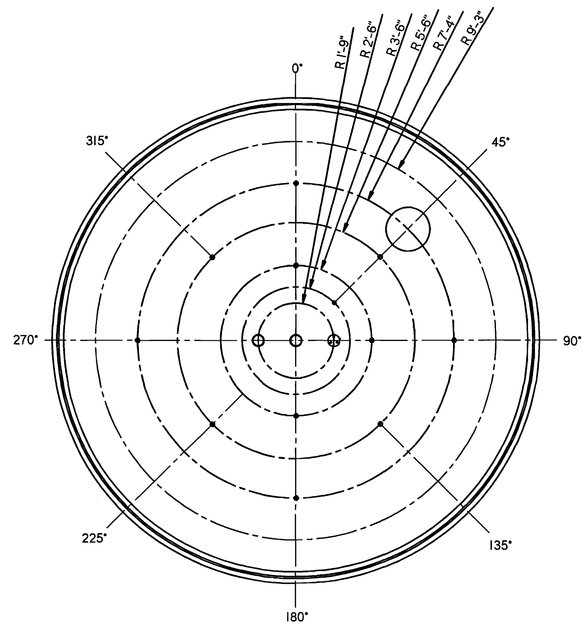

PLAN VIEW

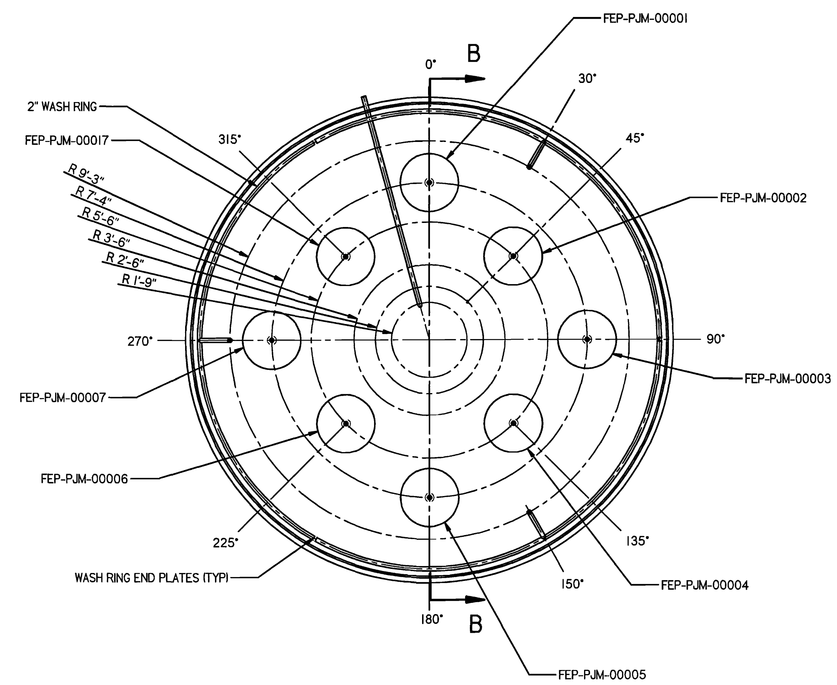

SECTION A-A

GENERAL NOTES:

1. DELETED
2. DELETED
3. FOR DIP LEGS USE 2" BOTTOM HEAD CLEARANCE.
4. DELETED
5. SOME HIDDEN LINES OMITTED FOR CLARITY
6. DELETED
7. DELETED
8. DELETED
9. DELETED

THIS DRAWING TO BE READ IN CONJUNCTION WITH MECHANICAL SYSTEMS DATA SHEET 24590-PTF-MVD-FEP-P0001

VESSEL COMPONENT QUALITY LEVELS	
COMPONENTS	QUALITY LEVEL
MAIN VESSEL, SKIRT, ALL NOZZLES	QL-1
ALL INTERNAL SUPPORTS	QL-2
PULSE JET MIXERS AND PIPING	QL-1
ALL CHARGE VESSELS, RFD'S, AND PIPING	QL-2
INSTRUMENTATION	QL-2
WASH RING AND PIPING	QL-2

PLEASE NOTE THAT SOURCE, SPECIAL NUCLEAR AND BYPRODUCT MATERIALS, AS DEFINED IN THE ATOMIC ENERGY ACT OF 1954 (AEA), ARE REGULATED AT THE U.S. DEPARTMENT OF ENERGY (DOE) FACILITIES EXCLUSIVELY BY DOE ACTING PURSUANT TO ITS AEA AUTHORITY. DOE ASSERTS, THAT PURSUANT TO THE AEA, IT HAS SOLE AND EXCLUSIVE RESPONSIBILITY AND AUTHORITY TO REGULATE SOURCE, SPECIAL NUCLEAR, AND BYPRODUCT MATERIALS AT DOE-OWNED NUCLEAR FACILITIES. INFORMATION CONTAINED HEREIN ON RADIONUCLIDES IS PROVIDED FOR PROCESS DESCRIPTION PURPOSES ONLY.

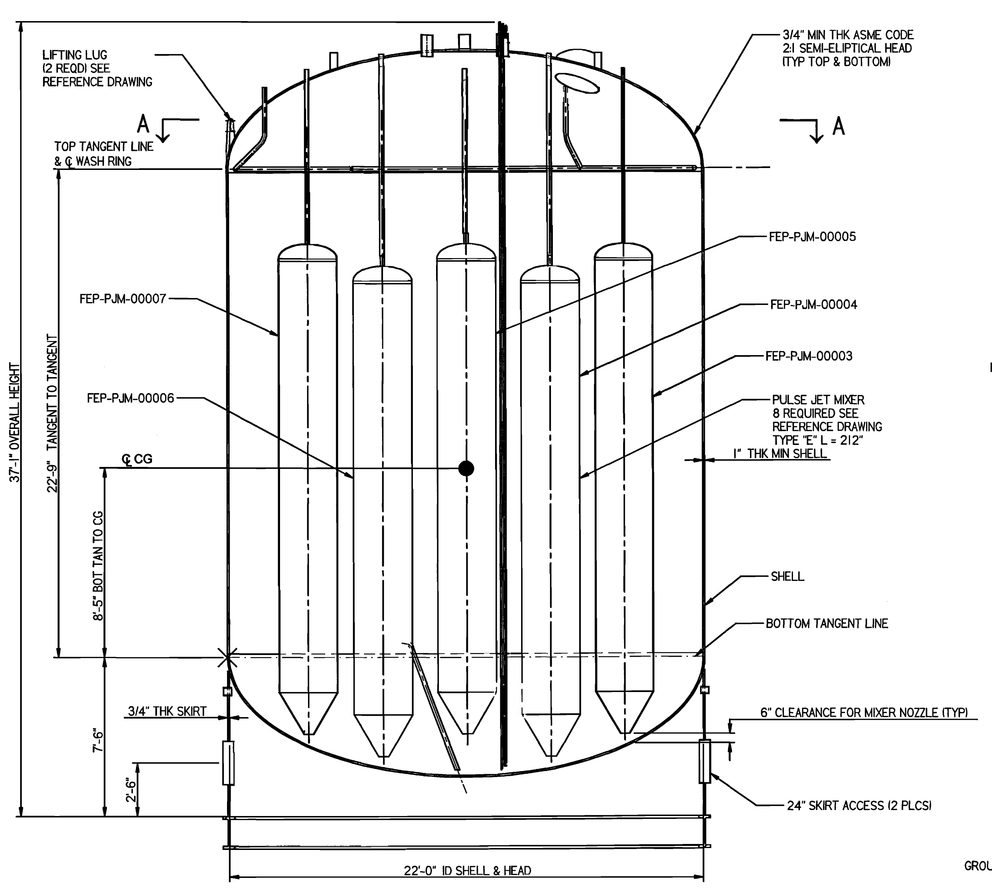

ELEVATION

SEE PLAN VIEW FOR TRUE ORIENTATION

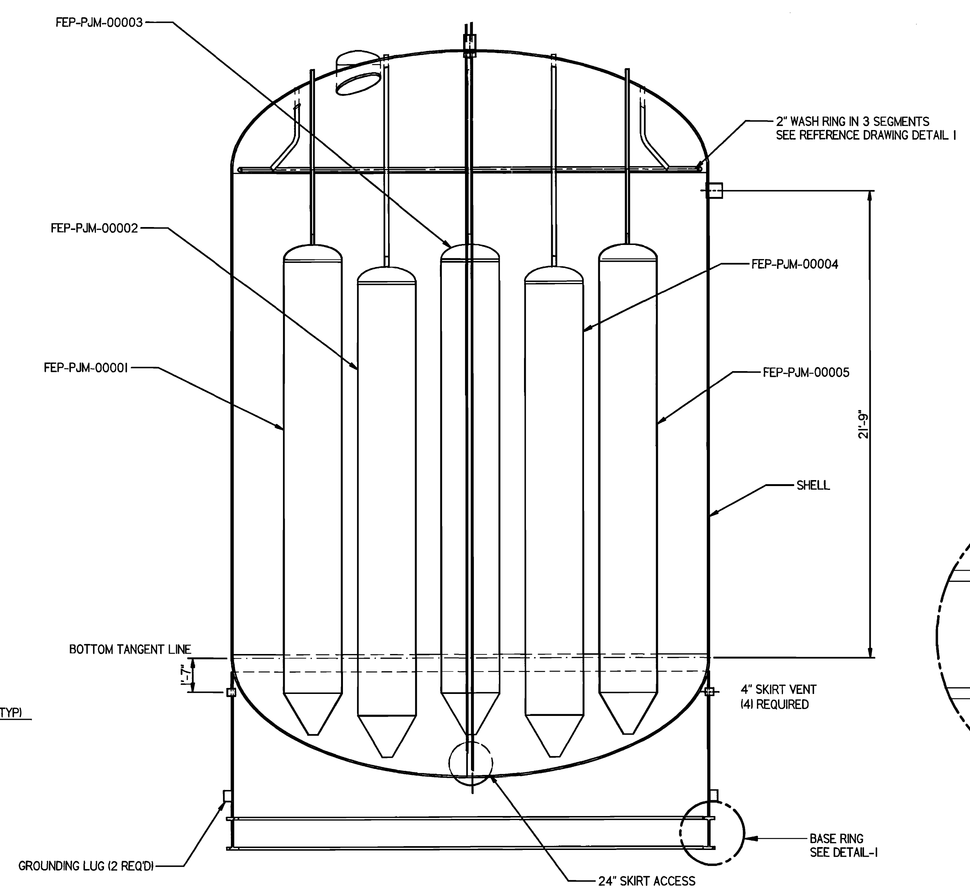

SECTION B-B

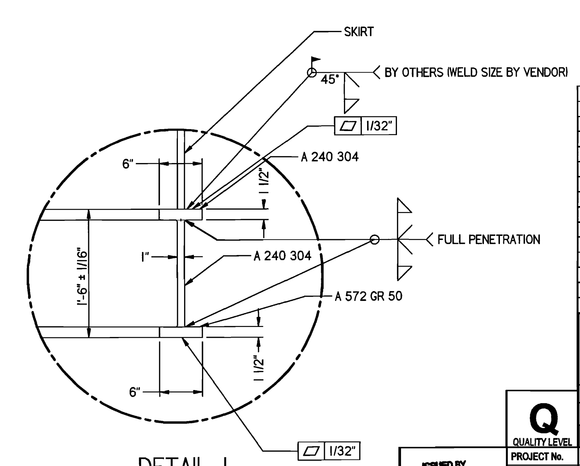

DETAIL-1

REFERENCE DRAWINGS		
DWG NO	REV	TITLE
24590-WTP-MV-M59T-00001	0	PRESSURE VESSEL TOLERANCES STANDARD DETAILS
24590-WTP-MV-M59T-00004	0	PULSE JET MIXERS STANDARD DETAILS
24590-WTP-MV-M59T-00007	0	THERMOWELL CONNECTION STANDARD DETAILS
24590-WTP-MV-M59T-00009	0	LIFTING LUGS STANDARD DETAILS
24590-WTP-MV-M59T-00010	0	TAILING LUG STANDARD DETAILS
24590-WTP-MV-M59T-00011	0	WASH RINGS STANDARD DETAILS
24590-WTP-MV-M59T-00012	0	GROUNDING LUG STANDARD DETAILS
24590-WTP-MV-M59T-00013	0	CHARGE VESSELS STANDARD DETAILS
24590-WTP-MV-M59T-00014	0	RFD PUMPS STANDARD DETAILS
24590-WTP-MV-M59T-00016001	0	VESSEL CONNECTIONS STANDARD DETAILS SHT 1 OF 3
24590-WTP-MV-M59T-00016003	0	VESSEL CONNECTIONS STANDARD DETAILS SHT 2 OF 3
24590-WTP-MV-M59T-00017	0	VESSEL INSPECTION MANWAY STANDARD DETAILS
24590-PTF-M6-FEP-P0001	0	P&ID

REVISION HISTORY						
REV	DESCRIPTION	ORG	CHKD	RVWD	APVD	DATE
0	ISSUED FOR PERMITTING USE					3/18/04

Q
QUALITY LEVEL

ISSUED BY
PER WTP PQC
INIT DATE
ISSUE STAMP

PROJECT No.	24590	
SITE	HANFORD	
AREA	200E	
BUILDING No.	10	
	BY	DATE
ORIGINATOR		3/18/04
CHECKER		3/18/04
APPROVER		3/18/04
REVIEWER		3/18/04

CONTENT APPLICABLE TO ALARA? ☒ YES ☐ NO
ADR NO. N/A REV:
DIM REFERENCE No.

MARK W. HOFFMANN
STATE OF WASHINGTON
20030953
REGISTERED
PROFESSIONAL ENGINEER
3/18/04
EXPIRES 12/10/04

RIVER PROTECTION PROJECT
WASTE TREATMENT PLANT
2435 STEVENS CENTER PLACE
RICHLAND, WA 99352

CONTRACT No: DE-AC27-01RV14136

EQUIPMENT ASSEMBLY
WASTE FEED EVAPORATOR FEED VESSEL
FEP-VSL-00017A

SCALE: NONE

24590-PTF-MV-FEP-P0001

REV 0

"B" SIZE - 44x34
COMPUTER GENERATED BY SOLID EDGE-
MANUAL CHANGES NOT PERMITTED

WHEN REFERENCING DRAWING AND DIM NUMBERS IN DOCUMENTS, BE SURE TO INCLUDE DASHES BETWEEN ELEMENTS

02/25/2004 4:27 PM

R10273162

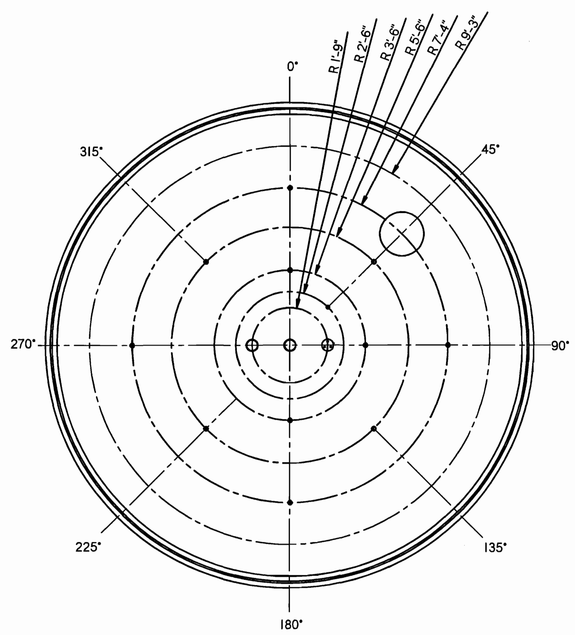

PLAN VIEW

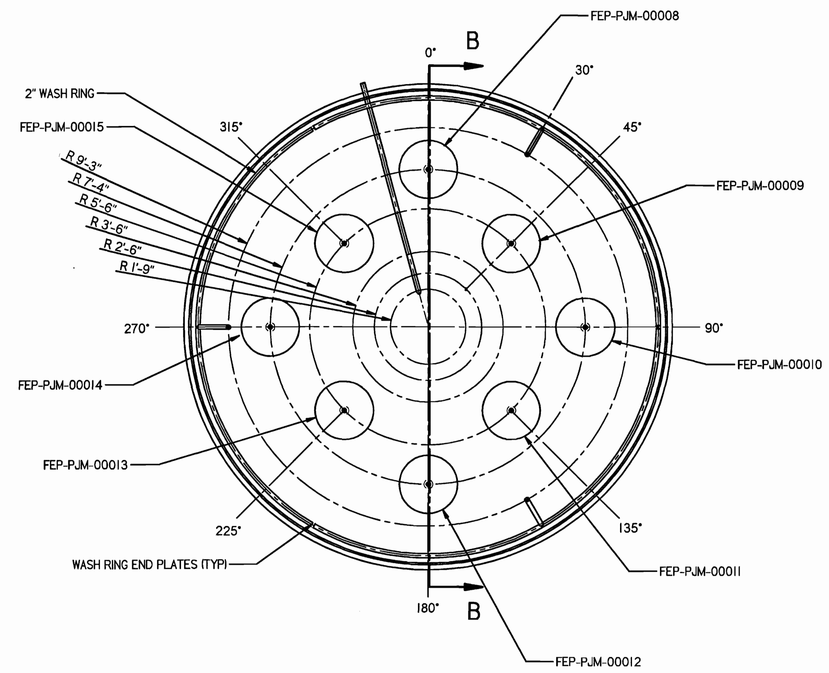

SECTION A-A

GENERAL NOTES:

1. DELETED
2. DELETED
3. FOR DIP LEGS USE 2" BOTTOM HEAD CLEARANCE.
4. DELETED
5. SOME HIDDEN LINES OMITTED FOR CLARITY
6. DELETED
7. DELETED
8. DELETED
9. DELETED

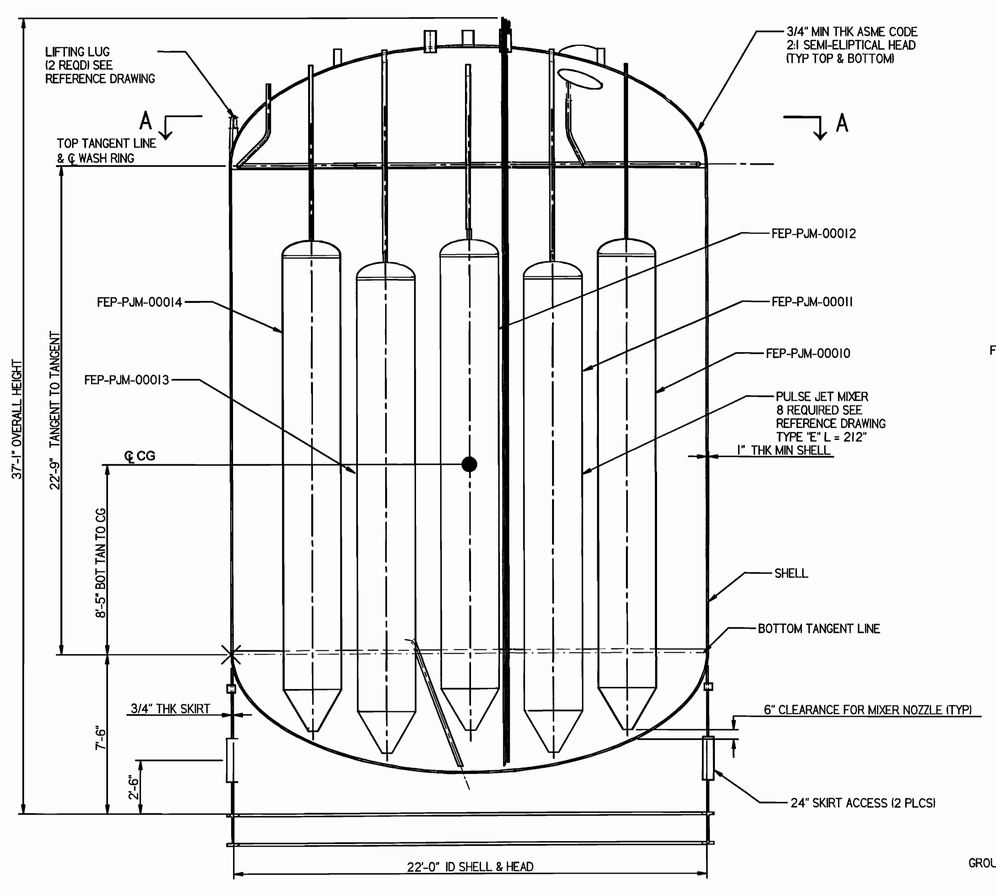

ELEVATION

SEE PLAN VIEW FOR TRUE ORIENTATION

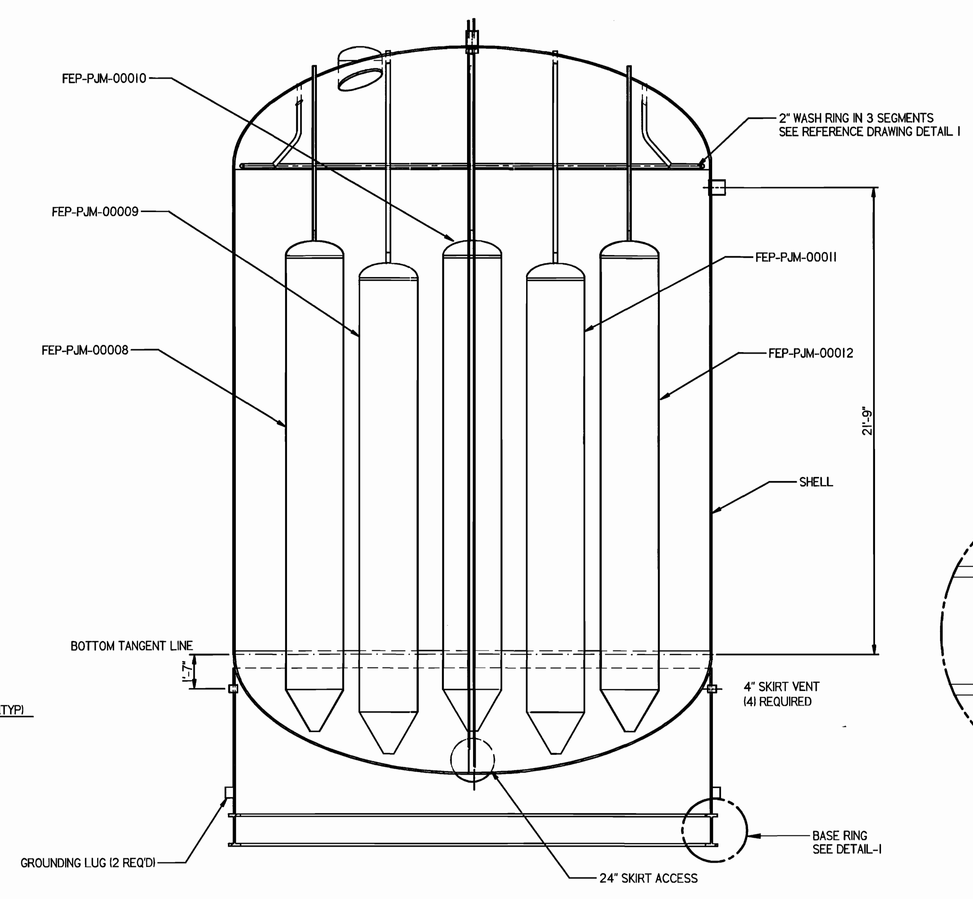

SECTION B-B

VESSEL COMPONENT QUALITY LEVELS	
COMPONENTS	QUALITY LEVEL
MAIN VESSEL, SKIRT, ALL NOZZLES	QL-1
ALL INTERNAL SUPPORTS	QL-2
PULSE JET MIXERS AND PIPING	QL-1
ALL CHARGE VESSELS, RFD'S, AND PIPING	QL-2
INSTRUMENTATION	QL-2
WASH RING AND PIPING	QL-2

THIS DRAWING TO BE READ IN CONJUNCTION WITH MECHANICAL SYSTEMS DATA SHEET 24590-PTF-MVD-FEP-P0002

PLEASE NOTE THAT SOURCE, SPECIAL NUCLEAR AND BYPRODUCT MATERIALS, AS DEFINED IN THE ATOMIC ENERGY ACT OF 1954 (AEA), ARE REGULATED AT THE U.S. DEPARTMENT OF ENERGY (DOE) FACILITIES EXCLUSIVELY BY DOE ACTING PURSUANT TO ITS AEA AUTHORITY. DOE ASSERTS, THAT PURSUANT TO THE AEA, IT HAS SOLE AND EXCLUSIVE RESPONSIBILITY AND AUTHORITY TO REGULATE SOURCE, SPECIAL NUCLEAR, AND BYPRODUCT MATERIALS AT DOE-OWNED NUCLEAR FACILITIES. INFORMATION CONTAINED HEREIN ON RADIONUCLIDES IS PROVIDED FOR PROCESS DESCRIPTION PURPOSES ONLY.

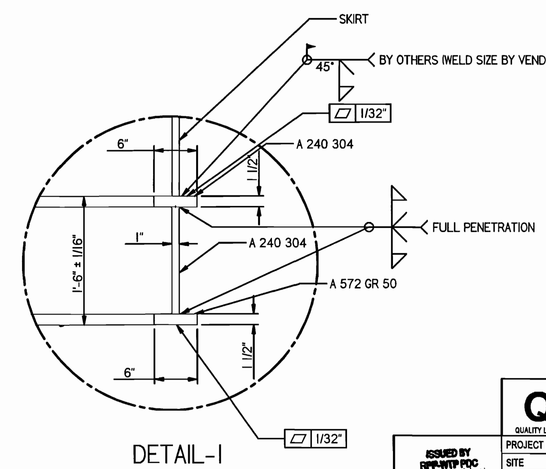

DETAIL-1

REFERENCE DRAWINGS		
DWG NO	REV	TITLE
24590-WTP-MV-M59T-00001	0	PRESSURE VESSEL TOLERANCES STANDARD DETAILS
24590-WTP-MV-M59T-00004	0	PULSE JET MIXERS STANDARD DETAILS
24590-WTP-MV-M59T-00007	0	THERMOWELL CONNECTION STANDARD DETAILS
24590-WTP-MV-M59T-00009	0	LIFTING LUGS STANDARD DETAILS
24590-WTP-MV-M59T-00010	0	TAILING LUG STANDARD DETAILS
24590-WTP-MV-M59T-00011	0	WASH RINGS STANDARD DETAILS
24590-WTP-MV-M59T-00012	0	GROUNDING LUG STANDARD DETAILS
24590-WTP-MV-M59T-00013	0	CHARGE VESSELS STANDARD DETAILS
24590-WTP-MV-M59T-00014	0	RFD PUMPS STANDARD DETAILS
24590-WTP-MV-M59T-00016001	0	VESSEL CONNECTIONS STANDARD DETAILS SHT 1 OF 3
24590-WTP-MV-M59T-00016003	0	VESSEL CONNECTIONS STANDARD DETAILS SHT 2 OF 3
24590-WTP-MV-M59T-00017	0	VESSEL INSPECTION MANWAY STANDARD DETAILS
24590-PTF-M6-FEP-P0001	0	P&ID

Q QUALITY LEVEL

REVISION HISTORY						
REV	DESCRIPTION	ORG	CHKD	RVWD	APVD	DATE
0	ISSUED FOR PERMITTING USE	NJG	HK	CS	MH	3/18/04

ISSUED BY RPP-WTP-PDC NJG 3/18/04 INIT DATE ISSUE STAMP

PROJECT No.	24590
SITE	HANFORD
AREA	200E
BUILDING No.	10

RIVER PROTECTION PROJECT
WASTE TREATMENT PLANT
2435 STEVENS CENTER PLACE
RICHLAND, WA 99352

CONTRACT No: DE-AC27-01RV14136

	BY	DATE
ORIGINATOR	NJG	3/18/04
CHECKER	HK	3/18/04
APPROVER	MH	3/19/04
REVIEWER	CS	3/18/04

MARK W. HOFFMANN, STATE OF WASHINGTON, 9030932, REGISTERED PROFESSIONAL ENGINEER, 3/18/04, EXPIRES 12/15/04

CONTENT APPLICABLE TO ALARA? [X] YES [ ] NO
ADR NO. N/A REV:
DIM REFERENCE No.

EQUIPMENT ASSEMBLY
WASTE FEED EVAPORATOR FEED VESSEL
FEP-VSL-00017B

SCALE: NONE

24590-PTF-MV-FEP-P0002 REV 0

R1027161

FORM E_MASTER 03/2003

"E" SIZE - 44x34
COMPUTER GENERATED BY SOLID EDGE-
MANUAL CHANGES NOT PERMITTED

WHEN REFERENCING DRAWING AND DIM NUMBERS IN DOCUMENTS, BE SURE TO INCLUDE DASHES BETWEEN ELEMENTS

02/25/2004 4:25 PM

24590-PTF-MV-HLP-P0003

NOZZLE	SIZE	SCHEDULE	SERVICE/REMARKS	LOCATION	DETAIL
N1	24"	CSD*	MANWAY	24-HLP-VPP-MV-MISC-0000-001 DET 1	CAPPED
N2	6"	80S	OVERFLOW	24-HLP-VPP-MV-MISC-0000-001 DET 2	6"-40S
N4	6"	80S	INLET AIR PURGE	24-HLP-VPP-MV-MISC-0000-001 DET 2	6"-40S
N5	6"	80S	RESEED VIEW	24-HLP-VPP-MV-MISC-0000-001 DET 1	6"-40S
N7	2"DN**	160S	TEMPERATURE	24-HLP-VPP-MV-MISC-0000-001 / ASME 1/2" 1	3/4"-316
N8	6"	80S	INSTRUMENTATION	24-HLP-VPP-MV-MISC-0000-001 DET 2	N/A
N9A	1"	160S	SAMPLE	24-HLP-VPP-MV-MISC-0000-001 DET 2	1/2"-316
N9B	1"	160S	DENSITY	24-HLP-VPP-MV-MISC-0000-001 DET 2	1/2"-316
N9C	1"	160S	LEVEL	24-HLP-VPP-MV-MISC-0000-001 DET 2	1/2"-316
V-0	2"	160S	INLET TO WASH RING	24-HLP-VPP-MV-MISC-0000-001 DET 3	2"-40S
V-1	2"	160S	INLET TO WASH RING	24-HLP-VPP-MV-MISC-0000-001 DET 3	2"-40S
V-2	2"	160S	INLET TO WASH RING	24-HLP-VPP-MV-MISC-0000-001 DET 3	2"-40S
V-3	2"	160S	INLET TO WASH RING	24-HLP-VPP-MV-MISC-0000-001 DET 3	2"-40S
V-4	2"	160S	INLET TO WASH RING	24-HLP-VPP-MV-MISC-0000-001 DET 3	2"-40S
V-5	2"	160S	INLET TO WASH RING	24-HLP-VPP-MV-MISC-0000-001 DET 3	2"-40S
V-6	2"	160S	AIR/VACUUM TO HLP-PIN-00054	24-HLP-VPP-MV-MISC-0000-001 DET 3	2"-40S
V-7	2"	160S	AIR/VACUUM TO HLP-PIN-00056	24-HLP-VPP-MV-MISC-0000-001 DET 3	2"-40S
V-8	2"	160S	AIR/VACUUM TO HLP-PIN-00058	24-HLP-VPP-MV-MISC-0000-001 DET 3	2"-40S
V-9	2"	160S	AIR/VACUUM TO HLP-PIN-00057	24-HLP-VPP-MV-MISC-0000-001 DET 3	2"-40S
V-10	2"	160S	AIR/VACUUM TO HLP-PIN-00059	24-HLP-VPP-MV-MISC-0000-001 DET 3	2"-40S
V-11	2"	160S	AIR/VACUUM TO HLP-PIN-00060	24-HLP-VPP-MV-MISC-0000-001 DET 3	2"-40S
V-12	2"	160S	AIR/VACUUM TO HLP-PIN-00061	24-HLP-VPP-MV-MISC-0000-001 DET 3	2"-40S
V-13	2"	160S	AIR/VACUUM TO HLP-PIN-00062	24-HLP-VPP-MV-MISC-0000-001 DET 3	2"-40S
V-14	2"	160S	AIR/VACUUM TO HLP-PIN-00063	24-HLP-VPP-MV-MISC-0000-001 DET 3	2"-40S
V-15	2"	160S	AIR/VACUUM TO HLP-PIN-00064	24-HLP-VPP-MV-MISC-0000-001 DET 3	2"-40S
V-16	2"	80S	SPARE	24-HLP-VPP-MV-MISC-0000-001 DET 3	2"-40S
V-17	2"	80S	SPARE	24-HLP-VPP-MV-MISC-0000-001 DET 3	2"-40S
V-18	2"	80S	SPARE	24-HLP-VPP-MV-MISC-0000-001 DET 3	2"-40S
V-19	2"	80S	INLET FROM RIP SYSTEM	24-HLP-VPP-MV-MISC-0000-001 DET 2	3"-40S
V-20	2"	80S	SPARE	24-HLP-VPP-MV-MISC-0000-001 DET 3	2"-40S
V-21	2"	80S	SPARE	24-HLP-VPP-MV-MISC-0000-001 DET 3	2"-40S
V-22	2"	80S	OUTLET HLP-PIN-00016	TBD	24-HLP-VPP-MV-MISC-0000-001 DET 3	3"-40S
V-23	2"	80S	INLET RECIRCULATING LOOP	24-HLP-VPP-MV-MISC-0000-001 DET 3	3"-40S
V-24	2"	80S	INLET TO COOLING JACKET	TBD	24-HLP-VPP-MV-MISC-0000-001 DET 3	3"-40S
V-25	2"	80S	OUTLET FROM COOLING JACKET	TBD	24-HLP-VPP-MV-MISC-0000-001 DET 1	6"-CS
V-27	2"	80S	INLET FROM AIR PURGE FOR BACKUP	24-HLP-VPP-MV-MISC-0000-001 DET 2	3"-40S
V-28	2"DN	SEE DETAIL	TS AIR PURGE	24-HLP-VPP-MV-MISC-0000-001 DET 3	1/2"-316
V-29	2"	160S	AIR/VACUUM TO HLP-PIN-00062	24-HLP-VPP-MV-MISC-0000-001 DET 3	2"-40S
V-30	2"	160S	AIR/VACUUM TO HLP-PIN-00063	24-HLP-VPP-MV-MISC-0000-001 DET 3	2"-40S

GENERAL NOTES:

1. DELETED
2. FOR DISTANCE OF DIP PIPES TO BOTTOM HEAD USE 1" CLEARANCE UNLESS OTHERWISE SPECIFIED.
3. ALL "Z" DIMENSIONS VEASUREDFROMWITH TANGENT LINE UNLESS OTHERWISE NOTED FOR SHELL NOZZLES, "Z" DIMENSIONSMEASURED FROM SHELL NOZZLE FACE
4. RINGBEAMTO BE FABRICATED & SHIPPED AHEAD OF VESSEL, TO FELIX CONSTRUCTION FOR INSTALLATION BY OTHERS

HOLDS:

1. DELETED
2. FINAL NOZZLE LOCATION ON VESSEL SHELL
3. DELETED
4. DELETED

THIS DRAWING TO BE READ IN CONJUNCTION WITH THE MECHANICAL DATA SHEET No 24590-PTF-MVB-HLP-P0004

VESSEL DIMENSIONS QUANTITIES	
COMPONENT	QUANTITY PER
NOZZLES FEEDRECEIPT WASHER, SPARE, ALL NOZZLES	QL-1
ALL INTERNAL SUPPORTS	QL-1
PULSE JET MECH AND PIPING	QL-1
WASH RING	QN
HOLD PRESS AND PIPING	QN
DELETED	

PLEASE NOTE THAT SOURCE, SPECIAL NUCLEAR AND BYPRODUCT MATERIALS AS DEFINED IN THE ATOMIC ENERGY ACT OF 1954 (AS AMENDED) AT THE U.S. DEPARTMENT OF ENERGY DOE FACILITIES EXCLUSIVELY FOR ACTING PURSUANT TO THE ACT AUTHORITY THAT PURSUANT TO THE ACT AS SOLE AND EXCLUSIVE RESPONSIBILITY AND AUTHORITY TO DEALWITH SOURCE, SPECIAL NUCLEAR, AND BYPRODUCT MATERIALS AT DOE-OWNED NUCLEAR FACILITIES. INFORMATION CONTAINED HEREIN ON NONNUCLEAR PROCESS DESCRIPTION PURPOSES ONLY.

REFERENCE DRAWINGS		
DRAWING	REV.	TITLE
24590-WTP-BNI-MKT-0001	1	PRESSURE VESSEL TO REPLACE OTHER DETAILS
24590-WTP-BNI-MKT-0006	1	PULSE JET MOUNTS STAINLESS RETAINS
24590-WTP-BNI-MKT-0007	2	EMPTY WELL CONNECTION STANDARD DETAILS
24590-WTP-BNI-MKT-0011	1	PUMP INSULATIONS RETAINS
24590-WTP-BNI-MKT-0016CO	2	ASSEMBLY-INSTRUMENTS AND PIPING DETAILS SHT 1 OF 2
24590-WTP-BNI-MKT-0016CO	4	ASSEMBLY-INSTRUMENTS AND PIPING DETAILS SHT 2 OF 2
24590-WTP-BNI-MKT-0017	2	ASSEMBLY-SECTION AND DETAILS STANDARD DETAILS
24590-WTP-BNI-MKT-0018	1	LIFTING LUGS STANDARD DETAILS
24590-WTP-BNI-MKT-0019	1	TAILING LUGS STANDARD DETAILS

REV	DESCRIPTION	DRN	CHK	STRUCT	APVD	DATE
0	ISSUED FOR REVIEW/REUSE	JM	JM	BF	BF	9/14/05

REVISION HISTORY

DESIGNED BY	RESIDENTIAL	24590
CHECKED BY	SITE	24590
APPROVED BY	AREA	ZONE
	SEQUENCE	10
PROPERTY	BY	DATE
DRAWN		9/14/05
CHECKED		9/14/05
APPROVED		9/14/05
RELEASED		9/14/05

RIVER PROTECTION PROJECT
WASTE TREATMENT PLANT
2435 STEVENS CENTER PLACE
RICHLAND, WA 99352

CONTRACT NO. DE-AC27-01RV14136

EQUIPMENT ASSEMBLY
HLW FEED RECEIPT VESSEL
HLP-VSL-00022

24590-PTF-MV-HLP-P0003 REV 0

SCALE NONE

SECTION A-A
FOR TRUE ORIENTATION, SEE PLAN

SECTION B-B

SECTION C-C

PLAN

DETAIL-1

24590-PTF-MV-HLP-P0004

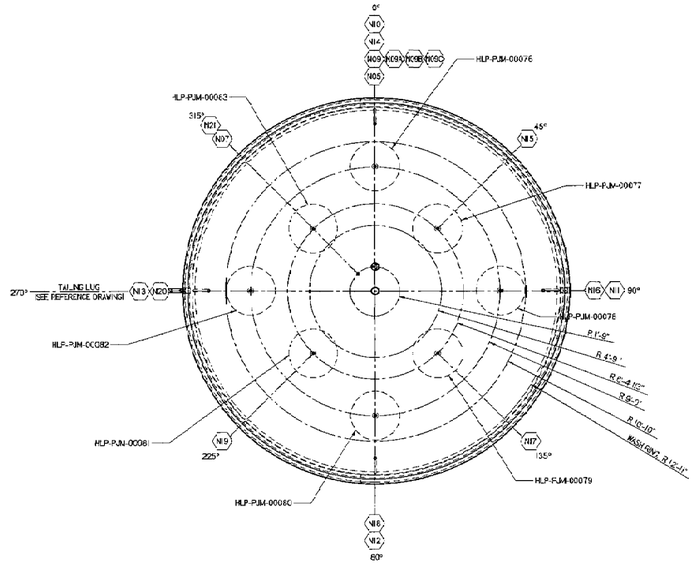

PLAN

NOZZLE	SIZE	SCHEDULE/WALL	SERVICE/REMARKS	"Z" DIM	REF DWG - DET	DOWN PIPE - SCHED
N01	24" ID	1/2"	MANWAY	TBD	24590-WTP-MV-M59T-000-7 DET 1	CAPPED
N02	6"	80S	OVERFLOW	28'-0"	24590-WTP-MV-M59T-000-ECO1 DET 2	8'-10S
N04	4"	80S	INLET AIR PURGE	TBD	24590-WTP-MV-M59T-000-ECO1 DET 2	4'-40S
N06	8"	80S	VENT	TBD	24590-WTP-MV-M59T-000-ECO1 DET 2	8'-10S
N07	2"OD x 1"	1806	TEMPERATURE	TBD	24590-WTP-MV-M59T-000-X1, ASSY-1, DET 1	3/4"-0S
N09	6"	80S	INSTRUMENTATION	34'-4"	24590-WTP-MV-M59T-000-ECO3 DET 26	NA
N09A	1"	1806	BALANCE	34'-0"	24590-WTP-MV-M59T-000-ECO3 DET 26	1/2"-40S
N09B	1"	1806	DENSITY	34'-0"	24590-WTP-MV-M59T-000-ECO3 DET 26	1/2"-40S
N09C	1"	1806	LEVEL	34'-1"	24590-WTP-MV-M59T-000-ECO3 DET 26	1/2"-40S
N10	2"	1806	INLET TO WASH RING	TBD	24590-WTP-MV-M59T-000-ECO1 DET 3	2'-40S
N11	2"	1806	INLET TO WASH RING	TBD	24590-WTP-MV-M59T-000-ECO1 DET 3	2'-40S
N12	2"	1806	INLET TO WASH RING	TBD	24590-WTP-MV-M59T-000-ECO1 DET 3	2'-40S
N13	2"	1806	INLET TO WASH RING	TBD	24590-WTP-MV-M59T-000-ECO1 DET 3	2'-40S
N14	2"	1806	ARRANGEMENT TO HLP-PJM-00076	TBD	24590-WTP-MV-M59T-000-ECO1 DET 3	2'-40S
N15	2"	1806	ARRANGEMENT TO HLP-PJM-00077	TBD	24590-WTP-MV-M59T-000-ECO1 DET 3	2'-40S
N16	2"	1806	ARRANGEMENT TO HLP-PJM-00078	TBD	24590-WTP-MV-M59T-000-ECO1 DET 3	2'-40S
N17	2"	1806	ARRANGEMENT TO HLP-PJM-00079	TBD	24590-WTP-MV-M59T-000-ECO1 DET 3	2'-40S
N18	2"	1806	ARRANGEMENT TO HLP-PJM-00080	TBD	24590-WTP-MV-M59T-000-ECO1 DET 3	2'-40S
N19	2"	1806	ARRANGEMENT TO HLP-PJM-00081	TBD	24590-WTP-MV-M59T-000-ECO1 DET 3	2'-40S
N20	2"	1806	ARRANGEMENT TO HLP-PJM-00082	TBD	24590-WTP-MV-M59T-000-ECO1 DET 3	2'-40S
N21	2"	1806	ARRANGEMENT TO HLP-PJM-00083	TBD	24590-WTP-MV-M59T-000-ECO1 DET 3	2'-40S
N25	2"OD	SEE DETAIL	INLET ITS AIR	TBD	24590-WTP-MV-M59T-000-ECO1 DET 5	1/2"-40S
N27	3"	80S	INLET	TBD	24590-WTP-MV-M59T-000-ECO1 DET 2	3'-40S
N28	2"	1806	INLET	TBD	24590-WTP-MV-M59T-000-ECO1 DET 2	2'-80S
N29	6"	80S	INLET FROM HLP-PBEP1-00006	TBD	24590-WTP-MV-M59T-000-ECO1 DET 2	6'-10S
N30	6"	80S	INLET FROM HLP-PBEP1-00006	TBD	24590-WTP-MV-M59T-000-ECO1 DET 2	6'-10S
N31	3"	80S	INLET	TBD	24590-WTP-MV-M59T-000-ECO1 DET 2	3'-40S
N32	3"	80S	INLET	TBD	24590-WTP-MV-M59T-000-ECO1 DET 2	3'-40S
N33	2"	1806	SPARE	TBD	24590-WTP-MV-M59T-000-ECO1 DET 2	2'-80S
N34	3"	80S	SPARE	TBD	24590-WTP-MV-M59T-000-ECO1 DET 2	3'-40S
N35	3"	80S	OUTLET WITH DIP PIPE (TO PUMP)	25'-9 1/2"	24590-WTP-MV-M59T-000-ECO1 DET 3	3'-40S
N37	3"	80S	INLET	TBD	24590-WTP-MV-M59T-000-ECO1 DET 2	3'-40S
N38	3"	80S	INLET WITH DIP PIPE (RECIRCULATION)	TBD	24590-WTP-MV-M59T-000-ECO1 DET 4	3'-40S
N39	4"	80S	INLET TO JACKET	8'	24590-WTP-MV-M59T-000-ECO1 DET 2	4'-40S
N40	4"	80S	OUTLET FROM JACKET	5'-9"	24590-WTP-MV-M59T-000-ECO1 DET 2	4'-40S
N41	3"	80S	INLET AUTO SAMPLE RETURN	TBD	24590-WTP-MV-M59T-000-ECO1 DET 2	3'-40S

NOTES:

1. DELETED
2. INTERNALS FINAL DESIGN
3. FINAL NOZZLE LOCATION AND SIZE
4. DELETED
5. DELETED

GENERAL NOTES:

1. DELETED
2. FOR DISTANCE OF DIP PIPES TO BOTTOM HEAD USE 2" CLEARANCE UNLESS OTHERWISE SPECIFIED
3. "Z" DIMENSION FOR NOZZLES MEASURED FROM CL OF NOZZLE FACE
4. RING BEAM SHALL BE DELIVERED AHEAD OF VESSEL TO JOBSITE FOR INSTALLATION BY OTHERS
5. NOZZLES WITH "80" IN NOZZLE SCHEDULE "Z" DIMENSION SHALL HAVE MAX OF 12" PROJECTION OUTSIDE SHELL OR HEAD

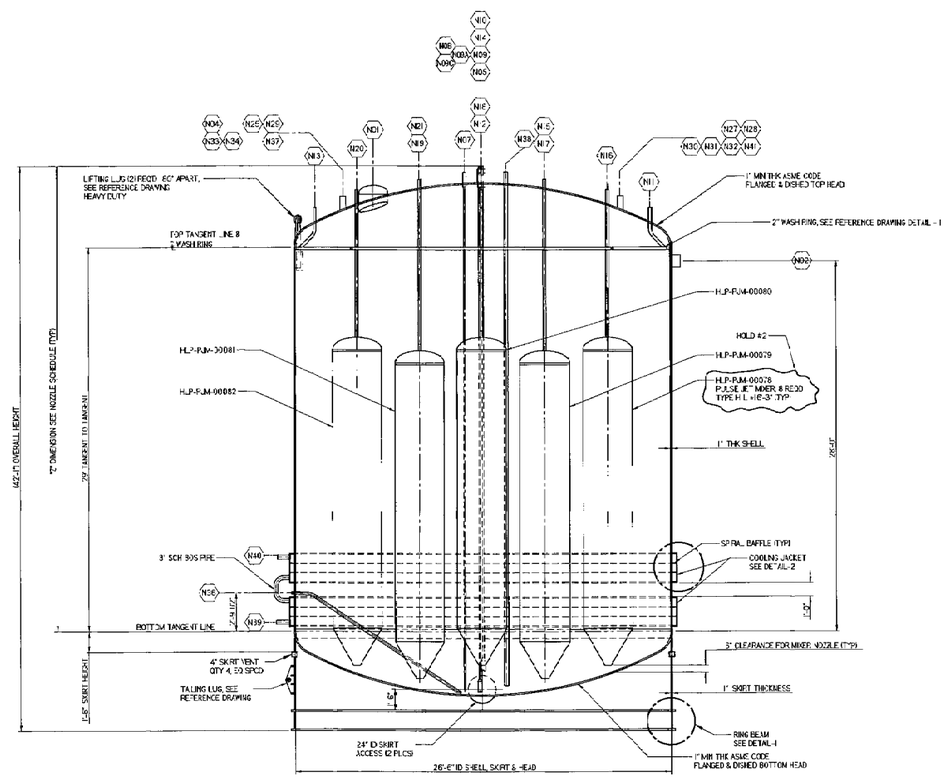

ELEVATION

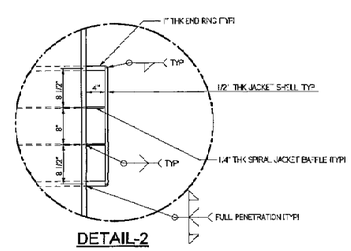

DETAIL-2
COOLING JACKET

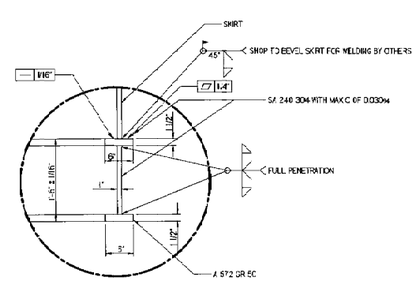

DETAIL-1
RING BEAM

VESSEL COMPONENT QUALITY LEVEL	
COMPONENT	QUALITY LEVEL
PARENT VESSEL, SKIRT, ALL NOZZLES	Q-1
ALL INTERNAL SUPPORT	Q-1
PULSE JET MIXERS AND PIPING	Q-1
DELETED	
INSTRUMENTATION	CM
WASH RING PIPING	CM

THIS DRAWING TO BE READ IN CONJUNCTION WITH "MECHANICAL SYSTEMS DATA SHEET" 24590-PTF-MV0-HLP-70609

PLEASE NOTE THAT SOURCE, SPECIAL NUCLEAR AND BYPRODUCT MATERIALS, AS DEFINED IN THE ATOMIC ENERGY ACT OF 1954 ARE NOT REGULATED AT THE U.S. DEPARTMENT OF ENERGY (DOE) FACILITIES EXCLUSIVELY BY DOE ACTING PURSUANT TO ITS NRC AUTHORITY. DOE ASSERTS, THAT PURSUANT TO THE ATOMIC ENERGY ACT, HAS SOLE AND EXCLUSIVE RESPONSIBILITY AND AUTHORITY TO REGULATE SOURCE, SPECIAL NUCLEAR, AND BYPRODUCT MATERIALS AT DOE-OWNED NUCLEAR FACILITIES. INFORMATION CONTAINED HEREIN ON RADIONUCLIDES IS PROVIDED FOR PROCESS DESCRIPTION PURPOSES ONLY.

REFERENCE DRAWINGS		
DWG NO	REV	TITLE
24590-WTP-MV-M59T-0001	0	PRESSURE VESSEL TOLERANCES STANDARD DETAILS
24590-WTP-MV-M59T-0004	0	PULSE JET MIXER STANDARD DETAILS
24590-WTP-MV-M59T-0007	2	THERMOWELL CONNECTION STANDARD DETAILS
24590-WTP-MV-M59T-0009	0	LIFTING LUGS STANDARD DETAILS
24590-WTP-MV-M59T-0010	0	BALANCE TEE STANDARD DETAILS
24590-WTP-MV-M59T-0021	0	WASH RINGS STANDARD DETAILS
24590-WTP-MV-M59T-000-ECO1003	0	VESSEL CONNECTION STANDARD DETAILS SHT 1 OF 2
24590-WTP-MV-M59T-000-ECO1003	0	VESSEL CONNECTION STANDARD DETAILS SHT 1 OF 3
24590-WTP-MV-M59T-0007	0	VESSEL INSPECTION NAMA STANDARD DETAILS

REV	DESCRIPTION	DRG	CHKD	RVWD	APVD	DATE
0	ISSUED FOR PERMITTING USE	JAW	JK	CS	DM	7/11/03

REVISION HISTORY

Q QUALITY LEVEL

PROJECT No. 24590
SITE RIVER PROTECTION PROJECT WASTE TREATMENT PLANT 2435 STEVENS CENTER PLACE RICHLAND, WA 99352
AREA 200E
BUILDING No. 0

ISSUED BY: BECHTEL NATIONAL, INC.

	BY	DATE
ORIGINATOR		7/11/03
CHECKER		7/11/03
APPROVER		7/11/03
REVIEWER		7/11/03

CONTENT APPLICABLE TO ALARA? YES NO
ACR NO. REV:
DM REFERENCE No.

CONTRACT No. DE-AC27-01RV14136

EQUIPMENT ASSEMBLY
HLW FEED BLENDING VESSEL
HLP-VSL-00028

SCALE: NONE
24590-PTF-MV-HLP-P0004
REV: 0

"Z" SIZE - 44134
COMPUTER GENERATED BY DOE-DESIGN MANUAL CHANGES NOT PERMITTED
"WAIT" REFERENCING DRAWING PROGRAM NUMBERS IN DOCUMENTS SHOULD BE SUBSTITUTED WHEN REVISED ELEMENTS
07/15/2003 10:16:57 AM

FORM E_MA3T01 01-03-2001

24590-PTF-MV-HLP-P0005

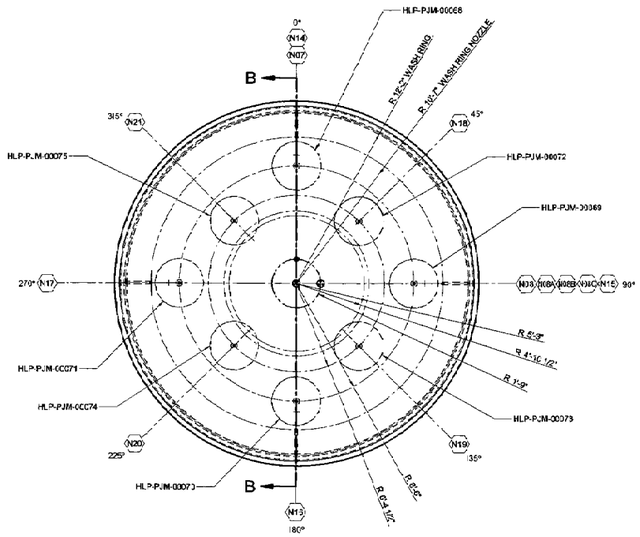

PLAN

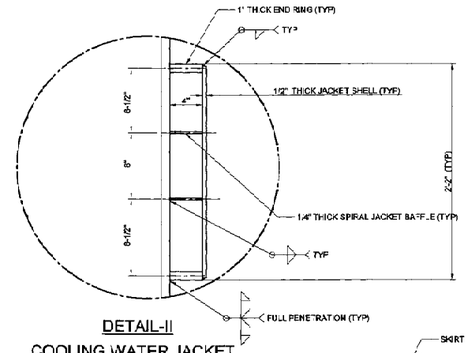

DETAIL-II
COOLING WATER JACKET

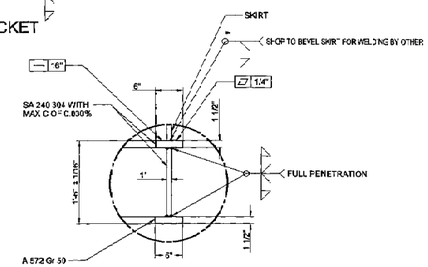

DETAIL-1
RING BEAM

NOZZLE	SIZE	SCHED/WALL	SERVICE/REMARKS	"Z" DIM	REF DWG-DET	CONNECTION
N01	24"	0.5"	MANWAY	TBD	24590-WTP-MV-M6ST-00017 DET 1	CAPPED
N02	6"	80S	OVERFLOW	28-4"	24590-WTP-MV-M6ST-00015001 DET 2	6"-43S
N04	4"	80S	INLET AIR PURGE	TBD	24590-WTP-MV-M6ST-00015001 DET 2	4"-43S
N05	6"	80S	VENT	TBD	24590-WTP-MV-M6ST-00015001 DET 2	6"-13S
N07	2" OD X 1"	160S	TEMPERATURE	TBD	24590-WTP-MV-M6ST-00037 ASSY 1, DET 1	3/4"-16S
N08	6"	80S	INSTRUMENTATION	34'-4"	24590-WTP-MV-M6ST-00015003 DET 26	N/A
N08A	1"	160S	BALANCE	34'-10"	24590-WTP-MV-M6ST-00015003 DET 26	1/2"-40S
N08B	1"	160S	DENSITY	34'-9"	24590-WTP-MV-M6ST-00015003 DET 26	1/2"-40S
N08C	1"	160S	LEVEL	34'-11"	24590-WTP-MV-M6ST-00015003 DET 26	1/2"-40S
N10	2"	160S	INLET TO WASH RING	TBD	24590-WTP-MV-M6ST-00015001 DET 3	2"-40S
N11	2"	160S	INLET TO WASH RING	TBD	24590-WTP-MV-M6ST-00015001 DET 3	2"-40S
N12	2"	160S	INLET TO WASH RING	TBD	24590-WTP-MV-M6ST-00015001 DET 3	2"-40S
N13	2"	160S	INLET TO WASH RING	TBD	24590-WTP-MV-M6ST-00015001 DET 3	2"-40S
N14	2"	160S	AIR/VACUUM TO HLP-PJM-00068	TBD	24590-WTP-MV-M6ST-00015001 DET 3	2"-43S
N15	2"	160S	AIR/VACUUM TO HLP-PJM-00069	TBD	24590-WTP-MV-M6ST-00015001 DET 3	2"-43S
N16	2"	160S	AIR/VACUUM TO HLP-PJM-00070	TBD	24590-WTP-MV-M6ST-00015001 DET 3	2"-43S
N17	2"	160S	AIR/VACUUM TO HLP-PJM-00071	TBD	24590-WTP-MV-M6ST-00015001 DET 3	2"-43S
N18	2"	160S	AIR/VACUUM TO HLP-PJM-00072	TBD	24590-WTP-MV-M6ST-00015001 DET 3	2"-43S
N19	2"	160S	AIR/VACUUM TO HLP-PJM-00073	TBD	24590-WTP-MV-M6ST-00015001 DET 3	2"-43S
N20	2"	160S	AIR/VACUUM TO HLP-PJM-00074	TBD	24590-WTP-MV-M6ST-00015001 DET 3	2"-43S
N21	2"	160S	AIR/VACUUM TO HLP-PJM-00075	TBD	24590-WTP-MV-M6ST-00015001 DET 3	2"-43S
N25	2" OD	SEE DETAIL	INLET ITS AIR	TBD	24590-WTP-MV-M6ST-00015001 DET 5	1/2"-40S
N27	3"	80S	INLET	TBD	24590-WTP-MV-M6ST-00015001 DET 2	3"-43S
N28	2"	160S	INLET	TBD	24590-WTP-MV-M6ST-00015001 DET 2	2"-80S
N29	6"	80S	INLET FROM HLP-BRKPT-00004	TBD	24590-WTP-MV-M6ST-00015001 DET 2	6"-13S
N30	6"	80S	INLET FROM HLP-BRKPT-00004	TBD	24590-WTP-MV-M6ST-00015001 DET 2	6"-13S
N31	3"	80S	INLET	TBD	24590-WTP-MV-M6ST-00015001 DET 2	3"-43S
N32	3"	80S	INLET	TBD	24590-WTP-MV-M6ST-00015001 DET 2	3"-43S
N33	2"	160S	SPARE	TBD	24590-WTP-MV-M6ST-00015001 DET 2	2"-80S
N34	3"	160S	SPARE	TBD	24590-WTP-MV-M6ST-00015001 DET 2	3"-43S
N36	3"	80S	OUTLET WITH DIP PIPE (TO PUMP)	TBD	24590-WTP-MV-M6ST-00015001 DET 3	3"-43S
N37	3"	80S	INLET	TBD	24590-WTP-MV-M6ST-00015001 DET 2	3"-43S
N38	3"	80S	OUTLET WITH DIP PIPE (RECIRCULATION)	TBD	24590-WTP-MV-M6ST-00015001 DET 3	3"-43S
N39	4"	80S	INLET TO JACKET	TBD	24590-WTP-MV-M6ST-00015001 DET 2	4"-43S
N40	4"	80S	OUTLET FROM JACKET	TBD	24590-WTP-MV-M6ST-00015001 DET 2	4"-43S
N41	3"	80S	INLET AUTO SAMPLE SYSTEM	TBD	24590-WTP-MV-M6ST-00015001 DET 2	3"-43S

GENERAL NOTES

1. DELETED
2. FOR DISTANCE OF DIP PIPES TO BOTTOM HEAD USE 2" CLEARANCE UNLESS OTHERWISE SPECIFIED
3. "Z" DIMENSION FOR NOZZLES MEASURED FROM C/L OF NOZZLE FACE
4. RING BEAM SHALL BE DELIVERED AHEAD OF VESSEL TO JOBSITE, FOR INSTALLATION BY OTHERS.
5. NOZZLE WITH TBD IN NOZZLE SCHEDULE "Z" DIM SHALL HAVE MAX OF 12" PROJECTION OUTSIDE SHELL OR HEAD.

HOLDS:

1. DELETED
2. INTERNALS FINAL DESIGN
3. FINAL NOZZLE LOCATION AND SIZE
4. DELETED
5. DELETED

THIS DRAWING TO BE READ IN CONJUNCTION WITH MECHANICAL SYSTEMS DATA SHEET 24590-PTF-MVC-HLP-P0006

VESSEL COMPONENT QUALITY LEVEL	
COMPONENT	QUALITY LEVEL
PARENT VESSEL, SKIRT, ALL NOZZLES	QL-1
ALL INTERNAL SUPPORT	QL-1
PULSE JET MIXERS AND PIPING	QL-1
DELETED	
INSTRUMENTATION	CM
WASH RING PIPING	CM

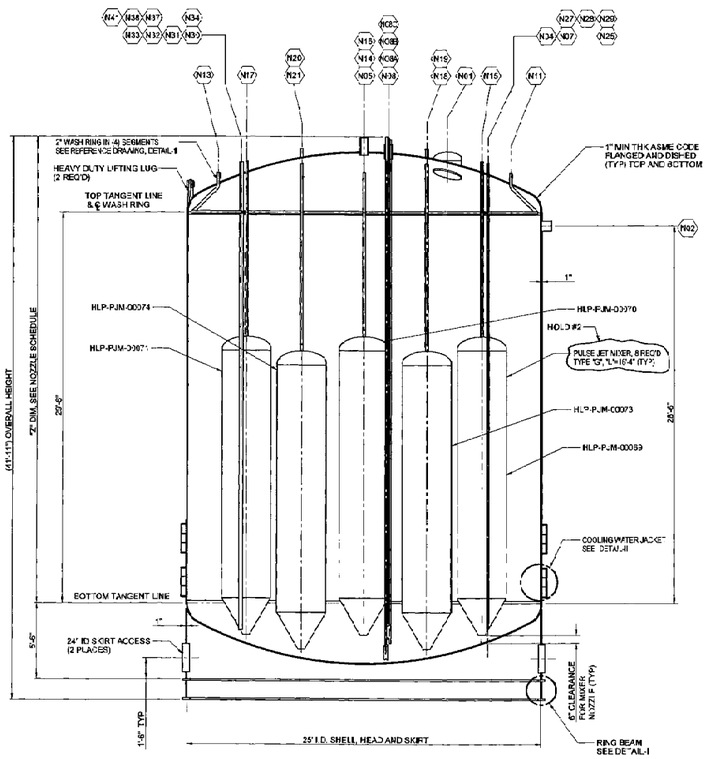

ELEVATION
FOR TRUE ORIENTATION SEE PLAN

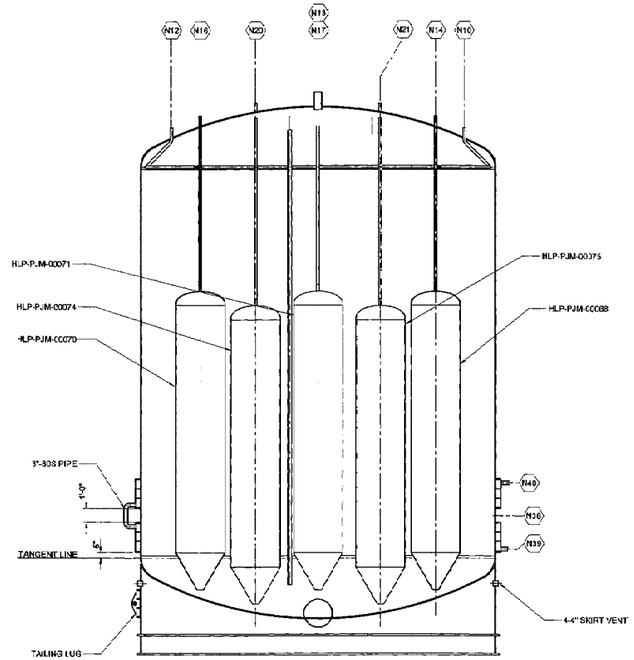

SECTION B-B

THIS DRAWING CONTAINS NO PROPRIETARY INFORMATION

REFERENCE DRAWINGS		
DWG NO	REV	TITLE
24590-WTP-MV-M6ST-00001	0	PRESSURE VESSEL TOLERANCES STANDARD DETAILS
24590-WTP-MV-M6ST-00004	0	PULSE JET MIXERS STANDARD DETAILS
24590-WTP-MV-M6ST-00007	2	TRUNNIONS & CONNECTOR STANDARD DETAILS
24590-WTP-MV-M6ST-00009	0	LIFTING LUGS STANDARD DETAILS
24590-WTP-MV-M6ST-00010	0	TAILING LUGS STANDARD DETAILS
24590-WTP-MV-M6ST-00011	0	WASH RING STANDARD DETAILS
24590-WTP-MV-M6ST-00016001	0	VESSEL CONNECTIONS STANDARD DETAILS SHT 1 OF 2
24590-WTP-MV-M6ST-00016002	0	VESSEL CONNECTIONS STANDARD DETAILS SHT 2 OF 2
24590-WTP-MV-M6ST-00017	0	VESSEL INSPECTION MANWAY STANDARD DETAILS

REGISTERED PROFESSIONAL ENGINEER — STATE OF WASHINGTON — 9/9/03 — EXPIRES 1/01/2004

REV	DESCRIPTION	ORG	CHKD	RVWD	APVD	DATE
0	ISSUED FOR PERMITTING USE					9/9/03

REVISION HISTORY

Q QUALITY LEVEL

ISSUED BY: VENDOR / ARCHITECT ENGINEER

	BY	DATE
ORIGINATOR		7/21/03
CHECKER		7/21/03
APPROVER		8/15/03
REVIEWER		7/21/03

CONTENT APPLICABLE TO ALARA? ☐ YES ☐ NO
ADR NO. REV.
DIR REFERENCE No

PROJECT No. 24590
SITE HANFORD
AREA 200E
SUBDIVISION No. 12

RIVER PROTECTION PROJECT
WASTE TREATMENT PLANT
2435 STEVENS CENTER PLACE
RICHLAND, WA 99352

CONTRACT No. DE-AC27-01RV14136

EQUIPMENT ASSEMBLY
HLW LAG STORAGE VESSEL
HLP-VSL-000273

SCALE NONE | 24590-PTF-MV-HLP-P0005 | REV 0

E SIZE 44x34 — COMPUTER GENERATED BY CODE IDENT 81996 — BUREAU CHANGES ACT PERMITTED

WHEN PLOTTED USING DWG WIZARD WITH BIS IN EQUIVALENT RESOLUTION TO HIGHER DEVICE DEVELOPED

07/15/2003 10:31:28 AM

FORM E_MNVTSR 100103

24590-PTF-MV-HLP-P0006

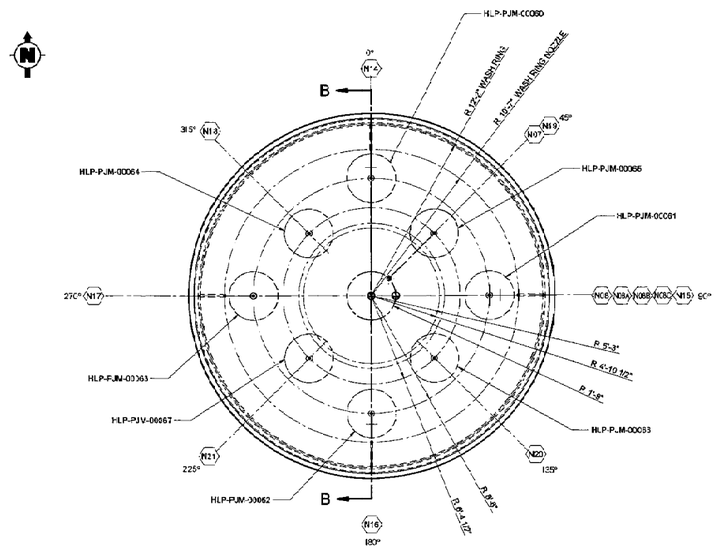

PLAN

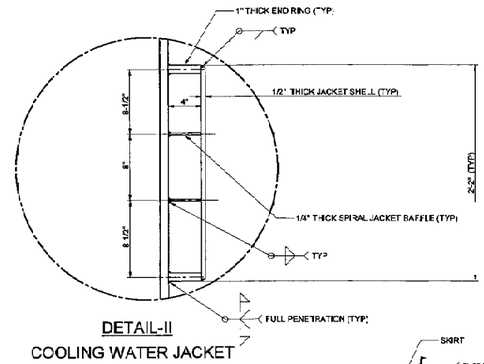

DETAIL-II
COOLING WATER JACKET

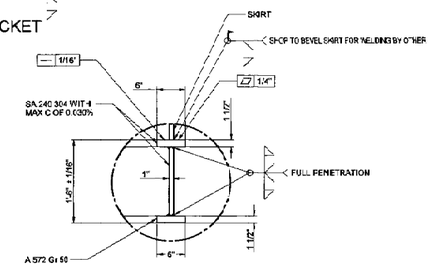

DETAIL-1
RING BEAM

NOZZLE	SIZE	SCHED/WALL	SERVICE/REMARKS	*Z DIM	SEE DWG/DET	CONNECTION
N01	24"	8.0"	MANWAY	TBD	24590-WTP-MM-MB9F-00007 DET 1	CAPPED
N02	8"	80S	OVERFLOW	24'-6"	24590-WTP-MM-MB9F-00016301 DET 2	8"-40S
N04	4"	80S	INLET AIR PURGE	TBD	24590-WTP-MM-MB9F-00016301 DET 2	4"-40S
N05	8"	80S	VENT	TBD	24590-WTP-MM-MB9F-00016301 DET 2	8"-80S
N07	2"OD X 1"	1695	TEMPERATURE	TBD	24590-WTP-MM-MB9F-00007 ASSY 1, DET 1	3/4"-1695
N08	6"	80S	INSTRUMENTATION	34'-4"	24590-WTP-MM-MB9F-00016303 DET 26	N/A
N08A	1"	1695	BALANCE	34'-6"	24590-WTP-MM-MB9F-00016303 DET 26	1/2"-4#S
N08B	1"	1695	DENSITY	34'-8"	24590-WTP-MM-MB9F-00016303 DET 26	1/2"-4#S
N08C	1"	1695	LEVEL	34'-11"	24590-WTP-MM-MB9F-00016303 DET 26	1/2"-4#S
N10	2"	1695	INLET TO WASH RING	TBD	24590-WTP-MM-MB9F-00016301 DET 2	2"-40S
N11	2"	1695	INLET TO WASH RING	TBD	24590-WTP-MM-MB9F-00016301 DET 2	2"-40S
N12	2"	1695	INLET TO WASH RING	TBD	24590-WTP-MM-MB9F-00016301 DET 2	2"-40S
N13	2"	1695	INLET TO WASH RING	TBD	24590-WTP-MM-MB9F-00016301 DET 2	2"-40S
N14	2"	1695	NR VACUUM TO HLP-PJM-00064	TBD	24590-WTP-MM-MB9F-00016301 DET 2	2"-40S
N15	2"	1695	NR VACUUM TO HLP-PJM-00061	TBD	24590-WTP-MM-MB9F-00016301 DET 2	2"-40S
N16	2"	1695	NR VACUUM TO HLP-PJM-00063	TBD	24590-WTP-MM-MB9F-00016301 DET 2	2"-40S
N17	2"	1695	NR VACUUM TO HLP-PJM-00063	TBD	24590-WTP-MM-MB9F-00016301 DET 2	2"-40S
N18	2"	1695	NR VACUUM TO HLP-PJM-00064	TBD	24590-WTP-MM-MB9F-00016301 DET 2	2"-40S
N19	2"	1695	NR VACUUM TO HLP-PJM-00066	TBD	24590-WTP-MM-MB9F-00016301 DET 2	2"-40S
N20	2"	1695	NR VACUUM TO HLP-PJM-00061	TBD	24590-WTP-MM-MB9F-00016301 DET 2	2"-40S
N21	2"	1695	NR VACUUM TO HLP-PJM-00067	TBD	24590-WTP-MM-MB9F-00016301 DET 2	2"-40S
N25	2" OD	SEE DETAIL	INLET TO AIR	TBD	24590-WTP-MM-MB9F-00016301 DET 6	1/2"-4#S
N27	3"	80S	INLET	TBD	24590-WTP-MM-MB9F-00016301 DET 2	3"-40S
N28	2"	1695	INLET	TBD	24590-WTP-MM-MB9F-00016301 DET 2	2"-40S
N29	2"	1695	SPARE	TBD	24590-WTP-MM-MB9F-00016301 DET 2	2"-40S
N30	3"	80S	SPARE	TBD	24590-WTP-MM-MB9F-00016301 DET 2	3"-40S
N32	3"	80S	OUTLET WITH DIP PIPE (TO PUMP)	TBD	24590-WTP-MM-MB9F-00016301 DET 2	3"-40S
N33	3"	80S	INLET	TBD	24590-WTP-MM-MB9F-00016301 DET 2	3"-40S
N34	3"	80S	INLET WITH DIP PIPE (RECIRCULATION)	TBD	24590-WTP-MM-MB9F-00016301 DET 2	3"-40S
N35	4"	80S	INLET TO JACKET	TBD	24590-WTP-MM-MB9F-00016301 DET 2	4"-40S
N36	4"	80S	OUTLET FROM JACKET	TBD	24590-WTP-MM-MB9F-00016301 DET 2	4"-40S
N37	3"	80S	INLET AUTO SAMPLE SYSTEM	TBD	24590-WTP-MM-MB9F-00016301 DET 2	3"-40S

GENERAL NOTES:

1. DELETED
2. FOR DISTANCE OF DIP PIPES TO BOTTOM HEAD USE 2" CLEARANCE UNLESS OTHERWISE SPECIFIED
3. "Z" DIMENSION FOR NOZZLES MEASURED FROM CL OF NOZZLE FACE
4. RING BEAM SHALL BE DELIVERED AHEAD OF VESSEL TO JOBSITE, FOR INSTALLATION BY OTHERS.
5. NOZZLE WITH "BD" IN NOZZLE SCHEDULE "Z" DIM SHALL HAVE MAX OF 1/2" PROJECT ON OUTSIDE SHELL OR HEAD.

HOLDS

1. DELETED
2. INTERNALS FINAL DESIGN
3. FINAL NOZZLE LOCATION AND SIZE
4. DELETED
5. DELETED

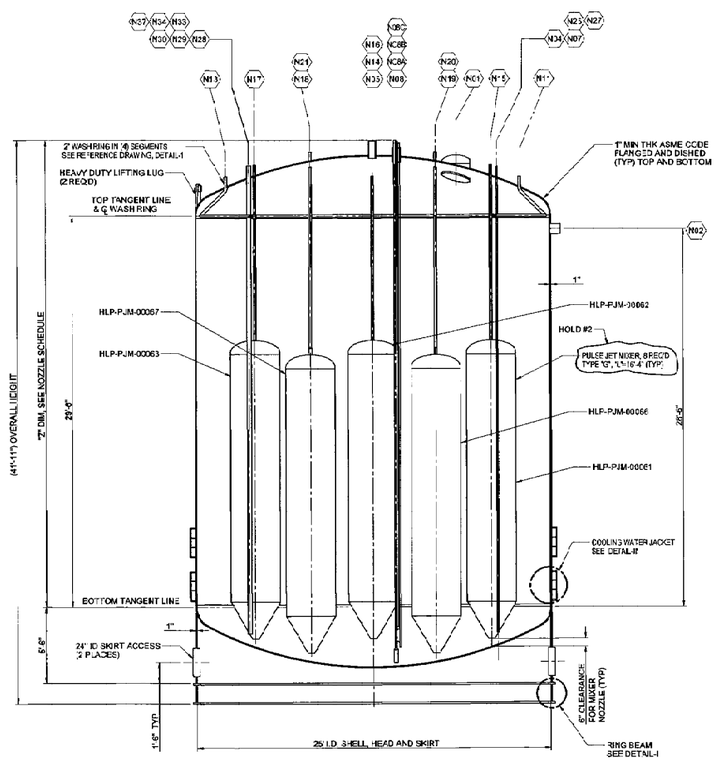

ELEVATION
FOR TRUE ORIENTATION SEE PLAN

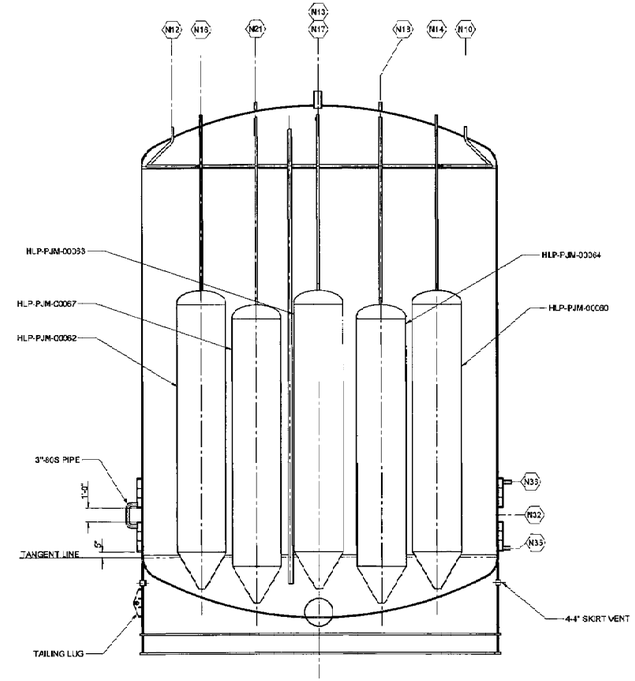

SECTION B-B

THIS DRAWING TO BE READ IN CONJUNCTION WITH MECHANICAL SYSTEMS DATA SHEET 24590-PTF-MDC-HLP-00007

VESSEL COMPONENT QUALITY LEVEL	
COMPONENT	QUALITY LEVEL
PARENT VESSEL, SKIRT, ALL NOZZLES	QL-1
ALL INTERNAL SUPPORT	QL-1
PULSE JET MIXERS AND PIPING	QL-1
DELETED	
INSTRUMENTATION	CM
WASH RING PIPING	CM

PLEASE NOTE THAT SOURCE, SPECIAL NUCLEAR AND BYPRODUCT MATERIALS, AS DEFINED IN THE ATOMIC ENERGY ACT OF 1954 (AEA) ARE REGULATED AT THE U.S. DEPARTMENT OF ENERGY (DOE) FACILITIES EXCLUSIVELY BY DOE ACTING PURSUANT TO ITS AEA AUTHORITY. DOE ASSERTS, THAT PURSUANT TO THE AEA, IT HAS SOLE AND EXCLUSIVE RESPONSIBILITY AND AUTHORITY TO REGULATE SOURCE, SPECIAL NUCLEAR, AND BYPRODUCT MATERIALS AT DOE-OWNED NUCLEAR FACILITIES. INFORMATION CONTAINED HEREIN ON RADIONUCLIDES IS PROVIDED FOR PROCESS DESCRIPTION PURPOSES ONLY.

REFERENCE DRAWINGS

DWG NO	REV	TITLE
2-30K-MFP-MV-M5R-C0008	0	PRESSURE VESSEL TOP HEADS STANDARD DETAILS
2-30K-MFP-MV-M5R-C0009	0	PULSE JET MIXERS STANDARD DETAILS
2-30K-MFP-MV-M5R-C0007	2	THERMOWELL CONNECTION STANDARD DETAILS
2-30K-MFP-MV-M5R-C0010	0	MIXING LIGHT STANDARD DETAILS
2-30K-MFP-MV-M5R-C0013	0	TAILING LUG STANDARD DETAILS
2-30K-MFP-MV-M5R-C0011	0	WASH RINGS STANDARD DETAILS
2-30K-MFP-MV-M5R-C0012	0	VESSEL CONNECTIONS STANDARD DETAILS SHT 1 OF 3
2-30K-MFP-MV-M5R-C0013	0	VESSEL CONNECTIONS STANDARD DETAILS SHT 2 OF 3
2-30K-MFP-MV-M5R-C0017	0	VESSEL INSPECTION MANWAY STANDARD DETAILS

STATE OF WASHINGTON — FRANK W. HOFFMANN — REGISTERED PROFESSIONAL ENGINEER — 24590 — 9/19/03 — EXPIRES 12/31/2004

REV	DESCRIPTION	ORG	CHKD	REVD	APVD	DATE
0	ISSUED FOR PERMITTING USE	JLO	MEF	CJF	JDF	9/19/03

REVISION HISTORY

Q QUALITY LEVEL

ISSUED BY: CH2M HILL FOR DOE-RL ORP

PROJECT No.	24590
SITE	HANFORD
AREA	200E
BUILDING No.	N/A

	BY	DATE
DESIGNATOR	[signature]	9/19/03
DESIGNER	[signature]	9/19/03
APPROVER	[signature]	9/19/03
REVIEWER	[signature]	9/19/03

CONTENT APPLICABLE TO ASME? ☐ YES ☒ NO
ASME NO. REV.
CMR REFERENCE No.

RIVER PROTECTION PROJECT
WASTE TREATMENT PLANT
2435 STEVENS CENTER PLACE
RICHLAND, WA 99352

CONTRACT No: DE-AC27-01RV14136

EQUIPMENT ASSEMBLY
HLW LAG STORAGE VESSEL
HLP-VSL-00027A

SCALE: NONE

24590-PTF-MV-HLP-P0006

REV 0

"E" SIZE - 44X34
COMPUTER GENERATED BY 10.00 ICON
MANUAL CHANGES NOT PERMITTED

THIS DRAWING MEANS AND DIMENSIONS AS DOCUMENTED, MAY DIFFER FROM ACTUAL SHOP DRAWINGS

FORM E_MASTER 02/2003

07/19/2003 10:43 AM

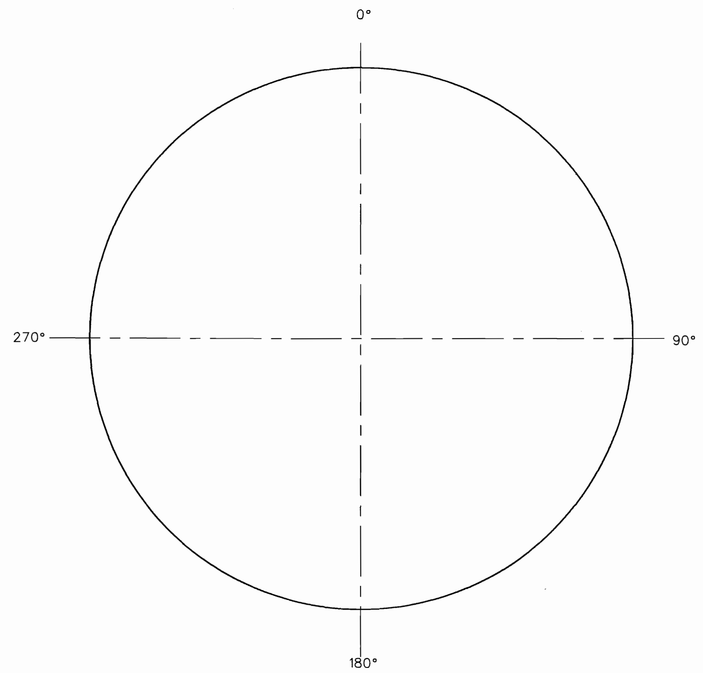

PLAN

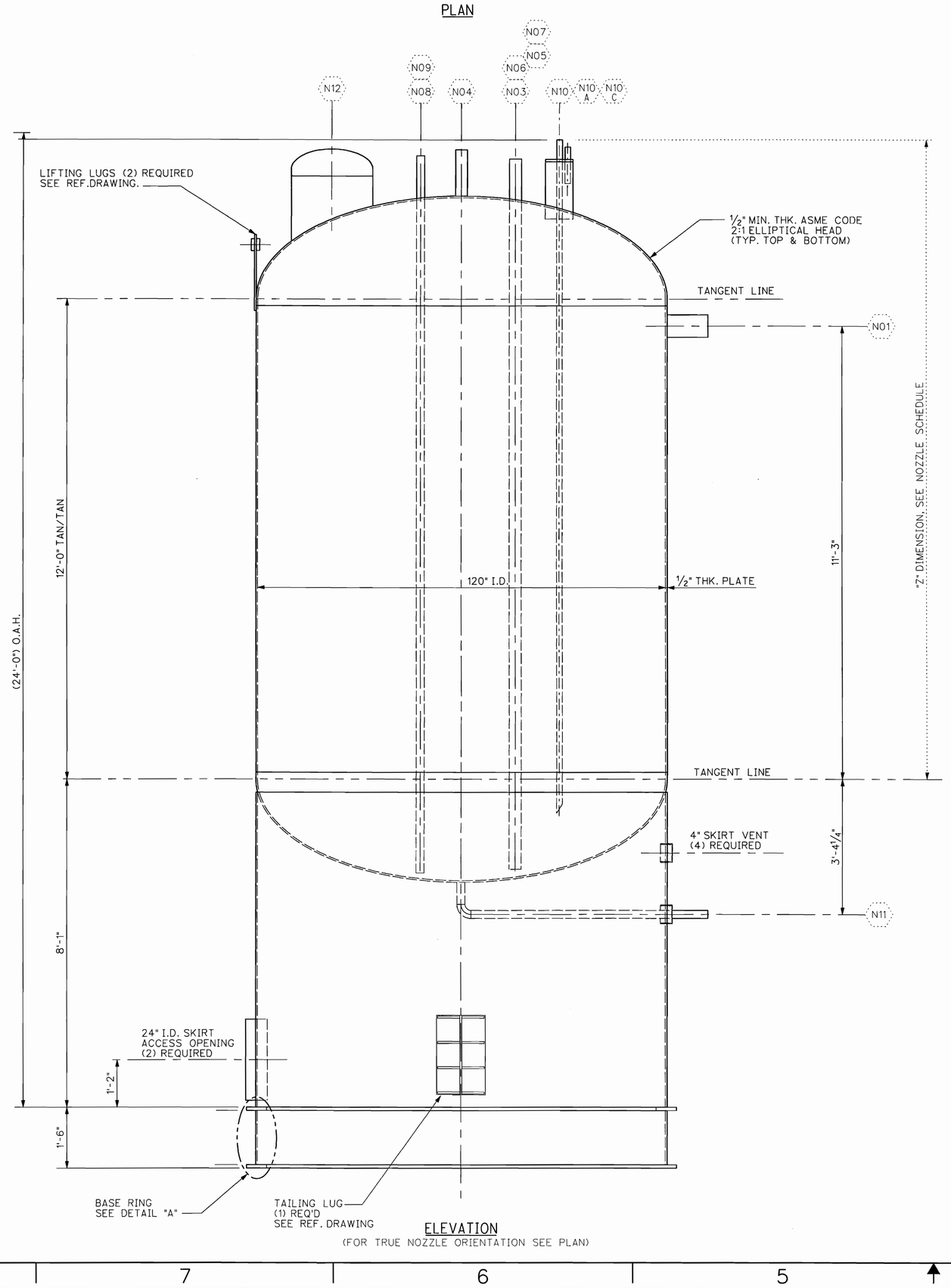

ELEVATION
(FOR TRUE NOZZLE ORIENTATION SEE PLAN)

NOZZLE	SIZE	SCHED/WALL	SERVICE/REMARKS	"Z"DIM	REF DWG/DET	CONN PIPE SIZE/SCHED
N01	6"	40S	OUTLET-OVERFLOW TO PWD-VSL-00033	T.B.D.	24590-WTP-MV-M59T-00016001 DET 1	6" SCH. 10S
N02			DELETED			
N03	3"	80S	INLET-PJV-DMST-00002A	T.B.D.	24590-WTP-MV-M59T-00016001 DET 4	3" SCH. 40S
N04	3"	80S	VENT	15'-2"	24590-WTP-MV-M59T-00016001 DET 1	2" SCH. 40S
N05	3"	80S	INLET- PJV-DMST-00002B	T.B.D.	24590-WTP-MV-M59T-00016001 DET 4	3" SCH. 40S
N06	3"	80S	INLET- PJV-DMST-00002C	T.B.D.	24590-WTP-MV-M59T-00016001 DET 4	3" SCH. 40S
N07	6"	80S	INLET- HEADER DRAIN LINE	T.B.D.	24590-WTP-MV-M59T-00016001 DET 4	3" SCH. 40S
N08	2"	80S	INLET- FROM PJV-PMP-00001A/B	T.B.D.	24590-WTP-MV-M59T-00016001 DET 1	2" SCH. 40S
N09	2"	80S	INLET- FROM PROCESS CONDENSATE	T.B.D.	24590-WTP-MV-M59T-00016001 DET 1	2" SCH.40S
N10	6"	40S	INSTRUMENTS (LT, LI)	T.B.D.	24590-WTP-MV-M59T-00016002 DET 19	SEE DETAIL
N10A	1"	160S	BALANCE	T.B.D.	24590-WTP-MV-M59T-00016002 DET 19	1/2" SCH. 40S
N10C	1"	160S	LEVEL	T.B.D.	24590-WTP-MV-M59T-00016002 DET 19	1/2" SCH. 40S
N11	3"	80S	DRAIN	3'-4 1/4"	24590-WTP-MV-M59T-00016002 DET 1	3" SCH. 40S
N12	24"	PLATE	MANWAY	T.B.D.	24590-WTP-MV-M59T-00017 DET 1	

GENERAL NOTES:

1. ALL "Z" DIMENSIONS MEASURED FROM BOTTOM TANGENT LINE UNLESS OTHERWISE NOTED. FOR SHELL NOZZLE, "Z" DIMENSIONS MEASURED FROM CENTER LINE OF NOZZLE FACE.
2. FOR DISTANCE OF DIP PIPES (LEGS) TO BOTTOM HEAD USE 2" CLEARANCE, UNLESS OTHERWISE SPECIFIED.
3. BASE RING BEAM TO BE SHIPPED AHEAD OF VESSEL TO FIELD CONSTRUCTION FOR INSTALLATION BY OTHERS.
4. DELETED
5. THE ACCEPTABLE DIAMETRICAL TOLERANCES FOR BOTH THE SKIRT AND THE RING BEAM SHALL BE PER ITEM 3 OF THE PROJECT STANDARD DRAWING 24590-WTP-MV-M59T-00001. THE MAXIMUM CENTERLINE DEVIATION OF THE BOTTOM OF THE SKIRT AND THE WEB OF THE RING BEAM AT ANY GIVEN POINT SHALL NOT EXCEED ONE HALF OF THE NOMINAL THICKNESS OF THE SKIRT.

HOLD:

1. FINAL LOCATION OF NOZZLES, NAMEPLATE BRACKET, LIFTING LUGS, SKIRT VENTS AND SKIRT OPENING PENDING INPUT FROM PLANT DESIGN.

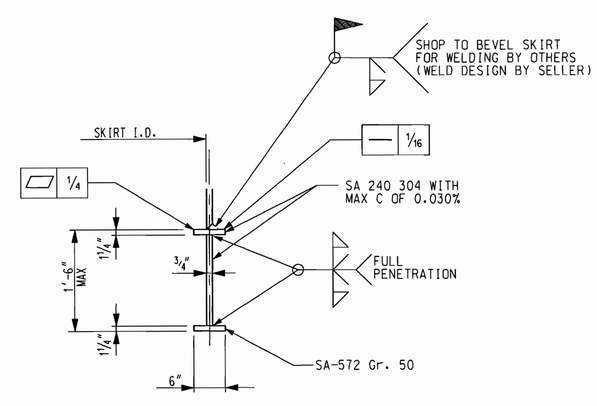

DETAIL "A"

PLEASE NOTE THAT SOURCE, SPECIAL NUCLEAR AND BYPRODUCT MATERIALS, AS DEFINED IN THE ATOMIC ENERGY ACT OF 1954 (AEA), ARE REGULATED AT THE U.S. DEPARTMENT OF ENERGY (DOE) FACILITIES EXCLUSIVELY BY DOE ACTING PURSUANT TO ITS AEA AUTHORITY. DOE ASSERTS, THAT PURSUANT TO THE AEA, IT HAS SOLE AND EXCLUSIVE RESPONSIBILITY AND AUTHORITY TO REGULATE SOURCE, SPECIAL NUCLEAR, AND BYPRODUCT MATERIAL AT DOE-OWNED NUCLEAR FACILITIES. INFORMATION CONTAINED HEREIN ON RADIONUCLIDES IS PROVIDED FOR PROCESS DESCRIPTION PURPOSES ONLY.

THIS DRAWING TO BE READ IN CONJUNCTION WITH THE MECHANICAL DATA SHEET NO 24590-PTF-MVD-PJV-P0003

VESSEL COMPONENT QUALITY LEVELS	
COMPONENTS	QUALITY LEVELS
MAIN VESSEL, SKIRT, NOZZLES	QL2
INTERNAL SUPPORTS	QL2
INSTRUMENTATION	CM

REFERENCE DRAWINGS		
DWG NO	REV	TITLE
24590-PTF-M6-PJV-P0002		P&ID
24590-WTP-MV-M59T-00001		PRESSURE VESSEL TOLERANCES STANDARD DETAILS
24590-WTP-MV-M59T-00009		LIFTING LUGS STANDARD DETAILS
24590-WTP-MV-M59T-00010		TAILING LUG STANDARD DETAILS
		DELETED
24590-WTP-MV-M59T-00017		VESSEL INSPECTION MANWAY
24590-WTP-MV-M59T-00018		VESSEL NAME PLATE STANDARD DETAILS
24590-WTP-MV-M59T-00016001		VESSEL CONNECTIONS STANDARD DETAILS SHT 1 of 3
24590-WTP-MV-M59T-00016002		VESSEL CONNECTIONS STANDARD DETAILS SHT 2 of 3

MARK W. HOFFMAN
STATE OF WASHINGTON
16309
REGISTERED PROFESSIONAL ENGINEER
9/15/04
EXPIRES 12/10/04

REV	DESCRIPTION	ORG	CHKD	RVWD	APVD	DATE
0	ISSUED FOR PERMITTING USE		RT			9/15/04

REVISION HISTORY

R10079539

ISSUED BY RPP-WTP PDC

PROJECT No.	24590
SITE	HANFORD
AREA	200E
BUILDING No.	10

ISSUE STAMP

	BY	DATE
ORIGINATOR		7/22/04
CHECKER		7/22/04
APPROVER		9/15/04
REVIEWER		7/22/04

CONTENT APPLICABLE TO ALARA? [XX] YES [ ] NO
ADR NO. N/A REV:

BECHTEL

RIVER PROTECTION PROJECT
WASTE TREATMENT PLANT
2435 STEVENS CENTER PLACE
RICHLAND, WA 99352

CONTRACT No: DE-AC27-01RV14136

EQUIPMENT ASSEMBLY PJV DRAIN COLLECTION VESSEL PJV-VSL-00002 (Q)

SCALE: NTS

24590-PTF-MV-PJV-P0001

REV 0

FORM E_SDN.DGN 02/2003

'E' SIZE - 44x34
COMPUTER GENERATED - MANUAL CHANGES NOT PERMITTED

07/22/2004 10:33:45 AM

C:\Work\dms05:18\PTFMVPJVP0001.DGN

NOZZLE	SIZE	SCHED/WALL	SERVICE/REMARKS	"Z'DIM	REF DWG/DET	CONN PIPE SIZE/SCHED
N01	3"	80S	INLET-PVP-HEME-00001A	9'-2"	24590-WTP-MV-M59T-00016001 DTL 4	3" SCH. 40S
N02	3"	80S	INLET-PVP-HEME-00001B	9'-2"	24590-WTP-MV-M59T-00016001 DTL 4	3" SCH. 40S
N03	3"	80S	INLET-PVP-HEME-00001C	9'-2"	24590-WTP-MV-M59T-00016001 DTL 4	3" SCH. 40S
N04	2"	80S	INLET-PVP-PMP-00002A/B	9'-2"	24590-WTP-MV-M59T-00016001 DTL 2	2" SCH. 40S
N05	2"	80S	INLET-PTF-M6-RLD-00004	9'-2"	24590-WTP-MV-M59T-00016001 DTL 4	2" SCH. 40S
N06	3"	40S	SUCTION-PVP-PMP-00002A/B	-2'-4"	24590-WTP-MV-M59T-00016001 DTL 1	3" SCH. 40S
N07	4"	40S	OVERFLOW-PWD-VSL-00033	6'-11"	24590-WTP-MV-M59T-00016001 DTL 2	4" SCH. 40S
N08	3"	40S	VENT	9-8½"	24590-WTP-MV-M59T-00016001 DTL 1	3" SCH. 40S
N10	24"	½" THK.	MANWAY	9'-8½"	24590-WTP-MV-M59T-00017 DET 1	CAPPED
N12A	2"X1"		BALANCE	9-8½"	24590-WTP-MV-M58T-00016001, DETAIL 6	1" SCH. 40S
N12C	2"X1"		LEVEL	9-8½"	24590-WTP-MV-M58T-00016002, DETAIL 17	1" SCH. 40S

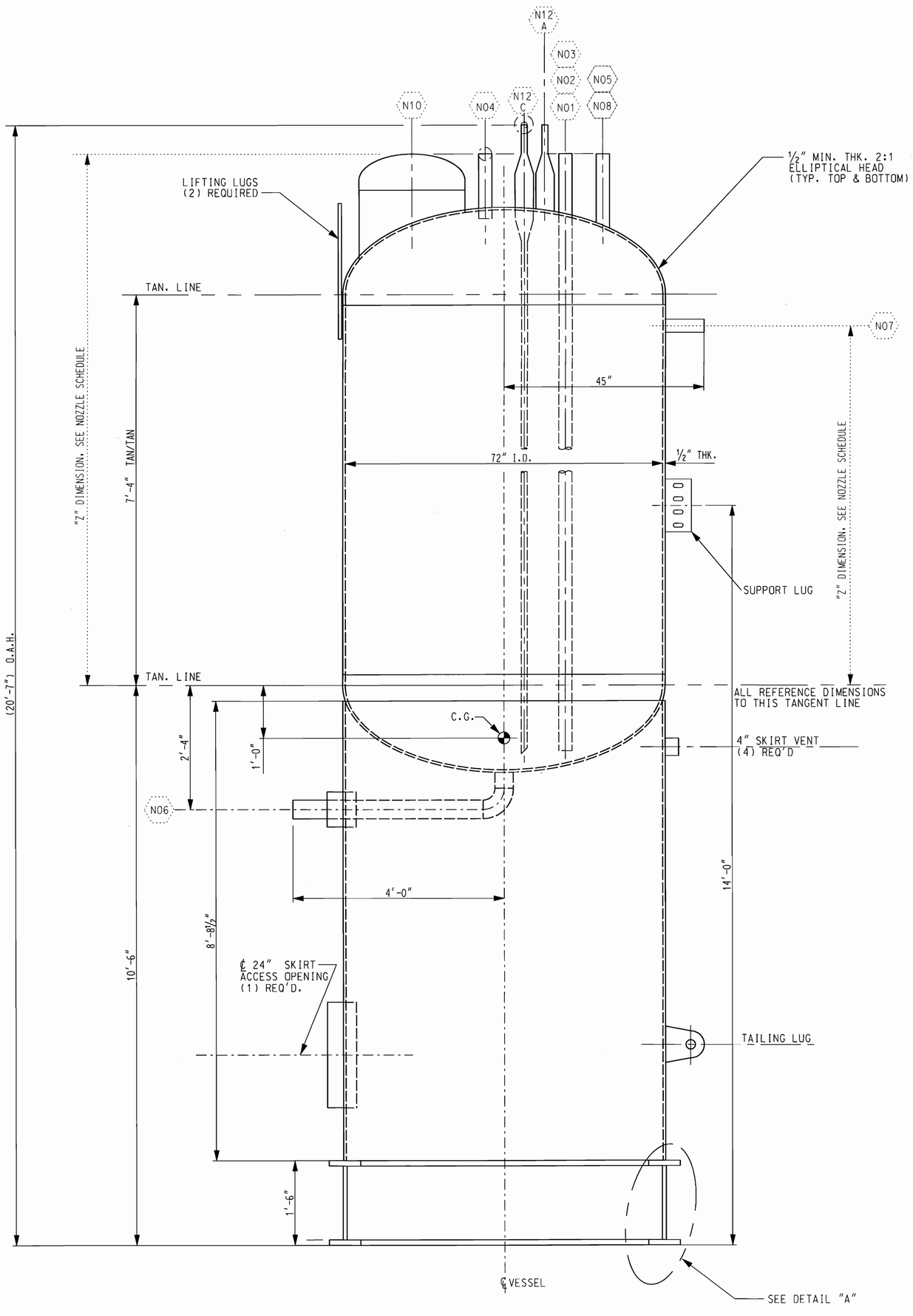

ELEVATION

SEE PLAN FOR TRUE ORIENTATION

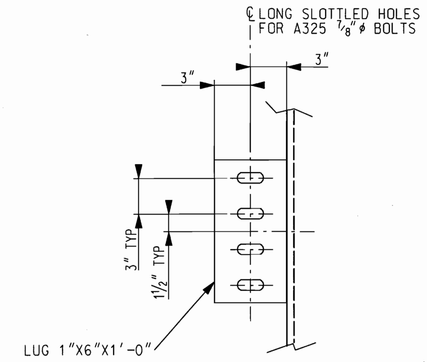

SECTION A-A

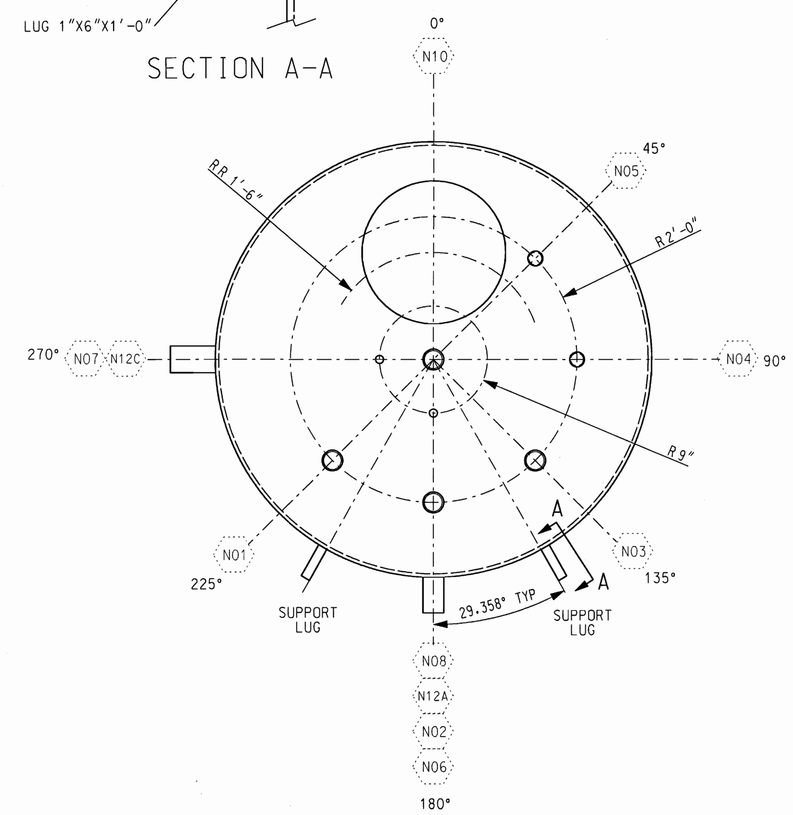

PLAN

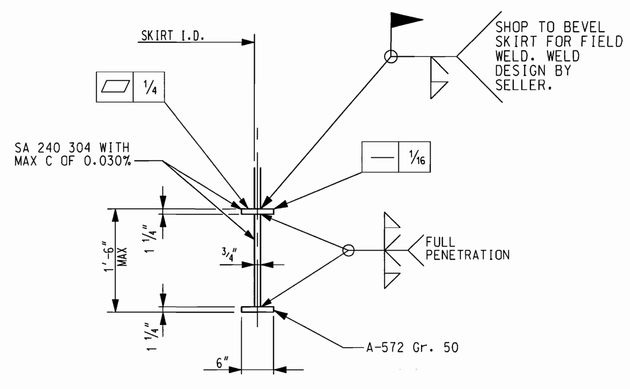

DETAIL "A"

GENERAL NOTES:

1. ALL "Z" DIMENSIONS MEASURED FROM BOTTOM TANGENT LINE UNLESS OTHERWISE NOTED. FOR SHELL NOZZLE, "Z" DIMENSIONS MEASURED FROM CENTER LINE OF NOZZLE FACE.
2. FOR DISTANCE OF DIP PIPES (LEGS) TO BOTTOM HEAD USE 2" CLEARANCE, UNLESS OTHERWISE SPECIFIED.
3. BASE RING BEAM TO BE SHIPPED AHEAD OF VESSEL TO FIELD CONSTRUCTION FOR INSTALLATION BY OTHERS.
4. DELETED
5. THE ACCEPTABLE DIAMETRICAL TOLERANCES FOR BOTH THE SKIRT AND THE RING BEAM SHALL BE PER ITEM 3 OF THE PROJECT STANDARD DRAWING 24590-WTP-MV-M59T-00001. THE MAXIMUM CENTERLINE DEVIATION OF THE BOTTOM OF THE SKIRT AND THE WEB OF THE RING BEAM AT ANY GIVEN POINT SHALL NOT EXCEED ONE HALF OF THE NOMINAL THICKNESS OF THE SKIRT.
6. DELETED
7. REFER TO 24590-PTF-M6-PVP-P0018 FOR INFORMATION ON THE NOZZLE CONFIGURATION SHOWN IN PHANTOM.

PLEASE NOTE THAT SOURCE, SPECIAL NUCLEAR AND BYPRODUCT MATERIALS, AS DEFINED IN THE ATOMIC ENERGY ACT OF 1954 (AEA), ARE REGULATED AT THE U.S. DEPARTMENT OF ENERGY (DOE) FACILITIES EXCLUSIVELY BY DOE ACTING PURSUANT TO ITS AEA AUTHORITY. DOE ASSERTS, THAT PURSUANT TO THE AEA, IT HAS SOLE AND EXCLUSIVE RESPONSIBILITY AND AUTHORITY TO REGULATE SOURCE, SPECIAL NUCLEAR, AND BYPRODUCT MATERIAL AT DOE-OWNED NUCLEAR FACILITIES. INFORMATION CONTAINED HEREIN ON RADIONUCLIDES IS PROVIDED FOR PROCESS DESCRIPTION PURPOSES ONLY.

THIS DRAWING TO BE READ IN CONJUNCTION WITH THE MECHANICAL DATA SHEET NO 24590-PTF-MVD-PVP-P0001.

VESSEL COMPONENT QUALITY LEVELS	
COMPONENTS	QUALITY LEVELS
MAIN VESSEL, SKIRT, NOZZLES	QL2
INTERNAL SUPPORTS	QL2
INSTRUMENTATION	CM

REFERENCE DRAWINGS		
DWG NO	REV	TITLE
24590-WTP-MV-M59T-00001		PRESSURE VESSEL TOLERANCES STANDARD DETAILS
24590-WTP-MV-M59T-00016001		VESSEL CONNECTIONS STANDARD DETAILS SHT 1 OF 3
24590-WTP-MV-M59T-00016002		VESSEL CONNECTIONS STANDARD DETAILS SHT 2 OF 3
24590-WTP-MV-M59T-00009		LIFTING LUG STANDARD DETAILS
24590-WTP-MV-M59T-00012		GROUNDING LUG STANDARD DETAILS
24590-WTP-MV-M59T-00017		VESSEL INSPECTION MANWAY STANDARD DETAILS
24590-WTP-MV-M59T-00018		VESSEL NAME PLATE STANDARD DETAILS
24590-PTF-M6-PVP-P0018		P&ID - PTF PRETREATMENT VESSEL VENT PROCESS SYSTEM (PVP) / HEMES TO VOC OXIDATION UNIT

MARK W. HOFFMANN, STATE OF WASHINGTON, 20030992, REGISTERED PROFESSIONAL ENGINEER — 11/18/04 — EXPIRES 12/18/04

REV	DESCRIPTION	ORG	CHKD	RVWD	APVD	DATE
0	ISSUED FOR PERMITTING USE		RT	RT		11/18/04

REVISION HISTORY

ISSUED BY RPP-WTP PDC — ISSUE STAMP

	PROJECT No.	24590
	SITE	HANFORD
	AREA	200E
	BUILDING No.	10

	BY	DATE
ORIGINATOR		11-17-04
CHECKER		11-17-04
APPROVER		11/18/04
REVIEWER		11-17-04

CONTENT APPLICABLE TO ALARA? [XX] YES [ ] NO
ADR NO. N/A REV:

BECHTEL

RIVER PROTECTION PROJECT
WASTE TREATMENT PLANT
2435 STEVENS CENTER PLACE
RICHLAND, WA 99352

CONTRACT No: DE-AC27-01RV14136

EQUIPMENT ASSEMBLY HEME DRAIN COLLECTION VESSEL PVP-VSL-00001

SCALE: NTS

24590-PTF-MV-PVP-P0002

REV 0

"E" SIZE - 44x34
COMPUTER GENERATED - MANUAL CHANGES NOT PERMITTED

R10437930

11/17/2004 10:28:49 AM

PLOTTED BY: jrmills3
C:\Work\dms0506B\PTF\MV\PVP\P0002.DGN

FORM E_SDN.DGN 02/2003

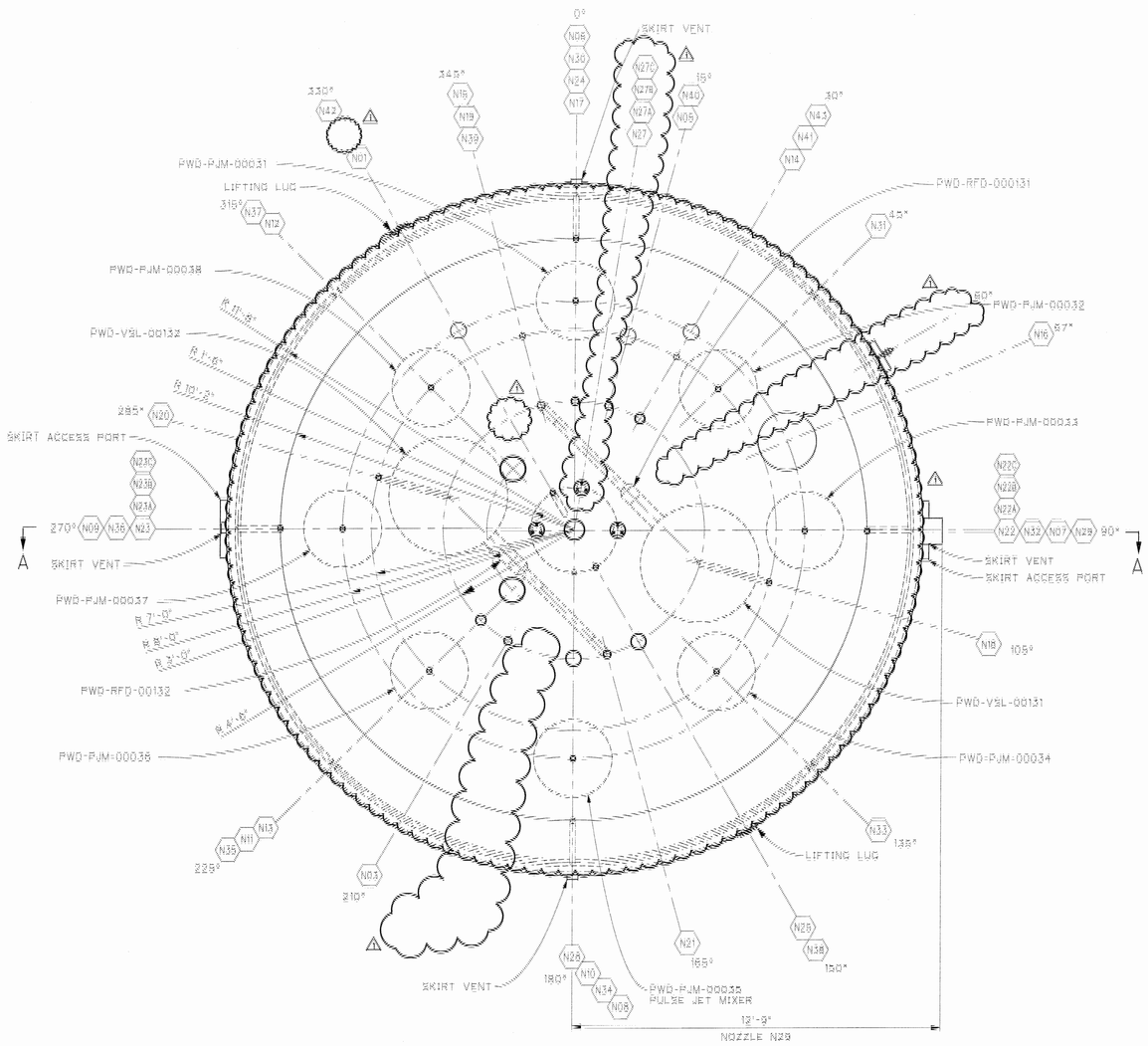

PLAN

NOZZLE	SIZE	SCHED/WALL	SERVICE/REMARKS	'Z'DIM	REF DWG/DET	CONN PIPE SIZE/SCHED
N01	3"	160S	OUTLET TO EMPTYING EJECTOR	12'-3"	24590-WTP-MV-M59T-00016001 DET 3	2"-40S
[illegible]	[illegible]	[illegible]	[illegible]	[illegible]	[illegible]	[illegible]
[illegible]	[illegible]	[illegible]	[illegible]	[illegible]	[illegible]	[illegible]
N05	3"	80S	SPARE WITH DIP PIPE	11'-10"	24590-WTP-MV-M59T-00016001 DET 4	CAPPED
N06	2"	80S	INLET TO WASH RING	10'-0"	24590-WTP-MV-M59T-00016001 DET 3	2"-40S
N07	2"	80S	INLET TO WASH RING	10'-0"	24590-WTP-MV-M59T-00016001 DET 3	2"-40S
N08	2"	80S	INLET TO WASH RING	10'-0"	24590-WTP-MV-M59T-00016001 DET 3	2"-40S
N09	2"	80S	INLET TO WASH RING	10'-0"	24590-WTP-MV-M59T-00016001 DET 3	2"-40S
N10	6"	40S	INLET WITH DIP PIPE	11'-10"	24590-WTP-MV-M59T-00016001 DET 4	6"-10S
N11	4"	80S	INLET	11'-10"	24590-WTP-MV-M59T-00016001 DET 2	4"-40S
N12	8"	40S	INLET WITH DIP PIPE	12'-0"	24590-WTP-MV-M59T-00016001 DET 4	8"-40S
N13	10"	40S	INLET	12'-0"	24590-WTP-MV-M59T-00016001 DET 2	10"-40S
N14	4"	80S	INLET WITH DIP PIPE	11'-10"	24590-WTP-MV-M59T-00016001 DET 4	4"-40S
N15	3"	160S	AIR PURGE	10'-0"	24590-WTP-MV-M59T-00016001 DET 1	2"-40S
N16	24"	PLATE	MANWAY	11'-0"	24590-WTP-MV-M59T-00017 DET 1	CAPPED
N17	3"	80S	VESSEL VENT	12'-3"	24590-WTP-MV-M59T-00016001 DET 1	3"-40S
N18	2"	160S	AIR/VACUUM TO PWD-VSL-00131	11'-2"	24590-WTP-MV-M59T-00016001 DET 3	2"-40S
N19	3"	80S	OUTLET FROM PWD-RFD-00131	11'-10"	24590-WTP-MV-M59T-00016001 DET 3	3"-40S
N20	2"	160S	AIR/VAC TO PWD-VSL-00132	11'-2"	24590-WTP-MV-M59T-00016001 DET 3	2"-40S
N21	3"	80S	OUTLET FROM PWD-RFD-00132	11'-10"	24590-WTP-MV-M59T-00016001 DET 3	3"-40S
N22	6"	40S	INSTRUMENT	12'-3"	24590-WTP-MV-M59T-00016002 DET 19	N/A
N22A	1"	160S	BALANCE	12'-9"	24590-WTP-MV-M59T-00016002 DET 19	1/2"-40S
N22B	1"	160S	DENSITY	12'-10"	24590-WTP-MV-M59T-00016002 DET 19	1/2"-40S
N22C	1"	160S	LEVEL	12'-11"	24590-WTP-MV-M59T-00016002 DET 19	1/2"-40S
N23	6"	40S	INSTRUMENT	12'-3"	24590-WTP-MV-M59T-00016002 DET 19	N/A
N23A	1"	160S	BALANCE	12'-9"	24590-WTP-MV-M59T-00016002 DET 19	1/2"-40S
N23B	1"	160S	DENSITY	12'-10"	24590-WTP-MV-M59T-00016002 DET 19	1/2"-40S
N23C	1"	160S	LEVEL	12'-11"	24590-WTP-MV-M59T-00016002 DET 19	1/2"-40S
N24	4"	80S	INLET WITH DIP PIPE	11'-10"	24590-WTP-MV-M59T-00016001 DET 4	4"-40S
N25	4"	80S	INLET WITH DIP PIPE	12'-4"	24590-WTP-MV-M59T-00016001 DET 3	4"-40S
N27	6"	40S	INSTRUMENT	12'-3"	24590-WTP-MV-M59T-00016003 DET 28	N/A
N27A	1"	160S	BALANCE	12'-9"	24590-WTP-MV-M59T-00016003 DET 28	1/2"-40S
N27B	1"	160S	DENSITY	12'-10"	24590-WTP-MV-M59T-00016003 DET 28	1/2"-40S
N27C	1"	160S	LEVEL	12'-11"	24590-WTP-MV-M59T-00016003 DET 28	1/2"-40S
N28	3"	160S	TEMPERATURE	12'-3"	24590-WTP-MV-M59T-00017 ASSEMBLY 2	3"-10S
N29	10"	40S	OVERFLOW	9'-9"/3"	24590-WTP-MV-M59T-00016001 DET 1	10"-10S
N30	2"	160S	AIR/VACUUM TO PWD-PJM-00031	10'-10"	24590-WTP-MV-M59T-00016001 DET 3	2"-40S
N31	2"	160S	AIR/VACUUM TO PWD-PJM-00032	11'-2"	24590-WTP-MV-M59T-00016001 DET 3	2"-40S
N32	2"	160S	AIR/VACUUM TO PWD-PJM-00033	10'-10"	24590-WTP-MV-M59T-00016001 DET 3	2"-40S
N33	2"	160S	AIR/VACUUM TO PWD-PJM-00034	11'-2"	24590-WTP-MV-M59T-00016001 DET 3	2"-40S
N34	2"	160S	AIR/VACUUM TO PWD-PJM-00035	10'-10"	24590-WTP-MV-M59T-00016001 DET 3	2"-40S
N35	2"	160S	AIR/VACUUM TO PWD-PJM-00036	11'-2"	24590-WTP-MV-M59T-00016001 DET 3	2"-40S
N36	2"	160S	AIR/VACUUM TO PWD-PJM-00037	10'-10"	24590-WTP-MV-M59T-00016001 DET 3	2"-40S
N37	2"	160S	AIR/VACUUM TO PWD-PJM-00038	11'-2"	24590-WTP-MV-M59T-00016001 DET 3	2"-40S
N38	6"	40S	SPARE	11'-10"	24590-WTP-MV-M59T-00016001 DET 2	CAPPED
N39	2"	160S	INLET	11'-2"	24590-WTP-MV-M59T-00016001 DET 2	2"-40S
N40	6"	40S	INLET WITH DIP PIPE	11'-2"	24590-WTP-MV-M59T-00016001 DET 4	6"-10S
N41	2"DIA/1/2"	160S	FORCED PURGE AIR	11'-2"	24590-WTP-MV-M59T-00016001 DET 7	1/2"-40S
N42	4"	80S	INLET WITH DIP PIPE	10'-10"	24590-WTP-MV-M59T-00016001 DET 4	4"-40S
N43	6"	40S	INLET WITH DIP PIPE	10'-10"	24590-WTP-MV-M59T-00016001 DET 4	6"-10S

1. FINAL NOZZLE LOCATIONS AND SIZE TO BE CONFIRMED AT LATER DATE.
2. RFD PUMP SHALL BE PROVIDED BY BUYER FOR SELLER TO INSTALL. ALL OTHER INTERNALS SHALL BE DESIGNED, PROVIDED AND INSTALLED BY SELLER.
3. FOR DISTANCE OF DIP PIPES TO BOTTOM HEAD USE 2" CLEARANCE, UNLESS OTHERWISE SPECIFIED.
4. DELETED
5. 'Z' DIMENSION FOR SHELL NOZZLES MEASURED FROM C.L. OF NOZZLE FACE.
6. DELETED
7. EMPTYING EJECTOR LINE INLET PARALLEL TO BOTTOM OF VESSEL.
8. FOR SECTIONS, SEE SHEET 2, DRAWING NO 24590-PTF-MV-PWD-P0001002.
9. DELETED

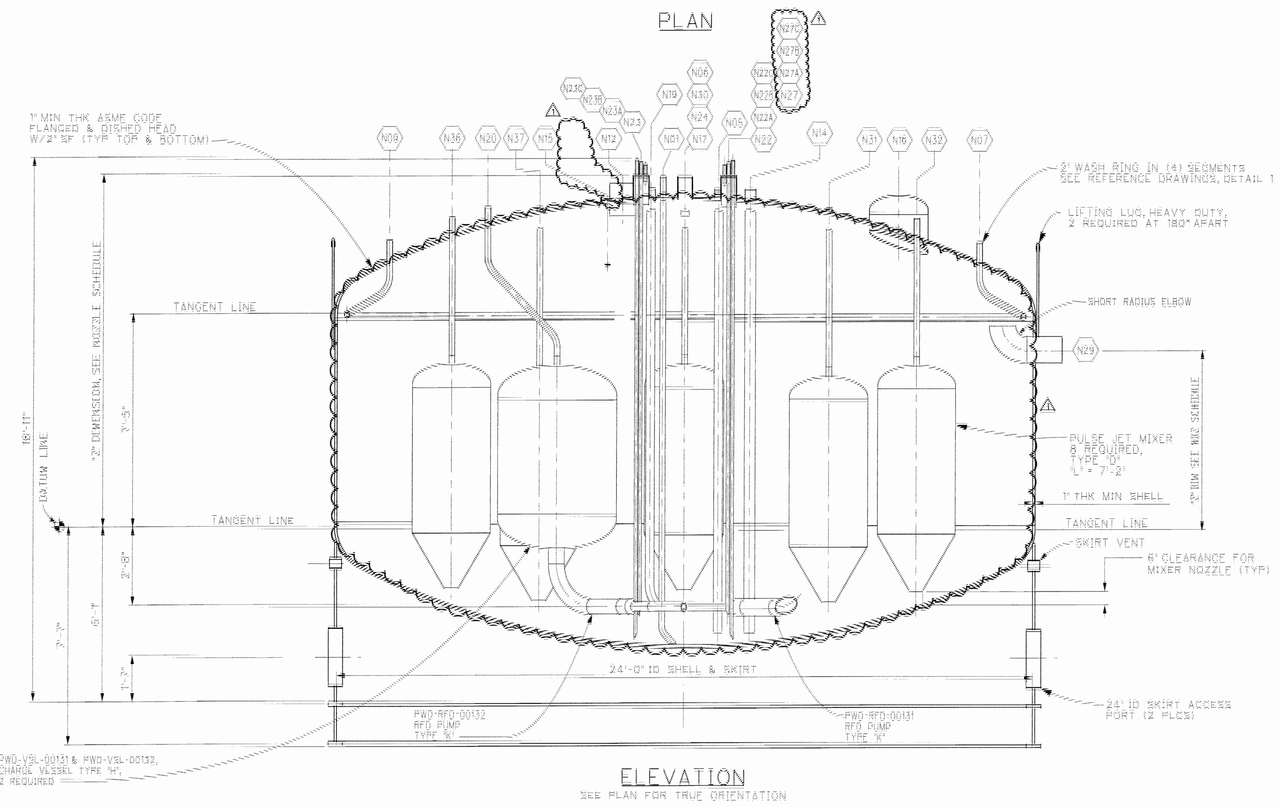

ELEVATION

SEE PLAN FOR TRUE ORIENTATION

THIS DRAWING TO BE READ IN CONJUNCTION WITH THE MECHANICAL DATA SHEET NO 24590-PTF-MVD-PWD-P0001

QUALITY LEVEL DESIGNATION FOR ALL COMPONENTS OF THIS VESSEL IS QL-1

DRAWING INDEX

DWG NO	REV	TITLE
24590-PTF-MV-PWD-P0001001	1	EQUIPMENT ASSY PLANT OVERFLOW VESSEL PWD-VSL-00033 (Q) (SH 1)
24590-PTF-MV-PWD-P0001002	1	EQUIPMENT ASSY PLANT OVERFLOW VESSEL PWD-VSL-00033 (Q) (SH 2)

REFERENCE DRAWINGS

DWG NO	REV	TITLE
24590-WTP-MV-M59T-00001	0	PRESSURE VESSEL TOLERANCES STANDARD DETAILS
24590-WTP-MV-M59T-00004	0	PULSE JET MIXERS STANDARD DETAILS
24590-WTP-MV-M59T-00007	0	THERMOWELL CONNECTION STANDARD DETAILS
24590-WTP-MV-M59T-00009	0	LIFTING LUGS STANDARD DETAILS
24590-WTP-MV-M59T-00010	0	TAILING LUG STANDARD DETAILS
24590-WTP-MV-M59T-00011	0	WASH RINGS STANDARD DETAILS
24590-WTP-MV-M59T-00012	0	GROUNDING LUG STANDARD DETAILS
24590-WTP-MV-M59T-00013	0	CHARGE VESSEL STANDARD DETAILS
24590-WTP-MV-M59T-00014	0	RFD PUMPS DETAIL
24590-WTP-MV-M59T-00016001	0	VESSEL CONNECTIONS STANDARD DETAILS SHT 1 of 2
24590-WTP-MV-M59T-00016002	0	VESSEL CONNECTIONS STANDARD DETAILS SHT 2 of 2
24590-WTP-MV-M59T-00017	0	VESSEL INSPECTION MANWAY STANDARD DETAILS

STATE OF WASHINGTON — R. HOLLAMAN — REGISTERED PROFESSIONAL ENGINEER — 3/27/03

EXPIRES 12/12/03

REVISION HISTORY

REV	DESCRIPTION	ORG	CHKD	RVWD	APVD	DATE
1	REVISED AS NOTED ISSUED FOR PERMITTING USE	JJ	CS		SK	3/31/03
0	ISSUED FOR PERMITTING USE	JJ	CS		SK	9/30/02

ISSUED BY HANFORD FOCUS — DATE — ISSUE STAMP

PROJECT No.	24590	
SITE	HANFORD	
AREA	200E	
BUILDING No.	TO	

	BY	DATE
ORIGINATOR	JESSICA JACKSON	9/30/02
CHECKER	CLIFF SLATER	9/30/02
APPROVER	SUZANNE KIRK	9/30/02
REVIEWER		

CONTENT APPLICABLE TO ALARAY ☐ YES ☐ NO
ADR NO. REV-
DIM REFERENCE No. N/A

BECHTEL

RIVER PROTECTION PROJECT
WASTE TREATMENT PLANT
2435 STEVENS CENTER PLACE
RICHLAND, WA 99352

CONTRACT No: DE-AC27-01RV14136

EQUIPMENT ASSEMBLY ULTIMATE OVERFLOW VESSEL PWD-VSL-00033 (Q) SHEET 1 OF 2

SCALE: NONE

24590-PTF-MV-PWD-P0001001 — REV 1

F SIZE - 44x34
COMPUTER GENERATED - MANUAL CHANGES NOT PERMITTED

WHEN REFERENCING DRAWING AND DIM NUMBERS IN DOCUMENTS, BE SURE TO INCLUDE DASHES BETWEEN ELEMENTS

03/28/2003 08:19:59 AM

FORM E.20ANLDCN 02/2003

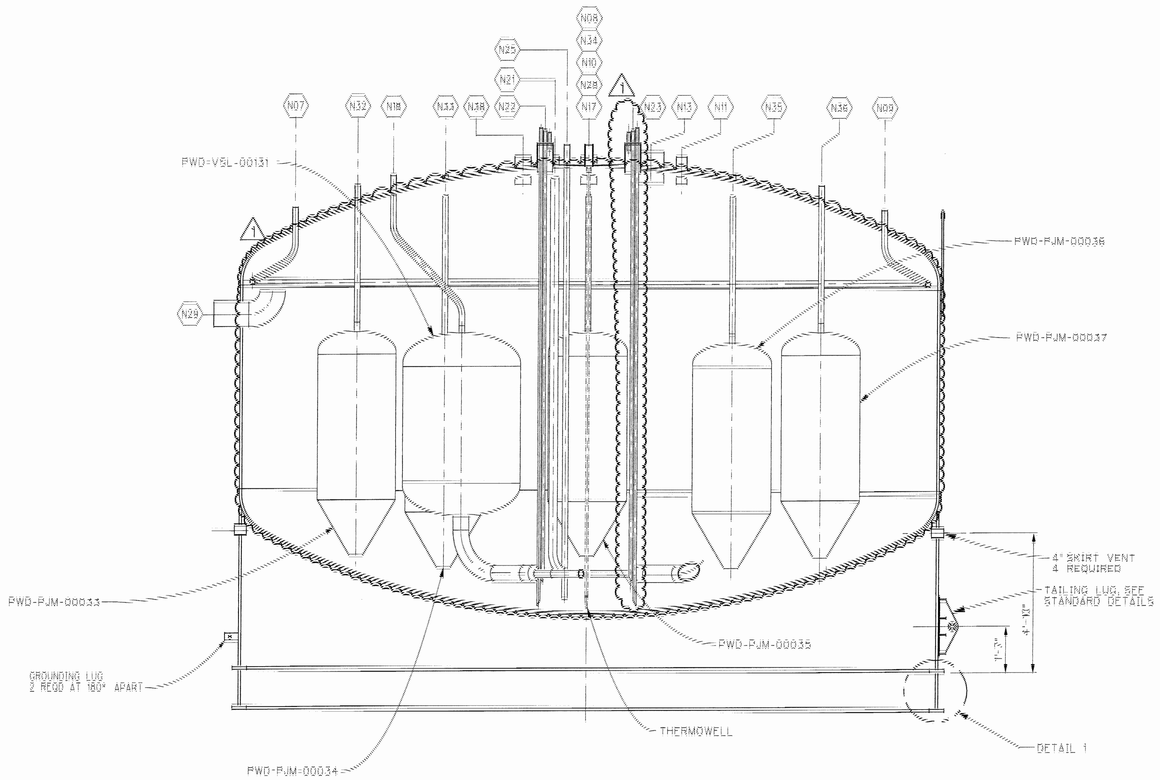

SECTION A-A

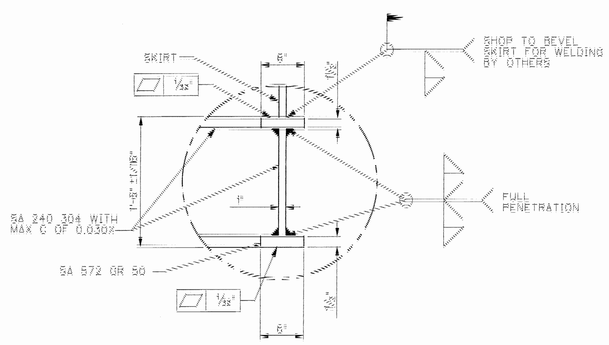

DETAIL 1

QUALITY LEVEL DESIGNATION FOR ALL COMPONENTS OF THIS VESSEL IS QL-1

REFERENCE DRAWINGS

DWG NO	REV	TITLE
24590-WTP-MV-M59T-00004	0	PULSE JET MIXERS STANDARD DETAILS
24590-WTP-MV-M59T-00007	0	THERMOWELL CONNECTION STANDARD DETAILS
24590-WTP-MV-M59T-00010	0	TAILING LUG STANDARD DETAILS
24590-WTP-MV-M59T-00012	0	GROUNDING LUG STANDARD DETAILS
24590-WTP-MV-M59T-00013	0	CHARGE VESSEL STANDARD DETAILS
24590-WTP-MV-M59T-00014	0	RFD PUMPS DETAIL

REVISION HISTORY

REV	DESCRIPTION	ORG	CHKD	RVWD	APVD	DATE
1	REVISED AS NOTED ISSUED FOR PERMITTING USE	BAM	[illegible]	[illegible]	[illegible]	3/28/03
0	ISSUED FOR PERMITTING USE	JJ	RS		SK	9/30/02

	BY	DATE
ORIGINATOR	JESSICA JACKSON	9/30/02
CHECKER	CLIFF SLATER	9/30/02
APPROVED	SUZANNE KIRK	9/30/02

CONTENT APPLICABLE TO ALARA? ___YES ___NO
ADR NO. REV:
DIM REFERENCE No. N/A

PROJECT No. 24590
SITE HANFORD
AREA 200E
BUILDING No. 10

RIVER PROTECTION PROJECT
WASTE TREATMENT PLANT
2435 STEVENS CENTER PLACE
RICHLAND, WA 99352

CONTRACT No: DE-AC27-01RV14136

EQUIPMENT ASSEMBLY (ULTIMATE)OVERFLOW VESSEL PWD-VSL-00033 (Q) SHEET 2 OF 2

SCALE: NONE

24590-PTF-MV-PWD-P0001002 REV 1

"E" SIZE - 44x34
COMPUTER GENERATED - MANUAL CHANGES NOT PERMITTED

WHEN REFERENCING DRAWING AND DIM NUMBERS IN DOCUMENTS BE SURE TO INCLUDE DASHES BETWEEN ELEMENTS

FORM E_SDN-001N 01/2003

03/28/2003 03:05:10 PM

NOZZLE	SIZE	SCHED/WALL	SERVICE/REMARKS	'Z' DIM	REF DWG/DET	CONN PIPE SIZE/SCHED
N01	2"	160S	OUTLET TO EMPTYING EJECTOR	12'-3"	24590-WTP-MV-M59T-00016001 DET 3	2"-40S
N02	2"	80S	OVERFLOW	8'-5 1/2"	24590-WTP-MV-M59T-00016001 DET 1	10"-10S
N03	2"	80S	SPARE	11'-10"	24590-WTP-MV-M59T-00016001 DET 4	CAPPED
N04	2"	80S	SPARE	11'-10"	24590-WTP-MV-M59T-00016001 DET 4	CAPPED
N05	3"	80S	SPARE WITH DIP PIPE	11'-10"	24590-WTP-MV-M59T-00016001 DET 4	CAPPED
N06	3"	80S	SPARE WITH DIP PIPE	11'-10"	24590-WTP-MV-M59T-00016001 DET 4	CAPPED
N07	2"	80S	INLET TO WASH RING	10'-0"	24590-WTP-MV-M59T-00016001 DET 3	2"-40S
N08	2"	80S	INLET TO WASH RING	10'-0"	24590-WTP-MV-M59T-00016001 DET 3	2"-40S
N09	2"	80S	INLET TO WASH RING	10'-0"	24590-WTP-MV-M59T-00016001 DET 3	2"-40S
N10	2"	80S	INLET TO WASH RING	10'-0"	24590-WTP-MV-M59T-00016001 DET 3	2"-40S
N11	3"	80S	INLET WITH DIP PIPE	11'-10"	24590-WTP-MV-M59T-00016001 DET 4	3"-40S
N12	3"	80S	INLET WITH DIP PIPE	12'-0"	24590-WTP-MV-M59T-00016001 DET 4	3"-40S
N13	3"	80S	INLET WITH DIP PIPE	12'-0"	24590-WTP-MV-M59T-00016001 DET 4	3"-40S
N14	3"	80S	INLET WITH DIP PIPE	11'-10"	24590-WTP-MV-M59T-00016001 DET 4	3"-40S
N15	3"	80S	AIR PURGE	10'-0"	24590-WTP-MV-M59T-00016001 DET 1	CAPPED
N16	24"	PLATE	MANWAY	11'-0"	24590-WTP-MV-M59T-00017 DET 1	CAPPED
N17	3"	80S	VESSEL VENT	12'-3"	24590-WTP-MV-M59T-00016001 DET 1	3"-40S
N18	2"	160S	AIR/VACUUM TO PWD-VSL-00141	11'-2"	24590-WTP-MV-M59T-00016001 DET 3	2"-40S
N19	3"	80S	OUTLET FROM PWD-RFD-000141	11'-10"	24590-WTP-MV-M59T-00016001 DET 3	3"-40S
N20	2"	160S	AIR/VACUUM TO PWD-VSL-00142	11'-2"	24590-WTP-MV-M59T-00016001 DET 3	2"-40S
N21	3"	80S	OUTLET FROM PWD-RFD-00142	11'-10"	24590-WTP-MV-M59T-00016001 DET 3	3"-40S
N22	6"	40S	INSTRUMENT	12'-3"	24590-WTP-MV-M59T-00016002 DET 19	N/A
N23A	1"	160S	BALANCE	12'-9"	24590-WTP-MV-M59T-00016002 DET 19	1/2"-40S
N23B	1"	160S	DENSITY	12'-10"	24590-WTP-MV-M59T-00016002 DET 19	1/2"-40S
N23C	1"	160S	LEVEL	12'-11"	24590-WTP-MV-M59T-00016002 DET 19	1/2"-40S
N24	6"	40S	SPARE	8'-10"	24590-WTP-MV-M59T-00016001 DET 3	CAPPED
N25	6"	40S	INLET WITH DIP PIPE	10'-10"	24590-WTP-MV-M59T-00016001 DET 4	6"-40S
N26	1"	160S	TEMPERATURE	12'-3"	24590-WTP-MV-M59T-00007 ASSY 2	3/4"-10S
N27	1"	160S	TEMPERATURE	12'-3"	24590-WTP-MV-M59T-00007 ASSY 2	3/4"-10S
N28	2"	160S	AIR/VACUUM TO PWD-PJM-00041	10'-10"	24590-WTP-MV-M59T-00016001 DET 3	2"-40S
N29	2"	160S	AIR/VACUUM TO PWD-PJM-00042	11'-2"	24590-WTP-MV-M59T-00016001 DET 3	2"-40S
N30	2"	160S	AIR/VACUUM TO PWD-PJM-00043	10'-10"	24590-WTP-MV-M59T-00016001 DET 3	2"-40S
N31	2"	160S	AIR/VACUUM TO PWD-PJM-00044	11'-2"	24590-WTP-MV-M59T-00016001 DET 3	2"-40S
N32	2"	160S	AIR/VACUUM TO PWD-PJM-00045	10'-10"	24590-WTP-MV-M59T-00016001 DET 3	2"-40S
N33	2"	160S	AIR/VACUUM TO PWD-PJM-00046	11'-2"	24590-WTP-MV-M59T-00016001 DET 3	2"-40S
N34	2"	160S	AIR/VACUUM TO PWD-PJM-00047	10'-10"	24590-WTP-MV-M59T-00016001 DET 3	2"-40S
N35	2"	160S	AIR/VACUUM TO PWD-PJM-00048	11'-2"	24590-WTP-MV-M59T-00016001 DET 3	2"-40S
N36	2"	80S	INLET	11'-2"	24590-WTP-MV-M59T-00016001 DET 2	2"-40S
N37	10"	40S	OVERFLOW	8'-5 1/2"	24590-WTP-MV-M59T-00016001 DET 1	10"-10S
N38	2"OD X1/2"	160S	FORCED PURGE AIR	10'-0"	24590-WTP-MV-M59T-00016001 DET 7	1/2"-40S

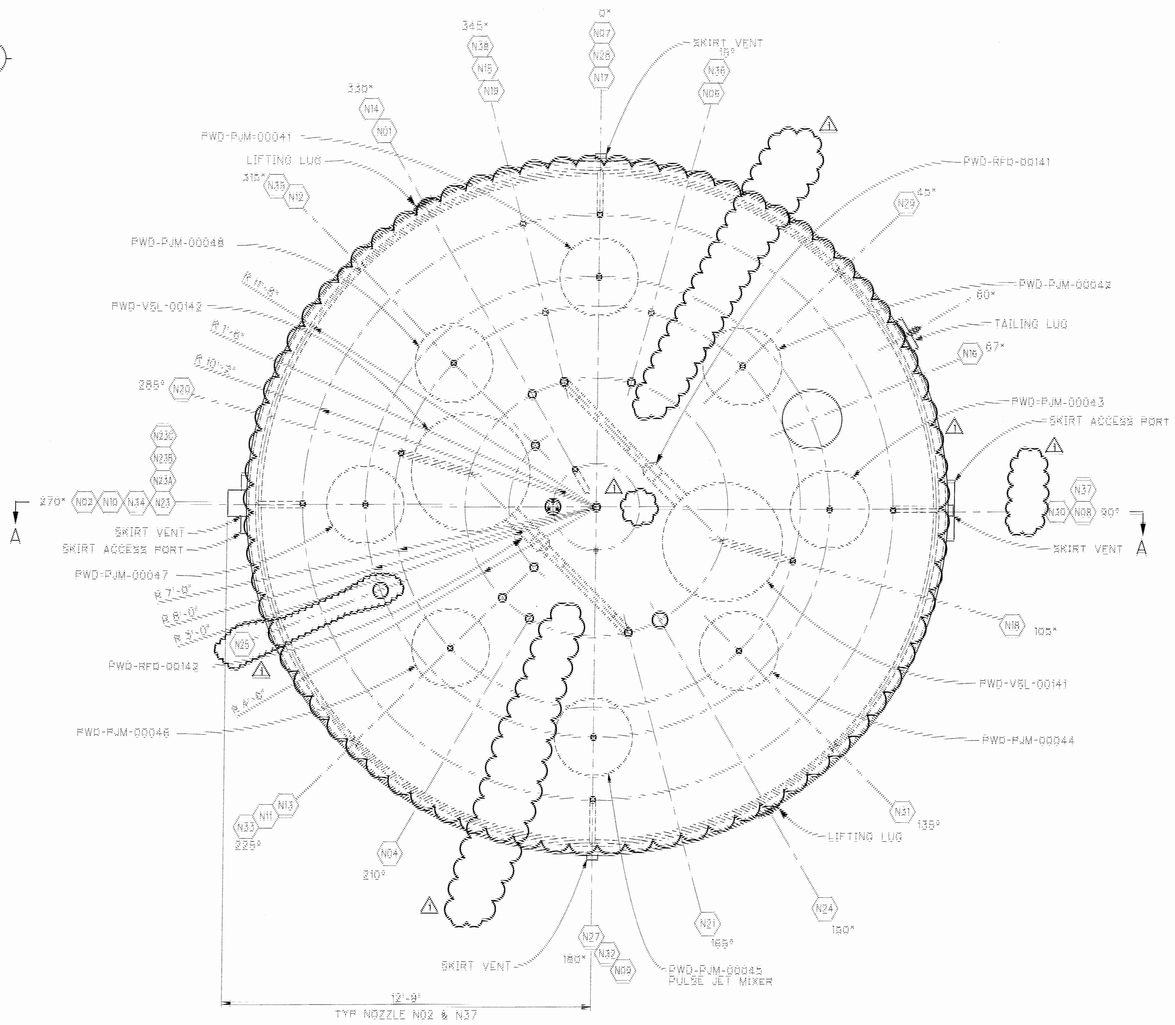

PLAN

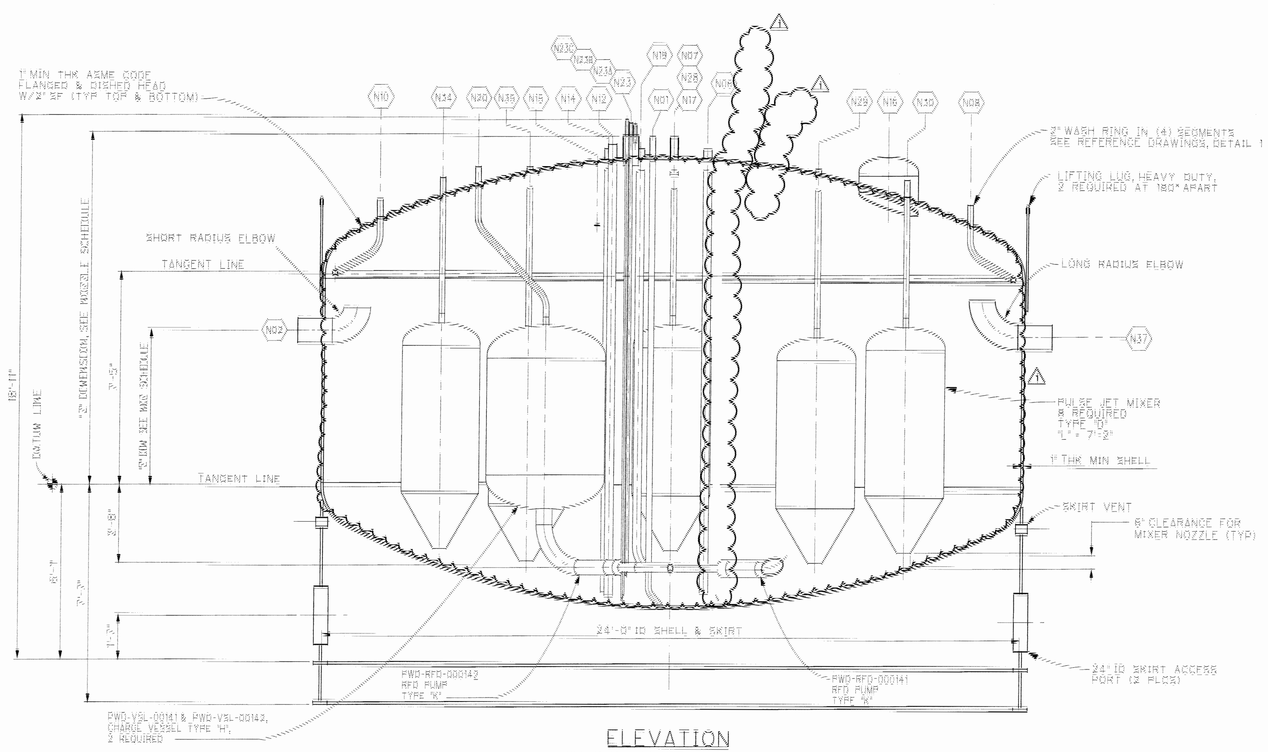

ELEVATION

SEE PLAN FOR TRUE ORIENTATION

GENERAL NOTES:

1. FINAL NOZZLE LOCATIONS AND SIZE TO BE CONFIRMED AT LATER DATE.
2. RFD PUMP SHALL BE PROVIDED BY BUYER FOR SELLER TO INSTALL. ALL OTHER INTERNALS SHALL BE DESIGNED, PROVIDED AND INSTALLED BY SELLER.
3. FOR DISTANCE OF DIP PIPES TO BOTTOM HEAD USE 2" CLEARANCE, UNLESS OTHERWISE SPECIFIED.
4. DELETED
5. "Z" DIMENSION FOR SHELL NOZZLES MEASURED FROM C.L. OF NOZZLE FACE.
6. DELETED
7. EMPTYING EJECTOR LINE INLET PARALLEL TO BOTTOM OF VESSEL.
8. FOR SECTIONS, SEE SHEET 2, DRAWING NO 24590-PTF-MV-PWD-P0003002.
9. DELETED

THIS DRAWING TO BE READ IN CONJUNCTION WITH THE MECHANICAL DATA SHEET NO 24590-PTF-MVD-PWD-P0003

QUALITY LEVEL DESIGNATION FOR ALL COMPONENTS OF THIS VESSEL IS QL-1

DRAWING INDEX

DWG NO	REV	TITLE
24590-PTF-MV-PWD-P0003001	1	EQUIPMENT ASSY HLW EFFLUENT TRANSFER VSL PWD-VSL-00043 (Q) (SH 1)
24590-PTF-MV-PWD-P0003002	1	EQUIPMENT ASSY HLW EFFLUENT TRANSFER VSL PWD-VSL-00043 (Q) (SH 2)

REFERENCE DRAWINGS

DWG NO	REV	TITLE
24590-WTP-MV-M59T-00001	0	PRESSURE VESSEL TOLERANCES STANDARD DETAILS
24590-WTP-MV-M59T-00004	0	PULSE JET MIXERS STANDARD DETAILS
24590-WTP-MV-M59T-00007	0	THERMOWELL CONNECTION STANDARD DETAILS
24590-WTP-MV-M59T-00009	0	LIFTING LUGS STANDARD DETAILS
24590-WTP-MV-M59T-00010	0	TAILING LUG STANDARD DETAILS
24590-WTP-MV-M59T-00011	0	WASH RINGS STANDARD DETAILS
24590-WTP-MV-M59T-00012	0	GROUNDING LUG STANDARD DETAILS
24590-WTP-MV-M59T-00013	0	CHARGE VESSEL STANDARD DETAILS
24590-WTP-MV-M59T-00014	0	RFD PUMPS DETAIL
24590-WTP-MV-M59T-00016001	0	VESSEL CONNECTIONS STANDARD DETAILS SHT 1 of 2
24590-WTP-MV-M59T-00016002	0	VESSEL CONNECTIONS STANDARD DETAILS SHT 2 of 2
24590-WTP-MV-M59T-00017	0	VESSEL INSPECTION MANWAY STANDARD DETAILS

REVISION HISTORY

REV	DESCRIPTION	ORG	CHKD	RVWD	APVD	DATE
1	REVISED AS NOTED, ISSUED FOR PERMITTING USE.	JJ	CS	JJ	SK	3/27/03
0	ISSUED FOR PERMITTING USE	JJ	CS		SK	9/30/02

PROJECT No.	24590	
SITE	HANFORD	
AREA	200E	
BUILDING No.	N/A	
	BY	DATE
ORIGINATOR	JESSICA JACKSON	9/30/02
CHECKER	CLIFF SLATER	9/30/02
APPROVER	SUZANNE KIRK	9/30/02
REVIEWER		

CONTENT APPLICABLE TO ALARA? ☐ YES ☐ NO
ADR NO. REV:
DIM REFERENCE No. N/A

RIVER PROTECTION PROJECT
WASTE TREATMENT PLANT
2435 STEVENS CENTER PLACE
RICHLAND, WA 99352

CONTRACT No: DE-AC27-01RV14136

EQUIPMENT ASSEMBLY HLW EFFLUENT TRANSFER VESSEL PWD-VSL-00043 (Q) SHEET 1 OF 2

SCALE: NONE

24590-PTF-MV-PWD-P0003001 REV 1

"E" SIZE - 44x34 COMPUTER GENERATED - MANUAL CHANGES NOT PERMITTED

WHEN REFERENCING DRAWING AND DIM NUMBERS IN DOCUMENTS, BE SURE TO INCLUDE DASHES BETWEEN ELEMENTS

03/12/2003 02:40:21 PM

FORM E_SZNLSCN 03/2003

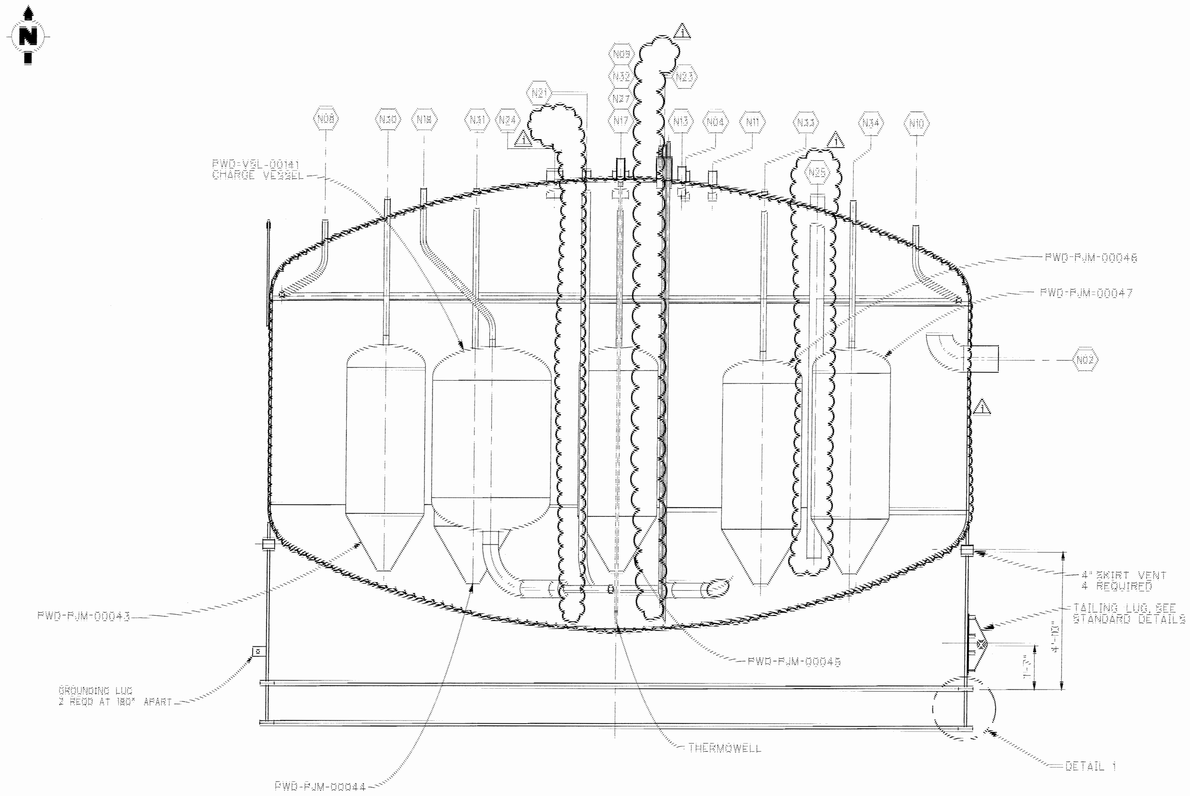

SECTION A-A

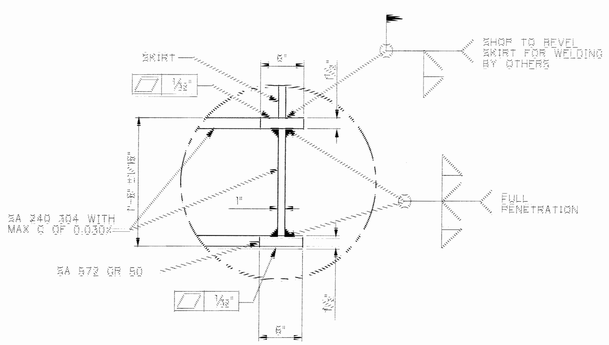

DETAIL 1

QUALITY LEVEL DESIGNATION FOR ALL COMPONENTS OF THIS VESSEL IS QL-1

REFERENCE DRAWINGS		
DWG NO	REV	TITLE
24590-WTP-MV-M59T-00004	0	PULSE JET MIXERS STANDARD DETAILS
24590-WTP-MV-M59T-00007	0	THERMOWELL CONNECTION STANDARD DETAILS
24590-WTP-MV-M59T-00010	0	TAILING LUG STANDARD DETAILS
24590-WTP-MV-M59T-00012	0	GROUNDING LUG STANDARD DETAILS
24590-WTP-MV-M59T-00013	0	CHARGE VESSEL STANDARD DETAILS
24590-WTP-MV-M59T-00014	0	RFD PUMPS DETAIL

REV	DESCRIPTION	ORG	CHKD	RVWD	APVD	DATE
1	REVISED AS NOTED. ISSUED FOR PERMITTING USE					3/27/03
0	ISSUED FOR PERMITTING USE	JJ	CS		SK	09/30/02

REVISION HISTORY

STATE OF WASHINGTON — MARK A. HOFFMAN — REGISTERED PROFESSIONAL ENGINEER — 3/31/03
EXPIRES 12/31/03

PROJECT No.	24590	
SITE	HANFORD	
AREA	200E	
BUILDING No.	10	
	BY	DATE
ORIGINATOR	JESSICA JACKSON	09/30/02
CHECKER	CLIFF SLATER	09/30/02
APPROVER	SUZANNE KIRK	09/30/02
REVIEWER		

CONTENT APPLICABLE TO ALARA? ☐ YES ☐ NO
ADR NO. REV:
RIM REFERENCE No. N/A

RIVER PROTECTION PROJECT
WASTE TREATMENT PLANT
2435 STEVENS CENTER PLACE
RICHLAND, WA 99352

CONTRACT No: DE-AC27-01RV14136

EQUIPMENT ASSEMBLY HLW EFFLUENT TRANSFER VESSEL PWD-VSL-00043 (Q) SHEET 2 OF 2

SCALE: NONE

24590-PTF-MV-PWD-P0003002 REV 1

"E" SIZE - 44x34
COMPUTER GENERATED - MANUAL CHANGES NOT PERMITTED

WHEN REFERENCING DRAWING AND DM NUMBERS IN DOCUMENTS BE SURE TO INCLUDE DASHES BETWEEN ALPHANS

03/19/2003 02:41:10 PM

NOZZLE	SIZE	SCHED/WALL	SERVICE/REMARKS	"Z" DIM	DET/REF	CONNECTION
N01	6"	40S	OVERFLOW	N/A	24590-WTP-MV-M59T-00016001 DET 2	6"-10S
N02	4"	40S	HEPA FILTER VENT	4'-7"	24590-WTP-MV-M59T-00016001 DET 1	4"-10S
N03	6"	40S	SPARE	4'-7"	24590-WTP-MV-M59T-00016001 DET 1	CAPPED
N04	6"	40S	INSTRUMENTATION	4'-7"		FLANGED
N04A	3"	80S	LEVEL	5'-7"		FLANGED
N05	2"	80S	INLET	4'-7"	24590-WTP-MV-M59T-00016001 DET 2	2"-10S
M1	24"	PLATE	MANWAY	5'-1"	24590-WTP-MV-M59T-00017 DET 1	CAPPED
N06	1 1/2"	80S	RECIRCULATION INLET	4'-7"	24590-WTP-MV-M59T-00016001 DET 2	1 1/2"-10S
N07	1 1/2"	80S	INLET	4'-7"	24590-WTP-MV-M59T-00016001 DET 2	1 1/2"-10S
N08	3"	80S	OUTLET WITH DIP PIPE	4'-7"	24590-WTP-MV-M59T-00016001 DET 4	3"-10S
N09	2"	80S	DRAIN	4'-7"	24590-WTP-MV-M59T-00016001 DET 1	2"-10S
N10	3"	80S	SPARE	4'-7"	24590-WTP-MV-M59T-00016001 DET 1	CAPPED
N11	12"	40S	INLET	4'-7"	24590-WTP-MV-M59T-00016001 DET 2	12"-10S
N12	12"	40S	INLET	4'-7"	24590-WTP-MV-M59T-00016001 DET 2	12"-10S

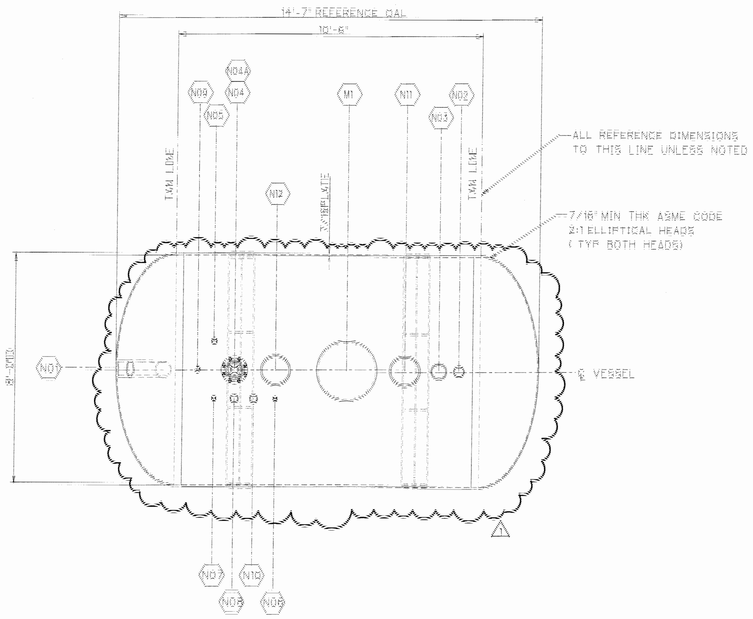

PLAN VIEW

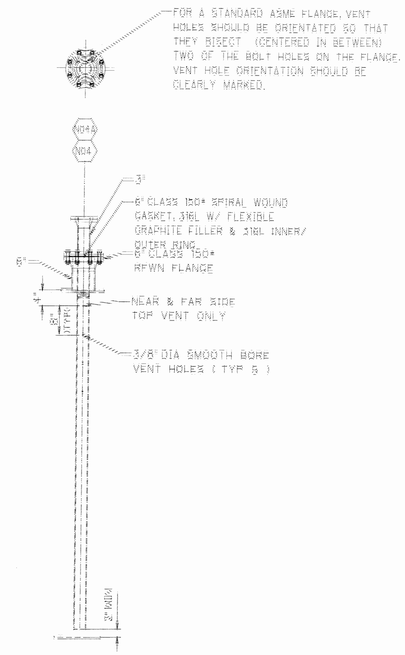

NOZZLE "N04" DETAIL

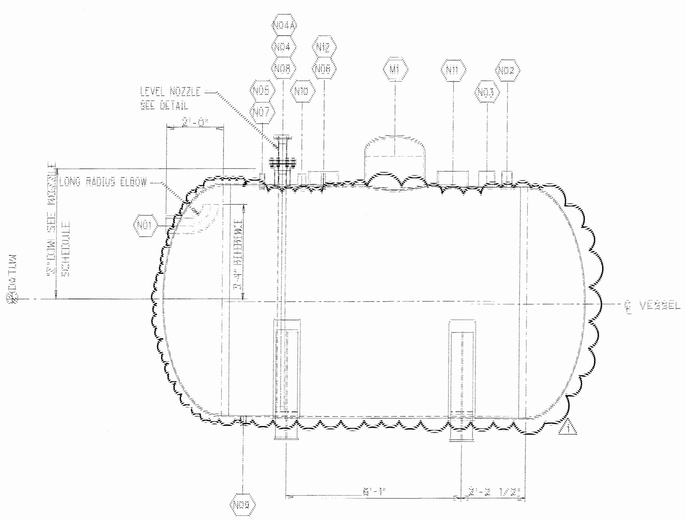

ELEVATION VIEW
(LOOKING NORTH)

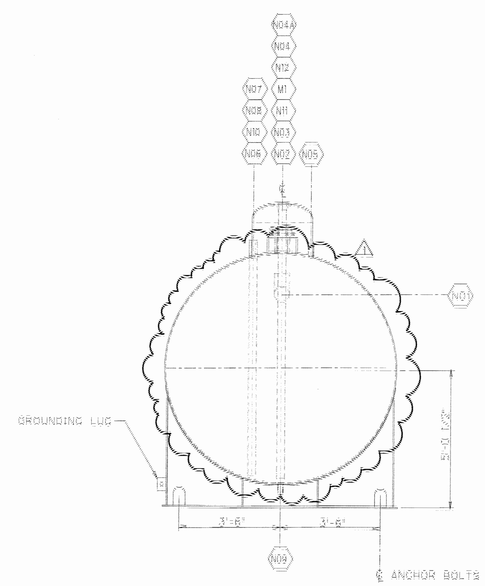

END VIEW
(LOOKING WEST)

GENERAL NOTES:

1 FINAL NOZZLE LOCATION AND SIZE TO BE CONFIRMED AT LATER DATE

2 SELLER TO DESIGN VESSEL SADDLES

3 FOR DISTANCE OF DIP PIPES TO BOTTOM SHELL USE 2" CLEARANCE, UNLESS OTHERWISE SPECIFIED

THIS DRAWING TO BE READ IN CONJUNCTION WITH MECHANICAL DATA SHEET № 24590-PTF-MVD-PWD-P0010

REV	DESCRIPTION	ORG	CHKD	RVWD	APVD	DATE
	REVISED AS NOTED					
1	ISSUED FOR PERMITTING USE					3/27/03
0	ISSUED FOR PERMITTING USE	JJ	CS		SK	10/02/02

REVISION HISTORY

	BY	DATE
ORIGINATOR	JESSICA JACKSON	10/02/02
CHECKER	CLIFF SLATER	10/01/02
APPROVER	SUZANNE KIRK	10/02/02
REVIEWER		

CONTENT APPLICABLE TO ALARA? ☐ YES ☐ NO
ADR NO. REV:
DIM REFERENCE No. N/A 0

PROJECT No. 24590
SITE HANFORD
AREA 200-E
BUILDING No. 10

RIVER PROTECTION PROJECT
WASTE TREATMENT PLANT
2435 STEVENS CENTER PLACE
RICHLAND, WA 99352

CONTRACT No: DE-AC27-01RV14136

EQUIPMENT ASSEMBLY
C3 FLOOR DRAIN COLLECTION
VESSEL PWD-VSL-00046

SCALE: NONE

24590 - PTF - MV - PWD - P0005

REV 1

E-SIZE 44x34
COMPUTER GENERATED - MANUAL CHANGES NOT PERMITTED

WHEN REFERENCING DRAWING AND DIM NUMBERS IN DOCUMENTS BE SURE TO INCLUDE DASHES BETWEEN ELEMENTS

03/12/2003 02:43:06

FORM E-20NLOGN 03/2003

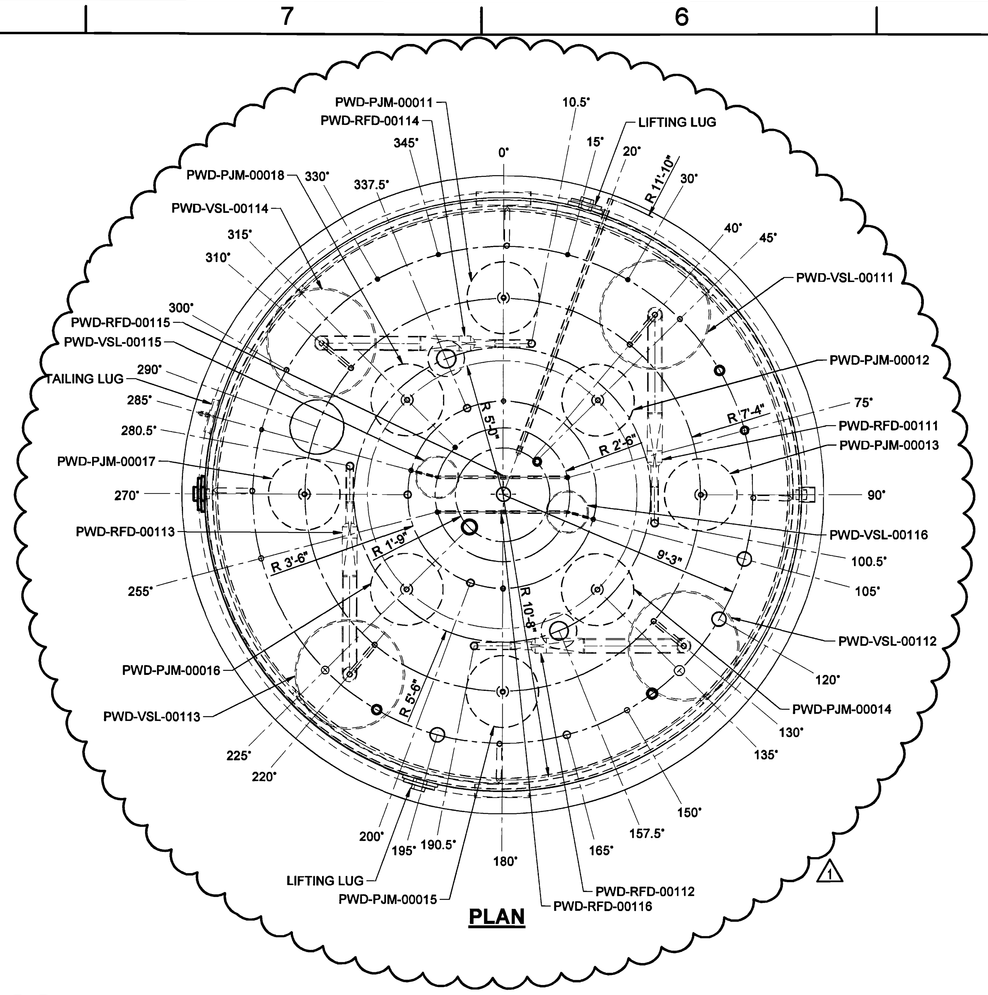

PLAN

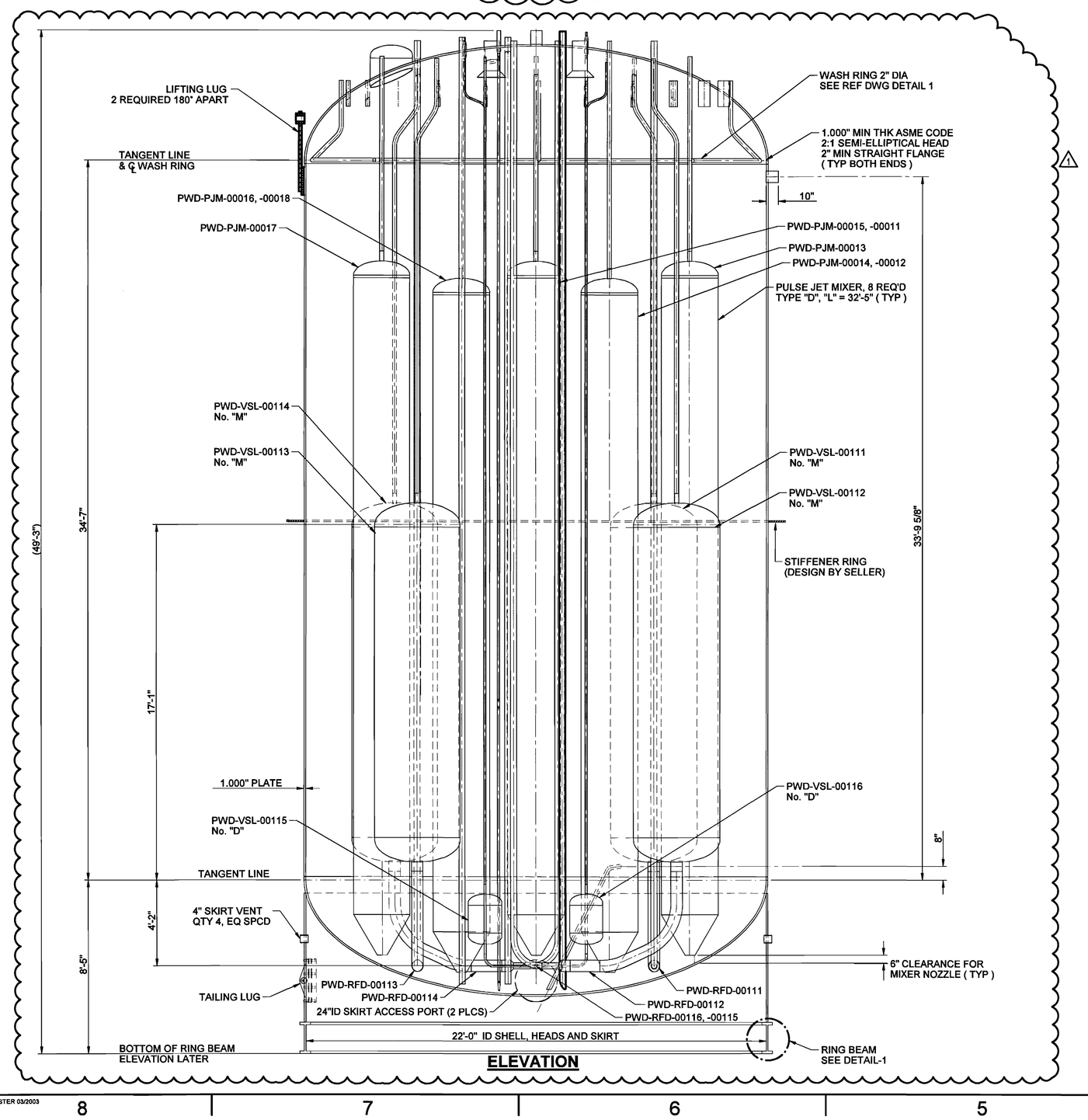

ELEVATION

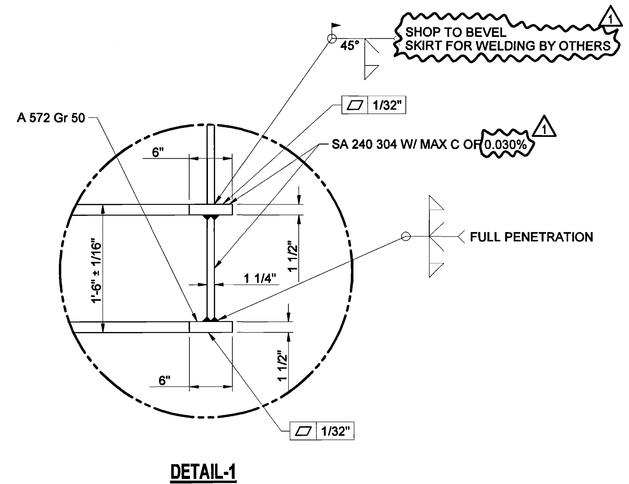

DETAIL-1

GENERAL NOTES:

1. RFD PUMP SHALL BE PROVIDED BY BUYER FOR SELLER TO INSTALL, ALL OTHER INTERNALS SHALL BE DESIGNED, PROVIDED AND INSTALLED BY SELLER.
2. FOR DISTANCE OF DIP PIPES TO BOTTOM HEAD USE 2" CLEARANCE UNLESS OTHERWISE SPECIFIED.
3. DELETED
4. DELETED
5. DELETED

HOLDS:

1. DELETED
2. DELETED
3. DELETED
4. DELETED
5. DELETED
6. DELETED

THIS DRAWING TO BE READ IN CONJUNCTION WITH THE MECHANICAL DATA SHEET No 24590-PTF-MVD-PWD-P0012

QUALITY LEVEL DESIGNATION FOR ALL COMPONENTS OF THIS VESSEL IS QL-1

PLEASE NOTE THAT SOURCE, SPECIAL NUCLEAR AND BYPRODUCT MATERIALS, AS DEFINED IN THE ATOMIC ENERGY ACT OF 1954 (AEA), ARE REGULATED AT THE U.S. DEPARTMENT OF ENERGY (DOE) FACILITIES EXCLUSIVELY BY DOE ACTING PURSUANT TO ITS AEA AUTHORITY. DOE ASSERTS, THAT PURSUANT TO THE AEA, IT HAS SOLE AND EXCLUSIVE RESPONSIBILITY AND AUTHORITY TO REGULATE SOURCE, SPECIAL NUCLEAR, AND BYPRODUCT MATERIALS AT DOE-OWNED NUCLEAR FACILITIES. INFORMATION CONTAINED HEREIN ON RADIONUCLIDES IS PROVIDED FOR PROCESS DESCRIPTION PURPOSES ONLY.

REFERENCE DRAWINGS

DWG NO	REV	TITLE
24590-WTP-MV-M69T-00001	0	PRESSURE VESSEL TOLERANCES STANDARD DETAILS
24590-WTP-MV-M69T-00004	0	PULSE JET MIXERS STANDARD DETAILS
24590-WTP-MV-M69T-00007	0	THERMOWELL CONNECTION STANDARD DETAILS
24590-WTP-MV-M69T-00011	0	WASH RINGS STANDARD DETAILS
24590-WTP-MV-M69T-00016001	0	VESSEL CONNECTIONS STANDARD DETAILS SHT 1 OF 2
24590-WTP-MV-M69T-00016002	0	VESSEL CONNECTIONS STANDARD DETAILS SHT 2 OF 2
24590-WTP-MV-M69T-00017	0	VESSEL INSPECTION MANWAY STANDARD DETAILS
24590-WTP-MV-M69T-00012	0	GROUNDING LUG
24590-WTP-MV-M69T-00009	0	LIFTING LUG STANDARD DETAILS
24590-WTP-MV-M69T-00010	0	TAILING LUG STANDARD DETAILS
24590-WTP-MV-M69T-00013	0	CHARGE VESSEL STANDARD DETAILS
24590-WTP-MV-M69T-00014	0	RFD PUMPS DETAIL

MARK W. HOEFLMAYER, STATE OF WASHINGTON, 6039952, REGISTERED PROFESSIONAL ENGINEER — 2/26/04
EXPIRES 12/10/04

REV	DESCRIPTION	ORG	CHKD	RVWD	APVD	DATE
1	ISSUED FOR PERMITTING USE	MWH	[illegible]	[illegible]	[illegible]	2/26/04
0	ISSUED FOR PERMITTING USE	JJ	CS		SK	10/2/02

REVISION HISTORY

Q — QUALITY LEVEL

ISSUED BY BPF-WTP EDC — INIT DATE — ISSUE STAMP

PROJECT No.	24590
SITE	HANFORD
AREA	200E
BUILDING No.	10

	BY	DATE
ORIGINATOR	J. JACKSON	10/1/02
CHECKER	C. SLATER	10/1/02
APPROVER	S. KIRK	10/2/02
REVIEWER		

CONTENT APPLICABLE TO ALARA? ☐ YES ☐ NO
ADR NO. REV:

RIVER PROTECTION PROJECT
WASTE TREATMENT PLANT
2435 STEVENS CENTER PLACE
RICHLAND, WA 99352

CONTRACT No: DE-AC27-01RV14136

EQUIPMENT ASSEMBLY ACIDIC/ALKALINE EFFLUENT VESSEL PWD-VSL-00016

SCALE: NONE

24590-PTF-MV-PWD-P0006

REV 1

R10221790

FORM E_MASTER 03/2003

"E" SIZE - 44x34
COMPUTER GENERATED BY SOLID EDGE-
MANUAL CHANGES NOT PERMITTED

WHEN REFERENCING DRAWING AND DIM NUMBERS IN DOCUMENTS, BE SURE TO INCLUDE DASHES BETWEEN ELEMENTS

02/26/2004 10:11 AM

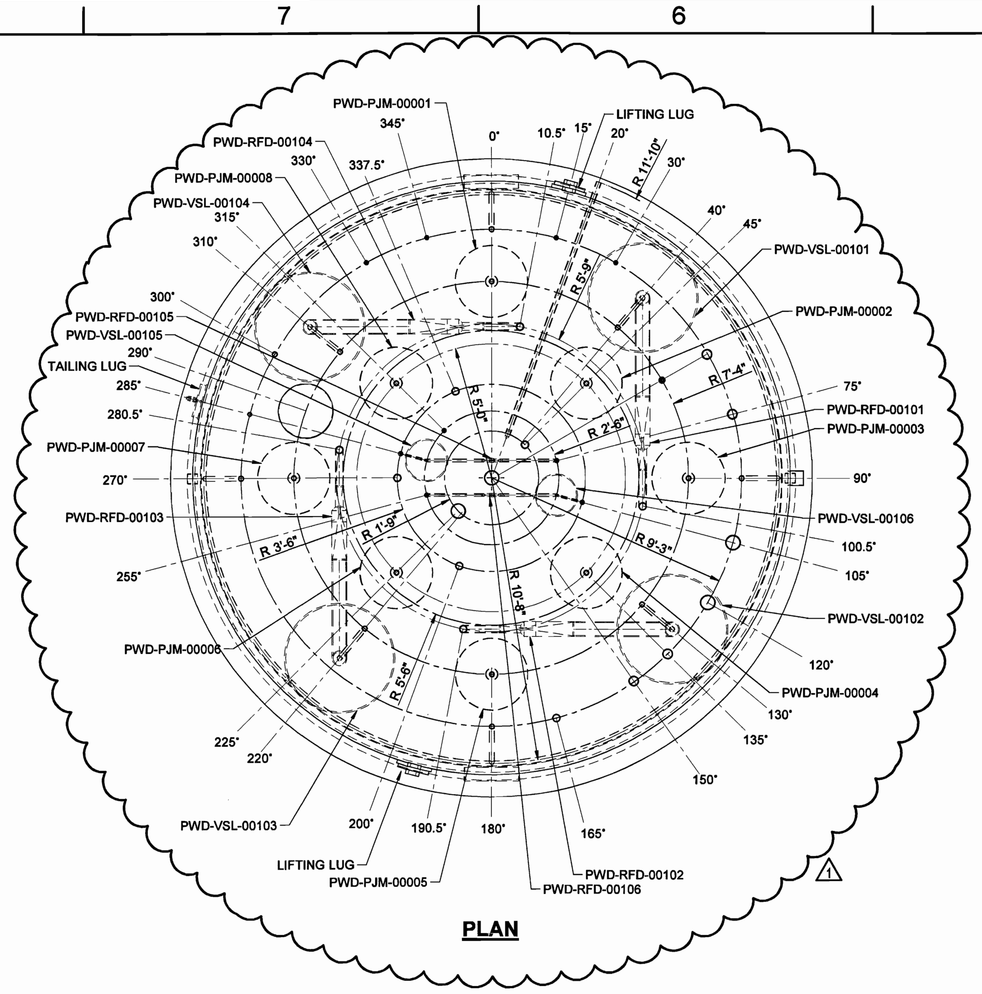

PLAN

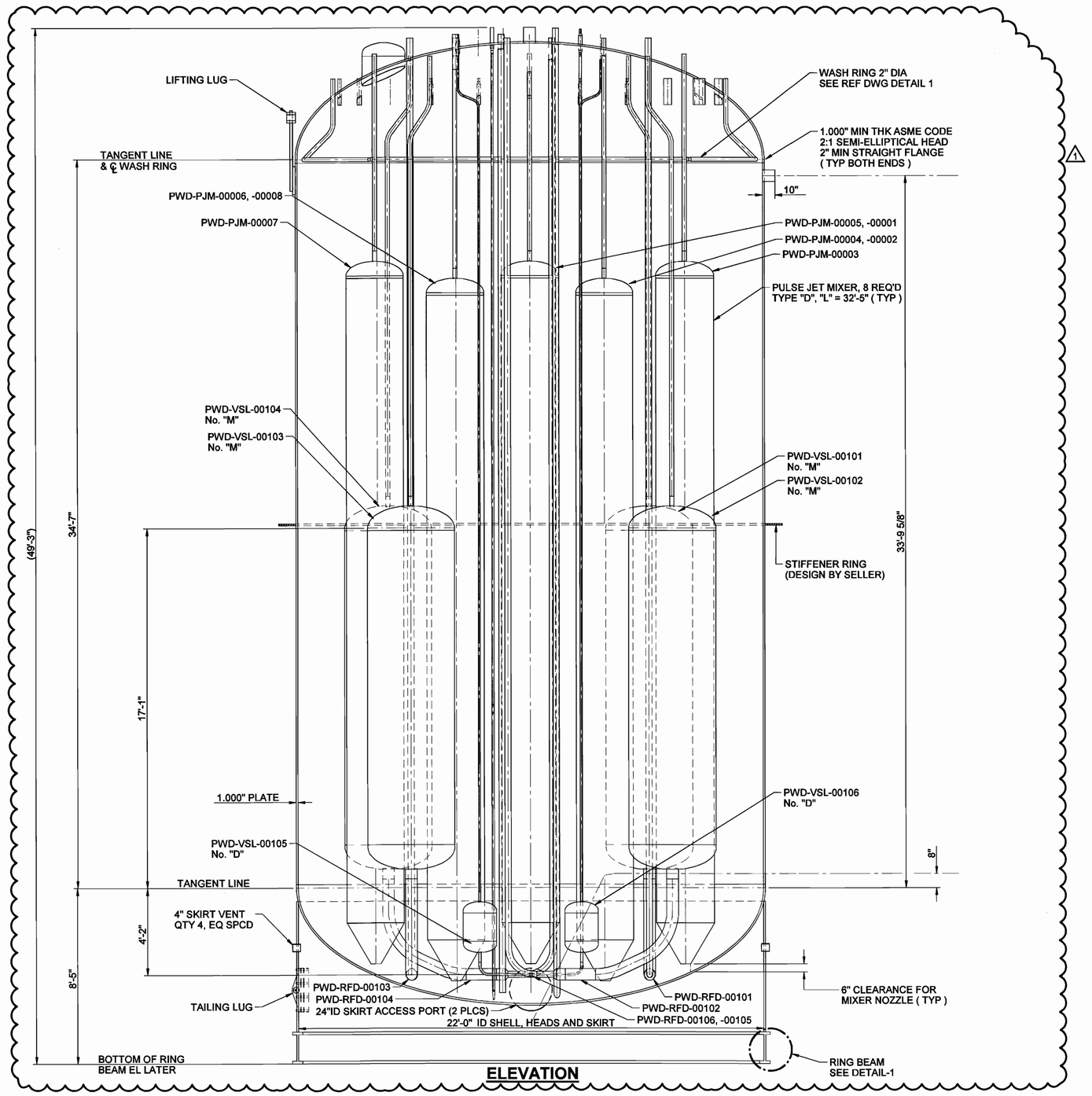

ELEVATION

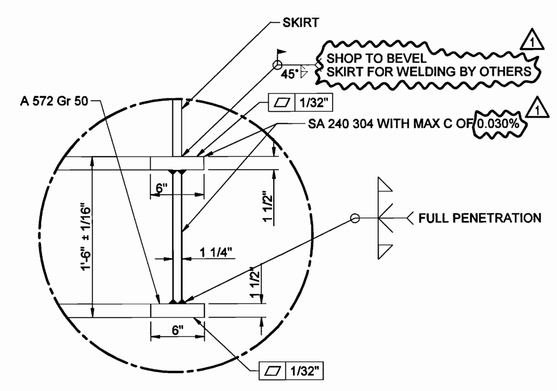

DETAIL-1

GENERAL NOTES:

1. RFD PUMP SHALL BE PROVIDED BY BUYER FOR SELLER TO INSTALL, ALL OTHER INTERNALS SHALL BE DESIGNED, PROVIDED AND INSTALLED BY SELLER.
2. FOR DISTANCE OF DIP PIPES TO BOTTOM HEAD USE 2" CLEARANCE UNLESS OTHERWISE SPECIFIED.
3. DELETED
4. DELETED
5. DELETED

HOLDS:

1. DELETED
2. DELETED
3. DELETED
4. DELETED
5. DELETED
6. DELETED

THIS DRAWING TO BE READ IN CONJUNCTION WITH THE MECHANICAL DATA SHEET No 24590-PTF-MVD-PWD-P0011

QUALITY LEVEL DESIGNATION FOR ALL COMPONENTS OF THIS VESSEL IS QL-1

PLEASE NOTE THAT SOURCE, SPECIAL NUCLEAR AND BYPRODUCT MATERIALS, AS DEFINED IN THE ATOMIC ENERGY ACT OF 1954 (AEA), ARE REGULATED AT THE U.S. DEPARTMENT OF ENERGY (DOE) FACILITIES EXCLUSIVELY BY DOE ACTING PURSUANT TO ITS AEA AUTHORITY. DOE ASSERTS, THAT PURSUANT TO THE AEA, IT HAS SOLE AND EXCLUSIVE RESPONSIBILITY AND AUTHORITY TO REGULATE SOURCE, SPECIAL NUCLEAR, AND BYPRODUCT MATERIALS AT DOE-OWNED NUCLEAR FACILITIES. INFORMATION CONTAINED HEREIN ON RADIONUCLIDES IS PROVIDED FOR PROCESS DESCRIPTION PURPOSES ONLY.

REFERENCE DRAWINGS

DWG NO	REV	TITLE
24590-WTP-MV-M69T-00001	0	PRESSURE VESSEL TOLERANCES STANDARD DETAILS
24590-WTP-MV-M69T-00004	0	PULSE JET MIXERS STANDARD DETAILS
24590-WTP-MV-M69T-00007	0	THERMOWELL CONNECTION STANDARD DETAILS
24590-WTP-MV-M69T-00011	0	WASH RINGS STANDARD DETAILS
24590-WTP-MV-M69T-00016001	0	VESSEL CONNECTIONS STANDARD DETAILS SHT 1 OF 2
24590-WTP-MV-M69T-00016002	0	VESSEL CONNECTIONS STANDARD DETAILS SHT 2 OF 2
24590-WTP-MV-M69T-00017	0	VESSEL INSPECTION MANWAY STANDARD DETAILS
24590-WTP-MV-M69T-00012	0	GROUNDING LUG
24590-WTP-MV-M69T-00009	0	LIFTING LUG STANDARD DETAILS
24590-WTP-MV-M69T-00010	0	TAILING LUG STANDARD DETAILS
24590-WTP-MV-M69T-00013	0	CHARGE VESSEL STANDARD DETAILS
24590-WTP-MV-M69T-00014	0	RFD PUMPS DETAIL

MARK W. HOFFMANN, STATE OF WASHINGTON, 36309933, REGISTERED PROFESSIONAL ENGINEER — 2/26/04
EXPIRES 12/10/04

REVISION HISTORY

REV	DESCRIPTION	ORG	CHKD	RVWD	APVD	DATE
1	ISSUED FOR PERMITTING USE	KB	[illegible]	[illegible]	[illegible]	2/26/04
0	ISSUED FOR PERMITTING USE	JJ	CS		SK	10/2/02

Q QUALITY LEVEL

ISSUED BY RPP-WTP PDC — INIT / DATE — ISSUE STAMP

PROJECT No.	24590
SITE	HANFORD
AREA	200E
BUILDING No.	10

	BY	DATE
ORIGINATOR	J. JACKSON	10/1/02
CHECKER	C. SLATER	10/1/02
APPROVER	S. KIRK	10/2/02
REVIEWER		

CONTENT APPLICABLE TO ALARA? ☐ YES ☐ NO
ADR NO. REV:

BECHTEL

RIVER PROTECTION PROJECT
WASTE TREATMENT PLANT
2435 STEVENS CENTER PLACE
RICHLAND, WA 99352

CONTRACT No: DE-AC27-01RV14136

EQUIPMENT ASSEMBLY ACIDIC/ALKALINE EFFLUENT VESSEL PWD-VSL-00015

SCALE: NONE

24590-PTF-MV-PWD-P0007

REV 1

"E" SIZE - 44x34
COMPUTER GENERATED BY SOLID EDGE-MANUAL CHANGES NOT PERMITTED

WHEN REFERENCING DRAWING AND DIM NUMBERS IN DOCUMENTS, BE SURE TO INCLUDE DASHES BETWEEN ELEMENTS

02/26/2004 10:11 AM

FORM E_MASTER 03/2003

R1012271191

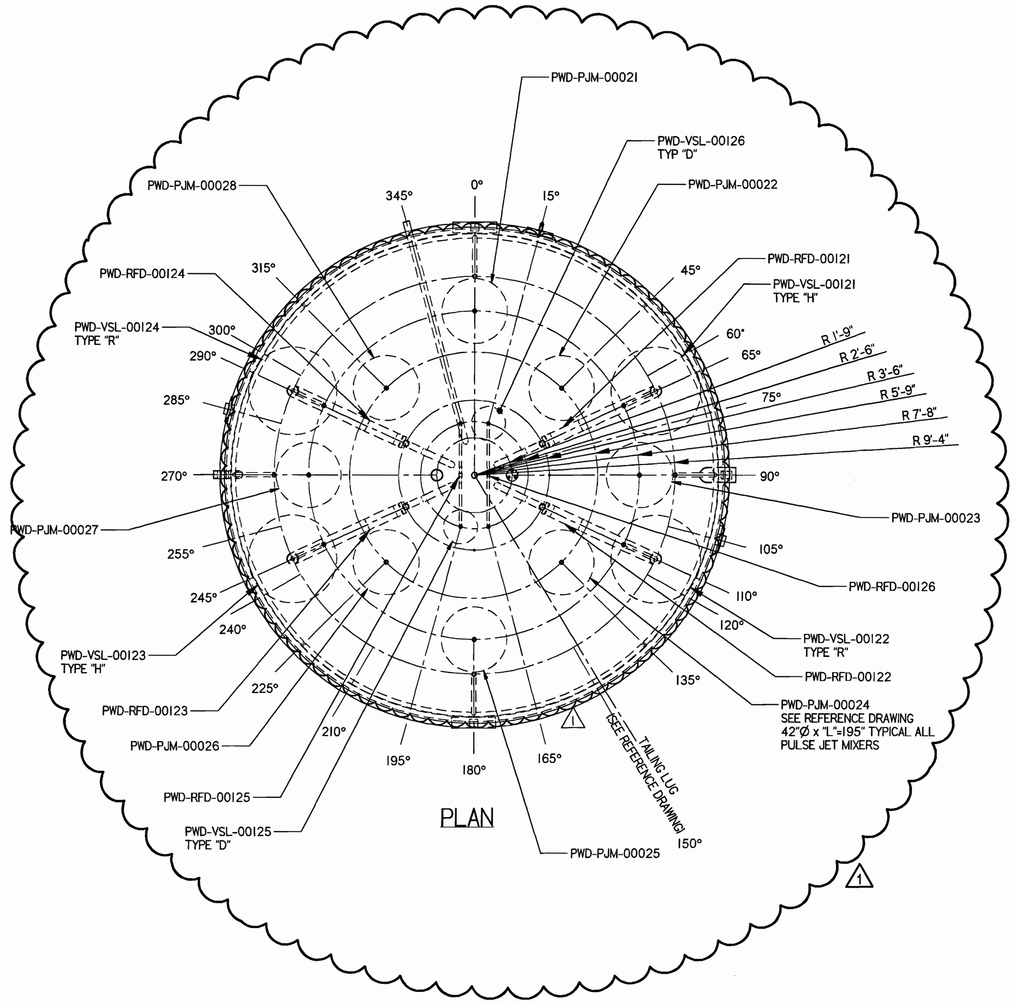

PLAN

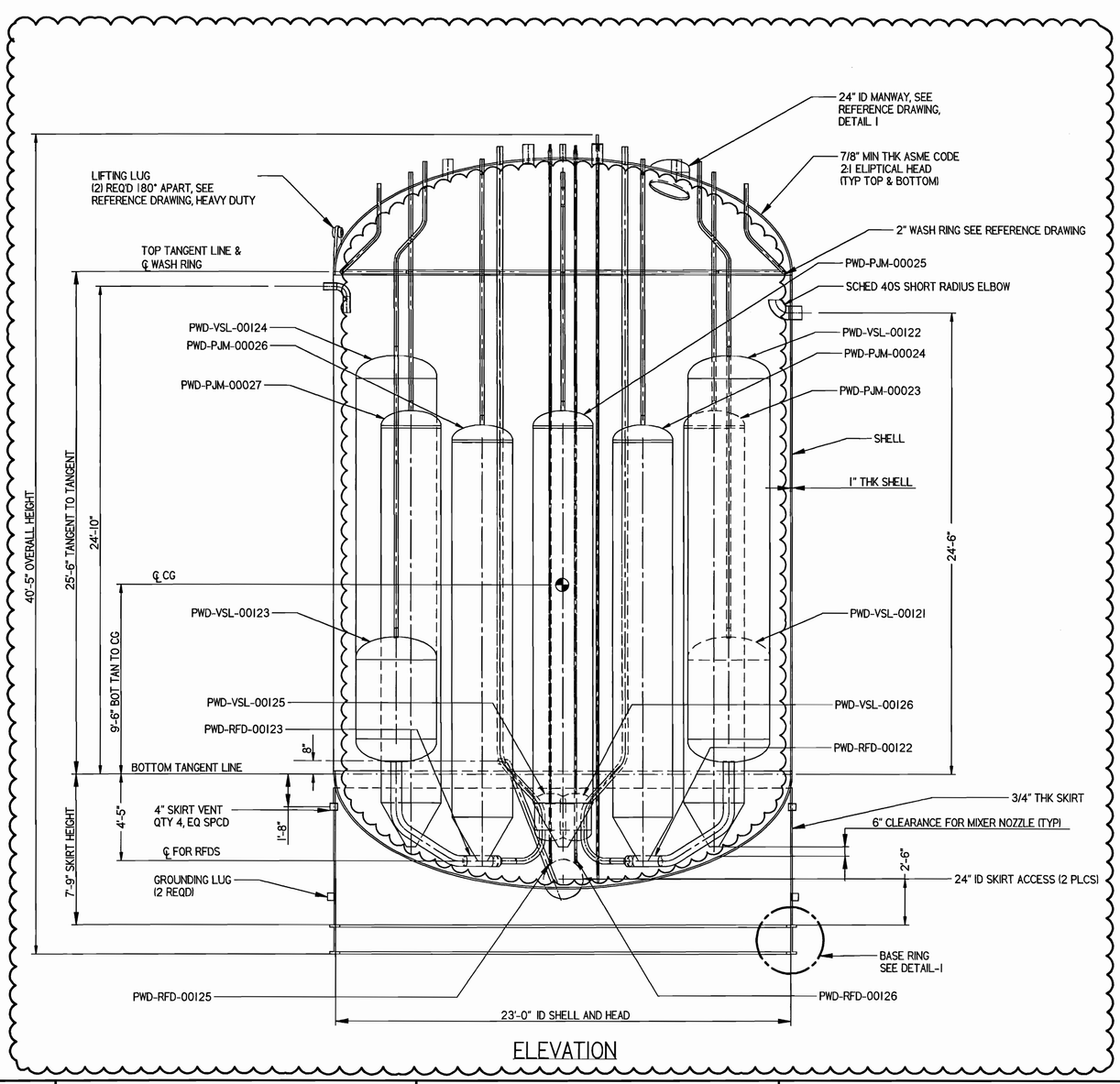

ELEVATION

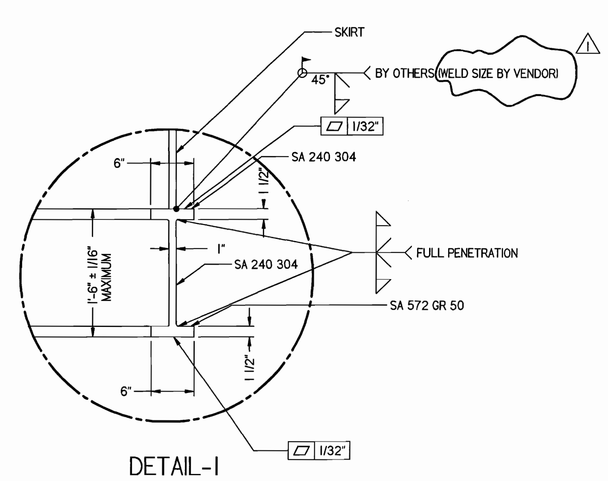

DETAIL-1

GENERAL NOTES:

1. DELETED
2. RFD PUMP SHALL BE PROVIDED BY BUYER FOR SELLER TO INSTALL. ALL OTHER INTERNALS SHALL BE DESIGNED, PROVIDED AND INSTALLED BY SELLER.
3. FOR DIP LEGS USE 2" BOTTOM HEAD CLEARANCE.
4. DELETED
5. SOME HIDDEN LINES OMITTED FOR CLARITY
6. RFD TYPE TO BE PROVIDED LATER
7. DELETED
8. BASE PLATE BEAM TO BE SHIPPED AHEAD OF VESSEL TO FIELD CONSTRUCTION FOR INSTALLATION BY OTHERS
9. DELETED

HOLDS:

1. SIZE OF SAMPLE CHARGE VESSELS ON HOLD
2. DELETED

THIS DRAWING TO BE READ IN CONJUNCTION WITH MECHANICAL SYSTEMS DATA SHEET 24590-PTF-MVD-PWD-P0002

VESSEL COMPONENT QUALITY LEVELS	
COMPONENTS	QUALITY LEVEL
PLANT WASH VESSEL, SKIRT, ALL NOZZLES	QL-1
ALL INTERNAL SUPPORTS, DIPPED PIPES	QL-1
PULSE JET MIXERS AND PIPING	QL-1
ALL CHARGE VESSELS, RFD'S, AND PIPING	CM
INSTRUMENTATION	CM
WASH RING AND PIPING	CM

PLEASE NOTE THAT SOURCE, SPECIAL NUCLEAR AND BYPRODUCT MATERIALS, AS DEFINED IN THE ATOMIC ENERGY ACT OF 1954 (AEA), ARE REGULATED AT THE U.S. DEPARTMENT OF ENERGY (DOE) FACILITIES EXCLUSIVELY BY DOE ACTING PURSUANT TO ITS AEA AUTHORITY. DOE ASSERTS, THAT PURSUANT TO THE AEA, IT HAS SOLE AND EXCLUSIVE RESPONSIBILITY AND AUTHORITY TO REGULATE SOURCE, SPECIAL NUCLEAR, AND BYPRODUCT MATERIALS AT DOE-OWNED NUCLEAR FACILITIES. INFORMATION CONTAINED HEREIN ON RADIONUCLIDES IS PROVIDED FOR PROCESS DESCRIPTION PURPOSES ONLY.

REFERENCE DRAWINGS		
DWG NO	REV	TITLE
24590-WTP-MV-M59T-00001	0	PRESSURE VESSEL TOLERANCES STANDARD DETAILS
24590-WTP-MV-M59T-00004	0	PULSE JET MIXERS STANDARD DETAILS
24590-WTP-MV-M59T-00007	0	THERMOWELL CONNECTION STANDARD DETAILS
24590-WTP-MV-M59T-00009	0	LIFTING LUGS STANDARD DETAILS
24590-WTP-MV-M59T-00010	0	TAILING LUG STANDARD DETAILS
24590-WTP-MV-M59T-00011	0	WASH RINGS STANDARD DETAILS
24590-WTP-MV-M59T-00012	0	GROUNDING LUG STANDARD DETAILS
24590-WTP-MV-M59T-00013	0	CHARGE VESSELS STANDARD DETAILS
24590-WTP-MV-M59T-00014	0	RFD PUMPS STANDARD DETAILS
24590-WTP-MV-M59T-00016001	0	VESSEL CONNECTIONS STANDARD DETAILS SHT 1 OF 2
24590-WTP-MV-M59T-00016002	0	VESSEL CONNECTIONS STANDARD DETAILS SHT 2 OF 2
24590-WTP-MV-M59T-00017	0	VESSEL INSPECTION MANWAY STANDARD DETAILS
24590-PTF-M6-PWD-P0002	0	P&ID-PTF PLANT WASH & DISPOSAL SYSTEM-EFFLUENT COLLECTION
24590-PTF-M6-PWD-P0018	0	P&ID-PTF PLANT WASH & DISPOSAL UTILITY SERVICES-PSA RACK
24590-PTF-M6-PWD-P0019	0	P&ID-PTF PLANT WASH & DISPOSAL UTILITY SERVICES-PSA RACK
24590-PTF-M6-PWD-P0026	0	P&ID-PTF PLANT WASH & DISPOSAL UTILITY SERVICES- PLANT WASH RACK

MARK W. HOBERMAN, STATE OF WASHINGTON, 40030932, REGISTERED PROFESSIONAL ENGINEER — 2/24/04 — EXPIRES 12/10/04

REV	DESCRIPTION	ORG	CHKD	RVWD	APVD	DATE
1	ISSUED FOR PERMITTING USE					2/24/04
0	ISSUED FOR PERMITTING USE	JJ	CS		SK	10/03/02

REVISION HISTORY

Q — QUALITY LEVEL

ISSUED BY RPP-WTP PDC — INIT — DATE — ISSUE STAMP

PROJECT No.	24590	
SITE	HANFORD	
AREA	200E	
BUILDING No.	10	
	BY	DATE
ORIGINATOR	JESSICA JACKSON	10/02/02
CHECKER	CLIFF SLATER	10/02/02
APPROVER	SUZANNE KIRK	10/03/02
REVIEWER		

CONTENT APPLICABLE TO ALARA? ☐ YES ☐ NO

ADR NO. REV:

RIVER PROTECTION PROJECT
WASTE TREATMENT PLANT
2435 STEVENS CENTER PLACE
RICHLAND, WA 99352

CONTRACT No: DE-AC27-01RV14136

EQUIPMENT ASSEMBLY PLANT WASH VESSEL PWD-VSL-00044

SCALE: NONE

24590-PTF-MV-PWD-P0010

REV 1

R10221789

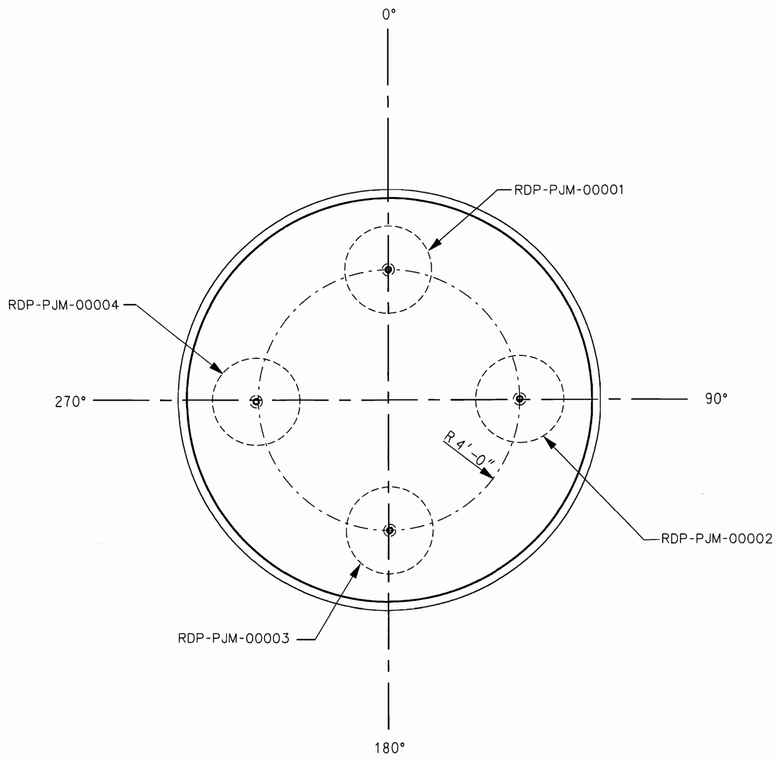

PLAN

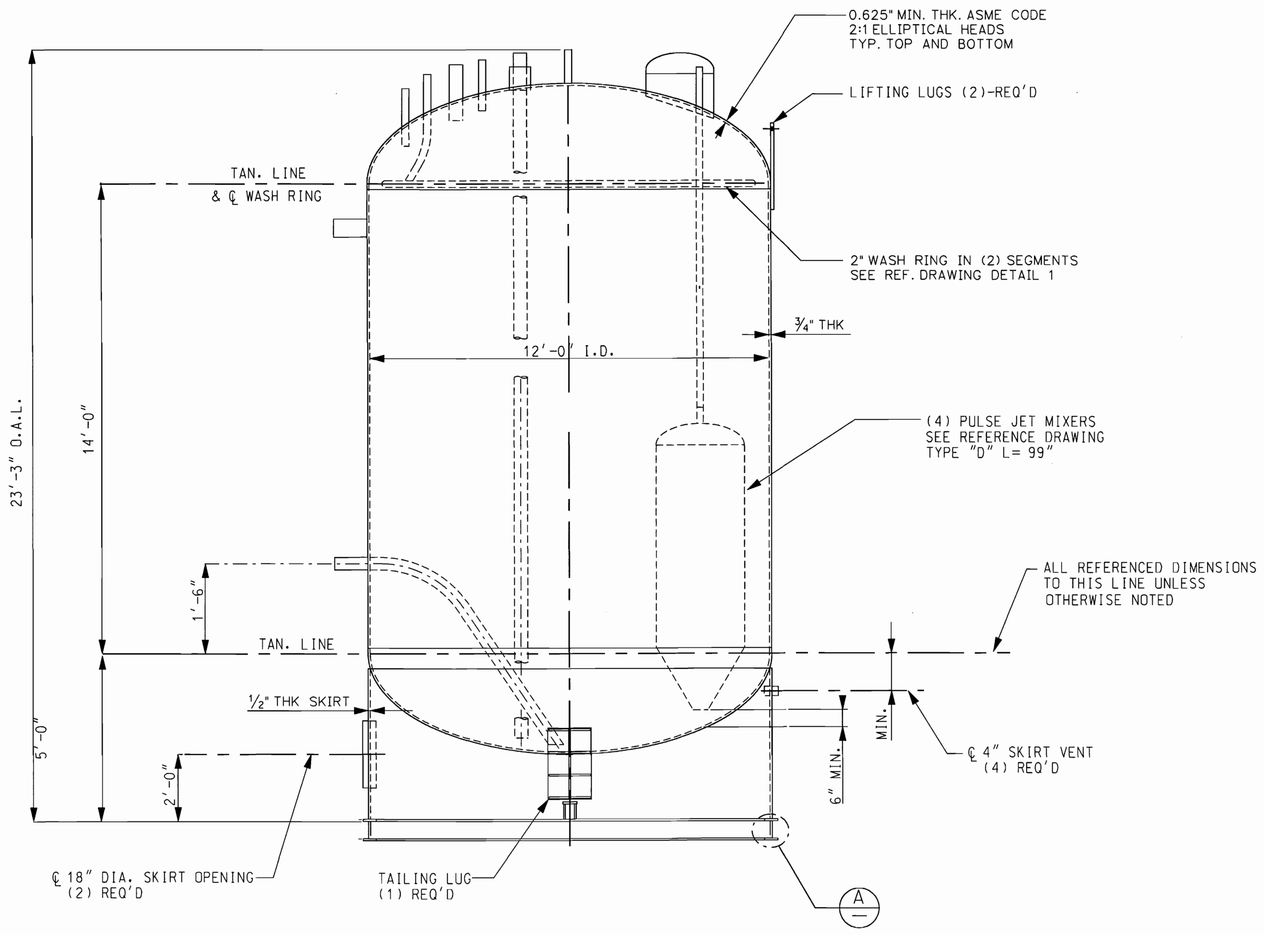

ELEVATION

SEE PLAN FOR TRUE ORIENTATION

GENERAL NOTES:

1. DELETED
2. FOR DISTANCE OF DIP PIPES TO BOTTOM HEAD, USE 2" CLEARANCE UNLESS OTHERWISE SPECIFIED.
3. BASE RING BEAM TO BE SHIPPED AHEAD OF VESSEL TO FIELD CONSTRUCTION FOR INSTALLATION BY OTHERS.
4. DELETED
5. THE ACCEPTABLE DIAMETRICAL TOLERANCES FOR BOTH THE SKIRT AND THE RING BEAM SHALL BE PER ITEM 3 OF THE PROJECT STANDARD DRAWING 24590-WTP-MV-M59T-00001. THE MAXIMUM CENTERLINE DEVIATION OF THE BOTTOM OF THE SKIRT AND THE WEB OF THE RING BEAM AT ANY GIVEN POINT SHALL NOT EXCEED ONE HALF OF THE NOMINAL THICKNESS OF THE SKIRT.

HOLDS:

1. FINAL INTERNALS LAYOUT, NOZZLE LOCATIONS, AND NAME PLATE LOCATION PENDING INPUT FROM PLANT DESIGN.
2. LIFTING LUG AND TAILING LUG LOCATION PENDING INPUT FROM CONSTRUCTION.
3. DELETED

PLEASE NOTE THAT SOURCE, SPECIAL NUCLEAR AND BYPRODUCT MATERIALS, AS DEFINED IN THE ATOMIC ENERGY ACT OF 1954 (AEA), ARE REGULATED AT THE U.S. DEPARTMENT OF ENERGY (DOE) FACILITIES EXCLUSIVELY BY DOE ACTING PURSUANT TO ITS AEA AUTHORITY. DOE ASSERTS, THAT PURSUANT TO THE AEA, IT HAS SOLE AND EXCLUSIVE RESPONSIBILITY AND AUTHORITY TO REGULATE SOURCE, SPECIAL NUCLEAR, AND BYPRODUCT MATERIAL AT DOE-OWNED NUCLEAR FACILITIES. INFORMATION CONTAINED HEREIN ON RADIONUCLIDES IS PROVIDED FOR PROCESS DESCRIPTION PURPOSES ONLY.

THIS DRAWING TO BE READ IN CONJUNCTION WITH THE MECHANICAL DATA SHEET NO 24590-PTF-MVD-RDP-P0005

VESSEL COMPONENT QUALITY LEVELS	
COMPONENTS	QUALITY LEVELS
MAIN VESSEL, SKIRT, NOZZLES	QL-1
ALL INTERNAL SUPPORTS	QL-1
LEVEL INSTRUMENTS ITS	QL-1
PULSE JET MIXERS & PIPING	QL-1
OTHER INSTRUMENTATION	CM
WASH RING AND PIPING	CM

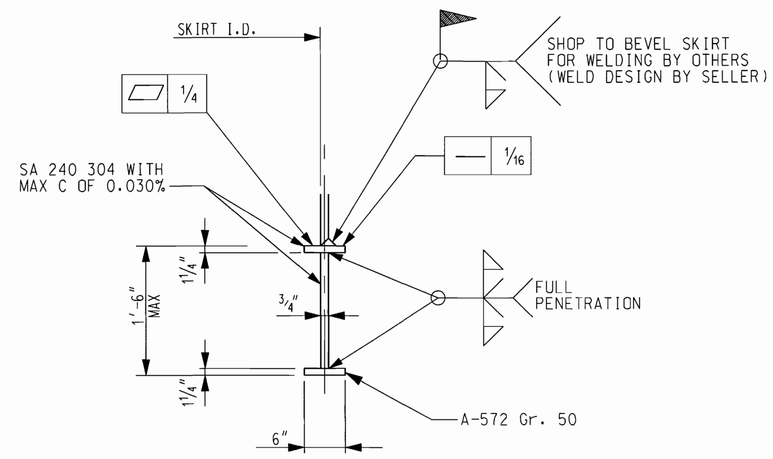

DETAIL "A"

REFERENCE DRAWINGS		
DWG NO	REV	TITLE
24590-PTF-M6-RDP-P0001		P&ID
24590-PTF-M6-RDP-P0006		P&ID
24590-PTF-M6-CNP-P0005		P&ID
24590-WTP-MV-M59T-00001	1	PRESSURE VESSEL TOLERANCES STANDARD DETAILS
24590-WTP-MV-M59T-00004	0	PULSE JET MIXERS STANDARD DETAILS
24590-WTP-MV-M59T-00009	1	LIFTING LUG STANDARD DETAILS
24590-WTP-MV-M59T-00010	1	TAILING LUG STANDARD DETAILS
24590-WTP-MV-M59T-00011	1	WASH RINGS STANDARD DETAILS
		DELETED
24590-WTP-MV-M59T-00016001	2	VESSEL CONNECTIONS STANDARD DETAILS SHT 1 OF 3
24590-WTP-MV-M59T-00016002	1	VESSEL CONNECTIONS STANDARD DETAILS SHT 2 OF 3
24590-WTP-MV-M59T-00016003	0	VESSEL CONNECTIONS STANDARD DETAILS SHT 3 OF 3
24590-WTP-MV-M59T-00017	1	VESSEL INSPECTION MANWAY STANDARD DETAILS
24590-WTP-MV-M59T-00018	1	VESSEL NAME PLATE STANDARD DETAILS

MARK W. HOEFMAN, STATE OF WASHINGTON, 38996, REGISTERED PROFESSIONAL ENGINEER
4/29/04
EXPIRES 12/15/04

REV	DESCRIPTION	ORG	CHKD	RVWD	APVD	DATE
0	ISSUED FOR PERMITTING USE					4/29/04

REVISION HISTORY

Q
QUALITY LEVEL

ISSUED BY RPP-WTP PDC
INIT / DATE
ISSUE STAMP

PROJECT No.	24590
SITE	HANFORD
AREA	200E
BUILDING No.	10

	BY	DATE
ORIGINATOR		4/28/04
CHECKER		04/28/04
APPROVER		4/29/04
REVIEWER		4/28/04

CONTENT APPLICABLE TO ALARA? [XX] YES [ ] NO
ADR NO. N/A REV:

BECHTEL

RIVER PROTECTION PROJECT
WASTE TREATMENT PLANT
2435 STEVENS CENTER PLACE
RICHLAND, WA 99352

CONTRACT No: DE-AC27-01RV14136

EQUIPMENT ASSEMBLY SPENT RESIN SLURRY VESSEL RDP-VSL-00002A

SCALE: NTS

24590-PTF-MV-RDP-P0001

REV 0

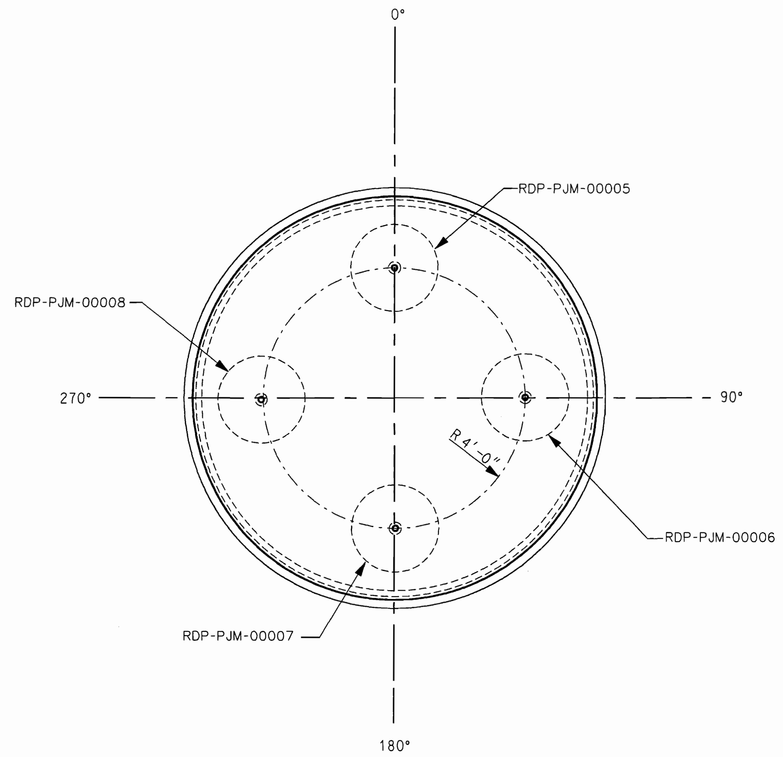

PLAN

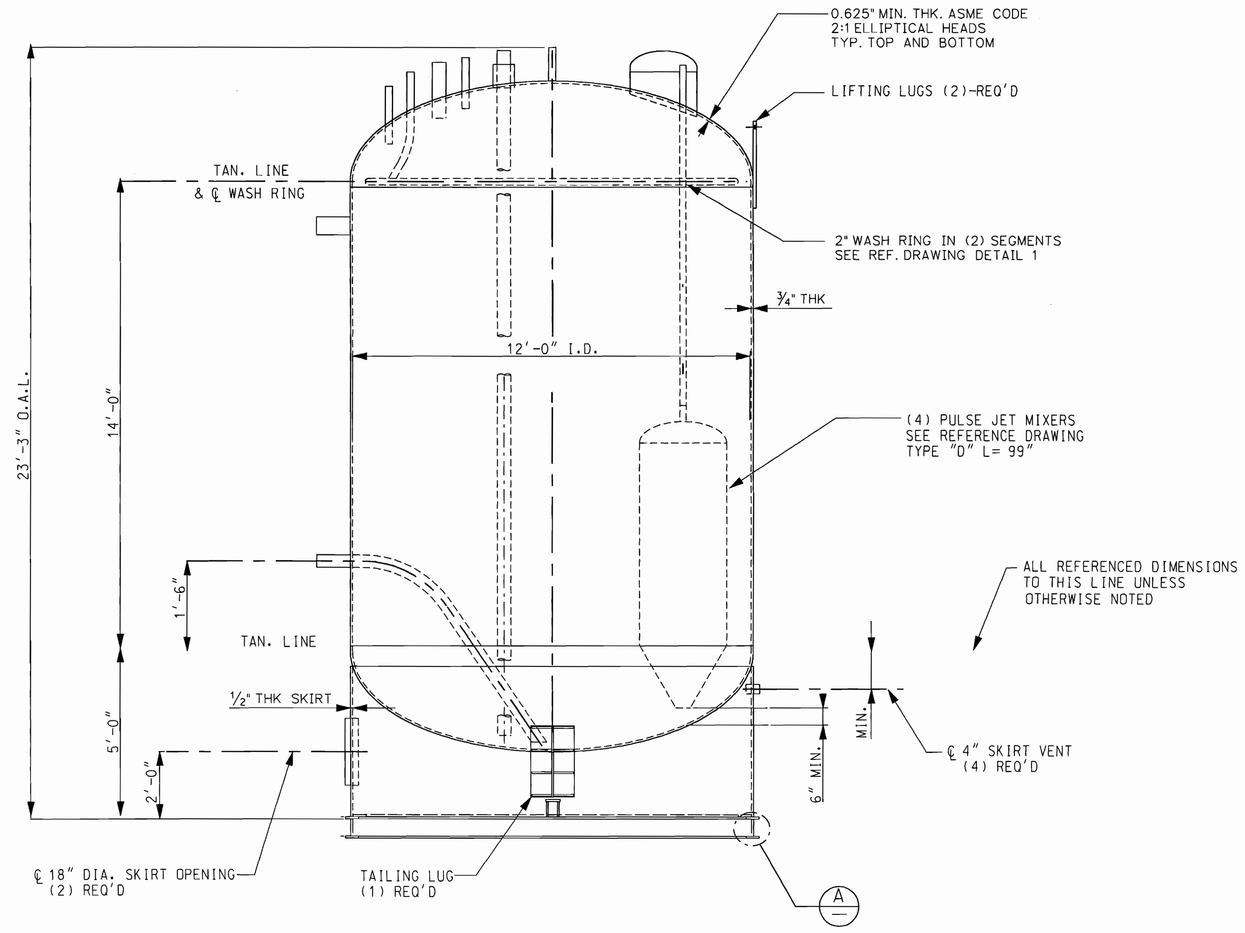

ELEVATION

SEE PLAN FOR TRUE ORIENTATION

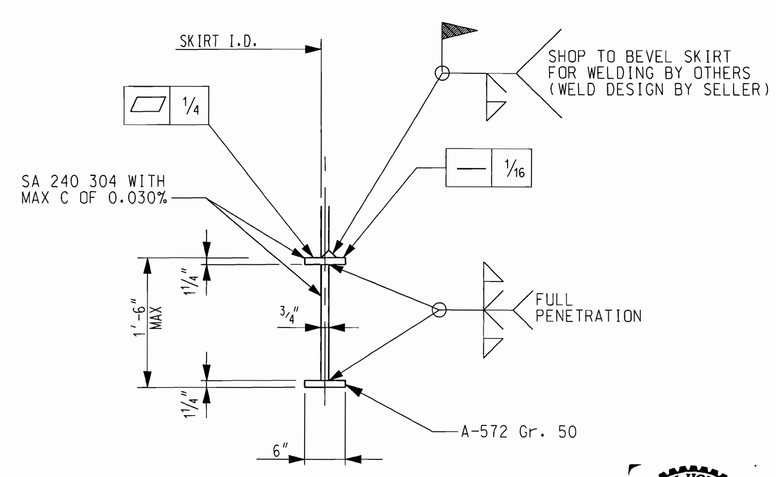

DETAIL "A"

GENERAL NOTES:

1. DELETED
2. FOR DISTANCE OF DIP PIPES TO BOTTOM HEAD, USE 2" CLEARANCE UNLESS OTHERWISE SPECIFIED.
3. BASE RING BEAM TO BE SHIPPED AHEAD OF VESSEL TO FIELD CONSTRUCTION FOR INSTALLATION BY OTHERS.
4. DELETED
5. THE ACCEPTABLE DIAMETRICAL TOLERANCES FOR BOTH THE SKIRT AND THE RING BEAM SHALL BE PER ITEM 3 OF THE PROJECT STANDARD DRAWING 24590-WTP-MV-M59T-00001. THE MAXIMUM CENTERLINE DEVIATION OF THE BOTTOM OF THE SKIRT AND THE WEB OF THE RING BEAM AT ANY GIVEN POINT SHALL NOT EXCEED ONE HALF OF THE NOMINAL THICKNESS OF THE SKIRT.

HOLDS:

1. FINAL INTERNALS LAYOUT, NOZZLE LOCATIONS, AND NAME PLATE LOCATION PENDING INPUT FROM PLANT DESIGN.
2. LIFTING LUG AND TAILING LUG LOCATION PENDING INPUT FROM CONSTRUCTION.
3. DELETED

PLEASE NOTE THAT SOURCE, SPECIAL NUCLEAR AND BYPRODUCT MATERIALS, AS DEFINED IN THE ATOMIC ENERGY ACT OF 1954 (AEA), ARE REGULATED AT THE U.S. DEPARTMENT OF ENERGY (DOE) FACILITIES EXCLUSIVELY BY DOE ACTING PURSUANT TO ITS AEA AUTHORITY. DOE ASSERTS, THAT PURSUANT TO THE AEA, IT HAS SOLE AND EXCLUSIVE RESPONSIBILITY AND AUTHORITY TO REGULATE SOURCE, SPECIAL NUCLEAR, AND BYPRODUCT MATERIAL AT DOE-OWNED NUCLEAR FACILITIES. INFORMATION CONTAINED HEREIN ON RADIONUCLIDES IS PROVIDED FOR PROCESS DESCRIPTION PURPOSES ONLY.

THIS DRAWING TO BE READ IN CONJUNCTION WITH THE MECHANICAL DATA SHEET NO 24590-PTF-MVD-RDP-P0006

VESSEL COMPONENT QUALITY LEVELS	
COMPONENTS	QUALITY LEVELS
MAIN VESSEL, SKIRT, NOZZLES	QL-1
ALL INTERNAL SUPPORTS	QL-1
LEVEL INSTRUMENTS ITS	QL-1
PULSE JET MIXERS & PIPING	QL-1
OTHER INSTRUMENTATION	CM
WASH RING AND PIPING	CM

REFERENCE DRAWINGS		
DWG NO	REV	TITLE
24590-PTF-M6-RDP-P0001		P&ID
24590-PTF-M6-RDP-P0006		P&ID
24590-PTF-M6-CNP-P0005		P&ID
24590-WTP-MV-M59T-00001	1	PRESSURE VESSEL TOLERANCES STANDARD DETAILS
24590-WTP-MV-M59T-00004	0	PULSE JET MIXERS STANDARD DETAILS
24590-WTP-MV-M59T-00009	1	LIFTING LUG STANDARD DETAILS
24590-WTP-MV-M59T-00010	1	TAILING LUG STANDARD DETAILS
24590-WTP-MV-M59T-00011	1	WASH RINGS STANDARD DETAILS
		DELETED
24590-WTP-MV-M59T-00016001	2	VESSEL CONNECTIONS STANDARD DETAILS SHT 1 OF 3
24590-WTP-MV-M59T-00016002	1	VESSEL CONNECTIONS STANDARD DETAILS SHT 2 OF 3
24590-WTP-MV-M59T-00016003	0	VESSEL CONNECTIONS STANDARD DETAILS SHT 3 OF 3
24590-WTP-MV-M59T-00017	1	VESSEL INSPECTION MANWAY STANDARD DETAILS
24590-WTP-MV-M59T-00018	1	VESSEL NAME PLATE STANDARD DETAILS

MARK W. HOFFMAN, STATE OF WASHINGTON, REGISTERED PROFESSIONAL ENGINEER — EXPIRES 12/16/04 — 4/29/04

REVISION HISTORY

REV	DESCRIPTION	ORG	CHKD	RVWD	APVD	DATE
0	ISSUED FOR PERMITTING USE					4/29/04

Q QUALITY LEVEL

ISSUED BY RPP-WTP PMO INT DATE — ISSUE STAMP

PROJECT No.	24590	
SITE	HANFORD	
AREA	200E	
BUILDING No.	10	
	BY	DATE
ORIGINATOR		4/05/04
CHECKER		4/28/04
APPROVER		4/29/04
REVIEWER		4/29/04

CONTENT APPLICABLE TO ALARA? [XX] YES [ ] NO
ADR NO. N/A REV:

BECHTEL

RIVER PROTECTION PROJECT
WASTE TREATMENT PLANT
2435 STEVENS CENTER PLACE
RICHLAND, WA 99352

CONTRACT No: DE-AC27-01RV14136

EQUIPMENT ASSEMBLY SPENT RESIN SLURRY VESSEL RDP-VSL-00002B

SCALE: NTS

24590-PTF-MV-RDP-P0002

REV 0

R0020020

r:\dms05068\PTFMV\RDPP0002.DGN

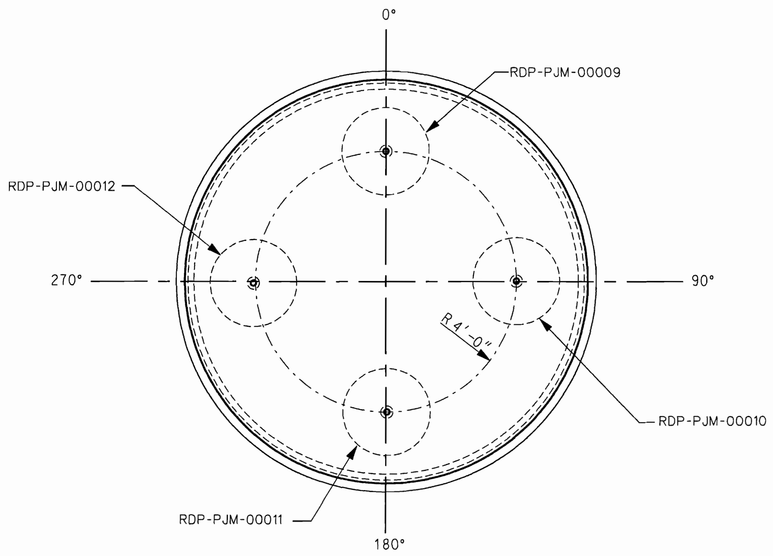

PLAN

GENERAL NOTES:

1. DELETED
2. FOR DISTANCE OF DIP PIPES TO BOTTOM HEAD, USE 2" CLEARANCE UNLESS OTHERWISE SPECIFIED.
3. BASE RING BEAM TO BE SHIPPED AHEAD OF VESSEL TO FIELD CONSTRUCTION FOR INSTALLATION BY OTHERS.
4. DELETED
5. THE ACCEPTABLE DIAMETRICAL TOLERANCES FOR BOTH THE SKIRT AND THE RING BEAM SHALL BE PER ITEM 3 OF THE PROJECT STANDARD DRAWING 24590-WTP-MV-M59T-00001. THE MAXIMUM CENTERLINE DEVIATION OF THE BOTTOM OF THE SKIRT AND THE WEB OF THE RING BEAM AT ANY GIVEN POINT SHALL NOT EXCEED ONE HALF OF THE NOMINAL THICKNESS OF THE SKIRT.

HOLDS:

1. FINAL INTERNALS LAYOUT, NOZZLE LOCATIONS, AND NAME PLATE LOCATION PENDING INPUT FROM PLANT DESIGN.
2. LIFTING LUG AND TAILING LUG LOCATION PENDING INPUT FROM CONSTRUCTION.
3. DELETED

PLEASE NOTE THAT SOURCE, SPECIAL NUCLEAR AND BYPRODUCT MATERIALS, AS DEFINED IN THE ATOMIC ENERGY ACT OF 1954 (AEA), ARE REGULATED AT THE U.S. DEPARTMENT OF ENERGY (DOE) FACILITIES EXCLUSIVELY BY DOE ACTING PURSUANT TO ITS AEA AUTHORITY. DOE ASSERTS, THAT PURSUANT TO THE AEA, IT HAS SOLE AND EXCLUSIVE RESPONSIBILITY AND AUTHORITY TO REGULATE SOURCE, SPECIAL NUCLEAR, AND BYPRODUCT MATERIAL AT DOE-OWNED NUCLEAR FACILITIES. INFORMATION CONTAINED HEREIN ON RADIONUCLIDES IS PROVIDED FOR PROCESS DESCRIPTION PURPOSES ONLY.

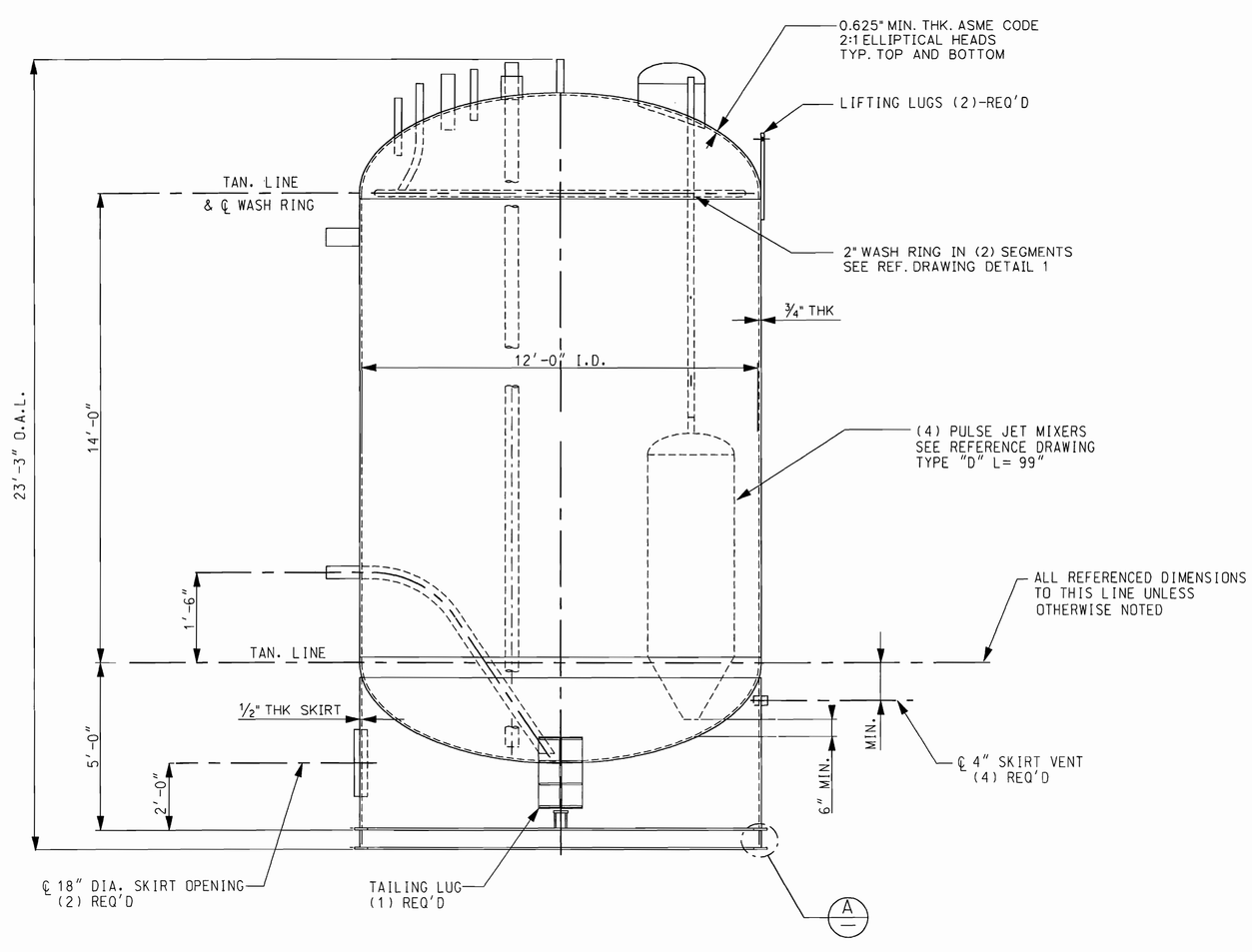

ELEVATION

SEE PLAN FOR TRUE ORIENTATION

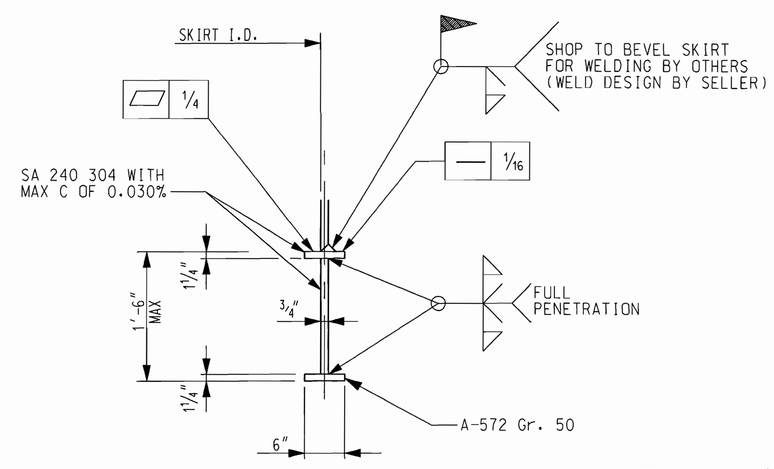

DETAIL "A"

THIS DRAWING TO BE READ IN CONJUNCTION WITH THE MECHANICAL DATA SHEET NO 24590-PTF-MVD-RDP-P0007

VESSEL COMPONENT QUALITY LEVELS	
COMPONENTS	QUALITY LEVELS
MAIN VESSEL, SKIRT, NOZZLES	QL-1
ALL INTERNAL SUPPORTS	QL-1
LEVEL INSTRUMENTS ITS	QL-1
PULSE JET MIXERS & PIPING	QL-1
OTHER INSTRUMENTATION	CM
WASH RING AND PIPING	CM

REFERENCE DRAWINGS		
DWG NO	REV	TITLE
24590-PTF-M6-RDP-P0001		P&ID
24590-PTF-M6-RDP-P0006		P&ID
24590-PTF-M6-CNP-P0005		P&ID
24590-WTP-MV-M59T-00001	1	PRESSURE VESSEL TOLERANCES STANDARD DETAILS
24590-WTP-MV-M59T-00004	0	PULSE JET MIXERS STANDARD DETAILS
24590-WTP-MV-M59T-00009	1	LIFTING LUG STANDARD DETAILS
24590-WTP-MV-M59T-00010	1	TAILING LUG STANDARD DETAILS
24590-WTP-MV-M59T-00011	1	WASH RINGS STANDARD DETAILS
		DELETED
24590-WTP-MV-M59T-00016001	2	VESSEL CONNECTIONS STANDARD DETAILS SHT 1 OF 3
24590-WTP-MV-M59T-00016002	1	VESSEL CONNECTIONS STANDARD DETAILS SHT 2 OF 3
24590-WTP-MV-M59T-00016003	0	VESSEL CONNECTIONS STANDARD DETAILS SHT 3 OF 3
24590-WTP-MV-M59T-00017	1	VESSEL INSPECTION MANWAY STANDARD DETAILS
24590-WTP-MV-M59T-00018	1	VESSEL NAME PLATE STANDARD DETAILS

MARK W. HOFFMANN, STATE OF WASHINGTON, REGISTERED PROFESSIONAL ENGINEER — EXPIRES 12/16/04 — 4/29/04

REV	DESCRIPTION	ORG	CHKD	RVWD	APVD	DATE
0	ISSUED FOR PERMITTING USE					4/29/04

Q — QUALITY LEVEL

REVISION HISTORY

ISSUED BY RDP-WTP PDC — INT — DATE — ISSUE STAMP

PROJECT No.	24590
SITE	HANFORD
AREA	200E
BUILDING No.	10

	BY	DATE
ORIGINATOR		4/29/04
CHECKER		04/28/04
APPROVER		4/29/04
REVIEWER		4/28/04

CONTENT APPLICABLE TO ALARA? [XX] YES [ ] NO
ADR NO. N/A REV:

BECHTEL

RIVER PROTECTION PROJECT
WASTE TREATMENT PLANT
2435 STEVENS CENTER PLACE
RICHLAND, WA 99352

CONTRACT No: DE-AC27-01RV14136

EQUIPMENT ASSEMBLY SPENT RESIN SLURRY VESSEL RDP-VSL-00002C

SCALE: NTS

24590-PTF-MV-RDP-P0003

REV 0

FORM E_SDN.DGN 02/2003

"E" SIZE - 44x34
COMPUTER GENERATED - MANUAL CHANGES NOT PERMITTED

04/28/2004 02:45:36 PM

C:\Work\dms05068\PTFMVRDPP0003.DGN

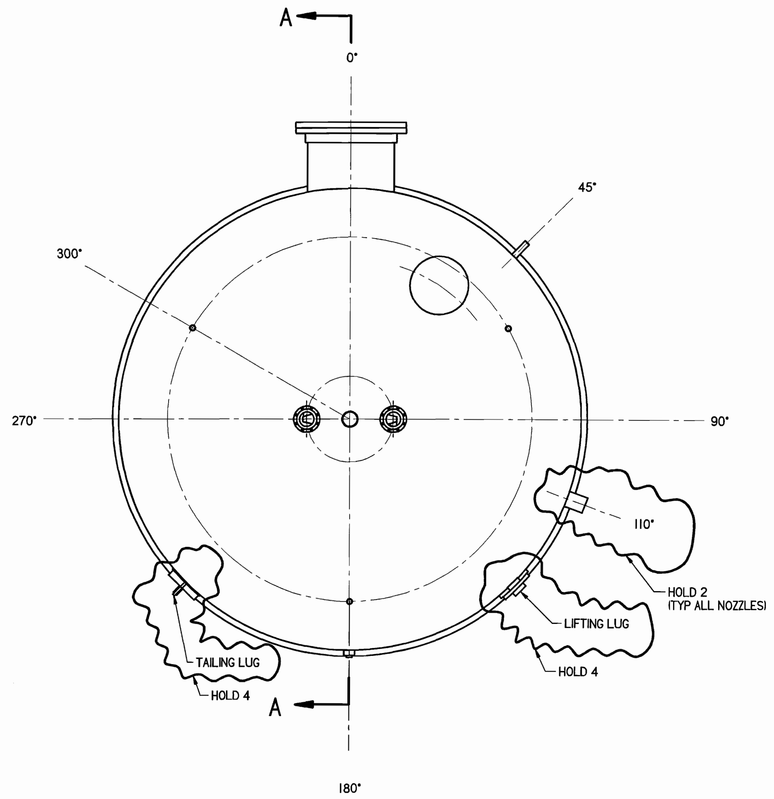

PLAN

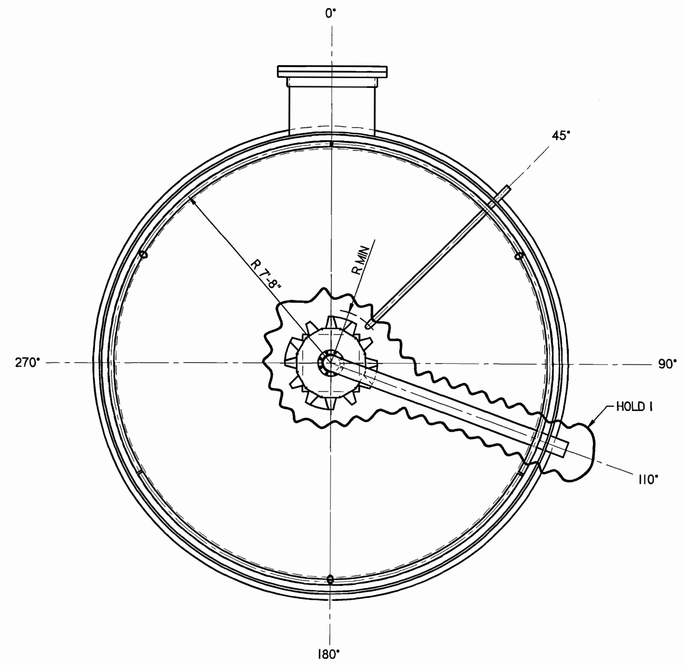

SECTION B-B

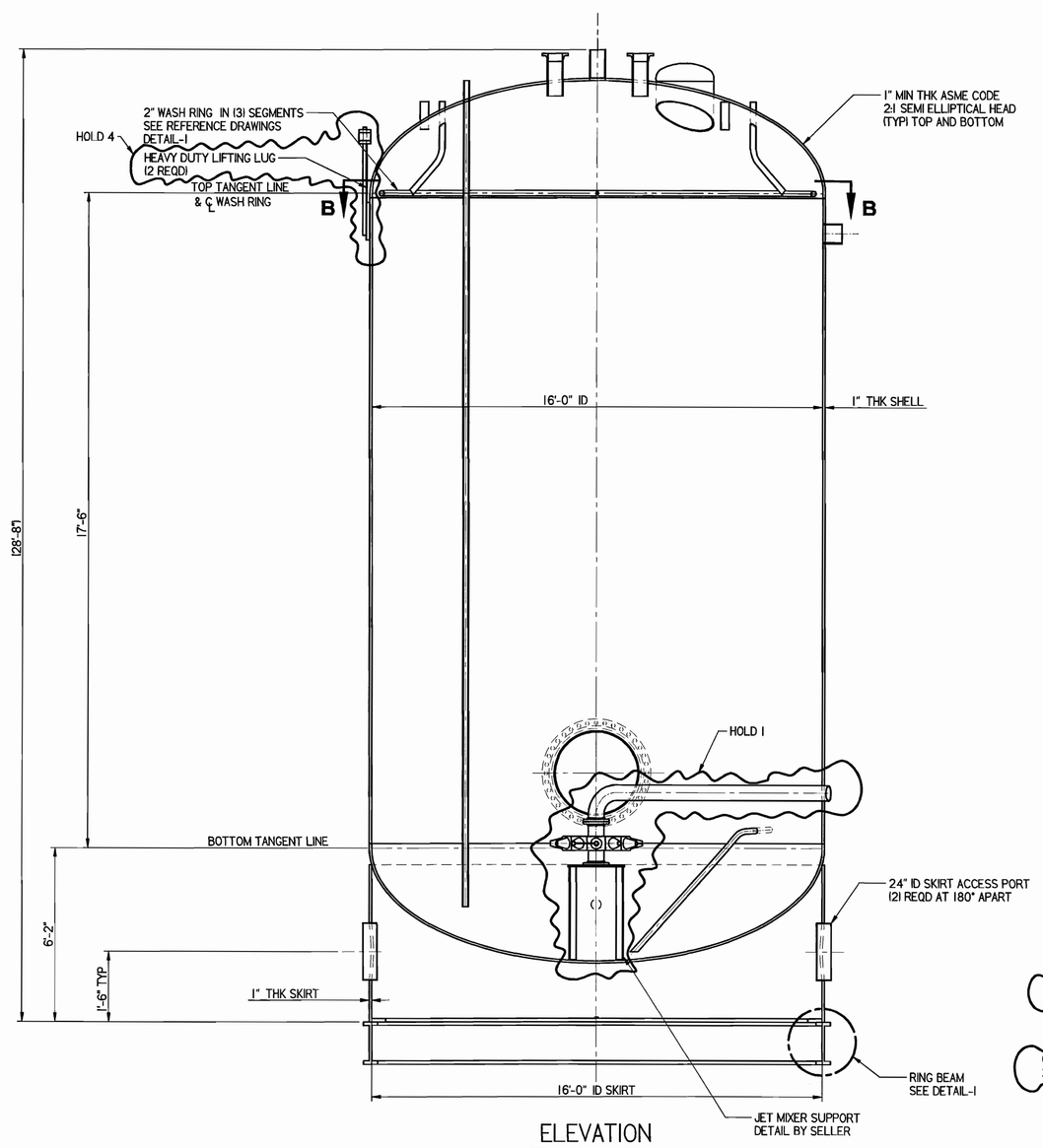

ELEVATION

SEE PLAN FOR TRUE ORIENTATION

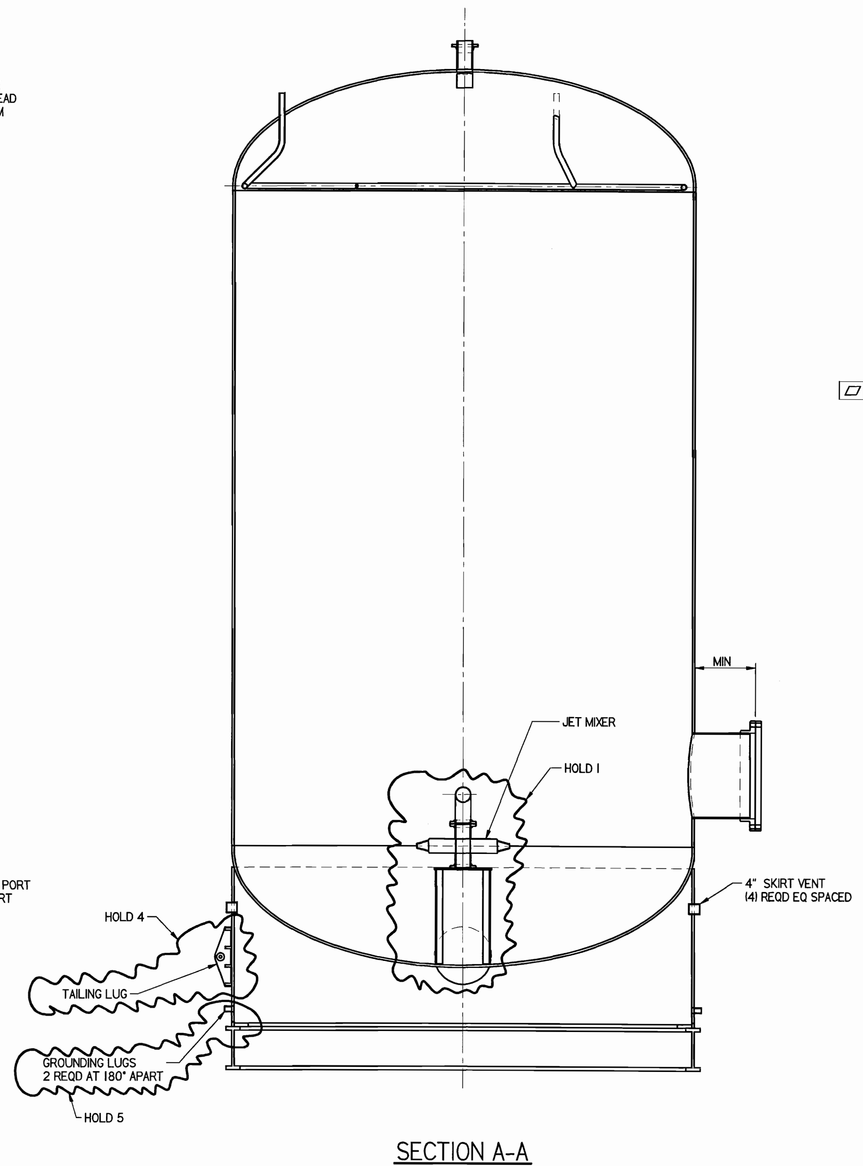

SECTION A-A

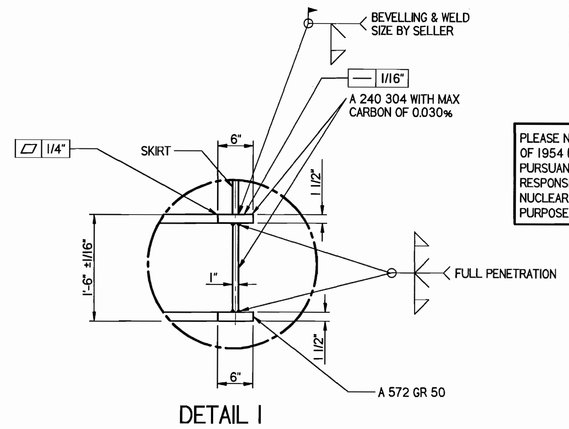

DETAIL 1

GENERAL NOTES:

1. DELETED
2. FOR DIP PIPES USE 3" BOTTOM HEAD CLEARANCE.
3. DELETED
4. SOME HIDDEN LINES OMITTED FOR CLARITY.
5. RING BEAM TO BE SHIPPED AHEAD OF VESSEL TO JOB SITE FOR INSTALLATION BY OTHERS.
6. SELLER TO PROVIDE INTERNAL PIPE SUPPORTS AND JET MIXER SUPPORTS.
7. SPECIFICATION FOR JET MIXER ACCESS:
   - CONNECTION TYPE: FLANGED CONNECTION (WITH BLIND FLANGE, DAVIT, BOLTS, NUTS, AND GASKET) PER ASME B16.47 SERIES A / FF / 150# / WN
   - FLANGE MATERIAL: SA 182 F304 WITH MAX. CARBON OF 0.030%
   - BOLT MATERIAL: AUSTENITIC SS TYPE 304L
   - GASKET MATERIAL: SPIRAL WOUND, 304L WINDING WITH FLEXIBLE GRAPHITE FILLER
   - DAVIT MATERIAL: AUSTENITIC SS TYPE 304L
   - DAVIT DESIGN BY SELLER
8. JET MIXER SHALL BE PROVIDED BY BUYER FOR SELLER TO INSTALL .
9. SELLER SHALL PROVIDE AND INSTALL JET MIXER PIPE CONNECTION FLANGE, GASKET, BOLTS AND NUTS.
10. DELETED.

HOLDS:

1. FINAL INTERNALS DESIGN, PENDING CONFIRMATION ON THE SELECTED MIXER.
2. FINAL NOZZLE SIZES, PENDING FINAL SIZING BY SYSTEM.
3. LOCATION OF NOZZLES AND NAMEPLATE, PENDING FINAL DESIGN BY PLANT DESIGN.
4. LOCATION OF LIFTING LUGS AND TAILING LUG, PENDING REVIEW BY CONSTRUCTION.
5. LOCATION OF GROUNDING LUGS, PENDING REVIEW BY ELECTRICAL.
6. DELETED
7. DELETED

PLEASE NOTE THAT SOURCE, SPECIAL NUCLEAR AND BYPRODUCT MATERIALS, AS DEFINED IN THE ATOMIC ENERGY ACT OF 1954 (AEA), ARE REGULATED AT THE U.S. DEPARTMENT OF ENERGY (DOE) FACILITIES EXCLUSIVELY BY DOE ACTING PURSUANT TO ITS AEA AUTHORITY. DOE ASSERTS, THAT PURSUANT TO THE AEA, IT HAS SOLE AND EXCLUSIVE RESPONSIBILITY AND AUTHORITY TO REGULATE SOURCE, SPECIAL NUCLEAR, AND BYPRODUCT MATERIALS AT DOE-OWNED NUCLEAR FACILITIES. INFORMATION CONTAINED HEREIN ON RADIONUCLIDES IS PROVIDED FOR PROCESS DESCRIPTION PURPOSES ONLY.

THIS DRAWING TO BE READ IN CONJUNCTION WITH MECHANICAL DATA SHEET No 24590-PTF-MVD-RLD-P0005

REFERENCE DRAWINGS

DWG NO	REV	TITLE
24590-PTF-M6-RLD-P0003	0	P&ID
24590-WTP-MV-M59T-00001	1	PRESSURE VESSEL TOLERANCES STANDARD DETAILS
24590-WTP-MV-M59T-00011	1	WASH RINGS STANDARD DETAILS
24590-WTP-MV-M59T-00016001	2	VESSEL CONNECTIONS STANDARD DETAILS SHT 1 OF 2
24590-WTP-MV-M59T-00016002	1	VESSEL CONNECTIONS STANDARD DETAILS SHT 2 OF 2
24590-WTP-MV-M59T-00016003	0	VESSEL CONNECTIONS STANDARD DETAILS SHT 3 OF 3
24590-WTP-MV-M59T-00017	1	VESSEL INSPECTION MANWAY STANDARD DETAILS
24590-WTP-MV-M59T-00012	1	GROUNDING LUG STANDARD DETAILS
24590-WTP-MV-M59T-00009	1	LIFTING LUG STANDARD DETAILS
24590-WTP-MV-M59T-00010	1	TAILING LUG STANDARD DETAILS
24590-WTP-MV-M59T-00018	1	VESSEL NAMEPLATE STANDARD DETAILS

MARK W. HOMMAN, STATE OF WASHINGTON, 0039953, REGISTERED PROFESSIONAL ENGINEER — 2/24/04
EXPIRES 12/10/04

REVISION HISTORY

REV	DESCRIPTION	ORG	CHKD	RVWD	APVD	DATE
0	ISSUED FOR PERMITTING USE					2/24/04

ISSUED BY DOE-WTP-PDC INIT DATE ISSUE STAMP

PROJECT No.	24590	
SITE	HANFORD	
AREA	200E	
BUILDING No.	10	
	BY	DATE
ORIGINATOR		2/23/04
CHECKER		2/23/04
APPROVER		2/24/04
REVIEWER		2/23/04

CONTENT APPLICABLE TO ALARA? ☐ YES ☐ NO
ADR NO. REV:

RICHLAND, WA 99352

CONTRACT No: DE-AC27-01RV14136

EQUIPMENT ASSEMBLY
ALKALINE EFFLUENT VESSEL
RLD-VSL-00017A

SCALE: NONE

24590-PTF-MV-RLD-P0001

REV 0

FORM E_MASTER 03/2003

"E" SIZE - 44x34
COMPUTER GENERATED BY SOLID EDGE-
MANUAL CHANGES NOT PERMITTED

WHEN REFERENCING DRAWING AND DIM NUMBERS IN DOCUMENTS, BE SURE TO INCLUDE DASHES BETWEEN ELEMENTS

02/12/2004 9:28:16 AM

R1022188

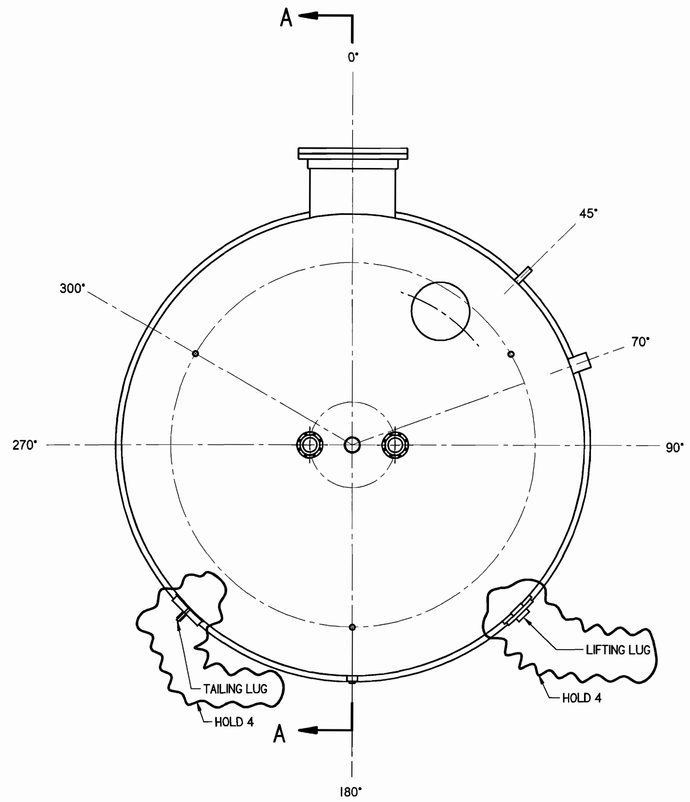

PLAN

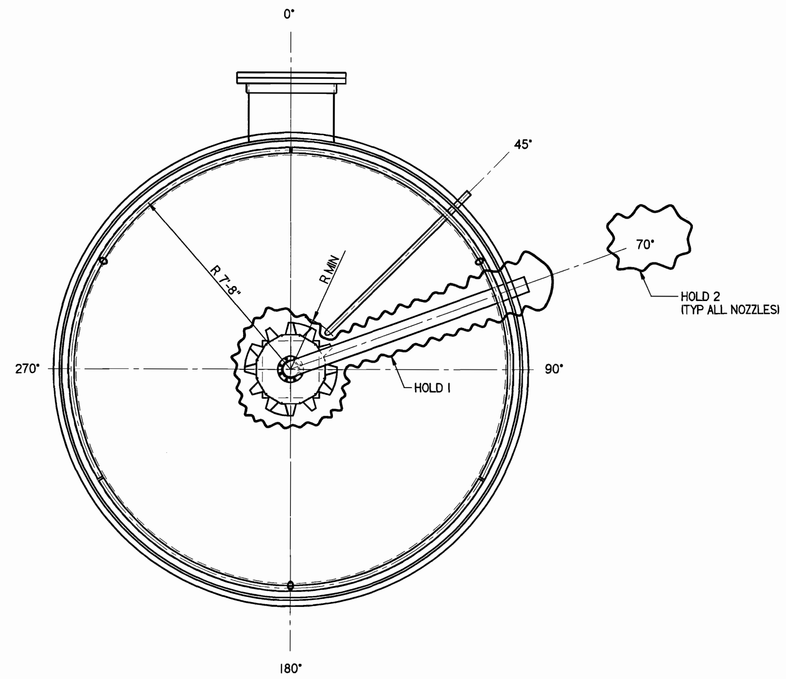

SECTION B-B

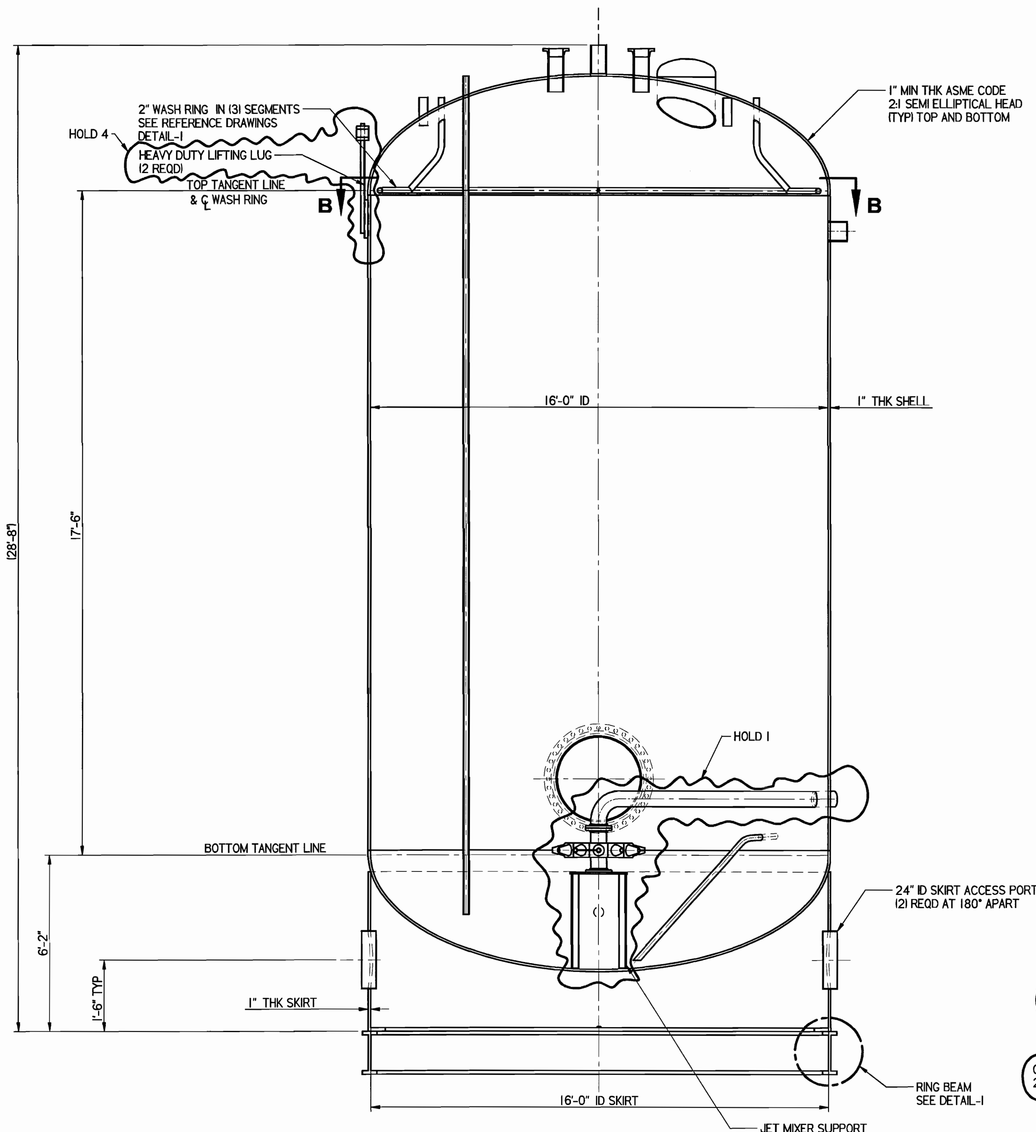

ELEVATION

SEE PLAN FOR TRUE ORIENTATION

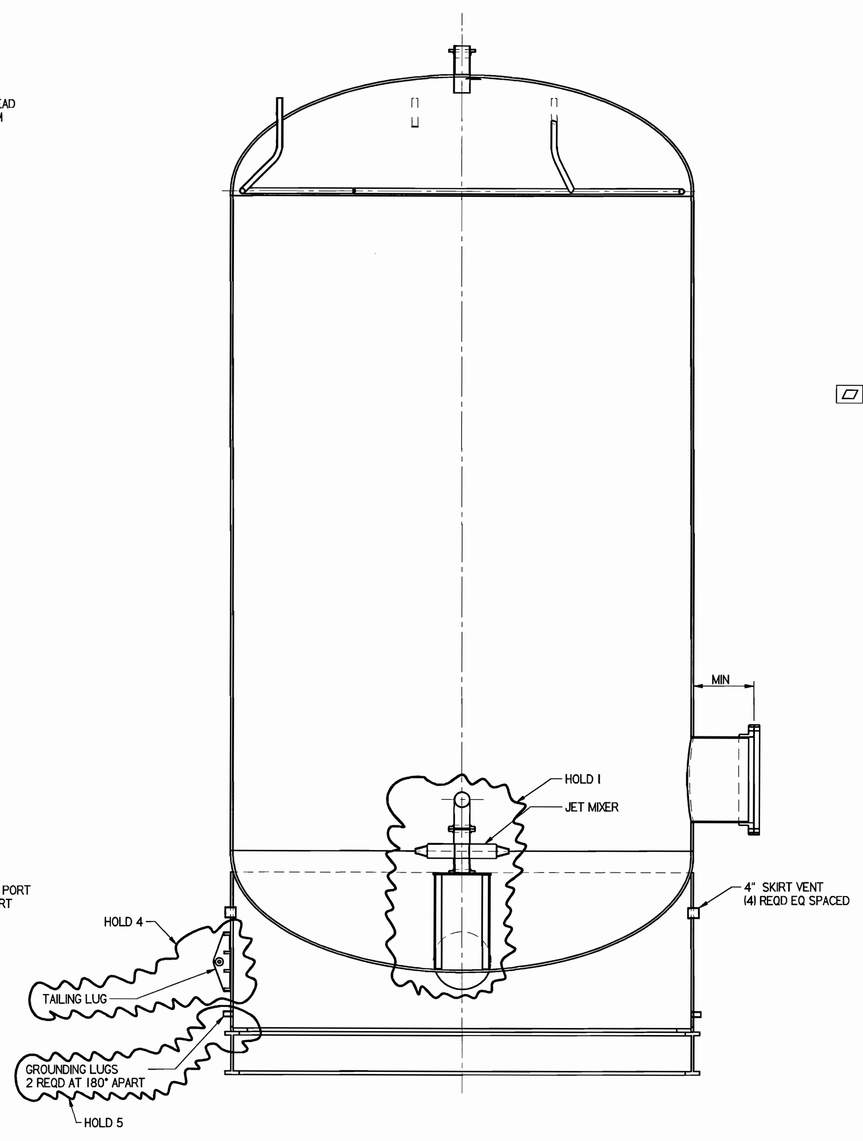

SECTION A-A

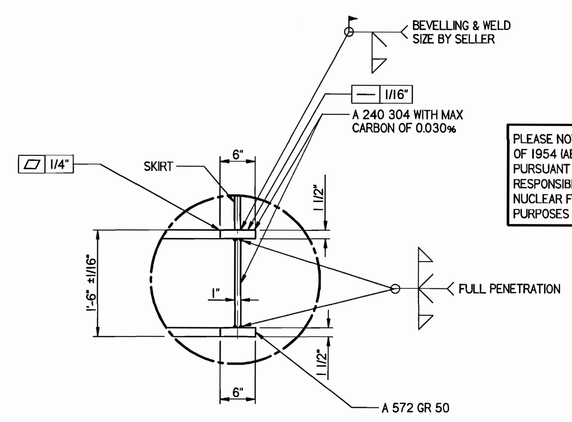

DETAIL 1

GENERAL NOTES:

1. DELETED
2. FOR DIP PIPES USE 3" BOTTOM HEAD CLEARANCE.
3. DELETED
4. SOME HIDDEN LINES OMITTED FOR CLARITY.
5. RING BEAM TO BE SHIPPED AHEAD OF VESSEL TO JOB SITE FOR INSTALLATION BY OTHERS.
6. SELLER TO PROVIDE INTERNAL PIPE SUPPORTS AND JET MIXER SUPPORTS.
7. SPECIFICATION FOR JET MIXER ACCESS:
   - CONNECTION TYPE: FLANGED CONNECTION (WITH BLIND FLANGE, DAVIT, BOLTS, NUTS, AND GASKET) PER ASME B16.47 SERIES A / FF / 150# / WN
   - FLANGE MATERIAL: SA 182 F304 WITH MAX. CARBON OF 0.030%
   - BOLT MATERIAL: AUSTENITIC SS TYPE 304L
   - GASKET MATERIAL: SPIRAL WOUND, 304L WINDING WITH FLEXIBLE GRAPHITE FILLER
   - DAVIT MATERIAL: AUSTENITIC SS TYPE 304L
   - DAVIT DESIGN BY SELLER
8. JET MIXER SHALL BE PROVIDED BY BUYER FOR SELLER TO INSTALL .
9. SELLER SHALL PROVIDE AND INSTALL JET MIXER PIPE CONNECTION FLANGE, GASKET, BOLTS AND NUTS.
10. DELETED.

HOLDS:

1. FINAL INTERNALS DESIGN, PENDING CONFIRMATION ON THE SELECTED MIXER.
2. FINAL NOZZLE SIZES, PENDING FINAL SIZING BY SYSTEM.
3. LOCATION OF NOZZLES AND NAMEPLATE, PENDING FINAL DESIGN BY PLANT DESIGN.
4. LOCATION OF LIFTING LUGS AND TAILING LUG, PENDING REVIEW BY CONSTRUCTION.
5. LOCATION OF GROUNDING LUGS, PENDING REVIEW BY ELECTRICAL.
6. DELETED
7. DELETED

PLEASE NOTE THAT SOURCE, SPECIAL NUCLEAR AND BYPRODUCT MATERIALS, AS DEFINED IN THE ATOMIC ENERGY ACT OF 1954 (AEA), ARE REGULATED AT THE U.S. DEPARTMENT OF ENERGY (DOE) FACILITIES EXCLUSIVELY BY DOE ACTING PURSUANT TO ITS AEA AUTHORITY. DOE ASSERTS, THAT PURSUANT TO THE AEA, IT HAS SOLE AND EXCLUSIVE RESPONSIBILITY AND AUTHORITY TO REGULATE SOURCE, SPECIAL NUCLEAR, AND BYPRODUCT MATERIALS AT DOE-OWNED NUCLEAR FACILITIES. INFORMATION CONTAINED HEREIN ON RADIONUCLIDES IS PROVIDED FOR PROCESS DESCRIPTION PURPOSES ONLY.

THIS DRAWING TO BE READ IN CONJUNCTION WITH MECHANICAL DATA SHEET No 24590-PTF-MVD-RLD-P0006

REFERENCE DRAWINGS

DWG NO	REV	TITLE
24590-PTF-M6-RLD-P0003	0	P&ID
24590-WTP-MV-M59T-00001	1	PRESSURE VESSEL TOLERANCES STANDARD DETAILS
24590-WTP-MV-M59T-00011	1	WASH RINGS STANDARD DETAILS
24590-WTP-MV-M59T-00016001	2	VESSEL CONNECTIONS STANDARD DETAILS SHT 1 OF 2
24590-WTP-MV-M59T-00016002	1	VESSEL CONNECTIONS STANDARD DETAILS SHT 2 OF 2
24590-WTP-MV-M59T-00016003	0	VESSEL CONNECTIONS STANDARD DETAILS SHT 3 OF 3
24590-WTP-MV-M59T-00017	1	VESSEL INSPECTION MANWAY STANDARD DETAILS
24590-WTP-MV-M59T-00012	1	GROUNDING LUG STANDARD DETAILS
24590-WTP-MV-M59T-00009	1	LIFTING LUG STANDARD DETAILS
24590-WTP-MV-M59T-00010	1	TAILING LUG STANDARD DETAILS
24590-WTP-MV-M59T-00018	1	VESSEL NAMEPLATE STANDARD DETAILS

MARK W. HOBBMANN, STATE OF WASHINGTON, 36309, REGISTERED PROFESSIONAL ENGINEER — 2/24/04
EXPIRES 12/16/04

REVISION HISTORY

REV	DESCRIPTION	ORG	CHKD	RVWD	APVD	DATE
0	ISSUED FOR PERMITTING USE					2/24/04

ISSUED BY RPP-WTP PDC — INIT / DATE — ISSUE STAMP

PROJECT No.	24590	
SITE	HANFORD	
AREA	200E	
BUILDING No.	10	

	BY	DATE
ORIGINATOR		2/23/04
CHECKER		2/23/04
APPROVER		2/24/04
REVIEWER		2/23/04

CONTENT APPLICABLE TO ALARA? ☐ YES ☐ NO
ADR NO. REV:

RIVER PROTECTION PROJECT
WASTE TREATMENT PLANT
2435 STEVENS CENTER PLACE
RICHLAND, WA 99352

CONTRACT No: DE-AC27-01RV14136

EQUIPMENT ASSEMBLY
ALKALINE EFFLUENT VESSEL
RLD-VSL-00017B

SCALE: NONE

24590-PTF-MV-RLD-P0002

REV 0

RV0216895

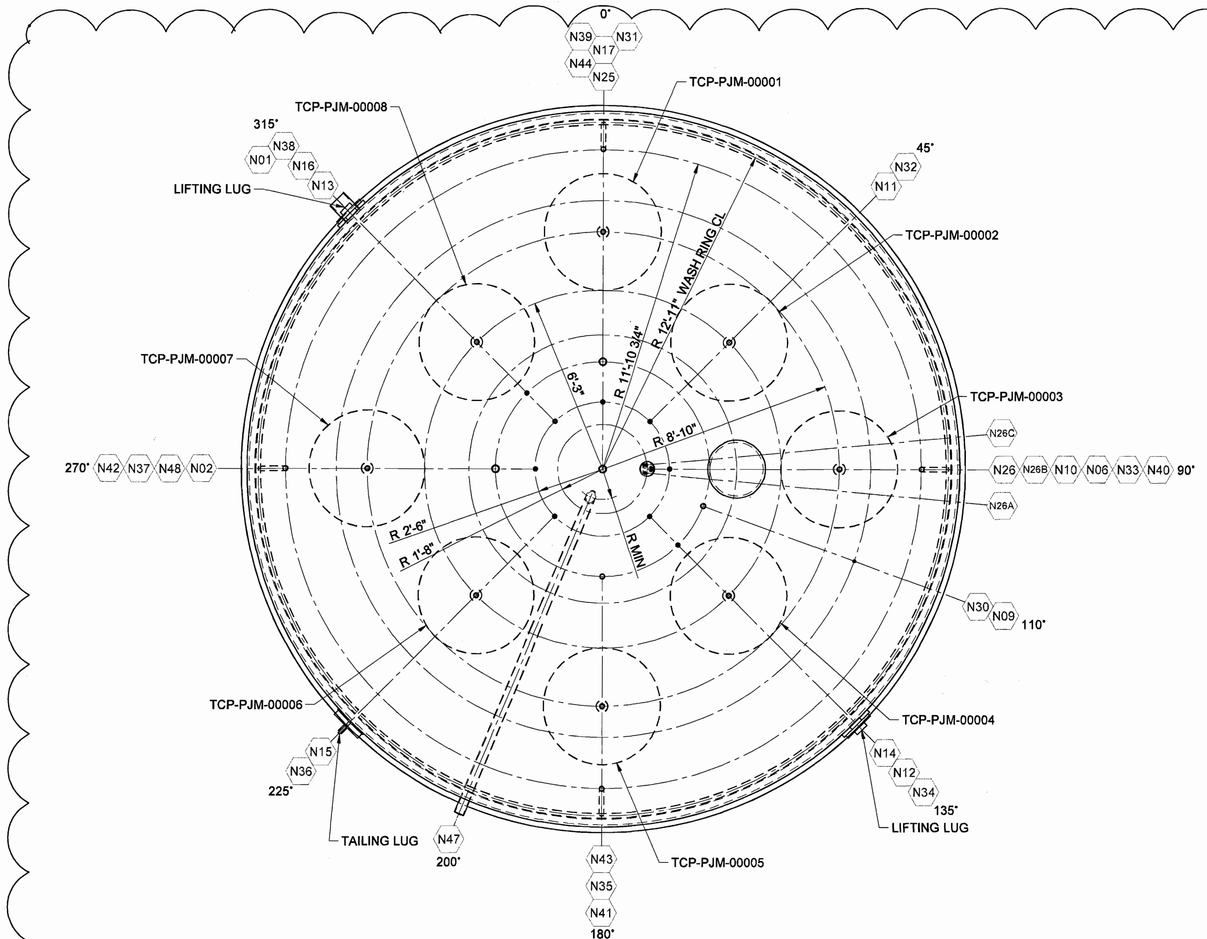

PLAN

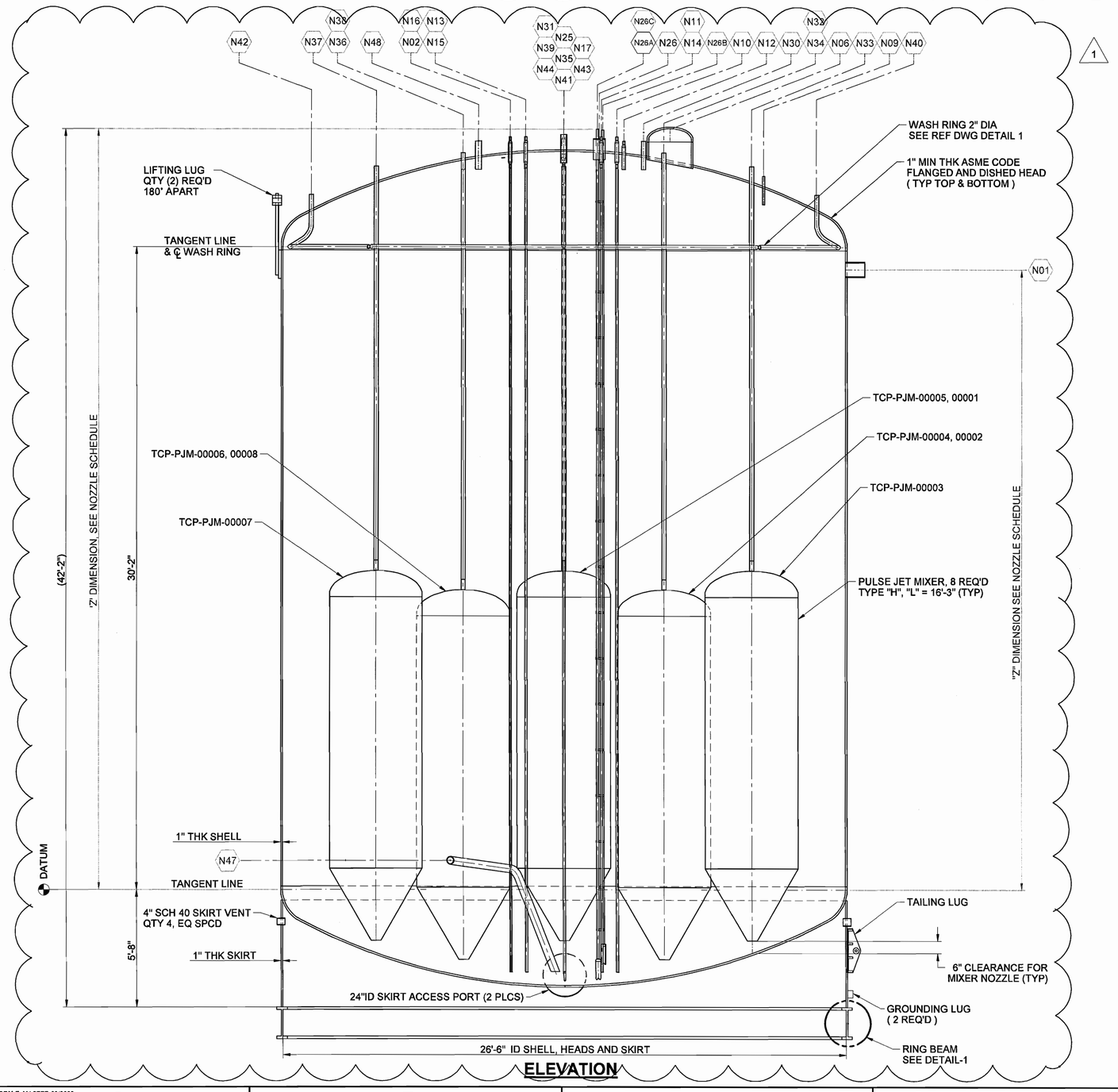

ELEVATION

NOZZLE	SIZE	SCHED/WALL	SERVICE/REMARKS	Z DIM	DETREF	CONNECTION
N01	8"	80S	OVERFLOW	29'-2"	24590-WTP-MV-M59T-00016001 DET 1	8"-40S
N02	2"	160S	INLET WITH DIP PIPE	TBD	24590-WTP-MV-M59T-00016001 DET 3	2"-40S
N06	24"ID	1/2" PLATE	MANWAY	TBD	24590-WTP-MV-M59T-00017 DET 1	CAPPED
N09	2"	80S	INLET	TBD	24590-WTP-MV-M59T-00016001 DET 2	2"-40S
N10	2"OD x 1"	160S	SPARE WITH DIP PIPE	TBD	24590-WTP-MV-M59T-00016001 DET 7	1"-40S CAPPED
N11	2"	80S	SPARE	TBD	24590-WTP-MV-M59T-00016001 DET 2	CAPPED
N12	2"OD	SEE DETAIL	SPARE	TBD	24590-WTP-MV-M59T-00016001 DET 5	1"-40S CAPPED
N13	2"OD	SEE DETAIL	SPARE	TBD	24590-WTP-MV-M59T-00016001 DET 5	1"-40S CAPPED
N14	2"OD x 1"	160S	SPARE WITH DIP PIPE	TBD	24590-WTP-MV-M59T-00016001 DET 7	1"-40S CAPPED
N15	2"OD x 1"	160S	SPARE WITH DIP PIPE	TBD	24590-WTP-MV-M59T-00016001 DET 7	1"-40S CAPPED
N16	2"OD x 1"	160S	SPARE WITH DIP PIPE	TBD	24590-WTP-MV-M59T-00016001 DET 7	1"-40S CAPPED
N17	2"OD x 1"	SEE DETAIL	TEMPERATURE	TBD	24590-WTP-MV-M59T-00007 DETAIL 1	3/4"-10S
N25	8"	80S	VENT	35'-9"	24590-WTP-MV-M59T-00016001 DET 1	3"-40S
N26	6"	80S	INSTRUMENTATION	35'-10"	24590-WTP-MV-M59T-00016003 DET 26	N/A
N26A	1"	160S	BALANCE (REFERENCE)	36'-4"	24590-WTP-MV-M59T-00016003 DET 26	1/2"-40S
N26B	1"	160S	DENSITY	36'-5"	24590-WTP-MV-M59T-00016003 DET 26	1/2"-40S
N26C	1"	160S	LEVEL	36'-6"	24590-WTP-MV-M59T-00016003 DET 26	1/2"-40S
N30	2"	80S	INLET	TBD	24590-WTP-MV-M59T-00016001 DET 2	2"-40S
N31	2"	160S	AIR/VACUUM TO TCP-PJM-00001	TBD	24590-WTP-MV-M59T-00016001 DET 3	2"-40S
N32	2"	160S	AIR/VACUUM TO TCP-PJM-00002	TBD	24590-WTP-MV-M59T-00016001 DET 3	2"-40S
N33	2"	160S	AIR/VACUUM TO TCP-PJM-00003	TBD	24590-WTP-MV-M59T-00016001 DET 3	2"-40S
N34	2"	160S	AIR/VACUUM TO TCP-PJM-00004	TBD	24590-WTP-MV-M59T-00016001 DET 3	2"-40S
N35	2"	160S	AIR/VACUUM TO TCP-PJM-00005	TBD	24590-WTP-MV-M59T-00016001 DET 3	2"-40S
N36	2"	160S	AIR/VACUUM TO TCP-PJM-00006	TBD	24590-WTP-MV-M59T-00016001 DET 3	2"-40S
N37	2"	160S	AIR/VACUUM TO TCP-PJM-00007	TBD	24590-WTP-MV-M59T-00016001 DET 3	2"-40S
N38	2"	160S	AIR/VACUUM TO TCP-PJM-00008	TBD	24590-WTP-MV-M59T-00016001 DET 3	2"-40S
N39	2"	80S	INLET TO WASH RING	TBD	24590-WTP-MV-M59T-00016001 DET 3	2"-40S
N40	2"	80S	INLET TO WASH RING	TBD	24590-WTP-MV-M59T-00016001 DET 3	2"-40S
N41	2"	80S	INLET TO WASH RING	TBD	24590-WTP-MV-M59T-00016001 DET 3	2"-40S
N42	2"	80S	INLET TO WASH RING	TBD	24590-WTP-MV-M59T-00016001 DET 3	2"-40S
N43	1 1/2"	80S	INLET	TBD	24590-WTP-MV-M59T-00016001 DET 2	1 1/2"-40S
N44	3"	80S	INLET	TBD	24590-WTP-MV-M59T-00016001 DET 2	3"-40S
N47	4"	80S	OUTLET WITH DIP PIPE	TBD	24590-WTP-MV-M59T-00016001 DET 4	4"-40S
N48	3"	80S	SAMPLE RETURN	TBD	24590-WTP-MV-M59T-00016001 DET 2	3"-40S

GENERAL NOTES:

1. FOR DISTANCE OF DIP PIPES TO BOTTOM HEAD USE 2" CLEARANCE UNLESS OTHERWISE SPECIFIED.
2. "Z" DIMENSION FOR NOZZLES MEASURED FROM CL OF NOZZLE FACE.
3. SELLER TO PROVIDE INTERNAL PIPE SUPPORTS.
4. NOZZLES WITH TBD IN NOZZLE SCHEDULE "Z" DIM SHALL HAVE 12" PROJECTION OUTSIDE SHELL OR HEAD.
5. NOZZLE REINFORCEMENT METHODS FOR THIS VESSEL MUST MEET REQUIREMENTS PER PARAGRAPHS 3.8.3 AND 6.2.1 OF SPECIFICATION NO. 24590-WTP-3PS-MV00-TP001. NOZZLE REINFORCING PADS SHALL NOT BE USED.
6. FOR NDE REQUIREMENTS FOR NOZZLE ATTACHMENT WELDS, REFER TO MECHANICAL DATA SHEET REFERENCED BELOW.
7. REFER TO 24590-PTF-M6-TCP-P0001 AND 24590-PTF-M6-TCP-P0002 FOR INFORMATION ON THE NOZZLE CONFIGURATION SHOWN IN PHANTOM.
8. REVISED/ADDED/DELETED
   a) DELETED ALL HOLDS
   b) REVISED DETAIL 1
   c) REVISED NOTE 6
   d) ADDED NOTE 7
   e) DELETED REV. NUMBERS FROM REFERENCE DRAWING TABLE

PLEASE NOTE THAT SOURCE, SPECIAL NUCLEAR AND BYPRODUCT MATERIALS, AS DEFINED IN THE ATOMIC ENERGY ACT OF 1954 (AEA), ARE REGULATED AT THE U.S. DEPARTMENT OF ENERGY (DOE) FACILITIES EXCLUSIVELY BY DOE ACTING PURSUANT TO ITS AEA AUTHORITY. DOE ASSERTS, THAT PURSUANT TO THE AEA, IT HAS SOLE AND EXCLUSIVE RESPONSIBILITY AND AUTHORITY TO REGULATE SOURCE, SPECIAL NUCLEAR, AND BYPRODUCT MATERIALS AT DOE-OWNED NUCLEAR FACILITIES. INFORMATION CONTAINED HEREIN ON RADIONUCLIDES IS PROVIDED FOR PROCESS DESCRIPTION PURPOSES ONLY.

THIS DRAWING TO BE READ IN CONJUNCTION WITH THE MECHANICAL DATA SHEET No 24590-PTF-MVD-TCP-P0002

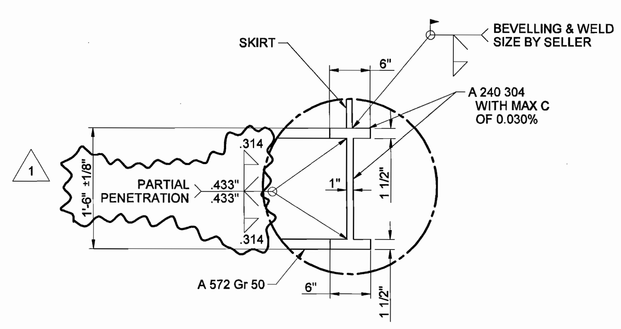

DETAIL 1

REFERENCE DRAWINGS		
DWG NO	REV	TITLE
24590-PTF-M6-TCP-P0001		P&ID - PTF TREATED LAW CONCENTRATE STORAGE
		SYSTEM TCP-VSL-00001
24590-PTF-M6-TCP-P0002		P&ID - PTF TREATED LAW CONCENTRATE STORAGE
		UTILITY SERVICES - PSA RACK
24590-WTP-MV-M59T-00001		PRESSURE VESSEL TOLERANCES STANDARD DETAILS
24590-WTP-MV-M59T-00004		PULSE JET MIXERS STANDARD DETAILS
24590-WTP-MV-M59T-00007		THERMOWELL CONNECTION STANDARD DETAILS
24590-WTP-MV-M59T-00009		LIFTING LUG STANDARD DETAILS
24590-WTP-MV-M59T-00010		TAILING LUG STANDARD DETAILS
24590-WTP-MV-M59T-00011		WASH RINGS STANDARD DETAILS
24590-WTP-MV-M59T-00012		GROUNDING LUG STANDARD DETAILS
24590-WTP-MV-M59T-00016001		VESSEL CONNECTIONS STANDARD DETAILS SHT 1 OF 3
24590-WTP-MV-M59T-00016002		VESSEL CONNECTIONS STANDARD DETAILS SHT 2 OF 3
24590-WTP-MV-M59T-00016003		VESSEL CONNECTIONS STANDARD DETAILS SHT 3 OF 3
24590-WTP-MV-M59T-00017		VESSEL INSPECTION MANWAY STANDARD DETAILS
24590-WTP-MV-M59T-00018		VESSEL NAMEPLATE STANDARD DETAILS

MARK W. HOFFMANN, STATE OF WASHINGTON, 030992, REGISTERED PROFESSIONAL ENGINEER — 1/26/05
EXPIRES 12/10/06

REV	DESCRIPTION	ORG	CHKD	RVWD	APVD	DATE
1	ISSUED FOR PERMITTING USE	JJ	SS	CS	MH	1/26/05
0	ISSUED FOR PERMITTING USE	JJ	SS	CS	MH	9/15/03

REVISION HISTORY

CM QUALITY LEVEL

ISSUED BY: RPP-WTP PDC

ISSUE STAMP

PROJECT No.	24590	
SITE	HANFORD	
AREA	200E	
BUILDING No.	10	
	BY	DATE
ORIGINATOR	J. JACKSON	8/12/03
CHECKER	S. SUHARTO	8/13/03
APPROVER	M. HOFFMAN	9/12/03
REVIEWER	C. SLATER	8/13/03

CONTENT APPLICABLE TO ALARA? ☒ YES ☐ NO
ADR NO. N/A REV: 1

BECHTEL

RIVER PROTECTION PROJECT
WASTE TREATMENT PLANT
2435 STEVENS CENTER PLACE
RICHLAND, WA 99352

CONTRACT No: DE-AC27-01RV14136

EQUIPMENT ASSEMBLY TREATED LAW CONCENTRATE STORAGE VESSEL TCP-VSL-00001

SCALE: NONE

24590-PTF-MV-TCP-P0002

REV 1

FORM E_MASTER 03/2003

"E" SIZE - 44x34
COMPUTER GENERATED BY SOLID EDGE-MANUAL CHANGES NOT PERMITTED

WHEN REFERENCING DRAWING AND DIM NUMBERS IN DOCUMENTS, BE SURE TO INCLUDE DASHES BETWEEN ELEMENTS

12/14/2004 8:22 AM

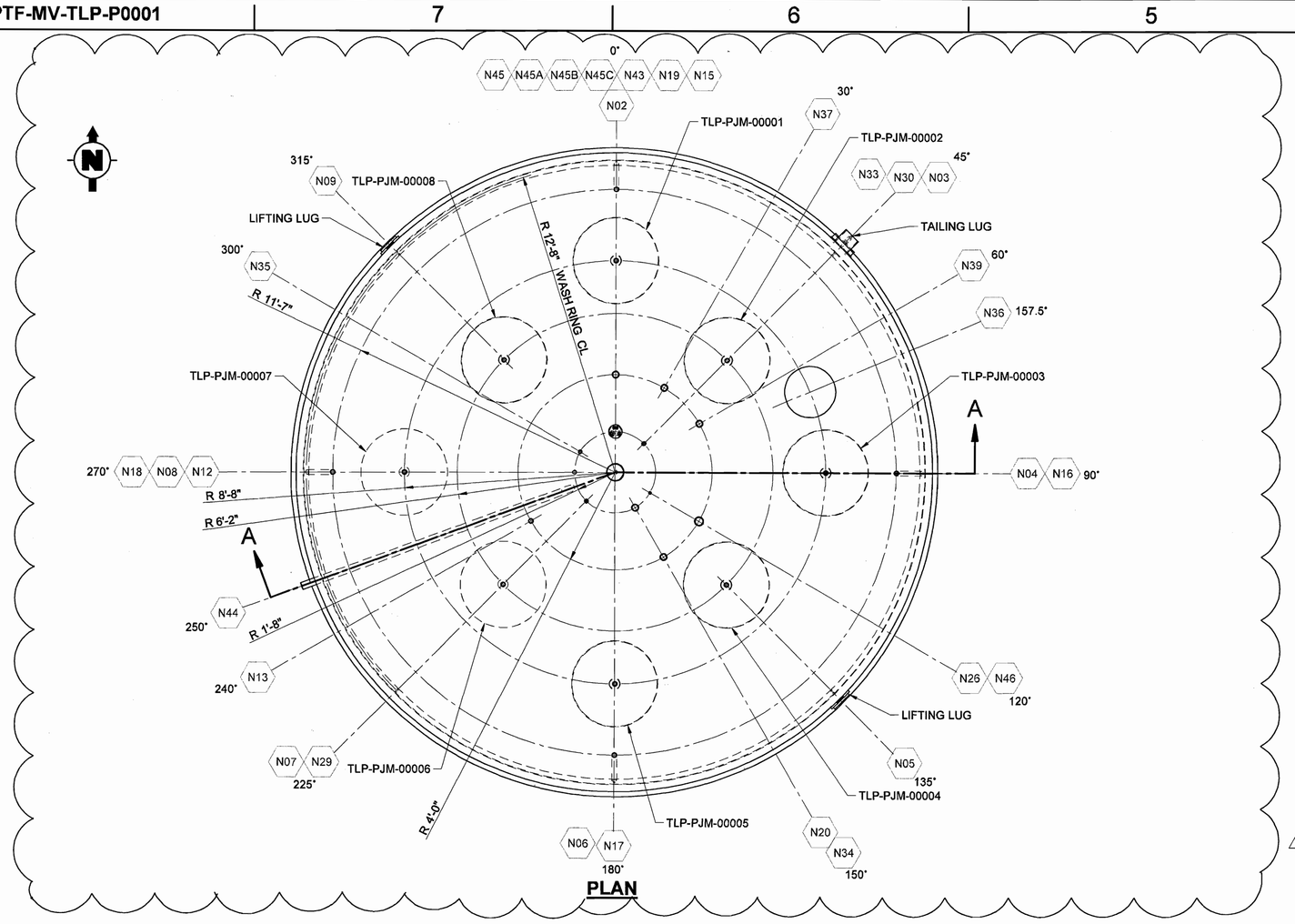

PLAN

NOZZLE	SIZE	SCHED/WALL	SERVICE/REMARKS	"Z" DIM	REF DWG/DET	CONN PIPE SIZE/SCHED
N01			DELETED			
N02	2"	160S	AIR/VACUUM TO TLP-PJM-00001	31'-0"	24590-WTP-MV-M59T-00016001 DET 3	2"-40S
N03	2"	160S	AIR/VACUUM TO TLP-PJM-00002	31'-9"	24590-WTP-MV-M59T-00016001 DET 3	2"-40S
N04	2"	160S	AIR/VACUUM TO TLP-PJM-00003	31'-0"	24590-WTP-MV-M59T-00016001 DET 3	2"-40S
N05	2"	160S	AIR/VACUUM TO TLP-PJM-00004	31'-9"	24590-WTP-MV-M59T-00016001 DET 3	2"-40S
N06	2"	160S	AIR/VACUUM TO TLP-PJM-00005	31'-0"	24590-WTP-MV-M59T-00016001 DET 3	2"-40S
N07	2"	160S	AIR/VACUUM TO TLP-PJM-00006	31'-9"	24590-WTP-MV-M59T-00016001 DET 3	2"-40S
N08	2"	160S	AIR/VACUUM TO TLP-PJM-00007	31'-0"	24590-WTP-MV-M59T-00016001 DET 3	2"-40S
N09	2"	160S	AIR/VACUUM TO TLP-PJM-00008	31'-9"	24590-WTP-MV-M59T-00016001 DET 3	2"-40S
N10			DELETED			
N11			DELETED			
N12	2"	80S	AIR PURGE	32'-6"	24590-WTP-MV-M59T-00016001 DET 1	2"-40S
N13	2"	80S	SAMPLE RETURN	32'-3"	24590-WTP-MV-M59T-00016002 DET 2	2"-80S
N15	2"	80S	INLET TO WASH RING	29'-11"	24590-WTP-MV-M59T-00016001 DET 3	2"-40S
N16	2"	80S	INLET TO WASH RING	29'-11"	24590-WTP-MV-M59T-00016001 DET 3	2"-40S
N17	2"	80S	INLET TO WASH RING	29'-11"	24590-WTP-MV-M59T-00016001 DET 3	2"-40S
N18	2"	80S	INLET TO WASH RING	29'-11"	24590-WTP-MV-M59T-00016001 DET 3	2"-40S
N19	8"	80S	VENT	32'-6"	24590-WTP-MV-M59T-00016001 DET 2	8"-40S
N20	3"	80S	SPARE	32'-3"	24590-WTP-MV-M59T-00016001 DET 2	CAPPED
N26	2"OD x 1"	SEE DETAIL	TEMPERATURE	32'-6"	24590-WTP-MV-M59T-00007 DETAIL 1	3/4"-10S
N27			DELETED			
N28			DELETED			
N29	3"	80S	SPARE	32'-6"	24590-WTP-MV-M59T-00016001 DET 2	CAPPED
N30	2"	80S	SPARE	32'-6"	24590-WTP-MV-M59T-00016001 DET 2	CAPPED
N32			DELETED			
N33	8"	80S	OVERFLOW	26'-4 1/2"	24590-WTP-MV-M59T-00016001 DET 2	8"-40S
N34	3"	80S	INLET	32'-3"	24590-WTP-MV-M59T-00016001 DET 2	3"-40S
N35	2"OD x 1"	160S	INLET W/DIP PIPE	32'-6"	24590-WTP-MV-M59T-00016001 DET 7	1"-40S
N36	24"ID	1/2"	MANWAY	31'-9"	24590-WTP-MV-M59T-00017DET 1	CAPPED
N37	3"	80S	INLET	32'-3"	24590-WTP-MV-M59T-00016001 DET 2	3"-40S
N39	3"	80S	INLET	32'-3"	24590-WTP-MV-M59T-00016001 DET 2	3"-40S
N40			DELETED			
N41			DELETED			
N43	3"	80S	INLET	32'-3"	24590-WTP-MV-M59T-00016001 DET 2	3"-40S
N44	2"	160S	OUTLET W/DIP PIPE	6"	24590-WTP-MV-M59T-00016001 DET 4	2"-80S
N45	6"	80S	INSTRUMENTATION	32'-6"	24590-WTP-MV-M59T-00016003 DET 26	NA
N45A	1"	160S	BALANCE	32'-9"	24590-WTP-MV-M59T-00016003 DET 26	1"-40S
N45B	1"	160S	DENSITY	33'-0"	24590-WTP-MV-M59T-00016003 DET 26	1"-40S
N45C	1"	160S	LEVEL	33'-1"	24590-WTP-MV-M59T-00016003 DET 26	1"-40S
N46	4"	80S	INLET	32'-3"	24590-WTP-MV-M59T-00016001 DET 2	4"-40S

GENERAL NOTES:

1. FOR DISTANCE OF DIP PIPES TO BOTTOM HEAD USE 2" CLEARANCE UNLESS OTHERWISE SPECIFIED.
2. "Z" DIMENSION FOR NOZZLES MEASURED FROM CL OF NOZZLE FACE.
3. SELLER TO PROVIDE INTERNAL PIPE SUPPORTS.
4. NOZZLE REINFORCEMENT METHODS FOR THIS VESSEL MUST MEET REQUIREMENTS PER PARAGRAPHS 3.8.3 AND 6.2.1 OF SPECIFICATION NO. 24590-WTP-3PS-MV00-TP001. NOZZLE REINFORCING PADS SHALL NOT BE USED.
5. FOR NDE REQUIREMENTS FOR NOZZLE ATTACHMENT WELDS, REFER TO MECHANICAL DATA SHEET REFERENCED BELOW.
6. DELETED
7. REFER TO 24590-PTF-M6-TLP-P0001 AND 24590-PTF-M6-TLP-P0005 FOR INFORMATION ON THE NOZZLE CONFIGURATION SHOWN IN PHANTOM.
8. REVISED/ADDED/DELETED
   a) DELETED ALL HOLDS
   b) REVISED DETAIL 1
   c) REVISED NOTE 5
   d) ADDED NOTE 7
   e) DELETED REV. NUMBERS FROM REFERENCE DRAWING TABLE

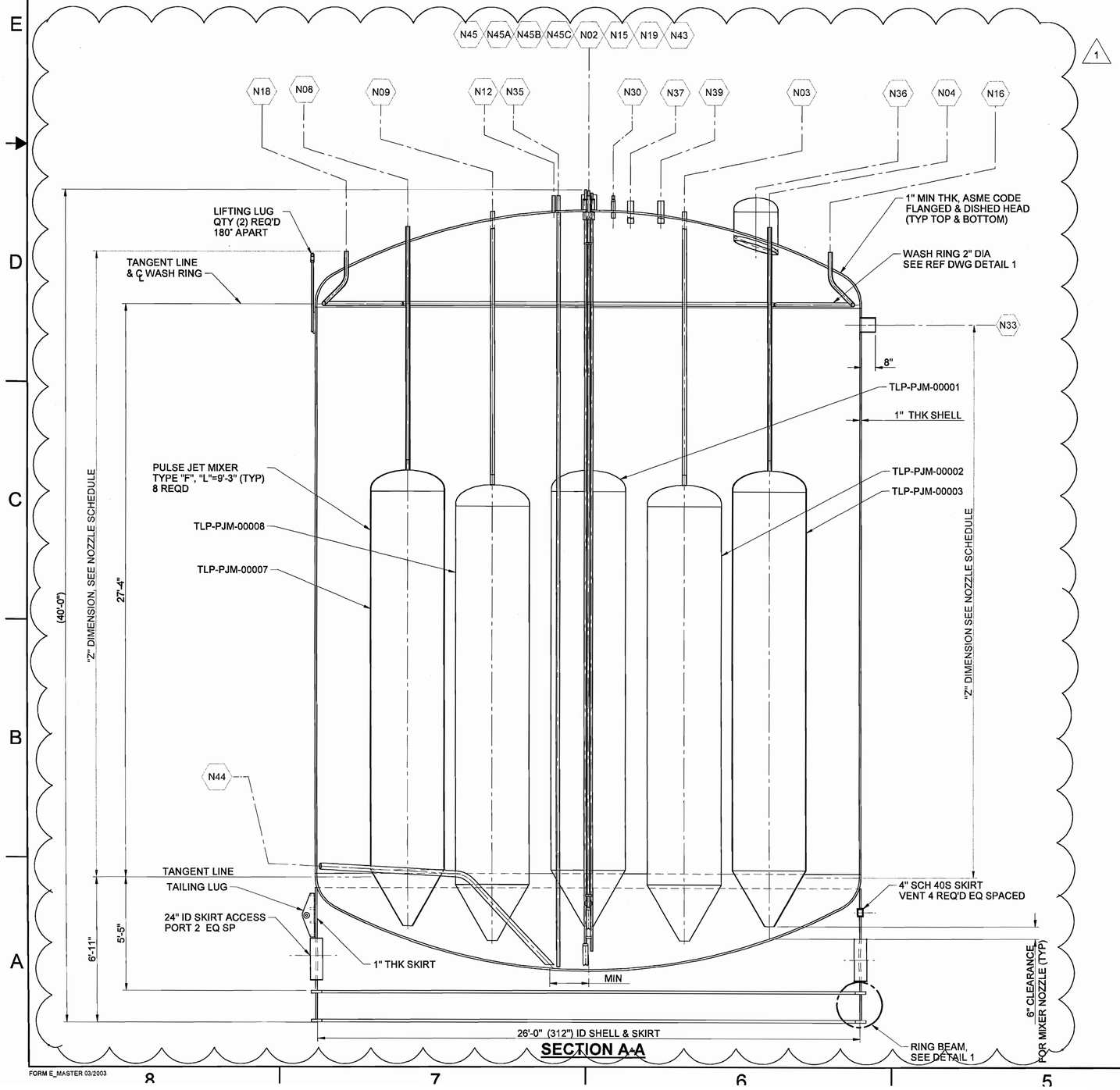

SECTION A-A

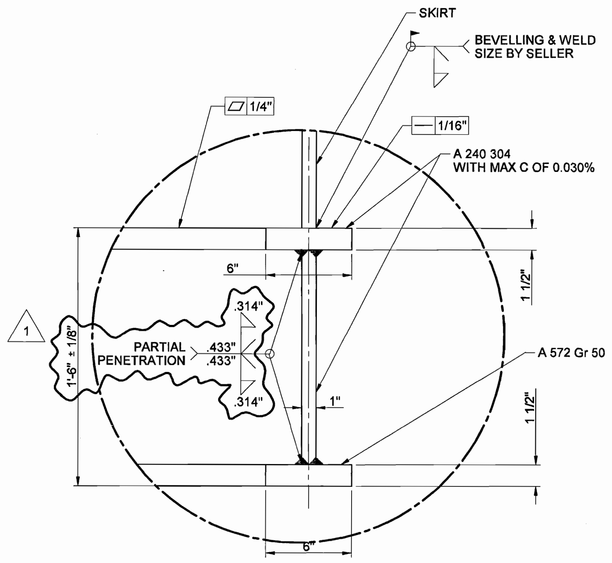

DETAIL 1

PLEASE NOTE THAT SOURCE, SPECIAL NUCLEAR AND BYPRODUCT MATERIALS, AS DEFINED IN THE ATOMIC ENERGY ACT OF 1954 (AEA), ARE REGULATED AT THE U.S. DEPARTMENT OF ENERGY (DOE) FACILITIES EXCLUSIVELY BY DOE ACTING PURSUANT TO ITS AEA AUTHORITY. DOE ASSERTS, THAT PURSUANT TO THE AEA, IT HAS SOLE AND EXCLUSIVE RESPONSIBILITY AND AUTHORITY TO REGULATE SOURCE, SPECIAL NUCLEAR, AND BYPRODUCT MATERIALS AT DOE-OWNED NUCLEAR FACILITIES. INFORMATION CONTAINED HEREIN ON RADIONUCLIDES IS PROVIDED FOR PROCESS DESCRIPTION PURPOSES ONLY.

THIS DRAWING TO BE READ IN CONJUNCTION WITH THE MECHANICAL DATA SHEET No 24590-PTF-MVD-TLP-P0001

REFERENCE DRAWINGS		
DWG NO	REV	TITLE
24590-PTF-M6-TLP-P0001		P&ID - PTF TREATED LAW EVAPORATION PROCESS SYSTEM LAW SBS CONDENSATE RECEIPT TLP-VSL-00009A & 9B (Q)
24590-PTF-M6-TLP-P0005		P&ID - PTF TREATED LAW EVAPORATION UTILITY SERVICES PSA RACK (Q)
24590-PTF-M6-TLP-P0007		P&ID - PTF TREATED LAW EVAPORATION UTILITY SERVICES - PLANT WASH RACK (Q)
24590-WTP-MV-M59T-00001		PRESSURE VESSEL TOLERANCES STANDARD DETAILS
24590-WTP-MV-M59T-00004		PULSE JET MIXERS STANDARD DETAILS
24590-WTP-MV-M59T-00007		THERMOWELL CONNECTION STANDARD DETAILS
24590-WTP-MV-M59T-00009		LIFTING LUGS STANDARD DETAILS
24590-WTP-MV-M59T-00010		TAILING LUG STANDARD DETAILS
24590-WTP-MV-M59T-00011		WASH RINGS STANDARD DETAILS
24590-WTP-MV-M59T-00016001		VESSEL CONNECTIONS STANDARD DETAILS SHT 1 OF 3
24590-WTP-MV-M59T-00016002		VESSEL CONNECTIONS STANDARD DETAILS SHT 2 OF 3
24590-WTP-MV-M59T-00016003		VESSEL CONNECTIONS STANDARD DETAILS SHT 3 OF 3
24590-WTP-MV-M59T-00017		VESSEL INSPECTION MANWAY STANDARD DETAILS
24590-WTP-MV-M59T-00018		VESSEL NAMEPLATE STANDARD DETAILS

MARK W. HOFFMAN, STATE OF WASHINGTON, 00309252, REGISTERED PROFESSIONAL ENGINEER — 1/26/05 — EXPIRES 12/10/06

CM QUALITY LEVEL

REV	DESCRIPTION	ORG	CHKD	RVWD	APVD	DATE
1	ISSUED FOR PERMITTING USE					1/26/05
0	ISSUED FOR PERMITTING USE	KB	CH	CS	MH	3/25/04

REVISION HISTORY

ISSUED BY RPP-WTP PDC

PROJECT No.	24590	
SITE	HANFORD	
AREA	200E	
BUILDING No.	10	
	BY	DATE
ORIGINATOR	K. BRIGHTMAN	3/18/04
CHECKER	C. CHUNG	3/18/04
APPROVER	M. HOFFMAN	3/25/04
REVIEWER	C. SLATER	3/18/04

ISSUE STAMP

CONTENT APPLICABLE TO ALARA? [XX] YES [ ] NO

ADR NO. N/A REV:

BECHTEL

RIVER PROTECTION PROJECT
WASTE TREATMENT PLANT
2435 STEVENS CENTER PLACE
RICHLAND, WA 99352

CONTRACT No: DE-AC27-01RV14136

EQUIPMENT ASSEMBLY LAW SBS CONDENSATE RECEIPT VESSEL TLP-VSL-00009A

SCALE: NONE

24590-PTF-MV-TLP-P0001

REV 1

FORM E_MASTER 03/2003

"E" SIZE - 44x34

COMPUTER GENERATED BY SOLID EDGE

WHEN REFERENCING DRAWING AND DIM NUMBERS IN DOCUMENTS, BE SURE TO INCLUDE

12/14/2004 8:28 AM

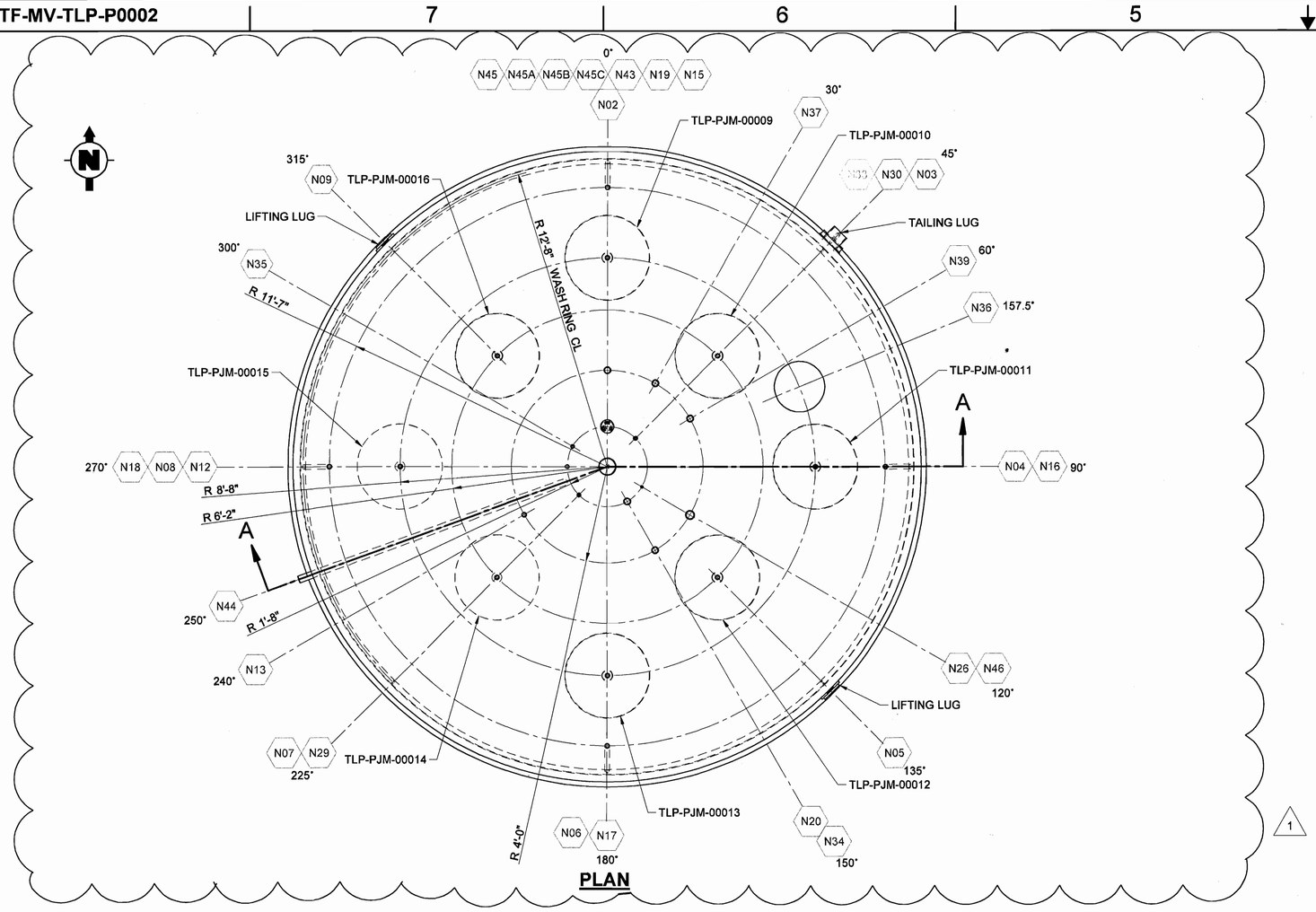

PLAN

NOZZLE	SIZE	SCHED/WALL	SERVICE/REMARKS	"Z" DIM	REF DWG/DET	CONN PIPE SIZE/SCHED
N01			DELETED			
N02	2"	160S	AIR/VACUUM TO TLP-PJM-00009	31'-0"	24590-WTP-MV-M59T-00016001 DET 3	2"-40S
N03	2"	160S	AIR/VACUUM TO TLP-PJM-00010	31'-9"	24590-WTP-MV-M59T-00016001 DET 3	2"-40S
N04	2"	160S	AIR/VACUUM TO TLP-PJM-00011	31'-0"	24590-WTP-MV-M59T-00016001 DET 3	2"-40S
N05	2"	160S	AIR/VACUUM TO TLP-PJM-00012	31'-9"	24590-WTP-MV-M59T-00016001 DET 3	2"-40S
N06	2"	160S	AIR/VACUUM TO TLP-PJM-00013	31'-0"	24590-WTP-MV-M59T-00016001 DET 3	2"-40S
N07	2"	160S	AIR/VACUUM TO TLP-PJM-00014	31'-9"	24590-WTP-MV-M59T-00016001 DET 3	2"-40S
N08	2"	160S	AIR/VACUUM TO TLP-PJM-00015	31'-0"	24590-WTP-MV-M59T-00016001 DET 3	2"-40S
N09	2"	160S	AIR/VACUUM TO TLP-PJM-00016	31'-9"	24590-WTP-MV-M59T-00016001 DET 3	2"-40S
N10			DELETED			
N11			DELETED			
N12	2"	80S	AIR PURGE	32'-6"	24590-WTP-MV-M59T-00016001 DET 1	2"-40S
N13	2"	80S	SPARE	32'-3"	24590-WTP-MV-M59T-00016002 DET 2	CAPPED
N15	2"	80S	INLET TO WASH RING	29'-11"	24590-WTP-MV-M59T-00016001 DET 3	2"-40S
N16	2"	80S	INLET TO WASH RING	29'-11"	24590-WTP-MV-M59T-00016001 DET 3	2"-40S
N17	2"	80S	INLET TO WASH RING	29'-11"	24590-WTP-MV-M59T-00016001 DET 3	2"-40S
N18	2"	80S	INLET TO WASH RING	29'-11"	24590-WTP-MV-M59T-00016001 DET 3	2"-40S
N19	8"	80S	VENT	32'-6"	24590-WTP-MV-M59T-00016001 DET 2	8"-40S
N20	3"	80S	SPARE	32'-3"	24590-WTP-MV-M59T-00016001 DET 2	CAPPED
N26	2"OD x 1"	SEE DETAIL	TEMPERATURE	32'-6"	24590-WTP-MV-M59T-00007 DETAIL 1	3/4"-10S
N27			DELETED			
N28			DELETED			
N29	3"	80S	SPARE	32'-6"	24590-WTP-MV-M59T-00016001 DET 2	CAPPED
N30	2"	80S	SPARE	32'-6"	24590-WTP-MV-M59T-00016001 DET 2	CAPPED
N32			DELETED			
N33	8"	80S	OVERFLOW	26'-4 1/2"	24590-WTP-MV-M59T-00016001 DET 2	8"-40S
N34	3"	80S	INLET	32'-3"	24590-WTP-MV-M59T-00016001 DET 2	3"-40S
N35	2"OD x 1"	160S	INLET W/DIP PIPE	32'-6"	24590-WTP-MV-M59T-00016001 DET 7	1"-40S
N36	24"ID	1/2"	MANWAY	31'-9"	24590-WTP-MV-M59T-00017DET 1	CAPPED
N37	3"	80S	INLET	32'-3"	24590-WTP-MV-M59T-00016001 DET 2	3"-40S
N39	3"	80S	INLET	32'-3"	24590-WTP-MV-M59T-00016001 DET 2	3"-40S
N40			DELETED			
N41			DELETED			
N43	3"	80S	INLET	32'-3"	24590-WTP-MV-M59T-00016001 DET 2	3"-40S
N44	2"	80S	OUTLET W/DIP PIPE	6"	24590-WTP-MV-M59T-00016001 DET 4	2"-80S
N45	6"	80S	INSTRUMENTATION	32'-6"	24590-WTP-MV-M59T-00016003 DET 26	NA
N45A	1"	160S	BALANCE	32'-9"	24590-WTP-MV-M59T-00016003 DET 26	1"-40S
N45B	1"	160S	DENSITY	33'-0"	24590-WTP-MV-M59T-00016003 DET 26	1"-40S
N45C	1"	160S	LEVEL	33'-1"	24590-WTP-MV-M59T-00016003 DET 26	1"-40S
N46	4"	80S	INLET	32'-3"	24590-WTP-MV-M59T-00016001 DET 2	4"-40S

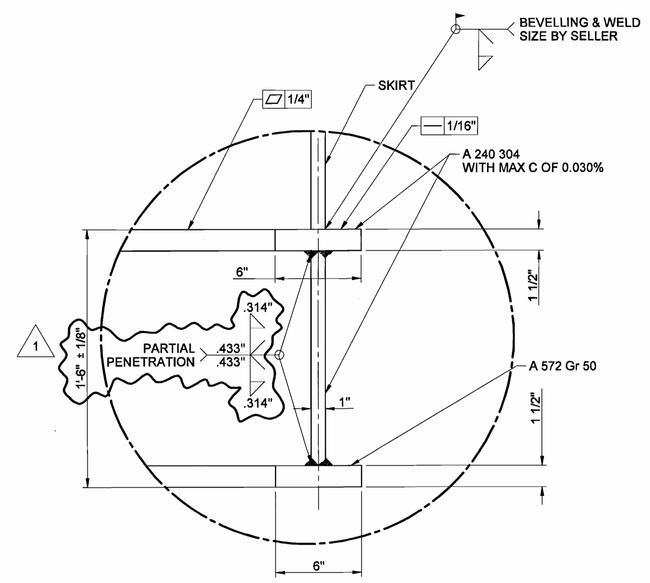

DETAIL 1

GENERAL NOTES:

1. FOR DISTANCE OF DIP PIPES TO BOTTOM HEAD USE 2" CLEARANCE UNLESS OTHERWISE SPECIFIED.
2. "Z" DIMENSION FOR NOZZLES MEASURED FROM CL OF NOZZLE FACE.
3. SELLER TO PROVIDE INTERNAL PIPE SUPPORTS.
4. NOZZLE REINFORCEMENT METHODS FOR THIS VESSEL MUST MEET REQUIREMENTS PER PARAGRAPHS 3.8.3 AND 6.2.1 OF SPECIFICATION NO. 24590-WTP-3PS-MV00-TP001. NOZZLE REINFORCING PADS SHALL NOT BE USED.
5. FOR NDE REQUIREMENTS FOR NOZZLE ATTACHMENT WELDS, REFER TO MECHANICAL DATA SHEET REFERENCED BELOW.
6. DELETED
7. REFER TO 24590-PTF-M6-TLP-P0001 AND 24590-PTF-M6-TLP-P0006 FOR INFORMATION ON THE NOZZLE CONFIGURATION SHOWN IN PHANTOM.
8. REVISED/ADDED/DELETED
   a) DELETED ALL HOLDS
   b) REVISED DETAIL 1
   c) REVISED NOTE 5
   d) ADDED NOTE 7
   e) DELETED REV. NUMBERS FROM REFERENCE DRAWING TABLE

PLEASE NOTE THAT SOURCE, SPECIAL NUCLEAR AND BYPRODUCT MATERIALS, AS DEFINED IN THE ATOMIC ENERGY ACT OF 1954 (AEA), ARE REGULATED AT THE U.S. DEPARTMENT OF ENERGY (DOE) FACILITIES EXCLUSIVELY BY DOE ACTING PURSUANT TO ITS AEA AUTHORITY. DOE ASSERTS, THAT PURSUANT TO THE AEA, IT HAS SOLE AND EXCLUSIVE RESPONSIBILITY AND AUTHORITY TO REGULATE SOURCE, SPECIAL NUCLEAR, AND BYPRODUCT MATERIALS AT DOE-OWNED NUCLEAR FACILITIES. INFORMATION CONTAINED HEREIN ON RADIONUCLIDES IS PROVIDED FOR PROCESS DESCRIPTION PURPOSES ONLY.

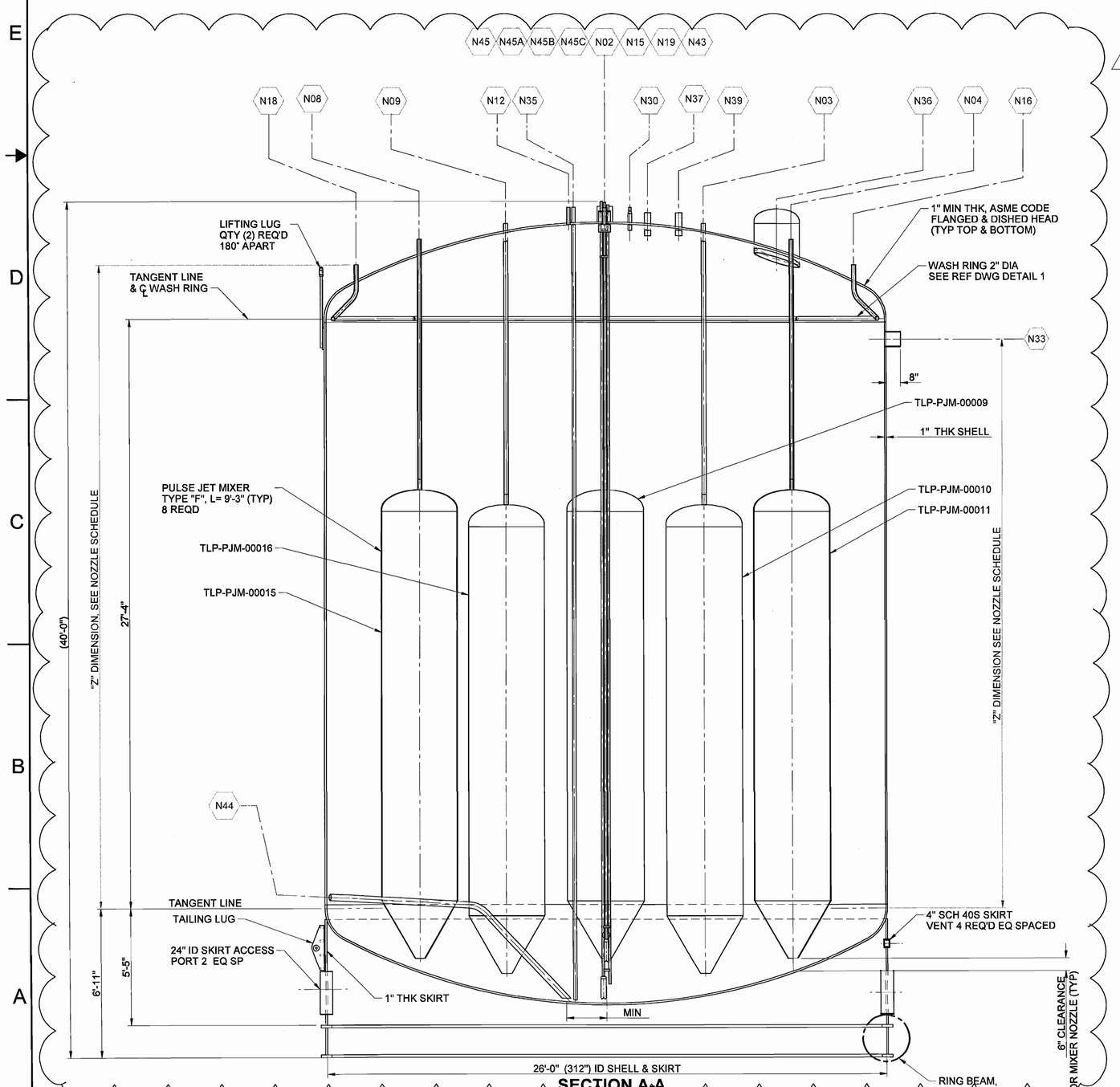

SECTION A-A

THIS DRAWING TO BE READ IN CONJUNCTION WITH THE MECHANICAL DATA SHEET No 24590-PTF-MVD-TLP-P0002

REFERENCE DRAWINGS		
DWG NO	REV	TITLE
24590-PTF-M6-TLP-P0001		P&ID - PTF TREATED LAW EVAPORATION PROCESS SYSTEM LAW SBS CONDENSATE RECEIPT TLP-VSL-00009A & 9B (Q)
24590-PTF-M6-TLP-P0005		P&ID - PTF TREATED LAW EVAPORATION UTILITY SERVICES PSA RACK (Q)
24590-PTF-M6-TLP-P0007		P&ID - PTF TREATED LAW EVAPORATION UTILITY SERVICES - PLANT WASH RACK (Q)
24590-WTP-MV-M59T-00001		PRESSURE VESSEL TOLERANCES STANDARD DETAILS
24590-WTP-MV-M59T-00004		PULSE JET MIXERS STANDARD DETAILS
24590-WTP-MV-M59T-00007		THERMOWELL CONNECTION STANDARD DETAILS
24590-WTP-MV-M59T-00009		LIFTING LUGS STANDARD DETAILS
24590-WTP-MV-M59T-00010		TAILING LUG STANDARD DETAILS
24590-WTP-MV-M59T-00011		WASH RINGS STANDARD DETAILS
24590-WTP-MV-M59T-00016001		VESSEL CONNECTIONS STANDARD DETAILS SHT 1 OF 3
24590-WTP-MV-M59T-00016002		VESSEL CONNECTIONS STANDARD DETAILS SHT 2 OF 3
24590-WTP-MV-M59T-00016003		VESSEL CONNECTIONS STANDARD DETAILS SHT 3 OF 3
24590-WTP-MV-M59T-00017		VESSEL INSPECTION MANWAY STANDARD DETAILS
24590-WTP-MV-M59T-00018		VESSEL NAMEPLATE STANDARD DETAILS

MARK W. HOFFMAN STATE OF WASHINGTON 00030932 REGISTERED PROFESSIONAL ENGINEER 1/26/05
EXPIRES 12/10/06

REV	DESCRIPTION	ORG	CHKD	RVWD	APVD	DATE
1	ISSUED FOR PERMITTING USE					1/26/05
0	ISSUED FOR PERMITTING USE	KB	CH	CS	MH	3/25/04

REVISION HISTORY

CM QUALITY LEVEL

ISSUED BY RPP-WTP PDC

ISSUE STAMP

PROJECT No.	24590	
SITE	HANFORD	
AREA	200E	
BUILDING No.	10	

	BY	DATE
ORIGINATOR	K. BRIGHTMAN	3/18/04
CHECKER	C. CHUNG	3/18/04
APPROVER	M. HOFFMAN	3/25/04
REVIEWER	C. SLATER	3/18/04

CONTENT APPLICABLE TO ALARA? [XX] YES [ ] NO

ADR NO. N/A REV:

BECHTEL

RIVER PROTECTION PROJECT
WASTE TREATMENT PLANT
2435 STEVENS CENTER PLACE
RICHLAND, WA 99352

CONTRACT No: DE-AC27-01RV14136

EQUIPMENT ASSEMBLY LAW SBS CONDENSATE RECEIPT VESSEL TLP-VSL-00009B

SCALE: NONE

24590-PTF-MV-TLP-P0002

REV 1

"E" SIZE - 44x34

COMPUTER GENERATED BY SOLID EDGE- MANUAL CHANGES NOT PERMITTED

WHEN REFERENCING DRAWING AND DIM NUMBERS IN DOCUMENTS, BE SURE TO INCLUDE DASHES BETWEEN ELEMENTS

12/14/2004 8:25 AM

R1046254

FORM E_MASTER 03/2003

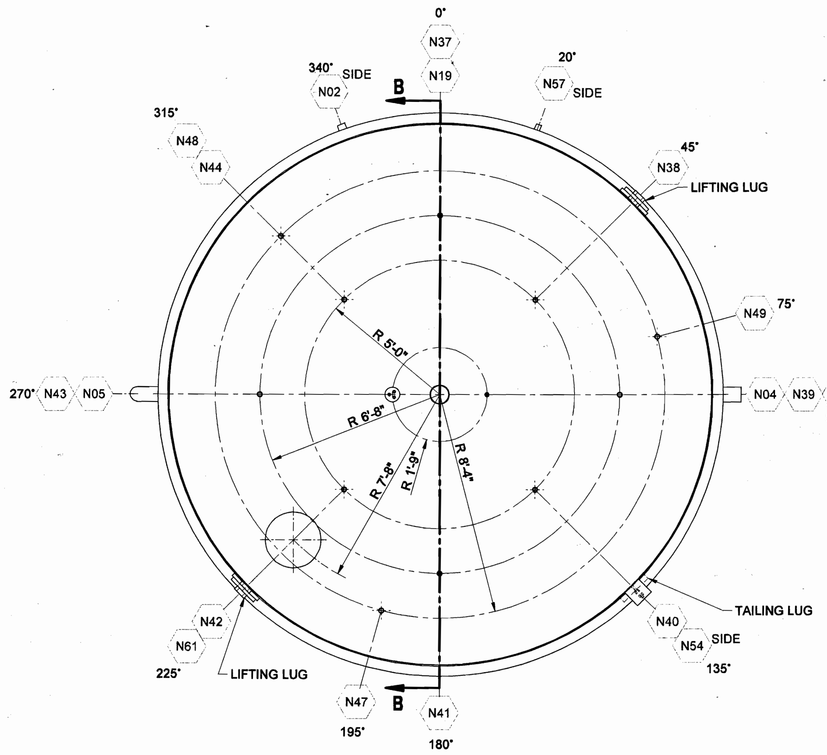

PLAN

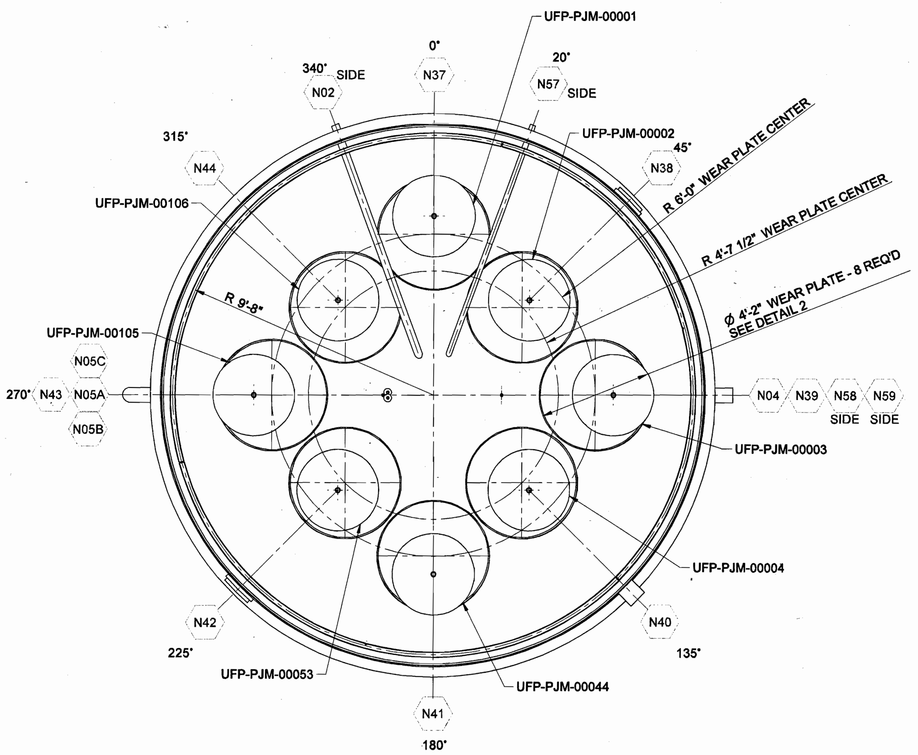

SECTION A-A 1

NOZZLE	SIZE	SCHED/WALL	SERVICE/REMARKS	"Z" DIM	REF DWG DET	CONNECTION
N02	3"	80S	OUTLET	NA	24590-WTP-MV-M59T-00016001 DET 3	3"-40S
N04	2" OD	160S	TEMPERATURE	31'-2"	24590-WTP-MV-M59T-00007 ASS'Y 1 DET 1	3/4"-10S
N05	6"	80S	INSTRUMENTATION	31'-2"	24590-WTP-MV-M59T-00016003 DET 26	N/A
N05A	1"	160S	BALANCE	31'-6"	24590-WTP-MV-M59T-00016003 DET 26	1"-40S
N05B	1"	160S	DENSITY	31'-7"	24590-WTP-MV-M59T-00016003 DET 26	1"-40S
N05C	1"	160S	LEVEL	31'-8"	24590-WTP-MV-M59T-00016003 DET 26	1"-40S
N07	4"	80S	INLET	31'-3"	24590-WTP-MV-M59T-00016001 DET 2	4"-40S
N11	3"	80S	INLET	31'-1"	24590-WTP-MV-M59T-00016001 DET 2	3"-40S
N13	3"	80S	INLET	31'-1"	24590-WTP-MV-M59T-00016001 DET 2	3"-40S
N15	3"	80S	INLET AIR PURGE (PASSIVE)	30'-11"	24590-WTP-MV-M59T-00016001 DET 1	3"-40S
N16	3"	80S	SAMPLE RETURN	29'-6"	24590-WTP-MV-M59T-00016001 DET 2	3"-40S
N18	6"	80S	INLET	29'-8"	24590-WTP-MV-M59T-00016001 DET 2	6"-40S
N19	8"	80S	OUTLET/VESSEL VENT	31'-5"	24590-WTP-MV-M59T-00016001 DET 1	8"-10S
N22	1 1/2"	80S	FORCED AIR PURGE	29'-6"	24590-WTP-MV-M59T-00016001 DET 1	1 1/2"-40S
N23	3"	80S	INLET	29'-6"	24590-WTP-MV-M59T-00016001 DET 2	3"-40S
N24	3"	80S	INLET	30'-1"	24590-WTP-MV-M59T-00016001 DET 2	3"-40S
N28	4"	80S	INLET	31'-3"	24590-WTP-MV-M59T-00016001 DET 2	4"-40S
N30	4"	80S	INLET	29'-8"	24590-WTP-MV-M59T-00016001 DET 2	4"-40S
N35	3"	80S	INLET WITH DIP PIPE	30'-7"	24590-WTP-MV-M59T-00016001 DET 3	3"-40S
N37	2"	160S	AIR/VACUUM TO UFP-PJM-00001	30'-0"	24590-WTP-MV-M59T-00016001 DET 3	2"-40S
N38	2"	160S	AIR/VACUUM TO UFP-PJM-00002	30'-7"	24590-WTP-MV-M59T-00016001 DET 3	2"-40S
N39	2"	160S	AIR/VACUUM TO UFP-PJM-00003	30'-0"	24590-WTP-MV-M59T-00016001 DET 3	2"-40S
N40	2"	160S	AIR/VACUUM TO UFP-PJM-00004	30'-7"	24590-WTP-MV-M59T-00016001 DET 3	2"-40S
N41	2"	160S	AIR/VACUUM TO UFP-PJM-00044	30'-0"	24590-WTP-MV-M59T-00016001 DET 3	2"-40S
N42	2"	160S	AIR/VACUUM TO UFP-PJM-00053	30'-7"	24590-WTP-MV-M59T-00016001 DET 3	2"-40S
N43	2"	160S	AIR/VACUUM TO UFP-PJM-00105	30'-0"	24590-WTP-MV-M59T-00016001 DET 3	2"-40S
N44	2"	160S	AIR/VACUUM TO UFP-PJM-00106	30'-7"	24590-WTP-MV-M59T-00016001 DET 3	2"-40S
N47	2"	80S	INLET TO WASH RING	29'-6"	24590-WTP-MV-M59T-00016001 DET 3	2"-40S
N48	2"	80S	INLET TO WASH RING	29'-6"	24590-WTP-MV-M59T-00016001 DET 3	2"-40S
N49	2"	80S	INLET TO WASH RING	29'-6"	24590-WTP-MV-M59T-00016001 DET 3	2"-40S
N51	2"	80S	INLET	30'-10"	24590-WTP-MV-M59T-00016001 DET 2	2"-80S
N52	2"	80S	INLET	29'-6"	24590-WTP-MV-M59T-00016001 DET 2	2"-80S
N53	3"	80S	INLET	31'-1"	24590-WTP-MV-M59T-00016001 DET 2	3"-40S
N54	8"	40S	OUTLET/OVERFLOW	NA	24590-WTP-MV-M59T-00016001 DET 1	8"-40S
N55	6"	80S	INLET	29'-8"	24590-WTP-MV-M59T-00016001 DET 2	6"-40S
N56	2"	160S	INLET WITH DIP PIPE	30'-7"	24590-WTP-MV-M59T-00016001 DET 3	2"-80S
N57	2"	160S	OUTLET	NA	24590-WTP-MV-M59T-00016001 DET 3	2"-80S
N58	6"	40S	CHILLED WATER SUPPLY	NA	24590-WTP-MV-M59T-00016001 DET 1	6"-10S
N59	6"	40S	CHILLED WATER RETURN	NA	24590-WTP-MV-M59T-00016001 DET 1	6"-10S
N60	3"	80S	SPARE	30'-11"	24590-WTP-MV-M59T-00016001 DET 2	3"-40S
N61	24"	PLATE	MANWAY	29'-10"	24590-WTP-MV-M59T-00017 DET 1	24"-CAPPED
N62	2"	80S	SPARE	31'-0"	24590-WTP-MV-M59T-00016002 DET 2	CAPPED
N63	2"	80S	INLET	30'-0"	24590-WTP-MV-M59T-00016002 DET 2	2"-40S

1

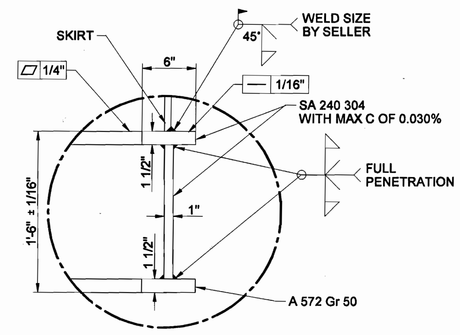

DETAIL 1

GENERAL NOTES:

1. FOR DIP LEGS USE 2" BOTTOM HEAD CLEARANCE.
2. "Z" DIMENSION MEASURED FROM BOTTOM TANGENT LINE TO NOZZLE FACE. (1)
3. BASE PLATE BEAM TO BE SHIPPED AHEAD OF VESSEL TO FIELD CONSTRUCTION FOR INSTALLATION BY OTHERS.
4. THIS IS A BLACK CELL VESSEL. (1)
5. DELETED
6. REFER TO 24590-PTF-M6-UFP-P0001, 24590-PTF-M6-UFP-P0007, 24590-PTF-M6-UFP-P0008 AND 24590-PTF-M6-UFP-P0015 FOR INFORMATION ON THE NOZZLE CONFIGURATION SHOWN IN PHANTOM. (1)
7. REVISED/ADDED/DELETED: (1)
   a) GHOSTING HAS BEEN ADDED ON THIS REVISION. NOZZLE IDENTIFIERS NOT CLOUDED.
   b) ADDED SECTION A-A AND DETAIL 2 TO SHOW WEAR PLATES.
   c) REVISED SHELL THICKNESS FROM 1" TO 1 3/8"
   d) REVISED NOZZLE LIST
   e) REVISED REFERENCE DRAWING LIST

PLEASE NOTE THAT SOURCE, SPECIAL NUCLEAR AND BYPRODUCT MATERIALS, AS DEFINED IN THE ATOMIC ENERGY ACT OF 1954 (AEA), ARE REGULATED AT THE U.S. DEPARTMENT OF ENERGY (DOE) FACILITIES EXCLUSIVELY BY DOE ACTING PURSUANT TO ITS AEA AUTHORITY. DOE ASSERTS, THAT PURSUANT TO THE AEA, IT HAS SOLE AND EXCLUSIVE RESPONSIBILITY AND AUTHORITY TO REGULATE SOURCE, SPECIAL NUCLEAR, AND BYPRODUCT MATERIALS AT DOE-OWNED NUCLEAR FACILITIES. INFORMATION CONTAINED HEREIN ON RADIONUCLIDES IS PROVIDED FOR PROCESS DESCRIPTION PURPOSES ONLY.

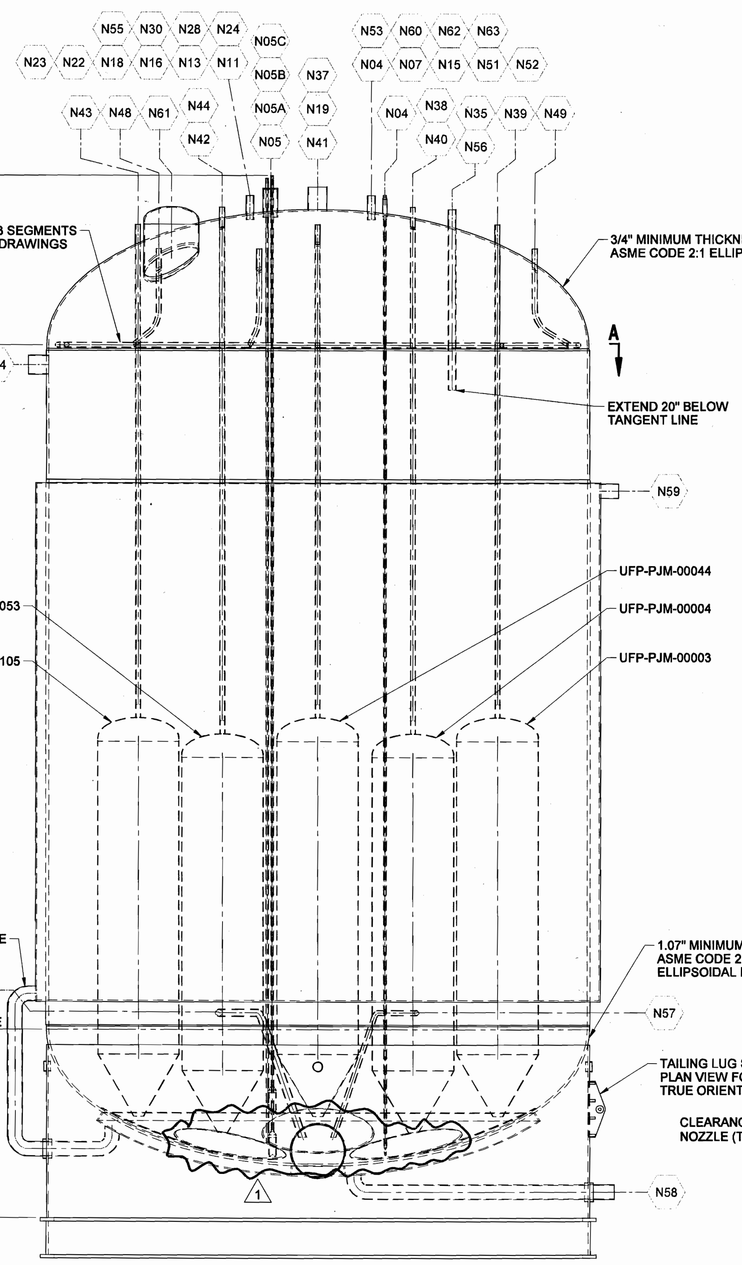

ELEVATION

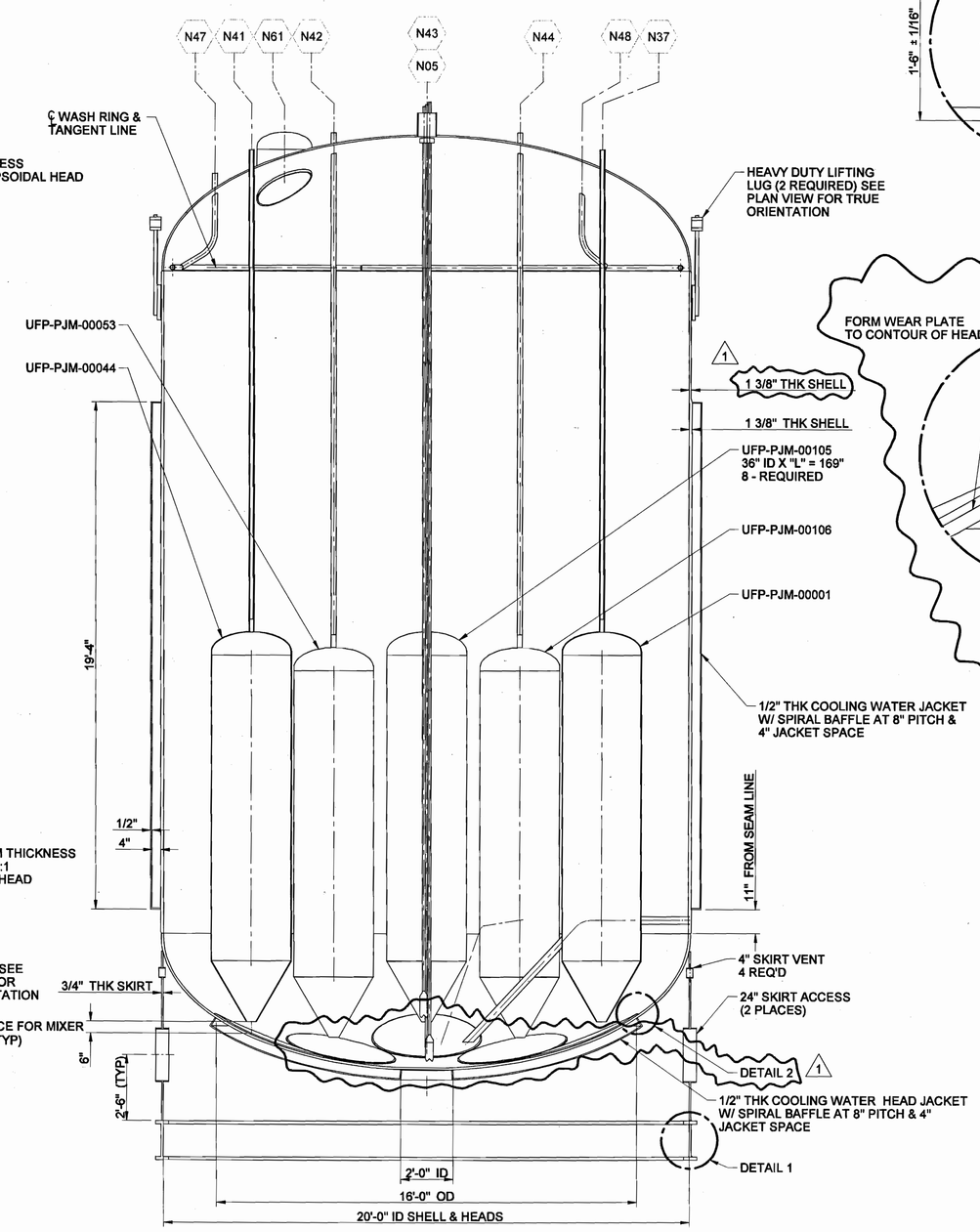

SECTION B-B

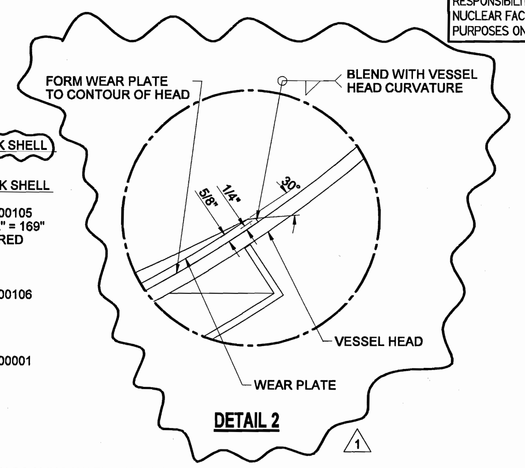

DETAIL 2 1

THIS DRAWING TO BE READ IN CONJUNCTION WITH MECHANICAL DATA SHEET 24590-PTF-MVD-UFP-P0001

VESSEL COMPONENT QUALITY LEVELS	
COMPONENTS	QUALITY LEVEL
MAIN VESSEL, SKIRT, ALL NOZZLES	QL-1
ALL INTERNAL SUPPORTS	QL-1
PULSE JET MIXERS AND PIPING	QL-1
THERMOWELL	QL-1
INSTRUMENTATION	CM
WASH RING AND PIPING	CM

REFERENCE DRAWINGS		
DWG NO	REV	TITLE
24590-PTF-M6-UFP-P0001		P&ID
24590-PTF-M6-UFP-P0007		P&ID
24590-PTF-M6-UFP-P0008		P&ID (1)
24590-PTF-M6-UFP-P0015		P&ID
24590-WTP-MV-M59T-00001		PRESSURE VESSEL TOLERANCES STANDARD DETAILS
24590-WTP-MV-M59T-00004		PULSE JET MIXERS STANDARD DETAILS
24590-WTP-MV-M59T-00007		THERMOWELL CONNECTION STANDARD DETAILS
24590-WTP-MV-M59T-00009		LIFTING LUGS STANDARD DETAILS
24590-WTP-MV-M59T-00010		TAILING LUG STANDARD DETAILS
24590-WTP-MV-M59T-00011		WASH RINGS STANDARD DETAILS
24590-WTP-MV-M59T-00016001		VESSEL CONNECTIONS STANDARD DETAILS SHT 1 OF 3
24590-WTP-MV-M59T-00016002		VESSEL CONNECTIONS STANDARD DETAILS SHT 2 OF 3
24590-WTP-MV-M59T-00016003		VESSEL CONNECTIONS STANDARD DETAILS SHT 3 OF 3
24590-WTP-MV-M59T-00017		VESSEL INSPECTION MANWAY STANDARD DETAILS
24590-WTP-MV-M59T-00018		VESSEL NAMEPLATE STANDARD DETAILS

1

MARK W. HOFFMANN, STATE OF WASHINGTON, 0030933, REGISTERED PROFESSIONAL ENGINEER — 5/3/05
EXPIRES 12/16/05

REV	DESCRIPTION	ORG	CHKD	RVWD	APVD	DATE
1	ISSUED FOR PERMITTING USE	JJ	HK	CS	MH	5/3/05
0	ISSUED FOR PERMITTING USE	JJ	HK	CS	MH	10/9/03

Q

REVISION HISTORY

ISSUED BY RPP-WTP PDC		
PROJECT No.	24590	
SITE	HANFORD	
AREA	200E	
BUILDING No.	10	
ISSUE STAMP		
	BY	DATE
ORIGINATOR	J. JACKSON	9/8/03
CHECKER	H. KHURANA	9/10/03
APPROVER	M. HOFFMANN	10/9/03
REVIEWER	C. SLATER	9/11/03

CONTENT APPLICABLE TO ALARA? ☒ YES ☐ NO
ADR NO. N/A REV: 1
SAFETY SCREEN REQUIRED? ☐ YES ☐ NO E&NS INITIAL IF YES

BECHTEL

RIVER PROTECTION PROJECT
WASTE TREATMENT PLANT
2435 STEVENS CENTER PLACE
RICHLAND, WA 99352

CONTRACT No: DE-AC27-01RV14136

EQUIPMENT ASSEMBLY
ULTRAFILTRATION FEED PREPARATION VESSEL
UFP-VSL-00001A

SCALE: NONE

24590-PTF-MV-UFP-P0001

REV 1

'E' SIZE - 44x34
COMPUTER GENERATED BY SOLID EDGE-MANUAL CHANGES NOT PERMITTED

WHEN REFERENCING DRAWING AND DIM NUMBERS IN DOCUMENTS, BE SURE TO INCLUDE DASHES BETWEEN ELEMENTS

01/03/2005 1:54 PM

FORM E_MASTER 03/2003

R10054530

NOZZLE	SIZE	SCHED/WALL	SERVICE/REMARKS	"Z" DIM	REF DWG-DET	CONNECTION
N02	3"	80S	OUTLET	NA	24590-WTP-MV-M59T-00016001 DET 3	3"-40S
N04	2" OD	160S	TEMPERATURE	31'-2"	24590-WTP-MV-M59T-00007 ASS'Y 1 DET 1	3/4"-10S
N05	6"	80S	INSTRUMENTATION	31'-2"	24590-WTP-MV-M59T-00016003 DET 26	N/A
N05A	1"	160S	BALANCE	31'-6"	24590-WTP-MV-M59T-00016003 DET 26	1"-40S
N05B	1"	160S	DENSITY	31'-7"	24590-WTP-MV-M59T-00016003 DET 26	1"-40S
N05C	1"	160S	LEVEL	31'-8"	24590-WTP-MV-M59T-00016003 DET 26	1"-40S
N07	4"	80S	INLET	29'-5"	24590-WTP-MV-M59T-00016001 DET 2	4"-40S
N11	3"	80S	INLET	31'-0"	24590-WTP-MV-M59T-00016001 DET 2	3"-40S
N13	3"	80S	INLET	31'-1"	24590-WTP-MV-M59T-00016001 DET 2	3"-40S
N15	3"	80S	INLET AIR PURGE (PASSIVE)	30'-7"	24590-WTP-MV-M59T-00016001 DET 1	3"-40S
N16	3"	80S	SAMPLE RETURN	29'-6"	24590-WTP-MV-M59T-00016001 DET 2	3"-40S
N18	6"	80S	INLET	29'-8"	24590-WTP-MV-M59T-00016001 DET 2	6"-40S
N19	8"	80S	OUTLET/VESSEL VENT	31'-5"	24590-WTP-MV-M59T-00016001 DET 1	8"-10S
N22	1 1/2"	80S	FORCED AIR PURGE	29'-6"	24590-WTP-MV-M59T-00016001 DET 1	1 1/2"-40S
N23	3"	80S	INLET	29'-6"	24590-WTP-MV-M59T-00016001 DET 2	3"-40S
N24	3"	80S	INLET	31'-1"	24590-WTP-MV-M59T-00016001 DET 2	3"-40S
N28	4"	80S	INLET	31'-1"	24590-WTP-MV-M59T-00016001 DET 2	4"-40S
N30	4"	80S	INLET	29'-6"	24590-WTP-MV-M59T-00016001 DET 2	4"-40S
N35	3"	80S	INLET WITH DIP PIPE	30'-7"	24590-WTP-MV-M59T-00016001 DET 3	3"-40S
N37	2"	160S	AIR/VACUUM TO UFP-PJM-00045	30'-0"	24590-WTP-MV-M59T-00016001 DET 3	2"-40S
N38	2"	160S	AIR/VACUUM TO UFP-PJM-00046	30'-7"	24590-WTP-MV-M59T-00016001 DET 3	2"-40S
N39	2"	160S	AIR/VACUUM TO UFP-PJM-00047	30'-0"	24590-WTP-MV-M59T-00016001 DET 3	2"-40S
N40	2"	160S	AIR/VACUUM TO UFP-PJM-00048	30'-7"	24590-WTP-MV-M59T-00016001 DET 3	2"-40S
N41	2"	160S	AIR/VACUUM TO UFP-PJM-00049	30'-0"	24590-WTP-MV-M59T-00016001 DET 3	2"-40S
N42	2"	160S	AIR/VACUUM TO UFP-PJM-00050	30'-7"	24590-WTP-MV-M59T-00016001 DET 3	2"-40S
N43	2"	160S	AIR/VACUUM TO UFP-PJM-00101	30'-0"	24590-WTP-MV-M59T-00016001 DET 3	2"-40S
N44	2"	160S	AIR/VACUUM TO UFP-PJM-00102	30'-7"	24590-WTP-MV-M59T-00016001 DET 3	2"-40S
N47	2"	80S	INLET TO WASH RING	29'-6"	24590-WTP-MV-M59T-00016001 DET 3	2"-40S
N48	2"	80S	INLET TO WASH RING	29'-6"	24590-WTP-MV-M59T-00016001 DET 3	2"-40S
N49	2"	80S	INLET TO WASH RING	29'-6"	24590-WTP-MV-M59T-00016001 DET 3	2"-40S
N51	2"	80S	INLET	30'-0"	24590-WTP-MV-M59T-00016001 DET 2	2"-80S
N52	2"	80S	INLET	29'-6"	24590-WTP-MV-M59T-00016001 DET 2	2"-80S
N53	3"	80S	INLET	31'-1"	24590-WTP-MV-M59T-00016001 DET 2	3"-40S
N54	8"	40S	OUTLET/OVERFLOW	NA	24590-WTP-MV-M59T-00016001 DET 1	8"-40S
N55	6"	80S	INLET	29'-8"	24590-WTP-MV-M59T-00016001 DET 2	6"-40S
N56	2"	160S	INLET WITH DIP PIPE	30'-7"	24590-WTP-MV-M59T-00016001 DET 3	2"-80S
N57	2"	160S	OUTLET	NA	24590-WTP-MV-M59T-00016001 DET 3	2"-80S
N58	6"	40S	CHILLED WATER SUPPLY	NA	24590-WTP-MV-M59T-00016001 DET 1	6"-10S
N59	6"	40S	CHILLED WATER RETURN	NA	24590-WTP-MV-M59T-00016001 DET 1	6"-10S
N60	3"	80S	SPARE	29'-6"	24590-WTP-MV-M59T-00016001 DET 2	3"-40S
N61	24"	PLATE	MANWAY	29'-10"	24590-WTP-MV-M59T-00017 DET 1	24"-CAPPED
N62	2"	80S	SPARE	31'-0"	24590-WTP-MV-M59T-00016002 DET 2	CAPPED
N63	2"	80S	INLET	31'-0"	24590-WTP-MV-M59T-00016002 DET 2	2"-40S

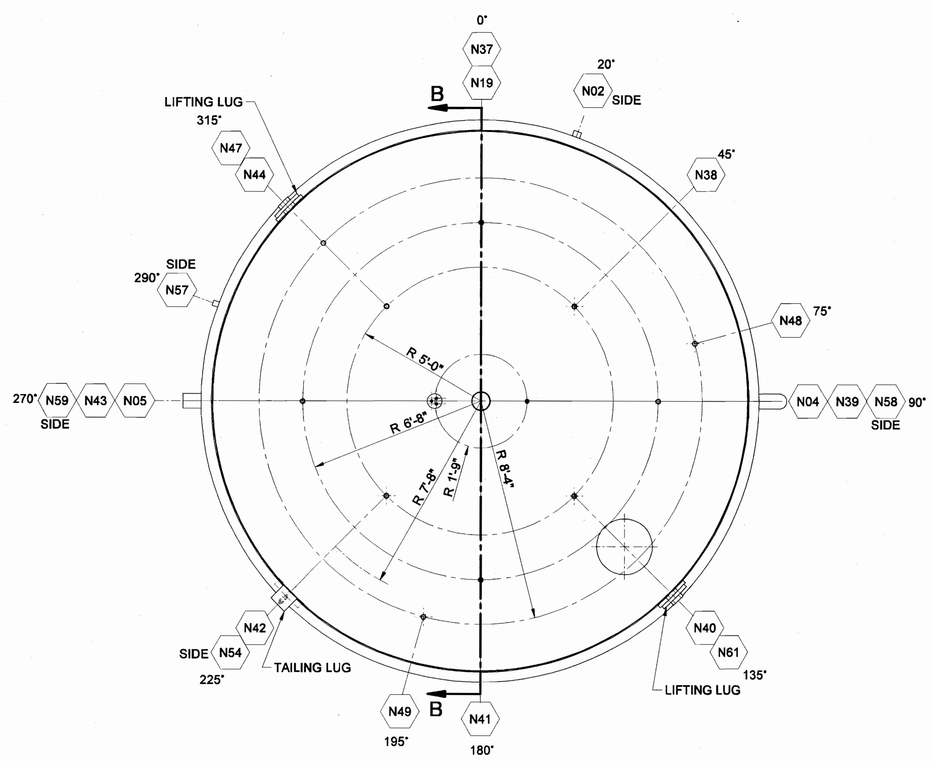

PLAN

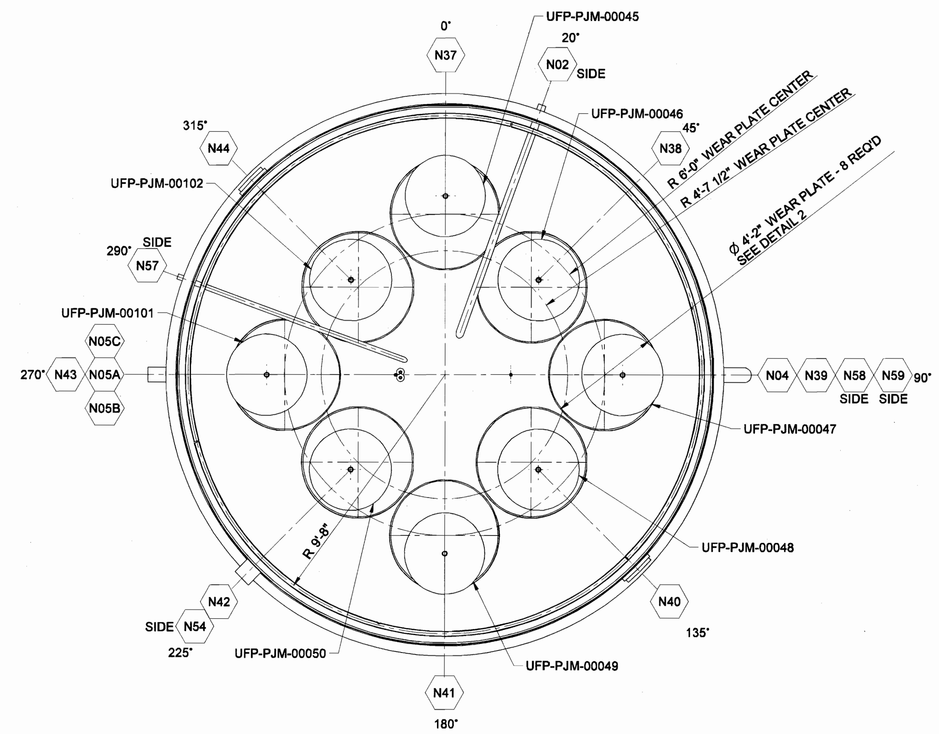

SECTION A-A

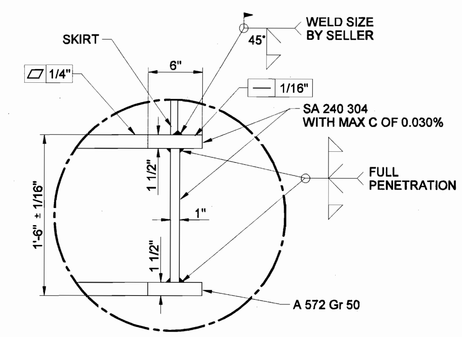

DETAIL 1

GENERAL NOTES

1. FOR DIP LEGS USE 2" BOTTOM HEAD CLEARANCE.
2. "Z" DIMENSION MEASURED FROM BOTTOM TANGENT LINE TO NOZZLE FACE.
3. BASE PLATE BEAM TO BE SHIPPED AHEAD OF VESSEL TO FIELD CONSTRUCTION FOR INSTALLATION BY OTHERS.
4. THIS IS A BLACK CELL VESSEL.
5. DELETED
6. REFER TO 24590-PTF-M6-UFP-P0001, 24590-PTF-M6-UFP-P0007, 24590-PTF-M6-UFP-P0008 AND 24590-PTF-M6-PWD-P0046 FOR INFORMATION ON THE NOZZLE CONFIGURATION SHOWN IN PHANTOM.
7. REVISED/ADDED/DELETED: (2)
   a) GHOSTING HAS BEEN REMOVED ON THIS REVISION.

PLEASE NOTE THAT SOURCE, SPECIAL NUCLEAR AND BYPRODUCT MATERIALS, AS DEFINED IN THE ATOMIC ENERGY ACT OF 1954 (AEA), ARE REGULATED AT THE U.S. DEPARTMENT OF ENERGY (DOE) FACILITIES EXCLUSIVELY BY DOE ACTING PURSUANT TO ITS AEA AUTHORITY. DOE ASSERTS, THAT PURSUANT TO THE AEA, IT HAS SOLE AND EXCLUSIVE RESPONSIBILITY AND AUTHORITY TO REGULATE SOURCE, SPECIAL NUCLEAR, AND BYPRODUCT MATERIALS AT DOE-OWNED NUCLEAR FACILITIES. INFORMATION CONTAINED HEREIN ON RADIONUCLIDES IS PROVIDED FOR PROCESS DESCRIPTION PURPOSES ONLY.

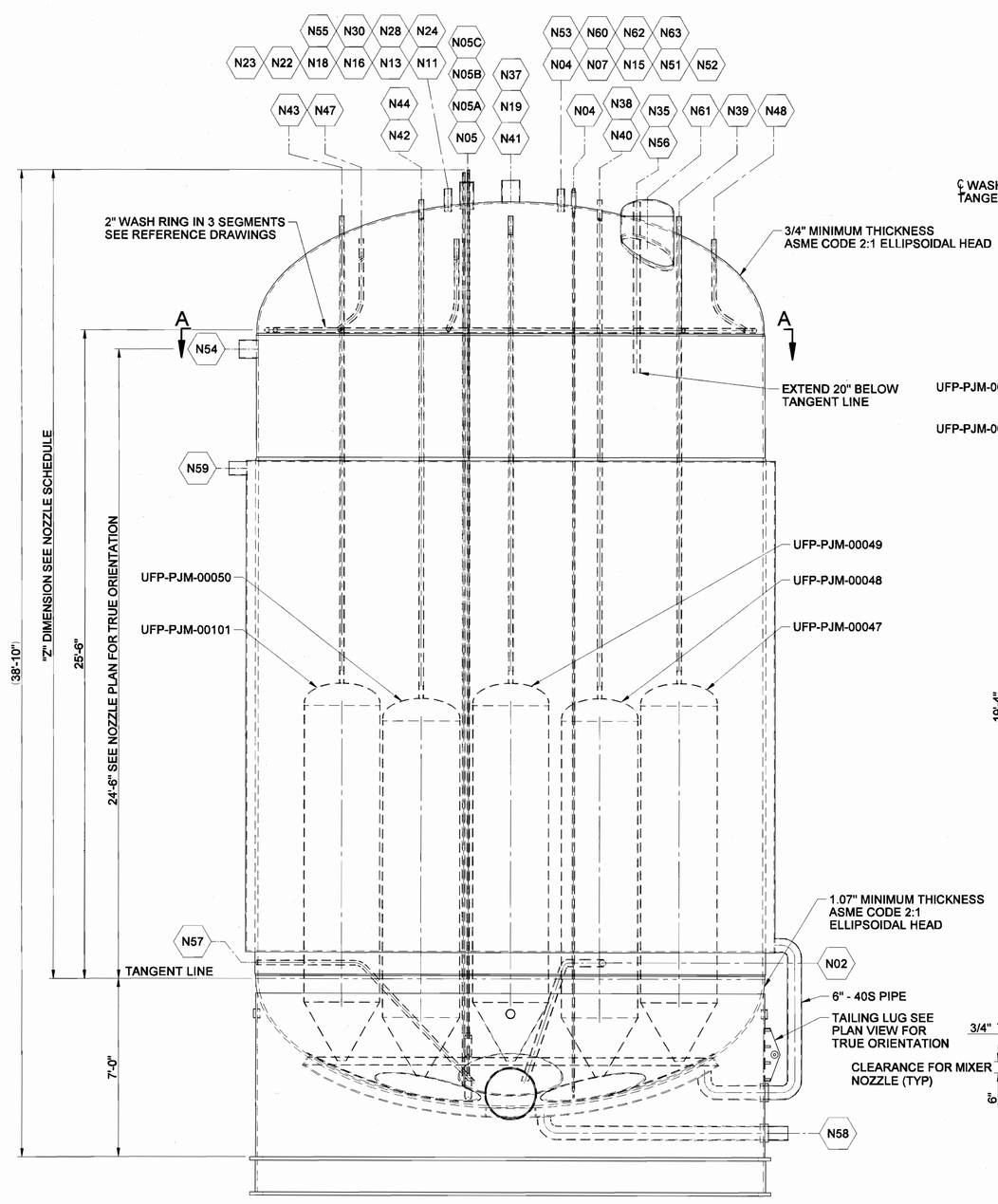

ELEVATION

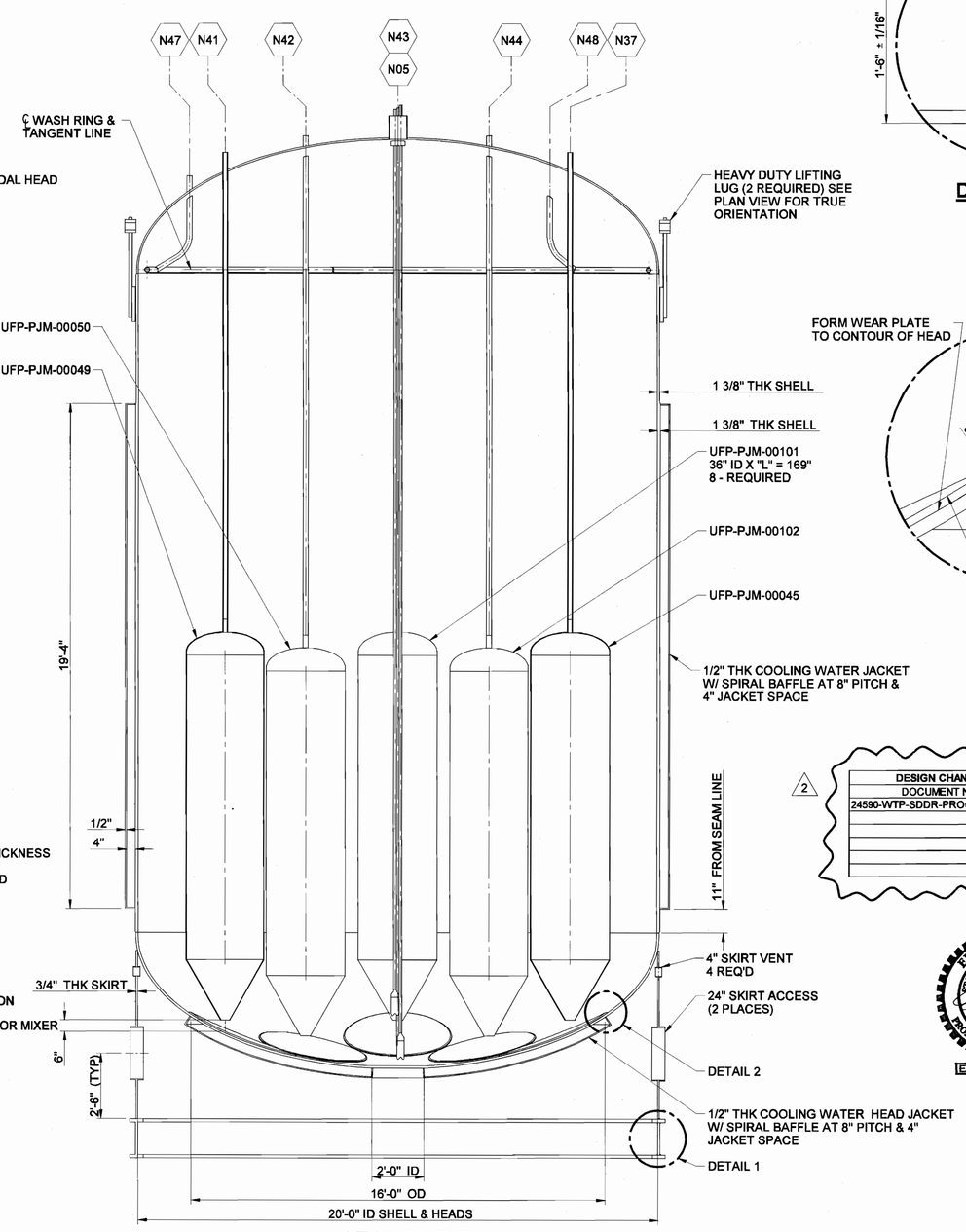

SECTION B-B

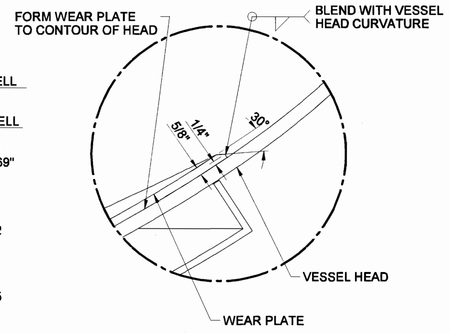

DETAIL 2

THIS DRAWING TO BE READ IN CONJUNCTION WITH MECHANICAL DATA SHEET 24590-PTF-MVD-UFP-P0002

VESSEL COMPONENT QUALITY LEVELS	
COMPONENTS	QUALITY LEVEL
MAIN VESSEL, SKIRT, ALL NOZZLES	QL-1
ALL INTERNAL SUPPORTS	QL-1
PULSE JET MIXERS AND PIPING	QL-1
THERMOWELL	QL-1
INSTRUMENTATION	CM
WASH RING AND PIPING	CM

DESIGN CHANGES INCORPORATED BY REFRERENCE	
DOCUMENT NO	DOCUMENT NO
24590-WTP-SDDR-PROC-04-01246	

REFERENCE DRAWINGS		
DWG NO	REV	TITLE
24590-PTF-M6-UFP-P0001		P&ID
24590-PTF-M6-UFP-P0007		P&ID
24590-PTF-M6-UFP-P0008		P&ID
24590-PTF-M6-PWD-P0046		P&ID
24590-WTP-MV-M59T-00001		PRESSURE VESSEL TOLERANCES STANDARD DETAILS
24590-WTP-MV-M59T-00004		PULSE JET MIXERS STANDARD DETAILS
24590-WTP-MV-M59T-00007		THERMOWELL CONNECTION STANDARD DETAILS
24590-WTP-MV-M59T-00009		LIFTING LUGS STANDARD DETAILS
24590-WTP-MV-M59T-00010		TAILING LUG STANDARD DETAILS
24590-WTP-MV-M59T-00011		WASH RINGS STANDARD DETAILS
24590-WTP-MV-M59T-00016001		VESSEL CONNECTIONS STANDARD DETAILS SHT 1 OF 3
24590-WTP-MV-M59T-00016002		VESSEL CONNECTIONS STANDARD DETAILS SHT 2 OF 3
24590-WTP-MV-M59T-00016003		VESSEL CONNECTIONS STANDARD DETAILS SHT 3 OF 3
24590-WTP-MV-M59T-00017		VESSEL INSPECTION MANWAY STANDARD DETAILS
24590-WTP-MV-M59T-00018		VESSEL NAMEPLATE STANDARD DETAILS

REV	DESCRIPTION	ORG	CHKD	RVWD	APVD	DATE
2	ISSUED FOR PERMITTING USE					1/11/06
1	ISSUED FOR PERMITTING USE	OF	HK	JP	MH	6/7/05
0	ISSUED FOR PERMITTING USE	JJ	HK	CS	MH	10/9/03

Q

REVISION HISTORY

ISSUED BY RPP-WTP PDC

PROJECT No.	24590
SITE	HANFORD
AREA	200E
BUILDING No.	10

ISSUE STAMP

	BY	DATE
ORIGINATOR	J. JACKSON	9/8/03
CHECKER	H. KHURANA	9/10/03
APPROVER	M. HOFFMANN	10/9/03
REVIEWER	C. SLATER	9/11/03

CONTENT APPLICABLE TO ALARA? [X] YES [ ] NO
ADR NO. N/A REV:
SAFETY SCREEN REQUIRED? [ ] YES [X] NO S&NS INITIAL IF YES ____

RIVER PROTECTION PROJECT
WASTE TREATMENT PLANT
2435 STEVENS CENTER PLACE
RICHLAND, WA 99352

CONTRACT No: DE-AC27-01RV14136

EQUIPMENT ASSEMBLY
ULTRAFILTRATION FEED PREPARATION VESSEL
UFP-VSL-00001B

SCALE: NONE

24590-PTF-MV-UFP-P0002

REV 2

"E" SIZE - 44x34
COMPUTER GENERATED BY SOLID EDGE-MANUAL CHANGES NOT PERMITTED

WHEN REFERENCING DRAWING AND DIM NUMBERS IN DOCUMENTS, BE SURE TO INCLUDE DASHES BETWEEN ELEMENTS

10/03/2005 2:01 PM

R10660985

FORM E_MASTER 03/2003

DWG No 24590-PTF-MV-UFP-P0003

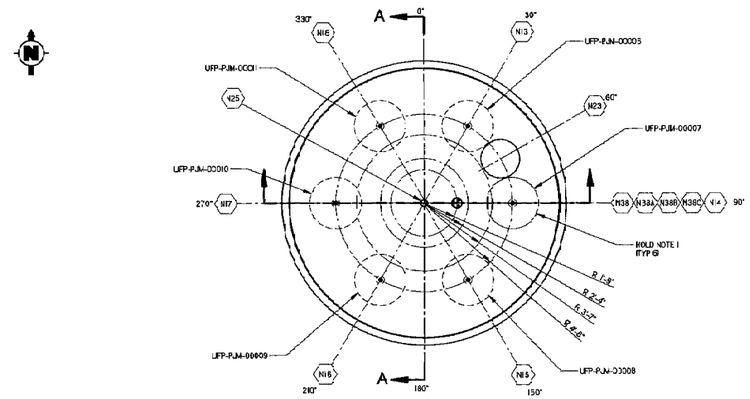

PLAN (HOLD NOTE 2)

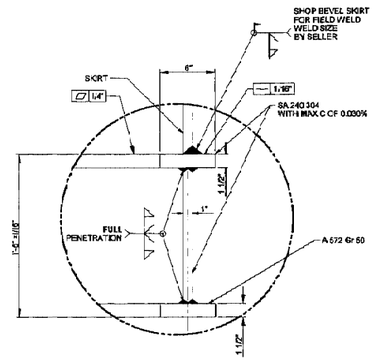

DETAIL 1

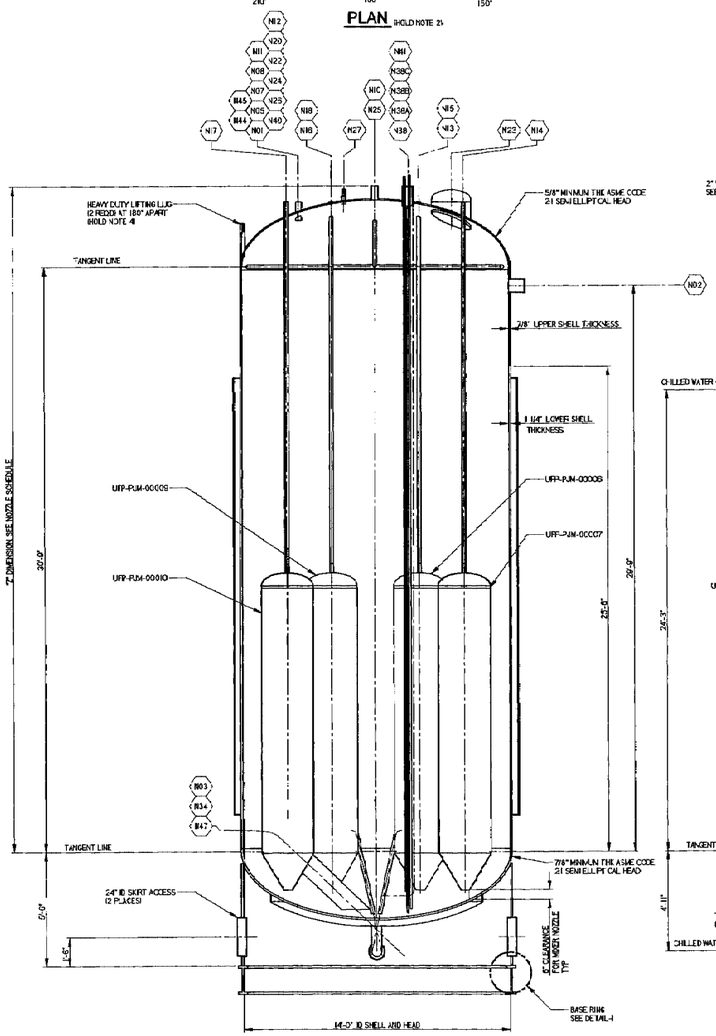

ELEVATION (HOLD NOTE 2)

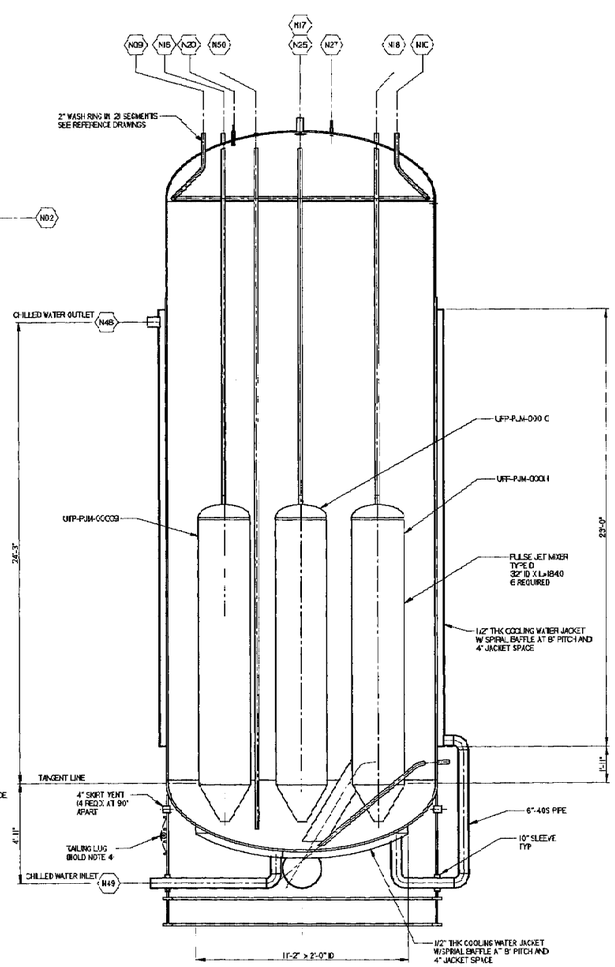

SECTION A-A (HOLD NOTE 2)

NOZZLE	SIZE	SCHED/WALL	SERVICE/REMARKS	"Z" DIM	REF DWG-DET	CONNECTION
N01	3"	80S	INLET REAGENT	TBD	24590-WTP-MV-M97T-00016001 DET 2	3"-445
N02	8"	40S	OUTLET/OVERFLOW	TBD	24590-WTP-MV-M97T-00016001 DET 1	8"-445
N03	12"	80S	OUTLET	TBD	24590-WTP-MV-M97T-00016001 DET 3	12"-425
N04	3"	80S	INLET	TBD	24590-WTP-MV-M97T-00016001 DET 2	3"-445
N07	2"	80S	INLET	TBD	24590-WTP-MV-M97T-00016001 DET 2	2"-445
N08	2"	80S	INLET REAGENT	TBD	24590-WTP-MV-M97T-00016001 DET 2	2"-445
N09	2"	80S	INLET TO WASH RING	TBD	24590-WTP-MV-M97T-00016001 DET 3	2"-445
N10	2"	80S	INLET TO WASH RING	TBD	24590-WTP-MV-M97T-00016001 DET 3	2"-445
N11	3"	80S	SPARE	TBD	24590-WTP-MV-M97T-00016001 DET 3	3"-445
N12	2"	80S	INLET PASSIVE AIR PURGE	TBD	24590-WTP-MV-M97T-00016001 DET 1	2"-445
N13	2"	160S	AIR/VACUUM TO UFP-PJM-00008	TBD	24590-WTP-MV-M97T-00016001 DET 3	2"-445
N14	2"	160S	AIR/VACUUM TO UFP-PJM-00007	TBD	24590-WTP-MV-M97T-00016001 DET 3	2"-445
N15	2"	160S	AIR/VACUUM TO UFP-PJM-00008	TBD	24590-WTP-MV-M97T-00016001 DET 3	2"-445
N16	2"	160S	AIR/VACUUM TO UFP-PJM-00009	TBD	24590-WTP-MV-M97T-00016001 DET 3	2"-445
N17	2"	160S	AIR/VACUUM TO UFP-PJM-00010	TBD	24590-WTP-MV-M97T-00016001 DET 3	2"-445
N18	2"	160S	AIR/VACUUM TO UFP-PJM-00011	TBD	24590-WTP-MV-M97T-00016001 DET 3	2"-445
N19			DELETED			
N20	2"	80S	SAMPLE RETURN	TBD	24590-WTP-MV-M97T-00016001 DET 5	2"-345
N21			DELETED			
N22	2"	80S	SPARE	TBD	24590-WTP-MV-M97T-00016001 DET 2	CAPPED
N23	24"	PLATE	MANWAY	TBD	24590-WTP-MV-M97T-00017 DET 1	CAPPED
N24	3"	80S	INLET REAGENT	TBD	24590-WTP-MV-M97T-00016001 DET 2	3"-445
N25	6"	40S	OUTLET/MISSILE VENT	34'-9"	24590-WTP-MV-M97T-00016001 DET 1	6"-445
N26	3"	80S	INLET REAGENT	TBD	24590-WTP-MV-M97T-00016001 DET 2	3"-445
N27	2" OD		INLET FORCED AIR PURGE	TBD	24590-WTP-MV-M97T-00016001 DET 6	1"-445
N33			DELETED			
N34	3"	80S	OUTLET	TBD	24590-WTP-MV-M97T-00016001 DET 3	3"-445
N35			DELETED			
N36			DELETED			
N37			DELETED			
N38	6"	80S	INSTRUMENTATION	TBD	24590-WTP-MV-M97T-00016003 DET 26	RA
N38A	1"	160S	BALANCE	TBD		1"-445
N38B	1"	160S	DENSITY	TBD		1"-445
N38C	1"	160S	LEVEL	TBD		1"-445
N39			DELETED			
N39A			DELETED			
N39B			DELETED			
N39C			DELETED			
N40	2"	80S	INLET REAGENT	TBD	24590-WTP-MV-M97T-00016001 DET 2	2"-445
N41	2" OD	SEE DETAIL	TEMPERATURE	TBD	24590-WTP-MV-M97T-00037 ASSY 1, DET 1	SAF-106
N44	2"	80S	INLET	TBD	24590-WTP-MV-M97T-00016001 DET 2	2"-445
N45	10"	80S	INLET	TBD	24590-WTP-MV-M97T-00016001 DET 3	10"-425
N47	4"	80S	OUTLET	TBD	24590-WTP-MV-M97T-00016001 DET 3	4"-445
N48	6"	80S	CHILLED WATER JACKET OUT, TOP	TBD	24590-WTP-MV-M97T-00016001 DET 1	6"-445
N49	6"	80S	CHILLED WATER JACKET IN, BOTTOM	TBD	24590-WTP-MV-M97T-00016001 DET 1	6"-445
N50	4"	80S	INLET	TBD	24590-WTP-MV-M97T-00016001 DET 4	4"-445
N51			DELETED			
N52			DELETED			

GENERAL NOTES:

1. FOR THE PUMP SUCTION DIP LEG USE 12" BOTTOM HEAD CLEARANCE, AND FOR EJECTOR DIP LEG USE 3" BOTTOM HEAD CLEARANCE OR OTHERWISE AS SPECIFIED.
2. ALL "Z" DIMENSIONS MEASURED FROM BOTTOM TANGENT LINE, UNLESS OTHERWISE NOTED.
3. RING BEAM TO BE FABRICATED & SHIPPED AHEAD OF VESSEL TO FIELD CONSTRUCTION FOR INSTALLATION BY OTHERS.
4. DELETED.
5. CONTENTS OF THIS DOCUMENT ARE DANGEROUS WASTE PERMIT AFFECTING.
6. INTERNAL BAFFLES NOT SHOWN ON JACKETS.

HOLDS:

1. FINAL PULSE JET MIXER SIZE & DISPOSITION PENDING STUDY OF MIXING OF NON-NEWTONIAN FLUIDS
2. NOZZLE ORIENTATION AND LOCATION PENDING REVIEW BY PLANT DESIGN
3. NAME PLATE LOCATION PENDING REVIEW BY CONSTRUCTION
4. LIFTING/TAILING LUGS LOCATION PENDING REVIEW BY CONSTRUCTION

PLEASE NOTE THAT SOURCE, SPECIAL, NUCLEAR AND BYPRODUCT MATERIALS, AS DEFINED IN THE ATOMIC ENERGY ACT OF 1954 WERE ARE REGULATED AT THE U.S. DEPARTMENT OF ENERGY (DOE) FACILITIES EXCLUSIVELY BY DOE ACTING PURSUANT TO ITS AEA AUTHORITY. DOE ASSERTS, THAT PURSUANT TO THE AEA IT HAS SOLE AND EXCLUSIVE RESPONSIBILITY AND AUTHORITY TO REGULATE SOURCE, SPECIAL, NUCLEAR, AND BYPRODUCT MATERIALS AT DOE-OWNED NUCLEAR FACILITIES. INFORMATION CONTAINED HEREIN ON RADIONUCLIDES IS PROVIDED FOR PROCESS DESCRIPTION PURPOSES ONLY".

THIS DRAWING TO BE READ IN CONJUNCTION WITH MECHANICAL SYSTEMS DATA SHEET 24590-PTF-MVD-UFP-P0014

VESSEL COMPONENT QUALITY LEVELS	
COMPONENTS	QUALITY LEVEL
MAIN VESSEL, SKIRT, ALL NOZZLES	QL-1
ALL INTERNAL SUPPORTS	QL-1
PULSE JET MIXERS AND PIPING	QL-1
THERMOWELL	QL-1
INSTRUMENTATION	QN
WASH RING AND PIPING	QN

REFERENCE DRAWINGS		
DWG NO	REV	TITLE
24590-PTF-MC-UFP-P0003	0	PAD
24590-PTF-MC-UFP-P0010	0	PAD
24590-PTF-MC-UFP-P0011	0	PAD
24590-WTP-MV-M97T-00001	1	PRESSURE VESSEL TOLERANCES STANDARD DETAILS
24590-WTP-MV-M97T-00004	0	PULSE JET MIXERS STANDARD DETAILS
24590-WTP-MV-M97T-00007	2	THERMOWELL CONNECTION STANDARD DETAILS
24590-WTP-MV-M97T-00008	0	LIFTING LUGS STANDARD DETAILS
24590-WTP-MV-M97T-00010	1	TAILING LUG STANDARD DETAILS
24590-WTP-MV-M97T-00011	1	WASH RINGS STANDARD DETAILS
24590-WTP-MV-M97T-00016001	2	VESSEL CONNECTIONS STANDARD DETAILS SHT 1 OF 3
24590-WTP-MV-M97T-00016002	1	VESSEL CONNECTIONS STANDARD DETAILS SHT 2 OF 3
24590-WTP-MV-M97T-00016003	0	VESSEL CONNECTIONS STANDARD DETAILS SHT 3 OF 3
24590-WTP-MV-M97T-00017	1	VESSEL INSPECTION MANWAY STANDARD DETAILS
24590-WTP-MV-M97T-00018	1	VESSEL NAME PLATE STANDARD DETAILS

REV	DESCRIPTION	DRG	CHKD	RVWD	APVD	DATE
0	ISSUED FOR PERMITTING USE	JAO	JPL	CF	CF	10/9/03

REVISION HISTORY

Q QUALITY LEVEL

ISSUED BY: BECHTEL NATIONAL, INC. SAN FRANCISCO, CALIFORNIA

PROJECT No. 24590
SITE HANFORD
AREA 200E
BUILDING No. 16

	BY	DATE
ORIGINATOR	Gregory Jackson	9/9/03
CHECKER		9/10/03
APPROVER		10/9/03
REVIEWER		9/9/03

CONFIDENTIAL APPLICABLE TO ALL APPROVED FOR REVIEW: YES NO
DR REFERENCE No: REV:

RIVER PROTECTION PROJECT
WASTE TREATMENT PLANT
2435 STEVENS CENTER PLACE
RICHLAND, WA 99352

CONTRACT No: DE-AC27-01RV14136

EQUIPMENT ASSEMBLY ULTRAFILTRATION FEED VESSEL UFP-VSL-00002A

SCALE: NONE

24590-PTF-MV-UFP-P0003

REV 0

8" SIZE = 4.0x3
COMPUTER GENERATED BY SOLID EDGE. MANUAL CHANGES NOT PERMITTED

WHEN RE-ORDERING CONVERTED CM NUMBERS IN ACCORDANCE WITH SUB TO INSURE DASHES BETWEEN ELEMENTS

09.05.2003 9:30:35 AM

FORM EL_MASTER 03/2003

24590-PTF-MV-UFP-P0004

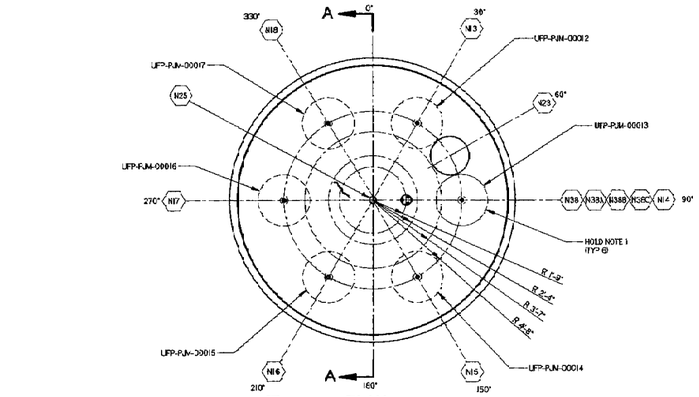

PLAN (HOLD NOTE 2)

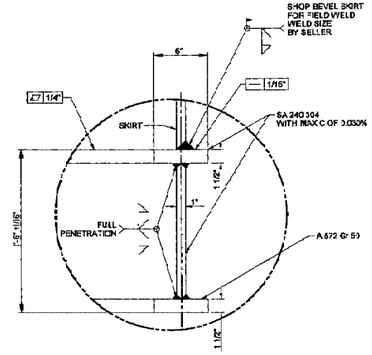

DETAIL 1

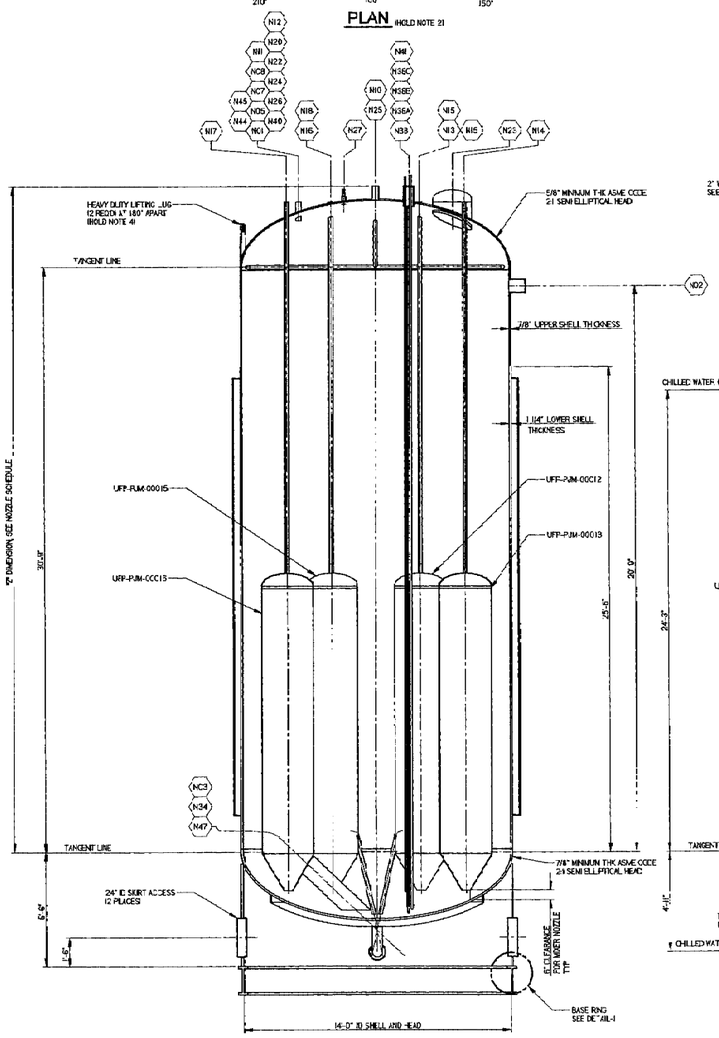

ELEVATION (HOLD NOTE 2)

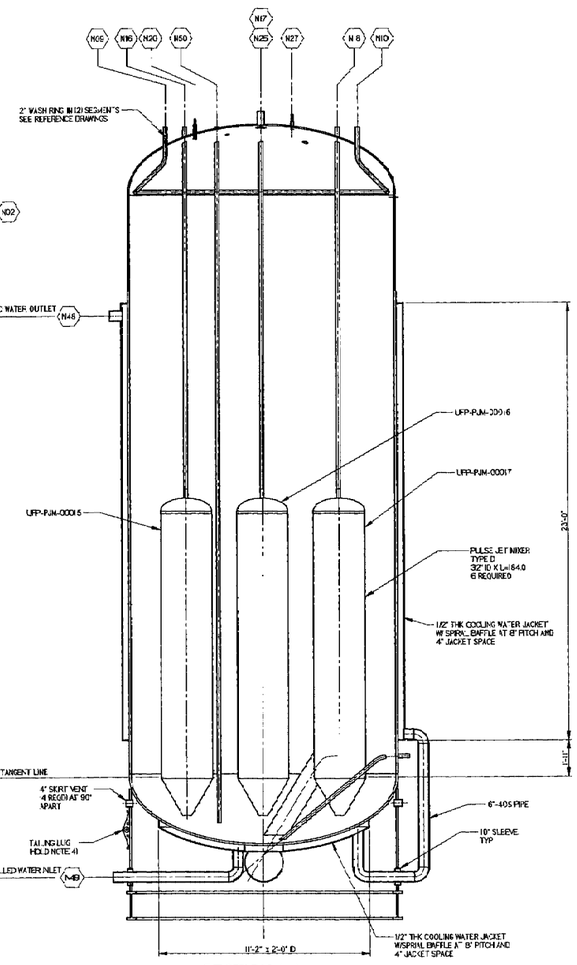

SECTION A-A (HOLD NOTE 2)

NOZZLE	SIZE	SCHED/WALL	SERVICE/REMARKS	"Z" DIM	REF DWG-DET	CONNECTION
N01	3"	80S	INLET REAGENT	TBD	24590-WTP-MVA-N56T-00016001 DET 2	3"-40S
N02	8"	40S	OUTLET/OVERFLOW	TBD	24590-WTP-MVA-N56T-00016001 DET 1	8"-40S
N03	12"	80S	OUTLET	TBD	24590-WTP-MVA-N56T-00016001 DET 3	12"-80S
N05	3"	80S	INLET	TBD	24590-WTP-MVA-N56T-00016001 DET 2	3"-40S
N07	2"	80S	INLET	TBD	24590-WTP-MVA-N56T-00016001 DET 2	2"-40S
N08	2"	80S	INLET REAGENT	TBD	24590-WTP-MVA-N56T-00016001 DET 2	2"-40S
N09	2"	80S	INLET TO WASH RING	TBD	24590-WTP-MVA-N56T-00016001 DET 3	2"-40S
N10	2"	80S	INLET TO WASH RING	TBD	24590-WTP-MVA-N56T-00016001 DET 3	2"-40S
N11	3"	80S	SPARE	TBD	24590-WTP-MVA-N56T-00016001 DET 3	3"-40S
N12	2"	80S	INLET/PASSIVE AIR PURGE	TBD	24590-WTP-MVA-N56T-00016001 DET 1	2"-40S
N13	2"	150S	ARRV/VACUUM TO UFP-PJM-00012	TBD	24590-WTP-MVA-N56T-00016001 DET 3	2"-40S
N14	2"	150S	ARRV/VACUUM TO UFP-PJM-00013	TBD	24590-WTP-MVA-N56T-00016001 DET 3	2"-40S
N15	2"	150S	ARRV/VACUUM TO UFP-PJM-00014	TBD	24590-WTP-MVA-N56T-00016001 DET 3	2"-40S
N16	2"	150S	ARRV/VACUUM TO UFP-PJM-00015	TBD	24590-WTP-MVA-N56T-00016001 DET 3	2"-40S
N17	2"	150S	ARRV/VACUUM TO UFP-PJM-00016	TBD	24590-WTP-MVA-N56T-00016001 DET 3	2"-40S
N18	2"	150S	ARRV/VACUUM TO UFP-PJM-00017	TBD	24590-WTP-MVA-N56T-00016001 DET 3	2"-40S
N19			DELETED			
N20	2"	40S	SAMPLE RETURN	TBD	24590-WTP-MVA-N56T-00016001 DET 3	2"-80S
N21			DELETED			
N22	2"	80S	SPARE	TBD	24590-WTP-MVA-N56T-00016001 DET 2	CAPPED
N23	24"	PLATE	MANWAY	TBD	24590-WTP-MVA-N56T-00016001 DET 1	CAPPED
N24	3"	40S	INLET REAGENT	TBD	24590-WTP-MVA-N56T-00016001 DET 2	3"-40S
N25	6"	40S	OUTLET/ASSBLY VENT	34'-0"	24590-WTP-MVA-N56T-00016001 DET 1	6"-40S
N26	3"	80S	INLET REAGENT	TBD	24590-WTP-MVA-N56T-00016001 DET 2	3"-40S
N27	1" OD		INLET FORCED AIR PURGE	TBD	24590-WTP-MVA-N56T-00016001 DET 5	1"-40S
N28			DELETED			
N29	3"	80S	OUTLET	TBD	24590-WTP-MVA-N56T-00016001 DET 3	3"-40S
N30			DELETED			
N31			DELETED			
N32			DELETED			
N33	6"	40S	INSTRUMENTATION	TBD	24590-WTP-MVA-N56T-00016001 DET 3E	NA
N35A	1"	160S	BALANCE	TBD		1"-40S
N35B	1"	160S	DENSITY	TBD		1"-40S
N35C	1"	160S	LEVEL	TBD		1"-40S
N36			DELETED			
N36A			DELETED			
N36B			DELETED			
N36C			DELETED			
N40	2"	80S	INLET REAGENT	TBD	24590-WTP-MVA-N56T-00016001 DET 2	2"-40S
N41	2" OD	SEE DETAIL	TEMPERATURE	TBD	24590-WTP-MVA-N56T-00007 ASSY1, DET 1	3/4"-10S
N44	2"	80S	INLET	TBD	24590-WTP-MVA-N56T-00016001 DET 2	2"-40S
N45	10"	80S	INLET	TBD	24590-WTP-MVA-N56T-00016001 DET 2	10"-40S
N47	4"	80S	OUTLET	TBD	24590-WTP-MVA-N56T-00016001 DET 3	4"-40S
N48	6"	80S	CHILLED WATER JACKET OUT, TOP	TBD	24590-WTP-MVA-N56T-00016001 DET 1	6"-10S
N49	6"	80S	CHILLED WATER JACKET IN, BOTTOM	TBD	24590-WTP-MVA-N56T-00016001 DET 1	6"-10S
N50	4"	80S	INLET	TBD	24590-WTP-MVA-N56T-00016001 DET 1	4"-40S
N51			DELETED			
N52			DELETED			

GENERAL NOTES:

1. FOR THE PUMP SUCTION DIP LEG USE 12" BOTTOM HEAD CLEARANCE, AND FOR EJECTOR DIP LEG USE 2" BOTTOM HEAD CLEARANCE OR OTHERWISE AS SPECIFIED.
2. ALL "Z" DIMENSIONS MEASURED FROM BOTTOM TANGENT LINE, UNLESS OTHERWISE NOTED.
3. RING BEAM TO BE FABRICATED & SHIPPED AHEAD OF VESSEL TO FIELD CONSTRUCTION FOR INSTALLATION BY OTHERS.
4. DELETED.
5. CONTENTS OF THIS DOCUMENT ARE DANGEROUS WASTE PERMIT AFFECTING.

HOLDS:

1. FINAL PULSE JET MIXER SIZE & DISPOSITION PENDING STUDY OF MIXING OF NON-NEWTONIAN FLUIDS
2. NOZZLE ORIENTATION AND LOCATION PENDING REVIEW BY PLANT DESIGN
3. NAME PLATE LOCATION PENDING REVIEW BY CONSTRUCTION
4. LIFTING/TAILING LUG LOCATION PENDING REVIEW BY CONSTRUCTION

PLEASE NOTE THAT SOURCE, SPECIAL NUCLEAR AND BYPRODUCT MATERIALS, AS DEFINED IN THE ATOMIC ENERGY ACT OF 1954 (AEA) ARE REGULATED AT THE "US DEPARTMENT OF ENERGY (DOE) FACILITIES EXCLUSIVELY" BY DOE ACTING PURSUANT TO ITS AEA AUTHORITY. DOE ASSERTS, THAT PURSUANT TO THE AEA, IT HAS SOLE AND EXCLUSIVE RESPONSIBILITY AND AUTHORITY TO REGULATE SOURCE, SPECIAL NUCLEAR, AND BYPRODUCT MATERIALS AT DOE-OWNED NUCLEAR FACILITIES. INFORMATION CONTAINED HEREIN ON RADIONUCLIDES IS PROVIDED FOR PROCESS DESCRIPTION PURPOSES ONLY.

THIS DRAWING TO BE READ IN CONJUNCTION WITH MECHANICAL SYSTEMS DATA SHEET 24590-PTF-MVD-UFP-P0015

VESSEL COMPONENT QUALITY LEVELS	
COMPONENTS	QUALITY LEVEL
MAIN VESSEL, SKIRT, ALL NOZZLES	QL-1
ALL INTERNAL SUPPORTS	QL-1
PULSE JET MIXERS AND PIPING	QL-1
THERMOWELL	QL-1
INSTRUMENTATION	QM
WASH RING AND PIPING	QM

REFERENCE DRAWINGS		
DWG NO	REV	TITLE
24590-PTF-MVB-UFP-P0002	0	P&ID
24590-PTF-MVB-UFP-P0011	0	P&ID
24590-PTF-MVB-UFP-P0015	0	P&ID
24590-WTP-MVA-N56T-00001	1	PRESSURE VESSEL TOLERANCES STANDARD DETAILS
24590-WTP-MVA-N56T-00004	0	PULSE JET MIXERS STANDARD DETAILS
24590-WTP-MVA-N56T-00007	2	THERMOWELL CONNECTION STANDARD DETAILS
24590-WTP-MVA-N56T-00009	1	LIFTING LUGS STANDARD DETAILS
24590-WTP-MVA-N56T-00010	1	TAILING LUG STANDARD DETAILS
24590-WTP-MVA-N56T-00011	1	WASH RINGS STANDARD DETAILS
24590-WTP-MVA-N56T-00016001	2	VESSEL CONNECTIONS STANDARD DETAILS SHT 1 OF 3
24590-WTP-MVA-N56T-00016002	1	VESSEL CONNECTIONS STANDARD DETAILS SHT 2 OF 3
24590-WTP-MVA-N56T-00016003	0	VESSEL CONNECTIONS STANDARD DETAILS SHT 3 OF 3
24590-WTP-MVA-N56T-00017	1	VESSEL INSPECTION MANWAY STANDARD DETAILS
24590-WTP-MVA-N56T-00018	1	VESSEL NAME PLATE STANDARD DETAILS

REV	DESCRIPTION	DR3	CHKD	R/WD	APVD	DATE
0	ISSUED FOR PERMITTING USE	JS	MK	CS	MJ	10/9/03

Q QUALITY LEVEL

REVISION HISTORY

ISSUED BY (SEPARATE SEC. 1.5.2.3.3.3 FOR DATA) — BY — DATE

DRAWN BY — DATE 09/9/03

CHECKED — 9/9/03

APPROVED — 10/9/03

REVIEWED — 9/9/03

CONTENT APPLICABLE TO ALARM ☐ YES ☐ NO

ADR NO — REV:

CDM REFERENCE No.

PROJECT No. 24590
SITE HANFORD
AREA 200E
BUILDING No. TD

RIVER PROTECTION PROJECT
WASTE TREATMENT PLANT
2435 STEVENS CENTER PLACE
RICHLAND, WA 99352

CONTRACT No. DE-AC27-01RV14136

EQUIPMENT ASSEMBLY
ULTRAFILTRATION FEED VESSEL
UFP-VSL-00002B

SCALE NONE

24590-PTF-MV-UFP-P0004

REV 0

09/09/2003 9:15:08 AM

ECFM E_MASTER 10/2003

24590-PTF-MV-UFP-P0005

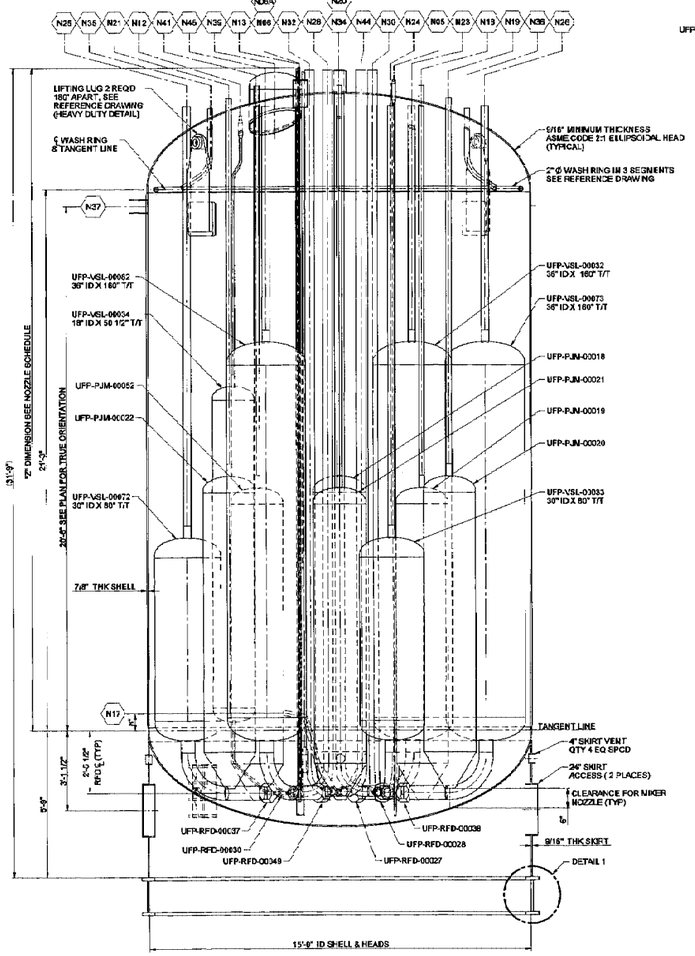

ELEVATION

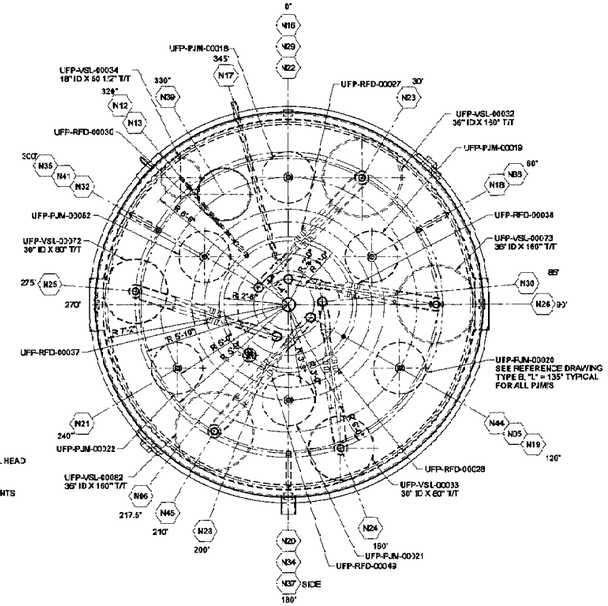

PLAN

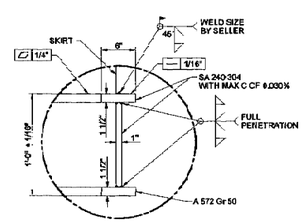

DETAIL 1

NOZZLE	SIZE	SCHED/WALL	SERVICE/REMARKS	Z DIM	REF DWG-DET	CONN PIPE/SCHED
N05	1"	160S	TEMPERATURE	TBD	24590-WTP-MV-M61T-00007001 ASSY 1	3/4"-16S
N06	6"	80S	INSTRUMENTATION	23'-6"	24590-WTP-MV-M61T-00016003 DET 26	N/A
N06A	1"	160S	BALANCE	26'-1"	24590-WTP-MV-M61T-00016003 DET 26	1"-40S
N06B	1"	160S	DENSITY	26'-2"	24590-WTP-MV-M61T-00016003 DET 26	1"-40S
N06C	1"	160S	LEVEL	26'-2"	24590-WTP-MV-M61T-00016003 DET 26	1"-40S
N07	2"	80S	INLET	TBD	24590-WTP-MV-M61T-00016001 DET 2	2"-40S
N09	2"	80S	INLET	TBD	24590-WTP-MV-M61T-00016001 DET 2	2"-40S
N10	2"	80S	INLET	TBD	24590-WTP-MV-M61T-00016001 DET 2	2"-40S
N11	2"	80S	INLET/AIR PURGE	TBD	24590-WTP-MV-M61T-00016001 DET 2	2"-40S
N12	2" OD	160S	AIR/VACUUM TO UFP-VSL-00034	25'-7"	24590-WTP-MV-M61T-00016001 DET 3	1"-40S
N13	2" OD	160S	OUTLET/SAMPLE (UFP-RFD-00030)	25'-3"	24590-WTP-MV-M61T-00016001 DET 7	1"-40S
N14	2"	80S	SAMPLE RETURN	25'-3"	24590-WTP-MV-M61T-00016001 DET 3	2"-40S
N16	2"	160S	AIR/VACUUM TO UFP-PJM-00018	25'-6"	24590-WTP-MV-M61T-00016001 DET 3	2"-40S
N17	2"	160S	OUTLET TO EJECTOR	8"	24590-WTP-MV-M61T-00016001 DET 3	2"-40S
N18	2"	160S	AIR/VACUUM TO UFP-PJM-00019	25'-2"	24590-WTP-MV-M61T-00016001 DET 3	2"-40S
N19	2"	160S	AIR/VACUUM TO UFP-PJM-00020	24'-7"	24590-WTP-MV-M61T-00016001 DET 3	2"-40S
N20	2"	160S	AIR/VACUUM TO UFP-PJM-00021	25'-3"	24590-WTP-MV-M61T-00016001 DET 3	2"-40S
N21	2"	160S	AIR/VACUUM TO UFP-PJM-00022	24'-7"	24590-WTP-MV-M61T-00016001 DET 3	2"-40S
N22	6"	40S	OUTLET/VESSEL VENT	25'-6"	24590-WTP-MV-M61T-00016001 DET 1	6"-40S
N23	3"	160S	AIR/VACUUM TO UFP-VSL-00032	24'-7"	24590-WTP-MV-M61T-00016001 DET 3	3"-40S
N24	3"	160S	AIR/VACUUM TO UFP-VSL-00033	24'-7"	24590-WTP-MV-M61T-00016001 DET 3	3"-40S
N25	3"	160S	AIR/VACUUM TO UFP-VSL-00072	24'-6"	24590-WTP-MV-M61T-00016001 DET 3	3"-40S
N26	3"	160S	AIR/VACUUM TO UFP-VSL-00073	24'-6"	24590-WTP-MV-M61T-00016001 DET 3	3"-40S
N28	4"	80S	OUTLET FOR UFP-RFD-00037	25'-4"	24590-WTP-MV-M61T-00016001 DET 3	4"-40S
N29	4"	80S	OUTLET FOR UFP-RFD-00038	24'-7"	24590-WTP-MV-M61T-00016001 DET 3	4"-40S
N30	4"	80S	OUTLET FOR UFP-RFD-00028	25'-3"	24590-WTP-MV-M61T-00016001 DET 3	4"-40S
N32	4"	80S	OUTLET FOR UFP-RFD-00027	25'-3"	24590-WTP-MV-M61T-00016001 DET 3	4"-40S
N34	2"	80S	INLET TO WASH RING	24'-4"	24590-WTP-MV-M61T-00016001 DET 3	2"-40S
N35	2"	80S	INLET TO WASH RING	24'-4"	24590-WTP-MV-M61T-00016001 DET 3	2"-40S
N36	2"	80S	INLET TO WASH RING	24'-4"	24590-WTP-MV-M61T-00016001 DET 3	2"-40S
N37	6"	80S	OUTLET/OVERFLOW	26'-7"	24590-WTP-MV-M61T-00016001 DET 1	6"-40S
N38	2"	40S	SPARE	TBD	24590-WTP-MV-M61T-00016001 DET 3	2"-40S
N39	24"	PLATE	MANWAY	TBD	24590-WTP-MV-M61T-00017 DET 1	24"-CAPPED
N40	3"	40S	SPARE	TBD	24590-WTP-MV-M61T-00016001 DET 2	3"-40S
N41	2"	160S	AIR/VACUUM TO UFP-PJM-00052	26'-2"	24590-WTP-MV-M61T-00016001 DET 3	2"-40S
N44	4"	80S	OUTLET FOR UFP-RFD-00049	25'-3"	24590-WTP-MV-M61T-00016001 DET 3	4"-40S
N45	3"	80S	AIR/VACUUM TO UFP-VSL-00062	24'-7"	24590-WTP-MV-M61T-00016001 DET 3	3"-40S
N46	2" OD	-	FORCED AIR PURGE	TBD	24590-WTP-MV-M61T-00016001 DET 5	1/2"-40S

GENERAL NOTES:

1. RFD PUMP SHALL BE PROVIDED BY BUYER. FOR SELLER TO INSTALL. ALL OTHER INTERNALS SHALL BE DESIGNED, PROVIDED AND INSTALLED BY SELLER.
2. FOR DIP LEGS USE 2" BOTTOM HEAD CLEARANCE.
3. "Z" DIMENSION MEASURED FROM BOTTOM "TANGENT" LINE TO NOZZLE FACE.
4. ALL RFD'S ARE TYPE 80L WITH EXCEPTION TO UFP-RFD-00034, WHICH IS 125M.
5. BASE PLATE BEAM TO BE SHIPPED AHEAD OF VESSEL TO FIELD CONSTRUCTION FOR INSTALLATION BY OTHERS.
6. REVISED, ADDED, DELETED:
   a) REVISED NOZZLE SCHEDULE PER REV. 0 OF P&ID.
   b) REVISED PULSE JET MIXER SIZE TO TYPE B "L" = 135°
   c) REVISED "VESSEL QUALITY COMPONENT TABLE"
   e) REVISED TOLERANCE IN DETAIL 1
   f) REVISED CHARGE VESSEL SIZES FOR UFP-VSL-00032, -00073, -00032, -00034.
   g) REVISED INTERNAL LAYOUT.
   h) DELETED GROUNDING LUGS.
   j) REVISED INSTRUMENTATION DETAIL.
7. CONTENTS OF THIS DOCUMENT ARE DANGEROUS WASTE PERMIT EFFECTING.

THIS DRAWING TO BE READ IN CONJUNCTION WITH MECHANICAL SYSTEMS DATA SHEET 24590-PTF-M/D-UFP-P0005

PLEASE NOTE THAT SOURCE, SPECIAL NUCLEAR AND BYPRODUCT MATERIALS, AS DEFINED IN THE ATOMIC ENERGY ACT OF 1954 (AEA), ARE REGULATED AT THE US DEPARTMENT OF ENERGY (DOE) FACILITIES EXCLUSIVELY BY DOE ACTING PURSUANT TO ITS AEA AUTHORITY. DOE ASSERTS, THAT PURSUANT TO THE AEA, IT HAS SOLE AND EXCLUSIVE RESPONSIBILITY AND AUTHORITY TO REGULATE SOURCE, SPECIAL NUCLEAR, AND BYPRODUCT MATERIALS AT DOE-OWNED NUCLEAR FACILITIES. INFORMATION CONTAINED HEREIN ON RADIONUCLIDES IS PROVIDED FOR PROCESS DESCRIPTION PURPOSES ONLY.

VESSEL COMPONENT QUALITY LEVELS	
COMPONENTS	QUALITY LEVEL
MAIN VESSEL, SKIRT, ALL NOZZLES	QL-1
ALL INTERNAL SUPPORTS	QL-1
PULSE JET MIXERS AND PIPING	CM
ALL CHARGE VESSELS, RFD'S, AND PIPING	CM
INSTRUMENTATION	CM
WASH RING AND PIPING	CM

REFERENCE DRAWINGS		
DWG NO	REV	TITLE
24590-WTP-M/M/S6T-00061	C	PRESSURE VESSEL TOLERANCES STANDARD DETAILS
24590-WTP-M/M/S6T-00064	C	PULSE JET MIXERS STANDARD DETAILS
24590-WTP-M/M/S6T-00067	C	THERMOWELL CONNECTION STANDARD DETAILS
24590-WTP-M/M/S6T-00069	C	LIFTING LUGS STANDARD DETAILS
24590-WTP-M/M/S6T-00010	C	TAILING LUG STANDARD DETAILS
24590-WTP-M/M/S6T-00011	C	WASH RINGS STANDARD DETAILS
24590-WTP-M/M/S6T-00013	C	CHARGE VESSELS STANDARD DETAILS
24590-WTP-M/M/S6T-00014	C	RFD PUMPS STANDARD DETAILS
24590-WTP-M/M/S6T-00016001	C	VESSEL CONNECTIONS STANDARD DETAILS SHT 1 OF 3
24590-WTP-M/M/S6T-00016002	C	VESSEL CONNECTIONS STANDARD DETAILS SHT 2 OF 3
24590-WTP-M/M/S6T-00016003	C	VESSEL CONNECTIONS STANDARD DETAILS SHT 3 OF 3
24590-WTP-M/M/S6T-00017	C	VESSEL INSPECTION MANWAY STANDARD DETAILS
24590-WTP-M/M/S6T-00018	C	VESSEL NAMEPLATE STANDARD DETAILS
24590-PTF-M0-UFP-P0004	C	P&ID
24590-PTF-M0-UFP-P0005	C	P&ID
24590-PTF-M0-UFP-P0006	C	P&ID
24590-PTF-M0-UFP-P0015	C	P&ID

REV	DESCRIPTION	ORG	CHKD	RVWD	APVD	DATE
0	ISSUED FOR PERMITTING USE	JW	JK			10/9/03

REVISION HISTORY

ISSUED BY BECHTEL NATIONAL, INC.	PROJECT No	24590
	SITE	HANFORD
	AREA	200E
	BUILDING No	11
	BY	DATE
ORIGINATOR	Jesse Jackson	9/18/03
CHECKER		9/18/03
APPROVER		10/9/03
REVIEWER		9/18/03
CONTRACT APPLICABILITY ALARA? ☐ YES ☐ NO		
AJR IC	REV	
DM REFERENCE(S):		

RIVER PROTECTION PROJECT
WASTE TREATMENT PLANT
2435 STEVENS CENTER PLACE
RICHLAND, WA 99352

CONTRACT No: DE-AC27-01RV14136

EQUIPMENT ASSEMBLY
ULTRAFILTER PERMEATE VESSEL
UFP-VSL-00062A

SCALE: 1" SIZE = 4-63

24590-PTF-MV-UFP-P0005 REV 0

COMPUTED GENERATED BY SOLIDEDGE. MANUAL CHANGES NOT PERMITTED

WHEN REFERENCING DRAWING AND COMPONENTS INCLUDE ALL REQUIRED SUFFIXES. DASHES ARE EMBEDDED IN CS

09/09/2003 7:35 AM

24590-PTF-MV-UFP-P0006

NOZZLE	SIZE	SCHED/WALL	SERVICE/REMARKS	Z DIM	REF DWG-DET	CONN PIPE/SCHED
N05	1"	160S	TEMPERATURE	TBD	24590-WTP-MV-MEBT-00017001 ASSY 1	3/4"-10S
N06	6"	80S	INSTRUMENTATION	25-8"	24590-WTP-MV-MEBT-00016003 DET 26	N/A
N06A	1"	160S	BALANCE	26-1"	24590-WTP-MV-MEBT-00016003 DET 26	1"40S
N06B	1"	160S	DENSITY	26-2"	24590-WTP-MV-MEBT-00016003 DET 26	1"40S
N06C	1"	160S	LEVEL	26-3"	24590-WTP-MV-MEBT-00016003 DET 26	1"40S
N07	2"	80S	INLET	TBD	24590-WTP-MV-MEBT-00016001 DET 2	2"-46S
N09	2"	80S	INLET	TBD	24590-WTP-MV-MEBT-00016001 DET 2	2"-46S
N10	2"	80S	INLET	TBD	24590-WTP-MV-MEBT-00016001 DET 2	2"-46S
N11	2"	80S	INLET/AIR PURGE	TBD	24590-WTP-MV-MEBT-00016001 DET 2	2"-46S
N12	2" OD	160S	AIR/VACUUM TO UFP-VSL-00037	25-7"	24590-WTP-MV-MEBT-00016001 DET 3	1"-46S
N13	2" OD	160S	OUTLET SAMPLE (UFP-RFD-00034)	25-3"	24590-WTP-MV-MEBT-00016001 DET 7	1"-46S
N14	2"	80S	SAMPLE RETURN	25-3"	24590-WTP-MV-MEBT-00016001 DET 3	2"-46S
N16	2"	160S	AIR/VACUUM TO UFP-PJM-00039	25-5"	24590-WTP-MV-MEBT-00016001 DET 3	2"-46S
N17	2"	160S	OUTLET TO EJECTOR	8"	24590-WTP-MV-MEBT-00016001 DET 3	2"-46S
N18	2"	160S	AIR/VACUUM TO UFP-PJM-00040	25-2"	24590-WTP-MV-MEBT-00016001 DET 3	2"-46S
N19	2"	160S	AIR/VACUUM TO UFP-PJM-00041	24-7"	24590-WTP-MV-MEBT-00016001 DET 3	2"-46S
N20	2"	160S	AIR/VACUUM TO UFP-PJM-00042	25-3"	24590-WTP-MV-MEBT-00016001 DET 3	2"-46S
N21	2"	160S	AIR/VACUUM TO UFP-PJM-00043	24-7"	24590-WTP-MV-MEBT-00016001 DET 3	2"-46S
N22	6"	40S	OUTLET/VESSEL VENT	25-8"	24590-WTP-MV-MEBT-00016001 DET 1	6"-10S
N23	3"	80S	AIR/VACUUM TO UFP-VSL-00035	24-7"	24590-WTP-MV-MEBT-00016001 DET 3	3"-46S
N24	3"	80S	AIR/VACUUM TO UFP-VSL-00036	24-7"	24590-WTP-MV-MEBT-00016001 DET 3	3"-46S
N25	3"	80S	AIR/VACUUM TO UFP-VSL-00075	24-8"	24590-WTP-MV-MEBT-00016001 DET 3	3"-46S
N26	3"	80S	AIR/VACUUM TO UFP-VSL-00051	24-8"	24590-WTP-MV-MEBT-00016001 DET 3	3"-46S
N28	4"	80S	OUTLET FOR UFP-RFD-00035	25-4"	24590-WTP-MV-MEBT-00016001 DET 3	4"-46S
N29	4"	80S	OUTLET FOR UFP-RFD-00039	24-7"	24590-WTP-MV-MEBT-00016001 DET 3	4"-46S
N30	4"	80S	OUTLET FOR UFP-RFD-00032	25-3"	24590-WTP-MV-MEBT-00016001 DET 3	4"-46S
N32	4"	80S	OUTLET FOR UFP-RFD-00031	25-3"	24590-WTP-MV-MEBT-00016001 DET 3	4"-46S
N34	2"	80S	INLET TO WASH RING	24-4"	24590-WTP-MV-MEBT-00016001 DET 3	2"-46S
N35	2"	80S	INLET TO WASH RING	24-4"	24590-WTP-MV-MEBT-00016001 DET 3	2"-46S
N36	2"	80S	INLET TO WASH RING	24-4"	24590-WTP-MV-MEBT-00016001 DET 3	2"-46S
N37	6"	80S	OUTLET/OVERFLOW	20-7"	24590-WTP-MV-MEBT-00016001 DET 1	6"-46S
N38	2"	40S	SPARE	TBD	24590-WTP-MV-MEBT-00016001 DET 3	CAPPED
N39	24"	PLATE	MANWAY	TBD	24590-WTP-MV-MEBT-00017 DET 1	24"-CAPPED
N40	3"	40S	SPARE	TBD	24590-WTP-MV-MEBT-00016001 DET 2	3"-46S
N41	2"	160S	AIR/VACUUM TO UFP-PJM-00051	25-2"	24590-WTP-MV-MEBT-00016001 DET 3	2"-46S
N44	4"	80S	OUTLET FOR UFP-RFD-00047	25-3"	24590-WTP-MV-MEBT-00016001 DET 3	4"-46S
N45	3"	80S	AIR/VACUUM TO UFP-VSL-00083	24-7"	24590-WTP-MV-MEBT-00016001 DET 3	2"-46S
N48	2" OD	-	FORCED AIR PURGE	TBD	24590-WTP-MV-MEBT-00016001 DET 5	1/2"-40S

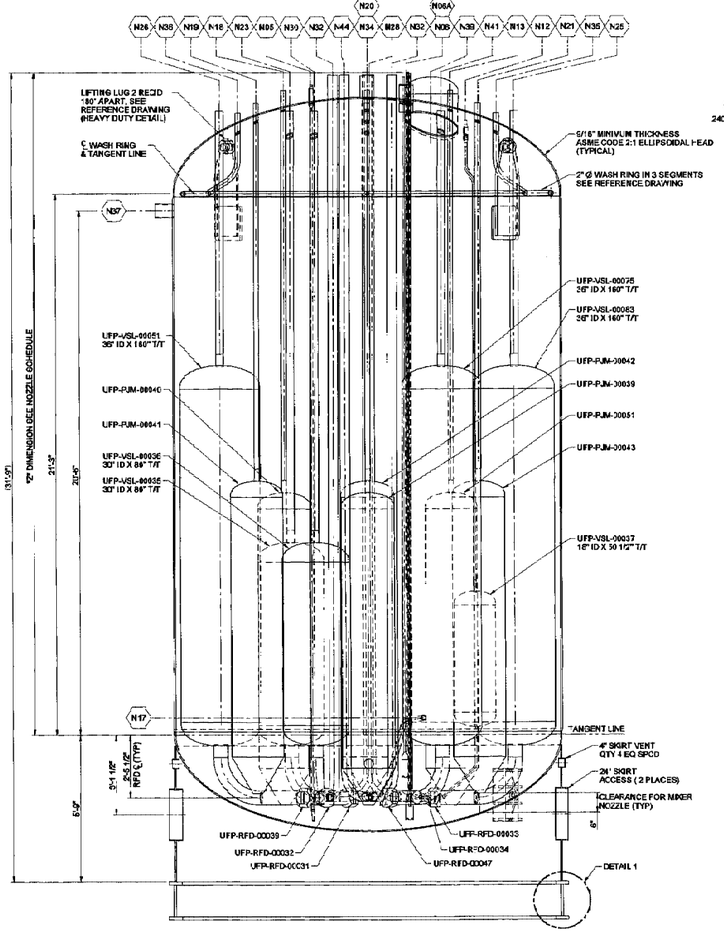

ELEVATION

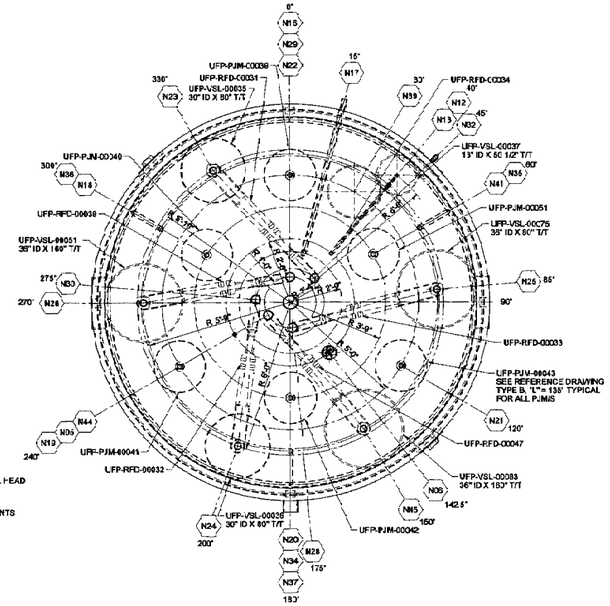

PLAN

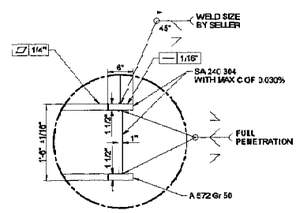

DETAIL 1

GENERAL NOTES:

1. RFD PUMP SHALL BE PROVIDED BY BUYER FOR SELLER TO INSTALL. ALL OTHER INTERNALS SHALL BE DESIGNED, PROVIDED AND INSTALLED BY SELLER.
2. FOR DIP LEGS USE 2" BOTTOM HEAD CLEARANCE.
3. "Z" DIMENSION MEASURED FROM BOTTOM TANGENT LINE TO NOZZLE FACE.
4. ALL RFD'S ARE TYPE 1801 WITH EXCEPTION TO UFP-RFD-00030, WHICH IS 1259M.
5. BASE PLATE BEAM TO BE SHIPPED AHEAD OF VESSEL TO FIELD CONSTRUCTION FOR INSTALLATION BY OTHERS.
6. REVISED, ADDED, DELETED:
   a) REVISED NOZZLE SCHEDULE PER REV. 0 OF P&ID.
   b) REVISED PULSE JET MIXER SIZE TO TYPE B "L" = 135"
   c) REVISED "VESSEL QUALITY COMPONENT TABLE"
   e) REVISED TOLERANCE IN DETAIL 1
   f) REVISED CHARGE VESSEL SIZES FOR UFP-VSL-00035, -00051, -00083, -00037.
   g) REVISED INTERNAL LAYOUT.
   h) DELETED GROUNDING LUGS.
   j) REVISED INSTRUMENTATION DETAIL.
7. CONTENTS OF THIS DOCUMENT ARE DANGEROUS WASTE PERMIT EFFECTING.

THIS DRAWING TO BE READ IN CONJUNCTION WITH MECHANICAL SYSTEMS DATA SHEET 24590-PTF-MND-UFP-P0006

PLEASE NOTE THAT SOURCE, SPECIAL NUCLEAR AND BYPRODUCT MATERIALS, AS DEFINED IN THE ATOMIC ENERGY ACT OF 1954 (AEA) ARE REGULATED AT THE U.S. DEPARTMENT OF ENERGY (DOE) FACILITIES EXCLUSIVELY BY DOE ACTING PURSUANT TO ITS AEA AUTHORITY. DOE ASSERTS, THAT PURSUANT TO THE AEA, IT HAS SOLE AND EXCLUSIVE RESPONSIBILITY AND AUTHORITY TO REGULATE SOURCE, SPECIAL NUCLEAR, AND BYPRODUCT MATERIALS AT DOE OWNED NUCLEAR FACILITIES. INFORMATION CONTAINED HEREIN ON RADIONUCLIDES IS PROVIDED FOR PROCESS DESCRIPTION PURPOSES ONLY.

VESSEL COMPONENT QUALITY LEVELS	
COMPONENTS	QUALITY LEVEL
MAIN VESSEL, SKIRT, ALL NOZZLES	QL-1
ALL INTERNAL SUPPORTS	QL-1
PULSE JET MIXERS AND PIPING	CM
ALL CHARGE VESSELS, RFD'S, AND PIPING	CM
INSTRUMENTATION	CM
WASH RING AND PIPING	CM

REFERENCE DRAWINGS

DWG NO	REV	TITLE
24590-WTP-MV-MEBT-00001	3	PRESSURE VESSEL TOLERANCES STANDARD DETAILS
24590-WTP-MV-MEBT-00004	3	PULSE JET MIXERS STANDARD DETAILS
24590-WTP-MV-MEBT-00007	3	THERMOWELL CONNECTION STANDARD DETAILS
24590-WTP-MV-MEBT-00009	3	LIFTING LUGS STANDARD DETAILS
24590-WTP-MV-MEBT-00010	3	TAILING LUGS STANDARD DETAILS
24590-WTP-MV-MEBT-00011	3	WASH RINGS STANDARD DETAILS
24590-WTP-MV-MEBT-00013	3	CHARGE VESSELS STANDARD DETAILS
24590-WTP-MV-MEBT-00014	3	RFD PUMPS STANDARD DETAILS
24590-WTP-MV-MEBT-00019001	3	VESSEL CONNECTIONS STANDARD DETAILS SHT 1 OF 3
24590-WTP-MV-MEBT-00019002	3	VESSEL CONNECTIONS STANDARD DETAILS SHT 2 OF 3
24590-WTP-MV-MEBT-00019003	3	VESSEL CONNECTIONS STANDARD DETAILS SHT 3 OF 3
24590-WTP-MV-MEBT-00017	3	VESSEL INSPECTION MANWAY STANDARD DETAILS
24590-WTP-MV-MEBT-00015	3	VESSEL NAMEPLATE STANDARD DETAILS
24590-PTF-MB-LFP-P0004	3	PMD
24590-PTF-MB-LFP-P0005	3	PMD
24590-PTF-MB-LFP-P0006	3	PMD
24590-PTF-MB-LFP-P0015	3	PMD

REV	DESCRIPTION	ORG	CHKD	R/WD	APVD	DATE
0	ISSUED FOR PERMITTING USE					10/9/03

REVISION HISTORY

Q CONTROL

ISSUED BY: RICHARD BAKER 10/9/03

PROJECT No.	24590	
SITE	HANFORD	
AREA	200E	
BUILDING No	0	
		DATE
ORIGINATOR		4/7/03
CHECKER		7/10/03
APPROVER		10/9/03
REVIEWER		9/11/03

CONTENT APPLICABLE TO NLAW? ☐ YES ☐ NO

A/E NO: REV:

CM REFERENCE NO.

RIVER PROTECTION PROJECT
WASTE TREATMENT PLANT
2435 STEVENS CENTER PLACE
RICHLAND, WA 99352

COMPANY No: DE-AC27-01RL14134

EQUIPMENT ASSEMBLY ULTRAFILTER PERMEATE VESSEL UFP-VSL-00062B

SIZE: E | 24590-PTF-MV-UFP-P0006 | REV 0

E 8.25E+ 44x34 COMPUTER GENERATED BY SOLID EDGE - MANUAL CHANGES NOT PERMITTED

VHS REFERENCING DRAWING AND EIB NUMBERS IN DOCUMENTS MUST INCLUDE PARTS BETWEEN PLANKETS.

09/08/2003 7:37 AM

FORM E_NAME:ER010/2003

1 of 1

NOZZLE	SIZE	SCHED/WALL	SERVICE/REMARKS	Z DIM	REF DWG-DET	CONN PIPE/SCHED
N05	1"	160S	TEMPERATURE	TBD	24590-WTP-MV-M59T-00007001 ASSY 1	3/4"-10S
N06	6"	80S	INSTRUMENTATION	25'-8"	24590-WTP-MV-M59T-00016003 DET 26	N/A
N06A	1"	160S	BALANCE	26'-1"	24590-WTP-MV-M59T-00016003 DET 26	1"40S
N06B	1"	160S	DENSITY	26'-2"	24590-WTP-MV-M59T-00016003 DET 26	1"40S
N06C	1"	160S	LEVEL	26'-2"	24590-WTP-MV-M59T-00016003 DET 26	1"40S
N07	2"	80S	INLET	TBD	24590-WTP-MV-M59T-00016001 DET 2	2"-40S
N09	2"	80S	INLET	TBD	24590-WTP-MV-M59T-00016001 DET 2	2"-40S
N10	2"	80S	INLET	TBD	24590-WTP-MV-M59T-00016001 DET 2	2"-40S
N11	2"	80S	INLET/AIR PURGE	TBD	24590-WTP-MV-M59T-00016001 DET 2	2"-40S
N12	2" OD	160S	AIR/VACUUM TO UFP-VSL-00023	25'-7"	24590-WTP-MV-M59T-00016001 DET 3	1"-40S
N13	2" OD	160S	OUTLET/SAMPLE (UFP-RFD-00046)	25'-3"	24590-WTP-MV-M59T-00016001 DET 7	1"-40S
N14	2"	80S	SAMPLE RETURN	25'-3"	24590-WTP-MV-M59T-00016001 DET 3	2"-40S
N16	2"	160S	AIR/VACUUM TO UFP-PJM-00073	25'-8"	24590-WTP-MV-M59T-00016001 DET 3	2"-40S
N17	2"	160S	OUTLET TO EJECTOR	8"	24590-WTP-MV-M59T-00016001 DET 3	2"-40S
N18	2"	160S	AIR/VACUUM TO UFP-PJM-00076	25'-2"	24590-WTP-MV-M59T-00016001 DET 3	2"-40S
N19	2"	160S	AIR/VACUUM TO UFP-PJM-00077	24'-7"	24590-WTP-MV-M59T-00016001 DET 3	2"-40S
N20	2"	160S	AIR/VACUUM TO UFP-PJM-00078	25'-3"	24590-WTP-MV-M59T-00016001 DET 3	2"-40S
N21	2"	160S	AIR/VACUUM TO UFP-PJM-00070	24'-7"	24590-WTP-MV-M59T-00016001 DET 3	2"-40S
N22	6"	40S	OUTLET/VESSEL VENT	25'-8"	24590-WTP-MV-M59T-00016001 DET 1	6"-40S
N23	3"	160S	AIR/VACUUM TO UFP-VSL-00025	24'-7"	24590-WTP-MV-M59T-00016001 DET 3	3"-40S
N24	3"	160S	AIR/VACUUM TO UFP-VSL-00024	24'-7"	24590-WTP-MV-M59T-00016001 DET 3	3"-40S
N25	3"	160S	AIR/VACUUM TO UFP-VSL-00069	24'-6"	24590-WTP-MV-M59T-00016001 DET 3	3"-40S
N26	3"	160S	AIR/VACUUM TO UFP-VSL-00070	24'-6"	24590-WTP-MV-M59T-00016001 DET 3	3"-40S
N28	4"	80S	OUTLET FOR UFP-RFD-00044	25'-4"	24590-WTP-MV-M59T-00016001 DET 3	4"-40S
N29	4"	80S	OUTLET FOR UFP-RFD-00045	24'-7"	24590-WTP-MV-M59T-00016001 DET 3	4"-40S
N30	4"	80S	OUTLET FOR UFP-RFD-00043	25'-3"	24590-WTP-MV-M59T-00016001 DET 3	4"-40S
N32	4"	80S	OUTLET FOR UFP-RFD-00042	25'-3"	24590-WTP-MV-M59T-00016001 DET 3	4"-40S
N34	2"	80S	INLET TO WASH RING	24'-4"	24590-WTP-MV-M59T-00016001 DET 3	2"-40S
N35	2"	80S	INLET TO WASH RING	24'-4"	24590-WTP-MV-M59T-00016001 DET 3	2"-40S
N36	2"	80S	INLET TO WASH RING	24'-4"	24590-WTP-MV-M59T-00016001 DET 3	2"-40S
N37	6"	80S	OUTLET/OVERFLOW	20'-7"	24590-WTP-MV-M59T-00016001 DET 1	6"-40S
N38	2"	40S	SPARE	TBD	24590-WTP-MV-M59T-00016001 DET 3	2"-40S
N39	24"	PLATE	MANWAY	TBD	24590-WTP-MV-M59T-00017 DET 1	24"-CAPPED
N40	3"	40S	SPARE	TBD	24590-WTP-MV-M59T-00016001 DET 2	3"-40S
N41	2"	160S	AIR/VACUUM TO UFP-PJM-00107	25'-2"	24590-WTP-MV-M59T-00016001 DET 3	2"-40S
N44	4"	80S	OUTLET FOR UFP-RFD-00048	25'-3"	24590-WTP-MV-M59T-00016001 DET 3	4"-40S
N45	3"	80S	AIR/VACUUM TO UFP-VSL-00084	24'-7"	24590-WTP-MV-M59T-00016001 DET 3	2"-40S
N46	2" OD	-	FORCED AIR PURGE	TBD	24590-WTP-MV-M59T-00016001 DET 5	1/2"-40S

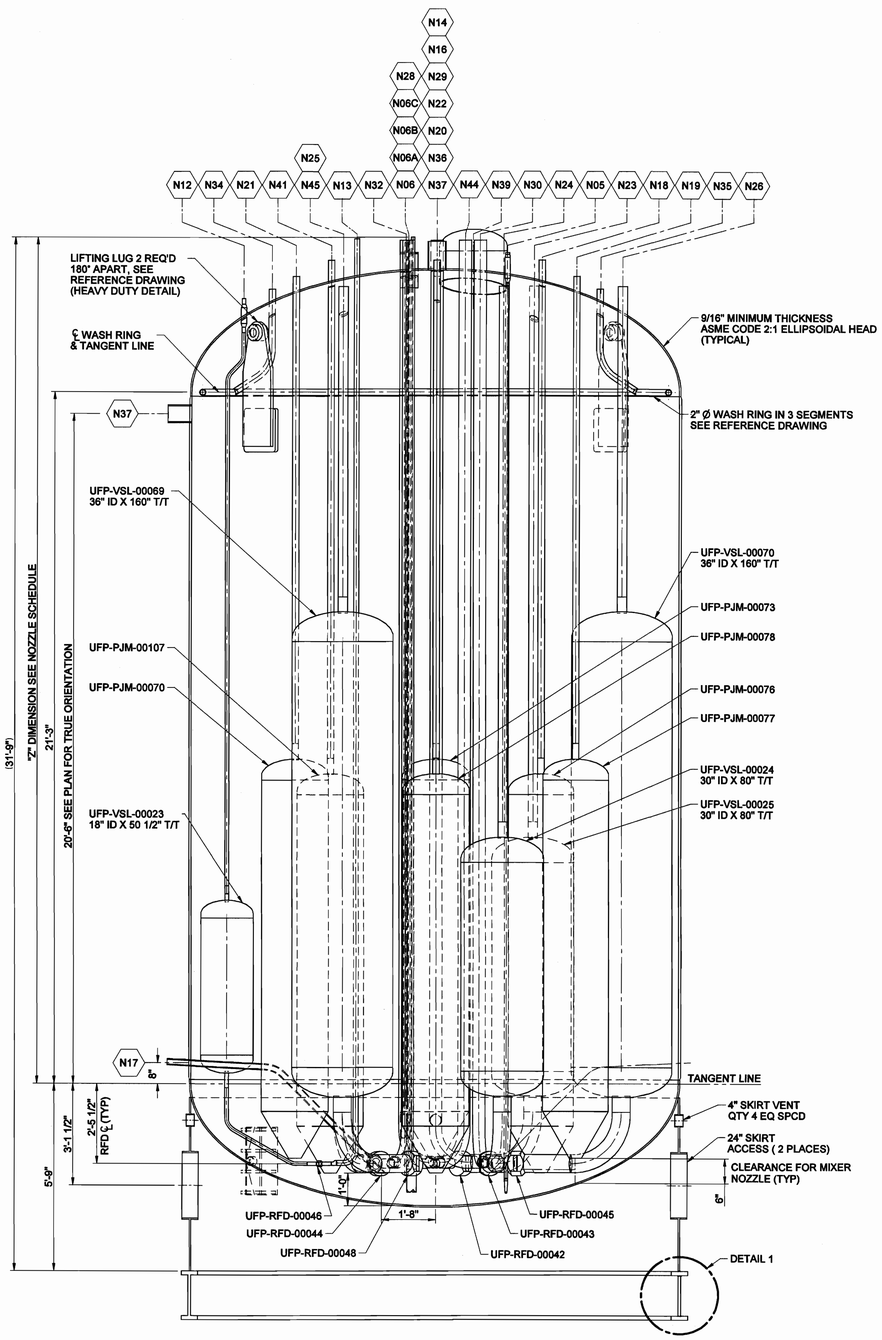

ELEVATION

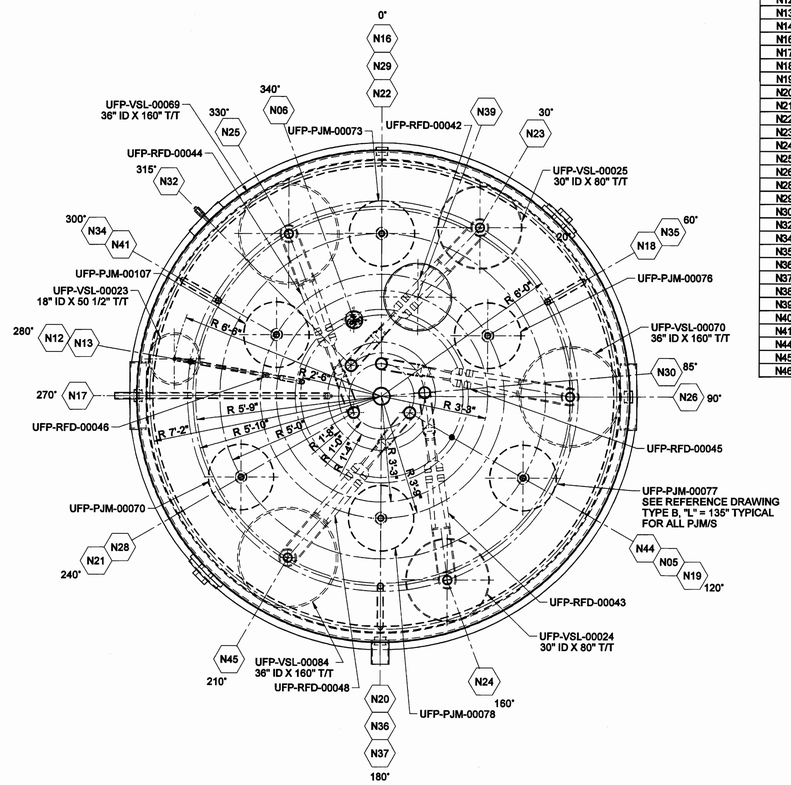

PLAN

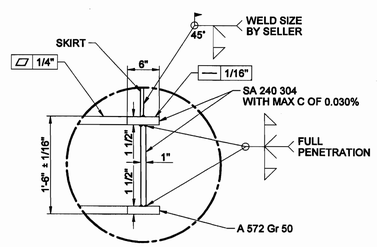

DETAIL 1

GENERAL NOTES:

1. RFD PUMP SHALL BE PROVIDED BY BUYER FOR SELLER TO INSTALL. ALL OTHER INTERNALS SHALL BE DESIGNED, PROVIDED AND INSTALLED BY SELLER.
2. FOR DIP LEGS USE 2" BOTTOM HEAD CLEARANCE.
3. "Z" DIMENSION MEASURED FROM BOTTOM TANGENT LINE TO NOZZLE FACE.
4. ALL RFD'S ARE TYPE I80L WITH EXCEPTION TO UFP-RFD-00023, WHICH IS I25M.
5. BASE PLATE BEAM TO BE SHIPPED AHEAD OF VESSEL TO FIELD CONSTRUCTION FOR INSTALLATION BY OTHERS.
6. REVISED, ADDED, DELETED:
   a) REVISED NOZZLE SCHEDULE PER REV. 0 OF P&ID.
   b) REVISED PULSE JET MIXER SIZE TO TYPE B "L" = 135"
   c) REVISED "VESSEL QUALITY COMPONENT TABLE"
   e) REVISED TOLERANCE IN DETAIL 1
   f) REVISED CHARGE VESSEL SIZES FOR UFP-VSL-00070, -00084, -00069, -00023.
   g) REVISED INTERNAL LAYOUT.
   h) DELETED GROUNDING LUGS.
   j) REVISED INSTRUMENTATION DETAIL.
7. CONTENTS OF THIS DOCUMENT ARE DANGEROUS WASTE PERMIT EFFECTING.

THIS DRAWING TO BE READ IN CONJUNCTION WITH MECHANICAL SYSTEMS DATA SHEET 24590-PTF-MVD-UFP-P0007

PLEASE NOTE THAT SOURCE, SPECIAL NUCLEAR AND BYPRODUCT MATERIALS, AS DEFINED IN THE ATOMIC ENERGY ACT OF 1954 (AEA) ARE REGULATED AT THE U.S. DEPARTMENT OF ENERGY (DOE) FACILITIES EXCLUSIVELY BY DOE ACTING PURSUANT TO ITS AEA AUTHORITY. DOE ASSERTS, THAT PURSUANT TO THE AEA, IT HAS SOLE AND EXCLUSIVE RESPONSIBILITY AND AUTHORITY TO REGULATE SOURCE, SPECIAL NUCLEAR, AND BYPRODUCT MATERIALS AT DOE-OWNED NUCLEAR FACILITIES. INFORMATION CONTAINED HEREIN ON RADIONUCLIDES IS PROVIDED FOR PROCESS DESCRIPTION PURPOSES ONLY.

VESSEL COMPONENT QUALITY LEVELS	
COMPONENTS	QUALITY LEVEL
MAIN VESSEL, SKIRT, ALL NOZZLES	QL-1
ALL INTERNAL SUPPORTS	QL-1
PULSE JET MIXERS AND PIPING	CM
ALL CHARGE VESSELS, RFD'S, AND PIPING	CM
INSTRUMENTATION	CM
WASH RING AND PIPING	CM

REFERENCE DRAWINGS		
DWG NO	REV	TITLE
24590-WTP-MV-M59T-00001	0	PRESSURE VESSEL TOLERANCES STANDARD DETAILS
24590-WTP-MV-M59T-00004	0	PULSE JET MIXERS STANDARD DETAILS
24590-WTP-MV-M59T-00007	0	THERMOWELL CONNECTION STANDARD DETAILS
24590-WTP-MV-M59T-00009	0	LIFTING LUGS STANDARD DETAILS
24590-WTP-MV-M59T-00010	0	TAILING LUG STANDARD DETAILS
24590-WTP-MV-M59T-00011	0	WASH RINGS STANDARD DETAILS
24590-WTP-MV-M59T-00013	0	CHARGE VESSELS STANDARD DETAILS
24590-WTP-MV-M59T-00014	0	RFD PUMPS STANDARD DETAILS
24590-WTP-MV-M59T-00016001	0	VESSEL CONNECTIONS STANDARD DETAILS SHT 1 OF 3
24590-WTP-MV-M59T-00016002	0	VESSEL CONNECTIONS STANDARD DETAILS SHT 2 OF 3
24590-WTP-MV-M59T-00016003	0	VESSEL CONNECTIONS STANDARD DETAILS SHT 3 OF 3
24590-WTP-MV-M59T-00017	0	VESSEL INSPECTION MANWAY STANDARD DETAILS
24590-WTP-MV-M59T-00018	0	VESSEL NAMEPLATE STANDARD DETAILS
24590-PTF-MB-UFP-P0004	0	P&ID
24590-PTF-MB-UFP-P0005	0	P&ID
24590-PTF-MB-UFP-P0006	0	P&ID
24590-PTF-MB-UFP-P0015	0	P&ID

MARK W. HOEHNE, STATE OF WASHINGTON, 0030953, REGISTERED PROFESSIONAL ENGINEER — 10/9/03
EXPIRES 12/10/04

Q QUALITY LEVEL

REV	DESCRIPTION	ORG	CHKD	RVWD	APVD	DATE
0	ISSUED FOR PERMITTING USE	JO	HK	CE	MWH	10/9/03

REVISION HISTORY

ISSUED BY RPP-WTP PDC — BY / DATE — ISSUE STAMP

	PROJECT No.	24590
	SITE	HANFORD
	AREA	200E
	BUILDING No.	10

BECHTEL

RIVER PROTECTION PROJECT
WASTE TREATMENT PLANT
2435 STEVENS CENTER PLACE
RICHLAND, WA 99352

CONTRACT No: DE-AC27-01RV14136

	BY	DATE
ORIGINATOR	Jessica Jackson	9/8/03
CHECKER		9/10/03
APPROVER		10/9/03
REVIEWER		9/11/03

CONTENT APPLICABLE TO ALARA? YES NO
ADR NO. REV:
DIM REFERENCE No.

EQUIPMENT ASSEMBLY ULTRAFILTER PERMEATE VESSEL UFP-VSL-00062C

SCALE:

24590-PTF-MV-UFP-P0007 — REV 0

'E' SIZE - 44x34
COMPUTER GENERATED BY SOLID EDGE-MANUAL CHANGES NOT PERMITTED

WHEN REFERENCING DRAWING AND DIM NUMBERS IN DOCUMENTS, BE SURE TO INCLUDE DASHES BETWEEN ELEMENTS.

09/08/2003 7:45 AM

FORM E_MASTER 03/2003

10/3/03 — Document Date Entry — Complete QA — Approved — Filed

MECHANICAL SYSTEMS DATA SHEET: COLUMN

PLANT ITEM No.
24590-PTF-MV-CNP-DISTC-00001

R10377791

Project	***RPP-WTP***	P&ID	***24590-PTF-M6-CNP-P0010***
Project No	***24590***	Process Data Sheet	***24590-PTF-M5D-CNP-00001***
Project Site	***Hanford***	Vessel Drawing	
Description.	***Cesium Evaporator Nitric Acid Rectifier CNP-DISTC-00001***		

ISSUED BY
~~RPP-WTP PDC~~

Reference Data

Charge Vessels (Tag Numbers)	***None***
Pulsejet Mixers / Agitators (Tag Numbers)	***None***
RFDs/Pumps (Tag Numbers)	***None***

Design Data

Quality Level		***QL-1***	Fabrication Specs	***24590-WTP-3PS-MV00-TP001***		
Seismic Category		***SC-I***	Design Code	***ASME VIII Div 1***		
Service/Contents		***Nitric Acid***	Code Stamp	***Yes***		
Design Specific Gravity		*	NB Registration	***Yes***		
Maximum Operating Volume	gal	*	Weights (lbs)	Empty	Operating	Test
Total Volume	gal	*	Estimated *			
			Actual *			

Inside Diameter	inch	***36****			Wind Design	***Not Required***	
Length/Height (TL-TL)	inch	***144****			Snow Design	***Not Required***	
		Vessel Operating	Vessel Design	Coil/Jacket Design	Seismic Design	***24590-WTP-3PS-SS90-T0001 & 24590-WTP-3PS-MV00-TP002***	
Internal Pressure	psig	***-13.25****	***50****	***N/A***	Seismic Base Moment *	ft*lb	
External Pressure	psig	***0****	***15****	***N/A***	Postweld Heat Treat	***Not Required***	
Temperature (min/max)	°F	***130/140****	***40/250****	***N/A***	Corrosion Allowance	Inch	***0.04***
Min Design Metal Temp.	°F	***40***			Hydrostatic Test Pressure *	psig	

Contents of this document are Dangerous Waste Permit Affecting.

Please note that source, special nuclear and byproduct materials, as defined in the Atomic Energy Act of 1954 (AEA), are regulated at the U.S. Department of Energy (DOE) facilities exclusively by DOE acting pursuant to its AEA authority DOE asserts, that pursuant to the AEA, it has sole and exclusive responsibility and authority to regulate source, special nuclear, and byproduct materials at DOE-owned nuclear facilities Information contained herein on radionuclides is provided for process description purposes only

GERALD RUSSEL CHIARAMONTE
STATE OF WASHINGTON
028043
REGISTERED
PROFESSIONAL ENGINEER

9-14-04

EXPIRES. 11/9/ 2004

This bound document contains a total of 2 sheets

REV	DATE	REASON FOR REVISION	PREPARER	CHECKER	REVIEWER	APPROVER
0	9/14/04	Issued for Permitting Use		K.R. Sadler Jr.		

BECHTEL	**MECHANICAL SYSTEMS DATA SHEET: COLUMN**	**PLANT ITEM No.** ***24590-PTF-MV-CNP-DISTC-00001***

Materials of Construction

Component	Material	Minimum Thickness / Size	Containment
Top Head	***SB688 UNS N08367/N08926 (6% Mo)*****	*	***Auxiliary***
Shell	***SB688 UNS N08367/N08926 (6% Mo)*****	*	***Primary***
Bottom Head	***SB688 UNS N08367/N08926 (6% Mo)*****	*	***Primary***
Support	***SA240 304 (Note 3)*****	*	***N/A***
Jacket/Coils/Half-Pipe Jacket	***N/A***	***N/A***	***N/A***
Internals	***SB688 UNS N08367/N08926 (6% Mo)*****	*	***Sieve Trays***
Pipe	***SB690 UNS N08367/N08926 (6% Mo)(Seamless)*****	*	***See Note 4***
Forgings/ Bar stock	***SB462 UNS N08367/N08926 (6% Mo)*****	*	***As Note 4 for Nozzle Necks***
Gaskets	*	*	***Auxiliary***
Bolting	***SA194 8M/SA193 B8M***	*	***Auxiliary***

Miscellaneous Data

Orientation	***Vertical***	Support Type	*
Insulation Function	***N/A***	Insulation Material	***N/A***
Insulation Thickness (inch)	***N/A***	Internal Finish	**** (Note 1)***
		External Finish	*

Remarks

* To be determined by Seller.
** To be verified by seller.
Note 1: Weld surface finish shall be de-scaled as laid.
Note 2: Design life is 40 years.
Note 3: Maximum carbon content of 0.030% for all welded components
Note 4: Nozzle necks below maximum liquid level are primary, others auxiliary.