U.S. Department of Energy
Hanford Site

20-ECD-0018 May 6, 2020

Ms. Alexandra K. Smith, Program Manager
Nuclear Waste Program
Washington State
Department of Ecology
3100 Port of Benton Blvd.
Richland, Washington 99354

Dear Ms. Smith:

SUBMITTAL OF CLASS 2 PERMIT MODIFICATION TO THE HANFORD FACILITY RESOURCE CONSERVATION AND RECOVERY ACT PERMIT, DANGEROUS WASTE PORTION FOR THE 242-A EVAPORATOR [T-2-6]

This letter transmits a Class 2 Permit Modification for Hanford Facility Resource Conservation and Recovery Act Permit, Dangerous Waste Portion for the Treatment Storage, and Disposal of Dangerous Waste, for the 242-A Evaporator Operating Unit Group 4.

This proposed Class 2 Permit Modification would allow installation of three new wall penetrations in the 242-A Evaporator to connect three new double-shell tank transfer lines.

This transmittal includes:

- Permittee Certifications, required under WAC 173-303-810(12) to support submittal of the Class 2 permit modification (Attachment 1).
- Permit Modification Package, which includes the Permit Change Notice C2-242-A-2020-01, Unit Specific Conditions, Process Information (Chapter 4), and supporting information (Attachment 2).

The public comment period for this permit modification is scheduled to begin on May 8, 2020, and continue through July 7, 2020.

If you have any questions, please contact me, or your staff may contact Chris Kemp, Director, Environmental Compliance Division, Office of River Protection, on (509) 373-0649.

Sincerely,

Digitally signed by Brian T. Vance
DN: cn=Brian T. Vance, o=Office of River Protection, ou=Department of Energy, email=brian.t.vance@orp.doe.gov, c=US
Date: 2020.05.06 15:49:15 -07'00'

Brian T. Vance
Manager

ECD:RLE

Attachments:
1. ORP and WRPS Certification Statements
2. Permit Modification Package

cc w/attachs:
J. Cantu, Ecology (CD Only)
Administrative Record (AR-03605) (T-2-6)
Environmental Portal
^Operating Record
WRPS Correspondence

cc w/o attachs:
J. Bell, NPT
R. Buck, Wanapum
A. S. Carlson, Ecology
L. Contreras, YN
S. L. Dahl, Ecology
D. Einan, EPA
J. L. Foster, WRPS
J. T. Hamilton, WRPS
S. Lowe, Ecology
J. J. Lyon, Ecology
N. Menard, Ecology
M. Murphy, CTUIR
K. Niles, Oregon Energy
A. G. Pomiak, Ecology
S. A. Thompson, WRPS

Attachment 1
20-ECD-0018

U.S. Department of Energy, Office of River Protection, and
Washington River Protection Solutions LLC Certification Statements

(3 Pages Including Cover Sheet)

U.S. Department of Energy, Office of River Protection Certification

The following certification statement is provided for the submittal of the Hanford Facility Resource Conservation and Recovery Act Class 2 Permit Modification Notification C2-242-A-2020-01, for 242-A Evaporator.

I certify under penalty of law that this document and all attachments were prepared under my direction or supervision in accordance with a system designed to assure that qualified personnel properly gather and evaluate the information submitted. Based on my inquiry of the person or persons who manage the system, or those persons directly responsible for gathering the information, the information submitted is, to the best of my knowledge and belief, true, accurate, and complete. I am aware that there are significant penalties for submitting false information, including the possibility of fine and imprisonment for knowing violations.

Digitally signed by Brian T. Vance
DN: cn=Brian T. Vance, o=Office of River Protection, ou=Department of Energy, email=brian.t.vance@orp.doe.gov, c=US
Date: 2020.05.06 15:52:32 -07'00'

Brian T. Vance, Manager
Office of River Protection
U.S. Department of Energy

Date

Washington River Protection Solutions LLC Certification

The following certification statement is provided for the submittal of the Hanford Facility Resource Conservation and Recovery Act Class 2 Permit Modification Notification C2-242-A-2020-01, for 242-A Evaporator.

I certify under penalty of law that this document and all attachments were prepared under my direction or supervision in accordance with a system designed to assure that qualified personnel properly gather and evaluate the information submitted. Based on my inquiry of the person or persons who manage the system, or those persons directly responsible for gathering the information, the information submitted is, to the best of my knowledge and belief, true, accurate, and complete. I am aware that there are significant penalties for submitting false information, including the possibility of fine and imprisonment for knowing violations.

John R. Eschenberg
President and Project Manager
Washington River Protection
Solutions LLC

April 23, 2020
Date

Attachment 2
20-ECD-0018

Permit Modification Package

(2041 Pages Including Cover Sheet)

Hanford Facility RCRA Permit Modification Notification Forms

Part III, Operating Unit 4

242-A Evaporator

Index

Page 2 of 3: Permit Conditions

Page 3 of 3: Chapter 4, Process Information

Submitted by Co-Operator:

Jeremy T. Hartley

4/22/20

Date

Reviewed by DOE Program Office:

Robert G. Hastings Digitally signed by Robert G. Hastings Date: 2020.05.05 13:03:18 -07'00'

Robert G. Hastings

Date

Hanford Facility RCRA Permit Modification Form

Unit:	Permit Part
242-A Evaporator	***Part III, Operating Unit Group 4***

Description of Modification:

Permit Conditions

- Updated list of Chapters specific to Operating Unit Group 4 as follows:

  Chapter 4.0 Process Information, dated TBD~~November 12, 2019~~

Added the following Permit Conditions:

III.4.C.5 Prior to receipt of DST System dangerous waste through transfer lines SN-275, SL-170, and SL-171, the Permittees will submit to the Department the following:

III.4.C.5.a Tightness test for waste lines SN-275, SL-170, and SL-171 that pass through the 242-A Evaporator wall to include the three welds connected to these transfer lines immediately outside the 242-A Evaporator building wall, and the three associated wall nozzles inside the 242-A Evaporator

III.4.C.5.b Installation assessment certified by an independent, qualified installation inspector, or IQRPE for SN-275, SL-170, and SL-171 wall penetrations.

III.4.C.5.c Installation assessment certified by an independent, qualified installation inspector, or IQRPE for the wall nozzles and jumpers.

III.4.C.6 The Permittees will perform a pneumatic pressure test on the encasements for the wall penetrations for waste lines SN-275, SL-170, and SL-171 that pass through the 242-A Evaporator wall, at a frequency of every 10 years upon completion of Permit Condition III.4.C.5.a.

WAC 173-303-830 Modification Class	Class 1	Class '1	Class 2	Class 3
Please mark the Modification Class:			X	

Enter relevant WAC 173-303-830, Appendix I Modification citation number: G.2

Enter wording of WAC 173-303-830, Appendix I Modification citation: Modification of a tank unit or secondary containment system without increasing the capacity of the unit.

Modification Approved: ☐ Yes ☐ No (*state reason for denial*)

Reason for denial:

Reviewed by Ecology:

Stephanie Schleif Date

Hanford Facility RCRA Permit Modification Form

Unit:	Permit Part
242-A Evaporator	***Part III, Operating Unit Group 4***

Description of Modification:

Chapter 4, Process Information – the proposed changes are shown in redline/strikeout.

Proposed changes:

- Section 4.0, updated nomenclature for the DST System transfer pipelines to the 242-A Evaporator to support DST System transfer line replacement.
- Section 4.1.3, updated text in to address DST System transfer line replacement
- Section 4.1.7.1, added text to address testing for tightness all new dangerous waste tanks and ancillary equipment, written assessment reviewed and certified by an IQRPE, and installation of new dangerous waste tank systems or components.
- Sections 4.1.7.3, 4.1.7.3.1 and 4.1.7.3.1, updated text in to address DST System transfer line replacement and connecting 242-A Evaporator wall nozzles.
- Section 4.1.8, added "safety shower testing" to routine discharges through secondary containment.
- Section 4.1.8, updated text pertaining to transfer piping wall penetrations to reflect DST System transfer line replacement.
- Figure 4-6, replace figure to correct typo for DR-335.

WAC 173-303-830 Modification Class	Class 1	Class 1	Class 2	Class 3
Please mark the Modification Class:			X	

Enter relevant WAC 173-303-830, Appendix I Modification citation number: G.2

Modification of a tank unit or secondary containment system without increasing the capacity of the unit.

Modification Approved: ☐ Yes ☐ No (*state reason for denial*)

Reason for denial:

Reviewed by Ecology:

Stephanie Schleif Date

Revision Instructions:

Remove the following and replace with the revised Permit documentation:

- Permit Conditions
- Chapter 4, Process Information

Supporting Information:

Drawing	Title	ECN/CALC Document
H-2-98988-2	P&ID Evap Recirc System	ECN-715003, 242-A Evaporator Pump Room Jumper Removal ECN-715004, Core Drill and Install Wall Nozzle 41, 42 and 43 Assemblies at 242-A Evaporator Pump Room ECN-715005, 242-A Evaporator Pump Room Jumper Installation (41 to 5 and 43 to 13A)
H-2-98989-1	P&ID Slurry System	ECN-715004, Core Drill and Install Wall Nozzle 41, 42 and 43 Assemblies at 242-A Evaporator Pump Room ECN-715005, 242-A Evaporator Pump Room Jumper Installation (41 to 5 and 43 to 13A)
H-14-111832	Wall Nozzle Assembles 242-A Pump Room	RPP-CALC-63208, Structural Analysis for the 242-A Pump Room Wall Nozzle Assemblies Plus Counterweight Lifting Devices
H-14-111834	Jumper Assembly 41 to 5, 242-A Pump Room	RPP-CALC-63213, ASME B31.3 Analyses of the 41 to 5 and 43 to 13A Jumpers for the 242-A Evaporator Pump Room RPP-CALC-63214, 242-A Evaporator Pump Room Jumpers Supporting Analyses
H-14-111835	Jumper Assembly 43 to 13A, 242-A Pump Room	
RPP-RPT-61521	Material Compatibility Report for Project TIP207, DST Replacement Waste Transfer Lines 241-AW to 242-A Evaporator	
RPP-CALC-63211	ASME B31.3 Analyses of the New SL-170, SL-171, SL-172 and SN-275 Waste Transfer Lines in 241-AW Tank Farm	
RPP-CALC-63212	241-AW Tank Farm Waste Transfer Lines SL-170, SL-171, SL-172 and SN-275 Supporting Analyses	
MT-50400	242-A Evaporator Waste Transfer Line Replacement	
RPP-PLAN-64037	242-A Evaporator Pump Room Transfer Line Wall Nozzles and Jumper Installation and Inspection Plan	

OPERATING UNIT 4 UNIT-SPECIFIC CONDITIONS
242-A EVAPORATOR

UNIT DESCRIPTION

The 242-A Evaporator is a mixed waste treatment and storage unit consisting of a conventional forced-circulation, vacuum evaporation system to concentrate mixed-waste solutions located in the 200 East Area.

This document sets forth the operating conditions for the 242-A Evaporator.

III.4.A COMPLIANCE WITH UNIT SPECIFIC PERMIT CONDITIONS

The Permittees shall comply with all requirements set forth in the Hanford Facility Resource Conservation and Recovery Act (RCRA) Permit (Permit) as specified in Permit Attachment 9, Permit Applicability Matrix, including all approved modifications. All chapters, subsections, figures, tables, and appendices included in the following unit-specific Permit Conditions are enforceable in their entirety.

In the event that the Part III-Unit-Specific Conditions for Operating Unit 4, 242-A Evaporator conflict with the Part I-Standard Conditions and/or Part II-General Facility Conditions of the Permit, the unit-specific conditions for Operating Unit 4, 242-A Evaporator prevail.

CHAPTERS SPECIFIC TO OPERATING UNIT GROUP 4:

Chapter 1.0	Part A Form, dated November 12, 2019
Chapter 3.0	Waste Analysis Plan, dated November 12, 2019
Chapter 4.0	Process Information, dated TBD~~November 12, 2019~~
Chapter 5.0	Groundwater Monitoring, (not applicable)
Chapter 6.0	Procedures to Prevent Hazards, dated November 12, 2019
Chapter 7.0	Contingency Plan, dated April 30, 2019
Chapter 8.0	Personnel Training, dated September 30, 2013
Chapter 11.0	Closure, dated September 30, 2013

III.4.B COMPLIANCE WITH UNIT-SPECIFIC PERMIT CONDITIONS

III.4.B.1 Portions of Permit Attachment 4 (DOE/RL-94-02) that are not made enforceable by inclusion in the applicability matrix for that document are not made enforceable by reference in this document.

III.4.C TANK SYSTEMS

III.4.C.1 Within 90 days of the effective date of the permit modification, the Permittee shall demonstrate to the department that the leak detection system for the combined PC-5000/3”-WTP-002-M17 transfer lines is designed and operated to detect the presence of liquid in the secondary containment system at the earliest practicable time if the existing detection technologies or site conditions will not allow detection of a release within 24-hours. The Permittees must consider alternative configurations for leak detection and this information will be provided to the department for concurrence. The department will provide a response within 30 days. [WAC 173-303-640(4)(c)(iii)]

III.4.C.2 Prior to receipt of any dangerous waste in the combined PC-5000/3”-WTP-002-M17 waste transfer system, the Permittees will submit the tightness test for the combined PC-5000/3”-WTP-002-M17 waste transfer system. [WAC 173-303-640(3)(e)]

III.4.C.2.a Tightness test for the combined waste transfer system piping (PC-5000/3”-WTP-002-M17) will be performed at a frequency of every 10 years upon completion of Permit Condition III.4.C.2.

III.4.C.3 Modifications to the leak detection system will be made in accordance with Permit Condition I.C.3.

III.4.C.4 The electronic leak detection system for the combined PC-5000 and 3”-WTP-002-M17 transfer lines shall be maintained and operated continuously when in use with the following exceptions:

III.4.C.4.a If the electronic leak detection system is not available, visual inspection shall be employed at the PC-5000 catch tank 60M-TK-1 (sight glass FG-60M-001) once per shift, during transfers.

III.4.C.4.b Ecology must be notified if the electronic leak detection system is out of service for more than 90 days. This notification must include a schedule for repairing and returning the system to service within 90 days from notification, or longer if approved by the department.

III.4.C.5 Prior to receipt of DST System dangerous waste through transfer lines SN-275, SL-170, and SL-171, the Permittees will submit to the Department the following:

III.4.C.5.a Tightness test for waste lines SN-275, SL-170, and SL-171 that pass through the 242-A Evaporator wall to include the three welds connected to these transfer lines immediately outside the 242-A Evaporator building wall, and the three associated wall nozzles inside the 242-A Evaporator.

III.4.C.5.b Installation assessment certified by an independent, qualified installation inspector, or IQRPE for SN-275, SL-170, and SL-171 wall penetrations.

III.4.C.5.c Installation assessment certified by an independent, qualified installation inspector, or IQRPE for the wall nozzles and jumpers.

III.4.C.6 The Permittees will perform a pneumatic pressure test on the encasements for the wall penetrations for waste lines SN-275, SL-170, and SL-171 that pass through the 242-A Evaporator wall, at a frequency of every 10 years upon completion of Permit Condition III.4.C.5.a.

4.0 PROCESS INFORMATION

The 242-A Evaporator receives mixed waste from the Double-Shell Tank (DST) System that contains inorganic and organic constituents and radionuclides. The 242-A Evaporator Treatment, Storage, and Disposal (TSD) unit group boundary for lines running between the 242-A Evaporator and the DST System end at the exterior wall of 242-A Building. At this point, these lines (e.g., feed and slurry line piping [SN-275, SL-170, and SL-171~~SN-269, SN-270, SL-167, and SL-168~~]) are DST System components. Additional requirements for secondary containment and 242-A Evaporator simplified process flow diagram is given in Figure 4-1. The 242-A Evaporator separates the mixed waste received from the DST System, generating the following waste streams:

- A concentrated aqueous waste stream (slurry) containing the nonvolatile components, including most of the radionuclides, inorganic constituents, and nonvolatile organics such as tri-butyl phosphate.
- A dilute aqueous waste stream (process condensate) containing the volatile components, primarily water with low concentrations of radionuclides, inorganic constituents, and volatile constituents such as ammonia and acetone.

The slurry is routed back to the DST System pending further treatment. The process condensate is transferred to Liquid Effluent Retention Facility (LERF) through the PC-5000 transfer line for storage until processed through the 200 Area Effluent Treatment Facility (ETF). The 242-A Evaporator TSD unit group boundary for the PC-5000 transfer line running between the 242-A Evaporator and LERF end at the LERF TSD unit group boundary.

The 242-A Evaporator process employs a conventional forced circulation, vacuum evaporation system to concentrate the DST System waste solution. The major components of this system include the reboiler (E-A-1), vapor-liquid separator (C-A-1), recirculation pump (P-B-1) and pipe loop, slurry product pump, condenser, jet vacuum system, and condensate collection tank (TK-C-100).

The vapor-liquid separator (C-A-1) also called the evaporator vessel, and the condensate collection tank (TK-C-100), meet the definition of a tank in Washington Administrative Code (WAC) 173-303-040. Other process equipment associated with these tank systems is considered ancillary equipment. Drawings that aid in understanding the systems are provided in Section 4.3.

The 242-A Evaporator receives waste from DST System tank 241-AW-102 that serves as the 242-A Evaporator feed tank. The feed enters the recirculation line and blends with the main process slurry stream, which is pumped to the reboiler.

In the reboiler, the mixture is heated to the specified operating temperature, normally 100 to 155°F, using 3 to 10 pounds per square inch gauge (psig) pressure steam. The low-pressure steam provides adequate heat input, and the resulting low-temperature differential across the reboiler minimizes scale formation on the heat transfer surfaces. The static liquid head of the waste in the reboiler is sufficient to suppress the boiling point so the waste does not boil in the reboiler tubes. Boiling occurs only near or at the liquid surface in the vapor liquid separator (C-A-1), where the static liquid head is zero and the heated waste is at the reduced pressure of the vapor-liquid separator (C-A-1). Slurry may be transferred back to the 242-A Evaporator feed tank through the DST system for one or more passes through the 242-A Evaporator to achieve desired waste volume reduction.

The heated slurry stream is discharged from the reboiler (E-A-1) to the vapor-liquid separator (C-A-1). The vapor-liquid separator (C-A-1) is typically maintained at an absolute pressure of 0.77 to 1.55 psig absolute. Under this reduced pressure, a fraction of the water in the heated slurry flashes to steam and the steam is drawn through two, wire mesh deentrainer pads into a 42-inch diameter vapor line that leads to the primary condenser, leaving behind a more concentrated slurry solution in the vapor-liquid separator (C-A-1).

Caisson MH-WTP-01, is a flat bottomed fiberglass tank that contains valves for the isolation of either PC-5000 (3”-PC-5000-M17) or WTP backup transfer line (3”-WTP-002-M17) carrier pipes. All containment pipes open into caisson MH-WTP-01 allowing any leaks to transfer through the caisson to LERF Basin 43. The containment pipe lower internal surfaces are flush with the inside bottom surface of the caisson. The caisson has a 48-inch inside diameter, an overall length of 98-inches and a nominal wall thickness of ½-inch. There are four isolation valves inside the caisson that are controlled by 242-A Evaporator for transfer line use. The valves are 3-inch valves fabricated with stainless steel bodies and pipe extensions.

The PC-5000 transfer line has limited capacity, and cannot be used by both the 242-A Evaporator and WTP at the same time due to valve alignment. The use of the PC-5000 transfer line to transfer liquid effluent from WTP to LERF will be controlled by the 242-A Evaporator. The WTP process condensate transfer to LERF will satisfy the waste acceptance criteria identified in the LERF and 200 Area ETF Permit, Addendum B, *Waste Analysis Plan*.

4.1.2.1 PC-5000 Transfer Line (3”-EVAP_COND-PC5000-M17)

The PC-5000 primary pipeline (3”-EVAP_COND-PC5000-M17) leaves the 242-A Evaporator and ends at valve 60M-43-P. The PC-5000 encasement line (6” ENC-M17” includes a single-point electronic leak detection element, PC-5000 encasement catch tank 60M-TK-1, and sight glass FG-60M-001. Process condensate from the 242-A Evaporator is transferred to the LERF using a pump located in the 242-A Evaporator and approximately 5,000 feet of pipe, consisting of a 3-inch carrier pipe within a 6-inch outer containment pipeline. Flow through the pump is controlled through a valve at approximate flow rates from 40 to 80 gpm.

The encased fiberglass transfer line (PC-5000) exits the 242-A Evaporator below grade and remains below grade at a minimum 4-feet depth for freeze protection, until the pipeline emerges at the LERF Catch Basin 242AL-43. All piping at the catch basin that is above grade is wrapped with electric heat tracing tape and insulated for protection from freezing. Additional detail including information on secondary containment, leak detection and integrity assessment for this line is provided in Sections 4.1.7.3.3 and 4.1.5.1. The PC-5000 transfer line leaving the 242-A Evaporator is considered ancillary equipment to the 242-A Evaporator up to LERF Catch Basin 242AL-43.

4.1.2.2 Waste Treatment Plant Backup Transfer Line (3”-WTP-002-M17)

The process condensate from WTP can be transferred to LERF by using a pump located at WTP, and approximately 2,380 feet of pipe, consisting of a 3-inch carrier pipe within a 6-inch outer containment pipeline that merges with the PC-5000 transfer line at caisson MH-WTP-001. The combined PC-5000 encasement line (6”-ENC-M17) and WTP backup transfer line (3”-WTP-002-M17) includes a single-point electronic leak detection element is installed at the end of the PC-5000 transfer line, PC-5000 encasement catch tank 60M-TK-1, and sight glass FG-60M-001.

The encased fiberglass backup transfer line (3”-WTP-002-M17) exits the WTP and runs below grade, and merges with the PC-5000 transfer line at caisson MH-WTP-01, for transferring process condensate to LERF. The WTP backup transfer line (3”-WTP-002-M17) leaving the WTP is considered ancillary equipment to the 242-A Evaporator from caisson MH-WTP-01 up to the WTP fence line.

4.1.3 Vapor-Liquid Separator (C-A-1) and Ancillary Equipment

The following sections describe the vapor-liquid separator (C-A-1) and ancillary equipment.

Waste Feed System. Feed to the 242-A Evaporator is supplied via a pump located in the DST System 241-AW-102 feed tank. The feed pump transfers the waste to the 242-A Evaporator through a 3-inch diameter ~~carbon steel~~ transfer pipeline encased in a 6-inch diameter ~~carbon steel~~ pipe to provide secondary containment or a 2-inch diameter transfer pipeline encased in a 4-inch diameter pipe to provide

secondary containment . The DST ~~pump~~ pits are~~is~~ equipped with ~~a~~ leak detectors that are~~is~~ part of the DST System.

Waste feed will be sampled from 241-AW-102 or identified candidate feed tanks as described in the *Waste Analysis Plan* (Chapter 3.0). The feed sampler (SAMP-F-1) located in a sample enclosure located in the hot equipment storage room has been isolated and blanked, and will be closed in accordance with the approved Closure Plan.

Evaporator Process Loop. The 242-A Evaporator process loop equipment components are as follows:

- Reboiler (E-A-1).
- Vapor-liquid separator (C-A-1).
- Recirculation pump (P-B-1).
- Recirculation loop.

Figure 4-2 is a simplified process flow diagram showing the major components of the process loop.

Reboiler (E-A-1). Waste is heated as the waste passes through the reboiler before entering the vapor-liquid separator (C-A-1). The reboiler (E-A-1) is a vertical tube unit with steam on the shell-side and process solution on the tube-side. The 364 tubes in the reboiler (E-A-1) are enclosed in an approximately 40-inch-outside diameter, 15-feet-long stainless steel shell. Both the reboiler shell and tubes are constructed of 304L stainless steel. The shell is 1/4-inch thick and the tubes are 14-gauge steel. The reboiler is designed to distribute steam evenly and to prevent tube damage from water droplets that may be present in the steam.

Vapor-Liquid Separator (C-A-1). Process solution from the reboiler enters the vapor-liquid separator (C-A-1) via the upper recirculation line. Some of the solution flashes into vapor, which exits through a vapor line at the top of the vapor-liquid separator (C-A-1). The remaining solution (slurry) exits through the recirculation line at the bottom.

The vapor-liquid separator (C-A-1) consists of a lower and upper section. The lower (liquid) section is a stainless steel shell 14 feet in diameter having a 22,500 to 26,000 gallon normal operating capacity (including recirculation loop and reboiler). The maximum design capacity is 35,600 gallons. The upper (vapor) section is a stainless steel shell is 11.5 feet in diameter containing two deentrainment pads. These wire mesh pads remove liquids and solids that entrain into the vapor section of the vessel. Spray nozzles, using recycled process condensate or filtered raw water, wash collected solids from the deentrainment pads and vessel walls; or raw water is used to flush the vapor-liquid separator (C-A-1) vessel. Both sections of the vapor-liquid separator (C-A-1) are constructed of 3/8-inch-thick stainless steel.

Operating parameters in the vapor-liquid separator (C-A-1) are monitored to provide an indication of process problems such as slurry foaming, deentrainer flooding, or excessive vapor temperatures. Instrumentation also is available to monitor the liquid levels in the vapor-liquid separator (C-A-1). Interlocks are activated when high pressures or high- or low-liquid levels are detected, shutting down the evaporation process and placing the facility in a safe configuration. Three configurations can be achieved during operation of the 242-A Evaporator:

- Recirculation with vacuum.
- Recirculation without vacuum.
- Waste in vapor-liquid separator (C-A-1) with no recirculation.

The vapor-liquid separator (C-A-1) and recirculation loop can be drained and flushed to remove any residual solids from the system and/or to reduce radiation levels. The most common flush solution is water, but dilute nitric or citric acid solutions could be used. All acidic flush solutions are chemically adjusted to meet DST acceptance criteria before transfer to the DST System. Antifoam solution is added

included in the latest IAR, along with the results of the leak/pressure test. The next integrity assessment for the PC-5000 transfer line will be completed on or before May 27, 2018, in accordance with the 2008 IARs. The schedule for conducting integrity assessments will be at a frequency of every 10 years unless otherwise required by an IQRPE or as required for system repairs and upgrades. All integrity assessments will be conducted in accordance with WAC 173-303-640.

4.1.6 Additional Requirements for Existing Tanks

Refer to information in Section 4.1.1 and the IARs, which includes measuring tank wall thicknesses, evaluating corrosion protection, and performing leak tests.

4.1.7 Secondary Containment and Release Detection for Tank Systems

This section describes the design and operation of secondary containment sumps, drain lines, and leak detection systems for the 242-A Evaporator.

4.1.7.1 Requirements for All Tank Systems

The Construction Specification for 242-A Evaporator-Crystallizer Facilities Project B-100 (Construction Specification for 242-A Evaporator-Crystallizer Facilities Project B-100, B-100-C1, Automated Industries, Vitro Engineering Division, Richland Washington, Vitro 1974) was used during preparation, design, and construction of the tank and secondary containment systems. The 2008 IARs detail how the construction specification relates to the national codes and standards.

Constructing the building and vessels per this specification ensures that foundations are capable of supporting tank and secondary containment systems and that uneven settling and failures from pressure gradients do not occur. The 2008 IARs state that the "242-A Evaporator has adequate design, sufficient structural strength, and sufficient compatibility with the wastes to not collapse, rupture, or fail during service loads associated with normal operations and that the building structure was designed and constructed to withstand a design basis earthquake."

The 2008 IARs describe the building and secondary containment system. This system is designed to ensure any release is detected within 24 hours.

The secondary containment system also is designed to contain 100 percent of the maximum operating capacity of the vapor-liquid separator (C-A-1)/reboiler loop, and the drain systems are sloped to allow collection of solution and have sufficient capacity to drain this volume in less than the required 24 hours.

The IAR describes the protective coating material and sealant used to protect concrete and joints from attack by leaks to the secondary containment. The materials of construction for the sump and drain lines are also compatible with the waste processed at the 242-A Evaporator.

For new dangerous waste tank systems or components, the Permittee must obtain a written assessment, reviewed and certified by an IQRPE, in accordance with WAC 173-303-810(13)(a), attesting that the tank system has sufficient structural integrity and is acceptable for the storing and treating of dangerous waste. The assessment must show that the foundation, structural support, seams, connections, and pressure controls (if applicable) are adequately designed and that the tank system has sufficient structural strength, compatibility with the waste(s) to be stored or treated, and corrosion protection to ensure that it will not collapse, rupture, or fail. [WAC 173-303-640(3)(a)]

During installation of a new dangerous waste tank systems or components, the Permittees will ensure that proper handling procedures are adhered to in order to prevent damage to the new tank systems or components. Prior to covering, enclosing, or placing a new tank system or component in use, an independent, qualified installation inspector, or an IQRPE, either of whom is trained and experienced in the proper installation of tank systems or components, must inspect the system for the presence of weld breaks, punctures, scrapes of protective coatings, cracks, corrosion, structural damage, and inadequate construction/installation. [WAC 173-303-640(3)(c)(i-vi)]

The Permittees will test for tightness, all new dangerous waste tanks and ancillary equipment prior to being covered, enclosed, or placed in use. If a tank system is found not to be tight, all repairs necessary to remedy the leak(s) in the system must be performed prior to the tank system being covered, enclosed, or placed into use. [WAC 173-303-640(3)(e)]

For existing tank system's integrity, for each existing tank system, the Permittees must determine that the tank system is not leaking or is fit for use. The permittees must obtain and keep on file at the facility a written assessment reviewed and certified by an IQRPE that attests to the tank system's integrity. This assessment must determine that the tank system is adequately designed and has sufficient structural strength and compatibility with the waste(s) to be stored or treated, to ensure that it will not collapse, rupture, or fail. [WAC 173-303-640(2)(a)].

At a minimum, this assessment must consider the following:

- Design standard(s), if available, according to which the tank system was constructed;
- Dangerous characteristics of the waste(s) that have been and will be handled;
- Existing corrosion protection measures;
- Documented age of the tank system, if available (otherwise, an estimate of the age); and
- Results of a leak test, internal inspection, or other tank system integrity examination such that for other than nonenterable underground tanks and for ancillary equipment, this assessment must include either a leak test, as described above, or other integrity examination, that is certified by an IQRPE, in accordance with WAC 173-303-810(13)(a), that addresses cracks, leaks, corrosion, and erosion.

4.1.7.2 242-A Building Secondary Containment

The 242-A Building serves as a secondary containment vault for the vapor-liquid separator (C-A-1), condensate collection tank (TK-C-100), and ancillary equipment used for transferring mixed waste at the 242-A Evaporator. The concrete for the operating area was poured to form a monolithic structure. Where needed, joints in the concrete were fabricated with preformed filler conforming to the standards of the American Society of Testing and Materials. Joint filler is sealed with a polysulfide sealant per the requirements of the construction specifications (*Construction Specification for 242-A Evaporator-Crystallizer Facilities Project B-100, B-100-C1, Automated Industries, Vitro Engineering Division, Richland Washington*, Vitro 1974).

Before restart in 1994, a new acrylic special protective coating was applied to the concrete in the pump, evaporator, and condenser rooms. The coating meets the requirements of the construction specifications (*Construction Specification for 242-A Evaporator-Crystallizer Facilities Project B-100, B-100-C1, Automated Industries, Vitro Engineering Division*, *Richland Washington*, Vitro 1974), including resistance to very high radiation doses, temperatures of 170°F, and spills of 25 percent caustic solution. The protective coating is maintained.

The following six rooms contain equipment used to process or store* mixed waste:

- Pump room.
- Evaporator room.
- Condenser room.
- Ion exchange room.
- Loading room* (used for temporary storage of mixed waste).
- Loadout and hot equipment storage room.

Both sumps drain via a 3-inch drain line to the pump room sump described in Section 4.1.7.2.1. The sumps, floor, and walls of the load out and hot equipment storage room up to an elevation of 12 feet are painted with a special protective coating.

Leaks in the sampler piping, flow into two drains in the sample enclosure that drain via a 2-inch line to the decontamination sump, which drains to the pump room sump (described in Section 4.1.7.2.1). Leak detectors in the sampler enclosures or a rise in the pump room sump level detects leaks in the sampler piping.

4.1.7.2.6 242-A Building Drain Lines

Figure 4-6 provides a simplified process flow schematic of sources routed to the 242-A Building drain lines. The 242-A Evaporator TSD unit group boundary includes these lines up until they exit the 242-A Building. At this point, the lines are considered DST System components. Four lines serve to drain the 242-A Building and equipment to feed tank 241-AW-102:

- Pump room sump drain line (DR-334): 10-inch carbon steel line that transfers process condensate overflow/diverted liquids and empty out of the pump room sump to the feed tank.
- Vapor-liquid separator vessel drain line (DR-335): 10-inch carbon steel line that allows gravity drain of the vessel to the DST feed tank 241-AW-102.
- Condenser room drain line (DR-343): 6-inch carbon steel line that drains potential leakage from the condenser room.
- Diverted process condensate drain line (DR-338): Process condensate liquid drains through DR-338 into sump drain line (DR-334) which drains to feed tank 241-AW-102.

The four lines are sloped to drain about 560 feet to feed tank 241-AW-102 via the drain pit (241-AW-02D). Although WAC 173-303-640(1)(c) exempts systems that serve as secondary containment from requiring secondary containment, drain lines DR-334, DR-335, and DR-338 have outer encasement piping and are part of the DST System.

4.1.7.3 Transfer Line Secondary Containment and Leak Detection

This section describes the design and operation of secondary containment and leak detection systems for transfer lines between the DST System and the 242-A Evaporator, from 242-A Evaporator to LERF, and from WTP Backup Transfer Line to PC-5000. The 242-A Evaporator TSD unit group boundary for lines running between the 242-A Evaporator and the DST System ends at the exterior wall of 242-A Building. At this point, these lines (e.g., feed and slurry line piping [SN-275, SL-170, and SL-171~~SN-269, SN-270, SL-167, and SL-168~~]) are DST System components.

The PC-5000 transfer line transfers process condensate (Section 4.1.2) from the 242-A Building to LERF. The 242-A Evaporator TSD unit boundary includes the PC-5000 transfer line up to the LERF TSD unit group boundary (*Part A Form*, Chapter 1.0, and Section 4.1.2).

If a leak or spill of dangerous and/or mixed waste is detected in the secondary containment for PC-5000 and WTP backup transfer line (3”-WTP-002-M17), the following actions will be taken:

- Immediately and safely stop the flow of dangerous waste into the tank or secondary containment.
- Determine the source of the dangerous waste.
- Remove the dangerous waste from secondary containment pursuant to WAC 173-303-640(7)(b). The waste removed from secondary containment areas will be managed as dangerous and/or mixed waste.
- If the cause of the release has not damaged the integrity of the tank system, the Permittee may return the tank system to service pursuant to WAC 173-303-640(7)(e)(ii). In such a case, the

Permittee will take action to ensure the incident that caused liquid to enter the secondary containment will not reoccur.

- If the source of the dangerous waste and/or mixed waste is determined to be a leak from the primary containment, or the tank system is unfit for use as determined through an integrity assessment or other inspection, the Permittee must comply with the requirements of WAC 173-303-640(7) and take the following actions [WAC 173-303-640(5)(c)]:
  - Close the tank system according to procedures in WAC 173-303-640(7)(e)(i); or
  - Repair and re-certify [in accordance with WAC 173-303-810(13)(a)] the tank system before the tank system is placed back into service [WAC 173-303-640(7)(e) and (f) and WAC 173-303-806(4)(c)(vii)].
- The permittees will notify and report to Ecology any releases to the environment in accordance with WAC 173-303-640(7)(d).
- If liquids (e.g., dangerous and/or mixed waste, leaks and spills, precipitation, fire water, liquids from damaged or broken pipes) cannot be removed from the secondary containment system within 24-hours, Ecology will be verbally notified within 24-hours of determination that the liquid cannot be removed.
- If the liquids cannot be removed with 24-hours, the Permittees will provide Ecology with a written demonstration within seven (7) business days, in accordance with WAC 173-303-640(4)(c)(iv), WAC 173-303-640(7)(b)(ii), and WAC 173-303-806(4)(c)(vii). The written demonstration will identify at a minimum:
  - Reasons for delayed removal.
  - Measures implemented to ensure continued protection of human health and the environment.
  - Current actions being taken to remove liquids from secondary containment.
- The Permittees will document in the operating record the actions/procedures taken to comply with the above conditions in accordance with WAC 173-303-640(6)(d).

4.1.7.3.1 Feed Line Piping

Waste feed is supplied to the 242-A Evaporator by ~~two~~ DST System ~~feed~~ transfer line~~s~~ SN-275, for transfers from DST System valve pit 241-AW-02E. Transfer line ~~SN-269 and SN-270) (one in service and one spare,~~ SN-275, consists~~ing~~ of a 3-inch transfer piping within a 6-inch secondary containment encasement piping. In the event transfer line SN-275 is not available, the spare transfer line SL-171 would be used for transfers from DST System valve pit 241-AW-02A. Transfer line SL-171 consists of a 2-inch transfer piping within a 4-inch secondary containment encasement piping. The transfer piping is sloped to gravity drain to the DST System.

Wall nozzles act as a connection point to the DST System transfer piping, which provide secondary containment through the 242-A building wall. If a leak develops in the wall nozzle primary pipe, fluid will travel down the interior of the respective encasement line (SN-275 or SL-171) to the DST System valve pit leak detection system. If the DST System MCS annunciates a leak alarm associated with the DST System transfer, the transfer operator notifies the 242-A Evaporator control room operator of the appropriate action regarding processing operations.

DST System feed lines SN-269 and SN-270, will be physically isolated from potential sources of dangerous waste, by disconnecting jumpers from the wall nozzles and installing process blanks. These transfer lines do not have secondary containment for the sections that pass through the 242-A building wall.

4.1.7.3.2 Slurry Line Piping

The slurry pump (P-B-2) transfers mixed waste through ~~one of two~~ DST System transfer line~~s: SL-167, for transfer to valve pit 241-AW-B (standard configuration), or SL-168 for transfer to valve pit 241-AW-A (alternate configuration).~~ SL-170, for transfers to DST System valve pit 241-AW-02A. In the event SL-170 is not available, the spare transfer line SL-171 would be used for transfers to DST System valve pit 241-AW-02A. Transfer lines SL-170 and SL-171, consist of a 2-inch transfer piping within a 4-inch secondary containment encasement piping. The transfer piping is sloped to gravity drain to the DST System. ~~Slurry solution can be routed via double-encased piping from these valve pits to any designated DST System slurry receiver tank.~~

Wall nozzles act as a connection point to the DST System transfer piping, which provide secondary containment through the 242-A building wall. If a leak develops in the wall nozzle primary pipe, fluid will travel down the interior of the respective encasement line (SL-170 or SL-171) to the DST System leak detection system. If the DST System MCS annunciates a leak alarm associated with the DST System transfer, the transfer operator notifies the 242-A Evaporator control room operator of the appropriate action regarding processing operations.

DST System slurry lines SL-167 and SL-168, will be physically isolated from potential sources of dangerous waste, by disconnecting jumpers from the wall nozzles and installing process blanks. These transfer lines do not have secondary containment for the sections that pass through the 242-A building wall.

4.1.7.3.3 PC-5000 Transfer Line (3”-EVAP_COND-PC5000-M17)

The process condensate transfer line (PC-5000) from the 242-A Evaporator is centrifugally cast, fiberglass-reinforced epoxy thermoset resin pressure pipe fabricated to meet the requirements of American Society of Mechanical Engineers (ASME) D2997 (ASME 1984). The 3-inch carrier piping is centered and supported within 6-inch containment piping. Pipe supports are fabricated of the same material as the pipe, and meet the strength requirements of American National Standards Institute (ANSI) B31.3 (ANSI 1987) for dead weight, thermal, and seismic loads. PC-5000 transfer line leaves the 242-A Evaporator and merges with the WTP backup transfer line (3”-WTP-002-M17) at caisson WTP-MH-01. At the intersection of the transfer lines (3”-EVAP COND-PC5000-M17 and 3”-WTP-002-M17), caisson MH-WTP-01 provides secondary containment.

The PC-5000 primary pipe leaves the 242-A Evaporator and ends at valve 60M-43-P. The encasement line (6”-ENC-M17) and caisson MH-WTP-01 provide secondary containment. If a leak develops in the primary pipe, fluid will travel down the interior of the encasement line to a leak detection system that sounds an alarm in the 242-A Evaporator Control Room. If the electronic leak detection system is not available, visual inspection can be employed at the PC-5000 encasement catch tank 60M-TK-1 (sight glass FG-60M-001). Upon verification of a leak, the 242-A Evaporator shift manager will direct the shutdown of the aqueous waste through the transfer line(s) to immediately prevent addition of waste. To stop 242-A Evaporator waste through the PC-5000 transfer line, the condensate pump (P-C-100), located at the 242-A Evaporator is shutdown. Any leaked waste in the encasement line is gravity drained to LERF Basin 43.

Drawing H-2-88766, Sheets 1 and 3, provide details of the piping from the 242-A Evaporator to LERF.

4.1.7.3.4 Waste Treatment Plant Backup Transfer Line (3”-WTP-002-M17)

The process condensate transfer line (3”-WTP-02-M17) from WTP is constructed of fiberglass-reinforced plastic. The piping material specification is American Society for Testing and Materials (ASTM) D2996, “Standard Specification for Filament-Wound “Fiberglass” (Glass-Fiber-Reinforced Thermosetting-Resin) Pipe”. The 3-inch carrier piping is centered and supported within 6-inch containment piping. Pipe supports are fabricated of the same material as the pipe, and meet the strength requirements of ANSI

- Steam condensate, cooling water, ~~and~~ process condensate sample stations, and safety shower testing drain to the DST feed tank, 241-AW-102, through drain line DR-343. Total discharge is about 10 gallons per month during operation.
- Sample bottle water sprays down in the slurry sample station drains to the decontamination sump in the load out and hot equipment storage room. The decontamination sump then drains to the pump room sump. Total discharge is about 20 gallons per month during operation.
- Vapor-liquid separator (C-A-1) and recirculation loop gravity drain to DST feed tank 241-AW-102, through DR-335. During operations (end of campaigns/shutdown), the waste in the vapor-liquid separator (C-A-1) and recirculation loop can be emptied using the slurry or feed lines; however, this does not fully empty the vapor-liquid separator (C-A-1) and recirculation loop. To ensure that waste is not stored when the 242-A Evaporator is in the shutdown mode, dump valves (HV-CA1-7 and HV-CA1-9) are opened to gravity drain the vapor-liquid separator (C-A-1) and recirculation loop to DST feed tank 241-AW-102 via drain line DR-335. The dump valves may also open to drain the system in the event of equipment failure, interlocks, or power outage.

Transfer Piping Wall Penetrations. ~~Three~~ Two dangerous waste transfer line piping section~~s~~ (DR-335 and DR-338) passing through the 242-A Building wall are single-walled, i.e., no secondary confinement in the wall ~~(about 22-inch-thick reinforced concrete)~~.

The~~se~~ deficiency~~ies~~ ~~were~~ for D-335 was identified to Ecology, October 28, 1993. Ecology's response stated:

- "No physical revision of the pipe wall penetrations or the floor drains in the evaporator pump room will be required prior to evaporator restart."
- "If at any time leakage is seen or detected from these installations, or if for any reason these installations are repaired or rebuilt, they will be rebuilt or repaired in accordance with regulations."
- "Should a spill occur in the evaporator pump room, the sump and the piping shall be rinsed three times as required in WAC 173-303-160, as appropriate. 'Appropriate' in this case means that the original regulation was written for a free container, not a sump, so that judgment will have to be used in the application of the regulation. The rinsate shall be transferred to the double-shell tanks."

4.1.9 Tank Management Practices

All waste to be processed at the 242-A Evaporator must be sampled to determine if the waste is compatible with the materials of construction at the 242-A Evaporator. Before each campaign, candidate feed tanks are sampled per the requirements of the *Waste Analysis Plan* (Chapter 3.0). Based on the results, three possible options are implemented.

- The waste is acceptable for processing without further actions.
- The waste is unacceptable for processing as a single batch, but is acceptable if blended with other waste that is going to be processed.
- The waste is unacceptable for processing.

The 242-A Evaporator process is controlled by operators using the MCS. The MCS computer monitors liquid levels in the vapor-liquid separator (C-A-1) and condensate collection tank (TK-C-100). The MCS system manages liquid levels in the vapor-liquid separator (C-A-1) using a control function that controls feed delivery to the vapor-liquid separator (C-A-1). The MCS system also manages liquid levels in the condensate collection tank (TK-C-100) using a control function to maintain the tank level at approximately 50-percent under normal conditions. The MCS has alarms that annunciate on high-liquid

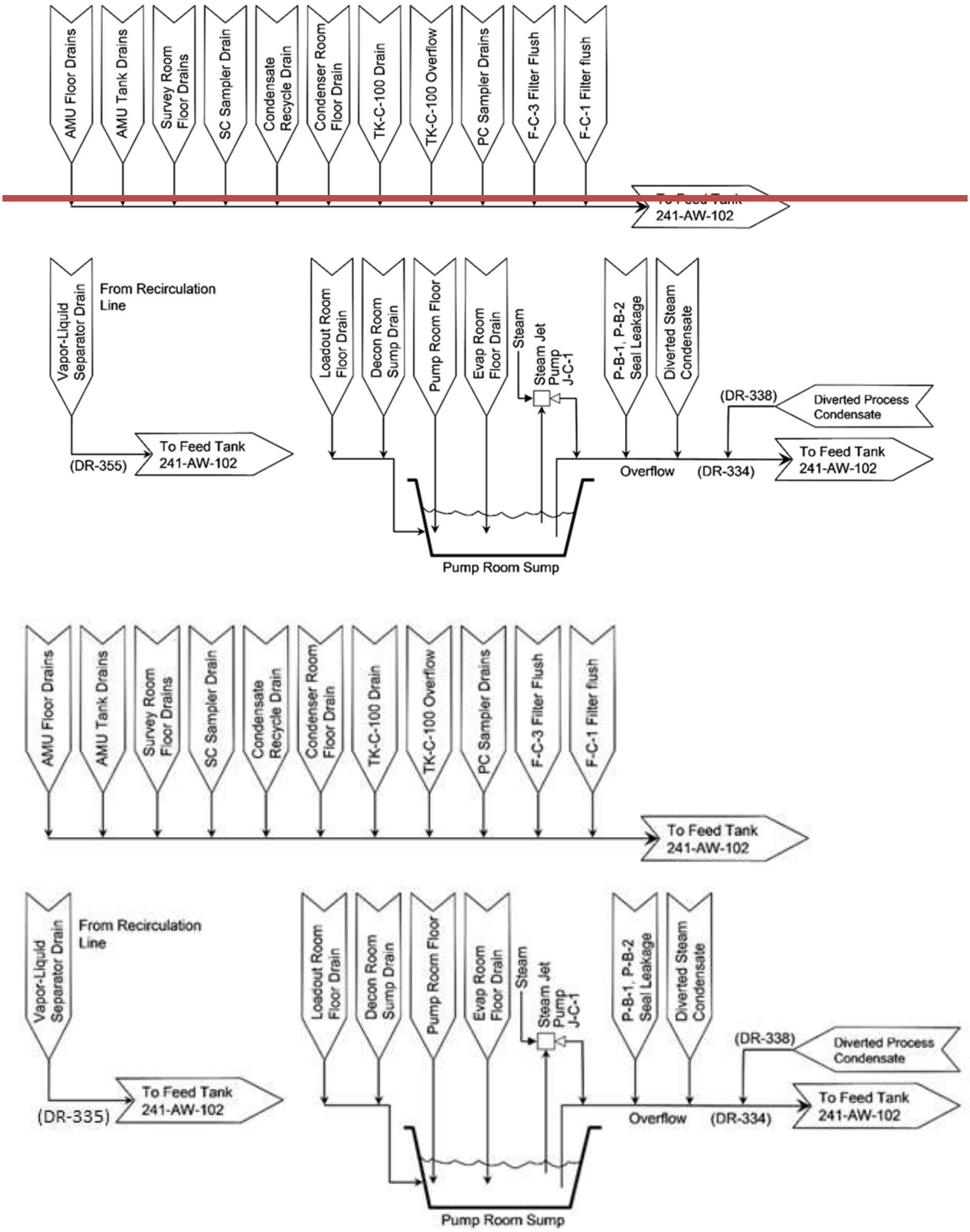

Figure 4-6 242-A Evaporator Drain System

~~This page intentionally left blank.~~

Supporting Information:

Drawing	Title	ECN/CALC Document
H-2-98988-2	P&ID Evap Recirc System	ECN-715003, 242-A Evaporator Pump Room Jumper Removal ECN-715004, Core Drill and Install Wall Nozzle 41, 42 and 43 Assemblies at 242-A Evaporator Pump Room ECN-715005, 242-A Evaporator Pump Room Jumper Installation (41 to 5 and 43 to 13A)
H-2-98989-1	P&ID Slurry System	ECN-715004, Core Drill and Install Wall Nozzle 41, 42 and 43 Assemblies at 242-A Evaporator Pump Room ECN-715005, 242-A Evaporator Pump Room Jumper Installation (41 to 5 and 43 to 13A)
H-14-111832	Wall Nozzle Assembles 242-A Pump Room	RPP-CALC-63208, Structural Analysis for the 242-A Pump Room Wall Nozzle Assemblies Plus Counterweight Lifting Devices
H-14-111834	Jumper Assembly 41 to 5, 242-A Pump Room	RPP-CALC-63213, ASME B31.3 Analyses of the 41 to 5 and 43 to 13A Jumpers for the 242-A Evaporator Pump Room RPP-CALC-63214, 242-A Evaporator Pump Room Jumpers Supporting Analyses
H-14-111835	Jumper Assembly 43 to 13A, 242-A Pump Room	
RPP-RPT-61521	Material Compatibility Report for Project TIP207, DST Replacement Waste Transfer Lines 241-AW to 242-A Evaporator	
RPP-CALC-63211	ASME B31.3 Analyses of the New SL-170, SL-171, SL-172 and SN-275 Waste Transfer Lines in 241-AW Tank Farm	
RPP-CALC-63212	241-AW Tank Farm Waste Transfer Lines SL-170, SL-171, SL-172 and SN-275 Supporting Analyses	
MT-50400	242-A Evaporator Waste Transfer Line Replacement	
RPP-PLAN-64037	242-A Evaporator Pump Room Transfer Line Wall Nozzles and Jumper Installation and Inspection Plan	

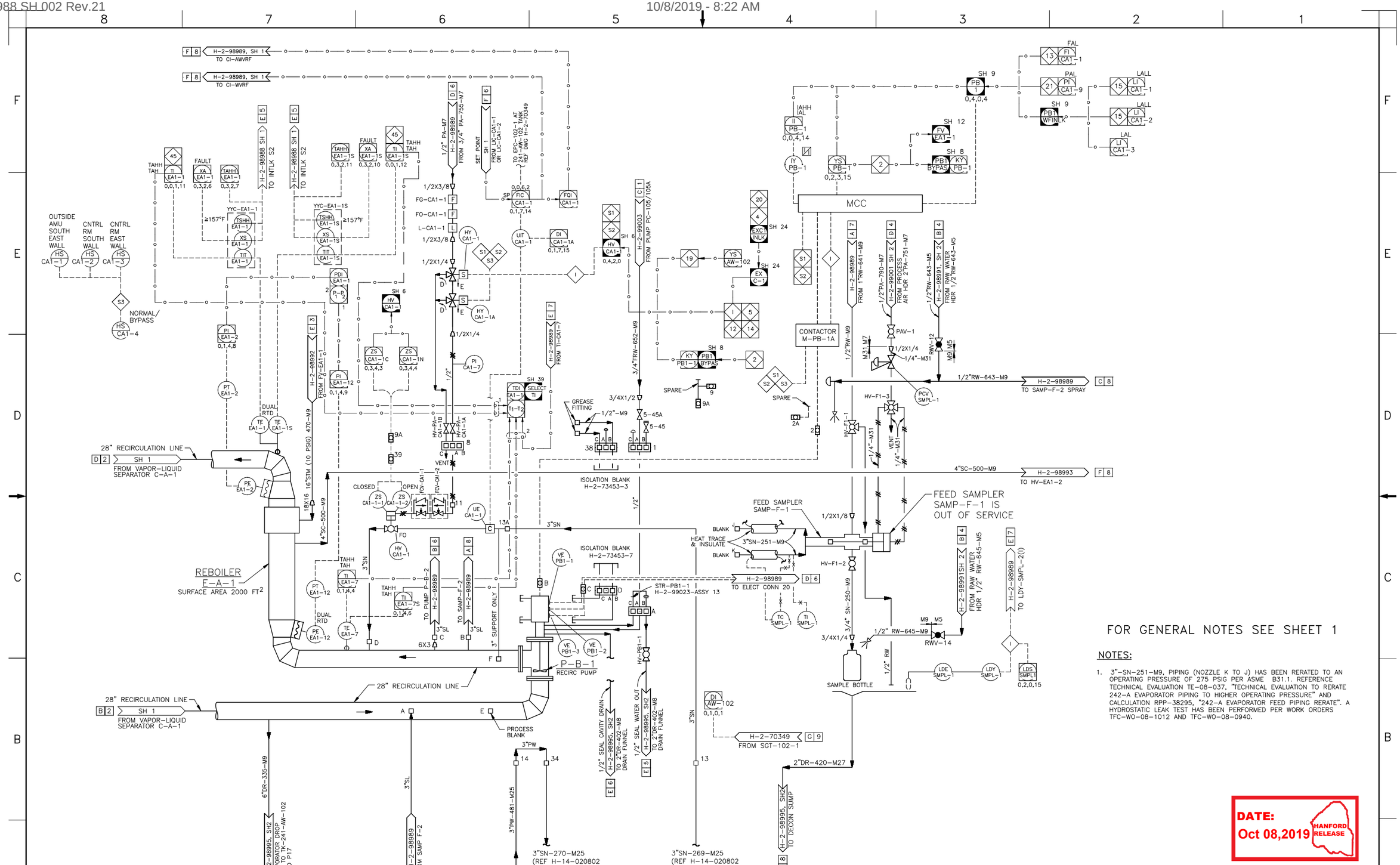

FOR GENERAL NOTES SEE SHEET 1

NOTES:

1. 3"-SN-251-M9, PIPING (NOZZLE K TO J) HAS BEEN RERATED TO AN OPERATING PRESSURE OF 275 PSIG PER ASME B31.1. REFERENCE TECHNICAL EVALUATION TE-08-037, "TECHNICAL EVALUATION TO RERATE 242-A EVAPORATOR PIPING TO HIGHER OPERATING PRESSURE" AND CALCULATION RPP-38295, "242-A EVAPORATOR FEED PIPING RERATE". A HYDROSTATIC LEAK TEST HAS BEEN PERFORMED PER WORK ORDERS TFC-WO-08-1012 AND TFC-WO-08-0940.

DATE: Oct 08,2019 HANFORD RELEASE

DWG NUMBER	TITLE	REF NUMBER	TITLE
DRAWING TRACEABILITY LIST		REFERENCES	
NEXT USED ON SHEET 1			

REV NO	DESCRIPTION
21	INC DCN-715281
REVISIONS	

BLDG NO 242-A

INDEX NO 7001 7002

CAUTION: NOT COMPLETE WITHOUT CURRENT CHANGE DOCUMENTS FROM DATABASE

	NAME	DATE	COMPANY
DRAFTING	M R DILLARD	N/A/2019	BRRPS
DRAFTING CHECKER	J CAMPBELL	N/A/2019	BRRPS
ENG. ENG. REPRESENTATIVE	T M GREEN	N/A/2019	BRRPS

U.S. DEPARTMENT OF ENERGY
Office of River Protection

P&ID
EVAP RECIRC
SYSTEM

SIZE F DRAWING NUMBER H-2-98988 SHEET 2 REV 21

SCALE NONE

15332 DOE_TB_F.DWG (MARCH 2019)

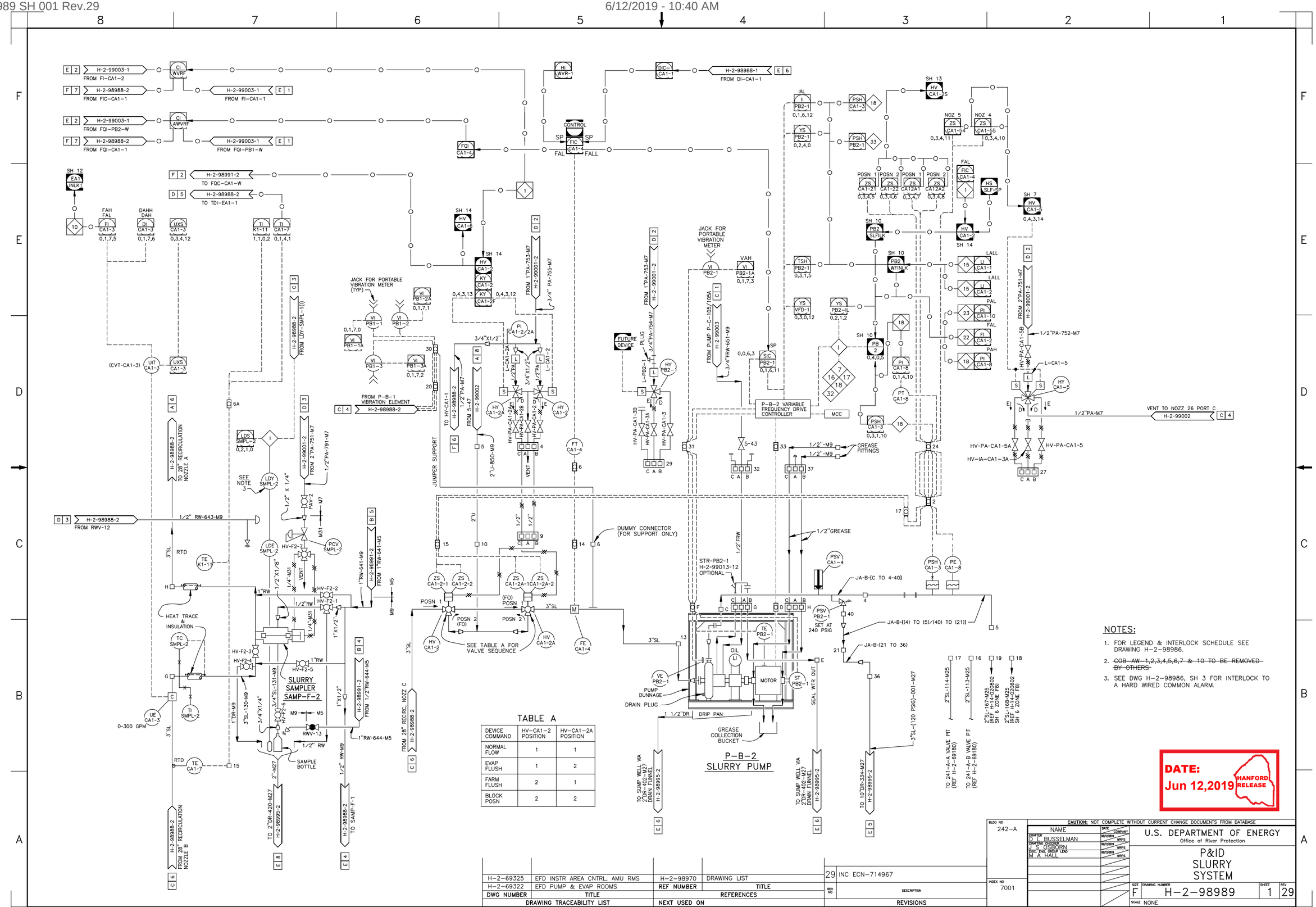

NOTES:

1. FOR LEGEND & INTERLOCK SCHEDULE SEE DRAWING H-2-98986.
2. ~~COB-AW-1,2,3,4,5,6,7 & 10 TO BE REMOVED BY OTHERS~~
3. SEE DWG H-2-98986, SH 3 FOR INTERLOCK TO A HARD WIRED COMMON ALARM.

TABLE A

DEVICE COMMAND	HV-CA1-2 POSITION	HV-CA1-2A POSITION
NORMAL FLOW	1	1
EVAP FLUSH	1	2
FARM FLUSH	2	1
BLOCK POSN	2	2

DATE: Jun 12,2019 HANFORD RELEASE

DWG NUMBER	TITLE	REF NUMBER	TITLE
H-2-69325	EFD INSTR AREA CNTRL, AMU RMS	H-2-98970	DRAWING LIST
H-2-69322	EFD PUMP & EVAP ROOMS		

DRAWING TRACEABILITY LIST — REFERENCES — NEXT USED ON

REV NO	DESCRIPTION
29	INC ECN-714967

REVISIONS

BLDG NO 242-A

INDEX NO 7001

CAUTION: NOT COMPLETE WITHOUT CURRENT CHANGE DOCUMENTS FROM DATABASE

	NAME	DATE	COMPANY
DRAFTER	B. RUSSELMAN	06/12/2019	WRPS
DRAFTING SUPERVISOR	J. S. OSBORN	06/12/2019	WRPS
DISC. ENG. GROUP LEAD	M. A. HALL	06/12/2019	WRPS

U.S. DEPARTMENT OF ENERGY
Office of River Protection

P&ID SLURRY SYSTEM

SIZE F | DRAWING NUMBER H-2-98989 | SHEET 1 | REV 29

SCALE NONE

26971 DOE_TB_F.DWG (MARCH 2019)

ENGINEERING CHANGE NOTICE

Prepared For the U.S. Department of Energy, Assistant Secretary for Environmental Management
By Washington River Protection Solutions, LLC., PO Box 850, Richland, WA 99352
Contractor For U.S. Department of Energy, Office of River Protection, under Contract DE-AC27-08RV14800

TRADEMARK DISCLAIMER: Reference herein to any specific commercial product, process, or service by trade name, trademark, manufacturer, or otherwise, does not necessarily constitute or imply its endorsement, recommendation, or favoring by the United States government or any agency thereof or its contractors or subcontractors. Printed in the United States of America.

Release Stamp

DATE:
Mar 31,2020
HANFORD RELEASE

1a. **ECN No:** ECN-715003 **Rev.** 01

1b. **Project Number:** T1P207 ☐N/A

2. **Title:**
242-A EVAPORATOR PUMP ROOM JUMPER REMOVAL

3. **WA or Redline ECN:**
☐ WA ☐ REDLINE ☒ N/A

4. **Temporary Modification:**
☐ Yes ☒ No

5. **Design Type:**
I

6. **Design Verification Required:**
☒Yes ☐No

7. **Safety Classification:**
☐SC ☐SS ☒GS ☐N/A

Workflow Approval Status:
Submitted for USQ
Clearance Review Restriction Type:
undefined

8. **USQ Number:** ☐ N/A
EV-19-2032-D, Rev. 1

9. **PrHA Number** ☐ N/A
PrHA-57384 **Rev.** 00

10. **Trend Codes**

Cause	Commodity	Discipline Driver
Customer Initiated Changes	Mechanical Equipment	Mechanical

11. **Design Authority Designator**

PRJ - 242-A TRANSFER LINE REPLACEMENT PROJECT

12. **Approvals**

Title	Name	Signature	Date
Design Authority	Engeman, Jason K	*Engeman, Jason K*	03/26/2020
Design Verifier	Harrington, James P	*Harrington, James P*	02/07/2020
Checker	Harrington, James P	*Harrington, James P*	02/07/2020
Document Control Approval	Meinecke, Kathryn R	*Meinecke, Kathryn R*	03/31/2020
Environmental Protection	Heninger, Steve D	*Heninger, Steve D*	02/10/2020
Originator	Lang, Ryan D	*Lang, Ryan D*	02/07/2020
Other Approver	Balint, Greg G	*Balint, Greg G*	03/25/2020
PrHA Lead	Kozlowski, Stephen D	*Kozlowski, Stephen D*	03/26/2020
Radiological Control	Franz, James A	*Franz, James A*	02/27/2020
Responsible Engineering Manager	Huntington, Matthew R	*Huntington, Matthew R*	03/30/2020
USQ Evaluator	Carlstrom, Richard	*Carlstrom, Richard*	03/30/2020
Waste Transfer Engineering	Moss, Hannah C	*Moss, Hannah C*	03/23/2020

13. **Problem**

ECN-715003 was revised to add 242-A Evaporator design authority approval, and clarify the as found configuration of blanks on nozzles 17 and 18.

Recent pneumatic testing on the encasement of SL-167 has determined that it cannot maintain pressure, and therefore cannot be used to compliantly transfer waste. Recent visual inspection of SL-168 (the back-up slurry line) and pneumatic testing have identified additional work to be performed in order to attempt to place the line back into service. Until new slurry transfer lines have been installed and placed into service, the 242-A Evaporator cannot slurry out concentrated waste to tank farms to allow waste volume reduction. To ensure long-term success of the evaporator, a replacement feed line will also be installed.

New transfer lines are to be installed to the 242-A Evaporator Pump Room. Prior to the installation of the new transfer lines, new core drills through the West exterior wall of the pump room will occur. To support the installation of the new wall nozzle assemblies the removal of an Not-In-Use jumper assembly will occur. The installation of the three new wall nozzles will block future access (remote via overhead crane) to existing wall nozzles 14, 15 and 16.

14. **Solution**

The removal of existing Not-In-Use jumper assembly [14 To 34] will provide better work access and remove abandoned equipment. This ECN captures the changes for the removal of the existing 242-A [14 To 34] jumper assembly and install Process Blanks on the wall nozzles where future remote access will be blocked.

Remove the existing [13 To 13A] jumper assembly connecting to the AW-02E Feed Pump Pit via 3"SN-269 transfer line. Install a Process Blank on the disconnected wall nozzle 13 and the intermediate jumper nozzle 13A.

15. **Analysis**

None required.

16. **Description of Change**

Design verification performed in accordance with Columbia Energy & Environmental Services Procedure CE-ES-3.3.

H-2-98988 Sheet 2; Update P&ID to reflect the removal of the [14 To 34] and [13 To 13A] jumper assemblies, removal of non-compliant line 3"PW-481 to wall nozzle 14, and currently unused 3"SN-270 to wall nozzle 34, add Process Blank notation to nozzle 13A, changes as shown on page 4.

ENGINEERING CHANGE NOTICE

ECN No: ECN-715003 **Rev.** 01

16. **Description of Change**

H-2-99009 Sheet 1; Update Jumper Schedule table to reflect removal of the [14 To 34] and [13 To 13A] jumpers, Update plan view to show the [14 To 34] and [13 To 13A] jumpers removed and Process Blanks installed on wall nozzles 13, 14, 16, 34 and intermediate nozzle 13A, changes as shown on pages 5, 6 and 7.

H-14-107346 Sheet 3; Update to reflect the removal of jumper assemblies [14 To 34] and [13 To 13A] and installation of Process Blanks on wall nozzles 13, 14, 16, 34 and intermediate nozzle 13A, changes as shown on page 8.

17. **Work Package Number(s)**

TBD

18. **TBDs or Holds** ☒N/A

19. **Related Structures, Systems, and Components**

a. **Related Building/Facilities** ☐N/A	b. **Related Systems** ☐N/A	c. **Related Equipment ID Nos. (EIN)** ☒N/A
242-A	241-WT 242A 242A-SN	

20. **Engineering Drawings to be Changed** Does change affect the Electronic Routing Board? ☒

Drawing Number	Rev.	Title
H-14-107346 SH 003	43	DST WASTE TRANSFER PIPING DIAGRAM
H-2-98988 SH 002	21	P&ID EVAP RECIRC SYSTEM
H-2-99009 SH 001	05	PIPING JUMPER ARRANGEMENT PUMP ROOM

21. **Related Modification Traveler** ☐N/A

MT-50400

22. **Related Documents** ☒N/A

Document Number	Rev.	Title

23. **Distribution**

Name	Organization
Anderson, Ladd L	ELECTRICAL ENGINEERING
Atterbury, Brittney M	WASTE STORAGE & TECH SUPPORT
Balint, Greg G	COGNIZANT SYSTEM ENGINEERING
Becker, Brent T	COGNIZANT SYSTEM ENGINEERING
Blaak, Todd M	WASTE TRANSFER ENGINEERING
Conner, John M	PROD OPERATIONS PROCESS ENGRNG
Engeman, Jason K	TANK FARM PROJECTS ENGINEERING
Everett, Brian K	WASTE TRANSFER PLANNING MGMT
Foster, Jim	242-A/AW/ETF OPERATIONS
Franz, James A	TFP RADCON
Griffin, Peter W	TANK FARM PROJECTS ENGINEERING
Harper, Jerry G	TANK RETRIEVAL AND PROJECTS QA
Harrington, James P	
Heninger, Steve D	RETRVL & CLOSURE/PROJ ENV CMPL
Huntington, Matthew R	TANK FARM PROJECTS ENGINEERING
Huntington, Nikki L	COGNIZANT SYSTEM ENGINEERING
Klages, Deanna L	CLOSURE & INTERIM MEASURES
Lang, Ryan D	
May, Dustin R	TFP PROJECT MANAGEMENT
Moss, Hannah C	WASTE TRANSFER ENGINEERING
Smith, Gregory E	TANK FARM PROJECTS ENGINEERING

Columbia Energy AND ENVIRONMENTAL SERVICES

Design Verification Checklist

Doc. Number	Rev.	Title
ECN-715003	01	242-A Evaporator Pump Room Jumper Removal

Verification Method (Check One)

☒ Review ☐ Alternate Calculation ☐ Qualification Testing

Verification Results

Yes	No	NA	
☒	☐	☐	Design inputs correctly selected and cited and correctly incorporated.
☒	☐	☐	Input data were checked for consistency with original source information.
☐	☐	☒	Design inputs for interfacing organizations are specified
☐	☐	☒	Necessary assumptions are explicit, adequately described and supported.
☐	☐	☒	Unverified assumptions (requiring verification) are clearly identified.
☐	☐	☒	Analytical and technical approaches and results are reasonable and appropriate.
☐	☐	☒	The version or revision of each reference is cited
☐	☐	☒	Design output is reasonable for design inputs
☐	☐	☒	Results and conclusions address all points in the purpose.
☐	☐	☒	Conclusions are consistent with analytical results and applicable limits.
☒	☐	☐	Suitable materials, parts, processes, and inspection and testing criteria specified
☒	☐	☐	All comments have been adequately addressed and dispositioned
☐	☐	☒	Calculations are sufficiently detailed such that a technically qualified person could reproduce the calc.
☐	☐	☒	Design method(s) are appropriately used and documented.
☐	☐	☒	Computer Program(s) are appropriately used and results support design.
☐	☐	☒	For pre-verified computer programs the V&V document is referenced and specific computer used for the calculation is identified

Ensure calculations that use software include a paper printout, microfiche, CD-ROM, or other electronic file of the input data and identification to the computer, computer codes, and versions used, or provide alternate documentation to uniquely and clearly identify the exact coding and execution process.

Checker Name	Signature	Date
JP Harrington	[signature]	3/7/20

CE-ES-3.3-F1, 10/20/14

ENGINEERING CHANGE NOTICE CONTINUATION SHEET	1a. ECN-715003 1b. Proj. T1P207

Document/Drawing No. H-2-98988	Sheet 2	Revision 21

WAS:

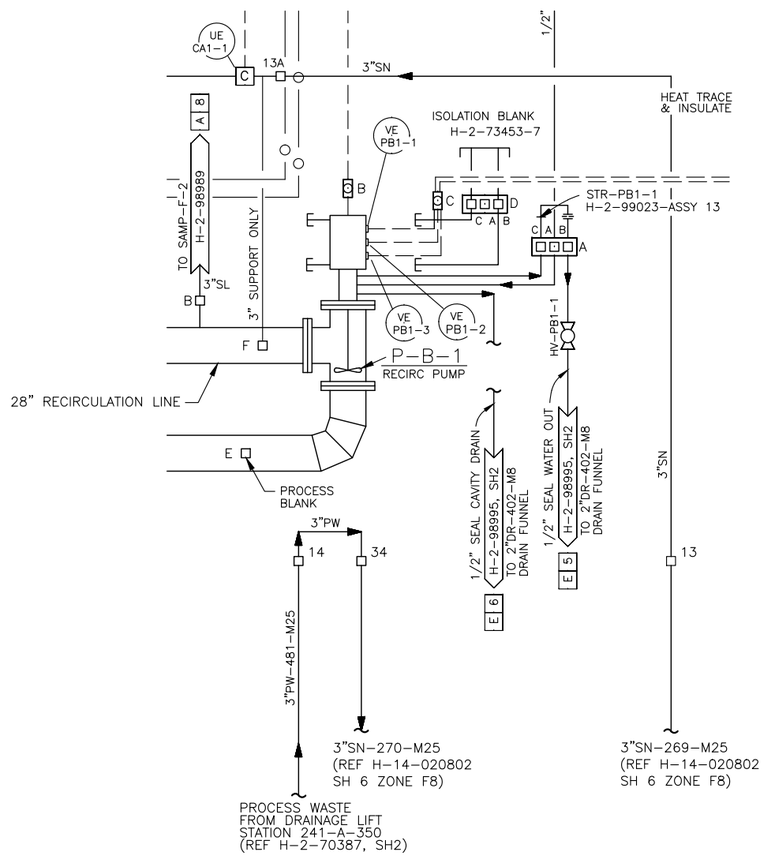

IS:

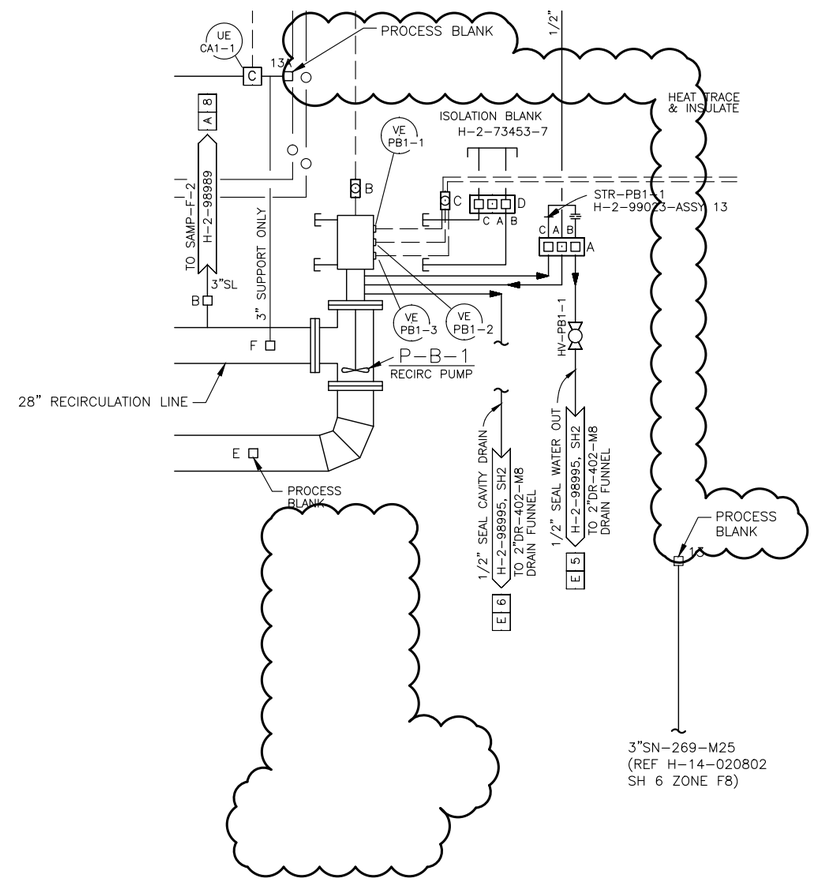

ENGINEERING CHANGE NOTICE CONTINUATION SHEET	1a. ECN-715003 1b. Proj. T1P207

Document/Drawing No. H-2-99009 Sheet 1 Revision 5

ECN NOTE: INCORPORATES CHANGES MADE BY ECN-711932 REV 00 AND ECN-714967 REV. 00.

WAS:

PUMP ROOM JUMPER SCHEDULE

JUMPER NAME	NOZZLE FROM	NOZZLE TO	SERVICE/PURPOSE	DRAWING NUMBER
13 TO 13A	13	13A	SUPERNATE FROM TK-241-AW-102-02E	H-14-109331
14 TO 34	14	34	PROCESS WASTE (241-A-350) SUPERNATE (34) TO SN-270	H-2-70462
15 TO 17	15	17	POWER/SIGNAL	H-2-99021
20 TO (P-B-1) C	20	(P-B-1) C	POWER/SIGNAL	H-2-99022
21 (SPARE)	21	N/A	POWER/SIGNAL	N/A
21 TO 36	36	21	SLURRY	H-2-99043
24 TO 2	24	2	POWER/SIGNAL, PE-CA1-8 PSH-CA1-3, PSH-PB2-1 POSN-ZS-CA1-2-1, 2-2, 2A-2, ZT-CA1-3	H-2-99020
30 TO 6	30	6 & 20	POWER/SIGNAL AT-PB1-2, VE-PB1-1/2/3	H-2-99012
31 TO (P-B-2) F	31	(P-B-2) F	SIGNAL, AT-PB2-1, ST-PB2-1 VE-PB2-1, TE-PB2-1	H-2-99015
32 TO (P-B-2) G	32	(P-B-2) G	WATER, FILTERED RAW TO PUMP SEAL	H-2-99013
33 TO (P-B-2) D	33	(P-B-2) D	POWER TO PUMP 460 VOLT	H-2-99011
37 TO (P-B-2) H	37	(P-B-2) H	GREASE TO MOTOR BEARINGS	H-2-99006
C TO (P-B-2) 13	C	(P-B-2) 13		H-2-99024
C TO 4-40	C	4 & 40		H-2-836148
4 D TO 13A	D	13A	SUPERNATE EVAPORATOR FEED	H-14-107263
E (BLANK)	E	N/A	SLURRY	H-2-32440
G TO B	G	B	SLURRY	H-2-90977
H TO A	H	A	SLURRY	H-2-90978
FROM SAMPLE CABINET	SAMPLE CABINET	J	SUPERNATE	
TO SAMPLE CABINET	K	SAMPLE CABINET	SUPERNATE	
FROM SAMPLE CABINET	SAMPLE CABINET	H	SLURRY	H-2-70087
TO SAMPLE CABINET	G	SAMPLE CABINET	SLURRY	H-2-70087

IS:

PUMP ROOM JUMPER SCHEDULE

JUMPER NAME	NOZZLE FROM	NOZZLE TO	SERVICE/PURPOSE	DRAWING NUMBER
15 TO 17	15	17	POWER/SIGNAL	H-2-99021
20 TO (P-B-1) C	20	(P-B-1) C	POWER/SIGNAL	H-2-99022
21 (SPARE)	21	N/A	POWER/SIGNAL	N/A
21 TO 36	36	21	SLURRY	H-2-99043
24 TO 2	24	2	POWER/SIGNAL, PE-CA1-8 PSH-CA1-3, PSH-PB2-1 POSN-ZS-CA1-2-1, 2-2, 2A-2, ZT-CA1-3	H-2-99020
30 TO 6	30	6 & 20	POWER/SIGNAL AT-PB1-2, VE-PB1-1/2/3	H-2-99012
31 TO (P-B-2) F	31	(P-B-2) F	SIGNAL, AT-PB2-1, ST-PB2-1 VE-PB2-1, TE-PB2-1	H-2-99015
32 TO (P-B-2) G	32	(P-B-2) G	WATER, FILTERED RAW TO PUMP SEAL	H-2-99013
33 TO (P-B-2) D	33	(P-B-2) D	POWER TO PUMP 460 VOLT	H-2-99011
37 TO (P-B-2) H	37	(P-B-2) H	GREASE TO MOTOR BEARINGS	H-2-99006
C TO (P-B-2) 13	C	(P-B-2) 13		H-2-99024
C TO 4-40	C	4 & 40		H-2-836148
4 D TO 13A	D	13A	SUPERNATE EVAPORATOR FEED	H-14-107263
E (BLANK)	E	N/A	SLURRY	H-2-32440
G TO B	G	B	SLURRY	H-2-90977
H TO A	H	A	SLURRY	H-2-90978
FROM SAMPLE CABINET	SAMPLE CABINET	J	SUPERNATE	
TO SAMPLE CABINET	K	SAMPLE CABINET	SUPERNATE	
FROM SAMPLE CABINET	SAMPLE CABINET	H	SLURRY	H-2-70087
TO SAMPLE CABINET	G	SAMPLE CABINET	SLURRY	H-2-70087

ENGINEERING CHANGE NOTICE CONTINUATION SHEET	1a. ECN-715003
	1b. Proj. T1P207

Document/Drawing No. H-2-99009 Sheet 1 Revision 5

ECN NOTE: INCORPORATES CHANGES MADE BY ECN-714967 REV. 00.

ECN NOTE: PROCESS BLANKS SHOWN ON NOZZLES 17 AND 18 REFLECTS THE AS-FOUND CONDITION. THE INSTALLATION OF NEW PROCESS BLANKS IS NOT REQUIRED.

WAS:

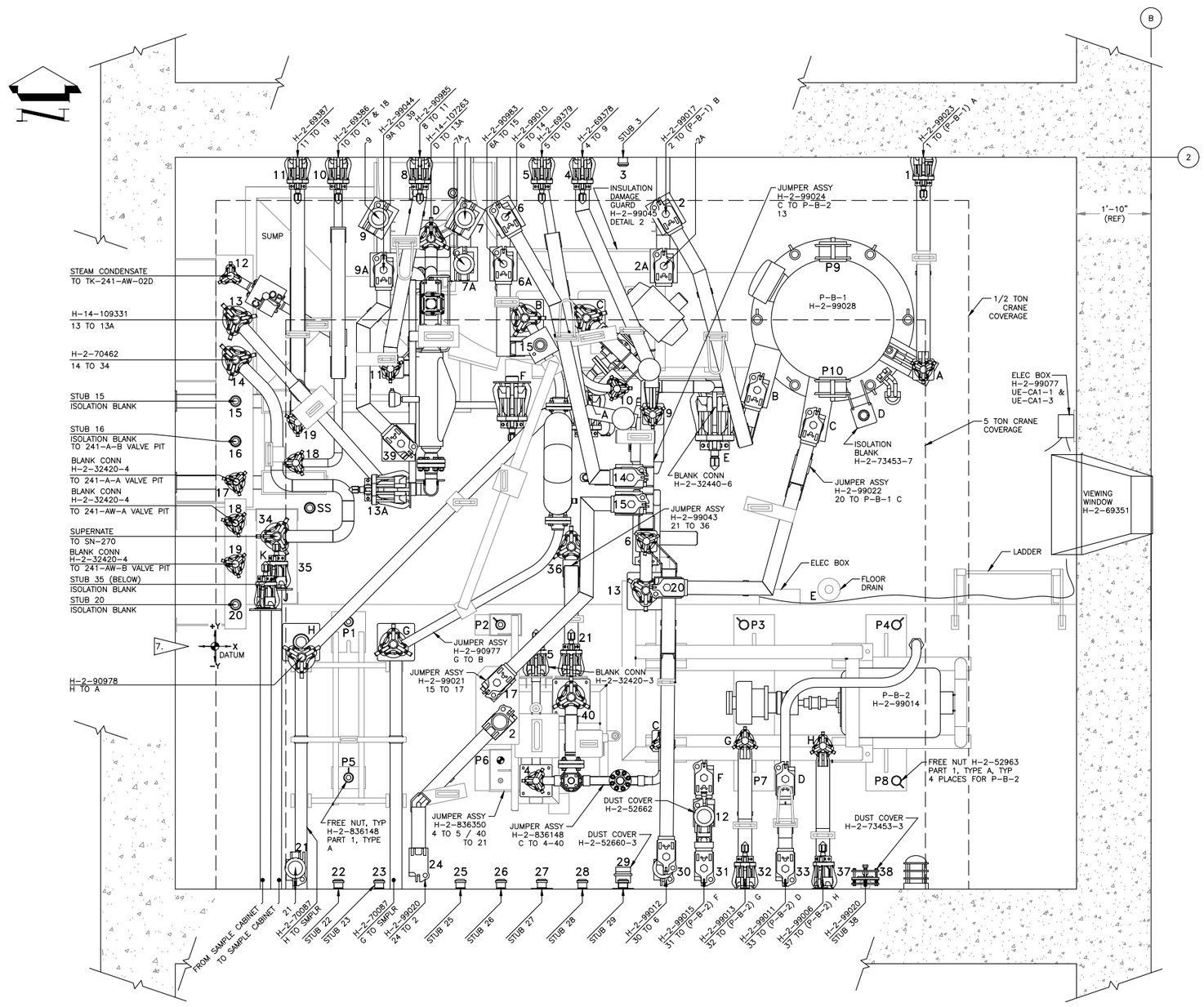

ENGINEERING CHANGE NOTICE CONTINUATION SHEET	1a. ECN–715003 1b. Proj. T1P207

Document/Drawing No. H–2–99009 Sheet 1 Revision 5

IS:

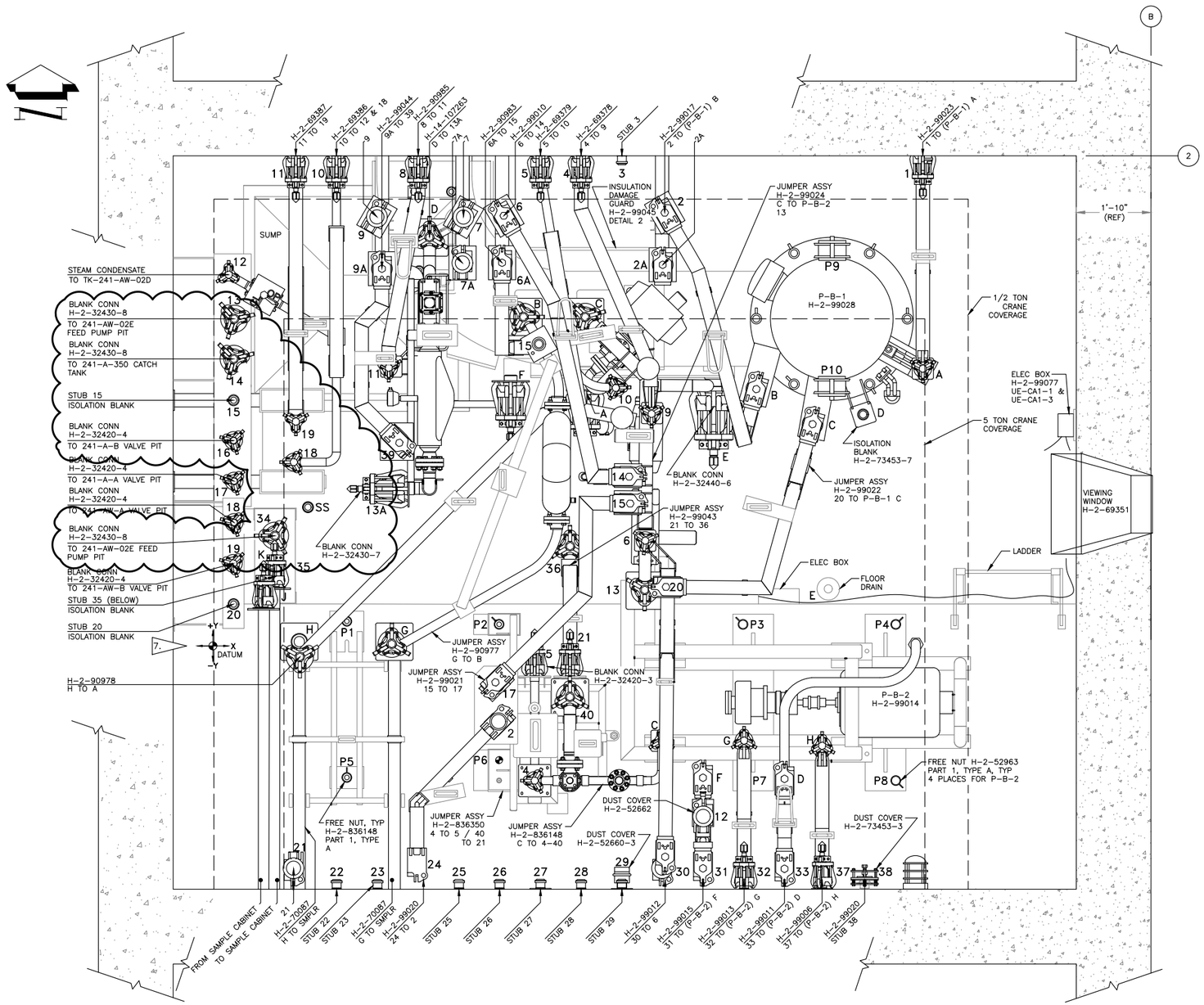

ENGINEERING CHANGE NOTICE CONTINUATION SHEET	1a. ECN– 715003 1b. Proj. T1P207

Document/Drawing No. H–14–107346	Sheet 3	Revision 43

WAS:

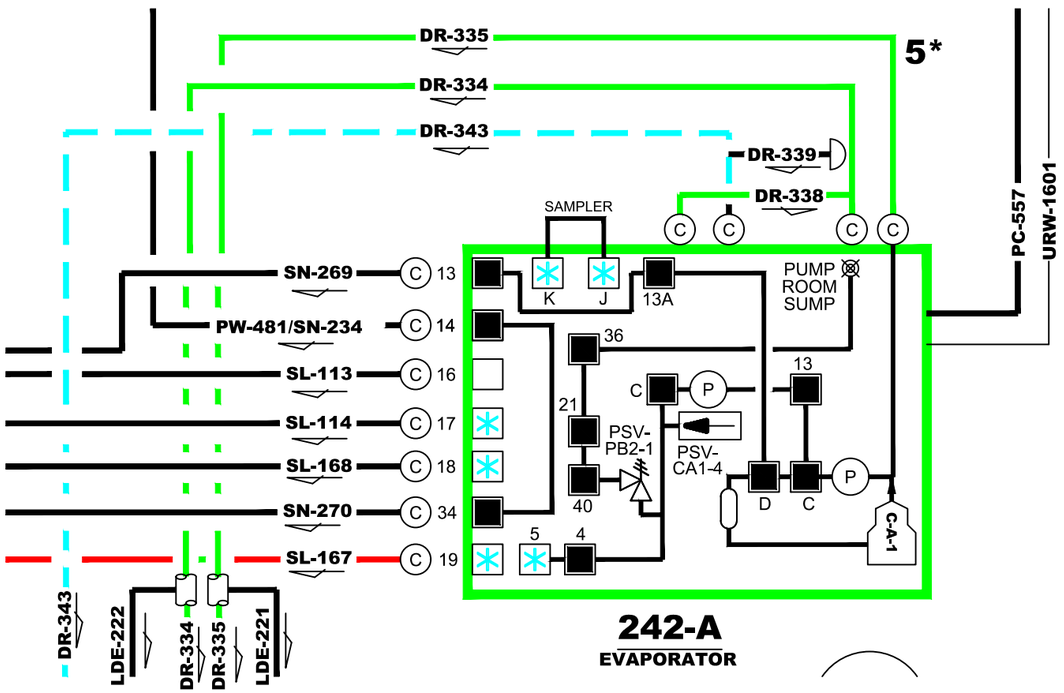

IS:

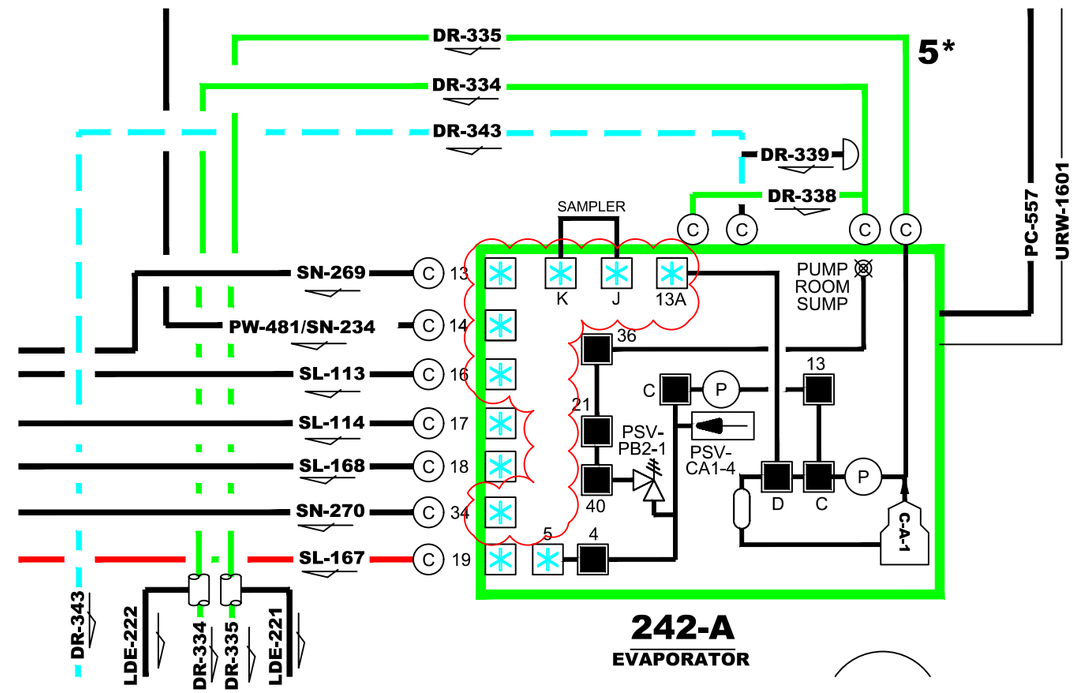

ENGINEERING CHANGE NOTICE

Prepared For the U.S. Department of Energy, Assistant Secretary for Environmental Management
By Washington River Protection Solutions, LLC., PO Box 850, Richland, WA 99352
Contractor For U.S. Department of Energy, Office of River Protection, under Contract DE-AC27-08RV14800

TRADEMARK DISCLAIMER: Reference herein to any specific commercial product, process, or service by trade name, trademark, manufacturer, or otherwise, does not necessarily constitute or imply its endorsement, recommendation, or favoring by the United States government or any agency thereof or its contractors or subcontractors. Printed in the United States of America.

Release Stamp

DATE:
Apr 01,2020
HANFORD RELEASE

Workflow Approval Status:
Submitted for USQ
Clearance Review Restriction Type:
undefined

1a. **ECN No:** ECN-715004 **Rev.** 01

1b. **Project Number:** T1P207 ☐N/A

2. **Title:**
CORE DRILL AND INSTALL WALL NOZZLE 41, 42 AND 43 ASSEMBLIES AT 242-A EVAPORATOR PUMP ROOM

3. **WA or Redline ECN:**
☐ WA ☐ REDLINE ☒ N/A

4. **Temporary Modification:**
☐ Yes ☒ No

5. **Design Type:**
I

6. **Design Verification Required:**
☒Yes ☐No

7. **Safety Classification:**
☐SC ☒SS ☐GS ☐N/A

8. **USQ Number:** ☐ N/A
EV-20-0497-D, Rev. 0

9. **PrHA Number** **Rev.** ☐ N/A
PrHA-57384 00

10. **Trend Codes**

Cause	Commodity	Discipline Driver
Customer Initiated Changes	Mechanical Equipment	Mechanical

11. **Design Authority Designator**

PRJ - 242-A TRANSFER LINE REPLACEMENT PROJECT

12. **Approvals**

Title	Name	Signature	Date
Design Authority	Engeman, Jason K	*Engeman, Jason K*	03/30/2020
Design Verifier	Harrington, James P	*Harrington, James P*	02/10/2020
Checker	Harrington, James P	*Harrington, James P*	02/10/2020
Document Control Approval	Scales, Anthony	*Scales, Anthony*	04/01/2020
Environmental Protection	Heninger, Steve D	*Heninger, Steve D*	02/10/2020
Originator	Lang, Ryan D	*Lang, Ryan D*	02/10/2020
Other Approver	Balint, Greg G	*Balint, Greg G*	03/30/2020
PrHA Lead	Kozlowski, Stephen D	*Kozlowski, Stephen D*	03/31/2020
Quality Assurance	Harper, Jerry G	*Harper, Jerry G*	03/30/2020
Radiological Control	Franz, James A	*Franz, James A*	02/27/2020
Responsible Engineering Manager	Huntington, Matthew R	*Huntington, Matthew R*	03/31/2020
USQ Evaluator	Carlstrom, Richard	*Carlstrom, Richard*	03/31/2020
Welding Engineer	Berkey, James	*Berkey, James*	02/10/2020
Waste Transfer Engineering	Moss, Hannah C	*Moss, Hannah C*	03/26/2020

13. **Problem**

Revise ECN to update MQIP, background for changes by ECN-715003, remove installation instruction paint notes, updated wall nozzle details.

Recent pneumatic testing on the encasement of SL-167 has determined that it cannot maintain pressure, and therefore cannot be used to compliantly transfer waste. Recent visual inspection of SL-168 (the back-up slurry line) and pneumatic testing have identified additional work to be performed in order to attempt to place the line back into service. Until new slurry transfer lines have been installed and placed into service, the 242-A Evaporator cannot slurry out concentrated waste to tank farms to allow waste volume reduction. To ensure long-term success of the evaporator, a replacement feed line will also be installed.

New transfer lines are to be installed to the 242-A Evaporator Pump Room. Prior to the installation of the new transfer lines, new core drills through the West exterior wall of the pump room will occur.

14. **Solution**

This ECN documents the three new core drill penetrations required through the exterior west wall of the Pump Room and details the installation of the new Pump Room wall nozzle assemblies. The connection of the new waste transfer lines to the new wall nozzle assemblies leading to 241-AW will occur at a later date.

15. **Analysis**

Refer to RPP-CALC-63208 for the supporting analyses for the core drill penetrations and wall nozzle assemblies. RPP-CALC-63211 shall address the applicable ASME B31.3 calculation for the wall nozzle assemblies, when the new transfer lines are connected.

ENGINEERING CHANGE NOTICE

ECN No: ECN-715004 **Rev.** 01

16. **Description of Change**

Installation Instructions (Not to be Incorporated) -

Apply sealant, Sikaflex-1a or approved alternate, between the concrete wall and the sealing surface of the adjoining exterior wall mounting plate.

Design verification performed in accordance with Columbia Energy & Environmental Services Procedure CE-ES-3.3.

H-2-69338 Sheet 1; Depict installed location of new wall nozzle 41, 42 and 43 assemblies, add reference elevations for pipe penetration centerlines and nozzle elevations, changes as shown on pages 8 and 9.

H-2-98988 Sheet 2; Reflect the installation of new wall nozzle 43 and add reference to future transfer line installation, change as shown on page 10.

H-2-98989 Sheet 1; Reflect the installation of new wall nozzles 41 and 42 and add reference to future transfer line installations, change as shown on page 11.

H-2-99009 Sheet 1; Add view of new wall nozzle assemblies (Stubs 41, 42 and 43), Update information for existing Stub's 14, 15 and 16 located below new assemblies, change as shown on pages 12 and 13.

H-2-99009 Sheet 2; Add Nozzle number 41, 42 and 43 position information and reference to flag note 9, Add new flag note 9, changes as shown on pages 14 and 15.

H-2-99029 Sheet 1; Depict installed location of new wall nozzle 41, 42 and 43 assemblies, and added reference to new Section views, changes as shown on pages 16 and 17.

H-2-99030 Sheet 1; Update Section to show new wall nozzles 41, 42 and 43 installation, Add new Section views to support the installation details of new wall nozzle assemblies, changes as shown on pages 18 and 19.

H-14-020802 Sheet 6; Update to include new wall nozzles 41, 42 and 43 with reference to future transfer lines, changes to page 20.

H-14-107346 Sheet 3; Update to reflect the installation of new "spare" wall nozzles 41, 42 and 43, changes as shown on pages 21 and 22.

17. **Work Package Number(s)**

TBD

18. **TBDs or Holds** ☒N/A

19. **Related Structures, Systems, and Components**

a. **Related Building/Facilities** ☐N/A	b. **Related Systems** ☐N/A	c. **Related Equipment ID Nos. (EIN)** ☒N/A
242-A	242A 242A-STRU	

20. **Engineering Drawings to be Changed** Does change affect the Electronic Routing Board? ☒

Drawing Number	Rev.	Title
H-14-020802 SH 006	11	WASTE TRANSFER SYSTEM (WT) O&M SYSTEM P&ID
H-14-107346 SH 003	43	DST WASTE TRANSFER PIPING DIAGRAM
H-2-69338 SH 001	04	PIPING ARRANGEMENT PUMP ROOM & HOT EQUIP. STORAGE SECTIONS
H-2-98988 SH 002	21	P&ID EVAP RECIRC SYSTEM
H-2-98989 SH 001	29	P&ID SLURRY SYSTEM
H-2-99009 SH 001	05	PIPING JUMPER ARRANGEMENT PUMP ROOM
H-2-99009 SH 002	00	PIPING JUMPER ARRANGEMENT PUMP ROOM
H-2-99029 SH 001	02	PIPING EVAPORATOR-PUMP ROOM PLANS AND SECTION
H-2-99030 SH 001	03	PIPING EVAPORATOR-PUMP ROOM SECTIONS AND DETAILS

21. **Related Modification Traveler** ☐N/A

MT-50400

22. **Related Documents** ☐N/A

Document Number	Rev.	Title
RPP-CALC-63208	00	Structural Analysis for the 242-A Pump Room Wall Nozzle Assemblies Plus Counterweight Lifting Devices
RPP-CALC-63211	00	ASME B31.3 Analyses of the New SL-170, SL-171, SL-172 and SN-275 Waste Transfer Lines in 241-AW Tank Farm

23. **Distribution**

Name	Organization
Anderson, Ladd L	ELECTRICAL ENGINEERING
Atterbury, Brittney M	WASTE STORAGE & TECH SUPPORT
Balint, Greg G	COGNIZANT SYSTEM ENGINEERING

ENGINEERING CHANGE NOTICE

ECN No: ECN-715004 **Rev.** 01

23. **Distribution**

Name	**Organization**
Becker, Brent T	COGNIZANT SYSTEM ENGINEERING
Berkey, James	ENGINEERING PROGRAMS
Blaak, Todd M	WASTE TRANSFER ENGINEERING
Conner, John M	PROD OPERATIONS PROCESS ENGRNG
Engeman, Jason K	TANK FARM PROJECTS ENGINEERING
Everett, Brian K	WASTE TRANSFER PLANNING MGMT
Foster, Jim	242-A/AW/ETF OPERATIONS
Franz, James A	TFP RADCON
Griffin, Peter W	TANK FARM PROJECTS ENGINEERING
Harper, Jerry G	TANK RETRIEVAL AND PROJECTS QA
Heninger, Steve D	RETRVL & CLOSURE/PROJ ENV CMPL
Huntington, Matthew R	TANK FARM PROJECTS ENGINEERING
Huntington, Nikki L	COGNIZANT SYSTEM ENGINEERING
Klages, Deanna L	CLOSURE & INTERIM MEASURES
Lang, Ryan D	
May, Dustin R	TFP PROJECT MANAGEMENT
Moss, Hannah C	WASTE TRANSFER ENGINEERING
Smith, Gregory E	TANK FARM PROJECTS ENGINEERING

Columbia Energy AND ENVIRONMENTAL SERVICES

Design Verification Checklist

Doc. Number	Rev.	Title
ECN-715004	01	Core Drill and Install Wall Nozzle 41, 42 and 43 Assemblies at 242-A Evaporator Pump Room

Verification Method (Check One)

☒ Review ☐ Alternate Calculation ☐ Qualification Testing

Verification Results

Yes	No	NA	
☒	☐	☐	Design inputs correctly selected and cited and correctly incorporated.
☒	☐	☐	Input data were checked for consistency with original source information.
☐	☐	☒	Design inputs for interfacing organizations are specified
☐	☐	☒	Necessary assumptions are explicit, adequately described and supported.
☐	☐	☒	Unverified assumptions (requiring verification) are clearly identified.
☐	☐	☒	Analytical and technical approaches and results are reasonable and appropriate.
☐	☐	☒	The version or revision of each reference is cited
☐	☐	☒	Design output is reasonable for design inputs
☐	☐	☒	Results and conclusions address all points in the purpose.
☐	☐	☒	Conclusions are consistent with analytical results and applicable limits.
☒	☐	☐	Suitable materials, parts, processes, and inspection and testing criteria specified
☒	☐	☐	All comments have been adequately addressed and dispositioned
☐	☐	☒	Calculations are sufficiently detailed such that a technically qualified person could reproduce the calc.
☐	☐	☒	Design method(s) are appropriately used and documented.
☐	☐	☒	Computer Program(s) are appropriately used and results support design.
☐	☐	☒	For pre-verified computer programs the V&V document is referenced and specific computer used for the calculation is identified

Ensure calculations that use software include a paper printout, microfiche, CD-ROM, or other electronic file of the input data and identification to the computer, computer codes, and versions used, or provide alternate documentation to uniquely and clearly identify the exact coding and execution process.

Checker Name	Signature	Date
JP Harrington		2/2/20

CE-ES-3.3-F1, 10/20/14

Washington River Protection Solutions

MODIFICATION QUALITY INSPECTION PLAN (MQIP)

ECN No.: 715004 **Rev No.:** 01

INSPECTION/TEST No. 1

Description of Inspection/Test:
Ensure new primary pipe section of the wall nozzle assemblies are free from packing material or blockages.

Inspection/Test Basis:	Supporting Documentation:
Engineering Best Practice	N/A

Method of Inspection/Test:	Acceptance Criteria/Tolerances:	Sample Size/Plan:
Visual	No debris	100%

Inspection/Test Organization: QC ☒ Witness ☐ Hold

INSPECTION/TEST No. 2

Description of Inspection/Test:
Ensure new encasement pipe section of the wall nozzle assemblies are free from packing material or blockages.

Inspection/Test Basis:	Supporting Documentation:
Engineering Best Practice	N/A

Method of Inspection/Test:	Acceptance Criteria/Tolerances:	Sample Size/Plan:
Visual	No debris	100%

Inspection/Test Organization: QC ☒ Witness ☐ Hold

"ADD SECTION"

INSPECTION/TEST No. 3

Description of Inspection/Test:
Gasket condition

Inspection/Test Basis:	Supporting Documentation:
Engineering Best Practice	N/A

Method of Inspection/Test:	Acceptance Criteria/Tolerances:	Sample Size/Plan:
Visual	Gasket Condition: No damage and securely sealed to back of wall mounting plate	100%

Inspection/Test Organization: QC ☒ Witness ☐ Hold

☒

A-6006-954 (REV 0)

Washington River Protection Solutions

MODIFICATION QUALITY INSPECTION PLAN (continued)

ECN No.: 715004 **Rev No.:** 01

INSPECTION/TEST No. 4			
Description of Inspection/Test: Nozzle Position and Level			
Inspection/Test Basis: Engineering Best Practice		Supporting Documentation: N/A	
Method of Inspection/Test: Visual/Level	Acceptance Criteria/Tolerances: Nozzle Position: Ensure the PUREX nozzle orientation is correct (upwards for Vertical nozzle). Nozzle level: Ensure the wall nozzle assembly reference block orientation is level +/- 0.25 degrees.	Sample Size/Plan: 100%	X
Inspection/Test Organization: QC		☒ Witness ☐ Hold	

INSPECTION/TEST No. 5			
Description of Inspection/Test: Grout Fill			
Inspection/Test Basis: Engineering Best Practice		Supporting Documentation: N/A	
Method of Inspection/Test: Visual	Acceptance Criteria/Tolerances: Ensure annulus between core drill penetration and exterior of the wall nozzle assembly encasement is filled by viewing steady stream of grout flowing out of the upper vent hole.	Sample Size/Plan: 100%	X
Inspection/Test Organization: QC		☒ Witness ☐ Hold	

INSPECTION/TEST No. 6			
Description of Inspection/Test: Base Plate Anchorage			
Inspection/Test Basis: Engineering Best Practice		Supporting Documentation: N/A	X
Method of Inspection/Test: Visual	Acceptance Criteria/Tolerances: Ensure base plate concrete anchors are properly installed and torqued 110 ft-lbs +10/-0 ft-lbs	Sample Size/Plan: 100%	
Inspection/Test Organization: QC		☒ Witness ☐ Hold	

Washington River Protection Solutions

MODIFICATION QUALITY INSPECTION PLAN (continued)

ECN No.: 715004 **Rev No.:** 01

INSPECTION/TEST No. 7			
Description of Inspection/Test: Nozzle Assembly Encasement Weld to Exterior Wall Mounting Plate			
Inspection/Test Basis: Certified Weld Inspector/ASME B31.3		Supporting Documentation: N/A	X
Method of Inspection/Test: Visual	Acceptance Criteria/Tolerances: ASME B31.3-2016, Table 341.3.2	Sample Size/Plan: 100%	
Inspection/Test Organization: QC		☒ Witness ☐ Hold	

ENGINEERING CHANGE NOTICE CONTINUATION SHEET	1a. ECN–715004 1b. Proj. T1P207

Document/Drawing No. H–2–69338	Sheet 1	Revision 4

WAS:

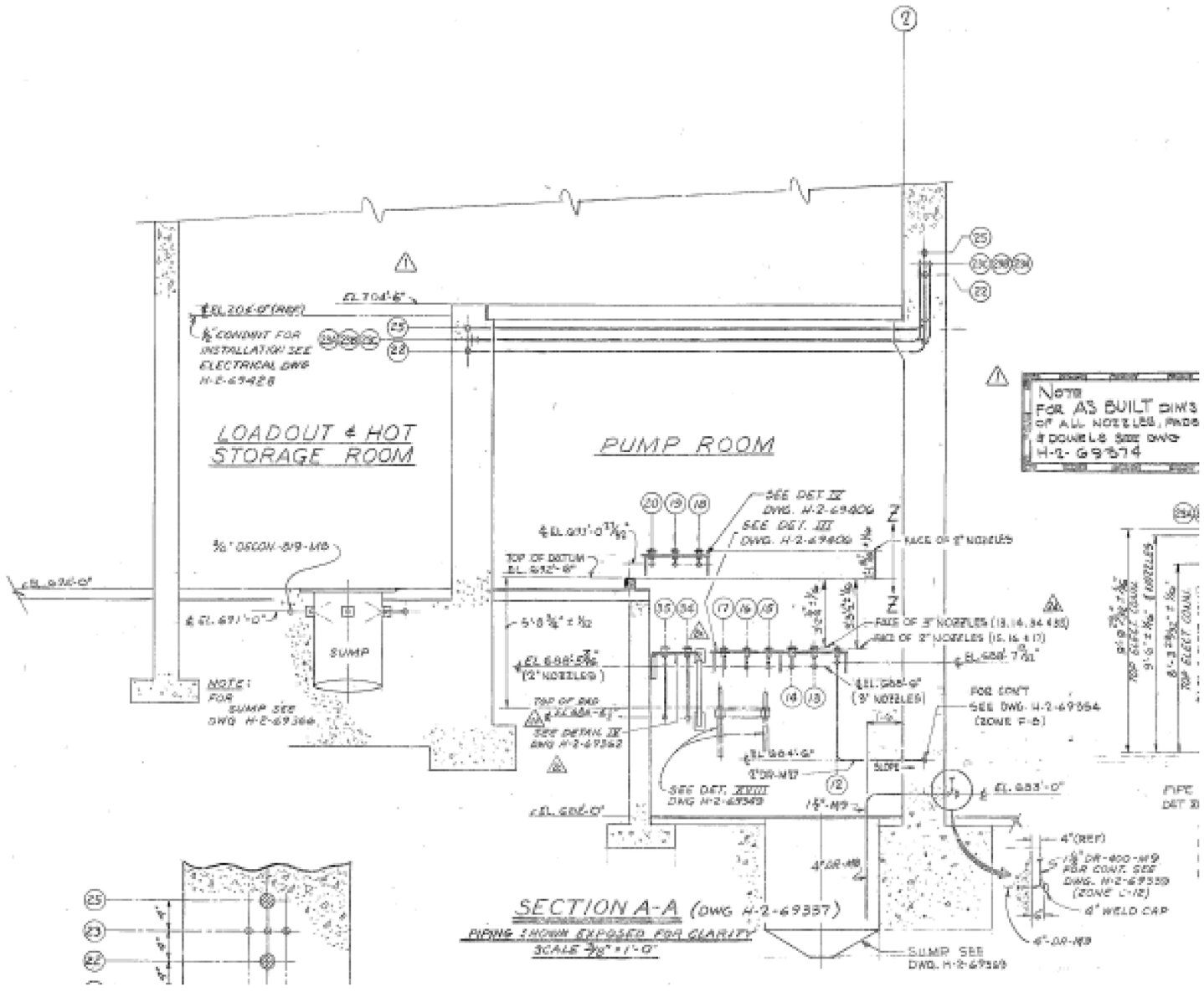

ENGINEERING CHANGE NOTICE CONTINUATION SHEET	1a. ECN– 715004 1b. Proj. T1P207

Document/Drawing No. H–2–69338	Sheet 1	Revision 4

IS:

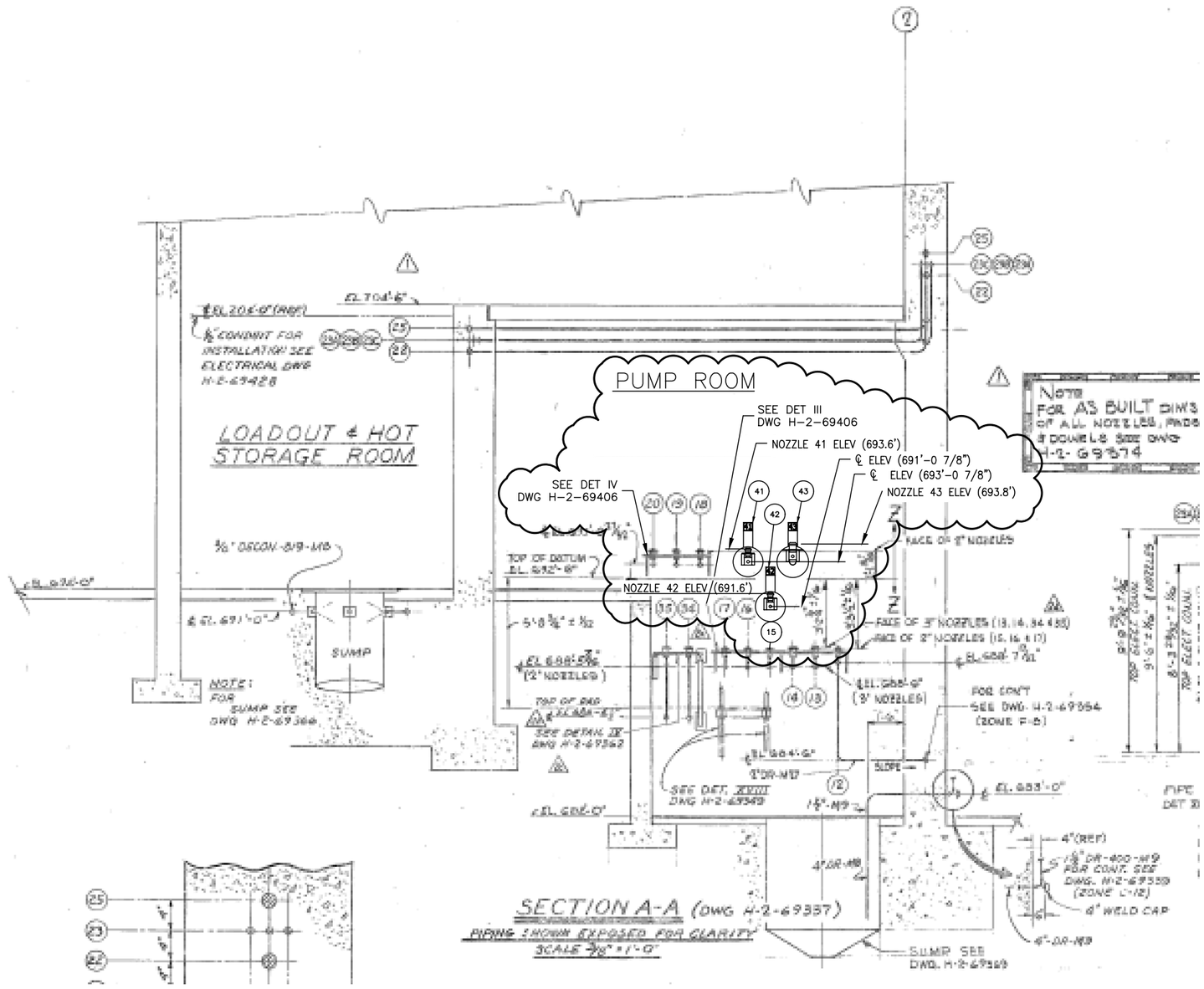

ENGINEERING CHANGE NOTICE CONTINUATION SHEET	1a. ECN-715004 1b. Proj. T1P207

Document/Drawing No. H-2-98988 Sheet 2 Revision 21

WAS: ECN NOTE: INCORPORATES CHANGES MADE BY ECN-715003 REV. 01

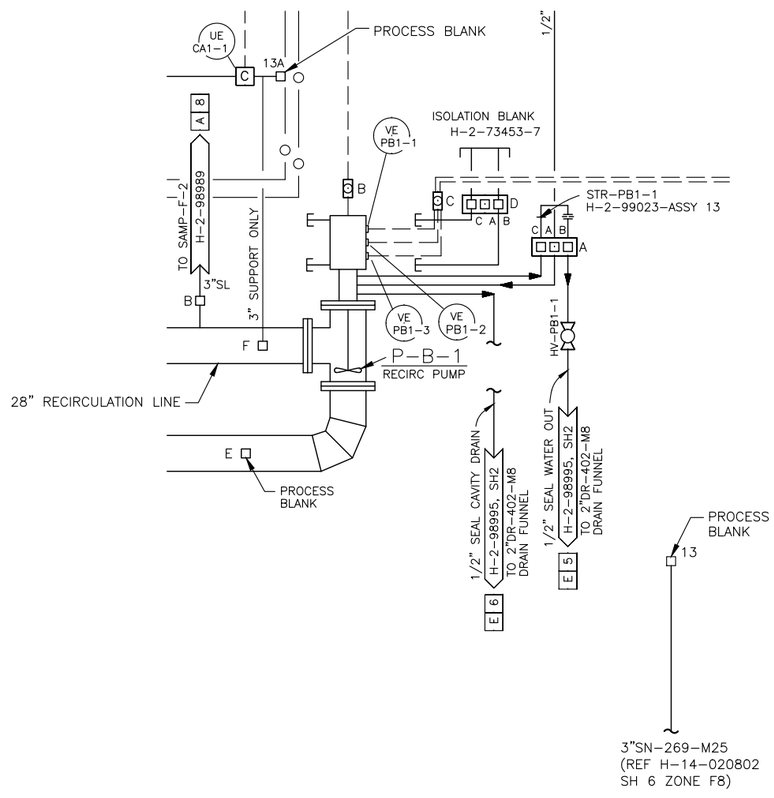

IS:

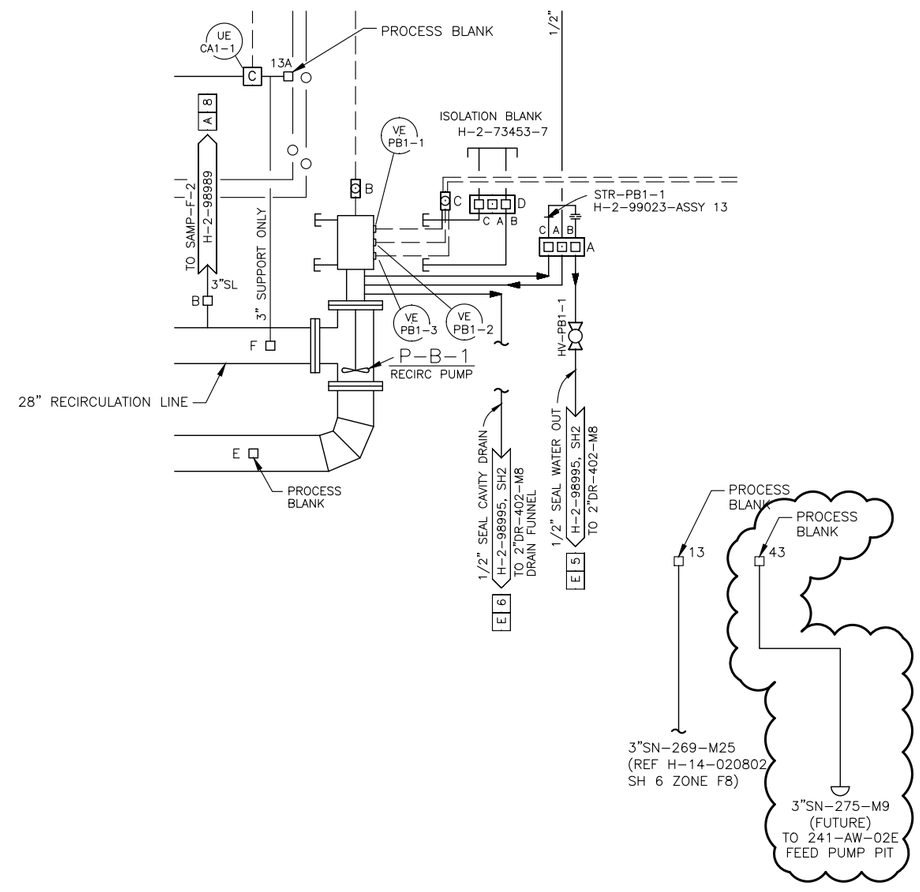

ENGINEERING CHANGE NOTICE CONTINUATION SHEET	1a. ECN– 715004 1b. Proj. T1P207

Document/Drawing No. H–2–98989 Sheet 1 Revision 29

WAS:

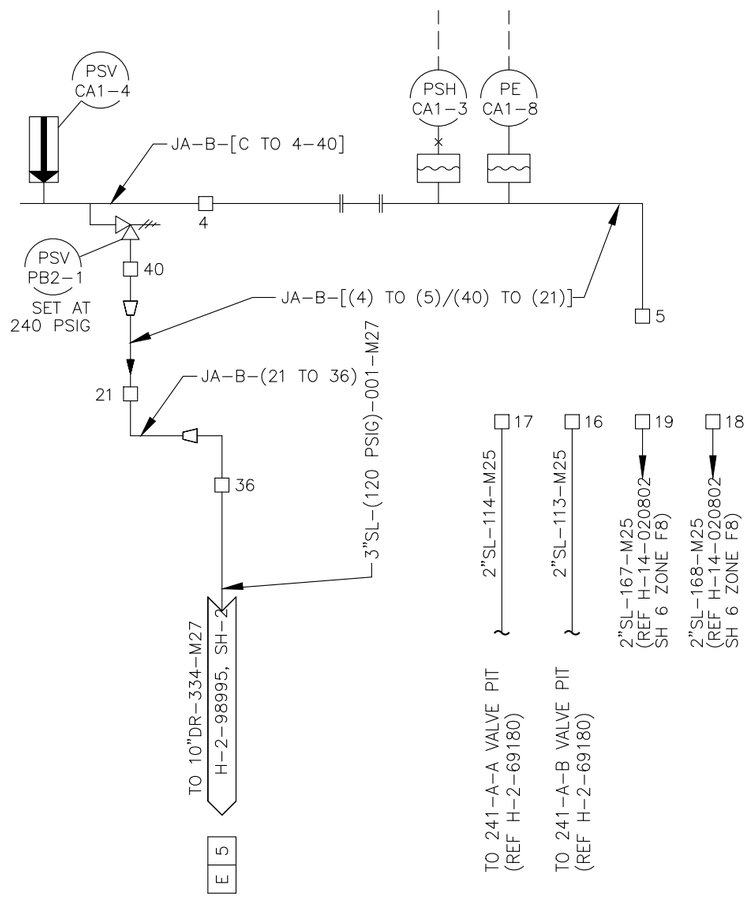

IS:

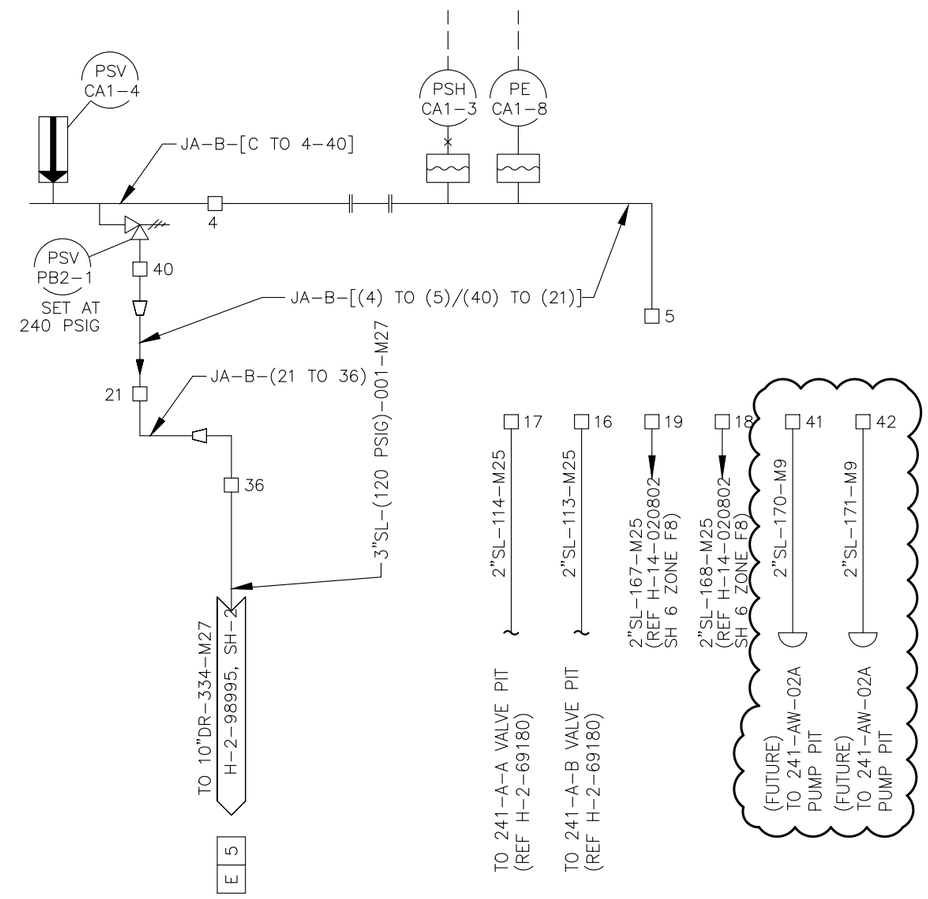

ENGINEERING CHANGE NOTICE CONTINUATION SHEET	1a. ECN-715004 1b. Proj. T1P207

Document/Drawing No. H-2-99009	Sheet 1	Revision 5

WAS: ECN NOTE: INCORPORATES CHANGES MADE BY ECN-714967 REV. 00 AND ECN-715003 REV. 01

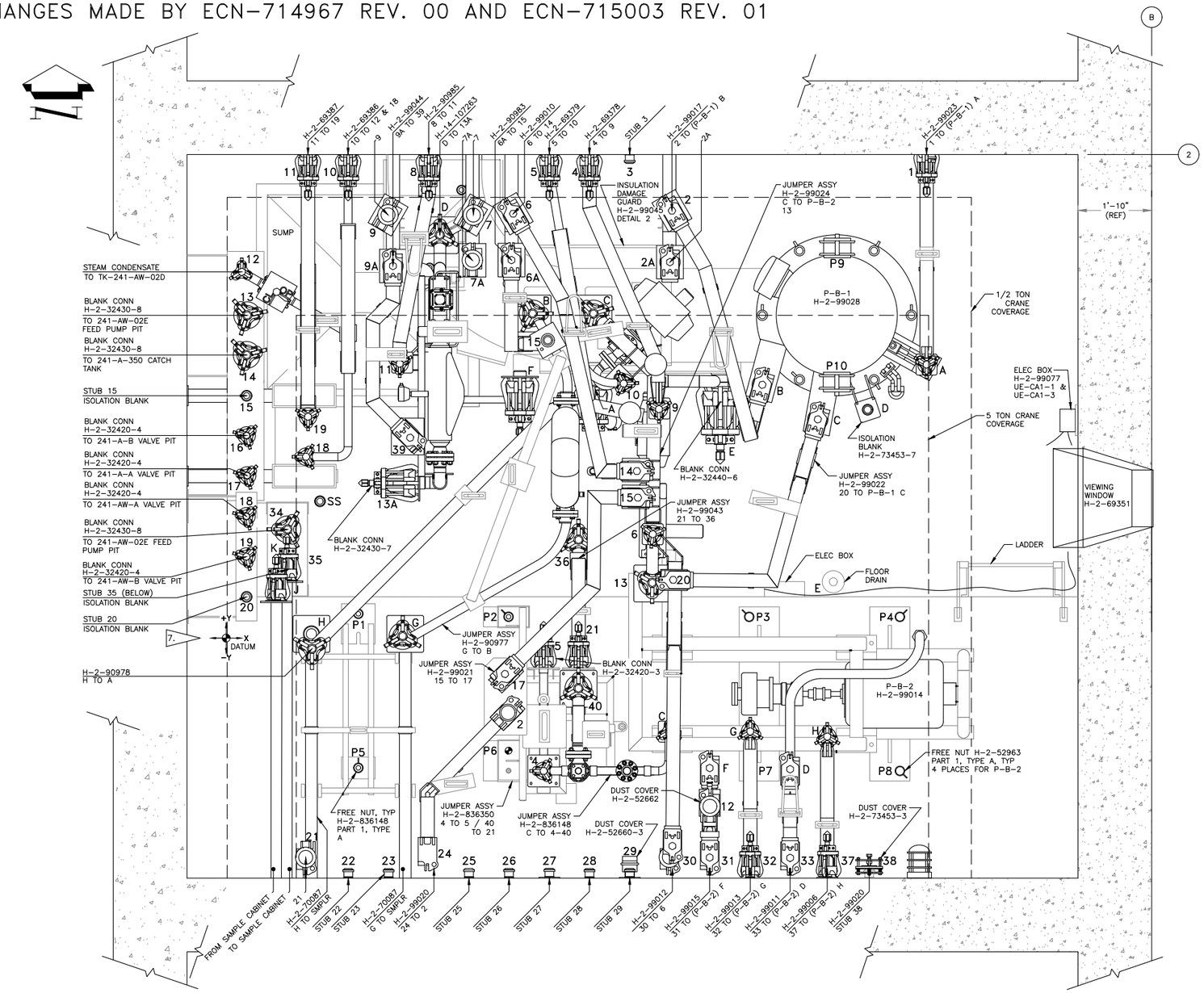

ENGINEERING CHANGE NOTICE CONTINUATION SHEET	1a. ECN-715004 1b. Proj. T1P207

Document/Drawing No. H-2-99009 Sheet 1 Revision 5

IS:

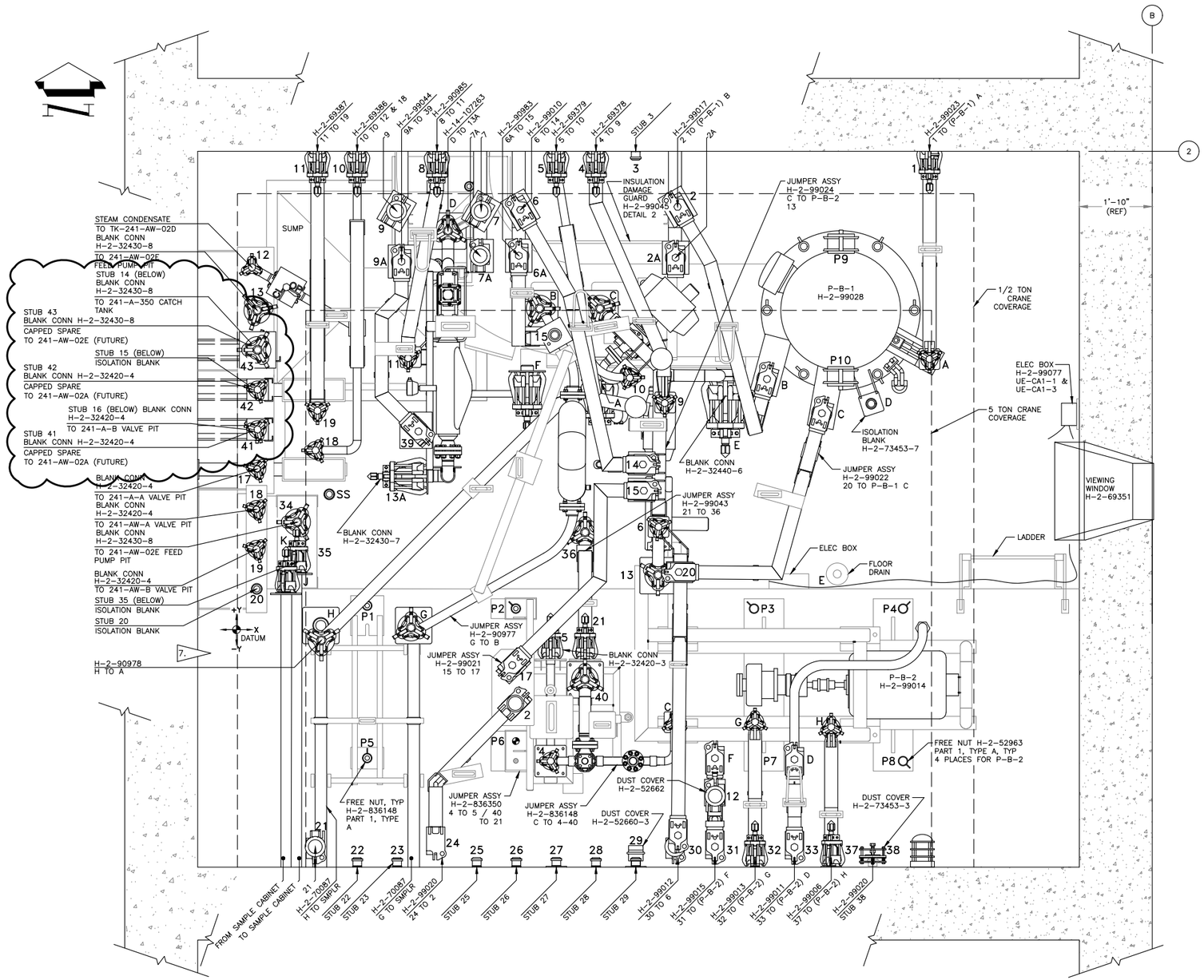

ENGINEERING CHANGE NOTICE CONTINUATION SHEET	1a. ECN-715004 1b. Proj. T1P207

Document/Drawing No. H-2-99009 Sheet 2 Revision 0

WAS:

NOZZLE POSITION

NOZZ NO.	X	Y	Z		NOZZ NO.	X	Y	Z
1	17'-6 1/16"	11'-11 13/16"	9'-6 37/64"					
2	11'-0 25/32"	10'-7 1/4"	9'-9 33/64"					
2A	11'-0 3/16"	9'-3 29/32"	8'-4 1/64"					
3	10'-0 11/64"	11'-9 25/32"	9'-5 7/16"					
4	9'-0 5/32"	11'-9 13/16"	9'-5 15/32"					
5	8'-0 3/16"	11'-9 13/16"	9'-5 1/2"					
6	7'-1 3/8"	10'-6 11/32"	9'-10 9/32"					
6A	7'-0 7/8"	9'-4 1/2"	8'-5 13/64"					
7	6'-1 33/64"	10'-5 15/16"	9'-11"					
7A	6'-1 7/32"	9'-4 7/16"	8'-5 1/32"					
8	5'-0 3/16"	11'-9 23/32"	9'-5 17/32"					
9	4'-0 1/32"	10'-6"	9'-9 29/32"					
9A	4'-1 1/2"	9'-2 3/4"	8'-5 3/64"					
10	3'-0 7/64"	11'-9 25/32"	9'-5 11/16"					
11	2'-0 9/64"	11'-9 53/64"	9'-5 19/32"					
12	0'-5 15/16"	8'-11 29/32"	-3'-3 51/64"					
13	0'-5 29/32"	8'-0 1/32"	-3'-3 1/64"					
14	0'-5 55/64"	7'-0 3/16"	-3'-2 61/64"					
15	0'-5 53/64"	6'-0"	-3'-3 11/16"					
16	0'-5 53/64"	5'-0 1/8"	-3'-3 41/64"					
17	0'-5 31/32"	4'-0 5/32"	-3'-3 45/64"					
18	0'-5 3/4"	2'-11 63/64"	1'-1 33/64"					
19	0'-5 27/32"	1'-11 15/16"	1'-1 15/32"					
20	0'-5 53/64"	0'-11 61/64"	1'-1 9/16"					
21	1'-11 31/64"	-5'-5 53/64"	9'-9 27/32"					
22	3'-0 5/32"	-5'-9 19/32"	9'-5 51/64"					
23	4'-0 3/16"	-5'-9 39/64"	9'-5 43/64"					
24	5'-0 3/64"	-5'-5 49/64"	9'-9 7/8"					
25	6'-0 3/16"	-5'-9 9/16"	9'-5 21/32"					
26	7'-0 9/64"	-5'-9 9/16"	9'-5 45/64"					
27	8'-0 13/64"	-5'-9 33/64"	9'-5 41/64"					
28	9'-0 5/32"	-5'-9 19/32"	6'-5 17/32"					
29	10'-0- 3/16"	-5'-9 17/32"	9'-5 19/32"					
30	11'-0 1/64"	-5'-5 25/32"	9'-9 7/8"					
31	12'-0 3/64"	-5'-5 55/64"	9'-9 57/64"					
32	13'-0 5/32"	-5'-9 39/64"	9'-5 5/8"					
33	14'-0 3/64"	-5'-5 31/32"	9'-9 7/8"					
34	1'-6 1/32"	2'-8 5/64"	-3'-2 61/64"					
35	1'-5 61/64"	1'-8 1/16"	-3'-3 3/32"					

	NOZZ NO.	X	Y	Z
PB-2	P1 DOWEL	3'-3 1/16"	-0'-0 1/64"	- 0'-3 61/64"
	P2 PAD	———	———	- 0'-3 61/64"
	P3 DOWEL	12'-11 31/32"	-0'-0 1/64"	- 0'-4 3/64"
	P4 PAD	———	———	- 0'-4 1/16"
	P5 PAD	———	———	- 0'-3 59/64"
	P6 DOWEL	7'-0 7/64"	-2'-9 61/64"	- 0'-3 59/64"
	P7 PAD	———	———	- 0'-4 1/32"
	P8 DOWEL	16'-8 15/16"	-2'-9 31/32"	- 0'-4 1/64"
PB-1	P9 DOWEL	15'-2 25/32"	9'-10 29/64"	5'-6 35/64"
	P10 DOWEL	15'-2 49/64"	6'-2 1/32"	5'-6 41/64"
SUMP	P11 DOWEL	1'-5 15/16"	6'-0"	- 5'-9 31/64"
	P12 DOWEL	2'-5 59/64"	3'-11 7/8"	- 5'-9 15/16"
	P13 PAD	———	———	- 0'-7 11/16"
	P14 PAD	———	———	4'-7 7/64"
PB-1	A	17'-4 51/64"	6'-9 5/16"	7'-1 59/64"
	B	13'-5 49/64"	6'-3 9/32"	6'-6 1/8"
4. 28" PIPE	A	9'-1 21/64"	5'-11 49/64"	- 4'-4 29/64"
	B	7'-7 3/16"	8'-0 35/64"	5'-8 5/16"
	C	9'-1 23/64"	8'-0 17/32"	5'-8 7/16"
	D	5'-3 1/2"	9'-11 59/64"	5'-8 1/8"
	E	12'-3 13/64"	5'-10 61/64"	- 4'-4 31/64"
	F	7'-3 27/64"	6'-2 25/64"	3'-8 15/16"
SEE DETAIL 1	P15(F)	7'-8 33/64"	———	4'-5 1/32"
8. PB-2	C	UNK	UNK	UNK
	D	UNK	UNK	UNK
	E	15'-2 1/16"	1'-3 1/8"	0'-10 53/64"
	F	UNK	UNK	UNK
	G	UNK	UNK	UNK
	H	UNK	UNK	UNK
4.	36	8'-9"	2'-5"	-5 3/4"
4.	37	15'-0"	-5'-8"	8'-4"
4.	38	16'-0"	-5'-8"	8'-4"

IS:

NOZZLE POSITION

NOZZ NO.	X	Y	Z
1	17'-6 1/16"	11'-11 13/16"	9'-6 37/64"
2	11'-0 25/32"	10'-7 1/4"	9'-9 33/64"
2A	11'-0 3/16"	9'-3 29/32"	8'-4 1/64"
3	10'-0 11/64"	11'-9 25/32"	9'-5 7/16"
4	9'-0 5/32"	11'-9 13/16"	9'-5 15/32"
5	8'-0 3/16"	11'-9 13/16"	9'-5 1/2"
6	7'-1 3/8"	10'-6 11/32"	9'-10 9/32"
6A	7'-0 7/8"	9'-4 1/2"	8'-5 13/64"
7	6'-1 33/64"	10'-5 15/16"	9'-11"
7A	6'-1 7/32"	9'-4 7/16"	8'-5 1/32"
8	5'-0 3/16"	11'-9 23/32"	9'-5 17/32"
9	4'-0 1/32"	10'-6"	9'-9 29/32"
9A	4'-1 1/2"	9'-2 3/4"	8'-5 3/64"
10	3'-0 7/64"	11'-9 25/32"	9'-5 11/16"
11	2'-0 9/64"	11'-9 53/64"	9'-5 19/32"
12	0'-5 15/16"	8'-11 29/32"	-3'-3 51/64"
13	0'-5 29/32"	8'-0 1/32"	-3'-3 1/64"
14	0'-5 55/64"	7'-0 3/16"	-3'-2 61/64"
15	0'-5 53/64"	6'-0"	-3'-3 11/16"
16	0'-5 53/64"	5'-0 1/8"	-3'-3 41/64"
17	0'-5 31/32"	4'-0 5/32"	-3'-3 45/64"
18	0'-5 3/4"	2'-11 63/64"	1'-1 33/64"
19	0'-5 27/32"	1'-11 15/16"	1'-1 15/32"
20	0'-5 53/64"	0'-11 61/64"	1'-1 9/16"
21	1'-11 31/64"	-5'-5 53/64"	9'-9 27/32"
22	3'-0 5/32"	-5'-9 19/32"	9'-5 51/64"
23	4'-0 3/16"	-5'-9 39/64"	9'-5 43/64"
24	5'-0 3/64"	-5'-5 49/64"	9'-9 7/8"
25	6'-0 3/16"	-5'-9 9/16"	9'-5 21/32"
26	7'-0 9/64"	-5'-9 9/16"	9'-5 45/64"
27	8'-0 13/64"	-5'-9 33/64"	9'-5 41/64"
28	9'-0 5/32"	-5'-9 19/32"	6'-5 17/32"
29	10'-0- 3/16"	-5'-9 17/32"	9'-5 19/32"
30	11'-0 1/64"	-5'-5 25/32"	9'-9 7/8"
31	12'-0 3/64"	-5'-5 55/64"	9'-9 57/64"
32	13'-0 5/32"	-5'-9 39/64"	9'-5 5/8"
33	14'-0 3/64"	-5'-5 31/32"	9'-9 7/8"
34	1'-6 1/32"	2'-8 5/64"	-3'-2 61/64"
35	1'-5 61/64"	1'-8 1/16"	-3'-3 3/32"

	NOZZ NO.	X	Y	Z
PB-2	P1 DOWEL	3'-3 1/16"	-0'-0 1/64"	- 0'-3 61/64"
	P2 PAD	———	———	- 0'-3 61/64"
	P3 DOWEL	12'-11 31/32"	-0'-0 1/64"	- 0'-4 3/64"
	P4 PAD	———	———	- 0'-4 1/16"
	P5 PAD	———	———	- 0'-3 59/64"
	P6 DOWEL	7'-0 7/64"	-2'-9 61/64"	- 0'-3 59/64"
	P7 PAD	———	———	- 0'-4 1/32"
	P8 DOWEL	16'-8 15/16"	-2'-9 31/32"	- 0'-4 1/64"
PB-1	P9 DOWEL	15'-2 25/32"	9'-10 29/64"	5'-6 35/64"
	P10 DOWEL	15'-2 49/64"	6'-2 1/32"	5'-6 41/64"
SUMP	P11 DOWEL	1'-5 15/16"	6'-0"	- 5'-9 31/64"
	P12 DOWEL	2'-5 59/64"	3'-11 7/8"	- 5'-9 15/16"
	P13 PAD	———	———	- 0'-7 11/16"
	P14 PAD	———	———	4'-7 7/64"
PB-1	A	17'-4 51/64"	6'-9 5/16"	7'-1 59/64"
	B	13'-5 49/64"	6'-3 9/32"	6'-6 1/8"
4. 28" PIPE	A	9'-1 21/64"	5'-11 49/64"	- 4'-4 29/64"
	B	7'-7 3/16"	8'-0 35/64"	5'-8 5/16"
	C	9'-1 23/64"	8'-0 17/32"	5'-8 7/16"
	D	5'-3 1/2"	9'-11 59/64"	5'-8 1/8"
	E	12'-3 13/64"	5'-10 61/64"	- 4'-4 31/64"
	F	7'-3 27/64"	6'-2 25/64"	3'-8 15/16"
SEE DETAIL 1	P15(F)	7'-8 33/64"	———	4'-5 1/32"
8. PB-2	C	UNK	UNK	UNK
	D	UNK	UNK	UNK
	E	15'-2 1/16"	1'-3 1/8"	0'-10 53/64"
	F	UNK	UNK	UNK
	G	UNK	UNK	UNK
	H	UNK	UNK	UNK
4.	36	8'-9"	2'-5"	-5 3/4"
4.	37	15'-0"	-5'-8"	8'-4"
4.	38	16'-0"	-5'-8"	8'-4"
9.	41	0'-6"	5'-0"	1'-1 1/2"
9.	42	0'-6"	6'-0"	-0'-10 1/2"
9.	43	0'-6"	7'-0"	1'-4"

ENGINEERING CHANGE NOTICE CONTINUATION SHEET	1a. ECN–715004
	1b. Proj. T1P207

Document/Drawing No. H–2–99009	Sheet 2	Revision 0

WAS:

NOTES: (CONTINUED FROM SHEET 1)

4. NOZZLES C, 36, 37, AND 38 WERE MODIFIED OR INSTALLED PER H–2–99029 AND H–2–99030.

5. NOZZLE LOCATION TOLERANCE: NOZZLE C – ± 3/8" NOZZLES 36, 37, AND 38 – ± 1/16". ALL OTHER NOZZLES LOCATED TO ± 1/64".

6. THE SAMPLE CABINET NOZZLES (G, H, J, AND K) HAVE NO IDENTIFIABLE LOCATION DIMENSIONS.

7. REFERENCE ELEVATION IS 692'–6" Z DIRECTION IS ABOVE (OR BELOW, INDICATED BY A "–" SIGN PRECEDING THE NUMBER).

8. FOR PB–2, UNK REPRESENTS DIMENSIONS THAT ARE CURRENTLY UNKNOWN AND REQUIRE SURVEYING.

IS:

NOTES: (CONTINUED FROM SHEET 1)

4. NOZZLES C, 36, 37, AND 38 WERE MODIFIED OR INSTALLED PER H–2–99029 AND H–2–99030.

5. NOZZLE LOCATION TOLERANCE: NOZZLE C – ± 3/8" NOZZLES 36, 37, AND 38 – ± 1/16". ALL OTHER NOZZLES LOCATED TO ± 1/64".

6. THE SAMPLE CABINET NOZZLES (G, H, J, AND K) HAVE NO IDENTIFIABLE LOCATION DIMENSIONS.

7. REFERENCE ELEVATION IS 692'–6" Z DIRECTION IS ABOVE (OR BELOW, INDICATED BY A "–" SIGN PRECEDING THE NUMBER).

8. FOR PB–2, UNK REPRESENTS DIMENSIONS THAT ARE CURRENTLY UNKNOWN AND REQUIRE SURVEYING.

9. NOZZLES 41, 42, AND 43 LOCATIONS ARE PROVIDED FOR TARGET INSTALLATION PURPOSES. FOLLOWING THEIR INSTALLATION A LASER SCAN SURVEY WILL BE PERFORMED AND THE ACTUAL NOZZLE LOCATIONS RELATIVE TO THE DATUM WILL BE UPDATED VIA DCN–715033.

ENGINEERING CHANGE NOTICE CONTINUATION SHEET	1a. ECN–715004 1b. Proj. T1P207

Document/Drawing No. H–2–99029 Sheet 1 Revision 2

WAS:

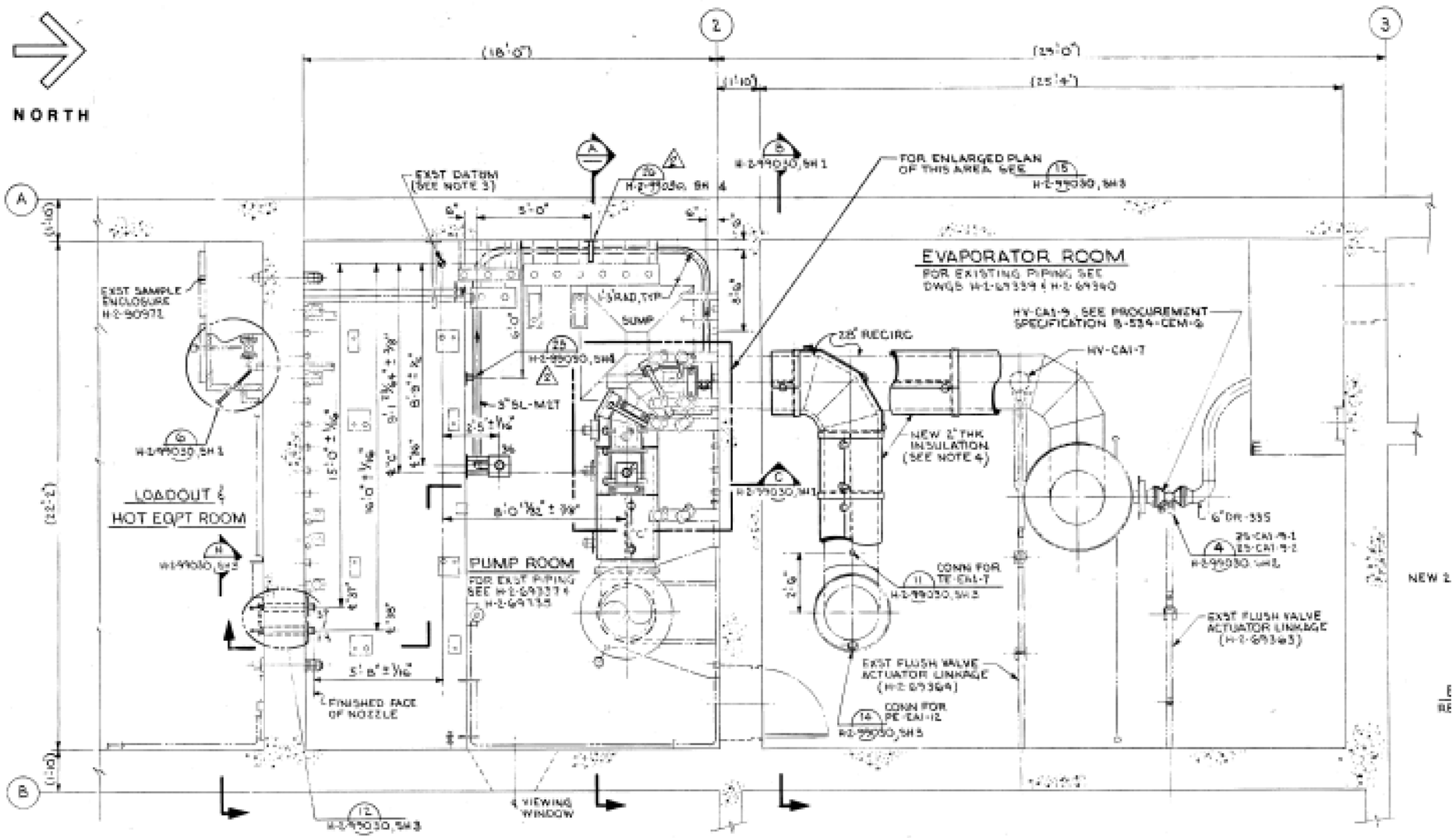

ENGINEERING CHANGE NOTICE CONTINUATION SHEET	1a. ECN-715004 1b. Proj. T1P207

Document/Drawing No. H-2-99029 Sheet 1 Revision 2

IS: ECN NOTE: DRAFTER TO ASSIGN NEXT AVAILABLE SECTION AND SHEET NUMBER UPON INCORPORATION. DISTANCE SHOWN FROM SOUTHWEST EXTERIOR CORNER OF 242-A EVAPORATOR IS FOR FIELD INSTALLATION AID ONLY (DO NOT INCORPORATE).

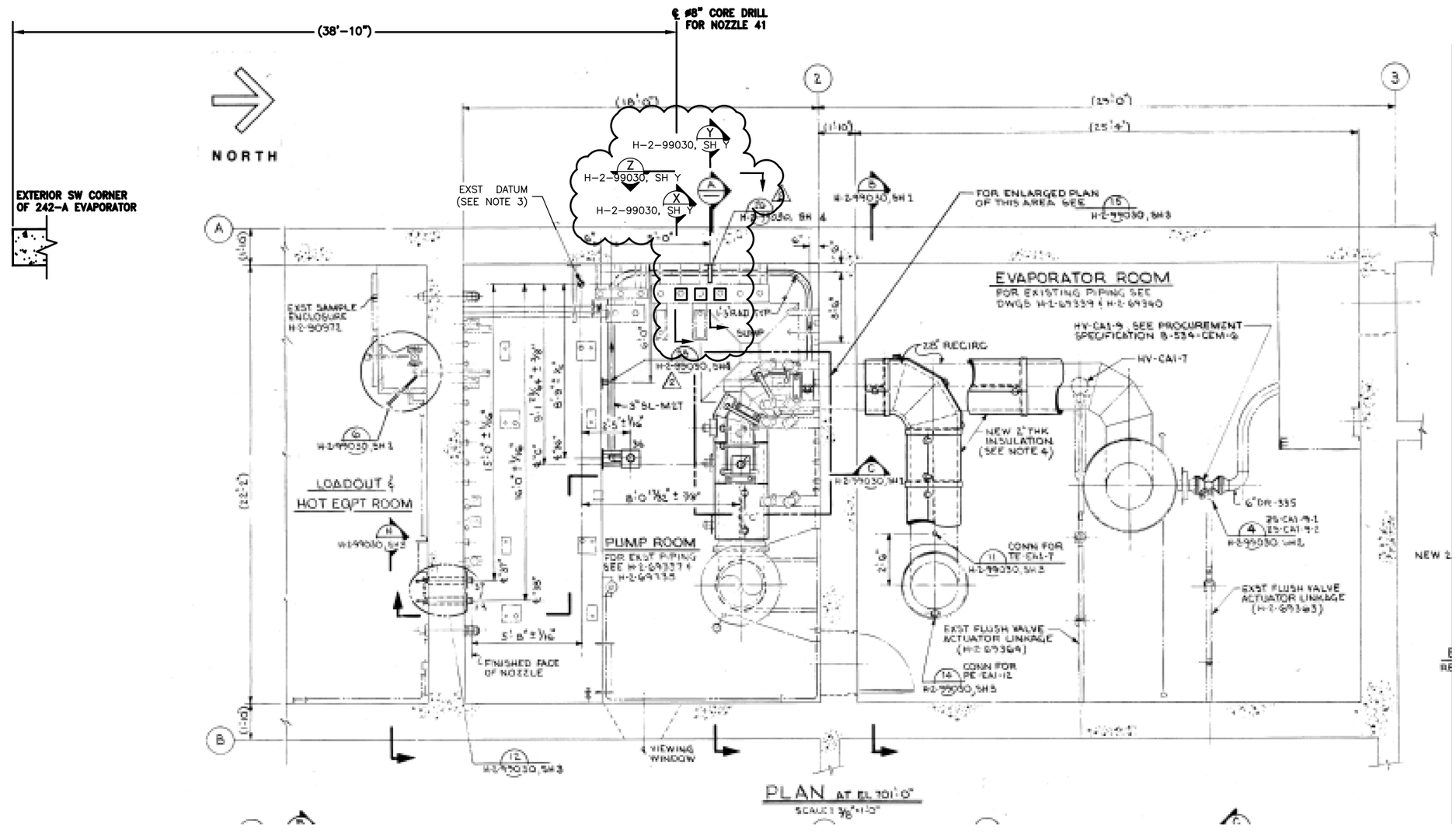

ENGINEERING CHANGE NOTICE CONTINUATION SHEET	1a. ECN–715004 1b. Proj. T1P207

Document/Drawing No. H–2–99030 Sheet 1 Revision 3

WAS:

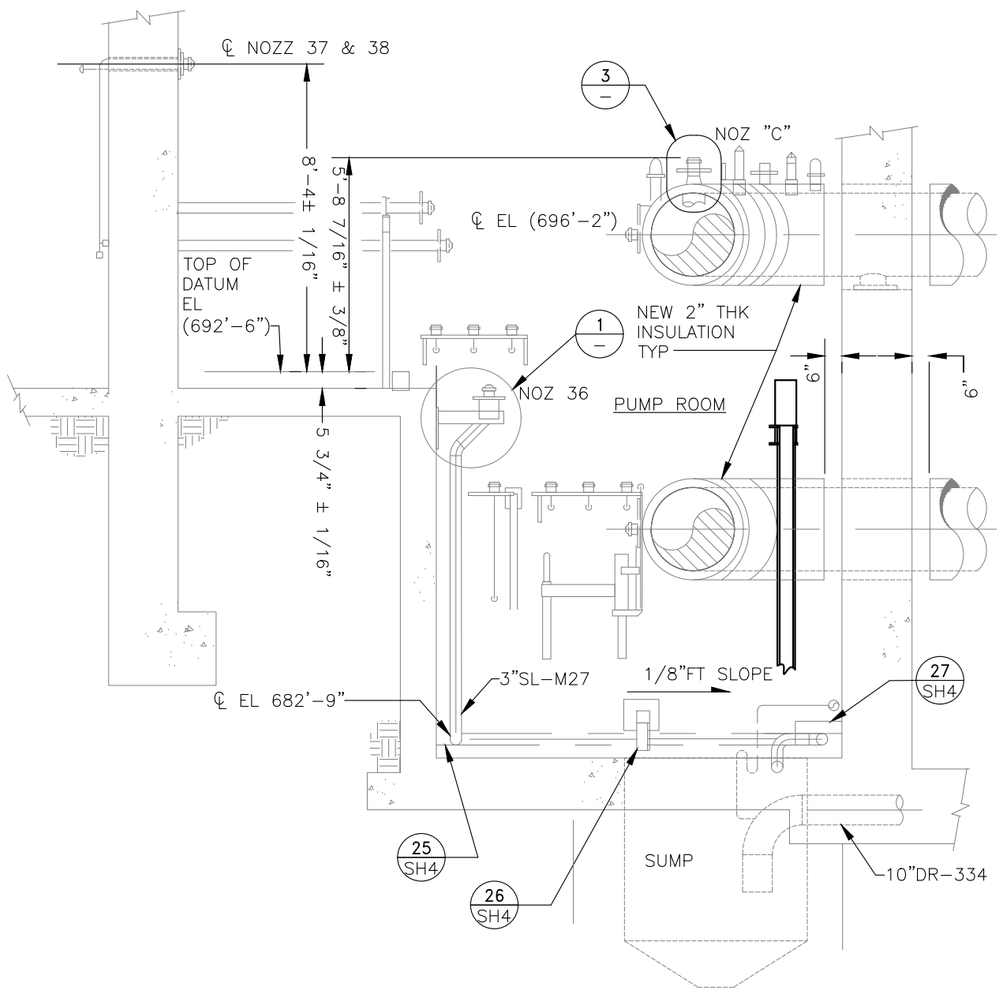

C SECTION
H–2–99029 SCALE: 3/8"=1'–0"

IS:

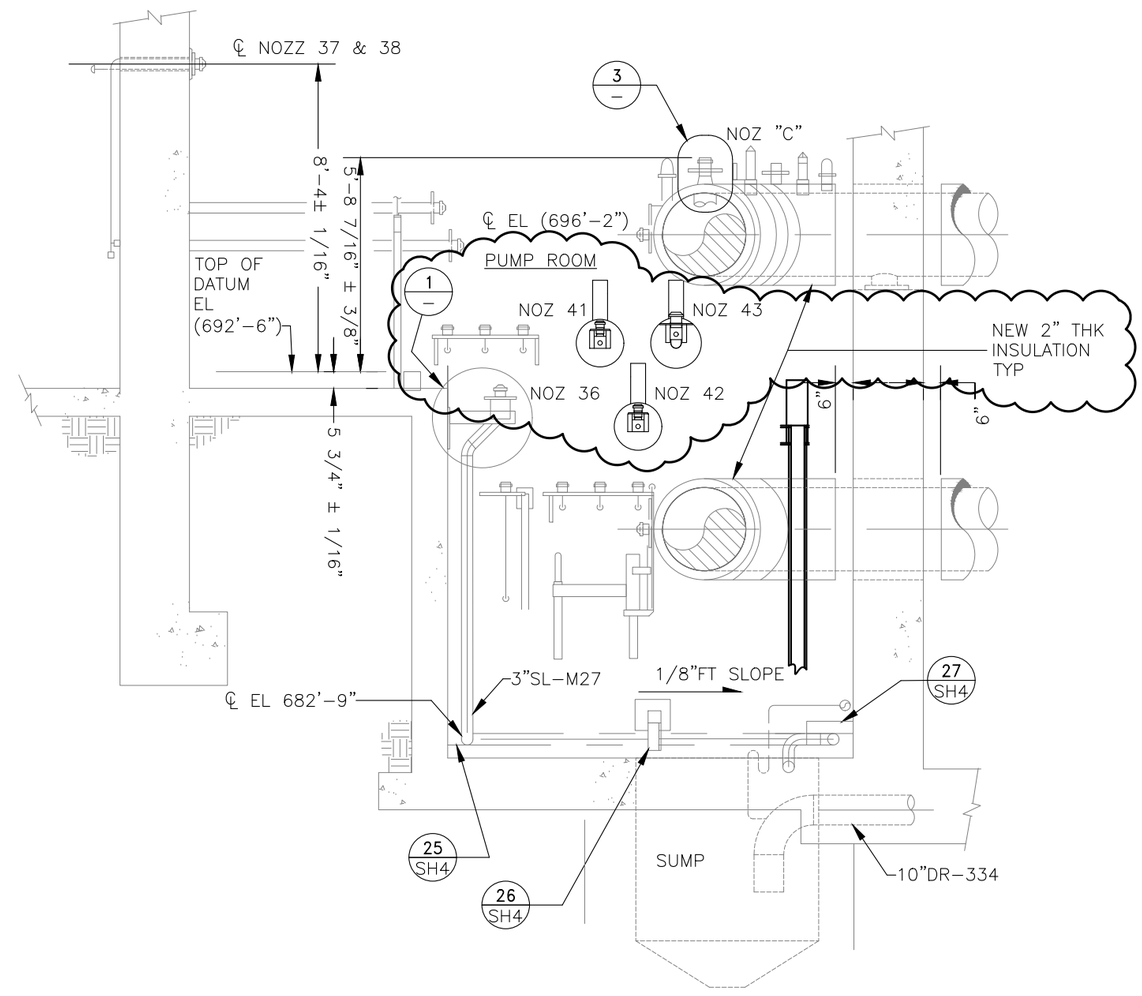

C SECTION
H–2–99029 SCALE: 3/8"=1'–0"

ENGINEERING CHANGE NOTICE CONTINUATION SHEET	1a. ECN–715004 1b. Proj. T1P207

Document/Drawing No. H–2–99030 Sheet 1 Revision 3

ECN NOTE: AFTER FINAL INSTALLATION OF WALL NOZZLE ASSEMBLIES INSTALL TEMPORARY COVER (E.G. 6–INCH DIAMETER PVC PIPE SLEEVE WITH CAP) OVER THE OPEN END OF THE ENCASEMENT PIPE TO PREVENT DEBRIS FROM ENTERING PIPE. SECURE COVER TO ENCASEMENT WITH LAYERS OF PLASTIC SHIPPING WRAP OR SIMILAR. ALTERNATE METHODS OF COVERING THE ENCASEMENT PIPE SHALL BE APPROVED BY TOC ENGINEERING.

ADD: ECN NOTE: DRAFTER TO ASSIGN NEXT AVAILABLE DETAIL AND SECTION NUMBERS UPON INCORPORATION.
ECN NOTE: REFERENCE COORDINATE PROVIDED TO SUPPORT FIELD INSTALLATION (DO NOT INCORPORATE).

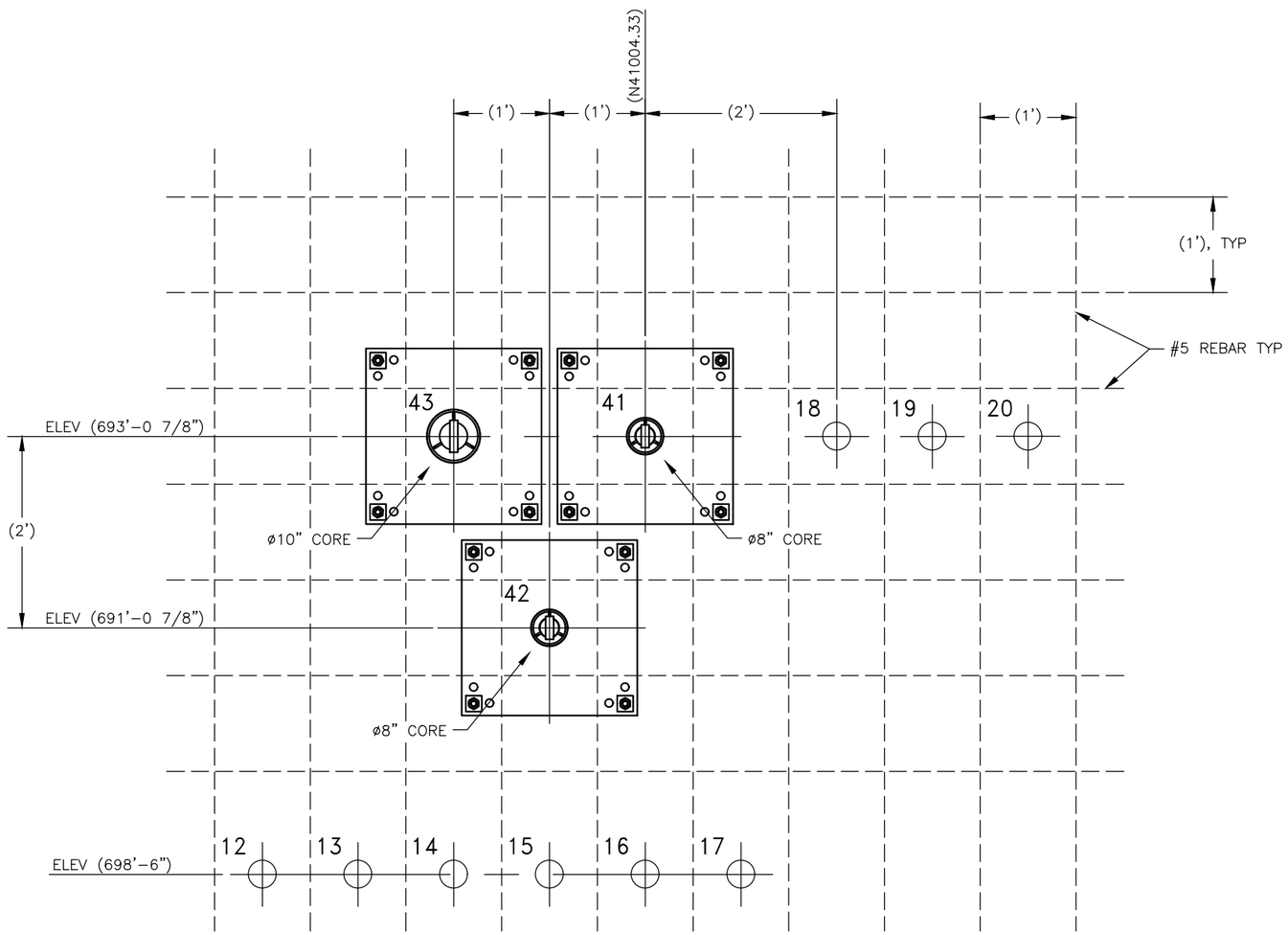

Z SECTION
H–2–99029 SCALE: 1/8

NOTE: REBAR PATTERN DEPICTED FOR INFORMATION ONLY. FINAL LOCATIONS OF NOZZLE 41, 42 AND 43 ASSEMBLIES TO BE FIELD LOCATED RELATIVE TO THE AS–SCANNED REBAR LOCATIONS AND RELATIVE LOCATION TO PIPING FOR EXISTING NOZZLES 14, 15, 16 AND 18. INSTALL ONE ANCHOR BOLT AT EACH CORNER LOCATION OF THE WALL MOUNTING PLATE. ALTERNATIVE HOLES ARE PROVIDED TO ENSURE REBAR IS NOT CUT DURING THE INSTALLATION OF MOUNTING PLATE ANCHORS.

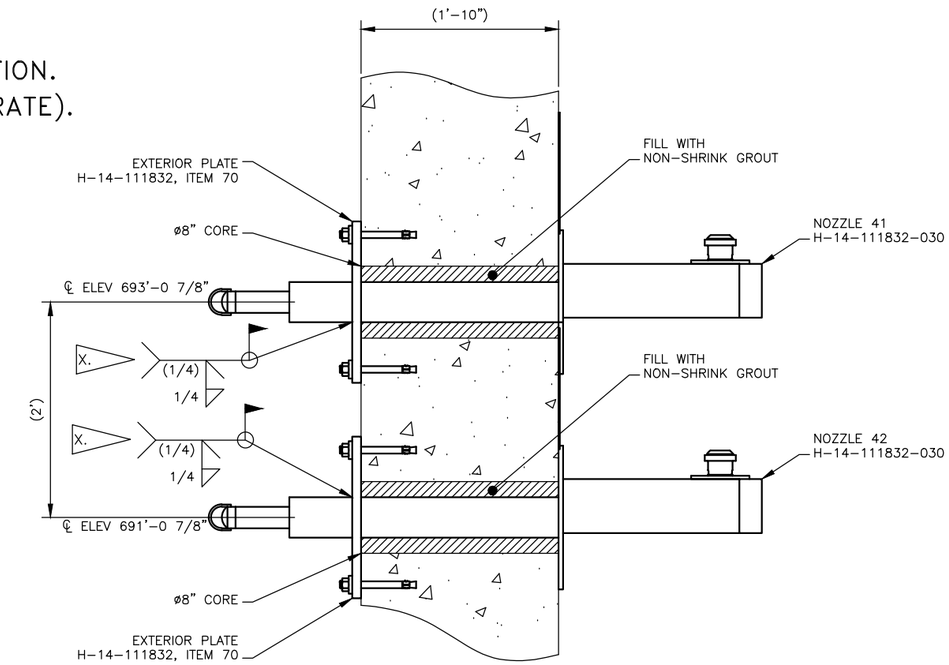

X SECTION
H–2–99029 SCALE: 1/8

NOTE: BACKGROUND NOZZLE 43 ASSEMBLY REMOVED FOR CLARITY.

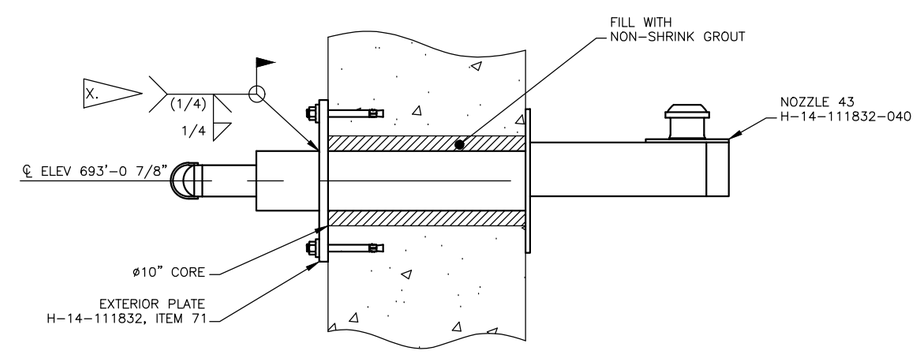

Y SECTION
H–2–99029 SCALE: 1/8

X. WELD AND INSPECT PER ASME B31.3–2016 CATEGORY NORMAL FLUID SERVICE. WELDS SHALL BE VT ON FINAL PASS.

ENGINEERING CHANGE NOTICE CONTINUATION SHEET	1a. ECN-715004 1b. Proj. T1P207

Document/Drawing No. H-14-020802 Sheet 6 Revision 11

WAS:

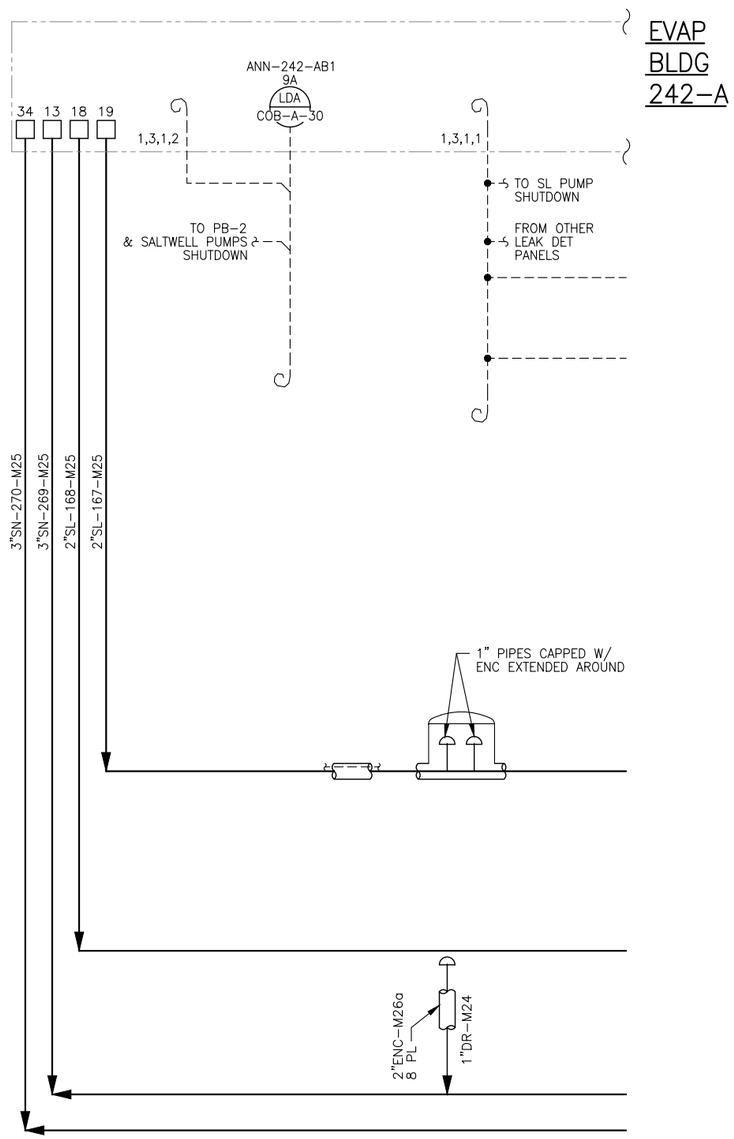

IS:

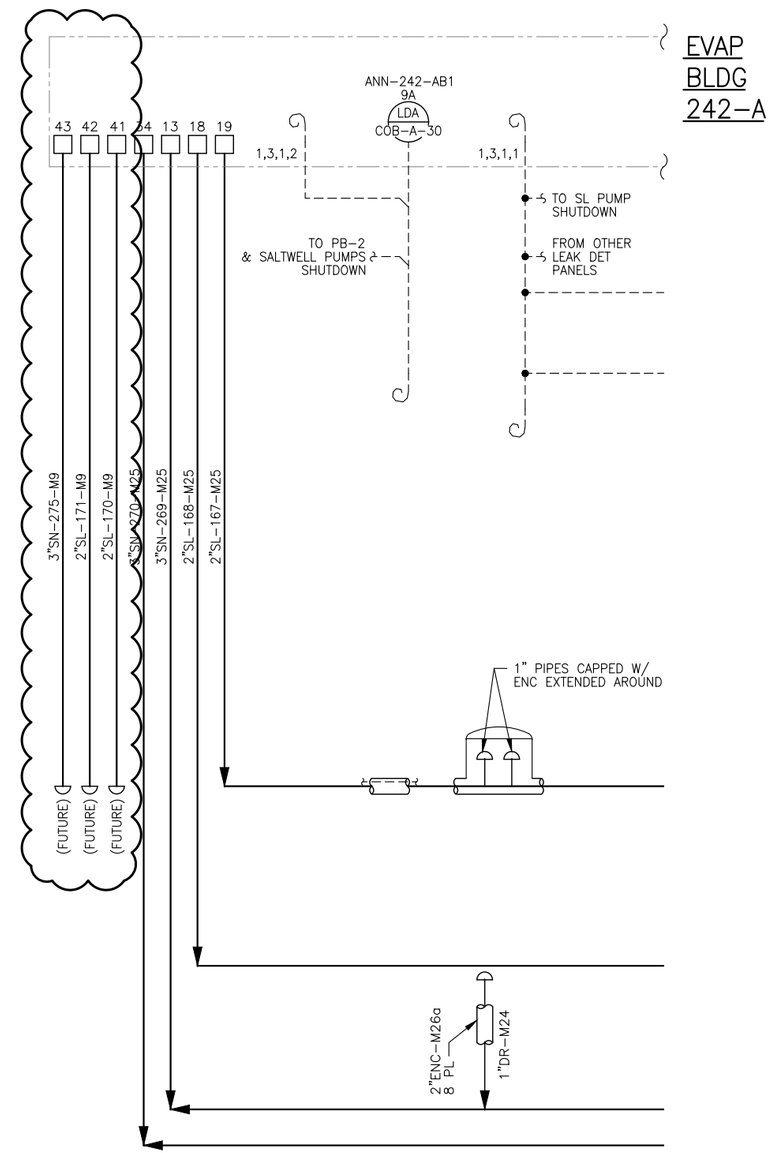

ENGINEERING CHANGE NOTICE CONTINUATION SHEET	1a. ECN– 715004
	1b. Proj. T1P207

Document/Drawing No. H–14–107346	Sheet 3	Revision 43

WAS: ECN NOTE: INCORPORATES CHANGES MADE BY ECN–715003 REV. 01

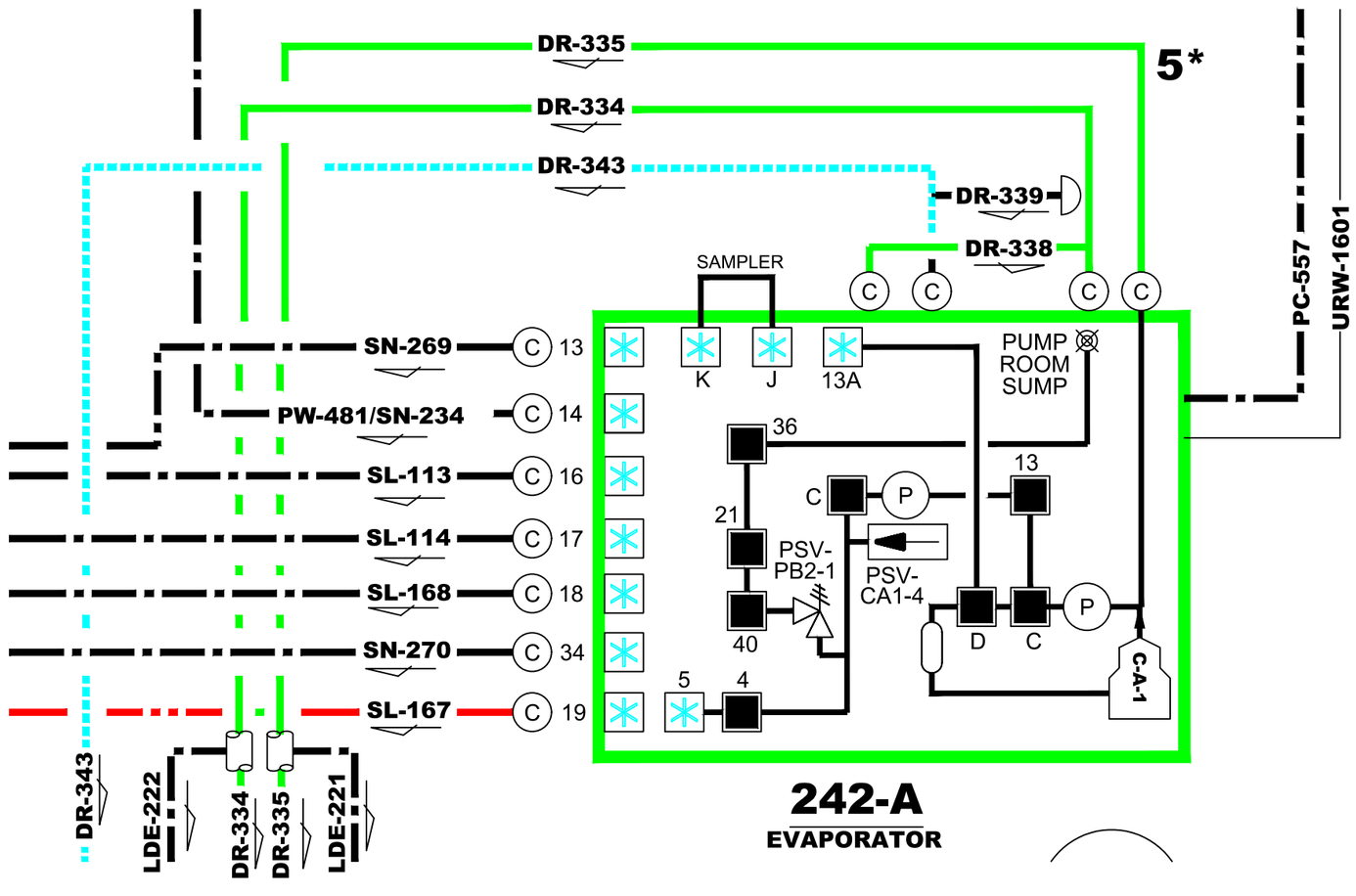

ENGINEERING CHANGE NOTICE CONTINUATION SHEET	1a. ECN– 715004 1b. Proj. T1P207

Document/Drawing No. H–14–107346	Sheet 3	Revision 43

IS:

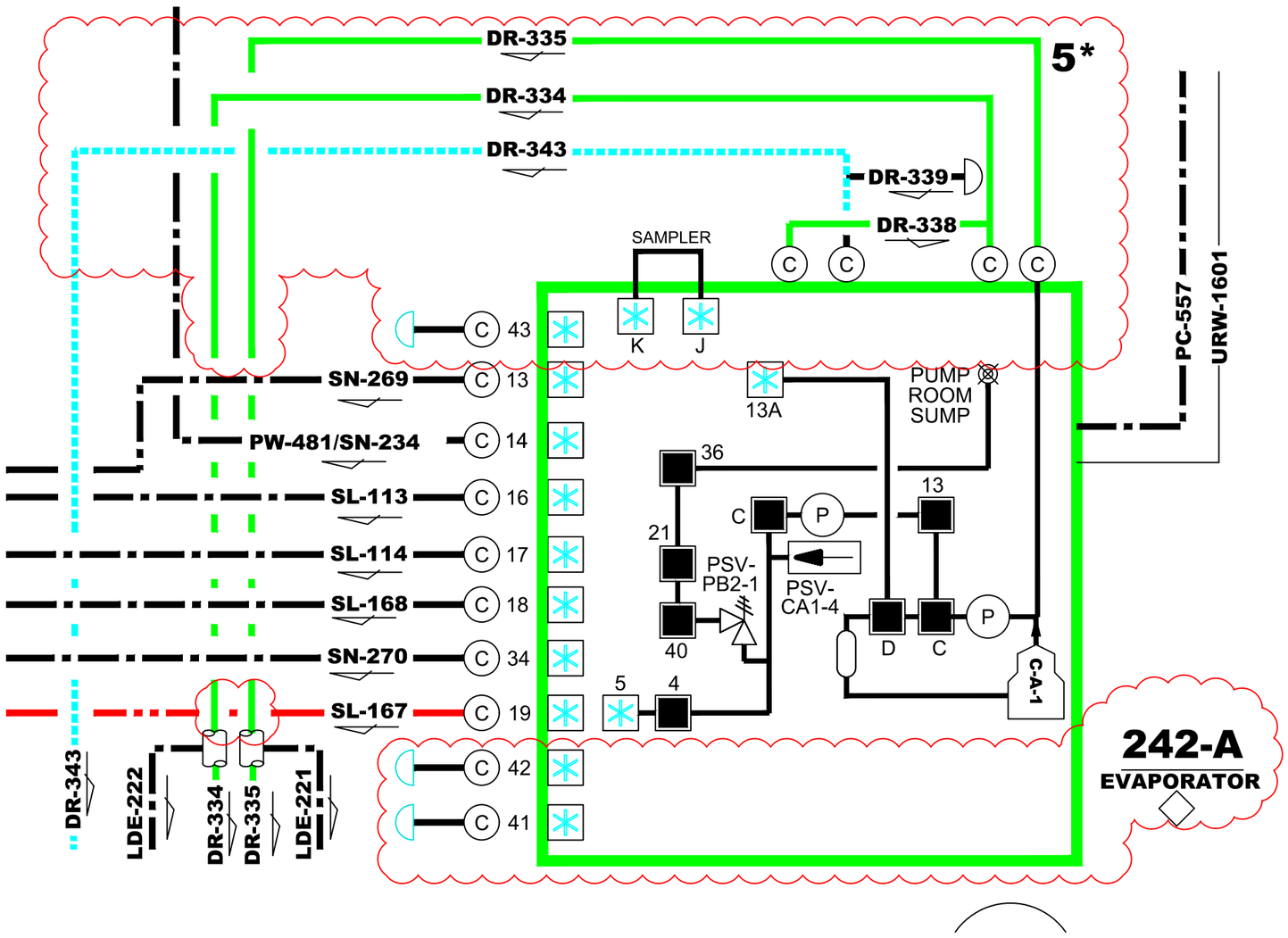

ENGINEERING CHANGE NOTICE

Prepared For the U.S. Department of Energy, Assistant Secretary for Environmental Management
By Washington River Protection Solutions, LLC., PO Box 850, Richland, WA 99352
Contractor For U.S. Department of Energy, Office of River Protection, under Contract DE-AC27-08RV14800

TRADEMARK DISCLAIMER: Reference herein to any specific commercial product, process, or service by trade name, trademark, manufacturer, or otherwise, does not necessarily constitute or imply its endorsement, recommendation, or favoring by the United States government or any agency thereof or its contractors or subcontractors. Printed in the United States of America.

Release Stamp

1a. **ECN No:** ECN-715005 **Rev.** 00

1b. **Project Number:** T1P207 ☐N/A

2. **Title:**
242-A EVAPORATOR PUMP ROOM JUMPER INSTALLATION (41 TO 5 AND 43 TO 13A)

3. **WA or Redline ECN:** ☐ WA ☐ REDLINE ☒ N/A

4. **Temporary Modification:** ☐ Yes ☒ No

5. **Design Type:** I

6. **Design Verification Required:** ☒Yes ☐No

7. **Safety Classification:** ☐SC ☐SS ☒GS ☐N/A

Workflow Approval Status: Submitted for USQ
Clearance Review Restriction Type: undefined

8. **USQ Number:** EV-20-0617 ☐ N/A

9. **PrHA Number** PrHA-57384 **Rev.** 00 ☐ N/A

10. **Trend Codes**

Cause	Commodity	Discipline Driver
Initial Design Release	Mechanical Equipment	Mechanical

11. **Design Authority Designator**

PRJ - 242-A TRANSFER LINE REPLACEMENT PROJECT

12. **Approvals**

Title	Name	Signature	Date
Design Authority	Engeman, Jason K	*Engeman, Jason K*	04/29/2020
Design Verifier	Harrington, James P	*Harrington, James P*	03/19/2020
Checker	Harrington, James P	*Harrington, James P*	03/19/2020
Document Control Approval	Fenton, Carrie L		
Environmental Protection	Heninger, Steve D	*Heninger, Steve D*	03/23/2020
Originator	Lang, Ryan D	*Lang, Ryan D*	03/18/2020
Quality Assurance	Harper, Jerry G	*Harper, Jerry G*	03/24/2020
Radiological Control	Franz, James A	*Franz, James A*	03/23/2020
Responsible Engineering Manager	Huntington, Matthew R	*Huntington, Matthew R*	04/30/2020
USQ Evaluator	Carlstrom, Richard	*Carlstrom, Richard*	04/30/2020
Waste Transfer Engineering	Moss, Hannah C	*Moss, Hannah C*	03/23/2020

13. **Problem**

Recent pneumatic testing on the encasement of SL-167 has determined that it cannot maintain pressure, and therefore cannot be used to compliantly transfer waste. Recent visual inspection of SL-168 (the back-up slurry line) and pneumatic testing have identified additional work to be performed in order to attempt to place the line back into service. Until new slurry transfer lines have been installed and placed into service, the 242-A Evaporator cannot slurry out concentrated waste to tank farms to allow waste volume reduction. To ensure long-term success of the evaporator, a replacement feed line will also be installed.

New wall nozzle assemblies (41, 42 and 43) were installed at the 242-A Evaporator Pump Room. New transfer lines (2"SL-170, 2"SL-171 and 3"SN-275) were installed between the 242-A Evaporator and double shell tank 241-AW-102.

The installation of new jumper assemblies is needed to connect the 242-A Evaporator with tank 241-AW-102 to support waste feed and slurry return operations.

14. **Solution**

Install new jumper assembly [43 To 13A] to allow receipt of supernate from the AW-02E Feed Pump Pit via the newly installed 3"SN-275 transfer line.

Install new jumper assembly [41 To 5] to allow slurry return to the AW-02A Pump Pit via the newly installed 2"SL-170 transfer line.

15. **Analysis**

Refer to RPP-CALC-63213 for the ASME B31.3 analysis for the new [41 To 5] and [43 To 13A] jumper assemblies. Refer to RPP-CALC-63214 for the Jumper Supporting analysis. Refer to RPP-SPEC-63237 for the Design Requirements Compliance Matrix (DRCM) for the new [41 To 5] and [43 To 13A] jumper assemblies.

16. **Description of Change**

Design verification performed in accordance with Columbia Energy & Environmental Services Procedure CE-ES-3.3.

ENGINEERING CHANGE NOTICE

ECN No: ECN-715005 **Rev.** 00

16. **Description of Change**

Inspection/Testing: Testing has been performed as described in the associated jumper assembly drawings. Perform an In-Service leak check to ensure the PUREX connector heads on the new jumper assemblies are properly connected. The In-Service leak check can be performed at any time following the installation, but must be completed prior to the new jumpers being used for a waste transfer.

H-2-98988 Sheet 2; Update P&ID to reflect the installation of the new [43 To 13A] jumper assembly, changes as shown on page 6.

H-2-98989 Sheet 1; Update P&ID to reflect the installation of the new [41 To 5] jumper assembly, changes as shown on page 7.

H-2-99009 Sheet 1; Update Jumper Schedule table to reflect the installation of the new [41 To 5] and [43 To 13A] jumpers, Update plan view to show the new [41 To 5] and [43 To 13A] jumpers installed, changes as shown on pages 8, 9 and 10.

H-14-107346 Sheet 3; Update to reflect the installation of new [41 To 5] and [43 To 13A] jumper assemblies, changes as shown on page 11.

17. **Work Package Number(s)**

TBD

18. **TBDs or Holds** ☒N/A

19. **Related Structures, Systems, and Components**

a. **Related Building/Facilities** ☐N/A	b. **Related Systems** ☐N/A	c. **Related Equipment ID Nos. (EIN)** ☐N/A
242-A	241-WT 242A 242A-SL 242A-SN	242A-WT-J-[41 TO 5] 242A-WT-J-[43 TO 13A]

20. **Engineering Drawings to be Changed** Does change affect the Electronic Routing Board? ☒

Drawing Number	Rev.	Title
H-14-107346 SH 003	43	DST WASTE TRANSFER PIPING DIAGRAM
H-2-98988 SH 002	21	P&ID EVAP RECIRC SYSTEM
H-2-98989 SH 001	29	P&ID SLURRY SYSTEM
H-2-99009 SH 001	05	PIPING JUMPER ARRANGEMENT PUMP ROOM

21. **Related Modification Traveler** ☐N/A

MT-50400

22. **Related Documents** ☐N/A

Document Number	Rev.	Title
RPP-CALC-63213	00	ASME B31.3 Analyses of the 41 To 5 and 43 To 13A Jumpers for the 242-A Evaporator Pump Room
RPP-CALC-63214	00	242-A Evaporator Pump Room Jumpers Supporting Analyses
RPP-SPEC-63237	00	242-A Evaporator Pump Room Design Requirements Compliance Matrix for the 41 To 5 and 43 To 13A Jumper Assemblies

23. **Distribution**

Name	Organization
Anderson, Ladd L	ELECTRICAL ENGINEERING
Atterbury, Brittney M	WASTE STORAGE & TECH SUPPORT
Balint, Greg G	COGNIZANT SYSTEM ENGINEERING
Becker, Brent T	COGNIZANT SYSTEM ENGINEERING
Blaak, Todd M	WASTE TRANSFER ENGINEERING
Conner, John M	PROD OPERATIONS PROCESS ENGRNG
Engeman, Jason K	TANK FARM PROJECTS ENGINEERING
Everett, Brian K	WASTE TRANSFER PLANNING MGMT
Foster, Jim	242-A/AW/ETF OPERATIONS
Franz, James A	TFP RADCON
Griffin, Peter W	TANK FARM PROJECTS ENGINEERING
Harper, Jerry G	TANK RETRIEVAL AND PROJECTS QA
Harrington, James P	
Heninger, Steve D	RETRVL & CLOSURE/PROJ ENV CMPL
Huntington, Matthew R	TANK FARM PROJECTS ENGINEERING
Huntington, Nikki L	COGNIZANT SYSTEM ENGINEERING
Johnson, Brian A	242-A/AW OPERATIONS

ENGINEERING CHANGE NOTICE	**ECN No:** ECN-715005 **Rev.** 00

23. **Distribution**

Name	**Organization**
Klages, Deanna L	CLOSURE & INTERIM MEASURES
Lang, Ryan D	
May, Dustin R	TFP PROJECT MANAGEMENT
Moss, Hannah C	WASTE TRANSFER ENGINEERING
Smith, Gregory E	TANK FARM PROJECTS ENGINEERING

Columbia Energy AND ENVIRONMENTAL SERVICES

Design Verification Checklist

Doc. Number	Rev.	Title
ECN-715005	00	242-A Evaporator Pump Room Jumper Installation (41 To 5, 43 To 13A)

Verification Method (Check One)

☒ Review ☐ Alternate Calculation ☐ Qualification Testing

Verification Results

Yes	No	NA	
☒	☐	☐	Design inputs correctly selected and cited and correctly incorporated.
☒	☐	☐	Input data were checked for consistency with original source information.
☐	☐	☒	Design inputs for interfacing organizations are specified
☐	☐	☒	Necessary assumptions are explicit, adequately described and supported.
☐	☐	☒	Unverified assumptions (requiring verification) are clearly identified.
☐	☐	☒	Analytical and technical approaches and results are reasonable and appropriate.
☐	☐	☒	The version or revision of each reference is cited
☐	☐	☒	Design output is reasonable for design inputs
☐	☐	☒	Results and conclusions address all points in the purpose.
☐	☐	☒	Conclusions are consistent with analytical results and applicable limits.
☒	☐	☐	Suitable materials, parts, processes, and inspection and testing criteria specified
☒	☐	☐	All comments have been adequately addressed and dispositioned
☐	☐	☒	Calculations are sufficiently detailed such that a technically qualified person could reproduce the calc.
☐	☐	☒	Design method(s) are appropriately used and documented.
☐	☐	☒	Computer Program(s) are appropriately used and results support design.
☐	☐	☒	For pre-verified computer programs the V&V document is referenced and specific computer used for the calculation is identified

Ensure calculations that use software include a paper printout, microfiche, CD-ROM, or other electronic file of the input data and identification to the computer, computer codes, and versions used, or provide alternate documentation to uniquely and clearly identify the exact coding and execution process.

Checker Name	Signature	Date
JP Harrington	[signature]	3/18/20

CE-ES-3.3-F1, 10/20/14

Washington River Protection Solutions

MODIFICATION QUALITY INSPECTION PLAN (MQIP)

ECN No.: 715005 **Rev No.:** 00

INSPECTION/TEST No. 1

Description of Inspection/Test:
Gasket condition and Retainer ring tightness check

Inspection/Test Basis:	Supporting Documentation:
Engineering Best Practice	H-2-32420/H-2-32430/RPP-14541

Method of Inspection/Test:	Acceptance Criteria/Tolerances:	Sample Size/Plan:
Visual	Gasket Condition: No damage. Tightness Check: Retainer ring cannot be loosened or further rotated by hand	100%

Inspection/Test Organization: QC ☒ Witness ☐ Hold

INSPECTION/TEST No. 2

Description of Inspection/Test:
Ensure connectors on the 41 To 5 Jumper Assembly are free of packing material or blockages

Inspection/Test Basis:	Supporting Documentation:
Engineering Best Practice	H-14-111834

Method of Inspection/Test:	Acceptance Criteria/Tolerances:	Sample Size/Plan:
Visual	No debris	100%

Inspection/Test Organization: QC ☒ Witness ☐ Hold

"ADD SECTION"

INSPECTION/TEST No. 3

Description of Inspection/Test:
Ensure connectors on the 43 To 13A Jumper Assembly are free of packing materials and blockages

Inspection/Test Basis:	Supporting Documentation:
Engineering Best Practice	H-14-111835

Method of Inspection/Test:	Acceptance Criteria/Tolerances:	Sample Size/Plan:
Visual	No debris	100%`

Inspection/Test Organization: QC ☒ Witness ☐ Hold

X

ENGINEERING CHANGE NOTICE CONTINUATION SHEET	1a. ECN-715005 1b. Proj. T1P207

Document/Drawing No. H-2-98988 Sheet 2 Revision 21

WAS: ECN NOTE: INCORPORATES CHANGES MADE BY ECN-715003, ECN-715004 AND ECN-715006

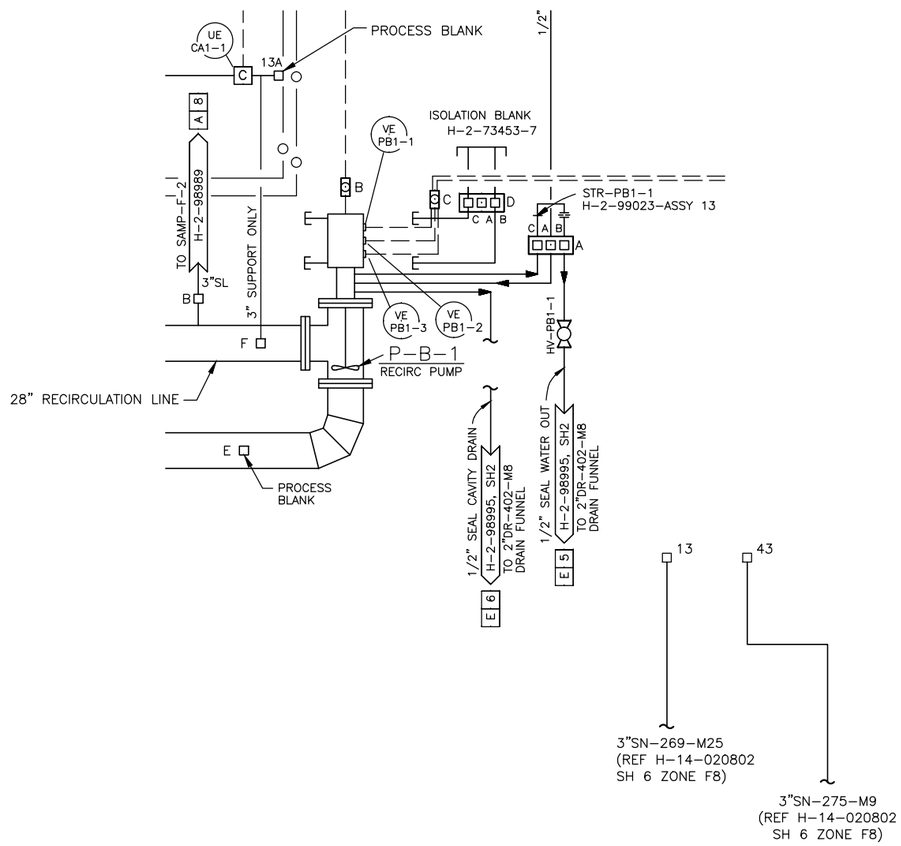

IS:

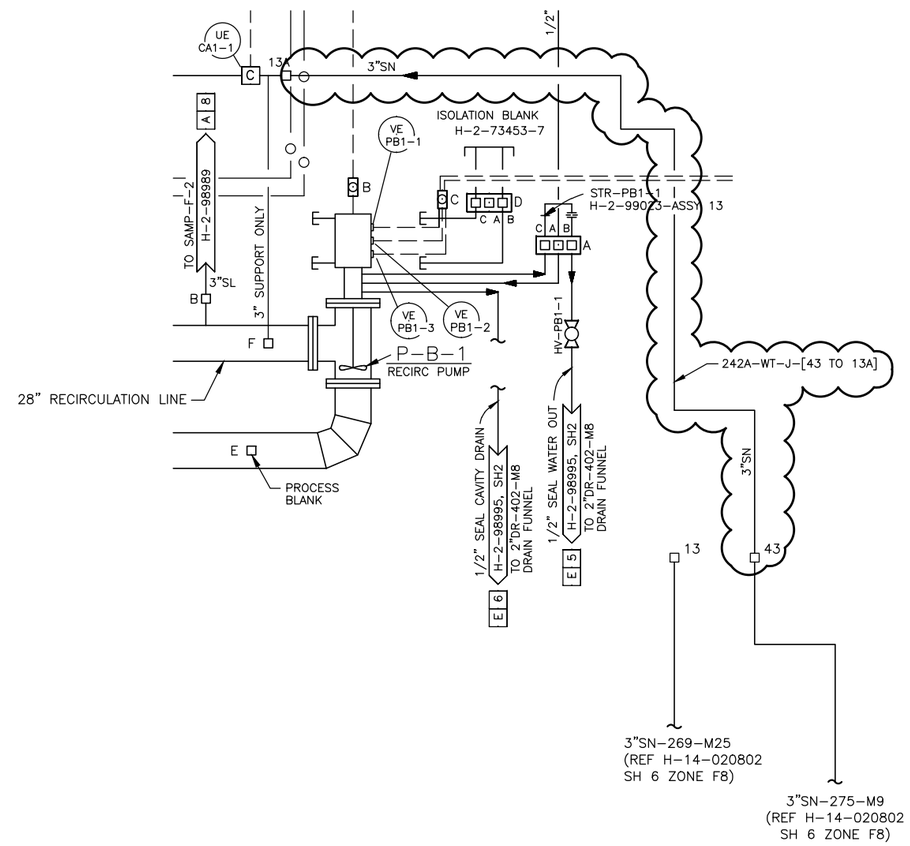

ENGINEERING CHANGE NOTICE CONTINUATION SHEET	1a. ECN– 715005 1b. Proj. T1P207

Document/Drawing No. H–2–98989 Sheet 1 Revision 29

WAS: ECN NOTE: INCORPORATES CHANGES MADE BY ECN–715004 AND ECN–715006 IS:

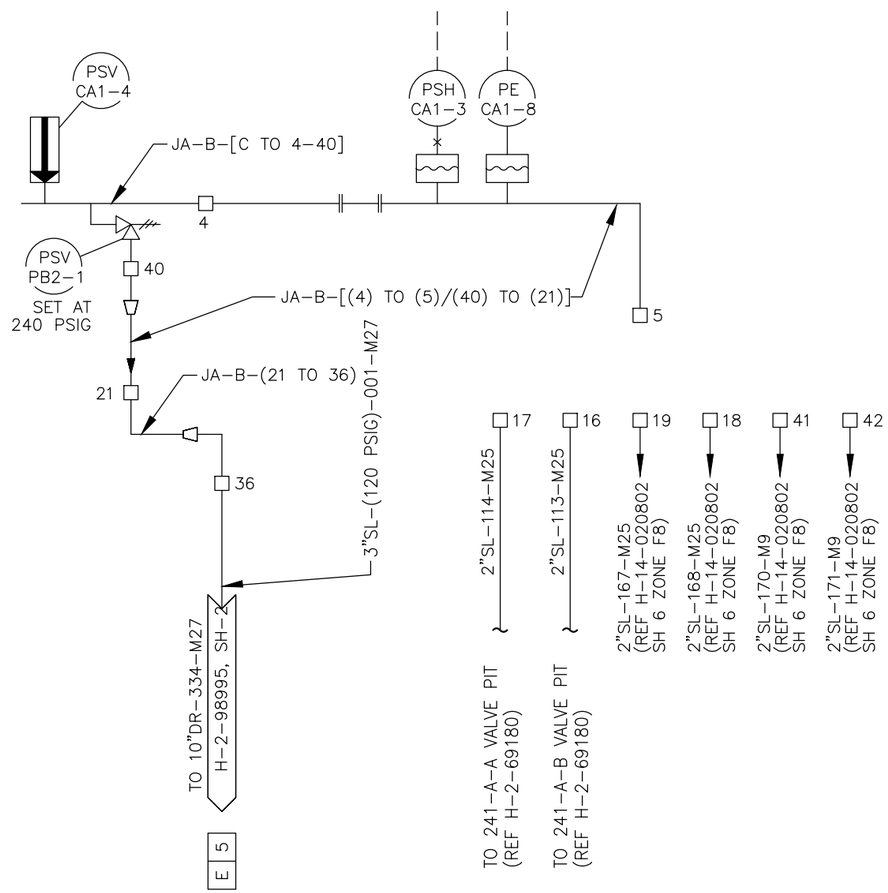

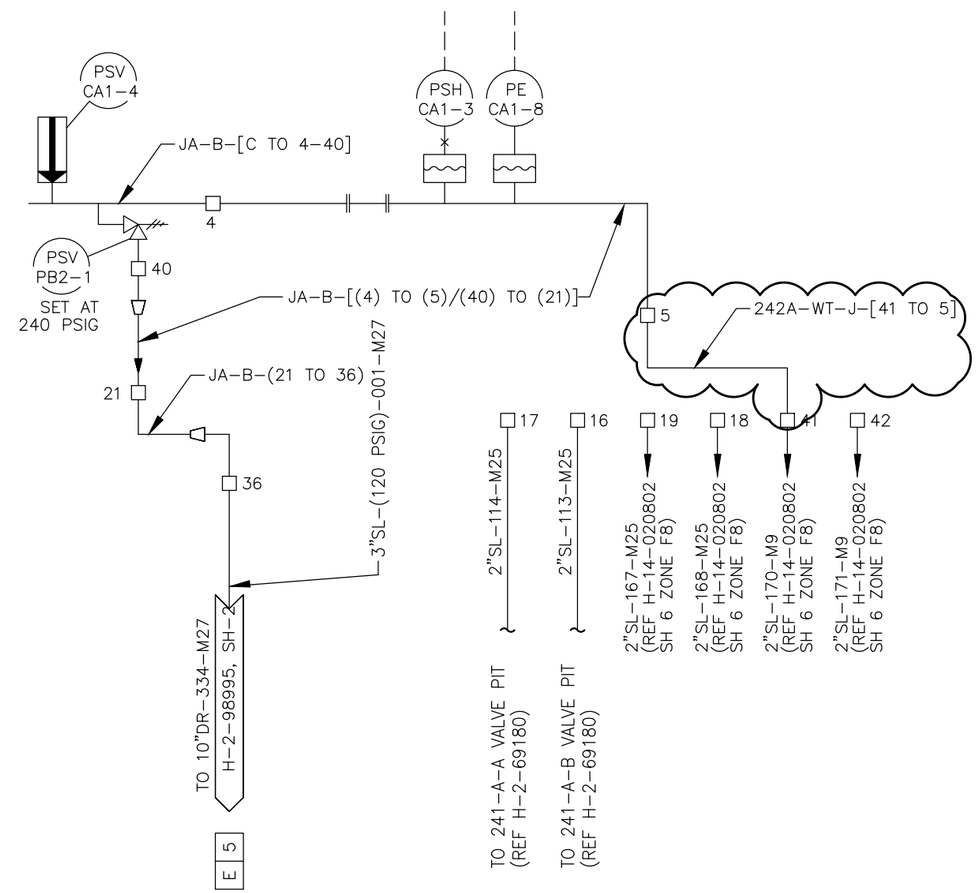

ENGINEERING CHANGE NOTICE CONTINUATION SHEET	1a. ECN– 715005 1b. Proj. T1P207

Document/Drawing No. H–2–99009 Sheet 1 Revision 5

WAS: ECN NOTE: INCORPORATES CHANGES MADE BY ECN–711932 AND ECN–714967 AND ECN–715003.

PUMP ROOM JUMPER SCHEDULE

JUMPER NAME	NOZZLE FROM	NOZZLE TO	SERVICE/PURPOSE	DRAWING NUMBER
15 TO 17	15	17	POWER/SIGNAL	H–2–99021
20 TO (P–B–1) C	20	(P–B–1) C	POWER/SIGNAL	H–2–99022
21 (SPARE)	21	N/A	POWER/SIGNAL	N/A
21 TO 36	36	21	SLURRY	H–2–99043
24 TO 2	24	2	POWER/SIGNAL, PE–CA1–8 PSH–CA1–3, PSH–PB2–1 POSN–ZS–CA1–2–1, 2–2, 2A–2, ZT–CA1–3	H–2–99020
30 TO 6	30	6 & 20	POWER/SIGNAL AT–PB1–2, VE–PB1–1/2/3	H–2–99012
31 TO (P–B–2) F	31	(P–B–2) F	SIGNAL, AT–PB2–1, ST–PB2–1 VE–PB2–1, TE–PB2–1	H–2–99015
32 TO (P–B–2) G	32	(P–B–2) G	WATER, FILTERED RAW TO PUMP SEAL	H–2–99013
33 TO (P–B–2) D	33	(P–B–2) D	POWER TO PUMP 460 VOLT	H–2–99011
37 TO (P–B–2) H	37	(P–B–2) H	GREASE TO MOTOR BEARINGS	H–2–99006
C TO (P–B–2) 13	C	(P–B–2) 13		H–2–99024
C TO 4–40	C	4 & 40		H–2–836148
4 D TO 13A	D	13A	SUPERNATE EVAPORATOR FEED	H–14–107263
E (BLANK)	E	N/A	SLURRY	H–2–32440
G TO B	G	B	SLURRY	H–2–90977
H TO A	H	A	SLURRY	H–2–90978
FROM SAMPLE CABINET	SAMPLE CABINET	J	SUPERNATE	
TO SAMPLE CABINET	K	SAMPLE CABINET	SUPERNATE	
FROM SAMPLE CABINET	SAMPLE CABINET	H	SLURRY	H–2–70087
TO SAMPLE CABINET	G	SAMPLE CABINET	SLURRY	H–2–70087

IS:

PUMP ROOM JUMPER SCHEDULE

JUMPER NAME	NOZZLE FROM	NOZZLE TO	SERVICE/PURPOSE	DRAWING NUMBER
15 TO 17	15	17	POWER/SIGNAL	H–2–99021
20 TO (P–B–1) C	20	(P–B–1) C	POWER/SIGNAL	H–2–99022
21 (SPARE)	21	N/A	POWER/SIGNAL	N/A
21 TO 36	36	21	SLURRY	H–2–99043
24 TO 2	24	2	POWER/SIGNAL, PE–CA1–8 PSH–CA1–3, PSH–PB2–1 POSN–ZS–CA1–2–1, 2–2, 2A–2, ZT–CA1–3	H–2–99020
30 TO 6	30	6 & 20	POWER/SIGNAL AT–PB1–2, VE–PB1–1/2/3	H–2–99012
31 TO (P–B–2) F	31	(P–B–2) F	SIGNAL, AT–PB2–1, ST–PB2–1 VE–PB2–1, TE–PB2–1	H–2–99015
32 TO (P–B–2) G	32	(P–B–2) G	WATER, FILTERED RAW TO PUMP SEAL	H–2–99013
33 TO (P–B–2) D	33	(P–B–2) D	POWER TO PUMP 460 VOLT	H–2–99011
37 TO (P–B–2) H	37	(P–B–2) H	GREASE TO MOTOR BEARINGS	H–2–99006
41 TO 5	41	5	SLURRY TO 241–AW–02A PUMP PIT	H–14–111834
43 TO 13A	43	13A	SUPERNATE FROM TK–241–AW–102–02E	H–14–111835
C TO (P–B–2) 13	C	(P–B–2) 13		H–2–99024
C TO 4–40	C	4 & 40		H–2–836148
4 D TO 13A	D	13A	SUPERNATE EVAPORATOR FEED	H–14–107263
E (BLANK)	E	N/A	SLURRY	H–2–32440
G TO B	G	B	SLURRY	H–2–90977
H TO A	H	A	SLURRY	H–2–90978
FROM SAMPLE CABINET	SAMPLE CABINET	J	SUPERNATE	
TO SAMPLE CABINET	K	SAMPLE CABINET	SUPERNATE	
FROM SAMPLE CABINET	SAMPLE CABINET	H	SLURRY	H–2–70087
TO SAMPLE CABINET	G	SAMPLE CABINET	SLURRY	H–2–70087

ENGINEERING CHANGE NOTICE CONTINUATION SHEET	1a. ECN-715005 1b. Proj. T1P207

Document/Drawing No. H-2-99009 Sheet 1 Revision 5

WAS: INCORPORATES CHANGES MADE BY ECN-714967, ECN-715003, ECN-715004 AND ECN-715006.

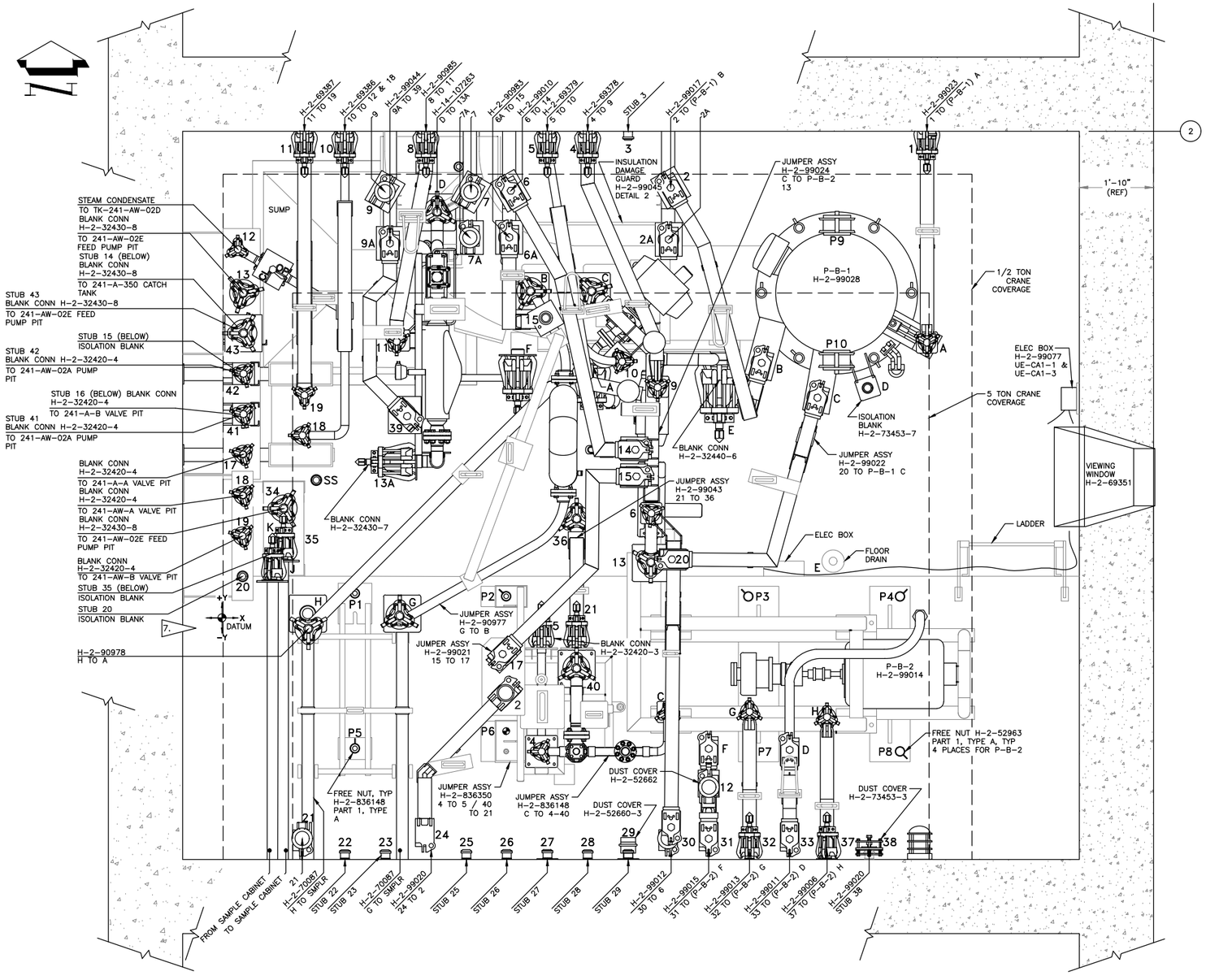

ENGINEERING CHANGE NOTICE CONTINUATION SHEET	1a. ECN-715005 1b. Proj. T1P207

Document/Drawing No. H-2-99009 Sheet 1 Revision 5

IS:

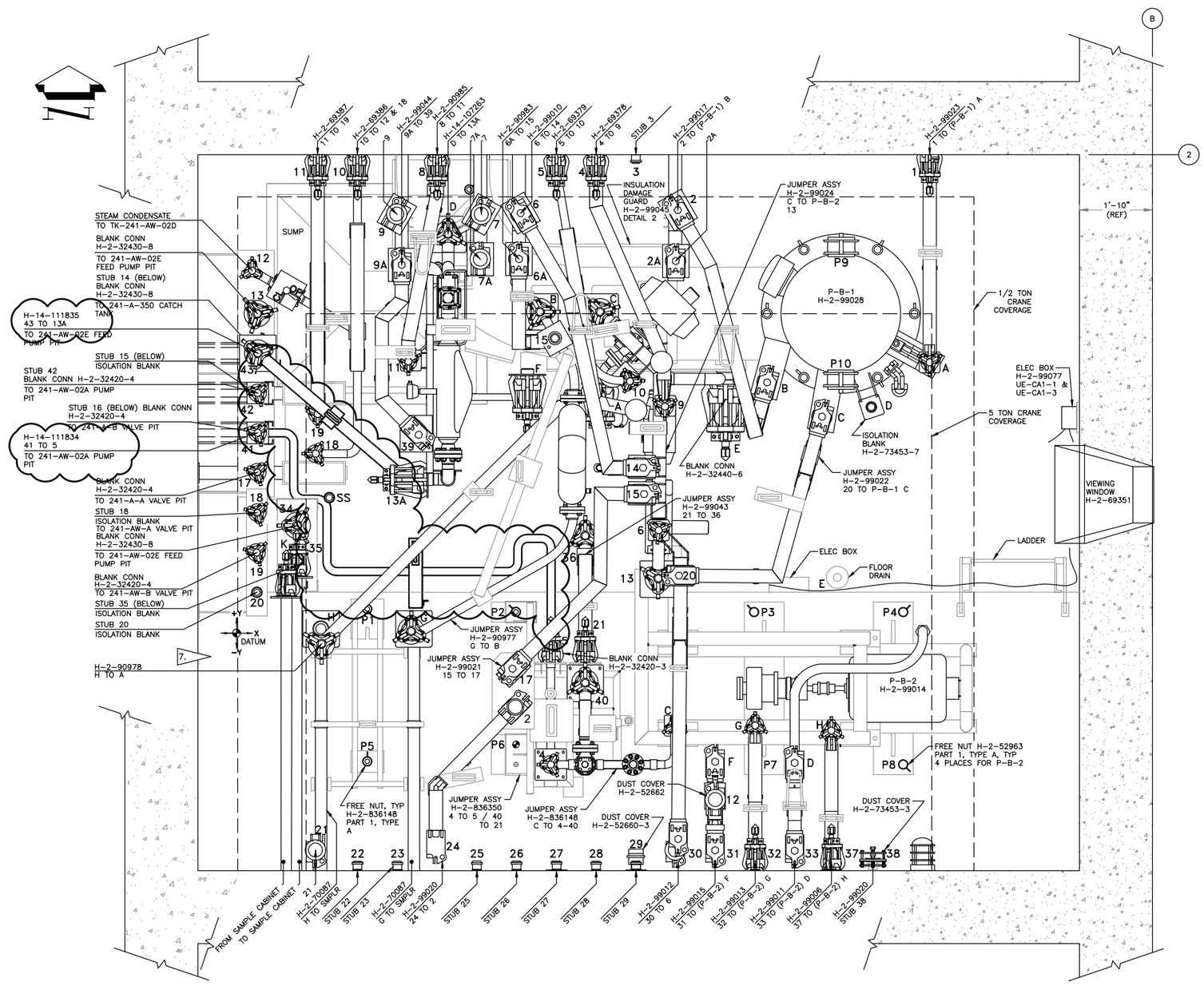

ENGINEERING CHANGE NOTICE CONTINUATION SHEET	1a. ECN–715005 1b. Proj. T1P207

Document/Drawing No. H–14–107346 Sheet 3 Revision 43

WAS: INCORPORATES CHANGES MADE BY ECN–715003, ECN–715004 AND ECN–715006

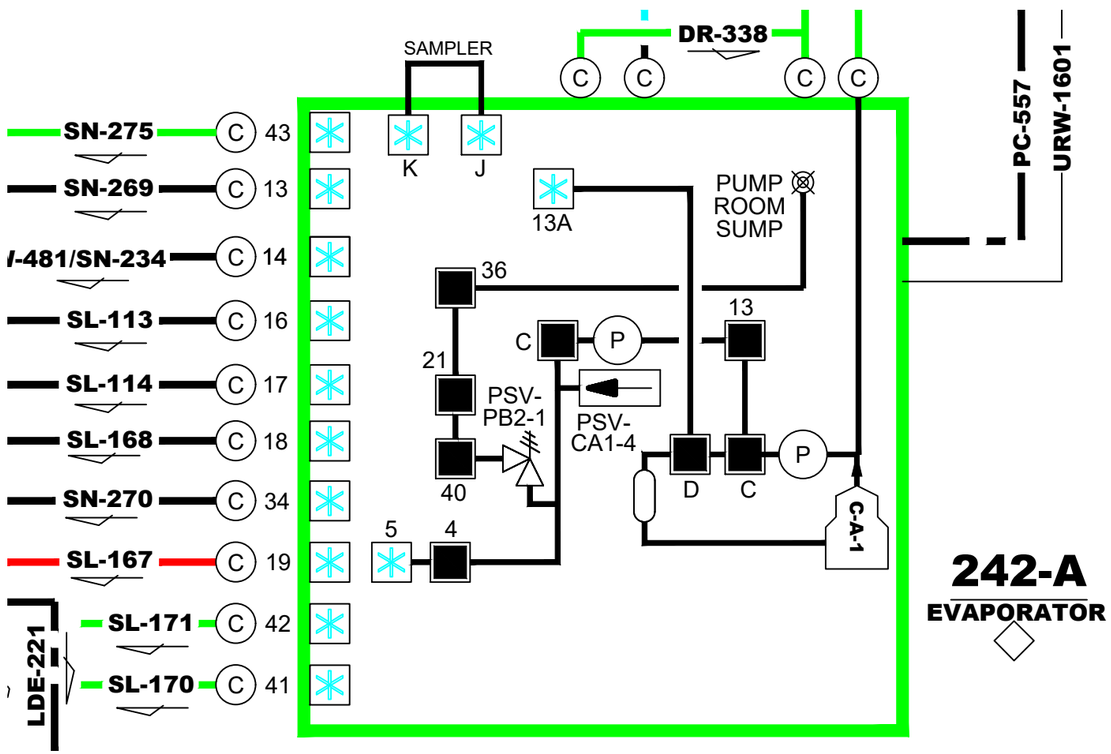

IS:

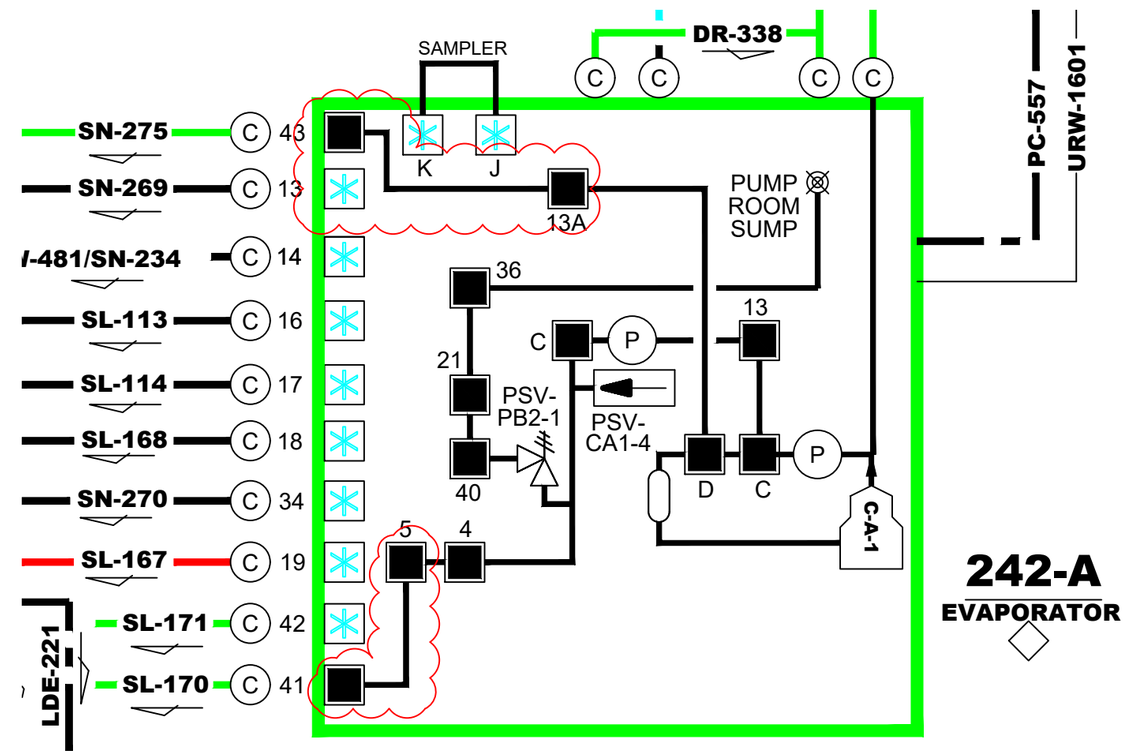

GENERAL NOTES: (UNLESS OTHERWISE SPECIFIED)

1. DIMENSIONS ARE IN INCHES.
2. TOLERANCES SHALL BE AS FOLLOWS:
   FRACTIONS = ±1/8
   .X = ±0.1
   .XX = ±0.03
   .XXX = ±0.010
   ANGLES = ±0.5°
3. REMOVE ALL BURRS AND BREAK SHARP EDGES.
4. CERTIFIED MATERIAL TEST REPORT (CMTR) REQUIRED FOR ALL PIPING MATERIALS.
5. PRIMARY PIPE (ITEMS 36, 37, 42, 43, 63 AND 64) ARE SAFETY-SIGNIFICANT.
6. WELD AND INSPECT PIPING IN ACCORDANCE WITH ASME B31.3, 2016 FOR CATEGORY NORMAL FLUID SERVICE. ALL WELDS SHALL BE VT ON FINAL PASS UNLESS OTHERWISE SPECIFIED. USE OF BACKING RINGS IS NOT PERMITTED. ALL PRIMARY PIPE WELDS REQUIRE 100% VOLUMETRIC EXAMINATION (RT OR UT) ENCASEMENT PIPE WELDS REQUIRE 20% MINIMUM VOLUMETRIC EXAMINATION.
7. WELD AND INSPECT STRUCTURAL WELDS IN ACCORDANCE WITH AWS D1.1, 2017 OR AWS D1.6, 2007 STATICALLY LOADED CRITERIA. ALL WELDS SHALL BE VT ON FINAL PASS UNLESS OTHERWISE SPECIFIED. WELD PROCEDURES AND QUALIFICATIONS PER ASME B&PV CODE SECTION IX, 2017 ARE ACCEPTABLE.
8. DESIGN PRESSURE FOR THE PRIMARY PIPING IS 620 PSIG. ALL INTEGRAL ATTACHMENTS TO THE PRIMARY PIPE SHALL BE COMPLETED PRIOR TO PERFORMING HYDROSTATIC TESTING. INSTALL TEMPORARY PIPE END COVERS ON PRIMARY PIPE AND PERFORM A HYDROSTATIC PRESSURE TEST TO 930 PSIG +20/-0 PSIG. MAINTAIN PRESSURE FOR 10 MINUTES AND PERFORM VISUAL INSPECTION OF PIPE ASSEMBLY. VERIFY NO LEAKAGE IS PRESENT. THE TEST PRESSURE HAS BEEN DETERMINED IN ACCORDANCE WITH ASME B31.3-2016, PARAGRAPH 345.4.2(b), AT THE DESIGN TEMPERATURE OF 200°F.
9. DESIGN PRESSURE FOR THE ENCASEMENT PIPING IS 60 PSIG. PERFORM A PNEUMATIC PRESSURE TEST TO 66 PSIG +10/-0 PSIG IN ACCORDANCE WITH ASME B31.3, 2016, PARAGRAPH 345.5. VERIFY NO LEAKAGE IS PRESENT.
10. PREPARE AND COAT ALL EXPOSED EXTERIOR CARBON STEEL SURFACES OF ENCASEMENT PIPING UP TO AND INCLUDING THE BACK FACE OF ITEMS 12 AND 13 AS WELL AS EXTERIOR PLATES (ITEMS 70 AND 71) WITH SCOTCHKOTE 134 FUSION BONDED EPOXY. FOR ITEMS 70 AND 71 LEAVE 3" AROUND ID AS INDICATED UNCOATED TO ALLOW FOR WELDING. COATING AREA SHALL BE PREPARED AND APPLIED PER MANUFACTURER'S SPECIFICATIONS, TO A MINIMUM DRY FILM THICKNESS OF 30 MILS. COATING SHALL BE 100% INSPECTED FOR HOLIDAYS, PINHOLES AND DISCONTINUITIES WITH HOLIDAY DETECTOR IN ACCORDANCE WITH ASTM D5162. THE COATING HOLD BACK FOR ITEMS 1 AND 2 SHALL BE 11 1/2 INCHES. THE HOLD BACK AREA AND BEVEL SHALL BE COATED WITH A WELDABLE PRIMER, SUCH AS 3M PART NUMBER 05917. UTILIZE SCOTHKOTE 323 OR 323+ FOR REPAIRS. REPAIR SPECIFICATIONS TO A MINIMUM DRY FILM THICKNESS OF 30 MILS.
11. PRIMARY PIPING. PIPE CODE (M-9), 620 PSIG DESIGN PRESSURE, 200°F DESIGN TEMPERATURE, 2-INCH AND 3-INCH DIAMETER SCHEDULE 40, SEAMLESS, ASTM A312 GRADE TP 316L PIPE.
12. ENCASEMENT PIPING PIPE CODE (M-26a), 60 PSIG DESIGN PRESSURE, 200°F DESIGN TEMPERATURE, 4-INCH AND 6-INCH DIAMETER SCHEDULE 40, SEAMLESS, ASTM A53 OR ASTM A106 GRADE B.
13. PIPING INTERNALS (PRIMARY PRESSURE BOUNDARY AND ENCASEMENT) WHEN INSTALLED ARE A CLASS I, DIVISION 1, GROUP B HAZARDOUS LOCATION PER HNF-SD-WM-HC-017.
14. PAINT NOZZLE IDENTIFICATION NUMBER IN AREA SHOWN. THE TWO 2" WALL NOZZLES TO BE PAINTED AS "41" AND "42". THE 3" WALL NOZZLE TO BE PAINTED AS "43". BLACK TEXT, YELLOW BACKGROUND, 3" TALL BLOCK NUMERALS WITH 1/2" WIDE BLACK BORDER AROUND EDGE OF NUMBERED AREA.
15. FACE BLOCK (34 AND 35) TO ALIGN WITH DATUMS AFTER FINAL ASSEMBLY. INSTALL BAIL AFTER ACHIEVING ALIGNMENT.
16. GRIND OR MACHINE FULCRUM PLATE TO ACHIEVE SPECIFIED DIMENSION.
17. INSTALL GASKET ITEM 46 OR 47 TO BACK SURFACE OF WALL MOUNT PLATE AFTER HYDROTEST AND PAINTING ARE COMPLETED.
18. LOCATE LIFT BAIL TO CENTER OF GRAVITY FOR WALL NOZZLE ASSEMBLY WITH COUNTERWEIGHT ASSEMBLY ATTACHED. ENSURE COMPLETED ARRANGEMENT HANGS LEVEL WITHIN TWO DEGREES AS SUPPORTED BY LIFT BAIL LOCATION.
19. LOCATE LIFT BAIL TO CENTER OF GRAVITY FOR COUNTERWEIGHT ASSEMBLY (ITEM 1 OR 2). ENSURE COMPLETED COUNTERWEIGHT ASSEMBLY HANGS LEVEL WITHIN TWO DEGREES AS SUPPORTED BY LIFT BAIL LOCATION.
20. INSTALL PIN (ITEM 54) INTO ATTACHEMENT SCREW (ITEM 32) FOLLOWING THE INSTALLATION INTO COUNTERWEIGHT (ITEM 1 OR 2). ENSURE PIN IS CENTERED ON SCREW AND THE PIN DOES NOT INTERFERE WITH RECESSED OPENING IN COUNTERWEIGHT.
21. IN-PROCESS EXAMINATION SHALL BE PERFOMED IN ACCORDANCE WITH ASME B31.3, 2016 SECTION 344.7. LIQUID PENETRANT EXAMINATION SHALL BE PERFORMED ON THE ROOT PASS.
22. QUALITY CONTROL TO VERIFY NO DEBRIS IS PRESENT IN THE ANNULAR SPACE BETWEEN PRIMARY AND ENCASEMENT, EXCEPT FINAL PACKAGING.
23. QUALITY CONTROL TO VERIFY PRIMARY PIPING IS CLEANED AND CLEAR OF OBSTRUCTIONS, EXCEPT FINAL PACKAGING.
24. INSTALL NOZZLE PROTECTION COVERS OVER SEALING SURFACE OF 2" AND 3" PUREX NOZZLES.
25. PROVIDE THREE LIFTING RINGS (ITEM 56) TO SUPPORT FIELD INSTALLATION OF EXTERIOR PLATES (ITEMS 70 AND 71). TORQUE TO 12 FT-LBS AT TIME OF INSTALLATION PER MANUFACTURERS RECOMMENDATION.
26. BLOCK IS TO SUPPORT HYDROTESTING AND INSTALLATION. WELD BETWEEN PIPE (ITEMS 36 AND 37) AND BLOCK (ITEMS 34 AND 35) DOES NOT REQUIRE HYDROTESTING.
27. TORQUE 30-40 FT-LB.

GENERAL NOTES CONTINUED ON SHEET 2.

PARTS LIST/MATERIAL LIST

	QTY -090	QTY -080	QTY -070	QTY -060	QTY -050	QTY -040	QTY -030	QTY -020	QTY -010	PARTS / DASH NUMBER	NOMENCLATURE/DESCRIPTION	MATERIAL/REFERENCE	SHEET	ITEM NO
			4	4						-027	ALIGNMENT LUG, ø1"	ASTM A36	7,8	40
														41
5.				1							ELBOW, 90°, ø2", LR, SCH 40, SMLS	ASTM A403, GR WP316L, CLASS S	3	42
5.			1								ELBOW, 90°, ø3", LR, SCH 40, SMLS	ASTM A403, GR WP316L, CLASS S	5	43
														44
			2	2							ANGLE, 1 1/2" X 2 1/2" X 1/4" THK, 6" LONG	ASTM A36	3,5	45
							1			-028	GASKET 1, 1/2" THK, NEOPRENE FOAM SHEET, CLOSED CELL, -30° TO 200°F, ADHESIVE BACK, 30 DUROMETER (MCMASTER 8583K68)	ASTM D2000 BC	2,8	46
						1				-029	GASKET 2, 1/2" THK, NEOPRENE FOAM SHEET, CLOSED CELL, -30° TO 200°F, ADHESIVE BACK, 30 DUROMETER (MCMASTER 8583K68)	ASTM D2000 BC	4,8	47
	1									-031	GUIDE PLATE, 3/8" THK	ASTM A240, TYPE 304/304L	9,10	48
	2									-032	GUSSET, 1/4" THK	ASTM A240, TYPE 304/304L	9,10	49
						2	2				THREADED ROD, 1/2-13UNC-2A, 25" LONG	ASTM A193, GRADE B7	4,7	50
						2	2				THREADED ROD, 1/2-13UNC-2A, 25 1/4" LONG	ASTM A193, GRADE B7	4,7	51
								2		-033	COUNTERWEIGHT 5, 2" THK	ASTM A36 OR A108	6,14	52
								1	1	-034	COUNTERWEIGHT 6, 2" THK	ASTM A36 OR A108	6,14	53
								1	1	(98296A916)	SLOTTED SPRING PIN, ø3/16" DIA, 1 3/4" L, 1050-1095 SPRING STEEL, ASME B18.8.2	(MCMASTER)	6	54
						1	1			(33045T75)	EYEBOLT, 3/4-10UNC-2A, 2" THREAD LENGTH, 304 STAINLESS	(MCMASTER)	2,4	55
29. 25.										43705	SIDE LIFTING RING, 3/8-16, 800 LB	ACTEK		56
														57
								2	2		HEX BOLT, 1/2-13UNC-2A, 3" L	ANY GRADE SST	6	58
								4			SOCKET HEAD CAP SCREW, 1/2-13UNC-2A, 6 1/2"L	ASTM F835	6	59
								4	4		SOCKET HEAD COUNTERSUNK BOLT, 1/4-20UNC-2A, 1/2"L	ANY GRADE SST	6	60
									4		SOCKET HEAD CAP SCREW, 1/2-13UNC-2A, 2 1/2"L	ASTM F835	6	61
								1	2	H-2-90161-070	ASSEMBLY, 10" CS		6	62
5.				1						H-2-90185-020	2" NOZZLE, SCH 40		3	63
5.			1							H-2-90186-020	3" NOZZLE, SCH 40		5	64
				1						H-2-30600-003	SQUARE KICK-OFF PLATE, 2"		3	65
			1							H-2-30600-005	SQUARE KICK-OFF PLATE, 3"		5	66
								1		H-2-90161-080	ASSEMBLY, 14" CS		6	67
														68
														69
29.										-035	2" EXTERIOR PLATE, 1" THK	ASTM A36	12	70
29.										-036	3" EXTERIOR PLATE, 1" THK	ASTM A36	12	71
														72
														73
														74
29.						4	4			(12022)	PLATE WASHER, 2 3/4"SQ X 5/16" THK, 13/16"ID, ASTM A36, GALVANIZED	(PORTLAND BOLT)		75
29.						4	4				KB-TZ GALVANIZED EXPANSION ANCHOR BOLT, 3/4" DIA X MIN 5 1/2" EFFECTIVE EMBED. TOTAL BOLT LENGTH 10"	HILTI		76
														77
		1			1					-037	FULCRUM, PLATE, 1/4" THK	ASTM A36 OR A108	2,4,8	78
			2							-038	WING 4, 1/4" THK	ASTM A240, TYPE 304/304L	7,10	79

PARTS LIST/MATERIAL LIST

	QTY -090	QTY -080	QTY -070	QTY -060	QTY -050	QTY -040	QTY -030	QTY -020	QTY -010	PARTS / DASH NUMBER	NOMENCLATURE/DESCRIPTION	MATERIAL/REFERENCE	SHEET	ITEM NO
									X	-010	2" COUNTERWEIGHT ASSEMBLY		6	1
								X		-020	3" COUNTERWEIGHT ASSEMBLY		6	2
							X			-030	2" WALL NOZZLE WELDMENT		2	3
						X				-040	3" WALL NOZZLE WELDMENT		4	4
					X		1			-050	2" OUTER PIPE WELDMENT		2	5
				X			1			-060	2" INNER PIPE WELDMENT		2,3	6
			X			1				-070	3" INNER PIPE WELDMENT		4,5	7
		X				1				-080	3" OUTER PIPE WELDMENT		4	8
X								1	1	-090	GUIDE WELDMENT		6,9	9
														10
			2	2							ANGLE, 1 1/2" X 1 1/2", 1/4" THK, 4" LONG	ASTM A240, TYPE 304/304L	3,5	11
				1						-001	PLATE 1, 1/2" THK	ASTM A36	7,9	12
			1							-002	PLATE 2, 1/2" THK	ASTM A36	7,9	13
				1						-003	PLATE 3, 1/8" THK	ASTM A36	7,10	14
			1							-004	PLATE 4, 1/8" THK	ASTM A36	7,10	15
				2						-005	PLATE 5, 1/2" THK	ASTM A36	7,10	16
					3					-006	PLATE 6, 1/4" THK	ASTM A36	2,10	17
			1	1							RECT. BAR, 1/2" X 1/8" THK	ASTM A36	7	18
			1	1						-008	PLATE 8, 1" THK	ASTM A36	3,5,10	19
		3									PLATE 7, 1/4" THK	ASTM A36	4,10	20
		4								-011	GUIDE BLOCK 1, 1" THK	ASTM A36	4,10	21
					4					-012	GUIDE BLOCK 2, 1" THK	ASTM A36	2,10	22
			2								PLATE 9, 1/2" THK	ASTM A36	7,10	23
														24
								1	1	-015	UHMWPE SHEET, 1/4" THK	ASTM D4020	6,12	25
								1	1	-016	COUNTERWEIGHT 1, 2" THK	ASTM A36 OR A108	6,11	26
	1									-017	COUNTERWEIGHT 2, 1" THK	ASTM A36 OR A108	6,11	27
								1	1	-018	COUNTERWEIGHT 3, 3/8" THK	ASTM A36 OR A108	6,11	28
								1	1	-019	COUNTERWEIGHT 4, 2" THK	ASTM A36 OR A108	6,13	29
			1							-021	WING 1, 1/4" THK	ASTM A240, TYPE 304/304L	7,10	30
				1						-022	WING 2, 1/4" THK	ASTM A240, TYPE 304/304L	7,10	31
								1	1	-023	ATTACHMENT SCREW, ROUND BAR, ø2 1/2	ASTM A572	6,8	32
				2						-024	WING 3, 1/4" THK	ASTM A240, TYPE 304/304L	7,10	33
				1						-025	BLOCK - 1, 2" THK	ASTM A240, TYPE 304/304L	3,8	34
			1							-026	BLOCK - 2, 2" THK	ASTM A240, TYPE 304/304L	5,8	35
5.				AR							PIPE, ø2", SCH 40, SMLS	ASTM A312, TP 316L	3	36
5.			AR								PIPE, ø3", SCH 40, SMLS	ASTM A312, TP 316L	5	37
					AR						PIPE, ø4", SCH 40, SMLS	ASTM A53 OR A106, GRADE B, TYPE S	2	38
		AR									PIPE, ø6", SCH 40, SMLS	ASTM A53 OR A106, GRADE B, TYPE S	4	39

4/29/20

DWG NUMBER	TITLE
RPP-CALC-63211	ASME B31.3 ANALYSES OF THE NEW SL-170, SL-171, SL-172 AND SN-275 WASTE TRANSFER LINES IN 241-AW TANK FARM
RPP-CALC-63208	STRUCTURAL ANALYSIS FOR THE 242-A PUMP ROOM WALL NOZZLE ASSEMBLIES PLUS COUNTERWEIGHT LIFTING DEVICES
REF NUMBER	REFERENCES TITLE

REV NO	DESCRIPTION
1	RELEASED PER EDT-882646

REVISIONS

CAUTION: NOT COMPLETE WITHOUT CURRENT CHANGE DOCUMENTS FROM DATABASE

BLDG NO 242A

	NAME	DATE	COMPANY
DRAWN	L FOSS		CH2M
CHKD BY / DESIGN	P M MCELROY		CH2M
DESIGN ENGINEER	G J BUGEN		CH2M

INDEX NO 9901

U.S. DEPARTMENT OF ENERGY
Office of River Protection

WALL NOZZLE ASSEMBLIES
242-A PUMP ROOM

SIZE	DRAWING NUMBER	SHEET	REV
F	H-14-111832	1	1

SCALE SHOWN

GENERAL NOTES: CONTINUED

28. PREPARE AND PAINT ALL EXPOSED CARBON CARBON STEEL SURFACES OF THE COUNTERWEIGHT ASSEMBLIES (ITEMS 1 AND 2) AND WALL NOZZLES (ITEMS 3 AND 4) ON THE INTERIOR SIDE OF THE PIT (STARTING FORM THE SIDE FACES OF ITEMS 12 AND 13). SURFACE PREPARATION SHALL BE PERFORMED IN ACCORDANCE WITH THE MANUFACTURER'S SPECIFICATIONS. CARBON STEEL SURFACES SHALL BE BLAST CLEANED TO SSPC SP-10 PRIOR TO APPLICATION OF PRIMER/BASE COAT. PRIME SURFACES WITH PPG AMERLOCK 400 SERIES PRIMER PER THE MANUFACTURER'S SPECIFICATIONS, TO OBTAIN A MINIMUM DRY FILM THICKNESS OF 7 MILS. APPLY FINAL TOP COAT(S) USING PPG PSX 700 PER THE MANUFACTURER'S SPECIFICATIONS, TO A MINIMUM DRY FILM THICKNESS OF 7 MILS. LIFT BAILS AND FRONT AND SIDE FACES OF KICK PLATES AND NOZZLE IDENTIFICATION LOCATIONS SHALL BE YELLOW. TOP OF LIFT BAILS AND TIP OF ACORN NUT SHALL BE PAINTED YELLOW ON COUNTERWEIGHT. ALL REMAINING SURFACES SHALL BE WHITE.

29. ITEMS REQUIRED FOR FIELD INSTALLATION. NOT SHOWN ON ASSEMBLIES.

30. GRIND BACK SIDE OF NOZZLE (ITEM 34) AS NECESSARY TO ACHIEVE DESIRED DIMENSION.

31. WELD AND INSPECT WELDS ON COUNTERWEIGHT ASSEMBLIES (ITEM 1 AND 2) PER AWS D14.1, 2005. WELD PROCEDURES AND QUALIFICATIONS PER ASME B&PV CODE SECTION IX, 2017 ARE ACCEPTABLE.

32. LOAD TEST TO 125% (+0%, -5%) OF RATED LOAD WITH QUALITY CONTROL (QC) WITNESS AND TRACEABLE LOAD; ATTACH LOAD TEST TAG PER DOE/RL-92-36. SUBMIT ALL TEST REPORTS AND RECORDS.

33. THE FOLLOWING SHALL BE LABELED ON THE LIFT DEVICE.
    a. THIS LIFTER SHALL BE USED FOR LIFTING THE 2" WALL NOZZLE WELDMENT.
    b. AFFIX AN ANSI Z535.4 COMPLIANT WARNING LABEL TO THE LIFTER.
    c. RATED LOAD CAPACITY OF 795 POUNDS (CAPACITY OF THE LIFTING BAIL).
    d. THIS LIFTER HAS A WEIGHT OF APPROXIMATELY 340 POUNDS WITHOUT LOAD.
    e. DESIGN CATEGORY A, SERVICE CLASS 0.
    f. MANUFACTURER'S NAME
       MANUFACTURER'S ADDRESS
       H-14-111832-010
    g. DO NOT OPERATE WITHOUT READING SAFETY INFORMATION ON DRAWING H-14-111832. FAILURE TO COMPLY WITH THE SAFETY INFORMATION AND PRECAUTIONS ON THE DRAWING COULD RESULT IN SERIOUS INJURY OR EVEN DEATH.

34. THE FOLLOWING SHALL BE LABELED ON THE LIFT DEVICE.
    a. THIS LIFTER SHALL BE USED FOR LIFTING THE 3" WALL NOZZLE WELDMENT.
    b. AFFIX AN ANSI Z535.4 COMPLIANT WARNING LABEL TO THE LIFTER.
    c. RATED LOAD CAPACITY OF 1,490 POUNDS (CAPACITY OF THE LIFTING BAIL).
    d. THIS LIFTER HAS A WEIGHT OF APPROXIMATELY 600 POUNDS WITHOUT LOAD.
    e. DESIGN CATEGORY A, SERVICE CLASS 0.
    f. MANUFACTURER'S NAME
       MANUFACTURER'S ADDRESS
       H-14-111832-020
    g. DO NOT OPERATE WITHOUT READING SAFETY INFORMATION ON DRAWING H-14-111832. FAILURE TO COMPLY WITH THE SAFETY INFORMATION AND PRECAUTIONS ON THE DRAWING COULD RESULT IN SERIOUS INJURY OR EVEN DEATH.

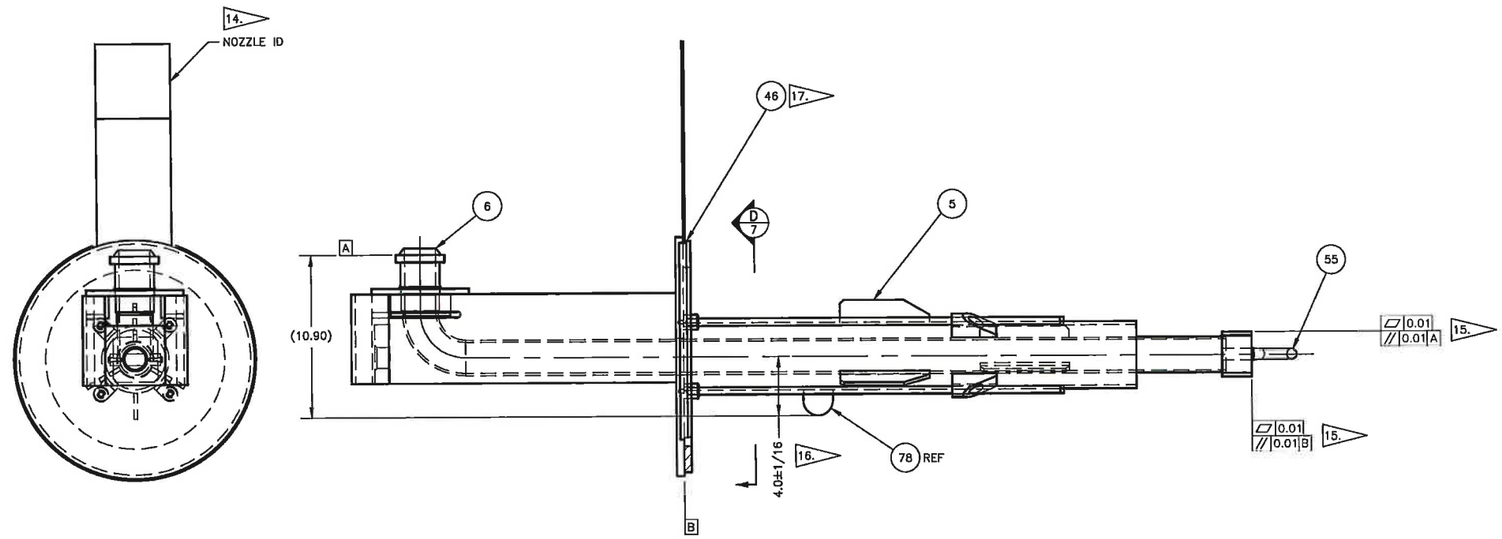

3 2" WALL NOZZLE WELDMENT
SCALE: 1/4

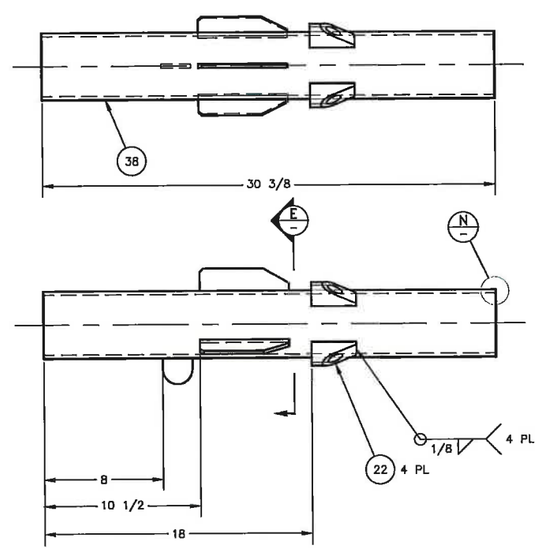

5 2" OUTER PIPE WELDMENT
SCALE: 1/4

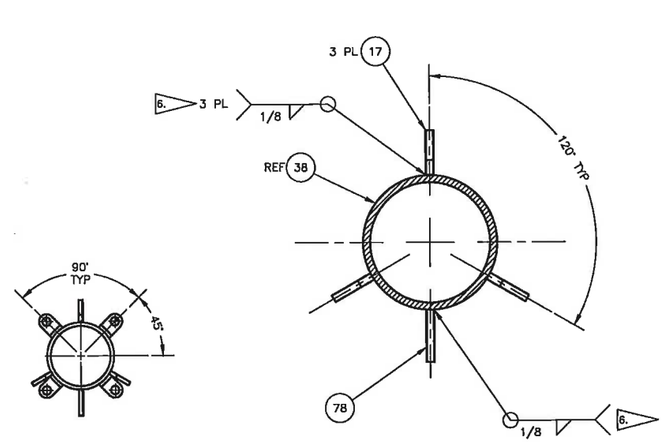

E SECTION
SCALE: 1/2

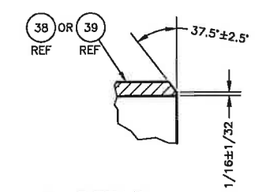

N DETAIL
2,4
SCALE: 1/1
NOTE: PREP FOR FIELD WELD.

4/29/20

DWG NUMBER	TITLE	REF NUMBER	TITLE
		REFERENCES	

REV NO	DESCRIPTION
1	RELEASED PER EDT-882646
	REVISIONS

BLDG NO 242A
INDEX NO 9901

CAUTION: NOT COMPLETE WITHOUT CURRENT CHANGE DOCUMENTS FROM DATABASE

	NAME	DATE	COMPANY
DRAWN	FOSS		CH2M
ENGINEER	P M MCELROY		CH2M
DESIGN ENGINEER	G V BOGEN		CH2M

U.S. DEPARTMENT OF ENERGY
Office of River Protection

WALL NOZZLE ASSEMLIES
242-A PUMP ROOM

SIZE F | DRAWING NUMBER H-14-111832 | SHEET 2 | REV 1

SCALE SHOWN

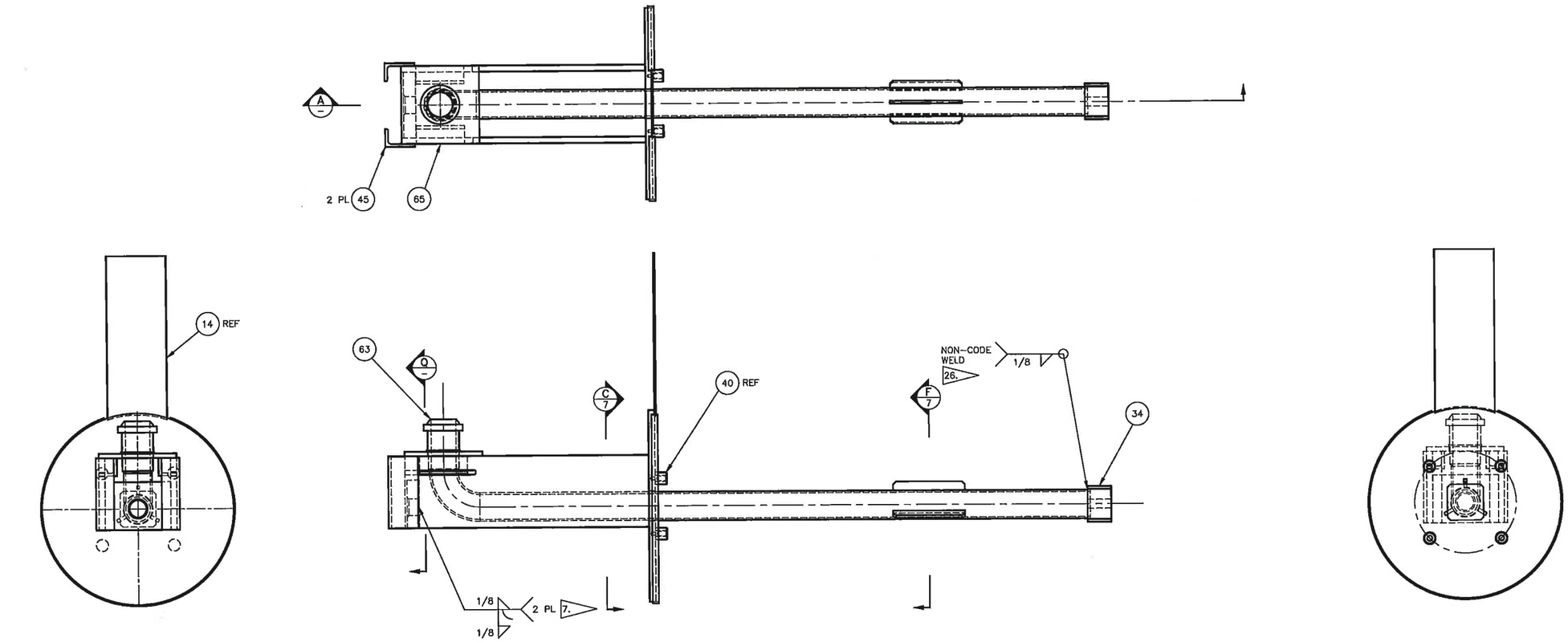

6 2" INNER PIPE WELDMENT
SCALE: 1/4

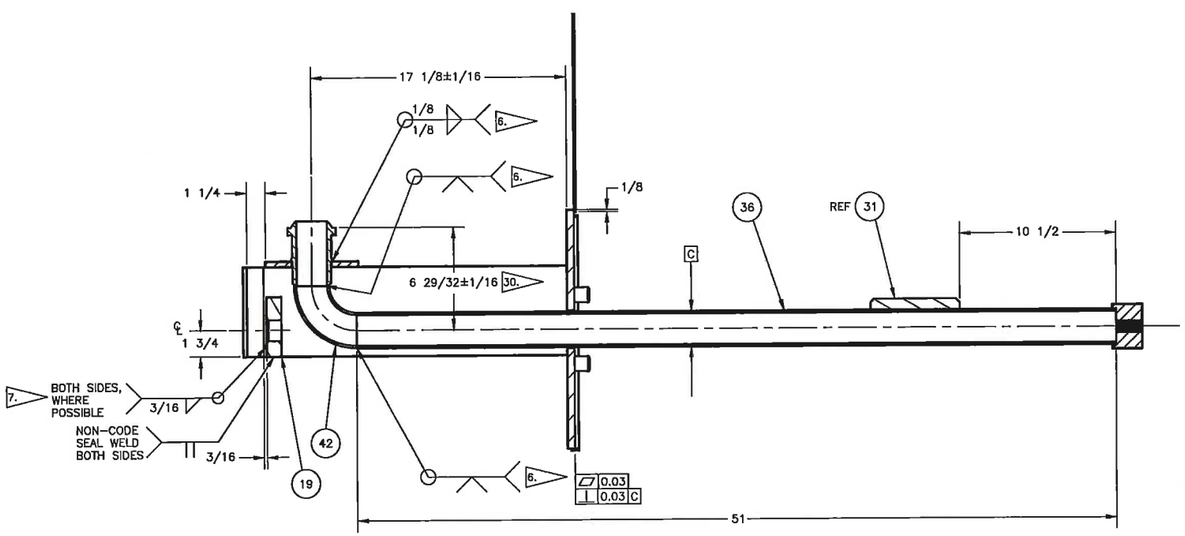

A SECTION
SCALE: 1/4

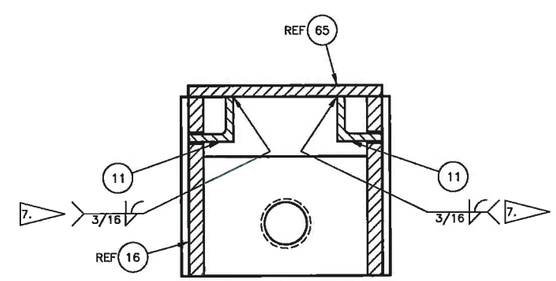

Q DETAIL
SCALE: 1/2
ITEMS 63 AND 42 REMOVED FROM SECTION

4/29/20

DWG NUMBER	TITLE

REF NUMBER	TITLE

REFERENCES

REV NO	DESCRIPTION
1	RELEASED PER EDT-882646

REVISIONS

BLDG NO 242A

INDEX NO 9901

CAUTION: NOT COMPLETE WITHOUT CURRENT CHANGE DOCUMENTS FROM DATABASE

	NAME	DATE	COMPANY
DRAFTER	J F FOSS		CH2M
DRAFTING DESIGN	P M MCELROY		CH2M
DESIGN ENGINEER	G J BOGEN		CH2M

U.S. DEPARTMENT OF ENERGY
Office of River Protection

WALL NOZZLE ASSEMBLIES
242-A PUMP ROOM

SIZE	DRAWING NUMBER	SHEET	REV
F	H-14-111832	3	1

SCALE SHOWN

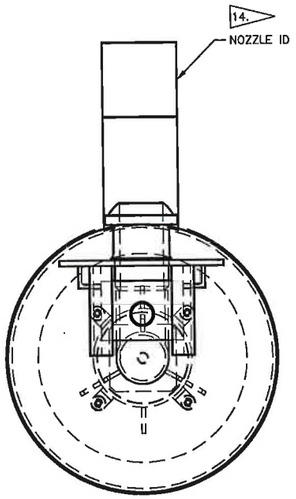

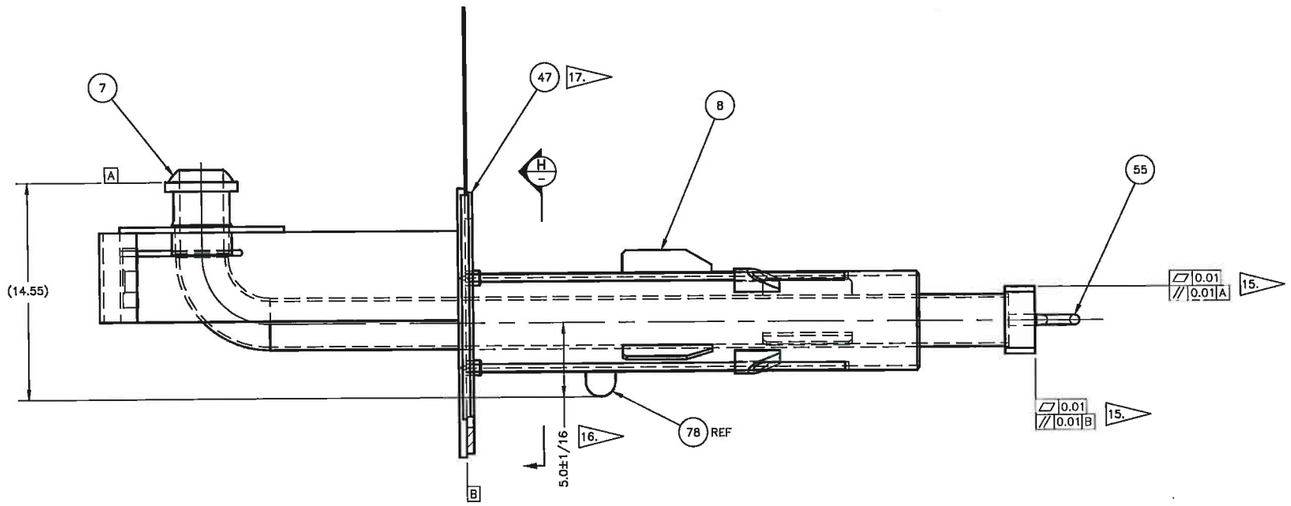

4 3" WALL NOZZLE WELDMENT
SCALE: 1/4

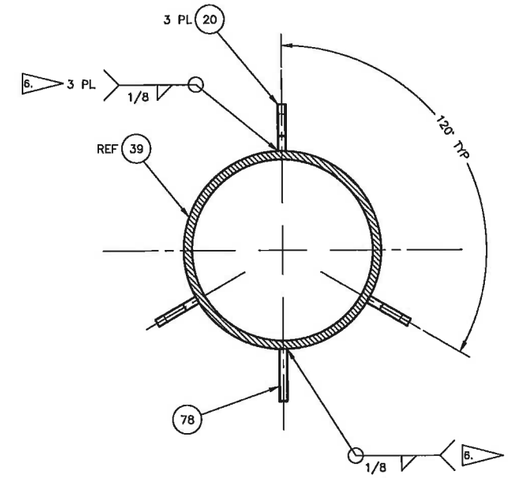

J SECTION
SCALE: 1/2

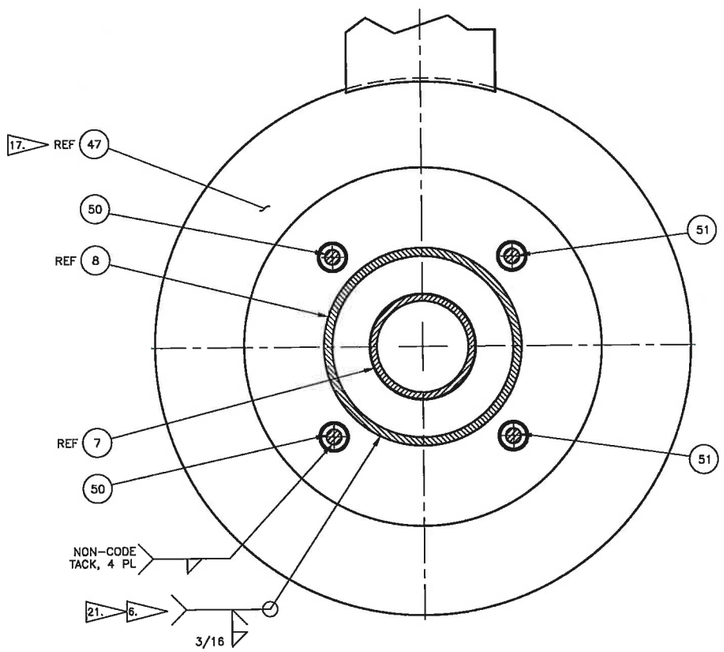

H SECTION
SCALE: 1/2

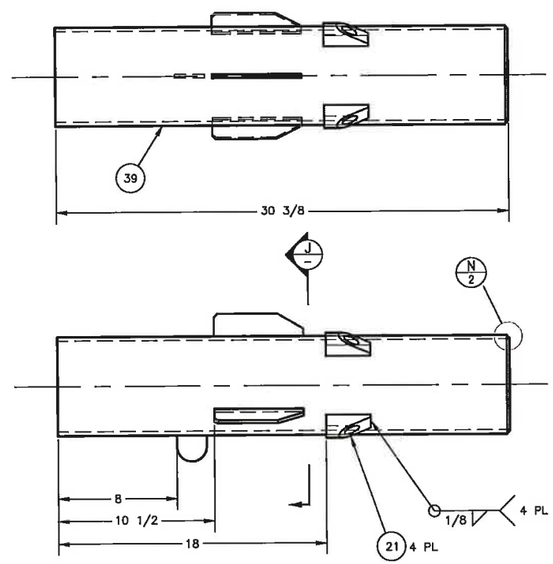

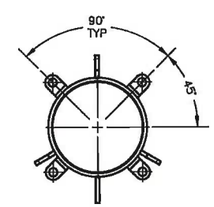

8 3" OUTER PIPE WELDMENT
SCALE: 1/4

DWG NUMBER	TITLE	REF NUMBER	TITLE
		REFERENCES	

REV NO	DESCRIPTION
1	RELEASED PER EDT-882646
	REVISIONS

BLDG NO 242A

INDEX NO 9901

CAUTION: NOT COMPLETE WITHOUT CURRENT CHANGE DOCUMENTS FROM DATABASE

	NAME	DATE	COMPANY
DRAWER	T FOSS		
CHECKER	P M MCELROY		
DESIGN ENGINEER	G J BOGEN		

U.S. DEPARTMENT OF ENERGY
Office of River Protection

WALL NOZZLE ASSEMBLIES
242-A PUMP RPPM

SIZE	DRAWING NUMBER	SHEET	REV
F	H-14-111832	4	1

SCALE SHOWN

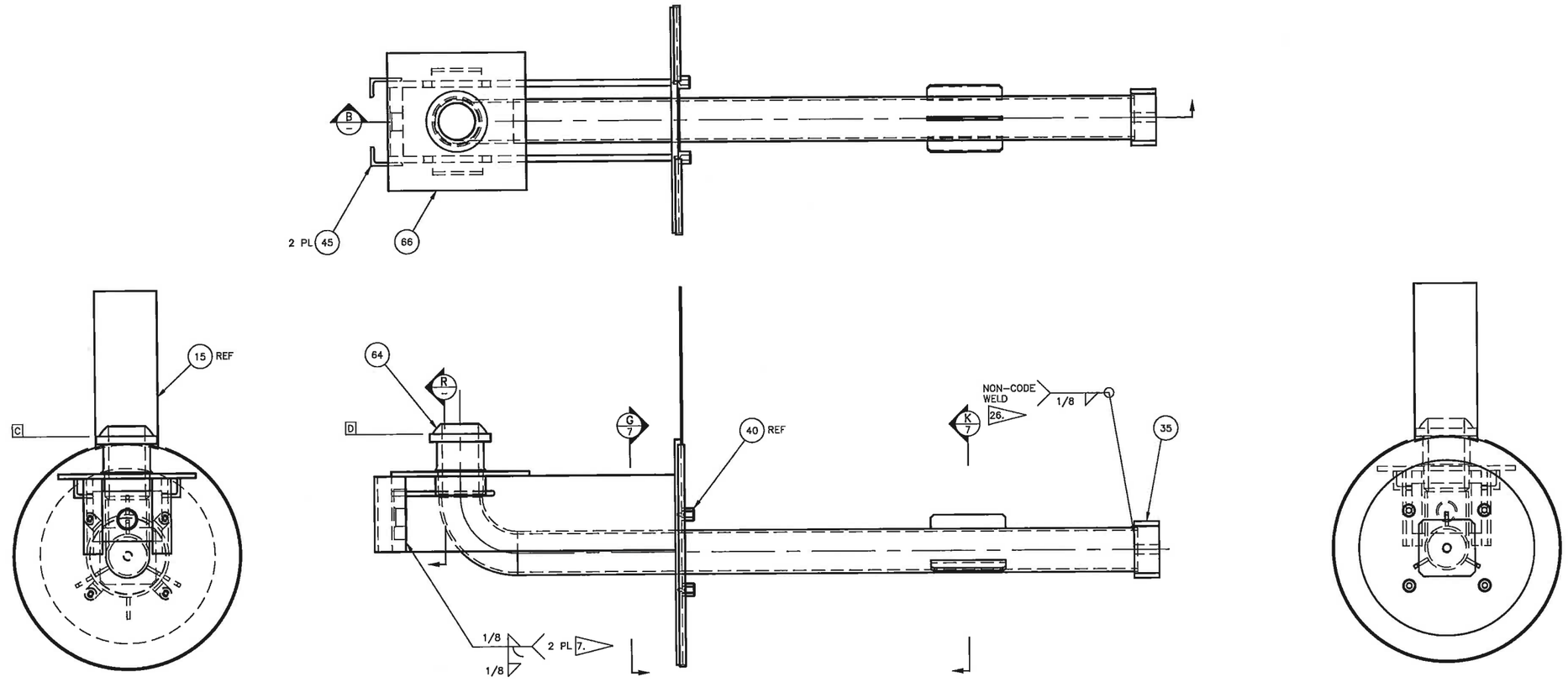

7 3" INNER PIPE WELDMENT
SCALE: 1/4

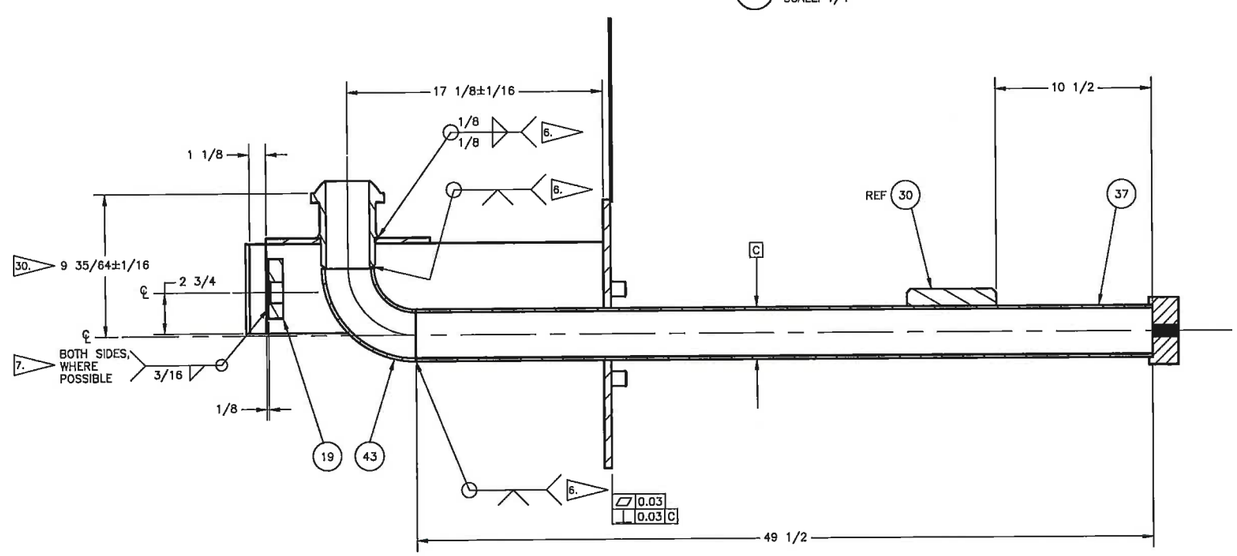

B SECTION
SCALE: 1/4

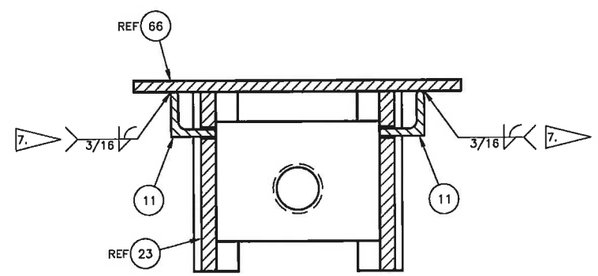

R DETAIL
SCALE: 1/2
ITEMS 64 AND 43 REMOVED FROM SECTION

4/29/20

DWG NUMBER	TITLE	REF NUMBER	TITLE

REFERENCES

REV NO	DESCRIPTION
1	RELEASED PER EDT-882646

REVISIONS

BLDG NO 242A

BLDG NO 9901

CAUTION: NOT COMPLETE WITHOUT CURRENT CHANGE DOCUMENTS FROM DATABASE

	NAME	DATE	COMPANY
DRAWN	J T FOSS		CEARCH
CHECKED / ENGINEER	P M MCELROY		CEARCH
DESIGN ENGINEER	G J BOGEN		CEARCH

U.S. DEPARTMENT OF ENERGY
Office of River Protection

WALL NOZZLE ASSEMBLIES
242-A PUMP ROOM

SIZE F | DRAWING NUMBER H-14-111832 | SHEET 5 | REV 1

SCALE SHOWN

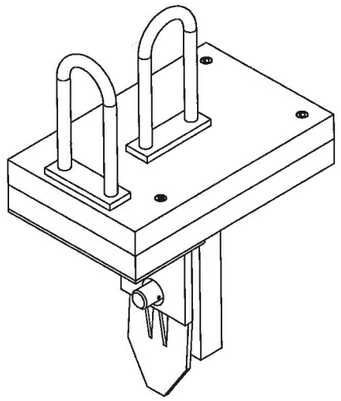

ISO VIEW
SCALE: NTS

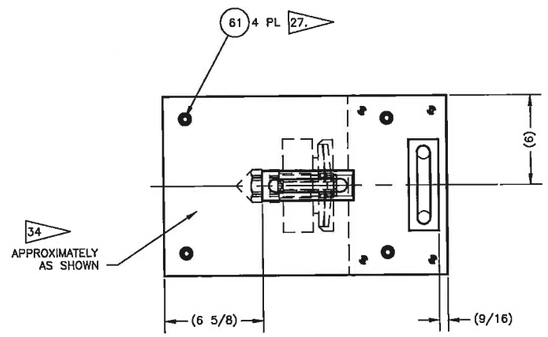

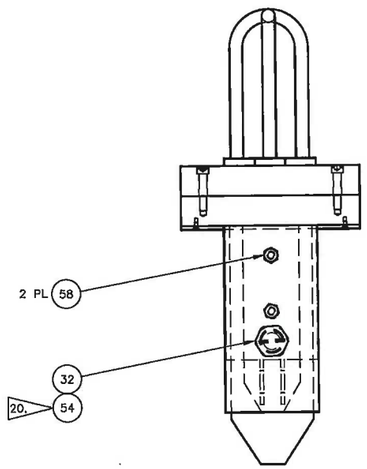

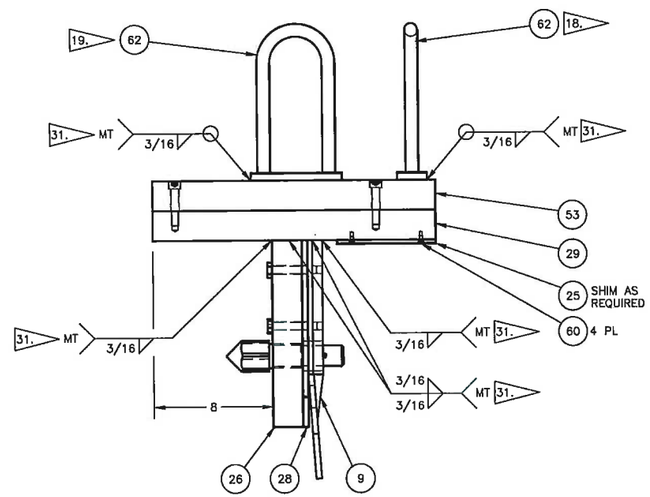

1 2" COUNTERWEIGHT ASSEMBLY
SCALE: 1/4
32.

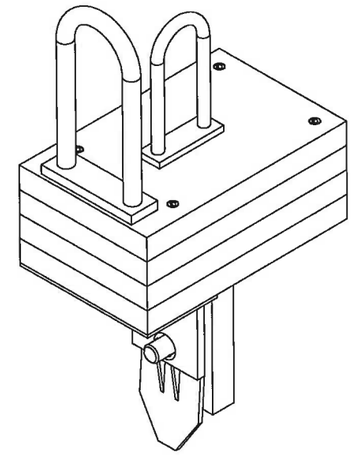

ISO VIEW
SCALE: NTS

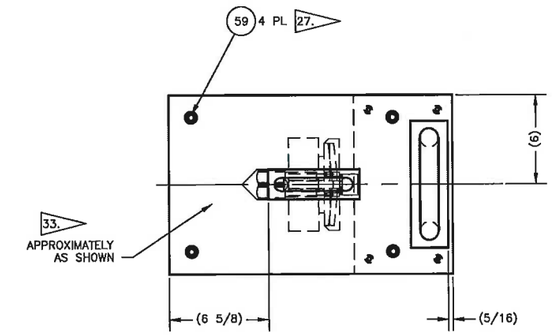

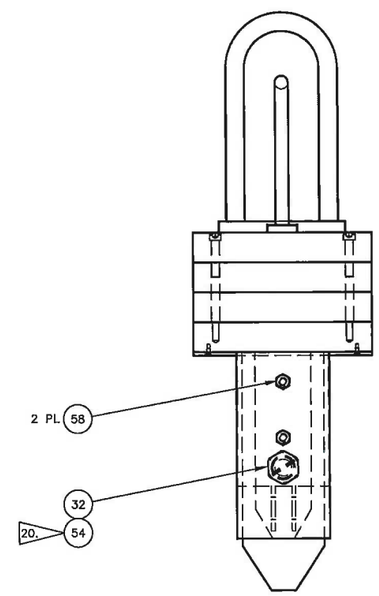

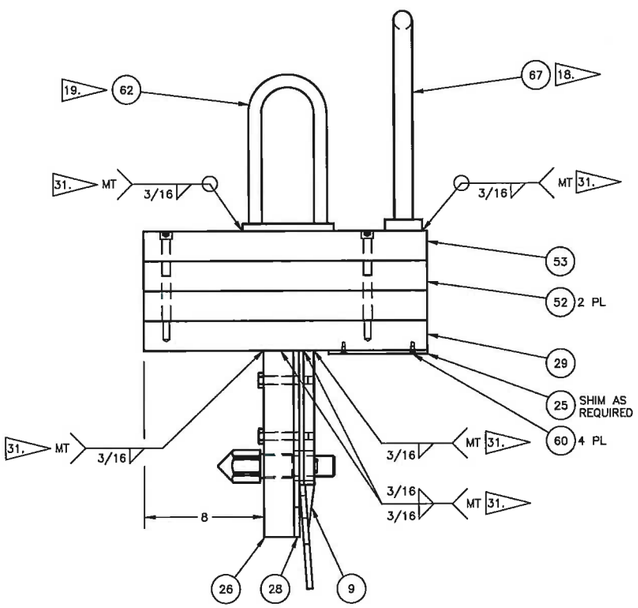

2 3" COUNTERWEIGHT ASSEMBLY
SCALE: 1/4
32.

REV NO	DESCRIPTION
1	RELEASED PER EDT-882646

DWG NUMBER	TITLE	REF NUMBER	TITLE
		REFERENCES	

BLDG NO 242A

INDEX NO 9901

CAUTION: NOT COMPLETE WITHOUT CURRENT CHANGE DOCUMENTS FROM DATABASE

	NAME	DATE	COMPANY
DRAWN BY	N L FOSS		CEMCI
TRACED BY / DESIGN	P M MCELROY		CEMCI
DESIGN ENGINEER	G J BOGEN		CEMCI

U.S. DEPARTMENT OF ENERGY
Office of River Protection

WALL NOZZLE ASSEMBLIES
242-A PUMP ROOM

SIZE	DRAWING NUMBER	SHEET	REV
F	H-14-111832	6	1

SCALE SHOWN

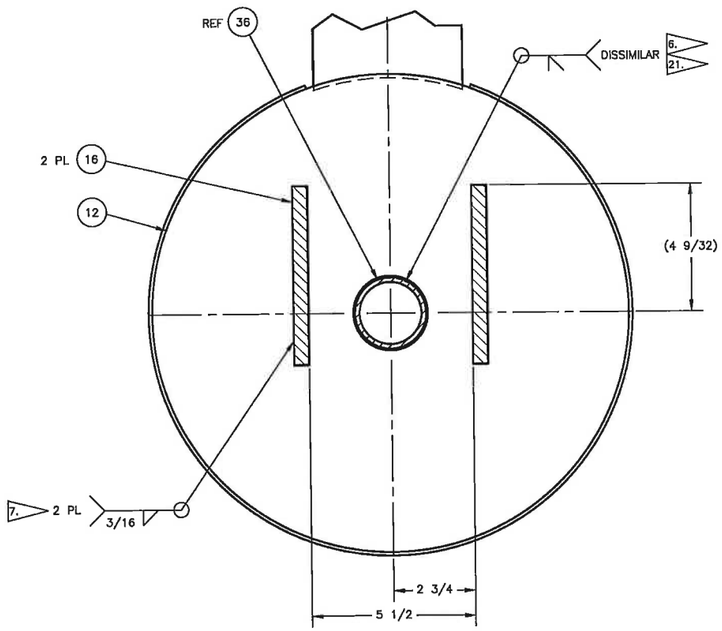

C/3 SECTION
SCALE: 1/2

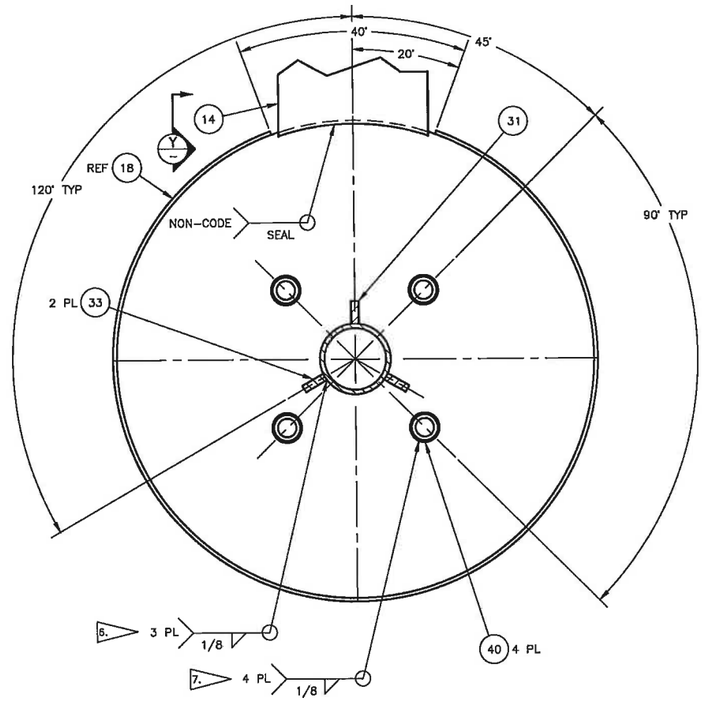

F/3 SECTION
SCALE: 1/2

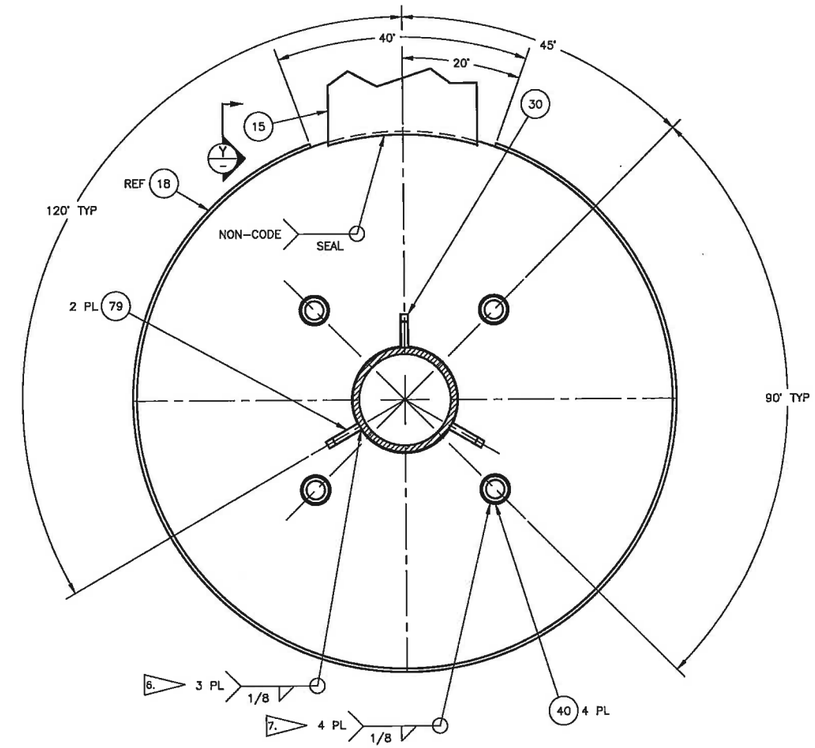

K/5 SECTION
SCALE: 1/2

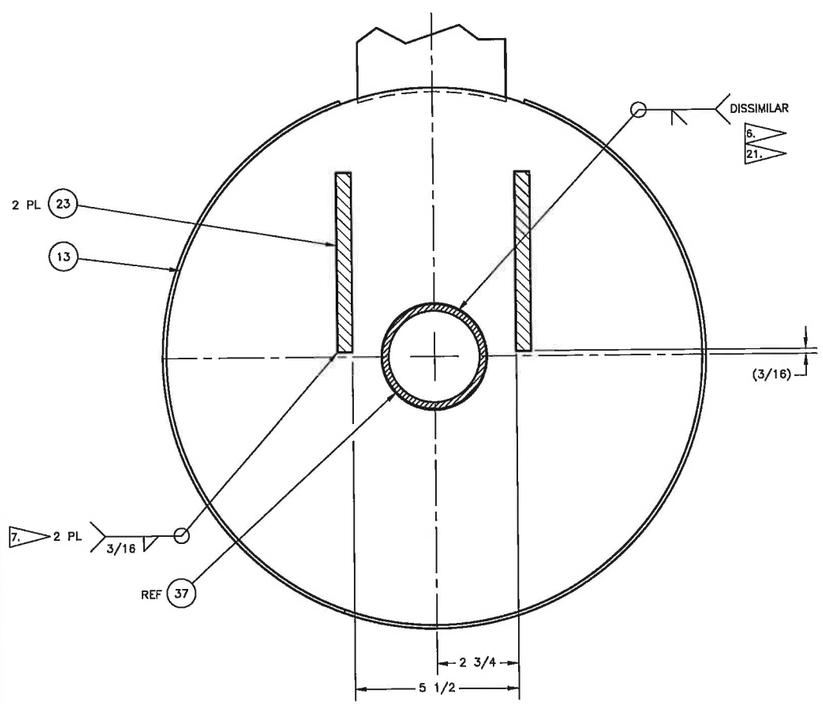

G/5 SECTION
SCALE: 1/2

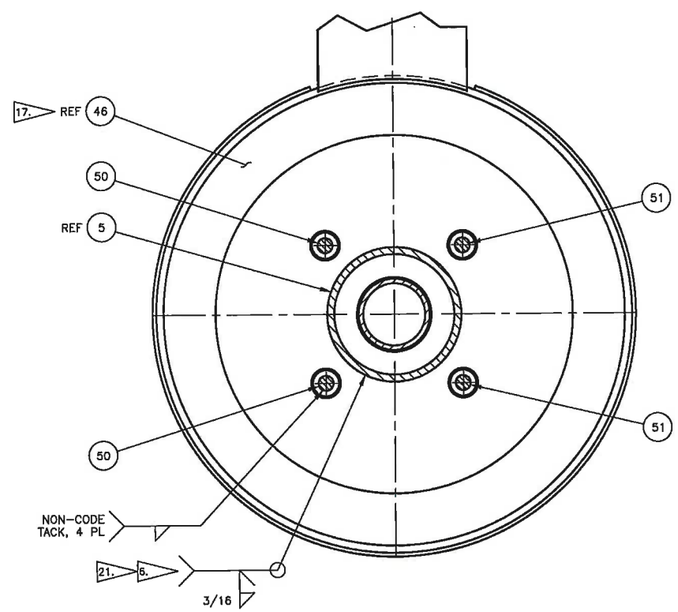

D/2 SECTION
SCALE: 1/2

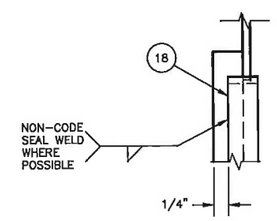

Y/– DETAIL
SCALE: 1/1

DWG NUMBER	TITLE	REF NUMBER	TITLE
		REFERENCES	

REV NO	DESCRIPTION
1	RELEASED PER EDT-882646
	REVISIONS

BLDG NO 242A
INDEX NO 9901

CAUTION: NOT COMPLETE WITHOUT CURRENT CHANGE DOCUMENTS FROM DATABASE

	NAME	DATE	COMPANY
DRAWN BY	J T FOSS		CTAES
DSGN RD CHECK	P M MCELROY		CTAES
DESIGN REVIEW	G J ROGEN		CTAES

U.S. DEPARTMENT OF ENERGY
Office of River Protection

WALL NOZZLE ASSEMBLIES
242-A PUMP ROOM

SIZE F | DRAWING NUMBER H-14-111832 | SHEET 7 | REV 1

SCALE SHOWN

STATE OF WASHINGTON
JOHN COLIN BENDIXSEN
4/29/20

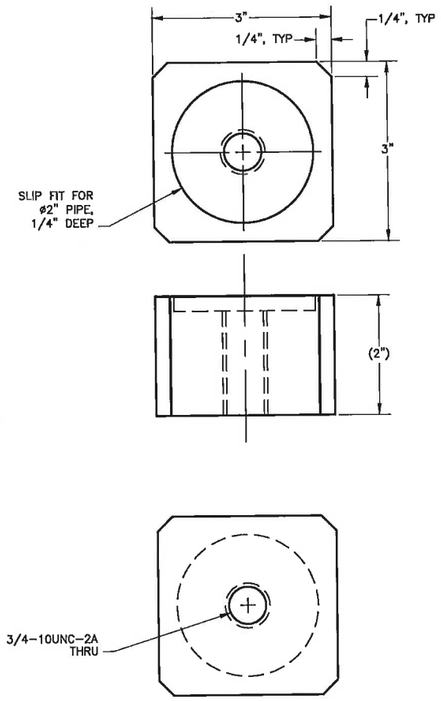

34 BLOCK – 1
SCALE: 1/1

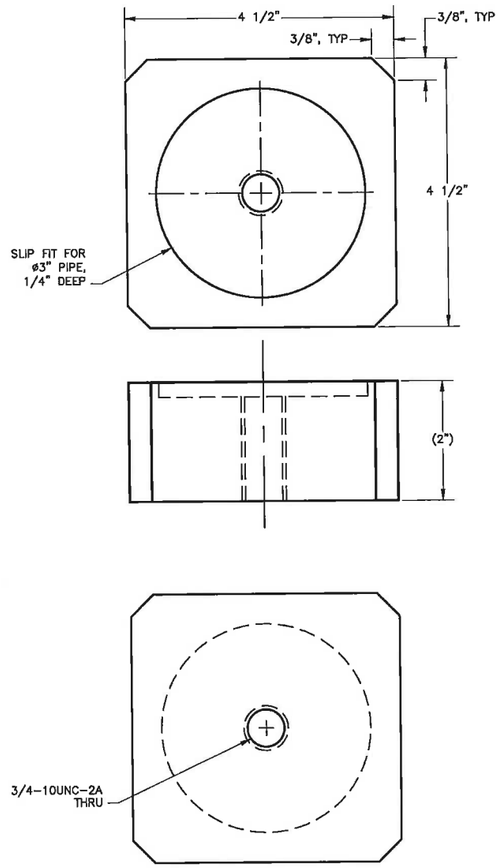

35 BLOCK – 2
SCALE: 1/1

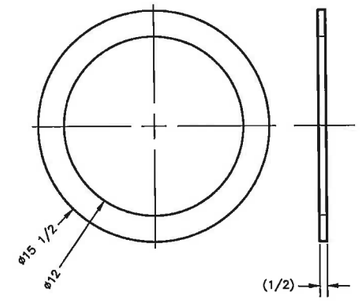

46 GASKET 1
SCALE: 1/4

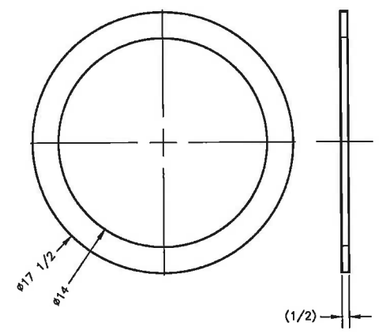

47 GASKET 2
SCALE: 1/4

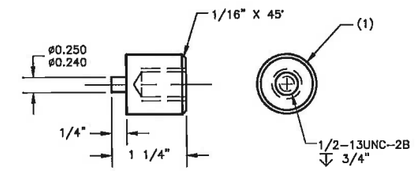

40 ALIGNMENT LUG
SCALE: 1/1

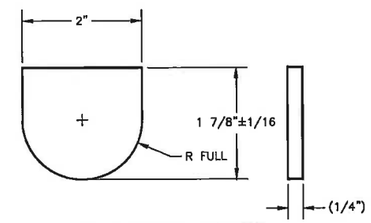

78 FULCRUM PLATE
SCALE: 1/1

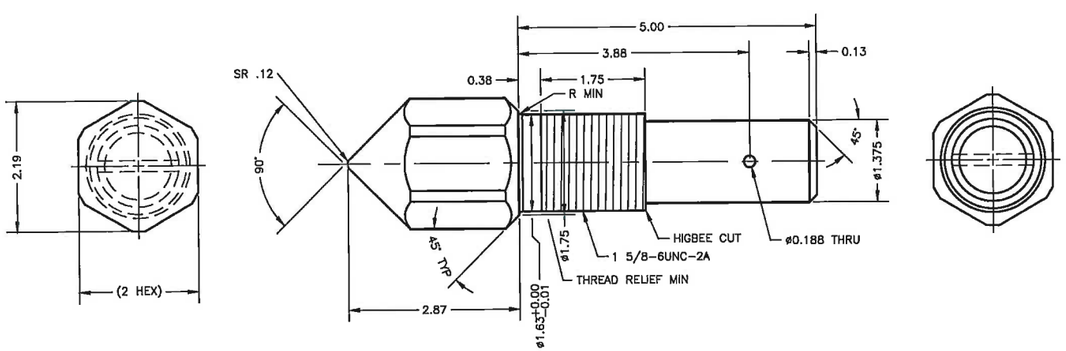

32 ATTACHMENT SCREW
SCALE: 1/1

4/29/20

REV NO	DESCRIPTION
1	RELEASED PER EDT-882646

DWG NUMBER	TITLE	REF NUMBER	TITLE
		REFERENCES	

BLDG NO 242A

INDEX NO 9901

CAUTION: NOT COMPLETE WITHOUT CURRENT CHANGE DOCUMENTS FROM DATABASE

	NAME	DATE	COMPANY
DRAWN BY	J J FOSS		CH2M
CHECKED BY	P M MCELROY		CH2M
DESIGN ENGINEER	G J BOGEN		CH2M

U.S. DEPARTMENT OF ENERGY
Office of River Protection

WALL NOZZLE ASSEMBLIES
242-A PUMP ROOM

SIZE F | DRAWING NUMBER H-14-111832 | SHEET 8 | REV 1

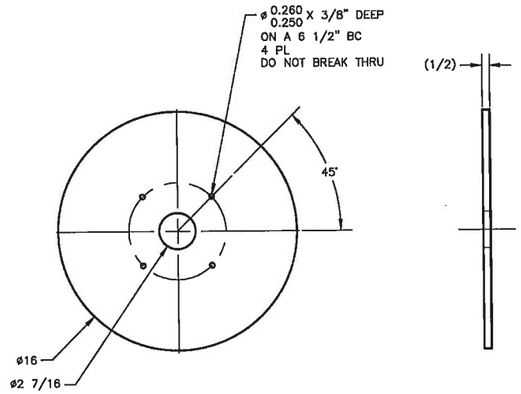

12 PLATE 1
SCALE: 1/4

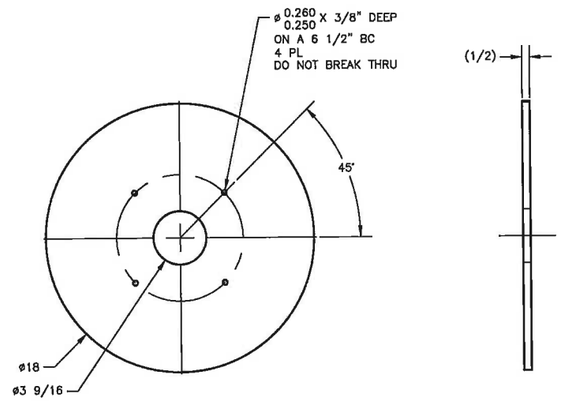

13 PLATE 2
SCALE: 1/4

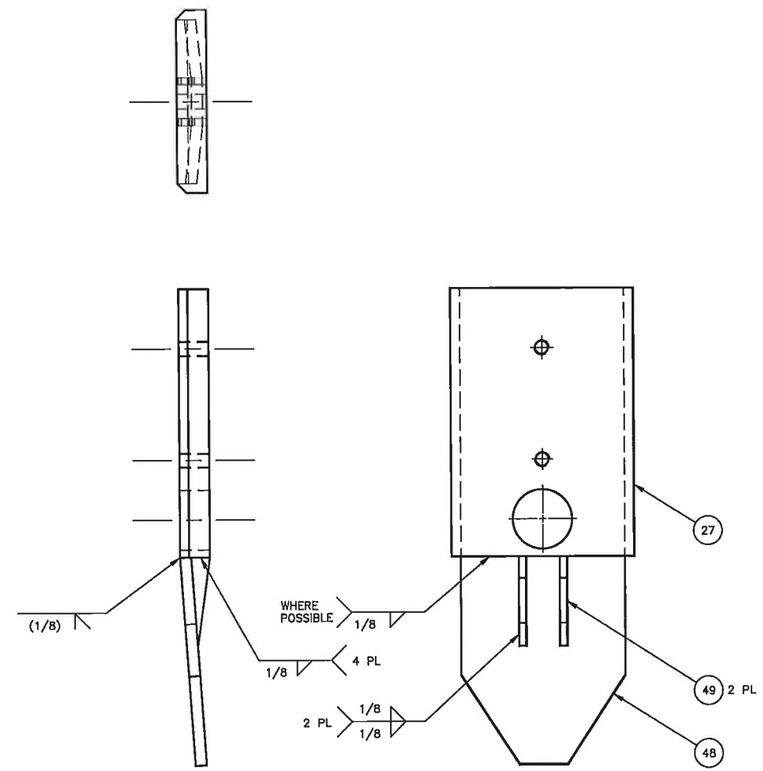

9 GUIDE WELDMENT
SCALE: 1/2

4/29/10

REF NUMBER	TITLE

DWG NUMBER	TITLE
	REFERENCES

REV NO	DESCRIPTION
1	RELEASED PER EDT-882646

CAUTION: NOT COMPLETE WITHOUT CURRENT CHANGE DOCUMENTS FROM DATABASE

BLDG NO 242A

INDEX NO 9901

	NAME	DATE	COMPANY
DRAWN BY	J T FOSS		DEMCO
ENGRG CONCURR	P M MCELROY		DEMCO
DESIGN ENGINEER	G J BOGEN		DEMCO

U.S. DEPARTMENT OF ENERGY
Office of River Protection

WALL NOZZLE ASSEMBLIES
242-A PUMP ROOM

SIZE	DRAWING NUMBER	SHEET	REV
F	H-14-111832	9	1

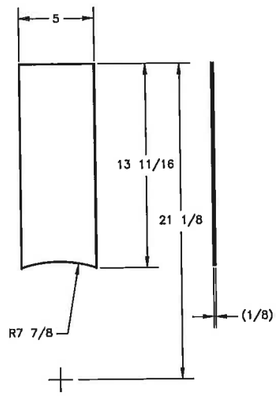

14 PLATE 3
SCALE: 1/4

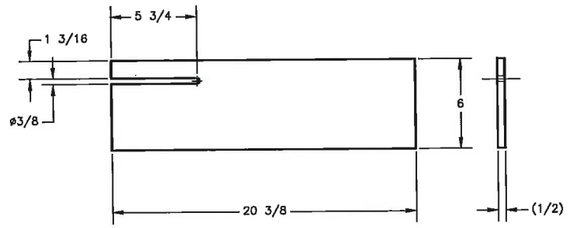

16 PLATE 5
SCALE: 1/4

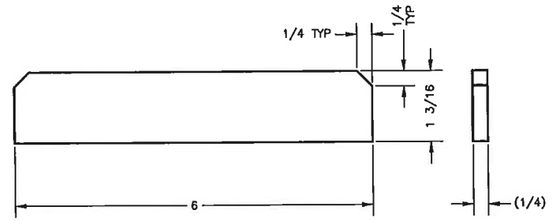

30 WING 1
SCALE: 1/1

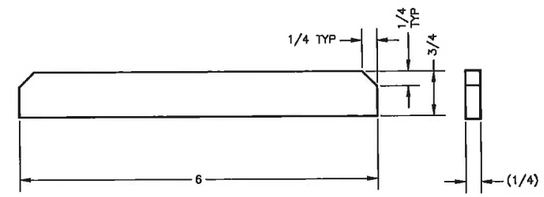

31 WING 2
SCALE: 1/1

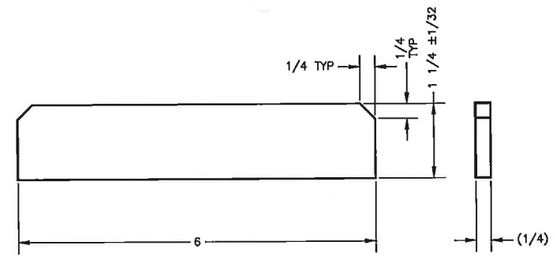

79 WING 4
SCALE: 1/1

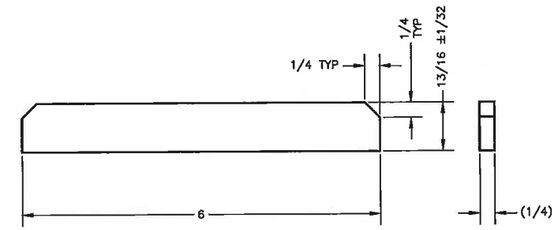

33 WING 3
SCALE: 1/1

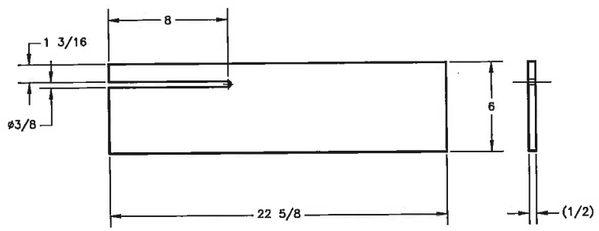

23 PLATE 9
SCALE: 1/4

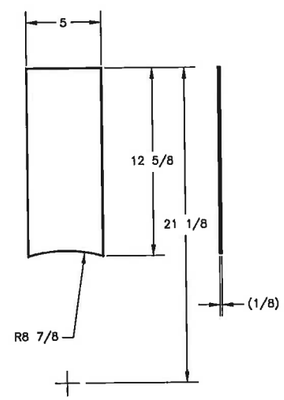

15 PLATE 4
SCALE: 1/4

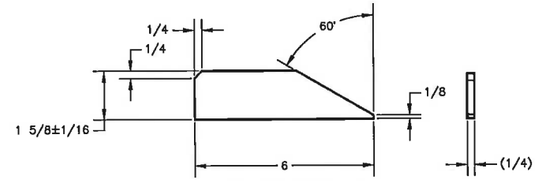

17 PLATE 6
SCALE: 1/2

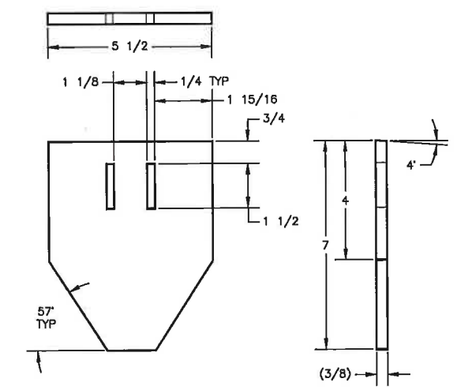

48 GUIDE PLATE
SCALE: 1/2

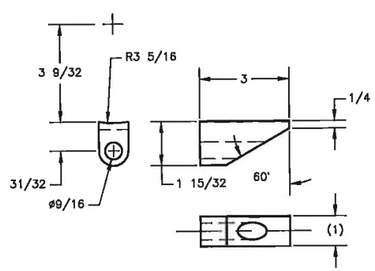

21 GUIDE BLOCK 1
SCALE: 1/2

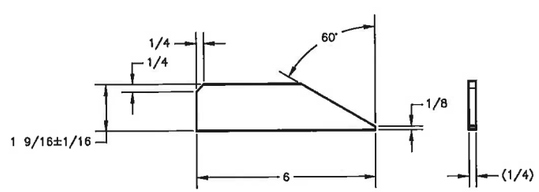

20 PLATE 7
SCALE: 1/2

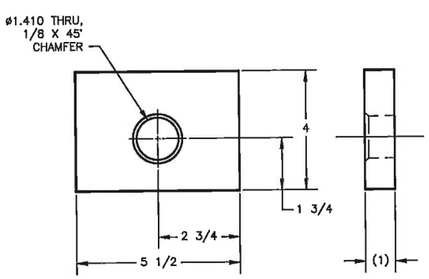

19 PLATE 8
SCALE: 1/2

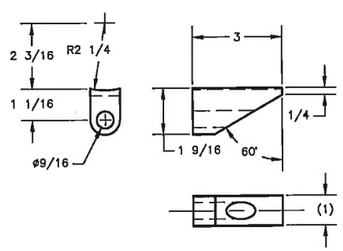

22 GUIDE BLOCK 2
SCALE: 1/2

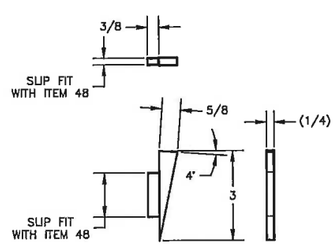

49 GUSSET
SCALE: 1/2

A/29/20

REV NO	DESCRIPTION
1	RELEASED PER EDT-882646

REVISIONS

DWG NUMBER	TITLE	REF NUMBER	TITLE

REFERENCES

CAUTION: NOT COMPLETE WITHOUT CURRENT CHANGE DOCUMENTS FROM DATABASE

BLDG NO 242A

INDEX NO 9901

	NAME	DATE	COMPANY
DRAWN BY	J. FOSS		
SQUIRED CHECKED	P. M. MCELROY		
DESIGN ENGINEER	G. J. BOGEN		

U.S. DEPARTMENT OF ENERGY
Office of River Protection

WALL NOZZLE ASSEMBLIES
242-A PUMP ROOM

SIZE F | DRAWING NUMBER H-14-111832 | SHEET 10 | REV 1

SCALE SHOWN

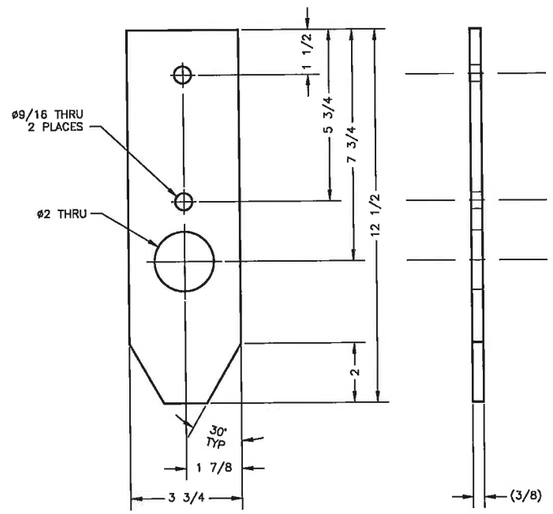

28 COUNTERWEIGHT 3
SCALE: 1/2

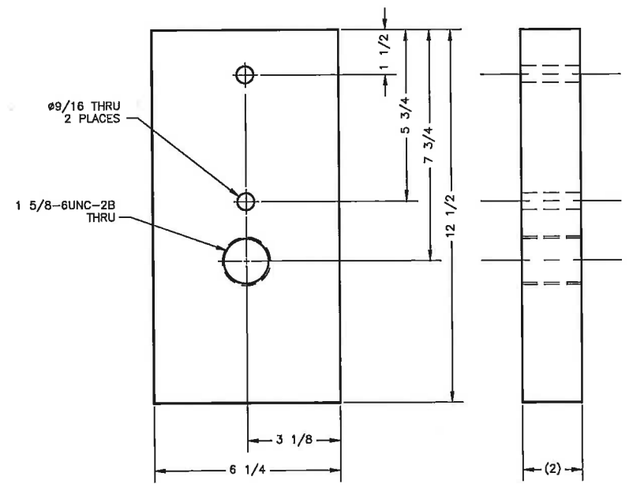

26 COUNTERWEIGHT 1
SCALE: 1/2

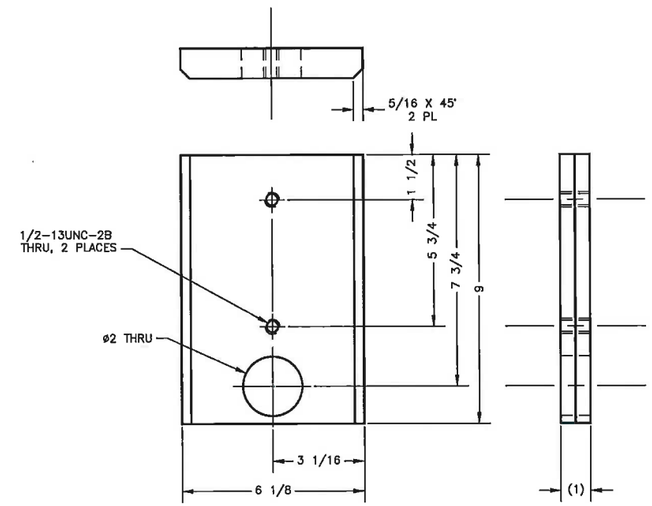

27 COUNTERWEIGHT 2
SCALE: 1/2

4/29/20

DWG NUMBER	TITLE	REF NUMBER	TITLE
		REFERENCES	

REV NO	DESCRIPTION
1	RELEASED PER EDT-882646

BLDG NO 242A

INDEX NO 9901

CAUTION: NOT COMPLETE WITHOUT CURRENT CHANGE DOCUMENTS FROM DATABASE

	NAME	DATE	COMPANY
DRAWN BY	J FOSS		CH2M
TECH REVIEWED BY	P M MCELROY		CH2M
DESIGN ENGINEER	G J BOGEN		CH2M

U.S. DEPARTMENT OF ENERGY
Office of River Protection

WALL NOZZLE ASSEMBLIES
242-A PUMP ROOM

SIZE	DRAWING NUMBER	SHEET	REV
F	H-14-111832	11	1

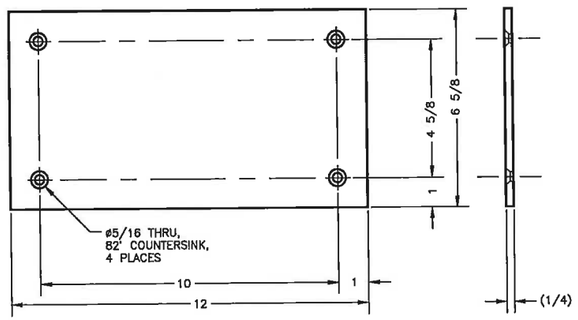

25 UHMWPE SHEET
SCALE: 1/2

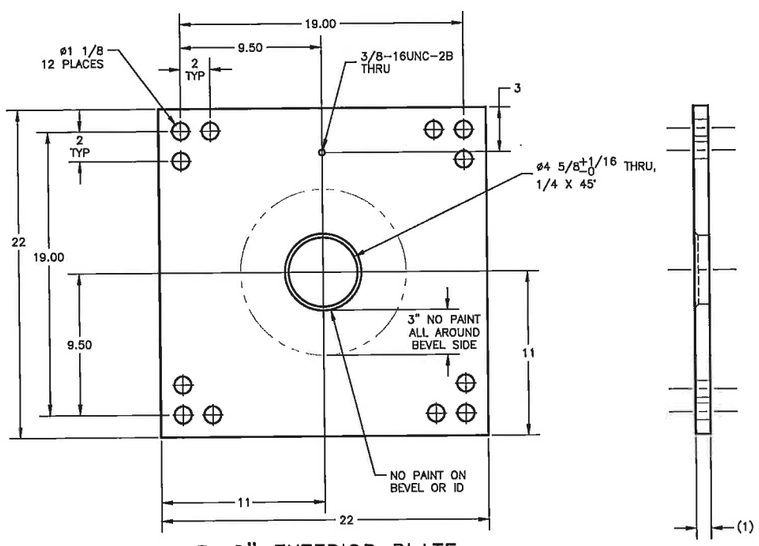

70 2" EXTERIOR PLATE
SCALE: 1/4

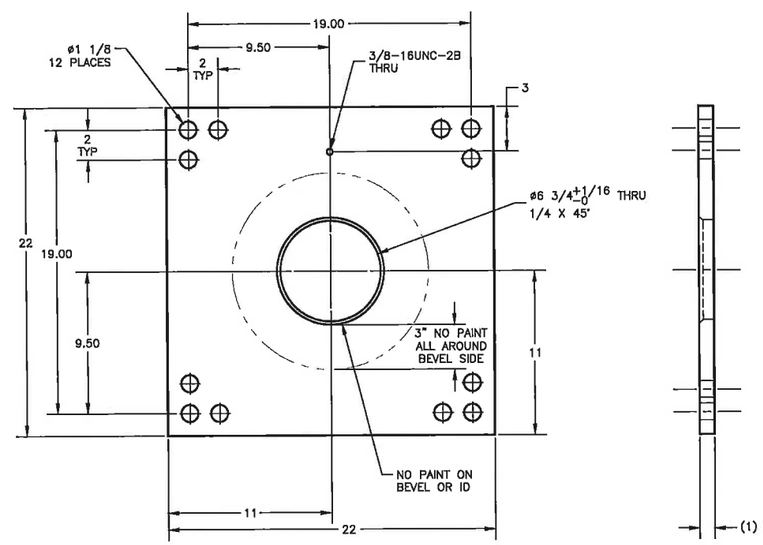

71 3" EXTERIOR PLATE
SCALE: 1/4

4/29/20

DWG NUMBER	TITLE	REF NUMBER	TITLE
		REFERENCES	

REV NO	DESCRIPTION
1	RELEASED PER EDT-882646

CAUTION: NOT COMPLETE WITHOUT CURRENT CHANGE DOCUMENTS FROM DATABASE

BLDG NO 242A

INDEX NO 9901

	NAME	DATE	COMPANY
DRAWER	J T FOSS		
CHECKER	P M MCELROY		
DESIGN ENGINEER	G J BOGEN		

U.S. DEPARTMENT OF ENERGY
Office of River Protection

WALL NOZZLE ASSEMBLIES
242-A PUMP ROOM

SIZE	DRAWING NUMBER	SHEET	REV
F	H-14-111832	12	1

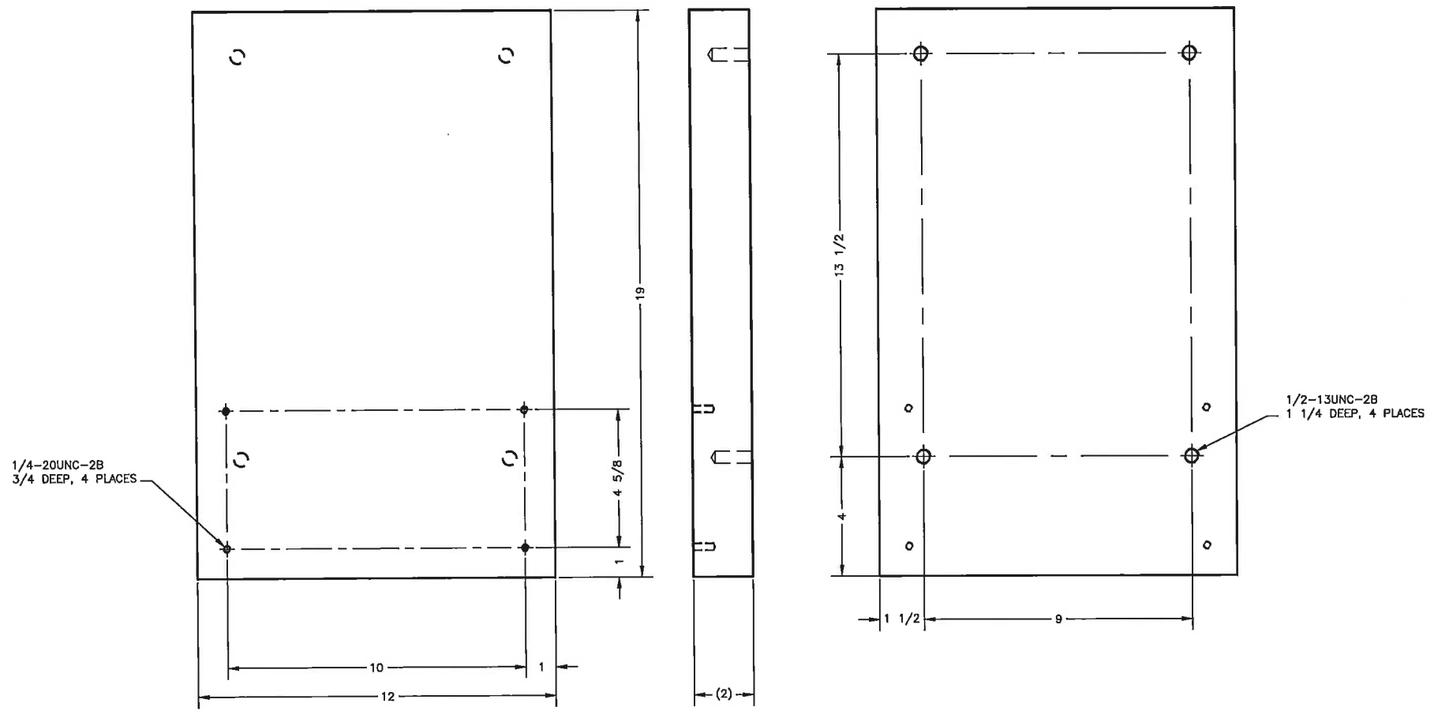

29 COUNTERWEIGHT 4
SCALE: 1/2

4/29/20

REV NO	DESCRIPTION
1	RELEASED PER EDT-882646

DWG NUMBER	TITLE

REFERENCES	
REF NUMBER	TITLE

BLDG NO 242A

INDEX NO 9901

CAUTION: NOT COMPLETE WITHOUT CURRENT CHANGE DOCUMENTS FROM DATABASE

	NAME	DATE	COMPANY
DRAWN	K J FOSS		CEARC
CHKD AND CORRECT	P M MCELROY		CEARC
DESIGN ENGINEER	G J BOGEN		CEARC

U.S. DEPARTMENT OF ENERGY
Office of River Protection

WALL NOZZLE ASSEMBLIES
242-A PUMP ROOM

SIZE	DRAWING NUMBER	SHEET	REV
F	H-14-111832	13	1

SCALE SHOWN

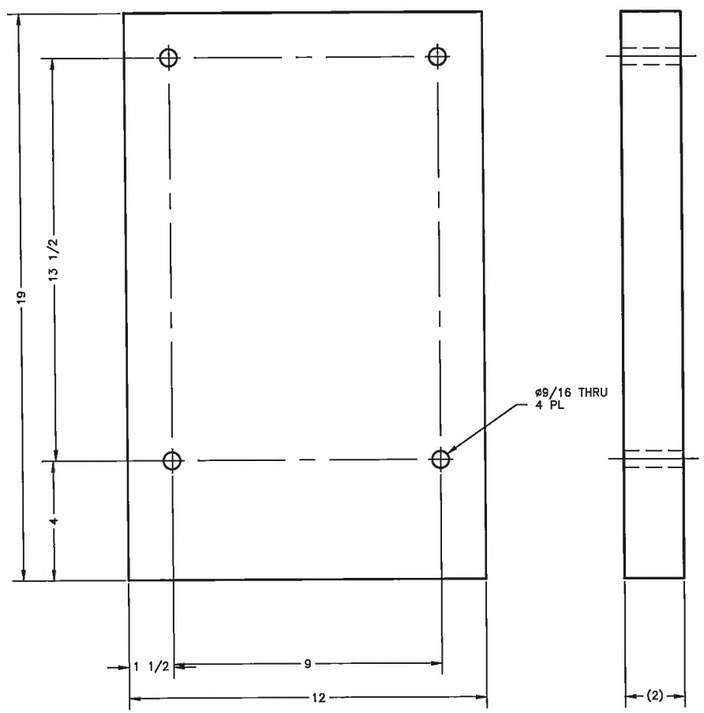

52 COUNTERWEIGHT 5
SCALE: 1/2

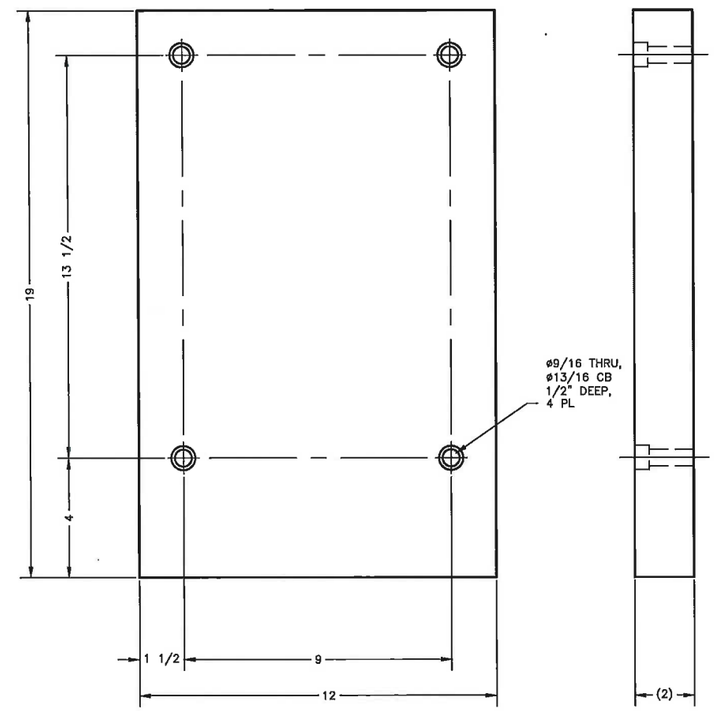

53 COUNTERWEIGHT 6
SCALE: 1/2

4/29/20

DWG NUMBER	TITLE	REF NUMBER	TITLE
		REFERENCES	

REV NO	DESCRIPTION
1	RELEASED PER EDT-882646

CAUTION: NOT COMPLETE WITHOUT CURRENT CHANGE DOCUMENTS FROM DATABASE

BLDG NO 242A

INDEX NO 9901

	NAME	DATE	COMPANY
DRAWN BY	J FOSS		CTACS
DRAFTING CHECKER	F M MCELROY		CTACS
DESIGN ENGINEER	G J BOGEN		CTACS

U.S. DEPARTMENT OF ENERGY
Office of River Protection

WALL NOZZLE ASSEMBLIES
242-A PUMP ROOM

SIZE	DRAWING NUMBER	SHEET	REV
F	H-14-111832	14	1

RPP-CALC-63208
Revision 1

Structural Analysis for the 242-A Pump Room Wall Nozzle Assemblies Plus Counterweight Lifting Devices

Prepared by

JD Yunker
Columbia Energy and Environmental Services, Inc. for
Washington River Protection Solutions, LLC

Date Published
April 2020

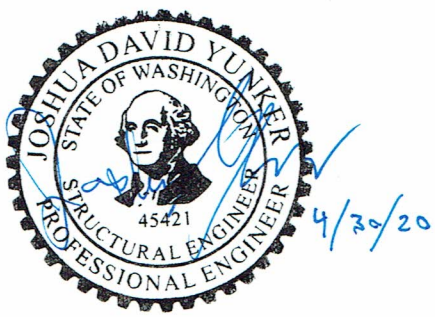

Prepared for the U.S. Department of Energy
Office of River Protection

Contract No. DE-AC27-08RV14800

Columbia Energy AND ENVIRONMENTAL SERVICES

Design Verification Checklist

Doc. Number	Rev.	Title
RPP-CALC-63208	1	Structural Analysis for the 242-A Pump Room Wall Nozzle Assemblies Plus Counterweight Devices

Verification Method (Check One)

☒ Review ☐ Alternate Calculation ☐ Qualification Testing

Verification Results

Yes	No	NA	
☒	☐	☐	Design inputs correctly selected and cited and correctly incorporated.
☒	☐	☐	Input data were checked for consistency with original source information.
☐	☐	☒	Design inputs for interfacing organizations are specified
☐	☐	☒	Necessary assumptions are explicit, adequately described and supported.
☐	☐	☒	Unverified assumptions (requiring verification) are clearly identified.
☒	☐	☐	Analytical and technical approaches and results are reasonable and appropriate.
☒	☐	☐	The version or revision of each reference is cited
☒	☐	☐	Design output is reasonable for design inputs
☒	☐	☐	Results and conclusions address all points in the purpose.
☒	☐	☐	Conclusions are consistent with analytical results and applicable limits.
☐	☐	☒	Suitable materials, parts, processes, and inspection and testing criteria specified
☒	☐	☐	All comments have been adequately addressed and dispositioned
☒	☐	☐	Calculations are sufficiently detailed such that a technically qualified person could reproduce the calc.
☒	☐	☐	Design method(s) are appropriately used and documented.
☒	☐	☐	Computer Program(s) are appropriately used and results support design.
☒	☐	☐	For pre-verified computer programs the V&V document is referenced and specific computer used for the calculation is identified

Ensure calculations that use software include a paper printout, microfiche, CD-ROM, or other electronic file of the input data and identification to the computer, computer codes, and versions used, or provide alternate documentation to uniquely and clearly identify the exact coding and execution process.

Checker Name	Signature	Date
Ryan Lang		4/30/2020

Columbia Energy
AND ENVIRONMENTAL SERVICES

Project Title:	242-A Evaporator Slurry Line Replacement	**Project No.:**	WRPS 67247 Release 5
		Calculation No.:	RPP-CALC-63208
Calculation Title:	Structural Analysis for the 242-A Pump Room Wall Nozzle Assemblies plus Counterweight Lifting Devices		

Revision	**0**		**1**		**2**	
Originator	On File	12/4/2019		4/30/20		
	Joshua Yunker	Date	Joshua Yunker	Date	Name	Date
Checker	On File	12/4/2019		4/30/20		
	Ryan Lang	Date	Ryan Lang	Date	Name	Date
Project Manager	On File	12/4/2019		4/30/20		
	Ralph Dunham	Date	Ralph Dunham	Date	Name	Date

Attachments

Attachment No.	Title	No. of Pages
1	RISA-3D Pump Room Wall Model	19
2	RISA-3D Nozzle Assembly and Anchorage	218

Affected Documents

Document No.	Document Title	Revision No.
	N/A	

Revision	Description of Revision
0	Initial release.
1	Revisions due to design evolution

1806 Terminal Drive
Richland, Washington 99354
www.columbia-energy.com
Phone: 509.946.7111
Fax: 509.946.9363

1.0 INTRODUCTION/BACKGROUND

Slurry Line (SL) 167 failed a recent pressure test. SL-168 also is in need of repair. Part of the slurry line replacement will require wall penetrations to be bored through the west wall of the 242A evaporator building and new nozzles for three replacement lines installed. Temporary lifting devices will be required to install the nozzles within the pump room.

Additionally, four 2" cores will be required through the south wall of the building, at Grids 1 and C, for routing of new electrical conduit.

2.0 OBJECTIVE/PURPOSE

The objective of this calculation is to qualify the existing west wall of the evaporator building at the pump room for the new wall penetrations, and to qualify new nozzle anchors at the side of the existing pump room wall. The lifting devices will also be qualified.

The location of the four new electrical conduit cores will be reviewed against the drawings to determine the requirements for qualifying the existing wall for the new cores.

3.0 ASSUMPTIONS

None

4.0 DESIGN INPUTS

1. Concrete 28 day compressive strength at pump room wall is 3,000psi per general notes, H-2-69277.
2. Concrete reinforcing strength at pump room wall is 60,000psi per general notes, H-2-69277.
3. Wall vertical reinforcing is #5 @ 12" on center per detail 7, sheet 1, H-2-69278.
4. Outside face horizontal reinforcing is #7 @ 9" on center per detail 7, sheet 1, H-2-69278.
5. Inside face horizontal reinforcing is #5 @ 18" on center per detail 7, sheet 1, H-2-69278.
6. The Evaporator walls are NDC-2/SDC-2 and Limit State C per MT-50400 Table 3.
7. Structural requirements in accordance with TFC-ENG-STD-06 Rev. D-1.
8. Nozzle envelope loading from transfer lines are are listed in Section 10.4.1
9. Nozzle Loading from jumpers inside pump room are listed in Section 10.4.1. (reference Tables I1-5 and I1-6 of Appendix I, RPP-CALC-63213).

5.0 METHOD OF ANALYSIS

Pump Room Wall

Per MT-50400, the evaporator wall is Safety Significant and Hazard Category 2. Using the "Component Performance Parameter Requirements" in Table 3 of MT-50400, NDC = 2, and the Limit State is C. Per Table 5 of TFC-ENG-STD-06, acceptable code of design is ASCE 7-10. Additionally footnote 1 of Table 5 references the use of IBC 2015. The concrete code referenced in IBC 2015 is ACI 318-14. This code will be used to qualify the evaporater walls. The walls will be cracked in the RISA model to 35% of their gross cross sectional stiffness properties in accordance with Table 6.6.3.1.1(a) of ACI 318-14. Total area of horizontal steel is 1.0 square inches per vertical foot for both curtains per design inputs. Walls are checked with #5 @ 12" horizontally each face, a total of 0.62 square inches per vertical foot, this is conservative.

The new penetrations will be placed in close proximity to one another. Because of the close spacing of the penetrations the wall will effectively behave as if a single blockout was made. Accordingly, the zone in which the penetrations occur will be modeled as a single square blockout. This method of analysis will ensure the wall has adequate strength to span over and around the weakened zone at the core locations.

The existing nozzle penetrations going through the Grid A wall in the vicinity of the pump room are shown on drawing H-2-99009. Nozzle numbers are 12-20, and 34-35. These penetrations consist of 2" and 3" cast in place pipes. Because of their relatively small size, the fact that they are cast in with no cut vertical reinforcing, and the low resultant stresses in the wall due to wall out of plane loading, it is acceptable to disregard them in the following calculations.

The wall panel will be modeled from approximately Grid 1.5 to the wall at Grid 2. The vertical extent is from the basement level to the top of low roof. The cross walls will be modeled as boundary conditions. Applicable NPH loading based on TFC-ENG-STD-06 will be used to qualify the wall.

Design load combinations are as follow:

- LC1 = IBC 16-1: 1.4DL
- LC2 = IBC 16-2: 1.2DL + 1.6H + 0.5RLL
- LC3 = IBC 16-3: 1.2DL + 1.6RLL + 1.6H + 0.5WL
- LC4 = IBC 16-4: 1.2DL + 1.0WL + 1.6H + 0.5RLL
- LC5 = IBC 16-5: 1.2DL + 1.0ELY + 1.0EL + 1.6H + 0.2SL
- LC6 = IBC 16-6: 0.9DL + 1.0WL + 1.6H
- LC7 = IBC 16-7: 0.9DL - 1.0ELY + 1.0EL + 1.6H

South Wall Conduit Penetrations

Four (4) new 2" diameter cores will be required at the south wall of the evaporator building. Due to the small size of the cores, and the fact that no rebar will be cut, the existing 12" concrete wall with a double mat of reinforcing will not see more than a negligible decrease in stiffness and strength in this location. Because of this, no additional analysis is required for these cores.

Nozzle Anchorage Assembly

Nozzle loading is applied to the RISA model. The nozzle assembly is modeled using frame elements and shell elements. Joint reactions representing anchor forces are then determined. Compression only spring boundary conditions are used at the square anchor plate to represent the plate contacting the face of the existing concrete wall. Pinned boundary conditions are used to represent the four expansion anchors at the corners. The presence of grout within the core is neglected, and compression only links are used to represent the guide plates welded to the secondary containment pipe providing restraint against movement against the sides of the core opening. No boundary conditions are applied at the back circular plate: there will be a 1/2" EPDM gasket between the plate and the wall, preventing structural engagement of the plate against the existing wall. While the B03 restraint reactions are used as a minimum design criteria, the anchors and nozzle assembly will be analyzed for higher forces, which will be larger than the B03 reactions. As such, the design forces used in the anchorage and nozzle assembly calculations will provide a capacity envelope to compare against potentially changing transfer line reactions.

The design forces used to qualify the nozzles are identical between the 2" and 3" nozzles. Accordingly, the 2" nozzle will be qualified in this calculation, which will envelope the design of the 3" nozzle since the 3" nozzle is comprised of a larger central pipe core, and is therefore stronger than the 2" nozzle assembly.

Design load combinations are as follow:

- LC1 = 1.2DL + 1.2Thermal + 1.2GT1P1
- LC2 = 1.2DL + 1.4GE5

GT1P1 and GE5 are taken from the ASME B31.3 analysis, RPP-CALC-63213.

5.1 Use of Computer Software

RISA 3D® Version 16.0.5, structural analysis software package suitable for analyzing static structures was used. The software is verified and validated in accordance with ASME NQA-1, Subpart 2.7, Paragraph 302, on computer CE-IT-10131, documented in CE-SVVR-18-001. Computer CE-IT-10131 is a PC with Intel Xeon 4 core processor with Windows 10 Professional, 64-bit operating system.

MathCAD® version 15 computer software is used to document and organize this calculation. All MathCAD computations are checked with a handheld calculator. Microsoft® Excel® is used to tabulate RISA 3D results. Formulas and sample calculations used in Excel tables are shown where used.

ANSYS® version 19.1 was used to calculate CG values and weights for the wall nozzle assemblies. The software is verified and validated on computer CE-IT-10131, documented in CE-SVVR-19-001.

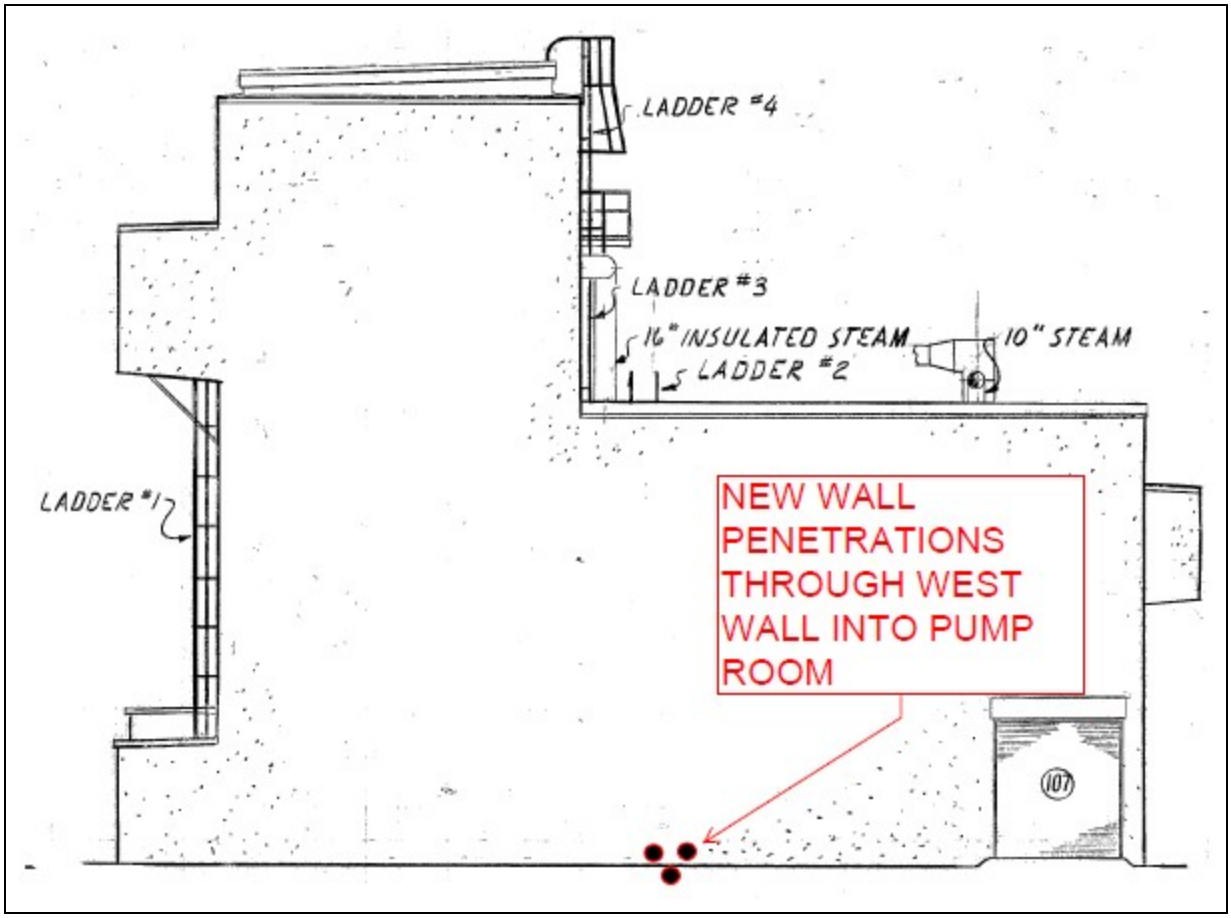

Figure 1. Approximate Location of New Penetrations Through West Wall of 242A Evaporator Building

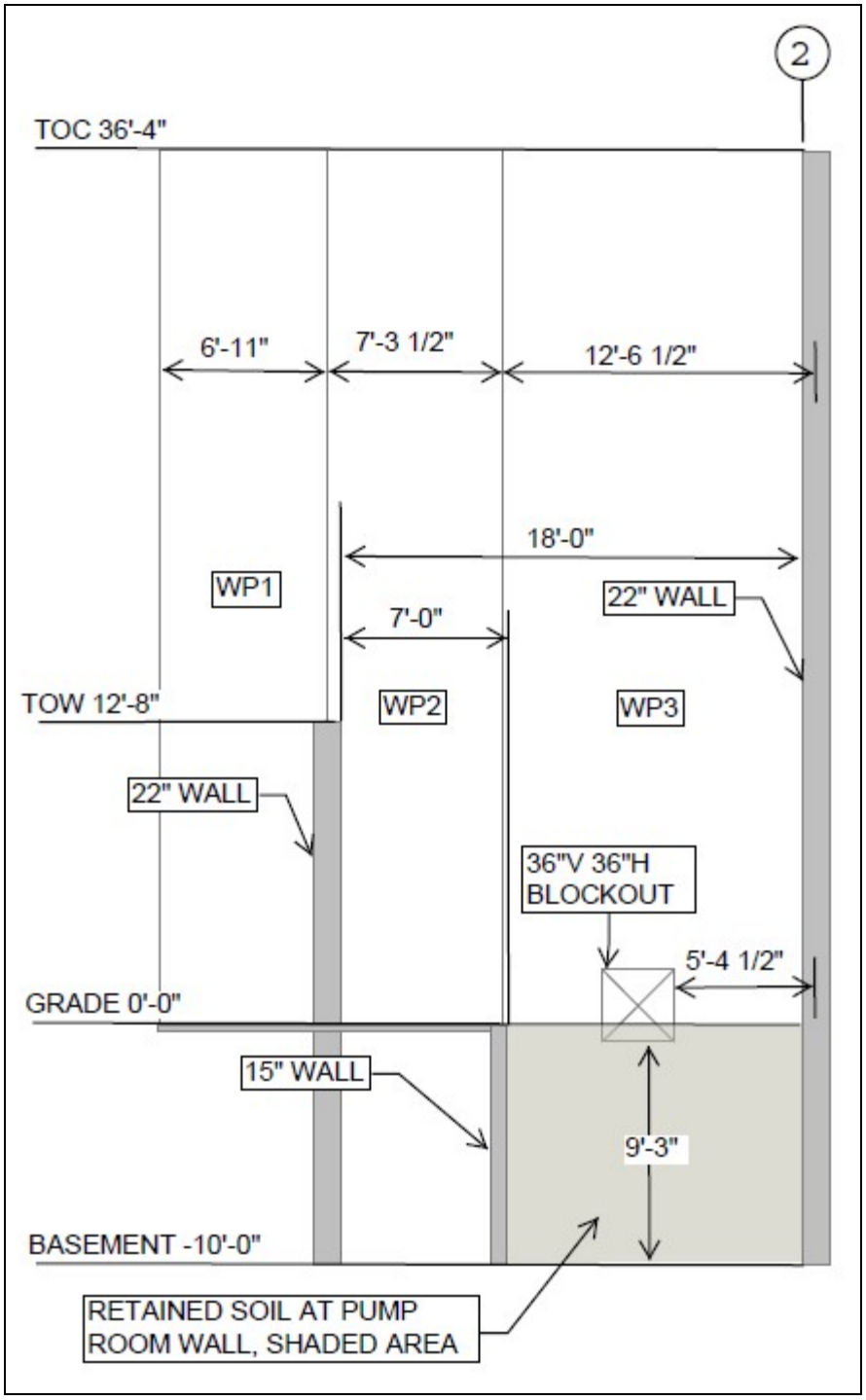

Figure 2. Risa 3D Wall Panel Configuration, Looking From Inside Building

Note that WP1 base is at 0'-0" elevation, and WP2 and WP3 base is at -10'-0" elevation. Additonally, retained soil loading is applied only to the shaded wall panel, the remainder of the walls have soil on both sides.

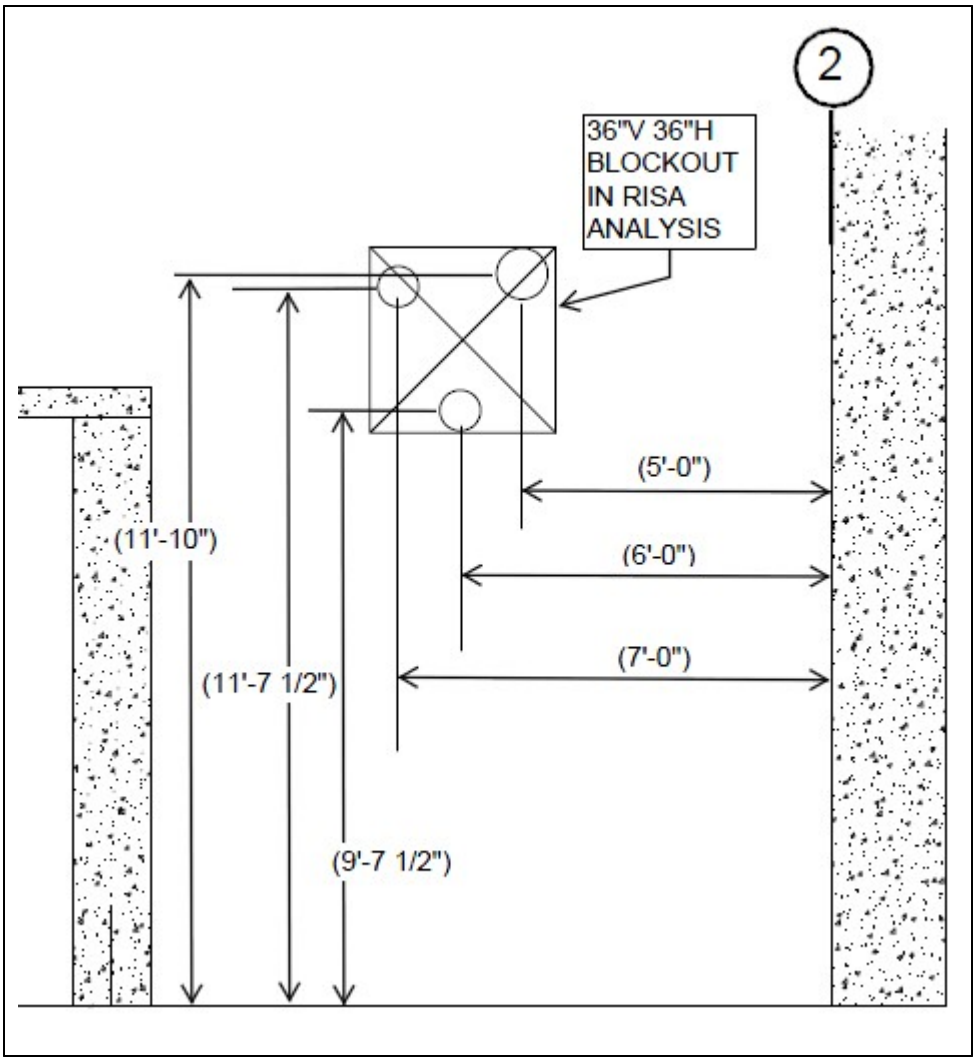

Figure 3. Approximate Core Locations, Looking From Inside Building

Note: Dimensions are approximate as shown. Reference ECN-715004 for record dimensions.

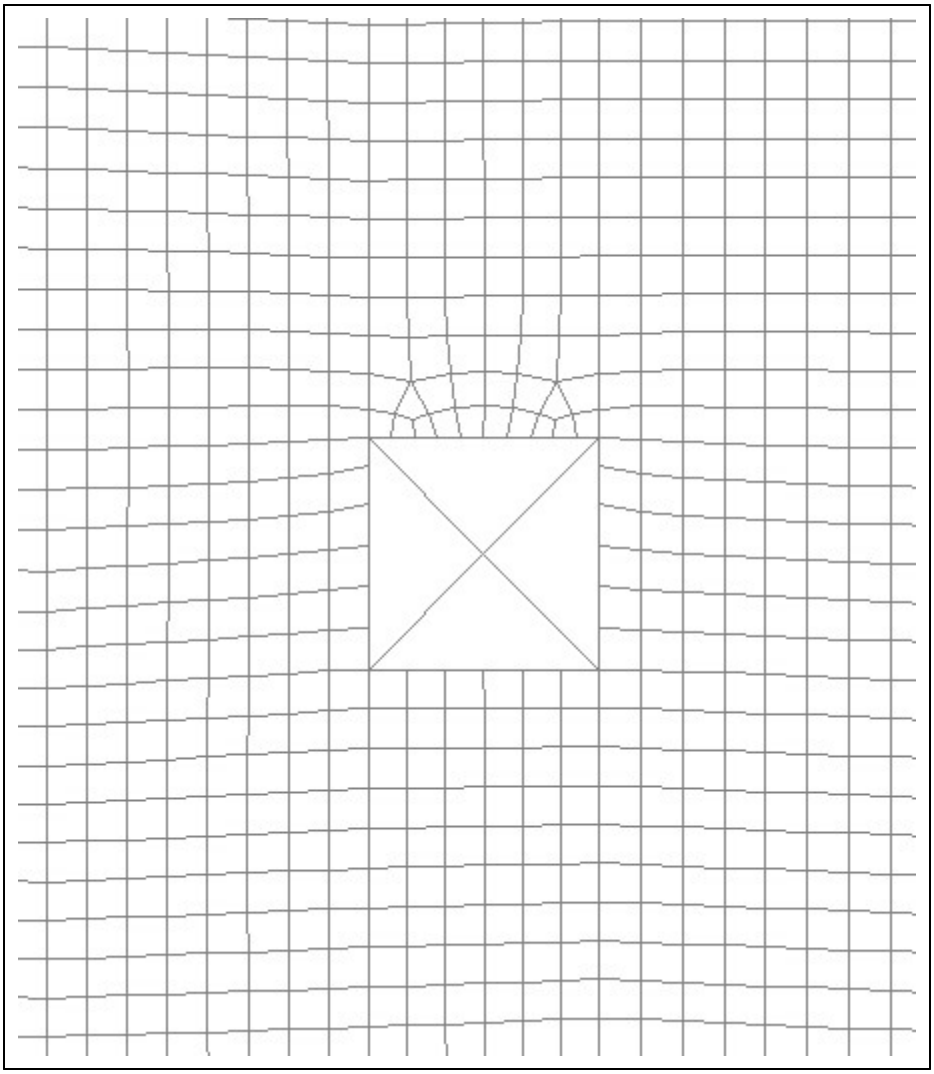

Figure 4. Wall Mesh at Opening

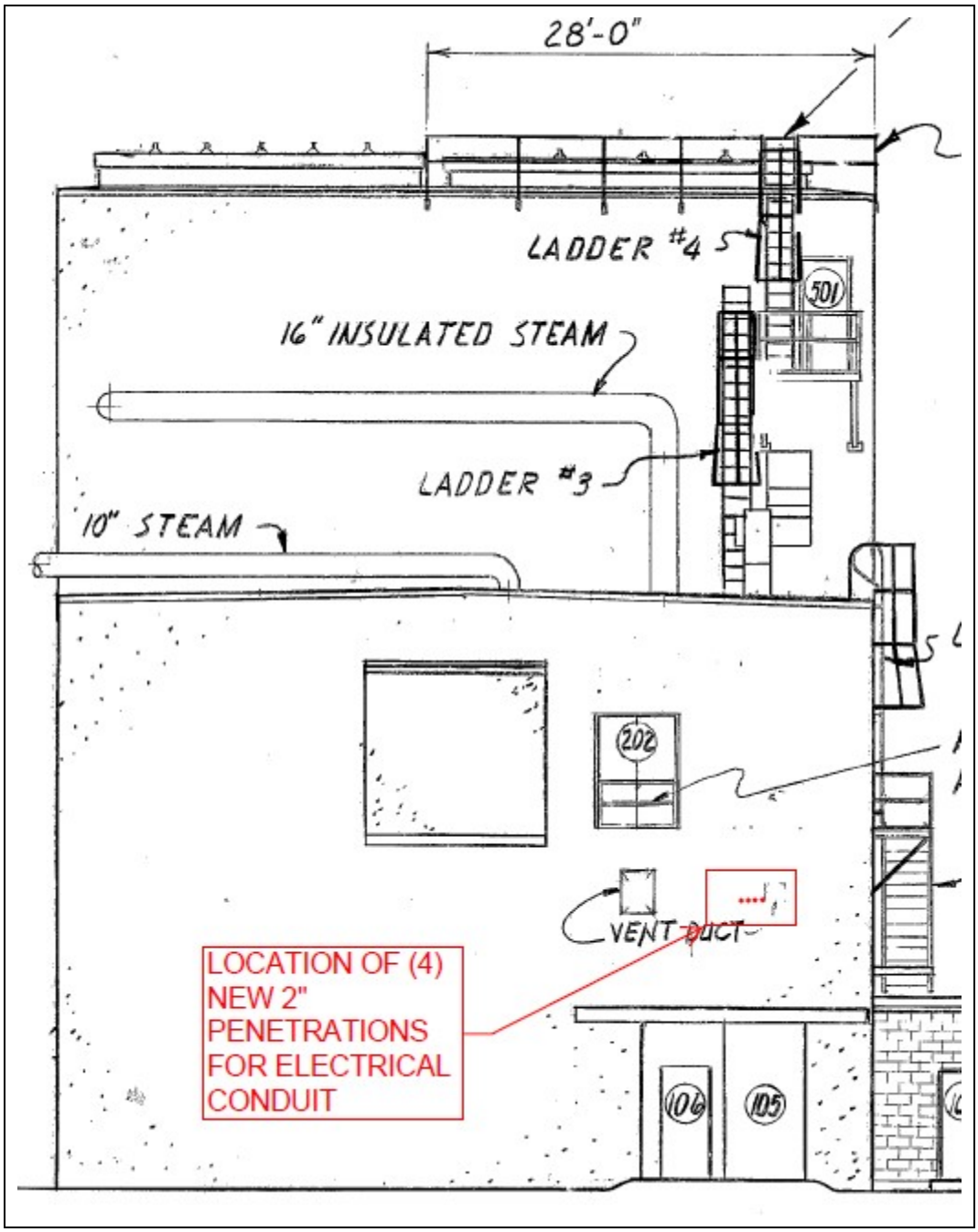

Figure 5. Approximate Location of New Penetrations Through South Wall of 242A Evaporator Building

6.0 RESULTS

6.1 Pump Room Wall

The maximum wall out-of-plane demand capacity ratio occurs at Wall Panel 3 = 0.345 for bending and 0.39 for shear. This is the wall panel with retained soil loading. See Section 10.3.

6.2 Nozzle Anchorage Assembly

The maximum plate stress is 11.2ksi under the applied loading. The maximum DCR for non plate members occurs at the 4" secondary containment pipe = 0.16. See Section 10.4.1.

Maximum anchor DCR = 0.33, with concrete breakout being the controlling failure mode. See Section 10.4.2

6.3 Nozzle Assembly Hoisting

The maximum demand capacity ratio that occurs at the connection of the hoisting fixture to the nozzle assembly is 0.43, which are the welds of the angle brackets to the nozzle plates. See Section 10.5.3.

7.0 CONCLUSIONS

The existing 242A pump room wall has capacity for the planned wall penetrations.

The nozzle anchor assembly has capacity for the applied loading.

The nozzle assemblies have capacity for the imparted loading during hoisting operations.

It is acceptable to place 4 new 2" penetrations in the south wall of the 242A building for new electrical conduit.

8.0 RECOMMENDATIONS

1. Wall nozzle anchors should be carbon steel 3/4" diameter Hilti KB-TZ expansion bolts with 5 1/2" effective embedment into the existing concrete. Follow all manufacturer recommendations for hole preparation and bolt installation, including criteria within ICC ESR-1917.
2. 5/16" carbon steel plate washers are planned for use at the anchorage plates.

9.0 REFERENCES

1. ASCE 7-10, *Minimum Design Loads for Buildings and Other Structures*, American Society of Civil Engineers, 2010.
2. IBC, *International Building Code*, 2015.
3. TFC-ENG-STD-06, Rev. D-1, *Design Loads for Tank Farm Facilities*, Washington River Protection Solutions, LLC, Richland, Washington.
4. AISC, *Steel Construction Manual*, Fourteenth Edition, American Institute of Steel Construction, 2011.
5. ACI 318-14, *Building Code Requirements for Structural Concrete*, American Concrete Institute, 2014.
6. AWS D1.1/D1.1M, *Structural Welding Code - Steel*, 18th Edition, American Welding Society, 2015.
7. ASME BTH-1, *Design of Below-the-Hook Lifting Devices*, 2017.
8. ASTM A36/A 36M, *Standard Specification for Carbon Structural Steel,* American Society of Testing and Materials, 2014.
9. ASTM A615/A 615M, *Standard Specification for Deformed and Plain Carbon-Steel Bars for Concrete Reinforcement,* American Society of Testing and Materials, 2016.
10. ICC ESR-1917, Hilti Kwik Bolt TZ Carbon and Stainless Steel Anchors in Cracked and Uncracked Concrete, ICC Evaluation Service, Report Issued 05-2019.
11. Blodgett, Omer. *Design of Welded Structures*, James F. Lincoln Arc Welding Foundation, 1966.
12. Modification Traveler MT-50400, *242-A Evaporator Waste Transfer Line Replacement*, Rev. 01. Washington River Protection Solutions, Richland, WA.
13. RPP-8360, 2017, *Lifting Attachment and Lifted Item Evaluation*, Rev. 6, Washington River Protection Solutions, LLC, Richland, Washington.
14. ECN-715004, *Core Drill and Install Wall Nozzle 41, 42 and 43 Assemblies at 242-A Evaporator Pump Room*, Rev 01.
15. RPP-CALC-63211, Rev. 0, *ASME B31.3 Analyses of the New SL-170, SL-171, SL-172 and SN-275 Waste Transfer Lines in 241-AW Tank Farm*, Columbia Energy and Environmental Services, Richland, Washington, 2019.
16. RPP-CALC-63213, Rev. 0, *ASME B31.3 Analyses of the 41 to 5 and 43 to 13A Jumpers for the 242-A Evaporator Pump Room*, Columbia Energy and Environmental Services, Richland, Washington, 2019.
17. H-2-69277, Sheet 1, *2008, STRL Foundation Plan Sections & General Notes Areas 1 & 2*, Rev. 3, U.S. Department of Energy, Office of River Protection, Richland, Washington.
18. H-2-69278, Sheet 1, *2008, Structural Sections Elevations & Details Areas 1 & 2*, Rev. 4, U.S. Department of Energy, Office of River Protection, Richland, Washington.
19. H-2-90161, Sheet 1, *2018, Standard Rigid Lifting Bails*, Rev. 6, U.S. Department of Energy, Office of River Protection, Richland, Washington.
20. H-2-99009, Sheet 1&2, *2014, Piping Jumper Arrangement Pump Room*, Rev. 5, U.S. Department of Energy, Office of River Protection, Richland, Washington.
21. H-14-111832, Multiple Sheets, *2019, Wall Nozzle Assemblies 242-A Pump Room*, Rev. 1, U.S. Department of Energy, Office of River Protection, Richland, Washington.
22. Columbia Energy Document CE-SVVR-18-001, Rev. 0, RISA-3D 16.0.5 - COTS Software V&V Report, 2018.

10.0 CALCULATIONS

10.1 Material Properties

$F_{y_A36} := 36ksi$ — Yield strength (A36), ASTM A36

$F_{u_A36} := 58ksi$ — Ultimate tensile strength (A36), ASTM A36

$F_{y_A572_50} := 50ksi$ — Yield strength (A572), ASTM A572 Grade 50ksi

$F_{u_A572_50} := 65ksi$ — Ultimate tensile strength (A572), ASTM A572 Grade 50ksi

$F_{y_KBTZ} := 84.8ksi$ — Yield strength of Carbon Steel Hilti KB-TZ, ESR-1917

$F_{u_KBTZ} := 106ksi$ — Ultimate tensile strength of Carbon Steel Hilti KB-TZ, ESR-1917

$\sigma_{conc} := 150pcf$ — Density of normal weight concrete.

10.2 Loading

10.2.1 Dead Loading

Roof Dead Loading:

Material	DL (psf)
Built Up Roof	4.00
Underlayment	1.00
2" Rigid Insulation @ 0.25psf/inch	0.50
12" Normal Weight Concrete = 150pcfx1ft	150.00
Mech/Elect/Plumbing	5.00
Misc	2.50
Total:	163.00

$DL_{rf} := 163psf$ — Total dead load at roof

$L_{rf} := \frac{23}{2}ft = 11.5\,ft$ — Recall tributary width of roof to top of grid line A wall

$W_{DLrf} := DL_{rf} \cdot L_{rf} = 1874.5 \cdot plf$ — Total distributed dead load at top of grid line A wall

10.2.2 Live Loading

$w_{rll} := 20psf$ — Roof live loading. TFC-ENG-STD-06, Section 3.5.2

$L_{rf} := \frac{23}{2} ft = 11.5\ ft$ — Tributary width of roof to top of Grid A wall

$W_{RLL} := w_{rll} \cdot L_{rf} = 230 \cdot plf$ — Total distributed roof live load at top of Grid A wall

10.2.3 Snow Loading

All Sections, Tables, Equations, and Figures listed are from ASCE 7-10 unless noted otherwise.

Flat Snow Load

$p_g := 15psf$ — Ground snow load. TFC-ENG-STD-06, Section 3.5.3

$C_e := 0.9$ — Exposure factor, terrain category C, fully exposed, Table 7-2

$C_t := 1.0$ — Thermal factor, Table 7-3

$I_s := 1.2$ — Snow importance factor, Table 1.5-2, Risk Category IV

$p_f := 0.7 \cdot C_e \cdot C_t \cdot I_s \cdot p_g = 11.34 \cdot psf$ — Flat snow load, EQN 7.3-1

$p_m := I_s \cdot p_g = 18 \cdot psf$ — Minimum flat snow load, Section 7.3.4

$w_{sl} := \max(p_f, p_m) = 18 \cdot psf$ — Design snow load

$L_{rf} := \frac{23}{2} ft = 11.5\ ft$ — Recall tributary width of roof to top of Grid A wall

$W_{SL} := w_{sl} \cdot L_{rf} = 207 \cdot plf$ — Total distributed flat snow load at top of Grid A wall. Roof live load controls for gravity combinations

Drift Snow Load

Snow will drift against the high wall at Grid 2. This drift loading will potentially load the Grid A wall in the vicinity of the new wall penetrations. Accordingly, drift loading will be accounting for in this area.

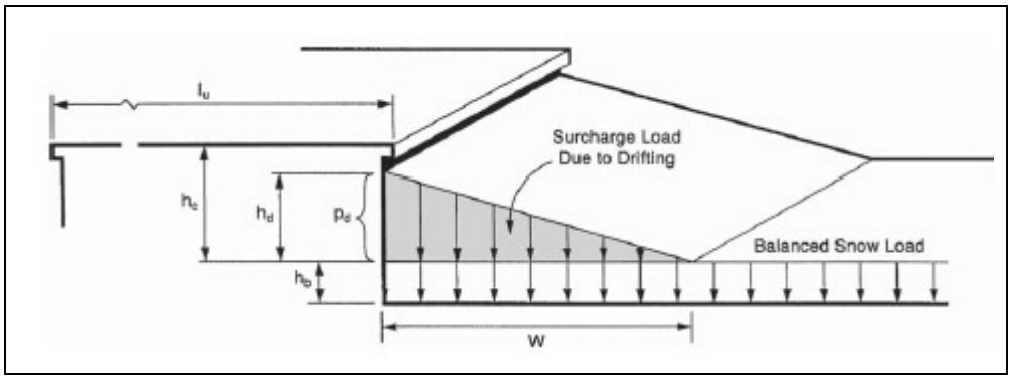

Figure 6. Snow Drift Loading. (ASCE 7-10 Figure 7-8)

$L_{uu} := 30ft$ — Length of upper roof

$L_{ul} := 46ft$ — Length of lower roof

$H_c := 25ft$ — Roof step height

$C_s := 1.0$ — Roof slope factor, Figure 7-2

$p_s := C_s \cdot w_{sl} = 18 \cdot psf$ — Balanced snow load, EQN 7.4-1

$\gamma_{sl} := \min\left(0.13 \cdot \frac{p_g}{psf} + 14, 30\right) pcf = 16 \cdot pcf$ — Snow density, EQN 7.1-1

$h_b := \frac{p_s}{\gamma_{sl}} = 1.13\,ft$ — Height of balanced snow, Section 7.7.1

$h_c := H_c - h_b = 23.9\,ft$ — Clear height from top of balanced snow load to top of step

$\frac{h_c}{h_b} = 21.2$ — hc/hb > 0.2. Per Section 7.7.1, drift loading is required to be considered

Leeward Drift Height on Lower Roof

$L_{ulw} := \max(L_{uu}, 20ft) = 30\,ft$

Minimum roof length for use in Figure 7-9 equation is 20ft

$$h_{dlw} := \left(0.43 \cdot \sqrt[3]{\frac{L_{ulw}}{ft}} \cdot \sqrt[4]{\frac{p_g}{psf} + 10} - 1.5\right) ft = 1.49\,ft$$

Drift height, Figure 7-9

Windward Drift Height on Lower Roof

$L_{uww} := \max(L_{ul}, 20ft) = 46\,ft$

Minimum roof length for use in Figure 7-9 equation is 20ft

$$h_{dww} := 0.75\left(0.43 \cdot \sqrt[3]{\frac{L_{uww}}{ft}} \cdot \sqrt[4]{\frac{p_g}{psf} + 10} - 1.5\right) ft = 1.46\,ft$$

Drift height, Figure 7-9, Section 7.7.1

$h_d := \max(h_{dlw}, h_{dww}) = 1.49\,ft$

Controlling drift height from leeward and windward directions

Design Snow Drift Load on Lower Roof

$$\frac{h_d}{h_c} = 0.06$$

If this value is less than or equal to 1.0 the drift width is equal to 4hd, and the drift height is equal to hd. If greater than 1.0 the drift width is 4hd^2/hc and the drift height shall be equal to hc. However, the drift width W shall not be greater than 8hc. Section 7.7.1

$$W_1 := \begin{cases} 4 \cdot h_d & \text{if } \frac{h_d}{h_c} \le 1.0 \\ \frac{4 \cdot h_d^2}{h_c} & \text{otherwise} \end{cases}$$

$W_1 = 6\,ft$

Length of drift on lower roof, Section 7.7.1

$W_{drft} := \min(8h_c, W_1) = 6\,ft$

Minimum drift width, Section 7.7.1

$$h_{d1} := \begin{cases} h_d & \text{if } \dfrac{h_d}{h_c} \le 1.0 \\ h_c & \text{otherwise} \end{cases}$$

$h_{d1} = 1.49\,\text{ft}$ — Height of drift on lower roof, Section 7.7.1

$w_{drft} := h_{d1} \cdot \gamma_{sl} = 23.73 \cdot \text{psf}$ — Maximum design drift load at peak of drift

$L_{rf} := \dfrac{23}{2}\,\text{ft} = 11.5\,\text{ft}$ — Recall tributary width of roof to top of Grid A wall

$W_{SLDRFT} := w_{drft} \cdot L_{rf} = 273 \cdot \text{plf}$ — Total maximum distributed drift snow load at top of Grid A wall.

10.2.4 Wind Loads

All Sections, Tables, Equations, and Figures listed are from ASCE 7-10 unless noted otherwise.

Exposure C	Wind Exposure
$V_w := 115$	Wind speed, 3 second gust, TFC-ENG-STD-06, Table 4 (Strength Level), WDC-2 Loading
$k_d := 0.85$	Directionality factor, Table 26.6-1
$k_{zt} := 1.0$	Topographic factor, Section 26.8.2
$k_z := 1.02$	Velocity pressure coefficient for 36ft height, Table 27.3-1. Use this for full height of evaporator wall
$G_w := 0.85$	Gust effect factor, Section 26.9.1
$q_z := 0.00256 \cdot k_z \cdot k_{zt} \cdot k_d \cdot V_w^2 \cdot psf$	Velocity pressure, EQN 27.3-1 (Strength Level)
$q_z = 29.35 \cdot psf$	
$C_{pw} := 0.8$	Windward wall pressure coefficient, Figure 27.4-1
$C_{pl} := -0.50$	Leeward wall pressure coefficient, Figure 27.4-1
$C_{ps} := -0.7$	Side wall pressure coefficient, Figure 27.4-1
$GC_{pi} := -0.18$	Internal pressure coefficient from Table 26.11-1

Wind pressures to apply in model. Negative GCpi values control roof and side wall pressures, use for design.

$W_w := q_z \cdot G_w \cdot C_{pw} - q_z \cdot GC_{pi}$	Windward wall pressure, EQN 27.4-1. (Strength Level)
$W_w = 25.24 \cdot psf$	Apply this wall pressure to RISA wall model

10.2.5 Seismic Loads

All Sections, Tables, Equations, and Figures listed are from ASCE 7-10 unless noted otherwise.

The 242A evaporator wall will be treated as NDC-2, correlating with SDC-2 and Limit State C. Wall out of plane forces will be determined per ASCE 7-10, Section 12.11.1.

Seismic Design Category (SDC) = 2	Table 5, TFC-ENG-STD-06
Risk Category = IV	Table 5, TFC-ENG-STD-06
$S_{DS} := 0.588g$	Horizontal design 5% Damped spectral response acceleration parameter at short periods, TFC-ENG-STD-06, Section 3.5.5.2
$I_e := 1.5$	Seismic importance factor, Table 5, TFC-ENG-STD-06
$\alpha_e := 1.2$	Note that any amplification factor used to increase seismic loading for wall out of plane forces is not addressed in TFC-ENG-STD-06. Accordingly, the wall out of plane forces will be increased by a factor of 1.2, using the same methodology prescribed in Table 6 of TFC-ENG-STD-06.
$F_p := 0.4 \cdot \alpha_e \cdot S_{DS} \cdot I_e = 0.42 \cdot g$	Design out of plane acceleration for use in wall out of plane checks. Section 12.11.1
$t_{wall} := 22in$	Thickness of Grid A wall
$w_{wall} := \sigma_{conc} \cdot t_{wall} = 275 \cdot psf$	Self weight of Grid A wall
$W_e := \frac{F_p}{g} \cdot w_{wall} = 116.42 \cdot psf$	Wall out of plane force to apply to RISA model. (Strength Level). Apply to RISA wall model
$W_{ev} := 0.2 \cdot \frac{S_{DS}}{g} = 0.12$	Vertical acceleration for wall design

10.3 Grid A Wall Checks with New Penetrations

Wall Panel 1 Design Results

CRITERIA		MATERIALS			GEOMETRY		
Code	: ACI 318-14	Material Set	: Conc3000NW		Total Height	: 436	in
Design Rule	: 242A 22" Wall	Concrete f'c	: 3000	ksi	Total Length	: 83	in
Seismic Rule	: None	Concrete E	: 3156	ksi	Thickness	: 22	in
Loc of r/f	: Each Face	Concrete G	: 1372	ksi			
Outer Bars	: Horizontal	Conc Density	: 145	lb/ft^3	Int Cover (-z)	: 2	in
		Lambda	: 1		Ext Cover (+z)	: 2	in
Vert Bar Size	: #5	Conc Str Blk	: Rectangular		Cover Open/Edge	2	in
Horz Bar Size	: #5				K	: 1	
		Vert Bar Fy	: 60000	ksi	Use Cracked?	: Yes	
Transfer In?	: No	Horz Bar Fy	: 60000	ksi	In Icr Factor	: .35	
Transfer Out?	: No	Steel E	: 29000	ksi	Out Icr Factor	: .35	
Group Wall?	: No						

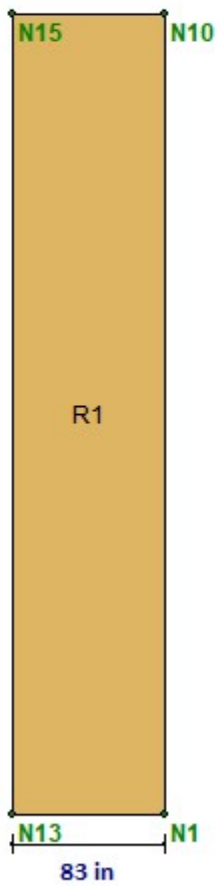

REGION RESULTS

Region	UC Max In Plane	LC	UC Shear In Plane	LC	Delta Max In Plane(in)	LC	UC Max Out Plane	LC	UC Shear Out Plane	LC	Delta Max Out Plane(in)	LC
R1	.064	1	.086	1	N/A	N/A	.048	7	.02	7	N/A	N/A

REINFORCEMENT RESULTS

Region	Vertical Reinforcement	Horizontal Reinforcement	Diagonal Reinforcement
R1	#5@12in oc e.f.	#5@12in oc e.f.	

Wall Panel 2 Design Results

CRITERIA		MATERIALS			GEOMETRY		
Code	: ACI 318-14	Material Set	: Conc3000NW		Total Height	: 556	in
Design Rule	: 242A 22" Wall	Concrete f'c	: 3000	ksi	Total Length	: 87.5	in
Seismic Rule	: None	Concrete E	: 3156	ksi	Thickness	: 22	in
Loc of r/f	: Each Face	Concrete G	: 1372	ksi			
Outer Bars	: Horizontal	Conc Density	: 145	lb/ft^3	Int Cover (-z)	: 2	in
		Lambda	: 1		Ext Cover (+z)	: 2	in
Vert Bar Size	: #5	Conc Str Blk	: Rectangular		Cover Open/Edge	2	in
Horz Bar Size	: #5				K	: 1	
		Vert Bar Fy	: 60000	ksi	Use Cracked?	: Yes	
Transfer In?	: No	Horz Bar Fy	: 60000	ksi	In Icr Factor	: .35	
Transfer Out?	: No	Steel E	: 29000	ksi	Out Icr Factor	: .35	
Group Wall?	: No						

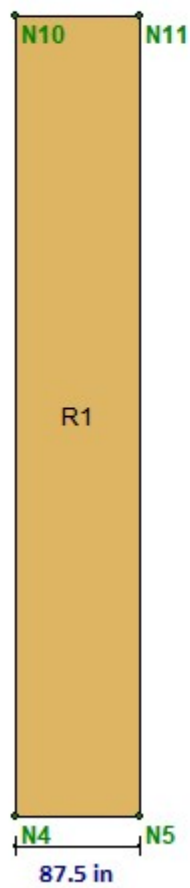

REGION RESULTS

Region	UC Max In Plane	LC	UC Shear In Plane	LC	Delta Max In Plane(in)	LC	UC Max Out Plane	LC	UC Shear Out Plane	LC	Delta Max Out Plane(in)	LC
R1	.029	1	.05	1	N/A	N/A	.052	7	.054	7	N/A	N/A

REINFORCEMENT RESULTS

Region	Vertical Reinforcement	Horizontal Reinforcement	Diagonal Reinforcement
R1	#5@12in oc e.f.	#5@12in oc e.f.	

Wall Panel 3 Design Results

CRITERIA

Code	:	ACI 318-14
Design Rule	:	242A 22" Wall
Seismic Rule	:	None
Loc of r/f	:	Each Face
Outer Bars	:	Horizontal
Vert Bar Size	:	#5
Horz Bar Size	:	#5
Transfer In?	:	No
Transfer Out?	:	No
Group Wall?	:	No

MATERIALS

Material Set	:	Conc3000NW	
Concrete f'c	:	3000	ksi
Concrete E	:	3156	ksi
Concrete G	:	1372	ksi
Conc Density	:	145	lb/ft^3
Lambda	:	1	
Conc Str Blk	:	Rectangular	
Vert Bar Fy	:	60000	ksi
Horz Bar Fy	:	60000	ksi
Steel E	:	29000	ksi

GEOMETRY

Total Height	:	556	in
Total Length	:	150.5	in
Thickness	:	22	in
Int Cover (-z)	:	2	in
Ext Cover (+z)	:	2	in
Cover Open/Edge		2	in
K	:	1	
Use Cracked?	:	Yes	
In Icr Factor	:	.35	
Out Icr Factor	:	.35	

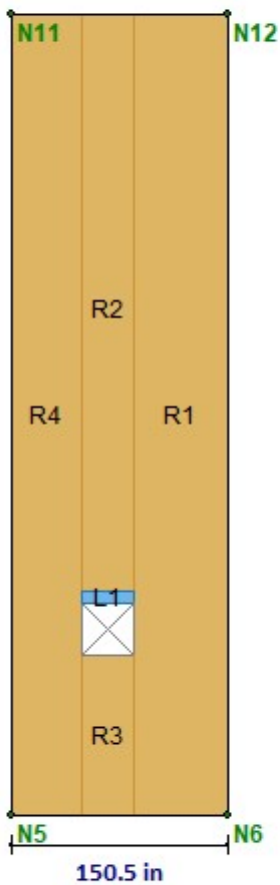

REGION RESULTS

Region	UC Max In Plane	LC	UC Shear In Plane	LC	Delta Max In Plane(in)	LC	UC Max Out Plane	LC	UC Shear Out Plane	LC	Delta Max Out Plane(in)	LC
R1	.024	1	.094	1	N/A	N/A	.191	7	.257	7	N/A	N/A
R2	.012	1	.057	1	N/A	N/A	.037	7	.034	7	N/A	N/A
R3	.004	1	.004	1	N/A	N/A	.345	5	.39	7	N/A	N/A
R4	.01	1	.031	1	N/A	N/A	.056	7	.051	7	N/A	N/A

Wall Panel 3 Design Results Continued

REINFORCEMENT RESULTS

Region	Vertical Reinforcement	Horizontal Reinforcement	Diagonal Reinforcement
R1	#5@12in oc e.f.	#5@12in oc e.f.	
R2	#5@12in oc e.f.	#5@12in oc e.f.	
R3	#5@12in oc e.f.	#5@12in oc e.f.	
R4	#5@12in oc e.f.	#5@12in oc e.f.	

10.4 Grid A Wall Nozzle Anchors

10.4.1 Design of Exterior Plate and Anchors

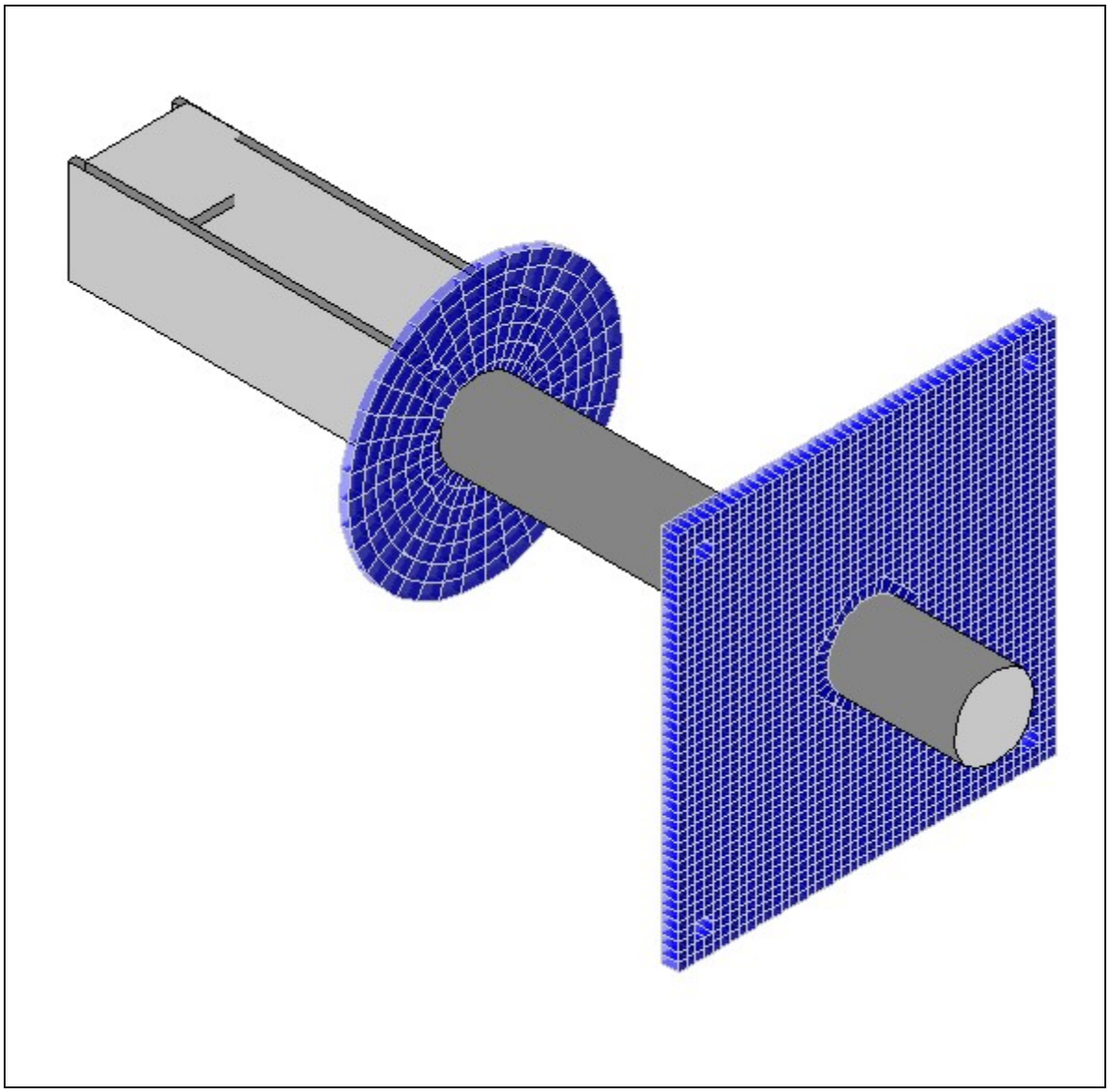

Figure 7. Nozzle Anchor Plate Assembly Layout

The nozzle assemblies will be designed for both the incoming nozzle loads from the transfer lines as well as the applied nozzle loading due to jumpers on the inside of the building. The incoming nozzle loads consist of a combination of both the transfer lines and encasements. B03, the 3" line, controls in terms of applied forces to the anchorage plate. The primary lines are welded to the circular interior plate, this is where the primary loading will be applied. The encasements are welded to the anchorage plate on the outside of the pump room wall, this is where the encasement loading will be applied. A summary of the forces are below.

Transfer Lines:

Primary Seismic/Sustained

- Global Horizontal Tension (TX) = 291lbs. Use 300lbs for design.
- Global Vertical Shear (VY) = 25lbs. Use 50lbs for design.
- Global Horizontal Shear (VZ) = 41lbs. Use 50lbs for design.
- Global Torsion Moment (MX) = 19ft-lbs. Use 25ft-lbs for design.
- Global Vertical Moment (MY) = 232ft-lbs. Use 250ft-lbs for design.
- Global Horizontal Moment (MZ) = 52ft-lbs. Use 75ft-lbs for design.

Primary Thermal

- Global Horizontal Tension (TX) = 328lbs. Use 350lbs for design.
- Global Vertical Shear (VY) = 126lbs. Use 150lbs for design.
- Global Horizontal Shear (VZ) = 41lbs. Use 50lbs for design.
- Global Torsion Moment (MX) = 15ft-lbs. Use 25ft-lbs for design.
- Global Vertical Moment (MY) = 206ft-lbs. Use 225ft-lbs for design.
- Global Horizontal Moment (MZ) = 154ft-lbs. Use 175ft-lbs for design.

Encasement Thermal

- Global Horizontal Tension (TX) = 416lbs. Use 450lbs for design.
- Global Vertical Shear (VY) = 51lbs. Use 100lbs for design.
- Global Horizontal Shear (VZ) = 26lbs. Use 50lbs for design.
- Global Torsion Moment (MX) = 96ft-lbs. Use 100ft-lbs for design.
- Global Vertical Moment (MY) = 539ft-lbs. Use 550ft-lbs for design.
- Global Horizontal Moment (MZ) = 101ft-lbs. Use 125ft-lbs for design.

Interior Jumpers (RPP-CALC-63213):

The jumper nozzle restraint reactions from RPP-CALC-63213 are from two different load combinations from Auto Pipe. They are as follow:

- GT1P1 = Gravity + Thermal + Pressure
- GE5 = Gravity + Earthquake

Both combinations will be applied to the nozzle assembly RISA model. GT1P1 will be factored by 1.2 to bring it up to strength level in the RISA analysis, and GE5 will be factored by 1.4 to bring it up to strength level in the RISA analysis. Note that factoring GE5 by 1.4 will be conservative because these values have deadload included.

GT1P1 @ B00 Load Combination:	**GE5 @ A13 Load Combination:**
Applied Global X Moment = 12lb-ft	Applied Global X Moment = 73lb-ft
Applied Global Y Moment = 3lb-ft	Applied Global Y Moment = 2lb-ft
Applied Global Z Moment = 49lb-ft	Applied Global Z Moment = 49lb-ft
Applied Global X Shear = 419lb	Applied Global X Shear = 31lb
Applied Global Y Shear = 491lb	Applied Global Y Shear = 84lb
Applied Global Z Shear = 12lb	Applied Global Z Shear = 26lb

Note: Self weight of all modeled components is accounted for in RISA

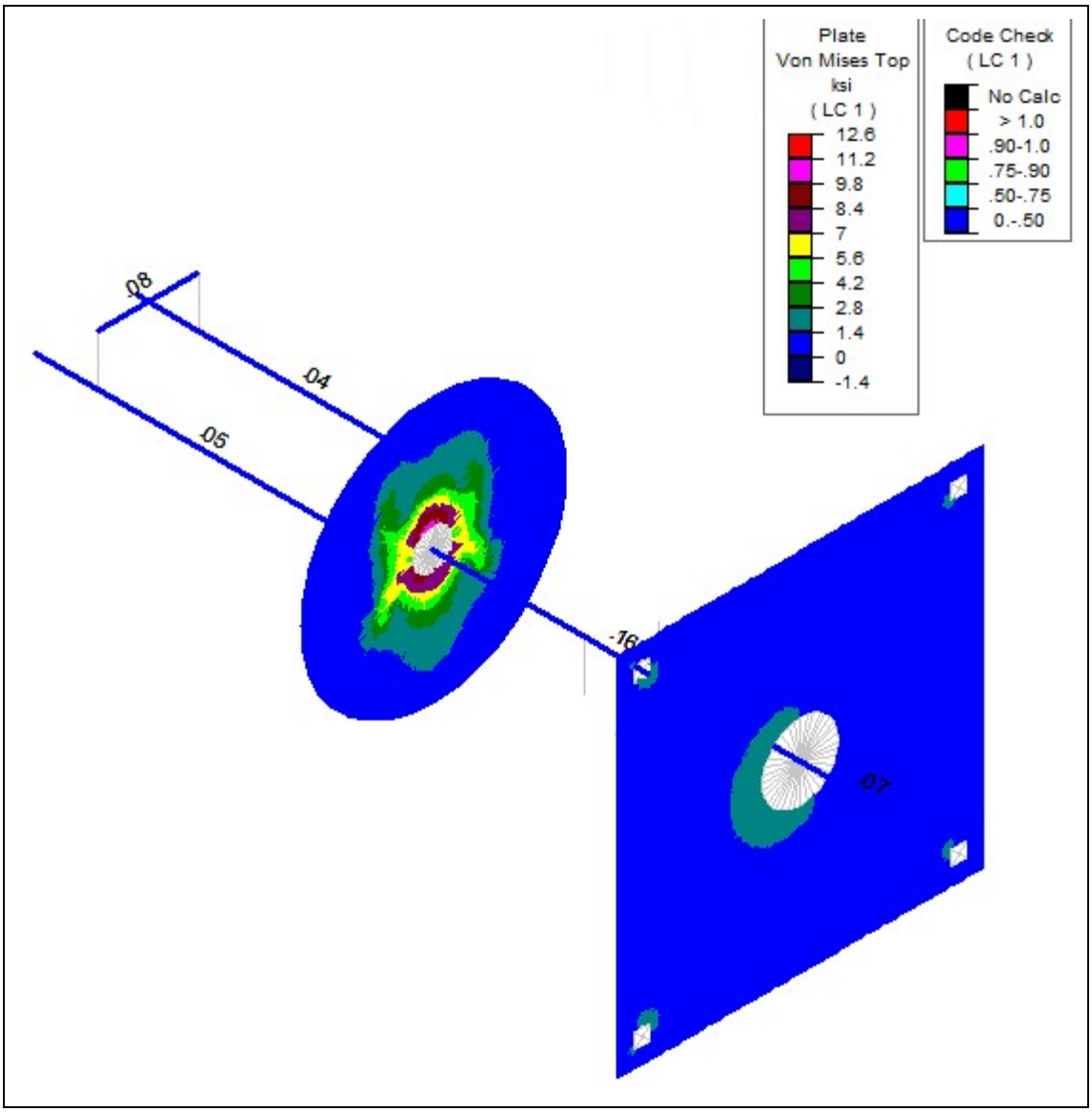

Figure 8. Nozzle Anchor Plate Stresses (1.2DL + 1.2Thermal + 1.2GT1P1)

0.9(36ksi) = 32.4ksi > 12.6 ksi. The plates have sufficient capacity for the applied loading

Controlling demand capacity ratio for non-plate element occurs at the 4" secondary containment pipe, with DCR = 0.16 < 1.0.

10.4.2 Anchorage Design

Unless noted otherwise, the anchorage design calculations reference ACI 318-14 and AISC 14th using LRFD design methodologies and ultimate forces. The applied loads occur concurrently at all three plates. Thermal loading controls the reactions. The reactions noted below include plate prying at the anchors. Because of this, there is concurrent tension loading at the anchors located 5" apart, as noted below. These two critical anchors will be considered as an anchor group.

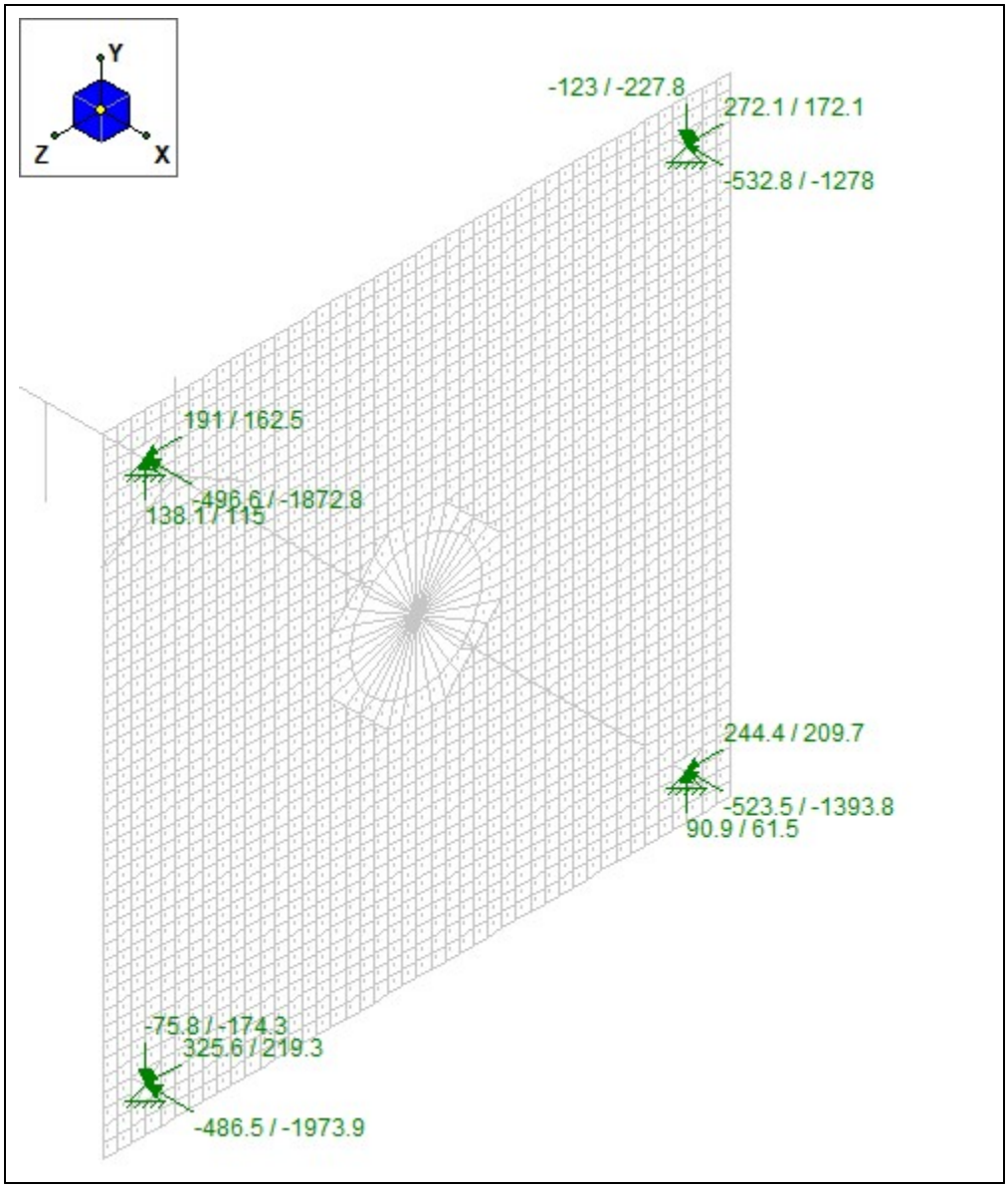

Figure 9. Nozzle Anchor Plate Reactions 1.2DL + 1.2Thermal + 1.2GT1P1

Single Anchor Reactions From RISA 3D:

$T_{U1} := 1974 lbf$ — Maximum Ultimate Global X Tension on heel of plate, resisting moment, axial, and prying

$T_{U2} := 1394 lbf$ — Maximum Ultimate Global X Tension on toe of plate, resisting axial and prying

$V_{UZ} := 326 lbf$ — Maximum Ultimate Global Z Shear

$V_{UY} := 228 lbf$ — Maximum Ultimate Global Y Shear

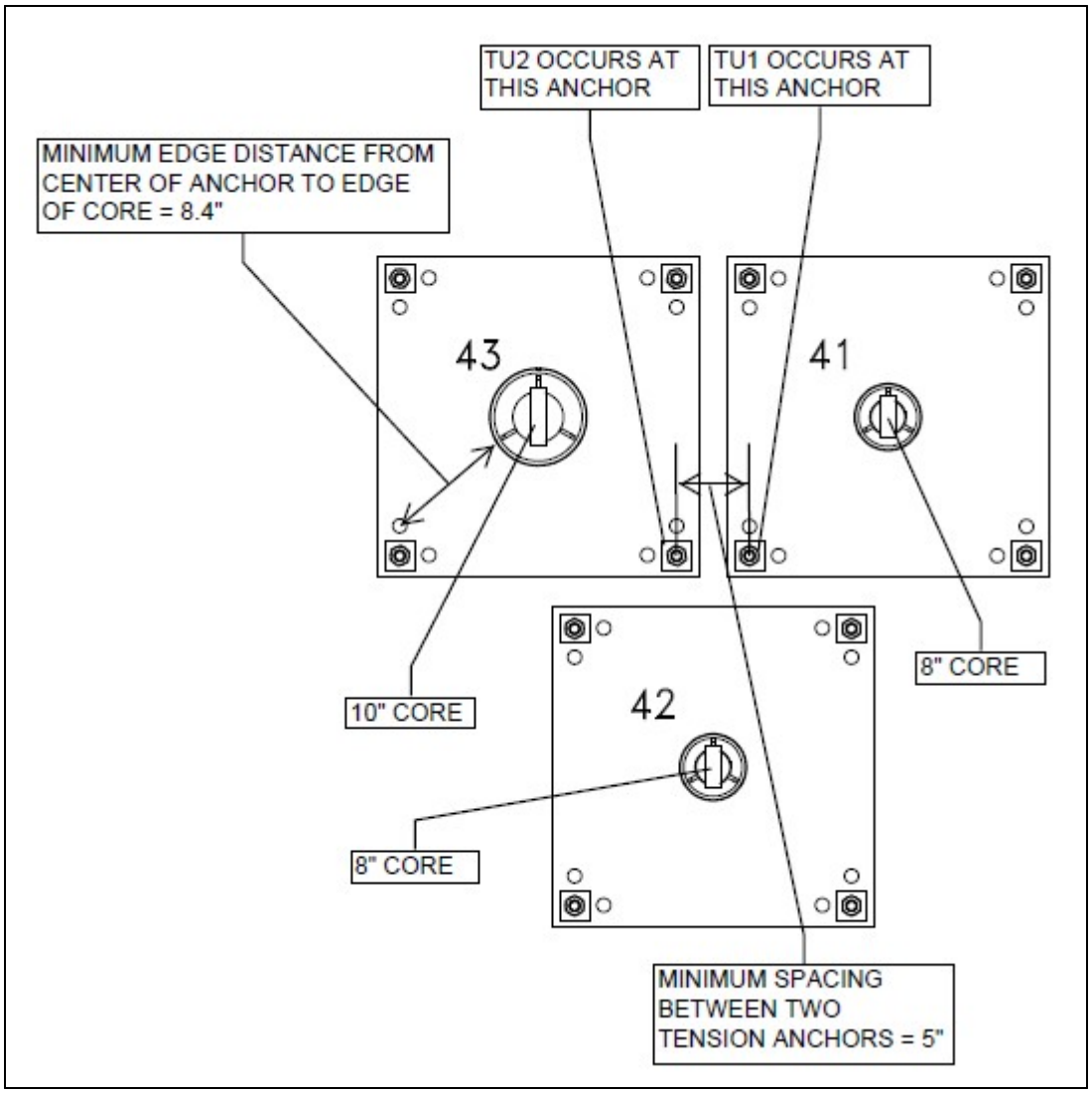

Figure 10. Nozzle Anchor Plate Layout

Define Geometry of Embed Connection
Reference ACI 318 Figure R17.4.2.1 for definitions

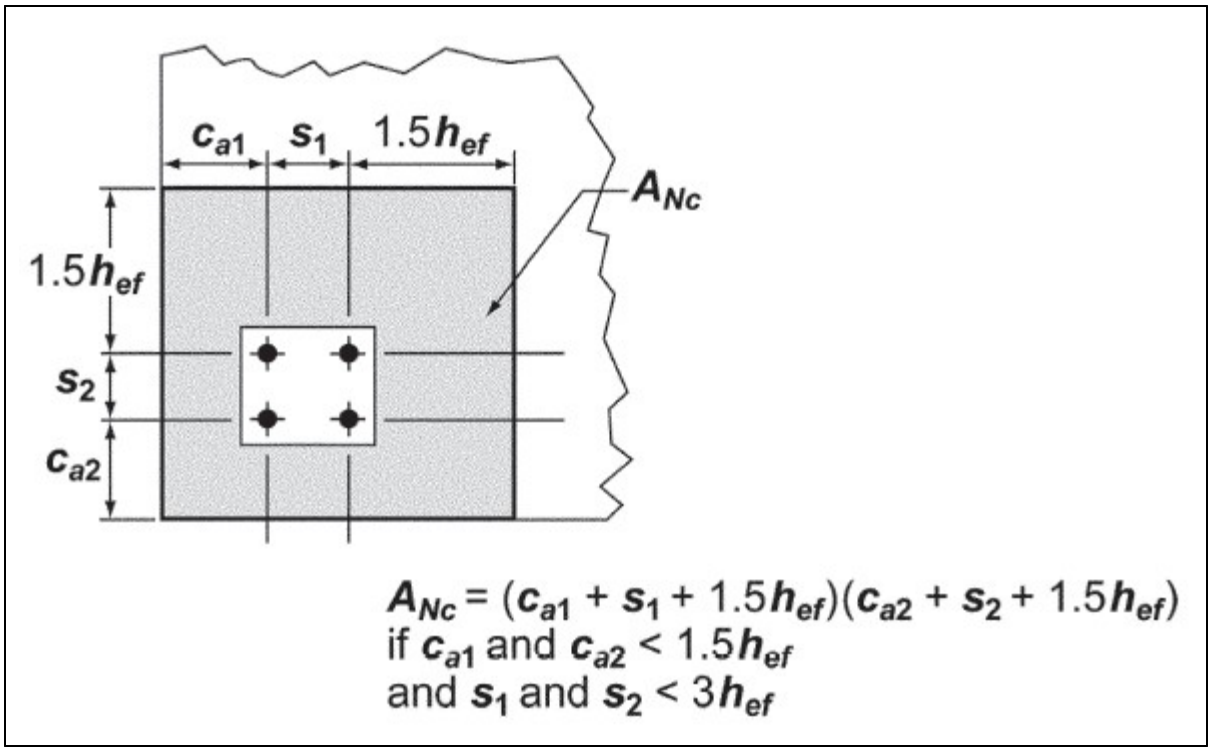

Figure 11. ACI 318-14 Anchorage Geometry Definitions

$c_{a1} := 8.4in$	$h_{ef} := 5.5in$	Effective embed of anchors
$s_1 := 5in$	$n := 2$	Number of anchors in the group
$t_{wall} = 22 \cdot in$	$d_{ba} := 0.75in$	Anchor diameter

The following limit states apply to the anchor design and will be checked below. Per ESR-1917 Table 3, 3/4" Carbon Steel KB-TZ anchors are a Category 1 post-installed concrete anchor. Strength reduction factors will be based on this for all concrete failure modes.

TENSION:

- Anchor tension capacity (ACI 318-14 17.4.1)
- Concrete breakout check (ACI 318-14 17.4.2)
- Pullout strength of anchor (ACI 318-14 17.4.3)
- Side-face blowout of anchor (ACI 318-14 17.4.4)

SHEAR:

- Anchor shear capacity (ACI 318-14 17.5.1)
- Concrete breakout check of anchor (ACI 318-14 17.5.2)

Check Anchor Tension Capacity:
Section 17.4.1

$\phi_{1t} := 0.75$ — Strength reduction factor, Section 17.3.3 for a ductile steel anchor

$f_{ya} := F_{y_KBTZ} = 84.8 \cdot ksi$ — Recall anchor yield stress

$f_{uta} := F_{u_KBTZ} = 106 \cdot ksi$ — Recall anchor tensile stress

$$f_{uta} := \begin{cases} f_{uta} & \text{if } f_{uta} \le \min(1.9 \cdot f_{ya}, 125000psi) \\ \min(1.9 \cdot f_{ya}, 125000psi) & \text{otherwise} \end{cases}$$

Check to make sure tension capacity meets Section 17.4.1.2 criteria

$f_{uta} = 106000\ psi$

$A_{seN} := 0.237in^2$ — Effective tensile stress area. ESR-1917

$N_{sa} := A_{seN} \cdot f_{uta} = 25122\ lbf$ — Steel strength, Eqn 17.4.1.2

$\phi_{1t} \cdot N_{sa} = 18841.5\ lbf$ — Design steel strength

$$DC_{1t} := \frac{\max(T_{U1}, T_{U2})}{\phi_{1t} \cdot N_{sa}} = 0.1$$

Demand/capacity ratio < 1.0, OK

Check Concrete Breakout Strength in Tension:
Section 17.4.2

$\phi_{2t} := 0.65$ — Strength reduction factor, Section 17.3.3 for Category 1 concrete failure modes without supplementary reinforcement (Condition B)

$A_{Nco} := 9 \cdot h_{ef}^2$ $\quad A_{Nco} = 272 \cdot in^2$ — Projected concrete failure area of single anchor Section 17.4.2.1, Eq. 17.4.2.1c

Determine controlling spacing values per Figure R17.4.2.1:

$$c_{a1b} := \begin{cases} (1.5 \cdot h_{ef}) & \text{if } c_{a1} > 1.5 \cdot h_{ef} \\ c_{a1} & \text{otherwise} \end{cases}$$

$$s_{1b} := \begin{cases} (3 \cdot h_{ef}) & \text{if } s_1 > 3 \cdot h_{ef} \\ s_1 & \text{otherwise} \end{cases}$$

$$c_{a1b} = 8.25 \cdot in$$

$$s_{1b} = 5 \cdot in$$

$$A_{Nc} := (c_{a1b} + s_{1b} + 1.5 \cdot h_{ef}) \cdot (2 \cdot 1.5 \cdot h_{ef})$$

$$A_{Nc} = 354.8 \cdot in^2$$

Projected concrete failure area of anchor group
Figure R17.4.2.1

Determine modification factors for concrete breakout equation:

$e_N := 0in$

Eccentricity of resultant tension force from anchor group centroid. Figure R17.4.2.4

$$\psi_{ecn} := \frac{1}{\left(1 + \frac{2 \cdot e_N}{3 \cdot h_{ef}}\right)} = 1$$

Eccentricity modification factor
Section 17.4.2.4, Eqn 17.4.2.4

$$\psi_{edN} := \begin{cases} 1 & \text{if } c_{a1b} \geq 1.5 \cdot h_{ef} \\ \left(\left(0.7 + 0.3 \cdot \frac{c_{a1b}}{1.5 \cdot h_{ef}}\right)\right) & \text{otherwise} \end{cases}$$

Edge modification factor
Section 17.4.2.5, Eq. 17.4.2.5a/17.4.2.5b

$\psi_{edN} = 1$

$\psi_{cN} := 1.0$

Crack formation modification factor for post-installed anchors, ESR-1917, Table 3

$\psi_{cpN} := 1.0$

Post-installed anchors modification factor
Section 17.4.2.7

$k_c := 17$

Factor for post installed anchors
ESR-1917, Table 3 and ACI 318-14 Section 17.4.2.2

$\lambda := 1.0$

Modification factor for normal weight concrete
Table 19.2.4.2

$\lambda_a := 1.0 \cdot \lambda = 1$

Modification factor for cast-in and undercut anchors in light weight concrete
Section 17.2.6

$f'_c := 3000psi$

Recall minimum compressive strength of concrete from Section 10.4.2

$$N_b := k_c \cdot \lambda_a \cdot \sqrt{f'_c \cdot \frac{1}{psi}} \cdot \left(\frac{h_{ef}}{in}\right)^{1.5} (lbf)$$

$N_b = 12010.29\ lbf$

Basic concrete breakout strength of a single anchor
Section 17.4.2.2, Eq. 17.4.2.2a/17.4.2.2b

$$N_{cbg} := \begin{cases} \frac{A_{Nc}}{A_{Nco}} \cdot \psi_{edN} \cdot \psi_{cN} \cdot \psi_{cpN} \cdot N_b & \text{if } n = 1 \\ \frac{A_{Nc}}{A_{Nco}} \cdot \psi_{ecn} \cdot \psi_{edN} \cdot \psi_{cN} \cdot \psi_{cpN} \cdot N_b & \text{otherwise} \end{cases}$$

$N_{cbg} = 15650\ \text{lbf}$ — Concrete breakout strength
Section 17.4.2.1, Eq. 17.4.2.1a/17.4.2.1b

$\phi_{2t} \cdot N_{cbg} = 10172\ \text{lbf}$ — Design concrete breakout strength

$DC_{2t} := \frac{T_{U1} + T_{U2}}{\phi_{2t} \cdot N_{cbg}} = 0.33$ — Demand/capacity ratio < 1.0, OK

Check Concrete Pullout Strength in Tension:

Per ESR-1917, Table 3, pullout strength does not control for 0.75" anchors embedded 4.75" or more

Check Side-Face Blowout:
Section 17.4.4

$\phi_{4t} := 0.65$ — Strength reduction factor, Section 17.3.3 for Category 1 concrete failure modes without supplementary reinforcement (Condition B)

Limits of applicability of side-face blowout:

Side-face blowout is only applicable if hef > 2.5ca1 for a single anchor, or if hef > 2.5ca1 and s < 6ca1 for an anchor group. Otherwise side-face blowout does not apply.

$h_{ef} = 5.5 \cdot \text{in}$ — Side face blowout does not apply

$2.5 \cdot c_{a1b} = 20.63 \cdot \text{in}$

Summary of tension demand/capacity results:

$DC_{1t} = 0.105$ Anchor steel capacity

$DC_{2t} = 0.33$ Concrete breakout

$DC_N := \max(DC_{1t}, DC_{2t}) = 0.33$ — Controlling limit state to use in interaction

Check Anchor Shear Capacity:
Section 17.5.1

$\phi_{1v} := 0.65$ — Strength reduction factor, Section 17.3.3 for a ductile steel anchor

Direct Shear:

$V_{UR} := \sqrt{V_{UZ}^2 + V_{UY}^2} = 397.8\ \text{lbf}$ — Maximum design shear per anchor

$f_{uta} = 106000\ \text{psi}$ — Recall futa from section above

$d_{ba} = 0.75 \cdot \text{in}$ — Recall headed stud diameter

$A_{seV} := A_{seN} = 0.237 \cdot \text{in}^2$ — Effective cross sectional area of stud

$V_{sa} := 13675\ \text{lbf}$ — Steel strength, ESR-1917, Table 3

$\phi_{1v} \cdot V_{sa} = 8889\ \text{lbf}$ — Design steel strength

$DC_{1v} := \dfrac{V_{UR}}{\phi_{1v} \cdot V_{sa}} = 0.045$ — Demand/capacity ratio < 1.0, OK

Check Concrete Breakout Strength in Shear:
Section 17.5.2

$\phi_{2v} := 0.65$ — Strength reduction factor, Section 17.3.3 for Category 1 concrete failure modes without supplementary reinforcement (Condition B)

$A_{Vco} := 4.5 \cdot c_{a1b}^2 \qquad A_{Vco} = 306 \cdot \text{in}^2$ — Projected concrete failure area of single anchor Section 17.5.2.1, Eq. 17.5.2.1c

$s_1 = 5 \cdot \text{in}$ — Recall spacing of anchors

$c_{a1} = 8.4 \cdot \text{in}$ — Recall edge spacing parallel to applied shear

$h_{a1} := \min\left(t_{wall}, 1.5c_{a1}\right) = 12.6 \cdot \text{in}$ — Determine controlling design thickness

$A_{Vc1} := 2 \cdot 1.5 \cdot c_{a1} \cdot h_{a1} = 317.5 \cdot in^2$ Controlling breakout area. Figure R17.5.2.1b

$d_{ba} = 0.75 \cdot in$ Recall anchor diameter

$l_e := 2 \cdot d_{ba} = 1.5 \cdot in$ Load bearing length of anchor in shear for for torque-controlled expansion anchors. Section 17.5.2.2

$\lambda_a := 1.0 \cdot \lambda = 1$ Recall modification factor for cast-in and undercut anchors in light weight concrete

$f'_c := 3000 psi$ Recall minimum compressive strength of concrete from Section 10.4.2

$$V_{b1} := 7 \cdot \left(\frac{l_e}{d_{ba}}\right)^{0.2} \cdot \sqrt{\frac{d_{ba}}{in}} \cdot \lambda_a \cdot \sqrt{\frac{f'_c}{psi}} \cdot \left(\frac{c_{a1}}{in}\right)^{1.5} lbf$$

Equation 17.5.2.2a. Vb per anchor

$$V_{b2} := 9 \cdot \lambda_a \cdot \sqrt{\frac{f'_c}{psi}} \cdot \left(\frac{c_{a1}}{in}\right)^{1.5} lbf$$

Equation 17.5.2.2b. Vb per anchor

$V_{bPlt1} := \min(V_{b1}, V_{b2}) = 9285.7 \cdot lbf$

$\psi_{edV} := 1.0$ Edge modification factor
Section 17.5.2.6

$\psi_{cV} := 1.0$ Cracked concrete modification factor
Section 17.5.2.7 for anchors in cracked concrete, assuming anchor is embedded between wall reinforcing grid

$$\psi_{hV} := \begin{cases} 1.0 & \text{if } h_{a1} \geq 1.5 \cdot c_{a1} \\ \sqrt{\dfrac{1.5 \cdot c_{a1}}{h_{a1}}} & \text{otherwise} \end{cases}$$

Concrete thickness modification factor
Section 17.5.2.8, Eq. 17.5.2.8

$\psi_{hV} = 1$

$$V_{cbg} := \frac{A_{Vc1}}{A_{Vco}} \cdot \psi_{edV} \cdot \psi_{cV} \cdot \psi_{hV} \cdot V_{bPlt1}$$

Concrete breakout strength
Section 17.5.2.1, Eq. 17.5.2.1a

$V_{cbg} = 9626 \cdot \text{lbf}$

$V_{UR} = 397.8\ \text{lbf}$

Recall design shear for anchor

$\phi_{2v} \cdot V_{cbg} = 6257\ \text{lbf}$

Design concrete breakout strength

$$DC_{2v} := \frac{V_{UR}}{\phi_{2v} \cdot 2V_{cbg}} = 0.032$$

Demand/capacity ratio < 1.0, OK

<u>Check concrete pryout strength in shear:</u>
Section 17.5.3

$\phi_{3v} := 0.65$

Strength reduction factor, Section 17.3.3 for Category 1 concrete failure modes without supplementary reinforcement (Condition B)

$$k_{cp} := \begin{cases} 1 & \text{if } h_{ef} < 2.5\text{in} \\ 2 & \text{otherwise} \end{cases}$$

$k_{cp} := 2.0$

Coefficient for pryout strength, Section 17.5.3.1

$N_{cbg} = 15650\ \text{lbf}$

Recall concrete breakout strength

$V_{cpg} := k_{cp} \cdot N_{cbg}$

Concrete pryout strength
Section 17.5.3.1, Eq. 17.5.3.1b

$\phi_{3v} \cdot V_{cpg} = 20345\ \text{lbf}$ Design concrete pryout strength

$DC_{3v} := \dfrac{V_{UR}}{\phi_{3v} \cdot V_{cpg}} = 0.02$ Demand/capacity ratio < 1.0, OK

Summary of shear demand/capacity results:

$DC_{1v} = 0.045$ Anchor steel capacity

$DC_{2v} = 0.032$ Concrete breakout

$DC_{3v} = 0.02$ Concrete pryout

$DC_V := \max\left(DC_{1v}, DC_{2v}, DC_{3v}\right) = 0.045$ Controlling limit state to use in interaction

<u>Check Interaction Equation per Section R17.6:</u>

$\zeta := \dfrac{5}{3}$ Interaction equation power.

$\left(DC_N\right)^{\zeta} + \left(DC_V\right)^{\zeta} = 0.16$ $\left(DC_N\right)^{\zeta} + \left(DC_V\right)^{\zeta} < 1.0$ Interaction OK.

Note that tension breakout demand capacity ratio controls over the interaction demand capacity ratio.

10.4.3 Plate Washer Design

The anchorage plates will incorporate 5/16"x3"x3" plate washers. 1-1/8" diameter holes in the anchor plates are used in conjunction with the 3/4" diameter anchors in order to provide sufficient installation clearance. A 3/4" hole with standard 1/16" oversize = 13/16" = 0.813". This is the diameter of the hole in the plate washer. This plate washer will be placed over the 1-1/8" hole in the anchor plate.

$D_w := 1.5in$ — Outside diameter of standard washer that will be used in conjuction with plate washer

$D_{id} := 0.813in$ — Diameter of hole in plate washer

$D_{ovs} := 1.125in$ — Diameter of hole in anchor plate

Ensure the washer plate has sufficient capacity to develop the ultimate tension capacity of the steel anchor.

$T_u := 25120lbf$ — Steel strength in tension from Table 3, ESR 1917. This is unreduced by φ.

The area of load application will be the area of the washer.

$$A_{washer} := \frac{\pi D_w^2}{4} - \frac{\pi D_{id}^2}{4} = 1.25 \cdot in^2$$

Theoretical area of washer

Because the methodology used to model the plate in RISA uses trapazoidal shapes, the actual area of plates within the washer area in RISA is $1.871in^2$. Use this area to determine the design pressure.

$$A_{washerRisa} := 1.87081 in^2$$

$$p_{design} := \frac{T_u}{A_{washerRisa}} = 13427.34 \text{ psi}$$

Use 13,428psi in RISA

Apply Tu to the plate and ensure that resulting stress is less than design yield strength = 0.9Fy

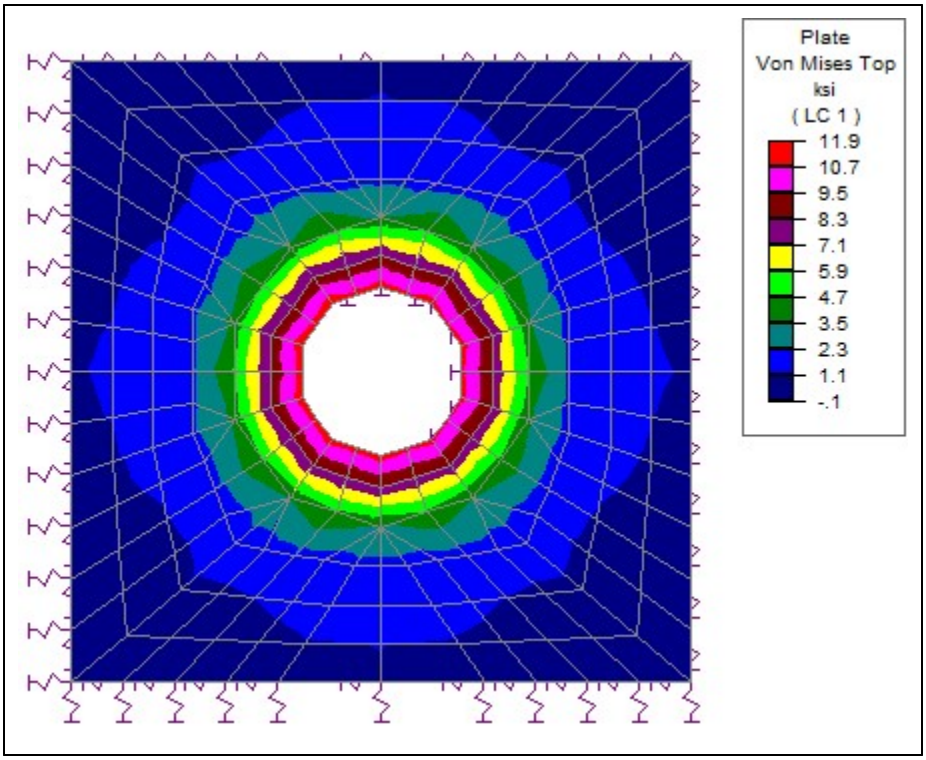

Figure 12. Washer Stress Under Max Anchor Tension

0.9(36ksi) = 32.4ksi > 10.3ksi. The washer plate has sufficient capacity for the applied loading

10.5 Wall Nozzle Lifting Device Assembly Analysis

10.5.1 Design of Lifting Bail Weld Analysis

The wall nozzle assemblies are balanced to enable hoisting from a single lifting bail. The counterweight assemblies utilize lifting bails (Item 15 and 16) shown on H-2-90161-070, *Standard Rigid Lifting Bails*, which are rated for 795lbs and 1,490lbs respectively. The lower capacity bails will be used to remove the counterweight assemblies after installation of the nozzles.

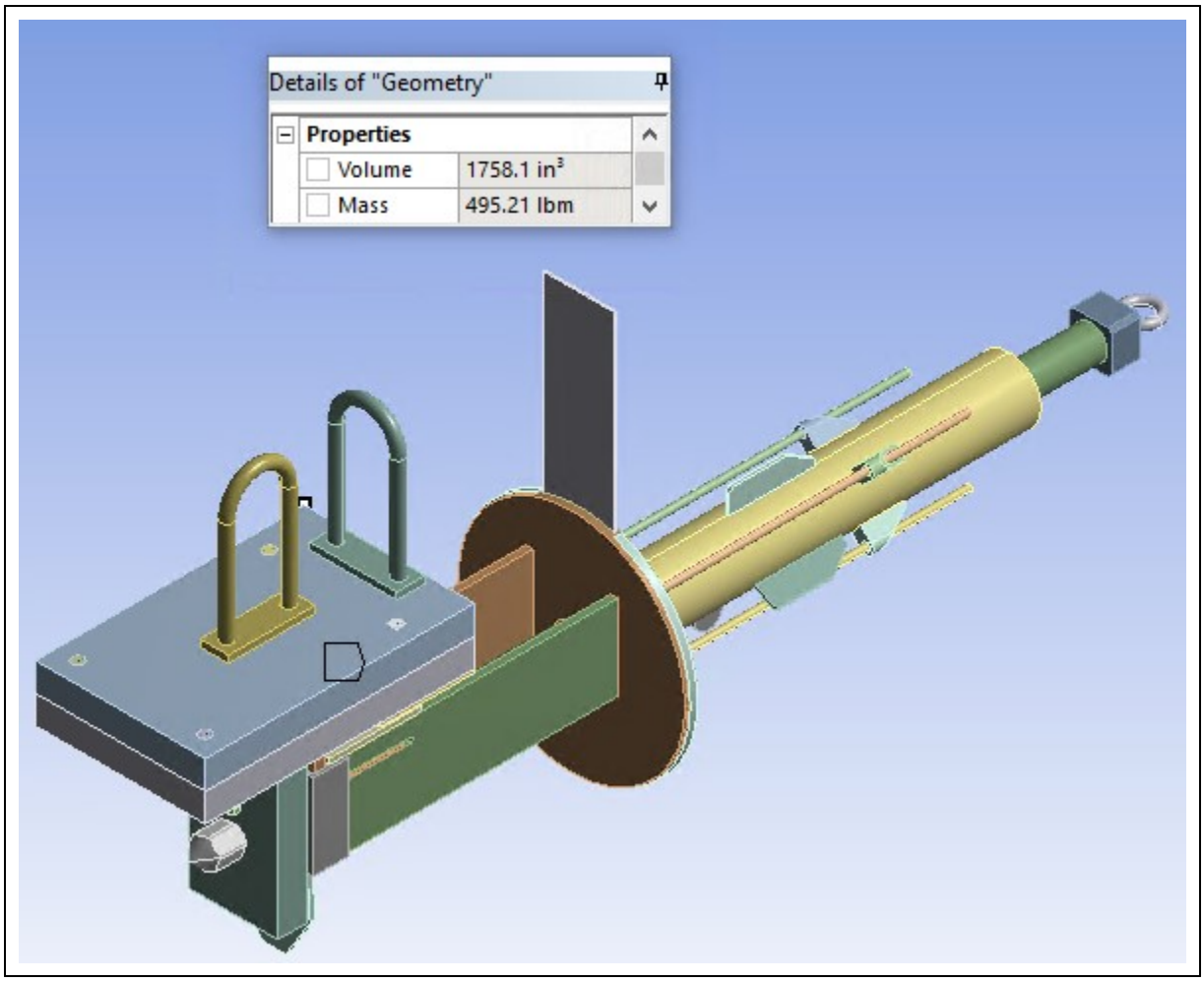

Figure 13. 2-Inch Wall Nozzle Assembly Weight

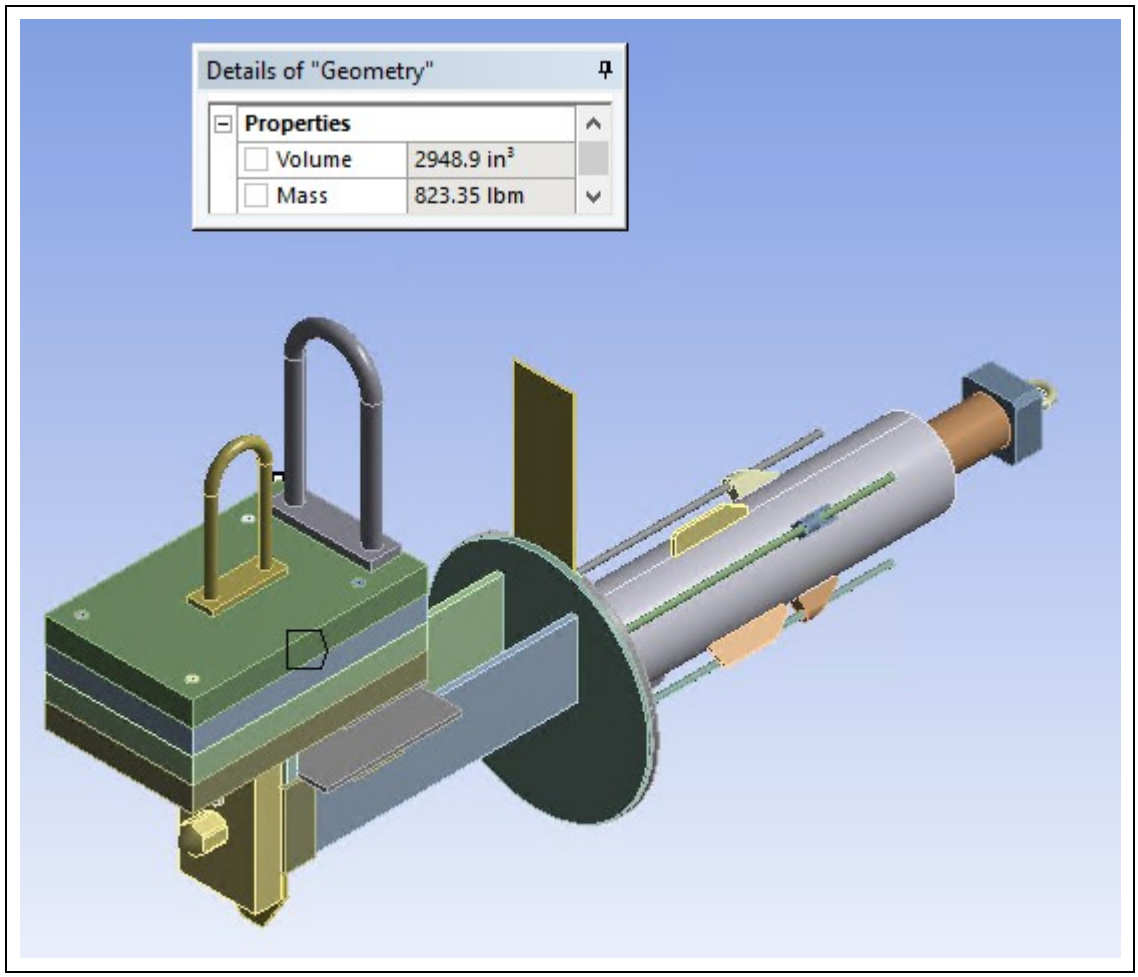

Figure 14. 3-Inch Wall Nozzle Assembly Weight

$W_2 := 496\,lbf$ — Design weight of entire 2" assembly, including counterweights

$W_3 := 824\,lbf$ — Design weight of entire 3" assembly, including counterweights

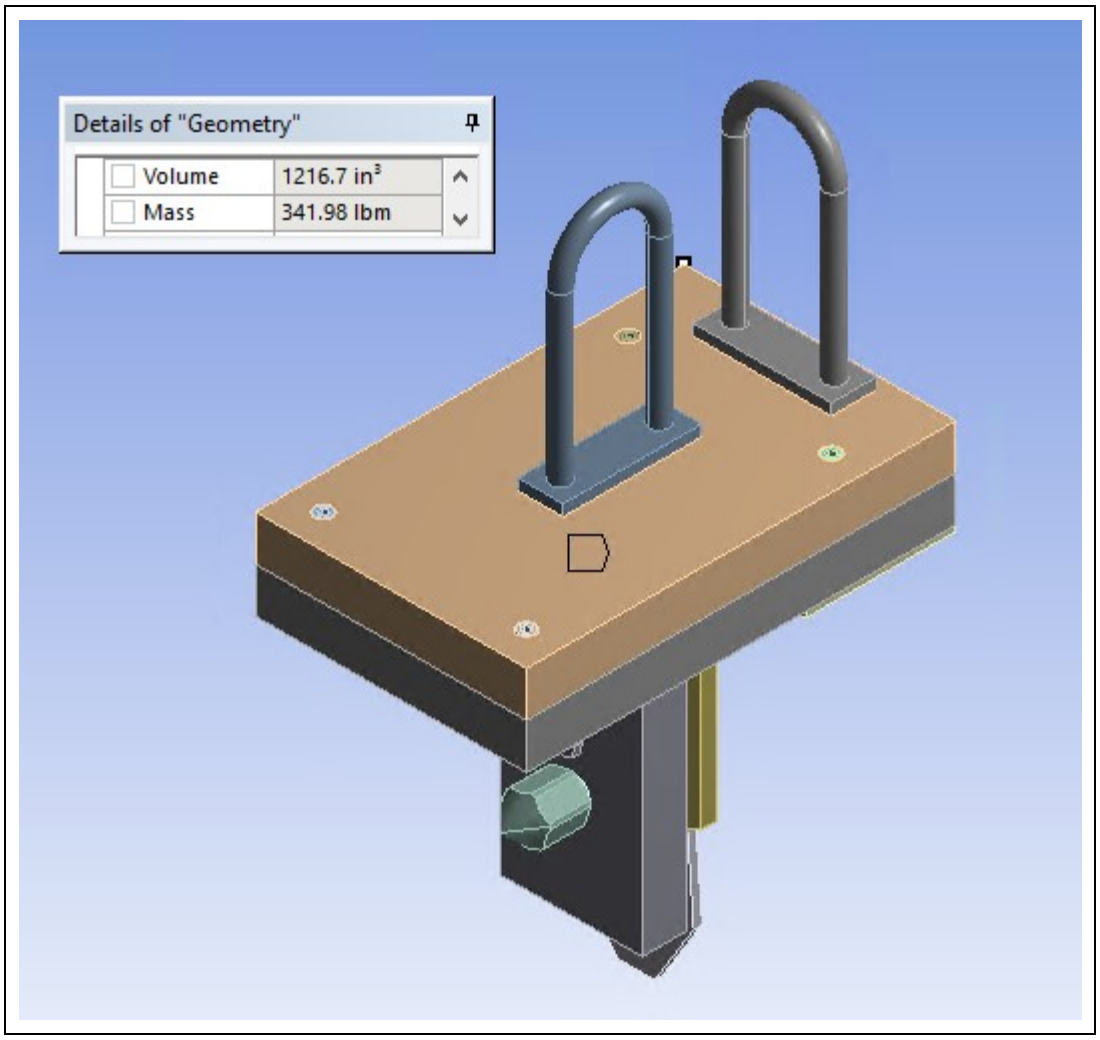

Figure 15. 2-Inch Wall Nozzle Counterweight Weight

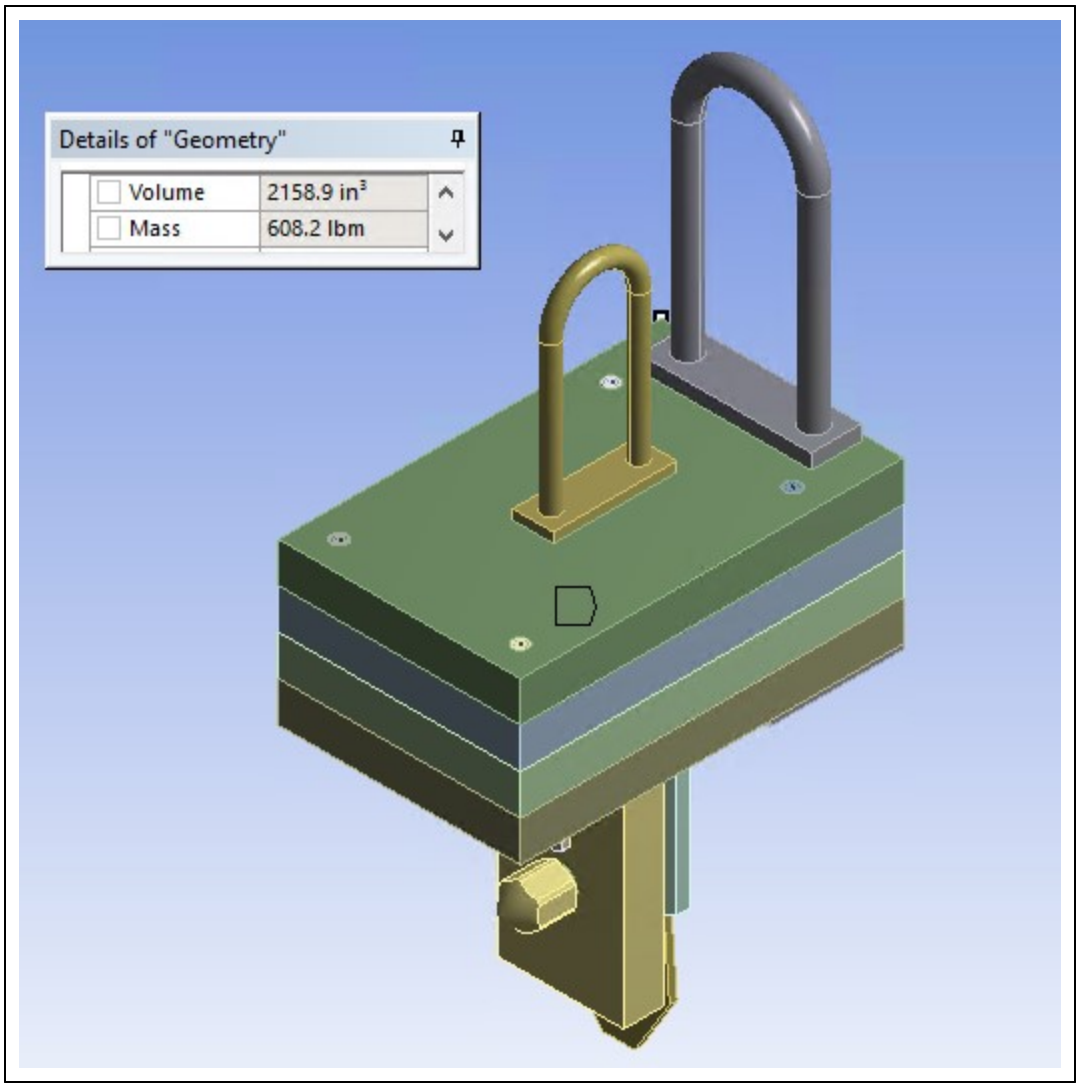

Figure 16. 3-Inch Wall Nozzle Counterweight Weight

$W_{CW2} := 342\,lbf$ — Design weight of 2" counterweight assembly

$W_{CW3} := 609\,lbf$ — Design weight of 3" counterweight assembly

$W_{NZL2} := W_2 - W_{CW2} = 154\ lbf$ — Design weight of 2" nozzle assembly with no counterweights

$W_{NZL3} := W_3 - W_{CW3} = 215\ lbf$ — Design weight of 3" nozzle assembly with no counterweights

10.5.2 Load Path Through Counterweight Assembly

The load path for the counterweight assembly is as follows for the hoisting configuration. All items reference H-14-111832:

- Tension is introduced into the bail to counterweight welds Items 62 and 67 welded to Item 53.
- Tension is then resisted by counterweight assembly screws, Items 59 and 61.
- Tension and moment are introduced into the welds connecting Items 26 and 28 to Item 29, which are part of assemblies 1 and 2.
- The attachment screw has shear and moment imparted to it due to the nozzle assembly cantilevering from it.

10.5.3 Bail to Counterweight Plate Welds

The lifting bail welded attachment is located at the wall nozzle assembly center of gravity by design. The bail is welded to the counterweight assembly all around the bail plate with a 3/16-inch fillet weld in accordance with AWS D1.1. The strength of the weld is governed by the weaker of the joined materials. Both the lifting bail plate and counter weight are fabricated from ASTM A36 steel. The weld is only stressed during installation and removal and is placed in pure tension. For conservatism, the weld requirement calculation for the lift bail is based on the rated capacity of the lift bail (1,490lbs) in lieu of the assembly weight. The length of weld required to install and remove the combined wall nozzle assembly is calculated as follows:

$t_w := \frac{3}{16}in$

Fillet weld size.
(See H-14-111832, Sheet 6, Details 1&2)

$A_{we} := 0.707 \cdot t_w = 0.13 \cdot in$

Size of fillet root

$F_{y_A36} = 36 \cdot ksi$

Recall the Yield strength (A36), ASTM A36

$F_{EXX} := 60ksi$

Nominal strength of weld metal

$b_{weld} := 2in \qquad d_{weld} := 5.125in$

Dimensions of lift bail flat bar

$A_w := 2 \cdot b_{weld} + 2 \cdot d_{weld} = 14.25 \cdot in$

Area of weld (or length per Blodgett)

$N_d := 2$

Design factor for category (A) lifters.
(See ASME BTH-1, Section 3-1.3)

$F_{v_min} := \min\left(\frac{0.6F_{EXX}}{1.2N_d}, 0.4 \cdot F_{y_A36}, 0.3 \cdot F_{EXX}\right)$

Allowable weld stress is the lesser of 30% of the tensile strength of the filler metal or 40% of the yield strength of the base metal (AWS D1.1, Table 2.3. See ASME BTH-1, Section 3-3.4.1 for additional weld requirements)

$F_{v_min} = 14.4 \cdot ksi$

$F_{max} := 1490 lbf$ — Use bail capacity as the design force for the welds

$R_{t_w} := F_{max} = 1490\ lbf$ — Vertical reaction on weld.

$f_{w1} := \frac{R_{t_w}}{A_w}$ $\quad f_{w1} = 105 \cdot \frac{lbf}{in}$ — Force on weld

$DCR_w := \frac{f_{w1}}{F_{v_min} \cdot A_{we}} = 0.05$ — Demand/capacity ratio < 1.0, OK

The 2" and 3" lifting bail attachment is adequate for installation and removal, and the stresses on the weld will remain within AWS D1.1 code allowable stress and BTH-1 requirements. Once the wall nozzle is installed and secured, the counter weight is remotely disconnected and removed by the second lifting bail (H-2-90161, Item 15). The individual counterweights are approximately 371-lbs for 2" nozzle assembly and 594-lbs for the 3" nozzle assembly.

10.5.4 Check Counterweight Assembly Screws

1/2" Diameter F835 socket head cap screws (Items 59 and 61, H-14-111832) have a tensile strength of 145ksi. Using AISC 14th methodology the tension capacity of each screw is as follows:

$Hst_3 := W_3 = 824\ lbf$ — Controlling demand. The entire weight of the assembly is tributary to this connection

$a_b := \frac{\pi \cdot (0.5in)^2}{4} = 0.196 \cdot in^2$ — Nominal area of screw

$R_n := 0.75 \cdot 145ksi \cdot a_b = 21.35 \cdot kip$ — Nominal tension strength of screw, AISC EQN J3-1

$\Omega_t := 2$ — Factor of safety for tension, AISC Section J.6

$\frac{R_n}{\Omega_t} = 10676.51\ lbf$ — Capacity of a single screw

$DCR := \frac{Hst_3}{4\left(\frac{R_n}{\Omega_t}\right)} = 0.02$ — Demand/capacity ratio < 1.0, OK

10.5.5 Design of Vertical Counterweight Welds to Horizontal Counterweights

$Hst_3 := W_3 = 824$ lbf

Controlling demand. While the entire weight of the assembly is not tributary to this connection, design welds for this vertical force.

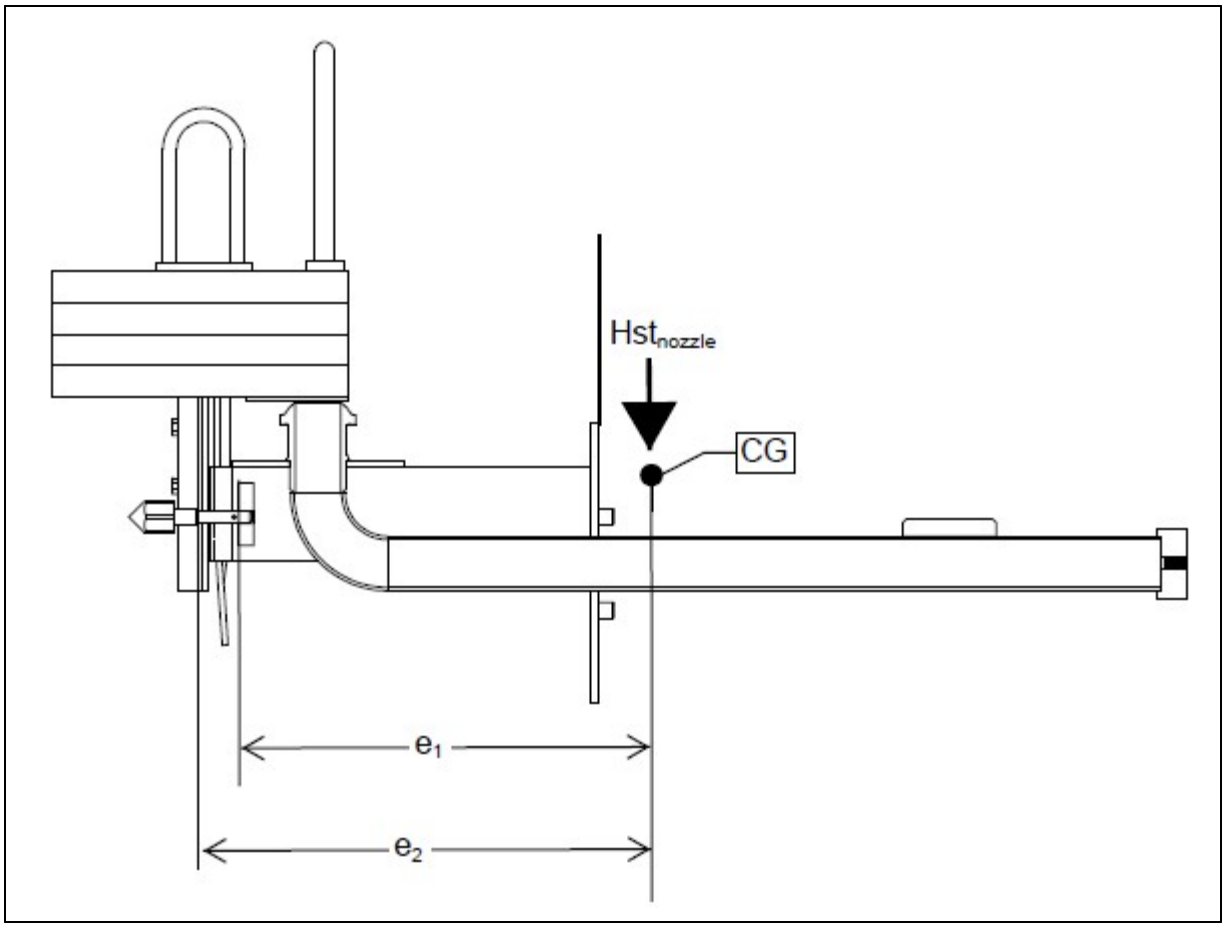

Figure 17. 3-Inch Wall Nozzle Assembly CG, No Counterweight

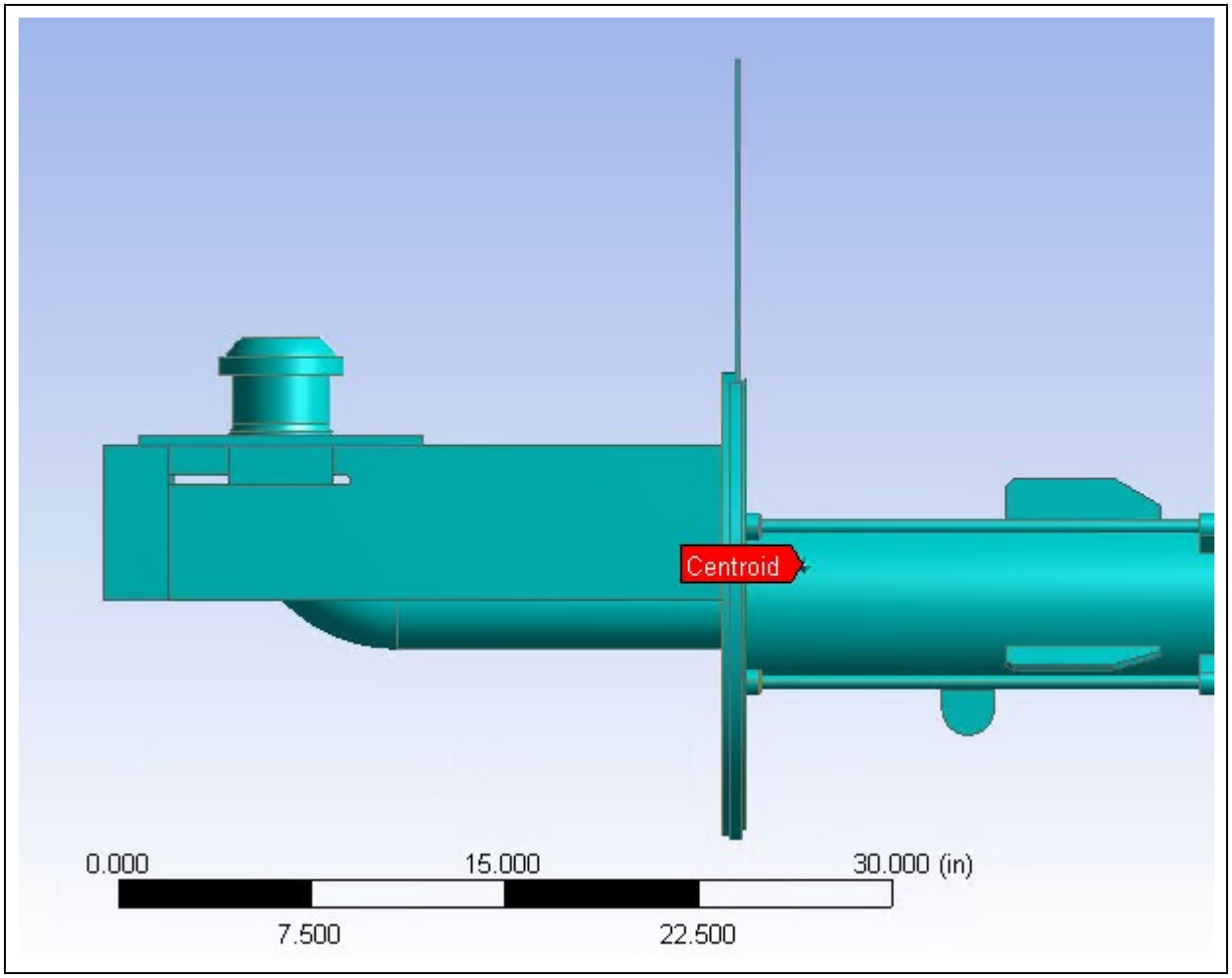

Figure 18. 3-Inch Wall Nozzle Assembly CG Location

$e_1 := 26.25in$ — Distance from CG to the center of Plate 8, Item 19.

$e_2 := 29in$ — Distance from CG to the center of weld group.

$Hst_{nozzle} := W_{NZL3} = 215\ lbf$ — Design weight of the nozzle assembly without the counterweights. This is the force that will contribute to the moment imparted into the weld group.

$M_{hst} := e_2 \cdot Hst_{nozzle} = 6235 \cdot lbf \cdot in$ — Applied moment to weld group

Weld of vertical counterweight plates to horizontal counterweight plate		Counterweight Welds
		242A Nozzle Welds
Reference Drawing:	H-14-111832	
Reference Detail/Sheet:	Details 1 and 2, Sheet 6	
Item Numbers:	Items 26 and 28 to Item 29	

Weld Group Diagram

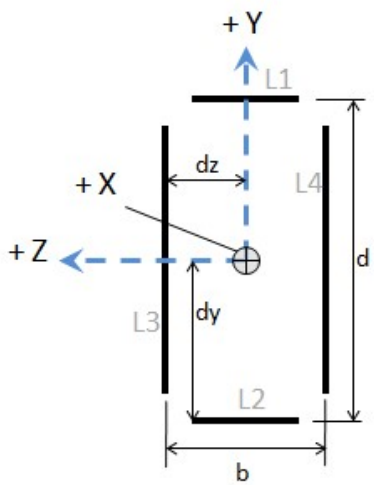

L3 = L4 =	6.25	in
b =	3.375	in
L1 = L2 =	1.5	in
d =	6.25	in

Determine Weld Group CG location

$d_y = d/2$ 3.13 in

$d_z = b/2$ 1.69 in

Determine mass properties of weld group

Line	Length (in)	I_{yo} (in^3)	I_{zo} (in^3)	About Z-Axis $L(d_y)^2$	About Y-Axis $L(d_z)^2$	$I_z = I_{zo} + L(d_y)^2$ (in^3)	$I_y = I_{yo} + L(d_z)^2$ (in^3)
L1	1.50	0.281	0.000	14.648	0.000	14.648	0.281
L2	1.50	0.281	0.000	14.648	0.000	14.648	0.281
L3	6.25	0.000	20.345	0.000	17.798	20.345	17.798
L4	6.25	0.000	20.345	0.000	17.798	20.345	17.798
					Total	69.987	36.158
A_w=	15.50 in				I_p =	106.145	in^3

Determine resultant stress on weld group

Input from RISA						*Highlighted Cells are Input Cells*			
Applied Loads transposed as necessary to align with weld group coordinate system			**Member**	**From Direction**	**Section**	**Demand** (lb/in)	**Basis**	**Influenced Direction**	**Resultant Demand, SRSS** (lb/in)
Px=	824	lbs.	NA	x	NA	53.2	Px/Aw	NA	
Py=	0	lbs.	NA	y	NA	0.0	Py/Aw	NA	
Pz=	0	lbs.	NA	z	NA	0.0	Pz/Aw	NA	
Mx_y=	0	in-lbs.	NA	mx	NA	0.0	Mx*dz/Ip	NA	**344.1**
Mx_z=	0	in-lbs.	NA	mx	NA	0.0	Mx*dy/Ip	NA	
My=	6235	in-lbs.	NA	my	NA	291.0	My*dz/Iy	NA	
Mz=	0	in-lbs.	NA	mz	NA	0.0	Mz*dy/Iz	NA	

Check Welds Using BTH-1, Section 3-3.4 "Welded Connections" Requirements

$F_{EXX} := 60ksi$ — Nominal strength of weld metal

$t_w := \frac{1}{8}in$ — Fillet weld size.
(See H-14-111832, Details 1&2)

$A_{we} := 0.707 \cdot t_w = 0.088 \cdot in$ — Size of fillet root

$F_v := \frac{0.6F_{EXX}}{1.2N_d} = 15 \cdot ksi$ — Allowable weld stress.
(See ASME BTH-1, Section 3-3.4.1)

$R_w := A_{we} \cdot F_v = 1325.63 \cdot \frac{lbf}{in}$ — Capacity of weld per inch

$f_{vw} := 344.1 \frac{lbf}{in}$ — Demand on weld from above

$DCR_w := \frac{f_{vw}}{F_v \cdot A_{we}} = 0.26$ — Demand/capacity ratio < 1.0, OK

10.5.6 Wall Nozzle Attachment Pin Shear Capacity

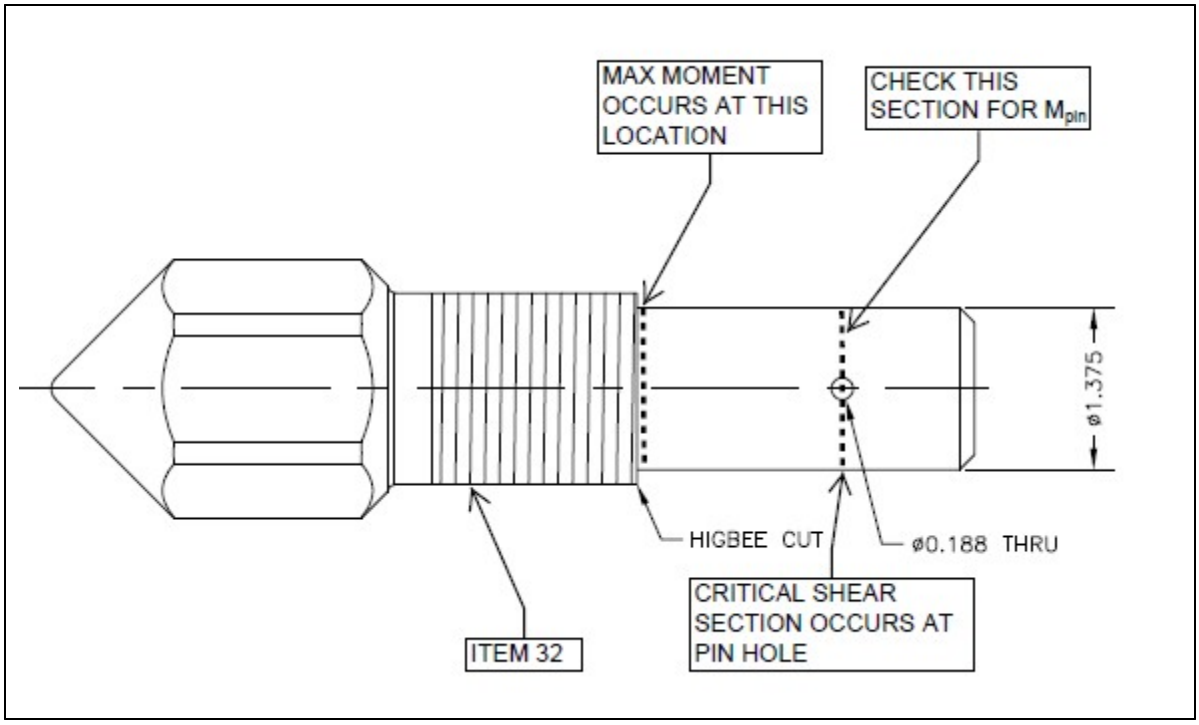

Figure 19. Attachment Pin (H-14-111832, Item 32)

During installation, the wall nozzle weldment will place a shear load on the attachment pin shank. This will result in a bending moment being applied at the base of the pin, at the threaded section. Additionally, the wall nozzle weldment will apply a force couple on the end of the pin, resulting in the application of a point moment on the end of the pin. This moment will be combined with the bending moment due to the applied shear load in order to adequately qualify the pin for all applied loading. The force couple is based on the distance from the wall nozzle weldment CG to the back of plate 8 (Item 19).

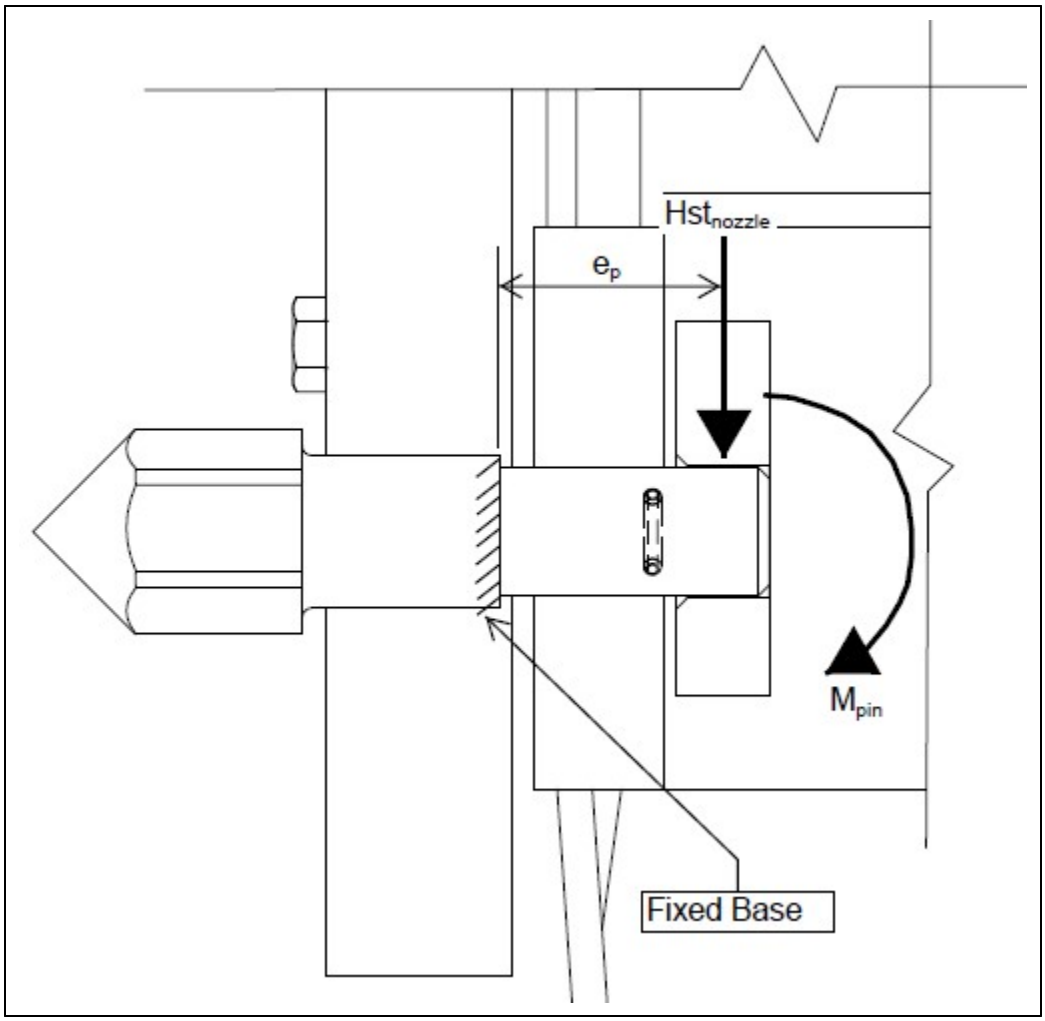

Figure 20. Attachment Pin Loading

$Hst_{nozzle} = 215\ lbf$ — Recall design weight of the nozzle assembly without the counterweights.

$N_d := 2$ — Design factor for category (A) lifters. (See ASME BTH-1, Section 3-1.3)

$P_{vpin} := Hst_{nozzle} = 215\ lbf$ — Design weight for hoisting operations

$D_{pin} := 1.375in$ — Minimum pin shank diameter

$D_{rollpin} := 0.188in$ — Diameter of roll-pin hole

$r := \frac{D_{pin}}{2} = 0.688 \cdot in$ — Radius of pin

$F_{y_A572_50} := 50ksi$ Recall the Yield strength (A572), ASTM A572

$F_{u_A572_50} := 65ksi$ Recall the Ultimate tensile strength (A572), ASTM A572

Shear Check:

$A_{pin} := \frac{\pi}{4} \cdot D_{pin}^2 - D_{rollpin} \cdot D_{pin} = 1.23 \cdot in^2$ Cross-sectional area of pin reduced for roll-pin drill out (conservative)

$f_v := \frac{P_{vpin}}{A_{pin}} = 175.3\,psi$ Max shear stress on pin

$h := 4in$ Height of Plate 8, Item 19

$t := 1in$ Thickness of Plate 8, Item 19

$\frac{h}{t} = 4 \qquad 2.45 \cdot \sqrt{\frac{29000ksi}{F_{y_A572_50}}} = 59$ $\frac{h}{t} \le 2.45\sqrt{\frac{E}{F_y}}$ Therefore, use EQN 3-28

$F_v := \frac{F_{y_A572_50}}{N_d \cdot \sqrt{3}} = 14434\,psi$ Allowable shear stress on pins. EQN 3-28

$DCR_{vpin} := \frac{f_v}{F_v} = 0.01$ Demand/capacity ratio < 1.0, OK

Bending Check at Roll-Pin Hole:

Use parallel axis theorem to calculation section modulus of pin at roll-pin hole. Diagram below is taken from Roark's Formulas, Table A.1, Case 19.

19. Segment of solid circle (*Note:* If $\alpha \leqslant \pi/4$, use expressions from case 20)

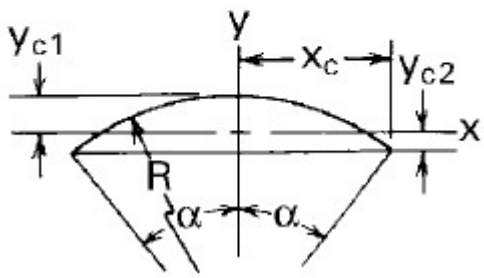

$$\theta_r := \frac{(\pi \cdot r - D_{rollpin})}{r} = 2.868 \cdot rad$$

$$\alpha_r := \frac{\theta_r}{2} = 1.43 \cdot rad$$

$$A_{seg} := r^2 \cdot (\alpha_r - \sin(\alpha_r) \cdot \cos(\alpha_r))$$

$$A_{seg} = 0.614 \cdot in^2$$

$$y_{c1} := r \cdot \left[1 - \frac{2 \cdot \sin(\alpha_r)^3}{3 \cdot (\alpha_r - \sin(\alpha_r) \cdot \cos(\alpha_r))}\right]$$

$y_{c1} = 0.34 \cdot in$ Distance from edge of pin to centroid of segment

$$y_{c2} := r \cdot \left[\frac{2 \cdot \sin(\alpha_r)^3}{3(\alpha_r - \sin(\alpha_r) \cdot \cos(\alpha_r))} - \cos(\alpha_r)\right]$$

$y_{c2} = 0.25 \cdot in$ Distance from edge of roll-pin hole to centroid of segment

$$I_x := \frac{r^4}{4} \cdot \left[\alpha_r - \sin(\alpha_r) \cdot \cos(\alpha_r) + 2 \cdot \sin(\alpha_r)^3 \cdot \cos(\alpha_r) - \frac{16 \cdot \sin(\alpha_r)^6}{9 \cdot (\alpha_r - \sin(\alpha_r) \cdot \cos(\alpha_r))}\right]$$

$I_x = 0.015 \cdot in^4$ Moment of inertia of segment about it's centroid

$d := r - y_{c1} = 0.34 \cdot in$

Distance from center of pin hole to segment centroid

$I_{xtr} := I_x + A_{seg} \cdot d^2 = 0.087 \cdot in^4$

Transformed moment of inertia of a single segment about pin centroid

$I_{xtotal} := 2 \cdot I_{xtr} = 0.175 \cdot in^4$

Total transformed moment of inertia of the pin with roll-pin hole accounted for

$$I_y := \frac{r^4}{12} \cdot \left(3\alpha_r - 3\sin(\alpha_r) \cdot \cos(\alpha_r) - 2\sin(\alpha_r)^3 \cdot \cos(\alpha_r)\right)$$

$I_y = 0.07 \cdot in^4$

Moment of inertia of a single segment about it's centroid

$I_{ytotal} := 2 \cdot I_y = 0.14 \cdot in^4$

$x_c := r \cdot \sin(\alpha_r) = 0.68 \cdot in$

Distance from center axis to extreme fiber for bending about the y axis

$S_{pinx} := \frac{I_{xtotal}}{r} = 0.254 \cdot in^3$

Elastic modulus of pin shank about the x axis (roll-pin horizontal), accounting for roll-pin hole

$S_{piny} := \frac{I_{ytotal}}{x_c} = 0.2 \cdot in^3$

Elastic modulus of pin shank about the y axis (roll-pin vertical), accounting for roll-pin hole

$S_{pin} := \min(S_{pinx}, S_{piny}) = 0.2 \cdot in^3$

Section modulus to use in design, this will envelope any orientation of the roll-pin

$e_1 := 26.5in$

Eccentricity from centroid of nozzle assembly to back face of plate 8 (Item 19)

$M_{pin} := Hst_{nozzle} \cdot e_1 = 5697.5 \cdot lbf \cdot in$

Maximum applied moment to pin at the roll-pin hole

$f_b := \frac{M_{pin}}{S_{pin}} = 28693.95\ psi$ Max bending stress on pin

$F_b := \frac{1.25 \cdot F_{y_A572_50}}{N_d} = 31250\ psi$ Allowable bending stress on pin. EQN 3-25

$DCR_{vpin} := \frac{f_b}{F_b} = 0.918$ Demand/capacity ratio < 1.0, OK

Bending Check at Edge of Higbee Cut on Pin:

$e_p := 2.39in$ Eccentricity from edge of Higbee cut to center of Plate 8 (Item 19)

$M_{max} := P_{vpin} \cdot e_p + M_{pin} = 6211.35 \cdot lbf \cdot in$ Maximum applied moment to pin

$S_{pin} := \frac{\pi \cdot D_{pin}^3}{32} = 0.255 \cdot in^3$ Elastic modulus of pin shank

$f_b := \frac{M_{max}}{S_{pin}} = 24337.61\ psi$ Max bending stress on pin

$F_b := \frac{1.25 \cdot F_{y_A572_50}}{N_d} = 31250\ psi$ Allowable bending stress on pin. EQN 3-25

$DCR_{vpin} := \frac{f_b}{F_b} = 0.78$ Demand/capacity ratio < 1.0, OK

Attachment 1:

RISA-3D Pump Room Wall Model

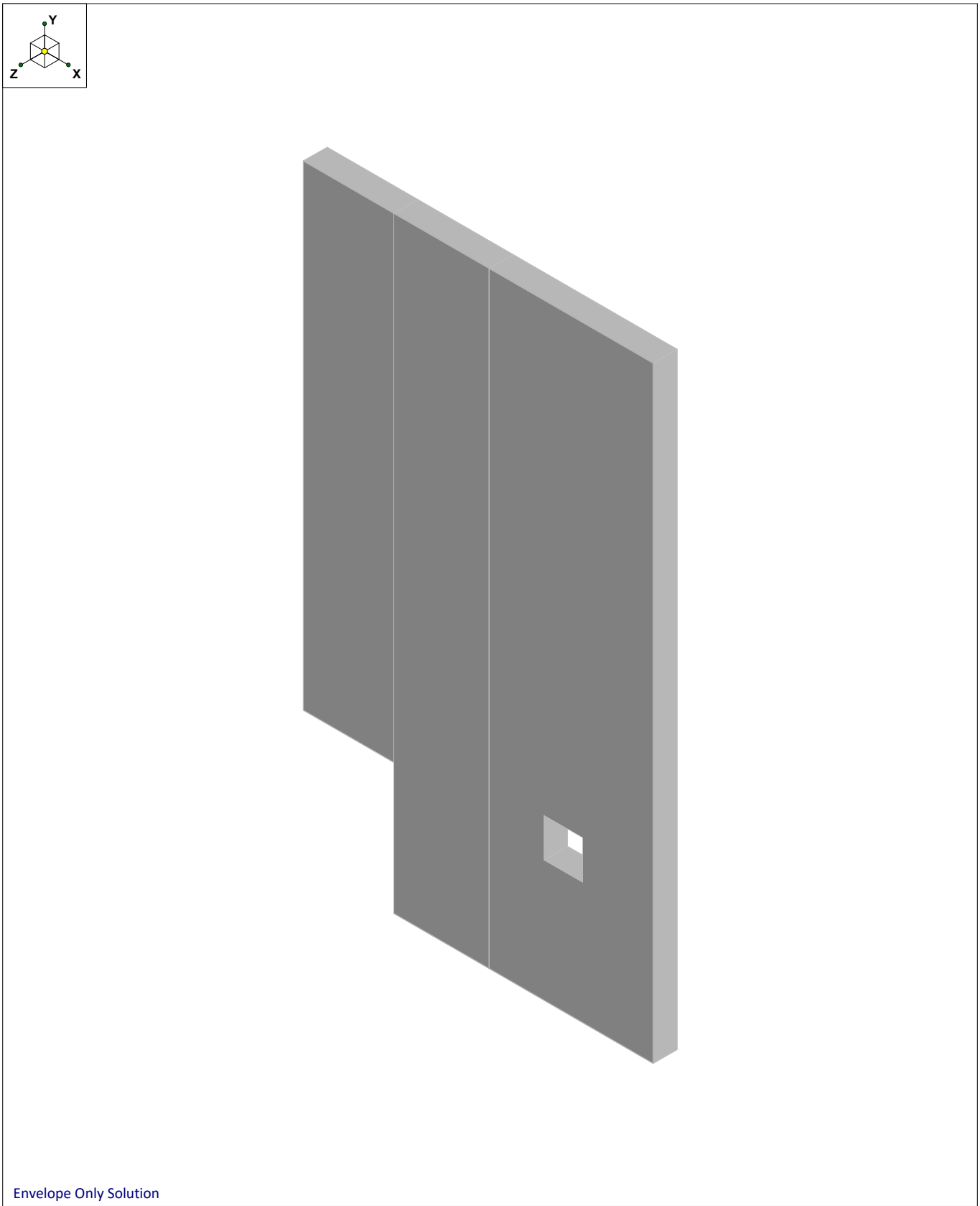

CEES	242A Pump Room Wall Penetrations Wall Panel Model in RISA	
JDY		
		242A Evaporator Wall 20190827.r3d

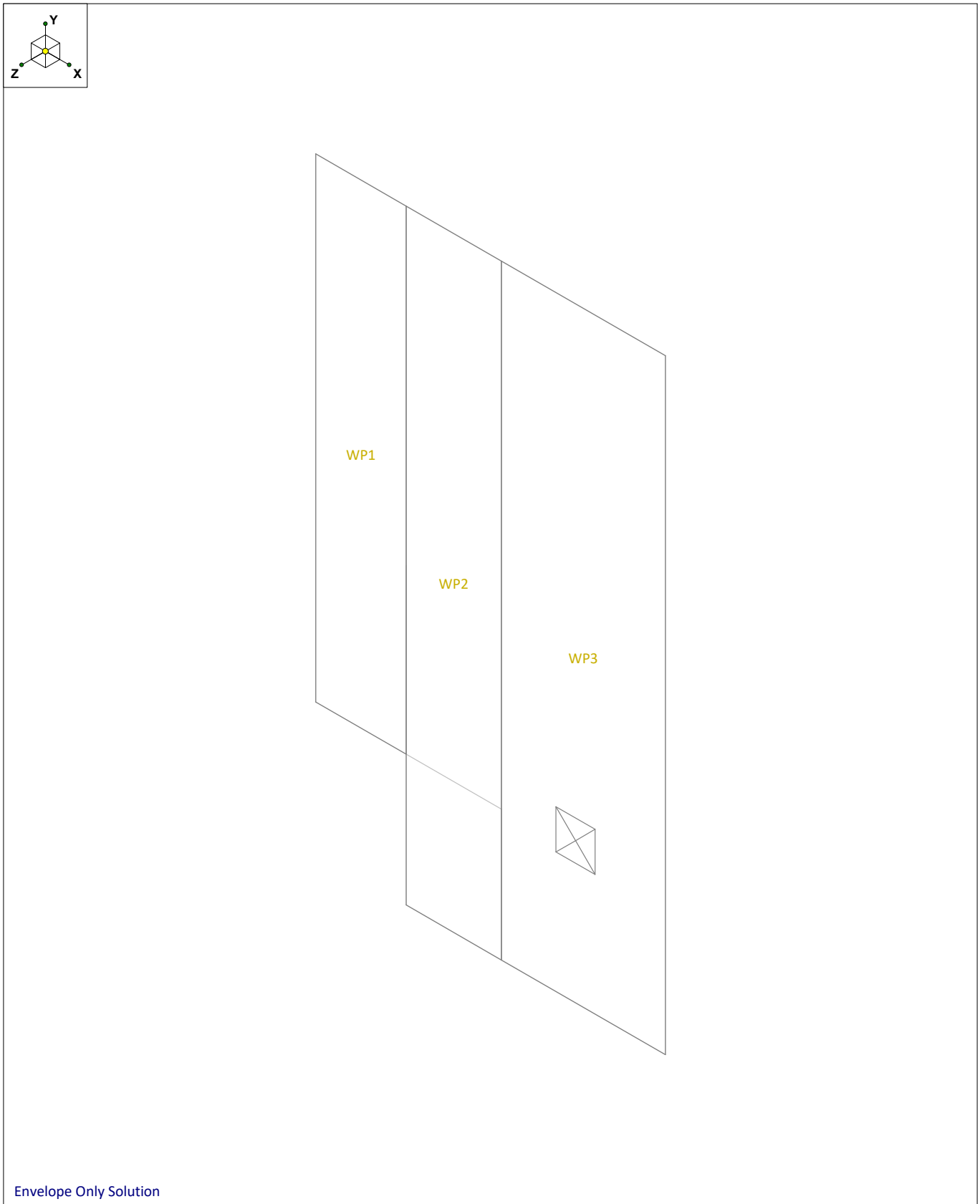

CEES	242A Pump Room Wall Penetrations	
JDY		
		242A Evaporator Wall 20190827.r3d

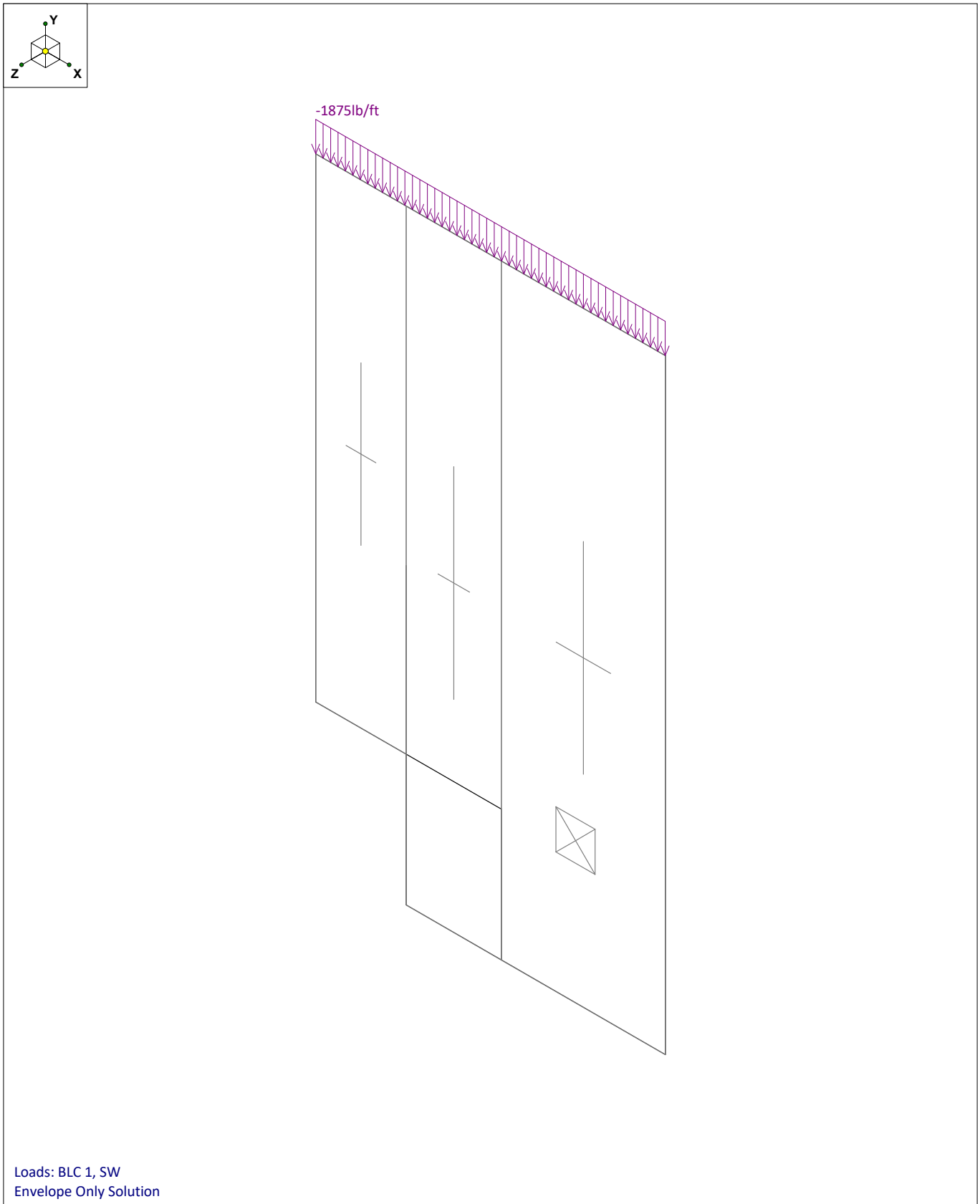

CEES	242A Pump Room Wall Penetrations	
JDY		
		242A Evaporator Wall 20190827.r3d

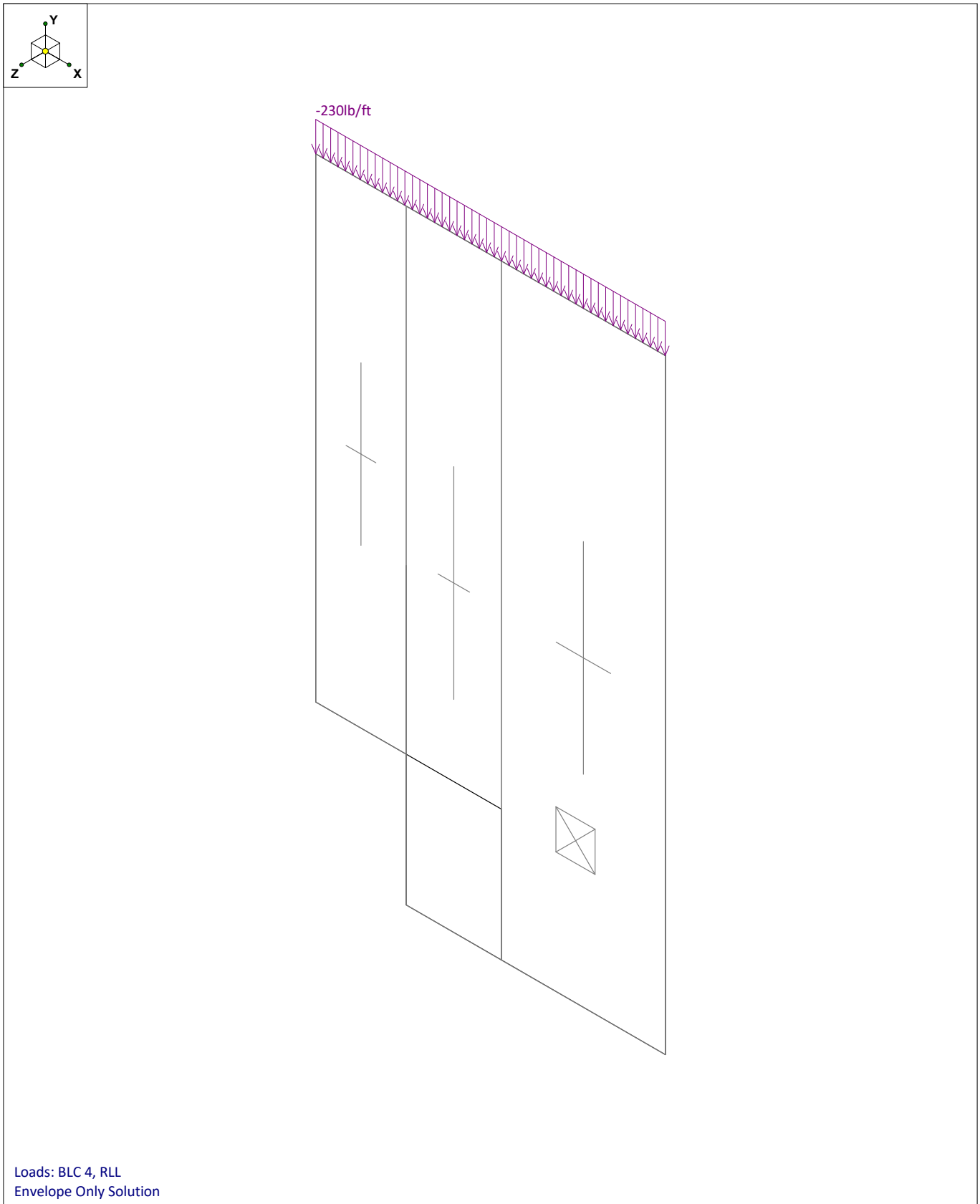

CEES	242A Pump Room Wall Penetrations	
JDY		
		242A Evaporator Wall 20190827.r3d

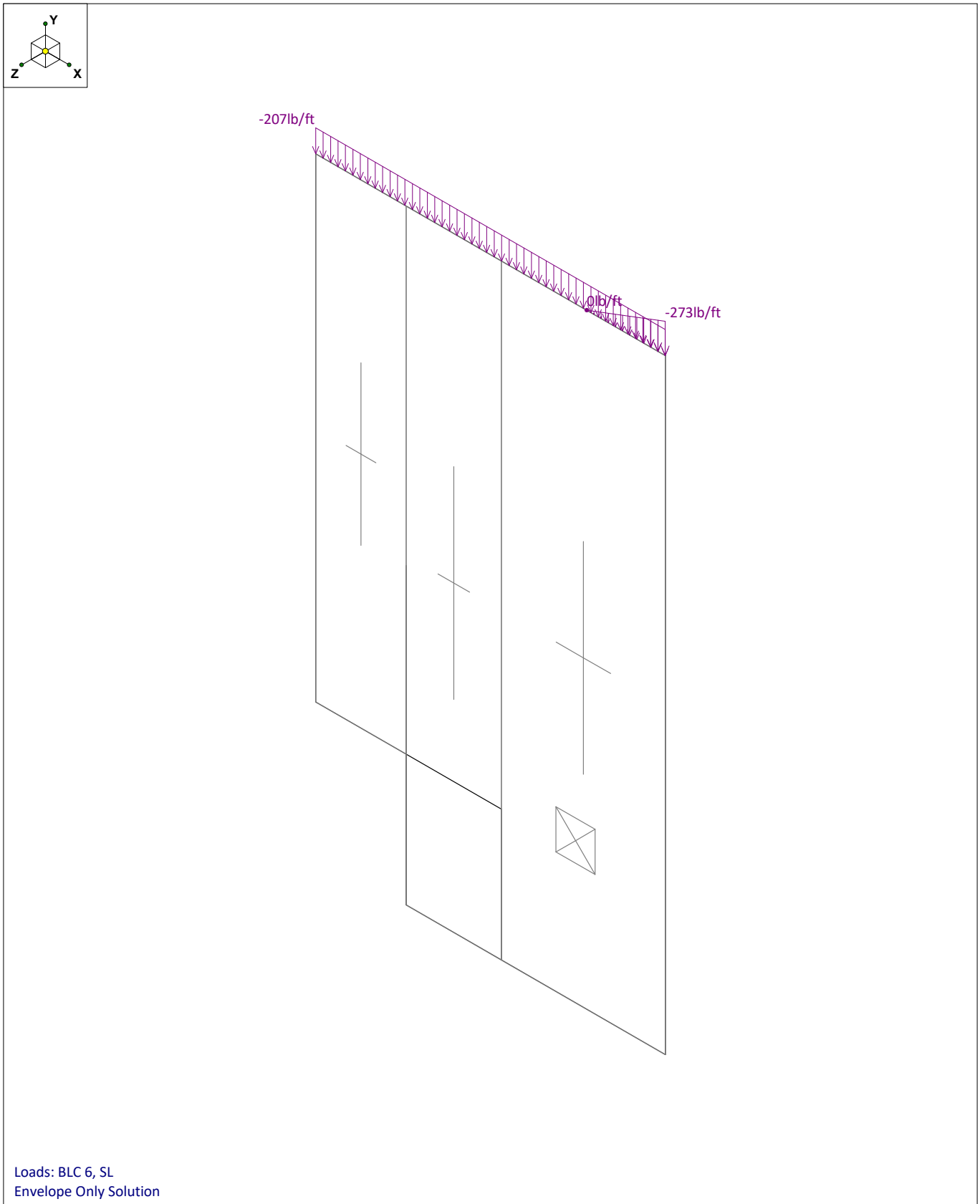

CEES	242A Pump Room Wall Penetrations	
JDY		
		242A Evaporator Wall 20190827.r3d

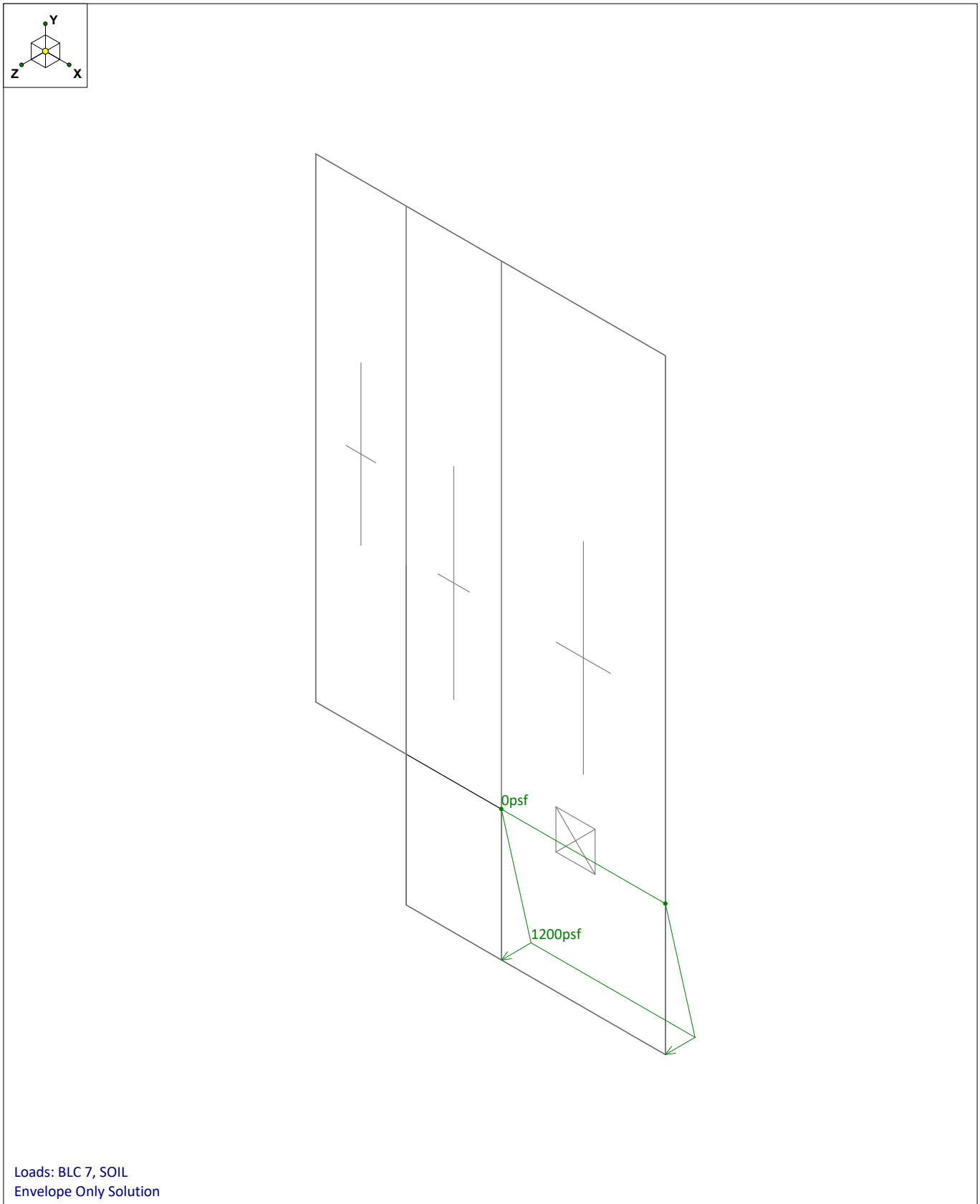

Loads: BLC 7, SOIL
Envelope Only Solution

CEES	242A Pump Room Wall Penetrations	
JDY		
		242A Evaporator Wall 20190827.r3d

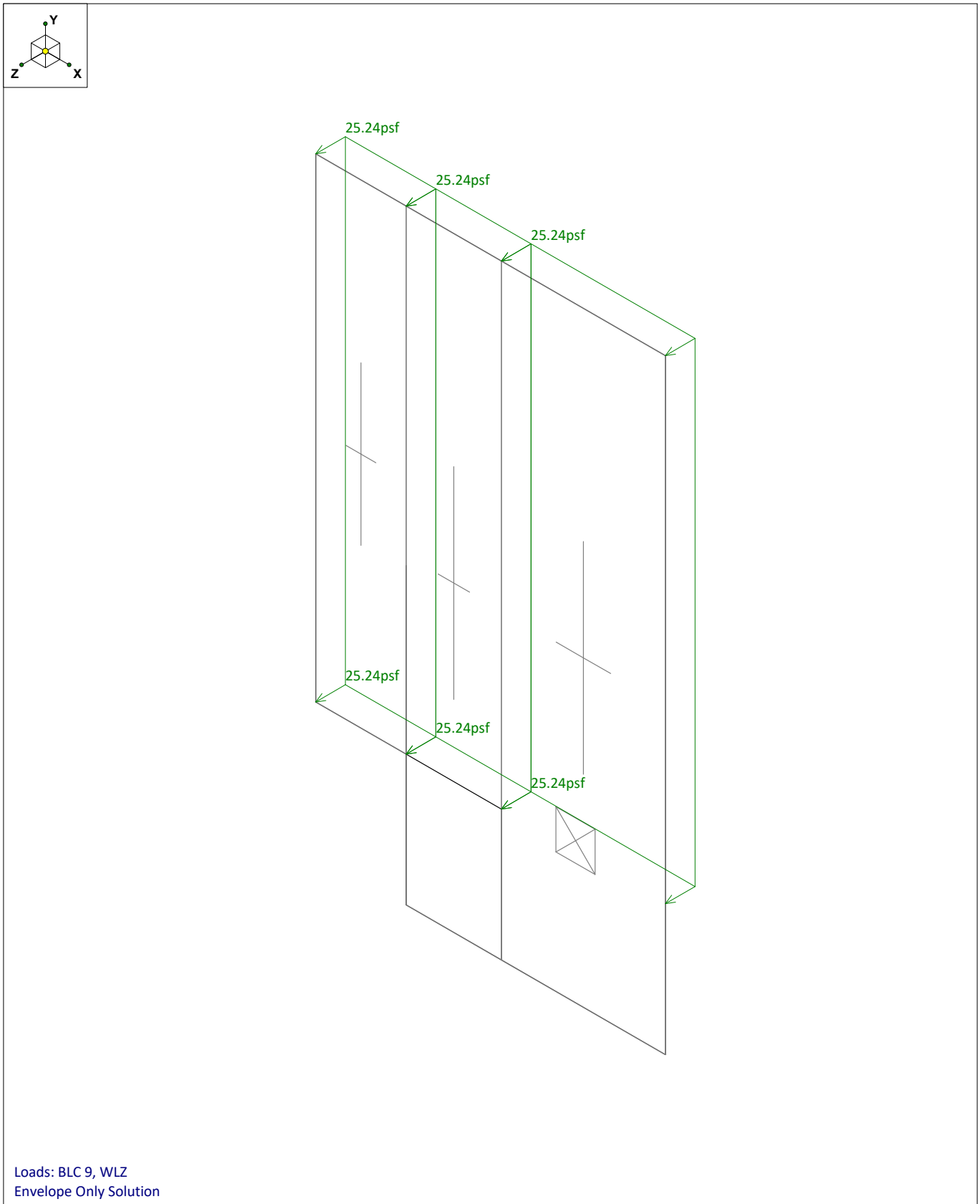

Loads: BLC 9, WLZ
Envelope Only Solution

CEES	242A Pump Room Wall Penetrations	
JDY		
		242A Evaporator Wall 20190827.r3d

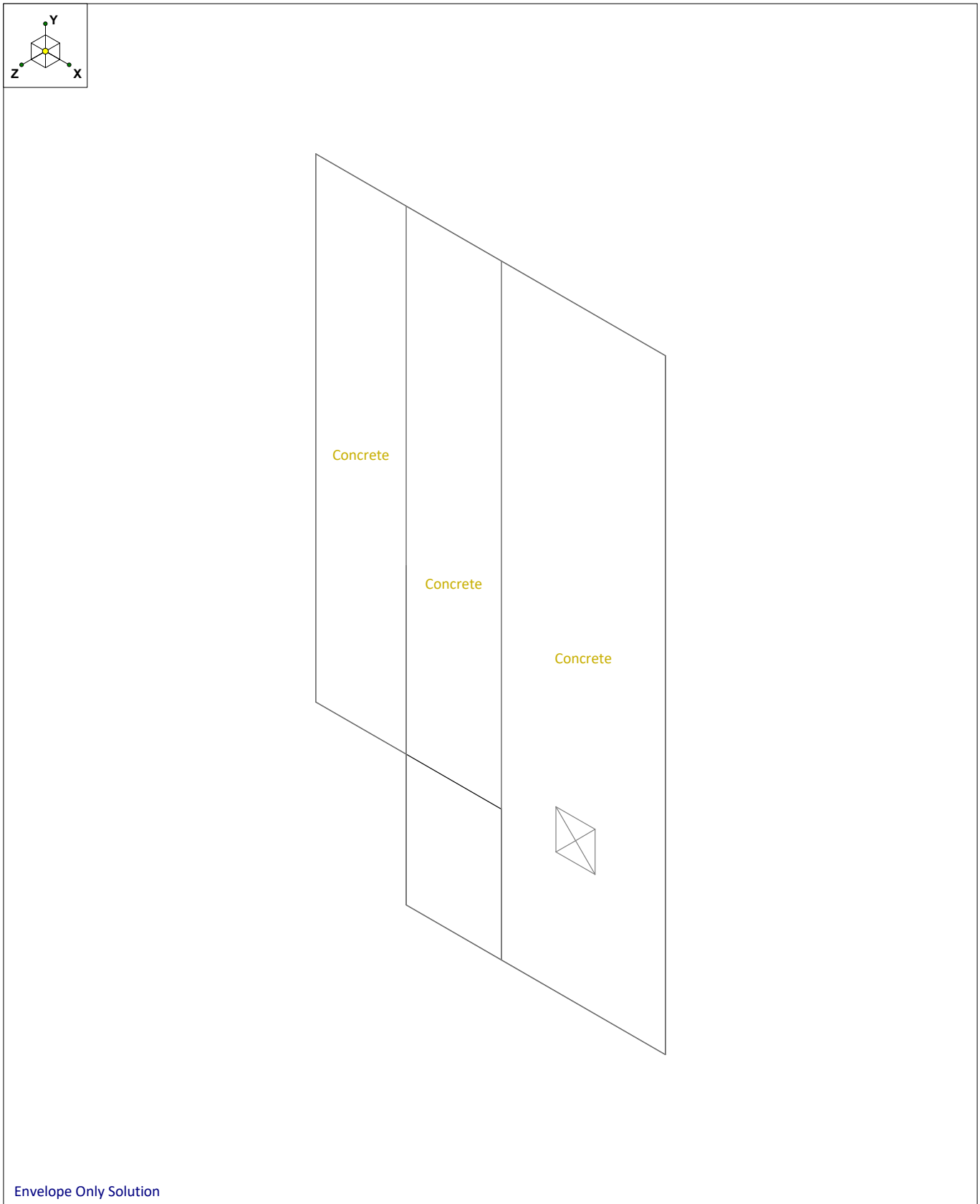

CEES	242A Pump Room Wall Penetrations	
JDY		
		242A Evaporator Wall 20190827.r3d

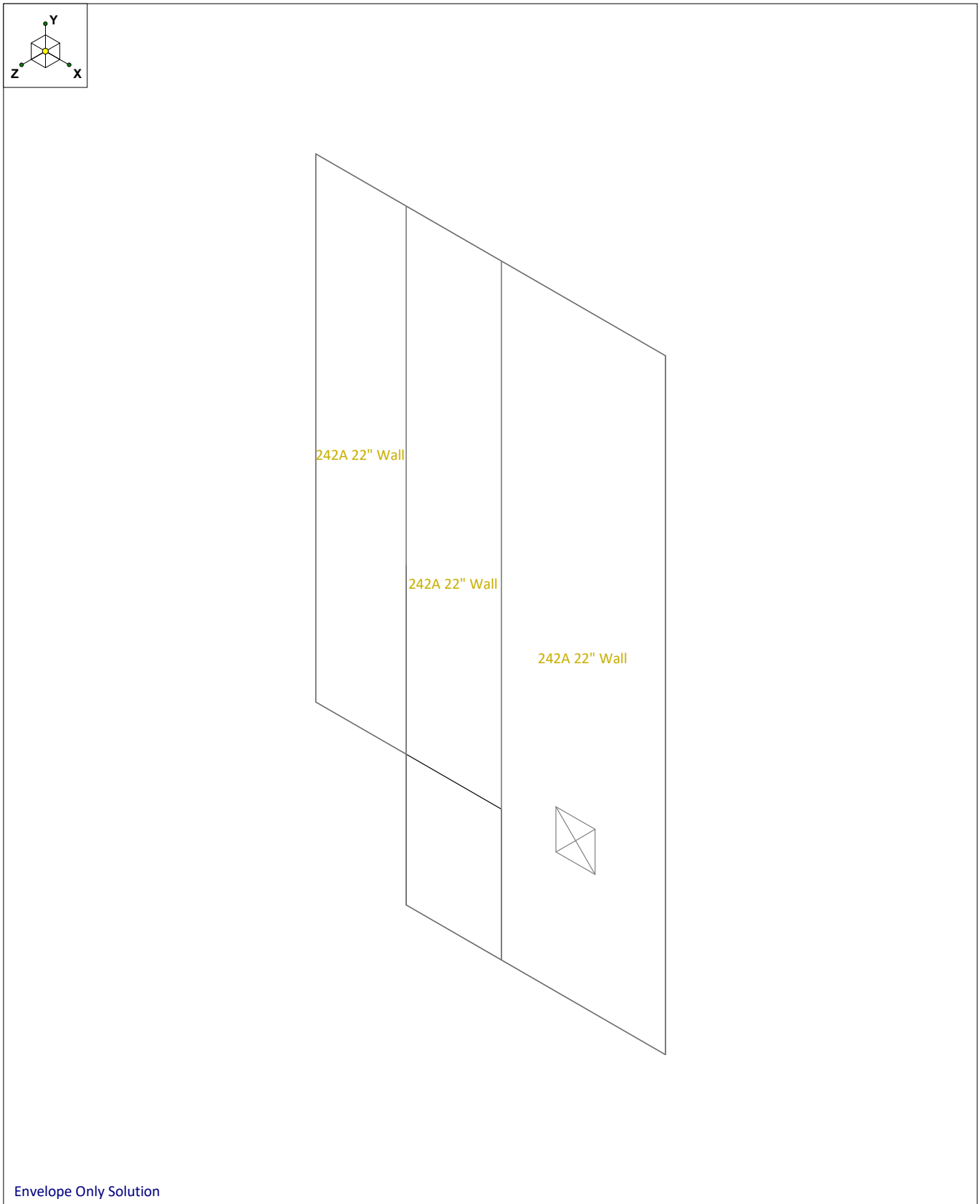

CEES	242A Pump Room Wall Penetrations	
JDY		
		242A Evaporator Wall 20190827.r3d

Company : CEES
Designer : JDY
Job Number :
Model Name : 242A Pump Room Wall Penetrations WP1

Checked By: RDL

CRITERIA		MATERIALS			GEOMETRY		
Code	: ACI 318-14	Material Set	: Conc3000NW		Total Height	: 436	in
Design Rule	: 242A 22" Wall	Concrete f'c	: 3000	ksi	Total Length	: 83	in
Seismic Rule	: None	Concrete E	: 3156	ksi	Thickness	: 22	in
Loc of r/f	: Each Face	Concrete G	: 1372	ksi			
Outer Bars	: Horizontal	Conc Density	: 145	lb/ft^3	Int Cover (-z)	: 2	in
		Lambda	: 1		Ext Cover (+z)	: 2	in
Vert Bar Size	: #5	Conc Str Blk	: Rectangular		Cover Open/Edge	2	in
Horz Bar Size	: #5				K	: 1	
		Vert Bar Fy	: 60000	ksi	Use Cracked?	: Yes	
Transfer In?	: No	Horz Bar Fy	: 60000	ksi	In Icr Factor	: .35	
Transfer Out?	: No	Steel E	: 29000	ksi	Out Icr Factor	: .35	
Group Wall?	: No						

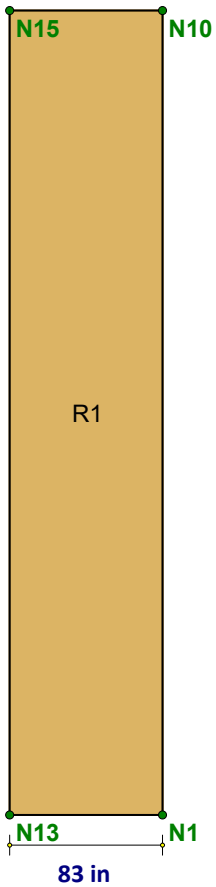

REGION RESULTS

Region	UC Max In Plane	LC	UC Shear In Plane	LC	Delta Max In Plane(in)	LC	UC Max Out Plane	LC	UC Shear Out Plane	LC	Delta Max Out Plane(in)	LC
R1	.064	1	.086	1	N/A	N/A	.048	7	.02	7	N/A	N/A

Company : CEES
Designer : JDY
Job Number :
Model Name : 242A Pump Room Wall Penetrations WP1

Checked By: RDL

REINFORCEMENT RESULTS

Region	Vertical Reinforcement	Horizontal Reinforcement	Diagonal Reinforcement
R1	#5@12in oc e.f.	#5@12in oc e.f.	

Company : CEES
Designer : JDY
Job Number :
Model Name : 242A Pump Room Wall Penetrations WP2

Checked By: RDL

CRITERIA		MATERIALS			GEOMETRY		
Code	: ACI 318-14	Material Set	: Conc3000NW		Total Height	: 556	in
Design Rule	: 242A 22" Wall	Concrete f'c	: 3000	ksi	Total Length	: 87.5	in
Seismic Rule	: None	Concrete E	: 3156	ksi	Thickness	: 22	in
Loc of r/f	: Each Face	Concrete G	: 1372	ksi			
Outer Bars	: Horizontal	Conc Density	: 145	lb/ft^3	Int Cover (-z)	: 2	in
		Lambda	: 1		Ext Cover (+z)	: 2	in
Vert Bar Size	: #5	Conc Str Blk	: Rectangular		Cover Open/Edge	2	in
Horz Bar Size	: #5				K	: 1	
		Vert Bar Fy	: 60000	ksi	Use Cracked?	: Yes	
Transfer In?	: No	Horz Bar Fy	: 60000	ksi	In Icr Factor	: .35	
Transfer Out?	: No	Steel E	: 29000	ksi	Out Icr Factor	: .35	
Group Wall?	: No						

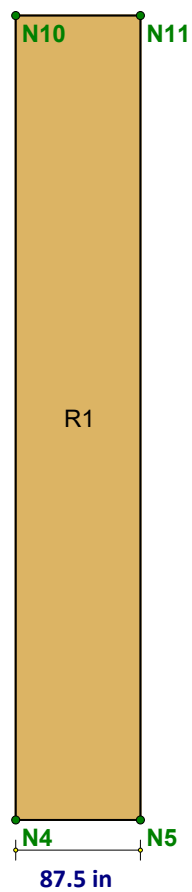

REGION RESULTS

Region	UC Max In Plane	LC	UC Shear In Plane	LC	Delta Max In Plane(in)	LC	UC Max Out Plane	LC	UC Shear Out Plane	LC	Delta Max Out Plane(in)	LC
R1	.029	1	.05	1	N/A	N/A	.052	7	.054	7	N/A	N/A

Company : CEES
Designer : JDY
Job Number :
Model Name : 242A Pump Room Wall Penetrations WP2

Checked By: RDL

REINFORCEMENT RESULTS

Region	Vertical Reinforcement	Horizontal Reinforcement	Diagonal Reinforcement
R1	#5@12in oc e.f.	#5@12in oc e.f.	

Company : CEES
Designer : JDY
Job Number :
Model Name : 242A Pump Room Wall Penetrations WP3

Checked By: RDL

CRITERIA

Code	:	ACI 318-14
Design Rule	:	242A 22" Wall
Seismic Rule	:	None
Loc of r/f	:	Each Face
Outer Bars	:	Horizontal
Vert Bar Size	:	#5
Horz Bar Size	:	#5
Transfer In?	:	No
Transfer Out?	:	No
Group Wall?	:	No

MATERIALS

Material Set	:	Conc3000NW	
Concrete f'c	:	3000	ksi
Concrete E	:	3156	ksi
Concrete G	:	1372	ksi
Conc Density	:	145	lb/ft^3
Lambda	:	1	
Conc Str Blk	:	Rectangular	
Vert Bar Fy	:	60000	ksi
Horz Bar Fy	:	60000	ksi
Steel E	:	29000	ksi

GEOMETRY

Total Height	:	556	in
Total Length	:	150.5	in
Thickness	:	22	in
Int Cover (-z)	:	2	in
Ext Cover (+z)	:	2	in
Cover Open/Edge		2	in
K	:	1	
Use Cracked?	:	Yes	
In Icr Factor	:	.35	
Out Icr Factor	:	.35	

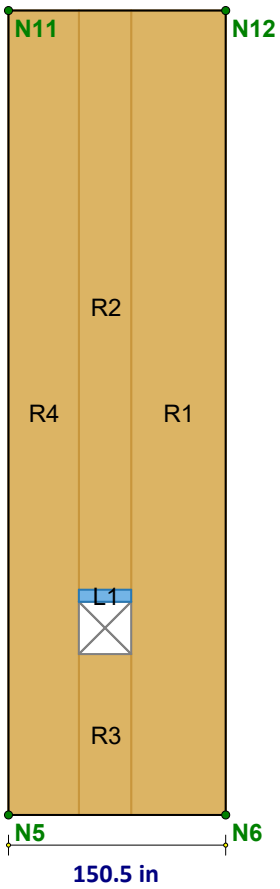

REGION RESULTS

Region	UC Max In Plane	LC	UC Shear In Plane	LC	Delta Max In Plane(in)	LC	UC Max Out Plane	LC	UC Shear Out Plane	LC	Delta Max Out Plane(in)	LC
R1	.024	1	.094	1	N/A	N/A	.191	7	.257	7	N/A	N/A
R2	.012	1	.057	1	N/A	N/A	.037	7	.034	7	N/A	N/A
R3	.004	1	.004	1	N/A	N/A	.345	5	.39	7	N/A	N/A
R4	.01	1	.031	1	N/A	N/A	.056	7	.051	7	N/A	N/A

Company : CEES
Designer : JDY
Job Number :
Model Name : 242A Pump Room Wall Penetrations WP3

Checked By: RDL

REINFORCEMENT RESULTS

Region	Vertical Reinforcement	Horizontal Reinforcement	Diagonal Reinforcement
R1	#5@12in oc e.f.	#5@12in oc e.f.	
R2	#5@12in oc e.f.	#5@12in oc e.f.	
R3	#5@12in oc e.f.	#5@12in oc e.f.	
R4	#5@12in oc e.f.	#5@12in oc e.f.	

Columbia Energy AND ENVIRONMENTAL SERVICES

Company : CEES
Designer : JDY
Job Number :
Model Name : 242A Pump Room Wall Penetrations

Checked By: RDL

Concrete Properties

	Label	E [ksi]	G [ksi]	Nu	Therm (\1E...	Density[lb/ft^3]	f'c[psi]	Lambda	Flex Steel[p...	Shear Steel...
1	Conc3000NW	3156	1372	.15	.6	145	3000	1	60000	60000
2	Conc3500NW	3409	1482	.15	.6	145	3500	1	60000	60000
3	Conc4000NW	3644	1584	.15	.6	145	4000	1	60000	60000
4	Conc3000LW	2085	907	.15	.6	109.999	3000	.75	60000	60000
5	Conc3500LW	2252	979	.15	.6	109.999	3500	.75	60000	60000
6	Conc4000LW	2408	1047	.15	.6	109.999	4000	.75	60000	60000

Wall Panel U.C. Parameters

	Label	Max Bending Chk	Max Shear Chk
1	Typical	1	1
2	242A 22" Wall	1	1

Concrete Wall Panel Rebar Parameters

	Label	Vert Bar Size	Max Vert Bar ...	Min Vert Bar ...	Vert Bar In...	Horz Bar Si...	Max Horz Bar...	Min Horz Bar ...	Horz Bar In...	Group Wall
1	Typical	#6	18	4	2	#4	18	4	2	
2	242A 22" ...	#5	12	12	2	#5	12	12	2	

Concrete Wall Panel Cover Parameters

	Label	Outer Bars	Location	Int Cover -z[in]	Ext Cover +z[in]	Edge Cover[in]	Transfer In	Transfer Out
1	Typical	Vertical	Each Face	2	2	2		
2	242A 22" Wall	Horizontal	Each Face	2	2	2		

Wall Panel Data

	Label	A Joint	B Joint	C Joint	D Joint	Material Type	Material Set	Thickness[i...	Design Rule	Panel/Spacing
1	WP1	N13	N15	N10	N1	Concrete	Conc3000NW	22	242A 22" Wall	N/A
2	WP2	N4	N10	N11	N5	Concrete	Conc3000NW	22	242A 22" Wall	N/A
3	WP3	N5	N11	N12	N6	Concrete	Conc3000NW	22	242A 22" Wall	N/A

Wall Panel Advanced Data

	Label	Seismic Rule	Design Method	SSAF	In-plane Icr Factor	Out-plane Icr Factor	K	Cm In-pl...	Cm Out-...	Inactive
1	WP1	None	N/A	N/A	.35	.35				
2	WP2	None	N/A	N/A	.35	.35				
3	WP3	None	N/A	N/A	.35	.35				

Member Distributed Loads (BLC 1 : SW)

	Member Label	Direction	Start Magnitude[lb/ft,F,psf]	End Magnitude[lb/ft,F,psf]	Start Location[in,%]	End Location[in,%]
1	M1	Y	-1875	-1875	0	0

Columbia Energy AND ENVIRONMENTAL SERVICES

Company : CEES
Designer : JDY
Job Number :
Model Name : 242A Pump Room Wall Penetrations

Checked By: RDL

Member Distributed Loads (BLC 4 : RLL)

	Member Label	Direction	Start Magnitude[lb/ft,F,psf]	End Magnitude[lb/ft,F,psf]	Start Location[in,%]	End Location[in,%]
1	M1	Y	-230	-230	0	0

Member Distributed Loads (BLC 6 : SL)

	Member Label	Direction	Start Magnitude[lb/ft,F,psf]	End Magnitude[lb/ft,F,psf]	Start Location[in,%]	End Location[in,%]
1	M1	Y	-207	-207	0	0
2	M1	Y	0	-273	249	321

Wall Panel Surface Loads (BLC 7 : SOIL)

	Wall Panel Label	Direction	Top Magnitude[psf,F]	Bottom Magnitude[psf,F]	Start Location[in]	Height[in]
1	WP3	Z	0	1200	0	120

Wall Panel Surface Loads (BLC 9 : WLZ)

	Wall Panel Label	Direction	Top Magnitude[psf,F]	Bottom Magnitude[psf,F]	Start Location[in]	Height[in]
1	WP1	Z	25.24	25.24	0	0
2	WP2	Z	25.24	25.24	120	556
3	WP3	Z	25.24	25.24	120	556

Basic Load Cases

	BLC Description	Category	X Gravity	Y Gravity	Z Gravity	Joint	Point	Distrib...	Area(M...	Surface(Plat...
1	SW	DL		-1				1		
2	SDL	DL								
4	RLL	RLL						1		
5	LL	LL								
6	SL	SL						2		
7	SOIL	HL								1
9	WLZ	WLZ								3
11	ELY	ELY		-.12						
12	ELZ	ELZ			.42					

Load Combinations

	Description	Sol...	P...	S...	BLC	Fa...	BLC	Fac...	BLC	Fac...	BLC	Factor	BLC	Factor	BLC	Fac...	BLC	Fac...	BLC	Fa...	BLC	Fa...	BLC	Fac...
1	IBC 16-1	Yes	Y		DL	1.4																		
2	IBC 16-2	Yes	Y		DL	1.2	HL	1.6	RLL	.5														
3	IBC 16-3	Yes	Y		DL	1.2	RLL	1.6	HL	1.6	WLZ	.5												
4	IBC 16-4	Yes	Y		DL	1.2	WLZ	1	HL	1.6	RLL	.5												
5	IBC 16-5	Yes	Y		DL	1.2	ELY	1	ELZ	1	HL	1.6	SL	.2										
6	IBC 16-6	Yes	Y		DL	.9	WLZ	1	HL	1.6														
7	IBC 16-7	Yes	Y		DL	.9	ELY	-1	ELZ	1	HL	1.6												

Columbia Energy AND ENVIRONMENTAL SERVICES

Company : CEES
Designer : JDY
Job Number :
Model Name : 242A Pump Room Wall Penetrations

Checked By: RDL

Wall Panel ACI 318-14: Concrete Code Checks (Out Plane)

	Wall Panel	Region	Max UC	LC	Shear UC	LC	Pn*phi[lb/ft]	Mn*phi[k-ft/in]	Vn*phi[lb/ft]
1	WP1	R1	.048 (Int)	7	.02	7	NC	2.42	18854.841
2	WP2	R1	.052 (Ext)	7	.054	7	NC	2.61	18879.903
3	WP3	R1	.191 (Int)	7	.257	7	NC	2.653	18837.421
4		R2	.037 (Ext)	7	.034	7	NC	2.393	18850.283
5		R3	.345 (Int)	5	.39	7	NC	2.393	18853.553
6		R4	.056 (Ext)	7	.051	7	NC	2.302	18822.162

Attachment 2:

RISA-3D Nozzle Assembly and Anchorage

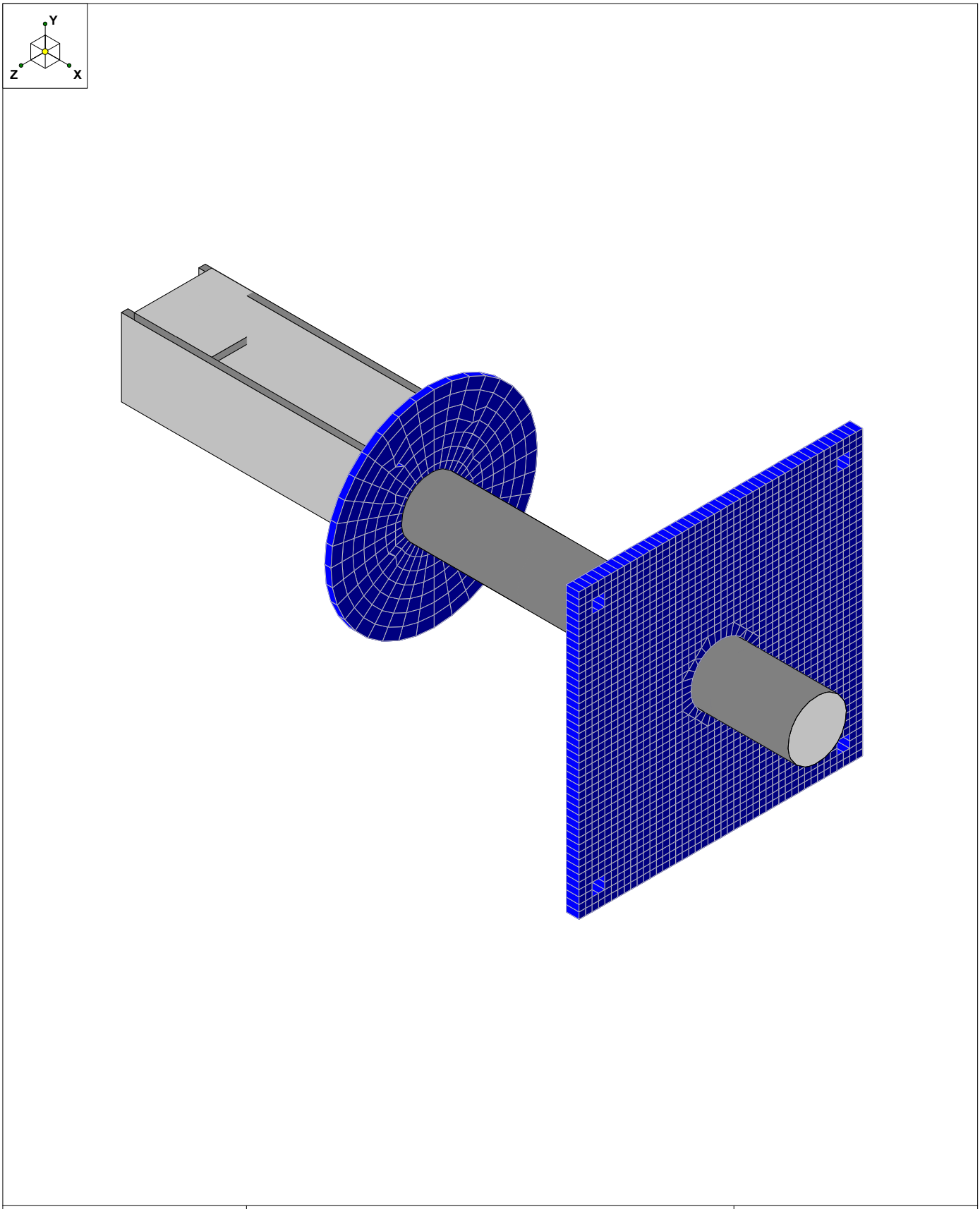

CEES	242A Pump Room Wall Nozzles	
JDY		
		242A Evaporator Wall Nozzles 2in...

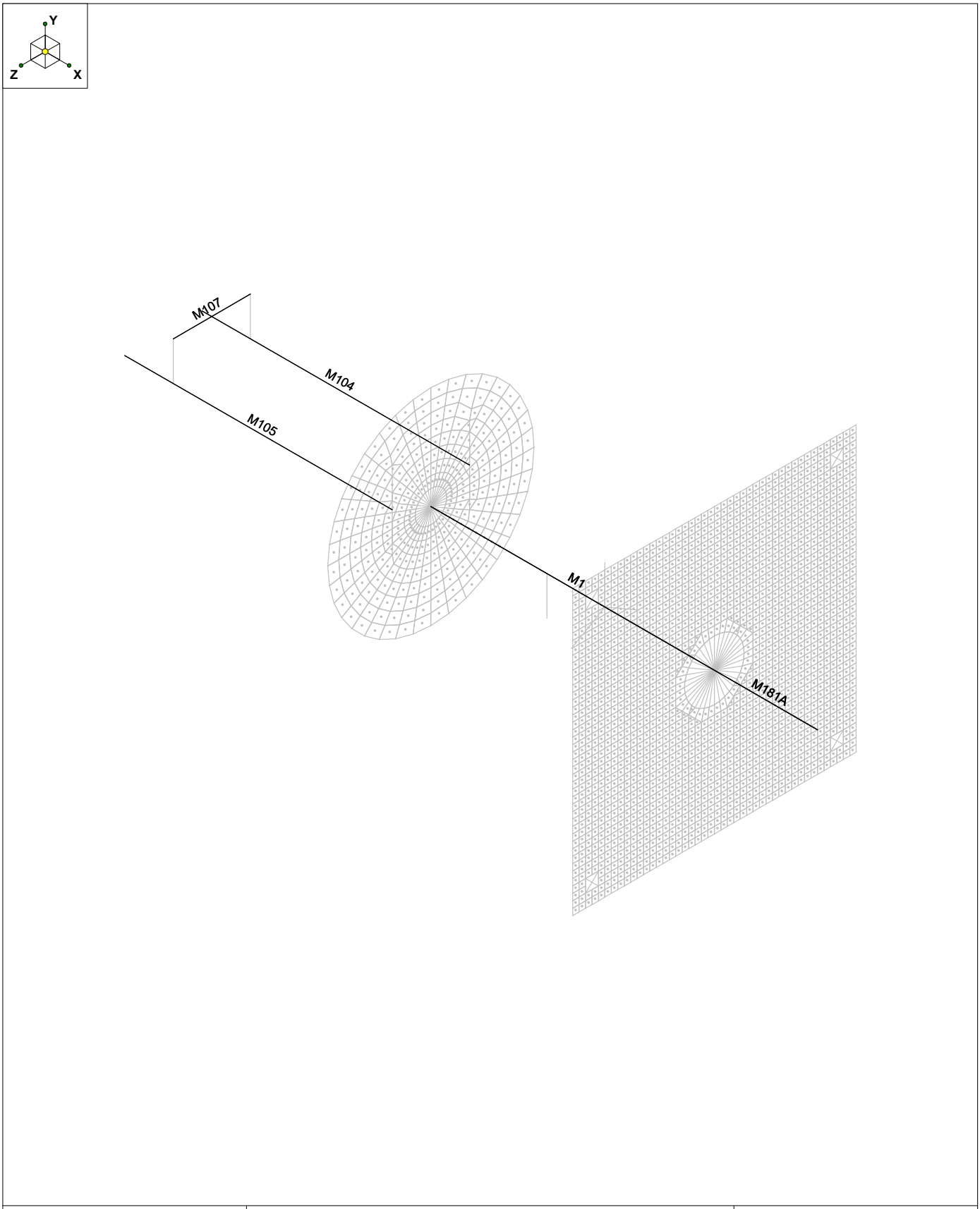

CEES	242A Pump Room Wall Nozzles	
JDY		
		242A Evaporator Wall Nozzles 2in...

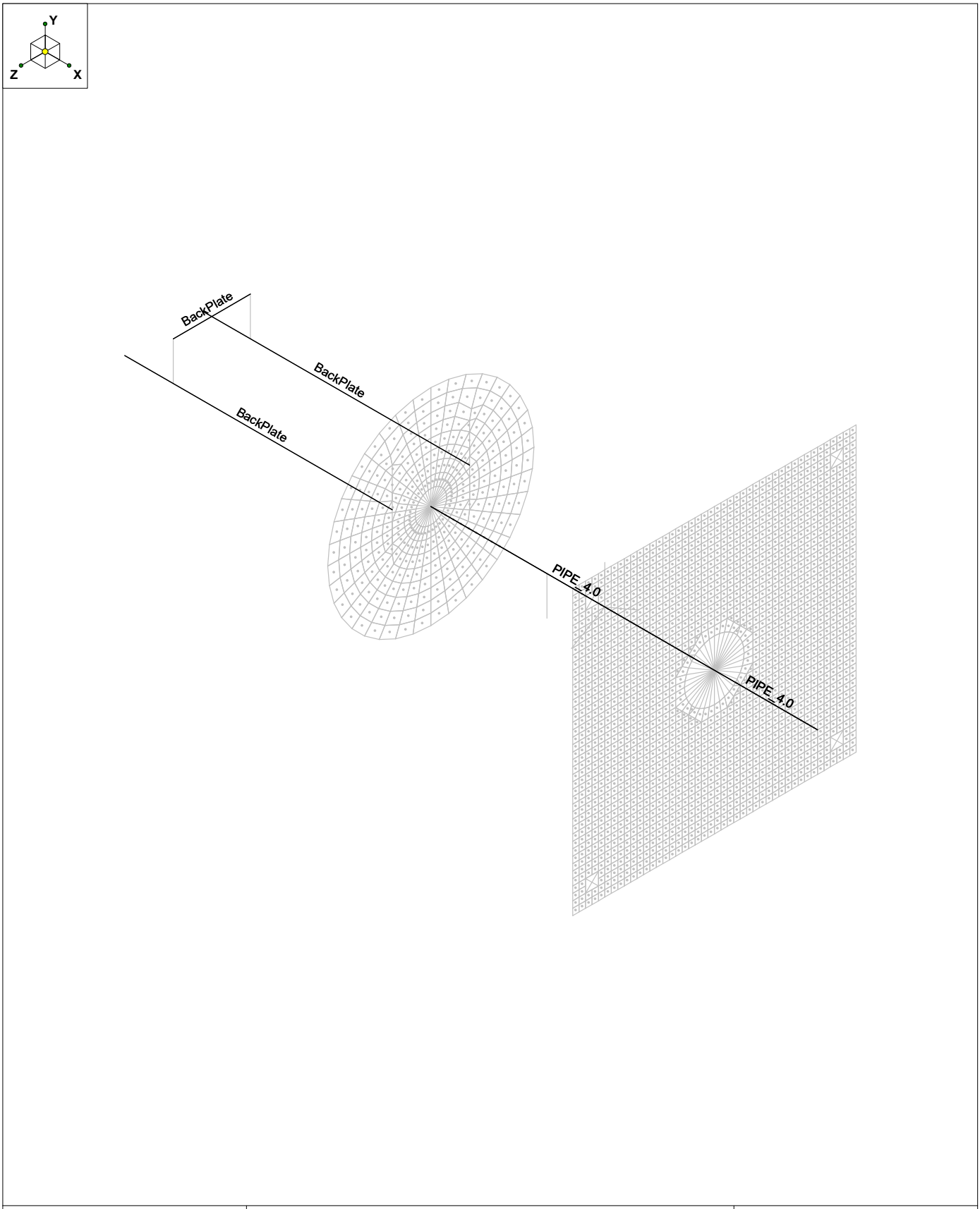

CEES	242A Pump Room Wall Nozzles	
JDY		
		242A Evaporator Wall Nozzles 2in...

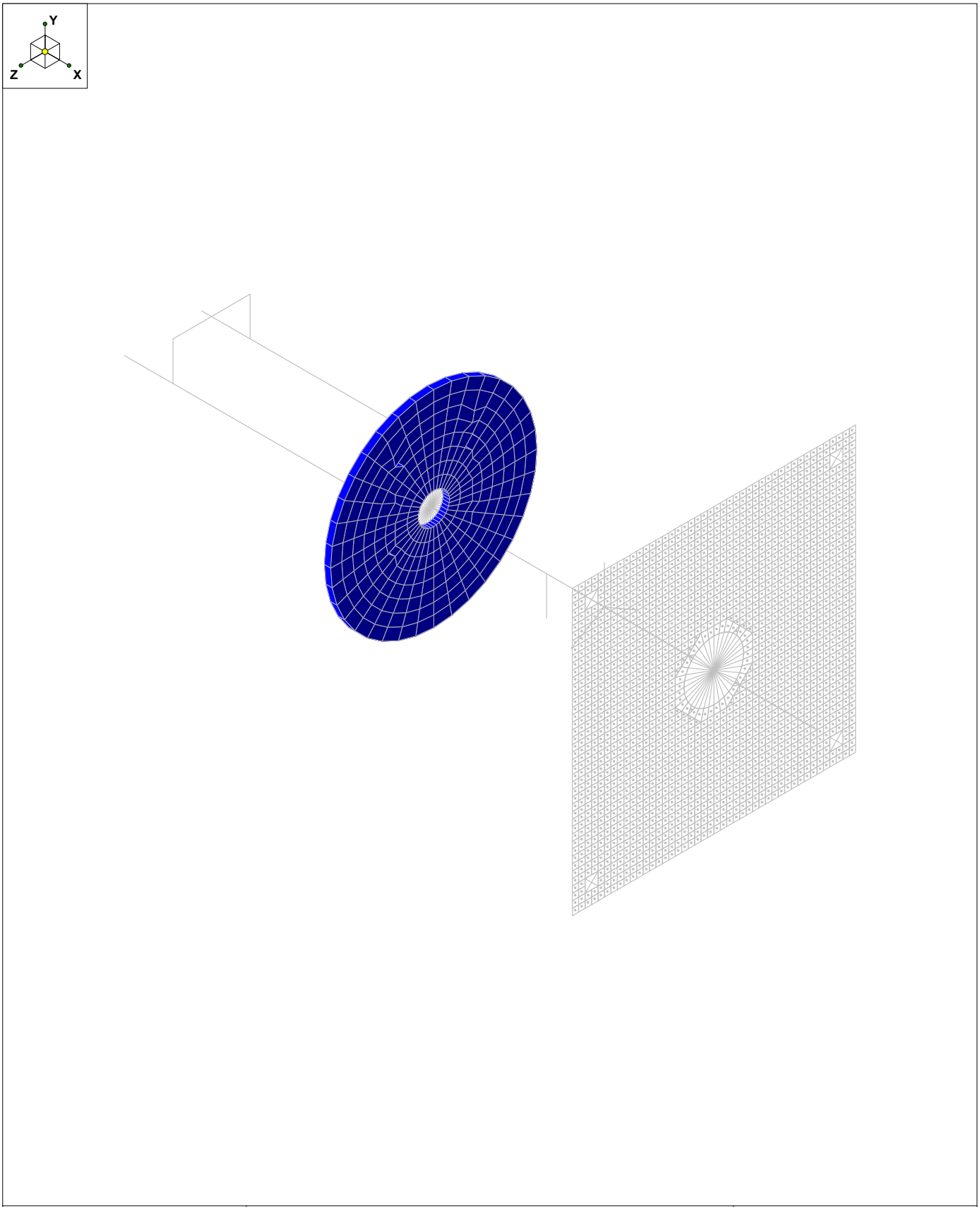

CEES		
JDY	242A Pump Room Wall Nozzles	
	0.5" Thick Plate	242A Evaporator Wall Nozzles 2in...

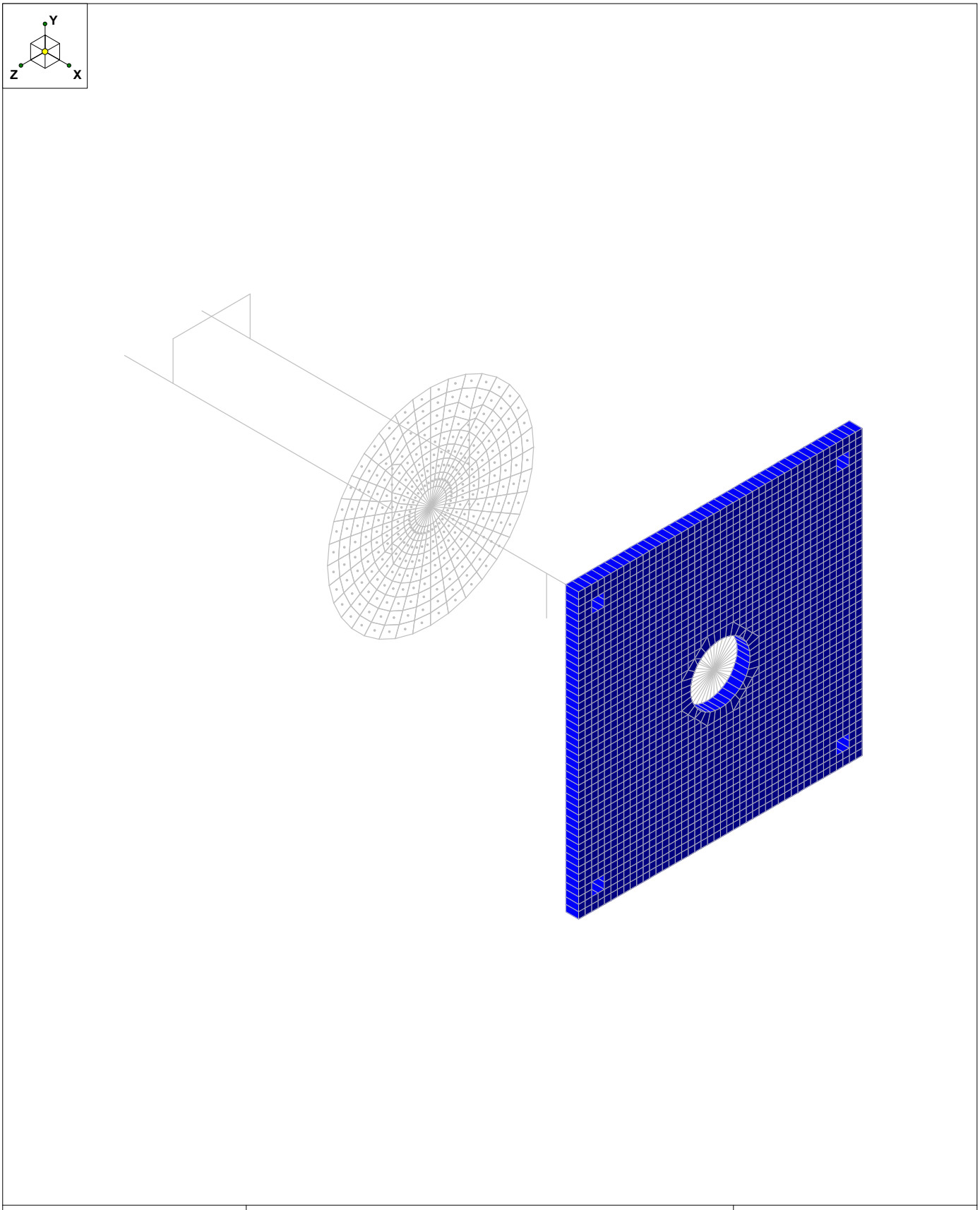

CEES		
JDY	242A Pump Room Wall Nozzles	
	1" Thick Plate	242A Evaporator Wall Nozzles 2in...

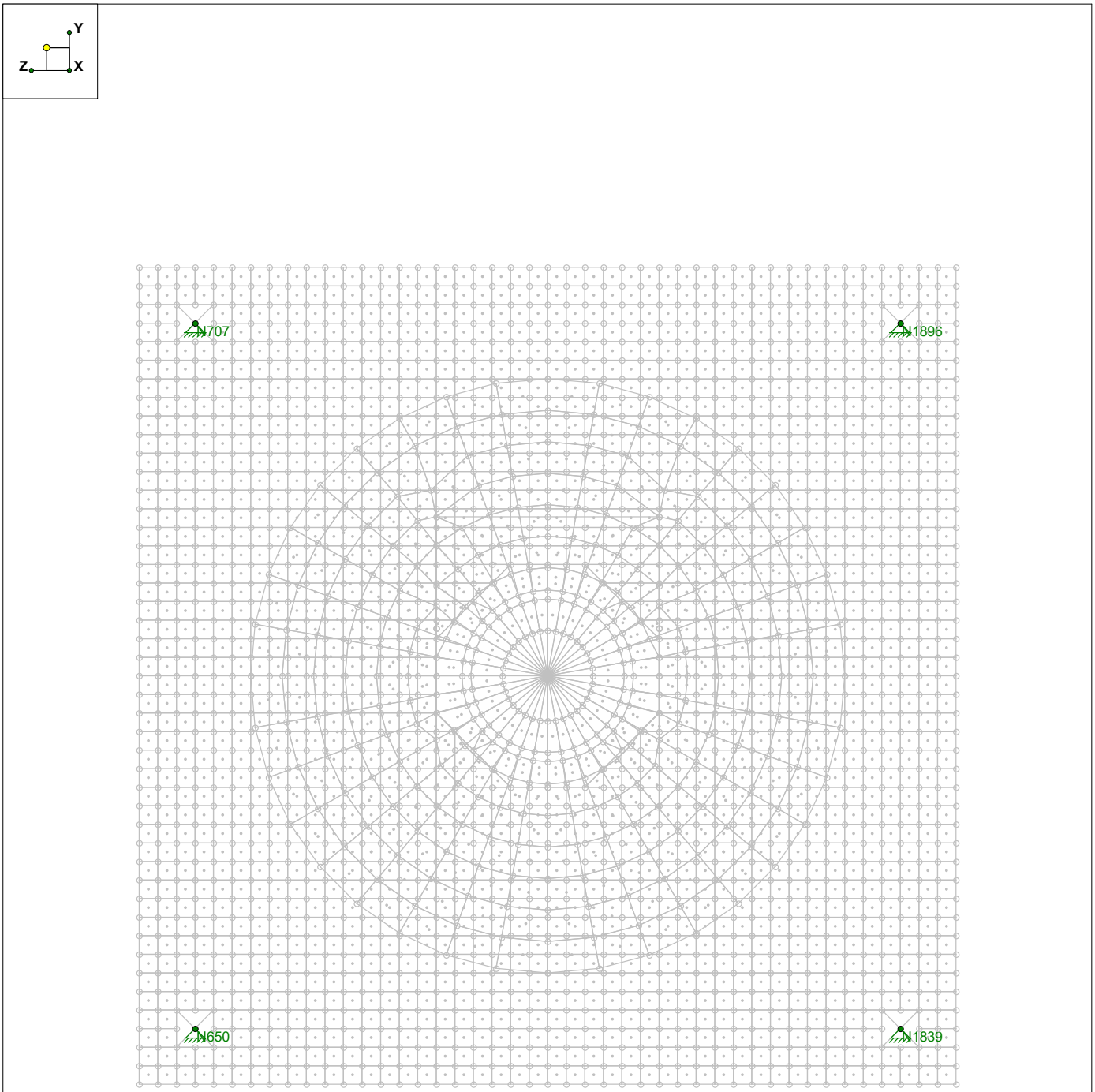

CEES		
JDY	242A Pump Room Wall Nozzles	
	Anchorage Joints (KB-TZ Locations)	242A Evaporator Wall Nozzles 2in...

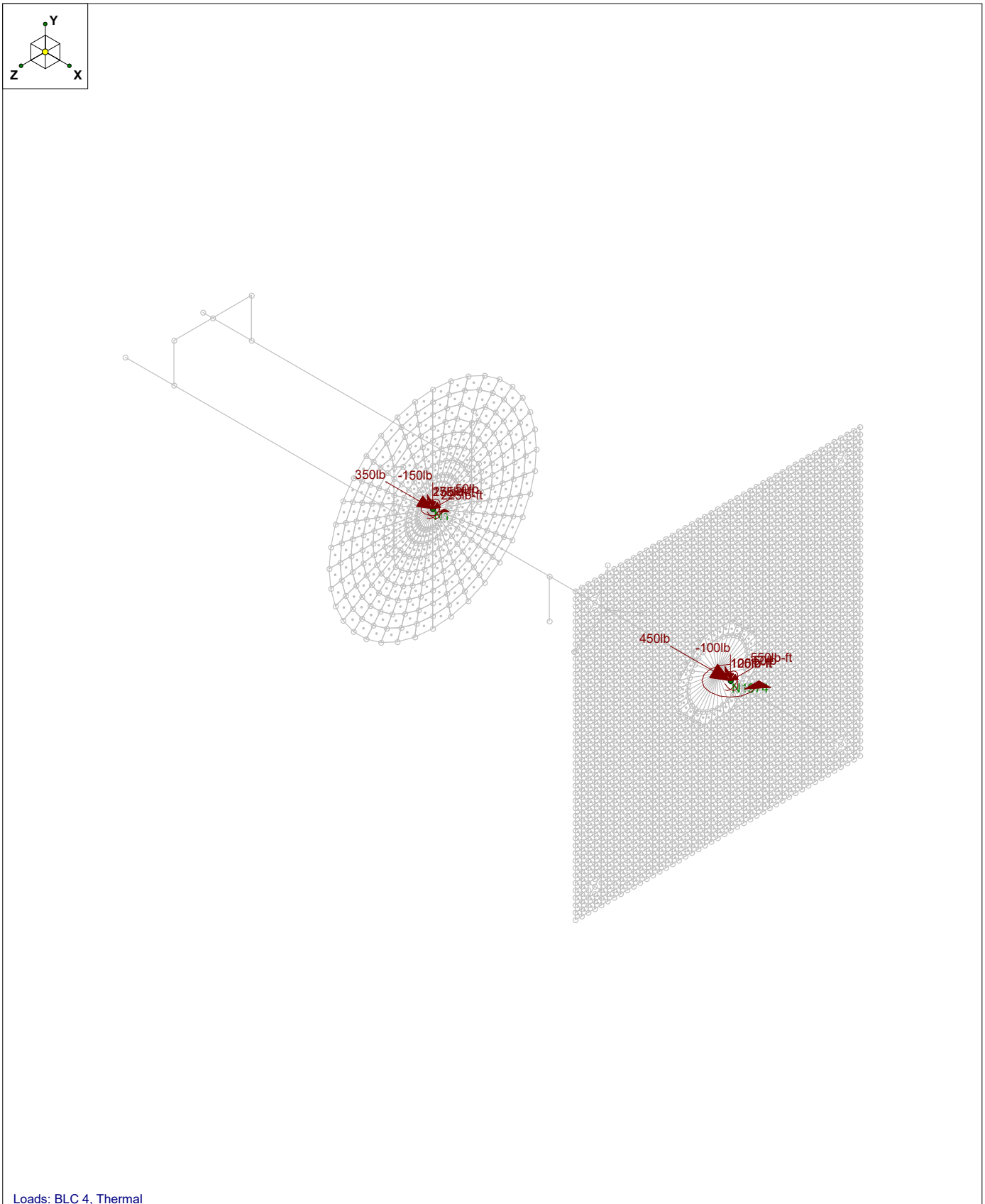

Loads: BLC 4, Thermal

CEES		
JDY	242A Pump Room Wall Nozzles	
	N1 = Primary, N1974 = Encasement.	242A Evaporator Wall Nozzles 2in...

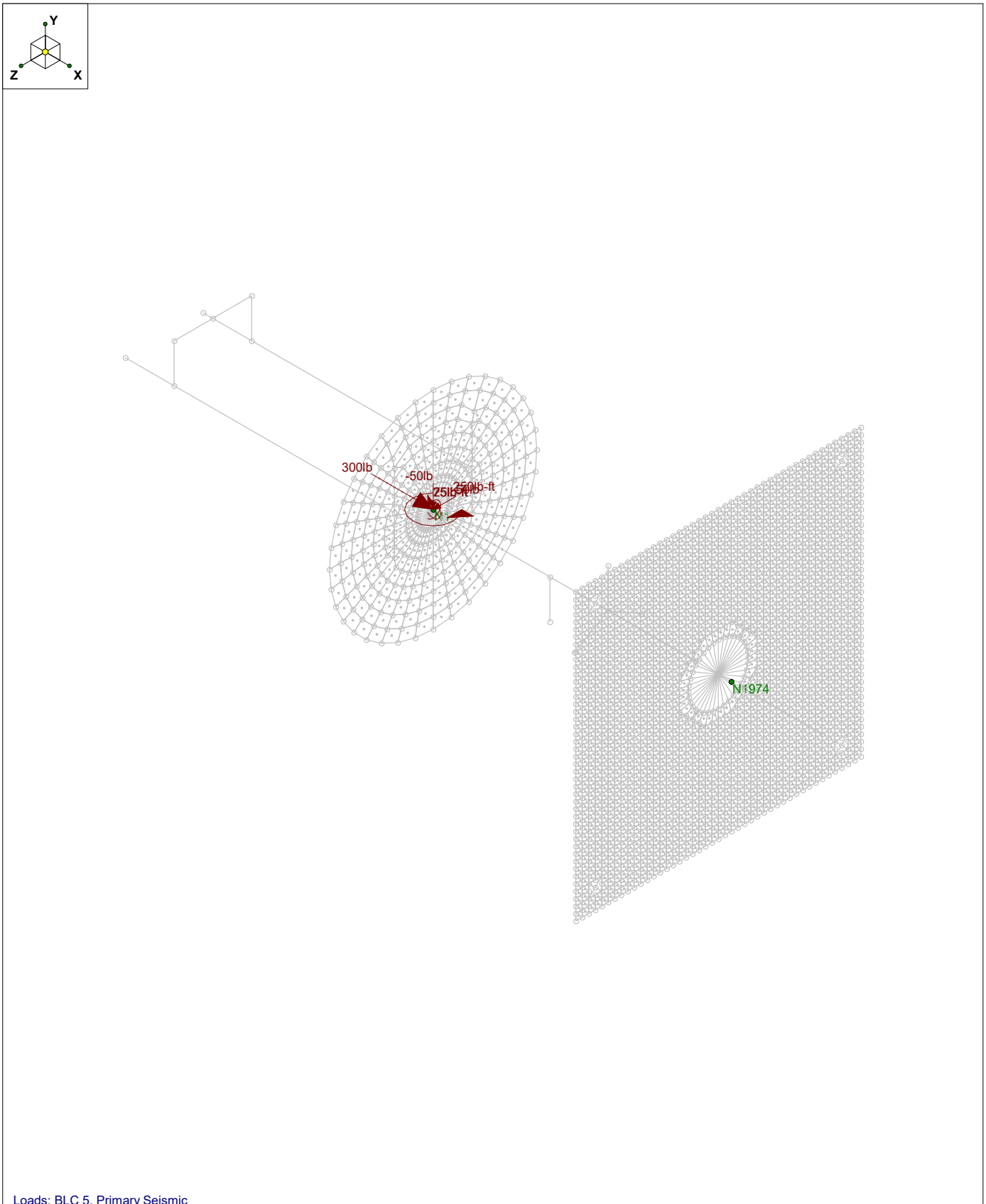

Loads: BLC 5, Primary Seismic

CEES	242A Pump Room Wall Nozzles N1=Primary	
JDY		
		242A Evaporator Wall Nozzles 2in...

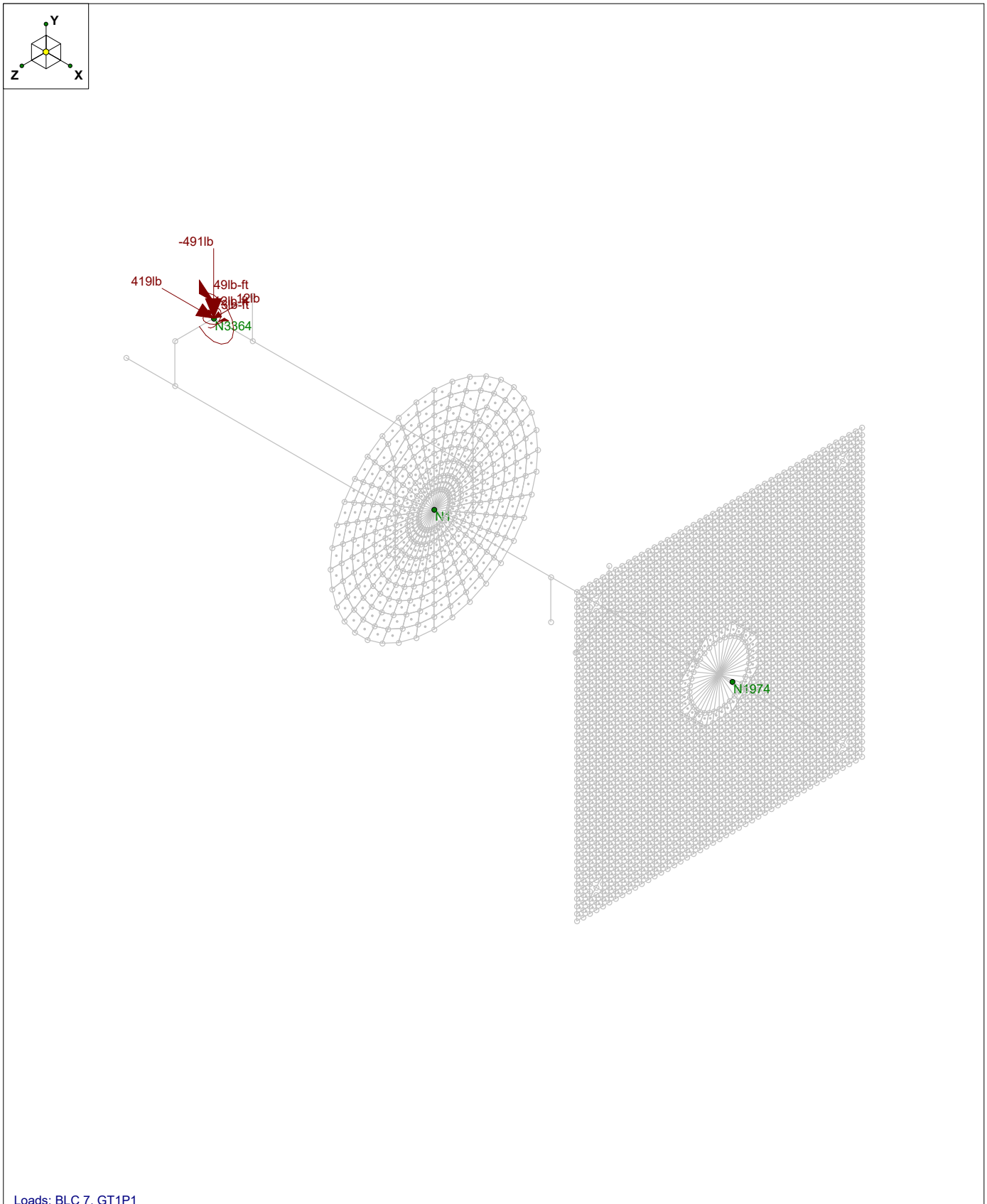

Loads: BLC 7, GT1P1

CEES		
JDY	242A Pump Room Wall Nozzles	
	N3364 = Jumper	242A Evaporator Wall Nozzles 2in...

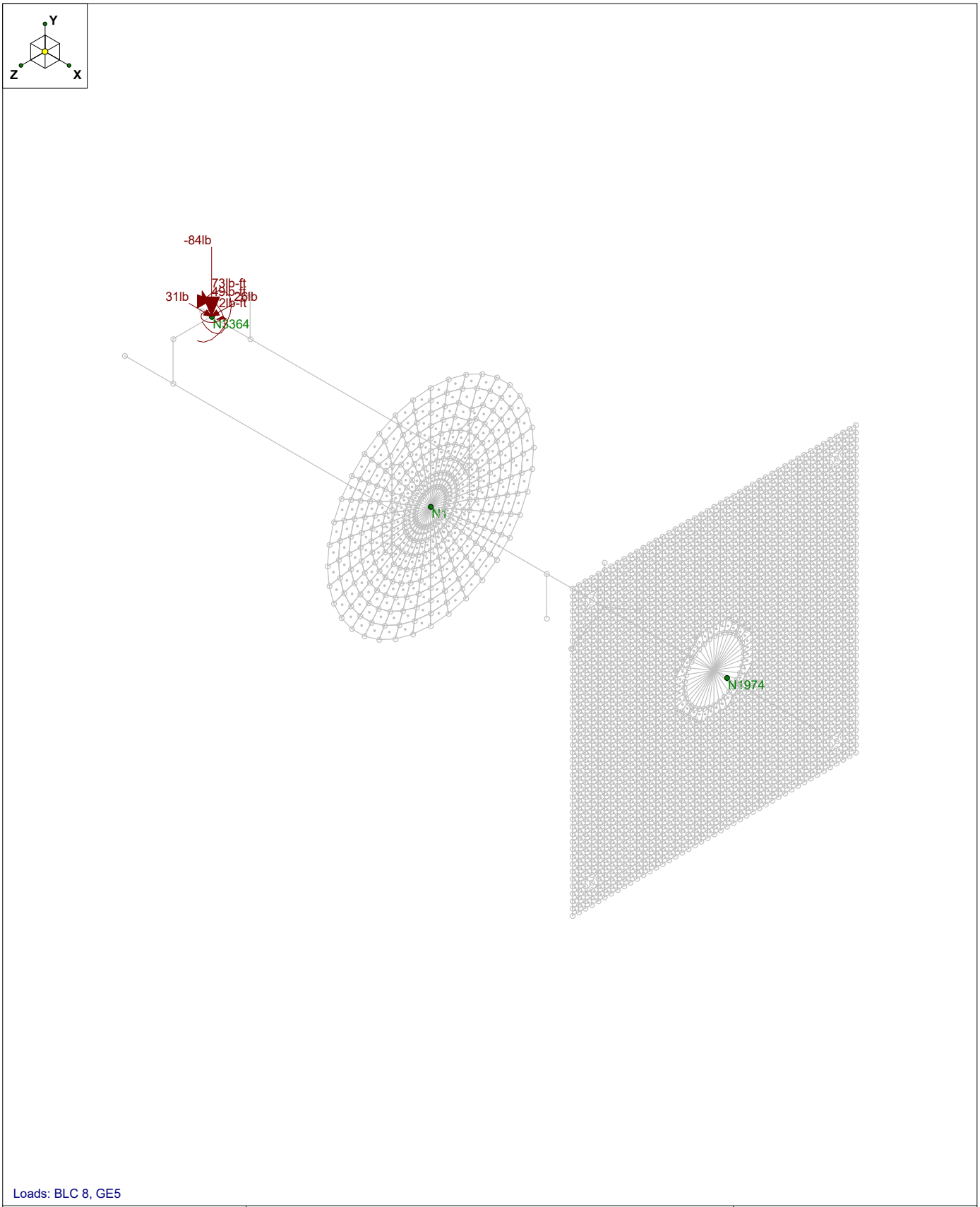

Loads: BLC 8, GE5

CEES		
JDY	242A Pump Room Wall Nozzles	
	N3364 = Primary	242A Evaporator Wall Nozzles 2in...

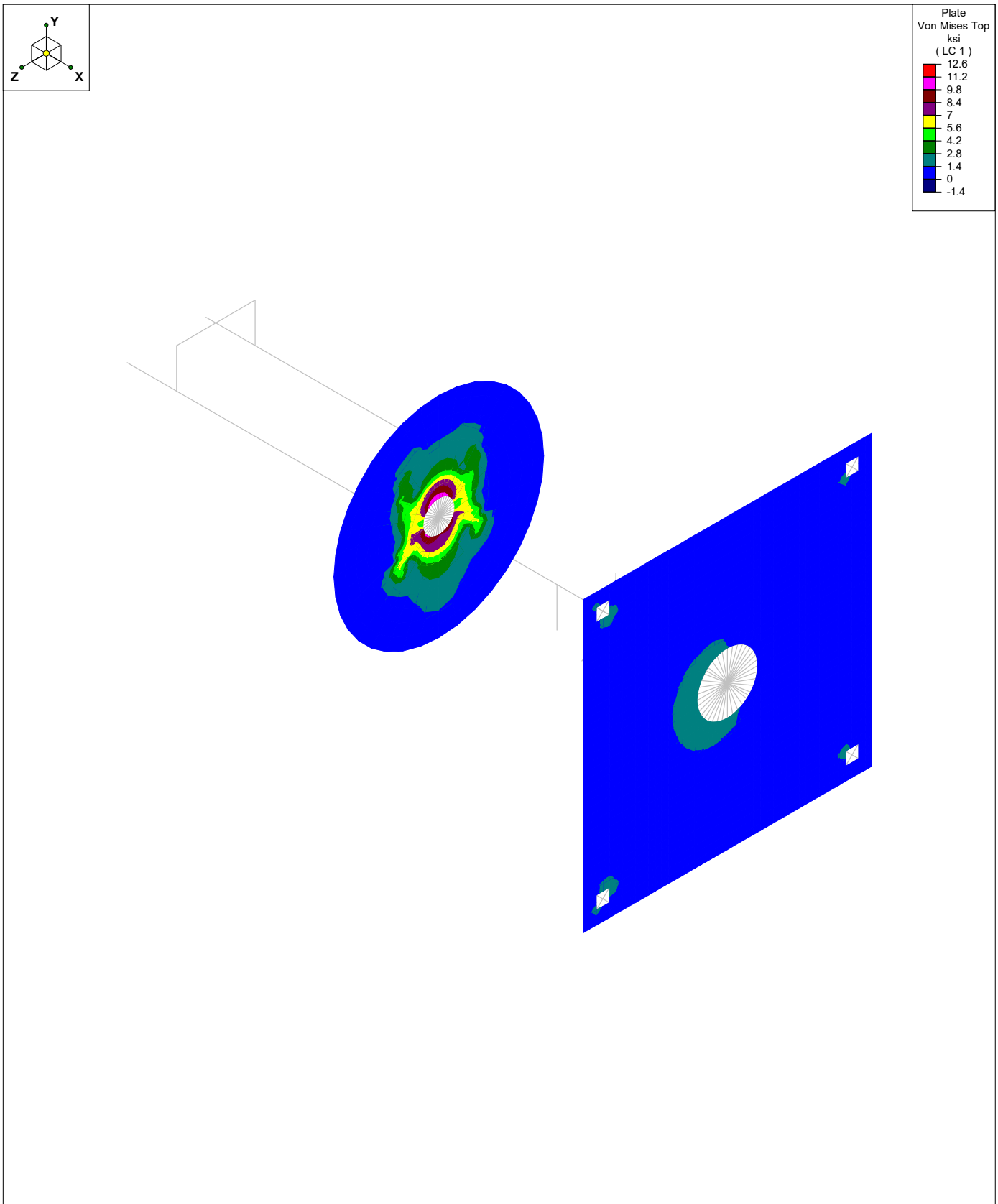

Results for LC 1, 1.2DL + 1.2Thermal + 1.2GT1P1

CEES	242A Pump Room Wall Nozzles	
JDY		
		242A Evaporator Wall Nozzles 2in...

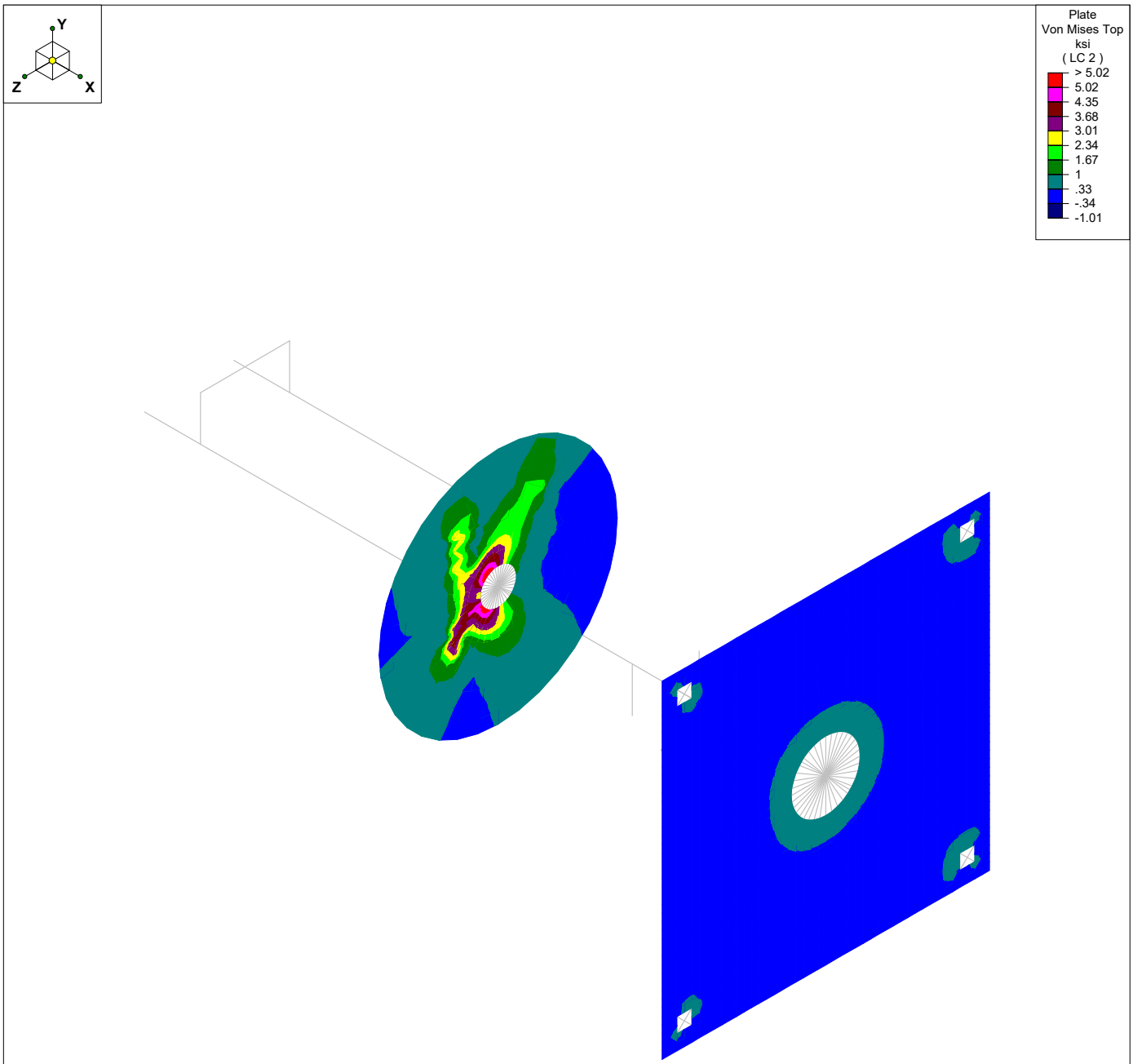

Results for LC 2, 1.2DL + 1.4GE5 + 1.4Primary Seismic

CEES	242A Pump Room Wall Nozzles	
JDY		
		242A Evaporator Wall Nozzles 2in...

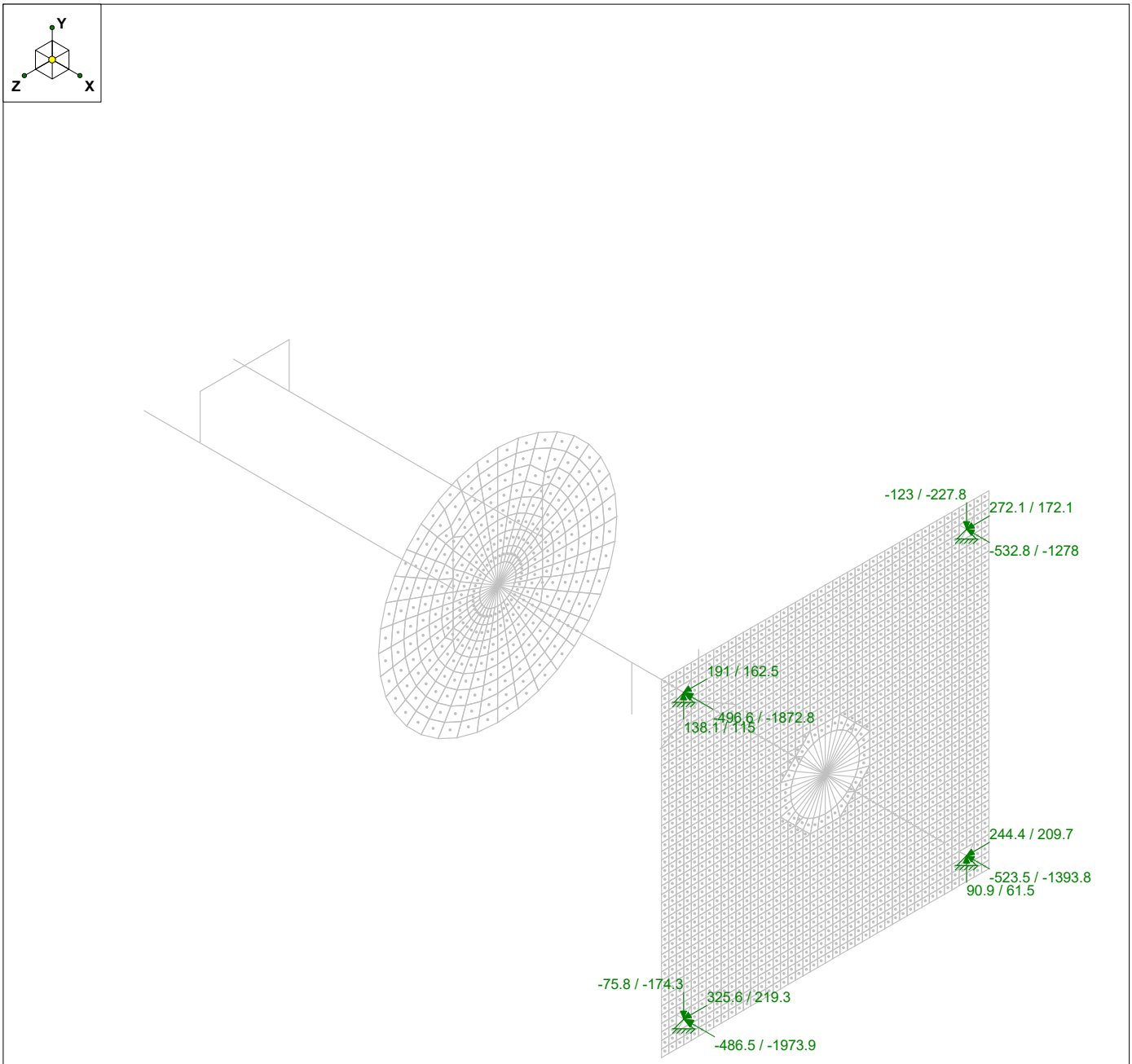

Envelope Only Solution
Reaction and Moment Units are lb and lb-ft (Enveloped)

CEES	242A Pump Room Wall Nozzles	
JDY		
		242A Evaporator Wall Nozzles 2in...

Columbia Energy AND ENVIRONMENTAL SERVICES

Company : CEES
Designer : JDY
Job Number :
Model Name : 242A Pump Room Wall Nozzles

Apr 16, 2020
11:35 AM
Checked By: RDL

Envelope Joint Reactions

	Joint		X [lb]	LC	Y [lb]	LC	Z [lb]	LC	MX [lb-ft]	LC	MY [lb-ft]	LC	MZ [lb-ft]	LC
1	N1839	max	-523.486	2	90.871	2	244.432	1	0	1	0	1	0	1
2		min	-1393.847	1	61.541	1	209.735	2	0	1	0	1	0	1
3	N650	max	-486.518	2	-75.813	2	325.575	1	0	1	0	1	0	1
4		min	-1973.853	1	-174.345	1	219.254	2	0	1	0	1	0	1
5	N707	max	-496.623	2	138.06	2	190.966	1	0	1	0	1	0	1
6		min	-1872.795	1	115.006	1	162.547	2	0	1	0	1	0	1
7	N1896	max	-532.792	2	-123.002	2	272.11	1	0	1	0	1	0	1
8		min	-1278.006	1	-227.811	1	172.065	2	0	1	0	1	0	1

Hot Rolled Steel Properties

	Label	E [ksi]	G [ksi]	Nu	Therm (\...	Density[lb/ft^3]	Yield[ksi]	Ry	Fu[ksi]	Rt
1	A992	29000	11154	.3	.65	490	50	1.1	65	1.1
2	A36 Gr.36	29000	11154	.3	.65	490	36	1.5	58	1.2
3	A572 Gr.50	29000	11154	.3	.65	490	50	1.1	65	1.1
4	A500 Gr.B RND	29000	11154	.3	.65	527	42	1.4	58	1.3
5	A500 Gr.B Rect	29000	11154	.3	.65	527	46	1.4	58	1.3
6	A53 Gr.B	29000	11154	.3	.65	490	35	1.6	60	1.2
7	A1085	29000	11154	.3	.65	490	50	1.4	65	1.3

General Material Properties

	Label	E [ksi]	G [ksi]	Nu	Therm (\1E5 F)	Density[lb/ft^3]
1	gen_Conc3NW	3155	1372	.15	.6	145
2	gen_Conc4NW	3644	1584	.15	.6	145
3	gen_Conc3LW	2085	906	.15	.6	109.999
4	gen_Conc4LW	2408	1047	.15	.6	109.999
5	gen_Alum	10100	4077	.3	1.29	173
6	gen_Steel	29000	11154	.3	.65	490
7	gen_Plywood	1800	38	0	.3	35
8	RIGID	1e+6		.3	0	0

Hot Rolled Steel Section Sets

	Label	Shape	Type	Design List	Material	Design R...	A [in2]	Iyy [in4]	Izz [in4]	J [in4]
1	2" Sleeve	PIPE 4.0	Beam	None	A53 Gr.B	Typical	2.96	6.82	6.82	13.6
2	Back Plates	BackPlate	Beam	None	A36 Gr.36	Typical	3	.063	9	.237

Plate Primary Data

	Label	A Joint	B Joint	C Joint	D Joint	Material	Thickness[in]
1	P1	N549	N302	N548		gen_Steel	1
2	P2	N548	N302	N553	N547	gen_Steel	1
3	P3	N546	N547	N553	N324	gen_Steel	1
4	P4	N522	N228	N521		gen_Steel	1
5	P5	N521	N228	N554	N520	gen_Steel	1
6	P6	N519	N520	N554	N247	gen_Steel	1
7	P7	N531	N227	N530		gen_Steel	1
8	P8	N530	N227	N555	N529	gen_Steel	1
9	P9	N528	N529	N555	N205	gen_Steel	1
10	P10	N540	N301	N539		gen_Steel	1
11	P11	N539	N301	N556	N538	gen_Steel	1
12	P12	N537	N538	N556	N282	gen_Steel	1
13	P13	N10	N557	N559	N558	gen_Steel	1
14	P14	N557	N13	N560	N559	gen_Steel	1
15	P15	N558	N559	N561	N34	gen_Steel	1
16	P16	N559	N560	N35	N561	gen_Steel	1
17	P17	N13	N562	N563	N560	gen_Steel	1
18	P18	N562	N14	N564	N563	gen_Steel	1
19	P19	N560	N563	N565	N35	gen_Steel	1
20	P20	N563	N564	N36	N565	gen_Steel	1
21	P21	N14	N566	N567	N564	gen_Steel	1
22	P22	N566	N15	N568	N567	gen_Steel	1
23	P23	N564	N567	N569	N36	gen_Steel	1
24	P24	N567	N568	N37	N569	gen_Steel	1
25	P25	N15	N570	N571	N568	gen_Steel	1

Plate Primary Data (Continued)

	Label	A Joint	B Joint	C Joint	D Joint	Material	Thickness[in]
26	P26	N570	N16	N572	N571	gen_Steel	1
27	P27	N568	N571	N573	N37	gen_Steel	1
28	P28	N571	N572	N38	N573	gen_Steel	1
29	P29	N16	N574	N575	N572	gen_Steel	1
30	P30	N574	N17	N576	N575	gen_Steel	1
31	P31	N572	N575	N577	N38	gen_Steel	1
32	P32	N575	N576	N39	N577	gen_Steel	1
33	P33	N17	N578	N579	N576	gen_Steel	1
34	P34	N578	N18	N580	N579	gen_Steel	1
35	P35	N576	N579	N581	N39	gen_Steel	1
36	P36	N579	N580	N40	N581	gen_Steel	1
37	P37	N18	N582	N583	N580	gen_Steel	1
38	P38	N582	N19	N584	N583	gen_Steel	1
39	P39	N580	N583	N585	N40	gen_Steel	1
40	P40	N583	N584	N41	N585	gen_Steel	1
41	P41	N19	N586	N587	N584	gen_Steel	1
42	P42	N586	N20	N588	N587	gen_Steel	1
43	P43	N584	N587	N589	N41	gen_Steel	1
44	P44	N587	N588	N42	N589	gen_Steel	1
45	P45	N20	N590	N591	N588	gen_Steel	1
46	P46	N590	N21	N592	N591	gen_Steel	1
47	P47	N588	N591	N593	N42	gen_Steel	1
48	P48	N591	N592	N43	N593	gen_Steel	1
49	P49	N21	N594	N595	N592	gen_Steel	1
50	P50	N594	N22	N596	N595	gen_Steel	1
51	P51	N592	N595	N597	N43	gen_Steel	1
52	P52	N595	N596	N44	N597	gen_Steel	1
53	P53	N22	N598	N599	N596	gen_Steel	1
54	P54	N598	N23	N600	N599	gen_Steel	1
55	P55	N596	N599	N601	N44	gen_Steel	1
56	P56	N599	N600	N45	N601	gen_Steel	1
57	P57	N23	N602	N603	N600	gen_Steel	1
58	P58	N602	N24	N604	N603	gen_Steel	1
59	P59	N600	N603	N605	N45	gen_Steel	1
60	P60	N603	N604	N46	N605	gen_Steel	1
61	P61	N24	N606	N607	N604	gen_Steel	1
62	P62	N606	N25	N608	N607	gen_Steel	1
63	P63	N604	N607	N609	N46	gen_Steel	1
64	P64	N607	N608	N47	N609	gen_Steel	1
65	P65	N25	N610	N611	N608	gen_Steel	1
66	P66	N610	N26	N612	N611	gen_Steel	1
67	P67	N608	N611	N613	N47	gen_Steel	1
68	P68	N611	N612	N48	N613	gen_Steel	1
69	P69	N26	N614	N615	N612	gen_Steel	1
70	P70	N614	N27	N616	N615	gen_Steel	1
71	P71	N612	N615	N617	N48	gen_Steel	1
72	P72	N615	N616	N49	N617	gen_Steel	1
73	P73	N27	N618	N619	N616	gen_Steel	1
74	P74	N618	N28	N620	N619	gen_Steel	1
75	P75	N616	N619	N621	N49	gen_Steel	1
76	P76	N619	N620	N50	N621	gen_Steel	1
77	P77	N28	N622	N623	N620	gen_Steel	1
78	P78	N622	N29	N624	N623	gen_Steel	1
79	P79	N620	N623	N625	N50	gen_Steel	1
80	P80	N623	N624	N51	N625	gen_Steel	1
81	P81	N29	N626	N627	N624	gen_Steel	1
82	P82	N626	N30	N628	N627	gen_Steel	1

Plate Primary Data (Continued)

	Label	A Joint	B Joint	C Joint	D Joint	Material	Thickness[in]
83	P83	N624	N627	N629	N51	gen_Steel	1
84	P84	N627	N628	N52	N629	gen_Steel	1
85	P85	N30	N630	N631	N628	gen_Steel	1
86	P86	N630	N31	N632	N631	gen_Steel	1
87	P87	N628	N631	N633	N52	gen_Steel	1
88	P88	N631	N632	N53	N633	gen_Steel	1
89	P89	N31	N634	N635	N632	gen_Steel	1
90	P90	N634	N32	N636	N635	gen_Steel	1
91	P91	N632	N635	N637	N53	gen_Steel	1
92	P92	N635	N636	N54	N637	gen_Steel	1
93	P93	N32	N638	N639	N636	gen_Steel	1
94	P94	N638	N33	N640	N639	gen_Steel	1
95	P95	N636	N639	N641	N54	gen_Steel	1
96	P96	N639	N640	N55	N641	gen_Steel	1
97	P97	N33	N642	N643	N640	gen_Steel	1
98	P98	N642	N9	N644	N643	gen_Steel	1
99	P99	N640	N643	N645	N55	gen_Steel	1
100	P100	N643	N644	N56	N645	gen_Steel	1
101	P101	N34	N561	N647	N646	gen_Steel	1
102	P102	N561	N35	N648	N647	gen_Steel	1
103	P103	N646	N647	N649	N57	gen_Steel	1
104	P104	N647	N648	N58	N649	gen_Steel	1
105	P105	N36	N569	N653	N651	gen_Steel	1
106	P106	N569	N37	N654	N653	gen_Steel	1
107	P107	N651	N653	N655	N59	gen_Steel	1
108	P108	N653	N654	N60	N655	gen_Steel	1
109	P109	N37	N573	N656	N654	gen_Steel	1
110	P110	N573	N38	N657	N656	gen_Steel	1
111	P111	N654	N656	N658	N60	gen_Steel	1
112	P112	N656	N657	N61	N658	gen_Steel	1
113	P113	N38	N577	N659	N657	gen_Steel	1
114	P114	N577	N39	N660	N659	gen_Steel	1
115	P115	N657	N659	N661	N61	gen_Steel	1
116	P116	N659	N660	N62	N661	gen_Steel	1
117	P117	N39	N581	N662	N660	gen_Steel	1
118	P118	N581	N40	N663	N662	gen_Steel	1
119	P119	N660	N662	N664	N62	gen_Steel	1
120	P120	N662	N663	N63	N664	gen_Steel	1
121	P121	N40	N585	N665	N663	gen_Steel	1
122	P122	N585	N41	N666	N665	gen_Steel	1
123	P123	N663	N665	N667	N63	gen_Steel	1
124	P124	N665	N666	N64	N667	gen_Steel	1
125	P125	N41	N589	N668	N666	gen_Steel	1
126	P126	N589	N42	N669	N668	gen_Steel	1
127	P127	N666	N668	N670	N64	gen_Steel	1
128	P128	N668	N669	N65	N670	gen_Steel	1
129	P129	N42	N593	N671	N669	gen_Steel	1
130	P130	N593	N43	N672	N671	gen_Steel	1
131	P131	N669	N671	N673	N65	gen_Steel	1
132	P132	N671	N672	N66	N673	gen_Steel	1
133	P133	N43	N597	N674	N672	gen_Steel	1
134	P134	N597	N44	N675	N674	gen_Steel	1
135	P135	N672	N674	N676	N66	gen_Steel	1
136	P136	N674	N675	N67	N676	gen_Steel	1
137	P137	N44	N601	N677	N675	gen_Steel	1
138	P138	N601	N45	N678	N677	gen_Steel	1
139	P139	N675	N677	N679	N67	gen_Steel	1

Plate Primary Data (Continued)

	Label	A Joint	B Joint	C Joint	D Joint	Material	Thickness[in]
140	P140	N677	N678	N68	N679	gen_Steel	1
141	P141	N45	N605	N680	N678	gen_Steel	1
142	P142	N605	N46	N681	N680	gen_Steel	1
143	P143	N678	N680	N682	N68	gen_Steel	1
144	P144	N680	N681	N69	N682	gen_Steel	1
145	P145	N46	N609	N683	N681	gen_Steel	1
146	P146	N609	N47	N684	N683	gen_Steel	1
147	P147	N681	N683	N685	N69	gen_Steel	1
148	P148	N683	N684	N70	N685	gen_Steel	1
149	P149	N47	N613	N686	N684	gen_Steel	1
150	P150	N613	N48	N687	N686	gen_Steel	1
151	P151	N684	N686	N688	N70	gen_Steel	1
152	P152	N686	N687	N71	N688	gen_Steel	1
153	P153	N48	N617	N689	N687	gen_Steel	1
154	P154	N617	N49	N690	N689	gen_Steel	1
155	P155	N687	N689	N691	N71	gen_Steel	1
156	P156	N689	N690	N72	N691	gen_Steel	1
157	P157	N49	N621	N692	N690	gen_Steel	1
158	P158	N621	N50	N693	N692	gen_Steel	1
159	P159	N690	N692	N694	N72	gen_Steel	1
160	P160	N692	N693	N73	N694	gen_Steel	1
161	P161	N50	N625	N695	N693	gen_Steel	1
162	P162	N625	N51	N696	N695	gen_Steel	1
163	P163	N693	N695	N697	N73	gen_Steel	1
164	P164	N695	N696	N74	N697	gen_Steel	1
165	P165	N51	N629	N698	N696	gen_Steel	1
166	P166	N629	N52	N699	N698	gen_Steel	1
167	P167	N696	N698	N700	N74	gen_Steel	1
168	P168	N698	N699	N75	N700	gen_Steel	1
169	P169	N52	N633	N701	N699	gen_Steel	1
170	P170	N633	N53	N702	N701	gen_Steel	1
171	P171	N699	N701	N703	N75	gen_Steel	1
172	P172	N701	N702	N76	N703	gen_Steel	1
173	P173	N53	N637	N704	N702	gen_Steel	1
174	P174	N637	N54	N705	N704	gen_Steel	1
175	P175	N702	N704	N706	N76	gen_Steel	1
176	P176	N704	N705	N77	N706	gen_Steel	1
177	P177	N55	N645	N710	N708	gen_Steel	1
178	P178	N645	N56	N711	N710	gen_Steel	1
179	P179	N708	N710	N712	N78	gen_Steel	1
180	P180	N710	N711	N79	N712	gen_Steel	1
181	P181	N57	N649	N714	N713	gen_Steel	1
182	P182	N649	N58	N715	N714	gen_Steel	1
183	P183	N713	N714	N716	N80	gen_Steel	1
184	P184	N714	N715	N81	N716	gen_Steel	1
185	P185	N58	N652	N717	N715	gen_Steel	1
186	P186	N652	N59	N718	N717	gen_Steel	1
187	P187	N715	N717	N719	N81	gen_Steel	1
188	P188	N717	N718	N82	N719	gen_Steel	1
189	P189	N59	N655	N720	N718	gen_Steel	1
190	P190	N655	N60	N721	N720	gen_Steel	1
191	P191	N718	N720	N722	N82	gen_Steel	1
192	P192	N720	N721	N83	N722	gen_Steel	1
193	P193	N60	N658	N723	N721	gen_Steel	1
194	P194	N658	N61	N724	N723	gen_Steel	1
195	P195	N721	N723	N725	N83	gen_Steel	1
196	P196	N723	N724	N84	N725	gen_Steel	1

Plate Primary Data (Continued)

	Label	A Joint	B Joint	C Joint	D Joint	Material	Thickness[in]
197	P197	N61	N661	N726	N724	gen_Steel	1
198	P198	N661	N62	N727	N726	gen_Steel	1
199	P199	N724	N726	N728	N84	gen_Steel	1
200	P200	N726	N727	N85	N728	gen_Steel	1
201	P201	N62	N664	N729	N727	gen_Steel	1
202	P202	N664	N63	N730	N729	gen_Steel	1
203	P203	N727	N729	N731	N85	gen_Steel	1
204	P204	N729	N730	N86	N731	gen_Steel	1
205	P205	N63	N667	N732	N730	gen_Steel	1
206	P206	N667	N64	N733	N732	gen_Steel	1
207	P207	N730	N732	N734	N86	gen_Steel	1
208	P208	N732	N733	N87	N734	gen_Steel	1
209	P209	N64	N670	N735	N733	gen_Steel	1
210	P210	N670	N65	N736	N735	gen_Steel	1
211	P211	N733	N735	N737	N87	gen_Steel	1
212	P212	N735	N736	N88	N737	gen_Steel	1
213	P213	N65	N673	N738	N736	gen_Steel	1
214	P214	N673	N66	N739	N738	gen_Steel	1
215	P215	N736	N738	N740	N88	gen_Steel	1
216	P216	N738	N739	N89	N740	gen_Steel	1
217	P217	N66	N676	N741	N739	gen_Steel	1
218	P218	N676	N67	N742	N741	gen_Steel	1
219	P219	N739	N741	N743	N89	gen_Steel	1
220	P220	N741	N742	N90	N743	gen_Steel	1
221	P221	N67	N679	N744	N742	gen_Steel	1
222	P222	N679	N68	N745	N744	gen_Steel	1
223	P223	N742	N744	N746	N90	gen_Steel	1
224	P224	N744	N745	N91	N746	gen_Steel	1
225	P225	N68	N682	N747	N745	gen_Steel	1
226	P226	N682	N69	N748	N747	gen_Steel	1
227	P227	N745	N747	N749	N91	gen_Steel	1
228	P228	N747	N748	N92	N749	gen_Steel	1
229	P229	N69	N685	N750	N748	gen_Steel	1
230	P230	N685	N70	N751	N750	gen_Steel	1
231	P231	N748	N750	N752	N92	gen_Steel	1
232	P232	N750	N751	N93	N752	gen_Steel	1
233	P233	N70	N688	N753	N751	gen_Steel	1
234	P234	N688	N71	N754	N753	gen_Steel	1
235	P235	N751	N753	N755	N93	gen_Steel	1
236	P236	N753	N754	N94	N755	gen_Steel	1
237	P237	N71	N691	N756	N754	gen_Steel	1
238	P238	N691	N72	N757	N756	gen_Steel	1
239	P239	N754	N756	N758	N94	gen_Steel	1
240	P240	N756	N757	N95	N758	gen_Steel	1
241	P241	N72	N694	N759	N757	gen_Steel	1
242	P242	N694	N73	N760	N759	gen_Steel	1
243	P243	N757	N759	N761	N95	gen_Steel	1
244	P244	N759	N760	N96	N761	gen_Steel	1
245	P245	N73	N697	N762	N760	gen_Steel	1
246	P246	N697	N74	N763	N762	gen_Steel	1
247	P247	N760	N762	N764	N96	gen_Steel	1
248	P248	N762	N763	N97	N764	gen_Steel	1
249	P249	N74	N700	N765	N763	gen_Steel	1
250	P250	N700	N75	N766	N765	gen_Steel	1
251	P251	N763	N765	N767	N97	gen_Steel	1
252	P252	N765	N766	N98	N767	gen_Steel	1
253	P253	N75	N703	N768	N766	gen_Steel	1

Plate Primary Data (Continued)

	Label	A Joint	B Joint	C Joint	D Joint	Material	Thickness[in]
254	P254	N703	N76	N769	N768	gen_Steel	1
255	P255	N766	N768	N770	N98	gen_Steel	1
256	P256	N768	N769	N99	N770	gen_Steel	1
257	P257	N76	N706	N771	N769	gen_Steel	1
258	P258	N706	N77	N772	N771	gen_Steel	1
259	P259	N769	N771	N773	N99	gen_Steel	1
260	P260	N771	N772	N100	N773	gen_Steel	1
261	P261	N77	N709	N774	N772	gen_Steel	1
262	P262	N709	N78	N775	N774	gen_Steel	1
263	P263	N772	N774	N776	N100	gen_Steel	1
264	P264	N774	N775	N101	N776	gen_Steel	1
265	P265	N78	N712	N777	N775	gen_Steel	1
266	P266	N712	N79	N778	N777	gen_Steel	1
267	P267	N775	N777	N779	N101	gen_Steel	1
268	P268	N777	N778	N102	N779	gen_Steel	1
269	P269	N80	N716	N781	N780	gen_Steel	1
270	P270	N716	N81	N782	N781	gen_Steel	1
271	P271	N780	N781	N783	N103	gen_Steel	1
272	P272	N781	N782	N104	N783	gen_Steel	1
273	P273	N81	N719	N784	N782	gen_Steel	1
274	P274	N719	N82	N785	N784	gen_Steel	1
275	P275	N782	N784	N786	N104	gen_Steel	1
276	P276	N784	N785	N105	N786	gen_Steel	1
277	P277	N82	N722	N787	N785	gen_Steel	1
278	P278	N722	N83	N788	N787	gen_Steel	1
279	P279	N785	N787	N789	N105	gen_Steel	1
280	P280	N787	N788	N106	N789	gen_Steel	1
281	P281	N83	N725	N790	N788	gen_Steel	1
282	P282	N725	N84	N791	N790	gen_Steel	1
283	P283	N788	N790	N792	N106	gen_Steel	1
284	P284	N790	N791	N107	N792	gen_Steel	1
285	P285	N84	N728	N793	N791	gen_Steel	1
286	P286	N728	N85	N794	N793	gen_Steel	1
287	P287	N791	N793	N795	N107	gen_Steel	1
288	P288	N793	N794	N108	N795	gen_Steel	1
289	P289	N85	N731	N796	N794	gen_Steel	1
290	P290	N731	N86	N797	N796	gen_Steel	1
291	P291	N794	N796	N798	N108	gen_Steel	1
292	P292	N796	N797	N109	N798	gen_Steel	1
293	P293	N86	N734	N799	N797	gen_Steel	1
294	P294	N734	N87	N800	N799	gen_Steel	1
295	P295	N797	N799	N801	N109	gen_Steel	1
296	P296	N799	N800	N110	N801	gen_Steel	1
297	P297	N87	N737	N802	N800	gen_Steel	1
298	P298	N737	N88	N803	N802	gen_Steel	1
299	P299	N800	N802	N804	N110	gen_Steel	1
300	P300	N802	N803	N111	N804	gen_Steel	1
301	P301	N88	N740	N805	N803	gen_Steel	1
302	P302	N740	N89	N806	N805	gen_Steel	1
303	P303	N803	N805	N807	N111	gen_Steel	1
304	P304	N805	N806	N112	N807	gen_Steel	1
305	P305	N89	N743	N808	N806	gen_Steel	1
306	P306	N743	N90	N809	N808	gen_Steel	1
307	P307	N806	N808	N810	N112	gen_Steel	1
308	P308	N808	N809	N113	N810	gen_Steel	1
309	P309	N90	N746	N811	N809	gen_Steel	1
310	P310	N746	N91	N812	N811	gen_Steel	1

Plate Primary Data (Continued)

	Label	A Joint	B Joint	C Joint	D Joint	Material	Thickness[in]
311	P311	N809	N811	N813	N113	gen_Steel	1
312	P312	N811	N812	N114	N813	gen_Steel	1
313	P313	N91	N749	N814	N812	gen_Steel	1
314	P314	N749	N92	N815	N814	gen_Steel	1
315	P315	N812	N814	N816	N114	gen_Steel	1
316	P316	N814	N815	N115	N816	gen_Steel	1
317	P317	N92	N752	N817	N815	gen_Steel	1
318	P318	N752	N93	N818	N817	gen_Steel	1
319	P319	N815	N817	N819	N115	gen_Steel	1
320	P320	N817	N818	N116	N819	gen_Steel	1
321	P321	N93	N755	N820	N818	gen_Steel	1
322	P322	N755	N94	N821	N820	gen_Steel	1
323	P323	N818	N820	N822	N116	gen_Steel	1
324	P324	N820	N821	N117	N822	gen_Steel	1
325	P325	N94	N758	N823	N821	gen_Steel	1
326	P326	N758	N95	N824	N823	gen_Steel	1
327	P327	N821	N823	N825	N117	gen_Steel	1
328	P328	N823	N824	N118	N825	gen_Steel	1
329	P329	N95	N761	N826	N824	gen_Steel	1
330	P330	N761	N96	N827	N826	gen_Steel	1
331	P331	N824	N826	N828	N118	gen_Steel	1
332	P332	N826	N827	N119	N828	gen_Steel	1
333	P333	N96	N764	N829	N827	gen_Steel	1
334	P334	N764	N97	N830	N829	gen_Steel	1
335	P335	N827	N829	N831	N119	gen_Steel	1
336	P336	N829	N830	N120	N831	gen_Steel	1
337	P337	N97	N767	N832	N830	gen_Steel	1
338	P338	N767	N98	N833	N832	gen_Steel	1
339	P339	N830	N832	N834	N120	gen_Steel	1
340	P340	N832	N833	N121	N834	gen_Steel	1
341	P341	N98	N770	N835	N833	gen_Steel	1
342	P342	N770	N99	N836	N835	gen_Steel	1
343	P343	N833	N835	N837	N121	gen_Steel	1
344	P344	N835	N836	N122	N837	gen_Steel	1
345	P345	N99	N773	N838	N836	gen_Steel	1
346	P346	N773	N100	N839	N838	gen_Steel	1
347	P347	N836	N838	N840	N122	gen_Steel	1
348	P348	N838	N839	N123	N840	gen_Steel	1
349	P349	N100	N776	N841	N839	gen_Steel	1
350	P350	N776	N101	N842	N841	gen_Steel	1
351	P351	N839	N841	N843	N123	gen_Steel	1
352	P352	N841	N842	N124	N843	gen_Steel	1
353	P353	N101	N779	N844	N842	gen_Steel	1
354	P354	N779	N102	N845	N844	gen_Steel	1
355	P355	N842	N844	N846	N124	gen_Steel	1
356	P356	N844	N845	N125	N846	gen_Steel	1
357	P357	N103	N783	N848	N847	gen_Steel	1
358	P358	N783	N104	N849	N848	gen_Steel	1
359	P359	N847	N848	N850	N126	gen_Steel	1
360	P360	N848	N849	N127	N850	gen_Steel	1
361	P361	N104	N786	N851	N849	gen_Steel	1
362	P362	N786	N105	N852	N851	gen_Steel	1
363	P363	N849	N851	N853	N127	gen_Steel	1
364	P364	N851	N852	N128	N853	gen_Steel	1
365	P365	N105	N789	N854	N852	gen_Steel	1
366	P366	N789	N106	N855	N854	gen_Steel	1
367	P367	N852	N854	N856	N128	gen_Steel	1

Plate Primary Data (Continued)

	Label	A Joint	B Joint	C Joint	D Joint	Material	Thickness[in]
368	P368	N854	N855	N129	N856	gen_Steel	1
369	P369	N106	N792	N857	N855	gen_Steel	1
370	P370	N792	N107	N858	N857	gen_Steel	1
371	P371	N855	N857	N859	N129	gen_Steel	1
372	P372	N857	N858	N130	N859	gen_Steel	1
373	P373	N107	N795	N860	N858	gen_Steel	1
374	P374	N795	N108	N861	N860	gen_Steel	1
375	P375	N858	N860	N862	N130	gen_Steel	1
376	P376	N860	N861	N131	N862	gen_Steel	1
377	P377	N108	N798	N863	N861	gen_Steel	1
378	P378	N798	N109	N864	N863	gen_Steel	1
379	P379	N861	N863	N865	N131	gen_Steel	1
380	P380	N863	N864	N132	N865	gen_Steel	1
381	P381	N109	N801	N866	N864	gen_Steel	1
382	P382	N801	N110	N867	N866	gen_Steel	1
383	P383	N864	N866	N868	N132	gen_Steel	1
384	P384	N866	N867	N133	N868	gen_Steel	1
385	P385	N110	N804	N869	N867	gen_Steel	1
386	P386	N804	N111	N870	N869	gen_Steel	1
387	P387	N867	N869	N871	N133	gen_Steel	1
388	P388	N869	N870	N134	N871	gen_Steel	1
389	P389	N111	N807	N872	N870	gen_Steel	1
390	P390	N807	N112	N873	N872	gen_Steel	1
391	P391	N870	N872	N874	N134	gen_Steel	1
392	P392	N872	N873	N135	N874	gen_Steel	1
393	P393	N112	N810	N875	N873	gen_Steel	1
394	P394	N810	N113	N876	N875	gen_Steel	1
395	P395	N873	N875	N877	N135	gen_Steel	1
396	P396	N875	N876	N136	N877	gen_Steel	1
397	P397	N113	N813	N878	N876	gen_Steel	1
398	P398	N813	N114	N879	N878	gen_Steel	1
399	P399	N876	N878	N880	N136	gen_Steel	1
400	P400	N878	N879	N137	N880	gen_Steel	1
401	P401	N114	N816	N881	N879	gen_Steel	1
402	P402	N816	N115	N882	N881	gen_Steel	1
403	P403	N879	N881	N883	N137	gen_Steel	1
404	P404	N881	N882	N138	N883	gen_Steel	1
405	P405	N115	N819	N884	N882	gen_Steel	1
406	P406	N819	N116	N885	N884	gen_Steel	1
407	P407	N882	N884	N886	N138	gen_Steel	1
408	P408	N884	N885	N139	N886	gen_Steel	1
409	P409	N116	N822	N887	N885	gen_Steel	1
410	P410	N822	N117	N888	N887	gen_Steel	1
411	P411	N885	N887	N889	N139	gen_Steel	1
412	P412	N887	N888	N140	N889	gen_Steel	1
413	P413	N117	N825	N890	N888	gen_Steel	1
414	P414	N825	N118	N891	N890	gen_Steel	1
415	P415	N888	N890	N892	N140	gen_Steel	1
416	P416	N890	N891	N141	N892	gen_Steel	1
417	P417	N118	N828	N893	N891	gen_Steel	1
418	P418	N828	N119	N894	N893	gen_Steel	1
419	P419	N891	N893	N895	N141	gen_Steel	1
420	P420	N893	N894	N142	N895	gen_Steel	1
421	P421	N119	N831	N896	N894	gen_Steel	1
422	P422	N831	N120	N897	N896	gen_Steel	1
423	P423	N894	N896	N898	N142	gen_Steel	1
424	P424	N896	N897	N143	N898	gen_Steel	1

Plate Primary Data (Continued)

	Label	A Joint	B Joint	C Joint	D Joint	Material	Thickness[in]
425	P425	N120	N834	N899	N897	gen_Steel	1
426	P426	N834	N121	N900	N899	gen_Steel	1
427	P427	N897	N899	N901	N143	gen_Steel	1
428	P428	N899	N900	N144	N901	gen_Steel	1
429	P429	N121	N837	N902	N900	gen_Steel	1
430	P430	N837	N122	N903	N902	gen_Steel	1
431	P431	N900	N902	N904	N144	gen_Steel	1
432	P432	N902	N903	N145	N904	gen_Steel	1
433	P433	N122	N840	N905	N903	gen_Steel	1
434	P434	N840	N123	N906	N905	gen_Steel	1
435	P435	N903	N905	N907	N145	gen_Steel	1
436	P436	N905	N906	N146	N907	gen_Steel	1
437	P437	N123	N843	N908	N906	gen_Steel	1
438	P438	N843	N124	N909	N908	gen_Steel	1
439	P439	N906	N908	N910	N146	gen_Steel	1
440	P440	N908	N909	N147	N910	gen_Steel	1
441	P441	N124	N846	N911	N909	gen_Steel	1
442	P442	N846	N125	N912	N911	gen_Steel	1
443	P443	N909	N911	N913	N147	gen_Steel	1
444	P444	N911	N912	N148	N913	gen_Steel	1
445	P445	N126	N850	N915	N914	gen_Steel	1
446	P446	N850	N127	N916	N915	gen_Steel	1
447	P447	N914	N915	N917	N149	gen_Steel	1
448	P448	N915	N916	N150	N917	gen_Steel	1
449	P449	N127	N853	N918	N916	gen_Steel	1
450	P450	N853	N128	N919	N918	gen_Steel	1
451	P451	N916	N918	N920	N150	gen_Steel	1
452	P452	N918	N919	N151	N920	gen_Steel	1
453	P453	N128	N856	N921	N919	gen_Steel	1
454	P454	N856	N129	N922	N921	gen_Steel	1
455	P455	N919	N921	N923	N151	gen_Steel	1
456	P456	N921	N922	N152	N923	gen_Steel	1
457	P457	N129	N859	N924	N922	gen_Steel	1
458	P458	N859	N130	N925	N924	gen_Steel	1
459	P459	N922	N924	N926	N152	gen_Steel	1
460	P460	N924	N925	N153	N926	gen_Steel	1
461	P461	N130	N862	N927	N925	gen_Steel	1
462	P462	N862	N131	N928	N927	gen_Steel	1
463	P463	N925	N927	N929	N153	gen_Steel	1
464	P464	N927	N928	N154	N929	gen_Steel	1
465	P465	N131	N865	N930	N928	gen_Steel	1
466	P466	N865	N132	N931	N930	gen_Steel	1
467	P467	N928	N930	N932	N154	gen_Steel	1
468	P468	N930	N931	N155	N932	gen_Steel	1
469	P469	N132	N868	N933	N931	gen_Steel	1
470	P470	N868	N133	N934	N933	gen_Steel	1
471	P471	N931	N933	N935	N155	gen_Steel	1
472	P472	N933	N934	N156	N935	gen_Steel	1
473	P473	N133	N871	N936	N934	gen_Steel	1
474	P474	N871	N134	N937	N936	gen_Steel	1
475	P475	N934	N936	N938	N156	gen_Steel	1
476	P476	N936	N937	N157	N938	gen_Steel	1
477	P477	N134	N874	N939	N937	gen_Steel	1
478	P478	N874	N135	N940	N939	gen_Steel	1
479	P479	N937	N939	N941	N157	gen_Steel	1
480	P480	N939	N940	N158	N941	gen_Steel	1
481	P481	N135	N877	N942	N940	gen_Steel	1

Plate Primary Data (Continued)

	Label	A Joint	B Joint	C Joint	D Joint	Material	Thickness[in]
482	P482	N877	N136	N943	N942	gen_Steel	1
483	P483	N940	N942	N944	N158	gen_Steel	1
484	P484	N942	N943	N159	N944	gen_Steel	1
485	P485	N136	N880	N945	N943	gen_Steel	1
486	P486	N880	N137	N946	N945	gen_Steel	1
487	P487	N943	N945	N947	N159	gen_Steel	1
488	P488	N945	N946	N160	N947	gen_Steel	1
489	P489	N137	N883	N948	N946	gen_Steel	1
490	P490	N883	N138	N949	N948	gen_Steel	1
491	P491	N946	N948	N950	N160	gen_Steel	1
492	P492	N948	N949	N161	N950	gen_Steel	1
493	P493	N138	N886	N951	N949	gen_Steel	1
494	P494	N886	N139	N952	N951	gen_Steel	1
495	P495	N949	N951	N953	N161	gen_Steel	1
496	P496	N951	N952	N162	N953	gen_Steel	1
497	P497	N139	N889	N954	N952	gen_Steel	1
498	P498	N889	N140	N955	N954	gen_Steel	1
499	P499	N952	N954	N956	N162	gen_Steel	1
500	P500	N954	N955	N163	N956	gen_Steel	1
501	P501	N140	N892	N957	N955	gen_Steel	1
502	P502	N892	N141	N958	N957	gen_Steel	1
503	P503	N955	N957	N959	N163	gen_Steel	1
504	P504	N957	N958	N164	N959	gen_Steel	1
505	P505	N141	N895	N960	N958	gen_Steel	1
506	P506	N895	N142	N961	N960	gen_Steel	1
507	P507	N958	N960	N962	N164	gen_Steel	1
508	P508	N960	N961	N165	N962	gen_Steel	1
509	P509	N142	N898	N963	N961	gen_Steel	1
510	P510	N898	N143	N964	N963	gen_Steel	1
511	P511	N961	N963	N965	N165	gen_Steel	1
512	P512	N963	N964	N166	N965	gen_Steel	1
513	P513	N143	N901	N966	N964	gen_Steel	1
514	P514	N901	N144	N967	N966	gen_Steel	1
515	P515	N964	N966	N968	N166	gen_Steel	1
516	P516	N966	N967	N167	N968	gen_Steel	1
517	P517	N144	N904	N969	N967	gen_Steel	1
518	P518	N904	N145	N970	N969	gen_Steel	1
519	P519	N967	N969	N971	N167	gen_Steel	1
520	P520	N969	N970	N168	N971	gen_Steel	1
521	P521	N145	N907	N972	N970	gen_Steel	1
522	P522	N907	N146	N973	N972	gen_Steel	1
523	P523	N970	N972	N974	N168	gen_Steel	1
524	P524	N972	N973	N169	N974	gen_Steel	1
525	P525	N146	N910	N975	N973	gen_Steel	1
526	P526	N910	N147	N976	N975	gen_Steel	1
527	P527	N973	N975	N977	N169	gen_Steel	1
528	P528	N975	N976	N170	N977	gen_Steel	1
529	P529	N147	N913	N978	N976	gen_Steel	1
530	P530	N913	N148	N979	N978	gen_Steel	1
531	P531	N976	N978	N980	N170	gen_Steel	1
532	P532	N978	N979	N171	N980	gen_Steel	1
533	P533	N149	N917	N982	N981	gen_Steel	1
534	P534	N917	N150	N983	N982	gen_Steel	1
535	P535	N981	N982	N984	N172	gen_Steel	1
536	P536	N982	N983	N173	N984	gen_Steel	1
537	P537	N150	N920	N985	N983	gen_Steel	1
538	P538	N920	N151	N986	N985	gen_Steel	1

Plate Primary Data (Continued)

	Label	A Joint	B Joint	C Joint	D Joint	Material	Thickness[in]
539	P539	N983	N985	N987	N173	gen_Steel	1
540	P540	N985	N986	N174	N987	gen_Steel	1
541	P541	N151	N923	N988	N986	gen_Steel	1
542	P542	N923	N152	N989	N988	gen_Steel	1
543	P543	N986	N988	N990	N174	gen_Steel	1
544	P544	N988	N989	N175	N990	gen_Steel	1
545	P545	N152	N926	N991	N989	gen_Steel	1
546	P546	N926	N153	N992	N991	gen_Steel	1
547	P547	N989	N991	N993	N175	gen_Steel	1
548	P548	N991	N992	N176	N993	gen_Steel	1
549	P549	N153	N929	N994	N992	gen_Steel	1
550	P550	N929	N154	N995	N994	gen_Steel	1
551	P551	N992	N994	N996	N176	gen_Steel	1
552	P552	N994	N995	N177	N996	gen_Steel	1
553	P553	N154	N932	N997	N995	gen_Steel	1
554	P554	N932	N155	N998	N997	gen_Steel	1
555	P555	N995	N997	N999	N177	gen_Steel	1
556	P556	N997	N998	N178	N999	gen_Steel	1
557	P557	N155	N935	N1000	N998	gen_Steel	1
558	P558	N935	N156	N1001	N1000	gen_Steel	1
559	P559	N998	N1000	N1002	N178	gen_Steel	1
560	P560	N1000	N1001	N179	N1002	gen_Steel	1
561	P561	N156	N938	N1003	N1001	gen_Steel	1
562	P562	N938	N157	N1004	N1003	gen_Steel	1
563	P563	N1001	N1003	N1005	N179	gen_Steel	1
564	P564	N1003	N1004	N180	N1005	gen_Steel	1
565	P565	N157	N941	N1006	N1004	gen_Steel	1
566	P566	N941	N158	N1007	N1006	gen_Steel	1
567	P567	N1004	N1006	N1008	N180	gen_Steel	1
568	P568	N1006	N1007	N181	N1008	gen_Steel	1
569	P569	N158	N944	N1009	N1007	gen_Steel	1
570	P570	N944	N159	N1010	N1009	gen_Steel	1
571	P571	N1007	N1009	N1011	N181	gen_Steel	1
572	P572	N1009	N1010	N182	N1011	gen_Steel	1
573	P573	N159	N947	N1012	N1010	gen_Steel	1
574	P574	N947	N160	N1013	N1012	gen_Steel	1
575	P575	N1010	N1012	N1014	N182	gen_Steel	1
576	P576	N1012	N1013	N183	N1014	gen_Steel	1
577	P577	N160	N950	N1015	N1013	gen_Steel	1
578	P578	N950	N161	N1016	N1015	gen_Steel	1
579	P579	N1013	N1015	N1017	N183	gen_Steel	1
580	P580	N1015	N1016	N184	N1017	gen_Steel	1
581	P581	N161	N953	N1018	N1016	gen_Steel	1
582	P582	N953	N162	N1019	N1018	gen_Steel	1
583	P583	N1016	N1018	N1020	N184	gen_Steel	1
584	P584	N1018	N1019	N185	N1020	gen_Steel	1
585	P585	N162	N956	N1021	N1019	gen_Steel	1
586	P586	N956	N163	N1022	N1021	gen_Steel	1
587	P587	N1019	N1021	N1023	N185	gen_Steel	1
588	P588	N1021	N1022	N186	N1023	gen_Steel	1
589	P589	N163	N959	N1024	N1022	gen_Steel	1
590	P590	N959	N164	N1025	N1024	gen_Steel	1
591	P591	N1022	N1024	N1026	N186	gen_Steel	1
592	P592	N1024	N1025	N187	N1026	gen_Steel	1
593	P593	N164	N962	N1027	N1025	gen_Steel	1
594	P594	N962	N165	N1028	N1027	gen_Steel	1
595	P595	N1025	N1027	N1029	N187	gen_Steel	1

Plate Primary Data (Continued)

	Label	A Joint	B Joint	C Joint	D Joint	Material	Thickness[in]
596	P596	N1027	N1028	N188	N1029	gen_Steel	1
597	P597	N165	N965	N1030	N1028	gen_Steel	1
598	P598	N965	N166	N1031	N1030	gen_Steel	1
599	P599	N1028	N1030	N1032	N188	gen_Steel	1
600	P600	N1030	N1031	N189	N1032	gen_Steel	1
601	P601	N166	N968	N1033	N1031	gen_Steel	1
602	P602	N968	N167	N1034	N1033	gen_Steel	1
603	P603	N1031	N1033	N1035	N189	gen_Steel	1
604	P604	N1033	N1034	N190	N1035	gen_Steel	1
605	P605	N167	N971	N1036	N1034	gen_Steel	1
606	P606	N971	N168	N1037	N1036	gen_Steel	1
607	P607	N1034	N1036	N1038	N190	gen_Steel	1
608	P608	N1036	N1037	N191	N1038	gen_Steel	1
609	P609	N168	N974	N1039	N1037	gen_Steel	1
610	P610	N974	N169	N1040	N1039	gen_Steel	1
611	P611	N1037	N1039	N1041	N191	gen_Steel	1
612	P612	N1039	N1040	N192	N1041	gen_Steel	1
613	P613	N169	N977	N1042	N1040	gen_Steel	1
614	P614	N977	N170	N1043	N1042	gen_Steel	1
615	P615	N1040	N1042	N1044	N192	gen_Steel	1
616	P616	N1042	N1043	N193	N1044	gen_Steel	1
617	P617	N170	N980	N1045	N1043	gen_Steel	1
618	P618	N980	N171	N1046	N1045	gen_Steel	1
619	P619	N1043	N1045	N1047	N193	gen_Steel	1
620	P620	N1045	N1046	N194	N1047	gen_Steel	1
621	P621	N172	N984	N1049	N1048	gen_Steel	1
622	P622	N984	N173	N1050	N1049	gen_Steel	1
623	P623	N1048	N1049	N1051	N195	gen_Steel	1
624	P624	N1049	N1050	N196	N1051	gen_Steel	1
625	P625	N173	N987	N1052	N1050	gen_Steel	1
626	P626	N987	N174	N1053	N1052	gen_Steel	1
627	P627	N1050	N1052	N1054	N196	gen_Steel	1
628	P628	N1052	N1053	N197	N1054	gen_Steel	1
629	P629	N174	N990	N1055	N1053	gen_Steel	1
630	P630	N990	N175	N1056	N1055	gen_Steel	1
631	P631	N1053	N1055	N1057	N197	gen_Steel	1
632	P632	N1055	N1056	N198	N1057	gen_Steel	1
633	P633	N175	N993	N1058	N1056	gen_Steel	1
634	P634	N993	N176	N1059	N1058	gen_Steel	1
635	P635	N1056	N1058	N1060	N198	gen_Steel	1
636	P636	N1058	N1059	N199	N1060	gen_Steel	1
637	P637	N176	N996	N1061	N1059	gen_Steel	1
638	P638	N996	N177	N1062	N1061	gen_Steel	1
639	P639	N1059	N1061	N1063	N199	gen_Steel	1
640	P640	N1061	N1062	N200	N1063	gen_Steel	1
641	P641	N177	N999	N1064	N1062	gen_Steel	1
642	P642	N999	N178	N1065	N1064	gen_Steel	1
643	P643	N1062	N1064	N1066	N200	gen_Steel	1
644	P644	N1064	N1065	N201	N1066	gen_Steel	1
645	P645	N178	N1002	N1067	N1065	gen_Steel	1
646	P646	N1002	N179	N1068	N1067	gen_Steel	1
647	P647	N1065	N1067	N1069	N201	gen_Steel	1
648	P648	N1067	N1068	N202	N1069	gen_Steel	1
649	P649	N179	N1005	N1070	N1068	gen_Steel	1
650	P650	N1005	N180	N1071	N1070	gen_Steel	1
651	P651	N1068	N1070	N1072	N202	gen_Steel	1
652	P652	N1070	N1071	N203	N1072	gen_Steel	1

Plate Primary Data (Continued)

	Label	A Joint	B Joint	C Joint	D Joint	Material	Thickness[in]
653	P653	N180	N1008	N1073	N1071	gen_Steel	1
654	P654	N1008	N181	N1074	N1073	gen_Steel	1
655	P655	N1071	N1073	N1075	N203	gen_Steel	1
656	P656	N1073	N1074	N204	N1075	gen_Steel	1
657	P657	N181	N1011	N1076	N1074	gen_Steel	1
658	P658	N1011	N182	N1077	N1076	gen_Steel	1
659	P659	N1074	N1076	N1078	N204	gen_Steel	1
660	P660	N1076	N1077	N205	N1078	gen_Steel	1
661	P661	N182	N1014	N1079	N1077	gen_Steel	1
662	P662	N1014	N183	N1080	N1079	gen_Steel	1
663	P663	N1077	N1079	N1081	N205	gen_Steel	1
664	P664	N1079	N1080	N206	N1081	gen_Steel	1
665	P665	N183	N1017	N1082	N1080	gen_Steel	1
666	P666	N1017	N184	N1083	N1082	gen_Steel	1
667	P667	N1080	N1082	N1084	N206	gen_Steel	1
668	P668	N1082	N1083	N207	N1084	gen_Steel	1
669	P669	N184	N1020	N1085	N1083	gen_Steel	1
670	P670	N1020	N185	N1086	N1085	gen_Steel	1
671	P671	N1083	N1085	N1087	N207	gen_Steel	1
672	P672	N1085	N1086	N208	N1087	gen_Steel	1
673	P673	N185	N1023	N1088	N1086	gen_Steel	1
674	P674	N1023	N186	N1089	N1088	gen_Steel	1
675	P675	N1086	N1088	N1090	N208	gen_Steel	1
676	P676	N1088	N1089	N209	N1090	gen_Steel	1
677	P677	N186	N1026	N1091	N1089	gen_Steel	1
678	P678	N1026	N187	N1092	N1091	gen_Steel	1
679	P679	N1089	N1091	N1093	N209	gen_Steel	1
680	P680	N1091	N1092	N210	N1093	gen_Steel	1
681	P681	N187	N1029	N1094	N1092	gen_Steel	1
682	P682	N1029	N188	N1095	N1094	gen_Steel	1
683	P683	N1092	N1094	N1096	N210	gen_Steel	1
684	P684	N1094	N1095	N211	N1096	gen_Steel	1
685	P685	N188	N1032	N1097	N1095	gen_Steel	1
686	P686	N1032	N189	N1098	N1097	gen_Steel	1
687	P687	N1095	N1097	N1099	N211	gen_Steel	1
688	P688	N1097	N1098	N212	N1099	gen_Steel	1
689	P689	N189	N1035	N1100	N1098	gen_Steel	1
690	P690	N1035	N190	N1101	N1100	gen_Steel	1
691	P691	N1098	N1100	N1102	N212	gen_Steel	1
692	P692	N1100	N1101	N213	N1102	gen_Steel	1
693	P693	N190	N1038	N1103	N1101	gen_Steel	1
694	P694	N1038	N191	N1104	N1103	gen_Steel	1
695	P695	N1101	N1103	N1105	N213	gen_Steel	1
696	P696	N1103	N1104	N214	N1105	gen_Steel	1
697	P697	N191	N1041	N1106	N1104	gen_Steel	1
698	P698	N1041	N192	N1107	N1106	gen_Steel	1
699	P699	N1104	N1106	N1108	N214	gen_Steel	1
700	P700	N1106	N1107	N215	N1108	gen_Steel	1
701	P701	N192	N1044	N1109	N1107	gen_Steel	1
702	P702	N1044	N193	N1110	N1109	gen_Steel	1
703	P703	N1107	N1109	N1111	N215	gen_Steel	1
704	P704	N1109	N1110	N216	N1111	gen_Steel	1
705	P705	N193	N1047	N1112	N1110	gen_Steel	1
706	P706	N1047	N194	N1113	N1112	gen_Steel	1
707	P707	N1110	N1112	N1114	N216	gen_Steel	1
708	P708	N1112	N1113	N217	N1114	gen_Steel	1
709	P709	N195	N1051	N1116	N1115	gen_Steel	1

Plate Primary Data (Continued)

	Label	A Joint	B Joint	C Joint	D Joint	Material	Thickness[in]
710	P710	N1051	N196	N1117	N1116	gen_Steel	1
711	P711	N1115	N1116	N1118	N218	gen_Steel	1
712	P712	N1116	N1117	N219	N1118	gen_Steel	1
713	P713	N196	N1054	N1119	N1117	gen_Steel	1
714	P714	N1054	N197	N1120	N1119	gen_Steel	1
715	P715	N1117	N1119	N1121	N219	gen_Steel	1
716	P716	N1119	N1120	N220	N1121	gen_Steel	1
717	P717	N197	N1057	N1122	N1120	gen_Steel	1
718	P718	N1057	N198	N1123	N1122	gen_Steel	1
719	P719	N1120	N1122	N1124	N220	gen_Steel	1
720	P720	N1122	N1123	N221	N1124	gen_Steel	1
721	P721	N198	N1060	N1125	N1123	gen_Steel	1
722	P722	N1060	N199	N1126	N1125	gen_Steel	1
723	P723	N1123	N1125	N1127	N221	gen_Steel	1
724	P724	N1125	N1126	N222	N1127	gen_Steel	1
725	P725	N199	N1063	N1128	N1126	gen_Steel	1
726	P726	N1063	N200	N1129	N1128	gen_Steel	1
727	P727	N1126	N1128	N1130	N222	gen_Steel	1
728	P728	N1128	N1129	N223	N1130	gen_Steel	1
729	P729	N200	N1066	N1131	N1129	gen_Steel	1
730	P730	N1066	N201	N1132	N1131	gen_Steel	1
731	P731	N1129	N1131	N1133	N223	gen_Steel	1
732	P732	N1131	N1132	N224	N1133	gen_Steel	1
733	P733	N201	N1069	N1134	N1132	gen_Steel	1
734	P734	N1069	N202	N1135	N1134	gen_Steel	1
735	P735	N1132	N1134	N1136	N224	gen_Steel	1
736	P736	N1134	N1135	N225	N1136	gen_Steel	1
737	P737	N202	N1072	N1137	N1135	gen_Steel	1
738	P738	N1072	N203	N1138	N1137	gen_Steel	1
739	P739	N1135	N1137	N1139	N225	gen_Steel	1
740	P740	N1137	N1138	N226	N1139	gen_Steel	1
741	P741	N203	N1075	N1140	N1138	gen_Steel	1
742	P742	N1075	N204	N1141	N1140	gen_Steel	1
743	P743	N1138	N1140	N1142	N226	gen_Steel	1
744	P744	N1140	N1141	N227	N1142	gen_Steel	1
745	P745	N208	N1090	N1144	N1143	gen_Steel	1
746	P746	N1090	N209	N1145	N1144	gen_Steel	1
747	P747	N1143	N1144	N1146	N228	gen_Steel	1
748	P748	N1144	N1145	N229	N1146	gen_Steel	1
749	P749	N209	N1093	N1147	N1145	gen_Steel	1
750	P750	N1093	N210	N1148	N1147	gen_Steel	1
751	P751	N1145	N1147	N1149	N229	gen_Steel	1
752	P752	N1147	N1148	N230	N1149	gen_Steel	1
753	P753	N210	N1096	N1150	N1148	gen_Steel	1
754	P754	N1096	N211	N1151	N1150	gen_Steel	1
755	P755	N1148	N1150	N1152	N230	gen_Steel	1
756	P756	N1150	N1151	N231	N1152	gen_Steel	1
757	P757	N211	N1099	N1153	N1151	gen_Steel	1
758	P758	N1099	N212	N1154	N1153	gen_Steel	1
759	P759	N1151	N1153	N1155	N231	gen_Steel	1
760	P760	N1153	N1154	N232	N1155	gen_Steel	1
761	P761	N212	N1102	N1156	N1154	gen_Steel	1
762	P762	N1102	N213	N1157	N1156	gen_Steel	1
763	P763	N1154	N1156	N1158	N232	gen_Steel	1
764	P764	N1156	N1157	N233	N1158	gen_Steel	1
765	P765	N213	N1105	N1159	N1157	gen_Steel	1
766	P766	N1105	N214	N1160	N1159	gen_Steel	1

Plate Primary Data (Continued)

	Label	A Joint	B Joint	C Joint	D Joint	Material	Thickness[in]
767	P767	N1157	N1159	N1161	N233	gen_Steel	1
768	P768	N1159	N1160	N234	N1161	gen_Steel	1
769	P769	N214	N1108	N1162	N1160	gen_Steel	1
770	P770	N1108	N215	N1163	N1162	gen_Steel	1
771	P771	N1160	N1162	N1164	N234	gen_Steel	1
772	P772	N1162	N1163	N235	N1164	gen_Steel	1
773	P773	N215	N1111	N1165	N1163	gen_Steel	1
774	P774	N1111	N216	N1166	N1165	gen_Steel	1
775	P775	N1163	N1165	N1167	N235	gen_Steel	1
776	P776	N1165	N1166	N236	N1167	gen_Steel	1
777	P777	N216	N1114	N1168	N1166	gen_Steel	1
778	P778	N1114	N217	N1169	N1168	gen_Steel	1
779	P779	N1166	N1168	N1170	N236	gen_Steel	1
780	P780	N1168	N1169	N237	N1170	gen_Steel	1
781	P781	N218	N1118	N1172	N1171	gen_Steel	1
782	P782	N1118	N219	N1173	N1172	gen_Steel	1
783	P783	N1171	N1172	N1174	N238	gen_Steel	1
784	P784	N1172	N1173	N239	N1174	gen_Steel	1
785	P785	N219	N1121	N1175	N1173	gen_Steel	1
786	P786	N1121	N220	N1176	N1175	gen_Steel	1
787	P787	N1173	N1175	N1177	N239	gen_Steel	1
788	P788	N1175	N1176	N240	N1177	gen_Steel	1
789	P789	N220	N1124	N1178	N1176	gen_Steel	1
790	P790	N1124	N221	N1179	N1178	gen_Steel	1
791	P791	N1176	N1178	N1180	N240	gen_Steel	1
792	P792	N1178	N1179	N241	N1180	gen_Steel	1
793	P793	N221	N1127	N1181	N1179	gen_Steel	1
794	P794	N1127	N222	N1182	N1181	gen_Steel	1
795	P795	N1179	N1181	N1183	N241	gen_Steel	1
796	P796	N1181	N1182	N242	N1183	gen_Steel	1
797	P797	N222	N1130	N1184	N1182	gen_Steel	1
798	P798	N1130	N223	N1185	N1184	gen_Steel	1
799	P799	N1182	N1184	N1186	N242	gen_Steel	1
800	P800	N1184	N1185	N243	N1186	gen_Steel	1
801	P801	N223	N1133	N1187	N1185	gen_Steel	1
802	P802	N1133	N224	N1188	N1187	gen_Steel	1
803	P803	N1185	N1187	N1189	N243	gen_Steel	1
804	P804	N1187	N1188	N244	N1189	gen_Steel	1
805	P805	N224	N1136	N1190	N1188	gen_Steel	1
806	P806	N1136	N225	N1191	N1190	gen_Steel	1
807	P807	N1188	N1190	N1192	N244	gen_Steel	1
808	P808	N1190	N1191	N245	N1192	gen_Steel	1
809	P809	N225	N1139	N1193	N1191	gen_Steel	1
810	P810	N1139	N226	N1194	N1193	gen_Steel	1
811	P811	N1191	N1193	N1195	N245	gen_Steel	1
812	P812	N1193	N1194	N246	N1195	gen_Steel	1
813	P813	N229	N1149	N1197	N1196	gen_Steel	1
814	P814	N1149	N230	N1198	N1197	gen_Steel	1
815	P815	N1196	N1197	N1199	N247	gen_Steel	1
816	P816	N1197	N1198	N248	N1199	gen_Steel	1
817	P817	N230	N1152	N1200	N1198	gen_Steel	1
818	P818	N1152	N231	N1201	N1200	gen_Steel	1
819	P819	N1198	N1200	N1202	N248	gen_Steel	1
820	P820	N1200	N1201	N249	N1202	gen_Steel	1
821	P821	N231	N1155	N1203	N1201	gen_Steel	1
822	P822	N1155	N232	N1204	N1203	gen_Steel	1
823	P823	N1201	N1203	N1205	N249	gen_Steel	1

Plate Primary Data (Continued)

	Label	A Joint	B Joint	C Joint	D Joint	Material	Thickness[in]
824	P824	N1203	N1204	N250	N1205	gen_Steel	1
825	P825	N232	N1158	N1206	N1204	gen_Steel	1
826	P826	N1158	N233	N1207	N1206	gen_Steel	1
827	P827	N1204	N1206	N1208	N250	gen_Steel	1
828	P828	N1206	N1207	N251	N1208	gen_Steel	1
829	P829	N233	N1161	N1209	N1207	gen_Steel	1
830	P830	N1161	N234	N1210	N1209	gen_Steel	1
831	P831	N1207	N1209	N1211	N251	gen_Steel	1
832	P832	N1209	N1210	N252	N1211	gen_Steel	1
833	P833	N234	N1164	N1212	N1210	gen_Steel	1
834	P834	N1164	N235	N1213	N1212	gen_Steel	1
835	P835	N1210	N1212	N1214	N252	gen_Steel	1
836	P836	N1212	N1213	N253	N1214	gen_Steel	1
837	P837	N235	N1167	N1215	N1213	gen_Steel	1
838	P838	N1167	N236	N1216	N1215	gen_Steel	1
839	P839	N1213	N1215	N1217	N253	gen_Steel	1
840	P840	N1215	N1216	N254	N1217	gen_Steel	1
841	P841	N236	N1170	N1218	N1216	gen_Steel	1
842	P842	N1170	N237	N1219	N1218	gen_Steel	1
843	P843	N1216	N1218	N1220	N254	gen_Steel	1
844	P844	N1218	N1219	N255	N1220	gen_Steel	1
845	P845	N238	N1174	N1222	N1221	gen_Steel	1
846	P846	N1174	N239	N1223	N1222	gen_Steel	1
847	P847	N1221	N1222	N1224	N256	gen_Steel	1
848	P848	N1222	N1223	N257	N1224	gen_Steel	1
849	P849	N239	N1177	N1225	N1223	gen_Steel	1
850	P850	N1177	N240	N1226	N1225	gen_Steel	1
851	P851	N1223	N1225	N1227	N257	gen_Steel	1
852	P852	N1225	N1226	N258	N1227	gen_Steel	1
853	P853	N240	N1180	N1228	N1226	gen_Steel	1
854	P854	N1180	N241	N1229	N1228	gen_Steel	1
855	P855	N1226	N1228	N1230	N258	gen_Steel	1
856	P856	N1228	N1229	N259	N1230	gen_Steel	1
857	P857	N241	N1183	N1231	N1229	gen_Steel	1
858	P858	N1183	N242	N1232	N1231	gen_Steel	1
859	P859	N1229	N1231	N1233	N259	gen_Steel	1
860	P860	N1231	N1232	N260	N1233	gen_Steel	1
861	P861	N242	N1186	N1234	N1232	gen_Steel	1
862	P862	N1186	N243	N1235	N1234	gen_Steel	1
863	P863	N1232	N1234	N1236	N260	gen_Steel	1
864	P864	N1234	N1235	N261	N1236	gen_Steel	1
865	P865	N243	N1189	N1237	N1235	gen_Steel	1
866	P866	N1189	N244	N1238	N1237	gen_Steel	1
867	P867	N1235	N1237	N1239	N261	gen_Steel	1
868	P868	N1237	N1238	N262	N1239	gen_Steel	1
869	P869	N244	N1192	N1240	N1238	gen_Steel	1
870	P870	N1192	N245	N1241	N1240	gen_Steel	1
871	P871	N1238	N1240	N1242	N262	gen_Steel	1
872	P872	N1240	N1241	N263	N1242	gen_Steel	1
873	P873	N245	N1195	N1243	N1241	gen_Steel	1
874	P874	N1195	N246	N1244	N1243	gen_Steel	1
875	P875	N1241	N1243	N1245	N263	gen_Steel	1
876	P876	N1243	N1244	N264	N1245	gen_Steel	1
877	P877	N247	N1199	N1247	N1246	gen_Steel	1
878	P878	N1199	N248	N1248	N1247	gen_Steel	1
879	P879	N1246	N1247	N1249	N265	gen_Steel	1
880	P880	N1247	N1248	N266	N1249	gen_Steel	1

Plate Primary Data (Continued)

	Label	A Joint	B Joint	C Joint	D Joint	Material	Thickness[in]
881	P881	N248	N1202	N1250	N1248	gen_Steel	1
882	P882	N1202	N249	N1251	N1250	gen_Steel	1
883	P883	N1248	N1250	N1252	N266	gen_Steel	1
884	P884	N1250	N1251	N267	N1252	gen_Steel	1
885	P885	N249	N1205	N1253	N1251	gen_Steel	1
886	P886	N1205	N250	N1254	N1253	gen_Steel	1
887	P887	N1251	N1253	N1255	N267	gen_Steel	1
888	P888	N1253	N1254	N268	N1255	gen_Steel	1
889	P889	N250	N1208	N1256	N1254	gen_Steel	1
890	P890	N1208	N251	N1257	N1256	gen_Steel	1
891	P891	N1254	N1256	N1258	N268	gen_Steel	1
892	P892	N1256	N1257	N269	N1258	gen_Steel	1
893	P893	N251	N1211	N1259	N1257	gen_Steel	1
894	P894	N1211	N252	N1260	N1259	gen_Steel	1
895	P895	N1257	N1259	N1261	N269	gen_Steel	1
896	P896	N1259	N1260	N270	N1261	gen_Steel	1
897	P897	N252	N1214	N1262	N1260	gen_Steel	1
898	P898	N1214	N253	N1263	N1262	gen_Steel	1
899	P899	N1260	N1262	N1264	N270	gen_Steel	1
900	P900	N1262	N1263	N271	N1264	gen_Steel	1
901	P901	N253	N1217	N1265	N1263	gen_Steel	1
902	P902	N1217	N254	N1266	N1265	gen_Steel	1
903	P903	N1263	N1265	N1267	N271	gen_Steel	1
904	P904	N1265	N1266	N272	N1267	gen_Steel	1
905	P905	N254	N1220	N1268	N1266	gen_Steel	1
906	P906	N1220	N255	N1269	N1268	gen_Steel	1
907	P907	N1266	N1268	N1270	N272	gen_Steel	1
908	P908	N1268	N1269	N273	N1270	gen_Steel	1
909	P909	N256	N1224	N1272	N1271	gen_Steel	1
910	P910	N1224	N257	N1273	N1272	gen_Steel	1
911	P911	N1271	N1272	N1274	N274	gen_Steel	1
912	P912	N1272	N1273	N275	N1274	gen_Steel	1
913	P913	N257	N1227	N1275	N1273	gen_Steel	1
914	P914	N1227	N258	N1276	N1275	gen_Steel	1
915	P915	N1273	N1275	N1277	N275	gen_Steel	1
916	P916	N1275	N1276	N276	N1277	gen_Steel	1
917	P917	N258	N1230	N1278	N1276	gen_Steel	1
918	P918	N1230	N259	N1279	N1278	gen_Steel	1
919	P919	N1276	N1278	N1280	N276	gen_Steel	1
920	P920	N1278	N1279	N277	N1280	gen_Steel	1
921	P921	N259	N1233	N1281	N1279	gen_Steel	1
922	P922	N1233	N260	N1282	N1281	gen_Steel	1
923	P923	N1279	N1281	N1283	N277	gen_Steel	1
924	P924	N1281	N1282	N278	N1283	gen_Steel	1
925	P925	N260	N1236	N1284	N1282	gen_Steel	1
926	P926	N1236	N261	N1285	N1284	gen_Steel	1
927	P927	N1282	N1284	N1286	N278	gen_Steel	1
928	P928	N1284	N1285	N279	N1286	gen_Steel	1
929	P929	N261	N1239	N1287	N1285	gen_Steel	1
930	P930	N1239	N262	N1288	N1287	gen_Steel	1
931	P931	N1285	N1287	N1289	N279	gen_Steel	1
932	P932	N1287	N1288	N280	N1289	gen_Steel	1
933	P933	N262	N1242	N1290	N1288	gen_Steel	1
934	P934	N1242	N263	N1291	N1290	gen_Steel	1
935	P935	N1288	N1290	N1292	N280	gen_Steel	1
936	P936	N1290	N1291	N281	N1292	gen_Steel	1
937	P937	N263	N1245	N1293	N1291	gen_Steel	1

Plate Primary Data (Continued)

	Label	A Joint	B Joint	C Joint	D Joint	Material	Thickness[in]
938	P938	N1245	N264	N1294	N1293	gen_Steel	1
939	P939	N1291	N1293	N1295	N281	gen_Steel	1
940	P940	N1293	N1294	N282	N1295	gen_Steel	1
941	P941	N265	N1249	N1297	N1296	gen_Steel	1
942	P942	N1249	N266	N1298	N1297	gen_Steel	1
943	P943	N1296	N1297	N1299	N283	gen_Steel	1
944	P944	N1297	N1298	N284	N1299	gen_Steel	1
945	P945	N266	N1252	N1300	N1298	gen_Steel	1
946	P946	N1252	N267	N1301	N1300	gen_Steel	1
947	P947	N1298	N1300	N1302	N284	gen_Steel	1
948	P948	N1300	N1301	N285	N1302	gen_Steel	1
949	P949	N267	N1255	N1303	N1301	gen_Steel	1
950	P950	N1255	N268	N1304	N1303	gen_Steel	1
951	P951	N1301	N1303	N1305	N285	gen_Steel	1
952	P952	N1303	N1304	N286	N1305	gen_Steel	1
953	P953	N268	N1258	N1306	N1304	gen_Steel	1
954	P954	N1258	N269	N1307	N1306	gen_Steel	1
955	P955	N1304	N1306	N1308	N286	gen_Steel	1
956	P956	N1306	N1307	N287	N1308	gen_Steel	1
957	P957	N269	N1261	N1309	N1307	gen_Steel	1
958	P958	N1261	N270	N1310	N1309	gen_Steel	1
959	P959	N1307	N1309	N1311	N287	gen_Steel	1
960	P960	N1309	N1310	N288	N1311	gen_Steel	1
961	P961	N270	N1264	N1312	N1310	gen_Steel	1
962	P962	N1264	N271	N1313	N1312	gen_Steel	1
963	P963	N1310	N1312	N1314	N288	gen_Steel	1
964	P964	N1312	N1313	N289	N1314	gen_Steel	1
965	P965	N271	N1267	N1315	N1313	gen_Steel	1
966	P966	N1267	N272	N1316	N1315	gen_Steel	1
967	P967	N1313	N1315	N1317	N289	gen_Steel	1
968	P968	N1315	N1316	N290	N1317	gen_Steel	1
969	P969	N272	N1270	N1318	N1316	gen_Steel	1
970	P970	N1270	N273	N1319	N1318	gen_Steel	1
971	P971	N1316	N1318	N1320	N290	gen_Steel	1
972	P972	N1318	N1319	N291	N1320	gen_Steel	1
973	P973	N274	N1274	N1322	N1321	gen_Steel	1
974	P974	N1274	N275	N1323	N1322	gen_Steel	1
975	P975	N1321	N1322	N1324	N292	gen_Steel	1
976	P976	N1322	N1323	N293	N1324	gen_Steel	1
977	P977	N275	N1277	N1325	N1323	gen_Steel	1
978	P978	N1277	N276	N1326	N1325	gen_Steel	1
979	P979	N1323	N1325	N1327	N293	gen_Steel	1
980	P980	N1325	N1326	N294	N1327	gen_Steel	1
981	P981	N276	N1280	N1328	N1326	gen_Steel	1
982	P982	N1280	N277	N1329	N1328	gen_Steel	1
983	P983	N1326	N1328	N1330	N294	gen_Steel	1
984	P984	N1328	N1329	N295	N1330	gen_Steel	1
985	P985	N277	N1283	N1331	N1329	gen_Steel	1
986	P986	N1283	N278	N1332	N1331	gen_Steel	1
987	P987	N1329	N1331	N1333	N295	gen_Steel	1
988	P988	N1331	N1332	N296	N1333	gen_Steel	1
989	P989	N278	N1286	N1334	N1332	gen_Steel	1
990	P990	N1286	N279	N1335	N1334	gen_Steel	1
991	P991	N1332	N1334	N1336	N296	gen_Steel	1
992	P992	N1334	N1335	N297	N1336	gen_Steel	1
993	P993	N279	N1289	N1337	N1335	gen_Steel	1
994	P994	N1289	N280	N1338	N1337	gen_Steel	1

Plate Primary Data (Continued)

	Label	A Joint	B Joint	C Joint	D Joint	Material	Thickness[in]
995	P995	N1335	N1337	N1339	N297	gen_Steel	1
996	P996	N1337	N1338	N298	N1339	gen_Steel	1
997	P997	N280	N1292	N1340	N1338	gen_Steel	1
998	P998	N1292	N281	N1341	N1340	gen_Steel	1
999	P999	N1338	N1340	N1342	N298	gen_Steel	1
1000	P1000	N1340	N1341	N299	N1342	gen_Steel	1
1001	P1001	N281	N1295	N1343	N1341	gen_Steel	1
1002	P1002	N1295	N282	N1344	N1343	gen_Steel	1
1003	P1003	N1341	N1343	N1345	N299	gen_Steel	1
1004	P1004	N1343	N1344	N300	N1345	gen_Steel	1
1005	P1005	N283	N1299	N1347	N1346	gen_Steel	1
1006	P1006	N1299	N284	N1348	N1347	gen_Steel	1
1007	P1007	N1346	N1347	N1349	N303	gen_Steel	1
1008	P1008	N1347	N1348	N304	N1349	gen_Steel	1
1009	P1009	N284	N1302	N1350	N1348	gen_Steel	1
1010	P1010	N1302	N285	N1351	N1350	gen_Steel	1
1011	P1011	N1348	N1350	N1352	N304	gen_Steel	1
1012	P1012	N1350	N1351	N305	N1352	gen_Steel	1
1013	P1013	N285	N1305	N1353	N1351	gen_Steel	1
1014	P1014	N1305	N286	N1354	N1353	gen_Steel	1
1015	P1015	N1351	N1353	N1355	N305	gen_Steel	1
1016	P1016	N1353	N1354	N306	N1355	gen_Steel	1
1017	P1017	N286	N1308	N1356	N1354	gen_Steel	1
1018	P1018	N1308	N287	N1357	N1356	gen_Steel	1
1019	P1019	N1354	N1356	N1358	N306	gen_Steel	1
1020	P1020	N1356	N1357	N307	N1358	gen_Steel	1
1021	P1021	N287	N1311	N1359	N1357	gen_Steel	1
1022	P1022	N1311	N288	N1360	N1359	gen_Steel	1
1023	P1023	N1357	N1359	N1361	N307	gen_Steel	1
1024	P1024	N1359	N1360	N308	N1361	gen_Steel	1
1025	P1025	N288	N1314	N1362	N1360	gen_Steel	1
1026	P1026	N1314	N289	N1363	N1362	gen_Steel	1
1027	P1027	N1360	N1362	N1364	N308	gen_Steel	1
1028	P1028	N1362	N1363	N309	N1364	gen_Steel	1
1029	P1029	N289	N1317	N1365	N1363	gen_Steel	1
1030	P1030	N1317	N290	N1366	N1365	gen_Steel	1
1031	P1031	N1363	N1365	N1367	N309	gen_Steel	1
1032	P1032	N1365	N1366	N310	N1367	gen_Steel	1
1033	P1033	N290	N1320	N1368	N1366	gen_Steel	1
1034	P1034	N1320	N291	N1369	N1368	gen_Steel	1
1035	P1035	N1366	N1368	N1370	N310	gen_Steel	1
1036	P1036	N1368	N1369	N311	N1370	gen_Steel	1
1037	P1037	N292	N1324	N1372	N1371	gen_Steel	1
1038	P1038	N1324	N293	N1373	N1372	gen_Steel	1
1039	P1039	N1371	N1372	N1374	N312	gen_Steel	1
1040	P1040	N1372	N1373	N313	N1374	gen_Steel	1
1041	P1041	N293	N1327	N1375	N1373	gen_Steel	1
1042	P1042	N1327	N294	N1376	N1375	gen_Steel	1
1043	P1043	N1373	N1375	N1377	N313	gen_Steel	1
1044	P1044	N1375	N1376	N314	N1377	gen_Steel	1
1045	P1045	N294	N1330	N1378	N1376	gen_Steel	1
1046	P1046	N1330	N295	N1379	N1378	gen_Steel	1
1047	P1047	N1376	N1378	N1380	N314	gen_Steel	1
1048	P1048	N1378	N1379	N315	N1380	gen_Steel	1
1049	P1049	N295	N1333	N1381	N1379	gen_Steel	1
1050	P1050	N1333	N296	N1382	N1381	gen_Steel	1
1051	P1051	N1379	N1381	N1383	N315	gen_Steel	1

Plate Primary Data (Continued)

	Label	A Joint	B Joint	C Joint	D Joint	Material	Thickness[in]
1052	P1052	N1381	N1382	N316	N1383	gen_Steel	1
1053	P1053	N296	N1336	N1384	N1382	gen_Steel	1
1054	P1054	N1336	N297	N1385	N1384	gen_Steel	1
1055	P1055	N1382	N1384	N1386	N316	gen_Steel	1
1056	P1056	N1384	N1385	N317	N1386	gen_Steel	1
1057	P1057	N297	N1339	N1387	N1385	gen_Steel	1
1058	P1058	N1339	N298	N1388	N1387	gen_Steel	1
1059	P1059	N1385	N1387	N1389	N317	gen_Steel	1
1060	P1060	N1387	N1388	N318	N1389	gen_Steel	1
1061	P1061	N298	N1342	N1390	N1388	gen_Steel	1
1062	P1062	N1342	N299	N1391	N1390	gen_Steel	1
1063	P1063	N1388	N1390	N1392	N318	gen_Steel	1
1064	P1064	N1390	N1391	N319	N1392	gen_Steel	1
1065	P1065	N299	N1345	N1393	N1391	gen_Steel	1
1066	P1066	N1345	N300	N1394	N1393	gen_Steel	1
1067	P1067	N1391	N1393	N1395	N319	gen_Steel	1
1068	P1068	N1393	N1394	N320	N1395	gen_Steel	1
1069	P1069	N300	N1396	N1397	N1394	gen_Steel	1
1070	P1070	N1396	N301	N1398	N1397	gen_Steel	1
1071	P1071	N1394	N1397	N1399	N320	gen_Steel	1
1072	P1072	N1397	N1398	N321	N1399	gen_Steel	1
1073	P1073	N302	N1400	N1402	N1401	gen_Steel	1
1074	P1074	N1400	N303	N1403	N1402	gen_Steel	1
1075	P1075	N1401	N1402	N1404	N325	gen_Steel	1
1076	P1076	N1402	N1403	N326	N1404	gen_Steel	1
1077	P1077	N303	N1349	N1405	N1403	gen_Steel	1
1078	P1078	N1349	N304	N1406	N1405	gen_Steel	1
1079	P1079	N1403	N1405	N1407	N326	gen_Steel	1
1080	P1080	N1405	N1406	N327	N1407	gen_Steel	1
1081	P1081	N304	N1352	N1408	N1406	gen_Steel	1
1082	P1082	N1352	N305	N1409	N1408	gen_Steel	1
1083	P1083	N1406	N1408	N1410	N327	gen_Steel	1
1084	P1084	N1408	N1409	N328	N1410	gen_Steel	1
1085	P1085	N305	N1355	N1411	N1409	gen_Steel	1
1086	P1086	N1355	N306	N1412	N1411	gen_Steel	1
1087	P1087	N1409	N1411	N1413	N328	gen_Steel	1
1088	P1088	N1411	N1412	N329	N1413	gen_Steel	1
1089	P1089	N306	N1358	N1414	N1412	gen_Steel	1
1090	P1090	N1358	N307	N1415	N1414	gen_Steel	1
1091	P1091	N1412	N1414	N1416	N329	gen_Steel	1
1092	P1092	N1414	N1415	N330	N1416	gen_Steel	1
1093	P1093	N307	N1361	N1417	N1415	gen_Steel	1
1094	P1094	N1361	N308	N1418	N1417	gen_Steel	1
1095	P1095	N1415	N1417	N1419	N330	gen_Steel	1
1096	P1096	N1417	N1418	N331	N1419	gen_Steel	1
1097	P1097	N308	N1364	N1420	N1418	gen_Steel	1
1098	P1098	N1364	N309	N1421	N1420	gen_Steel	1
1099	P1099	N1418	N1420	N1422	N331	gen_Steel	1
1100	P1100	N1420	N1421	N332	N1422	gen_Steel	1
1101	P1101	N309	N1367	N1423	N1421	gen_Steel	1
1102	P1102	N1367	N310	N1424	N1423	gen_Steel	1
1103	P1103	N1421	N1423	N1425	N332	gen_Steel	1
1104	P1104	N1423	N1424	N333	N1425	gen_Steel	1
1105	P1105	N310	N1370	N1426	N1424	gen_Steel	1
1106	P1106	N1370	N311	N1427	N1426	gen_Steel	1
1107	P1107	N1424	N1426	N1428	N333	gen_Steel	1
1108	P1108	N1426	N1427	N334	N1428	gen_Steel	1

Plate Primary Data (Continued)

	Label	A Joint	B Joint	C Joint	D Joint	Material	Thickness[in]
1109	P1109	N312	N1374	N1430	N1429	gen_Steel	1
1110	P1110	N1374	N313	N1431	N1430	gen_Steel	1
1111	P1111	N1429	N1430	N1432	N335	gen_Steel	1
1112	P1112	N1430	N1431	N336	N1432	gen_Steel	1
1113	P1113	N313	N1377	N1433	N1431	gen_Steel	1
1114	P1114	N1377	N314	N1434	N1433	gen_Steel	1
1115	P1115	N1431	N1433	N1435	N336	gen_Steel	1
1116	P1116	N1433	N1434	N337	N1435	gen_Steel	1
1117	P1117	N314	N1380	N1436	N1434	gen_Steel	1
1118	P1118	N1380	N315	N1437	N1436	gen_Steel	1
1119	P1119	N1434	N1436	N1438	N337	gen_Steel	1
1120	P1120	N1436	N1437	N338	N1438	gen_Steel	1
1121	P1121	N315	N1383	N1439	N1437	gen_Steel	1
1122	P1122	N1383	N316	N1440	N1439	gen_Steel	1
1123	P1123	N1437	N1439	N1441	N338	gen_Steel	1
1124	P1124	N1439	N1440	N339	N1441	gen_Steel	1
1125	P1125	N316	N1386	N1442	N1440	gen_Steel	1
1126	P1126	N1386	N317	N1443	N1442	gen_Steel	1
1127	P1127	N1440	N1442	N1444	N339	gen_Steel	1
1128	P1128	N1442	N1443	N340	N1444	gen_Steel	1
1129	P1129	N317	N1389	N1445	N1443	gen_Steel	1
1130	P1130	N1389	N318	N1446	N1445	gen_Steel	1
1131	P1131	N1443	N1445	N1447	N340	gen_Steel	1
1132	P1132	N1445	N1446	N341	N1447	gen_Steel	1
1133	P1133	N318	N1392	N1448	N1446	gen_Steel	1
1134	P1134	N1392	N319	N1449	N1448	gen_Steel	1
1135	P1135	N1446	N1448	N1450	N341	gen_Steel	1
1136	P1136	N1448	N1449	N342	N1450	gen_Steel	1
1137	P1137	N319	N1395	N1451	N1449	gen_Steel	1
1138	P1138	N1395	N320	N1452	N1451	gen_Steel	1
1139	P1139	N1449	N1451	N1453	N342	gen_Steel	1
1140	P1140	N1451	N1452	N343	N1453	gen_Steel	1
1141	P1141	N320	N1399	N1454	N1452	gen_Steel	1
1142	P1142	N1399	N321	N1455	N1454	gen_Steel	1
1143	P1143	N1452	N1454	N1456	N343	gen_Steel	1
1144	P1144	N1454	N1455	N344	N1456	gen_Steel	1
1145	P1145	N321	N1457	N1458	N1455	gen_Steel	1
1146	P1146	N1457	N322	N1459	N1458	gen_Steel	1
1147	P1147	N1455	N1458	N1460	N344	gen_Steel	1
1148	P1148	N1458	N1459	N345	N1460	gen_Steel	1
1149	P1149	N322	N1461	N1462	N1459	gen_Steel	1
1150	P1150	N1461	N323	N1463	N1462	gen_Steel	1
1151	P1151	N1459	N1462	N1464	N345	gen_Steel	1
1152	P1152	N1462	N1463	N346	N1464	gen_Steel	1
1153	P1153	N323	N1465	N1466	N1463	gen_Steel	1
1154	P1154	N1465	N324	N1467	N1466	gen_Steel	1
1155	P1155	N1463	N1466	N1468	N346	gen_Steel	1
1156	P1156	N1466	N1467	N347	N1468	gen_Steel	1
1157	P1157	N324	N1469	N1470	N1467	gen_Steel	1
1158	P1158	N1469	N325	N1471	N1470	gen_Steel	1
1159	P1159	N1467	N1470	N1472	N347	gen_Steel	1
1160	P1160	N1470	N1471	N348	N1472	gen_Steel	1
1161	P1161	N325	N1404	N1473	N1471	gen_Steel	1
1162	P1162	N1404	N326	N1474	N1473	gen_Steel	1
1163	P1163	N1471	N1473	N1475	N348	gen_Steel	1
1164	P1164	N1473	N1474	N349	N1475	gen_Steel	1
1165	P1165	N326	N1407	N1476	N1474	gen_Steel	1

Plate Primary Data (Continued)

	Label	A Joint	B Joint	C Joint	D Joint	Material	Thickness[in]
1166	P1166	N1407	N327	N1477	N1476	gen_Steel	1
1167	P1167	N1474	N1476	N1478	N349	gen_Steel	1
1168	P1168	N1476	N1477	N350	N1478	gen_Steel	1
1169	P1169	N327	N1410	N1479	N1477	gen_Steel	1
1170	P1170	N1410	N328	N1480	N1479	gen_Steel	1
1171	P1171	N1477	N1479	N1481	N350	gen_Steel	1
1172	P1172	N1479	N1480	N351	N1481	gen_Steel	1
1173	P1173	N328	N1413	N1482	N1480	gen_Steel	1
1174	P1174	N1413	N329	N1483	N1482	gen_Steel	1
1175	P1175	N1480	N1482	N1484	N351	gen_Steel	1
1176	P1176	N1482	N1483	N352	N1484	gen_Steel	1
1177	P1177	N329	N1416	N1485	N1483	gen_Steel	1
1178	P1178	N1416	N330	N1486	N1485	gen_Steel	1
1179	P1179	N1483	N1485	N1487	N352	gen_Steel	1
1180	P1180	N1485	N1486	N353	N1487	gen_Steel	1
1181	P1181	N330	N1419	N1488	N1486	gen_Steel	1
1182	P1182	N1419	N331	N1489	N1488	gen_Steel	1
1183	P1183	N1486	N1488	N1490	N353	gen_Steel	1
1184	P1184	N1488	N1489	N354	N1490	gen_Steel	1
1185	P1185	N331	N1422	N1491	N1489	gen_Steel	1
1186	P1186	N1422	N332	N1492	N1491	gen_Steel	1
1187	P1187	N1489	N1491	N1493	N354	gen_Steel	1
1188	P1188	N1491	N1492	N355	N1493	gen_Steel	1
1189	P1189	N332	N1425	N1494	N1492	gen_Steel	1
1190	P1190	N1425	N333	N1495	N1494	gen_Steel	1
1191	P1191	N1492	N1494	N1496	N355	gen_Steel	1
1192	P1192	N1494	N1495	N356	N1496	gen_Steel	1
1193	P1193	N333	N1428	N1497	N1495	gen_Steel	1
1194	P1194	N1428	N334	N1498	N1497	gen_Steel	1
1195	P1195	N1495	N1497	N1499	N356	gen_Steel	1
1196	P1196	N1497	N1498	N357	N1499	gen_Steel	1
1197	P1197	N335	N1432	N1501	N1500	gen_Steel	1
1198	P1198	N1432	N336	N1502	N1501	gen_Steel	1
1199	P1199	N1500	N1501	N1503	N358	gen_Steel	1
1200	P1200	N1501	N1502	N359	N1503	gen_Steel	1
1201	P1201	N336	N1435	N1504	N1502	gen_Steel	1
1202	P1202	N1435	N337	N1505	N1504	gen_Steel	1
1203	P1203	N1502	N1504	N1506	N359	gen_Steel	1
1204	P1204	N1504	N1505	N360	N1506	gen_Steel	1
1205	P1205	N337	N1438	N1507	N1505	gen_Steel	1
1206	P1206	N1438	N338	N1508	N1507	gen_Steel	1
1207	P1207	N1505	N1507	N1509	N360	gen_Steel	1
1208	P1208	N1507	N1508	N361	N1509	gen_Steel	1
1209	P1209	N338	N1441	N1510	N1508	gen_Steel	1
1210	P1210	N1441	N339	N1511	N1510	gen_Steel	1
1211	P1211	N1508	N1510	N1512	N361	gen_Steel	1
1212	P1212	N1510	N1511	N362	N1512	gen_Steel	1
1213	P1213	N339	N1444	N1513	N1511	gen_Steel	1
1214	P1214	N1444	N340	N1514	N1513	gen_Steel	1
1215	P1215	N1511	N1513	N1515	N362	gen_Steel	1
1216	P1216	N1513	N1514	N363	N1515	gen_Steel	1
1217	P1217	N340	N1447	N1516	N1514	gen_Steel	1
1218	P1218	N1447	N341	N1517	N1516	gen_Steel	1
1219	P1219	N1514	N1516	N1518	N363	gen_Steel	1
1220	P1220	N1516	N1517	N364	N1518	gen_Steel	1
1221	P1221	N341	N1450	N1519	N1517	gen_Steel	1
1222	P1222	N1450	N342	N1520	N1519	gen_Steel	1

Plate Primary Data (Continued)

	Label	A Joint	B Joint	C Joint	D Joint	Material	Thickness[in]
1223	P1223	N1517	N1519	N1521	N364	gen_Steel	1
1224	P1224	N1519	N1520	N365	N1521	gen_Steel	1
1225	P1225	N342	N1453	N1522	N1520	gen_Steel	1
1226	P1226	N1453	N343	N1523	N1522	gen_Steel	1
1227	P1227	N1520	N1522	N1524	N365	gen_Steel	1
1228	P1228	N1522	N1523	N366	N1524	gen_Steel	1
1229	P1229	N343	N1456	N1525	N1523	gen_Steel	1
1230	P1230	N1456	N344	N1526	N1525	gen_Steel	1
1231	P1231	N1523	N1525	N1527	N366	gen_Steel	1
1232	P1232	N1525	N1526	N367	N1527	gen_Steel	1
1233	P1233	N344	N1460	N1528	N1526	gen_Steel	1
1234	P1234	N1460	N345	N1529	N1528	gen_Steel	1
1235	P1235	N1526	N1528	N1530	N367	gen_Steel	1
1236	P1236	N1528	N1529	N368	N1530	gen_Steel	1
1237	P1237	N345	N1464	N1531	N1529	gen_Steel	1
1238	P1238	N1464	N346	N1532	N1531	gen_Steel	1
1239	P1239	N1529	N1531	N1533	N368	gen_Steel	1
1240	P1240	N1531	N1532	N369	N1533	gen_Steel	1
1241	P1241	N346	N1468	N1534	N1532	gen_Steel	1
1242	P1242	N1468	N347	N1535	N1534	gen_Steel	1
1243	P1243	N1532	N1534	N1536	N369	gen_Steel	1
1244	P1244	N1534	N1535	N370	N1536	gen_Steel	1
1245	P1245	N347	N1472	N1537	N1535	gen_Steel	1
1246	P1246	N1472	N348	N1538	N1537	gen_Steel	1
1247	P1247	N1535	N1537	N1539	N370	gen_Steel	1
1248	P1248	N1537	N1538	N371	N1539	gen_Steel	1
1249	P1249	N348	N1475	N1540	N1538	gen_Steel	1
1250	P1250	N1475	N349	N1541	N1540	gen_Steel	1
1251	P1251	N1538	N1540	N1542	N371	gen_Steel	1
1252	P1252	N1540	N1541	N372	N1542	gen_Steel	1
1253	P1253	N349	N1478	N1543	N1541	gen_Steel	1
1254	P1254	N1478	N350	N1544	N1543	gen_Steel	1
1255	P1255	N1541	N1543	N1545	N372	gen_Steel	1
1256	P1256	N1543	N1544	N373	N1545	gen_Steel	1
1257	P1257	N350	N1481	N1546	N1544	gen_Steel	1
1258	P1258	N1481	N351	N1547	N1546	gen_Steel	1
1259	P1259	N1544	N1546	N1548	N373	gen_Steel	1
1260	P1260	N1546	N1547	N374	N1548	gen_Steel	1
1261	P1261	N351	N1484	N1549	N1547	gen_Steel	1
1262	P1262	N1484	N352	N1550	N1549	gen_Steel	1
1263	P1263	N1547	N1549	N1551	N374	gen_Steel	1
1264	P1264	N1549	N1550	N375	N1551	gen_Steel	1
1265	P1265	N352	N1487	N1552	N1550	gen_Steel	1
1266	P1266	N1487	N353	N1553	N1552	gen_Steel	1
1267	P1267	N1550	N1552	N1554	N375	gen_Steel	1
1268	P1268	N1552	N1553	N376	N1554	gen_Steel	1
1269	P1269	N353	N1490	N1555	N1553	gen_Steel	1
1270	P1270	N1490	N354	N1556	N1555	gen_Steel	1
1271	P1271	N1553	N1555	N1557	N376	gen_Steel	1
1272	P1272	N1555	N1556	N377	N1557	gen_Steel	1
1273	P1273	N354	N1493	N1558	N1556	gen_Steel	1
1274	P1274	N1493	N355	N1559	N1558	gen_Steel	1
1275	P1275	N1556	N1558	N1560	N377	gen_Steel	1
1276	P1276	N1558	N1559	N378	N1560	gen_Steel	1
1277	P1277	N355	N1496	N1561	N1559	gen_Steel	1
1278	P1278	N1496	N356	N1562	N1561	gen_Steel	1
1279	P1279	N1559	N1561	N1563	N378	gen_Steel	1

Plate Primary Data (Continued)

	Label	A Joint	B Joint	C Joint	D Joint	Material	Thickness[in]
1280	P1280	N1561	N1562	N379	N1563	gen_Steel	1
1281	P1281	N356	N1499	N1564	N1562	gen_Steel	1
1282	P1282	N1499	N357	N1565	N1564	gen_Steel	1
1283	P1283	N1562	N1564	N1566	N379	gen_Steel	1
1284	P1284	N1564	N1565	N380	N1566	gen_Steel	1
1285	P1285	N358	N1503	N1568	N1567	gen_Steel	1
1286	P1286	N1503	N359	N1569	N1568	gen_Steel	1
1287	P1287	N1567	N1568	N1570	N381	gen_Steel	1
1288	P1288	N1568	N1569	N382	N1570	gen_Steel	1
1289	P1289	N359	N1506	N1571	N1569	gen_Steel	1
1290	P1290	N1506	N360	N1572	N1571	gen_Steel	1
1291	P1291	N1569	N1571	N1573	N382	gen_Steel	1
1292	P1292	N1571	N1572	N383	N1573	gen_Steel	1
1293	P1293	N360	N1509	N1574	N1572	gen_Steel	1
1294	P1294	N1509	N361	N1575	N1574	gen_Steel	1
1295	P1295	N1572	N1574	N1576	N383	gen_Steel	1
1296	P1296	N1574	N1575	N384	N1576	gen_Steel	1
1297	P1297	N361	N1512	N1577	N1575	gen_Steel	1
1298	P1298	N1512	N362	N1578	N1577	gen_Steel	1
1299	P1299	N1575	N1577	N1579	N384	gen_Steel	1
1300	P1300	N1577	N1578	N385	N1579	gen_Steel	1
1301	P1301	N362	N1515	N1580	N1578	gen_Steel	1
1302	P1302	N1515	N363	N1581	N1580	gen_Steel	1
1303	P1303	N1578	N1580	N1582	N385	gen_Steel	1
1304	P1304	N1580	N1581	N386	N1582	gen_Steel	1
1305	P1305	N363	N1518	N1583	N1581	gen_Steel	1
1306	P1306	N1518	N364	N1584	N1583	gen_Steel	1
1307	P1307	N1581	N1583	N1585	N386	gen_Steel	1
1308	P1308	N1583	N1584	N387	N1585	gen_Steel	1
1309	P1309	N364	N1521	N1586	N1584	gen_Steel	1
1310	P1310	N1521	N365	N1587	N1586	gen_Steel	1
1311	P1311	N1584	N1586	N1588	N387	gen_Steel	1
1312	P1312	N1586	N1587	N388	N1588	gen_Steel	1
1313	P1313	N365	N1524	N1589	N1587	gen_Steel	1
1314	P1314	N1524	N366	N1590	N1589	gen_Steel	1
1315	P1315	N1587	N1589	N1591	N388	gen_Steel	1
1316	P1316	N1589	N1590	N389	N1591	gen_Steel	1
1317	P1317	N366	N1527	N1592	N1590	gen_Steel	1
1318	P1318	N1527	N367	N1593	N1592	gen_Steel	1
1319	P1319	N1590	N1592	N1594	N389	gen_Steel	1
1320	P1320	N1592	N1593	N390	N1594	gen_Steel	1
1321	P1321	N367	N1530	N1595	N1593	gen_Steel	1
1322	P1322	N1530	N368	N1596	N1595	gen_Steel	1
1323	P1323	N1593	N1595	N1597	N390	gen_Steel	1
1324	P1324	N1595	N1596	N391	N1597	gen_Steel	1
1325	P1325	N368	N1533	N1598	N1596	gen_Steel	1
1326	P1326	N1533	N369	N1599	N1598	gen_Steel	1
1327	P1327	N1596	N1598	N1600	N391	gen_Steel	1
1328	P1328	N1598	N1599	N392	N1600	gen_Steel	1
1329	P1329	N369	N1536	N1601	N1599	gen_Steel	1
1330	P1330	N1536	N370	N1602	N1601	gen_Steel	1
1331	P1331	N1599	N1601	N1603	N392	gen_Steel	1
1332	P1332	N1601	N1602	N393	N1603	gen_Steel	1
1333	P1333	N370	N1539	N1604	N1602	gen_Steel	1
1334	P1334	N1539	N371	N1605	N1604	gen_Steel	1
1335	P1335	N1602	N1604	N1606	N393	gen_Steel	1
1336	P1336	N1604	N1605	N394	N1606	gen_Steel	1

Plate Primary Data (Continued)

	Label	A Joint	B Joint	C Joint	D Joint	Material	Thickness[in]
1337	P1337	N371	N1542	N1607	N1605	gen_Steel	1
1338	P1338	N1542	N372	N1608	N1607	gen_Steel	1
1339	P1339	N1605	N1607	N1609	N394	gen_Steel	1
1340	P1340	N1607	N1608	N395	N1609	gen_Steel	1
1341	P1341	N372	N1545	N1610	N1608	gen_Steel	1
1342	P1342	N1545	N373	N1611	N1610	gen_Steel	1
1343	P1343	N1608	N1610	N1612	N395	gen_Steel	1
1344	P1344	N1610	N1611	N396	N1612	gen_Steel	1
1345	P1345	N373	N1548	N1613	N1611	gen_Steel	1
1346	P1346	N1548	N374	N1614	N1613	gen_Steel	1
1347	P1347	N1611	N1613	N1615	N396	gen_Steel	1
1348	P1348	N1613	N1614	N397	N1615	gen_Steel	1
1349	P1349	N374	N1551	N1616	N1614	gen_Steel	1
1350	P1350	N1551	N375	N1617	N1616	gen_Steel	1
1351	P1351	N1614	N1616	N1618	N397	gen_Steel	1
1352	P1352	N1616	N1617	N398	N1618	gen_Steel	1
1353	P1353	N375	N1554	N1619	N1617	gen_Steel	1
1354	P1354	N1554	N376	N1620	N1619	gen_Steel	1
1355	P1355	N1617	N1619	N1621	N398	gen_Steel	1
1356	P1356	N1619	N1620	N399	N1621	gen_Steel	1
1357	P1357	N376	N1557	N1622	N1620	gen_Steel	1
1358	P1358	N1557	N377	N1623	N1622	gen_Steel	1
1359	P1359	N1620	N1622	N1624	N399	gen_Steel	1
1360	P1360	N1622	N1623	N400	N1624	gen_Steel	1
1361	P1361	N377	N1560	N1625	N1623	gen_Steel	1
1362	P1362	N1560	N378	N1626	N1625	gen_Steel	1
1363	P1363	N1623	N1625	N1627	N400	gen_Steel	1
1364	P1364	N1625	N1626	N401	N1627	gen_Steel	1
1365	P1365	N378	N1563	N1628	N1626	gen_Steel	1
1366	P1366	N1563	N379	N1629	N1628	gen_Steel	1
1367	P1367	N1626	N1628	N1630	N401	gen_Steel	1
1368	P1368	N1628	N1629	N402	N1630	gen_Steel	1
1369	P1369	N379	N1566	N1631	N1629	gen_Steel	1
1370	P1370	N1566	N380	N1632	N1631	gen_Steel	1
1371	P1371	N1629	N1631	N1633	N402	gen_Steel	1
1372	P1372	N1631	N1632	N403	N1633	gen_Steel	1
1373	P1373	N381	N1570	N1635	N1634	gen_Steel	1
1374	P1374	N1570	N382	N1636	N1635	gen_Steel	1
1375	P1375	N1634	N1635	N1637	N404	gen_Steel	1
1376	P1376	N1635	N1636	N405	N1637	gen_Steel	1
1377	P1377	N382	N1573	N1638	N1636	gen_Steel	1
1378	P1378	N1573	N383	N1639	N1638	gen_Steel	1
1379	P1379	N1636	N1638	N1640	N405	gen_Steel	1
1380	P1380	N1638	N1639	N406	N1640	gen_Steel	1
1381	P1381	N383	N1576	N1641	N1639	gen_Steel	1
1382	P1382	N1576	N384	N1642	N1641	gen_Steel	1
1383	P1383	N1639	N1641	N1643	N406	gen_Steel	1
1384	P1384	N1641	N1642	N407	N1643	gen_Steel	1
1385	P1385	N384	N1579	N1644	N1642	gen_Steel	1
1386	P1386	N1579	N385	N1645	N1644	gen_Steel	1
1387	P1387	N1642	N1644	N1646	N407	gen_Steel	1
1388	P1388	N1644	N1645	N408	N1646	gen_Steel	1
1389	P1389	N385	N1582	N1647	N1645	gen_Steel	1
1390	P1390	N1582	N386	N1648	N1647	gen_Steel	1
1391	P1391	N1645	N1647	N1649	N408	gen_Steel	1
1392	P1392	N1647	N1648	N409	N1649	gen_Steel	1
1393	P1393	N386	N1585	N1650	N1648	gen_Steel	1

Plate Primary Data (Continued)

	Label	A Joint	B Joint	C Joint	D Joint	Material	Thickness[in]
1394	P1394	N1585	N387	N1651	N1650	gen_Steel	1
1395	P1395	N1648	N1650	N1652	N409	gen_Steel	1
1396	P1396	N1650	N1651	N410	N1652	gen_Steel	1
1397	P1397	N387	N1588	N1653	N1651	gen_Steel	1
1398	P1398	N1588	N388	N1654	N1653	gen_Steel	1
1399	P1399	N1651	N1653	N1655	N410	gen_Steel	1
1400	P1400	N1653	N1654	N411	N1655	gen_Steel	1
1401	P1401	N388	N1591	N1656	N1654	gen_Steel	1
1402	P1402	N1591	N389	N1657	N1656	gen_Steel	1
1403	P1403	N1654	N1656	N1658	N411	gen_Steel	1
1404	P1404	N1656	N1657	N412	N1658	gen_Steel	1
1405	P1405	N389	N1594	N1659	N1657	gen_Steel	1
1406	P1406	N1594	N390	N1660	N1659	gen_Steel	1
1407	P1407	N1657	N1659	N1661	N412	gen_Steel	1
1408	P1408	N1659	N1660	N413	N1661	gen_Steel	1
1409	P1409	N390	N1597	N1662	N1660	gen_Steel	1
1410	P1410	N1597	N391	N1663	N1662	gen_Steel	1
1411	P1411	N1660	N1662	N1664	N413	gen_Steel	1
1412	P1412	N1662	N1663	N414	N1664	gen_Steel	1
1413	P1413	N391	N1600	N1665	N1663	gen_Steel	1
1414	P1414	N1600	N392	N1666	N1665	gen_Steel	1
1415	P1415	N1663	N1665	N1667	N414	gen_Steel	1
1416	P1416	N1665	N1666	N415	N1667	gen_Steel	1
1417	P1417	N392	N1603	N1668	N1666	gen_Steel	1
1418	P1418	N1603	N393	N1669	N1668	gen_Steel	1
1419	P1419	N1666	N1668	N1670	N415	gen_Steel	1
1420	P1420	N1668	N1669	N416	N1670	gen_Steel	1
1421	P1421	N393	N1606	N1671	N1669	gen_Steel	1
1422	P1422	N1606	N394	N1672	N1671	gen_Steel	1
1423	P1423	N1669	N1671	N1673	N416	gen_Steel	1
1424	P1424	N1671	N1672	N417	N1673	gen_Steel	1
1425	P1425	N394	N1609	N1674	N1672	gen_Steel	1
1426	P1426	N1609	N395	N1675	N1674	gen_Steel	1
1427	P1427	N1672	N1674	N1676	N417	gen_Steel	1
1428	P1428	N1674	N1675	N418	N1676	gen_Steel	1
1429	P1429	N395	N1612	N1677	N1675	gen_Steel	1
1430	P1430	N1612	N396	N1678	N1677	gen_Steel	1
1431	P1431	N1675	N1677	N1679	N418	gen_Steel	1
1432	P1432	N1677	N1678	N419	N1679	gen_Steel	1
1433	P1433	N396	N1615	N1680	N1678	gen_Steel	1
1434	P1434	N1615	N397	N1681	N1680	gen_Steel	1
1435	P1435	N1678	N1680	N1682	N419	gen_Steel	1
1436	P1436	N1680	N1681	N420	N1682	gen_Steel	1
1437	P1437	N397	N1618	N1683	N1681	gen_Steel	1
1438	P1438	N1618	N398	N1684	N1683	gen_Steel	1
1439	P1439	N1681	N1683	N1685	N420	gen_Steel	1
1440	P1440	N1683	N1684	N421	N1685	gen_Steel	1
1441	P1441	N398	N1621	N1686	N1684	gen_Steel	1
1442	P1442	N1621	N399	N1687	N1686	gen_Steel	1
1443	P1443	N1684	N1686	N1688	N421	gen_Steel	1
1444	P1444	N1686	N1687	N422	N1688	gen_Steel	1
1445	P1445	N399	N1624	N1689	N1687	gen_Steel	1
1446	P1446	N1624	N400	N1690	N1689	gen_Steel	1
1447	P1447	N1687	N1689	N1691	N422	gen_Steel	1
1448	P1448	N1689	N1690	N423	N1691	gen_Steel	1
1449	P1449	N400	N1627	N1692	N1690	gen_Steel	1
1450	P1450	N1627	N401	N1693	N1692	gen_Steel	1

Plate Primary Data (Continued)

	Label	A Joint	B Joint	C Joint	D Joint	Material	Thickness[in]
1451	P1451	N1690	N1692	N1694	N423	gen_Steel	1
1452	P1452	N1692	N1693	N424	N1694	gen_Steel	1
1453	P1453	N401	N1630	N1695	N1693	gen_Steel	1
1454	P1454	N1630	N402	N1696	N1695	gen_Steel	1
1455	P1455	N1693	N1695	N1697	N424	gen_Steel	1
1456	P1456	N1695	N1696	N425	N1697	gen_Steel	1
1457	P1457	N402	N1633	N1698	N1696	gen_Steel	1
1458	P1458	N1633	N403	N1699	N1698	gen_Steel	1
1459	P1459	N1696	N1698	N1700	N425	gen_Steel	1
1460	P1460	N1698	N1699	N426	N1700	gen_Steel	1
1461	P1461	N404	N1637	N1702	N1701	gen_Steel	1
1462	P1462	N1637	N405	N1703	N1702	gen_Steel	1
1463	P1463	N1701	N1702	N1704	N427	gen_Steel	1
1464	P1464	N1702	N1703	N428	N1704	gen_Steel	1
1465	P1465	N405	N1640	N1705	N1703	gen_Steel	1
1466	P1466	N1640	N406	N1706	N1705	gen_Steel	1
1467	P1467	N1703	N1705	N1707	N428	gen_Steel	1
1468	P1468	N1705	N1706	N429	N1707	gen_Steel	1
1469	P1469	N406	N1643	N1708	N1706	gen_Steel	1
1470	P1470	N1643	N407	N1709	N1708	gen_Steel	1
1471	P1471	N1706	N1708	N1710	N429	gen_Steel	1
1472	P1472	N1708	N1709	N430	N1710	gen_Steel	1
1473	P1473	N407	N1646	N1711	N1709	gen_Steel	1
1474	P1474	N1646	N408	N1712	N1711	gen_Steel	1
1475	P1475	N1709	N1711	N1713	N430	gen_Steel	1
1476	P1476	N1711	N1712	N431	N1713	gen_Steel	1
1477	P1477	N408	N1649	N1714	N1712	gen_Steel	1
1478	P1478	N1649	N409	N1715	N1714	gen_Steel	1
1479	P1479	N1712	N1714	N1716	N431	gen_Steel	1
1480	P1480	N1714	N1715	N432	N1716	gen_Steel	1
1481	P1481	N409	N1652	N1717	N1715	gen_Steel	1
1482	P1482	N1652	N410	N1718	N1717	gen_Steel	1
1483	P1483	N1715	N1717	N1719	N432	gen_Steel	1
1484	P1484	N1717	N1718	N433	N1719	gen_Steel	1
1485	P1485	N410	N1655	N1720	N1718	gen_Steel	1
1486	P1486	N1655	N411	N1721	N1720	gen_Steel	1
1487	P1487	N1718	N1720	N1722	N433	gen_Steel	1
1488	P1488	N1720	N1721	N434	N1722	gen_Steel	1
1489	P1489	N411	N1658	N1723	N1721	gen_Steel	1
1490	P1490	N1658	N412	N1724	N1723	gen_Steel	1
1491	P1491	N1721	N1723	N1725	N434	gen_Steel	1
1492	P1492	N1723	N1724	N435	N1725	gen_Steel	1
1493	P1493	N412	N1661	N1726	N1724	gen_Steel	1
1494	P1494	N1661	N413	N1727	N1726	gen_Steel	1
1495	P1495	N1724	N1726	N1728	N435	gen_Steel	1
1496	P1496	N1726	N1727	N436	N1728	gen_Steel	1
1497	P1497	N413	N1664	N1729	N1727	gen_Steel	1
1498	P1498	N1664	N414	N1730	N1729	gen_Steel	1
1499	P1499	N1727	N1729	N1731	N436	gen_Steel	1
1500	P1500	N1729	N1730	N437	N1731	gen_Steel	1
1501	P1501	N414	N1667	N1732	N1730	gen_Steel	1
1502	P1502	N1667	N415	N1733	N1732	gen_Steel	1
1503	P1503	N1730	N1732	N1734	N437	gen_Steel	1
1504	P1504	N1732	N1733	N438	N1734	gen_Steel	1
1505	P1505	N415	N1670	N1735	N1733	gen_Steel	1
1506	P1506	N1670	N416	N1736	N1735	gen_Steel	1
1507	P1507	N1733	N1735	N1737	N438	gen_Steel	1

Plate Primary Data (Continued)

	Label	A Joint	B Joint	C Joint	D Joint	Material	Thickness[in]
1508	P1508	N1735	N1736	N439	N1737	gen_Steel	1
1509	P1509	N416	N1673	N1738	N1736	gen_Steel	1
1510	P1510	N1673	N417	N1739	N1738	gen_Steel	1
1511	P1511	N1736	N1738	N1740	N439	gen_Steel	1
1512	P1512	N1738	N1739	N440	N1740	gen_Steel	1
1513	P1513	N417	N1676	N1741	N1739	gen_Steel	1
1514	P1514	N1676	N418	N1742	N1741	gen_Steel	1
1515	P1515	N1739	N1741	N1743	N440	gen_Steel	1
1516	P1516	N1741	N1742	N441	N1743	gen_Steel	1
1517	P1517	N418	N1679	N1744	N1742	gen_Steel	1
1518	P1518	N1679	N419	N1745	N1744	gen_Steel	1
1519	P1519	N1742	N1744	N1746	N441	gen_Steel	1
1520	P1520	N1744	N1745	N442	N1746	gen_Steel	1
1521	P1521	N419	N1682	N1747	N1745	gen_Steel	1
1522	P1522	N1682	N420	N1748	N1747	gen_Steel	1
1523	P1523	N1745	N1747	N1749	N442	gen_Steel	1
1524	P1524	N1747	N1748	N443	N1749	gen_Steel	1
1525	P1525	N420	N1685	N1750	N1748	gen_Steel	1
1526	P1526	N1685	N421	N1751	N1750	gen_Steel	1
1527	P1527	N1748	N1750	N1752	N443	gen_Steel	1
1528	P1528	N1750	N1751	N444	N1752	gen_Steel	1
1529	P1529	N421	N1688	N1753	N1751	gen_Steel	1
1530	P1530	N1688	N422	N1754	N1753	gen_Steel	1
1531	P1531	N1751	N1753	N1755	N444	gen_Steel	1
1532	P1532	N1753	N1754	N445	N1755	gen_Steel	1
1533	P1533	N422	N1691	N1756	N1754	gen_Steel	1
1534	P1534	N1691	N423	N1757	N1756	gen_Steel	1
1535	P1535	N1754	N1756	N1758	N445	gen_Steel	1
1536	P1536	N1756	N1757	N446	N1758	gen_Steel	1
1537	P1537	N423	N1694	N1759	N1757	gen_Steel	1
1538	P1538	N1694	N424	N1760	N1759	gen_Steel	1
1539	P1539	N1757	N1759	N1761	N446	gen_Steel	1
1540	P1540	N1759	N1760	N447	N1761	gen_Steel	1
1541	P1541	N424	N1697	N1762	N1760	gen_Steel	1
1542	P1542	N1697	N425	N1763	N1762	gen_Steel	1
1543	P1543	N1760	N1762	N1764	N447	gen_Steel	1
1544	P1544	N1762	N1763	N448	N1764	gen_Steel	1
1545	P1545	N425	N1700	N1765	N1763	gen_Steel	1
1546	P1546	N1700	N426	N1766	N1765	gen_Steel	1
1547	P1547	N1763	N1765	N1767	N448	gen_Steel	1
1548	P1548	N1765	N1766	N449	N1767	gen_Steel	1
1549	P1549	N427	N1704	N1769	N1768	gen_Steel	1
1550	P1550	N1704	N428	N1770	N1769	gen_Steel	1
1551	P1551	N1768	N1769	N1771	N450	gen_Steel	1
1552	P1552	N1769	N1770	N451	N1771	gen_Steel	1
1553	P1553	N428	N1707	N1772	N1770	gen_Steel	1
1554	P1554	N1707	N429	N1773	N1772	gen_Steel	1
1555	P1555	N1770	N1772	N1774	N451	gen_Steel	1
1556	P1556	N1772	N1773	N452	N1774	gen_Steel	1
1557	P1557	N429	N1710	N1775	N1773	gen_Steel	1
1558	P1558	N1710	N430	N1776	N1775	gen_Steel	1
1559	P1559	N1773	N1775	N1777	N452	gen_Steel	1
1560	P1560	N1775	N1776	N453	N1777	gen_Steel	1
1561	P1561	N430	N1713	N1778	N1776	gen_Steel	1
1562	P1562	N1713	N431	N1779	N1778	gen_Steel	1
1563	P1563	N1776	N1778	N1780	N453	gen_Steel	1
1564	P1564	N1778	N1779	N454	N1780	gen_Steel	1

Plate Primary Data (Continued)

	Label	A Joint	B Joint	C Joint	D Joint	Material	Thickness[in]
1565	P1565	N431	N1716	N1781	N1779	gen_Steel	1
1566	P1566	N1716	N432	N1782	N1781	gen_Steel	1
1567	P1567	N1779	N1781	N1783	N454	gen_Steel	1
1568	P1568	N1781	N1782	N455	N1783	gen_Steel	1
1569	P1569	N432	N1719	N1784	N1782	gen_Steel	1
1570	P1570	N1719	N433	N1785	N1784	gen_Steel	1
1571	P1571	N1782	N1784	N1786	N455	gen_Steel	1
1572	P1572	N1784	N1785	N456	N1786	gen_Steel	1
1573	P1573	N433	N1722	N1787	N1785	gen_Steel	1
1574	P1574	N1722	N434	N1788	N1787	gen_Steel	1
1575	P1575	N1785	N1787	N1789	N456	gen_Steel	1
1576	P1576	N1787	N1788	N457	N1789	gen_Steel	1
1577	P1577	N434	N1725	N1790	N1788	gen_Steel	1
1578	P1578	N1725	N435	N1791	N1790	gen_Steel	1
1579	P1579	N1788	N1790	N1792	N457	gen_Steel	1
1580	P1580	N1790	N1791	N458	N1792	gen_Steel	1
1581	P1581	N435	N1728	N1793	N1791	gen_Steel	1
1582	P1582	N1728	N436	N1794	N1793	gen_Steel	1
1583	P1583	N1791	N1793	N1795	N458	gen_Steel	1
1584	P1584	N1793	N1794	N459	N1795	gen_Steel	1
1585	P1585	N436	N1731	N1796	N1794	gen_Steel	1
1586	P1586	N1731	N437	N1797	N1796	gen_Steel	1
1587	P1587	N1794	N1796	N1798	N459	gen_Steel	1
1588	P1588	N1796	N1797	N460	N1798	gen_Steel	1
1589	P1589	N437	N1734	N1799	N1797	gen_Steel	1
1590	P1590	N1734	N438	N1800	N1799	gen_Steel	1
1591	P1591	N1797	N1799	N1801	N460	gen_Steel	1
1592	P1592	N1799	N1800	N461	N1801	gen_Steel	1
1593	P1593	N438	N1737	N1802	N1800	gen_Steel	1
1594	P1594	N1737	N439	N1803	N1802	gen_Steel	1
1595	P1595	N1800	N1802	N1804	N461	gen_Steel	1
1596	P1596	N1802	N1803	N462	N1804	gen_Steel	1
1597	P1597	N439	N1740	N1805	N1803	gen_Steel	1
1598	P1598	N1740	N440	N1806	N1805	gen_Steel	1
1599	P1599	N1803	N1805	N1807	N462	gen_Steel	1
1600	P1600	N1805	N1806	N463	N1807	gen_Steel	1
1601	P1601	N440	N1743	N1808	N1806	gen_Steel	1
1602	P1602	N1743	N441	N1809	N1808	gen_Steel	1
1603	P1603	N1806	N1808	N1810	N463	gen_Steel	1
1604	P1604	N1808	N1809	N464	N1810	gen_Steel	1
1605	P1605	N441	N1746	N1811	N1809	gen_Steel	1
1606	P1606	N1746	N442	N1812	N1811	gen_Steel	1
1607	P1607	N1809	N1811	N1813	N464	gen_Steel	1
1608	P1608	N1811	N1812	N465	N1813	gen_Steel	1
1609	P1609	N442	N1749	N1814	N1812	gen_Steel	1
1610	P1610	N1749	N443	N1815	N1814	gen_Steel	1
1611	P1611	N1812	N1814	N1816	N465	gen_Steel	1
1612	P1612	N1814	N1815	N466	N1816	gen_Steel	1
1613	P1613	N443	N1752	N1817	N1815	gen_Steel	1
1614	P1614	N1752	N444	N1818	N1817	gen_Steel	1
1615	P1615	N1815	N1817	N1819	N466	gen_Steel	1
1616	P1616	N1817	N1818	N467	N1819	gen_Steel	1
1617	P1617	N444	N1755	N1820	N1818	gen_Steel	1
1618	P1618	N1755	N445	N1821	N1820	gen_Steel	1
1619	P1619	N1818	N1820	N1822	N467	gen_Steel	1
1620	P1620	N1820	N1821	N468	N1822	gen_Steel	1
1621	P1621	N445	N1758	N1823	N1821	gen_Steel	1

Plate Primary Data (Continued)

	Label	A Joint	B Joint	C Joint	D Joint	Material	Thickness[in]
1622	P1622	N1758	N446	N1824	N1823	gen_Steel	1
1623	P1623	N1821	N1823	N1825	N468	gen_Steel	1
1624	P1624	N1823	N1824	N469	N1825	gen_Steel	1
1625	P1625	N446	N1761	N1826	N1824	gen_Steel	1
1626	P1626	N1761	N447	N1827	N1826	gen_Steel	1
1627	P1627	N1824	N1826	N1828	N469	gen_Steel	1
1628	P1628	N1826	N1827	N470	N1828	gen_Steel	1
1629	P1629	N447	N1764	N1829	N1827	gen_Steel	1
1630	P1630	N1764	N448	N1830	N1829	gen_Steel	1
1631	P1631	N1827	N1829	N1831	N470	gen_Steel	1
1632	P1632	N1829	N1830	N471	N1831	gen_Steel	1
1633	P1633	N448	N1767	N1832	N1830	gen_Steel	1
1634	P1634	N1767	N449	N1833	N1832	gen_Steel	1
1635	P1635	N1830	N1832	N1834	N471	gen_Steel	1
1636	P1636	N1832	N1833	N472	N1834	gen_Steel	1
1637	P1637	N450	N1771	N1836	N1835	gen_Steel	1
1638	P1638	N1771	N451	N1837	N1836	gen_Steel	1
1639	P1639	N1835	N1836	N1838	N473	gen_Steel	1
1640	P1640	N1836	N1837	N474	N1838	gen_Steel	1
1641	P1641	N452	N1777	N1842	N1840	gen_Steel	1
1642	P1642	N1777	N453	N1843	N1842	gen_Steel	1
1643	P1643	N1840	N1842	N1844	N475	gen_Steel	1
1644	P1644	N1842	N1843	N476	N1844	gen_Steel	1
1645	P1645	N453	N1780	N1845	N1843	gen_Steel	1
1646	P1646	N1780	N454	N1846	N1845	gen_Steel	1
1647	P1647	N1843	N1845	N1847	N476	gen_Steel	1
1648	P1648	N1845	N1846	N477	N1847	gen_Steel	1
1649	P1649	N454	N1783	N1848	N1846	gen_Steel	1
1650	P1650	N1783	N455	N1849	N1848	gen_Steel	1
1651	P1651	N1846	N1848	N1850	N477	gen_Steel	1
1652	P1652	N1848	N1849	N478	N1850	gen_Steel	1
1653	P1653	N455	N1786	N1851	N1849	gen_Steel	1
1654	P1654	N1786	N456	N1852	N1851	gen_Steel	1
1655	P1655	N1849	N1851	N1853	N478	gen_Steel	1
1656	P1656	N1851	N1852	N479	N1853	gen_Steel	1
1657	P1657	N456	N1789	N1854	N1852	gen_Steel	1
1658	P1658	N1789	N457	N1855	N1854	gen_Steel	1
1659	P1659	N1852	N1854	N1856	N479	gen_Steel	1
1660	P1660	N1854	N1855	N480	N1856	gen_Steel	1
1661	P1661	N457	N1792	N1857	N1855	gen_Steel	1
1662	P1662	N1792	N458	N1858	N1857	gen_Steel	1
1663	P1663	N1855	N1857	N1859	N480	gen_Steel	1
1664	P1664	N1857	N1858	N481	N1859	gen_Steel	1
1665	P1665	N458	N1795	N1860	N1858	gen_Steel	1
1666	P1666	N1795	N459	N1861	N1860	gen_Steel	1
1667	P1667	N1858	N1860	N1862	N481	gen_Steel	1
1668	P1668	N1860	N1861	N482	N1862	gen_Steel	1
1669	P1669	N459	N1798	N1863	N1861	gen_Steel	1
1670	P1670	N1798	N460	N1864	N1863	gen_Steel	1
1671	P1671	N1861	N1863	N1865	N482	gen_Steel	1
1672	P1672	N1863	N1864	N483	N1865	gen_Steel	1
1673	P1673	N460	N1801	N1866	N1864	gen_Steel	1
1674	P1674	N1801	N461	N1867	N1866	gen_Steel	1
1675	P1675	N1864	N1866	N1868	N483	gen_Steel	1
1676	P1676	N1866	N1867	N484	N1868	gen_Steel	1
1677	P1677	N461	N1804	N1869	N1867	gen_Steel	1
1678	P1678	N1804	N462	N1870	N1869	gen_Steel	1

Plate Primary Data (Continued)

	Label	A Joint	B Joint	C Joint	D Joint	Material	Thickness[in]
1679	P1679	N1867	N1869	N1871	N484	gen_Steel	1
1680	P1680	N1869	N1870	N485	N1871	gen_Steel	1
1681	P1681	N462	N1807	N1872	N1870	gen_Steel	1
1682	P1682	N1807	N463	N1873	N1872	gen_Steel	1
1683	P1683	N1870	N1872	N1874	N485	gen_Steel	1
1684	P1684	N1872	N1873	N486	N1874	gen_Steel	1
1685	P1685	N463	N1810	N1875	N1873	gen_Steel	1
1686	P1686	N1810	N464	N1876	N1875	gen_Steel	1
1687	P1687	N1873	N1875	N1877	N486	gen_Steel	1
1688	P1688	N1875	N1876	N487	N1877	gen_Steel	1
1689	P1689	N464	N1813	N1878	N1876	gen_Steel	1
1690	P1690	N1813	N465	N1879	N1878	gen_Steel	1
1691	P1691	N1876	N1878	N1880	N487	gen_Steel	1
1692	P1692	N1878	N1879	N488	N1880	gen_Steel	1
1693	P1693	N465	N1816	N1881	N1879	gen_Steel	1
1694	P1694	N1816	N466	N1882	N1881	gen_Steel	1
1695	P1695	N1879	N1881	N1883	N488	gen_Steel	1
1696	P1696	N1881	N1882	N489	N1883	gen_Steel	1
1697	P1697	N466	N1819	N1884	N1882	gen_Steel	1
1698	P1698	N1819	N467	N1885	N1884	gen_Steel	1
1699	P1699	N1882	N1884	N1886	N489	gen_Steel	1
1700	P1700	N1884	N1885	N490	N1886	gen_Steel	1
1701	P1701	N467	N1822	N1887	N1885	gen_Steel	1
1702	P1702	N1822	N468	N1888	N1887	gen_Steel	1
1703	P1703	N1885	N1887	N1889	N490	gen_Steel	1
1704	P1704	N1887	N1888	N491	N1889	gen_Steel	1
1705	P1705	N468	N1825	N1890	N1888	gen_Steel	1
1706	P1706	N1825	N469	N1891	N1890	gen_Steel	1
1707	P1707	N1888	N1890	N1892	N491	gen_Steel	1
1708	P1708	N1890	N1891	N492	N1892	gen_Steel	1
1709	P1709	N469	N1828	N1893	N1891	gen_Steel	1
1710	P1710	N1828	N470	N1894	N1893	gen_Steel	1
1711	P1711	N1891	N1893	N1895	N492	gen_Steel	1
1712	P1712	N1893	N1894	N493	N1895	gen_Steel	1
1713	P1713	N471	N1834	N1899	N1897	gen_Steel	1
1714	P1714	N1834	N472	N1900	N1899	gen_Steel	1
1715	P1715	N1897	N1899	N1901	N494	gen_Steel	1
1716	P1716	N1899	N1900	N495	N1901	gen_Steel	1
1717	P1717	N473	N1838	N1903	N1902	gen_Steel	1
1718	P1718	N1838	N474	N1904	N1903	gen_Steel	1
1719	P1719	N1902	N1903	N1905	N12	gen_Steel	1
1720	P1720	N1903	N1904	N496	N1905	gen_Steel	1
1721	P1721	N474	N1841	N1906	N1904	gen_Steel	1
1722	P1722	N1841	N475	N1907	N1906	gen_Steel	1
1723	P1723	N1904	N1906	N1908	N496	gen_Steel	1
1724	P1724	N1906	N1907	N497	N1908	gen_Steel	1
1725	P1725	N475	N1844	N1909	N1907	gen_Steel	1
1726	P1726	N1844	N476	N1910	N1909	gen_Steel	1
1727	P1727	N1907	N1909	N1911	N497	gen_Steel	1
1728	P1728	N1909	N1910	N498	N1911	gen_Steel	1
1729	P1729	N476	N1847	N1912	N1910	gen_Steel	1
1730	P1730	N1847	N477	N1913	N1912	gen_Steel	1
1731	P1731	N1910	N1912	N1914	N498	gen_Steel	1
1732	P1732	N1912	N1913	N499	N1914	gen_Steel	1
1733	P1733	N477	N1850	N1915	N1913	gen_Steel	1
1734	P1734	N1850	N478	N1916	N1915	gen_Steel	1
1735	P1735	N1913	N1915	N1917	N499	gen_Steel	1

Plate Primary Data (Continued)

	Label	A Joint	B Joint	C Joint	D Joint	Material	Thickness[in]
1736	P1736	N1915	N1916	N500	N1917	gen_Steel	1
1737	P1737	N478	N1853	N1918	N1916	gen_Steel	1
1738	P1738	N1853	N479	N1919	N1918	gen_Steel	1
1739	P1739	N1916	N1918	N1920	N500	gen_Steel	1
1740	P1740	N1918	N1919	N501	N1920	gen_Steel	1
1741	P1741	N479	N1856	N1921	N1919	gen_Steel	1
1742	P1742	N1856	N480	N1922	N1921	gen_Steel	1
1743	P1743	N1919	N1921	N1923	N501	gen_Steel	1
1744	P1744	N1921	N1922	N502	N1923	gen_Steel	1
1745	P1745	N480	N1859	N1924	N1922	gen_Steel	1
1746	P1746	N1859	N481	N1925	N1924	gen_Steel	1
1747	P1747	N1922	N1924	N1926	N502	gen_Steel	1
1748	P1748	N1924	N1925	N503	N1926	gen_Steel	1
1749	P1749	N481	N1862	N1927	N1925	gen_Steel	1
1750	P1750	N1862	N482	N1928	N1927	gen_Steel	1
1751	P1751	N1925	N1927	N1929	N503	gen_Steel	1
1752	P1752	N1927	N1928	N504	N1929	gen_Steel	1
1753	P1753	N482	N1865	N1930	N1928	gen_Steel	1
1754	P1754	N1865	N483	N1931	N1930	gen_Steel	1
1755	P1755	N1928	N1930	N1932	N504	gen_Steel	1
1756	P1756	N1930	N1931	N505	N1932	gen_Steel	1
1757	P1757	N483	N1868	N1933	N1931	gen_Steel	1
1758	P1758	N1868	N484	N1934	N1933	gen_Steel	1
1759	P1759	N1931	N1933	N1935	N505	gen_Steel	1
1760	P1760	N1933	N1934	N506	N1935	gen_Steel	1
1761	P1761	N484	N1871	N1936	N1934	gen_Steel	1
1762	P1762	N1871	N485	N1937	N1936	gen_Steel	1
1763	P1763	N1934	N1936	N1938	N506	gen_Steel	1
1764	P1764	N1936	N1937	N507	N1938	gen_Steel	1
1765	P1765	N485	N1874	N1939	N1937	gen_Steel	1
1766	P1766	N1874	N486	N1940	N1939	gen_Steel	1
1767	P1767	N1937	N1939	N1941	N507	gen_Steel	1
1768	P1768	N1939	N1940	N508	N1941	gen_Steel	1
1769	P1769	N486	N1877	N1942	N1940	gen_Steel	1
1770	P1770	N1877	N487	N1943	N1942	gen_Steel	1
1771	P1771	N1940	N1942	N1944	N508	gen_Steel	1
1772	P1772	N1942	N1943	N509	N1944	gen_Steel	1
1773	P1773	N487	N1880	N1945	N1943	gen_Steel	1
1774	P1774	N1880	N488	N1946	N1945	gen_Steel	1
1775	P1775	N1943	N1945	N1947	N509	gen_Steel	1
1776	P1776	N1945	N1946	N510	N1947	gen_Steel	1
1777	P1777	N488	N1883	N1948	N1946	gen_Steel	1
1778	P1778	N1883	N489	N1949	N1948	gen_Steel	1
1779	P1779	N1946	N1948	N1950	N510	gen_Steel	1
1780	P1780	N1948	N1949	N511	N1950	gen_Steel	1
1781	P1781	N489	N1886	N1951	N1949	gen_Steel	1
1782	P1782	N1886	N490	N1952	N1951	gen_Steel	1
1783	P1783	N1949	N1951	N1953	N511	gen_Steel	1
1784	P1784	N1951	N1952	N512	N1953	gen_Steel	1
1785	P1785	N490	N1889	N1954	N1952	gen_Steel	1
1786	P1786	N1889	N491	N1955	N1954	gen_Steel	1
1787	P1787	N1952	N1954	N1956	N512	gen_Steel	1
1788	P1788	N1954	N1955	N513	N1956	gen_Steel	1
1789	P1789	N491	N1892	N1957	N1955	gen_Steel	1
1790	P1790	N1892	N492	N1958	N1957	gen_Steel	1
1791	P1791	N1955	N1957	N1959	N513	gen_Steel	1
1792	P1792	N1957	N1958	N514	N1959	gen_Steel	1

Plate Primary Data (Continued)

	Label	A Joint	B Joint	C Joint	D Joint	Material	Thickness[in]
1793	P1793	N492	N1895	N1960	N1958	gen_Steel	1
1794	P1794	N1895	N493	N1961	N1960	gen_Steel	1
1795	P1795	N1958	N1960	N1962	N514	gen_Steel	1
1796	P1796	N1960	N1961	N515	N1962	gen_Steel	1
1797	P1797	N493	N1898	N1963	N1961	gen_Steel	1
1798	P1798	N1898	N494	N1964	N1963	gen_Steel	1
1799	P1799	N1961	N1963	N1965	N515	gen_Steel	1
1800	P1800	N1963	N1964	N516	N1965	gen_Steel	1
1801	P1801	N494	N1901	N1966	N1964	gen_Steel	1
1802	P1802	N1901	N495	N1967	N1966	gen_Steel	1
1803	P1803	N1964	N1966	N1968	N516	gen_Steel	1
1804	P1804	N1966	N1967	N11	N1968	gen_Steel	1
1805	P1805	N551	N283	N1969	N550	gen_Steel	1
1806	P1806	N550	N1969	N302	N549	gen_Steel	1
1807	P1807	N301	N540	N541	N1970	gen_Steel	1
1808	P1808	N1970	N541	N542	N322	gen_Steel	1
1809	P1809	N532	N1971	N227	N531	gen_Steel	1
1810	P1810	N246	N1971	N532	N533	gen_Steel	1
1811	P1811	N524	N207	N1972	N523	gen_Steel	1
1812	P1812	N523	N1972	N228	N522	gen_Steel	1
1813	P1813	N324	N553	N1469		gen_Steel	1
1814	P1814	N553	N302	N1401		gen_Steel	1
1815	P1815	N553	N1401	N325	N1469	gen_Steel	1
1816	P1816	N283	N1346	N1969		gen_Steel	1
1817	P1817	N1969	N1400	N302		gen_Steel	1
1818	P1818	N1969	N1346	N303	N1400	gen_Steel	1
1819	P1819	N228	N1146	N554		gen_Steel	1
1820	P1820	N1146	N229	N1196	N554	gen_Steel	1
1821	P1821	N554	N1196	N247		gen_Steel	1
1822	P1822	N207	N1087	N1972		gen_Steel	1
1823	P1823	N1087	N208	N1143	N1972	gen_Steel	1
1824	P1824	N1972	N1143	N228		gen_Steel	1
1825	P1825	N1078	N205	N555		gen_Steel	1
1826	P1826	N204	N1078	N555	N1141	gen_Steel	1
1827	P1827	N1141	N555	N227		gen_Steel	1
1828	P1828	N1142	N227	N1971		gen_Steel	1
1829	P1829	N226	N1142	N1971	N1194	gen_Steel	1
1830	P1830	N1194	N1971	N246		gen_Steel	1
1831	P1831	N282	N556	N1344		gen_Steel	1
1832	P1832	N1344	N556	N1396	N300	gen_Steel	1
1833	P1833	N556	N301	N1396		gen_Steel	1
1834	P1834	N301	N1970	N1398		gen_Steel	1
1835	P1835	N1398	N1970	N1457	N321	gen_Steel	1
1836	P1836	N1970	N322	N1457		gen_Steel	1
1837	P1837	N246	N533	N534	N1244	gen_Steel	1
1838	P1838	N1244	N534	N535	N264	gen_Steel	1
1839	P1839	N264	N535	N536	N1294	gen_Steel	1
1840	P1840	N1294	N536	N537	N282	gen_Steel	1
1841	P1841	N545	N546	N324	N1465	gen_Steel	1
1842	P1842	N544	N545	N1465	N323	gen_Steel	1
1843	P1843	N543	N544	N323	N1461	gen_Steel	1
1844	P1844	N542	N543	N1461	N322	gen_Steel	1
1845	P1845	N519	N247	N1246	N518	gen_Steel	1
1846	P1846	N518	N1246	N265	N517	gen_Steel	1
1847	P1847	N517	N265	N1296	N552	gen_Steel	1
1848	P1848	N552	N1296	N283	N551	gen_Steel	1
1849	P1849	N205	N1081	N527	N528	gen_Steel	1

Plate Primary Data (Continued)

	Label	A Joint	B Joint	C Joint	D Joint	Material	Thickness[in]
1850	P1850	N1081	N206	N526	N527	gen_Steel	1
1851	P1851	N206	N1084	N525	N526	gen_Steel	1
1852	P1852	N1084	N207	N524	N525	gen_Steel	1
1853	P1889	N1975	N2059A	N2066	N2010	gen_Steel	.5
1854	P1890	N2059A	N2060A	N2067	N2066	gen_Steel	.5
1855	P1891	N2060A	N2061	N2068	N2067	gen_Steel	.5
1856	P1892	N2061	N2062	N2069	N2068	gen_Steel	.5
1857	P1893	N2062	N2063	N2070	N2069	gen_Steel	.5
1858	P1894	N2063	N2064	N2071	N2070	gen_Steel	.5
1859	P1895	N2064	N2065	N2072	N2071	gen_Steel	.5
1860	P1896	N2065	N2011	N2046	N2072	gen_Steel	.5
1861	P1896A	N2010	N2066	N2073	N2009	gen_Steel	.5
1862	P1897	N2066	N2067	N2074	N2073	gen_Steel	.5
1863	P1898	N2067	N2068	N2075	N2074	gen_Steel	.5
1864	P1899	N2068	N2069	N2076	N2075	gen_Steel	.5
1865	P1900	N2069	N2070	N2077	N2076	gen_Steel	.5
1866	P1901	N2070	N2071	N2078	N2077	gen_Steel	.5
1867	P1902	N2071	N2072	N2079	N2078	gen_Steel	.5
1868	P1903	N2072	N2046	N2045	N2079	gen_Steel	.5
1869	P1903A	N2009	N2073	N2080	N2008	gen_Steel	.5
1870	P1904	N2073	N2074	N2081	N2080	gen_Steel	.5
1871	P1905	N2074	N2075	N2082	N2081	gen_Steel	.5
1872	P1906	N2075	N2076	N2083	N2082	gen_Steel	.5
1873	P1907	N2076	N2077	N2048	N2083	gen_Steel	.5
1874	P1908	N2077	N2078	N2085	N2048	gen_Steel	.5
1875	P1909	N2078	N2079	N2086	N2085	gen_Steel	.5
1876	P1910	N2079	N2045	N2044	N2086	gen_Steel	.5
1877	P1910A	N2008	N2080	N2087	N2007	gen_Steel	.5
1878	P1911	N2080	N2081	N2088	N2087	gen_Steel	.5
1879	P1912	N2081	N2082	N2089	N2088	gen_Steel	.5
1880	P1913	N2082	N2083	N2090	N2089	gen_Steel	.5
1881	P1914	N2083	N2048	N2091	N2090	gen_Steel	.5
1882	P1915	N2048	N2085	N2092	N2091	gen_Steel	.5
1883	P1916	N2085	N2086	N2093	N2092	gen_Steel	.5
1884	P1917	N2086	N2044	N2043	N2093	gen_Steel	.5
1885	P1917A	N2007	N2087	N2094	N2006	gen_Steel	.5
1886	P1918	N2087	N2088	N2095	N2094	gen_Steel	.5
1887	P1919	N2088	N2089	N2096	N2095	gen_Steel	.5
1888	P1920	N2089	N2090	N2097	N2096	gen_Steel	.5
1889	P1921	N2090	N2091	N2098	N2097	gen_Steel	.5
1890	P1922	N2091	N2092	N2099	N2098	gen_Steel	.5
1891	P1923	N2092	N2093	N2100	N2099	gen_Steel	.5
1892	P1924	N2093	N2043	N2042	N2100	gen_Steel	.5
1893	P1924A	N2006	N2094	N2101	N2005	gen_Steel	.5
1894	P1925	N2094	N2095	N2102	N2101	gen_Steel	.5
1895	P1926	N2095	N2096	N2103	N2102	gen_Steel	.5
1896	P1927	N2096	N2097	N2104	N2103	gen_Steel	.5
1897	P1928	N2097	N2098	N2105	N2104	gen_Steel	.5
1898	P1929	N2098	N2099	N2106	N2105	gen_Steel	.5
1899	P1930	N2099	N2100	N2107	N2106	gen_Steel	.5
1900	P1931	N2100	N2042	N2041	N2107	gen_Steel	.5
1901	P1931A	N2005	N2101	N2108	N2004	gen_Steel	.5
1902	P1932	N2101	N2102	N2109	N2108	gen_Steel	.5
1903	P1933	N2102	N2103	N2110	N2109	gen_Steel	.5
1904	P1934	N2103	N2104	N2111	N2110	gen_Steel	.5
1905	P1935	N2104	N2105	N2112	N2111	gen_Steel	.5
1906	P1936	N2105	N2106	N2113	N2112	gen_Steel	.5

Plate Primary Data (Continued)

	Label	A Joint	B Joint	C Joint	D Joint	Material	Thickness[in]
1907	P1937	N2106	N2107	N2114	N2113	gen_Steel	.5
1908	P1938	N2107	N2041	N2040	N2114	gen_Steel	.5
1909	P1938A	N2004	N2108	N2115	N2003	gen_Steel	.5
1910	P1939	N2108	N2109	N2116	N2115	gen_Steel	.5
1911	P1940	N2109	N2110	N2117	N2116	gen_Steel	.5
1912	P1941	N2110	N2111	N2118	N2117	gen_Steel	.5
1913	P1942	N2111	N2112	N2119	N2118	gen_Steel	.5
1914	P1943	N2112	N2113	N2120	N2119	gen_Steel	.5
1915	P1944	N2113	N2114	N2121	N2120	gen_Steel	.5
1916	P1945	N2114	N2040	N2039	N2121	gen_Steel	.5
1917	P1945A	N2003	N2115	N2122	N2002	gen_Steel	.5
1918	P1946	N2115	N2116	N2123	N2122	gen_Steel	.5
1919	P1947	N2116	N2117	N2124	N2123	gen_Steel	.5
1920	P1948	N2117	N2118	N2125	N2124	gen_Steel	.5
1921	P1949	N2118	N2119	N2126	N2125	gen_Steel	.5
1922	P1950	N2119	N2120	N2127	N2126	gen_Steel	.5
1923	P1951	N2120	N2121	N2128	N2127	gen_Steel	.5
1924	P1952	N2121	N2039	N2038	N2128	gen_Steel	.5
1925	P1952A	N1984	N2129	N2136	N1983	gen_Steel	.5
1926	P1953	N2129	N2130	N2137	N2136	gen_Steel	.5
1927	P1954	N2130	N2131	N2138	N2137	gen_Steel	.5
1928	P1955	N2131	N2132	N2139	N2138	gen_Steel	.5
1929	P1956	N2132	N2133	N2140	N2139	gen_Steel	.5
1930	P1957	N2133	N2134	N2141	N2140	gen_Steel	.5
1931	P1958	N2134	N2135	N2142	N2141	gen_Steel	.5
1932	P1959	N2135	N2020	N2019	N2142	gen_Steel	.5
1933	P1959A	N1983	N2136	N2143	N1982	gen_Steel	.5
1934	P1960	N2136	N2137	N2144	N2143	gen_Steel	.5
1935	P1961	N2137	N2138	N2145	N2144	gen_Steel	.5
1936	P1962	N2138	N2139	N2146	N2145	gen_Steel	.5
1937	P1963	N2139	N2140	N2147	N2146	gen_Steel	.5
1938	P1964	N2140	N2141	N2148	N2147	gen_Steel	.5
1939	P1965	N2141	N2142	N2149	N2148	gen_Steel	.5
1940	P1966	N2142	N2019	N2018	N2149	gen_Steel	.5
1941	P1966A	N1982	N2143	N2150	N1981	gen_Steel	.5
1942	P1967	N2143	N2144	N2151	N2150	gen_Steel	.5
1943	P1968	N2144	N2145	N2152	N2151	gen_Steel	.5
1944	P1969	N2145	N2146	N2153	N2152	gen_Steel	.5
1945	P1970	N2146	N2147	N2154	N2153	gen_Steel	.5
1946	P1971	N2147	N2148	N2155	N2154	gen_Steel	.5
1947	P1972	N2148	N2149	N2156	N2155	gen_Steel	.5
1948	P1973	N2149	N2018	N2017	N2156	gen_Steel	.5
1949	P1973A	N1981	N2150	N2157	N1980	gen_Steel	.5
1950	P1974	N2150	N2151	N2158	N2157	gen_Steel	.5
1951	P1975	N2151	N2152	N2159	N2158	gen_Steel	.5
1952	P1976	N2152	N2153	N2160	N2159	gen_Steel	.5
1953	P1977	N2153	N2154	N2161	N2160	gen_Steel	.5
1954	P1978	N2154	N2155	N2162	N2161	gen_Steel	.5
1955	P1979	N2155	N2156	N2163	N2162	gen_Steel	.5
1956	P1980	N2156	N2017	N2016	N2163	gen_Steel	.5
1957	P1980A	N1980	N2157	N2164	N1979	gen_Steel	.5
1958	P1981	N2157	N2158	N2165	N2164	gen_Steel	.5
1959	P1982	N2158	N2159	N2166	N2165	gen_Steel	.5
1960	P1983	N2159	N2160	N2167	N2166	gen_Steel	.5
1961	P1984	N2160	N2161	N2168	N2167	gen_Steel	.5
1962	P1985	N2161	N2162	N2169	N2168	gen_Steel	.5
1963	P1986	N2162	N2163	N2170	N2169	gen_Steel	.5

Plate Primary Data (Continued)

	Label	A Joint	B Joint	C Joint	D Joint	Material	Thickness[in]
1964	P1987	N2163	N2016	N2015	N2170	gen_Steel	.5
1965	P1987A	N1979	N2164	N2171	N1978	gen_Steel	.5
1966	P1988	N2164	N2165	N2172	N2171	gen_Steel	.5
1967	P1989	N2165	N2166	N2173	N2172	gen_Steel	.5
1968	P1990	N2166	N2167	N2174	N2173	gen_Steel	.5
1969	P1991	N2167	N2168	N2047	N2174	gen_Steel	.5
1970	P1992	N2168	N2169	N2176	N2047	gen_Steel	.5
1971	P1993	N2169	N2170	N2177	N2176	gen_Steel	.5
1972	P1994	N2170	N2015	N2014	N2177	gen_Steel	.5
1973	P1994A	N1978	N2171	N2178	N1977	gen_Steel	.5
1974	P1995	N2171	N2172	N2179	N2178	gen_Steel	.5
1975	P1996	N2172	N2173	N2180	N2179	gen_Steel	.5
1976	P1997	N2173	N2174	N2181	N2180	gen_Steel	.5
1977	P1998	N2174	N2047	N2182	N2181	gen_Steel	.5
1978	P1999	N2047	N2176	N2183	N2182	gen_Steel	.5
1979	P2000	N2176	N2177	N2184	N2183	gen_Steel	.5
1980	P2001	N2177	N2014	N2013	N2184	gen_Steel	.5
1981	P2001A	N1977	N2178	N2185	N1976	gen_Steel	.5
1982	P2002	N2178	N2179	N2186	N2185	gen_Steel	.5
1983	P2003	N2179	N2180	N2187	N2186	gen_Steel	.5
1984	P2004	N2180	N2181	N2188	N2187	gen_Steel	.5
1985	P2005	N2181	N2182	N2189	N2188	gen_Steel	.5
1986	P2006	N2182	N2183	N2190	N2189	gen_Steel	.5
1987	P2007	N2183	N2184	N2191	N2190	gen_Steel	.5
1988	P2008	N2184	N2013	N2012	N2191	gen_Steel	.5
1989	P2008A	N1976	N2185	N2059A	N1975	gen_Steel	.5
1990	P2009	N2185	N2186	N2060A	N2059A	gen_Steel	.5
1991	P2010	N2186	N2187	N2061	N2060A	gen_Steel	.5
1992	P2011	N2187	N2188	N2062	N2061	gen_Steel	.5
1993	P2012	N2188	N2189	N2063	N2062	gen_Steel	.5
1994	P2013	N2189	N2190	N2064	N2063	gen_Steel	.5
1995	P2014	N2190	N2191	N2065	N2064	gen_Steel	.5
1996	P2015	N2191	N2012	N2011	N2065	gen_Steel	.5
1997	P2015A	N1993	N2192	N2199	N1992	gen_Steel	.5
1998	P2016	N2192	N2193	N2200	N2199	gen_Steel	.5
1999	P2017	N2193	N2194	N2201	N2200	gen_Steel	.5
2000	P2018	N2194	N2195	N2202	N2201	gen_Steel	.5
2001	P2019	N2195	N2196	N2203	N2202	gen_Steel	.5
2002	P2020	N2196	N2197	N2204	N2203	gen_Steel	.5
2003	P2021	N2197	N2198	N2205	N2204	gen_Steel	.5
2004	P2022	N2198	N2029	N2028	N2205	gen_Steel	.5
2005	P2022A	N1992	N2199	N2206	N1991	gen_Steel	.5
2006	P2023	N2199	N2200	N2207	N2206	gen_Steel	.5
2007	P2024	N2200	N2201	N2208	N2207	gen_Steel	.5
2008	P2025	N2201	N2202	N2209	N2208	gen_Steel	.5
2009	P2026	N2202	N2203	N2210	N2209	gen_Steel	.5
2010	P2027	N2203	N2204	N2211	N2210	gen_Steel	.5
2011	P2028	N2204	N2205	N2212	N2211	gen_Steel	.5
2012	P2029	N2205	N2028	N2027	N2212	gen_Steel	.5
2013	P2029A	N1991	N2206	N2213	N1990	gen_Steel	.5
2014	P2030	N2206	N2207	N2214	N2213	gen_Steel	.5
2015	P2031	N2207	N2208	N2215	N2214	gen_Steel	.5
2016	P2032	N2208	N2209	N2216	N2215	gen_Steel	.5
2017	P2033	N2209	N2210	N2217	N2216	gen_Steel	.5
2018	P2034	N2210	N2211	N2218	N2217	gen_Steel	.5
2019	P2035	N2211	N2212	N2219	N2218	gen_Steel	.5
2020	P2036	N2212	N2027	N2026	N2219	gen_Steel	.5

Plate Primary Data (Continued)

	Label	A Joint	B Joint	C Joint	D Joint	Material	Thickness[in]
2021	P2036A	N1990	N2213	N2220	N1989	gen_Steel	.5
2022	P2037	N2213	N2214	N2221	N2220	gen_Steel	.5
2023	P2038	N2214	N2215	N2222	N2221	gen_Steel	.5
2024	P2039	N2215	N2216	N2223	N2222	gen_Steel	.5
2025	P2040	N2216	N2217	N2224	N2223	gen_Steel	.5
2026	P2041	N2217	N2218	N2225	N2224	gen_Steel	.5
2027	P2042	N2218	N2219	N2226	N2225	gen_Steel	.5
2028	P2043	N2219	N2026	N2025	N2226	gen_Steel	.5
2029	P2043A	N1989	N2220	N2227	N1988	gen_Steel	.5
2030	P2044	N2220	N2221	N2228	N2227	gen_Steel	.5
2031	P2045	N2221	N2222	N2229	N2228	gen_Steel	.5
2032	P2046	N2222	N2223	N2230	N2229	gen_Steel	.5
2033	P2047	N2223	N2224	N2231	N2230	gen_Steel	.5
2034	P2048	N2224	N2225	N2232	N2231	gen_Steel	.5
2035	P2049	N2225	N2226	N2233	N2232	gen_Steel	.5
2036	P2050	N2226	N2025	N2024	N2233	gen_Steel	.5
2037	P2050A	N1988	N2227	N2234	N1987	gen_Steel	.5
2038	P2051	N2227	N2228	N2235	N2234	gen_Steel	.5
2039	P2052	N2228	N2229	N2049	N2235	gen_Steel	.5
2040	P2053	N2229	N2230	N2237	N2049	gen_Steel	.5
2041	P2054	N2230	N2231	N2238	N2237	gen_Steel	.5
2042	P2055	N2231	N2232	N2239	N2238	gen_Steel	.5
2043	P2056	N2232	N2233	N2240	N2239	gen_Steel	.5
2044	P2057	N2233	N2024	N2023	N2240	gen_Steel	.5
2045	P2057A	N1987	N2234	N2241	N1986	gen_Steel	.5
2046	P2058	N2234	N2235	N2242	N2241	gen_Steel	.5
2047	P2059	N2235	N2049	N2243	N2242	gen_Steel	.5
2048	P2060	N2049	N2237	N2244	N2243	gen_Steel	.5
2049	P2061	N2237	N2238	N2245	N2244	gen_Steel	.5
2050	P2062	N2238	N2239	N2246	N2245	gen_Steel	.5
2051	P2063	N2239	N2240	N2247	N2246	gen_Steel	.5
2052	P2064	N2240	N2023	N2022	N2247	gen_Steel	.5
2053	P2064A	N1986	N2241	N2248	N1985	gen_Steel	.5
2054	P2065	N2241	N2242	N2249	N2248	gen_Steel	.5
2055	P2066	N2242	N2243	N2250	N2249	gen_Steel	.5
2056	P2067	N2243	N2244	N2251	N2250	gen_Steel	.5
2057	P2068	N2244	N2245	N2252	N2251	gen_Steel	.5
2058	P2069	N2245	N2246	N2253	N2252	gen_Steel	.5
2059	P2070	N2246	N2247	N2254	N2253	gen_Steel	.5
2060	P2071	N2247	N2022	N2021	N2254	gen_Steel	.5
2061	P2071A	N1985	N2248	N2129	N1984	gen_Steel	.5
2062	P2072	N2248	N2249	N2130	N2129	gen_Steel	.5
2063	P2073	N2249	N2250	N2131	N2130	gen_Steel	.5
2064	P2074	N2250	N2251	N2132	N2131	gen_Steel	.5
2065	P2075	N2251	N2252	N2133	N2132	gen_Steel	.5
2066	P2076	N2252	N2253	N2134	N2133	gen_Steel	.5
2067	P2077	N2253	N2254	N2135	N2134	gen_Steel	.5
2068	P2078	N2254	N2021	N2020	N2135	gen_Steel	.5
2069	P2078A	N2002	N2122	N2255	N2001	gen_Steel	.5
2070	P2079	N2122	N2123	N2256	N2255	gen_Steel	.5
2071	P2080	N2123	N2124	N2257	N2256	gen_Steel	.5
2072	P2081	N2124	N2125	N2258	N2257	gen_Steel	.5
2073	P2082	N2125	N2126	N2259	N2258	gen_Steel	.5
2074	P2083	N2126	N2127	N2260	N2259	gen_Steel	.5
2075	P2084	N2127	N2128	N2261	N2260	gen_Steel	.5
2076	P2085	N2128	N2038	N2037	N2261	gen_Steel	.5
2077	P2085A	N2001	N2255	N2262	N2000	gen_Steel	.5

Plate Primary Data (Continued)

	Label	A Joint	B Joint	C Joint	D Joint	Material	Thickness[in]
2078	P2086	N2255	N2256	N2263	N2262	gen_Steel	.5
2079	P2087	N2256	N2257	N2264	N2263	gen_Steel	.5
2080	P2088	N2257	N2258	N2265	N2264	gen_Steel	.5
2081	P2089	N2258	N2259	N2266	N2265	gen_Steel	.5
2082	P2090	N2259	N2260	N2267	N2266	gen_Steel	.5
2083	P2091	N2260	N2261	N2268	N2267	gen_Steel	.5
2084	P2092	N2261	N2037	N2036	N2268	gen_Steel	.5
2085	P2092A	N2000	N2262	N2269	N1999	gen_Steel	.5
2086	P2093	N2262	N2263	N2270	N2269	gen_Steel	.5
2087	P2094	N2263	N2264	N2050	N2270	gen_Steel	.5
2088	P2095	N2264	N2265	N2272	N2050	gen_Steel	.5
2089	P2096	N2265	N2266	N2273	N2272	gen_Steel	.5
2090	P2097	N2266	N2267	N2274	N2273	gen_Steel	.5
2091	P2098	N2267	N2268	N2275	N2274	gen_Steel	.5
2092	P2099	N2268	N2036	N2035	N2275	gen_Steel	.5
2093	P2099A	N1999	N2269	N2276	N1998	gen_Steel	.5
2094	P2100	N2269	N2270	N2277	N2276	gen_Steel	.5
2095	P2101	N2270	N2050	N2278	N2277	gen_Steel	.5
2096	P2102	N2050	N2272	N2279	N2278	gen_Steel	.5
2097	P2103	N2272	N2273	N2280	N2279	gen_Steel	.5
2098	P2104	N2273	N2274	N2281	N2280	gen_Steel	.5
2099	P2105	N2274	N2275	N2282	N2281	gen_Steel	.5
2100	P2106	N2275	N2035	N2034	N2282	gen_Steel	.5
2101	P2106A	N1998	N2276	N2283	N1997	gen_Steel	.5
2102	P2107	N2276	N2277	N2284	N2283	gen_Steel	.5
2103	P2108	N2277	N2278	N2285	N2284	gen_Steel	.5
2104	P2109	N2278	N2279	N2286	N2285	gen_Steel	.5
2105	P2110	N2279	N2280	N2287	N2286	gen_Steel	.5
2106	P2111	N2280	N2281	N2288	N2287	gen_Steel	.5
2107	P2112	N2281	N2282	N2289	N2288	gen_Steel	.5
2108	P2113	N2282	N2034	N2033	N2289	gen_Steel	.5
2109	P2113A	N1997	N2283	N2290	N1996	gen_Steel	.5
2110	P2114	N2283	N2284	N2291	N2290	gen_Steel	.5
2111	P2115	N2284	N2285	N2292	N2291	gen_Steel	.5
2112	P2116	N2285	N2286	N2293	N2292	gen_Steel	.5
2113	P2117	N2286	N2287	N2294	N2293	gen_Steel	.5
2114	P2118	N2287	N2288	N2295	N2294	gen_Steel	.5
2115	P2119	N2288	N2289	N2296	N2295	gen_Steel	.5
2116	P2120	N2289	N2033	N2032	N2296	gen_Steel	.5
2117	P2120A	N1996	N2290	N2297	N1995	gen_Steel	.5
2118	P2121	N2290	N2291	N2298	N2297	gen_Steel	.5
2119	P2122	N2291	N2292	N2299	N2298	gen_Steel	.5
2120	P2123	N2292	N2293	N2300	N2299	gen_Steel	.5
2121	P2124	N2293	N2294	N2301	N2300	gen_Steel	.5
2122	P2125	N2294	N2295	N2302	N2301	gen_Steel	.5
2123	P2126	N2295	N2296	N2303	N2302	gen_Steel	.5
2124	P2127	N2296	N2032	N2031	N2303	gen_Steel	.5
2125	P2127A	N1995	N2297	N2304	N1994	gen_Steel	.5
2126	P2128	N2297	N2298	N2305	N2304	gen_Steel	.5
2127	P2129	N2298	N2299	N2306	N2305	gen_Steel	.5
2128	P2130	N2299	N2300	N2307	N2306	gen_Steel	.5
2129	P2131	N2300	N2301	N2308	N2307	gen_Steel	.5
2130	P2132	N2301	N2302	N2309	N2308	gen_Steel	.5
2131	P2133	N2302	N2303	N2310	N2309	gen_Steel	.5
2132	P2134	N2303	N2031	N2030	N2310	gen_Steel	.5
2133	P2134A	N1994	N2304	N2192	N1993	gen_Steel	.5
2134	P2135	N2304	N2305	N2193	N2192	gen_Steel	.5

Plate Primary Data (Continued)

	Label	A Joint	B Joint	C Joint	D Joint	Material	Thickness[in]
2135	P2136	N2305	N2306	N2194	N2193	gen_Steel	.5
2136	P2137	N2306	N2307	N2195	N2194	gen_Steel	.5
2137	P2138	N2307	N2308	N2196	N2195	gen_Steel	.5
2138	P2139	N2308	N2309	N2197	N2196	gen_Steel	.5
2139	P2140	N2309	N2310	N2198	N2197	gen_Steel	.5
2140	P2141	N2310	N2030	N2029	N2198	gen_Steel	.5

Joint Loads and Enforced Displacements (BLC 4 : Thermal)

	Joint Label	L,D,M	Direction	Magnitude[(lb,lb-ft), (in,rad), (lb*s^2/in, lb*s^2*in)]
1	N1	L	X	350
2	N1	L	Y	-150
3	N1	L	Z	50
4	N1	L	Mx	25
5	N1	L	My	225
6	N1	L	Mz	175
7	N1974	L	X	450
8	N1974	L	Y	-100
9	N1974	L	Z	50
10	N1974	L	Mx	100
11	N1974	L	My	550
12	N1974	L	Mz	125

Joint Loads and Enforced Displacements (BLC 5 : Primary Seismic)

	Joint Label	L,D,M	Direction	Magnitude[(lb,lb-ft), (in,rad), (lb*s^2/in, lb*s^2*in)]
1	N1	L	X	300
2	N1	L	Y	-50
3	N1	L	Z	50
4	N1	L	Mx	25
5	N1	L	My	250
6	N1	L	Mz	75

Joint Loads and Enforced Displacements (BLC 7 : GT1P1)

	Joint Label	L,D,M	Direction	Magnitude[(lb,lb-ft), (in,rad), (lb*s^2/in, lb*s^2*in)]
1	N3364	L	X	419
2	N3364	L	Y	-491
3	N3364	L	Z	12
4	N3364	L	Mx	12
5	N3364	L	My	3
6	N3364	L	Mz	49

Joint Loads and Enforced Displacements (BLC 8 : GE5)

	Joint Label	L,D,M	Direction	Magnitude[(lb,lb-ft), (in,rad), (lb*s^2/in, lb*s^2*in)]
1	N3364	L	X	31
2	N3364	L	Y	-84
3	N3364	L	Z	26
4	N3364	L	Mx	73
5	N3364	L	My	2
6	N3364	L	Mz	49

Columbia Energy AND ENVIRONMENTAL SERVICES

Company : CEES
Designer : JDY
Job Number :
Model Name : 242A Pump Room Wall Nozzles

Apr 16, 2020
11:48 AM
Checked By: RDL

Basic Load Cases

	BLC Description	Category	X Gravity	Y Gravity	Z Gravity	Joint	Point	Distributed	Area(Me...	Surface(...
1	SW	DL		-1						
4	Thermal	OL1				12				
5	Primary Seismic	OL2				6				
7	GT1P1	OL3				6				
8	GE5	OL4				6				

Load Combinations

	Description	Sol...	PD...	S...	BLC	Fa...	BLC	Fa...	BLC	Fa...	BLC	Fa...	BLC	Fa...	BLC	Fa...	B...	Fa...	B...	Fa...	B...	Fa...	B...	Fa...
1	1.2DL + 1.2Thermal +..	Yes	Y		DL	1.2	OL1	1.2	OL3	1.2														
2	1.2DL + 1.4GE5 + 1.4..	Yes	Y		DL	1.2	OL2	1.4	OL4	1.4														

Envelope AISC 14th(360-10): LRFD Steel Code Checks

	Member	Shape	Code C...	Loc[in]	LC	Shear ...	Loc[in]	Dir	LC	phi*Pnc [lb]	phi*Pnt [lb]	phi*Mn y-...	phi*Mn z-...	Cb	Eqn
1	M1	PIPE_4.0	.160	8.938	1	.133	9.167		1	92242.896	93240	10631.25	10631.25	1....	H1-1b
2	M104	BackPlate	.036	20.75	1	.031	3.891	y	2	32793.19	97200	1012.5	12150	2....	H1-1b
3	M105	BackPlate	.048	20.75	1	.031	20.75	y	2	32793.19	97200	1012.5	12150	2....	H1-1b
4	M107	BackPlate	.075	3	1	.081	3	y	2	88748.021	97200	1012.5	12150	1....	H1-1b
5	M181A	PIPE_4.0	.067	1	1	.018	0		1	93107.536	93240	10631.25	10631.25	4....	H1-1b

Envelope Plate/Shell Principal Stresses

	Plate		Sur...	Sigma1 [ksi]	LC	Sigma2 [ksi]	LC	Tau Max [k...	LC	Angle [rad]	LC	Von Mises [ksi]	LC
1	P1	max	T	.981	1	.294	1	.344	1	.813	1	.872	1
2		min		.632	2	.188	2	.222	2	.728	2	.562	2
3		max	B	-.217	2	-.726	2	.404	1	-.689	1	1.015	1
4		min		-.332	1	-1.139	1	.255	2	-.744	2	.646	2
5	P2	max	T	.949	1	.415	1	.267	1	.687	1	.824	1
6		min		.646	2	.262	2	.192	2	.586	2	.562	2
7		max	B	-.274	2	-.746	2	.348	1	2.355	1	.978	1
8		min		-.422	1	-1.118	1	.236	2	2.285	2	.654	2
9	P3	max	T	.836	1	.396	1	.22	1	.423	1	.724	1
10		min		.609	2	.261	2	.174	2	.367	2	.529	2
11		max	B	-.273	2	-.71	2	.298	1	2.161	1	.871	1
12		min		-.404	1	-.999	1	.218	2	2.11	2	.62	2
13	P4	max	T	2.596	1	.776	1	.91	1	2.314	2	2.308	1
14		min		.616	2	.184	2	.216	2	-.748	1	.548	2
15		max	B	-.163	2	-.544	2	.885	1	.824	1	2.244	1
16		min		-.754	1	-2.524	1	.191	2	.807	2	.484	2
17	P5	max	T	2.539	1	.96	1	.79	1	2.299	1	2.221	1
18		min		.633	2	.239	2	.197	2	2.195	2	.553	2
19		max	B	-.233	2	-.571	2	.761	1	.723	1	2.165	1
20		min		-.956	1	-2.479	1	.169	2	.657	2	.498	2
21	P6	max	T	2.212	1	.859	1	.677	1	2.135	1	1.932	1
22		min		.602	2	.242	2	.18	2	2.011	2	.525	2
23		max	B	-.24	2	-.561	2	.656	1	.549	1	1.897	1
24		min		-.863	1	-2.175	1	.161	2	.437	2	.488	2
25	P7	max	T	2.916	1	.866	1	1.025	1	.728	1	2.594	1
26		min		.612	2	.17	2	.221	2	.633	2	.547	2
27		max	B	-.138	2	-.521	2	.966	1	-.593	2	2.452	1
28		min		-.827	1	-2.758	1	.191	2	-.768	1	.467	2
29	P8	max	T	3.035	1	1.144	1	.945	1	.603	1	2.655	1
30		min		.62	2	.223	2	.198	2	.517	2	.544	2
31		max	B	-.204	2	-.53	2	.876	1	2.238	1	2.513	1

Envelope Plate/Shell Principal Stresses (Continued)

	Plate		Sur...	Sigma1 [ksi]	LC	Sigma2 [ksi]	LC	Tau Max [k...	LC	Angle [rad]	LC	Von Mises [ksi]	LC
32		min		-1.128	1	-2.88	1	.163	2	-.722	2	.463	2
33	P9	max	T	2.922	1	1.156	1	.883	1	.423	1	2.549	1
34		min		.582	2	.223	2	.18	2	.335	2	.508	2
35		max	B	-.206	2	-.496	2	.821	1	2.2	2	2.421	1
36		min		-1.139	1	-2.78	1	.145	2	2.044	1	.432	2
37	P10	max	T	1.326	1	.357	1	.484	1	2.192	2	1.188	1
38		min		.625	2	.172	2	.227	2	2.175	1	.559	2
39		max	B	-.19	2	-.698	2	.48	1	.956	2	1.216	1
40		min		-.409	1	-1.368	1	.254	2	.824	1	.625	2
41	P11	max	T	1.497	1	.547	1	.475	1	2.046	2	1.312	1
42		min		.635	2	.243	2	.196	2	2.006	1	.555	2
43		max	B	-.241	2	-.707	2	.462	1	.849	2	1.325	1
44		min		-.594	1	-1.518	1	.233	2	.658	1	.623	2
45	P12	max	T	1.616	1	.63	1	.493	1	1.832	2	1.411	1
46		min		.595	2	.236	2	.179	2	1.797	1	.519	2
47		max	B	-.23	2	-.655	2	.466	1	.678	2	1.401	1
48		min		-.68	1	-1.612	1	.212	2	.441	1	.575	2
49	P13	max	T	-.006	2	-.076	2	.131	1	2.354	2	.283	1
50		min		-.039	1	-.301	1	.035	2	-.771	1	.073	2
51		max	B	.299	1	.059	1	.12	1	.801	1	.274	1
52		min		.074	2	.017	2	.028	2	.782	2	.067	2
53	P14	max	T	-.016	2	-.132	2	.217	1	-.635	1	.494	1
54		min		-.103	1	-.537	1	.058	2	-.71	2	.125	2
55		max	B	.543	1	.143	1	.2	1	1.01	2	.487	1
56		min		.134	2	.041	2	.047	2	1.001	1	.119	2
57	P15	max	T	-.016	2	-.132	2	.213	1	2.27	2	.484	1
58		min		-.1	1	-.526	1	.058	2	2.252	1	.125	2
59		max	B	.53	1	.144	1	.193	1	.62	1	.475	1
60		min		.135	2	.041	2	.047	2	.555	2	.12	2
61	P16	max	T	-.081	2	-.479	2	.748	1	2.347	2	1.718	1
62		min		-.381	1	-1.876	1	.199	2	-.772	1	.444	2
63		max	B	1.834	1	.445	1	.694	1	.804	1	1.657	1
64		min		.454	2	.119	2	.167	2	.79	2	.407	2
65	P17	max	T	-.031	2	-.167	2	.294	1	-.441	1	.674	1
66		min		-.146	1	-.735	1	.068	2	-.554	2	.154	2
67		max	B	.786	1	.169	1	.308	1	1.207	2	.717	1
68		min		.194	2	.045	2	.074	2	1.206	1	.176	2
69	P18	max	T	-.014	2	-.185	2	.402	1	-.39	1	.84	1
70		min		-.069	1	-.873	1	.085	2	-.485	2	.178	2
71		max	B	.964	1	.075	1	.445	1	1.228	1	.929	1
72		min		.233	2	.018	2	.108	2	1.209	2	.225	2
73	P19	max	T	-.074	2	-.424	2	.662	1	2.112	1	1.506	1
74		min		-.314	1	-1.638	1	.175	2	2.088	2	.392	2
75		max	B	1.605	1	.354	1	.625	1	.542	1	1.46	1
76		min		.406	2	.092	2	.157	2	.525	2	.369	2
77	P20	max	T	-.057	2	-.272	2	.37	1	2.261	1	.911	1
78		min		-.279	1	-1.018	1	.108	2	2.198	2	.248	2
79		max	B	.965	1	.31	1	.327	1	.738	1	.853	1
80		min		.244	2	.067	2	.088	2	.718	2	.218	2
81	P21	max	T	-.003	2	-.196	2	.454	1	-.375	1	.92	1
82		min		-.022	1	-.931	1	.097	2	-.447	2	.194	2
83		max	B	1.024	1	.014	1	.505	1	1.212	1	1.017	1
84		min		.244	2	-.005	2	.124	2	1.159	2	.246	2
85	P22	max	T	0	2	-.212	2	.468	1	-.323	1	.95	1
86		min		-.026	1	-.962	1	.106	2	-.389	2	.212	2
87		max	B	1.025	1	.022	1	.501	1	1.248	1	1.014	1
88		min		.24	2	-.006	2	.123	2	1.163	2	.243	2

Envelope Plate/Shell Principal Stresses (Continued)

	Plate		Sur...	Sigma1 [ksi]	LC	Sigma2 [ksi]	LC	Tau Max [k...	LC	Angle [rad]	LC	Von Mises [ksi]	LC
89	P23	max	T	-.06	2	-.286	2	.497	1	-.487	1	1.157	1
90		min		-.276	1	-1.27	1	.113	2	-.593	2	.261	2
91		max	B	1.375	1	.239	1	.568	1	1.109	1	1.273	1
92		min		.339	2	.028	2	.155	2	1.025	2	.326	2
93	P24	max	T	-.019	2	-.277	2	.536	1	-.499	1	1.141	1
94		min		-.126	1	-1.199	1	.129	2	-.567	2	.268	2
95		max	B	1.29	1	.118	1	.586	1	1.073	1	1.236	1
96		min		.324	2	.004	2	.16	2	.983	2	.322	2
97	P25	max	T	.003	2	-.201	2	.424	1	-.287	1	.854	1
98		min		-.01	1	-.859	1	.102	2	-.347	2	.202	2
99		max	B	.893	1	.009	1	.442	1	1.281	1	.889	1
100		min		.206	2	-.008	2	.107	2	1.186	2	.21	2
101	P26	max	T	.003	2	-.167	2	.334	1	-.276	1	.672	1
102		min		-.008	1	-.676	1	.085	2	-.33	2	.168	2
103		max	B	.689	1	.005	1	.342	1	1.288	1	.687	1
104		min		.158	2	-.008	2	.083	2	1.183	2	.162	2
105	P27	max	T	-.004	2	-.244	2	.473	1	-.495	1	.981	1
106		min		-.068	1	-1.013	1	.12	2	-.556	2	.242	2
107		max	B	1.081	1	.059	1	.511	1	1.074	1	1.053	1
108		min		.275	2	-.008	2	.142	2	.981	2	.279	2
109	P28	max	T	.003	2	-.197	2	.372	1	-.499	1	.762	1
110		min		-.037	1	-.78	1	.1	2	-.557	2	.199	2
111		max	B	.827	1	.028	1	.399	1	1.068	1	.813	1
112		min		.214	2	-.015	2	.114	2	.97	2	.221	2
113	P29	max	T	.003	2	-.126	2	.236	1	-.285	1	.474	1
114		min		-.005	1	-.476	1	.065	2	-.337	2	.128	2
115		max	B	.476	1	.002	1	.237	1	1.273	1	.475	1
116		min		.108	2	-.009	2	.058	2	1.141	2	.113	2
117	P30	max	T	.004	2	-.086	2	.143	1	-.332	1	.287	1
118		min		0	1	-.287	1	.045	2	-.375	2	.088	2
119		max	B	.277	1	-.005	1	.141	1	1.209	1	.279	1
120		min		.063	2	-.012	2	.038	2	1.024	2	.07	2
121	P31	max	T	.007	2	-.148	2	.268	1	-.527	1	.543	1
122		min		-.016	1	-.551	1	.078	2	-.579	2	.152	2
123		max	B	.582	1	.006	1	.288	1	1.037	1	.579	1
124		min		.155	2	-.02	2	.087	2	.931	2	.165	2
125	P32	max	T	.011	2	-.104	2	.177	1	-.606	1	.352	1
126		min		.006	1	-.349	1	.057	2	-.633	2	.11	2
127		max	B	.367	1	-.019	1	.193	1	.953	1	.377	1
128		min		.104	2	-.026	2	.065	2	.848	2	.119	2
129	P33	max	T	.013	1	-.05	2	.067	1	-.48	2	.128	1
130		min		.006	2	-.121	1	.028	2	-.531	1	.053	2
131		max	B	.108	1	-.021	2	.066	1	.943	1	.122	1
132		min		.029	2	-.024	1	.025	2	.744	2	.044	2
133	P34	max	T	.081	1	-.021	2	.055	1	1.932	1	.098	1
134		min		.012	2	-.028	1	.017	2	-.776	2	.029	2
135		max	B	.027	1	-.043	2	.07	1	.378	2	.128	1
136		min		.012	2	-.112	1	.027	2	.305	1	.05	2
137	P35	max	T	.043	1	-.067	2	.114	1	2.334	1	.21	1
138		min		.017	2	-.186	1	.042	2	-.744	2	.076	2
139		max	B	.197	1	-.036	2	.129	1	.749	1	.233	1
140		min		.064	2	-.06	1	.05	2	.701	2	.088	2
141	P36	max	T	.118	1	-.038	2	.102	1	2.206	2	.177	1
142		min		.026	2	-.085	1	.032	2	1.984	1	.056	2
143		max	B	.093	1	-.053	2	.117	1	.503	2	.204	1
144		min		.037	2	-.141	1	.045	2	.423	1	.078	2
145	P37	max	T	.207	1	-.008	2	.109	1	1.929	2	.213	1

Envelope Plate/Shell Principal Stresses (Continued)

	Plate		Sur...	Sigma1 [ksi]	LC	Sigma2 [ksi]	LC	Tau Max [k...	LC	Angle [rad]	LC	Von Mises [ksi]	LC
146		min		.029	2	-.011	1	.018	2	1.662	1	.034	2
147		max	B	.012	1	-.072	2	.13	1	.185	2	.254	1
148		min		.006	2	-.248	1	.039	2	.091	1	.075	2
149	P38	max	T	.329	1	-.003	2	.168	1	1.728	2	.332	1
150		min		.052	2	-.006	1	.028	2	1.595	1	.054	2
151		max	B	.006	1	-.1	2	.191	1	.101	2	.38	1
152		min		.003	2	-.377	1	.052	2	.03	1	.102	2
153	P39	max	T	.23	1	-.021	2	.136	1	1.976	2	.253	1
154		min		.043	2	-.041	1	.032	2	1.742	1	.056	2
155		max	B	.045	1	-.075	2	.152	1	.324	2	.284	1
156		min		.021	2	-.258	1	.048	2	.193	1	.088	2
157	P40	max	T	.346	1	-.011	2	.183	1	1.807	2	.357	1
158		min		.063	2	-.02	1	.037	2	1.638	1	.069	2
159		max	B	.023	1	-.1	2	.201	1	.204	2	.392	1
160		min		.012	2	-.38	1	.056	2	.087	1	.107	2
161	P41	max	T	.438	1	-.002	2	.221	1	1.651	2	.44	1
162		min		.075	2	-.003	1	.038	2	1.571	1	.076	2
163		max	B	.003	1	-.126	2	.247	1	.06	2	.493	1
164		min		.002	2	-.492	1	.064	2	.007	1	.127	2
165	P42	max	T	.534	1	0	1	.267	1	1.615	2	.534	1
166		min		.095	2	0	2	.048	2	1.561	1	.096	2
167		max	B	0	2	-.148	2	.296	1	.037	2	.593	1
168		min		0	1	-.593	1	.075	2	-.004	1	.149	2
169	P43	max	T	.453	1	-.006	2	.23	1	1.71	2	.457	1
170		min		.083	2	-.008	1	.045	2	1.591	1	.087	2
171		max	B	.009	1	-.124	2	.251	1	.131	2	.497	1
172		min		.007	2	-.493	1	.065	2	.038	1	.127	2
173	P44	max	T	.548	1	.001	1	.273	1	1.656	2	.547	1
174		min		.103	2	-.003	2	.053	2	1.569	1	.104	2
175		max	B	.004	2	-.145	2	.296	1	.086	2	.592	1
176		min		0	1	-.592	1	.075	2	.013	1	.147	2
177	P45	max	T	.615	1	.002	1	.307	1	1.598	2	.615	1
178		min		.113	2	0	2	.056	2	1.557	1	.113	2
179		max	B	0	2	-.168	2	.339	1	.024	2	.678	1
180		min		-.001	1	-.679	1	.084	2	-.009	1	.168	2
181	P46	max	T	.683	1	.003	1	.34	1	1.588	2	.682	1
182		min		.128	2	0	2	.064	2	1.556	1	.128	2
183		max	B	0	2	-.184	2	.374	1	.015	2	.749	1
184		min		-.003	1	-.751	1	.092	2	-.011	1	.184	2
185	P47	max	T	.629	1	.008	1	.311	1	1.626	2	.625	1
186		min		.12	2	0	2	.06	2	1.559	1	.12	2
187		max	B	.002	2	-.164	2	.336	1	.058	2	.675	1
188		min		-.007	1	-.678	1	.083	2	0	1	.165	2
189	P48	max	T	.697	1	.013	1	.342	1	1.609	2	.69	1
190		min		.134	2	0	2	.067	2	1.554	1	.134	2
191		max	B	0	2	-.18	2	.369	1	.038	2	.744	1
192		min		-.012	1	-.75	1	.09	2	-.008	1	.18	2
193	P49	max	T	.737	1	.004	1	.367	1	1.583	2	.736	1
194		min		.14	2	0	2	.07	2	1.557	1	.14	2
195		max	B	0	2	-.197	2	.402	1	.01	2	.806	1
196		min		-.004	1	-.808	1	.098	2	-.011	1	.197	2
197	P50	max	T	.778	1	.005	1	.387	1	1.58	2	.775	1
198		min		.149	2	0	2	.075	2	1.558	1	.149	2
199		max	B	0	2	-.206	2	.423	1	.006	2	.847	1
200		min		-.004	1	-.85	1	.103	2	-.011	1	.206	2
201	P51	max	T	.751	1	.017	1	.367	1	1.599	2	.743	1
202		min		.147	2	.002	2	.072	2	1.553	1	.146	2

Envelope Plate/Shell Principal Stresses (Continued)

	Plate		Sur...	Sigma1 [ksi]	LC	Sigma2 [ksi]	LC	Tau Max [k...	LC	Angle [rad]	LC	Von Mises [ksi]	LC
203		max	B	0	2	-.193	2	.396	1	.025	2	.799	1
204		min		-.015	1	-.807	1	.096	2	-.012	1	.192	2
205	P52	max	T	.791	1	.019	1	.386	1	1.593	2	.781	1
206		min		.156	2	.002	2	.077	2	1.553	1	.155	2
207		max	B	-.002	2	-.202	2	.415	1	.015	2	.84	1
208		min		-.018	1	-.849	1	.1	2	-.014	1	.201	2
209	P53	max	T	.804	1	.005	1	.399	1	1.579	2	.801	1
210		min		.156	2	0	2	.078	2	1.56	1	.156	2
211		max	B	0	2	-.212	2	.436	1	.003	2	.874	1
212		min		-.005	1	-.876	1	.106	2	-.01	1	.212	2
213	P54	max	T	.816	1	.005	1	.405	1	1.578	2	.814	1
214		min		.16	2	0	2	.08	2	1.562	1	.16	2
215		max	B	0	2	-.214	2	.441	1	.001	2	.886	1
216		min		-.005	1	-.888	1	.107	2	-.009	1	.214	2
217	P55	max	T	.817	1	.021	1	.398	1	1.59	2	.807	1
218		min		.163	2	.003	2	.08	2	1.554	1	.161	2
219		max	B	-.002	2	-.208	2	.428	1	.008	2	.866	1
220		min		-.02	1	-.875	1	.103	2	-.015	1	.207	2
221	P56	max	T	.829	1	.022	1	.403	1	1.588	2	.818	1
222		min		.167	2	.003	2	.082	2	1.555	1	.165	2
223		max	B	-.002	2	-.21	2	.433	1	0	2	.877	1
224		min		-.021	1	-.887	1	.104	2	-.015	1	.209	2
225	P57	max	T	.815	1	.006	1	.405	1	1.575	2	.812	1
226		min		.162	2	0	2	.081	2	1.564	1	.162	2
227		max	B	0	2	-.213	2	.44	1	-.003	2	.882	1
228		min		-.005	1	-.885	1	.106	2	-.007	1	.213	2
229	P58	max	T	.799	1	.005	1	.397	1	1.576	2	.796	1
230		min		.161	2	0	2	.08	2	1.566	1	.161	2
231		max	B	0	2	-.209	2	.431	1	-.004	2	.864	1
232		min		-.005	1	-.867	1	.104	2	-.006	1	.209	2
233	P59	max	T	.827	1	.022	1	.402	1	1.587	2	.816	1
234		min		.168	2	.003	2	.082	2	1.557	1	.167	2
235		max	B	-.002	2	-.21	2	.431	1	-.006	2	.874	1
236		min		-.021	1	-.884	1	.104	2	-.016	1	.208	2
237	P60	max	T	.811	1	.022	1	.395	1	1.585	2	.8	1
238		min		.167	2	.003	2	.082	2	1.559	1	.165	2
239		max	B	-.002	2	-.205	2	.423	1	-.012	2	.856	1
240		min		-.021	1	-.866	1	.102	2	-.016	1	.204	2
241	P61	max	T	.77	1	.005	1	.382	1	1.577	2	.767	1
242		min		.157	2	0	2	.078	2	1.567	1	.157	2
243		max	B	0	2	-.201	2	.414	1	-.005	2	.831	1
244		min		-.005	1	-.834	1	.1	2	-.005	1	.201	2
245	P62	max	T	.727	1	.004	1	.361	1	1.574	2	.724	1
246		min		.15	2	0	2	.075	2	1.568	1	.15	2
247		max	B	0	2	-.189	2	.391	1	-.005	1	.784	1
248		min		-.004	1	-.786	1	.095	2	-.01	2	.189	2
249	P63	max	T	.781	1	.021	1	.38	1	1.582	2	.771	1
250		min		.162	2	.002	2	.08	2	1.56	1	.161	2
251		max	B	-.002	2	-.198	2	.407	1	-.017	1	.824	1
252		min		-.019	1	-.833	1	.098	2	-.02	2	.197	2
253	P64	max	T	.738	1	.018	1	.36	1	1.577	2	.729	1
254		min		.156	2	.002	2	.077	2	1.559	1	.155	2
255		max	B	0	2	-.187	2	.385	1	-.019	1	.778	1
256		min		-.017	1	-.786	1	.093	2	-.031	2	.186	2
257	P65	max	T	.67	1	.004	1	.333	1	1.57	2	.669	1
258		min		.14	2	0	2	.07	2	1.569	1	.14	2
259		max	B	0	2	-.175	2	.361	1	-.005	1	.723	1

Envelope Plate/Shell Principal Stresses (Continued)

	Plate		Sur...	Sigma1 [ksi]	LC	Sigma2 [ksi]	LC	Tau Max [k...	LC	Angle [rad]	LC	Von Mises [ksi]	LC
260		min		-.003	1	-.725	1	.087	2	-.016	2	.175	2
261	P66	max	T	.601	1	.002	1	.299	1	1.567	1	.6	1
262		min		.128	2	0	2	.064	2	1.562	2	.128	2
263		max	B	0	2	-.157	2	.324	1	-.008	1	.649	1
264		min		-.002	1	-.65	1	.078	2	-.025	2	.157	2
265	P67	max	T	.681	1	.015	1	.333	1	1.568	2	.674	1
266		min		.146	2	0	2	.073	2	1.557	1	.146	2
267		max	B	0	2	-.172	2	.356	1	-.023	1	.719	1
268		min		-.014	1	-.726	1	.087	2	-.045	2	.173	2
269	P68	max	T	.612	1	.01	1	.301	1	1.553	2	.607	1
270		min		.133	2	0	2	.067	2	1.552	1	.134	2
271		max	B	.002	2	-.155	2	.321	1	-.03	1	.647	1
272		min		-.009	1	-.651	1	.079	2	-.066	2	.156	2
273	P69	max	T	.518	1	0	1	.259	1	1.562	1	.518	1
274		min		.112	2	0	2	.057	2	1.548	2	.113	2
275		max	B	.001	2	-.135	2	.281	1	-.013	1	.562	1
276		min		0	1	-.562	1	.068	2	-.04	2	.136	2
277	P70	max	T	.423	1	-.002	2	.213	1	1.551	1	.424	1
278		min		.094	2	-.002	1	.048	2	1.522	2	.095	2
279		max	B	.002	2	-.111	2	.231	1	-.025	1	.462	1
280		min		.002	1	-.461	1	.056	2	-.068	2	.112	2
281	P71	max	T	.53	1	.003	1	.263	1	1.539	1	.528	1
282		min		.118	2	-.003	2	.06	2	1.528	2	.119	2
283		max	B	.004	2	-.135	2	.281	1	-.044	1	.563	1
284		min		-.003	1	-.564	1	.069	2	-.098	2	.137	2
285	P72	max	T	.435	1	-.006	1	.221	1	1.514	1	.438	1
286		min		.099	2	-.006	2	.053	2	1.485	2	.102	2
287		max	B	.008	2	-.112	2	.236	1	-.071	1	.468	1
288		min		.007	1	-.465	1	.06	2	-.15	2	.116	2
289	P73	max	T	.315	1	-.003	2	.16	1	1.523	1	.318	1
290		min		.073	2	-.005	1	.038	2	1.472	2	.074	2
291		max	B	.005	1	-.084	2	.176	1	-.052	1	.35	1
292		min		.003	2	-.347	1	.044	2	-.121	2	.085	2
293	P74	max	T	.196	1	-.006	2	.104	1	1.448	1	.202	1
294		min		.049	2	-.011	1	.027	2	1.362	2	.052	2
295		max	B	.012	1	-.054	2	.117	1	-.122	1	.228	1
296		min		.007	2	-.222	1	.03	2	-.241	2	.058	2
297	P75	max	T	.33	1	-.01	2	.175	1	1.462	1	.34	1
298		min		.079	2	-.019	1	.045	2	1.412	2	.085	2
299		max	B	.021	1	-.087	2	.188	1	-.125	1	.365	1
300		min		.013	2	-.354	1	.05	2	-.238	2	.094	2
301	P76	max	T	.218	1	-.018	2	.13	1	1.347	1	.241	1
302		min		.058	2	-.041	1	.038	2	1.283	2	.069	2
303		max	B	.044	1	-.062	2	.141	1	-.24	1	.263	1
304		min		.024	2	-.237	1	.043	2	-.384	2	.077	2
305	P77	max	T	.075	1	-.013	2	.053	1	1.146	1	.095	1
306		min		.026	2	-.031	1	.02	2	1.093	2	.035	2
307		max	B	.03	1	-.027	2	.062	1	-.383	1	.112	1
308		min		.016	2	-.093	1	.022	2	-.542	2	.038	2
309	P78	max	T	.014	1	-.033	2	.071	1	.698	2	.135	1
310		min		.013	2	-.127	1	.023	2	.51	1	.041	2
311		max	B	.12	1	-.012	2	.07	1	2.195	2	.132	1
312		min		.042	2	-.02	1	.027	2	2.13	1	.049	2
313	P79	max	T	.113	1	-.032	2	.101	1	1.095	1	.176	1
314		min		.039	2	-.089	1	.036	2	1.086	2	.062	2
315		max	B	.094	1	-.041	2	.111	1	-.482	1	.194	1
316		min		.042	2	-.128	1	.042	2	-.592	2	.072	2

Envelope Plate/Shell Principal Stresses (Continued)

	Plate		Sur...	Sigma1 [ksi]	LC	Sigma2 [ksi]	LC	Tau Max [k...	LC	Angle [rad]	LC	Von Mises [ksi]	LC
317	P80	max	T	.045	1	-.057	2	.118	1	.876	2	.218	1
318		min		.026	2	-.192	1	.041	2	.769	1	.073	2
319		max	B	.2	1	-.027	2	.128	1	2.352	2	.233	1
320		min		.073	2	-.055	1	.05	2	2.347	1	.09	2
321	P81	max	T	.008	2	-.066	2	.145	1	.489	2	.289	1
322		min		.002	1	-.288	1	.037	2	.326	1	.071	2
323		max	B	.285	1	-.004	1	.145	1	2.005	2	.287	1
324		min		.081	2	-.007	2	.044	2	1.911	1	.085	2
325	P82	max	T	.006	2	-.106	2	.234	1	.41	2	.471	1
326		min		-.003	1	-.472	1	.056	2	.279	1	.11	2
327		max	B	.476	1	.002	1	.237	1	1.935	2	.475	1
328		min		.128	2	-.005	2	.067	2	1.855	1	.131	2
329	P83	max	T	.018	2	-.092	2	.181	1	.731	2	.357	1
330		min		.01	1	-.351	1	.055	2	.586	1	.103	2
331		max	B	.365	1	-.017	1	.191	1	2.224	2	.374	1
332		min		.116	2	-.019	2	.067	2	2.162	1	.126	2
333	P84	max	T	.014	2	-.137	2	.268	1	.653	2	.541	1
334		min		-.012	1	-.548	1	.075	2	.512	1	.144	2
335		max	B	.568	1	.007	1	.281	1	2.157	2	.565	1
336		min		.168	2	-.013	2	.091	2	2.085	1	.175	2
337	P85	max	T	.006	2	-.149	2	.33	1	.385	2	.663	1
338		min		-.007	1	-.666	1	.078	2	.269	1	.152	2
339		max	B	.678	1	.006	1	.336	1	1.913	2	.675	1
340		min		.177	2	-.005	2	.091	2	1.842	1	.18	2
341	P86	max	T	.007	2	-.187	2	.417	1	.394	2	.84	1
342		min		-.01	1	-.845	1	.097	2	.278	1	.19	2
343		max	B	.869	1	.01	1	.43	1	1.921	2	.864	1
344		min		.224	2	-.004	2	.114	2	1.85	1	.226	2
345	P87	max	T	.01	2	-.187	2	.368	1	.619	2	.753	1
346		min		-.033	1	-.769	1	.099	2	.486	1	.193	2
347		max	B	.799	1	.029	1	.385	1	2.128	2	.785	1
348		min		.227	2	-.008	2	.118	2	2.057	1	.231	2
349	P88	max	T	.004	2	-.237	2	.465	1	.613	2	.965	1
350		min		-.065	1	-.995	1	.121	2	.482	1	.24	2
351		max	B	1.038	1	.061	1	.489	1	2.123	2	1.009	1
352		min		.288	2	0	2	.144	2	2.052	1	.288	2
353	P89	max	T	.005	2	-.204	2	.462	1	.43	2	.937	1
354		min		-.025	1	-.95	1	.104	2	.312	1	.206	2
355		max	B	.99	1	.024	1	.483	1	1.95	2	.978	1
356		min		.252	2	-.001	2	.127	2	1.882	1	.253	2
357	P90	max	T	.001	2	-.192	2	.454	1	.477	2	.917	1
358		min		-.017	1	-.925	1	.097	2	.362	1	.193	2
359		max	B	.982	1	.013	1	.485	1	1.964	2	.976	1
360		min		.252	2	0	2	.126	2	1.923	1	.252	2
361	P91	max	T	-.008	2	-.274	2	.527	1	.62	2	1.12	1
362		min		-.122	1	-1.176	1	.133	2	.484	1	.27	2
363		max	B	1.233	1	.119	1	.557	1	2.123	2	1.178	1
364		min		.335	2	.015	2	.16	2	2.052	1	.328	2
365	P92	max	T	-.046	2	-.286	2	.499	1	.647	2	1.142	1
366		min		-.249	1	-1.246	1	.12	2	.465	1	.266	2
367		max	B	1.312	1	.229	1	.542	1	2.08	2	1.214	1
368		min		.35	2	.045	2	.153	2	2.019	1	.33	2
369	P93	max	T	-.012	2	-.185	2	.401	1	.506	2	.835	1
370		min		-.061	1	-.864	1	.087	2	.372	1	.179	2
371		max	B	.92	1	.065	1	.428	1	1.92	2	.889	1
372		min		.24	2	.021	2	.109	2	1.913	1	.23	2
373	P94	max	T	-.03	2	-.17	2	.288	1	.564	2	.657	1

Envelope Plate/Shell Principal Stresses (Continued)

	Plate		Sur...	Sigma1 [ksi]	LC	Sigma2 [ksi]	LC	Tau Max [k...	LC	Angle [rad]	LC	Von Mises [ksi]	LC
374		min		-.139	1	-.716	1	.07	2	.416	1	.157	2
375		max	B	.747	1	.153	1	.297	1	1.938	1	.684	1
376		min		.197	2	.048	2	.074	2	1.928	2	.178	2
377	P95	max	T	-.048	2	-.284	2	.34	1	.945	2	.843	1
378		min		-.262	1	-.943	1	.118	2	.851	1	.264	2
379		max	B	.909	1	.283	1	.313	1	-.713	2	.806	1
380		min		.244	2	.08	2	.082	2	-.753	1	.215	2
381	P96	max	T	-.069	2	-.435	2	.621	1	1.045	2	1.413	1
382		min		-.294	1	-1.537	1	.183	2	1.019	1	.405	2
383		max	B	1.515	1	.321	1	.597	1	-.51	2	1.383	1
384		min		.412	2	.102	2	.155	2	-.551	1	.372	2
385	P97	max	T	-.017	2	-.135	2	.204	1	.71	2	.469	1
386		min		-.105	1	-.513	1	.059	2	.613	1	.127	2
387		max	B	.516	1	.128	1	.194	1	2.142	1	.465	1
388		min		.136	2	.042	2	.047	2	2.136	2	.121	2
389	P98	max	T	-.006	2	-.077	2	.122	1	.789	2	.267	1
390		min		-.04	1	-.285	1	.036	2	.763	1	.074	2
391		max	B	.283	1	.052	1	.116	1	2.333	1	.261	1
392		min		.076	2	.018	2	.029	2	-.779	2	.069	2
393	P99	max	T	-.083	2	-.488	2	.701	1	.791	2	1.62	1
394		min		-.371	1	-1.773	1	.203	2	.763	1	.453	2
395		max	B	1.746	1	.41	1	.668	1	2.331	1	1.582	1
396		min		.462	2	.121	2	.17	2	-.781	2	.415	2
397	P100	max	T	-.017	2	-.135	2	.198	1	.887	1	.455	1
398		min		-.101	1	-.497	1	.059	2	.874	2	.128	2
399		max	B	.499	1	.129	1	.185	1	-.548	2	.449	1
400		min		.138	2	.042	2	.048	2	-.644	1	.122	2
401	P101	max	T	-.026	2	-.169	2	.268	1	2.13	2	.625	1
402		min		-.152	1	-.687	1	.072	2	2.08	1	.158	2
403		max	B	.733	1	.189	1	.272	1	.409	1	.659	1
404		min		.197	2	.048	2	.075	2	.332	2	.178	2
405	P102	max	T	-.055	2	-.425	2	.683	1	-.51	1	1.556	1
406		min		-.327	1	-1.694	1	.185	2	-.548	2	.401	2
407		max	B	1.653	1	.402	1	.626	1	1.077	1	1.493	1
408		min		.399	2	.107	2	.146	2	1.066	2	.358	2
409	P103	max	T	-.006	2	-.182	2	.346	1	2.088	2	.732	1
410		min		-.075	1	-.766	1	.088	2	2.031	1	.18	2
411		max	B	.871	1	.098	1	.386	1	.376	1	.826	1
412		min		.248	2	.022	2	.113	2	.32	2	.238	2
413	P104	max	T	-.031	2	-.282	2	.422	1	-.614	1	.997	1
414		min		-.255	1	-1.1	1	.126	2	-.647	2	.268	2
415		max	B	1.013	1	.345	1	.334	1	.927	1	.892	1
416		min		.228	2	.091	2	.068	2	.816	2	.198	2
417	P105	max	T	-.116	2	-.359	2	.585	1	-.368	1	1.478	1
418		min		-.492	1	-1.661	1	.122	2	-.389	2	.318	2
419		max	B	1.844	1	.461	1	.692	1	1.167	1	1.663	1
420		min		.456	2	.084	2	.186	2	1.078	2	.42	2
421	P106	max	T	-.092	2	-.308	2	.457	1	-.56	1	1.176	1
422		min		-.412	1	-1.327	1	.108	2	-.628	2	.274	2
423		max	B	1.452	1	.391	1	.531	1	1.008	1	1.302	1
424		min		.374	2	.069	2	.152	2	.911	2	.345	2
425	P107	max	T	-.167	2	-.535	2	.805	1	-.389	1	2.043	1
426		min		-.688	1	-2.298	1	.184	2	-.39	2	.474	2
427		max	B	2.482	1	.656	1	.913	1	1.142	1	2.228	1
428		min		.634	2	.134	2	.25	2	1.066	2	.578	2
429	P108	max	T	-.157	2	-.326	2	.368	1	-.589	1	1.215	1
430		min		-.667	1	-1.403	1	.084	2	-.648	2	.282	2

Envelope Plate/Shell Principal Stresses (Continued)

	Plate		Sur...	Sigma1 [ksi]	LC	Sigma2 [ksi]	LC	Tau Max [k...	LC	Angle [rad]	LC	Von Mises [ksi]	LC
431		max	B	1.562	1	.654	1	.454	1	.962	1	1.359	1
432		min		.413	2	.143	2	.135	2	.857	2	.364	2
433	P109	max	T	-.049	2	-.252	2	.396	1	-.613	1	.943	1
434		min		-.251	1	-1.043	1	.101	2	-.674	2	.231	2
435		max	B	1.14	1	.239	1	.45	1	.96	1	1.041	1
436		min		.301	2	.035	2	.133	2	.871	2	.286	2
437	P110	max	T	-.024	2	-.196	2	.316	1	-.645	1	.718	1
438		min		-.147	1	-.78	1	.086	2	-.702	2	.185	2
439		max	B	.853	1	.134	1	.36	1	.932	1	.795	1
440		min		.232	2	.009	2	.111	2	.847	2	.227	2
441	P111	max	T	-.089	2	-.242	2	.298	1	-.709	1	.874	1
442		min		-.407	1	-1.004	1	.076	2	-.783	2	.212	2
443		max	B	1.126	1	.389	1	.368	1	.873	1	.99	1
444		min		.308	2	.073	2	.117	2	.787	2	.278	2
445	P112	max	T	-.05	2	-.183	2	.241	1	2.296	2	.643	1
446		min		-.249	1	-.73	1	.067	2	-.779	1	.164	2
447		max	B	.826	1	.231	1	.298	1	.818	1	.738	1
448		min		.234	2	.034	2	.1	2	.745	2	.219	2
449	P113	max	T	-.008	2	-.146	2	.235	1	-.697	1	.515	1
450		min		-.078	1	-.549	1	.069	2	-.742	2	.142	2
451		max	B	.605	1	.063	1	.271	1	.884	1	.576	1
452		min		.171	2	-.008	2	.089	2	.805	2	.175	2
453	P114	max	T	.005	2	-.103	2	.17	1	2.336	1	.349	1
454		min		-.016	1	-.357	1	.054	2	2.328	2	.106	2
455		max	B	.398	1	0	1	.199	1	.785	1	.398	1
456		min		.12	2	-.022	2	.071	2	.731	2	.133	2
457	P115	max	T	-.022	2	-.135	2	.191	1	2.285	1	.461	1
458		min		-.131	1	-.512	1	.056	2	2.238	2	.126	2
459		max	B	.586	1	.112	1	.237	1	.756	1	.539	1
460		min		.174	2	.005	2	.084	2	.703	2	.171	2
461	P116	max	T	0	2	-.097	2	.155	1	2.158	1	.326	1
462		min		-.03	1	-.34	1	.048	2	2.156	2	.096	2
463		max	B	.395	1	.013	1	.191	1	.652	1	.389	1
464		min		.125	2	-.018	2	.072	2	.636	2	.135	2
465	P117	max	T	.056	1	-.069	2	.134	1	2.21	2	.244	1
466		min		.018	2	-.211	1	.044	2	2.138	1	.08	2
467		max	B	.239	1	-.038	2	.156	1	.616	2	.283	1
468		min		.081	2	-.074	1	.059	2	.607	1	.105	2
469	P118	max	T	.152	1	-.044	2	.135	1	2.053	2	.234	1
470		min		.034	2	-.117	1	.039	2	1.904	1	.067	2
471		max	B	.134	1	-.057	2	.152	1	.474	2	.263	1
472		min		.052	2	-.169	1	.055	2	.386	1	.095	2
473	P119	max	T	.072	1	-.066	2	.142	1	2.046	2	.256	1
474		min		.02	2	-.212	1	.043	2	1.987	1	.078	2
475		max	B	.25	1	-.039	2	.168	1	.543	2	.302	1
476		min		.087	2	-.086	1	.063	2	.501	1	.112	2
477	P120	max	T	.183	1	-.044	2	.153	1	1.925	2	.267	1
478		min		.041	2	-.124	1	.042	2	1.826	1	.073	2
479		max	B	.148	1	-.061	2	.171	1	.435	2	.297	1
480		min		.059	2	-.194	1	.06	2	.34	1	.103	2
481	P121	max	T	.263	1	-.027	2	.163	1	1.898	2	.3	1
482		min		.053	2	-.063	1	.04	2	1.742	1	.07	2
483		max	B	.073	1	-.079	2	.178	1	.338	2	.325	1
484		min		.032	2	-.282	1	.056	2	.218	1	.1	2
485	P122	max	T	.374	1	-.016	2	.202	1	1.782	2	.39	1
486		min		.073	2	-.029	1	.044	2	1.654	1	.082	2
487		max	B	.035	1	-.102	2	.216	1	.234	2	.416	1

Envelope Plate/Shell Principal Stresses (Continued)

	Plate		Sur...	Sigma1 [ksi]	LC	Sigma2 [ksi]	LC	Tau Max [k...	LC	Angle [rad]	LC	Von Mises [ksi]	LC
488		min		.02	2	-.397	1	.061	2	.12	1	.114	2
489	P123	max	T	.296	1	-.027	2	.18	1	1.82	2	.333	1
490		min		.062	2	-.064	1	.045	2	1.716	1	.079	2
491		max	B	.08	1	-.083	2	.193	1	.33	2	.354	1
492		min		.038	2	-.307	1	.061	2	.215	1	.107	2
493	P124	max	T	.404	1	-.015	2	.213	1	1.742	2	.416	1
494		min		.083	2	-.022	1	.049	2	1.651	1	.092	2
495		max	B	.033	1	-.106	2	.226	1	.243	2	.436	1
496		min		.023	2	-.419	1	.065	2	.134	1	.119	2
497	P125	max	T	.477	1	-.006	1	.242	1	1.708	2	.48	1
498		min		.093	2	-.008	2	.051	2	1.608	1	.098	2
499		max	B	.012	2	-.125	2	.258	1	.162	2	.51	1
500		min		.01	1	-.505	1	.068	2	.066	1	.131	2
501	P126	max	T	.569	1	.011	1	.279	1	1.662	2	.563	1
502		min		.112	2	-.003	2	.057	2	1.583	1	.113	2
503		max	B	.006	2	-.145	2	.297	1	.113	2	.598	1
504		min		-.007	1	-.602	1	.076	2	.035	1	.149	2
505	P127	max	T	.504	1	.009	1	.247	1	1.69	2	.5	1
506		min		.103	2	-.007	2	.055	2	1.613	1	.106	2
507		max	B	.013	2	-.127	2	.261	1	.178	2	.522	1
508		min		-.001	1	-.523	1	.07	2	.083	1	.134	2
509	P128	max	T	.593	1	.033	1	.28	1	1.655	2	.578	1
510		min		.121	2	0	2	.06	2	1.59	1	.121	2
511		max	B	.005	2	-.147	2	.295	1	.129	2	.604	1
512		min		-.026	1	-.616	1	.076	2	.051	1	.15	2
513	P129	max	T	.648	1	.024	1	.312	1	1.634	2	.636	1
514		min		.128	2	0	2	.064	2	1.57	1	.128	2
515		max	B	.002	2	-.164	2	.332	1	.079	2	.675	1
516		min		-.02	1	-.685	1	.083	2	.016	1	.165	2
517	P130	max	T	.714	1	.033	1	.341	1	1.617	2	.698	1
518		min		.142	2	.003	2	.07	2	1.562	1	.141	2
519		max	B	0	2	-.179	2	.363	1	.055	2	.741	1
520		min		-.03	1	-.755	1	.089	2	.004	1	.178	2
521	P131	max	T	.671	1	.051	1	.31	1	1.633	2	.647	1
522		min		.137	2	.005	2	.066	2	1.576	1	.134	2
523		max	B	0	2	-.165	2	.327	1	.094	2	.677	1
524		min		-.045	1	-.698	1	.082	2	.03	1	.165	2
525	P132	max	T	.736	1	.065	1	.335	1	1.619	2	.706	1
526		min		.151	2	.009	2	.071	2	1.568	1	.146	2
527		max	B	-.004	2	-.179	2	.354	1	.066	2	.739	1
528		min		-.059	1	-.767	1	.088	2	.015	1	.177	2
529	P133	max	T	.767	1	.041	1	.363	1	1.607	2	.748	1
530		min		.154	2	.005	2	.074	2	1.558	1	.151	2
531		max	B	-.003	2	-.191	2	.387	1	.037	2	.793	1
532		min		-.037	1	-.811	1	.094	2	-.004	1	.19	2
533	P134	max	T	.807	1	.046	1	.381	1	1.601	2	.785	1
534		min		.163	2	.007	2	.078	2	1.556	1	.16	2
535		max	B	-.004	2	-.2	2	.405	1	.022	2	.832	1
536		min		-.042	1	-.853	1	.098	2	-.009	1	.198	2
537	P135	max	T	.789	1	.076	1	.356	1	1.611	2	.753	1
538		min		.162	2	.012	2	.075	2	1.562	1	.156	2
539		max	B	-.007	2	-.191	2	.376	1	.045	2	.79	1
540		min		-.069	1	-.822	1	.092	2	.004	1	.188	2
541	P136	max	T	.828	1	.083	1	.372	1	1.605	2	.789	1
542		min		.171	2	.014	2	.079	2	1.559	1	.164	2
543		max	B	-.009	2	-.2	2	.393	1	.027	2	.827	1
544		min		-.077	1	-.863	1	.096	2	-.004	1	.196	2

Envelope Plate/Shell Principal Stresses (Continued)

	Plate		Sur...	Sigma1 [ksi]	LC	Sigma2 [ksi]	LC	Tau Max [k...	LC	Angle [rad]	LC	Von Mises [ksi]	LC
545	P137	max	T	.833	1	.049	1	.392	1	1.597	2	.809	1
546		min		.17	2	.008	2	.081	2	1.555	1	.166	2
547		max	B	-.005	2	-.206	2	.417	1	.01	2	.857	1
548		min		-.046	1	-.879	1	.1	2	-.013	1	.204	2
549	P138	max	T	.844	1	.051	1	.397	1	1.595	2	.82	1
550		min		.174	2	.008	2	.083	2	1.554	1	.17	2
551		max	B	-.006	2	-.209	2	.422	1	0	2	.868	1
552		min		-.048	1	-.891	1	.102	2	-.017	1	.206	2
553	P139	max	T	.853	1	.089	1	.382	1	1.602	2	.812	1
554		min		.177	2	.015	2	.081	2	1.556	1	.17	2
555		max	B	-.01	2	-.206	2	.404	1	.012	2	.851	1
556		min		-.082	1	-.889	1	.098	2	-.011	1	.201	2
557	P140	max	T	.864	1	.091	1	.386	1	1.6	2	.822	1
558		min		.181	2	.015	2	.083	2	1.554	1	.174	2
559		max	B	-.011	2	-.209	2	.408	1	-.002	2	.862	1
560		min		-.085	1	-.901	1	.099	2	-.018	1	.203	2
561	P141	max	T	.842	1	.052	1	.395	1	1.592	2	.817	1
562		min		.175	2	.008	2	.083	2	1.554	1	.171	2
563		max	B	-.006	2	-.208	2	.42	1	-.011	2	.865	1
564		min		-.048	1	-.888	1	.101	2	-.02	1	.205	2
565	P142	max	T	.826	1	.05	1	.388	1	1.59	2	.802	1
566		min		.173	2	.007	2	.083	2	1.554	1	.17	2
567		max	B	-.005	2	-.204	2	.411	1	-.022	2	.847	1
568		min		-.047	1	-.87	1	.099	2	-.023	1	.201	2
569	P143	max	T	.861	1	.092	1	.385	1	1.598	2	.82	1
570		min		.182	2	.015	2	.083	2	1.551	1	.175	2
571		max	B	-.011	2	-.208	2	.406	1	-.016	2	.858	1
572		min		-.086	1	-.898	1	.099	2	-.024	1	.203	2
573	P144	max	T	.845	1	.09	1	.378	1	1.595	2	.804	1
574		min		.181	2	.014	2	.083	2	1.549	1	.174	2
575		max	B	-.01	2	-.204	2	.398	1	-.03	1	.841	1
576		min		-.084	1	-.88	1	.097	2	-.031	2	.199	2
577	P145	max	T	.796	1	.048	1	.374	1	1.586	2	.773	1
578		min		.169	2	.006	2	.081	2	1.552	1	.166	2
579		max	B	-.004	2	-.197	2	.396	1	-.027	1	.816	1
580		min		-.045	1	-.838	1	.096	2	-.034	2	.195	2
581	P146	max	T	.753	1	.043	1	.355	1	1.58	2	.732	1
582		min		.162	2	.005	2	.079	2	1.55	1	.16	2
583		max	B	-.003	2	-.186	2	.375	1	-.033	1	.772	1
584		min		-.04	1	-.791	1	.092	2	-.049	2	.185	2
585	P147	max	T	.815	1	.085	1	.365	1	1.591	2	.776	1
586		min		.176	2	.013	2	.082	2	1.546	1	.17	2
587		max	B	-.009	2	-.197	2	.384	1	-.037	1	.811	1
588		min		-.08	1	-.848	1	.094	2	-.046	2	.193	2
589	P148	max	T	.772	1	.078	1	.347	1	1.585	2	.736	1
590		min		.17	2	.011	2	.079	2	1.542	1	.164	2
591		max	B	-.007	2	-.187	2	.364	1	-.045	1	.768	1
592		min		-.074	1	-.802	1	.09	2	-.064	2	.184	2
593	P149	max	T	.696	1	.036	1	.33	1	1.57	2	.679	1
594		min		.152	2	.003	2	.075	2	1.545	1	.151	2
595		max	B	0	2	-.173	2	.349	1	-.04	1	.715	1
596		min		-.034	1	-.731	1	.086	2	-.068	2	.172	2
597	P150	max	T	.628	1	.027	1	.301	1	1.554	2	.615	1
598		min		.14	2	0	2	.07	2	1.536	1	.14	2
599		max	B	.002	2	-.156	2	.317	1	-.052	1	.647	1
600		min		-.025	1	-.659	1	.079	2	-.095	2	.157	2
601	P151	max	T	.716	1	.068	1	.324	1	1.576	2	.684	1

Envelope Plate/Shell Principal Stresses (Continued)

	Plate		Sur...	Sigma1 [ksi]	LC	Sigma2 [ksi]	LC	Tau Max [k...	LC	Angle [rad]	LC	Von Mises [ksi]	LC
602		min		.16	2	.008	2	.076	2	1.535	1	.156	2
603		max	B	-.004	2	-.175	2	.339	1	-.056	1	.713	1
604		min		-.064	1	-.743	1	.085	2	-.086	2	.173	2
605	P152	max	T	.648	1	.055	1	.296	1	1.562	2	.622	1
606		min		.148	2	.004	2	.072	2	1.525	1	.146	2
607		max	B	0	2	-.159	2	.31	1	-.07	1	.647	1
608		min		-.051	1	-.671	1	.08	2	-.115	2	.159	2
609	P153	max	T	.547	1	.014	1	.267	1	1.53	2	.54	1
610		min		.125	2	-.003	2	.064	2	1.521	1	.127	2
611		max	B	.007	2	-.137	2	.281	1	-.071	1	.568	1
612		min		-.012	1	-.574	1	.072	2	-.132	2	.14	2
613	P154	max	T	.456	1	-.002	1	.229	1	1.493	1	.457	1
614		min		.107	2	-.008	2	.058	2	1.491	2	.112	2
615		max	B	.013	2	-.115	2	.242	1	-.103	1	.481	1
616		min		.005	1	-.478	1	.064	2	-.186	2	.122	2
617	P155	max	T	.569	1	.037	1	.266	1	1.541	2	.551	1
618		min		.133	2	-.001	2	.067	2	1.51	1	.133	2
619		max	B	.006	2	-.14	2	.278	1	-.091	1	.573	1
620		min		-.033	1	-.588	1	.073	2	-.153	2	.144	2
621	P156	max	T	.479	1	.014	1	.233	1	1.51	2	.472	1
622		min		.116	2	-.007	2	.062	2	1.484	1	.12	2
623		max	B	.014	2	-.12	2	.243	1	-.123	1	.491	1
624		min		-.008	1	-.495	1	.067	2	-.205	2	.127	2
625	P157	max	T	.355	1	-.015	2	.19	1	1.441	1	.368	1
626		min		.088	2	-.026	1	.051	2	1.429	2	.096	2
627		max	B	.03	1	-.092	2	.201	1	-.16	1	.389	1
628		min		.022	2	-.373	1	.057	2	-.268	2	.105	2
629	P158	max	T	.247	1	-.025	2	.154	1	1.344	1	.283	1
630		min		.067	2	-.061	1	.046	2	1.333	2	.082	2
631		max	B	.068	1	-.069	2	.165	1	-.262	1	.302	1
632		min		.035	2	-.262	1	.052	2	-.386	2	.092	2
633	P159	max	T	.38	1	-.016	2	.199	1	1.463	2	.389	1
634		min		.096	2	-.017	1	.056	2	1.44	1	.105	2
635		max	B	.025	2	-.098	2	.209	1	-.175	1	.406	1
636		min		.024	1	-.393	1	.061	2	-.275	2	.112	2
637	P160	max	T	.275	1	-.027	2	.167	1	1.395	2	.309	1
638		min		.075	2	-.06	1	.051	2	1.365	1	.092	2
639		max	B	.071	1	-.075	2	.178	1	-.259	1	.326	1
640		min		.04	2	-.285	1	.058	2	-.369	2	.101	2
641	P161	max	T	.142	1	-.041	2	.13	1	1.197	2	.226	1
642		min		.047	2	-.118	1	.044	2	1.171	1	.075	2
643		max	B	.13	1	-.048	2	.142	1	-.436	1	.247	1
644		min		.056	2	-.155	1	.052	2	-.533	2	.09	2
645	P162	max	T	.054	1	-.064	2	.135	1	1.042	2	.246	1
646		min		.029	2	-.215	1	.046	2	.942	1	.082	2
647		max	B	.233	1	-.03	2	.15	1	-.653	1	.273	1
648		min		.087	2	-.066	1	.058	2	-.678	2	.105	2
649	P163	max	T	.167	1	-.043	2	.144	1	1.301	2	.251	1
650		min		.053	2	-.121	1	.048	2	1.243	1	.084	2
651		max	B	.138	1	-.053	2	.157	1	-.387	1	.273	1
652		min		.062	2	-.177	1	.057	2	-.48	2	.099	2
653	P164	max	T	.065	1	-.065	2	.138	1	1.19	2	.25	1
654		min		.031	2	-.211	1	.048	2	1.077	1	.085	2
655		max	B	.237	1	-.031	2	.156	1	-.549	1	.282	1
656		min		.092	2	-.076	1	.062	2	-.591	2	.111	2
657	P165	max	T	.014	2	-.097	2	.174	1	.911	2	.354	1
658		min		-.012	1	-.36	1	.055	2	.763	1	.105	2

Envelope Plate/Shell Principal Stresses (Continued)

	Plate		Sur...	Sigma1 [ksi]	LC	Sigma2 [ksi]	LC	Tau Max [k...	LC	Angle [rad]	LC	Von Mises [ksi]	LC
659		max	B	.386	1	.002	1	.192	1	2.355	2	.385	1
660		min		.129	2	-.015	2	.072	2	2.321	1	.136	2
661	P166	max	T	0	2	-.14	2	.238	1	.825	2	.515	1
662		min		-.071	1	-.547	1	.07	2	.667	1	.14	2
663		max	B	.582	1	.062	1	.26	1	2.288	2	.554	1
664		min		.18	2	0	2	.09	2	2.23	1	.181	2
665	P167	max	T	.01	2	-.095	2	.156	1	1.08	2	.327	1
666		min		-.029	1	-.341	1	.052	2	.915	1	.1	2
667		max	B	.376	1	.018	1	.179	1	-.684	2	.368	1
668		min		.131	2	-.01	2	.071	2	-.695	1	.137	2
669	P168	max	T	-.013	2	-.134	2	.194	1	.994	2	.462	1
670		min		-.123	1	-.511	1	.06	2	.803	1	.128	2
671		max	B	.557	1	.112	1	.223	1	2.349	1	.511	1
672		min		.181	2	.013	2	.084	2	-.748	2	.175	2
673	P169	max	T	-.016	2	-.191	2	.317	1	.776	2	.712	1
674		min		-.138	1	-.771	1	.088	2	.621	1	.184	2
675		max	B	.817	1	.13	1	.343	1	2.25	2	.76	1
676		min		.242	2	.017	2	.113	2	2.186	1	.234	2
677	P170	max	T	-.041	2	-.248	2	.395	1	.746	2	.931	1
678		min		-.237	1	-1.027	1	.104	2	.592	1	.231	2
679		max	B	1.087	1	.232	1	.428	1	2.227	2	.992	1
680		min		.312	2	.044	2	.134	2	2.159	1	.293	2
681	P171	max	T	-.042	2	-.182	2	.245	1	.933	2	.639	1
682		min		-.235	1	-.724	1	.07	2	.737	1	.165	2
683		max	B	.783	1	.224	1	.279	1	2.352	2	.699	1
684		min		.242	2	.042	2	.1	2	2.291	1	.224	2
685	P172	max	T	-.082	2	-.241	2	.304	1	.873	2	.865	1
686		min		-.384	1	-.991	1	.079	2	.676	1	.212	2
687		max	B	1.066	1	.374	1	.346	1	2.31	2	.937	1
688		min		.317	2	.082	2	.118	2	2.239	1	.285	2
689	P173	max	T	-.082	2	-.305	2	.458	1	.704	2	1.16	1
690		min		-.39	1	-1.305	1	.111	2	.541	1	.273	2
691		max	B	1.383	1	.379	1	.502	1	2.186	2	1.238	1
692		min		.387	2	.082	2	.152	2	2.111	1	.353	2
693	P174	max	T	-.107	2	-.347	2	.591	1	.444	2	1.471	1
694		min		-.465	1	-1.647	1	.12	2	.368	1	.307	2
695		max	B	1.762	1	.449	1	.657	1	2.03	2	1.586	1
696		min		.477	2	.098	2	.189	2	1.96	1	.436	2
697	P175	max	T	-.154	2	-.323	2	.378	1	.747	2	1.2	1
698		min		-.627	1	-1.384	1	.084	2	.568	1	.279	2
699		max	B	1.482	1	.621	1	.431	1	2.237	2	1.289	1
700		min		.427	2	.153	2	.137	2	2.15	1	.374	2
701	P176	max	T	-.158	2	-.526	2	.797	1	.436	2	2.003	1
702		min		-.655	1	-2.249	1	.184	2	.387	1	.467	2
703		max	B	2.364	1	.639	1	.862	1	2.047	2	2.118	1
704		min		.655	2	.15	2	.253	2	1.981	1	.595	2
705	P177	max	T	-.064	2	-.431	2	.641	1	.541	2	1.476	1
706		min		-.33	1	-1.612	1	.184	2	.498	1	.403	2
707		max	B	1.587	1	.373	1	.607	1	2.091	2	1.437	1
708		min		.407	2	.101	2	.153	2	2.058	1	.367	2
709	P178	max	T	-.028	2	-.173	2	.247	1	1.06	1	.585	1
710		min		-.153	1	-.646	1	.072	2	1.025	2	.161	2
711		max	B	.673	1	.176	1	.249	1	-.337	2	.605	1
712		min		.202	2	.047	2	.078	2	-.444	1	.183	2
713	P179	max	T	-.043	2	-.281	2	.395	1	.648	2	.944	1
714		min		-.255	1	-1.046	1	.119	2	.6	1	.262	2
715		max	B	.993	1	.308	1	.343	1	2.325	2	.88	1

Envelope Plate/Shell Principal Stresses (Continued)

	Plate		Sur...	Sigma1 [ksi]	LC	Sigma2 [ksi]	LC	Tau Max [k...	LC	Angle [rad]	LC	Von Mises [ksi]	LC
716		min		.236	2	.083	2	.077	2	2.187	1	.208	2
717	P180	max	T	-.01	2	-.191	2	.32	1	1.108	1	.682	1
718		min		-.077	1	-.718	1	.091	2	1.08	2	.186	2
719		max	B	.78	1	.092	1	.344	1	-.33	2	.738	1
720		min		.251	2	.02	2	.116	2	-.406	1	.242	2
721	P181	max	T	.008	2	-.188	2	.39	1	2.069	2	.785	1
722		min		-.01	1	-.79	1	.098	2	2.027	1	.192	2
723		max	B	.912	1	.024	1	.444	1	.399	1	.9	1
724		min		.266	2	.003	2	.132	2	.354	2	.265	2
725	P182	max	T	-.021	2	-.28	2	.47	1	2.251	2	1.067	1
726		min		-.221	1	-1.16	1	.13	2	2.197	1	.27	2
727		max	B	1.287	1	.267	1	.51	1	.523	1	1.176	1
728		min		.363	2	.059	2	.152	2	.432	2	.338	2
729	P183	max	T	.011	2	-.194	2	.406	1	2.034	2	.808	1
730		min		.007	1	-.805	1	.103	2	1.998	1	.2	2
731		max	B	.925	1	.015	1	.455	1	.374	1	.917	1
732		min		.276	2	.005	2	.135	2	.322	2	.273	2
733	P184	max	T	.007	2	-.266	2	.522	1	2.23	2	1.069	1
734		min		-.048	1	-1.092	1	.137	2	2.193	1	.27	2
735		max	B	1.22	1	.097	1	.561	1	.554	1	1.174	1
736		min		.351	2	.029	2	.161	2	.475	2	.337	2
737	P185	max	T	-.091	2	-.33	2	.506	1	2.071	2	1.279	1
738		min		-.424	1	-1.437	1	.12	2	2.029	1	.296	2
739		max	B	1.706	1	.445	1	.63	1	.431	1	1.533	1
740		min		.504	2	.113	2	.195	2	.402	2	.458	2
741	P186	max	T	-.142	2	-.506	2	.757	1	2.051	2	1.887	1
742		min		-.602	1	-2.115	1	.182	2	2.042	1	.452	2
743		max	B	2.379	1	.627	1	.876	1	.457	1	2.136	1
744		min		.676	2	.167	2	.254	2	.42	2	.61	2
745	P187	max	T	-.065	2	-.295	2	.45	1	2.331	2	1.103	1
746		min		-.33	1	-1.23	1	.115	2	2.29	1	.269	2
747		max	B	1.392	1	.37	1	.511	1	.627	1	1.249	1
748		min		.403	2	.095	2	.154	2	.523	2	.365	2
749	P188	max	T	-.142	2	-.312	2	.349	1	-.748	2	1.141	1
750		min		-.617	1	-1.316	1	.085	2	-.785	1	.27	2
751		max	B	1.514	1	.641	1	.437	1	.681	1	1.316	1
752		min		.441	2	.156	2	.143	2	.568	2	.388	2
753	P189	max	T	-.237	2	-.608	2	.792	1	-.735	1	2.237	1
754		min		-.974	1	-2.559	1	.186	2	-.74	2	.531	2
755		max	B	2.841	1	.965	1	.938	1	.805	1	2.502	1
756		min		.777	2	.229	2	.274	2	.743	2	.692	2
757	P190	max	T	-.165	2	-.304	2	.311	1	-.586	1	1.129	1
758		min		-.681	1	-1.304	1	.069	2	-.633	2	.263	2
759		max	B	1.48	1	.66	1	.41	1	.941	1	1.284	1
760		min		.404	2	.15	2	.127	2	.837	2	.354	2
761	P191	max	T	-.163	2	-.289	2	.282	1	-.777	2	1.074	1
762		min		-.675	1	-1.239	1	.063	2	-.783	1	.251	2
763		max	B	1.451	1	.658	1	.397	1	.709	1	1.259	1
764		min		.425	2	.15	2	.137	2	.617	2	.373	2
765	P192	max	T	-.153	2	-.251	2	.227	1	-.66	1	.94	1
766		min		-.626	1	-1.081	1	.049	2	-.706	2	.22	2
767		max	B	1.267	1	.603	1	.332	1	.838	1	1.098	1
768		min		.365	2	.136	2	.115	2	.729	2	.32	2
769	P193	max	T	-.115	2	-.214	2	.196	1	2.265	2	.773	1
770		min		-.498	1	-.89	1	.049	2	-.768	1	.185	2
771		max	B	1.034	1	.474	1	.28	1	.815	1	.897	1
772		min		.294	2	.098	2	.098	2	.723	2	.26	2

Envelope Plate/Shell Principal Stresses (Continued)

	Plate		Sur...	Sigma1 [ksi]	LC	Sigma2 [ksi]	LC	Tau Max [k...	LC	Angle [rad]	LC	Von Mises [ksi]	LC
773	P194	max	T	-.066	2	-.159	2	.162	1	2.255	1	.548	1
774		min		-.308	1	-.632	1	.046	2	2.158	2	.138	2
775		max	B	.745	1	.285	1	.23	1	.741	1	.651	1
776		min		.221	2	.049	2	.086	2	.675	2	.201	2
777	P195	max	T	-.115	2	-.168	2	.119	1	2.285	2	.629	1
778		min		-.476	1	-.713	1	.027	2	-.686	1	.148	2
779		max	B	.866	1	.445	1	.21	1	.834	1	.75	1
780		min		.258	2	.094	2	.082	2	.708	2	.226	2
781	P196	max	T	-.071	2	-.125	2	.089	1	2.214	1	.436	1
782		min		-.319	1	-.497	1	.027	2	2.034	2	.109	2
783		max	B	.624	1	.289	1	.168	1	.722	1	.541	1
784		min		.196	2	.052	2	.072	2	.641	2	.176	2
785	P197	max	T	-.031	2	-.117	2	.142	1	2.138	1	.388	1
786		min		-.16	1	-.443	1	.043	2	2.077	2	.105	2
787		max	B	.53	1	.14	1	.195	1	.659	1	.476	1
788		min		.166	2	.014	2	.076	2	.627	2	.159	2
789	P198	max	T	-.002	2	-.084	2	.132	1	2.002	1	.281	1
790		min		-.03	1	-.295	1	.041	2	1.993	2	.083	2
791		max	B	.36	1	.016	1	.172	1	.567	2	.352	1
792		min		.121	2	-.015	2	.068	2	.553	1	.129	2
793	P199	max	T	-.032	2	-.093	2	.09	1	2.009	1	.296	1
794		min		-.162	1	-.342	1	.03	2	1.916	2	.082	2
795		max	B	.439	1	.141	1	.149	1	.611	1	.388	1
796		min		.148	2	.016	2	.066	2	.586	2	.14	2
797	P200	max	T	0	2	-.067	2	.103	1	1.858	1	.215	1
798		min		-.018	1	-.224	1	.034	2	1.837	2	.067	2
799		max	B	.294	1	.008	1	.143	1	.525	2	.29	1
800		min		.109	2	-.015	2	.062	2	.49	1	.117	2
801	P201	max	T	.092	1	-.058	2	.138	1	1.902	2	.244	1
802		min		.024	2	-.185	1	.041	2	1.863	1	.073	2
803		max	B	.23	1	-.04	2	.165	1	.489	2	.293	1
804		min		.086	2	-.1	1	.063	2	.423	1	.111	2
805	P202	max	T	.212	1	-.038	2	.157	1	1.818	2	.278	1
806		min		.048	2	-.103	1	.043	2	1.754	1	.075	2
807		max	B	.133	1	-.064	2	.175	1	.402	2	.306	1
808		min		.059	2	-.217	1	.061	2	.299	1	.106	2
809	P203	max	T	.115	1	-.045	2	.123	1	1.774	2	.213	1
810		min		.029	2	-.131	1	.037	2	1.753	1	.065	2
811		max	B	.179	1	-.042	2	.149	1	.455	2	.26	1
812		min		.077	2	-.118	1	.06	2	.37	1	.105	2
813	P204	max	T	.24	1	-.027	2	.148	1	1.722	2	.272	1
814		min		.055	2	-.057	1	.041	2	1.685	1	.073	2
815		max	B	.091	1	-.067	2	.165	1	.38	2	.295	1
816		min		.052	2	-.239	1	.06	2	.267	1	.103	2
817	P205	max	T	.327	1	-.022	2	.184	1	1.75	2	.35	1
818		min		.071	2	-.042	1	.047	2	1.681	1	.084	2
819		max	B	.063	1	-.087	2	.197	1	.318	2	.367	1
820		min		.038	2	-.332	1	.062	2	.203	1	.111	2
821	P206	max	T	.434	1	.005	1	.215	1	1.699	2	.432	1
822		min		.092	2	-.01	2	.051	2	1.636	1	.098	2
823		max	B	.022	2	-.109	2	.226	1	.245	2	.447	1
824		min		.011	1	-.442	1	.066	2	.137	1	.122	2
825	P207	max	T	.356	1	.003	1	.177	1	1.683	2	.355	1
826		min		.079	2	-.013	2	.046	2	1.641	1	.086	2
827		max	B	.032	2	-.091	2	.189	1	.308	2	.367	1
828		min		.023	1	-.356	1	.061	2	.19	1	.111	2
829	P208	max	T	.463	1	.051	1	.206	1	1.655	2	.44	1

Envelope Plate/Shell Principal Stresses (Continued)

	Plate		Sur...	Sigma1 [ksi]	LC	Sigma2 [ksi]	LC	Tau Max [k...	LC	Angle [rad]	LC	Von Mises [ksi]	LC
830		min		.101	2	0	2	.051	2	1.614	1	.101	2
831		max	B	.016	2	-.114	2	.217	1	.245	2	.451	1
832		min		-.031	1	-.465	1	.065	2	.136	1	.123	2
833	P209	max	T	.532	1	.041	1	.246	1	1.664	2	.513	1
834		min		.112	2	0	2	.056	2	1.608	1	.112	2
835		max	B	.011	2	-.131	2	.258	1	.186	2	.53	1
836		min		-.028	1	-.544	1	.071	2	.092	1	.136	2
837	P210	max	T	.62	1	.07	1	.275	1	1.641	2	.589	1
838		min		.13	2	.007	2	.062	2	1.59	1	.127	2
839		max	B	.002	2	-.15	2	.289	1	.14	2	.608	1
840		min		-.058	1	-.635	1	.076	2	.062	1	.151	2
841	P211	max	T	.561	1	.09	1	.235	1	1.635	2	.522	1
842		min		.121	2	.009	2	.056	2	1.596	1	.116	2
843		max	B	.004	2	-.135	2	.247	1	.192	2	.534	1
844		min		-.072	1	-.566	1	.069	2	.097	1	.137	2
845	P212	max	T	.649	1	.122	1	.263	1	1.622	2	.597	1
846		min		.139	2	.018	2	.06	2	1.584	1	.131	2
847		max	B	-.005	2	-.154	2	.276	1	.148	2	.612	1
848		min		-.106	1	-.658	1	.074	2	.068	1	.151	2
849	P213	max	T	.697	1	.092	1	.302	1	1.626	2	.656	1
850		min		.146	2	.013	2	.066	2	1.578	1	.14	2
851		max	B	-.005	2	-.167	2	.317	1	.104	2	.679	1
852		min		-.081	1	-.716	1	.081	2	.04	1	.164	2
853	P214	max	T	.762	1	.11	1	.326	1	1.616	2	.713	1
854		min		.159	2	.017	2	.071	2	1.57	1	.151	2
855		max	B	-.01	2	-.181	2	.342	1	.075	2	.739	1
856		min		-.099	1	-.784	1	.086	2	.024	1	.177	2
857	P215	max	T	.725	1	.148	1	.289	1	1.615	2	.664	1
858		min		.154	2	.024	2	.065	2	1.576	1	.144	2
859		max	B	-.013	2	-.17	2	.303	1	.112	2	.682	1
860		min		-.132	1	-.738	1	.079	2	.047	1	.164	2
861	P216	max	T	.79	1	.168	1	.311	1	1.61	2	.721	1
862		min		.167	2	.03	2	.069	2	1.569	1	.155	2
863		max	B	-.018	2	-.185	2	.327	1	.082	2	.742	1
864		min		-.153	1	-.806	1	.083	2	.03	1	.176	2
865	P217	max	T	.814	1	.123	1	.345	1	1.611	2	.76	1
866		min		.17	2	.021	2	.075	2	1.564	1	.161	2
867		max	B	-.013	2	-.193	2	.363	1	.051	2	.788	1
868		min		-.113	1	-.839	1	.09	2	.011	1	.187	2
869	P218	max	T	.852	1	.133	1	.36	1	1.608	2	.794	1
870		min		.179	2	.024	2	.078	2	1.56	1	.168	2
871		max	B	-.016	2	-.202	2	.378	1	.031	2	.825	1
872		min		-.123	1	-.879	1	.093	2	0	1	.194	2
873	P219	max	T	.843	1	.184	1	.329	1	1.608	2	.767	1
874		min		.179	2	.034	2	.072	2	1.564	1	.164	2
875		max	B	-.022	2	-.196	2	.346	1	.056	2	.79	1
876		min		-.168	1	-.861	1	.087	2	.015	1	.186	2
877	P220	max	T	.882	1	.196	1	.343	1	1.608	2	.802	1
878		min		.187	2	.037	2	.075	2	1.559	1	.172	2
879		max	B	-.025	2	-.205	2	.361	1	.034	2	.826	1
880		min		-.18	1	-.902	1	.09	2	.002	1	.193	2
881	P221	max	T	.878	1	.14	1	.369	1	1.606	2	.817	1
882		min		.185	2	.025	2	.08	2	1.556	1	.174	2
883		max	B	-.018	2	-.208	2	.388	1	.013	2	.848	1
884		min		-.129	1	-.906	1	.095	2	-.01	1	.199	2
885	P222	max	T	.889	1	.143	1	.373	1	1.605	2	.827	1
886		min		.189	2	.026	2	.082	2	1.552	1	.177	2

Envelope Plate/Shell Principal Stresses (Continued)

	Plate		Sur...	Sigma1 [ksi]	LC	Sigma2 [ksi]	LC	Tau Max [k...	LC	Angle [rad]	LC	Von Mises [ksi]	LC
887		max	B	-.019	2	-.21	2	.392	1	-.004	2	.858	1
888		min		-.133	1	-.917	1	.096	2	-.019	1	.202	2
889	P223	max	T	.907	1	.203	1	.352	1	1.609	2	.824	1
890		min		.193	2	.038	2	.078	2	1.554	1	.177	2
891		max	B	-.028	2	-.211	2	.37	1	.013	2	.85	1
892		min		-.188	1	-.928	1	.092	2	-.01	1	.198	2
893	P224	max	T	.918	1	.207	1	.355	1	1.61	2	.834	1
894		min		.197	2	.039	2	.079	2	1.55	1	.181	2
895		max	B	-.029	2	-.213	2	.373	1	-.006	2	.859	1
896		min		-.192	1	-.939	1	.092	2	-.022	1	.201	2
897	P225	max	T	.886	1	.143	1	.371	1	1.604	2	.823	1
898		min		.19	2	.025	2	.082	2	1.549	1	.179	2
899		max	B	-.019	2	-.21	2	.39	1	-.021	2	.855	1
900		min		-.134	1	-.914	1	.096	2	-.028	1	.201	2
901	P226	max	T	.869	1	.14	1	.364	1	1.602	2	.808	1
902		min		.189	2	.024	2	.082	2	1.545	1	.178	2
903		max	B	-.018	2	-.206	2	.382	1	-.037	1	.838	1
904		min		-.131	1	-.895	1	.094	2	-.038	2	.198	2
905	P227	max	T	.914	1	.207	1	.353	1	1.61	2	.83	1
906		min		.198	2	.039	2	.08	2	1.545	1	.182	2
907		max	B	-.029	2	-.213	2	.371	1	-.025	2	.855	1
908		min		-.193	1	-.935	1	.092	2	-.033	1	.2	2
909	P228	max	T	.897	1	.204	1	.346	1	1.61	2	.814	1
910		min		.197	2	.037	2	.08	2	1.54	1	.181	2
911		max	B	-.028	2	-.21	2	.363	1	-.044	1	.838	1
912		min		-.191	1	-.917	1	.091	2	-.044	2	.197	2
913	P229	max	T	.838	1	.135	1	.352	1	1.599	2	.779	1
914		min		.184	2	.022	2	.081	2	1.54	1	.174	2
915		max	B	-.016	2	-.2	2	.368	1	-.046	1	.807	1
916		min		-.126	1	-.863	1	.092	2	-.056	2	.192	2
917	P230	max	T	.794	1	.126	1	.334	1	1.594	2	.74	1
918		min		.178	2	.02	2	.079	2	1.535	1	.169	2
919		max	B	-.014	2	-.19	2	.35	1	-.056	1	.765	1
920		min		-.118	1	-.817	1	.088	2	-.076	2	.184	2
921	P231	max	T	.865	1	.197	1	.334	1	1.609	2	.786	1
922		min		.193	2	.035	2	.079	2	1.535	1	.178	2
923		max	B	-.026	2	-.203	2	.35	1	-.055	1	.808	1
924		min		-.184	1	-.884	1	.089	2	-.065	2	.192	2
925	P232	max	T	.821	1	.185	1	.318	1	1.606	2	.745	1
926		min		.186	2	.031	2	.077	2	1.53	1	.172	2
927		max	B	-.023	2	-.194	2	.331	1	-.067	1	.765	1
928		min		-.174	1	-.837	1	.086	2	-.087	2	.184	2
929	P233	max	T	.738	1	.113	1	.313	1	1.587	2	.689	1
930		min		.168	2	.016	2	.076	2	1.528	1	.161	2
931		max	B	-.01	2	-.178	2	.326	1	-.069	1	.711	1
932		min		-.106	1	-.758	1	.084	2	-.1	2	.173	2
933	P234	max	T	.67	1	.096	1	.287	1	1.576	2	.628	1
934		min		.156	2	.011	2	.072	2	1.519	1	.151	2
935		max	B	-.005	2	-.162	2	.299	1	-.084	1	.647	1
936		min		-.089	1	-.687	1	.079	2	-.13	2	.16	2
937	P235	max	T	.764	1	.17	1	.297	1	1.601	2	.694	1
938		min		.176	2	.027	2	.075	2	1.523	1	.165	2
939		max	B	-.019	2	-.182	2	.309	1	-.08	1	.711	1
940		min		-.16	1	-.778	1	.082	2	-.112	2	.173	2
941	P236	max	T	.695	1	.15	1	.272	1	1.593	2	.633	1
942		min		.164	2	.021	2	.071	2	1.515	1	.155	2
943		max	B	-.013	2	-.167	2	.283	1	-.096	1	.648	1

Envelope Plate/Shell Principal Stresses (Continued)

	Plate		Sur...	Sigma1 [ksi]	LC	Sigma2 [ksi]	LC	Tau Max [k...	LC	Angle [rad]	LC	Von Mises [ksi]	LC
944		min		-.14	1	-.706	1	.077	2	-.141	2	.161	2
945	P237	max	T	.592	1	.074	1	.259	1	1.559	2	.558	1
946		min		.141	2	.005	2	.068	2	1.505	1	.139	2
947		max	B	.002	2	-.145	2	.269	1	-.105	1	.575	1
948		min		-.067	1	-.605	1	.073	2	-.167	2	.146	2
949	P238	max	T	.503	1	.046	1	.229	1	1.536	2	.482	1
950		min		.124	2	-.003	2	.063	2	1.483	1	.125	2
951		max	B	.011	2	-.125	2	.238	1	-.135	1	.496	1
952		min		-.038	1	-.513	1	.068	2	-.214	2	.131	2
953	P239	max	T	.616	1	.125	1	.245	1	1.582	2	.564	1
954		min		.15	2	.015	2	.068	2	1.503	1	.143	2
955		max	B	-.005	2	-.15	2	.255	1	-.117	1	.575	1
956		min		-.115	1	-.624	1	.072	2	-.177	2	.147	2
957	P240	max	T	.527	1	.094	1	.217	1	1.566	2	.487	1
958		min		.133	2	.006	2	.063	2	1.487	1	.13	2
959		max	B	.004	2	-.13	2	.225	1	-.144	1	.496	1
960		min		-.083	1	-.533	1	.067	2	-.221	2	.133	2
961	P241	max	T	.405	1	.01	1	.198	1	1.502	2	.401	1
962		min		.105	2	-.012	2	.058	2	1.449	1	.111	2
963		max	B	.023	2	-.103	2	.207	1	-.18	1	.413	1
964		min		0	1	-.413	1	.063	2	-.275	2	.117	2
965	P242	max	T	.3	1	-.024	2	.169	1	1.456	2	.32	1
966		min		.083	2	-.037	1	.054	2	1.393	1	.098	2
967		max	B	.05	1	-.081	2	.178	1	-.248	1	.334	1
968		min		.039	2	-.306	1	.06	2	-.351	2	.106	2
969	P243	max	T	.429	1	.056	1	.187	1	1.544	2	.405	1
970		min		.113	2	-.004	2	.058	2	1.462	1	.115	2
971		max	B	.017	2	-.109	2	.195	1	-.183	1	.413	1
972		min		-.043	1	-.433	1	.063	2	-.275	2	.118	2
973	P244	max	T	.324	1	.008	1	.158	1	1.515	2	.32	1
974		min		.091	2	-.016	2	.053	2	1.424	1	.1	2
975		max	B	.033	2	-.086	2	.167	1	-.239	1	.331	1
976		min		.008	1	-.327	1	.06	2	-.339	2	.107	2
977	P245	max	T	.19	1	-.04	2	.144	1	1.394	2	.254	1
978		min		.06	2	-.098	1	.05	2	1.307	1	.087	2
979		max	B	.118	1	-.057	2	.157	1	-.347	1	.275	1
980		min		.061	2	-.196	1	.059	2	-.439	2	.102	2
981	P246	max	T	.078	1	-.06	2	.13	1	1.318	2	.231	1
982		min		.035	2	-.181	1	.048	2	1.183	1	.083	2
983		max	B	.211	1	-.033	2	.149	1	-.474	1	.265	1
984		min		.089	2	-.086	1	.061	2	-.528	2	.11	2
985	P247	max	T	.212	1	-.03	2	.132	1	1.477	2	.242	1
986		min		.067	2	-.051	1	.049	2	1.363	1	.087	2
987		max	B	.074	1	-.062	2	.144	1	-.32	1	.26	1
988		min		.053	2	-.215	1	.058	2	-.412	2	.1	2
989	P248	max	T	.094	1	-.049	2	.11	1	1.431	2	.191	1
990		min		.041	2	-.126	1	.045	2	1.27	1	.077	2
991		max	B	.159	1	-.037	2	.129	1	-.429	1	.226	1
992		min		.079	2	-.1	1	.058	2	-.488	2	.102	2
993	P249	max	T	.009	2	-.086	2	.13	1	1.235	2	.278	1
994		min		-.035	1	-.294	1	.047	2	1.04	1	.091	2
995		max	B	.336	1	.024	1	.156	1	-.605	1	.325	1
996		min		.125	2	-.008	2	.067	2	-.607	2	.129	2
997	P250	max	T	-.021	2	-.12	2	.144	1	1.158	2	.389	1
998		min		-.154	1	-.442	1	.049	2	.914	1	.11	2
999		max	B	.497	1	.14	1	.178	1	-.668	2	.444	1
1000		min		.17	2	.021	2	.075	2	-.709	1	.161	2

Envelope Plate/Shell Principal Stresses (Continued)

	Plate		Sur...	Sigma1 [ksi]	LC	Sigma2 [ksi]	LC	Tau Max [k...	LC	Angle [rad]	LC	Von Mises [ksi]	LC
1001	P251	max	T	.011	2	-.071	2	.096	1	1.377	2	.208	1
1002		min		-.03	1	-.221	1	.041	2	1.136	1	.077	2
1003		max	B	.268	1	.018	1	.125	1	-.557	1	.259	1
1004		min		.111	2	-.01	2	.06	2	-.559	2	.116	2
1005	P252	max	T	-.023	2	-.098	2	.093	1	1.315	2	.298	1
1006		min		-.159	1	-.344	1	.038	2	.971	1	.089	2
1007		max	B	.406	1	.143	1	.132	1	-.621	2	.357	1
1008		min		.15	2	.021	2	.064	2	-.682	1	.141	2
1009	P253	max	T	-.058	2	-.161	2	.17	1	1.086	2	.546	1
1010		min		-.291	1	-.63	1	.051	2	.813	1	.141	2
1011		max	B	.7	1	.277	1	.212	1	2.354	1	.611	1
1012		min		.226	2	.056	2	.085	2	-.716	2	.204	2
1013	P254	max	T	-.11	2	-.216	2	.209	1	.991	2	.766	1
1014		min		-.467	1	-.884	1	.053	2	.716	1	.187	2
1015		max	B	.973	1	.453	1	.26	1	2.283	1	.843	1
1016		min		.302	2	.104	2	.099	2	-.765	2	.265	2
1017	P255	max	T	-.064	2	-.13	2	.103	1	1.229	2	.439	1
1018		min		-.298	1	-.504	1	.033	2	.795	1	.113	2
1019		max	B	.582	1	.279	1	.151	1	2.347	1	.504	1
1020		min		.199	2	.058	2	.071	2	-.678	2	.177	2
1021	P256	max	T	-.112	2	-.171	2	.141	1	1.026	2	.629	1
1022		min		-.438	1	-.721	1	.029	2	.629	1	.151	2
1023		max	B	.811	1	.422	1	.195	1	2.242	1	.703	1
1024		min		.262	2	.099	2	.081	2	-.744	2	.229	2
1025	P257	max	T	-.168	2	-.301	2	.328	1	.725	2	1.117	1
1026		min		-.634	1	-1.29	1	.066	2	.569	1	.261	2
1027		max	B	1.397	1	.623	1	.387	1	2.269	2	1.212	1
1028		min		.415	2	.155	2	.13	2	2.167	1	.363	2
1029	P258	max	T	-.242	2	-.618	2	.787	1	.791	2	2.179	1
1030		min		-.914	1	-2.487	1	.188	2	.725	1	.54	2
1031		max	B	2.657	1	.91	1	.873	1	2.314	1	2.339	1
1032		min		.788	2	.236	2	.276	2	-.769	2	.701	2
1033	P259	max	T	-.157	2	-.256	2	.247	1	.812	2	.93	1
1034		min		-.578	1	-1.073	1	.05	2	.638	1	.223	2
1035		max	B	1.183	1	.567	1	.308	1	2.257	1	1.025	1
1036		min		.369	2	.141	2	.114	2	-.757	2	.322	2
1037	P260	max	T	-.169	2	-.302	2	.294	1	.877	2	1.051	1
1038		min		-.626	1	-1.214	1	.067	2	.763	1	.262	2
1039		max	B	1.338	1	.619	1	.36	1	-.646	2	1.16	1
1040		min		.423	2	.156	2	.134	2	-.755	1	.371	2
1041	P261	max	T	-.159	2	-.533	2	.733	1	1.139	2	1.809	1
1042		min		-.557	1	-2.022	1	.187	2	1.086	1	.474	2
1043		max	B	2.179	1	.57	1	.805	1	-.445	2	1.958	1
1044		min		.675	2	.161	2	.257	2	-.476	1	.611	2
1045	P262	max	T	-.106	2	-.356	2	.487	1	1.131	2	1.217	1
1046		min		-.391	1	-1.365	1	.125	2	1.096	1	.317	2
1047		max	B	1.525	1	.402	1	.561	1	-.428	2	1.369	1
1048		min		.501	2	.107	2	.197	2	-.456	1	.457	2
1049	P263	max	T	-.154	2	-.325	2	.353	1	.845	2	1.108	1
1050		min		-.572	1	-1.277	1	.085	2	.77	1	.281	2
1051		max	B	1.391	1	.589	1	.401	1	-.608	2	1.209	1
1052		min		.438	2	.157	2	.141	2	-.734	1	.385	2
1053	P264	max	T	-.082	2	-.308	2	.442	1	.883	2	1.065	1
1054		min		-.297	1	-1.182	1	.113	2	.837	1	.276	2
1055		max	B	1.276	1	.324	1	.476	1	-.561	2	1.149	1
1056		min		.4	2	.09	2	.155	2	-.676	1	.364	2
1057	P265	max	T	-.041	2	-.291	2	.446	1	.943	2	1.01	1

Envelope Plate/Shell Principal Stresses (Continued)

	Plate		Sur...	Sigma1 [ksi]	LC	Sigma2 [ksi]	LC	Tau Max [k...	LC	Angle [rad]	LC	Von Mises [ksi]	LC
1058		min		-.206	1	-1.097	1	.125	2	.931	1	.273	2
1059		max	B	1.169	1	.234	1	.468	1	-.464	2	1.072	1
1060		min		.364	2	.049	2	.157	2	-.573	1	.342	2
1061	P266	max	T	.003	2	-.201	2	.363	1	1.108	2	.73	1
1062		min		-.01	1	-.735	1	.102	2	1.103	1	.202	2
1063		max	B	.807	1	.018	1	.394	1	-.368	2	.798	1
1064		min		.268	2	0	2	.134	2	-.429	1	.267	2
1065	P267	max	T	-.007	2	-.279	2	.502	1	.965	2	1.021	1
1066		min		-.034	1	-1.038	1	.136	2	.931	1	.275	2
1067		max	B	1.111	1	.065	1	.523	1	-.505	2	1.08	1
1068		min		.349	2	.023	2	.163	2	-.596	1	.338	2
1069	P268	max	T	.011	1	-.211	2	.378	1	1.156	2	.751	1
1070		min		.005	2	-.745	1	.108	2	1.124	1	.214	2
1071		max	B	.814	1	.002	1	.406	1	-.342	2	.813	1
1072		min		.272	2	.002	2	.135	2	-.412	1	.271	2
1073	P269	max	T	.021	1	-.169	2	.364	1	2.006	2	.719	1
1074		min		.011	2	-.708	1	.09	2	1.97	1	.175	2
1075		max	B	.824	1	0	2	.414	1	.342	1	.826	1
1076		min		.254	2	-.004	1	.127	2	.282	2	.253	2
1077	P270	max	T	.015	2	-.225	2	.46	1	2.228	2	.921	1
1078		min		0	1	-.921	1	.12	2	2.193	1	.233	2
1079		max	B	1.039	1	.035	1	.502	1	.552	1	1.022	1
1080		min		.307	2	.011	2	.148	2	.471	2	.301	2
1081	P271	max	T	.018	1	-.126	2	.279	1	2.019	2	.549	1
1082		min		.01	2	-.54	1	.068	2	1.965	1	.132	2
1083		max	B	.653	1	0	2	.329	1	.328	1	.655	1
1084		min		.211	2	-.005	1	.106	2	.268	2	.211	2
1085	P272	max	T	.024	1	-.172	2	.363	1	2.246	2	.714	1
1086		min		.019	2	-.702	1	.095	2	2.205	1	.182	2
1087		max	B	.81	1	.004	1	.403	1	.556	1	.807	1
1088		min		.249	2	.002	2	.123	2	.471	2	.248	2
1089	P273	max	T	-.028	2	-.238	2	.403	1	2.337	1	.906	1
1090		min		-.175	1	-.981	1	.105	2	-.77	2	.225	2
1091		max	B	1.112	1	.213	1	.449	1	.672	1	1.022	1
1092		min		.327	2	.054	2	.136	2	.563	2	.303	2
1093	P274	max	T	-.071	2	-.233	2	.32	1	-.634	2	.856	1
1094		min		-.333	1	-.972	1	.081	2	-.669	1	.206	2
1095		max	B	1.114	1	.362	1	.376	1	.776	1	.984	1
1096		min		.329	2	.088	2	.12	2	.638	2	.294	2
1097	P275	max	T	-.005	2	-.18	2	.331	1	-.736	2	.702	1
1098		min		-.076	1	-.737	1	.087	2	-.767	1	.178	2
1099		max	B	.847	1	.108	1	.369	1	.701	1	.798	1
1100		min		.257	2	.027	2	.115	2	.584	2	.245	2
1101	P276	max	T	-.031	2	-.174	2	.277	1	-.577	2	.655	1
1102		min		-.169	1	-.723	1	.071	2	-.599	1	.161	2
1103		max	B	.833	1	.202	1	.315	1	.834	1	.752	1
1104		min		.252	2	.05	2	.101	2	.676	2	.231	2
1105	P277	max	T	-.102	2	-.209	2	.23	1	-.51	2	.772	1
1106		min		-.433	1	-.892	1	.054	2	-.538	1	.181	2
1107		max	B	1.038	1	.449	1	.295	1	.867	1	.902	1
1108		min		.308	2	.106	2	.101	2	.699	2	.271	2
1109	P278	max	T	-.108	2	-.167	2	.146	1	-.466	1	.634	1
1110		min		-.435	1	-.727	1	.03	2	-.474	2	.146	2
1111		max	B	.873	1	.431	1	.221	1	.901	1	.756	1
1112		min		.264	2	.097	2	.084	2	.718	2	.232	2
1113	P279	max	T	-.05	2	-.155	2	.217	1	-.427	2	.579	1
1114		min		-.224	1	-.658	1	.053	2	-.442	1	.137	2

Envelope Plate/Shell Principal Stresses (Continued)

	Plate		Sur...	Sigma1 [ksi]	LC	Sigma2 [ksi]	LC	Tau Max [k...	LC	Angle [rad]	LC	Von Mises [ksi]	LC
1115		max	B	.766	1	.254	1	.256	1	.944	1	.675	1
1116		min		.233	2	.061	2	.086	2	.742	2	.209	2
1117	P280	max	T	-.058	2	-.126	2	.157	1	-.289	2	.478	1
1118		min		-.235	1	-.55	1	.034	2	-.301	1	.109	2
1119		max	B	.652	1	.258	1	.197	1	1.02	1	.568	1
1120		min		.203	2	.06	2	.071	2	.772	2	.18	2
1121	P281	max	T	-.095	2	-.123	2	.086	1	-.449	1	.482	1
1122		min		-.372	1	-.545	1	.014	2	-.598	2	.112	2
1123		max	B	.684	1	.353	1	.166	1	.898	1	.592	1
1124		min		.214	2	.074	2	.07	2	.711	2	.188	2
1125	P282	max	T	-.065	2	-.085	2	.037	1	1.963	2	.319	1
1126		min		-.276	1	-.349	1	.01	2	-.651	1	.077	2
1127		max	B	.482	1	.24	1	.121	1	.804	1	.417	1
1128		min		.163	2	.043	2	.06	2	.654	2	.146	2
1129	P283	max	T	-.055	2	-.09	2	.101	1	-.166	2	.353	1
1130		min		-.206	1	-.407	1	.017	2	-.183	1	.078	2
1131		max	B	.504	1	.219	1	.143	1	1.039	1	.438	1
1132		min		.166	2	.047	2	.059	2	.755	2	.148	2
1133	P284	max	T	-.046	2	-.053	2	.052	1	.073	2	.222	1
1134		min		-.152	1	-.255	1	.004	2	-.072	1	.05	2
1135		max	B	.352	1	.15	1	.101	1	.978	1	.306	1
1136		min		.129	2	.025	2	.052	2	.701	2	.118	2
1137	P285	max	T	-.027	2	-.064	2	.038	1	1.898	1	.193	1
1138		min		-.142	1	-.219	1	.018	2	1.734	2	.055	2
1139		max	B	.326	1	.115	1	.106	1	.639	1	.287	1
1140		min		.123	2	.011	2	.056	2	.583	2	.118	2
1141	P286	max	T	.007	2	-.044	2	.067	1	1.704	1	.132	1
1142		min		.005	1	-.129	1	.025	2	1.678	2	.048	2
1143		max	B	.203	1	-.014	1	.108	1	.514	2	.21	1
1144		min		.09	2	-.019	2	.054	2	.476	1	.101	2
1145	P287	max	T	-.017	2	-.033	2	.01	1	1.395	2	.097	1
1146		min		-.085	1	-.106	1	.008	2	.303	1	.028	2
1147		max	B	.21	1	.06	1	.075	1	.801	1	.188	1
1148		min		.096	2	0	2	.048	2	.622	2	.096	2
1149	P288	max	T	.041	1	-.019	2	.032	1	1.481	2	.056	1
1150		min		.016	2	-.023	1	.017	2	1.413	1	.03	2
1151		max	B	.098	1	-.027	2	.073	1	.552	1	.129	1
1152		min		.068	2	-.048	1	.047	2	.538	2	.084	2
1153	P289	max	T	.142	1	-.027	2	.097	1	1.65	2	.175	1
1154		min		.036	2	-.053	1	.032	2	1.642	1	.055	2
1155		max	B	.104	1	-.046	2	.122	1	.443	2	.213	1
1156		min		.063	2	-.14	1	.054	2	.345	1	.095	2
1157	P290	max	T	.268	1	.012	1	.128	1	1.632	2	.262	1
1158		min		.063	2	-.011	2	.037	2	1.612	1	.07	2
1159		max	B	.04	2	-.072	2	.144	1	.373	2	.277	1
1160		min		.026	1	-.263	1	.056	2	.249	1	.098	2
1161	P291	max	T	.174	1	.04	1	.067	1	1.517	2	.157	1
1162		min		.045	2	-.005	2	.025	2	1.494	1	.048	2
1163		max	B	.044	2	-.053	2	.09	1	.457	2	.174	1
1164		min		.012	1	-.168	1	.048	2	.362	1	.084	2
1165	P292	max	T	.298	1	.098	1	.1	1	1.536	2	.263	1
1166		min		.072	2	.009	2	.031	2	1.525	1	.068	2
1167		max	B	.023	2	-.078	2	.115	1	.384	2	.264	1
1168		min		-.058	1	-.289	1	.05	2	.25	1	.092	2
1169	P293	max	T	.385	1	.068	1	.158	1	1.618	2	.355	1
1170		min		.087	2	.002	2	.043	2	1.596	1	.086	2
1171		max	B	.021	2	-.096	2	.171	1	.307	2	.362	1

Envelope Plate/Shell Principal Stresses (Continued)

	Plate		Sur...	Sigma1 [ksi]	LC	Sigma2 [ksi]	LC	Tau Max [k...	LC	Angle [rad]	LC	Von Mises [ksi]	LC
1172		min		-.038	1	-.38	1	.059	2	.181	1	.108	2
1173	P294	max	T	.492	1	.116	1	.188	1	1.609	2	.446	1
1174		min		.109	2	.014	2	.048	2	1.586	1	.103	2
1175		max	B	.006	2	-.118	2	.2	1	.248	2	.451	1
1176		min		-.09	1	-.49	1	.062	2	.134	1	.122	2
1177	P295	max	T	.413	1	.15	1	.132	1	1.549	2	.362	1
1178		min		.096	2	.021	2	.038	2	1.541	1	.087	2
1179		max	B	.006	2	-.102	2	.144	1	.316	2	.361	1
1180		min		-.117	1	-.405	1	.054	2	.181	1	.105	2
1181	P296	max	T	.521	1	.197	1	.162	1	1.558	2	.456	1
1182		min		.118	2	.032	2	.043	2	1.551	1	.106	2
1183		max	B	-.008	2	-.124	2	.174	1	.257	2	.456	1
1184		min		-.167	1	-.515	1	.058	2	.136	1	.12	2
1185	P297	max	T	.59	1	.156	1	.217	1	1.603	2	.53	1
1186		min		.129	2	.024	2	.053	2	1.579	1	.119	2
1187		max	B	-.006	2	-.139	2	.229	1	.197	2	.537	1
1188		min		-.133	1	-.591	1	.067	2	.099	1	.136	2
1189	P298	max	T	.678	1	.19	1	.244	1	1.6	2	.606	1
1190		min		.147	2	.032	2	.057	2	1.574	1	.134	2
1191		max	B	-.016	2	-.158	2	.257	1	.155	2	.616	1
1192		min		-.168	1	-.683	1	.071	2	.073	1	.151	2
1193	P299	max	T	.62	1	.238	1	.191	1	1.565	2	.542	1
1194		min		.138	2	.042	2	.048	2	1.556	1	.122	2
1195		max	B	-.02	2	-.145	2	.204	1	.206	2	.544	1
1196		min		-.209	1	-.618	1	.063	2	.103	1	.136	2
1197	P300	max	T	.71	1	.273	1	.218	1	1.572	2	.62	1
1198		min		.155	2	.05	2	.053	2	1.559	1	.137	2
1199		max	B	-.029	2	-.164	2	.233	1	.163	2	.625	1
1200		min		-.245	1	-.71	1	.067	2	.077	1	.151	2
1201	P301	max	T	.756	1	.218	1	.269	1	1.599	2	.674	1
1202		min		.163	2	.039	2	.062	2	1.569	1	.147	2
1203		max	B	-.023	2	-.175	2	.284	1	.118	2	.687	1
1204		min		-.197	1	-.764	1	.076	2	.052	1	.164	2
1205	P302	max	T	.822	1	.241	1	.29	1	1.601	2	.732	1
1206		min		.176	2	.045	2	.065	2	1.565	1	.158	2
1207		max	B	-.03	2	-.189	2	.306	1	.087	2	.747	1
1208		min		-.219	1	-.832	1	.08	2	.034	1	.176	2
1209	P303	max	T	.789	1	.303	1	.243	1	1.58	2	.689	1
1210		min		.171	2	.058	2	.057	2	1.559	1	.151	2
1211		max	B	-.037	2	-.18	2	.259	1	.125	2	.697	1
1212		min		-.275	1	-.793	1	.072	2	.056	1	.165	2
1213	P304	max	T	.856	1	.328	1	.264	1	1.588	2	.748	1
1214		min		.184	2	.064	2	.06	2	1.557	1	.162	2
1215		max	B	-.044	2	-.195	2	.281	1	.092	2	.759	1
1216		min		-.3	1	-.863	1	.075	2	.037	1	.177	2
1217	P305	max	T	.875	1	.259	1	.308	1	1.604	2	.779	1
1218		min		.187	2	.05	2	.069	2	1.561	1	.168	2
1219		max	B	-.034	2	-.201	2	.325	1	.06	2	.796	1
1220		min		-.237	1	-.888	1	.083	2	.018	1	.186	2
1221	P306	max	T	.915	1	.272	1	.321	1	1.607	2	.813	1
1222		min		.196	2	.053	2	.071	2	1.556	1	.175	2
1223		max	B	-.038	2	-.209	2	.339	1	.035	2	.833	1
1224		min		-.251	1	-.929	1	.086	2	.003	1	.193	2
1225	P307	max	T	.911	1	.348	1	.281	1	1.597	2	.796	1
1226		min		.196	2	.069	2	.063	2	1.555	1	.172	2
1227		max	B	-.049	2	-.206	2	.3	1	.062	2	.809	1
1228		min		-.32	1	-.92	1	.079	2	.019	1	.187	2

Envelope Plate/Shell Principal Stresses (Continued)

	Plate		Sur...	Sigma1 [ksi]	LC	Sigma2 [ksi]	LC	Tau Max [k...	LC	Angle [rad]	LC	Von Mises [ksi]	LC
1229	P308	max	T	.952	1	.363	1	.294	1	1.606	2	.832	1
1230		min		.204	2	.073	2	.066	2	1.551	1	.179	2
1231		max	B	-.053	2	-.215	2	.313	1	.036	2	.846	1
1232		min		-.335	1	-.962	1	.081	2	.002	1	.194	2
1233	P309	max	T	.94	1	.281	1	.33	1	1.612	2	.836	1
1234		min		.202	2	.055	2	.073	2	1.551	1	.181	2
1235		max	B	-.04	2	-.215	2	.348	1	.013	2	.856	1
1236		min		-.26	1	-.956	1	.088	2	-.011	1	.198	2
1237	P310	max	T	.951	1	.285	1	.333	1	1.616	2	.845	1
1238		min		.206	2	.056	2	.075	2	1.546	1	.184	2
1239		max	B	-.041	2	-.218	2	.351	1	-.009	2	.866	1
1240		min		-.265	1	-.967	1	.088	2	-.025	1	.2	2
1241	P311	max	T	.978	1	.373	1	.302	1	1.615	2	.855	1
1242		min		.211	2	.075	2	.068	2	1.546	1	.185	2
1243		max	B	-.055	2	-.221	2	.322	1	.011	2	.87	1
1244		min		-.346	1	-.989	1	.083	2	-.014	1	.199	2
1245	P312	max	T	.989	1	.378	1	.305	1	1.623	2	.864	1
1246		min		.215	2	.076	2	.069	2	1.541	1	.188	2
1247		max	B	-.057	2	-.223	2	.324	1	-.012	2	.879	1
1248		min		-.351	1	-1	1	.083	2	-.029	1	.201	2
1249	P313	max	T	.947	1	.285	1	.331	1	1.619	2	.842	1
1250		min		.207	2	.055	2	.076	2	1.541	1	.186	2
1251		max	B	-.041	2	-.218	2	.348	1	-.03	2	.861	1
1252		min		-.266	1	-.963	1	.088	2	-.038	1	.2	2
1253	P314	max	T	.929	1	.281	1	.324	1	1.625	2	.825	1
1254		min		.206	2	.053	2	.076	2	1.536	1	.185	2
1255		max	B	-.041	2	-.214	2	.34	1	-.047	2	.843	1
1256		min		-.263	1	-.943	1	.087	2	-.051	1	.197	2
1257	P315	max	T	.984	1	.378	1	.303	1	1.63	2	.86	1
1258		min		.216	2	.075	2	.07	2	1.536	1	.19	2
1259		max	B	-.057	2	-.223	2	.322	1	-.035	2	.874	1
1260		min		-.352	1	-.996	1	.083	2	-.045	1	.201	2
1261	P316	max	T	.965	1	.372	1	.296	1	1.636	2	.843	1
1262		min		.215	2	.073	2	.071	2	1.531	1	.189	2
1263		max	B	-.056	2	-.22	2	.313	1	-.057	2	.856	1
1264		min		-.349	1	-.975	1	.082	2	-.059	1	.198	2
1265	P317	max	T	.896	1	.272	1	.312	1	1.622	2	.796	1
1266		min		.202	2	.051	2	.075	2	1.531	1	.182	2
1267		max	B	-.038	2	-.208	2	.327	1	-.064	1	.812	1
1268		min		-.255	1	-.909	1	.085	2	-.073	2	.192	2
1269	P318	max	T	.85	1	.259	1	.296	1	1.621	2	.755	1
1270		min		.195	2	.047	2	.074	2	1.525	1	.176	2
1271		max	B	-.035	2	-.199	2	.309	1	-.078	1	.769	1
1272		min		-.243	1	-.861	1	.082	2	-.096	2	.184	2
1273	P319	max	T	.93	1	.362	1	.284	1	1.64	2	.812	1
1274		min		.211	2	.07	2	.071	2	1.526	1	.186	2
1275		max	B	-.054	2	-.214	2	.3	1	-.074	1	.824	1
1276		min		-.34	1	-.939	1	.08	2	-.08	2	.193	2
1277	P320	max	T	.882	1	.346	1	.268	1	1.641	2	.77	1
1278		min		.204	2	.065	2	.07	2	1.521	1	.181	2
1279		max	B	-.051	2	-.205	2	.282	1	-.089	1	.779	1
1280		min		-.326	1	-.889	1	.077	2	-.105	2	.185	2
1281	P321	max	T	.791	1	.241	1	.275	1	1.619	2	.703	1
1282		min		.185	2	.041	2	.072	2	1.519	1	.169	2
1283		max	B	-.031	2	-.187	2	.287	1	-.092	1	.715	1
1284		min		-.227	1	-.801	1	.078	2	-.122	2	.174	2
1285	P322	max	T	.721	1	.219	1	.251	1	1.614	2	.641	1

Envelope Plate/Shell Principal Stresses (Continued)

	Plate		Sur...	Sigma1 [ksi]	LC	Sigma2 [ksi]	LC	Tau Max [k...	LC	Angle [rad]	LC	Von Mises [ksi]	LC
1286		min		.173	2	.035	2	.069	2	1.513	1	.159	2
1287		max	B	-.025	2	-.172	2	.261	1	-.109	1	.65	1
1288		min		-.205	1	-.728	1	.074	2	-.152	2	.162	2
1289	P323	max	T	.821	1	.326	1	.248	1	1.642	2	.716	1
1290		min		.195	2	.059	2	.068	2	1.516	1	.173	2
1291		max	B	-.046	2	-.193	2	.26	1	-.105	1	.724	1
1292		min		-.308	1	-.827	1	.074	2	-.132	2	.175	2
1293	P324	max	T	.749	1	.301	1	.224	1	1.64	2	.653	1
1294		min		.183	2	.052	2	.065	2	1.511	1	.163	2
1295		max	B	-.04	2	-.179	2	.234	1	-.122	1	.658	1
1296		min		-.284	1	-.752	1	.07	2	-.163	2	.163	2
1297	P325	max	T	.641	1	.191	1	.225	1	1.608	2	.57	1
1298		min		.159	2	.028	2	.065	2	1.504	1	.147	2
1299		max	B	-.017	2	-.156	2	.234	1	-.128	1	.577	1
1300		min		-.178	1	-.645	1	.069	2	-.187	2	.148	2
1301	P326	max	T	.551	1	.158	1	.197	1	1.599	2	.492	1
1302		min		.141	2	.019	2	.061	2	1.494	1	.133	2
1303		max	B	-.007	2	-.136	2	.204	1	-.153	1	.497	1
1304		min		-.145	1	-.553	1	.065	2	-.228	2	.133	2
1305	P327	max	T	.667	1	.271	1	.198	1	1.638	2	.581	1
1306		min		.168	2	.045	2	.062	2	1.507	1	.151	2
1307		max	B	-.032	2	-.162	2	.207	1	-.142	1	.584	1
1308		min		-.255	1	-.668	1	.065	2	-.198	2	.149	2
1309	P328	max	T	.575	1	.236	1	.17	1	1.635	2	.501	1
1310		min		.15	2	.036	2	.057	2	1.502	1	.136	2
1311		max	B	-.022	2	-.143	2	.177	1	-.167	1	.502	1
1312		min		-.22	1	-.575	1	.06	2	-.239	2	.133	2
1313	P329	max	T	.453	1	.119	1	.167	1	1.587	2	.407	1
1314		min		.122	2	.009	2	.056	2	1.478	1	.117	2
1315		max	B	.005	2	-.115	2	.175	1	-.188	1	.411	1
1316		min		-.103	1	-.453	1	.06	2	-.277	2	.118	2
1317	P330	max	T	.347	1	.072	1	.137	1	1.572	2	.317	1
1318		min		.099	2	-.002	2	.051	2	1.455	1	.101	2
1319		max	B	.021	2	-.093	2	.147	1	-.237	1	.323	1
1320		min		-.053	1	-.346	1	.057	2	-.335	2	.104	2
1321	P331	max	T	.476	1	.197	1	.14	1	1.632	2	.414	1
1322		min		.13	2	.026	2	.052	2	1.496	1	.12	2
1323		max	B	-.01	2	-.122	2	.147	1	-.2	1	.414	1
1324		min		-.179	1	-.474	1	.056	2	-.287	2	.117	2
1325	P332	max	T	.369	1	.152	1	.109	1	1.63	2	.321	1
1326		min		.108	2	.015	2	.047	2	1.486	1	.101	2
1327		max	B	.004	2	-.099	2	.118	1	-.251	1	.322	1
1328		min		-.131	1	-.367	1	.052	2	-.343	2	.102	2
1329	P333	max	T	.233	1	.017	1	.108	1	1.555	2	.225	1
1330		min		.075	2	-.016	2	.045	2	1.415	1	.084	2
1331		max	B	.039	2	-.068	2	.121	1	-.311	1	.238	1
1332		min		.008	1	-.234	1	.054	2	-.401	2	.094	2
1333	P334	max	T	.113	1	-.032	2	.081	1	1.534	2	.143	1
1334		min		.048	2	-.048	1	.04	2	1.342	1	.069	2
1335		max	B	.084	1	-.042	2	.101	1	-.421	1	.175	1
1336		min		.062	2	-.118	1	.052	2	-.471	2	.091	2
1337	P335	max	T	.256	1	.101	1	.077	1	1.63	2	.223	1
1338		min		.083	2	.003	2	.04	2	1.466	1	.082	2
1339		max	B	.021	2	-.075	2	.091	1	-.334	1	.228	1
1340		min		-.074	1	-.255	1	.048	2	-.409	2	.088	2
1341	P336	max	T	.136	1	.045	1	.045	1	1.635	2	.12	1
1342		min		.056	2	-.011	2	.033	2	1.408	1	.062	2

Envelope Plate/Shell Principal Stresses (Continued)

	Plate		Sur...	Sigma1 [ksi]	LC	Sigma2 [ksi]	LC	Tau Max [k...	LC	Angle [rad]	LC	Von Mises [ksi]	LC
1343		max	B	.042	2	-.05	2	.069	1	-.483	2	.14	1
1344		min		-.005	1	-.142	1	.046	2	-.485	1	.08	2
1345	P337	max	T	.017	2	-.05	2	.057	1	1.509	2	.121	1
1346		min		-.013	1	-.127	1	.033	2	1.19	1	.06	2
1347		max	B	.179	1	0	1	.09	1	-.543	2	.179	1
1348		min		.09	2	-.015	2	.052	2	-.576	1	.098	2
1349	P338	max	T	-.018	2	-.07	2	.046	1	1.47	2	.201	1
1350		min		-.138	1	-.23	1	.026	2	.876	1	.063	2
1351		max	B	.3	1	.117	1	.091	1	-.614	2	.262	1
1352		min		.123	2	.015	2	.054	2	-.758	1	.117	2
1353	P339	max	T	.025	2	-.021	1	.025	2	1.645	2	.043	2
1354		min		.013	1	-.025	2	.017	1	1.057	1	.03	1
1355		max	B	.083	1	-.024	2	.06	1	-.565	2	.106	1
1356		min		.066	2	-.036	1	.045	2	-.734	1	.08	2
1357	P340	max	T	-.009	2	-.04	2	.034	1	1.658	2	.119	1
1358		min		-.07	1	-.137	1	.015	2	.3	1	.036	2
1359		max	B	.199	1	.056	1	.072	1	2.157	1	.178	1
1360		min		.094	2	.003	2	.045	2	-.652	2	.092	2
1361	P341	max	T	-.058	2	-.092	2	.065	1	1.354	2	.33	1
1362		min		-.245	1	-.375	1	.017	2	.548	1	.081	2
1363		max	B	.451	1	.227	1	.112	1	2.224	1	.391	1
1364		min		.163	2	.047	2	.058	2	-.686	2	.146	2
1365	P342	max	T	-.097	2	-.125	2	.114	1	.903	2	.491	1
1366		min		-.335	1	-.563	1	.014	2	.455	1	.114	2
1367		max	B	.643	1	.327	1	.158	1	2.153	1	.557	1
1368		min		.214	2	.078	2	.068	2	-.743	2	.188	2
1369	P343	max	T	-.046	2	-.054	2	.075	1	1.53	2	.244	1
1370		min		-.132	1	-.282	1	.004	2	.225	1	.05	2
1371		max	B	.338	1	.132	1	.103	1	2.031	1	.295	1
1372		min		.127	2	.029	2	.049	2	-.735	2	.115	2
1373	P344	max	T	-.064	2	-.086	2	.122	1	.348	2	.371	1
1374		min		-.182	1	-.427	1	.011	2	.26	1	.077	2
1375		max	B	.483	1	.192	1	.145	1	2.35	2	.421	1
1376		min		.163	2	.05	2	.057	2	2.007	1	.144	2
1377	P345	max	T	-.115	2	-.169	2	.17	1	.637	2	.637	1
1378		min		-.394	1	-.734	1	.027	2	.476	1	.149	2
1379		max	B	.818	1	.396	1	.211	1	2.165	1	.708	1
1380		min		.263	2	.101	2	.081	2	-.752	2	.23	2
1381	P346	max	T	-.112	2	-.213	2	.247	1	.617	2	.769	1
1382		min		-.392	1	-.886	1	.051	2	.542	1	.185	2
1383		max	B	.969	1	.406	1	.282	1	2.212	1	.843	1
1384		min		.305	2	.109	2	.098	2	-.738	2	.268	2
1385	P347	max	T	-.068	2	-.125	2	.177	1	.4	2	.492	1
1386		min		-.208	1	-.561	1	.029	2	.342	1	.108	2
1387		max	B	.619	1	.225	1	.197	1	2.33	2	.543	1
1388		min		.199	2	.062	2	.068	2	2.047	1	.176	2
1389	P348	max	T	-.061	2	-.158	2	.233	1	.517	2	.589	1
1390		min		-.196	1	-.662	1	.048	2	.461	1	.138	2
1391		max	B	.722	1	.217	1	.252	1	2.136	1	.642	1
1392		min		.228	2	.062	2	.083	2	-.783	2	.204	2
1393	P349	max	T	-.084	2	-.24	2	.328	1	.718	2	.845	1
1394		min		-.297	1	-.954	1	.078	2	.664	1	.211	2
1395		max	B	1.034	1	.319	1	.358	1	2.312	1	.917	1
1396		min		.324	2	.088	2	.118	2	-.678	2	.29	2
1397	P350	max	T	-.041	2	-.249	2	.402	1	.838	2	.888	1
1398		min		-.149	1	-.953	1	.104	2	.793	1	.231	2
1399		max	B	1.027	1	.175	1	.426	1	-.6	2	.952	1

Envelope Plate/Shell Principal Stresses (Continued)

	Plate		Sur...	Sigma1 [ksi]	LC	Sigma2 [ksi]	LC	Tau Max [k...	LC	Angle [rad]	LC	Von Mises [ksi]	LC
1400		min		.322	2	.052	2	.135	2	-.72	1	.3	2
1401	P351	max	T	-.043	2	-.18	2	.288	1	.655	2	.659	1
1402		min		-.142	1	-.719	1	.069	2	.603	1	.163	2
1403		max	B	.78	1	.166	1	.307	1	2.254	1	.712	1
1404		min		.246	2	.049	2	.099	2	-.716	2	.226	2
1405	P352	max	T	-.016	2	-.19	2	.337	1	.806	2	.701	1
1406		min		-.053	1	-.726	1	.087	2	.759	1	.182	2
1407		max	B	.787	1	.076	1	.356	1	-.62	2	.752	1
1408		min		.25	2	.025	2	.113	2	-.749	1	.239	2
1409	P353	max	T	.016	1	-.239	2	.45	1	.972	2	.893	1
1410		min		.003	2	-.884	1	.121	2	.929	1	.241	2
1411		max	B	.951	1	.007	2	.472	1	-.501	2	.948	1
1412		min		.301	2	.007	1	.147	2	-.597	1	.297	2
1413	P354	max	T	.029	1	-.19	2	.346	1	1.194	2	.678	1
1414		min		.006	2	-.663	1	.098	2	1.146	1	.193	2
1415		max	B	.729	1	0	2	.373	1	-.304	2	.738	1
1416		min		.244	2	-.017	1	.122	2	-.386	1	.244	2
1417	P355	max	T	.041	1	-.186	2	.362	1	.96	2	.705	1
1418		min		.009	2	-.684	1	.098	2	.92	1	.191	2
1419		max	B	.745	1	0	2	.383	1	-.503	2	.756	1
1420		min		.239	2	-.021	1	.12	2	-.601	1	.24	2
1421	P356	max	T	.025	1	-.148	2	.27	1	1.195	2	.528	1
1422		min		.006	2	-.515	1	.077	2	1.154	1	.151	2
1423		max	B	.578	1	-.002	2	.297	1	-.294	2	.587	1
1424		min		.196	2	-.016	1	.099	2	-.372	1	.197	2
1425	P357	max	T	.019	1	-.082	2	.189	1	2.087	2	.369	1
1426		min		.012	2	-.359	1	.047	2	2.001	1	.088	2
1427		max	B	.464	1	-.001	2	.235	1	.34	1	.467	1
1428		min		.163	2	-.006	1	.082	2	.273	2	.163	2
1429	P358	max	T	.039	1	-.12	2	.264	1	2.302	2	.509	1
1430		min		.023	2	-.489	1	.072	2	2.253	1	.133	2
1431		max	B	.584	1	-.004	2	.298	1	.585	1	.59	1
1432		min		.191	2	-.013	1	.097	2	.488	2	.192	2
1433	P359	max	T	.028	1	-.044	2	.111	1	2.259	2	.21	1
1434		min		.016	2	-.195	1	.03	2	2.127	1	.054	2
1435		max	B	.285	1	-.002	2	.147	1	.398	1	.29	1
1436		min		.115	2	-.01	1	.059	2	.299	2	.116	2
1437	P360	max	T	.061	1	-.077	2	.184	1	-.729	2	.341	1
1438		min		.03	2	-.306	1	.053	2	-.776	1	.095	2
1439		max	B	.385	1	-.008	2	.208	1	.66	1	.401	1
1440		min		.138	2	-.031	1	.073	2	.529	2	.143	2
1441	P361	max	T	.011	2	-.129	2	.256	1	-.676	2	.518	1
1442		min		-.01	1	-.523	1	.07	2	-.701	1	.134	2
1443		max	B	.614	1	.042	1	.286	1	.749	1	.594	1
1444		min		.196	2	.01	2	.093	2	.611	2	.191	2
1445	P362	max	T	-.003	2	-.126	2	.234	1	-.516	2	.496	1
1446		min		-.052	1	-.52	1	.061	2	-.522	1	.124	2
1447		max	B	.607	1	.088	1	.259	1	.896	1	.568	1
1448		min		.191	2	.022	2	.084	2	.711	2	.181	2
1449	P363	max	T	.052	1	-.087	2	.2	1	-.576	2	.377	1
1450		min		.026	2	-.348	1	.057	2	-.583	1	.102	2
1451		max	B	.42	1	-.003	2	.217	1	.841	1	.427	1
1452		min		.144	2	-.014	1	.074	2	.662	2	.145	2
1453	P364	max	T	.048	1	-.087	2	.204	1	-.414	1	.387	1
1454		min		.021	2	-.361	1	.054	2	-.428	2	.1	2
1455		max	B	.426	1	0	2	.215	1	.991	1	.428	1
1456		min		.141	2	-.005	1	.07	2	.766	2	.141	2

Envelope Plate/Shell Principal Stresses (Continued)

	Plate		Sur...	Sigma1 [ksi]	LC	Sigma2 [ksi]	LC	Tau Max [k...	LC	Angle [rad]	LC	Von Mises [ksi]	LC
1457	P365	max	T	-.012	2	-.113	2	.205	1	-.36	1	.45	1
1458		min		-.072	1	-.482	1	.05	2	-.362	2	.108	2
1459		max	B	.562	1	.11	1	.226	1	1.02	1	.516	1
1460		min		.177	2	.028	2	.074	2	.785	2	.165	2
1461	P366	max	T	-.016	2	-.093	2	.17	1	-.214	2	.379	1
1462		min		-.068	1	-.408	1	.038	2	-.215	1	.086	2
1463		max	B	.481	1	.106	1	.188	1	1.113	1	.438	1
1464		min		.154	2	.027	2	.064	2	.825	2	.143	2
1465	P367	max	T	.055	1	-.08	2	.199	1	-.27	1	.374	1
1466		min		.018	2	-.343	1	.049	2	-.291	2	.091	2
1467		max	B	.402	1	.001	2	.205	1	1.111	1	.406	1
1468		min		.132	2	-.009	1	.065	2	.842	2	.131	2
1469	P368	max	T	.072	1	-.065	2	.183	1	-.148	1	.336	1
1470		min		.018	2	-.294	1	.042	2	-.161	2	.076	2
1471		max	B	.346	1	-.002	2	.186	1	1.203	1	.359	1
1472		min		.115	2	-.025	1	.058	2	.887	2	.116	2
1473	P369	max	T	-.015	2	-.066	2	.131	1	-.063	2	.287	1
1474		min		-.043	1	-.306	1	.026	2	-.086	1	.06	2
1475		max	B	.371	1	.078	1	.146	1	1.168	1	.338	1
1476		min		.126	2	.018	2	.054	2	.822	2	.118	2
1477	P370	max	T	-.002	1	-.037	2	.091	1	.144	2	.184	1
1478		min		-.008	2	-.185	1	.014	2	.041	1	.034	2
1479		max	B	.244	1	.033	1	.106	1	1.167	1	.229	1
1480		min		.097	2	.003	2	.047	2	.775	2	.095	2
1481	P371	max	T	.1	1	-.045	2	.158	1	-.031	2	.28	1
1482		min		.02	2	-.217	1	.033	2	-.039	1	.058	2
1483		max	B	.262	1	-.009	2	.158	1	1.266	1	.292	1
1484		min		.093	2	-.054	1	.051	2	.894	2	.098	2
1485	P372	max	T	.137	1	-.021	2	.128	1	.116	2	.221	1
1486		min		.026	2	-.119	1	.023	2	.062	1	.041	2
1487		max	B	.158	1	-.021	2	.125	1	1.296	1	.218	1
1488		min		.069	2	-.091	1	.045	2	.862	2	.081	2
1489	P373	max	T	.05	1	-.011	2	.055	1	.62	2	.095	1
1490		min		.005	2	-.059	1	.008	2	.212	1	.014	2
1491		max	B	.115	1	-.016	2	.071	1	1.075	1	.13	1
1492		min		.069	2	-.027	1	.042	2	.695	2	.078	2
1493	P374	max	T	.116	1	.057	1	.029	1	1.154	2	.1	1
1494		min		.029	2	.006	2	.011	2	.619	1	.026	2
1495		max	B	.044	2	-.039	2	.051	1	.813	1	.102	1
1496		min		-.002	1	-.103	1	.041	2	.598	2	.071	2
1497	P375	max	T	.18	1	.004	2	.095	1	.333	2	.185	1
1498		min		.035	2	-.01	1	.015	2	.171	1	.033	2
1499		max	B	.044	2	-.036	2	.09	1	1.281	1	.163	1
1500		min		.043	1	-.137	1	.04	2	.79	2	.069	2
1501	P376	max	T	.23	1	.103	1	.063	1	.7	2	.2	1
1502		min		.048	2	.025	2	.011	2	.327	1	.042	2
1503		max	B	.021	2	-.054	2	.057	1	1.175	1	.165	1
1504		min		-.075	1	-.19	1	.037	2	.689	2	.067	2
1505	P377	max	T	.216	1	.137	1	.039	1	1.341	2	.189	1
1506		min		.055	2	.019	2	.018	2	1.185	1	.049	2
1507		max	B	.022	2	-.062	2	.057	1	.501	2	.176	1
1508		min		-.089	1	-.203	1	.042	2	.476	1	.076	2
1509	P378	max	T	.331	1	.194	1	.068	1	1.422	2	.288	1
1510		min		.081	2	.031	2	.025	2	1.386	1	.071	2
1511		max	B	.004	2	-.086	2	.082	1	.414	2	.275	1
1512		min		-.154	1	-.317	1	.045	2	.287	1	.088	2
1513	P379	max	T	.291	1	.208	1	.041	1	1.066	2	.26	1

Envelope Plate/Shell Principal Stresses (Continued)

	Plate		Sur...	Sigma1 [ksi]	LC	Sigma2 [ksi]	LC	Tau Max [k...	LC	Angle [rad]	LC	Von Mises [ksi]	LC
1514		min		.069	2	.041	2	.014	2	.635	1	.06	2
1515		max	B	0	2	-.074	2	.037	1	.844	1	.228	1
1516		min		-.181	1	-.256	1	.037	2	.577	2	.074	2
1517	P380	max	T	.376	1	.288	1	.044	1	1.258	2	.341	1
1518		min		.092	2	.053	2	.019	2	1.079	1	.08	2
1519		max	B	-.016	2	-.096	2	.048	1	.471	2	.315	1
1520		min		-.255	1	-.352	1	.04	2	.427	1	.089	2
1521	P381	max	T	.444	1	.245	1	.1	1	1.468	2	.385	1
1522		min		.105	2	.042	2	.031	2	1.464	1	.091	2
1523		max	B	-.012	2	-.109	2	.112	1	.339	2	.375	1
1524		min		-.209	1	-.432	1	.049	2	.197	1	.104	2
1525	P382	max	T	.551	1	.291	1	.13	1	1.502	1	.478	1
1526		min		.126	2	.053	2	.037	2	1.497	2	.11	2
1527		max	B	-.025	2	-.131	2	.143	1	.274	2	.47	1
1528		min		-.257	1	-.543	1	.053	2	.145	1	.12	2
1529	P383	max	T	.479	1	.345	1	.067	1	1.356	2	.428	1
1530		min		.114	2	.065	2	.025	2	1.317	1	.099	2
1531		max	B	-.031	2	-.118	2	.076	1	.38	2	.408	1
1532		min		-.31	1	-.462	1	.043	2	.244	1	.105	2
1533	P384	max	T	.584	1	.394	1	.095	1	1.42	1	.516	1
1534		min		.136	2	.075	2	.03	2	1.415	2	.118	2
1535		max	B	-.044	2	-.139	2	.108	1	.303	2	.501	1
1536		min		-.357	1	-.572	1	.047	2	.165	1	.123	2
1537	P385	max	T	.651	1	.333	1	.159	1	1.524	1	.564	1
1538		min		.146	2	.062	2	.042	2	1.519	2	.127	2
1539		max	B	-.036	2	-.152	2	.174	1	.22	2	.56	1
1540		min		-.299	1	-.646	1	.058	2	.109	1	.137	2
1541	P386	max	T	.743	1	.37	1	.186	1	1.537	2	.643	1
1542		min		.164	2	.072	2	.046	2	1.536	1	.142	2
1543		max	B	-.046	2	-.17	2	.203	1	.173	2	.643	1
1544		min		-.336	1	-.741	1	.062	2	.082	1	.153	2
1545	P387	max	T	.685	1	.438	1	.124	1	1.471	1	.601	1
1546		min		.155	2	.086	2	.035	2	1.454	2	.135	2
1547		max	B	-.055	2	-.159	2	.139	1	.239	2	.589	1
1548		min		-.4	1	-.677	1	.052	2	.12	1	.14	2
1549	P388	max	T	.778	1	.479	1	.15	1	1.498	1	.68	1
1550		min		.173	2	.096	2	.039	2	1.485	2	.15	2
1551		max	B	-.065	2	-.178	2	.168	1	.185	2	.672	1
1552		min		-.439	1	-.774	1	.056	2	.087	1	.156	2
1553	P389	max	T	.824	1	.403	1	.211	1	1.553	2	.714	1
1554		min		.18	2	.08	2	.05	2	1.542	1	.156	2
1555		max	B	-.054	2	-.187	2	.229	1	.132	2	.716	1
1556		min		-.368	1	-.825	1	.066	2	.059	1	.167	2
1557	P390	max	T	.894	1	.431	1	.232	1	1.569	2	.774	1
1558		min		.193	2	.087	2	.053	2	1.545	1	.167	2
1559		max	B	-.061	2	-.201	2	.251	1	.096	2	.779	1
1560		min		-.395	1	-.898	1	.07	2	.038	1	.179	2
1561	P391	max	T	.862	1	.515	1	.174	1	1.513	1	.751	1
1562		min		.189	2	.105	2	.042	2	1.512	2	.164	2
1563		max	B	-.074	2	-.195	2	.194	1	.139	2	.747	1
1564		min		-.474	1	-.861	1	.06	2	.06	1	.17	2
1565	P392	max	T	.935	1	.547	1	.194	1	1.539	2	.813	1
1566		min		.202	2	.113	2	.045	2	1.521	1	.175	2
1567		max	B	-.081	2	-.209	2	.216	1	.098	2	.812	1
1568		min		-.504	1	-.936	1	.064	2	.036	1	.182	2
1569	P393	max	T	.95	1	.453	1	.248	1	1.586	2	.823	1
1570		min		.204	2	.093	2	.056	2	1.544	1	.177	2

Envelope Plate/Shell Principal Stresses (Continued)

	Plate		Sur...	Sigma1 [ksi]	LC	Sigma2 [ksi]	LC	Tau Max [k...	LC	Angle [rad]	LC	Von Mises [ksi]	LC
1571		max	B	-.066	2	-.213	2	.269	1	.064	2	.83	1
1572		min		-.418	1	-.956	1	.073	2	.018	1	.188	2
1573	P394	max	T	.993	1	.471	1	.261	1	1.602	2	.86	1
1574		min		.213	2	.097	2	.058	2	1.542	1	.185	2
1575		max	B	-.071	2	-.221	2	.283	1	.035	2	.869	1
1576		min		-.435	1	-1	1	.075	2	0	1	.196	2
1577	P395	max	T	.994	1	.574	1	.21	1	1.567	2	.864	1
1578		min		.213	2	.119	2	.047	2	1.525	1	.185	2
1579		max	B	-.087	2	-.22	2	.234	1	.063	2	.865	1
1580		min		-.53	1	-.998	1	.067	2	.014	1	.192	2
1581	P396	max	T	1.038	1	.595	1	.221	1	1.595	2	.902	1
1582		min		.222	2	.124	2	.049	2	1.526	1	.193	2
1583		max	B	-.092	2	-.229	2	.246	1	.031	2	.904	1
1584		min		-.551	1	-1.043	1	.069	2	-.007	1	.2	2
1585	P397	max	T	1.02	1	.482	1	.269	1	1.618	2	.883	1
1586		min		.22	2	.099	2	.06	2	1.539	1	.19	2
1587		max	B	-.074	2	-.227	2	.291	1	.008	2	.893	1
1588		min		-.447	1	-1.028	1	.077	2	-.018	1	.201	2
1589	P398	max	T	1.031	1	.487	1	.272	1	1.633	2	.893	1
1590		min		.224	2	.1	2	.062	2	1.534	1	.194	2
1591		max	B	-.076	2	-.23	2	.293	1	-.017	2	.902	1
1592		min		-.454	1	-1.039	1	.077	2	-.036	1	.203	2
1593	P399	max	T	1.066	1	.609	1	.228	1	1.624	2	.926	1
1594		min		.229	2	.127	2	.051	2	1.525	1	.198	2
1595		max	B	-.095	2	-.235	2	.253	1	.002	2	.929	1
1596		min		-.565	1	-1.072	1	.07	2	-.027	1	.205	2
1597	P400	max	T	1.077	1	.615	1	.231	1	1.65	2	.936	1
1598		min		.233	2	.128	2	.053	2	1.523	1	.202	2
1599		max	B	-.098	2	-.238	2	.255	1	-.024	2	.938	1
1600		min		-.573	1	-1.083	1	.07	2	-.047	1	.207	2
1601	P401	max	T	1.025	1	.487	1	.269	1	1.646	2	.888	1
1602		min		.225	2	.099	2	.063	2	1.53	1	.196	2
1603		max	B	-.076	2	-.23	2	.29	1	-.041	2	.897	1
1604		min		-.454	1	-1.033	1	.077	2	-.053	1	.203	2
1605	P402	max	T	1.004	1	.48	1	.262	1	1.657	2	.87	1
1606		min		.225	2	.096	2	.064	2	1.525	1	.195	2
1607		max	B	-.075	2	-.227	2	.281	1	-.064	2	.878	1
1608		min		-.45	1	-1.011	1	.076	2	-.07	1	.2	2
1609	P403	max	T	1.071	1	.614	1	.228	1	1.672	2	.931	1
1610		min		.235	2	.127	2	.054	2	1.521	1	.204	2
1611		max	B	-.098	2	-.237	2	.251	1	-.049	2	.933	1
1612		min		-.574	1	-1.076	1	.07	2	-.065	1	.207	2
1613	P404	max	T	1.048	1	.605	1	.221	1	1.69	2	.911	1
1614		min		.235	2	.123	2	.056	2	1.519	1	.204	2
1615		max	B	-.098	2	-.234	2	.242	1	-.073	2	.912	1
1616		min		-.568	1	-1.052	1	.068	2	-.083	1	.204	2
1617	P405	max	T	.968	1	.467	1	.251	1	1.668	2	.838	1
1618		min		.221	2	.092	2	.065	2	1.521	1	.192	2
1619		max	B	-.073	2	-.221	2	.267	1	-.085	2	.844	1
1620		min		-.439	1	-.974	1	.074	2	-.087	1	.195	2
1621	P406	max	T	.917	1	.448	1	.235	1	1.669	2	.795	1
1622		min		.214	2	.086	2	.064	2	1.517	1	.187	2
1623		max	B	-.069	2	-.212	2	.249	1	-.103	1	.799	1
1624		min		-.423	1	-.921	1	.071	2	-.115	2	.187	2
1625	P407	max	T	1.009	1	.589	1	.21	1	1.702	2	.878	1
1626		min		.232	2	.118	2	.057	2	1.517	1	.201	2
1627		max	B	-.095	2	-.228	2	.229	1	-.099	2	.878	1

Envelope Plate/Shell Principal Stresses (Continued)

	Plate		Sur...	Sigma1 [ksi]	LC	Sigma2 [ksi]	LC	Tau Max [k...	LC	Angle [rad]	LC	Von Mises [ksi]	LC
1628		min		-.555	1	-1.012	1	.066	2	-.102	1	.199	2
1629	P408	max	T	.955	1	.566	1	.195	1	1.71	2	.832	1
1630		min		.226	2	.111	2	.057	2	1.516	1	.195	2
1631		max	B	-.091	2	-.219	2	.211	1	-.12	1	.83	1
1632		min		-.535	1	-.956	1	.064	2	-.125	2	.191	2
1633	P409	max	T	.854	1	.425	1	.215	1	1.672	2	.739	1
1634		min		.205	2	.08	2	.063	2	1.514	1	.179	2
1635		max	B	-.064	2	-.2	2	.227	1	-.121	1	.742	1
1636		min		-.402	1	-.856	1	.068	2	-.144	2	.177	2
1637	P410	max	T	.779	1	.396	1	.191	1	1.673	2	.675	1
1638		min		.193	2	.072	2	.06	2	1.512	1	.169	2
1639		max	B	-.058	2	-.186	2	.202	1	-.139	1	.675	1
1640		min		-.376	1	-.779	1	.064	2	-.176	2	.165	2
1641	P411	max	T	.888	1	.538	1	.175	1	1.713	2	.775	1
1642		min		.216	2	.103	2	.056	2	1.516	1	.187	2
1643		max	B	-.086	2	-.208	2	.189	1	-.14	1	.772	1
1644		min		-.51	1	-.888	1	.061	2	-.156	2	.181	2
1645	P412	max	T	.81	1	.505	1	.153	1	1.716	2	.708	1
1646		min		.204	2	.095	2	.054	2	1.517	1	.177	2
1647		max	B	-.079	2	-.193	2	.164	1	-.162	1	.704	1
1648		min		-.48	1	-.808	1	.057	2	-.191	2	.168	2
1649	P413	max	T	.694	1	.364	1	.165	1	1.674	2	.601	1
1650		min		.178	2	.064	2	.057	2	1.511	1	.156	2
1651		max	B	-.05	2	-.169	2	.174	1	-.161	1	.599	1
1652		min		-.344	1	-.692	1	.06	2	-.212	2	.15	2
1653	P414	max	T	.6	1	.327	1	.136	1	1.676	2	.521	1
1654		min		.16	2	.055	2	.052	2	1.513	1	.141	2
1655		max	B	-.04	2	-.15	2	.145	1	-.189	1	.517	1
1656		min		-.308	1	-.597	1	.055	2	-.255	2	.135	2
1657	P415	max	T	.722	1	.468	1	.127	1	1.719	2	.634	1
1658		min		.188	2	.086	2	.051	2	1.522	1	.163	2
1659		max	B	-.071	2	-.177	2	.137	1	-.189	1	.628	1
1660		min		-.445	1	-.718	1	.053	2	-.232	2	.154	2
1661	P416	max	T	.626	1	.428	1	.099	1	1.724	2	.554	1
1662		min		.17	2	.077	2	.047	2	1.533	1	.148	2
1663		max	B	-.061	2	-.158	2	.108	1	-.227	1	.546	1
1664		min		-.406	1	-.621	1	.048	2	-.28	2	.138	2
1665	P417	max	T	.499	1	.287	1	.106	1	1.68	2	.434	1
1666		min		.14	2	.046	2	.047	2	1.517	1	.123	2
1667		max	B	-.029	2	-.129	2	.114	1	-.228	1	.43	1
1668		min		-.267	1	-.495	1	.05	2	-.306	2	.118	2
1669	P418	max	T	.392	1	.243	1	.074	1	1.69	2	.343	1
1670		min		.117	2	.035	2	.041	2	1.526	1	.104	2
1671		max	B	-.015	2	-.107	2	.085	1	-.296	1	.338	1
1672		min		-.22	1	-.389	1	.046	2	-.367	2	.1	2
1673	P419	max	T	.523	1	.386	1	.068	1	1.736	2	.47	1
1674		min		.15	2	.067	2	.041	2	1.557	1	.13	2
1675		max	B	-.05	2	-.138	2	.078	1	-.291	1	.461	1
1676		min		-.363	1	-.519	1	.044	2	-.339	2	.121	2
1677	P420	max	T	.416	1	.342	1	.037	1	1.758	2	.385	1
1678		min		.127	2	.058	2	.034	2	1.621	1	.11	2
1679		max	B	-.037	2	-.116	2	.051	1	-.412	2	.375	1
1680		min		-.314	1	-.415	1	.04	2	-.431	1	.103	2
1681	P421	max	T	.279	1	.196	1	.041	1	1.709	2	.249	1
1682		min		.092	2	.024	2	.034	2	1.544	1	.083	2
1683		max	B	0	2	-.084	2	.058	1	-.435	1	.244	1
1684		min		-.165	1	-.281	1	.042	2	-.441	2	.084	2

Envelope Plate/Shell Principal Stresses (Continued)

	Plate		Sur...	Sigma1 [ksi]	LC	Sigma2 [ksi]	LC	Tau Max [k...	LC	Angle [rad]	LC	Von Mises [ksi]	LC
1685	P422	max	T	.162	1	.147	1	.026	2	1.744	2	.155	1
1686		min		.065	2	.013	2	.007	1	1.63	1	.059	2
1687		max	B	.019	2	-.06	2	.043	1	-.528	2	.156	1
1688		min		-.094	1	-.18	1	.039	2	-.736	1	.071	2
1689	P423	max	T	.311	1	.292	1	.027	2	2.15	1	.302	1
1690		min		.102	2	.048	2	.009	1	1.801	2	.088	2
1691		max	B	-.022	2	-.094	2	.036	2	-.503	2	.291	1
1692		min		-.251	1	-.319	1	.034	1	-.784	1	.085	2
1693	P424	max	T	.255	1	.189	1	.033	1	1.887	2	.229	1
1694		min		.076	2	.038	2	.019	2	-.184	1	.065	2
1695		max	B	-.005	2	-.072	2	.046	1	1.955	1	.219	1
1696		min		-.158	1	-.25	1	.034	2	-.612	2	.07	2
1697	P425	max	T	.097	1	.04	1	.028	1	1.817	2	.084	1
1698		min		.036	2	.001	2	.017	2	-.021	1	.035	2
1699		max	B	.04	2	-.036	2	.053	1	2.06	1	.103	1
1700		min		.005	1	-.101	1	.038	2	-.628	2	.066	2
1701	P426	max	T	.047	1	-.01	2	.066	1	2.044	2	.116	1
1702		min		.005	2	-.085	1	.008	2	.031	1	.014	2
1703		max	B	.123	1	-.014	2	.081	1	1.906	1	.146	1
1704		min		.065	2	-.039	1	.039	2	-.731	2	.073	2
1705	P427	max	T	.209	1	.075	1	.067	1	2.108	2	.184	1
1706		min		.049	2	.027	2	.011	2	-.085	1	.043	2
1707		max	B	.015	2	-.052	2	.074	1	1.802	1	.177	1
1708		min		-.049	1	-.196	1	.034	2	-.731	2	.061	2
1709	P428	max	T	.167	1	.01	2	.102	1	-.024	1	.188	1
1710		min		.028	2	-.037	1	.009	2	-.469	2	.025	2
1711		max	B	.063	1	-.034	2	.106	1	2.303	2	.188	1
1712		min		.038	2	-.148	1	.036	2	1.762	1	.063	2
1713	P429	max	T	.002	1	-.031	2	.105	1	.089	1	.21	1
1714		min		-.016	2	-.209	1	.007	2	-.161	2	.027	2
1715		max	B	.246	1	.014	1	.116	1	2.325	2	.24	1
1716		min		.092	2	.005	2	.044	2	1.871	1	.09	2
1717	P430	max	T	-.024	2	-.062	2	.146	1	.167	1	.31	1
1718		min		-.034	1	-.325	1	.019	2	.146	2	.054	2
1719		max	B	.364	1	.055	1	.155	1	2.275	2	.34	1
1720		min		.122	2	.02	2	.051	2	1.897	1	.113	2
1721	P431	max	T	.129	1	-.015	2	.136	1	.039	1	.236	1
1722		min		.018	2	-.143	1	.017	2	-.079	2	.029	2
1723		max	B	.17	1	-.02	2	.138	1	2.227	2	.241	1
1724		min		.063	2	-.106	1	.041	2	1.773	1	.075	2
1725	P432	max	T	.097	1	-.041	2	.167	1	.114	1	.298	1
1726		min		.012	2	-.237	1	.027	2	.099	2	.048	2
1727		max	B	.265	1	-.009	2	.168	1	2.193	2	.307	1
1728		min		.087	2	-.07	1	.048	2	1.817	1	.092	2
1729	P433	max	T	-.026	2	-.092	2	.184	1	.299	2	.399	1
1730		min		-.054	1	-.423	1	.033	2	.268	1	.082	2
1731		max	B	.465	1	.079	1	.193	1	2.271	2	.431	1
1732		min		.149	2	.028	2	.061	2	1.965	1	.137	2
1733	P434	max	T	-.022	2	-.115	2	.219	1	.442	2	.467	1
1734		min		-.055	1	-.492	1	.046	2	.391	1	.106	2
1735		max	B	.537	1	.081	1	.228	1	2.311	2	.501	1
1736		min		.171	2	.028	2	.071	2	2.066	1	.159	2
1737	P435	max	T	.073	1	-.064	2	.192	1	.233	2	.353	1
1738		min		.009	2	-.311	1	.037	2	.204	1	.069	2
1739		max	B	.341	1	-.002	2	.193	1	2.202	2	.365	1
1740		min		.109	2	-.044	1	.055	2	1.887	1	.11	2
1741	P436	max	T	.06	1	-.081	2	.209	1	.364	2	.391	1

Envelope Plate/Shell Principal Stresses (Continued)

	Plate		Sur...	Sigma1 [ksi]	LC	Sigma2 [ksi]	LC	Tau Max [k...	LC	Angle [rad]	LC	Von Mises [ksi]	LC
1742		min		.009	2	-.358	1	.045	2	.313	1	.086	2
1743		max	B	.39	1	0	2	.209	1	2.248	2	.405	1
1744		min		.124	2	-.029	1	.062	2	1.984	1	.124	2
1745	P437	max	T	-.013	2	-.131	2	.246	1	.593	2	.51	1
1746		min		-.033	1	-.526	1	.059	2	.537	1	.125	2
1747		max	B	.573	1	.059	1	.257	1	2.195	1	.546	1
1748		min		.184	2	.021	2	.081	2	-.754	2	.174	2
1749	P438	max	T	.008	1	-.137	2	.267	1	.751	2	.529	1
1750		min		0	2	-.525	1	.069	2	.701	1	.138	2
1751		max	B	.575	1	.015	1	.28	1	2.344	1	.568	1
1752		min		.187	2	.008	2	.089	2	-.652	2	.183	2
1753	P439	max	T	.056	1	-.091	2	.215	1	.503	2	.405	1
1754		min		.012	2	-.373	1	.052	2	.444	1	.098	2
1755		max	B	.409	1	-.001	2	.217	1	2.325	2	.422	1
1756		min		.133	2	-.026	1	.067	2	2.106	1	.133	2
1757	P440	max	T	.063	1	-.094	2	.211	1	.657	2	.395	1
1758		min		.016	2	-.36	1	.055	2	.6	1	.103	2
1759		max	B	.398	1	-.006	2	.217	1	2.256	1	.418	1
1760		min		.133	2	-.036	1	.07	2	-.711	2	.136	2
1761	P441	max	T	.054	1	-.133	2	.27	1	.917	2	.516	1
1762		min		.014	2	-.487	1	.074	2	.878	1	.141	2
1763		max	B	.54	1	-.006	2	.288	1	-.524	2	.558	1
1764		min		.178	2	-.035	1	.092	2	-.632	1	.182	2
1765	P442	max	T	.026	1	-.103	2	.188	1	1.159	2	.364	1
1766		min		.006	2	-.35	1	.054	2	1.119	1	.106	2
1767		max	B	.409	1	-.002	2	.213	1	-.305	2	.417	1
1768		min		.145	2	-.016	1	.074	2	-.39	1	.146	2
1769	P443	max	T	.072	1	-.088	2	.194	1	.824	2	.358	1
1770		min		.02	2	-.316	1	.054	2	.779	1	.099	2
1771		max	B	.359	1	-.011	2	.205	1	-.578	2	.387	1
1772		min		.125	2	-.051	1	.068	2	-.71	1	.131	2
1773	P444	max	T	.033	1	-.06	2	.117	1	1.054	2	.218	1
1774		min		.009	2	-.2	1	.035	2	1.003	1	.065	2
1775		max	B	.25	1	-.004	2	.135	1	-.348	2	.261	1
1776		min		.097	2	-.02	1	.05	2	-.463	1	.099	2
1777	P445	max	T	.063	1	-.019	2	.069	1	-.546	2	.119	1
1778		min		.03	2	-.074	1	.024	2	-.638	1	.042	2
1779		max	B	.131	1	-.004	2	.077	1	.599	1	.144	1
1780		min		.071	2	-.023	1	.038	2	.37	2	.073	2
1781	P446	max	T	.104	1	-.045	2	.137	1	-.553	2	.24	1
1782		min		.042	2	-.17	1	.043	2	-.561	1	.075	2
1783		max	B	.224	1	-.014	2	.142	1	.826	1	.26	1
1784		min		.093	2	-.061	1	.054	2	.614	2	.101	2
1785	P447	max	T	.155	1	-.008	2	.091	1	-.222	1	.17	1
1786		min		.053	2	-.028	1	.031	2	-.263	2	.058	2
1787		max	B	.039	1	-.009	2	.061	1	1.15	1	.107	1
1788		min		.034	2	-.082	1	.021	2	.58	2	.039	2
1789	P448	max	T	.181	1	-.025	2	.136	1	-.299	1	.24	1
1790		min		.06	2	-.091	1	.043	2	-.358	2	.076	2
1791		max	B	.116	1	-.024	2	.118	1	1.106	1	.205	1
1792		min		.056	2	-.121	1	.04	2	.772	2	.071	2
1793	P449	max	T	.124	1	-.056	2	.173	1	-.412	1	.303	1
1794		min		.044	2	-.221	1	.05	2	-.439	2	.087	2
1795		max	B	.269	1	-.016	2	.173	1	.994	1	.314	1
1796		min		.1	2	-.076	1	.058	2	.75	2	.109	2
1797	P450	max	T	.145	1	-.058	2	.194	1	-.286	1	.34	1
1798		min		.044	2	-.244	1	.051	2	-.325	2	.089	2

Envelope Plate/Shell Principal Stresses (Continued)

	Plate		Sur...	Sigma1 [ksi]	LC	Sigma2 [ksi]	LC	Tau Max [k...	LC	Angle [rad]	LC	Von Mises [ksi]	LC
1799		max	B	.288	1	-.018	2	.191	1	1.12	1	.344	1
1800		min		.101	2	-.093	1	.06	2	.847	2	.111	2
1801	P451	max	T	.212	1	-.035	2	.175	1	-.238	1	.306	1
1802		min		.065	2	-.139	1	.05	2	-.3	2	.087	2
1803		max	B	.165	1	-.031	2	.16	1	1.188	1	.277	1
1804		min		.066	2	-.154	1	.049	2	.883	2	.086	2
1805	P452	max	T	.243	1	-.037	2	.202	1	-.167	1	.353	1
1806		min		.068	2	-.162	1	.053	2	-.225	2	.093	2
1807		max	B	.189	1	-.038	2	.187	1	1.261	1	.325	1
1808		min		.069	2	-.186	1	.053	2	.96	2	.094	2
1809	P453	max	T	.168	1	-.054	2	.203	1	-.18	1	.353	1
1810		min		.046	2	-.238	1	.05	2	-.216	2	.086	2
1811		max	B	.278	1	-.022	2	.197	1	1.217	1	.35	1
1812		min		.095	2	-.116	1	.059	2	.919	2	.108	2
1813	P454	max	T	.195	1	-.043	2	.199	1	-.088	1	.344	1
1814		min		.048	2	-.202	1	.045	2	-.114	2	.079	2
1815		max	B	.238	1	-.028	2	.19	1	1.291	1	.333	1
1816		min		.083	2	-.143	1	.055	2	.96	2	.099	2
1817	P455	max	T	.274	1	-.034	2	.216	1	-.1	1	.379	1
1818		min		.072	2	-.159	1	.053	2	-.15	2	.093	2
1819		max	B	.185	1	-.045	2	.201	1	1.321	1	.349	1
1820		min		.065	2	-.218	1	.055	2	1.012	2	.096	2
1821	P456	max	T	.306	1	-.024	2	.218	1	-.037	1	.387	1
1822		min		.075	2	-.129	1	.05	2	-.075	2	.09	2
1823		max	B	.154	1	-.052	2	.202	1	1.371	1	.354	1
1824		min		.056	2	-.251	1	.054	2	1.041	2	.094	2
1825	P457	max	T	.227	1	-.026	2	.183	1	-.006	1	.321	1
1826		min		.051	2	-.14	1	.039	2	-.013	2	.068	2
1827		max	B	.172	1	-.035	2	.173	1	1.345	1	.3	1
1828		min		.065	2	-.175	1	.05	2	.971	2	.088	2
1829	P458	max	T	.262	1	-.005	2	.16	1	.096	2	.295	1
1830		min		.056	2	-.058	1	.031	2	.071	1	.059	2
1831		max	B	.085	1	-.045	2	.148	1	1.38	1	.264	1
1832		min		.044	2	-.211	1	.045	2	.949	2	.077	2
1833	P459	max	T	.34	1	-.01	2	.208	1	.023	1	.383	1
1834		min		.079	2	-.076	1	.044	2	.001	2	.085	2
1835		max	B	.098	1	-.06	2	.192	1	1.411	1	.345	1
1836		min		.042	2	-.286	1	.051	2	1.049	2	.089	2
1837	P460	max	T	.376	1	.009	2	.189	1	.082	2	.377	1
1838		min		.084	2	-.003	1	.038	2	.08	1	.08	2
1839		max	B	.024	2	-.069	2	.172	1	1.44	1	.334	1
1840		min		.022	1	-.322	1	.046	2	1.031	2	.083	2
1841	P461	max	T	.302	1	.04	1	.131	1	.23	2	.284	1
1842		min		.064	2	.017	2	.023	2	.148	1	.057	2
1843		max	B	.022	2	-.057	2	.117	1	1.391	1	.244	1
1844		min		-.017	1	-.252	1	.04	2	.891	2	.071	2
1845	P462	max	T	.346	1	.145	1	.101	1	.428	2	.301	1
1846		min		.073	2	.04	2	.017	2	.238	1	.064	2
1847		max	B	0	2	-.072	2	.084	1	1.366	1	.257	1
1848		min		-.127	1	-.296	1	.036	2	.797	2	.072	2
1849	P463	max	T	.415	1	.086	1	.165	1	.177	2	.379	1
1850		min		.091	2	.03	2	.031	2	.137	1	.08	2
1851		max	B	.003	2	-.079	2	.146	1	1.456	1	.333	1
1852		min		-.069	1	-.362	1	.041	2	.985	2	.081	2
1853	P464	max	T	.457	1	.184	1	.136	1	.302	2	.398	1
1854		min		.099	2	.052	2	.024	2	.199	1	.086	2
1855		max	B	-.018	2	-.091	2	.116	1	1.455	1	.351	1

Envelope Plate/Shell Principal Stresses (Continued)

	Plate		Sur...	Sigma1 [ksi]	LC	Sigma2 [ksi]	LC	Tau Max [k...	LC	Angle [rad]	LC	Von Mises [ksi]	LC
1856		min		-.172	1	-.404	1	.037	2	.905	2	.084	2
1857	P465	max	T	.395	1	.252	1	.071	1	.719	2	.347	1
1858		min		.087	2	.059	2	.014	2	.371	1	.077	2
1859		max	B	-.02	2	-.089	2	.052	1	1.263	1	.306	1
1860		min		-.24	1	-.344	1	.034	2	.678	2	.081	2
1861	P466	max	T	.453	1	.354	1	.049	1	1.005	2	.413	1
1862		min		.105	2	.075	2	.015	2	.614	1	.094	2
1863		max	B	-.037	2	-.108	2	.035	2	.901	1	.377	1
1864		min		-.344	1	-.404	1	.03	1	.554	2	.095	2
1865	P467	max	T	.504	1	.289	1	.107	1	.481	2	.438	1
1866		min		.11	2	.073	2	.018	2	.276	1	.097	2
1867		max	B	-.038	2	-.105	2	.083	1	1.43	1	.392	1
1868		min		-.282	1	-.448	1	.034	2	.793	2	.092	2
1869	P468	max	T	.555	1	.396	1	.08	1	.716	2	.495	1
1870		min		.124	2	.092	2	.016	2	.39	1	.111	2
1871		max	B	-.057	2	-.122	2	.05	1	1.347	1	.453	1
1872		min		-.394	1	-.495	1	.033	2	.66	2	.106	2
1873	P469	max	T	.53	1	.437	1	.047	1	1.185	2	.49	1
1874		min		.126	2	.087	2	.019	2	.98	1	.112	2
1875		max	B	-.052	2	-.128	2	.041	1	.441	2	.46	1
1876		min		-.414	1	-.496	1	.038	2	.395	1	.111	2
1877	P470	max	T	.625	1	.498	1	.064	1	1.288	2	.572	1
1878		min		.147	2	.099	2	.024	2	1.239	1	.13	2
1879		max	B	-.065	2	-.148	2	.069	1	.345	2	.548	1
1880		min		-.465	1	-.604	1	.042	2	.211	1	.129	2
1881	P471	max	T	.615	1	.497	1	.059	1	.937	2	.565	1
1882		min		.141	2	.107	2	.017	2	.581	1	.128	2
1883		max	B	-.073	2	-.14	2	.034	2	1.014	1	.528	1
1884		min		-.502	1	-.55	1	.024	1	.524	2	.121	2
1885	P472	max	T	.689	1	.585	1	.052	1	1.089	2	.643	1
1886		min		.16	2	.121	2	.02	2	.862	1	.145	2
1887		max	B	-.087	2	-.159	2	.036	2	.403	2	.609	1
1888		min		-.576	1	-.638	1	.031	1	.352	1	.138	2
1889	P473	max	T	.724	1	.549	1	.087	1	1.362	1	.654	1
1890		min		.166	2	.11	2	.028	2	1.352	2	.146	2
1891		max	B	-.077	2	-.168	2	.1	1	.266	2	.634	1
1892		min		-.51	1	-.71	1	.046	2	.134	1	.146	2
1893	P474	max	T	.819	1	.596	1	.111	1	1.422	1	.733	1
1894		min		.183	2	.121	2	.031	2	1.399	2	.161	2
1895		max	B	-.087	2	-.187	2	.129	1	.2	2	.717	1
1896		min		-.553	1	-.81	1	.05	2	.089	1	.162	2
1897	P475	max	T	.777	1	.655	1	.061	1	1.182	2	.724	1
1898		min		.179	2	.134	2	.022	2	1.106	1	.161	2
1899		max	B	-.099	2	-.178	2	.059	1	.301	2	.694	1
1900		min		-.628	1	-.745	1	.04	2	.151	1	.155	2
1901	P476	max	T	.87	1	.715	1	.078	1	1.245	2	.804	1
1902		min		.196	2	.147	2	.024	2	1.244	1	.177	2
1903		max	B	-.11	2	-.197	2	.086	1	.216	2	.777	1
1904		min		-.676	1	-.849	1	.043	2	.073	1	.171	2
1905	P477	max	T	.905	1	.639	1	.133	1	1.455	1	.806	1
1906		min		.198	2	.132	2	.033	2	1.44	2	.175	2
1907		max	B	-.096	2	-.203	2	.154	1	.145	2	.793	1
1908		min		-.592	1	-.901	1	.054	2	.054	1	.176	2
1909	P478	max	T	.98	1	.678	1	.151	1	1.481	2	.87	1
1910		min		.211	2	.142	2	.035	2	1.473	1	.187	2
1911		max	B	-.104	2	-.218	2	.176	1	.097	2	.859	1
1912		min		-.628	1	-.979	1	.057	2	.025	1	.188	2

Envelope Plate/Shell Principal Stresses (Continued)

	Plate		Sur...	Sigma1 [ksi]	LC	Sigma2 [ksi]	LC	Tau Max [k...	LC	Angle [rad]	LC	Von Mises [ksi]	LC
1913	P479	max	T	.958	1	.769	1	.094	1	1.317	1	.879	1
1914		min		.211	2	.16	2	.025	2	1.295	2	.19	2
1915		max	B	-.12	2	-.213	2	.111	1	.145	2	.855	1
1916		min		-.723	1	-.944	1	.047	2	.026	1	.185	2
1917	P480	max	T	1.035	1	.819	1	.108	1	1.358	1	.946	1
1918		min		.223	2	.172	2	.025	2	1.351	2	.202	2
1919		max	B	-.129	2	-.227	2	.131	1	.086	2	.925	1
1920		min		-.766	1	-1.027	1	.049	2	-.011	1	.198	2
1921	P481	max	T	1.042	1	.712	1	.165	1	1.527	2	.922	1
1922		min		.222	2	.15	2	.036	2	1.485	1	.196	2
1923		max	B	-.111	2	-.229	2	.192	1	.056	2	.914	1
1924		min		-.66	1	-1.044	1	.059	2	0	1	.198	2
1925	P482	max	T	1.088	1	.738	1	.175	1	1.578	2	.962	1
1926		min		.231	2	.156	2	.037	2	1.492	1	.204	2
1927		max	B	-.116	2	-.238	2	.203	1	.02	2	.955	1
1928		min		-.685	1	-1.091	1	.061	2	-.024	1	.206	2
1929	P483	max	T	1.098	1	.864	1	.117	1	1.424	2	1.002	1
1930		min		.232	2	.184	2	.024	2	1.384	1	.212	2
1931		max	B	-.137	2	-.239	2	.145	1	.036	2	.983	1
1932		min		-.806	1	-1.095	1	.051	2	-.042	1	.208	2
1933	P484	max	T	1.144	1	.9	1	.122	1	1.524	2	1.044	1
1934		min		.24	2	.193	2	.024	2	1.406	1	.22	2
1935		max	B	-.144	2	-.247	2	.153	1	-.005	2	1.027	1
1936		min		-.839	1	-1.145	1	.051	2	-.068	1	.215	2
1937	P485	max	T	1.116	1	.756	1	.18	1	1.631	2	.987	1
1938		min		.238	2	.16	2	.039	2	1.498	1	.21	2
1939		max	B	-.121	2	-.243	2	.209	1	-.01	2	.981	1
1940		min		-.703	1	-1.121	1	.061	2	-.046	1	.211	2
1941	P486	max	T	1.127	1	.764	1	.181	1	1.68	2	.996	1
1942		min		.243	2	.161	2	.041	2	1.503	1	.214	2
1943		max	B	-.124	2	-.246	2	.209	1	-.037	2	.991	1
1944		min		-.713	1	-1.132	1	.061	2	-.065	1	.213	2
1945	P487	max	T	1.172	1	.926	1	.123	1	1.645	2	1.07	1
1946		min		.246	2	.198	2	.024	2	1.429	1	.226	2
1947		max	B	-.15	2	-.252	2	.156	1	-.035	2	1.054	1
1948		min		-.864	1	-1.175	1	.051	2	-.089	1	.22	2
1949	P488	max	T	1.181	1	.939	1	.121	1	1.749	2	1.08	1
1950		min		.252	2	.198	2	.027	2	1.455	1	.23	2
1951		max	B	-.154	2	-.255	2	.154	1	-.062	2	1.065	1
1952		min		-.877	1	-1.185	1	.05	2	-.106	1	.222	2
1953	P489	max	T	1.119	1	.763	1	.178	1	1.719	2	.99	1
1954		min		.246	2	.158	2	.044	2	1.509	1	.216	2
1955		max	B	-.125	2	-.246	2	.205	1	-.061	2	.985	1
1956		min		-.714	1	-1.124	1	.06	2	-.084	1	.213	2
1957	P490	max	T	1.094	1	.75	1	.172	1	1.747	2	.969	1
1958		min		.246	2	.153	2	.046	2	1.514	1	.215	2
1959		max	B	-.124	2	-.242	2	.196	1	-.084	2	.963	1
1960		min		-.706	1	-1.097	1	.059	2	-.102	1	.21	2
1961	P491	max	T	1.171	1	.937	1	.117	1	1.822	2	1.073	1
1962		min		.257	2	.194	2	.031	2	1.484	1	.232	2
1963		max	B	-.156	2	-.254	2	.148	1	-.081	2	1.058	1
1964		min		-.879	1	-1.174	1	.049	2	-.119	1	.222	2
1965	P492	max	T	1.143	1	.92	1	.112	1	1.86	2	1.05	1
1966		min		.259	2	.187	2	.036	2	1.514	1	.232	2
1967		max	B	-.155	2	-.251	2	.139	1	-.099	2	1.034	1
1968		min		-.867	1	-1.145	1	.048	2	-.13	1	.219	2
1969	P493	max	T	1.053	1	.729	1	.162	1	1.764	2	.934	1

Envelope Plate/Shell Principal Stresses (Continued)

	Plate		Sur...	Sigma1 [ksi]	LC	Sigma2 [ksi]	LC	Tau Max [k...	LC	Angle [rad]	LC	Von Mises [ksi]	LC
1970		min		.244	2	.146	2	.049	2	1.519	1	.213	2
1971		max	B	-.121	2	-.236	2	.182	1	-.109	2	.927	1
1972		min		-.689	1	-1.054	1	.058	2	-.12	1	.205	2
1973	P494	max	T	.996	1	.7	1	.148	1	1.772	2	.885	1
1974		min		.238	2	.138	2	.05	2	1.524	1	.207	2
1975		max	B	-.117	2	-.228	2	.165	1	-.137	2	.877	1
1976		min		-.664	1	-.994	1	.055	2	-.14	1	.197	2
1977	P495	max	T	1.099	1	.89	1	.104	1	1.874	2	1.011	1
1978		min		.258	2	.177	2	.041	2	1.541	1	.229	2
1979		max	B	-.152	2	-.245	2	.127	1	-.12	2	.995	1
1980		min		-.844	1	-1.097	1	.047	2	-.144	1	.214	2
1981	P496	max	T	1.039	1	.85	1	.094	1	1.873	2	.959	1
1982		min		.254	2	.167	2	.043	2	1.567	1	.223	2
1983		max	B	-.146	2	-.236	2	.112	1	-.146	2	.943	1
1984		min		-.81	1	-1.034	1	.045	2	-.162	1	.207	2
1985	P497	max	T	.925	1	.664	1	.13	1	1.774	2	.826	1
1986		min		.229	2	.129	2	.05	2	1.53	1	.199	2
1987		max	B	-.111	2	-.216	2	.145	1	-.163	1	.817	1
1988		min		-.633	1	-.922	1	.053	2	-.17	2	.187	2
1989	P498	max	T	.843	1	.624	1	.109	1	1.779	2	.758	1
1990		min		.217	2	.119	2	.049	2	1.539	1	.188	2
1991		max	B	-.104	2	-.202	2	.121	1	-.191	1	.747	1
1992		min		-.596	1	-.838	1	.049	2	-.206	2	.175	2
1993	P499	max	T	.965	1	.804	1	.081	1	1.867	2	.895	1
1994		min		.245	2	.156	2	.044	2	1.593	1	.214	2
1995		max	B	-.139	2	-.225	2	.094	1	-.182	2	.879	1
1996		min		-.77	1	-.958	1	.043	2	-.189	1	.197	2
1997	P500	max	T	.879	1	.753	1	.063	1	1.86	2	.823	1
1998		min		.232	2	.145	2	.043	2	1.63	1	.203	2
1999		max	B	-.131	2	-.211	2	.073	1	-.229	2	.807	1
2000		min		-.724	1	-.871	1	.04	2	-.234	1	.185	2
2001	P501	max	T	.751	1	.582	1	.085	1	1.778	2	.683	1
2002		min		.201	2	.11	2	.045	2	1.556	1	.174	2
2003		max	B	-.095	2	-.186	2	.095	1	-.233	1	.671	1
2004		min		-.556	1	-.746	1	.045	2	-.257	2	.161	2
2005	P502	max	T	.653	1	.537	1	.058	1	1.786	2	.603	1
2006		min		.182	2	.1	2	.041	2	1.593	1	.158	2
2007		max	B	-.085	2	-.167	2	.068	1	-.304	1	.591	1
2008		min		-.512	1	-.647	1	.041	2	-.316	2	.145	2
2009	P503	max	T	.785	1	.7	1	.043	1	1.857	2	.746	1
2010		min		.215	2	.134	2	.04	2	1.706	1	.188	2
2011		max	B	-.121	2	-.195	2	.051	1	-.289	2	.73	1
2012		min		-.674	1	-.776	1	.037	2	-.323	1	.171	2
2013	P504	max	T	.688	1	.643	1	.036	2	1.956	1	.667	1
2014		min		.195	2	.124	2	.022	1	1.865	2	.171	2
2015		max	B	-.11	2	-.177	2	.034	2	-.367	2	.651	1
2016		min		-.619	1	-.679	1	.03	1	-.559	1	.155	2
2017	P505	max	T	.55	1	.49	1	.035	2	1.804	2	.522	1
2018		min		.161	2	.091	2	.03	1	1.709	1	.139	2
2019		max	B	-.073	2	-.147	2	.042	1	-.391	2	.51	1
2020		min		-.462	1	-.547	1	.037	2	-.468	1	.128	2
2021	P506	max	T	.457	1	.429	1	.028	2	1.843	2	.444	1
2022		min		.137	2	.081	2	.014	1	-.702	1	.12	2
2023		max	B	-.06	2	-.127	2	.033	2	2.247	1	.431	1
2024		min		-.398	1	-.457	1	.03	1	-.485	2	.11	2
2025	P507	max	T	.61	1	.564	1	.029	2	1.893	2	.588	1
2026		min		.173	2	.114	2	.023	1	-.524	1	.153	2

Envelope Plate/Shell Principal Stresses (Continued)

	Plate		Sur...	Sigma1 [ksi]	LC	Sigma2 [ksi]	LC	Tau Max [k...	LC	Angle [rad]	LC	Von Mises [ksi]	LC
2027		max	B	-.097	2	-.158	2	.031	2	2.048	1	.573	1
2028		min		-.543	1	-.598	1	.028	1	-.467	2	.138	2
2029	P508	max	T	.556	1	.46	1	.048	1	1.958	2	.515	1
2030		min		.15	2	.105	2	.022	2	-.267	1	.133	2
2031		max	B	-.083	2	-.139	2	.049	1	1.758	1	.499	1
2032		min		-.442	1	-.541	1	.028	2	-.592	2	.121	2
2033	P509	max	T	.405	1	.327	1	.039	1	1.924	2	.372	1
2034		min		.113	2	.072	2	.021	2	-.239	1	.099	2
2035		max	B	-.045	2	-.107	2	.046	1	1.858	1	.358	1
2036		min		-.304	1	-.395	1	.031	2	-.602	2	.093	2
2037	P510	max	T	.36	1	.218	1	.071	1	2.115	2	.314	1
2038		min		.088	2	.061	2	.014	2	-.145	1	.078	2
2039		max	B	-.027	2	-.088	2	.074	1	1.726	1	.3	1
2040		min		-.198	1	-.345	1	.03	2	-.733	2	.078	2
2041	P511	max	T	.508	1	.353	1	.078	1	2.111	2	.451	1
2042		min		.126	2	.094	2	.016	2	-.182	1	.113	2
2043		max	B	-.066	2	-.122	2	.078	1	1.665	1	.435	1
2044		min		-.336	1	-.491	1	.028	2	-.736	2	.105	2
2045	P512	max	T	.463	1	.247	1	.108	1	-.134	1	.401	1
2046		min		.105	2	.081	2	.012	2	-.693	2	.095	2
2047		max	B	-.047	2	-.106	2	.107	1	2.266	2	.385	1
2048		min		-.231	1	-.444	1	.029	2	1.631	1	.092	2
2049	P513	max	T	.318	1	.111	1	.104	1	-.091	1	.28	1
2050		min		.068	2	.047	2	.011	2	-.604	2	.06	2
2051		max	B	-.007	2	-.071	2	.104	1	2.282	2	.266	1
2052		min		-.091	1	-.299	1	.032	2	1.686	1	.068	2
2053	P514	max	T	.279	1	.024	2	.135	1	-.043	1	.275	1
2054		min		.056	2	.008	1	.016	2	-.226	2	.049	2
2055		max	B	.015	2	-.057	2	.134	1	2.185	2	.262	1
2056		min		.011	1	-.257	1	.036	2	1.685	1	.066	2
2057	P515	max	T	.421	1	.145	1	.138	1	-.095	1	.37	1
2058		min		.092	2	.061	2	.015	2	-.324	2	.081	2
2059		max	B	-.026	2	-.092	2	.135	1	2.153	2	.353	1
2060		min		-.129	1	-.4	1	.033	2	1.625	1	.082	2
2061	P516	max	T	.382	1	.051	1	.165	1	-.056	1	.359	1
2062		min		.084	2	.037	2	.023	2	-.128	2	.073	2
2063		max	B	-.005	2	-.08	2	.161	1	2.076	2	.342	1
2064		min		-.035	1	-.358	1	.038	2	1.635	1	.078	2
2065	P517	max	T	.243	1	0	2	.164	1	.01	1	.294	1
2066		min		.049	2	-.084	1	.024	2	-.041	2	.049	2
2067		max	B	.104	1	-.045	2	.161	1	2.127	2	.284	1
2068		min		.037	2	-.217	1	.041	2	1.708	1	.072	2
2069	P518	max	T	.211	1	-.023	2	.187	1	.078	2	.325	1
2070		min		.044	2	-.163	1	.033	2	.072	1	.059	2
2071		max	B	.183	1	-.036	2	.183	1	2.107	2	.317	1
2072		min		.058	2	-.182	1	.047	2	1.751	1	.083	2
2073	P519	max	T	.346	1	.014	2	.189	1	-.013	1	.363	1
2074		min		.078	2	-.032	1	.032	2	-.018	2	.072	2
2075		max	B	.048	1	-.071	2	.183	1	2.034	2	.346	1
2076		min		.016	2	-.319	1	.043	2	1.658	1	.08	2
2077	P520	max	T	.313	1	-.007	2	.207	1	.064	2	.373	1
2078		min		.073	2	-.1	1	.04	2	.035	1	.076	2
2079		max	B	.115	1	-.062	2	.199	1	2.02	2	.355	1
2080		min		.034	2	-.283	1	.048	2	1.693	1	.085	2
2081	P521	max	T	.184	1	-.042	2	.202	1	.18	2	.351	1
2082		min		.04	2	-.221	1	.041	2	.144	1	.071	2
2083		max	B	.242	1	-.029	2	.197	1	2.12	2	.344	1

Envelope Plate/Shell Principal Stresses (Continued)

	Plate		Sur...	Sigma1 [ksi]	LC	Sigma2 [ksi]	LC	Tau Max [k...	LC	Angle [rad]	LC	Von Mises [ksi]	LC
2084		min		.075	2	-.152	1	.052	2	1.811	1	.094	2
2085	P522	max	T	.161	1	-.055	2	.207	1	.283	2	.362	1
2086		min		.038	2	-.253	1	.046	2	.229	1	.08	2
2087		max	B	.276	1	-.025	2	.201	1	2.162	2	.356	1
2088		min		.087	2	-.127	1	.056	2	1.889	1	.102	2
2089	P523	max	T	.283	1	-.023	2	.216	1	.138	2	.38	1
2090		min		.068	2	-.149	1	.046	2	.089	1	.082	2
2091		max	B	.164	1	-.055	2	.207	1	2.03	2	.36	1
2092		min		.049	2	-.249	1	.052	2	1.739	1	.09	2
2093	P524	max	T	.254	1	-.034	2	.214	1	.21	2	.373	1
2094		min		.064	2	-.175	1	.049	2	.15	1	.087	2
2095		max	B	.189	1	-.049	2	.204	1	2.06	2	.353	1
2096		min		.058	2	-.218	1	.053	2	1.795	1	.092	2
2097	P525	max	T	.141	1	-.061	2	.2	1	.394	2	.351	1
2098		min		.035	2	-.258	1	.048	2	.331	1	.085	2
2099		max	B	.282	1	-.022	2	.194	1	2.231	2	.348	1
2100		min		.092	2	-.106	1	.057	2	1.989	1	.104	2
2101	P526	max	T	.124	1	-.061	2	.18	1	.518	2	.316	1
2102		min		.034	2	-.235	1	.047	2	.453	1	.083	2
2103		max	B	.261	1	-.02	2	.176	1	2.326	2	.317	1
2104		min		.09	2	-.091	1	.055	2	2.116	1	.101	2
2105	P527	max	T	.226	1	-.039	2	.201	1	.286	2	.349	1
2106		min		.06	2	-.176	1	.05	2	.217	1	.087	2
2107		max	B	.19	1	-.043	2	.189	1	2.107	2	.327	1
2108		min		.06	2	-.188	1	.052	2	1.862	1	.09	2
2109	P528	max	T	.198	1	-.038	2	.175	1	.366	2	.303	1
2110		min		.055	2	-.151	1	.046	2	.292	1	.081	2
2111		max	B	.166	1	-.037	2	.162	1	2.174	2	.281	1
2112		min		.056	2	-.159	1	.047	2	1.941	1	.082	2
2113	P529	max	T	.107	1	-.052	2	.146	1	.658	2	.257	1
2114		min		.031	2	-.185	1	.041	2	.598	1	.073	2
2115		max	B	.215	1	-.018	2	.147	1	2.274	1	.263	1
2116		min		.08	2	-.078	1	.049	2	-.688	2	.09	2
2117	P530	max	T	.062	1	-.027	2	.074	1	.774	2	.128	1
2118		min		.016	2	-.085	1	.022	2	.69	1	.038	2
2119		max	B	.117	1	-.006	2	.077	1	-.47	2	.139	1
2120		min		.054	2	-.036	1	.03	2	-.685	1	.057	2
2121	P531	max	T	.169	1	-.029	2	.136	1	.441	2	.238	1
2122		min		.048	2	-.103	1	.039	2	.362	1	.067	2
2123		max	B	.117	1	-.03	2	.123	1	2.258	2	.214	1
2124		min		.045	2	-.13	1	.038	2	2.029	1	.066	2
2125	P532	max	T	.138	1	-.01	2	.085	1	.373	2	.157	1
2126		min		.036	2	-.033	1	.023	2	.288	1	.043	2
2127		max	B	.04	1	-.016	2	.066	1	2.316	2	.118	1
2128		min		.021	2	-.092	1	.018	2	1.985	1	.032	2
2129	P533	max	T	.263	1	-.004	2	.139	1	-.067	1	.271	1
2130		min		.079	2	-.015	1	.042	2	-.133	2	.081	2
2131		max	B	.017	1	-.024	2	.105	1	1.452	1	.202	1
2132		min		.011	2	-.193	1	.018	2	1.061	2	.031	2
2133	P534	max	T	.277	1	-.014	2	.165	1	-.121	1	.307	1
2134		min		.083	2	-.053	1	.049	2	-.213	2	.091	2
2135		max	B	.062	1	-.039	2	.138	1	1.354	1	.25	1
2136		min		.031	2	-.213	1	.035	2	1.002	2	.061	2
2137	P535	max	T	.363	1	-.002	2	.186	1	-.008	1	.368	1
2138		min		.103	2	-.009	1	.053	2	-.072	2	.105	2
2139		max	B	.01	1	-.052	2	.157	1	1.542	1	.308	1
2140		min		.005	2	-.303	1	.028	2	1.356	2	.054	2

Envelope Plate/Shell Principal Stresses (Continued)

	Plate		Sur...	Sigma1 [ksi]	LC	Sigma2 [ksi]	LC	Tau Max [k...	LC	Angle [rad]	LC	Von Mises [ksi]	LC
2141	P536	max	T	.373	1	-.008	2	.203	1	-.027	1	.391	1
2142		min		.106	2	-.034	1	.057	2	-.126	2	.11	2
2143		max	B	.037	1	-.062	2	.176	1	1.49	1	.334	1
2144		min		.017	2	-.314	1	.039	2	1.211	2	.071	2
2145	P537	max	T	.307	1	-.021	2	.198	1	-.11	1	.359	1
2146		min		.087	2	-.089	1	.054	2	-.191	2	.099	2
2147		max	B	.102	1	-.05	2	.174	1	1.356	1	.31	1
2148		min		.041	2	-.247	1	.046	2	1.044	2	.079	2
2149	P538	max	T	.339	1	-.022	2	.222	1	-.078	1	.402	1
2150		min		.092	2	-.105	1	.057	2	-.148	2	.105	2
2151		max	B	.121	1	-.059	2	.201	1	1.38	1	.357	1
2152		min		.045	2	-.281	1	.052	2	1.082	2	.09	2
2153	P539	max	T	.398	1	-.012	2	.228	1	-.029	1	.43	1
2154		min		.11	2	-.057	1	.061	2	-.118	2	.116	2
2155		max	B	.063	1	-.072	2	.203	1	1.467	1	.377	1
2156		min		.025	2	-.342	1	.048	2	1.192	2	.087	2
2157	P540	max	T	.428	1	-.011	2	.247	1	-.015	1	.464	1
2158		min		.114	2	-.065	1	.063	2	-.093	2	.12	2
2159		max	B	.074	1	-.081	2	.224	1	1.467	1	.416	1
2160		min		.028	2	-.374	1	.054	2	1.193	2	.098	2
2161	P541	max	T	.372	1	-.018	2	.236	1	-.038	1	.43	1
2162		min		.096	2	-.1	1	.057	2	-.098	2	.106	2
2163		max	B	.116	1	-.067	2	.216	1	1.409	1	.388	1
2164		min		.043	2	-.316	1	.055	2	1.108	2	.096	2
2165	P542	max	T	.406	1	-.009	2	.239	1	.004	1	.446	1
2166		min		.1	2	-.071	1	.055	2	-.044	2	.105	2
2167		max	B	.088	1	-.075	2	.22	1	1.439	1	.403	1
2168		min		.035	2	-.351	1	.055	2	1.123	2	.098	2
2169	P543	max	T	.461	1	-.007	2	.258	1	.009	1	.49	1
2170		min		.118	2	-.055	1	.062	2	-.06	2	.122	2
2171		max	B	.065	1	-.09	2	.237	1	1.477	1	.444	1
2172		min		.025	2	-.408	1	.057	2	1.196	2	.105	2
2173	P544	max	T	.495	1	.003	2	.26	1	.038	1	.508	1
2174		min		.123	2	-.026	1	.06	2	-.021	2	.121	2
2175		max	B	.037	1	-.098	2	.24	1	1.493	1	.462	1
2176		min		.018	2	-.443	1	.058	2	1.196	2	.108	2
2177	P545	max	T	.441	1	.004	2	.232	1	.048	1	.452	1
2178		min		.105	2	-.022	1	.05	2	.013	2	.103	2
2179		max	B	.038	1	-.084	2	.213	1	1.465	1	.408	1
2180		min		.022	2	-.387	1	.053	2	1.122	2	.097	2
2181	P546	max	T	.478	1	.045	1	.216	1	.091	1	.457	1
2182		min		.11	2	.022	2	.044	2	.074	2	.101	2
2183		max	B	.006	2	-.092	2	.197	1	1.486	1	.41	1
2184		min		-.031	1	-.425	1	.049	2	1.105	2	.096	2
2185	P547	max	T	.531	1	.022	1	.254	1	.07	1	.52	1
2186		min		.128	2	.016	2	.056	2	.021	2	.12	2
2187		max	B	.006	2	-.106	2	.234	1	1.509	1	.474	1
2188		min		-.011	1	-.479	1	.056	2	1.187	2	.11	2
2189	P548	max	T	.569	1	.086	1	.241	1	.104	1	.531	1
2190		min		.133	2	.033	2	.05	2	.069	2	.12	2
2191		max	B	-.009	2	-.115	2	.221	1	1.525	1	.484	1
2192		min		-.076	1	-.518	1	.053	2	1.168	2	.111	2
2193	P549	max	T	.518	1	.128	1	.195	1	.146	2	.467	1
2194		min		.116	2	.042	2	.037	2	.135	1	.102	2
2195		max	B	-.013	2	-.102	2	.175	1	1.501	1	.419	1
2196		min		-.115	1	-.464	1	.044	2	1.066	2	.096	2
2197	P550	max	T	.561	1	.222	1	.17	1	.236	2	.49	1

Envelope Plate/Shell Principal Stresses (Continued)

	Plate		Sur...	Sigma1 [ksi]	LC	Sigma2 [ksi]	LC	Tau Max [k...	LC	Angle [rad]	LC	Von Mises [ksi]	LC
2198		min		.124	2	.063	2	.03	2	.182	1	.107	2
2199		max	B	-.034	2	-.112	2	.147	1	1.509	1	.44	1
2200		min		-.212	1	-.506	1	.039	2	1	2	.1	2
2201	P551	max	T	.611	1	.165	1	.223	1	.14	1	.547	1
2202		min		.14	2	.052	2	.044	2	.126	2	.122	2
2203		max	B	-.027	2	-.124	2	.201	1	1.538	1	.499	1
2204		min		-.156	1	-.558	1	.048	2	1.133	2	.113	2
2205	P552	max	T	.656	1	.255	1	.201	1	.197	2	.573	1
2206		min		.147	2	.074	2	.037	2	.179	1	.128	2
2207		max	B	-.048	2	-.134	2	.176	1	1.548	1	.523	1
2208		min		-.249	1	-.601	1	.043	2	1.079	2	.117	2
2209	P553	max	T	.609	1	.323	1	.143	1	.357	2	.528	1
2210		min		.134	2	.085	2	.025	2	.237	1	.117	2
2211		max	B	-.055	2	-.124	2	.116	1	1.507	1	.479	1
2212		min		-.319	1	-.551	1	.035	2	.903	2	.108	2
2213	P554	max	T	.661	1	.43	1	.116	1	.518	2	.581	1
2214		min		.146	2	.105	2	.02	2	.308	1	.131	2
2215		max	B	-.075	2	-.138	2	.083	1	1.493	1	.534	1
2216		min		-.431	1	-.598	1	.032	2	.774	2	.12	2
2217	P555	max	T	.707	1	.355	1	.176	1	.29	2	.612	1
2218		min		.157	2	.095	2	.031	2	.224	1	.137	2
2219		max	B	-.07	2	-.144	2	.147	1	1.557	1	.562	1
2220		min		-.353	1	-.648	1	.037	2	.997	2	.125	2
2221	P556	max	T	.764	1	.461	1	.151	1	.412	2	.666	1
2222		min		.169	2	.117	2	.026	2	.279	1	.15	2
2223		max	B	-.091	2	-.156	2	.116	1	1.565	1	.615	1
2224		min		-.465	1	-.697	1	.032	2	.883	2	.136	2
2225	P557	max	T	.72	1	.536	1	.092	1	.7	2	.648	1
2226		min		.162	2	.123	2	.019	2	.409	1	.146	2
2227		max	B	-.093	2	-.154	2	.05	1	1.457	1	.603	1
2228		min		-.547	1	-.647	1	.031	2	.625	2	.134	2
2229	P558	max	T	.788	1	.639	1	.075	1	.852	2	.725	1
2230		min		.179	2	.139	2	.02	2	.555	1	.163	2
2231		max	B	-.109	2	-.171	2	.031	2	1.314	1	.682	1
2232		min		-.664	1	-.699	1	.018	1	.475	2	.15	2
2233	P559	max	T	.828	1	.57	1	.129	1	.554	2	.734	1
2234		min		.184	2	.136	2	.024	2	.35	1	.166	2
2235		max	B	-.112	2	-.17	2	.084	1	1.583	1	.682	1
2236		min		-.583	1	-.75	1	.029	2	.733	2	.149	2
2237	P560	max	T	.901	1	.677	1	.112	1	.681	2	.813	1
2238		min		.203	2	.153	2	.025	2	.442	1	.183	2
2239		max	B	-.13	2	-.185	2	.052	1	1.64	1	.761	1
2240		min		-.704	1	-.808	1	.027	2	.554	2	.164	2
2241	P561	max	T	.866	1	.731	1	.067	1	.947	2	.807	1
2242		min		.198	2	.154	2	.022	2	.736	1	.18	2
2243		max	B	-.123	2	-.189	2	.033	2	.335	2	.767	1
2244		min		-.75	1	-.782	1	.016	1	.126	1	.166	2
2245	P562	max	T	.951	1	.813	1	.069	1	1.006	2	.89	1
2246		min		.214	2	.17	2	.022	2	.899	1	.196	2
2247		max	B	-.135	2	-.208	2	.044	1	.228	2	.852	1
2248		min		-.805	1	-.893	1	.037	2	-.034	1	.183	2
2249	P563	max	T	.984	1	.78	1	.102	1	.76	2	.9	1
2250		min		.222	2	.17	2	.026	2	.547	1	.201	2
2251		max	B	-.146	2	-.203	2	.028	2	1.872	1	.848	1
2252		min		-.82	1	-.874	1	.027	1	.383	2	.181	2
2253	P564	max	T	1.076	1	.875	1	.101	1	.788	2	.991	1
2254		min		.241	2	.186	2	.027	2	.642	1	.219	2

Envelope Plate/Shell Principal Stresses (Continued)

	Plate		Sur...	Sigma1 [ksi]	LC	Sigma2 [ksi]	LC	Tau Max [k...	LC	Angle [rad]	LC	Von Mises [ksi]	LC
2255		max	B	-.16	2	-.221	2	.03	2	.224	2	.94	1
2256		min		-.912	1	-.966	1	.027	1	-.725	1	.197	2
2257	P565	max	T	1.038	1	.886	1	.076	1	1.034	2	.971	1
2258		min		.229	2	.185	2	.022	2	1.007	1	.21	2
2259		max	B	-.146	2	-.224	2	.067	1	.133	2	.935	1
2260		min		-.861	1	-.995	1	.039	2	-.093	1	.197	2
2261	P566	max	T	1.116	1	.954	1	.081	1	1.066	1	1.044	1
2262		min		.24	2	.201	2	.02	2	1.05	2	.223	2
2263		max	B	-.157	2	-.239	2	.085	1	.053	2	1.01	1
2264		min		-.915	1	-1.084	1	.041	2	-.138	1	.21	2
2265	P567	max	T	1.171	1	.963	1	.104	1	.772	2	1.082	1
2266		min		.258	2	.202	2	.028	2	.699	1	.235	2
2267		max	B	-.173	2	-.238	2	.046	1	.087	2	1.032	1
2268		min		-.982	1	-1.075	1	.032	2	-.547	1	.213	2
2269	P568	max	T	1.26	1	1.046	1	.107	1	.713	2	1.168	1
2270		min		.271	2	.219	2	.026	2	.711	1	.249	2
2271		max	B	-.185	2	-.252	2	.064	1	-.032	2	1.118	1
2272		min		-1.049	1	-1.176	1	.034	2	-.542	1	.227	2
2273	P569	max	T	1.179	1	1.016	1	.081	1	1.096	1	1.106	1
2274		min		.247	2	.217	2	.015	2	1.079	2	.233	2
2275		max	B	-.167	2	-.25	2	.095	1	-.014	2	1.074	1
2276		min		-.966	1	-1.157	1	.042	2	-.178	1	.22	2
2277	P570	max	T	1.222	1	1.071	1	.076	1	1.191	2	1.154	1
2278		min		.251	2	.232	2	.01	2	1.117	1	.242	2
2279		max	B	-.176	2	-.258	2	.098	1	-.067	2	1.123	1
2280		min		-1.012	1	-1.209	1	.041	2	-.211	1	.228	2
2281	P571	max	T	1.335	1	1.121	1	.107	1	.677	1	1.242	1
2282		min		.281	2	.235	2	.023	2	.601	2	.261	2
2283		max	B	-.197	2	-.264	2	.074	1	-.138	2	1.193	1
2284		min		-1.112	1	-1.26	1	.033	2	-.598	1	.238	2
2285	P572	max	T	1.389	1	1.187	1	.101	1	.599	1	1.3	1
2286		min		.288	2	.25	2	.019	2	.407	2	.271	2
2287		max	B	-.209	2	-.271	2	.076	1	-.229	2	1.252	1
2288		min		-1.169	1	-1.321	1	.031	2	-.687	1	.246	2
2289	P573	max	T	1.243	1	1.114	1	.065	1	1.672	2	1.184	1
2290		min		.254	2	.242	2	.006	2	1.15	1	.248	2
2291		max	B	-.184	2	-.262	2	.095	1	-.103	2	1.154	1
2292		min		-1.048	1	-1.238	1	.039	2	-.232	1	.233	2
2293	P574	max	T	1.242	1	1.14	1	.051	1	2.033	2	1.194	1
2294		min		.263	2	.24	2	.012	2	1.224	1	.252	2
2295		max	B	-.189	2	-.263	2	.087	1	-.129	2	1.166	1
2296		min		-1.069	1	-1.243	1	.037	2	-.237	1	.235	2
2297	P575	max	T	1.417	1	1.238	1	.09	1	.47	1	1.336	1
2298		min		.293	2	.26	2	.016	2	.082	2	.278	2
2299		max	B	-.22	2	-.274	2	.069	1	2.332	1	1.291	1
2300		min		-1.216	1	-1.354	1	.027	2	-.301	2	.251	2
2301	P576	max	T	1.419	1	1.267	1	.076	1	.282	1	1.35	1
2302		min		.3	2	.262	2	.019	2	-.281	2	.283	2
2303		max	B	-.23	2	-.273	2	.055	1	2.171	1	1.306	1
2304		min		-1.247	1	-1.358	1	.021	2	-.331	2	.254	2
2305	P577	max	T	1.223	1	1.143	1	.04	1	2.108	2	1.185	1
2306		min		.273	2	.231	2	.021	2	1.376	1	.255	2
2307		max	B	-.192	2	-.262	2	.077	1	-.124	2	1.158	1
2308		min		-1.073	1	-1.228	1	.035	2	-.223	1	.235	2
2309	P578	max	T	1.193	1	1.119	1	.037	1	2.097	2	1.158	1
2310		min		.278	2	.22	2	.029	2	1.584	1	.254	2
2311		max	B	-.191	2	-.259	2	.068	1	-.121	2	1.131	1

Envelope Plate/Shell Principal Stresses (Continued)

	Plate		Sur...	Sigma1 [ksi]	LC	Sigma2 [ksi]	LC	Tau Max [k...	LC	Angle [rad]	LC	Von Mises [ksi]	LC
2312		min		-1.057	1	-1.193	1	.034	2	-.197	1	.232	2
2313	P579	max	T	1.399	1	1.267	1	.066	1	.035	1	1.338	1
2314		min		.308	2	.255	2	.026	2	-.537	2	.285	2
2315		max	B	-.236	2	-.269	2	.04	1	1.947	1	1.296	1
2316		min		-1.254	1	-1.334	1	.017	2	-.286	2	.254	2
2317	P580	max	T	1.362	1	1.235	1	.064	1	-.223	1	1.303	1
2318		min		.312	2	.244	2	.034	2	-.707	2	.285	2
2319		max	B	-.235	2	-.265	2	.029	1	1.643	1	1.263	1
2320		min		-1.233	1	-1.292	1	.015	2	-.167	2	.251	2
2321	P581	max	T	1.15	1	1.072	1	.039	1	2.066	2	1.113	1
2322		min		.279	2	.208	2	.036	2	1.751	1	.251	2
2323		max	B	-.187	2	-.253	2	.059	1	-.124	2	1.088	1
2324		min		-1.024	1	-1.142	1	.033	2	-.173	1	.228	2
2325	P582	max	T	1.092	1	1.012	1	.04	1	2.031	2	1.054	1
2326		min		.274	2	.195	2	.04	2	1.861	1	.245	2
2327		max	B	-.18	2	-.245	2	.049	1	-.144	2	1.03	1
2328		min		-.977	1	-1.075	1	.033	2	-.168	1	.22	2
2329	P583	max	T	1.309	1	1.176	1	.066	1	2.311	2	1.248	1
2330		min		.312	2	.232	2	.04	2	-.419	1	.28	2
2331		max	B	-.229	2	-.261	2	.027	1	1.352	1	1.21	1
2332		min		-1.182	1	-1.237	1	.016	2	-.079	2	.246	2
2333	P584	max	T	1.239	1	1.101	1	.069	1	2.218	2	1.176	1
2334		min		.305	2	.218	2	.043	2	-.532	1	.272	2
2335		max	B	-.219	2	-.254	2	.029	1	1.208	1	1.142	1
2336		min		-1.112	1	-1.169	1	.018	2	-.074	2	.239	2
2337	P585	max	T	1.019	1	.944	1	.041	2	1.998	2	.984	1
2338		min		.265	2	.182	2	.038	1	1.965	1	.235	2
2339		max	B	-.171	2	-.235	2	.036	1	-.184	2	.96	1
2340		min		-.922	1	-.994	1	.032	2	-.202	1	.21	2
2341	P586	max	T	.937	1	.871	1	.04	2	2.131	1	.906	1
2342		min		.251	2	.17	2	.033	1	1.973	2	.222	2
2343		max	B	-.161	2	-.221	2	.03	2	-.245	2	.884	1
2344		min		-.862	1	-.904	1	.021	1	-.341	1	.198	2
2345	P587	max	T	1.156	1	1.016	1	.07	1	2.148	2	1.093	1
2346		min		.293	2	.205	2	.044	2	-.568	1	.26	2
2347		max	B	-.207	2	-.245	2	.031	1	1.22	1	1.062	1
2348		min		-1.029	1	-1.092	1	.019	2	-.131	2	.228	2
2349	P588	max	T	1.067	1	.925	1	.071	1	2.1	2	1.003	1
2350		min		.275	2	.192	2	.041	2	-.538	1	.245	2
2351		max	B	-.194	2	-.232	2	.038	1	1.316	1	.975	1
2352		min		-.935	1	-1.011	1	.019	2	-.23	2	.215	2
2353	P589	max	T	.853	1	.79	1	.037	2	1.96	2	.824	1
2354		min		.232	2	.158	2	.032	1	-.733	1	.206	2
2355		max	B	-.149	2	-.206	2	.028	2	2.155	1	.803	1
2356		min		-.79	1	-.815	1	.013	1	-.328	2	.184	2
2357	P590	max	T	.779	1	.696	1	.042	1	1.966	2	.741	1
2358		min		.211	2	.148	2	.032	2	-.461	1	.188	2
2359		max	B	-.136	2	-.188	2	.031	1	1.731	1	.722	1
2360		min		-.689	1	-.751	1	.026	2	-.439	2	.168	2
2361	P591	max	T	.978	1	.828	1	.075	1	2.073	2	.912	1
2362		min		.254	2	.181	2	.037	2	-.461	1	.226	2
2363		max	B	-.179	2	-.217	2	.051	1	1.411	1	.887	1
2364		min		-.831	1	-.933	1	.019	2	-.367	2	.201	2
2365	P592	max	T	.895	1	.724	1	.085	1	2.078	2	.823	1
2366		min		.23	2	.169	2	.03	2	-.366	1	.207	2
2367		max	B	-.163	2	-.201	2	.07	1	1.469	1	.801	1
2368		min		-.721	1	-.862	1	.019	2	-.541	2	.185	2

Envelope Plate/Shell Principal Stresses (Continued)

	Plate		Sur...	Sigma1 [ksi]	LC	Sigma2 [ksi]	LC	Tau Max [k...	LC	Angle [rad]	LC	Von Mises [ksi]	LC
2369	P593	max	T	.716	1	.592	1	.062	1	2.006	2	.662	1
2370		min		.188	2	.137	2	.025	2	-.305	1	.168	2
2371		max	B	-.122	2	-.171	2	.056	1	1.633	1	.644	1
2372		min		-.581	1	-.693	1	.025	2	-.578	2	.152	2
2373	P594	max	T	.658	1	.484	1	.087	1	2.115	2	.591	1
2374		min		.164	2	.127	2	.019	2	-.223	1	.149	2
2375		max	B	-.105	2	-.154	2	.084	1	1.596	1	.574	1
2376		min		-.471	1	-.639	1	.025	2	-.736	2	.136	2
2377	P595	max	T	.821	1	.616	1	.102	1	2.131	2	.741	1
2378		min		.204	2	.159	2	.023	2	-.285	1	.186	2
2379		max	B	-.145	2	-.186	2	.093	1	1.498	1	.721	1
2380		min		-.609	1	-.796	1	.021	2	-.731	2	.169	2
2381	P596	max	T	.756	1	.508	1	.124	1	2.302	2	.668	1
2382		min		.18	2	.147	2	.017	2	-.225	1	.166	2
2383		max	B	-.125	2	-.171	2	.119	1	2.242	2	.65	1
2384		min		-.498	1	-.735	1	.023	2	1.513	1	.153	2
2385	P597	max	T	.606	1	.378	1	.114	1	-.173	1	.53	1
2386		min		.142	2	.114	2	.014	2	-.771	2	.13	2
2387		max	B	-.086	2	-.139	2	.112	1	2.253	2	.514	1
2388		min		-.364	1	-.588	1	.027	2	1.579	1	.121	2
2389	P598	max	T	.559	1	.275	1	.142	1	-.136	1	.484	1
2390		min		.126	2	.096	2	.015	2	-.414	2	.114	2
2391		max	B	-.065	2	-.126	2	.139	1	2.129	2	.467	1
2392		min		-.261	1	-.539	1	.031	2	1.576	1	.109	2
2393	P599	max	T	.698	1	.402	1	.148	1	-.181	1	.607	1
2394		min		.161	2	.131	2	.015	2	-.528	2	.148	2
2395		max	B	-.103	2	-.159	2	.144	1	2.11	2	.59	1
2396		min		-.391	1	-.679	1	.028	2	1.523	1	.139	2
2397	P600	max	T	.647	1	.301	1	.173	1	-.146	1	.56	1
2398		min		.148	2	.109	2	.02	2	-.259	2	.133	2
2399		max	B	-.08	2	-.147	2	.169	1	2.016	2	.544	1
2400		min		-.289	1	-.627	1	.034	2	1.533	1	.128	2
2401	P601	max	T	.515	1	.178	1	.169	1	-.103	1	.453	1
2402		min		.116	2	.073	2	.022	2	-.191	2	.102	2
2403		max	B	-.043	2	-.114	2	.165	1	2.041	2	.436	1
2404		min		-.164	1	-.494	1	.036	2	1.582	1	.1	2
2405	P602	max	T	.475	1	.089	1	.193	1	-.07	1	.437	1
2406		min		.11	2	.049	2	.03	2	-.076	2	.095	2
2407		max	B	-.022	2	-.104	2	.187	1	1.985	2	.418	1
2408		min		-.077	1	-.451	1	.041	2	1.596	1	.095	2
2409	P603	max	T	.6	1	.207	1	.196	1	-.116	1	.528	1
2410		min		.14	2	.084	2	.028	2	-.12	2	.122	2
2411		max	B	-.058	2	-.137	2	.191	1	1.953	2	.51	1
2412		min		-.196	1	-.579	1	.04	2	1.546	1	.119	2
2413	P604	max	T	.558	1	.123	1	.217	1	-.044	2	.507	1
2414		min		.134	2	.06	2	.037	2	-.087	1	.116	2
2415		max	B	-.036	2	-.128	2	.211	1	1.911	2	.488	1
2416		min		-.113	1	-.535	1	.046	2	1.561	1	.114	2
2417	P605	max	T	.438	1	.027	2	.212	1	-.003	2	.432	1
2418		min		.104	2	.013	1	.039	2	-.035	1	.093	2
2419		max	B	0	1	-.095	2	.205	1	1.953	2	.411	1
2420		min		-.002	2	-.411	1	.047	2	1.617	1	.094	2
2421	P606	max	T	.404	1	.007	2	.226	1	.054	2	.43	1
2422		min		.099	2	-.048	1	.046	2	.002	1	.096	2
2423		max	B	.06	1	-.087	2	.217	1	1.941	2	.407	1
2424		min		.015	2	-.374	1	.051	2	1.644	1	.095	2
2425	P607	max	T	.519	1	.051	1	.234	1	.007	2	.495	1

Envelope Plate/Shell Principal Stresses (Continued)

	Plate		Sur...	Sigma1 [ksi]	LC	Sigma2 [ksi]	LC	Tau Max [k...	LC	Angle [rad]	LC	Von Mises [ksi]	LC
2426		min		.128	2	.038	2	.045	2	-.057	1	.114	2
2427		max	B	-.017	2	-.119	2	.226	1	1.886	2	.474	1
2428		min		-.042	1	-.494	1	.051	2	1.58	1	.112	2
2429	P608	max	T	.483	1	.019	2	.245	1	.047	2	.487	1
2430		min		.123	2	-.006	1	.052	2	-.028	1	.115	2
2431		max	B	.015	1	-.111	2	.235	1	1.873	2	.462	1
2432		min		-.001	2	-.455	1	.055	2	1.6	1	.111	2
2433	P609	max	T	.371	1	-.008	2	.232	1	.105	2	.425	1
2434		min		.094	2	-.092	1	.051	2	.042	1	.099	2
2435		max	B	.103	1	-.08	2	.221	1	1.944	2	.4	1
2436		min		.027	2	-.338	1	.053	2	1.676	1	.096	2
2437	P610	max	T	.34	1	-.019	2	.228	1	.154	2	.41	1
2438		min		.09	2	-.116	1	.054	2	.083	1	.1	2
2439		max	B	.125	1	-.072	2	.215	1	1.958	2	.383	1
2440		min		.035	2	-.304	1	.054	2	1.712	1	.095	2
2441	P611	max	T	.45	1	.004	2	.249	1	.082	2	.476	1
2442		min		.118	2	-.048	1	.057	2	.002	1	.116	2
2443		max	B	.055	1	-.104	2	.237	1	1.869	2	.449	1
2444		min		.011	2	-.419	1	.057	2	1.624	1	.109	2
2445	P612	max	T	.419	1	-.006	2	.245	1	.114	2	.459	1
2446		min		.113	2	-.072	1	.06	2	.03	1	.117	2
2447		max	B	.077	1	-.096	2	.231	1	1.87	2	.428	1
2448		min		.018	2	-.384	1	.057	2	1.646	1	.107	2
2449	P613	max	T	.31	1	-.024	2	.214	1	.201	2	.382	1
2450		min		.084	2	-.118	1	.054	2	.124	1	.098	2
2451		max	B	.126	1	-.065	2	.198	1	1.979	2	.351	1
2452		min		.037	2	-.271	1	.051	2	1.75	1	.09	2
2453	P614	max	T	.279	1	-.023	2	.189	1	.242	2	.339	1
2454		min		.078	2	-.098	1	.05	2	.159	1	.092	2
2455		max	B	.105	1	-.058	2	.172	1	2.005	2	.305	1
2456		min		.034	2	-.238	1	.046	2	1.785	1	.08	2
2457	P615	max	T	.388	1	-.012	2	.233	1	.14	2	.432	1
2458		min		.108	2	-.077	1	.06	2	.054	1	.114	2
2459		max	B	.082	1	-.089	2	.216	1	1.871	2	.398	1
2460		min		.021	2	-.351	1	.055	2	1.665	1	.101	2
2461	P616	max	T	.36	1	-.013	2	.212	1	.159	2	.396	1
2462		min		.102	2	-.065	1	.057	2	.069	1	.109	2
2463		max	B	.068	1	-.081	2	.194	1	1.867	2	.358	1
2464		min		.019	2	-.32	1	.05	2	1.675	1	.093	2
2465	P617	max	T	.25	1	-.016	2	.155	1	.264	2	.285	1
2466		min		.071	2	-.06	1	.044	2	.176	1	.08	2
2467		max	B	.065	1	-.05	2	.136	1	2.018	2	.246	1
2468		min		.024	2	-.207	1	.037	2	1.802	1	.065	2
2469	P618	max	T	.234	1	-.005	2	.125	1	.17	2	.243	1
2470		min		.064	2	-.017	1	.034	2	.104	1	.066	2
2471		max	B	.018	1	-.039	2	.102	1	1.882	2	.197	1
2472		min		.007	2	-.187	1	.023	2	1.711	1	.043	2
2473	P619	max	T	.335	1	-.009	2	.186	1	.158	2	.355	1
2474		min		.096	2	-.038	1	.052	2	.066	1	.101	2
2475		max	B	.04	1	-.074	2	.166	1	1.84	2	.314	1
2476		min		.013	2	-.292	1	.043	2	1.665	1	.081	2
2477	P620	max	T	.325	1	-.003	2	.168	1	.089	2	.33	1
2478		min		.091	2	-.011	1	.047	2	.03	1	.092	2
2479		max	B	.011	1	-.069	2	.146	1	1.714	2	.287	1
2480		min		.003	2	-.281	1	.036	2	1.613	1	.071	2
2481	P621	max	T	.449	1	-.001	2	.228	1	.02	1	.452	1
2482		min		.125	2	-.007	1	.063	2	-.042	2	.126	2

Envelope Plate/Shell Principal Stresses (Continued)

	Plate		Sur...	Sigma1 [ksi]	LC	Sigma2 [ksi]	LC	Tau Max [k...	LC	Angle [rad]	LC	Von Mises [ksi]	LC
2483		max	B	.007	1	-.08	2	.204	1	1.579	1	.404	1
2484		min		.002	2	-.401	1	.041	2	1.458	2	.081	2
2485	P622	max	T	.458	1	-.004	2	.24	1	.024	1	.47	1
2486		min		.127	2	-.023	1	.065	2	-.075	2	.129	2
2487		max	B	.023	1	-.086	2	.216	1	1.559	1	.421	1
2488		min		.009	2	-.408	1	.048	2	1.341	2	.091	2
2489	P623	max	T	.521	1	0	2	.263	1	.035	1	.523	1
2490		min		.144	2	-.005	1	.072	2	-.025	2	.144	2
2491		max	B	.005	1	-.106	2	.244	1	1.597	1	.486	1
2492		min		0	2	-.484	1	.053	2	1.501	2	.106	2
2493	P624	max	T	.531	1	-.002	2	.273	1	.053	1	.538	1
2494		min		.145	2	-.015	1	.074	2	-.046	2	.146	2
2495		max	B	.015	1	-.11	2	.253	1	1.597	1	.498	1
2496		min		.005	2	-.49	1	.058	2	1.415	2	.113	2
2497	P625	max	T	.48	1	-.005	2	.258	1	.021	1	.499	1
2498		min		.13	2	-.035	1	.068	2	-.073	2	.133	2
2499		max	B	.038	1	-.095	2	.235	1	1.536	1	.451	1
2500		min		.014	2	-.431	1	.054	2	1.299	2	.102	2
2501	P626	max	T	.508	1	-.003	2	.272	1	.028	1	.527	1
2502		min		.134	2	-.036	1	.069	2	-.057	2	.136	2
2503		max	B	.041	1	-.103	2	.25	1	1.527	1	.481	1
2504		min		.015	2	-.459	1	.059	2	1.28	2	.111	2
2505	P627	max	T	.551	1	0	2	.285	1	.053	1	.561	1
2506		min		.149	2	-.02	1	.075	2	-.044	2	.149	2
2507		max	B	.021	1	-.117	2	.265	1	1.579	1	.52	1
2508		min		.007	2	-.509	1	.062	2	1.371	2	.121	2
2509	P628	max	T	.576	1	.003	2	.295	1	.058	1	.583	1
2510		min		.152	2	-.014	1	.075	2	-.033	2	.151	2
2511		max	B	.016	1	-.124	2	.275	1	1.568	1	.542	1
2512		min		.007	2	-.534	1	.066	2	1.343	2	.128	2
2513	P629	max	T	.539	1	.003	2	.28	1	.043	1	.549	1
2514		min		.139	2	-.021	1	.068	2	-.034	2	.137	2
2515		max	B	.027	1	-.111	2	.259	1	1.528	1	.505	1
2516		min		.012	2	-.491	1	.062	2	1.268	2	.118	2
2517	P630	max	T	.572	1	.012	2	.281	1	.064	1	.567	1
2518		min		.143	2	.011	1	.065	2	-.005	2	.137	2
2519		max	B	.005	2	-.12	2	.261	1	1.536	1	.523	1
2520		min		-.003	1	-.525	1	.062	2	1.257	2	.122	2
2521	P631	max	T	.605	1	.01	2	.3	1	.069	1	.602	1
2522		min		.157	2	.006	1	.073	2	-.015	2	.152	2
2523		max	B	.002	2	-.132	2	.281	1	1.566	1	.562	1
2524		min		-.002	1	-.563	1	.067	2	1.324	2	.133	2
2525	P632	max	T	.638	1	.039	1	.299	1	.087	1	.62	1
2526		min		.161	2	.02	2	.071	2	.006	2	.152	2
2527		max	B	-.006	2	-.14	2	.28	1	1.57	1	.579	1
2528		min		-.035	1	-.595	1	.067	2	1.306	2	.138	2
2529	P633	max	T	.609	1	.058	1	.275	1	.09	1	.582	1
2530		min		.148	2	.026	2	.061	2	.028	2	.137	2
2531		max	B	-.007	2	-.128	2	.255	1	1.546	1	.537	1
2532		min		-.05	1	-.561	1	.061	2	1.242	2	.125	2
2533	P634	max	T	.649	1	.121	1	.264	1	.118	1	.597	1
2534		min		.154	2	.043	2	.056	2	.067	2	.138	2
2535		max	B	-.022	2	-.137	2	.243	1	1.558	1	.552	1
2536		min		-.114	1	-.6	1	.057	2	1.221	2	.127	2
2537	P635	max	T	.675	1	.088	1	.294	1	.108	1	.636	1
2538		min		.167	2	.034	2	.066	2	.033	2	.153	2
2539		max	B	-.017	2	-.148	2	.274	1	1.578	1	.594	1

Envelope Plate/Shell Principal Stresses (Continued)

	Plate		Sur...	Sigma1 [ksi]	LC	Sigma2 [ksi]	LC	Tau Max [k...	LC	Angle [rad]	LC	Von Mises [ksi]	LC
2540		min		-.083	1	-.631	1	.066	2	1.287	2	.141	2
2541	P636	max	T	.716	1	.15	1	.283	1	.133	1	.654	1
2542		min		.173	2	.051	2	.061	2	.065	2	.154	2
2543		max	B	-.032	2	-.157	2	.263	1	1.588	1	.611	1
2544		min		-.145	1	-.67	1	.062	2	1.264	2	.143	2
2545	P637	max	T	.692	1	.197	1	.248	1	.149	1	.618	1
2546		min		.161	2	.062	2	.049	2	.113	2	.14	2
2547		max	B	-.04	2	-.145	2	.225	1	1.57	1	.57	1
2548		min		-.191	1	-.641	1	.053	2	1.188	2	.13	2
2549	P638	max	T	.741	1	.286	1	.228	1	.184	1	.647	1
2550		min		.169	2	.084	2	.043	2	.173	2	.146	2
2551		max	B	-.061	2	-.154	2	.202	1	1.583	1	.598	1
2552		min		-.282	1	-.686	1	.047	2	1.141	2	.135	2
2553	P639	max	T	.762	1	.225	1	.268	1	.162	1	.678	1
2554		min		.18	2	.071	2	.054	2	.105	2	.157	2
2555		max	B	-.051	2	-.165	2	.246	1	1.6	1	.632	1
2556		min		-.222	1	-.713	1	.057	2	1.233	2	.147	2
2557	P640	max	T	.814	1	.313	1	.251	1	.196	1	.711	1
2558		min		.188	2	.093	2	.048	2	.158	2	.163	2
2559		max	B	-.072	2	-.174	2	.224	1	1.615	1	.662	1
2560		min		-.312	1	-.76	1	.051	2	1.19	2	.152	2
2561	P641	max	T	.796	1	.384	1	.206	1	.252	2	.689	1
2562		min		.179	2	.106	2	.037	2	.225	1	.156	2
2563		max	B	-.083	2	-.164	2	.175	1	1.597	1	.637	1
2564		min		-.385	1	-.735	1	.041	2	1.072	2	.142	2
2565	P642	max	T	.858	1	.49	1	.184	1	.358	2	.746	1
2566		min		.192	2	.128	2	.032	2	.275	1	.169	2
2567		max	B	-.106	2	-.175	2	.146	1	1.617	1	.691	1
2568		min		-.497	1	-.789	1	.034	2	.974	2	.152	2
2569	P643	max	T	.873	1	.41	1	.231	1	.236	1	.756	1
2570		min		.199	2	.116	2	.042	2	.23	2	.173	2
2571		max	B	-.095	2	-.184	2	.199	1	1.634	1	.703	1
2572		min		-.414	1	-.812	1	.044	2	1.13	2	.159	2
2573	P644	max	T	.941	1	.516	1	.213	1	.33	2	.816	1
2574		min		.212	2	.139	2	.037	2	.286	1	.187	2
2575		max	B	-.12	2	-.194	2	.171	1	1.663	1	.759	1
2576		min		-.527	1	-.87	1	.037	2	1.044	2	.169	2
2577	P645	max	T	.93	1	.6	1	.165	1	.481	2	.817	1
2578		min		.208	2	.148	2	.03	2	.337	1	.185	2
2579		max	B	-.129	2	-.187	2	.116	1	1.655	1	.759	1
2580		min		-.617	1	-.848	1	.029	2	.834	2	.166	2
2581	P646	max	T	1.014	1	.711	1	.152	1	.592	2	.901	1
2582		min		.227	2	.166	2	.031	2	.413	1	.204	2
2583		max	B	-.151	2	-.2	2	.088	1	1.735	1	.841	1
2584		min		-.74	1	-.915	1	.025	2	.644	2	.181	2
2585	P647	max	T	1.022	1	.628	1	.197	1	.455	2	.893	1
2586		min		.23	2	.159	2	.035	2	.349	1	.204	2
2587		max	B	-.146	2	-.204	2	.143	1	1.714	1	.83	1
2588		min		-.649	1	-.936	1	.029	2	.919	2	.182	2
2589	P648	max	T	1.119	1	.741	1	.189	1	.562	2	.986	1
2590		min		.252	2	.178	2	.037	2	.423	1	.225	2
2591		max	B	-.17	2	-.217	2	.119	1	1.807	1	.918	1
2592		min		-.775	1	-1.014	1	.023	2	.717	2	.198	2
2593	P649	max	T	1.112	1	.818	1	.147	1	.661	2	.998	1
2594		min		.25	2	.183	2	.033	2	.493	1	.224	2
2595		max	B	-.17	2	-.217	2	.068	1	1.897	1	.935	1
2596		min		-.859	1	-.996	1	.024	2	.415	2	.197	2

Envelope Plate/Shell Principal Stresses (Continued)

	Plate		Sur...	Sigma1 [ksi]	LC	Sigma2 [ksi]	LC	Tau Max [k...	LC	Angle [rad]	LC	Von Mises [ksi]	LC
2597	P650	max	T	1.222	1	.919	1	.152	1	.678	2	1.103	1
2598		min		.273	2	.199	2	.037	2	.558	1	.244	2
2599		max	B	-.186	2	-.235	2	.068	1	2.117	1	1.037	1
2600		min		-.963	1	-1.099	1	.025	2	.184	2	.215	2
2601	P651	max	T	1.236	1	.851	1	.192	1	.632	2	1.095	1
2602		min		.279	2	.195	2	.042	2	.499	1	.248	2
2603		max	B	-.192	2	-.233	2	.107	1	1.957	1	1.021	1
2604		min		-.897	1	-1.111	1	.02	2	.421	2	.215	2
2605	P652	max	T	1.375	1	.955	1	.21	1	.649	2	1.221	1
2606		min		.308	2	.209	2	.049	2	.557	1	.272	2
2607		max	B	-.21	2	-.253	2	.118	1	2.119	1	1.141	1
2608		min		-1.004	1	-1.24	1	.022	2	.087	2	.235	2
2609	P653	max	T	1.343	1	1.014	1	.165	1	.648	2	1.212	1
2610		min		.295	2	.214	2	.041	2	.588	1	.264	2
2611		max	B	-.2	2	-.254	2	.087	1	2.249	1	1.145	1
2612		min		-1.049	1	-1.222	1	.027	2	-.024	2	.232	2
2613	P654	max	T	1.461	1	1.1	1	.18	1	.571	2	1.318	1
2614		min		.315	2	.229	2	.043	2	.57	1	.282	2
2615		max	B	-.212	2	-.272	2	.111	1	2.258	1	1.249	1
2616		min		-1.123	1	-1.345	1	.03	2	-.207	2	.247	2
2617	P655	max	T	1.529	1	1.051	1	.239	1	.618	2	1.355	1
2618		min		.337	2	.223	2	.057	2	.579	1	.297	2
2619		max	B	-.222	2	-.278	2	.151	1	2.205	1	1.269	1
2620		min		-1.091	1	-1.393	1	.028	2	-.184	2	.254	2
2621	P656	max	T	1.707	1	1.14	1	.284	1	.561	1	1.506	1
2622		min		.367	2	.236	2	.066	2	.549	2	.322	2
2623		max	B	-.232	2	-.305	2	.204	1	2.208	1	1.416	1
2624		min		-1.167	1	-1.575	1	.037	2	-.417	2	.276	2
2625	P657	max	T	1.568	1	1.18	1	.194	1	.514	1	1.415	1
2626		min		.331	2	.244	2	.044	2	.456	2	.297	2
2627		max	B	-.224	2	-.287	2	.135	1	2.205	1	1.346	1
2628		min		-1.191	1	-1.46	1	.031	2	-.379	2	.261	2
2629	P658	max	T	1.656	1	1.243	1	.207	1	.42	1	1.493	1
2630		min		.344	2	.255	2	.045	2	.301	2	.31	2
2631		max	B	-.236	2	-.297	2	.155	1	2.1	1	1.425	1
2632		min		-1.244	1	-1.554	1	.031	2	-.563	2	.271	2
2633	P659	max	T	1.86	1	1.204	1	.328	1	.479	1	1.634	1
2634		min		.392	2	.245	2	.074	2	.429	2	.343	2
2635		max	B	-.239	2	-.324	2	.255	1	2.119	1	1.54	1
2636		min		-1.22	1	-1.731	1	.043	2	-.631	2	.291	2
2637	P660	max	T	1.997	1	1.276	1	.36	1	.381	1	1.752	1
2638		min		.413	2	.256	2	.078	2	.289	2	.361	2
2639		max	B	-.247	2	-.344	2	.297	1	2.328	2	1.66	1
2640		min		-1.281	1	-1.875	1	.049	2	2.019	1	.307	2
2641	P661	max	T	1.716	1	1.287	1	.214	1	.29	1	1.547	1
2642		min		.355	2	.263	2	.046	2	.11	2	.319	2
2643		max	B	-.247	2	-.302	2	.169	1	1.957	1	1.481	1
2644		min		-1.283	1	-1.62	1	.027	2	-.763	2	.278	2
2645	P662	max	T	1.738	1	1.306	1	.216	1	.13	1	1.567	1
2646		min		.363	2	.266	2	.049	2	-.104	2	.325	2
2647		max	B	-.257	2	-.301	2	.174	1	2.148	2	1.504	1
2648		min		-1.3	1	-1.647	1	.022	2	1.786	1	.282	2
2649	P663	max	T	2.111	1	1.305	1	.403	1	.259	1	1.845	1
2650		min		.431	2	.26	2	.085	2	.137	2	.376	2
2651		max	B	-.25	2	-.36	2	.349	1	2.116	2	1.756	1
2652		min		-1.301	1	-1.998	1	.055	2	1.888	1	.319	2
2653	P664	max	T	2.163	1	1.312	1	.425	1	.096	1	1.887	1

Envelope Plate/Shell Principal Stresses (Continued)

	Plate		Sur...	Sigma1 [ksi]	LC	Sigma2 [ksi]	LC	Tau Max [k...	LC	Angle [rad]	LC	Von Mises [ksi]	LC
2654		min		.443	2	.262	2	.091	2	-.051	2	.386	2
2655		max	B	-.253	2	-.367	2	.377	1	1.881	2	1.802	1
2656		min		-1.302	1	-2.057	1	.057	2	1.716	1	.326	2
2657	P665	max	T	1.718	1	1.3	1	.209	1	-.04	1	1.552	1
2658		min		.367	2	.263	2	.052	2	-.313	2	.328	2
2659		max	B	-.264	2	-.297	2	.169	1	1.864	2	1.492	1
2660		min		-1.295	1	-1.632	1	.016	2	1.608	1	.282	2
2661	P666	max	T	1.659	1	1.266	1	.197	1	-.203	1	1.502	1
2662		min		.367	2	.256	2	.055	2	-.499	2	.326	2
2663		max	B	-.266	2	-.29	2	.157	1	1.487	2	1.446	1
2664		min		-1.264	1	-1.577	1	.012	2	1.44	1	.279	2
2665	P667	max	T	2.135	1	1.302	1	.416	1	-.069	1	1.863	1
2666		min		.445	2	.261	2	.092	2	-.237	2	.388	2
2667		max	B	-.258	2	-.367	2	.372	1	1.648	2	1.785	1
2668		min		-1.292	1	-2.036	1	.055	2	1.544	1	.326	2
2669	P668	max	T	2.04	1	1.278	1	.381	1	-.223	1	1.785	1
2670		min		.44	2	.259	2	.09	2	-.413	2	.383	2
2671		max	B	-.263	2	-.359	2	.338	1	1.422	2	1.714	1
2672		min		-1.272	1	-1.949	1	.048	2	1.387	1	.322	2
2673	P669	max	T	1.57	1	1.211	1	.179	1	-.342	1	1.425	1
2674		min		.36	2	.246	2	.057	2	-.657	2	.319	2
2675		max	B	-.263	2	-.281	2	.139	1	1.303	1	1.374	1
2676		min		-1.214	1	-1.492	1	.009	2	1.036	2	.273	2
2677	P670	max	T	1.46	1	1.139	1	.161	1	-.432	1	1.329	1
2678		min		.347	2	.235	2	.056	2	-.781	2	.307	2
2679		max	B	-.254	2	-.272	2	.122	1	1.224	1	1.284	1
2680		min		-1.145	1	-1.388	1	.009	2	.653	2	.264	2
2681	P671	max	T	1.889	1	1.217	1	.336	1	-.359	1	1.659	1
2682		min		.425	2	.253	2	.086	2	-.573	2	.37	2
2683		max	B	-.262	2	-.342	2	.295	1	1.253	1	1.594	1
2684		min		-1.215	1	-1.804	1	.04	2	1.219	2	.31	2
2685	P672	max	T	1.72	1	1.152	1	.284	1	-.449	1	1.518	1
2686		min		.401	2	.245	2	.078	2	-.7	2	.35	2
2687		max	B	-.261	2	-.324	2	.244	1	1.167	1	1.463	1
2688		min		-1.157	1	-1.645	1	.031	2	1.03	2	.297	2
2689	P673	max	T	1.344	1	1.05	1	.147	1	2.271	2	1.224	1
2690		min		.329	2	.223	2	.053	2	-.479	1	.291	2
2691		max	B	-.242	2	-.26	2	.11	1	1.196	1	1.184	1
2692		min		-1.059	1	-1.279	1	.009	2	.347	2	.252	2
2693	P674	max	T	1.225	1	.957	1	.134	1	2.203	2	1.115	1
2694		min		.307	2	.211	2	.048	2	-.485	1	.272	2
2695		max	B	-.228	2	-.245	2	.101	1	1.216	1	1.081	1
2696		min		-.965	1	-1.168	1	.008	2	.016	2	.237	2
2697	P675	max	T	1.561	1	1.075	1	.243	1	2.33	2	1.384	1
2698		min		.377	2	.237	2	.07	2	-.516	1	.33	2
2699		max	B	-.257	2	-.302	2	.204	1	1.109	1	1.335	1
2700		min		-1.084	1	-1.492	1	.023	2	.844	2	.282	2
2701	P676	max	T	1.386	1	.979	1	.203	1	2.255	2	1.234	1
2702		min		.343	2	.227	2	.058	2	-.517	1	.302	2
2703		max	B	-.249	2	-.274	2	.169	1	1.129	1	1.194	1
2704		min		-.989	1	-1.326	1	.013	2	.701	2	.262	2
2705	P677	max	T	1.11	1	.856	1	.127	1	2.166	2	1.007	1
2706		min		.28	2	.2	2	.04	2	-.441	1	.25	2
2707		max	B	-.211	2	-.229	2	.101	1	1.286	1	.978	1
2708		min		-.86	1	-1.063	1	.009	2	-.369	2	.221	2
2709	P678	max	T	1.008	1	.749	1	.13	1	2.173	2	.907	1
2710		min		.252	2	.189	2	.031	2	-.373	1	.227	2

Envelope Plate/Shell Principal Stresses (Continued)

	Plate		Sur...	Sigma1 [ksi]	LC	Sigma2 [ksi]	LC	Tau Max [k...	LC	Angle [rad]	LC	Von Mises [ksi]	LC
2711		max	B	-.191	2	-.215	2	.112	1	1.358	1	.882	1
2712		min		-.749	1	-.972	1	.012	2	-.7	2	.204	2
2713	P679	max	T	1.24	1	.879	1	.181	1	2.217	2	1.105	1
2714		min		.31	2	.218	2	.046	2	-.48	1	.276	2
2715		max	B	-.24	2	-.247	2	.152	1	1.188	1	1.072	1
2716		min		-.886	1	-1.191	1	.003	2	.53	2	.244	2
2717	P680	max	T	1.113	1	.771	1	.171	1	2.228	2	.988	1
2718		min		.276	2	.207	2	.034	2	-.412	1	.249	2
2719		max	B	-.218	2	-.23	2	.151	1	2.131	2	.961	1
2720		min		-.774	1	-1.076	1	.006	2	1.268	1	.224	2
2721	P681	max	T	.921	1	.639	1	.141	1	2.254	2	.817	1
2722		min		.224	2	.178	2	.023	2	-.303	1	.205	2
2723		max	B	-.168	2	-.202	2	.129	1	2.224	2	.796	1
2724		min		-.635	1	-.893	1	.017	2	1.413	1	.187	2
2725	P682	max	T	.846	1	.53	1	.158	1	-.245	1	.74	1
2726		min		.199	2	.164	2	.017	2	-.672	2	.184	2
2727		max	B	-.143	2	-.19	2	.15	1	2.085	2	.722	1
2728		min		-.522	1	-.823	1	.023	2	1.45	1	.171	2
2729	P683	max	T	1.009	1	.66	1	.175	1	2.333	2	.888	1
2730		min		.244	2	.196	2	.024	2	-.339	1	.224	2
2731		max	B	-.189	2	-.22	2	.161	1	2.027	2	.866	1
2732		min		-.659	1	-.981	1	.016	2	1.339	1	.206	2
2733	P684	max	T	.923	1	.55	1	.187	1	-.275	1	.805	1
2734		min		.218	2	.18	2	.019	2	-.555	2	.202	2
2735		max	B	-.16	2	-.209	2	.178	1	1.954	2	.786	1
2736		min		-.546	1	-.901	1	.024	2	1.392	1	.19	2
2737	P685	max	T	.781	1	.424	1	.179	1	-.199	1	.677	1
2738		min		.181	2	.144	2	.018	2	-.368	2	.166	2
2739		max	B	-.118	2	-.179	2	.173	1	1.993	2	.66	1
2740		min		-.415	1	-.761	1	.03	2	1.475	1	.158	2
2741	P686	max	T	.724	1	.324	1	.2	1	-.163	1	.629	1
2742		min		.17	2	.12	2	.025	2	-.173	2	.151	2
2743		max	B	-.094	2	-.169	2	.195	1	1.929	2	.612	1
2744		min		-.316	1	-.705	1	.038	2	1.495	1	.147	2
2745	P687	max	T	.852	1	.444	1	.204	1	-.225	1	.738	1
2746		min		.201	2	.157	2	.022	2	-.27	2	.183	2
2747		max	B	-.133	2	-.199	2	.197	1	1.905	2	.721	1
2748		min		-.438	1	-.832	1	.033	2	1.429	1	.176	2
2749	P688	max	T	.79	1	.345	1	.223	1	-.119	2	.686	1
2750		min		.191	2	.13	2	.03	2	-.185	1	.169	2
2751		max	B	-.107	2	-.19	2	.216	1	1.863	2	.67	1
2752		min		-.339	1	-.771	1	.041	2	1.457	1	.165	2
2753	P689	max	T	.674	1	.233	1	.221	1	-.076	2	.593	1
2754		min		.162	2	.094	2	.034	2	-.133	1	.141	2
2755		max	B	-.071	2	-.159	2	.215	1	1.884	2	.576	1
2756		min		-.225	1	-.654	1	.044	2	1.512	1	.138	2
2757	P690	max	T	.63	1	.152	1	.239	1	-.022	2	.569	1
2758		min		.156	2	.07	2	.043	2	-.105	1	.135	2
2759		max	B	-.049	2	-.15	2	.232	1	1.853	2	.55	1
2760		min		-.145	1	-.608	1	.051	2	1.529	1	.133	2
2761	P691	max	T	.737	1	.256	1	.241	1	-.047	2	.648	1
2762		min		.183	2	.103	2	.04	2	-.153	1	.159	2
2763		max	B	-.082	2	-.18	2	.234	1	1.832	2	.631	1
2764		min		-.25	1	-.718	1	.049	2	1.479	1	.156	2
2765	P692	max	T	.69	1	.177	1	.256	1	-.007	2	.621	1
2766		min		.176	2	.078	2	.049	2	-.125	1	.153	2
2767		max	B	-.061	2	-.171	2	.249	1	1.807	2	.602	1

Envelope Plate/Shell Principal Stresses (Continued)

	Plate		Sur...	Sigma1 [ksi]	LC	Sigma2 [ksi]	LC	Tau Max [k...	LC	Angle [rad]	LC	Von Mises [ksi]	LC
2768		min		-.172	1	-.669	1	.055	2	1.499	1	.15	2
2769	P693	max	T	.589	1	.083	1	.253	1	.014	2	.552	1
2770		min		.15	2	.048	2	.051	2	-.079	1	.133	2
2771		max	B	-.03	2	-.142	2	.244	1	1.832	2	.531	1
2772		min		-.077	1	-.565	1	.056	2	1.547	1	.129	2
2773	P694	max	T	.553	1	.029	2	.262	1	.042	2	.539	1
2774		min		.145	2	.028	1	.058	2	-.054	1	.133	2
2775		max	B	-.014	2	-.134	2	.252	1	1.818	2	.515	1
2776		min		-.022	1	-.526	1	.06	2	1.564	1	.127	2
2777	P695	max	T	.648	1	.11	1	.269	1	.019	2	.601	1
2778		min		.171	2	.056	2	.057	2	-.1	1	.151	2
2779		max	B	-.041	2	-.163	2	.26	1	1.789	2	.58	1
2780		min		-.106	1	-.626	1	.061	2	1.516	1	.147	2
2781	P696	max	T	.611	1	.056	1	.278	1	.038	2	.585	1
2782		min		.165	2	.037	2	.064	2	-.078	1	.15	2
2783		max	B	-.025	2	-.155	2	.267	1	1.775	2	.562	1
2784		min		-.052	1	-.586	1	.065	2	1.532	1	.144	2
2785	P697	max	T	.519	1	.014	2	.266	1	.066	2	.525	1
2786		min		.14	2	-.013	1	.063	2	-.031	1	.134	2
2787		max	B	.018	1	-.126	2	.253	1	1.809	2	.498	1
2788		min		-.002	2	-.489	1	.062	2	1.581	1	.125	2
2789	P698	max	T	.488	1	.003	2	.263	1	.086	2	.508	1
2790		min		.135	2	-.038	1	.066	2	-.011	1	.134	2
2791		max	B	.042	1	-.119	2	.249	1	1.802	2	.478	1
2792		min		.006	2	-.455	1	.062	2	1.595	1	.122	2
2793	P699	max	T	.577	1	.022	2	.281	1	.054	2	.57	1
2794		min		.16	2	.015	1	.069	2	-.059	1	.15	2
2795		max	B	-.012	1	-.147	2	.269	1	1.763	2	.544	1
2796		min		-.013	2	-.55	1	.067	2	1.546	1	.142	2
2797	P700	max	T	.547	1	.01	2	.28	1	.066	2	.553	1
2798		min		.155	2	-.012	1	.072	2	-.043	1	.15	2
2799		max	B	.014	1	-.14	2	.266	1	1.751	2	.524	1
2800		min		-.003	2	-.517	1	.068	2	1.556	1	.139	2
2801	P701	max	T	.459	1	-.004	2	.253	1	.1	2	.485	1
2802		min		.13	2	-.048	1	.067	2	.004	1	.132	2
2803		max	B	.05	1	-.112	2	.237	1	1.792	2	.451	1
2804		min		.01	2	-.424	1	.061	2	1.604	1	.117	2
2805	P702	max	T	.433	1	-.006	2	.238	1	.107	2	.456	1
2806		min		.124	2	-.043	1	.065	2	.01	1	.128	2
2807		max	B	.044	1	-.106	2	.22	1	1.774	2	.419	1
2808		min		.01	2	-.396	1	.058	2	1.603	1	.111	2
2809	P703	max	T	.52	1	.003	2	.273	1	.074	2	.533	1
2810		min		.15	2	-.026	1	.074	2	-.033	1	.148	2
2811		max	B	.027	1	-.134	2	.257	1	1.736	2	.502	1
2812		min		.002	2	-.487	1	.068	2	1.56	1	.135	2
2813	P704	max	T	.496	1	-.001	2	.262	1	.075	2	.51	1
2814		min		.145	2	-.027	1	.073	2	-.03	1	.146	2
2815		max	B	.027	1	-.128	2	.245	1	1.715	2	.476	1
2816		min		.004	2	-.462	1	.066	2	1.556	1	.13	2
2817	P705	max	T	.412	1	-.005	2	.219	1	.099	2	.425	1
2818		min		.119	2	-.026	1	.062	2	.003	1	.122	2
2819		max	B	.026	1	-.1	2	.199	1	1.738	2	.386	1
2820		min		.007	2	-.372	1	.053	2	1.589	1	.103	2
2821	P706	max	T	.404	1	-.001	2	.206	1	.051	2	.408	1
2822		min		.116	2	-.007	1	.058	2	-.006	1	.116	2
2823		max	B	.007	1	-.097	2	.186	1	1.649	2	.368	1
2824		min		.002	2	-.364	1	.049	2	1.569	1	.098	2

Envelope Plate/Shell Principal Stresses (Continued)

	Plate		Sur...	Sigma1 [ksi]	LC	Sigma2 [ksi]	LC	Tau Max [k...	LC	Angle [rad]	LC	Von Mises [ksi]	LC
2825	P707	max	T	.478	1	-.002	2	.248	1	.066	2	.487	1
2826		min		.14	2	-.018	1	.071	2	-.034	1	.141	2
2827		max	B	.018	1	-.124	2	.23	1	1.681	2	.451	1
2828		min		.003	2	-.442	1	.063	2	1.545	1	.125	2
2829	P708	max	T	.471	1	0	2	.238	1	.032	2	.473	1
2830		min		.137	2	-.005	1	.069	2	-.025	1	.138	2
2831		max	B	.005	1	-.122	2	.22	1	1.619	2	.437	1
2832		min		0	2	-.434	1	.061	2	1.547	1	.122	2
2833	P709	max	T	.58	1	0	2	.291	1	.043	1	.581	1
2834		min		.16	2	-.003	1	.08	2	-.016	2	.16	2
2835		max	B	.003	1	-.129	2	.278	1	1.607	1	.554	1
2836		min		0	2	-.553	1	.065	2	1.523	2	.129	2
2837	P710	max	T	.59	1	0	2	.3	1	.072	1	.595	1
2838		min		.162	2	-.009	1	.081	2	-.028	2	.161	2
2839		max	B	.009	1	-.132	2	.284	1	1.619	1	.564	1
2840		min		.002	2	-.559	1	.067	2	1.458	2	.133	2
2841	P711	max	T	.624	1	0	2	.313	1	.049	1	.625	1
2842		min		.173	2	-.002	1	.087	2	-.01	2	.173	2
2843		max	B	.002	1	-.149	2	.305	1	1.613	1	.608	1
2844		min		0	2	-.607	1	.075	2	1.536	2	.149	2
2845	P712	max	T	.635	1	.002	2	.32	1	.083	1	.638	1
2846		min		.175	2	-.005	1	.087	2	-.017	2	.174	2
2847		max	B	.004	1	-.152	2	.309	1	1.634	1	.616	1
2848		min		0	2	-.614	1	.076	2	1.485	2	.152	2
2849	P713	max	T	.608	1	.002	2	.308	1	.074	1	.612	1
2850		min		.164	2	-.008	1	.081	2	-.026	2	.163	2
2851		max	B	.008	1	-.138	2	.292	1	1.607	1	.579	1
2852		min		.002	2	-.575	1	.07	2	1.418	2	.139	2
2853	P714	max	T	.631	1	.007	2	.314	1	.079	1	.63	1
2854		min		.168	2	.003	1	.08	2	-.017	2	.164	2
2855		max	B	0	2	-.144	2	.297	1	1.598	1	.596	1
2856		min		-.002	1	-.597	1	.072	2	1.389	2	.144	2
2857	P715	max	T	.652	1	.005	2	.326	1	.09	1	.652	1
2858		min		.177	2	0	1	.086	2	-.014	2	.175	2
2859		max	B	0	2	-.156	2	.313	1	1.626	1	.627	1
2860		min		-.001	1	-.627	1	.078	2	1.449	2	.156	2
2861	P716	max	T	.674	1	.016	1	.329	1	.096	1	.666	1
2862		min		.181	2	.011	2	.085	2	-.005	2	.176	2
2863		max	B	-.004	2	-.162	2	.315	1	1.62	1	.639	1
2864		min		-.016	1	-.647	1	.079	2	1.421	2	.16	2
2865	P717	max	T	.66	1	.026	1	.317	1	.09	1	.647	1
2866		min		.172	2	.015	2	.078	2	-.003	2	.165	2
2867		max	B	-.005	2	-.151	2	.3	1	1.595	1	.612	1
2868		min		-.024	1	-.623	1	.073	2	1.366	2	.149	2
2869	P718	max	T	.692	1	.062	1	.315	1	.106	1	.663	1
2870		min		.177	2	.026	2	.075	2	.015	2	.165	2
2871		max	B	-.014	2	-.159	2	.297	1	1.598	1	.627	1
2872		min		-.06	1	-.655	1	.073	2	1.345	2	.153	2
2873	P719	max	T	.701	1	.043	1	.329	1	.107	1	.681	1
2874		min		.185	2	.02	2	.083	2	.006	2	.176	2
2875		max	B	-.011	2	-.168	2	.315	1	1.619	1	.652	1
2876		min		-.042	1	-.672	1	.079	2	1.398	2	.163	2
2877	P720	max	T	.733	1	.081	1	.326	1	.123	1	.696	1
2878		min		.19	2	.031	2	.079	2	.022	2	.177	2
2879		max	B	-.02	2	-.176	2	.311	1	1.622	1	.665	1
2880		min		-.079	1	-.701	1	.078	2	1.376	2	.166	2
2881	P721	max	T	.729	1	.112	1	.309	1	.126	1	.68	1

Envelope Plate/Shell Principal Stresses (Continued)

	Plate		Sur...	Sigma1 [ksi]	LC	Sigma2 [ksi]	LC	Tau Max [k...	LC	Angle [rad]	LC	Von Mises [ksi]	LC
2882		min		.183	2	.041	2	.071	2	.037	2	.166	2
2883		max	B	-.026	2	-.167	2	.29	1	1.605	1	.642	1
2884		min		-.109	1	-.69	1	.07	2	1.324	2	.156	2
2885	P722	max	T	.771	1	.174	1	.298	1	.15	1	.7	1
2886		min		.189	2	.058	2	.065	2	.064	2	.168	2
2887		max	B	-.041	2	-.175	2	.279	1	1.615	1	.66	1
2888		min		-.171	1	-.729	1	.067	2	1.299	2	.159	2
2889	P723	max	T	.769	1	.131	1	.319	1	.143	1	.713	1
2890		min		.196	2	.046	2	.075	2	.041	2	.178	2
2891		max	B	-.033	2	-.184	2	.303	1	1.629	1	.68	1
2892		min		-.13	1	-.735	1	.075	2	1.353	2	.169	2
2893	P724	max	T	.812	1	.193	1	.309	1	.167	1	.734	1
2894		min		.203	2	.064	2	.069	2	.064	2	.18	2
2895		max	B	-.049	2	-.192	2	.291	1	1.64	1	.698	1
2896		min		-.193	1	-.774	1	.071	2	1.328	2	.173	2
2897	P725	max	T	.818	1	.249	1	.285	1	.178	1	.726	1
2898		min		.196	2	.079	2	.059	2	.1	2	.171	2
2899		max	B	-.06	2	-.184	2	.262	1	1.628	1	.683	1
2900		min		-.248	1	-.772	1	.062	2	1.268	2	.162	2
2901	P726	max	T	.872	1	.335	1	.269	1	.213	1	.762	1
2902		min		.205	2	.101	2	.052	2	.148	2	.178	2
2903		max	B	-.082	2	-.193	2	.242	1	1.646	1	.714	1
2904		min		-.337	1	-.821	1	.056	2	1.228	2	.168	2
2905	P727	max	T	.86	1	.268	1	.296	1	.197	1	.762	1
2906		min		.211	2	.085	2	.063	2	.096	2	.184	2
2907		max	B	-.068	2	-.201	2	.274	1	1.656	1	.722	1
2908		min		-.269	1	-.817	1	.066	2	1.298	2	.177	2
2909	P728	max	T	.916	1	.354	1	.281	1	.233	1	.8	1
2910		min		.22	2	.109	2	.056	2	.141	2	.19	2
2911		max	B	-.09	2	-.21	2	.254	1	1.676	1	.754	1
2912		min		-.358	1	-.867	1	.06	2	1.259	2	.182	2
2913	P729	max	T	.935	1	.433	1	.251	1	.255	1	.811	1
2914		min		.216	2	.125	2	.046	2	.217	2	.188	2
2915		max	B	-.106	2	-.202	2	.218	1	1.67	1	.758	1
2916		min		-.439	1	-.875	1	.048	2	1.173	2	.175	2
2917	P730	max	T	1.01	1	.539	1	.235	1	.317	2	.875	1
2918		min		.23	2	.149	2	.041	2	.308	1	.202	2
2919		max	B	-.132	2	-.212	2	.191	1	1.708	1	.816	1
2920		min		-.554	1	-.937	1	.04	2	1.095	2	.185	2
2921	P731	max	T	.982	1	.451	1	.265	1	.279	1	.851	1
2922		min		.231	2	.134	2	.049	2	.209	2	.201	2
2923		max	B	-.115	2	-.219	2	.23	1	1.706	1	.799	1
2924		min		-.461	1	-.922	1	.052	2	1.206	2	.19	2
2925	P732	max	T	1.06	1	.558	1	.251	1	.338	1	.919	1
2926		min		.246	2	.16	2	.043	2	.312	2	.216	2
2927		max	B	-.143	2	-.229	2	.205	1	1.752	1	.859	1
2928		min		-.577	1	-.987	1	.043	2	1.13	2	.2	2
2929	P733	max	T	1.099	1	.652	1	.223	1	.444	2	.957	1
2930		min		.249	2	.172	2	.039	2	.375	1	.221	2
2931		max	B	-.16	2	-.222	2	.165	1	1.771	1	.891	1
2932		min		-.679	1	-1.009	1	.031	2	.974	2	.198	2
2933	P734	max	T	1.21	1	.768	1	.221	1	.567	2	1.06	1
2934		min		.275	2	.191	2	.042	2	.456	1	.244	2
2935		max	B	-.189	2	-.234	2	.144	1	1.879	1	.985	1
2936		min		-.809	1	-1.097	1	.023	2	.762	2	.215	2
2937	P735	max	T	1.157	1	.673	1	.242	1	.452	2	1.006	1
2938		min		.266	2	.183	2	.041	2	.413	1	.236	2

Envelope Plate/Shell Principal Stresses (Continued)

	Plate		Sur...	Sigma1 [ksi]	LC	Sigma2 [ksi]	LC	Tau Max [k...	LC	Angle [rad]	LC	Von Mises [ksi]	LC
2939		max	B	-.174	2	-.239	2	.179	1	1.828	1	.937	1
2940		min		-.705	1	-1.063	1	.033	2	1.007	2	.214	2
2941	P736	max	T	1.28	1	.79	1	.245	1	.595	2	1.119	1
2942		min		.295	2	.203	2	.046	2	.504	1	.261	2
2943		max	B	-.205	2	-.251	2	.161	1	1.955	1	1.038	1
2944		min		-.839	1	-1.161	1	.023	2	.773	2	.232	2
2945	P737	max	T	1.35	1	.88	1	.235	1	.647	2	1.187	1
2946		min		.307	2	.206	2	.05	2	.538	1	.271	2
2947		max	B	-.214	2	-.25	2	.141	1	2.037	1	1.102	1
2948		min		-.933	1	-1.216	1	.018	2	.383	2	.234	2
2949	P738	max	T	1.519	1	.983	1	.268	1	.668	2	1.335	1
2950		min		.343	2	.219	2	.062	2	.598	1	.301	2
2951		max	B	-.229	2	-.277	2	.168	1	2.182	1	1.24	1
2952		min		-1.038	1	-1.373	1	.024	2	-.026	2	.256	2
2953	P739	max	T	1.439	1	.902	1	.268	1	.693	2	1.26	1
2954		min		.332	2	.218	2	.057	2	.6	1	.292	2
2955		max	B	-.23	2	-.271	2	.167	1	2.133	1	1.167	1
2956		min		-.964	1	-1.298	1	.02	2	.321	2	.253	2
2957	P740	max	T	1.66	1	1.005	1	.328	1	.724	2	1.448	1
2958		min		.38	2	.228	2	.076	2	.673	1	.332	2
2959		max	B	-.244	2	-.307	2	.219	1	2.282	1	1.339	1
2960		min		-1.065	1	-1.503	1	.031	2	-.092	2	.281	2
2961	P741	max	T	1.732	1	1.08	1	.326	1	.642	2	1.515	1
2962		min		.384	2	.23	2	.077	2	.623	1	.335	2
2963		max	B	-.237	2	-.311	2	.229	1	2.254	1	1.41	1
2964		min		-1.125	1	-1.583	1	.037	2	-.305	2	.282	2
2965	P742	max	T	1.946	1	1.154	1	.396	1	.601	1	1.695	1
2966		min		.421	2	.238	2	.092	2	.57	2	.366	2
2967		max	B	-.239	2	-.345	2	.307	1	2.247	1	1.583	1
2968		min		-1.184	1	-1.798	1	.053	2	-.493	2	.306	2
2969	P743	max	T	1.902	1	1.084	1	.409	1	.699	1	1.653	1
2970		min		.427	2	.233	2	.097	2	.696	2	.37	2
2971		max	B	-.245	2	-.348	2	.305	1	2.345	1	1.532	1
2972		min		-1.133	1	-1.743	1	.052	2	-.308	2	.31	2
2973	P744	max	T	2.287	1	1.166	1	.561	1	.677	1	1.981	1
2974		min		.497	2	.241	2	.128	2	.637	2	.43	2
2975		max	B	-.243	2	-.41	2	.464	1	2.324	1	1.843	1
2976		min		-1.195	1	-2.122	1	.083	2	-.496	2	.357	2
2977	P745	max	T	1.757	1	1.077	1	.34	1	2.326	2	1.534	1
2978		min		.426	2	.245	2	.09	2	-.591	1	.37	2
2979		max	B	-.261	2	-.352	2	.3	1	1.01	1	1.48	1
2980		min		-1.086	1	-1.685	1	.045	2	.856	2	.316	2
2981	P746	max	T	1.554	1	.995	1	.279	1	2.257	2	1.363	1
2982		min		.386	2	.241	2	.072	2	-.59	1	.338	2
2983		max	B	-.26	2	-.319	2	.243	1	1.024	1	1.319	1
2984		min		-1.007	1	-1.492	1	.029	2	.772	2	.294	2
2985	P747	max	T	2.043	1	1.073	1	.485	1	2.294	2	1.77	1
2986		min		.499	2	.255	2	.122	2	-.677	1	.432	2
2987		max	B	-.266	2	-.426	2	.445	1	.906	1	1.71	1
2988		min		-1.081	1	-1.971	1	.08	2	.797	2	.373	2
2989	P748	max	T	1.682	1	.989	1	.346	1	2.209	2	1.464	1
2990		min		.426	2	.251	2	.087	2	-.692	1	.371	2
2991		max	B	-.267	2	-.362	2	.309	1	.9	1	1.418	1
2992		min		-1.003	1	-1.622	1	.048	2	.699	2	.325	2
2993	P749	max	T	1.356	1	.895	1	.23	1	2.218	2	1.194	1
2994		min		.341	2	.233	2	.054	2	-.546	1	.302	2
2995		max	B	-.254	2	-.281	2	.2	1	1.088	1	1.159	1

Envelope Plate/Shell Principal Stresses (Continued)

	Plate		Sur...	Sigma1 [ksi]	LC	Sigma2 [ksi]	LC	Tau Max [k...	LC	Angle [rad]	LC	Von Mises [ksi]	LC
2996		min		-.906	1	-1.307	1	.013	2	.762	2	.268	2
2997	P750	max	T	1.204	1	.79	1	.207	1	2.237	2	1.06	1
2998		min		.3	2	.225	2	.037	2	-.472	1	.27	2
2999		max	B	-.241	2	-.25	2	.185	1	1.422	2	1.032	1
3000		min		-.797	1	-1.166	1	.005	2	1.176	1	.246	2
3001	P751	max	T	1.463	1	.906	1	.278	1	2.179	2	1.279	1
3002		min		.374	2	.249	2	.063	2	-.638	1	.33	2
3003		max	B	-.266	2	-.319	2	.247	1	.97	1	1.243	1
3004		min		-.92	1	-1.414	1	.027	2	.676	2	.296	2
3005	P752	max	T	1.269	1	.802	1	.234	1	2.198	2	1.112	1
3006		min		.321	2	.242	2	.04	2	-.548	1	.29	2
3007		max	B	-.258	2	-.275	2	.209	1	1.077	1	1.085	1
3008		min		-.814	1	-1.232	1	.008	2	.899	2	.267	2
3009	P753	max	T	1.082	1	.678	1	.202	1	-.388	1	.947	1
3010		min		.263	2	.214	2	.025	2	-.774	2	.242	2
3011		max	B	-.209	2	-.238	2	.186	1	1.856	2	.925	1
3012		min		-.681	1	-1.053	1	.015	2	1.265	1	.225	2
3013	P754	max	T	.986	1	.567	1	.21	1	-.314	1	.857	1
3014		min		.235	2	.195	2	.02	2	-.469	2	.218	2
3015		max	B	-.177	2	-.229	2	.198	1	1.864	2	.838	1
3016		min		-.567	1	-.963	1	.026	2	1.334	1	.208	2
3017	P755	max	T	1.133	1	.691	1	.221	1	-.446	1	.989	1
3018		min		.279	2	.231	2	.024	2	-.775	2	.258	2
3019		max	B	-.229	2	-.255	2	.203	1	1.722	2	.968	1
3020		min		-.699	1	-1.105	1	.013	2	1.187	1	.244	2
3021	P756	max	T	1.029	1	.579	1	.225	1	-.359	1	.893	1
3022		min		.25	2	.21	2	.02	2	-.403	2	.233	2
3023		max	B	-.193	2	-.246	2	.211	1	1.801	2	.876	1
3024		min		-.584	1	-1.007	1	.026	2	1.273	1	.224	2
3025	P757	max	T	.907	1	.46	1	.224	1	-.203	2	.786	1
3026		min		.219	2	.169	2	.025	2	-.256	1	.199	2
3027		max	B	-.147	2	-.219	2	.215	1	1.84	2	.769	1
3028		min		-.459	1	-.888	1	.036	2	1.383	1	.193	2
3029	P758	max	T	.842	1	.362	1	.24	1	-.081	2	.731	1
3030		min		.209	2	.139	2	.035	2	-.211	1	.185	2
3031		max	B	-.119	2	-.209	2	.232	1	1.814	2	.716	1
3032		min		-.36	1	-.824	1	.045	2	1.419	1	.181	2
3033	P759	max	T	.946	1	.473	1	.236	1	-.149	2	.819	1
3034		min		.235	2	.179	2	.028	2	-.291	1	.213	2
3035		max	B	-.16	2	-.236	2	.226	1	1.796	2	.804	1
3036		min		-.477	1	-.928	1	.038	2	1.335	1	.209	2
3037	P760	max	T	.878	1	.376	1	.251	1	-.052	2	.763	1
3038		min		.226	2	.147	2	.039	2	-.24	1	.199	2
3039		max	B	-.13	2	-.226	2	.242	1	1.778	2	.748	1
3040		min		-.378	1	-.861	1	.048	2	1.38	1	.196	2
3041	P761	max	T	.786	1	.274	1	.256	1	-.026	2	.691	1
3042		min		.201	2	.111	2	.045	2	-.176	1	.175	2
3043		max	B	-.093	2	-.199	2	.248	1	1.791	2	.675	1
3044		min		-.272	1	-.768	1	.053	2	1.447	1	.173	2
3045	P762	max	T	.737	1	.197	1	.27	1	.003	2	.661	1
3046		min		.195	2	.085	2	.055	2	-.147	1	.169	2
3047		max	B	-.07	2	-.19	2	.262	1	1.771	2	.644	1
3048		min		-.195	1	-.719	1	.06	2	1.469	1	.167	2
3049	P763	max	T	.821	1	.289	1	.266	1	-.011	2	.721	1
3050		min		.218	2	.118	2	.05	2	-.201	1	.189	2
3051		max	B	-.103	2	-.216	2	.257	1	1.76	2	.705	1
3052		min		-.291	1	-.804	1	.057	2	1.414	1	.187	2

Envelope Plate/Shell Principal Stresses (Continued)

	Plate		Sur...	Sigma1 [ksi]	LC	Sigma2 [ksi]	LC	Tau Max [k...	LC	Angle [rad]	LC	Von Mises [ksi]	LC
3053	P764	max	T	.772	1	.213	1	.28	1	.01	2	.691	1
3054		min		.211	2	.091	2	.06	2	-.17	1	.183	2
3055		max	B	-.079	2	-.207	2	.27	1	1.743	2	.673	1
3056		min		-.214	1	-.754	1	.064	2	1.44	1	.181	2
3057	P765	max	T	.695	1	.131	1	.282	1	.022	2	.639	1
3058		min		.188	2	.063	2	.063	2	-.122	1	.166	2
3059		max	B	-.051	2	-.182	2	.272	1	1.755	2	.62	1
3060		min		-.13	1	-.674	1	.066	2	1.488	1	.163	2
3061	P766	max	T	.657	1	.078	1	.29	1	.035	2	.622	1
3062		min		.183	2	.044	2	.07	2	-.101	1	.165	2
3063		max	B	-.034	2	-.174	2	.279	1	1.74	2	.6	1
3064		min		-.076	1	-.635	1	.07	2	1.503	1	.16	2
3065	P767	max	T	.729	1	.148	1	.291	1	.023	2	.668	1
3066		min		.204	2	.068	2	.068	2	-.144	1	.18	2
3067		max	B	-.059	2	-.199	2	.281	1	1.727	2	.649	1
3068		min		-.149	1	-.71	1	.07	2	1.461	1	.177	2
3069	P768	max	T	.692	1	.095	1	.299	1	.032	2	.65	1
3070		min		.198	2	.049	2	.075	2	-.122	1	.179	2
3071		max	B	-.041	2	-.191	2	.288	1	1.713	2	.629	1
3072		min		-.096	1	-.672	1	.075	2	1.478	1	.174	2
3073	P769	max	T	.624	1	.036	1	.294	1	.045	2	.607	1
3074		min		.177	2	.028	2	.075	2	-.083	1	.165	2
3075		max	B	-.021	2	-.167	2	.282	1	1.727	2	.582	1
3076		min		-.035	1	-.599	1	.073	2	1.516	1	.157	2
3077	P770	max	T	.595	1	.016	2	.294	1	.053	2	.591	1
3078		min		.172	2	.007	1	.078	2	-.069	1	.165	2
3079		max	B	-.007	1	-.16	2	.28	1	1.714	2	.564	1
3080		min		-.011	2	-.568	1	.074	2	1.524	1	.155	2
3081	P771	max	T	.659	1	.053	1	.303	1	.038	2	.634	1
3082		min		.192	2	.033	2	.08	2	-.104	1	.178	2
3083		max	B	-.027	2	-.183	2	.292	1	1.7	2	.612	1
3084		min		-.054	1	-.637	1	.078	2	1.49	1	.171	2
3085	P772	max	T	.631	1	.022	1	.304	1	.042	2	.62	1
3086		min		.187	2	.02	2	.084	2	-.09	1	.178	2
3087		max	B	-.016	2	-.177	2	.292	1	1.686	2	.596	1
3088		min		-.023	1	-.607	1	.08	2	1.499	1	.169	2
3089	P773	max	T	.569	1	.007	2	.289	1	.056	2	.574	1
3090		min		.167	2	-.01	1	.08	2	-.06	1	.164	2
3091		max	B	.01	1	-.154	2	.275	1	1.698	2	.545	1
3092		min		-.004	2	-.54	1	.075	2	1.528	1	.152	2
3093	P774	max	T	.548	1	.002	2	.282	1	.055	2	.556	1
3094		min		.163	2	-.016	1	.08	2	-.057	1	.162	2
3095		max	B	.015	1	-.149	2	.266	1	1.677	2	.525	1
3096		min		0	2	-.517	1	.074	2	1.524	1	.148	2
3097	P775	max	T	.607	1	.011	2	.302	1	.044	2	.606	1
3098		min		.182	2	.003	1	.086	2	-.081	1	.177	2
3099		max	B	-.004	1	-.171	2	.289	1	1.671	2	.579	1
3100		min		-.009	2	-.581	1	.081	2	1.503	1	.167	2
3101	P776	max	T	.588	1	.005	2	.298	1	.042	2	.592	1
3102		min		.178	2	-.007	1	.087	2	-.077	1	.176	2
3103		max	B	.006	1	-.166	2	.283	1	1.652	2	.563	1
3104		min		-.004	2	-.56	1	.081	2	1.502	1	.165	2
3105	P777	max	T	.532	1	0	2	.272	1	.046	2	.538	1
3106		min		.159	2	-.012	1	.08	2	-.058	1	.159	2
3107		max	B	.012	1	-.145	2	.256	1	1.648	2	.505	1
3108		min		0	2	-.499	1	.073	2	1.518	1	.145	2
3109	P778	max	T	.525	1	0	2	.264	1	.022	2	.527	1

Envelope Plate/Shell Principal Stresses (Continued)

	Plate		Sur...	Sigma1 [ksi]	LC	Sigma2 [ksi]	LC	Tau Max [k...	LC	Angle [rad]	LC	Von Mises [ksi]	LC
3110		min		.157	2	-.004	1	.078	2	-.037	1	.157	2
3111		max	B	.004	1	-.143	2	.247	1	1.603	2	.493	1
3112		min		0	2	-.491	1	.072	2	1.534	1	.144	2
3113	P779	max	T	.574	1	.001	2	.291	1	.035	2	.578	1
3114		min		.175	2	-.008	1	.087	2	-.074	1	.174	2
3115		max	B	.008	1	-.163	2	.276	1	1.628	2	.548	1
3116		min		-.001	2	-.544	1	.081	2	1.499	1	.163	2
3117	P780	max	T	.566	1	0	2	.285	1	.016	2	.568	1
3118		min		.173	2	-.003	1	.086	2	-.045	1	.173	2
3119		max	B	.003	1	-.162	2	.269	1	1.594	2	.537	1
3120		min		0	2	-.535	1	.081	2	1.526	1	.162	2
3121	P781	max	T	.656	1	0	2	.328	1	.052	1	.656	1
3122		min		.184	2	0	1	.092	2	-.007	2	.184	2
3123		max	B	0	1	-.166	2	.324	1	1.616	1	.649	1
3124		min		0	2	-.648	1	.083	2	1.543	2	.166	2
3125	P782	max	T	.667	1	.003	2	.334	1	.092	1	.668	1
3126		min		.185	2	-.002	1	.091	2	-.011	2	.184	2
3127		max	B	0	1	-.168	2	.328	1	1.644	1	.655	1
3128		min		0	2	-.655	1	.084	2	1.501	2	.168	2
3129	P783	max	T	.674	1	0	2	.337	1	.054	1	.674	1
3130		min		.191	2	0	1	.095	2	-.006	2	.191	2
3131		max	B	0	1	-.18	2	.338	1	1.618	1	.675	1
3132		min		0	2	-.675	1	.09	2	1.547	2	.18	2
3133	P784	max	T	.687	1	.003	2	.343	1	.098	1	.686	1
3134		min		.193	2	.001	1	.095	2	-.007	2	.191	2
3135		max	B	-.002	2	-.181	2	.34	1	1.651	1	.681	1
3136		min		-.002	1	-.682	1	.09	2	1.512	2	.181	2
3137	P785	max	T	.683	1	.008	1	.338	1	.101	1	.68	1
3138		min		.188	2	.007	2	.091	2	-.006	2	.184	2
3139		max	B	-.003	2	-.172	2	.329	1	1.641	1	.662	1
3140		min		-.009	1	-.667	1	.084	2	1.471	2	.17	2
3141	P786	max	T	.704	1	.026	1	.339	1	.11	1	.691	1
3142		min		.191	2	.013	2	.089	2	.003	2	.185	2
3143		max	B	-.008	2	-.177	2	.329	1	1.638	1	.671	1
3144		min		-.027	1	-.684	1	.085	2	1.445	2	.173	2
3145	P787	max	T	.702	1	.013	1	.344	1	.111	1	.695	1
3146		min		.195	2	.008	2	.094	2	0	2	.191	2
3147		max	B	-.005	2	-.185	2	.339	1	1.652	1	.686	1
3148		min		-.014	1	-.693	1	.09	2	1.486	2	.182	2
3149	P788	max	T	.721	1	.034	1	.344	1	.122	1	.705	1
3150		min		.199	2	.015	2	.092	2	.009	2	.192	2
3151		max	B	-.01	2	-.189	2	.337	1	1.652	1	.692	1
3152		min		-.035	1	-.709	1	.09	2	1.463	2	.184	2
3153	P789	max	T	.73	1	.055	1	.337	1	.122	1	.704	1
3154		min		.196	2	.023	2	.087	2	.014	2	.185	2
3155		max	B	-.015	2	-.183	2	.326	1	1.638	1	.681	1
3156		min		-.056	1	-.707	1	.084	2	1.422	2	.176	2
3157	P790	max	T	.761	1	.095	1	.333	1	.139	1	.718	1
3158		min		.201	2	.035	2	.083	2	.027	2	.186	2
3159		max	B	-.025	2	-.19	2	.32	1	1.643	1	.692	1
3160		min		-.095	1	-.735	1	.082	2	1.4	2	.179	2
3161	P791	max	T	.746	1	.065	1	.341	1	.136	1	.716	1
3162		min		.203	2	.025	2	.089	2	.02	2	.192	2
3163		max	B	-.018	2	-.195	2	.332	1	1.655	1	.699	1
3164		min		-.066	1	-.73	1	.088	2	1.441	2	.187	2
3165	P792	max	T	.775	1	.105	1	.335	1	.154	1	.729	1
3166		min		.209	2	.037	2	.086	2	.033	2	.193	2

Envelope Plate/Shell Principal Stresses (Continued)

	Plate		Sur...	Sigma1 [ksi]	LC	Sigma2 [ksi]	LC	Tau Max [k...	LC	Angle [rad]	LC	Von Mises [ksi]	LC
3167		max	B	-.029	2	-.202	2	.324	1	1.661	1	.708	1
3168		min		-.107	1	-.756	1	.086	2	1.42	2	.189	2
3169	P793	max	T	.797	1	.146	1	.326	1	.159	1	.735	1
3170		min		.207	2	.05	2	.078	2	.044	2	.187	2
3171		max	B	-.039	2	-.198	2	.311	1	1.652	1	.706	1
3172		min		-.146	1	-.768	1	.08	2	1.377	2	.182	2
3173	P794	max	T	.839	1	.208	1	.315	1	.185	1	.756	1
3174		min		.214	2	.069	2	.073	2	.065	2	.189	2
3175		max	B	-.055	2	-.206	2	.298	1	1.664	1	.724	1
3176		min		-.21	1	-.805	1	.076	2	1.352	2	.185	2
3177	P795	max	T	.81	1	.157	1	.327	1	.176	1	.745	1
3178		min		.215	2	.053	2	.081	2	.048	2	.194	2
3179		max	B	-.043	2	-.21	2	.314	1	1.672	1	.721	1
3180		min		-.159	1	-.787	1	.083	2	1.397	2	.192	2
3181	P796	max	T	.851	1	.219	1	.316	1	.203	1	.766	1
3182		min		.222	2	.072	2	.075	2	.067	2	.197	2
3183		max	B	-.06	2	-.218	2	.3	1	1.687	1	.737	1
3184		min		-.223	1	-.823	1	.079	2	1.372	2	.195	2
3185	P797	max	T	.887	1	.282	1	.302	1	.217	1	.785	1
3186		min		.222	2	.09	2	.066	2	.094	2	.193	2
3187		max	B	-.075	2	-.215	2	.281	1	1.682	1	.747	1
3188		min		-.286	1	-.848	1	.07	2	1.321	2	.189	2
3189	P798	max	T	.943	1	.368	1	.287	1	.256	1	.823	1
3190		min		.231	2	.115	2	.058	2	.136	2	.2	2
3191		max	B	-.098	2	-.225	2	.261	1	1.706	1	.78	1
3192		min		-.376	1	-.897	1	.064	2	1.283	2	.195	2
3193	P799	max	T	.899	1	.293	1	.303	1	.238	1	.794	1
3194		min		.231	2	.094	2	.068	2	.093	2	.201	2
3195		max	B	-.08	2	-.227	2	.282	1	1.707	1	.76	1
3196		min		-.299	1	-.864	1	.074	2	1.341	2	.2	2
3197	P800	max	T	.954	1	.378	1	.288	1	.281	1	.832	1
3198		min		.24	2	.12	2	.06	2	.132	2	.208	2
3199		max	B	-.104	2	-.237	2	.261	1	1.736	1	.792	1
3200		min		-.389	1	-.911	1	.067	2	1.302	2	.206	2
3201	P801	max	T	1.01	1	.466	1	.272	1	.307	1	.876	1
3202		min		.243	2	.142	2	.051	2	.201	2	.211	2
3203		max	B	-.124	2	-.234	2	.237	1	1.742	1	.825	1
3204		min		-.479	1	-.953	1	.055	2	1.23	2	.203	2
3205	P802	max	T	1.091	1	.573	1	.259	1	.373	1	.945	1
3206		min		.257	2	.169	2	.044	2	.308	2	.227	2
3207		max	B	-.153	2	-.245	2	.21	1	1.796	1	.886	1
3208		min		-.597	1	-1.017	1	.046	2	1.152	2	.214	2
3209	P803	max	T	1.02	1	.475	1	.272	1	.337	1	.884	1
3210		min		.251	2	.148	2	.052	2	.194	2	.219	2
3211		max	B	-.131	2	-.248	2	.236	1	1.777	1	.836	1
3212		min		-.492	1	-.965	1	.059	2	1.247	2	.215	2
3213	P804	max	T	1.099	1	.582	1	.259	1	.412	1	.953	1
3214		min		.266	2	.178	2	.044	2	.302	2	.234	2
3215		max	B	-.161	2	-.259	2	.209	1	1.84	1	.895	1
3216		min		-.61	1	-1.028	1	.049	2	1.165	2	.226	2
3217	P805	max	T	1.192	1	.688	1	.252	1	.468	2	1.036	1
3218		min		.278	2	.195	2	.041	2	.459	1	.248	2
3219		max	B	-.185	2	-.256	2	.185	1	1.887	1	.966	1
3220		min		-.726	1	-1.096	1	.035	2	1.021	2	.229	2
3221	P806	max	T	1.324	1	.805	1	.26	1	.642	2	1.155	1
3222		min		.31	2	.216	2	.047	2	.565	1	.275	2
3223		max	B	-.218	2	-.269	2	.169	1	2.037	1	1.072	1

Envelope Plate/Shell Principal Stresses (Continued)

	Plate		Sur...	Sigma1 [ksi]	LC	Sigma2 [ksi]	LC	Tau Max [k...	LC	Angle [rad]	LC	Von Mises [ksi]	LC
3224		min		-.862	1	-1.2	1	.026	2	.759	2	.248	2
3225	P807	max	T	1.201	1	.696	1	.252	1	.512	1	1.044	1
3226		min		.286	2	.207	2	.04	2	.484	2	.256	2
3227		max	B	-.195	2	-.271	2	.182	1	1.947	1	.975	1
3228		min		-.741	1	-1.105	1	.038	2	1.022	2	.242	2
3229	P808	max	T	1.336	1	.811	1	.263	1	.703	2	1.166	1
3230		min		.32	2	.229	2	.045	2	.637	1	.285	2
3231		max	B	-.228	2	-.288	2	.167	1	2.128	1	1.083	1
3232		min		-.877	1	-1.211	1	.03	2	.744	2	.263	2
3233	P809	max	T	1.502	1	.917	1	.293	1	.76	2	1.312	1
3234		min		.353	2	.23	2	.062	2	.677	1	.311	2
3235		max	B	-.243	2	-.295	2	.183	1	2.24	1	1.213	1
3236		min		-.987	1	-1.354	1	.026	2	.303	2	.273	2
3237	P810	max	T	1.74	1	1.009	1	.365	1	.819	2	1.513	1
3238		min		.407	2	.236	2	.085	2	.783	1	.354	2
3239		max	B	-.25	2	-.34	2	.255	1	-.049	2	1.401	1
3240		min		-1.074	1	-1.584	1	.045	2	-.715	1	.305	2
3241	P811	max	T	1.525	1	.918	1	.304	1	.855	2	1.33	1
3242		min		.369	2	.242	2	.064	2	.771	1	.325	2
3243		max	B	-.25	2	-.32	2	.19	1	.335	2	1.23	1
3244		min		-.996	1	-1.375	1	.035	2	-.775	1	.292	2
3245	P812	max	T	1.79	1	1.018	1	.386	1	.916	2	1.555	1
3246		min		.434	2	.248	2	.093	2	.884	1	.377	2
3247		max	B	-.254	2	-.374	2	.271	1	.055	2	1.436	1
3248		min		-1.086	1	-1.629	1	.06	2	-.582	1	.33	2
3249	P813	max	T	1.51	1	.9	1	.305	1	2.075	2	1.316	1
3250		min		.401	2	.26	2	.07	2	-.766	1	.352	2
3251		max	B	-.274	2	-.354	2	.275	1	.819	1	1.284	1
3252		min		-.918	1	-1.467	1	.04	2	.502	2	.322	2
3253	P814	max	T	1.307	1	.808	1	.25	1	2.122	2	1.142	1
3254		min		.34	2	.258	2	.041	2	-.634	1	.307	2
3255		max	B	-.274	2	-.3	2	.225	1	.969	1	1.119	1
3256		min		-.824	1	-1.274	1	.013	2	.598	2	.288	2
3257	P815	max	T	1.519	1	.903	1	.308	1	2.266	1	1.324	1
3258		min		.422	2	.277	2	.073	2	1.96	2	.372	2
3259		max	B	-.288	2	-.389	2	.283	1	.691	1	1.301	1
3260		min		-.923	1	-1.489	1	.051	2	.356	2	.349	2
3261	P816	max	T	1.305	1	.801	1	.252	1	2.003	2	1.14	1
3262		min		.353	2	.274	2	.04	2	-.733	1	.321	2
3263		max	B	-.285	2	-.325	2	.228	1	.847	1	1.123	1
3264		min		-.823	1	-1.279	1	.02	2	.337	2	.307	2
3265	P817	max	T	1.158	1	.698	1	.23	1	2.333	2	1.01	1
3266		min		.291	2	.248	2	.021	2	-.512	1	.272	2
3267		max	B	-.25	2	-.27	2	.21	1	1.641	2	.992	1
3268		min		-.712	1	-1.133	1	.01	2	1.102	1	.26	2
3269	P818	max	T	1.05	1	.587	1	.231	1	-.33	2	.911	1
3270		min		.262	2	.223	2	.019	2	-.408	1	.245	2
3271		max	B	-.209	2	-.26	2	.216	1	1.771	2	.895	1
3272		min		-.598	1	-1.029	1	.025	2	1.209	1	.239	2
3273	P819	max	T	1.155	1	.698	1	.229	1	2.271	2	1.007	1
3274		min		.298	2	.265	2	.017	2	-.583	1	.283	2
3275		max	B	-.27	2	-.28	2	.207	1	1.725	2	.993	1
3276		min		-.718	1	-1.133	1	.005	2	1.011	1	.276	2
3277	P820	max	T	1.048	1	.589	1	.229	1	-.229	2	.91	1
3278		min		.272	2	.234	2	.019	2	-.46	1	.255	2
3279		max	B	-.224	2	-.272	2	.211	1	1.78	2	.896	1
3280		min		-.608	1	-1.029	1	.024	2	1.143	1	.252	2

Envelope Plate/Shell Principal Stresses (Continued)

	Plate		Sur...	Sigma1 [ksi]	LC	Sigma2 [ksi]	LC	Tau Max [k...	LC	Angle [rad]	LC	Von Mises [ksi]	LC
3281	P821	max	T	.966	1	.482	1	.242	1	-.1	2	.837	1
3282		min		.249	2	.188	2	.031	2	-.33	1	.225	2
3283		max	B	-.173	2	-.251	2	.229	1	1.769	2	.822	1
3284		min		-.491	1	-.949	1	.039	2	1.286	1	.222	2
3285	P822	max	T	.898	1	.385	1	.257	1	-.028	2	.781	1
3286		min		.24	2	.153	2	.043	2	-.272	1	.211	2
3287		max	B	-.14	2	-.241	2	.245	1	1.753	2	.765	1
3288		min		-.393	1	-.882	1	.05	2	1.341	1	.209	2
3289	P823	max	T	.967	1	.485	1	.241	1	-.054	2	.837	1
3290		min		.261	2	.194	2	.033	2	-.37	1	.235	2
3291		max	B	-.184	2	-.263	2	.224	1	1.759	2	.823	1
3292		min		-.501	1	-.95	1	.039	2	1.237	1	.233	2
3293	P824	max	T	.902	1	.39	1	.256	1	-.009	2	.783	1
3294		min		.252	2	.158	2	.047	2	-.304	1	.22	2
3295		max	B	-.149	2	-.253	2	.241	1	1.738	2	.768	1
3296		min		-.404	1	-.886	1	.052	2	1.302	1	.22	2
3297	P825	max	T	.842	1	.299	1	.271	1	0	2	.739	1
3298		min		.232	2	.123	2	.055	2	-.228	1	.201	2
3299		max	B	-.112	2	-.231	2	.26	1	1.736	2	.723	1
3300		min		-.306	1	-.826	1	.06	2	1.381	1	.2	2
3301	P826	max	T	.793	1	.225	1	.284	1	.014	2	.708	1
3302		min		.224	2	.095	2	.064	2	-.193	1	.195	2
3303		max	B	-.087	2	-.222	2	.273	1	1.72	2	.691	1
3304		min		-.23	1	-.777	1	.067	2	1.412	1	.193	2
3305	P827	max	T	.847	1	.306	1	.271	1	.007	2	.743	1
3306		min		.243	2	.126	2	.059	2	-.255	1	.211	2
3307		max	B	-.119	2	-.243	2	.257	1	1.72	2	.727	1
3308		min		-.318	1	-.832	1	.062	2	1.35	1	.21	2
3309	P828	max	T	.8	1	.232	1	.284	1	.015	2	.713	1
3310		min		.235	2	.098	2	.068	2	-.217	1	.204	2
3311		max	B	-.093	2	-.233	2	.271	1	1.703	2	.696	1
3312		min		-.243	1	-.785	1	.07	2	1.385	1	.203	2
3313	P829	max	T	.751	1	.161	1	.295	1	.022	2	.685	1
3314		min		.217	2	.072	2	.072	2	-.165	1	.191	2
3315		max	B	-.065	2	-.213	2	.284	1	1.706	2	.667	1
3316		min		-.165	1	-.734	1	.074	2	1.436	1	.189	2
3317	P830	max	T	.714	1	.108	1	.303	1	.028	2	.667	1
3318		min		.21	2	.052	2	.079	2	-.142	1	.19	2
3319		max	B	-.047	2	-.205	2	.292	1	1.692	2	.648	1
3320		min		-.112	1	-.696	1	.079	2	1.454	1	.186	2
3321	P831	max	T	.76	1	.17	1	.295	1	.019	2	.691	1
3322		min		.227	2	.074	2	.076	2	-.187	1	.201	2
3323		max	B	-.071	2	-.224	2	.283	1	1.688	2	.673	1
3324		min		-.178	1	-.744	1	.077	2	1.412	1	.199	2
3325	P832	max	T	.725	1	.117	1	.304	1	.022	2	.674	1
3326		min		.22	2	.054	2	.083	2	-.162	1	.199	2
3327		max	B	-.052	2	-.216	2	.292	1	1.675	2	.656	1
3328		min		-.124	1	-.709	1	.082	2	1.433	1	.195	2
3329	P833	max	T	.683	1	.066	1	.309	1	.032	2	.653	1
3330		min		.205	2	.036	2	.084	2	-.124	1	.189	2
3331		max	B	-.032	2	-.197	2	.297	1	1.679	2	.632	1
3332		min		-.069	1	-.663	1	.083	2	1.468	1	.183	2
3333	P834	max	T	.656	1	.034	1	.311	1	.034	2	.64	1
3334		min		.199	2	.023	2	.088	2	-.109	1	.189	2
3335		max	B	-.021	2	-.191	2	.299	1	1.666	2	.617	1
3336		min		-.036	1	-.635	1	.085	2	1.478	1	.181	2
3337	P835	max	T	.695	1	.075	1	.31	1	.025	2	.661	1

Envelope Plate/Shell Principal Stresses (Continued)

	Plate		Sur...	Sigma1 [ksi]	LC	Sigma2 [ksi]	LC	Tau Max [k...	LC	Angle [rad]	LC	Von Mises [ksi]	LC
3338		min		.214	2	.038	2	.088	2	-.142	1	.198	2
3339		max	B	-.036	2	-.209	2	.299	1	1.662	2	.641	1
3340		min		-.08	1	-.678	1	.086	2	1.449	1	.193	2
3341	P836	max	T	.67	1	.042	1	.314	1	.027	2	.65	1
3342		min		.209	2	.025	2	.092	2	-.126	1	.197	2
3343		max	B	-.024	2	-.202	2	.302	1	1.65	2	.629	1
3344		min		-.046	1	-.651	1	.089	2	1.46	1	.192	2
3345	P837	max	T	.634	1	.013	2	.311	1	.035	2	.628	1
3346		min		.195	2	.012	1	.091	2	-.099	1	.188	2
3347		max	B	-.012	2	-.185	2	.298	1	1.651	2	.604	1
3348		min		-.014	1	-.611	1	.087	2	1.483	1	.18	2
3349	P838	max	T	.616	1	.006	2	.309	1	.033	2	.617	1
3350		min		.191	2	0	1	.092	2	-.093	1	.188	2
3351		max	B	0	1	-.181	2	.295	1	1.635	2	.591	1
3352		min		-.006	2	-.591	1	.088	2	1.485	1	.178	2
3353	P839	max	T	.649	1	.019	1	.315	1	.027	2	.64	1
3354		min		.204	2	.015	2	.095	2	-.114	1	.197	2
3355		max	B	-.014	2	-.197	2	.303	1	1.637	2	.618	1
3356		min		-.022	1	-.629	1	.091	2	1.467	1	.19	2
3357	P840	max	T	.633	1	.008	2	.315	1	.026	2	.631	1
3358		min		.2	2	.004	1	.096	2	-.105	1	.196	2
3359		max	B	-.006	1	-.193	2	.302	1	1.623	2	.608	1
3360		min		-.007	2	-.611	1	.093	2	1.471	1	.189	2
3361	P841	max	T	.604	1	.002	2	.304	1	.027	2	.606	1
3362		min		.188	2	-.005	1	.093	2	-.086	1	.186	2
3363		max	B	.004	1	-.178	2	.29	1	1.616	2	.579	1
3364		min		-.002	2	-.577	1	.088	2	1.487	1	.177	2
3365	P842	max	T	.596	1	0	2	.299	1	.013	2	.597	1
3366		min		.186	2	-.001	1	.093	2	-.05	1	.186	2
3367		max	B	.001	1	-.177	2	.284	1	1.589	2	.568	1
3368		min		0	2	-.567	1	.088	2	1.52	1	.177	2
3369	P843	max	T	.622	1	.003	2	.312	1	.023	2	.623	1
3370		min		.197	2	-.003	1	.097	2	-.095	1	.196	2
3371		max	B	.002	1	-.19	2	.3	1	1.608	2	.598	1
3372		min		-.003	2	-.597	1	.093	2	1.477	1	.188	2
3373	P844	max	T	.614	1	0	2	.308	1	.011	2	.615	1
3374		min		.196	2	-.002	1	.098	2	-.054	1	.195	2
3375		max	B	.002	1	-.189	2	.294	1	1.586	2	.588	1
3376		min		0	2	-.587	1	.094	2	1.516	1	.188	2
3377	P845	max	T	.681	1	0	2	.34	1	.056	1	.68	1
3378		min		.195	2	0	1	.097	2	-.005	2	.195	2
3379		max	B	0	1	-.19	2	.345	1	1.62	1	.69	1
3380		min		0	2	-.69	1	.095	2	1.55	2	.19	2
3381	P846	max	T	.693	1	.004	2	.345	1	.103	1	.691	1
3382		min		.197	2	.003	1	.097	2	-.004	2	.195	2
3383		max	B	-.002	2	-.192	2	.346	1	1.656	1	.694	1
3384		min		-.004	1	-.697	1	.095	2	1.52	2	.19	2
3385	P847	max	T	.675	1	0	2	.337	1	.057	1	.674	1
3386		min		.196	2	0	1	.098	2	-.004	2	.196	2
3387		max	B	0	2	-.197	2	.345	1	1.621	1	.691	1
3388		min		-.001	1	-.692	1	.098	2	1.552	2	.197	2
3389	P848	max	T	.687	1	.005	1	.341	1	.108	1	.685	1
3390		min		.198	2	.004	2	.097	2	0	2	.196	2
3391		max	B	-.003	2	-.198	2	.346	1	1.66	1	.696	1
3392		min		-.006	1	-.699	1	.098	2	1.526	2	.197	2
3393	P849	max	T	.707	1	.017	1	.345	1	.119	1	.699	1
3394		min		.199	2	.008	2	.096	2	.005	2	.195	2

Envelope Plate/Shell Principal Stresses (Continued)

	Plate		Sur...	Sigma1 [ksi]	LC	Sigma2 [ksi]	LC	Tau Max [k...	LC	Angle [rad]	LC	Von Mises [ksi]	LC
3395		max	B	-.006	2	-.195	2	.344	1	1.661	1	.697	1
3396		min		-.019	1	-.706	1	.094	2	1.498	2	.192	2
3397	P850	max	T	.726	1	.04	1	.343	1	.132	1	.707	1
3398		min		.203	2	.016	2	.094	2	.015	2	.196	2
3399		max	B	-.012	2	-.199	2	.339	1	1.664	1	.7	1
3400		min		-.042	1	-.72	1	.093	2	1.477	2	.193	2
3401	P851	max	T	.701	1	.02	1	.341	1	.127	1	.691	1
3402		min		.201	2	.009	2	.096	2	.009	2	.197	2
3403		max	B	-.007	2	-.201	2	.343	1	1.669	1	.696	1
3404		min		-.022	1	-.707	1	.097	2	1.506	2	.198	2
3405	P852	max	T	.719	1	.043	1	.338	1	.143	1	.698	1
3406		min		.205	2	.016	2	.094	2	.021	2	.197	2
3407		max	B	-.013	2	-.205	2	.337	1	1.675	1	.698	1
3408		min		-.046	1	-.72	1	.096	2	1.488	2	.199	2
3409	P853	max	T	.749	1	.071	1	.339	1	.148	1	.716	1
3410		min		.208	2	.026	2	.091	2	.026	2	.196	2
3411		max	B	-.02	2	-.205	2	.333	1	1.669	1	.706	1
3412		min		-.074	1	-.74	1	.092	2	1.457	2	.195	2
3413	P854	max	T	.778	1	.113	1	.332	1	.168	1	.728	1
3414		min		.214	2	.039	2	.087	2	.038	2	.197	2
3415		max	B	-.032	2	-.211	2	.324	1	1.678	1	.713	1
3416		min		-.116	1	-.764	1	.09	2	1.437	2	.197	2
3417	P855	max	T	.741	1	.075	1	.333	1	.161	1	.706	1
3418		min		.21	2	.026	2	.092	2	.033	2	.198	2
3419		max	B	-.022	2	-.211	2	.329	1	1.682	1	.701	1
3420		min		-.079	1	-.737	1	.095	2	1.47	2	.201	2
3421	P856	max	T	.767	1	.117	1	.325	1	.183	1	.716	1
3422		min		.216	2	.039	2	.088	2	.045	2	.199	2
3423		max	B	-.033	2	-.217	2	.319	1	1.693	1	.707	1
3424		min		-.122	1	-.759	1	.092	2	1.451	2	.203	2
3425	P857	max	T	.811	1	.164	1	.323	1	.193	1	.743	1
3426		min		.22	2	.055	2	.083	2	.053	2	.199	2
3427		max	B	-.046	2	-.219	2	.312	1	1.691	1	.723	1
3428		min		-.168	1	-.793	1	.087	2	1.414	2	.2	2
3429	P858	max	T	.85	1	.226	1	.312	1	.222	1	.762	1
3430		min		.228	2	.074	2	.077	2	.07	2	.201	2
3431		max	B	-.063	2	-.228	2	.297	1	1.708	1	.738	1
3432		min		-.232	1	-.826	1	.082	2	1.389	2	.203	2
3433	P859	max	T	.799	1	.168	1	.315	1	.209	1	.73	1
3434		min		.223	2	.055	2	.084	2	.059	2	.201	2
3435		max	B	-.048	2	-.225	2	.306	1	1.708	1	.715	1
3436		min		-.174	1	-.786	1	.089	2	1.429	2	.206	2
3437	P860	max	T	.835	1	.23	1	.303	1	.241	1	.748	1
3438		min		.231	2	.075	2	.078	2	.075	2	.204	2
3439		max	B	-.065	2	-.234	2	.289	1	1.728	1	.727	1
3440		min		-.238	1	-.817	1	.084	2	1.404	2	.209	2
3441	P861	max	T	.895	1	.299	1	.298	1	.259	1	.789	1
3442		min		.237	2	.097	2	.07	2	.094	2	.206	2
3443		max	B	-.084	2	-.237	2	.278	1	1.731	1	.759	1
3444		min		-.308	1	-.865	1	.077	2	1.358	2	.208	2
3445	P862	max	T	.948	1	.384	1	.282	1	.307	1	.826	1
3446		min		.246	2	.123	2	.062	2	.128	2	.213	2
3447		max	B	-.108	2	-.247	2	.256	1	1.764	1	.789	1
3448		min		-.397	1	-.909	1	.07	2	1.318	2	.215	2
3449	P863	max	T	.878	1	.302	1	.288	1	.282	1	.772	1
3450		min		.239	2	.098	2	.071	2	.096	2	.208	2
3451		max	B	-.086	2	-.244	2	.269	1	1.754	1	.746	1

Envelope Plate/Shell Principal Stresses (Continued)

	Plate		Sur...	Sigma1 [ksi]	LC	Sigma2 [ksi]	LC	Tau Max [k...	LC	Angle [rad]	LC	Von Mises [ksi]	LC
3452		min		-.313	1	-.852	1	.079	2	1.373	2	.214	2
3453	P864	max	T	.927	1	.384	1	.271	1	.333	1	.806	1
3454		min		.249	2	.124	2	.062	2	.126	2	.216	2
3455		max	B	-.111	2	-.255	2	.245	1	1.79	1	.774	1
3456		min		-.401	1	-.892	1	.072	2	1.331	2	.221	2
3457	P865	max	T	1.01	1	.479	1	.266	1	.369	1	.875	1
3458		min		.257	2	.153	2	.052	2	.185	2	.224	2
3459		max	B	-.136	2	-.258	2	.23	1	1.81	1	.831	1
3460		min		-.5	1	-.959	1	.061	2	1.261	2	.224	2
3461	P866	max	T	1.086	1	.584	1	.251	1	.453	1	.942	1
3462		min		.27	2	.185	2	.043	2	.29	2	.239	2
3463		max	B	-.167	2	-.271	2	.2	1	1.883	1	.888	1
3464		min		-.618	1	-1.018	1	.052	2	1.174	2	.237	2
3465	P867	max	T	.984	1	.477	1	.253	1	.402	1	.852	1
3466		min		.26	2	.155	2	.052	2	.176	2	.226	2
3467		max	B	-.138	2	-.267	2	.217	1	1.842	1	.812	1
3468		min		-.502	1	-.937	1	.064	2	1.273	2	.231	2
3469	P868	max	T	1.053	1	.58	1	.237	1	.495	1	.914	1
3470		min		.272	2	.189	2	.041	2	.27	2	.242	2
3471		max	B	-.17	2	-.281	2	.186	1	1.924	1	.865	1
3472		min		-.618	1	-.989	1	.055	2	1.182	2	.245	2
3473	P869	max	T	1.183	1	.697	1	.243	1	.568	1	1.03	1
3474		min		.29	2	.217	2	.036	2	.491	2	.261	2
3475		max	B	-.201	2	-.286	2	.171	1	2.008	1	.965	1
3476		min		-.748	1	-1.09	1	.043	2	1.022	2	.254	2
3477	P870	max	T	1.315	1	.808	1	.253	1	.773	2	1.149	1
3478		min		.323	2	.242	2	.04	2	.715	1	.291	2
3479		max	B	-.233	2	-.307	2	.154	1	2.226	1	1.07	1
3480		min		-.882	1	-1.191	1	.037	2	.749	2	.278	2
3481	P871	max	T	1.141	1	.688	1	.227	1	.625	1	.995	1
3482		min		.289	2	.226	2	.032	2	.478	2	.263	2
3483		max	B	-.203	2	-.298	2	.153	1	2.066	1	.937	1
3484		min		-.746	1	-1.052	1	.048	2	1.028	2	.264	2
3485	P872	max	T	1.262	1	.794	1	.234	1	.845	2	1.105	1
3486		min		.32	2	.254	2	.033	2	.797	1	.293	2
3487		max	B	-.234	2	-.325	2	.134	1	2.329	1	1.036	1
3488		min		-.875	1	-1.144	1	.045	2	.78	2	.29	2
3489	P873	max	T	1.506	1	.906	1	.3	1	.971	2	1.313	1
3490		min		.377	2	.254	2	.061	2	.877	1	.333	2
3491		max	B	-.254	2	-.346	2	.186	1	.4	2	1.219	1
3492		min		-.989	1	-1.361	1	.046	2	-.63	1	.31	2
3493	P874	max	T	1.788	1	.974	1	.407	1	1.049	2	1.551	1
3494		min		.452	2	.256	2	.098	2	1.014	1	.392	2
3495		max	B	-.256	2	-.409	2	.299	1	.156	2	1.438	1
3496		min		-1.042	1	-1.641	1	.076	2	-.426	1	.358	2
3497	P875	max	T	1.439	1	.881	1	.279	1	1.105	2	1.257	1
3498		min		.377	2	.265	2	.056	2	.993	1	.335	2
3499		max	B	-.253	2	-.37	2	.17	1	.496	2	1.175	1
3500		min		-.967	1	-1.307	1	.059	2	-.466	1	.327	2
3501	P876	max	T	1.706	1	.931	1	.388	1	1.206	2	1.479	1
3502		min		.458	2	.262	2	.098	2	1.167	1	.398	2
3503		max	B	-.254	2	-.442	2	.293	1	.304	2	1.387	1
3504		min		-.998	1	-1.584	1	.094	2	-.229	1	.384	2
3505	P877	max	T	1.489	1	.852	1	.319	1	2.133	1	1.294	1
3506		min		.44	2	.285	2	.078	2	1.826	2	.387	2
3507		max	B	-.29	2	-.424	2	.302	1	.538	1	1.285	1
3508		min		-.872	1	-1.475	1	.067	2	.204	2	.376	2

Envelope Plate/Shell Principal Stresses (Continued)

	Plate		Sur...	Sigma1 [ksi]	LC	Sigma2 [ksi]	LC	Tau Max [k...	LC	Angle [rad]	LC	Von Mises [ksi]	LC
3509	P878	max	T	1.266	1	.785	1	.241	1	2.303	1	1.107	1
3510		min		.361	2	.287	2	.037	2	1.838	2	.33	2
3511		max	B	-.293	2	-.349	2	.22	1	.715	1	1.099	1
3512		min		-.811	1	-1.251	1	.028	2	.11	2	.325	2
3513	P879	max	T	1.389	1	.807	1	.291	1	1.971	1	1.208	1
3514		min		.45	2	.291	2	.079	2	1.639	2	.395	2
3515		max	B	-.292	2	-.455	2	.287	1	.353	1	1.219	1
3516		min		-.827	1	-1.4	1	.082	2	.012	2	.4	2
3517	P880	max	T	1.188	1	.758	1	.215	1	2.191	1	1.042	1
3518		min		.364	2	.296	2	.034	2	1.62	2	.335	2
3519		max	B	-.295	2	-.371	2	.2	1	.569	1	1.046	1
3520		min		-.786	1	-1.187	1	.038	2	-.095	2	.34	2
3521	P881	max	T	1.122	1	.689	1	.216	1	2.165	2	.98	1
3522		min		.3	2	.281	2	.01	2	-.658	1	.291	2
3523		max	B	-.283	2	-.294	2	.194	1	.913	1	.97	1
3524		min		-.717	1	-1.104	1	.005	2	-.701	2	.288	2
3525	P882	max	T	1.023	1	.584	1	.22	1	-.096	2	.889	1
3526		min		.279	2	.241	2	.019	2	-.513	1	.262	2
3527		max	B	-.236	2	-.282	2	.197	1	1.836	2	.878	1
3528		min		-.611	1	-1.006	1	.023	2	1.075	1	.262	2
3529	P883	max	T	1.063	1	.672	1	.196	1	1.584	2	.931	1
3530		min		.297	2	.293	2	.002	2	-.73	1	.295	2
3531		max	B	-.284	2	-.312	2	.172	1	.81	1	.928	1
3532		min		-.708	1	-1.051	1	.014	2	-.582	2	.299	2
3533	P884	max	T	.979	1	.572	1	.203	1	.024	2	.852	1
3534		min		.286	2	.242	2	.022	2	-.563	1	.267	2
3535		max	B	-.243	2	-.29	2	.176	1	1.924	2	.843	1
3536		min		-.609	1	-.962	1	.024	2	1.006	1	.27	2
3537	P885	max	T	.949	1	.483	1	.233	1	-.013	2	.822	1
3538		min		.27	2	.197	2	.036	2	-.409	1	.242	2
3539		max	B	-.193	2	-.272	2	.212	1	1.767	2	.808	1
3540		min		-.508	1	-.932	1	.039	2	1.187	1	.242	2
3541	P886	max	T	.889	1	.39	1	.249	1	.004	2	.772	1
3542		min		.261	2	.16	2	.051	2	-.336	1	.228	2
3543		max	B	-.157	2	-.262	2	.231	1	1.732	2	.757	1
3544		min		-.412	1	-.873	1	.052	2	1.265	1	.228	2
3545	P887	max	T	.915	1	.475	1	.22	1	.016	2	.792	1
3546		min		.277	2	.197	2	.04	2	-.448	1	.247	2
3547		max	B	-.2	2	-.279	2	.194	1	1.787	2	.779	1
3548		min		-.509	1	-.897	1	.04	2	1.14	1	.249	2
3549	P888	max	T	.862	1	.386	1	.238	1	.011	2	.748	1
3550		min		.267	2	.159	2	.054	2	-.368	1	.232	2
3551		max	B	-.162	2	-.268	2	.215	1	1.733	2	.732	1
3552		min		-.416	1	-.845	1	.053	2	1.23	1	.233	2
3553	P889	max	T	.838	1	.308	1	.265	1	.01	2	.735	1
3554		min		.252	2	.127	2	.062	2	-.282	1	.218	2
3555		max	B	-.125	2	-.251	2	.248	1	1.709	2	.718	1
3556		min		-.327	1	-.823	1	.063	2	1.32	1	.218	2
3557	P890	max	T	.795	1	.236	1	.279	1	.012	2	.707	1
3558		min		.243	2	.099	2	.072	2	-.241	1	.211	2
3559		max	B	-.098	2	-.242	2	.264	1	1.69	2	.69	1
3560		min		-.252	1	-.78	1	.072	2	1.36	1	.211	2
3561	P891	max	T	.817	1	.306	1	.255	1	.008	2	.715	1
3562		min		.257	2	.127	2	.065	2	-.31	1	.223	2
3563		max	B	-.129	2	-.257	2	.235	1	1.703	2	.697	1
3564		min		-.332	1	-.801	1	.064	2	1.292	1	.223	2
3565	P892	max	T	.777	1	.236	1	.27	1	.006	2	.69	1

Envelope Plate/Shell Principal Stresses (Continued)

	Plate		Sur...	Sigma1 [ksi]	LC	Sigma2 [ksi]	LC	Tau Max [k...	LC	Angle [rad]	LC	Von Mises [ksi]	LC
3566		min		.248	2	.099	2	.074	2	-.265	1	.216	2
3567		max	B	-.101	2	-.247	2	.252	1	1.681	2	.672	1
3568		min		-.258	1	-.763	1	.073	2	1.336	1	.215	2
3569	P893	max	T	.757	1	.175	1	.291	1	.014	2	.687	1
3570		min		.235	2	.076	2	.08	2	-.208	1	.208	2
3571		max	B	-.075	2	-.233	2	.277	1	1.675	2	.669	1
3572		min		-.188	1	-.742	1	.079	2	1.39	1	.206	2
3573	P894	max	T	.724	1	.123	1	.301	1	.016	2	.671	1
3574		min		.227	2	.056	2	.086	2	-.182	1	.205	2
3575		max	B	-.055	2	-.224	2	.288	1	1.662	2	.653	1
3576		min		-.133	1	-.709	1	.085	2	1.413	1	.203	2
3577	P895	max	T	.743	1	.176	1	.283	1	.006	2	.672	1
3578		min		.239	2	.075	2	.082	2	-.23	1	.212	2
3579		max	B	-.077	2	-.238	2	.267	1	1.665	2	.654	1
3580		min		-.194	1	-.729	1	.08	2	1.37	1	.21	2
3581	P896	max	T	.712	1	.126	1	.293	1	.007	2	.659	1
3582		min		.231	2	.055	2	.088	2	-.201	1	.209	2
3583		max	B	-.057	2	-.23	2	.28	1	1.651	2	.641	1
3584		min		-.14	1	-.699	1	.086	2	1.395	1	.207	2
3585	P897	max	T	.696	1	.081	1	.307	1	.018	2	.659	1
3586		min		.221	2	.039	2	.091	2	-.16	1	.204	2
3587		max	B	-.039	2	-.217	2	.296	1	1.649	2	.641	1
3588		min		-.089	1	-.681	1	.089	2	1.431	1	.2	2
3589	P898	max	T	.672	1	.048	1	.312	1	.019	2	.65	1
3590		min		.215	2	.026	2	.095	2	-.142	1	.203	2
3591		max	B	-.026	2	-.211	2	.301	1	1.638	2	.631	1
3592		min		-.054	1	-.656	1	.092	2	1.444	1	.199	2
3593	P899	max	T	.686	1	.084	1	.301	1	.009	2	.648	1
3594		min		.224	2	.039	2	.093	2	-.177	1	.208	2
3595		max	B	-.041	2	-.222	2	.289	1	1.639	2	.631	1
3596		min		-.095	1	-.673	1	.091	2	1.415	1	.205	2
3597	P900	max	T	.665	1	.052	1	.306	1	.011	2	.64	1
3598		min		.218	2	.026	2	.096	2	-.158	1	.207	2
3599		max	B	-.027	2	-.216	2	.296	1	1.628	2	.623	1
3600		min		-.059	1	-.651	1	.094	2	1.43	1	.204	2
3601	P901	max	T	.653	1	.024	1	.315	1	.021	2	.642	1
3602		min		.21	2	.016	2	.097	2	-.128	1	.203	2
3603		max	B	-.016	2	-.205	2	.304	1	1.627	2	.622	1
3604		min		-.028	1	-.635	1	.095	2	1.454	1	.198	2
3605	P902	max	T	.639	1	.008	2	.316	1	.021	2	.635	1
3606		min		.207	2	.007	1	.099	2	-.117	1	.203	2
3607		max	B	-.009	2	-.201	2	.305	1	1.615	2	.614	1
3608		min		-.01	1	-.619	1	.096	2	1.46	1	.197	2
3609	P903	max	T	.647	1	.027	1	.31	1	.013	2	.634	1
3610		min		.213	2	.016	2	.099	2	-.142	1	.206	2
3611		max	B	-.017	2	-.211	2	.3	1	1.618	2	.616	1
3612		min		-.032	1	-.632	1	.097	2	1.441	1	.203	2
3613	P904	max	T	.633	1	.01	1	.312	1	.016	2	.629	1
3614		min		.21	2	.008	2	.101	2	-.127	1	.206	2
3615		max	B	-.009	2	-.206	2	.302	1	1.609	2	.61	1
3616		min		-.013	1	-.617	1	.099	2	1.451	1	.202	2
3617	P905	max	T	.628	1	.003	2	.315	1	.019	2	.629	1
3618		min		.204	2	-.001	1	.1	2	-.103	1	.202	2
3619		max	B	0	1	-.198	2	.303	1	1.603	2	.606	1
3620		min		-.004	2	-.606	1	.097	2	1.469	1	.197	2
3621	P906	max	T	.62	1	0	2	.31	1	.01	2	.62	1
3622		min		.203	2	0	1	.101	2	-.057	1	.202	2

Envelope Plate/Shell Principal Stresses (Continued)

	Plate		Sur...	Sigma1 [ksi]	LC	Sigma2 [ksi]	LC	Tau Max [k...	LC	Angle [rad]	LC	Von Mises [ksi]	LC
3623		max	B	0	1	-.197	2	.298	1	1.585	2	.596	1
3624		min		0	2	-.596	1	.098	2	1.513	1	.196	2
3625	P907	max	T	.624	1	.003	2	.312	1	.016	2	.624	1
3626		min		.207	2	0	1	.102	2	-.11	1	.206	2
3627		max	B	-.001	1	-.204	2	.302	1	1.599	2	.604	1
3628		min		-.004	2	-.605	1	.1	2	1.463	1	.202	2
3629	P908	max	T	.616	1	0	2	.308	1	.01	2	.616	1
3630		min		.206	2	0	1	.103	2	-.059	1	.206	2
3631		max	B	0	1	-.202	2	.297	1	1.584	2	.593	1
3632		min		0	2	-.593	1	.1	2	1.511	1	.201	2
3633	P909	max	T	.658	1	.001	1	.328	1	.059	1	.657	1
3634		min		.194	2	0	2	.097	2	-.004	2	.194	2
3635		max	B	0	2	-.201	2	.34	1	1.622	1	.681	1
3636		min		-.001	1	-.682	1	.1	2	1.553	2	.2	2
3637	P910	max	T	.67	1	.006	1	.332	1	.112	1	.668	1
3638		min		.196	2	.003	2	.096	2	.002	2	.194	2
3639		max	B	-.003	2	-.202	2	.341	1	1.664	1	.685	1
3640		min		-.007	1	-.689	1	.1	2	1.53	2	.201	2
3641	P911	max	T	.63	1	.001	1	.314	1	.061	1	.629	1
3642		min		.189	2	0	2	.094	2	-.003	2	.189	2
3643		max	B	0	2	-.201	2	.33	1	1.623	1	.66	1
3644		min		-.002	1	-.661	1	.1	2	1.554	2	.201	2
3645	P912	max	T	.642	1	.006	1	.318	1	.118	1	.64	1
3646		min		.191	2	.003	2	.094	2	.006	2	.189	2
3647		max	B	-.002	2	-.202	2	.33	1	1.669	1	.664	1
3648		min		-.007	1	-.668	1	.1	2	1.534	2	.201	2
3649	P913	max	T	.683	1	.021	1	.331	1	.134	1	.673	1
3650		min		.199	2	.008	2	.095	2	.015	2	.195	2
3651		max	B	-.007	2	-.205	2	.336	1	1.676	1	.685	1
3652		min		-.024	1	-.696	1	.099	2	1.514	2	.202	2
3653	P914	max	T	.7	1	.045	1	.328	1	.153	1	.679	1
3654		min		.203	2	.016	2	.094	2	.028	2	.196	2
3655		max	B	-.013	2	-.209	2	.33	1	1.685	1	.685	1
3656		min		-.049	1	-.708	1	.098	2	1.498	2	.203	2
3657	P915	max	T	.655	1	.021	1	.317	1	.143	1	.645	1
3658		min		.194	2	.008	2	.093	2	.021	2	.19	2
3659		max	B	-.006	2	-.205	2	.325	1	1.683	1	.663	1
3660		min		-.024	1	-.675	1	.099	2	1.521	2	.202	2
3661	P916	max	T	.671	1	.045	1	.313	1	.165	1	.65	1
3662		min		.199	2	.015	2	.092	2	.036	2	.192	2
3663		max	B	-.013	2	-.209	2	.318	1	1.694	1	.662	1
3664		min		-.049	1	-.685	1	.098	2	1.507	2	.203	2
3665	P917	max	T	.721	1	.077	1	.322	1	.174	1	.686	1
3666		min		.209	2	.026	2	.091	2	.041	2	.197	2
3667		max	B	-.022	2	-.214	2	.321	1	1.695	1	.686	1
3668		min		-.082	1	-.724	1	.096	2	1.481	2	.204	2
3669	P918	max	T	.746	1	.118	1	.314	1	.198	1	.694	1
3670		min		.215	2	.038	2	.088	2	.053	2	.198	2
3671		max	B	-.034	2	-.221	2	.309	1	1.708	1	.69	1
3672		min		-.125	1	-.743	1	.094	2	1.463	2	.206	2
3673	P919	max	T	.691	1	.076	1	.307	1	.187	1	.656	1
3674		min		.204	2	.024	2	.09	2	.05	2	.193	2
3675		max	B	-.021	2	-.214	2	.308	1	1.706	1	.662	1
3676		min		-.082	1	-.699	1	.096	2	1.492	2	.205	2
3677	P920	max	T	.714	1	.117	1	.299	1	.213	1	.663	1
3678		min		.211	2	.037	2	.087	2	.064	2	.195	2
3679		max	B	-.033	2	-.221	2	.296	1	1.721	1	.663	1

Envelope Plate/Shell Principal Stresses (Continued)

	Plate		Sur...	Sigma1 [ksi]	LC	Sigma2 [ksi]	LC	Tau Max [k...	LC	Angle [rad]	LC	Von Mises [ksi]	LC
3680		min		-.125	1	-.717	1	.094	2	1.474	2	.206	2
3681	P921	max	T	.775	1	.169	1	.303	1	.226	1	.706	1
3682		min		.222	2	.054	2	.084	2	.067	2	.201	2
3683		max	B	-.048	2	-.228	2	.295	1	1.724	1	.696	1
3684		min		-.177	1	-.767	1	.09	2	1.442	2	.209	2
3685	P922	max	T	.809	1	.229	1	.29	1	.261	1	.722	1
3686		min		.23	2	.074	2	.078	2	.082	2	.204	2
3687		max	B	-.066	2	-.237	2	.277	1	1.746	1	.706	1
3688		min		-.24	1	-.795	1	.086	2	1.417	2	.212	2
3689	P923	max	T	.741	1	.166	1	.287	1	.243	1	.673	1
3690		min		.218	2	.052	2	.083	2	.077	2	.198	2
3691		max	B	-.048	2	-.229	2	.281	1	1.74	1	.667	1
3692		min		-.176	1	-.737	1	.09	2	1.453	2	.209	2
3693	P924	max	T	.771	1	.225	1	.273	1	.28	1	.687	1
3694		min		.227	2	.071	2	.078	2	.091	2	.201	2
3695		max	B	-.066	2	-.238	2	.262	1	1.763	1	.675	1
3696		min		-.238	1	-.761	1	.086	2	1.428	2	.213	2
3697	P925	max	T	.847	1	.299	1	.274	1	.304	1	.744	1
3698		min		.239	2	.097	2	.071	2	.101	2	.208	2
3699		max	B	-.087	2	-.247	2	.256	1	1.775	1	.722	1
3700		min		-.314	1	-.826	1	.08	2	1.385	2	.217	2
3701	P926	max	T	.891	1	.38	1	.256	1	.36	1	.775	1
3702		min		.249	2	.124	2	.063	2	.127	2	.216	2
3703		max	B	-.112	2	-.259	2	.23	1	1.815	1	.746	1
3704		min		-.4	1	-.861	1	.074	2	1.344	2	.225	2
3705	P927	max	T	.805	1	.293	1	.256	1	.327	1	.706	1
3706		min		.236	2	.094	2	.071	2	.109	2	.206	2
3707		max	B	-.087	2	-.248	2	.239	1	1.795	1	.688	1
3708		min		-.311	1	-.788	1	.081	2	1.397	2	.218	2
3709	P928	max	T	.844	1	.37	1	.237	1	.387	1	.733	1
3710		min		.246	2	.121	2	.062	2	.131	2	.213	2
3711		max	B	-.111	2	-.26	2	.212	1	1.837	1	.709	1
3712		min		-.394	1	-.818	1	.074	2	1.355	2	.226	2
3713	P929	max	T	.942	1	.47	1	.236	1	.434	1	.816	1
3714		min		.259	2	.155	2	.052	2	.168	2	.226	2
3715		max	B	-.139	2	-.272	2	.201	1	1.871	1	.781	1
3716		min		-.499	1	-.9	1	.066	2	1.284	2	.235	2
3717	P930	max	T	1.003	1	.568	1	.217	1	.537	1	.871	1
3718		min		.271	2	.191	2	.04	2	.246	2	.241	2
3719		max	B	-.17	2	-.287	2	.167	1	1.96	1	.829	1
3720		min		-.611	1	-.944	1	.059	2	1.192	2	.25	2
3721	P931	max	T	.888	1	.457	1	.216	1	.467	1	.769	1
3722		min		.256	2	.152	2	.052	2	.164	2	.223	2
3723		max	B	-.138	2	-.273	2	.181	1	1.898	1	.74	1
3724		min		-.489	1	-.851	1	.068	2	1.296	2	.237	2
3725	P932	max	T	.94	1	.55	1	.195	1	.579	1	.818	1
3726		min		.267	2	.188	2	.039	2	.223	2	.238	2
3727		max	B	-.168	2	-.29	2	.145	1	1.994	1	.783	1
3728		min		-.596	1	-.887	1	.061	2	1.207	2	.253	2
3729	P933	max	T	1.08	1	.671	1	.204	1	.683	1	.944	1
3730		min		.285	2	.23	2	.027	2	.437	2	.262	2
3731		max	B	-.202	2	-.308	2	.131	1	2.12	1	.895	1
3732		min		-.735	1	-.996	1	.053	2	1.045	2	.271	2
3733	P934	max	T	1.184	1	.769	1	.207	1	.906	2	1.041	1
3734		min		.312	2	.263	2	.024	2	.879	1	.291	2
3735		max	B	-.231	2	-.338	2	.109	1	.831	2	.983	1
3736		min		-.856	1	-1.074	1	.054	2	-.706	1	.3	2

Envelope Plate/Shell Principal Stresses (Continued)

	Plate		Sur...	Sigma1 [ksi]	LC	Sigma2 [ksi]	LC	Tau Max [k...	LC	Angle [rad]	LC	Von Mises [ksi]	LC
3737	P935	max	T	1.005	1	.645	1	.18	1	.739	1	.882	1
3738		min		.279	2	.229	2	.025	2	.37	2	.258	2
3739		max	B	-.199	2	-.313	2	.108	1	2.171	1	.841	1
3740		min		-.713	1	-.928	1	.057	2	1.072	2	.274	2
3741	P936	max	T	1.091	1	.734	1	.179	1	.955	1	.964	1
3742		min		.299	2	.268	2	.016	2	.923	2	.285	2
3743		max	B	-.226	2	-.347	2	.085	1	.893	2	.92	1
3744		min		-.823	1	-.993	1	.06	2	-.597	1	.305	2
3745	P937	max	T	1.337	1	.845	1	.246	1	1.258	2	1.171	1
3746		min		.369	2	.275	2	.047	2	1.105	1	.332	2
3747		max	B	-.25	2	-.388	2	.146	1	.608	2	1.107	1
3748		min		-.932	1	-1.224	1	.069	2	-.301	1	.341	2
3749	P938	max	T	1.563	1	.876	1	.344	1	1.377	2	1.357	1
3750		min		.453	2	.27	2	.091	2	1.308	1	.394	2
3751		max	B	-.253	2	-.463	2	.264	1	.458	2	1.288	1
3752		min		-.94	1	-1.467	1	.105	2	-.05	1	.402	2
3753	P939	max	T	1.215	1	.797	1	.209	1	1.421	2	1.069	1
3754		min		.354	2	.281	2	.036	2	1.206	1	.324	2
3755		max	B	-.245	2	-.398	2	.123	1	.718	2	1.024	1
3756		min		-.88	1	-1.125	1	.076	2	-.143	1	.347	2
3757	P940	max	T	1.397	1	.818	1	.289	1	1.553	2	1.215	1
3758		min		.434	2	.278	2	.078	2	1.429	1	.381	2
3759		max	B	-.255	2	-.472	2	.225	1	.603	2	1.173	1
3760		min		-.882	1	-1.332	1	.108	2	.102	1	.409	2
3761	P941	max	T	1.243	1	.755	1	.244	1	1.826	1	1.085	1
3762		min		.447	2	.296	2	.076	2	1.436	2	.394	2
3763		max	B	-.293	2	-.475	2	.255	1	.185	1	1.118	1
3764		min		-.771	1	-1.282	1	.091	2	-.169	2	.415	2
3765	P942	max	T	1.085	1	.724	1	.18	1	2.089	1	.957	1
3766		min		.362	2	.3	2	.031	2	1.354	2	.335	2
3767		max	B	-.294	2	-.387	2	.173	1	.421	1	.974	1
3768		min		-.754	1	-1.1	1	.047	2	-.279	2	.35	2
3769	P943	max	T	1.09	1	.707	1	.191	1	1.706	1	.957	1
3770		min		.434	2	.3	2	.067	2	1.223	2	.385	2
3771		max	B	-.293	2	-.48	2	.219	1	.037	1	1.01	1
3772		min		-.717	1	-1.155	1	.094	2	-.336	2	.419	2
3773	P944	max	T	.971	1	.682	1	.144	1	2.006	1	.864	1
3774		min		.356	2	.297	2	.029	2	1.066	2	.33	2
3775		max	B	-.288	2	-.395	2	.145	1	.275	1	.893	1
3776		min		-.711	1	-1.002	1	.054	2	-.437	2	.354	2
3777	P945	max	T	.986	1	.647	1	.17	1	2.347	1	.868	1
3778		min		.304	2	.287	2	.009	2	.587	2	.296	2
3779		max	B	-.28	2	-.326	2	.145	1	.703	1	.871	1
3780		min		-.69	1	-.979	1	.023	2	-.631	2	.306	2
3781	P946	max	T	.919	1	.553	1	.183	1	.09	2	.802	1
3782		min		.291	2	.238	2	.026	2	-.608	1	.268	2
3783		max	B	-.245	2	-.297	2	.151	1	2.004	2	.796	1
3784		min		-.601	1	-.903	1	.026	2	.939	1	.275	2
3785	P947	max	T	.9	1	.614	1	.143	1	2.296	1	.796	1
3786		min		.309	2	.275	2	.017	2	.438	2	.293	2
3787		max	B	-.273	2	-.335	2	.117	1	.591	1	.807	1
3788		min		-.665	1	-.898	1	.031	2	-.704	2	.309	2
3789	P948	max	T	.851	1	.528	1	.162	1	.103	2	.744	1
3790		min		.293	2	.23	2	.032	2	-.647	1	.267	2
3791		max	B	-.241	2	-.302	2	.123	1	2.05	2	.741	1
3792		min		-.586	1	-.833	1	.03	2	.872	1	.276	2
3793	P949	max	T	.867	1	.461	1	.203	1	.029	2	.752	1

Envelope Plate/Shell Principal Stresses (Continued)

	Plate		Sur...	Sigma1 [ksi]	LC	Sigma2 [ksi]	LC	Tau Max [k...	LC	Angle [rad]	LC	Von Mises [ksi]	LC
3794		min		.28	2	.194	2	.043	2	-.484	1	.249	2
3795		max	B	-.202	2	-.283	2	.171	1	1.814	2	.739	1
3796		min		-.506	1	-.848	1	.04	2	1.096	1	.252	2
3797	P950	max	T	.823	1	.376	1	.224	1	.009	2	.714	1
3798		min		.27	2	.156	2	.057	2	-.398	1	.234	2
3799		max	B	-.164	2	-.271	2	.195	1	1.74	2	.697	1
3800		min		-.415	1	-.805	1	.053	2	1.197	1	.236	2
3801	P951	max	T	.811	1	.442	1	.184	1	.025	2	.703	1
3802		min		.281	2	.188	2	.046	2	-.517	1	.248	2
3803		max	B	-.201	2	-.284	2	.146	1	1.841	2	.691	1
3804		min		-.497	1	-.789	1	.041	2	1.055	1	.253	2
3805	P952	max	T	.775	1	.361	1	.207	1	-.002	2	.671	1
3806		min		.269	2	.151	2	.059	2	-.428	1	.233	2
3807		max	B	-.164	2	-.27	2	.172	1	1.749	2	.654	1
3808		min		-.41	1	-.754	1	.053	2	1.169	1	.236	2
3809	P953	max	T	.784	1	.3	1	.242	1	0	2	.685	1
3810		min		.259	2	.124	2	.067	2	-.336	1	.224	2
3811		max	B	-.132	2	-.26	2	.217	1	1.7	2	.667	1
3812		min		-.333	1	-.767	1	.064	2	1.266	1	.225	2
3813	P954	max	T	.749	1	.232	1	.258	1	-.003	2	.664	1
3814		min		.249	2	.097	2	.076	2	-.289	1	.218	2
3815		max	B	-.103	2	-.249	2	.237	1	1.675	2	.645	1
3816		min		-.261	1	-.734	1	.073	2	1.315	1	.217	2
3817	P955	max	T	.742	1	.289	1	.226	1	-.013	2	.648	1
3818		min		.258	2	.12	2	.069	2	-.362	1	.223	2
3819		max	B	-.132	2	-.259	2	.197	1	1.701	2	.628	1
3820		min		-.331	1	-.724	1	.064	2	1.245	1	.224	2
3821	P956	max	T	.712	1	.225	1	.243	1	-.017	2	.63	1
3822		min		.247	2	.093	2	.077	2	-.312	1	.216	2
3823		max	B	-.103	2	-.248	2	.219	1	1.672	2	.61	1
3824		min		-.259	1	-.697	1	.073	2	1.297	1	.216	2
3825	P957	max	T	.718	1	.174	1	.272	1	-.004	2	.649	1
3826		min		.24	2	.074	2	.083	2	-.251	1	.213	2
3827		max	B	-.079	2	-.24	2	.254	1	1.657	2	.63	1
3828		min		-.197	1	-.705	1	.081	2	1.352	1	.212	2
3829	P958	max	T	.691	1	.125	1	.283	1	-.003	2	.637	1
3830		min		.232	2	.054	2	.089	2	-.22	1	.21	2
3831		max	B	-.058	2	-.232	2	.268	1	1.643	2	.62	1
3832		min		-.143	1	-.679	1	.087	2	1.379	1	.209	2
3833	P959	max	T	.685	1	.169	1	.258	1	-.018	2	.618	1
3834		min		.238	2	.071	2	.084	2	-.273	1	.212	2
3835		max	B	-.079	2	-.239	2	.237	1	1.651	2	.598	1
3836		min		-.197	1	-.672	1	.08	2	1.336	1	.211	2
3837	P960	max	T	.66	1	.122	1	.269	1	-.017	2	.608	1
3838		min		.229	2	.052	2	.089	2	-.24	1	.208	2
3839		max	B	-.058	2	-.231	2	.253	1	1.636	2	.591	1
3840		min		-.144	1	-.649	1	.086	2	1.365	1	.208	2
3841	P961	max	T	.667	1	.085	1	.291	1	-.001	2	.629	1
3842		min		.225	2	.038	2	.093	2	-.195	1	.208	2
3843		max	B	-.041	2	-.224	2	.278	1	1.631	2	.612	1
3844		min		-.099	1	-.655	1	.091	2	1.401	1	.207	2
3845	P962	max	T	.647	1	.053	1	.297	1	.002	2	.622	1
3846		min		.218	2	.025	2	.097	2	-.174	1	.207	2
3847		max	B	-.028	2	-.218	2	.286	1	1.62	2	.606	1
3848		min		-.063	1	-.635	1	.095	2	1.417	1	.206	2
3849	P963	max	T	.639	1	.082	1	.278	1	-.014	2	.602	1
3850		min		.222	2	.036	2	.093	2	-.213	1	.206	2

Envelope Plate/Shell Principal Stresses (Continued)

	Plate		Sur...	Sigma1 [ksi]	LC	Sigma2 [ksi]	LC	Tau Max [k...	LC	Angle [rad]	LC	Von Mises [ksi]	LC
3851		max	B	-.041	2	-.223	2	.265	1	1.623	2	.586	1
3852		min		-.099	1	-.629	1	.091	2	1.387	1	.206	2
3853	P964	max	T	.62	1	.051	1	.285	1	-.01	2	.596	1
3854		min		.215	2	.023	2	.096	2	-.19	1	.204	2
3855		max	B	-.027	2	-.217	2	.274	1	1.613	2	.582	1
3856		min		-.063	1	-.611	1	.095	2	1.405	1	.205	2
3857	P965	max	T	.63	1	.028	1	.301	1	.005	2	.617	1
3858		min		.213	2	.015	2	.099	2	-.155	1	.206	2
3859		max	B	-.017	2	-.213	2	.292	1	1.612	2	.602	1
3860		min		-.035	1	-.618	1	.098	2	1.43	1	.205	2
3861	P966	max	T	.618	1	.011	1	.304	1	.01	2	.613	1
3862		min		.21	2	.008	2	.101	2	-.138	1	.206	2
3863		max	B	-.009	2	-.208	2	.295	1	1.604	2	.597	1
3864		min		-.015	1	-.604	1	.1	2	1.442	1	.204	2
3865	P967	max	T	.605	1	.027	1	.289	1	-.004	2	.592	1
3866		min		.21	2	.014	2	.098	2	-.169	1	.203	2
3867		max	B	-.017	2	-.211	2	.28	1	1.606	2	.579	1
3868		min		-.035	1	-.595	1	.097	2	1.42	1	.204	2
3869	P968	max	T	.593	1	.01	1	.292	1	.003	2	.588	1
3870		min		.206	2	.007	2	.099	2	-.15	1	.202	2
3871		max	B	-.009	2	-.207	2	.284	1	1.599	2	.575	1
3872		min		-.015	1	-.582	1	.099	2	1.433	1	.203	2
3873	P969	max	T	.609	1	.003	2	.304	1	.013	2	.609	1
3874		min		.207	2	0	1	.102	2	-.118	1	.206	2
3875		max	B	-.002	1	-.205	2	.295	1	1.597	2	.592	1
3876		min		-.004	2	-.593	1	.101	2	1.457	1	.204	2
3877	P970	max	T	.601	1	0	2	.301	1	.009	2	.601	1
3878		min		.206	2	0	1	.103	2	-.062	1	.206	2
3879		max	B	0	1	-.203	2	.291	1	1.584	2	.581	1
3880		min		0	2	-.581	1	.101	2	1.508	1	.203	2
3881	P971	max	T	.585	1	.003	2	.292	1	.009	2	.585	1
3882		min		.204	2	0	1	.1	2	-.126	1	.202	2
3883		max	B	-.002	1	-.204	2	.285	1	1.594	2	.57	1
3884		min		-.004	2	-.572	1	.1	2	1.45	1	.202	2
3885	P972	max	T	.577	1	0	2	.288	1	.008	2	.577	1
3886		min		.203	2	0	1	.101	2	-.066	1	.202	2
3887		max	B	0	1	-.202	2	.28	1	1.583	2	.56	1
3888		min		0	2	-.56	1	.1	2	1.506	1	.201	2
3889	P973	max	T	.592	1	.001	1	.295	1	.063	1	.591	1
3890		min		.181	2	0	2	.09	2	-.001	2	.181	2
3891		max	B	0	2	-.198	2	.314	1	1.625	1	.629	1
3892		min		-.002	1	-.63	1	.099	2	1.556	2	.198	2
3893	P974	max	T	.604	1	.005	1	.3	1	.125	1	.602	1
3894		min		.182	2	.003	2	.09	2	.012	2	.181	2
3895		max	B	-.002	2	-.199	2	.314	1	1.674	1	.633	1
3896		min		-.007	1	-.636	1	.099	2	1.539	2	.199	2
3897	P975	max	T	.544	1	0	1	.272	1	.068	1	.544	1
3898		min		.169	2	0	2	.084	2	.002	2	.169	2
3899		max	B	0	2	-.192	2	.293	1	1.628	1	.588	1
3900		min		-.001	1	-.588	1	.096	2	1.558	2	.192	2
3901	P976	max	T	.557	1	.003	1	.277	1	.135	1	.555	1
3902		min		.171	2	.002	2	.085	2	.02	2	.17	2
3903		max	B	-.001	2	-.193	2	.295	1	1.68	1	.592	1
3904		min		-.006	1	-.595	1	.096	2	1.545	2	.193	2
3905	P977	max	T	.617	1	.019	1	.299	1	.154	1	.608	1
3906		min		.186	2	.006	2	.09	2	.03	2	.183	2
3907		max	B	-.005	2	-.202	2	.31	1	1.691	1	.631	1

Envelope Plate/Shell Principal Stresses (Continued)

	Plate		Sur...	Sigma1 [ksi]	LC	Sigma2 [ksi]	LC	Tau Max [k...	LC	Angle [rad]	LC	Von Mises [ksi]	LC
3908		min		-.023	1	-.643	1	.098	2	1.528	2	.199	2
3909	P978	max	T	.632	1	.042	1	.295	1	.178	1	.613	1
3910		min		.191	2	.013	2	.089	2	.048	2	.185	2
3911		max	B	-.011	2	-.206	2	.302	1	1.704	1	.63	1
3912		min		-.047	1	-.652	1	.097	2	1.516	2	.201	2
3913	P979	max	T	.57	1	.016	1	.277	1	.167	1	.562	1
3914		min		.175	2	.005	2	.085	2	.041	2	.172	2
3915		max	B	-.004	2	-.196	2	.291	1	1.701	1	.592	1
3916		min		-.02	1	-.601	1	.096	2	1.534	2	.194	2
3917	P980	max	T	.585	1	.037	1	.274	1	.193	1	.568	1
3918		min		.18	2	.01	2	.085	2	.063	2	.175	2
3919		max	B	-.01	2	-.2	2	.283	1	1.716	1	.59	1
3920		min		-.043	1	-.61	1	.095	2	1.525	2	.195	2
3921	P981	max	T	.651	1	.072	1	.289	1	.202	1	.618	1
3922		min		.197	2	.022	2	.088	2	.063	2	.187	2
3923		max	B	-.02	2	-.211	2	.292	1	1.718	1	.628	1
3924		min		-.08	1	-.665	1	.096	2	1.501	2	.202	2
3925	P982	max	T	.673	1	.111	1	.281	1	.23	1	.624	1
3926		min		.204	2	.034	2	.085	2	.077	2	.189	2
3927		max	B	-.032	2	-.218	2	.279	1	1.734	1	.628	1
3928		min		-.122	1	-.68	1	.093	2	1.484	2	.204	2
3929	P983	max	T	.603	1	.065	1	.269	1	.22	1	.573	1
3930		min		.186	2	.018	2	.084	2	.079	2	.178	2
3931		max	B	-.018	2	-.205	2	.273	1	1.731	1	.588	1
3932		min		-.075	1	-.621	1	.094	2	1.512	2	.197	2
3933	P984	max	T	.623	1	.103	1	.26	1	.249	1	.578	1
3934		min		.194	2	.03	2	.082	2	.093	2	.181	2
3935		max	B	-.029	2	-.212	2	.26	1	1.748	1	.586	1
3936		min		-.115	1	-.635	1	.091	2	1.495	2	.199	2
3937	P985	max	T	.697	1	.159	1	.269	1	.262	1	.632	1
3938		min		.212	2	.049	2	.081	2	.09	2	.192	2
3939		max	B	-.046	2	-.226	2	.263	1	1.754	1	.63	1
3940		min		-.172	1	-.698	1	.09	2	1.464	2	.206	2
3941	P986	max	T	.724	1	.216	1	.254	1	.301	1	.644	1
3942		min		.22	2	.068	2	.076	2	.104	2	.195	2
3943		max	B	-.064	2	-.235	2	.243	1	1.779	1	.635	1
3944		min		-.233	1	-.719	1	.085	2	1.439	2	.21	2
3945	P987	max	T	.645	1	.149	1	.248	1	.282	1	.585	1
3946		min		.202	2	.045	2	.079	2	.107	2	.184	2
3947		max	B	-.043	2	-.219	2	.243	1	1.768	1	.586	1
3948		min		-.165	1	-.65	1	.088	2	1.475	2	.201	2
3949	P988	max	T	.669	1	.204	1	.233	1	.323	1	.594	1
3950		min		.211	2	.063	2	.074	2	.12	2	.187	2
3951		max	B	-.061	2	-.228	2	.222	1	1.795	1	.589	1
3952		min		-.223	1	-.667	1	.084	2	1.449	2	.205	2
3953	P989	max	T	.754	1	.282	1	.236	1	.35	1	.66	1
3954		min		.23	2	.09	2	.07	2	.12	2	.2	2
3955		max	B	-.085	2	-.245	2	.219	1	1.813	1	.646	1
3956		min		-.303	1	-.741	1	.08	2	1.408	2	.215	2
3957	P990	max	T	.788	1	.356	1	.216	1	.414	1	.683	1
3958		min		.24	2	.117	2	.061	2	.14	2	.208	2
3959		max	B	-.109	2	-.257	2	.191	1	1.858	1	.663	1
3960		min		-.384	1	-.766	1	.074	2	1.367	2	.223	2
3961	P991	max	T	.696	1	.267	1	.214	1	.375	1	.608	1
3962		min		.22	2	.085	2	.068	2	.135	2	.192	2
3963		max	B	-.081	2	-.239	2	.197	1	1.829	1	.596	1
3964		min		-.291	1	-.686	1	.079	2	1.418	2	.21	2

Envelope Plate/Shell Principal Stresses (Continued)

	Plate		Sur...	Sigma1 [ksi]	LC	Sigma2 [ksi]	LC	Tau Max [k...	LC	Angle [rad]	LC	Von Mises [ksi]	LC
3965	P992	max	T	.724	1	.337	1	.194	1	.443	1	.628	1
3966		min		.23	2	.111	2	.06	2	.154	2	.199	2
3967		max	B	-.105	2	-.251	2	.169	1	1.877	1	.612	1
3968		min		-.368	1	-.706	1	.073	2	1.377	2	.218	2
3969	P993	max	T	.825	1	.438	1	.194	1	.501	1	.715	1
3970		min		.25	2	.147	2	.051	2	.167	2	.218	2
3971		max	B	-.135	2	-.271	2	.159	1	1.922	1	.691	1
3972		min		-.474	1	-.792	1	.068	2	1.308	2	.235	2
3973	P994	max	T	.869	1	.524	1	.172	1	.622	1	.758	1
3974		min		.261	2	.183	2	.039	2	.21	2	.232	2
3975		max	B	-.164	2	-.289	2	.123	1	2.025	1	.729	1
3976		min		-.575	1	-.821	1	.063	2	1.224	2	.251	2
3977	P995	max	T	.756	1	.414	1	.171	1	.536	1	.656	1
3978		min		.241	2	.14	2	.05	2	.177	2	.209	2
3979		max	B	-.131	2	-.265	2	.137	1	1.946	1	.636	1
3980		min		-.454	1	-.727	1	.067	2	1.321	2	.23	2
3981	P996	max	T	.793	1	.493	1	.15	1	.667	1	.694	1
3982		min		.251	2	.175	2	.038	2	.21	2	.223	2
3983		max	B	-.158	2	-.283	2	.101	1	2.058	1	.672	1
3984		min		-.547	1	-.749	1	.062	2	1.244	2	.246	2
3985	P997	max	T	.922	1	.611	1	.155	1	.794	1	.813	1
3986		min		.271	2	.224	2	.024	2	.304	2	.251	2
3987		max	B	-.193	2	-.313	2	.085	1	2.222	1	.782	1
3988		min		-.682	1	-.853	1	.06	2	1.105	2	.274	2
3989	P998	max	T	.993	1	.688	1	.153	1	1.026	1	.881	1
3990		min		.285	2	.267	2	.009	2	.811	2	.277	2
3991		max	B	-.219	2	-.347	2	.065	1	.959	2	.85	1
3992		min		-.777	1	-.907	1	.064	2	-.482	1	.304	2
3993	P999	max	T	.838	1	.57	1	.134	1	.852	1	.741	1
3994		min		.262	2	.214	2	.024	2	.267	2	.242	2
3995		max	B	-.186	2	-.307	2	.066	1	2.283	1	.719	1
3996		min		-.643	1	-.776	1	.061	2	1.139	2	.268	2
3997	P1000	max	T	.897	1	.635	1	.131	1	1.093	1	.799	1
3998		min		.273	2	.259	2	.007	2	.514	2	.266	2
3999		max	B	-.212	2	-.34	2	.064	2	1.019	2	.778	1
4000		min		-.721	1	-.825	1	.052	1	-.355	1	.298	2
4001	P1001	max	T	1.092	1	.742	1	.175	1	1.576	2	.966	1
4002		min		.334	2	.283	2	.026	2	1.289	1	.312	2
4003		max	B	-.239	2	-.397	2	.102	1	.824	2	.937	1
4004		min		-.819	1	-1.022	1	.079	2	-.003	1	.346	2
4005	P1002	max	T	1.224	1	.751	1	.236	1	1.704	2	1.069	1
4006		min		.406	2	.281	2	.062	2	1.533	1	.36	2
4007		max	B	-.251	2	-.464	2	.189	1	.735	2	1.048	1
4008		min		-.807	1	-1.185	1	.107	2	.245	1	.403	2
4009	P1003	max	T	.977	1	.678	1	.15	1	1.713	2	.867	1
4010		min		.313	2	.279	2	.017	2	1.354	1	.298	2
4011		max	B	-.233	2	-.385	2	.087	1	.915	2	.85	1
4012		min		-.75	1	-.924	1	.076	2	.092	1	.336	2
4013	P1004	max	T	1.077	1	.692	1	.193	1	1.842	2	.945	1
4014		min		.378	2	.282	2	.048	2	1.592	1	.34	2
4015		max	B	-.248	2	-.442	2	.153	1	.841	2	.934	1
4016		min		-.743	1	-1.048	1	.097	2	.32	1	.384	2
4017	P1005	max	T	.94	1	.655	1	.142	1	1.603	1	.835	1
4018		min		.411	2	.298	2	.057	2	1.017	2	.368	2
4019		max	B	-.286	2	-.471	2	.186	1	-.105	1	.9	1
4020		min		-.655	1	-1.026	1	.092	2	-.479	2	.411	2
4021	P1006	max	T	.862	1	.637	1	.113	1	1.953	1	.774	1

Envelope Plate/Shell Principal Stresses (Continued)

	Plate		Sur...	Sigma1 [ksi]	LC	Sigma2 [ksi]	LC	Tau Max [k...	LC	Angle [rad]	LC	Von Mises [ksi]	LC
4022		min		.346	2	.289	2	.028	2	.793	2	.321	2
4023		max	B	-.279	2	-.394	2	.121	1	.136	1	.812	1
4024		min		-.664	1	-.905	1	.057	2	-.57	2	.351	2
4025	P1007	max	T	.817	1	.609	1	.104	1	1.573	1	.736	1
4026		min		.383	2	.292	2	.045	2	.829	2	.347	2
4027		max	B	-.279	2	-.451	2	.155	1	-.2	1	.806	1
4028		min		-.604	1	-.915	1	.086	2	-.592	2	.394	2
4029	P1008	max	T	.767	1	.585	1	.091	1	1.933	1	.694	1
4030		min		.331	2	.277	2	.027	2	.56	2	.307	2
4031		max	B	-.269	2	-.384	2	.103	1	.017	1	.736	1
4032		min		-.611	1	-.817	1	.057	2	-.668	2	.341	2
4033	P1009	max	T	.814	1	.574	1	.12	1	2.258	1	.724	1
4034		min		.308	2	.26	2	.024	2	.318	2	.287	2
4035		max	B	-.262	2	-.337	2	.092	1	.472	1	.74	1
4036		min		-.631	1	-.815	1	.038	2	-.775	2	.307	2
4037	P1010	max	T	.779	1	.496	1	.142	1	.081	2	.683	1
4038		min		.29	2	.219	2	.036	2	-.68	1	.262	2
4039		max	B	-.233	2	-.302	2	.097	1	2.067	2	.683	1
4040		min		-.565	1	-.759	1	.034	2	.805	1	.274	2
4041	P1011	max	T	.734	1	.529	1	.102	1	2.231	1	.656	1
4042		min		.3	2	.245	2	.028	2	.204	2	.277	2
4043		max	B	-.25	2	-.332	2	.073	1	2.308	2	.675	1
4044		min		-.59	1	-.736	1	.041	2	.344	1	.3	2
4045	P1012	max	T	.708	1	.459	1	.124	1	.035	2	.622	1
4046		min		.283	2	.206	2	.038	2	-.712	1	.253	2
4047		max	B	-.223	2	-.297	2	.074	1	2.068	2	.624	1
4048		min		-.537	1	-.685	1	.037	2	.729	1	.268	2
4049	P1013	max	T	.749	1	.417	1	.166	1	.007	2	.65	1
4050		min		.277	2	.179	2	.049	2	-.548	1	.243	2
4051		max	B	-.197	2	-.281	2	.121	1	1.862	2	.639	1
4052		min		-.483	1	-.724	1	.042	2	1.019	1	.25	2
4053	P1014	max	T	.72	1	.343	1	.189	1	-.02	2	.624	1
4054		min		.264	2	.145	2	.06	2	-.456	1	.229	2
4055		max	B	-.162	2	-.267	2	.148	1	1.759	2	.606	1
4056		min		-.401	1	-.697	1	.052	2	1.146	1	.233	2
4057	P1015	max	T	.685	1	.388	1	.148	1	-.024	2	.595	1
4058		min		.269	2	.17	2	.05	2	-.579	1	.235	2
4059		max	B	-.19	2	-.275	2	.096	1	1.878	2	.584	1
4060		min		-.464	1	-.656	1	.042	2	.984	1	.244	2
4061	P1016	max	T	.661	1	.32	1	.171	1	-.047	2	.573	1
4062		min		.256	2	.137	2	.06	2	-.486	1	.222	2
4063		max	B	-.157	2	-.26	2	.125	1	1.77	2	.555	1
4064		min		-.386	1	-.636	1	.051	2	1.125	1	.226	2
4065	P1017	max	T	.693	1	.274	1	.209	1	-.031	2	.604	1
4066		min		.253	2	.115	2	.069	2	-.389	1	.219	2
4067		max	B	-.13	2	-.255	2	.175	1	1.704	2	.583	1
4068		min		-.324	1	-.673	1	.063	2	1.226	1	.221	2
4069	P1018	max	T	.667	1	.213	1	.227	1	-.035	2	.59	1
4070		min		.242	2	.089	2	.077	2	-.337	1	.212	2
4071		max	B	-.102	2	-.244	2	.198	1	1.67	2	.569	1
4072		min		-.255	1	-.651	1	.071	2	1.282	1	.212	2
4073	P1019	max	T	.639	1	.256	1	.191	1	-.055	2	.557	1
4074		min		.244	2	.108	2	.068	2	-.416	1	.212	2
4075		max	B	-.126	2	-.247	2	.152	1	1.708	2	.535	1
4076		min		-.313	1	-.617	1	.061	2	1.211	1	.214	2
4077	P1020	max	T	.617	1	.198	1	.209	1	-.057	2	.545	1
4078		min		.233	2	.083	2	.075	2	-.362	1	.205	2

Envelope Plate/Shell Principal Stresses (Continued)

	Plate		Sur...	Sigma1 [ksi]	LC	Sigma2 [ksi]	LC	Tau Max [k...	LC	Angle [rad]	LC	Von Mises [ksi]	LC
4079		max	B	-.098	2	-.237	2	.177	1	1.671	2	.522	1
4080		min		-.246	1	-.6	1	.069	2	1.269	1	.206	2
4081	P1021	max	T	.643	1	.16	1	.242	1	-.035	2	.58	1
4082		min		.232	2	.067	2	.083	2	-.295	1	.207	2
4083		max	B	-.077	2	-.235	2	.219	1	1.647	2	.56	1
4084		min		-.194	1	-.631	1	.079	2	1.322	1	.207	2
4085	P1022	max	T	.622	1	.114	1	.254	1	-.033	2	.573	1
4086		min		.223	2	.048	2	.088	2	-.262	1	.204	2
4087		max	B	-.057	2	-.226	2	.235	1	1.63	2	.555	1
4088		min		-.141	1	-.612	1	.085	2	1.351	1	.204	2
4089	P1023	max	T	.596	1	.147	1	.224	1	-.055	2	.538	1
4090		min		.223	2	.061	2	.081	2	-.319	1	.2	2
4091		max	B	-.074	2	-.227	2	.199	1	1.645	2	.516	1
4092		min		-.186	1	-.584	1	.077	2	1.309	1	.201	2
4093	P1024	max	T	.577	1	.104	1	.236	1	-.053	2	.532	1
4094		min		.214	2	.043	2	.085	2	-.285	1	.196	2
4095		max	B	-.054	2	-.219	2	.217	1	1.625	2	.514	1
4096		min		-.135	1	-.568	1	.083	2	1.339	1	.198	2
4097	P1025	max	T	.602	1	.077	1	.263	1	-.029	2	.568	1
4098		min		.215	2	.033	2	.091	2	-.233	1	.201	2
4099		max	B	-.04	2	-.219	2	.249	1	1.617	2	.552	1
4100		min		-.097	1	-.594	1	.09	2	1.374	1	.202	2
4101	P1026	max	T	.585	1	.047	1	.269	1	-.023	2	.563	1
4102		min		.209	2	.021	2	.094	2	-.208	1	.199	2
4103		max	B	-.026	2	-.213	2	.259	1	1.607	2	.55	1
4104		min		-.061	1	-.579	1	.093	2	1.393	1	.201	2
4105	P1027	max	T	.559	1	.068	1	.246	1	-.047	2	.528	1
4106		min		.206	2	.029	2	.088	2	-.255	1	.193	2
4107		max	B	-.037	2	-.212	2	.231	1	1.611	2	.514	1
4108		min		-.092	1	-.553	1	.087	2	1.362	1	.196	2
4109	P1028	max	T	.543	1	.039	1	.252	1	-.04	2	.525	1
4110		min		.199	2	.018	2	.091	2	-.229	1	.191	2
4111		max	B	-.024	2	-.205	2	.241	1	1.6	2	.513	1
4112		min		-.057	1	-.539	1	.091	2	1.38	1	.194	2
4113	P1029	max	T	.571	1	.024	1	.274	1	-.016	2	.559	1
4114		min		.203	2	.012	2	.095	2	-.186	1	.197	2
4115		max	B	-.015	2	-.207	2	.265	1	1.6	2	.548	1
4116		min		-.034	1	-.565	1	.096	2	1.408	1	.2	2
4117	P1030	max	T	.56	1	.008	1	.276	1	-.007	2	.556	1
4118		min		.199	2	.006	2	.096	2	-.164	1	.196	2
4119		max	B	-.008	2	-.203	2	.269	1	1.595	2	.546	1
4120		min		-.014	1	-.552	1	.097	2	1.423	1	.199	2
4121	P1031	max	T	.53	1	.018	1	.256	1	-.031	2	.521	1
4122		min		.193	2	.01	2	.092	2	-.205	1	.188	2
4123		max	B	-.014	2	-.199	2	.248	1	1.593	2	.512	1
4124		min		-.03	1	-.526	1	.093	2	1.395	1	.193	2
4125	P1032	max	T	.519	1	.004	2	.257	1	-.019	2	.517	1
4126		min		.188	2	.004	1	.092	2	-.181	1	.186	2
4127		max	B	-.007	2	-.195	2	.252	1	1.589	2	.509	1
4128		min		-.011	1	-.515	1	.094	2	1.411	1	.191	2
4129	P1033	max	T	.551	1	.002	2	.276	1	.003	2	.552	1
4130		min		.196	2	0	1	.097	2	-.136	1	.195	2
4131		max	B	-.002	1	-.199	2	.27	1	1.591	2	.541	1
4132		min		-.003	2	-.542	1	.098	2	1.443	1	.198	2
4133	P1034	max	T	.543	1	0	2	.272	1	.006	2	.543	1
4134		min		.196	2	0	1	.098	2	-.07	1	.195	2
4135		max	B	0	1	-.197	2	.265	1	1.582	2	.53	1

Envelope Plate/Shell Principal Stresses (Continued)

	Plate		Sur...	Sigma1 [ksi]	LC	Sigma2 [ksi]	LC	Tau Max [k...	LC	Angle [rad]	LC	Von Mises [ksi]	LC
4136		min		0	2	-.53	1	.098	2	1.502	1	.196	2
4137	P1035	max	T	.51	1	.001	2	.256	1	-.005	2	.511	1
4138		min		.186	2	-.003	1	.092	2	-.149	1	.185	2
4139		max	B	0	1	-.191	2	.252	1	1.587	2	.504	1
4140		min		-.002	2	-.504	1	.094	2	1.433	1	.19	2
4141	P1036	max	T	.501	1	0	2	.251	1	.004	2	.501	1
4142		min		.185	2	0	1	.093	2	-.076	1	.185	2
4143		max	B	0	1	-.188	2	.246	1	1.581	2	.492	1
4144		min		0	2	-.492	1	.094	2	1.498	1	.188	2
4145	P1037	max	T	.487	1	0	1	.244	1	.075	1	.487	1
4146		min		.153	2	0	2	.077	2	.009	2	.153	2
4147		max	B	0	2	-.182	2	.269	1	1.632	1	.538	1
4148		min		0	1	-.538	1	.091	2	1.563	2	.182	2
4149	P1038	max	T	.501	1	0	1	.25	1	.15	1	.501	1
4150		min		.156	2	0	2	.078	2	.034	2	.156	2
4151		max	B	0	2	-.183	2	.271	1	1.69	1	.543	1
4152		min		-.003	1	-.545	1	.092	2	1.553	2	.184	2
4153	P1039	max	T	.422	1	0	2	.212	1	.086	1	.423	1
4154		min		.135	2	-.001	1	.067	2	.017	2	.135	2
4155		max	B	0	1	-.169	2	.24	1	1.64	1	.479	1
4156		min		0	2	-.479	1	.085	2	1.567	2	.169	2
4157	P1040	max	T	.437	1	-.001	2	.221	1	.173	1	.44	1
4158		min		.137	2	-.005	1	.069	2	.056	2	.138	2
4159		max	B	.001	2	-.171	2	.244	1	1.706	1	.487	1
4160		min		0	1	-.487	1	.086	2	1.564	2	.171	2
4161	P1041	max	T	.515	1	.01	1	.252	1	.186	1	.51	1
4162		min		.16	2	.002	2	.079	2	.061	2	.159	2
4163		max	B	-.002	2	-.186	2	.268	1	1.713	1	.544	1
4164		min		-.016	1	-.552	1	.092	2	1.546	2	.185	2
4165	P1042	max	T	.53	1	.028	1	.251	1	.214	1	.517	1
4166		min		.166	2	.007	2	.08	2	.083	2	.163	2
4167		max	B	-.007	2	-.191	2	.262	1	1.73	1	.543	1
4168		min		-.037	1	-.56	1	.092	2	1.536	2	.187	2
4169	P1043	max	T	.453	1	.001	1	.226	1	.212	1	.452	1
4170		min		.143	2	0	2	.072	2	.089	2	.143	2
4171		max	B	0	2	-.174	2	.243	1	1.731	1	.49	1
4172		min		-.008	1	-.495	1	.087	2	1.56	2	.174	2
4173	P1044	max	T	.469	1	.016	1	.226	1	.242	1	.461	1
4174		min		.149	2	.002	2	.074	2	.112	2	.148	2
4175		max	B	-.003	2	-.178	2	.238	1	1.748	1	.49	1
4176		min		-.026	1	-.503	1	.087	2	1.55	2	.177	2
4177	P1045	max	T	.548	1	.055	1	.246	1	.241	1	.522	1
4178		min		.173	2	.014	2	.08	2	.1	2	.167	2
4179		max	B	-.015	2	-.196	2	.252	1	1.745	1	.54	1
4180		min		-.066	1	-.571	1	.091	2	1.523	2	.189	2
4181	P1046	max	T	.566	1	.09	1	.238	1	.271	1	.527	1
4182		min		.181	2	.025	2	.078	2	.115	2	.17	2
4183		max	B	-.025	2	-.203	2	.239	1	1.762	1	.538	1
4184		min		-.105	1	-.582	1	.089	2	1.505	2	.191	2
4185	P1047	max	T	.486	1	.04	1	.223	1	.269	1	.467	1
4186		min		.157	2	.008	2	.074	2	.129	2	.153	2
4187		max	B	-.01	2	-.184	2	.229	1	1.763	1	.488	1
4188		min		-.054	1	-.513	1	.087	2	1.536	2	.179	2
4189	P1048	max	T	.504	1	.073	1	.215	1	.298	1	.472	1
4190		min		.165	2	.018	2	.074	2	.142	2	.157	2
4191		max	B	-.02	2	-.19	2	.216	1	1.78	1	.484	1
4192		min		-.091	1	-.523	1	.085	2	1.517	2	.181	2

Envelope Plate/Shell Principal Stresses (Continued)

	Plate		Sur...	Sigma1 [ksi]	LC	Sigma2 [ksi]	LC	Tau Max [k...	LC	Angle [rad]	LC	Von Mises [ksi]	LC
4193	P1049	max	T	.587	1	.135	1	.226	1	.305	1	.532	1
4194		min		.189	2	.039	2	.075	2	.127	2	.173	2
4195		max	B	-.039	2	-.21	2	.221	1	1.783	1	.536	1
4196		min		-.153	1	-.595	1	.085	2	1.484	2	.193	2
4197	P1050	max	T	.608	1	.187	1	.211	1	.348	1	.54	1
4198		min		.198	2	.057	2	.071	2	.141	2	.177	2
4199		max	B	-.057	2	-.219	2	.2	1	1.81	1	.536	1
4200		min		-.21	1	-.609	1	.081	2	1.458	2	.197	2
4201	P1051	max	T	.523	1	.116	1	.204	1	.333	1	.476	1
4202		min		.174	2	.032	2	.071	2	.154	2	.16	2
4203		max	B	-.034	2	-.198	2	.199	1	1.8	1	.481	1
4204		min		-.137	1	-.534	1	.082	2	1.494	2	.183	2
4205	P1052	max	T	.542	1	.166	1	.188	1	.377	1	.481	1
4206		min		.183	2	.049	2	.067	2	.166	2	.164	2
4207		max	B	-.051	2	-.206	2	.177	1	1.827	1	.48	1
4208		min		-.192	1	-.546	1	.077	2	1.467	2	.186	2
4209	P1053	max	T	.631	1	.248	1	.192	1	.403	1	.551	1
4210		min		.208	2	.078	2	.065	2	.155	2	.182	2
4211		max	B	-.077	2	-.229	2	.175	1	1.846	1	.542	1
4212		min		-.275	1	-.625	1	.076	2	1.427	2	.202	2
4213	P1054	max	T	.656	1	.314	1	.171	1	.476	1	.569	1
4214		min		.218	2	.103	2	.057	2	.174	2	.189	2
4215		max	B	-.1	2	-.241	2	.146	1	1.897	1	.556	1
4216		min		-.349	1	-.641	1	.07	2	1.387	2	.209	2
4217	P1055	max	T	.563	1	.224	1	.17	1	.436	1	.491	1
4218		min		.193	2	.07	2	.061	2	.181	2	.169	2
4219		max	B	-.071	2	-.216	2	.151	1	1.865	1	.484	1
4220		min		-.256	1	-.558	1	.072	2	1.434	2	.19	2
4221	P1056	max	T	.586	1	.287	1	.149	1	.516	1	.507	1
4222		min		.203	2	.094	2	.054	2	.201	2	.176	2
4223		max	B	-.094	2	-.227	2	.123	1	1.921	1	.496	1
4224		min		-.326	1	-.571	1	.067	2	1.394	2	.198	2
4225	P1057	max	T	.684	1	.385	1	.15	1	.577	1	.594	1
4226		min		.229	2	.132	2	.048	2	.197	2	.199	2
4227		max	B	-.125	2	-.255	2	.114	1	1.973	1	.578	1
4228		min		-.429	1	-.658	1	.065	2	1.333	2	.221	2
4229	P1058	max	T	.716	1	.457	1	.13	1	.719	1	.628	1
4230		min		.239	2	.165	2	.037	2	.227	2	.212	2
4231		max	B	-.152	2	-.273	2	.081	1	2.102	1	.611	1
4232		min		-.514	1	-.676	1	.061	2	1.262	2	.237	2
4233	P1059	max	T	.611	1	.352	1	.129	1	.628	1	.531	1
4234		min		.213	2	.122	2	.046	2	.226	2	.185	2
4235		max	B	-.118	2	-.241	2	.092	1	2.01	1	.518	1
4236		min		-.401	1	-.586	1	.061	2	1.342	2	.209	2
4237	P1060	max	T	.641	1	.416	1	.113	1	.784	1	.563	1
4238		min		.224	2	.153	2	.036	2	.261	2	.199	2
4239		max	B	-.144	2	-.258	2	.063	1	2.172	1	.551	1
4240		min		-.477	1	-.602	1	.057	2	1.276	2	.224	2
4241	P1061	max	T	.756	1	.523	1	.116	1	.915	1	.671	1
4242		min		.25	2	.202	2	.024	2	.271	2	.23	2
4243		max	B	-.179	2	-.296	2	.059	2	1.171	2	.655	1
4244		min		-.598	1	-.7	1	.051	1	-.766	1	.258	2
4245	P1062	max	T	.808	1	.577	1	.116	1	1.159	1	.721	1
4246		min		.261	2	.243	2	.009	2	.371	2	.252	2
4247		max	B	-.204	2	-.326	2	.061	2	1.071	2	.708	1
4248		min		-.656	1	-.75	1	.047	1	-.227	1	.285	2
4249	P1063	max	T	.679	1	.472	1	.104	1	.989	1	.603	1

Envelope Plate/Shell Principal Stresses (Continued)

	Plate		Sur...	Sigma1 [ksi]	LC	Sigma2 [ksi]	LC	Tau Max [k...	LC	Angle [rad]	LC	Von Mises [ksi]	LC
4250		min		.235	2	.188	2	.024	2	.311	2	.216	2
4251		max	B	-.17	2	-.279	2	.054	2	1.195	2	.592	1
4252		min		-.546	1	-.629	1	.041	1	-.617	1	.244	2
4253	P1064	max	T	.727	1	.514	1	.106	1	1.223	1	.648	1
4254		min		.247	2	.225	2	.011	2	.413	2	.237	2
4255		max	B	-.195	2	-.306	2	.056	2	1.109	2	.64	1
4256		min		-.586	1	-.683	1	.048	1	-.12	1	.269	2
4257	P1065	max	T	.875	1	.61	1	.132	1	1.821	2	.777	1
4258		min		.291	2	.27	2	.011	2	1.41	1	.281	2
4259		max	B	-.226	2	-.365	2	.08	1	.983	2	.768	1
4260		min		-.675	1	-.836	1	.07	2	.154	1	.319	2
4261	P1066	max	T	.953	1	.627	1	.163	1	1.953	2	.839	1
4262		min		.346	2	.278	2	.034	2	1.639	1	.317	2
4263		max	B	-.244	2	-.419	2	.13	1	.935	2	.839	1
4264		min		-.678	1	-.938	1	.087	2	.378	1	.364	2
4265	P1067	max	T	.785	1	.542	1	.121	1	1.747	2	.696	1
4266		min		.268	2	.257	2	.005	2	1.448	1	.262	2
4267		max	B	-.218	2	-.341	2	.077	1	1.037	2	.692	1
4268		min		-.603	1	-.756	1	.061	2	.177	1	.299	2
4269	P1068	max	T	.842	1	.554	1	.144	1	1.964	2	.741	1
4270		min		.312	2	.267	2	.023	2	1.643	1	.292	2
4271		max	B	-.238	2	-.381	2	.11	1	1.003	2	.743	1
4272		min		-.608	1	-.828	1	.072	2	.362	1	.333	2
4273	P1069	max	T	1.015	1	.616	1	.199	1	2.039	2	.886	1
4274		min		.403	2	.281	2	.061	2	1.829	1	.358	2
4275		max	B	-.256	2	-.475	2	.177	1	.945	2	.893	1
4276		min		-.661	1	-1.015	1	.11	2	.551	1	.411	2
4277	P1070	max	T	1.115	1	.588	1	.264	1	2.145	2	.966	1
4278		min		.486	2	.282	2	.102	2	2.007	1	.422	2
4279		max	B	-.271	2	-.559	2	.247	1	.976	2	.982	1
4280		min		-.636	1	-1.131	1	.144	2	.697	1	.484	2
4281	P1071	max	T	.898	1	.555	1	.171	1	2.079	2	.785	1
4282		min		.362	2	.275	2	.043	2	1.825	1	.327	2
4283		max	B	-.256	2	-.43	2	.145	1	1.009	2	.792	1
4284		min		-.607	1	-.896	1	.087	2	.528	1	.374	2
4285	P1072	max	T	.926	1	.539	1	.194	1	2.192	2	.806	1
4286		min		.408	2	.279	2	.064	2	1.994	1	.361	2
4287		max	B	-.269	2	-.477	2	.171	1	1.066	2	.819	1
4288		min		-.592	1	-.935	1	.104	2	.699	1	.414	2
4289	P1073	max	T	.821	1	.546	1	.137	1	.988	1	.724	1
4290		min		.484	2	.304	2	.09	2	.679	2	.424	2
4291		max	B	-.295	2	-.578	2	.23	1	-.583	1	.85	1
4292		min		-.522	1	-.981	1	.141	2	-.748	2	.5	2
4293	P1074	max	T	.752	1	.562	1	.095	1	1.248	1	.678	1
4294		min		.405	2	.292	2	.056	2	.697	2	.362	2
4295		max	B	-.279	2	-.487	2	.175	1	-.439	1	.775	1
4296		min		-.537	1	-.888	1	.104	2	-.697	2	.423	2
4297	P1075	max	T	.682	1	.522	1	.08	1	1.037	1	.618	1
4298		min		.405	2	.296	2	.054	2	.573	2	.363	2
4299		max	B	-.281	2	-.495	2	.172	1	2.346	2	.725	1
4300		min		-.488	1	-.833	1	.107	2	-.602	1	.43	2
4301	P1076	max	T	.666	1	.524	1	.071	1	1.333	1	.608	1
4302		min		.363	2	.288	2	.037	2	.578	2	.332	2
4303		max	B	-.271	2	-.445	2	.148	1	-.461	1	.697	1
4304		min		-.5	1	-.796	1	.087	2	-.748	2	.389	2
4305	P1077	max	T	.721	1	.564	1	.079	1	1.569	1	.657	1
4306		min		.356	2	.284	2	.036	2	.633	2	.326	2

Envelope Plate/Shell Principal Stresses (Continued)

	Plate		Sur...	Sigma1 [ksi]	LC	Sigma2 [ksi]	LC	Tau Max [k...	LC	Angle [rad]	LC	Von Mises [ksi]	LC
4307		max	B	-.27	2	-.426	2	.134	1	-.284	1	.727	1
4308		min		-.555	1	-.823	1	.078	2	-.686	2	.373	2
4309	P1078	max	T	.686	1	.53	1	.078	1	1.929	1	.623	1
4310		min		.312	2	.263	2	.024	2	.364	2	.29	2
4311		max	B	-.256	2	-.366	2	.092	1	-.083	1	.667	1
4312		min		-.556	1	-.74	1	.055	2	-.736	2	.325	2
4313	P1079	max	T	.64	1	.505	1	.067	1	1.657	1	.585	1
4314		min		.319	2	.272	2	.024	2	.438	2	.298	2
4315		max	B	-.257	2	-.39	2	.116	1	-.313	1	.65	1
4316		min		-.503	1	-.734	1	.067	2	-.735	2	.344	2
4317	P1080	max	T	.619	1	.473	1	.073	1	1.942	1	.56	1
4318		min		.29	2	.247	2	.021	2	.159	2	.271	2
4319		max	B	-.242	2	-.343	2	.084	1	-.15	1	.604	1
4320		min		-.501	1	-.67	1	.051	2	-.78	2	.306	2
4321	P1081	max	T	.661	1	.48	1	.091	1	2.206	1	.592	1
4322		min		.287	2	.229	2	.029	2	.09	2	.263	2
4323		max	B	-.237	2	-.32	2	.061	1	2.266	2	.614	1
4324		min		-.543	1	-.666	1	.042	2	.211	1	.288	2
4325	P1082	max	T	.641	1	.419	1	.111	1	-.025	2	.563	1
4326		min		.271	2	.193	2	.039	2	-.746	1	.241	2
4327		max	B	-.212	2	-.287	2	.055	1	2.066	2	.568	1
4328		min		-.504	1	-.615	1	.038	2	.633	1	.258	2
4329	P1083	max	T	.598	1	.428	1	.085	1	2.175	1	.533	1
4330		min		.27	2	.214	2	.028	2	-.032	2	.247	2
4331		max	B	-.223	2	-.303	2	.056	1	2.245	2	.556	1
4332		min		-.492	1	-.604	1	.04	2	.091	1	.272	2
4333	P1084	max	T	.578	1	.376	1	.101	1	2.352	1	.508	1
4334		min		.254	2	.18	2	.037	2	-.099	2	.226	2
4335		max	B	-.199	2	-.272	2	.043	1	2.071	2	.513	1
4336		min		-.465	1	-.551	1	.037	2	.498	1	.244	2
4337	P1085	max	T	.621	1	.355	1	.133	1	-.066	2	.539	1
4338		min		.257	2	.159	2	.049	2	-.614	1	.224	2
4339		max	B	-.181	2	-.265	2	.074	1	1.892	2	.53	1
4340		min		-.44	1	-.588	1	.042	2	.943	1	.234	2
4341	P1086	max	T	.601	1	.293	1	.154	1	-.08	2	.52	1
4342		min		.244	2	.128	2	.058	2	-.518	1	.211	2
4343		max	B	-.15	2	-.249	2	.102	1	1.781	2	.502	1
4344		min		-.368	1	-.572	1	.049	2	1.105	1	.217	2
4345	P1087	max	T	.558	1	.32	1	.119	1	-.119	2	.485	1
4346		min		.241	2	.147	2	.047	2	-.657	1	.21	2
4347		max	B	-.171	2	-.25	2	.056	1	1.908	2	.477	1
4348		min		-.411	1	-.523	1	.04	2	.884	1	.222	2
4349	P1088	max	T	.54	1	.263	1	.138	1	-.121	2	.467	1
4350		min		.228	2	.118	2	.055	2	-.558	1	.197	2
4351		max	B	-.142	2	-.235	2	.081	1	1.795	2	.449	1
4352		min		-.345	1	-.507	1	.047	2	1.081	1	.205	2
4353	P1089	max	T	.581	1	.234	1	.174	1	-.084	2	.506	1
4354		min		.232	2	.1	2	.066	2	-.446	1	.201	2
4355		max	B	-.12	2	-.236	2	.13	1	1.715	2	.483	1
4356		min		-.298	1	-.558	1	.058	2	1.198	1	.205	2
4357	P1090	max	T	.562	1	.179	1	.191	1	-.083	2	.497	1
4358		min		.221	2	.076	2	.073	2	-.39	1	.194	2
4359		max	B	-.093	2	-.226	2	.156	1	1.672	2	.473	1
4360		min		-.233	1	-.544	1	.066	2	1.257	1	.197	2
4361	P1091	max	T	.521	1	.208	1	.157	1	-.118	2	.455	1
4362		min		.216	2	.091	2	.063	2	-.481	1	.188	2
4363		max	B	-.113	2	-.222	2	.108	1	1.723	2	.431	1

Envelope Plate/Shell Principal Stresses (Continued)

	Plate		Sur...	Sigma1 [ksi]	LC	Sigma2 [ksi]	LC	Tau Max [k...	LC	Angle [rad]	LC	Von Mises [ksi]	LC
4364		min		-.279	1	-.496	1	.055	2	1.184	1	.192	2
4365	P1092	max	T	.504	1	.157	1	.174	1	-.114	2	.447	1
4366		min		.205	2	.068	2	.069	2	-.423	1	.181	2
4367		max	B	-.087	2	-.212	2	.134	1	1.676	2	.421	1
4368		min		-.217	1	-.485	1	.063	2	1.246	1	.184	2
4369	P1093	max	T	.544	1	.131	1	.206	1	-.08	2	.491	1
4370		min		.211	2	.055	2	.078	2	-.346	1	.189	2
4371		max	B	-.07	2	-.217	2	.178	1	1.643	2	.469	1
4372		min		-.175	1	-.531	1	.073	2	1.298	1	.192	2
4373	P1094	max	T	.526	1	.089	1	.218	1	-.076	2	.488	1
4374		min		.201	2	.038	2	.082	2	-.311	1	.185	2
4375		max	B	-.05	2	-.208	2	.197	1	1.622	2	.469	1
4376		min		-.125	1	-.519	1	.079	2	1.327	1	.189	2
4377	P1095	max	T	.487	1	.11	1	.188	1	-.109	2	.443	1
4378		min		.195	2	.047	2	.074	2	-.377	1	.176	2
4379		max	B	-.064	2	-.203	2	.157	1	1.643	2	.419	1
4380		min		-.16	1	-.475	1	.07	2	1.286	1	.18	2
4381	P1096	max	T	.471	1	.071	1	.2	1	-.104	2	.44	1
4382		min		.186	2	.03	2	.078	2	-.341	1	.172	2
4383		max	B	-.044	2	-.195	2	.177	1	1.618	2	.42	1
4384		min		-.111	1	-.465	1	.075	2	1.313	1	.177	2
4385	P1097	max	T	.51	1	.055	1	.228	1	-.07	2	.485	1
4386		min		.193	2	.024	2	.085	2	-.281	1	.182	2
4387		max	B	-.033	2	-.201	2	.212	1	1.605	2	.47	1
4388		min		-.082	1	-.506	1	.084	2	1.348	1	.187	2
4389	P1098	max	T	.495	1	.028	1	.233	1	-.062	2	.482	1
4390		min		.186	2	.013	2	.086	2	-.255	1	.179	2
4391		max	B	-.02	2	-.194	2	.222	1	1.593	2	.471	1
4392		min		-.049	1	-.494	1	.087	2	1.365	1	.185	2
4393	P1099	max	T	.456	1	.038	1	.209	1	-.098	2	.439	1
4394		min		.177	2	.017	2	.08	2	-.312	1	.169	2
4395		max	B	-.028	2	-.188	2	.192	1	1.598	2	.423	1
4396		min		-.069	1	-.454	1	.08	2	1.332	1	.175	2
4397	P1100	max	T	.442	1	.013	1	.214	1	-.09	2	.435	1
4398		min		.169	2	.008	2	.081	2	-.286	1	.166	2
4399		max	B	-.016	2	-.181	2	.203	1	1.583	2	.426	1
4400		min		-.037	1	-.443	1	.083	2	1.347	1	.174	2
4401	P1101	max	T	.482	1	.009	1	.236	1	-.051	2	.477	1
4402		min		.179	2	.006	2	.087	2	-.23	1	.176	2
4403		max	B	-.011	2	-.189	2	.229	1	1.585	2	.471	1
4404		min		-.023	1	-.482	1	.089	2	1.38	1	.184	2
4405	P1102	max	T	.47	1	.002	2	.236	1	-.036	2	.472	1
4406		min		.175	2	-.002	1	.086	2	-.204	1	.174	2
4407		max	B	-.005	2	-.184	2	.232	1	1.581	2	.467	1
4408		min		-.006	1	-.471	1	.089	2	1.395	1	.181	2
4409	P1103	max	T	.428	1	.002	2	.216	1	-.078	2	.43	1
4410		min		.163	2	-.003	1	.081	2	-.262	1	.162	2
4411		max	B	-.007	2	-.175	2	.209	1	1.573	2	.425	1
4412		min		-.014	1	-.432	1	.084	2	1.359	1	.171	2
4413	P1104	max	T	.416	1	-.001	2	.214	1	-.061	2	.422	1
4414		min		.157	2	-.012	1	.079	2	-.235	1	.158	2
4415		max	B	.001	1	-.169	2	.211	1	1.569	2	.421	1
4416		min		-.002	2	-.42	1	.084	2	1.374	1	.168	2
4417	P1105	max	T	.461	1	0	2	.234	1	-.014	2	.464	1
4418		min		.171	2	-.007	1	.086	2	-.168	1	.171	2
4419		max	B	.002	1	-.18	2	.231	1	1.584	2	.461	1
4420		min		-.001	2	-.46	1	.089	2	1.419	1	.179	2

Envelope Plate/Shell Principal Stresses (Continued)

	Plate		Sur...	Sigma1 [ksi]	LC	Sigma2 [ksi]	LC	Tau Max [k...	LC	Angle [rad]	LC	Von Mises [ksi]	LC
4421	P1106	max	T	.451	1	0	2	.226	1	-.004	2	.451	1
4422		min		.171	2	-.002	1	.085	2	-.086	1	.171	2
4423		max	B	0	1	-.177	2	.224	1	1.575	2	.447	1
4424		min		0	2	-.446	1	.088	2	1.49	1	.177	2
4425	P1107	max	T	.405	1	-.001	2	.208	1	-.036	2	.411	1
4426		min		.153	2	-.012	1	.077	2	-.196	1	.154	2
4427		max	B	.007	1	-.165	2	.208	1	1.57	2	.412	1
4428		min		0	2	-.409	1	.082	2	1.399	1	.165	2
4429	P1108	max	T	.393	1	0	2	.198	1	-.006	2	.394	1
4430		min		.152	2	-.003	1	.076	2	-.1	1	.153	2
4431		max	B	.002	1	-.162	2	.198	1	1.576	2	.395	1
4432		min		0	2	-.394	1	.081	2	1.479	1	.162	2
4433	P1109	max	T	.349	1	0	2	.176	1	.107	1	.35	1
4434		min		.112	2	-.003	1	.057	2	.035	2	.113	2
4435		max	B	.002	1	-.153	2	.207	1	1.653	1	.413	1
4436		min		0	2	-.412	1	.077	2	1.576	2	.154	2
4437	P1110	max	T	.367	1	-.004	2	.19	1	.21	1	.373	1
4438		min		.116	2	-.013	1	.06	2	.093	2	.118	2
4439		max	B	.007	1	-.154	2	.215	1	1.731	1	.425	1
4440		min		.003	2	-.422	1	.079	2	1.583	2	.156	2
4441	P1111	max	T	.268	1	-.002	2	.138	1	.147	1	.272	1
4442		min		.087	2	-.007	1	.044	2	.07	2	.088	2
4443		max	B	.005	1	-.134	2	.171	1	1.677	1	.34	1
4444		min		.002	2	-.338	1	.068	2	1.593	2	.134	2
4445	P1112	max	T	.292	1	-.007	2	.158	1	.274	1	.305	1
4446		min		.092	2	-.025	1	.05	2	.157	2	.096	2
4447		max	B	.017	1	-.135	2	.184	1	1.772	1	.359	1
4448		min		.006	2	-.35	1	.07	2	1.613	2	.138	2
4449	P1113	max	T	.384	1	-.006	2	.198	1	.253	1	.391	1
4450		min		.122	2	-.012	1	.064	2	.13	2	.125	2
4451		max	B	.004	2	-.158	2	.217	1	1.758	1	.432	1
4452		min		.003	1	-.431	1	.081	2	1.58	2	.16	2
4453	P1114	max	T	.402	1	-.001	1	.202	1	.281	1	.403	1
4454		min		.13	2	-.004	2	.067	2	.153	2	.132	2
4455		max	B	.001	2	-.163	2	.214	1	1.774	1	.434	1
4456		min		-.012	1	-.44	1	.082	2	1.569	2	.163	2
4457	P1115	max	T	.312	1	-.012	2	.172	1	.314	1	.329	1
4458		min		.1	2	-.031	1	.056	2	.195	2	.106	2
4459		max	B	.018	1	-.139	2	.19	1	1.8	1	.371	1
4460		min		.008	2	-.361	1	.074	2	1.61	2	.144	2
4461	P1116	max	T	.332	1	-.013	2	.179	1	.336	1	.345	1
4462		min		.108	2	-.025	1	.061	2	.211	2	.115	2
4463		max	B	.008	1	-.145	2	.19	1	1.812	1	.376	1
4464		min		.008	2	-.372	1	.076	2	1.595	2	.148	2
4465	P1117	max	T	.42	1	.02	1	.2	1	.306	1	.41	1
4466		min		.138	2	0	2	.069	2	.167	2	.138	2
4467		max	B	-.005	2	-.168	2	.206	1	1.787	1	.432	1
4468		min		-.037	1	-.449	1	.082	2	1.552	2	.166	2
4469	P1118	max	T	.437	1	.051	1	.193	1	.333	1	.414	1
4470		min		.147	2	.01	2	.069	2	.177	2	.142	2
4471		max	B	-.014	2	-.175	2	.193	1	1.801	1	.427	1
4472		min		-.072	1	-.459	1	.08	2	1.53	2	.168	2
4473	P1119	max	T	.35	1	-.007	1	.179	1	.356	1	.353	1
4474		min		.117	2	-.009	2	.063	2	.219	2	.122	2
4475		max	B	.003	2	-.15	2	.184	1	1.82	1	.374	1
4476		min		-.014	1	-.381	1	.077	2	1.573	2	.152	2
4477	P1120	max	T	.367	1	.022	1	.173	1	.379	1	.357	1

Envelope Plate/Shell Principal Stresses (Continued)

	Plate		Sur...	Sigma1 [ksi]	LC	Sigma2 [ksi]	LC	Tau Max [k...	LC	Angle [rad]	LC	Von Mises [ksi]	LC
4478		min		.126	2	0	2	.064	2	.223	2	.127	2
4479		max	B	-.006	2	-.157	2	.171	1	1.829	1	.368	1
4480		min		-.047	1	-.39	1	.075	2	1.546	2	.154	2
4481	P1121	max	T	.455	1	.092	1	.182	1	.367	1	.417	1
4482		min		.156	2	.023	2	.067	2	.187	2	.146	2
4483		max	B	-.028	2	-.182	2	.176	1	1.819	1	.422	1
4484		min		-.117	1	-.468	1	.077	2	1.504	2	.17	2
4485	P1122	max	T	.473	1	.141	1	.166	1	.413	1	.421	1
4486		min		.165	2	.04	2	.063	2	.198	2	.149	2
4487		max	B	-.044	2	-.19	2	.154	1	1.846	1	.419	1
4488		min		-.171	1	-.478	1	.073	2	1.474	2	.172	2
4489	P1123	max	T	.384	1	.062	1	.161	1	.411	1	.357	1
4490		min		.136	2	.012	2	.062	2	.228	2	.13	2
4491		max	B	-.019	2	-.164	2	.153	1	1.845	1	.361	1
4492		min		-.091	1	-.398	1	.072	2	1.515	2	.155	2
4493	P1124	max	T	.401	1	.11	1	.146	1	.459	1	.359	1
4494		min		.145	2	.029	2	.058	2	.238	2	.133	2
4495		max	B	-.036	2	-.171	2	.131	1	1.872	1	.356	1
4496		min		-.145	1	-.406	1	.068	2	1.481	2	.156	2
4497	P1125	max	T	.492	1	.196	1	.148	1	.477	1	.429	1
4498		min		.175	2	.06	2	.057	2	.214	2	.154	2
4499		max	B	-.064	2	-.199	2	.128	1	1.887	1	.423	1
4500		min		-.232	1	-.488	1	.068	2	1.44	2	.176	2
4501	P1126	max	T	.513	1	.255	1	.129	1	.566	1	.445	1
4502		min		.185	2	.084	2	.05	2	.236	2	.161	2
4503		max	B	-.087	2	-.21	2	.1	1	1.953	1	.435	1
4504		min		-.299	1	-.499	1	.062	2	1.398	2	.183	2
4505	P1127	max	T	.42	1	.163	1	.128	1	.53	1	.367	1
4506		min		.155	2	.049	2	.053	2	.254	2	.137	2
4507		max	B	-.056	2	-.18	2	.105	1	1.918	1	.359	1
4508		min		-.205	1	-.415	1	.062	2	1.442	2	.16	2
4509	P1128	max	T	.442	1	.219	1	.111	1	.633	1	.383	1
4510		min		.165	2	.073	2	.046	2	.281	2	.143	2
4511		max	B	-.079	2	-.19	2	.078	1	2.003	1	.373	1
4512		min		-.269	1	-.425	1	.056	2	1.398	2	.166	2
4513	P1129	max	T	.538	1	.315	1	.112	1	.693	1	.468	1
4514		min		.196	2	.111	2	.042	2	.267	2	.17	2
4515		max	B	-.111	2	-.223	2	.072	1	2.067	1	.458	1
4516		min		-.369	1	-.512	1	.056	2	1.347	2	.193	2
4517	P1130	max	T	.569	1	.37	1	.1	1	.865	1	.5	1
4518		min		.207	2	.141	2	.033	2	.314	2	.183	2
4519		max	B	-.136	2	-.239	2	.051	2	2.296	1	.49	1
4520		min		-.436	1	-.531	1	.048	1	1.284	2	.208	2
4521	P1131	max	T	.469	1	.273	1	.098	1	.779	1	.408	1
4522		min		.176	2	.099	2	.038	2	.323	2	.153	2
4523		max	B	-.103	2	-.203	2	.054	1	2.17	1	.398	1
4524		min		-.333	1	-.44	1	.05	2	1.344	2	.175	2
4525	P1132	max	T	.503	1	.32	1	.092	1	.963	1	.441	1
4526		min		.187	2	.127	2	.03	2	.39	2	.166	2
4527		max	B	-.128	2	-.217	2	.044	2	1.28	2	.432	1
4528		min		-.387	1	-.466	1	.039	1	-.637	1	.189	2
4529	P1133	max	T	.608	1	.416	1	.096	1	1.072	1	.539	1
4530		min		.218	2	.173	2	.023	2	.388	2	.199	2
4531		max	B	-.162	2	-.258	2	.048	2	1.209	2	.531	1
4532		min		-.487	1	-.566	1	.04	1	-.421	1	.226	2
4533	P1134	max	T	.656	1	.45	1	.103	1	1.283	1	.581	1
4534		min		.231	2	.206	2	.012	2	.546	2	.219	2

Envelope Plate/Shell Principal Stresses (Continued)

	Plate		Sur...	Sigma1 [ksi]	LC	Sigma2 [ksi]	LC	Tau Max [k...	LC	Angle [rad]	LC	Von Mises [ksi]	LC
4535		max	B	-.187	2	-.282	2	.054	1	1.131	2	.576	1
4536		min		-.514	1	-.623	1	.048	2	-.051	1	.249	2
4537	P1135	max	T	.546	1	.356	1	.095	1	1.158	1	.48	1
4538		min		.2	2	.157	2	.021	2	.504	2	.182	2
4539		max	B	-.153	2	-.234	2	.046	1	1.205	2	.473	1
4540		min		-.421	1	-.512	1	.041	2	-.249	1	.206	2
4541	P1136	max	T	.593	1	.383	1	.105	1	1.335	1	.521	1
4542		min		.214	2	.186	2	.014	2	.728	2	.201	2
4543		max	B	-.178	2	-.255	2	.065	1	1.128	2	.517	1
4544		min		-.44	1	-.569	1	.039	2	-.016	1	.226	2
4545	P1137	max	T	.707	1	.471	1	.118	1	1.468	1	.623	1
4546		min		.248	2	.237	2	.006	2	1.278	2	.242	2
4547		max	B	-.209	2	-.311	2	.078	1	1.069	2	.621	1
4548		min		-.529	1	-.684	1	.051	2	.157	1	.274	2
4549	P1138	max	T	.755	1	.485	1	.135	1	1.838	2	.662	1
4550		min		.282	2	.252	2	.015	2	1.636	1	.268	2
4551		max	B	-.231	2	-.344	2	.101	1	1.039	2	.664	1
4552		min		-.539	1	-.742	1	.056	2	.316	1	.303	2
4553	P1139	max	T	.64	1	.402	1	.119	1	1.486	1	.561	1
4554		min		.233	2	.211	2	.011	2	1.165	2	.223	2
4555		max	B	-.201	2	-.279	2	.084	1	1.066	2	.559	1
4556		min		-.455	1	-.624	1	.039	2	.13	1	.249	2
4557	P1140	max	T	.682	1	.415	1	.133	1	1.616	1	.595	1
4558		min		.259	2	.229	2	.015	2	1.567	2	.245	2
4559		max	B	-.223	2	-.305	2	.1	1	1.037	2	.595	1
4560		min		-.469	1	-.67	1	.041	2	.247	1	.273	2
4561	P1141	max	T	.792	1	.49	1	.151	1	2.009	2	.693	1
4562		min		.319	2	.263	2	.028	2	1.785	1	.295	2
4563		max	B	-.251	2	-.379	2	.12	1	1.052	2	.697	1
4564		min		-.546	1	-.785	1	.064	2	.459	1	.333	2
4565	P1142	max	T	.82	1	.491	1	.165	1	2.16	2	.715	1
4566		min		.36	2	.274	2	.043	2	1.939	1	.325	2
4567		max	B	-.27	2	-.417	2	.134	1	1.101	2	.723	1
4568		min		-.551	1	-.819	1	.074	2	.613	1	.367	2
4569	P1143	max	T	.713	1	.425	1	.144	1	1.801	2	.621	1
4570		min		.288	2	.244	2	.022	2	1.737	1	.268	2
4571		max	B	-.244	2	-.332	2	.11	1	1.049	2	.623	1
4572		min		-.483	1	-.703	1	.044	2	.359	1	.298	2
4573	P1144	max	T	.729	1	.433	1	.148	1	1.968	2	.635	1
4574		min		.314	2	.258	2	.028	2	1.853	1	.29	2
4575		max	B	-.264	2	-.358	2	.111	1	1.11	2	.638	1
4576		min		-.497	1	-.72	1	.047	2	.479	1	.321	2
4577	P1145	max	T	.815	1	.486	1	.164	1	2.333	2	.71	1
4578		min		.389	2	.283	2	.053	2	2.102	1	.348	2
4579		max	B	-.282	2	-.453	2	.137	1	1.208	2	.727	1
4580		min		-.55	1	-.824	1	.085	2	.804	1	.396	2
4581	P1146	max	T	.799	1	.486	1	.157	1	2.248	1	.698	1
4582		min		.419	2	.296	2	.062	2	-.674	2	.373	2
4583		max	B	-.3	2	-.482	2	.13	1	1.337	2	.719	1
4584		min		-.553	1	-.813	1	.091	2	.999	1	.422	2
4585	P1147	max	T	.73	1	.439	1	.145	1	2.12	2	.636	1
4586		min		.338	2	.271	2	.033	2	1.968	1	.31	2
4587		max	B	-.282	2	-.381	2	.104	1	1.211	2	.642	1
4588		min		-.513	1	-.72	1	.05	2	.613	1	.343	2
4589	P1148	max	T	.712	1	.446	1	.133	1	2.285	2	.623	1
4590		min		.355	2	.284	2	.036	2	2.087	1	.326	2
4591		max	B	-.297	2	-.402	2	.088	1	1.35	2	.634	1

Envelope Plate/Shell Principal Stresses (Continued)

	Plate		Sur...	Sigma1 [ksi]	LC	Sigma2 [ksi]	LC	Tau Max [k...	LC	Angle [rad]	LC	Von Mises [ksi]	LC
4592		min		-.528	1	-.703	1	.052	2	.779	1	.361	2
4593	P1149	max	T	.767	1	.475	1	.146	1	-.504	2	.67	1
4594		min		.444	2	.298	2	.073	2	-.714	1	.392	2
4595		max	B	-.306	2	-.509	2	.13	1	1.466	2	.704	1
4596		min		-.537	1	-.797	1	.102	2	1.224	1	.444	2
4597	P1150	max	T	.718	1	.474	1	.122	1	-.299	2	.632	1
4598		min		.456	2	.301	2	.077	2	-.499	1	.402	2
4599		max	B	-.309	2	-.53	2	.128	1	1.64	2	.687	1
4600		min		-.523	1	-.778	1	.11	2	1.506	1	.461	2
4601	P1151	max	T	.68	1	.456	1	.112	1	2.207	1	.6	1
4602		min		.367	2	.295	2	.036	2	-.68	2	.337	2
4603		max	B	-.308	2	-.419	2	.067	1	1.515	2	.62	1
4604		min		-.542	1	-.676	1	.055	2	1.009	1	.376	2
4605	P1152	max	T	.637	1	.471	1	.083	1	2.325	1	.572	1
4606		min		.37	2	.304	2	.033	2	-.482	2	.342	2
4607		max	B	-.311	2	-.431	2	.06	2	1.698	2	.606	1
4608		min		-.549	1	-.65	1	.051	1	1.378	1	.385	2
4609	P1153	max	T	.669	1	.485	1	.092	1	-.098	2	.599	1
4610		min		.454	2	.305	2	.074	2	-.255	1	.401	2
4611		max	B	-.309	2	-.534	2	.128	1	1.813	2	.673	1
4612		min		-.507	1	-.764	1	.113	2	1.779	1	.464	2
4613	P1154	max	T	.63	1	.504	1	.065	2	.094	2	.578	1
4614		min		.438	2	.309	2	.063	1	.056	1	.39	2
4615		max	B	-.307	2	-.525	2	.133	1	2.027	1	.669	1
4616		min		-.496	1	-.761	1	.109	2	1.976	2	.457	2
4617	P1155	max	T	.59	1	.491	1	.049	1	-.265	2	.547	1
4618		min		.366	2	.31	2	.028	2	-.718	1	.341	2
4619		max	B	-.309	2	-.437	2	.064	2	1.881	2	.597	1
4620		min		-.537	1	-.642	1	.053	1	1.841	1	.389	2
4621	P1156	max	T	.545	1	.512	1	.022	2	-.037	2	.53	1
4622		min		.354	2	.31	2	.017	1	-.778	1	.334	2
4623		max	B	-.301	2	-.435	2	.071	1	2.17	1	.593	1
4624		min		-.509	1	-.651	1	.067	2	2.046	2	.386	2
4625	P1157	max	T	.607	1	.514	1	.053	2	.464	1	.566	1
4626		min		.412	2	.305	2	.047	1	.256	2	.37	2
4627		max	B	-.297	2	-.503	2	.139	1	2.24	1	.667	1
4628		min		-.483	1	-.761	1	.103	2	2.122	2	.438	2
4629	P1158	max	T	.603	1	.51	1	.046	1	.905	1	.562	1
4630		min		.382	2	.301	2	.041	2	.386	2	.349	2
4631		max	B	-.286	2	-.471	2	.139	1	2.233	2	.658	1
4632		min		-.473	1	-.752	1	.092	2	-.73	1	.411	2
4633	P1159	max	T	.539	1	.5	1	.019	1	1.47	1	.521	1
4634		min		.338	2	.307	2	.015	2	.177	2	.323	2
4635		max	B	-.289	2	-.424	2	.091	1	2.188	2	.592	1
4636		min		-.479	1	-.662	1	.067	2	-.759	1	.375	2
4637	P1160	max	T	.552	1	.468	1	.042	1	1.462	1	.515	1
4638		min		.318	2	.298	2	.01	2	.335	2	.308	2
4639		max	B	-.276	2	-.405	2	.104	1	2.296	2	.588	1
4640		min		-.455	1	-.664	1	.065	2	-.603	1	.358	2
4641	P1161	max	T	.606	1	.495	1	.055	1	1.252	1	.559	1
4642		min		.351	2	.293	2	.029	2	.484	2	.326	2
4643		max	B	-.274	2	-.438	2	.137	1	2.328	2	.648	1
4644		min		-.467	1	-.74	1	.082	2	-.573	1	.384	2
4645	P1162	max	T	.596	1	.472	1	.062	1	1.519	1	.545	1
4646		min		.314	2	.279	2	.018	2	.43	2	.298	2
4647		max	B	-.258	2	-.395	2	.122	1	-.437	1	.619	1
4648		min		-.46	1	-.704	1	.068	2	-.761	2	.348	2

Envelope Plate/Shell Principal Stresses (Continued)

	Plate		Sur...	Sigma1 [ksi]	LC	Sigma2 [ksi]	LC	Tau Max [k...	LC	Angle [rad]	LC	Von Mises [ksi]	LC
4649	P1163	max	T	.557	1	.439	1	.059	1	1.55	1	.508	1
4650		min		.295	2	.284	2	.006	2	.389	2	.29	2
4651		max	B	-.26	2	-.381	2	.11	1	-.483	1	.577	1
4652		min		-.435	1	-.654	1	.06	2	-.772	2	.337	2
4653	P1164	max	T	.552	1	.411	1	.071	1	1.666	1	.497	1
4654		min		.273	2	.267	2	.003	2	-.145	2	.27	2
4655		max	B	-.244	2	-.352	2	.108	1	-.374	1	.557	1
4656		min		-.418	1	-.633	1	.054	2	-.723	2	.312	2
4657	P1165	max	T	.583	1	.446	1	.068	1	1.74	1	.528	1
4658		min		.286	2	.259	2	.013	2	.18	2	.273	2
4659		max	B	-.243	2	-.355	2	.104	1	-.311	1	.586	1
4660		min		-.454	1	-.661	1	.056	2	-.748	2	.315	2
4661	P1166	max	T	.563	1	.413	1	.075	1	1.947	1	.505	1
4662		min		.265	2	.23	2	.017	2	-.087	2	.249	2
4663		max	B	-.226	2	-.316	2	.081	1	2.356	2	.545	1
4664		min		-.446	1	-.608	1	.045	2	-.174	1	.282	2
4665	P1167	max	T	.538	1	.383	1	.077	1	1.796	1	.48	1
4666		min		.257	2	.24	2	.008	2	-.433	2	.249	2
4667		max	B	-.227	2	-.32	2	.097	1	-.271	1	.528	1
4668		min		-.404	1	-.598	1	.046	2	-.712	2	.285	2
4669	P1168	max	T	.517	1	.354	1	.082	1	1.936	1	.458	1
4670		min		.241	2	.211	2	.015	2	-.404	2	.228	2
4671		max	B	-.21	2	-.288	2	.081	1	-.166	1	.493	1
4672		min		-.391	1	-.554	1	.039	2	-.748	2	.258	2
4673	P1169	max	T	.541	1	.375	1	.083	1	2.134	1	.48	1
4674		min		.249	2	.198	2	.026	2	-.173	2	.228	2
4675		max	B	-.208	2	-.282	2	.057	1	2.252	2	.503	1
4676		min		-.436	1	-.55	1	.037	2	.007	1	.253	2
4677	P1170	max	T	.519	1	.33	1	.095	1	2.296	1	.455	1
4678		min		.235	2	.166	2	.034	2	-.189	2	.209	2
4679		max	B	-.186	2	-.254	2	.039	1	2.092	2	.461	1
4680		min		-.418	1	-.495	1	.034	2	.329	1	.227	2
4681	P1171	max	T	.492	1	.32	1	.086	1	2.083	1	.433	1
4682		min		.227	2	.181	2	.023	2	-.351	2	.208	2
4683		max	B	-.192	2	-.258	2	.061	1	2.296	2	.453	1
4684		min		-.379	1	-.502	1	.033	2	-.035	1	.232	2
4685	P1172	max	T	.467	1	.283	1	.092	1	2.228	1	.407	1
4686		min		.213	2	.152	2	.031	2	-.302	2	.19	2
4687		max	B	-.172	2	-.232	2	.042	1	2.141	2	.413	1
4688		min		-.365	1	-.448	1	.03	2	.179	1	.209	2
4689	P1173	max	T	.499	1	.281	1	.109	1	-.182	2	.433	1
4690		min		.222	2	.136	2	.043	2	-.712	1	.193	2
4691		max	B	-.16	2	-.233	2	.041	1	1.932	2	.425	1
4692		min		-.378	1	-.46	1	.036	2	.776	1	.206	2
4693	P1174	max	T	.479	1	.23	1	.124	1	-.171	2	.415	1
4694		min		.209	2	.107	2	.051	2	-.606	1	.181	2
4695		max	B	-.132	2	-.217	2	.062	1	1.814	2	.396	1
4696		min		-.319	1	-.443	1	.043	2	1.04	1	.189	2
4697	P1175	max	T	.442	1	.24	1	.101	1	-.262	2	.383	1
4698		min		.2	2	.123	2	.038	2	-.781	1	.175	2
4699		max	B	-.148	2	-.212	2	.033	1	1.975	2	.375	1
4700		min		-.338	1	-.404	1	.032	2	.585	1	.188	2
4701	P1176	max	T	.42	1	.194	1	.113	1	-.227	2	.364	1
4702		min		.188	2	.096	2	.046	2	-.668	1	.162	2
4703		max	B	-.121	2	-.197	2	.045	1	1.849	2	.344	1
4704		min		-.29	1	-.381	1	.038	2	.959	1	.172	2
4705	P1177	max	T	.461	1	.179	1	.141	1	-.16	2	.403	1

Envelope Plate/Shell Principal Stresses (Continued)

	Plate		Sur...	Sigma1 [ksi]	LC	Sigma2 [ksi]	LC	Tau Max [k...	LC	Angle [rad]	LC	Von Mises [ksi]	LC
4706		min		.197	2	.081	2	.058	2	-.524	1	.172	2
4707		max	B	-.104	2	-.205	2	.088	1	1.736	2	.377	1
4708		min		-.257	1	-.433	1	.05	2	1.165	1	.178	2
4709	P1178	max	T	.444	1	.13	1	.157	1	-.15	2	.395	1
4710		min		.187	2	.058	2	.064	2	-.462	1	.165	2
4711		max	B	-.079	2	-.195	2	.114	1	1.683	2	.367	1
4712		min		-.196	1	-.424	1	.058	2	1.232	1	.17	2
4713	P1179	max	T	.401	1	.146	1	.127	1	-.209	2	.351	1
4714		min		.176	2	.07	2	.053	2	-.577	1	.154	2
4715		max	B	-.095	2	-.185	2	.069	1	1.755	2	.323	1
4716		min		-.231	1	-.369	1	.045	2	1.131	1	.16	2
4717	P1180	max	T	.383	1	.1	1	.142	1	-.194	2	.344	1
4718		min		.166	2	.047	2	.059	2	-.509	1	.148	2
4719		max	B	-.07	2	-.175	2	.094	1	1.693	2	.312	1
4720		min		-.173	1	-.36	1	.053	2	1.212	1	.153	2
4721	P1181	max	T	.428	1	.086	1	.171	1	-.143	2	.393	1
4722		min		.177	2	.038	2	.069	2	-.414	1	.161	2
4723		max	B	-.056	2	-.186	2	.137	1	1.644	2	.366	1
4724		min		-.141	1	-.415	1	.065	2	1.272	1	.165	2
4725	P1182	max	T	.413	1	.047	1	.183	1	-.138	2	.392	1
4726		min		.167	2	.022	2	.073	2	-.378	1	.157	2
4727		max	B	-.037	2	-.178	2	.157	1	1.614	2	.369	1
4728		min		-.092	1	-.407	1	.071	2	1.297	1	.163	2
4729	P1183	max	T	.367	1	.056	1	.156	1	-.185	2	.343	1
4730		min		.155	2	.028	2	.064	2	-.458	1	.144	2
4731		max	B	-.047	2	-.167	2	.118	1	1.646	2	.311	1
4732		min		-.118	1	-.353	1	.06	2	1.254	1	.149	2
4733	P1184	max	T	.353	1	.018	1	.167	1	-.18	2	.344	1
4734		min		.146	2	.011	2	.067	2	-.422	1	.141	2
4735		max	B	-.028	2	-.159	2	.138	1	1.609	2	.317	1
4736		min		-.069	1	-.346	1	.066	2	1.276	1	.147	2
4737	P1185	max	T	.399	1	.016	1	.192	1	-.133	2	.391	1
4738		min		.158	2	.009	2	.075	2	-.35	1	.154	2
4739		max	B	-.021	2	-.171	2	.173	1	1.589	2	.374	1
4740		min		-.052	1	-.398	1	.075	2	1.312	1	.162	2
4741	P1186	max	T	.385	1	0	2	.196	1	-.126	2	.388	1
4742		min		.15	2	-.007	1	.075	2	-.327	1	.15	2
4743		max	B	-.01	2	-.164	2	.184	1	1.57	2	.378	1
4744		min		-.021	1	-.388	1	.077	2	1.322	1	.16	2
4745	P1187	max	T	.339	1	-.001	2	.176	1	-.178	2	.345	1
4746		min		.137	2	-.013	1	.069	2	-.397	1	.138	2
4747		max	B	-.013	2	-.152	2	.154	1	1.577	2	.325	1
4748		min		-.029	1	-.338	1	.07	2	1.286	1	.146	2
4749	P1188	max	T	.325	1	-.009	2	.179	1	-.175	2	.343	1
4750		min		.129	2	-.034	1	.069	2	-.378	1	.133	2
4751		max	B	0	1	-.145	2	.165	1	1.551	2	.33	1
4752		min		-.002	2	-.329	1	.072	2	1.289	1	.144	2
4753	P1189	max	T	.371	1	-.004	2	.196	1	-.116	2	.381	1
4754		min		.143	2	-.021	1	.074	2	-.305	1	.145	2
4755		max	B	0	1	-.158	2	.189	1	1.556	2	.377	1
4756		min		-.002	2	-.377	1	.078	2	1.331	1	.157	2
4757	P1190	max	T	.357	1	-.005	2	.191	1	-.097	2	.37	1
4758		min		.137	2	-.025	1	.071	2	-.28	1	.139	2
4759		max	B	.012	1	-.152	2	.189	1	1.55	2	.372	1
4760		min		.002	2	-.365	1	.077	2	1.342	1	.153	2
4761	P1191	max	T	.31	1	-.012	2	.178	1	-.169	2	.335	1
4762		min		.121	2	-.045	1	.067	2	-.363	1	.127	2

Envelope Plate/Shell Principal Stresses (Continued)

	Plate		Sur...	Sigma1 [ksi]	LC	Sigma2 [ksi]	LC	Tau Max [k...	LC	Angle [rad]	LC	Von Mises [ksi]	LC
4763		max	B	.02	1	-.138	2	.17	1	1.532	2	.329	1
4764		min		.004	2	-.319	1	.071	2	1.29	1	.141	2
4765	P1192	max	T	.295	1	-.012	2	.17	1	-.153	2	.32	1
4766		min		.113	2	-.045	1	.062	2	-.344	1	.119	2
4767		max	B	.028	1	-.132	2	.168	1	1.52	2	.322	1
4768		min		.006	2	-.307	1	.069	2	1.294	1	.135	2
4769	P1193	max	T	.343	1	-.004	2	.182	1	-.067	2	.354	1
4770		min		.132	2	-.021	1	.068	2	-.238	1	.134	2
4771		max	B	.014	1	-.147	2	.183	1	1.553	2	.36	1
4772		min		.002	2	-.352	1	.074	2	1.366	1	.148	2
4773	P1194	max	T	.328	1	0	2	.167	1	-.023	2	.33	1
4774		min		.131	2	-.005	1	.066	2	-.125	1	.131	2
4775		max	B	.004	1	-.144	2	.17	1	1.564	2	.338	1
4776		min		0	2	-.335	1	.072	2	1.459	1	.144	2
4777	P1195	max	T	.278	1	-.007	2	.156	1	-.119	2	.297	1
4778		min		.107	2	-.034	1	.057	2	-.306	1	.111	2
4779		max	B	.025	1	-.126	2	.158	1	1.522	2	.305	1
4780		min		.005	2	-.292	1	.065	2	1.314	1	.128	2
4781	P1196	max	T	.256	1	-.002	2	.133	1	-.05	2	.261	1
4782		min		.105	2	-.009	1	.053	2	-.17	1	.106	2
4783		max	B	.007	1	-.123	2	.139	1	1.547	2	.275	1
4784		min		.001	2	-.271	1	.062	2	1.424	1	.123	2
4785	P1197	max	T	.182	1	-.004	2	.098	1	.234	1	.189	1
4786		min		.058	2	-.014	1	.031	2	.15	2	.06	2
4787		max	B	.009	1	-.111	2	.133	1	1.725	1	.262	1
4788		min		.003	2	-.257	1	.057	2	1.622	2	.112	2
4789	P1198	max	T	.215	1	-.014	2	.131	1	.383	1	.242	1
4790		min		.066	2	-.046	1	.04	2	.276	2	.074	2
4791		max	B	.033	1	-.113	2	.154	1	1.844	1	.293	1
4792		min		.009	2	-.275	1	.061	2	1.663	2	.118	2
4793	P1199	max	T	.098	1	-.009	2	.064	1	.458	1	.116	1
4794		min		.029	2	-.031	1	.019	2	.385	2	.034	2
4795		max	B	.018	1	-.085	2	.095	1	1.832	1	.181	1
4796		min		.004	2	-.171	1	.045	2	1.68	2	.087	2
4797	P1200	max	T	.145	1	-.027	2	.115	1	.558	1	.201	1
4798		min		.042	2	-.085	1	.034	2	.483	2	.06	2
4799		max	B	.059	1	-.088	2	.129	1	1.967	1	.235	1
4800		min		.016	2	-.2	1	.052	2	1.749	2	.097	2
4801	P1201	max	T	.239	1	-.022	2	.15	1	.408	1	.275	1
4802		min		.076	2	-.061	1	.049	2	.297	2	.088	2
4803		max	B	.042	1	-.118	2	.165	1	1.865	1	.312	1
4804		min		.015	2	-.289	1	.066	2	1.656	2	.126	2
4805	P1202	max	T	.26	1	-.025	2	.159	1	.415	1	.294	1
4806		min		.085	2	-.059	1	.055	2	.295	2	.1	2
4807		max	B	.036	1	-.124	2	.168	1	1.867	1	.319	1
4808		min		.016	2	-.3	1	.07	2	1.633	2	.132	2
4809	P1203	max	T	.17	1	-.037	2	.138	1	.54	1	.241	1
4810		min		.052	2	-.105	1	.045	2	.445	2	.078	2
4811		max	B	.076	1	-.094	2	.146	1	1.965	1	.263	1
4812		min		.024	2	-.216	1	.059	2	1.729	2	.108	2
4813	P1204	max	T	.189	1	-.042	2	.148	1	.518	1	.26	1
4814		min		.062	2	-.107	1	.052	2	.406	2	.09	2
4815		max	B	.075	1	-.1	2	.151	1	1.946	1	.272	1
4816		min		.027	2	-.227	1	.064	2	1.688	2	.116	2
4817	P1205	max	T	.278	1	-.022	2	.161	1	.422	1	.302	1
4818		min		.095	2	-.043	1	.058	2	.287	2	.107	2
4819		max	B	.017	1	-.129	2	.163	1	1.866	1	.318	1

Envelope Plate/Shell Principal Stresses (Continued)

	Plate		Sur...	Sigma1 [ksi]	LC	Sigma2 [ksi]	LC	Tau Max [k...	LC	Angle [rad]	LC	Von Mises [ksi]	LC
4820		min		.012	2	-.309	1	.071	2	1.602	2	.136	2
4821	P1206	max	T	.295	1	-.014	2	.155	1	.438	1	.302	1
4822		min		.104	2	-.015	1	.059	2	.281	2	.112	2
4823		max	B	.004	2	-.136	2	.15	1	1.868	1	.309	1
4824		min		-.016	1	-.317	1	.07	2	1.566	2	.138	2
4825	P1207	max	T	.206	1	-.039	2	.149	1	.507	1	.264	1
4826		min		.071	2	-.091	1	.055	2	.375	2	.097	2
4827		max	B	.057	1	-.106	2	.146	1	1.929	1	.268	1
4828		min		.024	2	-.235	1	.065	2	1.641	2	.12	2
4829	P1208	max	T	.221	1	-.031	2	.141	1	.512	1	.258	1
4830		min		.08	2	-.062	1	.056	2	.353	2	.099	2
4831		max	B	.023	1	-.112	2	.132	1	1.92	1	.254	1
4832		min		.016	2	-.241	1	.064	2	1.591	2	.121	2
4833	P1209	max	T	.311	1	.025	1	.143	1	.468	1	.299	1
4834		min		.113	2	-.001	2	.057	2	.28	2	.114	2
4835		max	B	-.009	2	-.142	2	.132	1	1.879	1	.298	1
4836		min		-.06	1	-.324	1	.067	2	1.527	2	.138	2
4837	P1210	max	T	.328	1	.073	1	.128	1	.519	1	.299	1
4838		min		.123	2	.016	2	.053	2	.287	2	.116	2
4839		max	B	-.026	2	-.15	2	.109	1	1.907	1	.291	1
4840		min		-.114	1	-.331	1	.062	2	1.485	2	.138	2
4841	P1211	max	T	.237	1	-.017	2	.129	1	.539	1	.248	1
4842		min		.089	2	-.02	1	.053	2	.343	2	.099	2
4843		max	B	.003	2	-.118	2	.112	1	1.927	1	.237	1
4844		min		-.022	1	-.247	1	.061	2	1.54	2	.12	2
4845	P1212	max	T	.255	1	.029	1	.113	1	.596	1	.242	1
4846		min		.099	2	0	2	.049	2	.347	2	.099	2
4847		max	B	-.015	2	-.126	2	.088	1	1.962	1	.225	1
4848		min		-.077	1	-.254	1	.055	2	1.488	2	.119	2
4849	P1213	max	T	.348	1	.125	1	.111	1	.601	1	.305	1
4850		min		.133	2	.037	2	.048	2	.305	2	.119	2
4851		max	B	-.047	2	-.158	2	.083	1	1.967	1	.294	1
4852		min		-.173	1	-.34	1	.056	2	1.44	2	.141	2
4853	P1214	max	T	.372	1	.178	1	.097	1	.723	1	.323	1
4854		min		.143	2	.061	2	.041	2	.34	2	.125	2
4855		max	B	-.07	2	-.168	2	.058	1	2.093	1	.31	1
4856		min		-.235	1	-.352	1	.049	2	1.39	2	.146	2
4857	P1215	max	T	.278	1	.081	1	.098	1	.694	1	.247	1
4858		min		.109	2	.023	2	.043	2	.37	2	.1	2
4859		max	B	-.037	2	-.134	2	.063	1	2.052	1	.229	1
4860		min		-.137	1	-.264	1	.049	2	1.432	2	.12	2
4861	P1216	max	T	.307	1	.13	1	.089	1	.836	1	.267	1
4862		min		.12	2	.047	2	.037	2	.418	2	.105	2
4863		max	B	-.06	2	-.143	2	.043	1	2.267	1	.25	1
4864		min		-.195	1	-.281	1	.041	2	1.371	2	.124	2
4865	P1217	max	T	.404	1	.226	1	.089	1	.886	1	.351	1
4866		min		.155	2	.086	2	.034	2	.399	2	.134	2
4867		max	B	-.094	2	-.179	2	.042	2	1.33	2	.339	1
4868		min		-.291	1	-.373	1	.041	1	-.779	1	.155	2
4869	P1218	max	T	.444	1	.264	1	.09	1	1.069	1	.387	1
4870		min		.166	2	.114	2	.026	2	.491	2	.147	2
4871		max	B	-.119	2	-.193	2	.042	1	1.252	2	.378	1
4872		min		-.329	1	-.412	1	.037	2	-.394	1	.168	2
4873	P1219	max	T	.346	1	.172	1	.087	1	1.007	1	.3	1
4874		min		.133	2	.072	2	.03	2	.503	2	.115	2
4875		max	B	-.085	2	-.154	2	.04	1	1.297	2	.285	1
4876		min		-.237	1	-.316	1	.034	2	-.505	1	.133	2

Envelope Plate/Shell Principal Stresses (Continued)

	Plate		Sur...	Sigma1 [ksi]	LC	Sigma2 [ksi]	LC	Tau Max [k...	LC	Angle [rad]	LC	Von Mises [ksi]	LC
4877	P1220	max	T	.392	1	.204	1	.094	1	1.17	1	.34	1
4878		min		.147	2	.097	2	.025	2	.64	2	.129	2
4879		max	B	-.11	2	-.166	2	.054	1	1.204	2	.329	1
4880		min		-.261	1	-.369	1	.028	2	-.227	1	.146	2
4881	P1221	max	T	.49	1	.294	1	.098	1	1.239	1	.427	1
4882		min		.181	2	.139	2	.021	2	.66	2	.164	2
4883		max	B	-.144	2	-.208	2	.058	1	1.173	2	.421	1
4884		min		-.35	1	-.467	1	.032	2	-.141	1	.185	2
4885	P1222	max	T	.539	1	.316	1	.111	1	1.379	1	.469	1
4886		min		.198	2	.163	2	.017	2	.909	2	.183	2
4887		max	B	-.168	2	-.226	2	.078	1	1.082	2	.464	1
4888		min		-.367	1	-.522	1	.029	2	0	1	.203	2
4889	P1223	max	T	.442	1	.23	1	.106	1	1.304	1	.383	1
4890		min		.164	2	.12	2	.022	2	.836	2	.147	2
4891		max	B	-.134	2	-.181	2	.074	1	1.086	2	.375	1
4892		min		-.279	1	-.426	1	.023	2	-.084	1	.163	2
4893	P1224	max	T	.492	1	.25	1	.121	1	1.411	1	.426	1
4894		min		.184	2	.139	2	.022	2	1.054	2	.166	2
4895		max	B	-.157	2	-.198	2	.092	1	.949	2	.419	1
4896		min		-.295	1	-.48	1	.02	2	.003	1	.181	2
4897	P1225	max	T	.584	1	.334	1	.125	1	1.496	1	.507	1
4898		min		.219	2	.183	2	.018	2	1.192	2	.204	2
4899		max	B	-.191	2	-.246	2	.095	1	1.004	2	.504	1
4900		min		-.382	1	-.571	1	.028	2	.099	1	.224	2
4901	P1226	max	T	.622	1	.348	1	.137	1	1.595	1	.54	1
4902		min		.243	2	.2	2	.021	2	1.417	2	.224	2
4903		max	B	-.213	2	-.267	2	.107	1	.96	2	.537	1
4904		min		-.398	1	-.611	1	.027	2	.179	1	.245	2
4905	P1227	max	T	.536	1	.267	1	.134	1	1.5	1	.464	1
4906		min		.206	2	.156	2	.025	2	1.239	2	.186	2
4907		max	B	-.179	2	-.216	2	.108	1	.818	2	.458	1
4908		min		-.311	1	-.526	1	.019	2	.068	1	.2	2
4909	P1228	max	T	.573	1	.282	1	.145	1	1.576	1	.496	1
4910		min		.229	2	.17	2	.03	2	1.376	2	.206	2
4911		max	B	-.199	2	-.235	2	.118	1	.717	2	.49	1
4912		min		-.328	1	-.563	1	.018	2	.123	1	.219	2
4913	P1229	max	T	.65	1	.36	1	.145	1	1.686	1	.564	1
4914		min		.266	2	.215	2	.026	2	1.578	2	.245	2
4915		max	B	-.234	2	-.288	2	.112	1	.961	2	.562	1
4916		min		-.415	1	-.639	1	.027	2	.256	1	.265	2
4917	P1230	max	T	.665	1	.371	1	.147	1	1.771	1	.577	1
4918		min		.287	2	.23	2	.029	2	1.705	2	.263	2
4919		max	B	-.255	2	-.306	2	.109	1	1.014	2	.575	1
4920		min		-.434	1	-.652	1	.026	2	.331	1	.284	2
4921	P1231	max	T	.6	1	.296	1	.152	1	1.644	1	.519	1
4922		min		.251	2	.183	2	.034	2	1.48	2	.225	2
4923		max	B	-.219	2	-.253	2	.122	1	.648	2	.513	1
4924		min		-.346	1	-.589	1	.017	2	.173	1	.237	2
4925	P1232	max	T	.616	1	.308	1	.154	1	1.706	1	.533	1
4926		min		.27	2	.196	2	.037	2	1.561	2	.242	2
4927		max	B	-.238	2	-.267	2	.119	1	.6	2	.526	1
4928		min		-.366	1	-.603	1	.014	2	.216	1	.254	2
4929	P1233	max	T	.666	1	.382	1	.142	1	1.851	1	.579	1
4930		min		.305	2	.244	2	.03	2	1.815	2	.279	2
4931		max	B	-.275	2	-.322	2	.098	1	1.131	2	.578	1
4932		min		-.454	1	-.651	1	.023	2	.405	1	.301	2
4933	P1234	max	T	.654	1	.393	1	.13	1	1.923	1	.57	1

Envelope Plate/Shell Principal Stresses (Continued)

	Plate		Sur...	Sigma1 [ksi]	LC	Sigma2 [ksi]	LC	Tau Max [k...	LC	Angle [rad]	LC	Von Mises [ksi]	LC
4934		min		.317	2	.257	2	.03	2	1.913	2	.291	2
4935		max	B	-.292	2	-.334	2	.079	1	1.329	2	.572	1
4936		min		-.477	1	-.635	1	.021	2	.475	1	.315	2
4937	P1235	max	T	.621	1	.321	1	.15	1	1.76	1	.537	1
4938		min		.286	2	.208	2	.039	2	1.628	2	.256	2
4939		max	B	-.258	2	-.278	2	.11	1	.535	2	.531	1
4940		min		-.386	1	-.605	1	.01	2	.249	1	.268	2
4941	P1236	max	T	.615	1	.332	1	.141	1	1.804	1	.533	1
4942		min		.297	2	.219	2	.039	2	1.681	2	.267	2
4943		max	B	-.275	2	-.285	2	.095	1	.285	2	.528	1
4944		min		-.406	1	-.596	1	.005	2	.261	1	.28	2
4945	P1237	max	T	.63	1	.406	1	.112	1	1.998	2	.553	1
4946		min		.322	2	.27	2	.026	2	1.98	1	.3	2
4947		max	B	-.302	2	-.346	2	.053	1	1.601	2	.561	1
4948		min		-.501	1	-.606	1	.022	2	.527	1	.326	2
4949	P1238	max	T	.6	1	.42	1	.09	1	2.057	2	.533	1
4950		min		.322	2	.28	2	.021	2	2.004	1	.303	2
4951		max	B	-.304	2	-.356	2	.026	2	1.87	2	.55	1
4952		min		-.526	1	-.572	1	.023	1	.464	1	.333	2
4953	P1239	max	T	.601	1	.343	1	.129	1	1.832	1	.522	1
4954		min		.304	2	.227	2	.038	2	1.718	2	.274	2
4955		max	B	-.283	2	-.296	2	.078	1	.234	1	.52	1
4956		min		-.424	1	-.58	1	.007	2	-.43	2	.289	2
4957	P1240	max	T	.582	1	.352	1	.115	1	1.837	1	.507	1
4958		min		.306	2	.233	2	.036	2	1.74	2	.277	2
4959		max	B	-.28	2	-.309	2	.063	1	.136	1	.511	1
4960		min		-.436	1	-.563	1	.015	2	-.589	2	.295	2
4961	P1241	max	T	.569	1	.43	1	.07	1	2.059	2	.514	1
4962		min		.317	2	.285	2	.016	2	1.967	1	.303	2
4963		max	B	-.299	2	-.364	2	.033	2	2.077	2	.542	1
4964		min		-.523	1	-.559	1	.018	1	-.388	1	.336	2
4965	P1242	max	T	.548	1	.431	1	.059	1	1.97	2	.5	1
4966		min		.309	2	.285	2	.012	2	1.85	1	.298	2
4967		max	B	-.288	2	-.367	2	.046	1	2.23	2	.538	1
4968		min		-.486	1	-.578	1	.04	2	-.528	1	.335	2
4969	P1243	max	T	.563	1	.355	1	.104	1	1.816	1	.493	1
4970		min		.304	2	.236	2	.034	2	1.749	2	.276	2
4971		max	B	-.272	2	-.319	2	.059	1	-.031	1	.504	1
4972		min		-.435	1	-.553	1	.023	2	-.598	2	.298	2
4973	P1244	max	T	.547	1	.352	1	.097	1	1.776	1	.48	1
4974		min		.299	2	.234	2	.033	2	1.752	2	.272	2
4975		max	B	-.261	2	-.323	2	.067	1	-.173	1	.499	1
4976		min		-.418	1	-.553	1	.031	2	-.574	2	.297	2
4977	P1245	max	T	.539	1	.417	1	.061	1	1.853	2	.49	1
4978		min		.3	2	.277	2	.012	2	1.724	1	.289	2
4979		max	B	-.274	2	-.363	2	.071	1	2.344	2	.536	1
4980		min		-.45	1	-.593	1	.045	2	-.487	1	.328	2
4981	P1246	max	T	.536	1	.396	1	.07	1	1.824	2	.482	1
4982		min		.289	2	.264	2	.013	2	1.673	1	.278	2
4983		max	B	-.258	2	-.353	2	.09	1	-.421	1	.532	1
4984		min		-.419	1	-.598	1	.047	2	-.713	2	.316	2
4985	P1247	max	T	.535	1	.341	1	.097	1	1.763	2	.469	1
4986		min		.291	2	.228	2	.032	2	1.738	1	.265	2
4987		max	B	-.247	2	-.322	2	.082	1	-.236	1	.495	1
4988		min		-.393	1	-.556	1	.037	2	-.542	2	.292	2
4989	P1248	max	T	.524	1	.325	1	.1	1	1.791	2	.458	1
4990		min		.279	2	.218	2	.031	2	1.722	1	.254	2

Envelope Plate/Shell Principal Stresses (Continued)

	Plate		Sur...	Sigma1 [ksi]	LC	Sigma2 [ksi]	LC	Tau Max [k...	LC	Angle [rad]	LC	Von Mises [ksi]	LC
4991		max	B	-.232	2	-.314	2	.095	1	-.244	1	.49	1
4992		min		-.366	1	-.556	1	.041	2	-.511	2	.282	2
4993	P1249	max	T	.532	1	.371	1	.08	1	1.889	2	.472	1
4994		min		.275	2	.248	2	.013	2	1.687	1	.263	2
4995		max	B	-.241	2	-.335	2	.1	1	-.351	1	.522	1
4996		min		-.393	1	-.593	1	.047	2	-.655	2	.3	2
4997	P1250	max	T	.521	1	.346	1	.087	1	2.024	2	.459	1
4998		min		.258	2	.23	2	.014	2	1.739	1	.245	2
4999		max	B	-.225	2	-.314	2	.102	1	-.282	1	.505	1
5000		min		-.37	1	-.575	1	.044	2	-.623	2	.28	2
5001	P1251	max	T	.512	1	.305	1	.104	1	1.841	2	.446	1
5002		min		.264	2	.206	2	.029	2	1.732	1	.241	2
5003		max	B	-.217	2	-.301	2	.104	1	-.223	1	.479	1
5004		min		-.341	1	-.548	1	.042	2	-.488	2	.269	2
5005	P1252	max	T	.495	1	.283	1	.106	1	1.917	2	.43	1
5006		min		.247	2	.193	2	.027	2	1.763	1	.225	2
5007		max	B	-.202	2	-.283	2	.107	1	-.191	1	.463	1
5008		min		-.318	1	-.531	1	.041	2	-.478	2	.252	2
5009	P1253	max	T	.503	1	.321	1	.091	1	2.207	2	.441	1
5010		min		.24	2	.21	2	.015	2	1.817	1	.226	2
5011		max	B	-.209	2	-.288	2	.097	1	-.211	1	.479	1
5012		min		-.352	1	-.546	1	.04	2	-.621	2	.258	2
5013	P1254	max	T	.478	1	.294	1	.092	1	1.915	1	.418	1
5014		min		.222	2	.188	2	.017	2	-.738	2	.207	2
5015		max	B	-.193	2	-.261	2	.086	1	-.136	1	.447	1
5016		min		-.336	1	-.507	1	.034	2	-.659	2	.234	2
5017	P1255	max	T	.473	1	.26	1	.106	1	2.025	2	.41	1
5018		min		.227	2	.178	2	.025	2	1.819	1	.207	2
5019		max	B	-.187	2	-.261	2	.103	1	-.147	1	.439	1
5020		min		-.298	1	-.504	1	.037	2	-.488	2	.233	2
5021	P1256	max	T	.445	1	.236	1	.104	1	2.169	2	.386	1
5022		min		.207	2	.161	2	.023	2	1.889	1	.188	2
5023		max	B	-.172	2	-.237	2	.094	1	-.098	1	.407	1
5024		min		-.28	1	-.467	1	.033	2	-.527	2	.212	2
5025	P1257	max	T	.45	1	.265	1	.092	1	2.028	1	.392	1
5026		min		.206	2	.163	2	.021	2	-.572	2	.188	2
5027		max	B	-.176	2	-.234	2	.069	1	-.047	1	.409	1
5028		min		-.322	1	-.46	1	.029	2	-.752	2	.211	2
5029	P1258	max	T	.419	1	.233	1	.093	1	2.152	1	.364	1
5030		min		.191	2	.137	2	.027	2	-.45	2	.17	2
5031		max	B	-.157	2	-.209	2	.05	1	2.233	2	.368	1
5032		min		-.308	1	-.408	1	.026	2	.086	1	.189	2
5033	P1259	max	T	.413	1	.21	1	.101	1	2.339	2	.357	1
5034		min		.188	2	.141	2	.023	2	1.976	1	.169	2
5035		max	B	-.157	2	-.212	2	.08	1	-.039	1	.37	1
5036		min		-.264	1	-.423	1	.027	2	-.611	2	.19	2
5037	P1260	max	T	.378	1	.181	1	.098	1	2.078	1	.327	1
5038		min		.17	2	.12	2	.025	2	-.634	2	.151	2
5039		max	B	-.14	2	-.188	2	.062	1	.042	1	.329	1
5040		min		-.249	1	-.373	1	.024	2	-.762	2	.169	2
5041	P1261	max	T	.39	1	.196	1	.097	1	2.28	1	.338	1
5042		min		.177	2	.11	2	.034	2	-.365	2	.155	2
5043		max	B	-.135	2	-.19	2	.034	1	2.049	2	.329	1
5044		min		-.29	1	-.357	1	.027	2	.35	1	.169	2
5045	P1262	max	T	.364	1	.154	1	.105	1	-.308	2	.316	1
5046		min		.165	2	.084	2	.041	2	-.743	1	.143	2
5047		max	B	-.11	2	-.174	2	.033	1	1.894	2	.294	1

Envelope Plate/Shell Principal Stresses (Continued)

	Plate		Sur...	Sigma1 [ksi]	LC	Sigma2 [ksi]	LC	Tau Max [k...	LC	Angle [rad]	LC	Von Mises [ksi]	LC
5048		min		-.255	1	-.321	1	.032	2	.79	1	.153	2
5049	P1263	max	T	.343	1	.148	1	.098	1	2.193	1	.298	1
5050		min		.154	2	.095	2	.03	2	-.502	2	.135	2
5051		max	B	-.121	2	-.167	2	.043	1	2.173	2	.286	1
5052		min		-.233	1	-.32	1	.023	2	.187	1	.149	2
5053	P1264	max	T	.311	1	.11	1	.1	1	2.311	1	.273	1
5054		min		.141	2	.07	2	.035	2	-.408	2	.122	2
5055		max	B	-.097	2	-.15	2	.03	1	1.977	2	.247	1
5056		min		-.211	1	-.271	1	.027	2	.509	1	.132	2
5057	P1265	max	T	.341	1	.11	1	.116	1	-.27	2	.302	1
5058		min		.153	2	.058	2	.047	2	-.643	1	.134	2
5059		max	B	-.084	2	-.163	2	.051	1	1.786	2	.269	1
5060		min		-.203	1	-.305	1	.039	2	1.065	1	.141	2
5061	P1266	max	T	.322	1	.064	1	.129	1	-.247	2	.295	1
5062		min		.142	2	.035	2	.053	2	-.567	1	.128	2
5063		max	B	-.059	2	-.153	2	.075	1	1.709	2	.256	1
5064		min		-.145	1	-.295	1	.047	2	1.179	1	.134	2
5065	P1267	max	T	.284	1	.068	1	.108	1	-.347	2	.257	1
5066		min		.128	2	.045	2	.042	2	-.723	1	.113	2
5067		max	B	-.072	2	-.138	2	.037	1	1.834	2	.215	1
5068		min		-.169	1	-.243	1	.033	2	.923	1	.12	2
5069	P1268	max	T	.261	1	.024	1	.119	1	-.311	2	.25	1
5070		min		.117	2	.021	2	.048	2	-.637	1	.108	2
5071		max	B	-.047	2	-.128	2	.058	1	1.734	2	.199	1
5072		min		-.114	1	-.229	1	.04	2	1.117	1	.112	2
5073	P1269	max	T	.305	1	.021	1	.142	1	-.235	2	.295	1
5074		min		.132	2	.015	2	.059	2	-.512	1	.125	2
5075		max	B	-.037	2	-.145	2	.099	1	1.651	2	.256	1
5076		min		-.09	1	-.289	1	.054	2	1.228	1	.13	2
5077	P1270	max	T	.29	1	-.002	2	.154	1	-.232	2	.3	1
5078		min		.123	2	-.018	1	.062	2	-.476	1	.124	2
5079		max	B	-.017	2	-.137	2	.121	1	1.603	2	.264	1
5080		min		-.041	1	-.282	1	.06	2	1.248	1	.129	2
5081	P1271	max	T	.242	1	0	2	.132	1	-.295	2	.253	1
5082		min		.107	2	-.021	1	.053	2	-.575	1	.107	2
5083		max	B	-.024	2	-.12	2	.082	1	1.659	2	.199	1
5084		min		-.058	1	-.222	1	.048	2	1.188	1	.11	2
5085	P1272	max	T	.227	1	-.018	2	.144	1	-.294	2	.263	1
5086		min		.097	2	-.061	1	.057	2	-.538	1	.107	2
5087		max	B	-.005	2	-.112	2	.104	1	1.596	2	.213	1
5088		min		-.007	1	-.216	1	.054	2	1.209	1	.11	2
5089	P1273	max	T	.277	1	-.014	2	.163	1	-.234	2	.304	1
5090		min		.114	2	-.049	1	.064	2	-.454	1	.121	2
5091		max	B	0	1	-.13	2	.138	1	1.561	2	.275	1
5092		min		-.002	2	-.276	1	.064	2	1.251	1	.129	2
5093	P1274	max	T	.263	1	-.022	2	.166	1	-.24	2	.304	1
5094		min		.105	2	-.069	1	.063	2	-.444	1	.117	2
5095		max	B	.029	1	-.123	2	.149	1	1.524	2	.284	1
5096		min		.008	2	-.268	1	.066	2	1.244	1	.127	2
5097	P1275	max	T	.214	1	-.031	2	.154	1	-.304	2	.273	1
5098		min		.088	2	-.094	1	.06	2	-.521	1	.107	2
5099		max	B	.035	1	-.105	2	.123	1	1.539	2	.231	1
5100		min		.011	2	-.211	1	.058	2	1.205	1	.111	2
5101	P1276	max	T	.201	1	-.038	2	.159	1	-.323	2	.278	1
5102		min		.08	2	-.116	1	.059	2	-.521	1	.104	2
5103		max	B	.066	1	-.099	2	.136	1	1.485	2	.245	1
5104		min		.021	2	-.205	1	.06	2	1.185	1	.11	2

Envelope Plate/Shell Principal Stresses (Continued)

	Plate		Sur...	Sigma1 [ksi]	LC	Sigma2 [ksi]	LC	Tau Max [k...	LC	Angle [rad]	LC	Von Mises [ksi]	LC
5105	P1277	max	T	.249	1	-.024	2	.164	1	-.244	2	.296	1
5106		min		.096	2	-.079	1	.06	2	-.439	1	.11	2
5107		max	B	.047	1	-.116	2	.153	1	1.493	2	.285	1
5108		min		.013	2	-.259	1	.065	2	1.233	1	.123	2
5109	P1278	max	T	.233	1	-.021	2	.154	1	-.241	2	.278	1
5110		min		.088	2	-.075	1	.054	2	-.435	1	.1	2
5111		max	B	.052	1	-.109	2	.149	1	1.472	2	.276	1
5112		min		.013	2	-.246	1	.061	2	1.222	1	.116	2
5113	P1279	max	T	.189	1	-.04	2	.157	1	-.348	2	.274	1
5114		min		.071	2	-.125	1	.055	2	-.533	1	.097	2
5115		max	B	.084	1	-.092	2	.141	1	1.436	2	.251	1
5116		min		.025	2	-.198	1	.058	2	1.156	1	.106	2
5117	P1280	max	T	.174	1	-.035	2	.146	1	-.374	2	.255	1
5118		min		.063	2	-.119	1	.049	2	-.554	1	.085	2
5119		max	B	.087	1	-.084	2	.137	1	1.392	2	.242	1
5120		min		.023	2	-.187	1	.054	2	1.122	1	.098	2
5121	P1281	max	T	.212	1	-.013	2	.134	1	-.214	2	.245	1
5122		min		.08	2	-.056	1	.047	2	-.413	1	.087	2
5123		max	B	.042	1	-.102	2	.136	1	1.468	2	.253	1
5124		min		.009	2	-.229	1	.055	2	1.229	1	.107	2
5125	P1282	max	T	.181	1	-.003	2	.099	1	-.106	2	.19	1
5126		min		.076	2	-.017	1	.04	2	-.261	1	.077	2
5127		max	B	.013	1	-.098	2	.108	1	1.514	2	.209	1
5128		min		.002	2	-.202	1	.05	2	1.356	1	.1	2
5129	P1283	max	T	.152	1	-.023	2	.123	1	-.385	2	.216	1
5130		min		.053	2	-.094	1	.038	2	-.569	1	.068	2
5131		max	B	.071	1	-.077	2	.121	1	1.369	2	.215	1
5132		min		.015	2	-.17	1	.046	2	1.098	1	.085	2
5133	P1284	max	T	.107	1	-.007	2	.071	1	-.252	2	.127	1
5134		min		.044	2	-.034	1	.025	2	-.462	1	.048	2
5135		max	B	.025	1	-.071	2	.079	1	1.444	2	.146	1
5136		min		.004	2	-.132	1	.038	2	1.213	1	.073	2
5137	P1285	max	T	.04	1	-.028	2	.063	1	.907	2	.111	1
5138		min		.01	2	-.085	1	.019	2	.89	1	.034	2
5139		max	B	.042	1	-.057	2	.067	1	2.09	1	.118	1
5140		min		.008	2	-.091	1	.033	2	1.806	2	.061	2
5141	P1286	max	T	.091	1	-.051	2	.121	1	.771	1	.212	1
5142		min		.024	2	-.151	1	.038	2	.739	2	.066	2
5143		max	B	.107	1	-.064	2	.12	1	2.152	1	.209	1
5144		min		.027	2	-.134	1	.045	2	1.894	2	.081	2
5145	P1287	max	T	.019	1	-.065	2	.103	1	1.171	2	.196	1
5146		min		.004	2	-.186	1	.035	2	1.156	1	.067	2
5147		max	B	.108	1	-.031	2	.075	1	2.09	2	.133	1
5148		min		.019	2	-.041	1	.025	2	-.658	1	.044	2
5149	P1288	max	T	.057	1	-.088	2	.154	1	.937	1	.283	1
5150		min		.014	2	-.251	1	.051	2	.921	2	.096	2
5151		max	B	.186	1	-.044	2	.136	1	2.348	1	.241	1
5152		min		.047	2	-.086	1	.045	2	2.095	2	.079	2
5153	P1289	max	T	.111	1	-.062	2	.142	1	.693	1	.247	1
5154		min		.032	2	-.173	1	.047	2	.621	2	.082	2
5155		max	B	.129	1	-.07	2	.139	1	2.101	1	.241	1
5156		min		.038	2	-.148	1	.054	2	1.836	2	.095	2
5157	P1290	max	T	.124	1	-.065	2	.148	1	.637	1	.258	1
5158		min		.039	2	-.173	1	.052	2	.536	2	.092	2
5159		max	B	.129	1	-.076	2	.142	1	2.05	1	.247	1
5160		min		.043	2	-.155	1	.059	2	1.764	2	.104	2
5161	P1291	max	T	.062	1	-.097	2	.164	1	.826	1	.303	1

Envelope Plate/Shell Principal Stresses (Continued)

	Plate		Sur...	Sigma1 [ksi]	LC	Sigma2 [ksi]	LC	Tau Max [k...	LC	Angle [rad]	LC	Von Mises [ksi]	LC
5162		min		.016	2	-.267	1	.056	2	.772	2	.106	2
5163		max	B	.208	1	-.048	2	.149	1	2.246	1	.265	1
5164		min		.06	2	-.09	1	.054	2	1.977	2	.093	2
5165	P1292	max	T	.063	1	-.098	2	.162	1	.748	1	.297	1
5166		min		.018	2	-.261	1	.058	2	.66	2	.108	2
5167		max	B	.204	1	-.05	2	.146	1	2.163	1	.259	1
5168		min		.065	2	-.087	1	.057	2	1.862	2	.1	2
5169	P1293	max	T	.135	1	-.062	2	.145	1	.605	1	.251	1
5170		min		.047	2	-.154	1	.055	2	.476	2	.095	2
5171		max	B	.109	1	-.081	2	.134	1	2.011	1	.234	1
5172		min		.041	2	-.159	1	.061	2	1.693	2	.107	2
5173	P1294	max	T	.148	1	-.053	2	.134	1	.598	1	.233	1
5174		min		.055	2	-.121	1	.054	2	.437	2	.093	2
5175		max	B	.073	1	-.086	2	.118	1	1.989	1	.209	1
5176		min		.032	2	-.163	1	.059	2	1.623	2	.105	2
5177	P1295	max	T	.066	1	-.093	2	.151	1	.7	1	.274	1
5178		min		.023	2	-.235	1	.058	2	.578	2	.106	2
5179		max	B	.179	1	-.053	2	.131	1	2.103	1	.232	1
5180		min		.062	2	-.084	1	.057	2	1.757	2	.099	2
5181	P1296	max	T	.074	1	-.08	2	.134	1	.687	1	.24	1
5182		min		.029	2	-.194	1	.054	2	.524	2	.098	2
5183		max	B	.135	1	-.057	2	.109	1	2.072	1	.191	1
5184		min		.051	2	-.083	1	.054	2	1.661	2	.094	2
5185	P1297	max	T	.163	1	-.037	2	.119	1	.624	1	.211	1
5186		min		.064	2	-.075	1	.051	2	.417	2	.088	2
5187		max	B	.023	1	-.092	2	.096	1	1.994	1	.18	1
5188		min		.017	2	-.168	1	.054	2	1.555	2	.101	2
5189	P1298	max	T	.183	1	-.017	2	.103	1	.692	1	.196	1
5190		min		.073	2	-.023	1	.045	2	.418	2	.084	2
5191		max	B	-.002	2	-.099	2	.07	1	2.049	1	.161	1
5192		min		-.035	1	-.175	1	.048	2	1.487	2	.098	2
5193	P1299	max	T	.088	1	-.061	2	.115	1	.718	1	.201	1
5194		min		.037	2	-.142	1	.049	2	.499	2	.086	2
5195		max	B	.079	1	-.062	2	.082	1	2.087	1	.143	1
5196		min		.034	2	-.086	1	.048	2	1.571	2	.084	2
5197	P1300	max	T	.113	1	-.038	2	.099	1	.802	1	.173	1
5198		min		.047	2	-.086	1	.043	2	.506	2	.074	2
5199		max	B	.017	1	-.069	2	.057	1	2.192	1	.107	1
5200		min		.012	2	-.097	1	.041	2	1.481	2	.076	2
5201	P1301	max	T	.211	1	.029	1	.091	1	.809	1	.198	1
5202		min		.084	2	.006	2	.039	2	.451	2	.082	2
5203		max	B	-.025	2	-.106	2	.048	1	2.21	1	.165	1
5204		min		-.094	1	-.19	1	.041	2	1.416	2	.096	2
5205	P1302	max	T	.248	1	.075	1	.087	1	.963	1	.221	1
5206		min		.097	2	.031	2	.033	2	.52	2	.086	2
5207		max	B	-.05	2	-.116	2	.039	1	1.334	2	.194	1
5208		min		-.142	1	-.221	1	.033	2	-.598	1	.101	2
5209	P1303	max	T	.149	1	-.013	2	.091	1	.933	1	.168	1
5210		min		.059	2	-.033	1	.036	2	.554	2	.067	2
5211		max	B	-.013	2	-.077	2	.043	1	1.385	2	.11	1
5212		min		-.039	1	-.124	1	.032	2	-.678	1	.072	2
5213	P1304	max	T	.197	1	.013	2	.093	1	1.08	1	.192	1
5214		min		.074	2	.011	1	.031	2	.65	2	.069	2
5215		max	B	-.039	2	-.087	2	.049	1	1.264	2	.151	1
5216		min		-.075	1	-.174	1	.024	2	-.362	1	.076	2
5217	P1305	max	T	.295	1	.112	1	.092	1	1.12	1	.258	1
5218		min		.111	2	.056	2	.028	2	.638	2	.096	2

Envelope Plate/Shell Principal Stresses (Continued)

	Plate		Sur...	Sigma1 [ksi]	LC	Sigma2 [ksi]	LC	Tau Max [k...	LC	Angle [rad]	LC	Von Mises [ksi]	LC
5219		max	B	-.075	2	-.127	2	.051	1	1.229	2	.238	1
5220		min		-.171	1	-.272	1	.026	2	-.294	1	.11	2
5221	P1306	max	T	.348	1	.141	1	.103	1	1.251	1	.303	1
5222		min		.128	2	.078	2	.025	2	.807	2	.112	2
5223		max	B	-.1	2	-.139	2	.07	1	1.082	2	.288	1
5224		min		-.191	1	-.332	1	.02	2	-.141	1	.124	2
5225	P1307	max	T	.253	1	.047	1	.103	1	1.208	1	.233	1
5226		min		.092	2	.037	2	.028	2	.796	2	.08	2
5227		max	B	-.064	2	-.099	2	.068	1	1.084	2	.205	1
5228		min		-.099	1	-.236	1	.018	2	-.19	1	.087	2
5229	P1308	max	T	.31	1	.076	1	.117	1	1.306	1	.28	1
5230		min		.113	2	.057	2	.028	2	.964	2	.098	2
5231		max	B	-.087	2	-.115	2	.089	1	.812	2	.26	1
5232		min		-.12	1	-.298	1	.014	2	-.105	1	.104	2
5233	P1309	max	T	.401	1	.165	1	.118	1	1.352	1	.349	1
5234		min		.149	2	.098	2	.025	2	.996	2	.131	2
5235		max	B	-.122	2	-.155	2	.091	1	.878	2	.338	1
5236		min		-.208	1	-.389	1	.016	2	-.058	1	.142	2
5237	P1310	max	T	.451	1	.186	1	.133	1	1.433	1	.392	1
5238		min		.171	2	.114	2	.028	2	1.159	2	.151	2
5239		max	B	-.142	2	-.174	2	.108	1	.653	2	.383	1
5240		min		-.225	1	-.442	1	.016	2	-.002	1	.16	2
5241	P1311	max	T	.365	1	.102	1	.132	1	1.382	1	.326	1
5242		min		.136	2	.075	2	.031	2	1.115	2	.118	2
5243		max	B	-.105	2	-.135	2	.108	1	.524	2	.311	1
5244		min		-.139	1	-.356	1	.015	2	-.052	1	.123	2
5245	P1312	max	T	.415	1	.124	1	.146	1	1.445	1	.369	1
5246		min		.16	2	.089	2	.036	2	1.232	2	.139	2
5247		max	B	-.12	2	-.157	2	.125	1	.332	2	.356	1
5248		min		-.159	1	-.408	1	.019	2	-.013	1	.142	2
5249	P1313	max	T	.495	1	.204	1	.145	1	1.501	1	.431	1
5250		min		.195	2	.128	2	.033	2	1.283	2	.171	2
5251		max	B	-.16	2	-.194	2	.122	1	.475	2	.422	1
5252		min		-.243	1	-.487	1	.017	2	.043	1	.179	2
5253	P1314	max	T	.531	1	.22	1	.156	1	1.559	1	.462	1
5254		min		.218	2	.141	2	.038	2	1.376	2	.191	2
5255		max	B	-.176	2	-.214	2	.131	1	.349	2	.453	1
5256		min		-.261	1	-.523	1	.019	2	.081	1	.198	2
5257	P1315	max	T	.46	1	.144	1	.158	1	1.498	1	.407	1
5258		min		.184	2	.102	2	.041	2	1.32	2	.16	2
5259		max	B	-.133	2	-.18	2	.137	1	.22	2	.395	1
5260		min		-.178	1	-.453	1	.023	2	.019	1	.162	2
5261	P1316	max	T	.496	1	.162	1	.167	1	1.545	1	.438	1
5262		min		.207	2	.113	2	.047	2	1.388	2	.179	2
5263		max	B	-.146	2	-.201	2	.145	1	.147	2	.426	1
5264		min		-.198	1	-.488	1	.028	2	.047	1	.18	2
5265	P1317	max	T	.559	1	.235	1	.162	1	1.612	1	.486	1
5266		min		.239	2	.152	2	.043	2	1.45	2	.209	2
5267		max	B	-.191	2	-.232	2	.135	1	.259	2	.476	1
5268		min		-.279	1	-.549	1	.021	2	.113	1	.215	2
5269	P1318	max	T	.577	1	.248	1	.164	1	1.658	1	.501	1
5270		min		.257	2	.163	2	.047	2	1.5	2	.225	2
5271		max	B	-.205	2	-.248	2	.134	1	.156	2	.49	1
5272		min		-.298	1	-.565	1	.022	2	.138	1	.23	2
5273	P1319	max	T	.524	1	.178	1	.173	1	1.587	1	.462	1
5274		min		.228	2	.123	2	.052	2	1.442	2	.197	2
5275		max	B	-.158	2	-.221	2	.15	1	.092	2	.448	1

Envelope Plate/Shell Principal Stresses (Continued)

	Plate		Sur...	Sigma1 [ksi]	LC	Sigma2 [ksi]	LC	Tau Max [k...	LC	Angle [rad]	LC	Von Mises [ksi]	LC
5276		min		-.216	1	-.515	1	.031	2	.07	1	.197	2
5277	P1320	max	T	.544	1	.192	1	.176	1	1.624	1	.478	1
5278		min		.246	2	.132	2	.057	2	1.488	2	.213	2
5279		max	B	-.169	2	-.238	2	.15	1	.087	1	.463	1
5280		min		-.234	1	-.534	1	.034	2	.045	2	.212	2
5281	P1321	max	T	.585	1	.26	1	.162	1	1.698	1	.508	1
5282		min		.272	2	.172	2	.05	2	1.555	2	.238	2
5283		max	B	-.218	2	-.263	2	.128	1	.153	1	.496	1
5284		min		-.316	1	-.572	1	.022	2	.076	2	.243	2
5285	P1322	max	T	.585	1	.271	1	.157	1	1.728	1	.507	1
5286		min		.283	2	.18	2	.051	2	1.589	2	.248	2
5287		max	B	-.227	2	-.274	2	.119	1	.152	1	.496	1
5288		min		-.333	1	-.57	1	.024	2	-.04	2	.254	2
5289	P1323	max	T	.556	1	.204	1	.176	1	1.655	1	.487	1
5290		min		.26	2	.14	2	.06	2	1.527	2	.226	2
5291		max	B	-.178	2	-.252	2	.147	1	.096	1	.471	1
5292		min		-.25	1	-.544	1	.037	2	0	2	.224	2
5293	P1324	max	T	.56	1	.214	1	.173	1	1.68	1	.489	1
5294		min		.272	2	.146	2	.063	2	1.561	2	.236	2
5295		max	B	-.185	2	-.264	2	.141	1	.095	1	.474	1
5296		min		-.265	1	-.547	1	.04	2	-.045	2	.235	2
5297	P1325	max	T	.578	1	.28	1	.149	1	1.748	1	.501	1
5298		min		.291	2	.187	2	.052	2	1.631	2	.255	2
5299		max	B	-.233	2	-.284	2	.108	1	.128	1	.491	1
5300		min		-.346	1	-.562	1	.026	2	-.124	2	.262	2
5301	P1326	max	T	.567	1	.286	1	.14	1	1.755	1	.491	1
5302		min		.294	2	.191	2	.052	2	1.654	2	.258	2
5303		max	B	-.234	2	-.292	2	.1	1	.078	1	.485	1
5304		min		-.354	1	-.553	1	.029	2	-.217	2	.268	2
5305	P1327	max	T	.558	1	.222	1	.168	1	1.698	1	.486	1
5306		min		.279	2	.151	2	.064	2	1.592	2	.242	2
5307		max	B	-.189	2	-.273	2	.135	1	.08	1	.472	1
5308		min		-.275	1	-.545	1	.042	2	-.088	2	.242	2
5309	P1328	max	T	.551	1	.226	1	.163	1	1.709	1	.48	1
5310		min		.283	2	.154	2	.064	2	1.619	2	.245	2
5311		max	B	-.19	2	-.279	2	.129	1	.054	1	.468	1
5312		min		-.281	1	-.54	1	.045	2	-.126	2	.247	2
5313	P1329	max	T	.553	1	.287	1	.133	1	1.751	1	.479	1
5314		min		.293	2	.192	2	.051	2	1.677	2	.258	2
5315		max	B	-.23	2	-.297	2	.096	1	.009	1	.479	1
5316		min		-.353	1	-.545	1	.034	2	-.275	2	.27	2
5317	P1330	max	T	.539	1	.283	1	.128	1	1.74	1	.467	1
5318		min		.289	2	.19	2	.049	2	1.7	2	.254	2
5319		max	B	-.222	2	-.299	2	.098	1	-.059	1	.473	1
5320		min		-.343	1	-.539	1	.038	2	-.307	2	.269	2
5321	P1331	max	T	.541	1	.226	1	.157	1	1.714	1	.471	1
5322		min		.282	2	.155	2	.064	2	1.646	2	.245	2
5323		max	B	-.188	2	-.283	2	.126	1	.02	1	.462	1
5324		min		-.281	1	-.533	1	.047	2	-.157	2	.249	2
5325	P1332	max	T	.529	1	.222	1	.153	1	1.716	1	.46	1
5326		min		.278	2	.153	2	.062	2	1.672	2	.241	2
5327		max	B	-.183	2	-.282	2	.126	1	-.015	1	.455	1
5328		min		-.275	1	-.526	1	.049	2	-.181	2	.248	2
5329	P1333	max	T	.526	1	.274	1	.126	1	1.731	1	.456	1
5330		min		.281	2	.185	2	.048	2	1.726	2	.247	2
5331		max	B	-.212	2	-.296	2	.104	1	-.106	1	.467	1
5332		min		-.327	1	-.535	1	.042	2	-.322	2	.264	2

Envelope Plate/Shell Principal Stresses (Continued)

	Plate		Sur...	Sigma1 [ksi]	LC	Sigma2 [ksi]	LC	Tau Max [k...	LC	Angle [rad]	LC	Von Mises [ksi]	LC
5333	P1334	max	T	.511	1	.26	1	.126	1	1.758	2	.443	1
5334		min		.269	2	.178	2	.045	2	1.731	1	.237	2
5335		max	B	-.201	2	-.288	2	.111	1	-.127	1	.459	1
5336		min		-.306	1	-.528	1	.044	2	-.327	2	.256	2
5337	P1335	max	T	.514	1	.214	1	.15	1	1.72	1	.447	1
5338		min		.27	2	.149	2	.06	2	1.7	2	.234	2
5339		max	B	-.176	2	-.278	2	.127	1	-.043	1	.448	1
5340		min		-.263	1	-.517	1	.051	2	-.197	2	.244	2
5341	P1336	max	T	.498	1	.202	1	.148	1	1.731	2	.433	1
5342		min		.259	2	.144	2	.057	2	1.729	1	.224	2
5343		max	B	-.167	2	-.27	2	.13	1	-.06	1	.438	1
5344		min		-.247	1	-.506	1	.051	2	-.209	2	.236	2
5345	P1337	max	T	.494	1	.243	1	.126	1	1.801	2	.428	1
5346		min		.254	2	.169	2	.042	2	1.744	1	.224	2
5347		max	B	-.188	2	-.276	2	.115	1	-.128	1	.447	1
5348		min		-.285	1	-.516	1	.044	2	-.329	2	.244	2
5349	P1338	max	T	.473	1	.224	1	.125	1	1.856	2	.41	1
5350		min		.236	2	.159	2	.039	2	1.771	1	.208	2
5351		max	B	-.175	2	-.26	2	.116	1	-.114	1	.43	1
5352		min		-.263	1	-.496	1	.043	2	-.336	2	.229	2
5353	P1339	max	T	.478	1	.187	1	.145	1	1.771	2	.417	1
5354		min		.244	2	.136	2	.054	2	1.744	1	.212	2
5355		max	B	-.157	2	-.258	2	.131	1	-.064	1	.425	1
5356		min		-.228	1	-.49	1	.05	2	-.215	2	.225	2
5357	P1340	max	T	.453	1	.169	1	.142	1	1.812	2	.397	1
5358		min		.226	2	.128	2	.049	2	1.769	1	.196	2
5359		max	B	-.146	2	-.242	2	.13	1	-.059	1	.406	1
5360		min		-.209	1	-.468	1	.048	2	-.229	2	.211	2
5361	P1341	max	T	.447	1	.203	1	.122	1	1.929	2	.388	1
5362		min		.216	2	.146	2	.035	2	1.812	1	.191	2
5363		max	B	-.161	2	-.24	2	.113	1	-.091	1	.406	1
5364		min		-.243	1	-.469	1	.039	2	-.352	2	.212	2
5365	P1342	max	T	.416	1	.18	1	.118	1	2.025	2	.361	1
5366		min		.194	2	.133	2	.031	2	1.865	1	.172	2
5367		max	B	-.148	2	-.217	2	.105	1	-.06	1	.376	1
5368		min		-.224	1	-.434	1	.035	2	-.389	2	.192	2
5369	P1343	max	T	.425	1	.149	1	.138	1	1.867	2	.373	1
5370		min		.206	2	.117	2	.044	2	1.802	1	.179	2
5371		max	B	-.134	2	-.223	2	.126	1	-.046	1	.382	1
5372		min		-.189	1	-.44	1	.044	2	-.245	2	.195	2
5373	P1344	max	T	.391	1	.126	1	.132	1	1.936	2	.346	1
5374		min		.184	2	.105	2	.039	2	1.845	1	.16	2
5375		max	B	-.122	2	-.201	2	.118	1	-.026	1	.352	1
5376		min		-.169	1	-.405	1	.039	2	-.273	2	.176	2
5377	P1345	max	T	.381	1	.155	1	.113	1	2.154	2	.331	1
5378		min		.173	2	.117	2	.028	2	1.932	1	.153	2
5379		max	B	-.135	2	-.193	2	.092	1	-.022	1	.339	1
5380		min		-.206	1	-.391	1	.029	2	-.454	2	.171	2
5381	P1346	max	T	.342	1	.128	1	.107	1	2.309	2	.299	1
5382		min		.152	2	.099	2	.026	2	2.014	1	.134	2
5383		max	B	-.12	2	-.168	2	.076	1	.028	1	.296	1
5384		min		-.189	1	-.342	1	.024	2	-.576	2	.15	2
5385	P1347	max	T	.353	1	.102	1	.126	1	2.027	2	.315	1
5386		min		.161	2	.092	2	.034	2	1.898	1	.14	2
5387		max	B	-.11	2	-.177	2	.106	1	0	1	.315	1
5388		min		-.15	1	-.362	1	.033	2	-.32	2	.155	2
5389	P1348	max	T	.311	1	.076	2	.118	1	2.145	2	.281	1

Envelope Plate/Shell Principal Stresses (Continued)

	Plate		Sur...	Sigma1 [ksi]	LC	Sigma2 [ksi]	LC	Tau Max [k...	LC	Angle [rad]	LC	Von Mises [ksi]	LC
5390		min		.137	2	.074	1	.031	2	1.963	1	.119	2
5391		max	B	-.097	2	-.152	2	.092	1	.033	1	.273	1
5392		min		-.131	1	-.314	1	.027	2	-.403	2	.133	2
5393	P1349	max	T	.302	1	.097	1	.103	1	2.11	1	.267	1
5394		min		.133	2	.078	2	.028	2	-.673	2	.116	2
5395		max	B	-.104	2	-.145	2	.057	1	.109	1	.251	1
5396		min		-.173	1	-.288	1	.02	2	-.777	2	.129	2
5397	P1350	max	T	.264	1	.062	1	.101	1	2.219	1	.239	1
5398		min		.117	2	.055	2	.031	2	-.54	2	.102	2
5399		max	B	-.083	2	-.126	2	.039	1	2.118	2	.205	1
5400		min		-.155	1	-.233	1	.021	2	.278	1	.111	2
5401	P1351	max	T	.267	1	.058	2	.112	1	2.29	2	.248	1
5402		min		.115	2	.043	1	.029	2	2.041	1	.1	2
5403		max	B	-.084	2	-.126	2	.074	1	.082	1	.226	1
5404		min		-.112	1	-.26	1	.021	2	-.551	2	.111	2
5405	P1352	max	T	.222	1	.036	2	.107	1	2.133	1	.218	1
5406		min		.096	2	.009	1	.03	2	-.701	2	.084	2
5407		max	B	-.067	2	-.103	2	.055	1	2.343	2	.175	1
5408		min		-.093	1	-.202	1	.018	2	.17	1	.091	2
5409	P1353	max	T	.23	1	.03	2	.104	1	2.328	1	.22	1
5410		min		.103	2	.021	1	.037	2	-.448	2	.092	2
5411		max	B	-.06	2	-.112	2	.03	1	1.915	2	.166	1
5412		min		-.127	1	-.187	1	.026	2	.649	1	.097	2
5413	P1354	max	T	.201	1	.005	2	.112	1	-.393	2	.214	1
5414		min		.091	2	-.023	1	.043	2	-.718	1	.088	2
5415		max	B	-.035	2	-.101	2	.043	1	1.774	2	.142	1
5416		min		-.078	1	-.164	1	.033	2	.992	1	.089	2
5417	P1355	max	T	.181	1	.012	2	.106	1	2.235	1	.198	1
5418		min		.079	2	-.031	1	.033	2	-.577	2	.073	2
5419		max	B	-.045	2	-.085	2	.037	1	2.057	2	.126	1
5420		min		-.07	1	-.145	1	.02	2	.372	1	.074	2
5421	P1356	max	T	.144	1	-.014	2	.111	1	2.335	1	.195	1
5422		min		.064	2	-.077	1	.039	2	-.495	2	.072	2
5423		max	B	-.02	2	-.072	2	.035	1	1.841	2	.091	1
5424		min		-.033	1	-.103	1	.026	2	.754	1	.064	2
5425	P1357	max	T	.179	1	-.018	2	.124	1	-.368	2	.222	1
5426		min		.08	2	-.07	1	.049	2	-.648	1	.09	2
5427		max	B	-.011	2	-.092	2	.066	1	1.672	2	.144	1
5428		min		-.021	1	-.153	1	.041	2	1.121	1	.088	2
5429	P1358	max	T	.162	1	-.037	2	.138	1	-.368	2	.24	1
5430		min		.07	2	-.114	1	.054	2	-.607	1	.095	2
5431		max	B	.033	1	-.085	2	.09	1	1.587	2	.166	1
5432		min		.01	2	-.147	1	.048	2	1.155	1	.091	2
5433	P1359	max	T	.116	1	-.039	2	.121	1	-.455	2	.21	1
5434		min		.052	2	-.126	1	.045	2	-.727	1	.079	2
5435		max	B	.022	1	-.062	2	.053	1	1.693	2	.096	1
5436		min		.005	2	-.083	1	.034	2	1.006	1	.065	2
5437	P1360	max	T	.097	1	-.061	2	.136	1	-.451	2	.239	1
5438		min		.042	2	-.176	1	.052	2	-.679	1	.09	2
5439		max	B	.082	1	-.055	2	.079	1	1.576	2	.136	1
5440		min		.028	2	-.076	1	.041	2	1.08	1	.073	2
5441	P1361	max	T	.15	1	-.052	2	.15	1	-.387	2	.26	1
5442		min		.062	2	-.151	1	.057	2	-.594	1	.099	2
5443		max	B	.08	1	-.078	2	.112	1	1.508	2	.197	1
5444		min		.027	2	-.144	1	.052	2	1.146	1	.095	2
5445	P1362	max	T	.14	1	-.061	2	.158	1	-.423	2	.275	1
5446		min		.054	2	-.176	1	.057	2	-.604	1	.099	2

Envelope Plate/Shell Principal Stresses (Continued)

	Plate		Sur...	Sigma1 [ksi]	LC	Sigma2 [ksi]	LC	Tau Max [k...	LC	Angle [rad]	LC	Von Mises [ksi]	LC
5447		max	B	.115	1	-.072	2	.128	1	1.431	2	.222	1
5448		min		.037	2	-.142	1	.055	2	1.112	1	.096	2
5449	P1363	max	T	.085	1	-.079	2	.152	1	-.476	2	.273	1
5450		min		.034	2	-.22	1	.057	2	-.665	1	.101	2
5451		max	B	.135	1	-.049	2	.105	1	1.469	2	.184	1
5452		min		.046	2	-.074	1	.047	2	1.076	1	.082	2
5453	P1364	max	T	.079	1	-.091	2	.166	1	-.527	2	.3	1
5454		min		.028	2	-.253	1	.059	2	-.683	1	.107	2
5455		max	B	.177	1	-.044	2	.127	1	1.36	2	.225	1
5456		min		.059	2	-.077	1	.051	2	1.033	1	.089	2
5457	P1365	max	T	.132	1	-.063	2	.16	1	-.476	2	.278	1
5458		min		.047	2	-.188	1	.055	2	-.635	1	.095	2
5459		max	B	.135	1	-.066	2	.137	1	1.352	2	.237	1
5460		min		.041	2	-.139	1	.053	2	1.061	1	.093	2
5461	P1366	max	T	.122	1	-.057	2	.152	1	-.546	2	.266	1
5462		min		.04	2	-.183	1	.048	2	-.684	1	.084	2
5463		max	B	.138	1	-.06	2	.136	1	1.27	2	.235	1
5464		min		.038	2	-.133	1	.049	2	.997	1	.085	2
5465	P1367	max	T	.078	1	-.095	2	.174	1	-.605	2	.317	1
5466		min		.024	2	-.27	1	.059	2	-.728	1	.109	2
5467		max	B	.203	1	-.04	2	.142	1	1.244	2	.254	1
5468		min		.063	2	-.082	1	.052	2	.964	1	.09	2
5469	P1368	max	T	.079	1	-.091	2	.174	1	2.343	1	.316	1
5470		min		.021	2	-.269	1	.056	2	-.711	2	.103	2
5471		max	B	.211	1	-.037	2	.149	1	1.112	2	.265	1
5472		min		.061	2	-.087	1	.049	2	.874	1	.085	2
5473	P1369	max	T	.106	1	-.044	2	.131	1	-.635	2	.228	1
5474		min		.032	2	-.156	1	.038	2	-.748	1	.066	2
5475		max	B	.12	1	-.052	2	.12	1	1.196	2	.208	1
5476		min		.027	2	-.12	1	.04	2	.928	1	.07	2
5477	P1370	max	T	.053	1	-.019	2	.067	1	2.324	1	.116	1
5478		min		.017	2	-.081	1	.018	2	-.673	2	.031	2
5479		max	B	.056	1	-.042	2	.064	1	1.271	2	.111	1
5480		min		.009	2	-.072	1	.026	2	.923	1	.047	2
5481	P1371	max	T	.074	1	-.079	2	.159	1	2.291	2	.289	1
5482		min		.018	2	-.245	1	.049	2	2.246	1	.09	2
5483		max	B	.195	1	-.033	2	.14	1	.968	2	.248	1
5484		min		.05	2	-.085	1	.042	2	.767	1	.073	2
5485	P1372	max	T	.029	1	-.052	2	.098	1	2.062	2	.182	1
5486		min		.006	2	-.166	1	.029	2	2.057	1	.055	2
5487		max	B	.123	1	-.019	2	.081	1	.883	2	.146	1
5488		min		.024	2	-.039	1	.022	2	.608	1	.038	2
5489	P1373	max	T	.011	1	-.11	2	.161	1	1.254	2	.316	1
5490		min		.002	2	-.311	1	.056	2	1.254	1	.112	2
5491		max	B	.216	1	-.017	2	.119	1	-.442	1	.228	1
5492		min		.045	2	-.023	1	.031	2	-.7	2	.056	2
5493	P1374	max	T	.035	1	-.136	2	.206	1	1.033	1	.395	1
5494		min		.008	2	-.377	1	.072	2	1.016	2	.14	2
5495		max	B	.298	1	-.031	2	.177	1	2.281	2	.33	1
5496		min		.08	2	-.056	1	.056	2	-.656	1	.099	2
5497	P1375	max	T	.006	1	-.16	2	.227	1	1.29	1	.452	1
5498		min		.001	2	-.449	1	.081	2	1.282	2	.161	2
5499		max	B	.346	1	-.012	2	.181	1	-.36	1	.354	1
5500		min		.086	2	-.016	1	.049	2	-.52	2	.092	2
5501	P1376	max	T	.017	1	-.191	2	.271	1	1.08	1	.534	1
5502		min		.004	2	-.525	1	.097	2	1.06	2	.193	2
5503		max	B	.437	1	-.023	2	.237	1	-.582	1	.457	1

Envelope Plate/Shell Principal Stresses (Continued)

	Plate		Sur...	Sigma1 [ksi]	LC	Sigma2 [ksi]	LC	Tau Max [k...	LC	Angle [rad]	LC	Von Mises [ksi]	LC
5504		min		.126	2	-.037	1	.075	2	-.743	2	.139	2
5505	P1377	max	T	.02	1	-.142	2	.204	1	.916	1	.398	1
5506		min		.002	2	-.388	1	.072	2	.871	2	.143	2
5507		max	B	.315	1	-.028	2	.178	1	2.119	2	.338	1
5508		min		.092	2	-.042	1	.06	2	-.78	1	.109	2
5509	P1378	max	T	.003	1	-.141	2	.188	1	.831	1	.374	1
5510		min		-.002	2	-.372	1	.069	2	.754	2	.139	2
5511		max	B	.303	1	-.022	1	.162	1	2.262	1	.314	1
5512		min		.095	2	-.025	2	.06	2	1.966	2	.11	2
5513	P1379	max	T	-.012	2	-.198	2	.255	1	.968	1	.522	1
5514		min		-.023	1	-.533	1	.093	2	.927	2	.192	2
5515		max	B	.45	1	.003	1	.223	1	2.225	2	.448	1
5516		min		.137	2	-.011	2	.074	2	-.709	1	.143	2
5517	P1380	max	T	-.025	2	-.193	2	.224	1	.885	1	.481	1
5518		min		-.062	1	-.509	1	.084	2	.816	2	.182	2
5519		max	B	.427	1	.047	1	.19	1	2.331	1	.406	1
5520		min		.135	2	.001	2	.067	2	2.057	2	.135	2
5521	P1381	max	T	-.003	2	-.131	2	.165	1	.779	1	.334	1
5522		min		-.006	1	-.337	1	.064	2	.664	2	.13	2
5523		max	B	.267	1	-.006	1	.137	1	2.192	1	.27	1
5524		min		.089	2	-.024	2	.056	2	1.829	2	.103	2
5525	P1382	max	T	0	2	-.114	2	.14	1	.768	1	.282	1
5526		min		-.003	1	-.284	1	.057	2	.605	2	.114	2
5527		max	B	.213	1	.002	1	.106	1	2.164	1	.212	1
5528		min		.075	2	-.025	2	.05	2	1.705	2	.09	2
5529	P1383	max	T	-.032	2	-.179	2	.187	1	.836	1	.424	1
5530		min		-.086	1	-.46	1	.073	2	.729	2	.165	2
5531		max	B	.378	1	.079	1	.149	1	2.264	1	.345	1
5532		min		.124	2	.01	2	.057	2	1.899	2	.12	2
5533	P1384	max	T	-.031	2	-.155	2	.152	1	.837	1	.356	1
5534		min		-.087	1	-.391	1	.062	2	.676	2	.142	2
5535		max	B	.307	1	.093	1	.107	1	2.258	1	.273	1
5536		min		.104	2	.012	2	.046	2	1.753	2	.098	2
5537	P1385	max	T	.013	1	-.09	2	.117	1	.812	1	.228	1
5538		min		.008	2	-.221	1	.049	2	.583	2	.095	2
5539		max	B	.147	1	-.003	1	.075	1	2.212	1	.148	1
5540		min		.054	2	-.029	2	.041	2	1.588	2	.073	2
5541	P1386	max	T	.047	1	-.063	2	.103	1	.913	1	.187	1
5542		min		.02	2	-.159	1	.042	2	.604	2	.075	2
5543		max	B	.082	1	-.024	1	.053	1	1.47	2	.096	1
5544		min		.028	2	-.036	2	.032	2	-.741	1	.056	2
5545	P1387	max	T	-.022	2	-.125	2	.126	1	.899	1	.289	1
5546		min		-.063	1	-.316	1	.051	2	.666	2	.115	2
5547		max	B	.23	1	.081	1	.074	1	1.613	2	.202	1
5548		min		.076	2	.009	2	.034	2	-.778	1	.072	2
5549	P1388	max	T	-.007	2	-.092	2	.115	1	1.009	1	.237	1
5550		min		-.015	1	-.245	1	.043	2	.707	2	.089	2
5551		max	B	.164	1	.039	1	.063	1	1.457	2	.149	1
5552		min		.045	2	0	2	.022	2	-.537	1	.045	2
5553	P1389	max	T	.095	1	-.035	2	.1	1	1.045	1	.173	1
5554		min		.035	2	-.104	1	.035	2	.674	2	.061	2
5555		max	B	.033	1	-.045	2	.052	1	1.329	2	.092	1
5556		min		0	2	-.071	1	.023	2	-.443	1	.046	2
5557	P1390	max	T	.154	1	-.008	2	.106	1	1.168	1	.19	1
5558		min		.054	2	-.059	1	.031	2	.794	2	.058	2
5559		max	B	.001	1	-.058	2	.069	1	1.113	2	.137	1
5560		min		-.027	2	-.136	1	.016	2	-.248	1	.05	2

Envelope Plate/Shell Principal Stresses (Continued)

	Plate		Sur...	Sigma1 [ksi]	LC	Sigma2 [ksi]	LC	Tau Max [k...	LC	Angle [rad]	LC	Von Mises [ksi]	LC
5561	P1391	max	T	.049	1	-.061	2	.116	1	1.124	1	.212	1
5562		min		.013	2	-.184	1	.037	2	.797	2	.068	2
5563		max	B	.118	1	-.012	2	.073	1	1.208	2	.134	1
5564		min		.014	2	-.029	1	.013	2	-.325	1	.022	2
5565	P1392	max	T	.118	1	-.033	2	.125	1	1.218	1	.217	1
5566		min		.037	2	-.132	1	.035	2	.92	2	.06	2
5567		max	B	.08	1	-.031	2	.092	1	.712	2	.16	1
5568		min		-.012	2	-.104	1	.01	2	-.213	1	.027	2
5569	P1393	max	T	.216	1	.015	2	.119	1	1.264	1	.227	1
5570		min		.075	2	-.021	1	.03	2	.941	2	.069	2
5571		max	B	-.025	1	-.075	2	.089	1	.76	2	.192	1
5572		min		-.05	2	-.204	1	.012	2	-.152	1	.066	2
5573	P1394	max	T	.277	1	.034	2	.132	1	1.337	1	.271	1
5574		min		.1	2	.012	1	.033	2	1.081	2	.088	2
5575		max	B	-.051	1	-.097	2	.109	1	.43	2	.247	1
5576		min		-.067	2	-.268	1	.015	2	-.098	1	.086	2
5577	P1395	max	T	.186	1	-.009	2	.137	1	1.29	1	.242	1
5578		min		.062	2	-.087	1	.036	2	1.046	2	.067	2
5579		max	B	.046	1	-.057	2	.111	1	.334	2	.203	1
5580		min		-.029	2	-.176	1	.014	2	-.152	1	.05	2
5581	P1396	max	T	.25	1	.011	2	.149	1	1.348	1	.277	1
5582		min		.089	2	-.048	1	.039	2	1.156	2	.084	2
5583		max	B	.014	1	-.085	2	.128	1	.184	2	.248	1
5584		min		-.043	2	-.241	1	.021	2	-.111	1	.074	2
5585	P1397	max	T	.334	1	.051	2	.146	1	1.397	1	.315	1
5586		min		.125	2	.042	1	.037	2	1.195	2	.109	2
5587		max	B	-.075	1	-.122	2	.126	1	.252	2	.296	1
5588		min		-.081	2	-.327	1	.021	2	-.06	1	.108	2
5589	P1398	max	T	.385	1	.067	1	.159	1	1.447	1	.356	1
5590		min		.151	2	.065	2	.043	2	1.281	2	.131	2
5591		max	B	-.093	2	-.147	2	.14	1	.158	2	.34	1
5592		min		-.098	1	-.378	1	.027	2	-.03	1	.129	2
5593	P1399	max	T	.307	1	.028	2	.161	1	1.397	1	.315	1
5594		min		.116	2	-.014	1	.044	2	1.244	2	.105	2
5595		max	B	-.015	1	-.112	2	.142	1	.11	2	.292	1
5596		min		-.056	2	-.299	1	.028	2	-.079	1	.097	2
5597	P1400	max	T	.359	1	.042	2	.171	1	1.441	1	.351	1
5598		min		.142	2	.016	1	.05	2	1.313	2	.126	2
5599		max	B	-.042	1	-.138	2	.154	1	.067	2	.331	1
5600		min		-.067	2	-.35	1	.035	2	-.051	1	.119	2
5601	P1401	max	T	.429	1	.09	1	.17	1	1.491	1	.392	1
5602		min		.175	2	.077	2	.049	2	1.348	2	.152	2
5603		max	B	-.105	2	-.17	2	.151	1	.1	2	.376	1
5604		min		-.119	1	-.422	1	.032	2	-.004	1	.149	2
5605	P1402	max	T	.466	1	.11	1	.178	1	1.531	1	.422	1
5606		min		.197	2	.088	2	.055	2	1.401	2	.171	2
5607		max	B	-.116	2	-.191	2	.159	1	.06	2	.406	1
5608		min		-.14	1	-.458	1	.038	2	.019	1	.167	2
5609	P1403	max	T	.403	1	.054	2	.181	1	1.481	1	.384	1
5610		min		.167	2	.042	1	.056	2	1.368	2	.147	2
5611		max	B	-.066	1	-.161	2	.164	1	.038	2	.365	1
5612		min		-.078	2	-.394	1	.041	2	-.027	1	.14	2
5613	P1404	max	T	.44	1	.065	2	.188	1	1.517	1	.412	1
5614		min		.189	2	.063	1	.062	2	1.413	2	.166	2
5615		max	B	-.088	1	-.183	2	.171	1	.016	2	.393	1
5616		min		-.088	2	-.43	1	.047	2	-.006	1	.158	2
5617	P1405	max	T	.495	1	.127	1	.184	1	1.567	1	.446	1

Envelope Plate/Shell Principal Stresses (Continued)

	Plate		Sur...	Sigma1 [ksi]	LC	Sigma2 [ksi]	LC	Tau Max [k...	LC	Angle [rad]	LC	Von Mises [ksi]	LC
5618		min		.218	2	.097	2	.06	2	1.445	2	.189	2
5619		max	B	-.126	2	-.211	2	.163	1	.038	1	.429	1
5620		min		-.159	1	-.486	1	.042	2	.029	2	.184	2
5621	P1406	max	T	.517	1	.141	1	.188	1	1.598	1	.463	1
5622		min		.236	2	.105	2	.065	2	1.483	2	.204	2
5623		max	B	-.135	2	-.228	2	.165	1	.052	1	.445	1
5624		min		-.176	1	-.506	1	.046	2	.002	2	.198	2
5625	P1407	max	T	.47	1	.082	1	.194	1	1.549	1	.435	1
5626		min		.209	2	.073	2	.068	2	1.451	2	.184	2
5627		max	B	-.097	2	-.202	2	.175	1	.012	1	.416	1
5628		min		-.108	1	-.459	1	.052	2	-.001	2	.175	2
5629	P1408	max	T	.493	1	.097	1	.198	1	1.578	1	.452	1
5630		min		.227	2	.081	2	.073	2	1.485	2	.199	2
5631		max	B	-.105	2	-.218	2	.178	1	.025	1	.432	1
5632		min		-.125	1	-.481	1	.057	2	-.017	2	.189	2
5633	P1409	max	T	.531	1	.154	1	.189	1	1.625	1	.473	1
5634		min		.25	2	.111	2	.069	2	1.517	2	.217	2
5635		max	B	-.142	2	-.242	2	.164	1	.06	1	.454	1
5636		min		-.191	1	-.519	1	.05	2	-.022	2	.211	2
5637	P1410	max	T	.538	1	.163	1	.187	1	1.648	1	.478	1
5638		min		.261	2	.117	2	.072	2	1.547	2	.227	2
5639		max	B	-.148	2	-.254	2	.161	1	.06	1	.459	1
5640		min		-.204	1	-.525	1	.053	2	-.046	2	.221	2
5641	P1411	max	T	.509	1	.109	1	.2	1	1.604	1	.464	1
5642		min		.241	2	.087	2	.077	2	1.514	2	.211	2
5643		max	B	-.111	2	-.232	2	.178	1	.034	1	.443	1
5644		min		-.139	1	-.496	1	.06	2	-.03	2	.201	2
5645	P1412	max	T	.518	1	.119	1	.2	1	1.625	1	.47	1
5646		min		.252	2	.091	2	.08	2	1.542	2	.221	2
5647		max	B	-.116	2	-.243	2	.177	1	.038	1	.449	1
5648		min		-.151	1	-.505	1	.064	2	-.043	2	.211	2
5649	P1413	max	T	.539	1	.17	1	.185	1	1.666	1	.477	1
5650		min		.269	2	.12	2	.074	2	1.575	2	.233	2
5651		max	B	-.151	2	-.262	2	.157	1	.054	1	.459	1
5652		min		-.213	1	-.527	1	.055	2	-.068	2	.228	2
5653	P1414	max	T	.535	1	.173	1	.181	1	1.679	1	.473	1
5654		min		.272	2	.123	2	.075	2	1.602	2	.236	2
5655		max	B	-.153	2	-.268	2	.153	1	.041	1	.456	1
5656		min		-.218	1	-.524	1	.058	2	-.087	2	.233	2
5657	P1415	max	T	.522	1	.125	1	.198	1	1.644	1	.472	1
5658		min		.259	2	.094	2	.082	2	1.567	2	.227	2
5659		max	B	-.119	2	-.251	2	.175	1	.037	1	.45	1
5660		min		-.159	1	-.508	1	.066	2	-.055	2	.218	2
5661	P1416	max	T	.52	1	.128	1	.196	1	1.659	1	.469	1
5662		min		.263	2	.096	2	.083	2	1.592	2	.23	2
5663		max	B	-.12	2	-.256	2	.172	1	.032	1	.449	1
5664		min		-.164	1	-.508	1	.068	2	-.066	2	.222	2
5665	P1417	max	T	.527	1	.173	1	.177	1	1.69	1	.466	1
5666		min		.272	2	.123	2	.074	2	1.628	2	.236	2
5667		max	B	-.151	2	-.27	2	.15	1	.023	1	.451	1
5668		min		-.218	1	-.519	1	.059	2	-.105	2	.234	2
5669	P1418	max	T	.516	1	.17	1	.173	1	1.699	1	.456	1
5670		min		.268	2	.122	2	.073	2	1.653	2	.232	2
5671		max	B	-.148	2	-.269	2	.149	1	.005	1	.445	1
5672		min		-.214	1	-.511	1	.06	2	-.119	2	.233	2
5673	P1419	max	T	.513	1	.128	1	.193	1	1.673	1	.463	1
5674		min		.263	2	.096	2	.083	2	1.616	2	.23	2

Envelope Plate/Shell Principal Stresses (Continued)

	Plate		Sur...	Sigma1 [ksi]	LC	Sigma2 [ksi]	LC	Tau Max [k...	LC	Angle [rad]	LC	Von Mises [ksi]	LC
5675		max	B	-.119	2	-.258	2	.169	1	.025	1	.445	1
5676		min		-.164	1	-.503	1	.069	2	-.076	2	.224	2
5677	P1420	max	T	.503	1	.125	1	.189	1	1.686	1	.453	1
5678		min		.259	2	.095	2	.082	2	1.641	2	.227	2
5679		max	B	-.117	2	-.256	2	.167	1	.016	1	.438	1
5680		min		-.161	1	-.495	1	.07	2	-.083	2	.222	2
5681	P1421	max	T	.501	1	.162	1	.17	1	1.71	1	.443	1
5682		min		.26	2	.119	2	.071	2	1.681	2	.226	2
5683		max	B	-.142	2	-.264	2	.148	1	-.01	1	.436	1
5684		min		-.204	1	-.5	1	.061	2	-.129	2	.229	2
5685	P1422	max	T	.483	1	.151	1	.166	1	1.723	1	.428	1
5686		min		.249	2	.114	2	.068	2	1.71	2	.216	2
5687		max	B	-.135	2	-.255	2	.148	1	-.02	1	.425	1
5688		min		-.191	1	-.487	1	.06	2	-.14	2	.221	2
5689	P1423	max	T	.488	1	.118	1	.185	1	1.7	1	.441	1
5690		min		.251	2	.092	2	.079	2	1.665	2	.22	2
5691		max	B	-.112	2	-.251	2	.165	1	.01	1	.428	1
5692		min		-.153	1	-.484	1	.07	2	-.091	2	.218	2
5693	P1424	max	T	.469	1	.107	1	.181	1	1.717	1	.426	1
5694		min		.24	2	.088	2	.076	2	1.692	2	.21	2
5695		max	B	-.106	2	-.243	2	.163	1	.006	1	.416	1
5696		min		-.142	1	-.468	1	.068	2	-.097	2	.211	2
5697	P1425	max	T	.461	1	.137	1	.162	1	1.742	2	.41	1
5698		min		.234	2	.107	2	.063	2	1.741	1	.203	2
5699		max	B	-.127	2	-.243	2	.146	1	-.023	1	.41	1
5700		min		-.175	1	-.468	1	.058	2	-.148	2	.211	2
5701	P1426	max	T	.435	1	.12	1	.158	1	1.779	2	.39	1
5702		min		.217	2	.1	2	.059	2	1.764	1	.188	2
5703		max	B	-.118	2	-.228	2	.144	1	-.019	1	.391	1
5704		min		-.157	1	-.445	1	.055	2	-.157	2	.197	2
5705	P1427	max	T	.446	1	.094	1	.176	1	1.736	1	.408	1
5706		min		.226	2	.082	2	.072	2	1.721	2	.198	2
5707		max	B	-.099	2	-.231	2	.161	1	.007	1	.4	1
5708		min		-.128	1	-.449	1	.066	2	-.103	2	.2	2
5709	P1428	max	T	.419	1	.077	1	.171	1	1.76	1	.386	1
5710		min		.208	2	.075	2	.067	2	1.754	2	.183	2
5711		max	B	-.091	2	-.216	2	.157	1	.012	1	.381	1
5712		min		-.111	1	-.424	1	.062	2	-.109	2	.187	2
5713	P1429	max	T	.405	1	.1	1	.152	1	1.823	2	.365	1
5714		min		.197	2	.09	2	.053	2	1.795	1	.17	2
5715		max	B	-.107	2	-.209	2	.139	1	-.009	1	.367	1
5716		min		-.138	1	-.415	1	.051	2	-.17	2	.181	2
5717	P1430	max	T	.369	1	.079	2	.146	1	1.877	2	.337	1
5718		min		.174	2	.077	1	.048	2	1.831	1	.151	2
5719		max	B	-.096	2	-.188	2	.131	1	.006	1	.337	1
5720		min		-.117	1	-.38	1	.046	2	-.189	2	.163	2
5721	P1431	max	T	.387	1	.066	2	.165	1	1.792	2	.362	1
5722		min		.188	2	.056	1	.061	2	1.789	1	.165	2
5723		max	B	-.082	2	-.197	2	.151	1	.022	1	.357	1
5724		min		-.091	1	-.394	1	.058	2	-.117	2	.172	2
5725	P1432	max	T	.35	1	.055	2	.159	1	1.837	2	.335	1
5726		min		.166	2	.032	1	.055	2	1.824	1	.146	2
5727		max	B	-.07	1	-.176	2	.144	1	.036	1	.328	1
5728		min		-.072	2	-.358	1	.052	2	-.128	2	.154	2
5729	P1433	max	T	.329	1	.067	2	.139	1	1.945	2	.307	1
5730		min		.151	2	.051	1	.042	2	1.876	1	.131	2
5731		max	B	-.085	2	-.164	2	.121	1	.025	1	.301	1

Envelope Plate/Shell Principal Stresses (Continued)

	Plate		Sur...	Sigma1 [ksi]	LC	Sigma2 [ksi]	LC	Tau Max [k...	LC	Angle [rad]	LC	Von Mises [ksi]	LC
5732		min		-.096	1	-.338	1	.04	2	-.22	2	.142	2
5733	P1434	max	T	.285	1	.052	2	.132	1	2.033	2	.275	1
5734		min		.126	2	.022	1	.037	2	1.928	1	.109	2
5735		max	B	-.073	2	-.138	2	.108	1	.05	1	.26	1
5736		min		-.074	1	-.289	1	.033	2	-.271	2	.12	2
5737	P1435	max	T	.309	1	.043	2	.152	1	1.893	2	.307	1
5738		min		.142	2	.004	1	.049	2	1.864	1	.126	2
5739		max	B	-.047	1	-.153	2	.135	1	.054	1	.295	1
5740		min		-.061	2	-.316	1	.046	2	-.145	2	.133	2
5741	P1436	max	T	.263	1	.028	2	.145	1	1.962	2	.278	1
5742		min		.116	2	-.028	1	.044	2	1.909	1	.105	2
5743		max	B	-.021	1	-.127	2	.123	1	.076	1	.258	1
5744		min		-.049	2	-.268	1	.039	2	-.173	2	.111	2
5745	P1437	max	T	.237	1	.035	2	.124	1	2.145	2	.243	1
5746		min		.101	2	-.011	1	.033	2	1.991	1	.089	2
5747		max	B	-.051	1	-.111	2	.092	1	.083	1	.214	1
5748		min		-.06	2	-.235	1	.026	2	-.36	2	.097	2
5749	P1438	max	T	.187	1	.015	2	.117	1	2.28	2	.215	1
5750		min		.077	2	-.048	1	.031	2	2.066	1	.071	2
5751		max	B	-.028	1	-.084	2	.073	1	.136	1	.163	1
5752		min		-.046	2	-.175	1	.019	2	-.527	2	.073	2
5753	P1439	max	T	.212	1	.011	2	.138	1	2.05	2	.251	1
5754		min		.09	2	-.064	1	.039	2	1.962	1	.085	2
5755		max	B	.006	1	-.099	2	.11	1	.103	1	.216	1
5756		min		-.036	2	-.213	1	.032	2	-.22	2	.087	2
5757	P1440	max	T	.158	1	-.01	2	.132	1	2.157	2	.23	1
5758		min		.063	2	-.106	1	.036	2	2.022	1	.068	2
5759		max	B	.035	1	-.069	2	.094	1	.141	1	.173	1
5760		min		-.022	2	-.152	1	.024	2	-.303	2	.061	2
5761	P1441	max	T	.137	1	-.009	2	.114	1	2.153	1	.198	1
5762		min		.056	2	-.09	1	.033	2	-.726	2	.061	2
5763		max	B	-.004	1	-.06	2	.054	1	2.314	2	.111	1
5764		min		-.029	2	-.112	1	.016	2	.24	1	.052	2
5765	P1442	max	T	.092	1	-.036	2	.115	1	2.248	1	.2	1
5766		min		.038	2	-.138	1	.037	2	-.619	2	.064	2
5767		max	B	.027	1	-.042	2	.04	1	1.968	2	.071	1
5768		min		-.005	2	-.054	1	.018	2	.479	1	.039	2
5769	P1443	max	T	.101	1	-.034	2	.127	1	2.278	2	.222	1
5770		min		.038	2	-.153	1	.036	2	2.093	1	.062	2
5771		max	B	.066	1	-.039	2	.076	1	.203	1	.132	1
5772		min		-.007	2	-.086	1	.016	2	-.478	2	.036	2
5773	P1444	max	T	.045	1	-.062	2	.126	1	2.174	1	.233	1
5774		min		.014	2	-.207	1	.038	2	-.748	2	.07	2
5775		max	B	.1	1	-.011	2	.058	1	2.258	2	.109	1
5776		min		.012	2	-.017	1	.011	2	.331	1	.02	2
5777	P1445	max	T	.054	1	-.064	2	.123	1	2.334	1	.224	1
5778		min		.023	2	-.192	1	.043	2	-.555	2	.078	2
5779		max	B	.075	1	-.016	1	.046	1	1.728	2	.084	1
5780		min		.022	2	-.029	2	.026	2	.815	1	.044	2
5781	P1446	max	T	.028	1	-.09	2	.139	1	-.538	2	.265	1
5782		min		.012	2	-.25	1	.051	2	-.748	1	.097	2
5783		max	B	.139	1	0	1	.07	1	1.563	2	.14	1
5784		min		.048	2	-.021	2	.034	2	.978	1	.061	2
5785	P1447	max	T	-.005	2	-.093	2	.131	1	2.258	1	.266	1
5786		min		-.006	1	-.268	1	.044	2	-.664	2	.09	2
5787		max	B	.144	1	.043	1	.051	1	1.793	2	.128	1
5788		min		.039	2	.007	2	.016	2	.586	1	.036	2

Envelope Plate/Shell Principal Stresses (Continued)

	Plate		Sur...	Sigma1 [ksi]	LC	Sigma2 [ksi]	LC	Tau Max [k...	LC	Angle [rad]	LC	Von Mises [ksi]	LC
5789	P1448	max	T	-.02	2	-.125	2	.147	1	2.328	1	.317	1
5790		min		-.043	1	-.336	1	.053	2	-.626	2	.117	2
5791		max	B	.21	1	.077	1	.067	1	1.54	2	.184	1
5792		min		.071	2	.018	2	.027	2	.838	1	.064	2
5793	P1449	max	T	.016	1	-.113	2	.16	1	-.561	2	.312	1
5794		min		.004	2	-.304	1	.059	2	-.728	1	.115	2
5795		max	B	.203	1	0	1	.101	1	1.421	2	.203	1
5796		min		.07	2	-.016	2	.043	2	1.001	1	.079	2
5797	P1450	max	T	.015	1	-.129	2	.181	1	-.62	2	.355	1
5798		min		0	2	-.347	1	.065	2	-.747	1	.13	2
5799		max	B	.255	1	-.009	1	.132	1	1.279	2	.26	1
5800		min		.087	2	-.013	2	.05	2	.96	1	.094	2
5801	P1451	max	T	-.029	2	-.155	2	.172	1	-.637	2	.378	1
5802		min		-.061	1	-.404	1	.063	2	-.782	1	.143	2
5803		max	B	.285	1	.082	1	.101	1	1.363	2	.254	1
5804		min		.1	2	.022	2	.039	2	.922	1	.091	2
5805	P1452	max	T	-.029	2	-.178	2	.203	1	2.347	1	.437	1
5806		min		-.057	1	-.462	1	.074	2	-.691	2	.165	2
5807		max	B	.352	1	.067	1	.143	1	1.199	2	.324	1
5808		min		.123	2	.02	2	.051	2	.9	1	.114	2
5809	P1453	max	T	.025	1	-.137	2	.199	1	2.342	1	.387	1
5810		min		.002	2	-.374	1	.069	2	-.709	2	.138	2
5811		max	B	.291	1	-.014	2	.159	1	1.128	2	.305	1
5812		min		.095	2	-.026	1	.055	2	.882	1	.103	2
5813	P1454	max	T	.041	1	-.136	2	.21	1	2.315	2	.401	1
5814		min		.006	2	-.379	1	.071	2	2.262	1	.139	2
5815		max	B	.306	1	-.018	2	.177	1	.962	2	.332	1
5816		min		.095	2	-.047	1	.057	2	.78	1	.105	2
5817	P1455	max	T	-.023	2	-.19	2	.233	1	2.294	1	.484	1
5818		min		-.034	1	-.5	1	.084	2	-.779	2	.18	2
5819		max	B	.401	1	.034	1	.183	1	1.031	2	.385	1
5820		min		.137	2	.012	2	.062	2	.824	1	.131	2
5821	P1456	max	T	.003	1	-.193	2	.258	1	2.248	2	.514	1
5822		min		-.009	2	-.513	1	.092	2	2.212	1	.188	2
5823		max	B	.425	1	-.001	2	.217	1	.858	2	.429	1
5824		min		.141	2	-.009	1	.071	2	.72	1	.142	2
5825	P1457	max	T	.053	1	-.127	2	.206	1	2.169	2	.388	1
5826		min		.011	2	-.359	1	.069	2	2.153	1	.133	2
5827		max	B	.295	1	-.021	2	.178	1	.783	2	.33	1
5828		min		.087	2	-.062	1	.054	2	.657	1	.099	2
5829	P1458	max	T	.019	1	-.097	2	.148	1	1.941	1	.286	1
5830		min		.003	2	-.276	1	.05	2	1.928	2	.099	2
5831		max	B	.218	1	-.01	2	.122	1	.56	2	.232	1
5832		min		.057	2	-.025	1	.033	2	.444	1	.062	2
5833	P1459	max	T	.037	1	-.184	2	.265	1	2.11	2	.513	1
5834		min		.006	2	-.493	1	.095	2	2.103	1	.186	2
5835		max	B	.417	1	-.015	2	.231	1	.681	2	.442	1
5836		min		.135	2	-.046	1	.075	2	.595	1	.143	2
5837	P1460	max	T	.014	1	-.149	2	.207	1	1.893	1	.407	1
5838		min		.002	2	-.4	1	.075	2	1.883	2	.15	2
5839		max	B	.331	1	-.007	2	.175	1	.438	2	.341	1
5840		min		.101	2	-.02	1	.054	2	.375	1	.105	2
5841	P1461	max	T	.003	1	-.211	2	.297	1	1.301	1	.592	1
5842		min		0	2	-.591	1	.106	2	1.286	2	.211	2
5843		max	B	.486	1	-.011	2	.249	1	-.331	1	.492	1
5844		min		.133	2	-.012	1	.072	2	-.454	2	.138	2
5845	P1462	max	T	0	1	-.253	2	.345	1	1.1	1	.69	1

Envelope Plate/Shell Principal Stresses (Continued)

	Plate		Sur...	Sigma1 [ksi]	LC	Sigma2 [ksi]	LC	Tau Max [k...	LC	Angle [rad]	LC	Von Mises [ksi]	LC
5846		min		-.002	2	-.69	1	.125	2	1.077	2	.252	2
5847		max	B	.596	1	-.019	2	.308	1	-.548	1	.607	1
5848		min		.181	2	-.02	1	.1	2	-.685	2	.191	2
5849	P1463	max	T	0	2	-.256	2	.359	1	1.293	1	.718	1
5850		min		0	1	-.718	1	.128	2	1.27	2	.256	2
5851		max	B	.616	1	-.01	1	.313	1	-.331	1	.621	1
5852		min		.178	2	-.012	2	.095	2	-.443	2	.184	2
5853	P1464	max	T	-.011	2	-.314	2	.415	1	1.104	1	.843	1
5854		min		-.027	1	-.856	1	.152	2	1.076	2	.309	2
5855		max	B	.758	1	.002	1	.378	1	-.538	1	.758	1
5856		min		.238	2	-.014	2	.126	2	-.667	2	.245	2
5857	P1465	max	T	-.029	2	-.263	2	.315	1	.995	1	.67	1
5858		min		-.073	1	-.704	1	.117	2	.957	2	.249	2
5859		max	B	.611	1	.053	1	.279	1	2.289	2	.586	1
5860		min		.191	2	.006	2	.093	2	-.67	1	.188	2
5861	P1466	max	T	-.055	2	-.258	2	.266	1	.918	1	.617	1
5862		min		-.144	1	-.677	1	.102	2	.855	2	.235	2
5863		max	B	.581	1	.131	1	.225	1	2.123	2	.528	1
5864		min		.187	2	.033	2	.077	2	-.766	1	.173	2
5865	P1467	max	T	-.058	2	-.336	2	.374	1	1.016	1	.834	1
5866		min		-.151	1	-.899	1	.139	2	.978	2	.311	2
5867		max	B	.793	1	.128	1	.333	1	2.327	2	.738	1
5868		min		.253	2	.032	2	.111	2	-.644	1	.239	2
5869	P1468	max	T	-.096	2	-.339	2	.316	1	.955	1	.791	1
5870		min		-.254	1	-.887	1	.121	2	.897	2	.302	2
5871		max	B	.772	1	.244	1	.264	1	2.184	2	.683	1
5872		min		.249	2	.076	2	.086	2	-.719	1	.221	2
5873	P1469	max	T	-.068	2	-.238	2	.215	1	.879	1	.545	1
5874		min		-.182	1	-.612	1	.085	2	.779	2	.213	2
5875		max	B	.515	1	.182	1	.166	1	2.324	1	.452	1
5876		min		.168	2	.05	2	.059	2	1.964	2	.15	2
5877	P1470	max	T	-.067	2	-.206	2	.171	1	.896	1	.461	1
5878		min		-.181	1	-.524	1	.069	2	.737	2	.182	2
5879		max	B	.426	1	.195	1	.115	1	1.816	2	.369	1
5880		min		.139	2	.057	2	.041	2	-.785	1	.121	2
5881	P1471	max	T	-.116	2	-.318	2	.254	1	.924	1	.715	1
5882		min		-.309	1	-.817	1	.101	2	.828	2	.279	2
5883		max	B	.698	1	.316	1	.191	1	2.045	2	.605	1
5884		min		.226	2	.107	2	.059	2	-.746	1	.196	2
5885	P1472	max	T	-.108	2	-.272	2	.207	1	.954	1	.606	1
5886		min		-.281	1	-.695	1	.082	2	.804	2	.237	2
5887		max	B	.583	1	.301	1	.141	1	1.973	2	.505	1
5888		min		.181	2	.112	2	.035	2	-.668	1	.159	2
5889	P1473	max	T	-.054	2	-.166	2	.145	1	.974	1	.378	1
5890		min		-.138	1	-.428	1	.056	2	.747	2	.147	2
5891		max	B	.335	1	.161	1	.087	1	1.68	2	.29	1
5892		min		.101	2	.053	2	.024	2	-.624	1	.088	2
5893	P1474	max	T	-.032	2	-.126	2	.137	1	1.073	1	.313	1
5894		min		-.069	1	-.342	1	.047	2	.803	2	.114	2
5895		max	B	.264	1	.091	1	.087	1	1.5	2	.232	1
5896		min		.062	2	.041	2	.01	2	-.426	1	.055	2
5897	P1475	max	T	-.085	2	-.219	2	.179	1	1.009	1	.496	1
5898		min		-.208	1	-.566	1	.067	2	.806	2	.191	2
5899		max	B	.471	1	.23	1	.12	1	1.988	2	.408	1
5900		min		.134	2	.099	2	.017	2	-.543	1	.12	2
5901	P1476	max	T	-.052	2	-.163	2	.167	1	1.096	1	.4	1
5902		min		-.108	1	-.443	1	.055	2	.867	2	.144	2

Envelope Plate/Shell Principal Stresses (Continued)

	Plate		Sur...	Sigma1 [ksi]	LC	Sigma2 [ksi]	LC	Tau Max [k...	LC	Angle [rad]	LC	Von Mises [ksi]	LC
5903		max	B	.369	1	.127	1	.121	1	-.404	1	.325	1
5904		min		.086	2	.073	2	.006	2	-.666	2	.081	2
5905	P1477	max	T	.012	1	-.09	2	.14	1	1.163	1	.273	1
5906		min		-.005	2	-.267	1	.042	2	.897	2	.087	2
5907		max	B	.206	1	.02	2	.101	1	.581	2	.204	1
5908		min		.029	2	.005	1	.004	2	-.296	1	.026	2
5909	P1478	max	T	.091	1	-.059	2	.147	1	1.233	1	.262	1
5910		min		.023	2	-.204	1	.041	2	1.004	2	.073	2
5911		max	B	.157	1	-.014	2	.117	1	.167	2	.207	1
5912		min		.012	2	-.077	1	.013	2	-.225	1	.022	2
5913	P1479	max	T	-.012	1	-.12	2	.169	1	1.162	1	.343	1
5914		min		-.019	2	-.349	1	.051	2	.952	2	.112	2
5915		max	B	.293	1	.034	2	.132	1	-.176	2	.28	1
5916		min		.06	2	.028	1	.013	2	-.323	1	.053	2
5917	P1480	max	T	.072	1	-.084	2	.171	1	1.216	1	.312	1
5918		min		.014	2	-.27	1	.049	2	1.039	2	.092	2
5919		max	B	.227	1	-.004	2	.142	1	-.097	2	.26	1
5920		min		.039	2	-.058	1	.022	2	-.27	1	.041	2
5921	P1481	max	T	.163	1	-.033	2	.156	1	1.289	1	.27	1
5922		min		.052	2	-.15	1	.043	2	1.106	2	.074	2
5923		max	B	.112	1	-.046	2	.132	1	.084	2	.229	1
5924		min		-.004	2	-.151	1	.021	2	-.178	1	.044	2
5925	P1482	max	T	.227	1	-.011	2	.165	1	1.34	1	.292	1
5926		min		.081	2	-.102	1	.046	2	1.195	2	.087	2
5927		max	B	.072	1	-.076	2	.144	1	.046	2	.26	1
5928		min		-.018	2	-.217	1	.029	2	-.141	1	.069	2
5929	P1483	max	T	.145	1	-.054	2	.174	1	1.266	1	.303	1
5930		min		.045	2	-.203	1	.05	2	1.126	2	.086	2
5931		max	B	.169	1	-.037	2	.15	1	-.069	2	.261	1
5932		min		.021	2	-.131	1	.029	2	-.226	1	.051	2
5933	P1484	max	T	.209	1	-.03	2	.178	1	1.316	1	.31	1
5934		min		.074	2	-.147	1	.052	2	1.209	2	.093	2
5935		max	B	.12	1	-.068	2	.158	1	-.053	2	.276	1
5936		min		.004	2	-.195	1	.036	2	-.184	1	.07	2
5937	P1485	max	T	.285	1	.007	2	.173	1	1.386	1	.32	1
5938		min		.109	2	-.062	1	.051	2	1.271	2	.105	2
5939		max	B	.037	1	-.104	2	.156	1	.024	2	.294	1
5940		min		-.031	2	-.274	1	.036	2	-.108	1	.092	2
5941	P1486	max	T	.336	1	.022	2	.182	1	1.428	1	.35	1
5942		min		.135	2	-.028	1	.056	2	1.332	2	.125	2
5943		max	B	.006	1	-.13	2	.165	1	.009	2	.328	1
5944		min		-.043	2	-.325	1	.043	2	-.078	1	.114	2
5945	P1487	max	T	.265	1	-.011	2	.183	1	1.364	1	.327	1
5946		min		.102	2	-.1	1	.056	2	1.281	2	.108	2
5947		max	B	.079	1	-.096	2	.165	1	-.043	2	.299	1
5948		min		-.01	2	-.251	1	.043	2	-.145	1	.091	2
5949	P1488	max	T	.316	1	.005	2	.189	1	1.41	1	.351	1
5950		min		.128	2	-.062	1	.062	2	1.342	2	.126	2
5951		max	B	.044	1	-.121	2	.172	1	-.036	2	.325	1
5952		min		-.023	2	-.301	1	.049	2	-.11	1	.112	2
5953	P1489	max	T	.38	1	.034	2	.189	1	1.467	1	.379	1
5954		min		.159	2	0	1	.062	2	1.382	2	.145	2
5955		max	B	-.021	1	-.153	2	.173	1	-.002	2	.358	1
5956		min		-.054	2	-.368	1	.049	2	-.052	1	.134	2
5957	P1490	max	T	.417	1	.045	2	.196	1	1.503	1	.406	1
5958		min		.182	2	.025	1	.069	2	1.423	2	.164	2
5959		max	B	-.045	1	-.174	2	.18	1	-.012	2	.384	1

Envelope Plate/Shell Principal Stresses (Continued)

	Plate		Sur...	Sigma1 [ksi]	LC	Sigma2 [ksi]	LC	Tau Max [k...	LC	Angle [rad]	LC	Von Mises [ksi]	LC
5960		min		-.064	2	-.404	1	.055	2	-.029	1	.153	2
5961	P1491	max	T	.36	1	.018	2	.195	1	1.451	1	.376	1
5962		min		.153	2	-.031	1	.068	2	1.391	2	.145	2
5963		max	B	.015	1	-.145	2	.179	1	-.033	2	.351	1
5964		min		-.034	2	-.344	1	.056	2	-.079	1	.131	2
5965	P1492	max	T	.397	1	.028	2	.202	1	1.488	1	.401	1
5966		min		.175	2	-.006	1	.074	2	1.432	2	.163	2
5967		max	B	-.009	1	-.166	2	.185	1	-.032	2	.376	1
5968		min		-.043	2	-.38	1	.061	2	-.052	1	.149	2
5969	P1493	max	T	.448	1	.053	2	.202	1	1.534	1	.428	1
5970		min		.202	2	.044	1	.074	2	1.458	2	.181	2
5971		max	B	-.065	1	-.193	2	.185	1	-.011	1	.406	1
5972		min		-.072	2	-.434	1	.06	2	-.02	2	.169	2
5973	P1494	max	T	.472	1	.06	2	.206	1	1.562	1	.445	1
5974		min		.219	2	.06	1	.08	2	1.488	2	.196	2
5975		max	B	-.079	2	-.209	2	.188	1	.005	1	.422	1
5976		min		-.082	1	-.457	1	.065	2	-.027	2	.183	2
5977	P1495	max	T	.429	1	.036	2	.208	1	1.52	1	.422	1
5978		min		.195	2	.014	1	.08	2	1.465	2	.18	2
5979		max	B	-.03	1	-.184	2	.19	1	-.03	1	.397	1
5980		min		-.05	2	-.411	1	.067	2	-.032	2	.165	2
5981	P1496	max	T	.454	1	.042	2	.212	1	1.549	1	.44	1
5982		min		.212	2	.03	1	.085	2	1.493	2	.195	2
5983		max	B	-.046	1	-.2	2	.194	1	-.013	1	.413	1
5984		min		-.057	2	-.435	1	.072	2	-.033	2	.179	2
5985	P1497	max	T	.489	1	.072	1	.209	1	1.587	1	.458	1
5986		min		.233	2	.065	2	.084	2	1.515	2	.208	2
5987		max	B	-.085	2	-.223	2	.189	1	.016	1	.434	1
5988		min		-.095	1	-.474	1	.069	2	-.034	2	.195	2
5989	P1498	max	T	.501	1	.081	1	.21	1	1.608	1	.465	1
5990		min		.244	2	.069	2	.087	2	1.54	2	.217	2
5991		max	B	-.089	2	-.233	2	.189	1	.023	1	.441	1
5992		min		-.106	1	-.484	1	.072	2	-.041	2	.204	2
5993	P1499	max	T	.472	1	.047	2	.215	1	1.573	1	.453	1
5994		min		.226	2	.042	1	.09	2	1.518	2	.207	2
5995		max	B	-.059	1	-.213	2	.197	1	.001	1	.426	1
5996		min		-.062	2	-.453	1	.076	2	-.036	2	.19	2
5997	P1500	max	T	.485	1	.051	1	.217	1	1.595	1	.462	1
5998		min		.237	2	.051	2	.093	2	1.54	2	.216	2
5999		max	B	-.065	2	-.224	2	.198	1	.011	1	.434	1
6000		min		-.07	1	-.465	1	.079	2	-.038	2	.199	2
6001	P1501	max	T	.506	1	.087	1	.209	1	1.627	1	.468	1
6002		min		.251	2	.072	2	.09	2	1.563	2	.224	2
6003		max	B	-.091	2	-.241	2	.188	1	.026	1	.444	1
6004		min		-.114	1	-.49	1	.075	2	-.047	2	.211	2
6005	P1502	max	T	.505	1	.09	1	.207	1	1.644	1	.467	1
6006		min		.254	2	.073	2	.091	2	1.585	2	.227	2
6007		max	B	-.092	2	-.246	2	.186	1	.027	1	.444	1
6008		min		-.118	1	-.491	1	.077	2	-.053	2	.215	2
6009	P1503	max	T	.491	1	.057	1	.217	1	1.615	1	.465	1
6010		min		.244	2	.053	2	.096	2	1.561	2	.222	2
6011		max	B	-.068	2	-.231	2	.198	1	.018	1	.438	1
6012		min		-.077	1	-.472	1	.082	2	-.041	2	.206	2
6013	P1504	max	T	.492	1	.059	1	.216	1	1.633	1	.465	1
6014		min		.247	2	.054	2	.097	2	1.581	2	.225	2
6015		max	B	-.069	2	-.236	2	.196	1	.023	1	.439	1
6016		min		-.08	1	-.473	1	.083	2	-.043	2	.21	2

Envelope Plate/Shell Principal Stresses (Continued)

	Plate		Sur...	Sigma1 [ksi]	LC	Sigma2 [ksi]	LC	Tau Max [k...	LC	Angle [rad]	LC	Von Mises [ksi]	LC
6017	P1505	max	T	.5	1	.09	1	.205	1	1.66	1	.461	1
6018		min		.254	2	.073	2	.09	2	1.607	2	.227	2
6019		max	B	-.092	2	-.247	2	.184	1	.025	1	.44	1
6020		min		-.119	1	-.487	1	.078	2	-.058	2	.216	2
6021	P1506	max	T	.49	1	.087	1	.201	1	1.676	1	.452	1
6022		min		.25	2	.072	2	.089	2	1.627	2	.223	2
6023		max	B	-.089	2	-.245	2	.182	1	.024	1	.433	1
6024		min		-.116	1	-.479	1	.078	2	-.065	2	.215	2
6025	P1507	max	T	.487	1	.059	1	.214	1	1.65	1	.46	1
6026		min		.247	2	.054	2	.097	2	1.6	2	.225	2
6027		max	B	-.068	2	-.237	2	.195	1	.026	1	.435	1
6028		min		-.081	1	-.47	1	.084	2	-.046	2	.211	2
6029	P1508	max	T	.477	1	.056	1	.21	1	1.667	1	.452	1
6030		min		.244	2	.053	2	.095	2	1.62	2	.222	2
6031		max	B	-.066	2	-.235	2	.192	1	.029	1	.429	1
6032		min		-.079	1	-.463	1	.084	2	-.048	2	.209	2
6033	P1509	max	T	.475	1	.08	1	.197	1	1.692	1	.44	1
6034		min		.243	2	.07	2	.087	2	1.652	2	.217	2
6035		max	B	-.086	2	-.24	2	.179	1	.023	1	.423	1
6036		min		-.109	1	-.467	1	.077	2	-.066	2	.21	2
6037	P1510	max	T	.456	1	.07	1	.193	1	1.711	1	.425	1
6038		min		.232	2	.066	2	.083	2	1.677	2	.207	2
6039		max	B	-.081	2	-.231	2	.176	1	.024	1	.411	1
6040		min		-.099	1	-.451	1	.075	2	-.069	2	.203	2
6041	P1511	max	T	.462	1	.051	2	.206	1	1.685	1	.439	1
6042		min		.236	2	.05	1	.093	2	1.641	2	.215	2
6043		max	B	-.064	2	-.229	2	.189	1	.032	1	.419	1
6044		min		-.073	1	-.451	1	.083	2	-.049	2	.205	2
6045	P1512	max	T	.443	1	.047	2	.201	1	1.705	1	.424	1
6046		min		.225	2	.04	1	.089	2	1.664	2	.206	2
6047		max	B	-.059	2	-.221	2	.185	1	.038	1	.406	1
6048		min		-.064	1	-.434	1	.081	2	-.049	2	.198	2
6049	P1513	max	T	.432	1	.06	2	.187	1	1.732	1	.406	1
6050		min		.218	2	.057	1	.079	2	1.704	2	.195	2
6051		max	B	-.075	2	-.219	2	.172	1	.029	1	.394	1
6052		min		-.086	1	-.43	1	.072	2	-.071	2	.193	2
6053	P1514	max	T	.403	1	.054	2	.182	1	1.758	1	.385	1
6054		min		.201	2	.04	1	.074	2	1.734	2	.18	2
6055		max	B	-.068	2	-.204	2	.167	1	.037	1	.375	1
6056		min		-.07	1	-.405	1	.068	2	-.074	2	.18	2
6057	P1515	max	T	.418	1	.042	2	.195	1	1.729	1	.405	1
6058		min		.211	2	.027	1	.084	2	1.689	2	.194	2
6059		max	B	-.052	1	-.209	2	.181	1	.047	1	.39	1
6060		min		-.054	2	-.413	1	.078	2	-.049	2	.188	2
6061	P1516	max	T	.389	1	.036	2	.189	1	1.756	1	.384	1
6062		min		.194	2	.011	1	.079	2	1.717	2	.179	2
6063		max	B	-.036	1	-.194	2	.175	1	.059	1	.37	1
6064		min		-.047	2	-.387	1	.073	2	-.048	2	.175	2
6065	P1517	max	T	.371	1	.045	2	.176	1	1.787	1	.361	1
6066		min		.181	2	.019	1	.068	2	1.769	2	.163	2
6067		max	B	-.051	1	-.187	2	.162	1	.049	1	.351	1
6068		min		-.059	2	-.374	1	.064	2	-.077	2	.165	2
6069	P1518	max	T	.333	1	.035	2	.17	1	1.822	1	.336	1
6070		min		.158	2	-.006	1	.062	2	1.81	2	.144	2
6071		max	B	-.029	1	-.166	2	.155	1	.066	1	.325	1
6072		min		-.049	2	-.338	1	.058	2	-.081	2	.148	2
6073	P1519	max	T	.356	1	.028	2	.183	1	1.788	1	.361	1

Envelope Plate/Shell Principal Stresses (Continued)

	Plate		Sur...	Sigma1 [ksi]	LC	Sigma2 [ksi]	LC	Tau Max [k...	LC	Angle [rad]	LC	Von Mises [ksi]	LC
6074		min		.174	2	-.011	1	.073	2	1.751	2	.162	2
6075		max	B	-.017	1	-.176	2	.169	1	.075	1	.347	1
6076		min		-.039	2	-.356	1	.069	2	-.045	2	.16	2
6077	P1520	max	T	.318	1	.017	2	.177	1	1.825	1	.338	1
6078		min		.152	2	-.037	1	.067	2	1.792	2	.144	2
6079		max	B	.006	1	-.156	2	.163	1	.096	1	.322	1
6080		min		-.03	2	-.32	1	.063	2	-.042	2	.143	2
6081	P1521	max	T	.291	1	.022	2	.164	1	1.861	1	.311	1
6082		min		.134	2	-.036	1	.056	2	1.861	2	.125	2
6083		max	B	-.003	1	-.143	2	.146	1	.086	1	.295	1
6084		min		-.038	2	-.296	1	.052	2	-.087	2	.128	2
6085	P1522	max	T	.244	1	.006	2	.158	1	1.922	2	.287	1
6086		min		.108	2	-.072	1	.051	2	1.905	1	.105	2
6087		max	B	.026	1	-.117	2	.137	1	.11	1	.262	1
6088		min		-.026	2	-.248	1	.045	2	-.096	2	.106	2
6089	P1523	max	T	.275	1	.004	2	.172	1	1.867	1	.315	1
6090		min		.127	2	-.069	1	.061	2	1.842	2	.125	2
6091		max	B	.033	1	-.133	2	.155	1	.122	1	.296	1
6092		min		-.019	2	-.278	1	.057	2	-.037	2	.124	2
6093	P1524	max	T	.228	1	-.012	2	.168	1	1.913	1	.298	1
6094		min		.101	2	-.108	1	.056	2	1.903	2	.107	2
6095		max	B	.065	1	-.107	2	.148	1	.153	1	.27	1
6096		min		-.007	2	-.231	1	.05	2	-.03	2	.104	2
6097	P1525	max	T	.192	1	-.012	2	.153	1	1.996	2	.268	1
6098		min		.08	2	-.113	1	.046	2	1.952	1	.087	2
6099		max	B	.058	1	-.088	2	.126	1	.138	1	.229	1
6100		min		-.012	2	-.194	1	.038	2	-.112	2	.083	2
6101	P1526	max	T	.136	1	-.034	2	.149	1	2.084	2	.258	1
6102		min		.052	2	-.162	1	.043	2	2.004	1	.075	2
6103		max	B	.095	1	-.057	2	.114	1	.172	1	.199	1
6104		min		.002	2	-.134	1	.03	2	-.14	2	.059	2
6105	P1527	max	T	.177	1	-.032	2	.166	1	1.975	2	.288	1
6106		min		.073	2	-.155	1	.052	2	1.961	1	.093	2
6107		max	B	.103	1	-.079	2	.141	1	.187	1	.247	1
6108		min		.008	2	-.179	1	.043	2	-.021	2	.083	2
6109	P1528	max	T	.12	1	-.057	2	.165	1	2.056	2	.29	1
6110		min		.044	2	-.211	1	.05	2	2.01	1	.087	2
6111		max	B	.147	1	-.048	2	.133	1	.224	1	.232	1
6112		min		.025	2	-.119	1	.036	2	-.009	2	.064	2
6113	P1529	max	T	.073	1	-.06	2	.145	1	2.183	2	.262	1
6114		min		.023	2	-.217	1	.042	2	2.06	1	.075	2
6115		max	B	.135	1	-.024	2	.1	1	.217	1	.177	1
6116		min		.019	2	-.065	1	.021	2	-.194	2	.037	2
6117	P1530	max	T	.007	1	-.091	2	.144	1	2.286	2	.284	1
6118		min		-.005	2	-.281	1	.043	2	2.125	1	.089	2
6119		max	B	.179	1	.013	2	.084	1	.291	1	.174	1
6120		min		.035	2	.011	1	.011	2	-.328	2	.031	2
6121	P1531	max	T	.055	1	-.087	2	.166	1	2.14	2	.309	1
6122		min		.013	2	-.277	1	.05	2	2.059	1	.094	2
6123		max	B	.199	1	-.013	2	.125	1	.265	1	.229	1
6124		min		.044	2	-.051	1	.029	2	.007	2	.052	2
6125	P1532	max	T	-.018	1	-.123	2	.169	1	2.224	2	.346	1
6126		min		-.019	2	-.355	1	.052	2	2.109	1	.114	2
6127		max	B	.258	1	.028	1	.115	1	.315	1	.245	1
6128		min		.066	2	.026	2	.02	2	.04	2	.058	2
6129	P1533	max	T	-.032	2	-.128	2	.148	1	2.198	1	.33	1
6130		min		-.059	1	-.356	1	.048	2	-.766	2	.115	2

Envelope Plate/Shell Principal Stresses (Continued)

	Plate		Sur...	Sigma1 [ksi]	LC	Sigma2 [ksi]	LC	Tau Max [k...	LC	Angle [rad]	LC	Von Mises [ksi]	LC
6131		max	B	.231	1	.089	1	.071	1	1.991	2	.202	1
6132		min		.057	2	.047	2	.005	2	.44	1	.053	2
6133	P1534	max	T	-.054	2	-.168	2	.162	1	2.267	1	.394	1
6134		min		-.116	1	-.439	1	.057	2	-.713	2	.148	2
6135		max	B	.299	1	.151	1	.074	1	1.454	2	.259	1
6136		min		.096	2	.062	2	.017	2	.668	1	.084	2
6137	P1535	max	T	-.053	2	-.166	2	.173	1	2.305	2	.407	1
6138		min		-.1	1	-.447	1	.056	2	2.167	1	.147	2
6139		max	B	.326	1	.12	1	.103	1	.4	1	.286	1
6140		min		.09	2	.07	2	.01	2	.211	2	.082	2
6141	P1536	max	T	-.086	2	-.221	2	.192	1	2.23	1	.501	1
6142		min		-.184	1	-.567	1	.068	2	-.779	2	.193	2
6143		max	B	.418	1	.214	1	.102	1	.965	2	.362	1
6144		min		.131	2	.106	2	.012	2	.557	1	.12	2
6145	P1537	max	T	-.067	2	-.207	2	.189	1	2.312	1	.471	1
6146		min		-.149	1	-.528	1	.07	2	-.704	2	.183	2
6147		max	B	.386	1	.176	1	.105	1	1.281	2	.335	1
6148		min		.136	2	.067	2	.034	2	.828	1	.118	2
6149	P1538	max	T	-.067	2	-.238	2	.229	1	2.31	1	.546	1
6150		min		-.147	1	-.604	1	.086	2	-.746	2	.212	2
6151		max	B	.471	1	.159	1	.156	1	1.123	2	.415	1
6152		min		.168	2	.062	2	.053	2	.846	1	.147	2
6153	P1539	max	T	-.109	2	-.274	2	.221	1	2.26	1	.603	1
6154		min		-.245	1	-.687	1	.082	2	-.777	2	.238	2
6155		max	B	.521	1	.276	1	.123	1	1.076	2	.452	1
6156		min		.18	2	.121	2	.029	2	.698	1	.159	2
6157	P1540	max	T	-.117	2	-.319	2	.264	1	2.342	2	.7	1
6158		min		-.266	1	-.795	1	.101	2	2.27	1	.279	2
6159		max	B	.63	1	.283	1	.173	1	1.027	2	.547	1
6160		min		.228	2	.118	2	.055	2	.775	1	.197	2
6161	P1541	max	T	-.053	2	-.256	2	.273	1	2.317	2	.608	1
6162		min		-.109	1	-.655	1	.102	2	2.264	1	.234	2
6163		max	B	.535	1	.109	1	.213	1	.963	2	.49	1
6164		min		.189	2	.044	2	.073	2	.786	1	.172	2
6165	P1542	max	T	-.027	2	-.26	2	.313	1	2.212	2	.65	1
6166		min		-.043	1	-.67	1	.116	2	2.185	1	.247	2
6167		max	B	.565	1	.035	1	.265	1	.798	2	.548	1
6168		min		.198	2	.016	2	.091	2	.686	1	.19	2
6169	P1543	max	T	-.096	2	-.338	2	.319	1	2.273	2	.765	1
6170		min		-.211	1	-.849	1	.121	2	2.23	1	.302	2
6171		max	B	.701	1	.212	1	.244	1	.898	2	.622	1
6172		min		.254	2	.088	2	.083	2	.741	1	.224	2
6173	P1544	max	T	-.057	2	-.336	2	.367	1	2.188	2	.798	1
6174		min		-.114	1	-.849	1	.14	2	2.165	1	.311	2
6175		max	B	.722	1	.102	1	.31	1	.764	2	.677	1
6176		min		.261	2	.043	2	.109	2	.663	1	.243	2
6177	P1545	max	T	.021	1	-.248	2	.333	1	2.087	2	.655	1
6178		min		0	2	-.644	1	.124	2	2.08	1	.248	2
6179		max	B	.554	1	-.011	2	.294	1	.634	2	.571	1
6180		min		.191	2	-.033	1	.101	2	.565	1	.197	2
6181	P1546	max	T	.011	1	-.202	2	.27	1	1.876	1	.534	1
6182		min		.001	2	-.529	1	.102	2	1.872	2	.203	2
6183		max	B	.449	1	-.007	2	.233	1	.398	2	.458	1
6184		min		.149	2	-.017	1	.078	2	.35	1	.152	2
6185	P1547	max	T	-.001	1	-.313	2	.398	1	2.084	2	.796	1
6186		min		-.009	2	-.796	1	.152	2	2.075	1	.308	2
6187		max	B	.692	1	-.005	2	.353	1	.622	2	.699	1

Envelope Plate/Shell Principal Stresses (Continued)

	Plate		Sur...	Sigma1 [ksi]	LC	Sigma2 [ksi]	LC	Tau Max [k...	LC	Angle [rad]	LC	Von Mises [ksi]	LC
6188		min		.249	2	-.014	1	.127	2	.558	1	.251	2
6189	P1548	max	T	.009	1	-.252	2	.327	1	1.884	2	.65	1
6190		min		0	2	-.646	1	.126	2	1.882	1	.252	2
6191		max	B	.557	1	-.008	2	.287	1	.398	2	.565	1
6192		min		.194	2	-.017	1	.101	2	.352	1	.197	2
6193	P1549	max	T	-.005	2	-.281	2	.388	1	1.259	1	.781	1
6194		min		-.01	1	-.786	1	.138	2	1.233	2	.278	2
6195		max	B	.691	1	-.005	1	.348	1	-.361	1	.693	1
6196		min		.203	2	-.01	2	.107	2	-.468	2	.208	2
6197	P1550	max	T	-.03	2	-.362	2	.453	1	1.102	1	.947	1
6198		min		-.077	1	-.983	1	.166	2	1.072	2	.348	2
6199		max	B	.883	1	.04	1	.422	1	-.54	1	.864	1
6200		min		.281	2	-.004	2	.143	2	-.667	2	.283	2
6201	P1551	max	T	0	1	-.274	2	.381	1	1.217	1	.761	1
6202		min		-.005	2	-.761	1	.135	2	1.205	2	.272	2
6203		max	B	.672	1	-.005	2	.342	1	-.4	1	.678	1
6204		min		.198	2	-.011	1	.102	2	-.501	2	.2	2
6205	P1552	max	T	-.066	2	-.377	2	.439	1	1.133	1	.956	1
6206		min		-.141	1	-1.019	1	.156	2	1.116	2	.349	2
6207		max	B	.918	1	.104	1	.407	1	-.527	1	.871	1
6208		min		.298	2	.032	2	.133	2	-.688	2	.283	2
6209	P1553	max	T	-.101	2	-.417	2	.422	1	1.061	1	1.006	1
6210		min		-.268	1	-1.112	1	.158	2	1.018	2	.376	2
6211		max	B	.984	1	.241	1	.372	1	-.596	1	.889	1
6212		min		.314	2	.072	2	.121	2	-.772	2	.285	2
6213	P1554	max	T	-.169	2	-.456	2	.382	1	1.032	1	1.054	1
6214		min		-.439	1	-1.203	1	.144	2	.971	2	.4	2
6215		max	B	1.052	1	.433	1	.31	1	2.298	2	.916	1
6216		min		.333	2	.153	2	.09	2	-.618	1	.288	2
6217	P1555	max	T	-.12	2	-.519	2	.534	1	1.183	1	1.264	1
6218		min		-.326	1	-1.395	1	.2	2	1.157	2	.471	2
6219		max	B	1.202	1	.299	1	.451	1	-.421	1	1.084	1
6220		min		.35	2	.101	2	.124	2	-.498	2	.312	2
6221	P1556	max	T	-.174	2	-.703	2	.695	1	1.176	1	1.687	1
6222		min		-.487	1	-1.877	1	.264	2	1.136	2	.634	2
6223		max	B	1.689	1	.456	1	.617	1	-.418	1	1.514	1
6224		min		.537	2	.153	2	.192	2	-.484	2	.479	2
6225	P1557	max	T	-.166	2	-.44	2	.356	1	1.005	1	.999	1
6226		min		-.429	1	-1.142	1	.137	2	.926	2	.385	2
6227		max	B	.992	1	.448	1	.272	1	2.316	2	.861	1
6228		min		.31	2	.176	2	.067	2	-.606	1	.269	2
6229	P1558	max	T	-.151	2	-.381	2	.29	1	.927	1	.843	1
6230		min		-.386	1	-.967	1	.115	2	.806	2	.332	2
6231		max	B	.847	1	.407	1	.22	1	2.225	2	.733	1
6232		min		.27	2	.165	2	.053	2	-.663	1	.236	2
6233	P1559	max	T	-.25	2	-.821	2	.719	1	.862	1	1.848	1
6234		min		-.647	1	-2.085	1	.285	2	.806	2	.728	2
6235		max	B	1.907	1	.66	1	.623	1	2.299	2	1.677	1
6236		min		.652	2	.255	2	.198	2	-.739	1	.569	2
6237	P1560	max	T	-.166	2	-.429	2	.317	1	.819	1	.919	1
6238		min		-.42	1	-1.054	1	.131	2	.696	2	.375	2
6239		max	B	.952	1	.44	1	.256	1	2.168	2	.825	1
6240		min		.328	2	.179	2	.075	2	-.775	1	.284	2
6241	P1561	max	T	-.107	2	-.267	2	.218	1	1	1	.602	1
6242		min		-.252	1	-.687	1	.08	2	.817	2	.233	2
6243		max	B	.598	1	.273	1	.163	1	2.322	2	.519	1
6244		min		.178	2	.125	2	.026	2	-.544	1	.158	2

Envelope Plate/Shell Principal Stresses (Continued)

	Plate		Sur...	Sigma1 [ksi]	LC	Sigma2 [ksi]	LC	Tau Max [k...	LC	Angle [rad]	LC	Von Mises [ksi]	LC
6245	P1562	max	T	-.064	2	-.2	2	.207	1	1.076	1	.488	1
6246		min		-.124	1	-.538	1	.068	2	.89	2	.177	2
6247		max	B	.471	1	.142	1	.164	1	-.444	1	.418	1
6248		min		.129	2	.081	2	.024	2	-.53	2	.113	2
6249	P1563	max	T	-.113	2	-.308	2	.271	1	.966	1	.699	1
6250		min		-.248	1	-.789	1	.098	2	.807	2	.27	2
6251		max	B	.711	1	.267	1	.222	1	-.589	1	.622	1
6252		min		.227	2	.127	2	.05	2	-.743	2	.197	2
6253	P1564	max	T	-.062	2	-.228	2	.251	1	1.014	1	.562	1
6254		min		-.106	1	-.608	1	.083	2	.86	2	.204	2
6255		max	B	.549	1	.126	1	.212	1	-.531	1	.498	1
6256		min		.166	2	.076	2	.045	2	-.624	2	.144	2
6257	P1565	max	T	-.02	1	-.147	2	.2	1	1.124	1	.41	1
6258		min		-.025	2	-.419	1	.061	2	.956	2	.137	2
6259		max	B	.368	1	.039	2	.166	1	-.371	2	.351	1
6260		min		.093	2	.037	1	.027	2	-.39	1	.081	2
6261	P1566	max	T	.064	1	-.106	2	.193	1	1.171	1	.359	1
6262		min		.009	2	-.323	1	.057	2	1.031	2	.11	2
6263		max	B	.284	1	.002	2	.165	1	-.269	2	.31	1
6264		min		.064	2	-.046	1	.031	2	-.342	1	.063	2
6265	P1567	max	T	-.009	1	-.168	2	.23	1	1.054	1	.465	1
6266		min		-.024	2	-.469	1	.072	2	.915	2	.158	2
6267		max	B	.425	1	.037	2	.198	1	-.488	1	.411	1
6268		min		.12	2	.029	1	.041	2	-.529	2	.107	2
6269	P1568	max	T	.065	1	-.12	2	.211	1	1.101	1	.394	1
6270		min		.008	2	-.357	1	.064	2	.987	2	.125	2
6271		max	B	.324	1	.005	2	.184	1	-.427	2	.348	1
6272		min		.084	2	-.044	1	.04	2	-.438	1	.082	2
6273	P1569	max	T	.133	1	-.072	2	.188	1	1.223	1	.331	1
6274		min		.04	2	-.243	1	.056	2	1.116	2	.098	2
6275		max	B	.214	1	-.03	2	.165	1	-.195	2	.29	1
6276		min		.041	2	-.116	1	.036	2	-.293	1	.062	2
6277	P1570	max	T	.194	1	-.045	2	.186	1	1.278	1	.323	1
6278		min		.069	2	-.179	1	.057	2	1.202	2	.099	2
6279		max	B	.156	1	-.06	2	.166	1	-.14	2	.288	1
6280		min		.022	2	-.176	1	.041	2	-.241	1	.074	2
6281	P1571	max	T	.127	1	-.082	2	.197	1	1.161	1	.348	1
6282		min		.036	2	-.266	1	.059	2	1.08	2	.105	2
6283		max	B	.242	1	-.024	2	.174	1	-.321	2	.308	1
6284		min		.056	2	-.105	1	.04	2	-.378	1	.071	2
6285	P1572	max	T	.183	1	-.053	2	.189	1	1.228	1	.327	1
6286		min		.064	2	-.195	1	.059	2	1.181	2	.102	2
6287		max	B	.177	1	-.052	2	.168	1	-.229	2	.291	1
6288		min		.034	2	-.16	1	.043	2	-.312	1	.076	2
6289	P1573	max	T	.249	1	-.024	2	.188	1	1.334	1	.331	1
6290		min		.096	2	-.127	1	.06	2	1.281	2	.11	2
6291		max	B	.109	1	-.088	2	.17	1	-.102	2	.3	1
6292		min		.006	2	-.23	1	.047	2	-.192	1	.091	2
6293	P1574	max	T	.298	1	-.008	2	.192	1	1.386	1	.349	1
6294		min		.123	2	-.086	1	.065	2	1.346	2	.127	2
6295		max	B	.071	1	-.113	2	.175	1	-.075	2	.32	1
6296		min		-.006	2	-.278	1	.053	2	-.146	1	.11	2
6297	P1575	max	T	.234	1	-.032	2	.187	1	1.297	1	.327	1
6298		min		.091	2	-.14	1	.062	2	1.274	2	.111	2
6299		max	B	.126	1	-.079	2	.168	1	-.159	2	.293	1
6300		min		.018	2	-.21	1	.049	2	-.246	1	.089	2
6301	P1576	max	T	.282	1	-.016	2	.19	1	1.36	1	.341	1

Envelope Plate/Shell Principal Stresses (Continued)

	Plate		Sur...	Sigma1 [ksi]	LC	Sigma2 [ksi]	LC	Tau Max [k...	LC	Angle [rad]	LC	Von Mises [ksi]	LC
6302		min		.118	2	-.097	1	.067	2	1.349	2	.126	2
6303		max	B	.086	1	-.104	2	.171	1	-.111	2	.308	1
6304		min		.005	2	-.256	1	.055	2	-.187	1	.107	2
6305	P1577	max	T	.342	1	.005	2	.198	1	1.433	1	.371	1
6306		min		.148	2	-.053	1	.071	2	1.398	2	.145	2
6307		max	B	.041	1	-.136	2	.181	1	-.058	2	.343	1
6308		min		-.017	2	-.32	1	.06	2	-.107	1	.129	2
6309	P1578	max	T	.38	1	.015	2	.204	1	1.473	1	.395	1
6310		min		.17	2	-.028	1	.078	2	1.439	2	.163	2
6311		max	B	.016	1	-.157	2	.187	1	-.048	2	.366	1
6312		min		-.026	2	-.357	1	.066	2	-.075	1	.146	2
6313	P1579	max	T	.326	1	-.004	2	.195	1	1.415	1	.362	1
6314		min		.143	2	-.065	1	.073	2	1.406	2	.145	2
6315		max	B	.056	1	-.127	2	.177	1	-.08	2	.329	1
6316		min		-.005	2	-.298	1	.061	2	-.136	1	.125	2
6317	P1580	max	T	.364	1	.005	2	.202	1	1.46	1	.386	1
6318		min		.166	2	-.04	1	.08	2	1.448	2	.163	2
6319		max	B	.032	1	-.148	2	.183	1	-.06	2	.352	1
6320		min		-.013	2	-.335	1	.068	2	-.096	1	.142	2
6321	P1581	max	T	.412	1	.022	2	.21	1	1.508	1	.416	1
6322		min		.19	2	-.008	1	.084	2	1.472	2	.18	2
6323		max	B	-.003	1	-.175	2	.192	1	-.041	2	.386	1
6324		min		-.033	2	-.388	1	.071	2	-.048	1	.162	2
6325	P1582	max	T	.438	1	.028	2	.215	1	1.538	1	.434	1
6326		min		.207	2	.007	1	.09	2	1.499	2	.195	2
6327		max	B	-.019	1	-.191	2	.197	1	-.027	1	.404	1
6328		min		-.038	2	-.413	1	.076	2	-.037	2	.175	2
6329	P1583	max	T	.397	1	.012	2	.209	1	1.498	1	.409	1
6330		min		.186	2	-.022	1	.087	2	1.481	2	.18	2
6331		max	B	.014	1	-.167	2	.19	1	-.047	2	.374	1
6332		min		-.019	2	-.366	1	.074	2	-.063	1	.158	2
6333	P1584	max	T	.424	1	.017	2	.216	1	1.529	1	.428	1
6334		min		.203	2	-.008	1	.093	2	1.506	2	.195	2
6335		max	B	0	1	-.182	2	.196	1	-.038	1	.392	1
6336		min		-.024	2	-.392	1	.079	2	-.039	2	.172	2
6337	P1585	max	T	.458	1	.032	2	.219	1	1.563	1	.449	1
6338		min		.221	2	.019	1	.094	2	1.521	2	.207	2
6339		max	B	-.031	1	-.204	2	.2	1	-.01	1	.417	1
6340		min		-.043	2	-.432	1	.081	2	-.036	2	.187	2
6341	P1586	max	T	.471	1	.035	2	.222	1	1.585	1	.458	1
6342		min		.232	2	.027	1	.098	2	1.542	2	.216	2
6343		max	B	-.041	1	-.215	2	.202	1	.002	1	.427	1
6344		min		-.046	2	-.446	1	.084	2	-.035	2	.196	2
6345	P1587	max	T	.445	1	.021	2	.221	1	1.555	1	.444	1
6346		min		.217	2	.003	1	.098	2	1.527	2	.208	2
6347		max	B	-.011	1	-.196	2	.201	1	-.019	1	.407	1
6348		min		-.028	2	-.413	1	.084	2	-.035	2	.183	2
6349	P1588	max	T	.459	1	.023	2	.225	1	1.578	1	.454	1
6350		min		.228	2	.01	1	.102	2	1.544	2	.217	2
6351		max	B	-.02	1	-.206	2	.204	1	-.004	1	.418	1
6352		min		-.03	2	-.427	1	.088	2	-.032	2	.192	2
6353	P1589	max	T	.478	1	.037	2	.223	1	1.605	1	.463	1
6354		min		.239	2	.033	1	.101	2	1.56	2	.222	2
6355		max	B	-.047	1	-.222	2	.203	1	.012	1	.432	1
6356		min		-.048	2	-.454	1	.087	2	-.036	2	.202	2
6357	P1590	max	T	.48	1	.038	2	.222	1	1.623	1	.463	1
6358		min		.242	2	.035	1	.102	2	1.578	2	.225	2

Envelope Plate/Shell Principal Stresses (Continued)

	Plate		Sur...	Sigma1 [ksi]	LC	Sigma2 [ksi]	LC	Tau Max [k...	LC	Angle [rad]	LC	Von Mises [ksi]	LC
6359		max	B	-.049	2	-.226	2	.203	1	.02	1	.433	1
6360		min		-.051	1	-.456	1	.089	2	-.036	2	.206	2
6361	P1591	max	T	.468	1	.025	2	.226	1	1.597	1	.46	1
6362		min		.235	2	.015	1	.105	2	1.56	2	.223	2
6363		max	B	-.025	1	-.213	2	.206	1	.008	1	.424	1
6364		min		-.032	2	-.436	1	.09	2	-.031	2	.199	2
6365	P1592	max	T	.47	1	.026	2	.226	1	1.616	1	.461	1
6366		min		.238	2	.018	1	.106	2	1.575	2	.226	2
6367		max	B	-.028	1	-.217	2	.206	1	.018	1	.426	1
6368		min		-.033	2	-.439	1	.092	2	-.03	2	.202	2
6369	P1593	max	T	.475	1	.038	2	.22	1	1.641	1	.459	1
6370		min		.242	2	.035	1	.102	2	1.595	2	.225	2
6371		max	B	-.049	2	-.227	2	.201	1	.026	1	.43	1
6372		min		-.051	1	-.454	1	.089	2	-.037	2	.207	2
6373	P1594	max	T	.466	1	.037	2	.217	1	1.659	1	.45	1
6374		min		.238	2	.032	1	.1	2	1.612	2	.222	2
6375		max	B	-.047	2	-.225	2	.199	1	.033	1	.424	1
6376		min		-.049	1	-.446	1	.089	2	-.037	2	.205	2
6377	P1595	max	T	.466	1	.026	2	.224	1	1.633	1	.457	1
6378		min		.238	2	.018	1	.106	2	1.59	2	.226	2
6379		max	B	-.029	1	-.218	2	.204	1	.027	1	.424	1
6380		min		-.033	2	-.438	1	.093	2	-.03	2	.204	2
6381	P1596	max	T	.456	1	.025	2	.22	1	1.651	1	.449	1
6382		min		.234	2	.015	1	.105	2	1.605	2	.223	2
6383		max	B	-.027	1	-.216	2	.202	1	.036	1	.418	1
6384		min		-.032	2	-.43	1	.092	2	-.029	2	.202	2
6385	P1597	max	T	.451	1	.035	2	.212	1	1.678	1	.438	1
6386		min		.231	2	.027	1	.098	2	1.631	2	.215	2
6387		max	B	-.044	1	-.219	2	.195	1	.04	1	.414	1
6388		min		-.045	2	-.434	1	.087	2	-.036	2	.201	2
6389	P1598	max	T	.431	1	.032	2	.206	1	1.7	1	.422	1
6390		min		.22	2	.018	1	.094	2	1.652	2	.205	2
6391		max	B	-.036	1	-.211	2	.191	1	.05	1	.401	1
6392		min		-.041	2	-.417	1	.085	2	-.035	2	.194	2
6393	P1599	max	T	.441	1	.023	2	.215	1	1.671	1	.436	1
6394		min		.226	2	.01	1	.102	2	1.621	2	.216	2
6395		max	B	-.022	1	-.21	2	.198	1	.046	1	.408	1
6396		min		-.03	2	-.418	1	.09	2	-.027	2	.197	2
6397	P1600	max	T	.42	1	.02	2	.209	1	1.694	1	.419	1
6398		min		.215	2	.002	1	.097	2	1.639	2	.206	2
6399		max	B	-.015	1	-.202	2	.193	1	.059	1	.394	1
6400		min		-.027	2	-.401	1	.087	2	-.024	2	.19	2
6401	P1601	max	T	.406	1	.028	2	.2	1	1.725	1	.403	1
6402		min		.205	2	.005	1	.089	2	1.675	2	.193	2
6403		max	B	-.025	1	-.199	2	.186	1	.062	1	.384	1
6404		min		-.037	2	-.396	1	.081	2	-.032	2	.184	2
6405	P1602	max	T	.376	1	.022	2	.193	1	1.755	1	.382	1
6406		min		.188	2	-.011	1	.083	2	1.702	2	.178	2
6407		max	B	-.01	1	-.185	2	.18	1	.079	1	.364	1
6408		min		-.031	2	-.369	1	.077	2	-.027	2	.171	2
6409	P1603	max	T	.394	1	.017	2	.202	1	1.721	1	.399	1
6410		min		.201	2	-.009	1	.092	2	1.661	2	.193	2
6411		max	B	-.005	1	-.19	2	.187	1	.075	1	.376	1
6412		min		-.023	2	-.379	1	.084	2	-.019	2	.18	2
6413	P1604	max	T	.364	1	.011	2	.194	1	1.753	1	.376	1
6414		min		.183	2	-.024	1	.086	2	1.687	2	.178	2
6415		max	B	.008	1	-.175	2	.18	1	.096	1	.356	1

Envelope Plate/Shell Principal Stresses (Continued)

	Plate		Sur...	Sigma1 [ksi]	LC	Sigma2 [ksi]	LC	Tau Max [k...	LC	Angle [rad]	LC	Von Mises [ksi]	LC
6416		min		-.018	2	-.352	1	.079	2	-.012	2	.167	2
6417	P1605	max	T	.342	1	.014	2	.187	1	1.79	1	.359	1
6418		min		.168	2	-.032	1	.077	2	1.736	2	.162	2
6419		max	B	.008	1	-.167	2	.173	1	.1	1	.342	1
6420		min		-.023	2	-.338	1	.072	2	-.02	2	.157	2
6421	P1606	max	T	.303	1	.004	2	.181	1	1.832	1	.336	1
6422		min		.145	2	-.058	1	.071	2	1.778	2	.144	2
6423		max	B	.031	1	-.147	2	.167	1	.128	1	.319	1
6424		min		-.015	2	-.302	1	.066	2	-.009	2	.14	2
6425	P1607	max	T	.329	1	.004	2	.186	1	1.793	1	.353	1
6426		min		.163	2	-.044	1	.079	2	1.721	2	.161	2
6427		max	B	.025	1	-.158	2	.173	1	.124	1	.334	1
6428		min		-.011	2	-.321	1	.073	2	0	2	.152	2
6429	P1608	max	T	.29	1	-.005	2	.18	1	1.841	1	.33	1
6430		min		.14	2	-.07	1	.072	2	1.765	2	.142	2
6431		max	B	.047	1	-.137	2	.166	1	.16	1	.311	1
6432		min		-.003	2	-.285	1	.067	2	.019	2	.136	2
6433	P1609	max	T	.261	1	-.009	2	.177	1	1.88	1	.317	1
6434		min		.121	2	-.092	1	.065	2	1.831	2	.126	2
6435		max	B	.059	1	-.124	2	.16	1	.162	1	.296	1
6436		min		-.004	2	-.261	1	.06	2	.007	2	.122	2
6437	P1610	max	T	.215	1	-.026	2	.175	1	1.932	1	.305	1
6438		min		.094	2	-.134	1	.06	2	1.898	2	.11	2
6439		max	B	.094	1	-.098	2	.155	1	.202	1	.275	1
6440		min		.009	2	-.216	1	.053	2	.031	2	.103	2
6441	P1611	max	T	.248	1	-.017	2	.176	1	1.898	1	.313	1
6442		min		.115	2	-.104	1	.066	2	1.825	2	.124	2
6443		max	B	.075	1	-.114	2	.16	1	.206	1	.29	1
6444		min		.006	2	-.245	1	.06	2	.048	2	.118	2
6445	P1612	max	T	.203	1	-.034	2	.175	1	1.961	1	.305	1
6446		min		.088	2	-.147	1	.061	2	1.902	2	.109	2
6447		max	B	.112	1	-.089	2	.157	1	.259	1	.275	1
6448		min		.019	2	-.202	1	.054	2	.091	2	.1	2
6449	P1613	max	T	.165	1	-.047	2	.176	1	1.987	1	.304	1
6450		min		.067	2	-.186	1	.057	2	1.977	2	.099	2
6451		max	B	.137	1	-.07	2	.151	1	.247	1	.263	1
6452		min		.024	2	-.166	1	.047	2	.065	2	.085	2
6453	P1614	max	T	.11	1	-.075	2	.18	1	2.062	2	.32	1
6454		min		.038	2	-.25	1	.056	2	2.039	1	.099	2
6455		max	B	.189	1	-.039	2	.15	1	.294	1	.262	1
6456		min		.044	2	-.11	1	.041	2	.113	2	.072	2
6457	P1615	max	T	.156	1	-.057	2	.18	1	2.027	1	.312	1
6458		min		.061	2	-.203	1	.059	2	1.996	2	.102	2
6459		max	B	.158	1	-.061	2	.157	1	.319	1	.272	1
6460		min		.035	2	-.155	1	.048	2	.153	2	.085	2
6461	P1616	max	T	.106	1	-.086	2	.19	1	2.096	2	.34	1
6462		min		.034	2	-.274	1	.06	2	2.089	1	.107	2
6463		max	B	.218	1	-.032	2	.161	1	.38	1	.285	1
6464		min		.057	2	-.105	1	.044	2	.238	2	.078	2
6465	P1617	max	T	.047	1	-.109	2	.188	1	2.144	2	.354	1
6466		min		.007	2	-.328	1	.058	2	2.087	1	.113	2
6467		max	B	.253	1	-.005	2	.149	1	.339	1	.278	1
6468		min		.067	2	-.045	1	.036	2	.175	2	.07	2
6469	P1618	max	T	-.027	2	-.151	2	.197	1	2.216	2	.409	1
6470		min		-.027	1	-.421	1	.062	2	2.129	1	.14	2
6471		max	B	.329	1	.033	2	.149	1	.382	1	.314	1
6472		min		.096	2	.032	1	.032	2	.256	2	.084	2

Envelope Plate/Shell Principal Stresses (Continued)

	Plate		Sur...	Sigma1 [ksi]	LC	Sigma2 [ksi]	LC	Tau Max [k...	LC	Angle [rad]	LC	Von Mises [ksi]	LC
6473	P1619	max	T	.05	1	-.125	2	.206	1	2.186	2	.39	1
6474		min		.005	2	-.362	1	.065	2	2.141	1	.128	2
6475		max	B	.292	1	-.002	2	.17	1	.435	1	.319	1
6476		min		.084	2	-.049	1	.043	2	.338	2	.085	2
6477	P1620	max	T	-.017	1	-.174	2	.226	1	2.255	2	.462	1
6478		min		-.026	2	-.47	1	.074	2	2.182	1	.162	2
6479		max	B	.383	1	.032	2	.182	1	.479	1	.374	1
6480		min		.121	2	.019	1	.044	2	.439	2	.108	2
6481	P1621	max	T	-.066	2	-.204	2	.208	1	2.28	2	.488	1
6482		min		-.119	1	-.536	1	.069	2	2.171	1	.18	2
6483		max	B	.42	1	.129	1	.146	1	.433	1	.373	1
6484		min		.131	2	.077	2	.027	2	.383	2	.114	2
6485	P1622	max	T	-.109	2	-.272	2	.226	1	2.349	2	.601	1
6486		min		-.23	1	-.682	1	.081	2	2.234	1	.237	2
6487		max	B	.533	1	.25	1	.142	1	.667	2	.462	1
6488		min		.179	2	.127	2	.026	2	.538	1	.159	2
6489	P1623	max	T	-.064	2	-.234	2	.249	1	2.309	2	.557	1
6490		min		-.106	1	-.603	1	.085	2	2.216	1	.21	2
6491		max	B	.494	1	.108	1	.193	1	.535	2	.45	1
6492		min		.166	2	.073	2	.047	2	.518	1	.145	2
6493	P1624	max	T	-.116	2	-.315	2	.273	1	2.259	1	.692	1
6494		min		-.233	1	-.779	1	.1	2	-.782	2	.276	2
6495		max	B	.638	1	.239	1	.199	1	.654	2	.558	1
6496		min		.228	2	.127	2	.05	2	.573	1	.198	2
6497	P1625	max	T	-.154	2	-.386	2	.301	1	2.355	2	.831	1
6498		min		-.345	1	-.948	1	.116	2	2.274	1	.337	2
6499		max	B	.757	1	.373	1	.192	1	.84	2	.656	1
6500		min		.273	2	.171	2	.051	2	.67	1	.239	2
6501	P1626	max	T	-.169	2	-.442	2	.355	1	2.236	2	.961	1
6502		min		-.384	1	-1.094	1	.136	2	2.185	1	.386	2
6503		max	B	.889	1	.408	1	.24	1	.751	2	.77	1
6504		min		.319	2	.183	2	.068	2	.618	1	.277	2
6505	P1627	max	T	-.169	2	-.439	2	.332	1	-.676	2	.915	1
6506		min		-.379	1	-1.043	1	.135	2	-.76	1	.383	2
6507		max	B	.852	1	.4	1	.226	1	.916	2	.738	1
6508		min		.327	2	.184	2	.071	2	.767	1	.284	2
6509	P1628	max	T	-.255	2	-.832	2	.708	1	2.35	2	1.786	1
6510		min		-.589	1	-2.006	1	.289	2	2.311	1	.738	2
6511		max	B	1.72	1	.601	1	.559	1	.81	2	1.512	1
6512		min		.663	2	.262	2	.201	2	.739	1	.578	2
6513	P1629	max	T	-.17	2	-.457	2	.374	1	2.197	2	1	1
6514		min		-.388	1	-1.136	1	.144	2	2.158	1	.4	2
6515		max	B	.941	1	.388	1	.277	1	.774	2	.819	1
6516		min		.343	2	.164	2	.089	2	.637	1	.297	2
6517	P1630	max	T	-.099	2	-.417	2	.41	1	2.147	2	.949	1
6518		min		-.219	1	-1.039	1	.159	2	2.124	1	.378	2
6519		max	B	.881	1	.209	1	.336	1	.72	2	.798	1
6520		min		.324	2	.085	2	.12	2	.62	1	.291	2
6521	P1631	max	T	-.172	2	-.706	2	.666	1	2.021	2	1.583	1
6522		min		-.419	1	-1.75	1	.267	2	2.001	1	.638	2
6523		max	B	1.513	1	.416	1	.549	1	.452	2	1.354	1
6524		min		.56	2	.165	2	.197	2	.418	1	.498	2
6525	P1632	max	T	-.117	2	-.52	2	.509	1	2	2	1.174	1
6526		min		-.267	1	-1.285	1	.201	2	1.998	1	.472	2
6527		max	B	1.044	1	.266	1	.389	1	.457	2	.94	1
6528		min		.372	2	.112	2	.13	2	.432	1	.33	2
6529	P1633	max	T	-.026	2	-.364	2	.434	1	2.087	2	.89	1

Envelope Plate/Shell Principal Stresses (Continued)

	Plate		Sur...	Sigma1 [ksi]	LC	Sigma2 [ksi]	LC	Tau Max [k...	LC	Angle [rad]	LC	Von Mises [ksi]	LC
6530		min		-.043	1	-.911	1	.169	2	2.078	1	.351	2
6531		max	B	.792	1	.019	1	.386	1	.627	2	.782	1
6532		min		.292	2	.006	2	.143	2	.565	1	.289	2
6533	P1634	max	T	.003	1	-.281	2	.357	1	1.92	2	.712	1
6534		min		-.003	2	-.71	1	.139	2	1.916	1	.279	2
6535		max	B	.609	1	-.006	2	.311	1	.433	2	.616	1
6536		min		.217	2	-.014	1	.112	2	.388	1	.22	2
6537	P1635	max	T	-.061	2	-.38	2	.422	1	2.045	2	.893	1
6538		min		-.093	1	-.936	1	.16	2	2.045	1	.354	2
6539		max	B	.812	1	.082	1	.365	1	.649	2	.774	1
6540		min		.308	2	.045	2	.131	2	.568	1	.288	2
6541	P1636	max	T	.01	1	-.277	2	.35	1	1.946	1	.696	1
6542		min		-.003	2	-.691	1	.137	2	1.945	2	.275	2
6543		max	B	.578	1	-.002	2	.297	1	.474	2	.586	1
6544		min		.209	2	-.015	1	.106	2	.43	1	.21	2
6545	P1637	max	T	-.025	2	-.258	2	.331	1	1.241	2	.683	1
6546		min		-.04	1	-.702	1	.116	2	1.231	1	.246	2
6547		max	B	.628	1	.026	1	.301	1	-.405	1	.615	1
6548		min		.193	2	.01	2	.091	2	-.52	2	.188	2
6549	P1638	max	T	-.099	2	-.25	2	.233	1	.787	1	.589	1
6550		min		-.195	1	-.662	1	.076	2	.717	2	.218	2
6551		max	B	.719	1	.13	1	.295	1	2.301	1	.664	1
6552		min		.305	2	.041	2	.132	2	2.199	2	.286	2
6553	P1639	max	T	-.052	2	-.208	2	.226	1	1.226	2	.516	1
6554		min		-.111	1	-.563	1	.078	2	1.208	1	.187	2
6555		max	B	.53	1	.09	1	.22	1	-.442	1	.491	1
6556		min		.18	2	.03	2	.075	2	-.566	2	.167	2
6557	P1640	max	T	-.115	2	-.432	2	.446	1	.554	1	1.033	1
6558		min		-.239	1	-1.132	1	.158	2	.497	2	.387	2
6559		max	B	1.162	1	.181	1	.49	1	2.139	1	1.083	1
6560		min		.458	2	.067	2	.196	2	2.105	2	.429	2
6561	P1641	max	T	-.155	2	-.686	2	.636	1	.53	1	1.486	1
6562		min		-.362	1	-1.633	1	.265	2	.48	2	.623	2
6563		max	B	1.535	1	.409	1	.563	1	2.057	1	1.377	1
6564		min		.582	2	.181	2	.2	2	1.952	2	.516	2
6565	P1642	max	T	-.162	2	-.443	2	.348	1	.81	1	.944	1
6566		min		-.38	1	-1.075	1	.141	2	.671	2	.388	2
6567		max	B	.988	1	.401	1	.293	1	2.188	2	.86	1
6568		min		.353	2	.172	2	.091	2	-.779	1	.306	2
6569	P1643	max	T	-.102	2	-.503	2	.434	1	.535	1	1.002	1
6570		min		-.228	1	-1.096	1	.201	2	.462	2	.46	2
6571		max	B	1.002	1	.272	1	.365	1	2.068	1	.898	1
6572		min		.4	2	.127	2	.137	2	1.945	2	.354	2
6573	P1644	max	T	-.086	2	-.404	2	.404	1	.754	1	.9	1
6574		min		-.162	1	-.97	1	.159	2	.618	2	.369	2
6575		max	B	.905	1	.194	1	.355	1	2.315	1	.825	1
6576		min		.335	2	.103	2	.116	2	2.17	2	.297	2
6577	P1645	max	T	-.088	2	-.326	2	.327	1	.884	1	.754	1
6578		min		-.17	1	-.824	1	.119	2	.745	2	.292	2
6579		max	B	.761	1	.191	1	.285	1	2.323	2	.686	1
6580		min		.259	2	.101	2	.079	2	-.687	1	.226	2
6581	P1646	max	T	-.046	2	-.245	2	.293	1	.922	1	.616	1
6582		min		-.057	1	-.642	1	.099	2	.789	2	.225	2
6583		max	B	.595	1	.078	1	.259	1	-.645	1	.56	1
6584		min		.193	2	.059	2	.067	2	-.752	2	.171	2
6585	P1647	max	T	-.048	2	-.322	2	.375	1	.788	1	.778	1
6586		min		-.054	1	-.803	1	.137	2	.66	2	.301	2

Envelope Plate/Shell Principal Stresses (Continued)

	Plate		Sur...	Sigma1 [ksi]	LC	Sigma2 [ksi]	LC	Tau Max [k...	LC	Angle [rad]	LC	Von Mises [ksi]	LC
6587		max	B	.756	1	.076	1	.34	1	2.347	1	.721	1
6588		min		.271	2	.058	2	.106	2	2.219	2	.247	2
6589	P1648	max	T	.018	1	-.245	2	.327	1	.808	1	.644	1
6590		min		-.02	2	-.635	1	.113	2	.685	2	.236	2
6591		max	B	.604	1	.031	2	.3	1	2.249	2	.602	1
6592		min		.208	2	.003	1	.088	2	-.775	1	.194	2
6593	P1649	max	T	.019	1	-.179	2	.255	1	.958	1	.501	1
6594		min		-.015	2	-.491	1	.082	2	.837	2	.172	2
6595		max	B	.457	1	.029	2	.227	1	-.608	1	.456	1
6596		min		.14	2	.003	1	.056	2	-.688	2	.128	2
6597	P1650	max	T	.076	1	-.126	2	.222	1	1.01	1	.412	1
6598		min		.01	2	-.368	1	.068	2	.913	2	.132	2
6599		max	B	.344	1	.004	2	.198	1	-.555	1	.373	1
6600		min		.097	2	-.052	1	.047	2	-.591	2	.096	2
6601	P1651	max	T	.06	1	-.178	2	.272	1	.842	1	.516	1
6602		min		-.001	2	-.483	1	.088	2	.729	2	.178	2
6603		max	B	.464	1	.014	2	.251	1	2.292	2	.484	1
6604		min		.152	2	-.038	1	.069	2	-.744	1	.146	2
6605	P1652	max	T	.093	1	-.123	2	.224	1	.9	1	.41	1
6606		min		.015	2	-.355	1	.069	2	.811	2	.131	2
6607		max	B	.344	1	-.001	2	.206	1	-.69	1	.382	1
6608		min		.105	2	-.068	1	.053	2	-.767	2	.105	2
6609	P1653	max	T	.126	1	-.085	2	.198	1	1.082	1	.35	1
6610		min		.035	2	-.27	1	.06	2	1.022	2	.107	2
6611		max	B	.253	1	-.02	2	.176	1	-.462	2	.315	1
6612		min		.065	2	-.1	1	.042	2	-.483	1	.077	2
6613	P1654	max	T	.173	1	-.055	2	.184	1	1.167	1	.318	1
6614		min		.06	2	-.194	1	.057	2	1.149	2	.099	2
6615		max	B	.182	1	-.045	2	.163	1	-.327	2	.283	1
6616		min		.041	2	-.145	1	.043	2	-.398	1	.074	2
6617	P1655	max	T	.127	1	-.079	2	.189	1	.987	1	.334	1
6618		min		.033	2	-.252	1	.056	2	.944	2	.1	2
6619		max	B	.246	1	-.017	2	.172	1	-.608	1	.307	1
6620		min		.067	2	-.098	1	.042	2	-.626	2	.077	2
6621	P1656	max	T	.164	1	-.049	2	.169	1	1.11	2	.293	1
6622		min		.056	2	-.174	1	.052	2	1.095	1	.09	2
6623		max	B	.17	1	-.037	2	.151	1	-.442	2	.262	1
6624		min		.041	2	-.131	1	.039	2	-.5	1	.067	2
6625	P1657	max	T	.221	1	-.034	2	.179	1	1.264	2	.312	1
6626		min		.087	2	-.137	1	.06	2	1.254	1	.107	2
6627		max	B	.128	1	-.07	2	.159	1	-.218	2	.277	1
6628		min		.024	2	-.189	1	.047	2	-.31	1	.084	2
6629	P1658	max	T	.267	1	-.019	2	.181	1	1.353	2	.325	1
6630		min		.113	2	-.095	1	.066	2	1.333	1	.124	2
6631		max	B	.089	1	-.095	2	.161	1	-.143	2	.288	1
6632		min		.012	2	-.233	1	.053	2	-.23	1	.101	2
6633	P1659	max	T	.207	1	-.029	2	.163	1	1.26	2	.285	1
6634		min		.082	2	-.119	1	.055	2	1.209	1	.1	2
6635		max	B	.116	1	-.06	2	.142	1	-.278	2	.248	1
6636		min		.023	2	-.169	1	.042	2	-.382	1	.075	2
6637	P1660	max	T	.252	1	-.017	2	.166	1	1.366	2	.301	1
6638		min		.109	2	-.08	1	.063	2	1.309	1	.119	2
6639		max	B	.078	1	-.085	2	.144	1	-.169	2	.258	1
6640		min		.013	2	-.211	1	.049	2	-.275	1	.092	2
6641	P1661	max	T	.311	1	-.008	2	.188	1	1.416	2	.348	1
6642		min		.139	2	-.065	1	.074	2	1.398	1	.143	2
6643		max	B	.06	1	-.118	2	.167	1	-.096	2	.309	1

Envelope Plate/Shell Principal Stresses (Continued)

	Plate		Sur...	Sigma1 [ksi]	LC	Sigma2 [ksi]	LC	Tau Max [k...	LC	Angle [rad]	LC	Von Mises [ksi]	LC
6644		min		.003	2	-.275	1	.06	2	-.165	1	.12	2
6645	P1662	max	T	.35	1	0	2	.197	1	1.46	2	.374	1
6646		min		.162	2	-.043	1	.081	2	1.451	1	.163	2
6647		max	B	.038	1	-.139	2	.175	1	-.067	2	.333	1
6648		min		-.004	2	-.313	1	.068	2	-.114	1	.137	2
6649	P1663	max	T	.297	1	-.009	2	.176	1	1.434	2	.328	1
6650		min		.136	2	-.054	1	.072	2	1.388	1	.14	2
6651		max	B	.052	1	-.109	2	.152	1	-.104	2	.282	1
6652		min		.006	2	-.252	1	.057	2	-.19	1	.112	2
6653	P1664	max	T	.338	1	-.003	2	.188	1	1.478	2	.358	1
6654		min		.16	2	-.037	1	.082	2	1.448	1	.162	2
6655		max	B	.034	1	-.13	2	.163	1	-.067	2	.309	1
6656		min		0	2	-.291	1	.065	2	-.127	1	.131	2
6657	P1665	max	T	.385	1	.005	2	.206	1	1.492	1	.399	1
6658		min		.183	2	-.027	1	.089	2	1.492	2	.181	2
6659		max	B	.022	1	-.158	2	.184	1	-.049	2	.357	1
6660		min		-.009	2	-.345	1	.074	2	-.075	1	.154	2
6661	P1666	max	T	.413	1	.009	2	.214	1	1.525	1	.421	1
6662		min		.201	2	-.015	1	.096	2	1.515	2	.196	2
6663		max	B	.01	1	-.174	2	.191	1	-.038	2	.378	1
6664		min		-.013	2	-.373	1	.08	2	-.046	1	.168	2
6665	P1667	max	T	.375	1	.001	2	.199	1	1.507	2	.387	1
6666		min		.182	2	-.024	1	.09	2	1.491	1	.181	2
6667		max	B	.022	1	-.149	2	.173	1	-.045	2	.337	1
6668		min		-.003	2	-.325	1	.073	2	-.081	1	.148	2
6669	P1668	max	T	.404	1	.004	2	.21	1	1.527	2	.412	1
6670		min		.2	2	-.015	1	.098	2	1.525	1	.198	2
6671		max	B	.013	1	-.166	2	.183	1	-.033	2	.36	1
6672		min		-.006	2	-.354	1	.08	2	-.049	1	.163	2
6673	P1669	max	T	.435	1	.012	2	.22	1	1.551	1	.438	1
6674		min		.215	2	-.006	1	.101	2	1.533	2	.209	2
6675		max	B	0	1	-.187	2	.197	1	-.024	1	.395	1
6676		min		-.016	2	-.394	1	.085	2	-.032	2	.179	2
6677	P1670	max	T	.45	1	.014	2	.225	1	1.573	1	.45	1
6678		min		.225	2	0	1	.106	2	1.548	2	.219	2
6679		max	B	-.006	1	-.197	2	.202	1	-.007	1	.407	1
6680		min		-.018	2	-.41	1	.089	2	-.028	2	.189	2
6681	P1671	max	T	.428	1	.006	2	.218	1	1.55	1	.432	1
6682		min		.214	2	-.009	1	.104	2	1.542	2	.211	2
6683		max	B	.006	1	-.179	2	.191	1	-.025	1	.38	1
6684		min		-.008	2	-.377	1	.085	2	-.026	2	.175	2
6685	P1672	max	T	.444	1	.007	2	.224	1	1.571	1	.446	1
6686		min		.225	2	-.004	1	.109	2	1.553	2	.221	2
6687		max	B	.001	1	-.189	2	.197	1	-.007	1	.394	1
6688		min		-.01	2	-.393	1	.09	2	-.022	2	.185	2
6689	P1673	max	T	.459	1	.015	2	.228	1	1.592	1	.457	1
6690		min		.233	2	.004	1	.109	2	1.561	2	.225	2
6691		max	B	-.01	1	-.204	2	.205	1	.007	1	.414	1
6692		min		-.02	2	-.419	1	.092	2	-.026	2	.195	2
6693	P1674	max	T	.462	1	.016	2	.228	1	1.609	1	.459	1
6694		min		.236	2	.006	1	.11	2	1.573	2	.228	2
6695		max	B	-.013	1	-.209	2	.205	1	.018	1	.417	1
6696		min		-.02	2	-.424	1	.094	2	-.025	2	.199	2
6697	P1675	max	T	.454	1	.008	2	.228	1	1.588	1	.455	1
6698		min		.232	2	-.002	1	.112	2	1.563	2	.228	2
6699		max	B	-.002	1	-.197	2	.201	1	.007	1	.403	1
6700		min		-.011	2	-.404	1	.093	2	-.02	2	.192	2

Envelope Plate/Shell Principal Stresses (Continued)

	Plate		Sur...	Sigma1 [ksi]	LC	Sigma2 [ksi]	LC	Tau Max [k...	LC	Angle [rad]	LC	Von Mises [ksi]	LC
6701	P1676	max	T	.457	1	.009	2	.228	1	1.604	1	.457	1
6702		min		.236	2	0	1	.113	2	1.571	2	.231	2
6703		max	B	-.003	1	-.201	2	.203	1	.019	1	.407	1
6704		min		-.011	2	-.409	1	.095	2	-.019	2	.196	2
6705	P1677	max	T	.458	1	.016	2	.226	1	1.626	1	.455	1
6706		min		.236	2	.006	1	.11	2	1.585	2	.228	2
6707		max	B	-.013	1	-.209	2	.204	1	.029	1	.416	1
6708		min		-.02	2	-.422	1	.095	2	-.024	2	.2	2
6709	P1678	max	T	.448	1	.015	2	.222	1	1.644	1	.446	1
6710		min		.232	2	.004	1	.108	2	1.597	2	.224	2
6711		max	B	-.012	1	-.207	2	.202	1	.039	1	.409	1
6712		min		-.019	2	-.415	1	.094	2	-.023	2	.198	2
6713	P1679	max	T	.453	1	.009	2	.227	1	1.619	1	.453	1
6714		min		.235	2	0	1	.113	2	1.579	2	.231	2
6715		max	B	-.004	1	-.202	2	.202	1	.03	1	.406	1
6716		min		-.011	2	-.408	1	.095	2	-.019	2	.197	2
6717	P1680	max	T	.443	1	.008	2	.222	1	1.635	1	.444	1
6718		min		.231	2	-.002	1	.111	2	1.587	2	.227	2
6719		max	B	-.003	1	-.2	2	.199	1	.041	1	.4	1
6720		min		-.01	2	-.401	1	.095	2	-.019	2	.195	2
6721	P1681	max	T	.433	1	.014	2	.216	1	1.663	1	.433	1
6722		min		.224	2	0	1	.105	2	1.61	2	.217	2
6723		max	B	-.008	1	-.202	2	.197	1	.051	1	.399	1
6724		min		-.018	2	-.403	1	.092	2	-.021	2	.193	2
6725	P1682	max	T	.411	1	.012	2	.209	1	1.686	1	.415	1
6726		min		.213	2	-.007	1	.1	2	1.625	2	.207	2
6727		max	B	-.002	1	-.193	2	.192	1	.066	1	.384	1
6728		min		-.016	2	-.386	1	.089	2	-.017	2	.186	2
6729	P1683	max	T	.427	1	.007	2	.216	1	1.653	1	.429	1
6730		min		.223	2	-.004	1	.108	2	1.598	2	.219	2
6731		max	B	0	1	-.194	2	.194	1	.054	1	.388	1
6732		min		-.009	2	-.388	1	.092	2	-.017	2	.19	2
6733	P1684	max	T	.404	1	.006	2	.207	1	1.675	1	.409	1
6734		min		.211	2	-.01	1	.103	2	1.61	2	.208	2
6735		max	B	.004	1	-.185	2	.187	1	.071	1	.373	1
6736		min		-.008	2	-.371	1	.089	2	-.013	2	.182	2
6737	P1685	max	T	.384	1	.009	2	.2	1	1.714	1	.393	1
6738		min		.198	2	-.016	1	.095	2	1.644	2	.194	2
6739		max	B	.006	1	-.181	2	.185	1	.086	1	.366	1
6740		min		-.013	2	-.363	1	.084	2	-.011	2	.175	2
6741	P1686	max	T	.353	1	.004	2	.191	1	1.75	1	.368	1
6742		min		.18	2	-.029	1	.088	2	1.669	2	.177	2
6743		max	B	.017	1	-.167	2	.177	1	.112	1	.345	1
6744		min		-.009	2	-.336	1	.079	2	0	2	.162	2
6745	P1687	max	T	.376	1	.004	2	.196	1	1.703	1	.385	1
6746		min		.196	2	-.017	1	.096	2	1.625	2	.194	2
6747		max	B	.011	1	-.173	2	.179	1	.093	1	.353	1
6748		min		-.006	2	-.347	1	.084	2	-.007	2	.171	2
6749	P1688	max	T	.343	1	0	2	.185	1	1.74	1	.357	1
6750		min		.177	2	-.027	1	.088	2	1.647	2	.177	2
6751		max	B	.019	1	-.158	2	.169	1	.123	1	.329	1
6752		min		-.003	2	-.319	1	.078	2	.004	2	.157	2
6753	P1689	max	T	.316	1	-.001	2	.182	1	1.794	1	.342	1
6754		min		.158	2	-.047	1	.08	2	1.703	2	.159	2
6755		max	B	.033	1	-.149	2	.168	1	.147	1	.321	1
6756		min		-.003	2	-.304	1	.073	2	.015	2	.147	2
6757	P1690	max	T	.277	1	-.009	2	.174	1	1.851	1	.318	1

Envelope Plate/Shell Principal Stresses (Continued)

	Plate		Sur...	Sigma1 [ksi]	LC	Sigma2 [ksi]	LC	Tau Max [k...	LC	Angle [rad]	LC	Von Mises [ksi]	LC
6758		min		.135	2	-.071	1	.072	2	1.75	2	.14	2
6759		max	B	.053	1	-.128	2	.16	1	.193	1	.298	1
6760		min		.003	2	-.268	1	.066	2	.041	2	.13	2
6761	P1691	max	T	.305	1	-.004	2	.173	1	1.789	1	.327	1
6762		min		.155	2	-.041	1	.079	2	1.678	2	.157	2
6763		max	B	.032	1	-.14	2	.159	1	.164	1	.304	1
6764		min		0	2	-.287	1	.07	2	.023	2	.14	2
6765	P1692	max	T	.263	1	-.009	2	.162	1	1.855	1	.299	1
6766		min		.13	2	-.061	1	.07	2	1.726	2	.135	2
6767		max	B	.049	1	-.119	2	.149	1	.222	1	.278	1
6768		min		.006	2	-.25	1	.062	2	.056	2	.122	2
6769	P1693	max	T	.235	1	-.02	2	.169	1	1.92	1	.3	1
6770		min		.109	2	-.103	1	.065	2	1.817	2	.12	2
6771		max	B	.08	1	-.105	2	.154	1	.252	1	.278	1
6772		min		.012	2	-.229	1	.058	2	.083	2	.111	2
6773	P1694	max	T	.192	1	-.036	2	.169	1	1.999	1	.294	1
6774		min		.082	2	-.147	1	.059	2	1.911	2	.105	2
6775		max	B	.117	1	-.08	2	.152	1	.324	1	.266	1
6776		min		.024	2	-.188	1	.052	2	.149	2	.094	2
6777	P1695	max	T	.221	1	-.018	2	.156	1	1.94	1	.277	1
6778		min		.103	2	-.09	1	.061	2	1.801	2	.113	2
6779		max	B	.073	1	-.095	2	.142	1	.299	1	.256	1
6780		min		.012	2	-.212	1	.054	2	.11	2	.102	2
6781	P1696	max	T	.18	1	-.031	2	.156	1	2.042	1	.271	1
6782		min		.076	2	-.132	1	.054	2	1.916	2	.095	2
6783		max	B	.108	1	-.07	2	.141	1	.395	1	.246	1
6784		min		.022	2	-.174	1	.046	2	.204	2	.083	2
6785	P1697	max	T	.149	1	-.058	2	.177	1	2.081	1	.308	1
6786		min		.056	2	-.205	1	.057	2	2.03	2	.099	2
6787		max	B	.166	1	-.053	2	.156	1	.404	1	.27	1
6788		min		.04	2	-.146	1	.046	2	.247	2	.081	2
6789	P1698	max	T	.107	1	-.09	2	.194	1	2.158	1	.347	1
6790		min		.031	2	-.281	1	.06	2	2.155	2	.109	2
6791		max	B	.23	1	-.027	2	.167	1	.482	1	.296	1
6792		min		.063	2	-.104	1	.045	2	.376	2	.08	2
6793	P1699	max	T	.142	1	-.053	2	.166	1	2.149	1	.289	1
6794		min		.05	2	-.19	1	.051	2	2.074	2	.089	2
6795		max	B	.158	1	-.045	2	.148	1	.501	1	.257	1
6796		min		.038	2	-.138	1	.041	2	.352	2	.072	2
6797	P1700	max	T	.109	1	-.085	2	.189	1	2.244	1	.337	1
6798		min		.029	2	-.269	1	.057	2	2.24	2	.102	2
6799		max	B	.226	1	-.023	2	.167	1	.6	1	.295	1
6800		min		.063	2	-.107	1	.043	2	.537	2	.077	2
6801	P1701	max	T	.062	1	-.132	2	.219	1	2.261	2	.411	1
6802		min		.007	2	-.376	1	.07	2	2.219	1	.136	2
6803		max	B	.313	1	-.002	2	.187	1	.549	1	.347	1
6804		min		.095	2	-.061	1	.048	2	.51	2	.096	2
6805	P1702	max	T	.01	1	-.186	2	.252	1	2.333	2	.499	1
6806		min		-.018	2	-.494	1	.084	2	2.262	1	.177	2
6807		max	B	.415	1	.024	2	.212	1	.616	2	.42	1
6808		min		.138	2	-.01	1	.057	2	.597	1	.127	2
6809	P1703	max	T	.079	1	-.13	2	.224	1	2.317	1	.414	1
6810		min		.011	2	-.368	1	.07	2	-.776	2	.136	2
6811		max	B	.314	1	-.006	2	.197	1	.695	2	.36	1
6812		min		.099	2	-.079	1	.052	2	.678	1	.102	2
6813	P1704	max	T	.048	1	-.186	2	.269	1	-.7	2	.516	1
6814		min		-.005	2	-.491	1	.091	2	-.778	1	.184	2

Envelope Plate/Shell Principal Stresses (Continued)

	Plate		Sur...	Sigma1 [ksi]	LC	Sigma2 [ksi]	LC	Tau Max [k...	LC	Angle [rad]	LC	Von Mises [ksi]	LC
6815		max	B	.423	1	.01	2	.237	1	.793	2	.45	1
6816		min		.147	2	-.05	1	.068	2	.729	1	.142	2
6817	P1705	max	T	-.05	2	-.252	2	.288	1	2.292	1	.609	1
6818		min		-.061	1	-.638	1	.101	2	-.763	2	.231	2
6819		max	B	.539	1	.059	1	.24	1	.689	2	.513	1
6820		min		.192	2	.055	2	.068	2	.631	1	.171	2
6821	P1706	max	T	-.093	2	-.334	2	.323	1	2.327	1	.743	1
6822		min		-.166	1	-.812	1	.121	2	-.72	2	.299	2
6823		max	B	.688	1	.162	1	.263	1	.759	2	.623	1
6824		min		.258	2	.099	2	.08	2	.669	1	.225	2
6825	P1707	max	T	.008	1	-.254	2	.321	1	-.66	2	.638	1
6826		min		-.024	2	-.634	1	.115	2	-.75	1	.243	2
6827		max	B	.55	1	.027	2	.282	1	.846	2	.557	1
6828		min		.204	2	-.013	1	.088	2	.759	1	.192	2
6829	P1708	max	T	-.053	2	-.332	2	.365	1	-.636	2	.763	1
6830		min		-.061	1	-.792	1	.14	2	-.732	1	.309	2
6831		max	B	.688	1	.054	2	.318	1	.878	2	.664	1
6832		min		.268	2	.051	1	.107	2	.777	1	.246	2
6833	P1709	max	T	-.167	2	-.454	2	.351	1	-.646	2	.933	1
6834		min		-.357	1	-1.059	1	.143	2	-.743	1	.397	2
6835		max	B	.888	1	.355	1	.267	1	.894	2	.775	1
6836		min		.352	2	.173	2	.09	2	.76	1	.305	2
6837	P1710	max	T	-.165	2	-.702	2	.628	1	-.464	2	1.463	1
6838		min		-.349	1	-1.606	1	.269	2	-.508	1	.636	2
6839		max	B	1.386	1	.367	1	.509	1	1.163	2	1.244	1
6840		min		.58	2	.178	2	.201	2	1.079	1	.515	2
6841	P1711	max	T	-.093	2	-.414	2	.394	1	-.595	2	.881	1
6842		min		-.164	1	-.952	1	.161	2	-.698	1	.377	2
6843		max	B	.819	1	.158	1	.331	1	.926	2	.753	1
6844		min		.334	2	.099	2	.118	2	.806	1	.297	2
6845	P1712	max	T	-.11	2	-.516	2	.445	1	-.446	2	1.014	1
6846		min		-.215	1	-1.104	1	.203	2	-.511	1	.471	2
6847		max	B	.887	1	.231	1	.328	1	1.166	2	.797	1
6848		min		.394	2	.123	2	.136	2	1.052	1	.35	2
6849	P1713	max	T	-.094	2	-.258	2	.223	1	-.718	2	.549	1
6850		min		-.167	1	-.614	1	.082	2	-.778	1	.226	2
6851		max	B	.683	1	.103	1	.29	1	.938	2	.638	1
6852		min		.304	2	.05	2	.127	2	.869	1	.283	2
6853	P1714	max	T	-.024	2	-.261	2	.303	1	1.919	1	.624	1
6854		min		-.036	1	-.641	1	.118	2	1.908	2	.25	2
6855		max	B	.54	1	.02	1	.26	1	.498	2	.531	1
6856		min		.201	2	.012	2	.095	2	.444	1	.195	2
6857	P1715	max	T	-.112	2	-.44	2	.413	1	-.506	2	.958	1
6858		min		-.225	1	-1.051	1	.164	2	-.546	1	.396	2
6859		max	B	1.09	1	.16	1	.465	1	1.039	2	1.02	1
6860		min		.464	2	.072	2	.196	2	1.013	1	.432	2
6861	P1716	max	T	-.052	2	-.212	2	.206	1	1.933	1	.474	1
6862		min		-.107	1	-.518	1	.08	2	1.922	2	.191	2
6863		max	B	.469	1	.077	1	.196	1	.55	2	.435	1
6864		min		.184	2	.032	2	.076	2	.489	1	.17	2
6865	P1717	max	T	-.044	2	-.144	2	.146	1	1.005	2	.35	1
6866		min		-.096	1	-.388	1	.05	2	1.002	1	.128	2
6867		max	B	.384	1	.07	1	.157	1	-.624	1	.354	1
6868		min		.141	2	.018	2	.062	2	-.706	2	.133	2
6869	P1718	max	T	-.127	2	-.486	2	.506	1	.812	1	1.194	1
6870		min		-.305	1	-1.317	1	.179	2	.774	2	.436	2
6871		max	B	1.344	1	.266	1	.539	1	2.356	2	1.233	1

Envelope Plate/Shell Principal Stresses (Continued)

	Plate		Sur...	Sigma1 [ksi]	LC	Sigma2 [ksi]	LC	Tau Max [k...	LC	Angle [rad]	LC	Von Mises [ksi]	LC
6872		min		.512	2	.089	2	.212	2	-.755	1	.474	2
6873	P1719	max	T	-.018	2	-.08	2	.087	1	.814	1	.196	1
6874		min		-.039	1	-.213	1	.031	2	.781	2	.072	2
6875		max	B	.214	1	.027	1	.094	1	2.351	2	.202	1
6876		min		.081	2	.007	2	.037	2	-.76	1	.078	2
6877	P1720	max	T	-.043	2	-.145	2	.139	1	.657	1	.335	1
6878		min		-.094	1	-.372	1	.051	2	.551	2	.129	2
6879		max	B	.372	1	.068	1	.152	1	2.279	1	.343	1
6880		min		.143	2	.019	2	.062	2	2.262	2	.134	2
6881	P1721	max	T	-.099	2	-.431	2	.473	1	1.08	1	1.099	1
6882		min		-.261	1	-1.206	1	.166	2	1.039	2	.391	2
6883		max	B	1.225	1	.246	1	.489	1	-.488	1	1.122	1
6884		min		.45	2	.077	2	.186	2	-.53	2	.417	2
6885	P1722	max	T	-.077	2	-.256	2	.292	1	.955	1	.691	1
6886		min		-.179	1	-.763	1	.09	2	.831	2	.228	2
6887		max	B	.791	1	.172	1	.31	1	-.59	1	.721	1
6888		min		.287	2	.062	2	.113	2	-.648	2	.262	2
6889	P1723	max	T	-.048	2	-.212	2	.184	1	.475	1	.444	1
6890		min		-.126	1	-.494	1	.082	2	.35	2	.192	2
6891		max	B	.47	1	.109	1	.18	1	2.12	1	.426	1
6892		min		.184	2	.033	2	.075	2	2.096	2	.169	2
6893	P1724	max	T	-.019	2	-.258	2	.249	1	.451	1	.527	1
6894		min		-.055	1	-.552	1	.12	2	.347	2	.249	2
6895		max	B	.509	1	.05	1	.229	1	2.072	1	.486	1
6896		min		.208	2	.015	2	.096	2	2.029	2	.201	2
6897	P1725	max	T	-.04	2	-.372	2	.387	1	.656	1	.817	1
6898		min		-.08	1	-.854	1	.166	2	.507	2	.353	2
6899		max	B	.806	1	.119	1	.343	1	2.246	1	.753	1
6900		min		.315	2	.067	2	.124	2	2.13	2	.288	2
6901	P1726	max	T	.03	1	-.353	2	.428	1	.677	1	.842	1
6902		min		-.015	2	-.827	1	.169	2	.549	2	.346	2
6903		max	B	.783	1	.024	2	.394	1	2.238	1	.786	1
6904		min		.304	2	-.006	1	.14	2	2.111	2	.293	2
6905	P1727	max	T	.015	1	-.272	2	.288	1	.492	1	.568	1
6906		min		.003	2	-.561	1	.137	2	.388	2	.273	2
6907		max	B	.518	1	.003	2	.262	1	2.077	1	.521	1
6908		min		.222	2	-.006	1	.109	2	1.993	2	.22	2
6909	P1728	max	T	.037	1	-.269	2	.297	1	.502	1	.577	1
6910		min		.002	2	-.558	1	.136	2	.372	2	.27	2
6911		max	B	.537	1	.002	2	.281	1	2.061	1	.55	1
6912		min		.239	2	-.026	1	.118	2	1.934	2	.238	2
6913	P1729	max	T	.07	1	-.298	2	.398	1	.679	1	.762	1
6914		min		0	2	-.725	1	.148	2	.549	2	.297	2
6915		max	B	.698	1	.009	2	.374	1	2.233	1	.724	1
6916		min		.264	2	-.049	1	.127	2	2.101	2	.26	2
6917	P1730	max	T	.088	1	-.23	2	.335	1	.682	1	.631	1
6918		min		.006	2	-.582	1	.118	2	.559	2	.233	2
6919		max	B	.572	1	.002	2	.321	1	2.231	1	.609	1
6920		min		.21	2	-.069	1	.104	2	2.103	2	.209	2
6921	P1731	max	T	.052	1	-.232	2	.279	1	.491	1	.534	1
6922		min		.004	2	-.506	1	.118	2	.341	2	.234	2
6923		max	B	.509	1	-.001	2	.276	1	2.038	1	.532	1
6924		min		.222	2	-.042	1	.111	2	1.89	2	.222	2
6925	P1732	max	T	.047	1	-.178	2	.227	1	.483	1	.432	1
6926		min		.004	2	-.407	1	.091	2	.341	2	.18	2
6927		max	B	.426	1	-.001	2	.232	1	2.016	1	.446	1
6928		min		.181	2	-.037	1	.091	2	1.876	2	.181	2

Envelope Plate/Shell Principal Stresses (Continued)

	Plate		Sur...	Sigma1 [ksi]	LC	Sigma2 [ksi]	LC	Tau Max [k...	LC	Angle [rad]	LC	Von Mises [ksi]	LC
6929	P1733	max	T	.096	1	-.164	2	.267	1	.711	1	.493	1
6930		min		.012	2	-.438	1	.088	2	.596	2	.171	2
6931		max	B	.439	1	-.003	2	.257	1	2.251	1	.481	1
6932		min		.155	2	-.076	1	.079	2	2.127	2	.156	2
6933	P1734	max	T	.105	1	-.108	2	.208	1	.775	1	.375	1
6934		min		.019	2	-.312	1	.064	2	.682	2	.119	2
6935		max	B	.319	1	-.008	2	.2	1	2.303	1	.367	1
6936		min		.105	2	-.082	1	.056	2	2.188	2	.109	2
6937	P1735	max	T	.047	1	-.122	2	.169	1	.518	1	.318	1
6938		min		.005	2	-.291	1	.064	2	.374	2	.125	2
6939		max	B	.321	1	-.002	2	.178	1	2.031	1	.34	1
6940		min		.134	2	-.035	1	.068	2	1.885	2	.135	2
6941	P1736	max	T	.053	1	-.071	2	.12	1	.615	1	.219	1
6942		min		.008	2	-.187	1	.039	2	.474	2	.075	2
6943		max	B	.22	1	-.002	2	.128	1	2.091	1	.24	1
6944		min		.088	2	-.037	1	.045	2	1.924	2	.089	2
6945	P1737	max	T	.123	1	-.064	2	.166	1	.881	1	.291	1
6946		min		.03	2	-.209	1	.047	2	.847	2	.084	2
6947		max	B	.218	1	-.015	2	.156	1	2.322	2	.278	1
6948		min		.064	2	-.094	1	.039	2	-.749	1	.073	2
6949	P1738	max	T	.151	1	-.035	2	.142	1	1.081	2	.247	1
6950		min		.05	2	-.134	1	.042	2	1.024	1	.074	2
6951		max	B	.141	1	-.028	2	.128	1	-.581	2	.222	1
6952		min		.034	2	-.115	1	.031	2	-.614	1	.054	2
6953	P1739	max	T	.071	1	-.031	2	.087	1	.809	1	.152	1
6954		min		.016	2	-.104	1	.023	2	.765	2	.041	2
6955		max	B	.132	1	-.005	2	.088	1	2.223	1	.159	1
6956		min		.047	2	-.045	1	.026	2	2.048	2	.05	2
6957	P1740	max	T	.11	1	-.011	2	.08	1	1.209	2	.142	1
6958		min		.041	2	-.051	1	.026	2	1.08	1	.047	2
6959		max	B	.067	1	-.014	2	.067	1	-.671	1	.116	1
6960		min		.017	2	-.067	1	.015	2	-.696	2	.026	2
6961	P1741	max	T	.191	1	-.019	2	.137	1	1.281	2	.244	1
6962		min		.077	2	-.084	1	.048	2	1.177	1	.088	2
6963		max	B	.087	1	-.049	2	.117	1	-.329	2	.205	1
6964		min		.017	2	-.146	1	.033	2	-.453	1	.06	2
6965	P1742	max	T	.238	1	-.01	2	.145	1	1.4	2	.268	1
6966		min		.106	2	-.053	1	.058	2	1.304	1	.112	2
6967		max	B	.054	1	-.074	2	.12	1	-.175	2	.219	1
6968		min		.009	2	-.186	1	.042	2	-.307	1	.079	2
6969	P1743	max	T	.165	1	-.005	2	.096	1	1.414	2	.18	1
6970		min		.074	2	-.026	1	.039	2	1.292	1	.077	2
6971		max	B	.032	1	-.037	2	.07	1	-.251	2	.127	1
6972		min		.006	2	-.108	1	.022	2	-.389	1	.041	2
6973	P1744	max	T	.224	1	-.003	2	.12	1	1.492	2	.232	1
6974		min		.107	2	-.015	1	.055	2	1.41	1	.108	2
6975		max	B	.017	1	-.065	2	.088	1	-.103	2	.169	1
6976		min		.003	2	-.16	1	.034	2	-.212	1	.067	2
6977	P1745	max	T	.285	1	-.005	2	.16	1	1.467	2	.304	1
6978		min		.134	2	-.034	1	.07	2	1.396	1	.137	2
6979		max	B	.034	1	-.099	2	.132	1	-.097	2	.248	1
6980		min		.004	2	-.23	1	.052	2	-.198	1	.101	2
6981	P1746	max	T	.329	1	-.002	2	.176	1	1.505	2	.341	1
6982		min		.16	2	-.022	1	.081	2	1.459	1	.161	2
6983		max	B	.022	1	-.122	2	.146	1	-.056	2	.282	1
6984		min		.001	2	-.271	1	.062	2	-.125	1	.122	2
6985	P1747	max	T	.279	1	-.001	2	.144	1	1.527	2	.284	1

Envelope Plate/Shell Principal Stresses (Continued)

	Plate		Sur...	Sigma1 [ksi]	LC	Sigma2 [ksi]	LC	Tau Max [k...	LC	Angle [rad]	LC	Von Mises [ksi]	LC
6986		min		.136	2	-.009	1	.069	2	1.475	1	.137	2
6987		max	B	.01	1	-.092	2	.11	1	-.049	2	.216	1
6988		min		.001	2	-.21	1	.046	2	-.12	1	.092	2
6989	P1748	max	T	.328	1	0	2	.167	1	1.545	2	.331	1
6990		min		.163	2	-.006	1	.081	2	1.513	1	.163	2
6991		max	B	.006	1	-.115	2	.131	1	-.025	2	.259	1
6992		min		0	2	-.256	1	.057	2	-.07	1	.115	2
6993	P1749	max	T	.368	1	0	2	.191	1	1.528	2	.375	1
6994		min		.182	2	-.015	1	.091	2	1.501	1	.182	2
6995		max	B	.014	1	-.141	2	.16	1	-.034	2	.314	1
6996		min		0	2	-.307	1	.071	2	-.076	1	.141	2
6997	P1750	max	T	.399	1	.001	2	.205	1	1.543	2	.404	1
6998		min		.201	2	-.01	1	.1	2	1.532	1	.2	2
6999		max	B	.009	1	-.158	2	.173	1	-.023	2	.342	1
7000		min		-.002	2	-.337	1	.078	2	-.043	1	.157	2
7001	P1751	max	T	.368	1	0	2	.186	1	1.556	2	.37	1
7002		min		.185	2	-.004	1	.093	2	1.537	1	.185	2
7003		max	B	.004	1	-.135	2	.149	1	-.013	2	.296	1
7004		min		0	2	-.294	1	.067	2	-.04	1	.135	2
7005	P1752	max	T	.401	1	0	2	.202	1	1.562	2	.403	1
7006		min		.204	2	-.003	1	.102	2	1.553	1	.204	2
7007		max	B	.003	1	-.151	2	.164	1	-.008	2	.327	1
7008		min		0	2	-.326	1	.076	2	-.021	1	.151	2
7009	P1753	max	T	.424	1	.002	2	.215	1	1.554	1	.427	1
7010		min		.215	2	-.006	1	.107	2	1.553	2	.214	2
7011		max	B	.005	1	-.172	2	.183	1	-.017	2	.364	1
7012		min		-.003	2	-.361	1	.084	2	-.02	1	.17	2
7013	P1754	max	T	.441	1	.003	2	.223	1	1.573	1	.443	1
7014		min		.227	2	-.004	1	.112	2	1.56	2	.225	2
7015		max	B	.003	1	-.182	2	.191	1	-.002	1	.38	1
7016		min		-.004	2	-.379	1	.089	2	-.014	2	.18	2
7017	P1755	max	T	.427	1	0	2	.214	1	1.565	2	.428	1
7018		min		.219	2	-.002	1	.109	2	1.564	1	.219	2
7019		max	B	.002	1	-.165	2	.176	1	-.005	2	.352	1
7020		min		0	2	-.351	1	.082	2	-.008	1	.165	2
7021	P1756	max	T	.445	1	0	2	.223	1	1.571	1	.445	1
7022		min		.23	2	-.001	1	.115	2	1.567	2	.23	2
7023		max	B	0	1	-.176	2	.185	1	0	1	.369	1
7024		min		0	2	-.369	1	.087	2	-.004	2	.175	2
7025	P1757	max	T	.452	1	.003	2	.227	1	1.585	1	.453	1
7026		min		.234	2	-.002	1	.115	2	1.565	2	.232	2
7027		max	B	.001	1	-.19	2	.196	1	.009	1	.391	1
7028		min		-.004	2	-.39	1	.093	2	-.013	2	.188	2
7029	P1758	max	T	.455	1	.004	2	.228	1	1.598	1	.456	1
7030		min		.237	2	-.002	1	.117	2	1.57	2	.235	2
7031		max	B	0	1	-.194	2	.198	1	.02	1	.396	1
7032		min		-.005	2	-.396	1	.095	2	-.013	2	.192	2
7033	P1759	max	T	.455	1	0	2	.228	1	1.579	1	.455	1
7034		min		.237	2	0	1	.118	2	1.569	2	.237	2
7035		max	B	0	1	-.183	2	.19	1	.007	1	.381	1
7036		min		0	2	-.38	1	.091	2	-.005	2	.183	2
7037	P1760	max	T	.458	1	.001	2	.229	1	1.585	1	.458	1
7038		min		.241	2	0	1	.12	2	1.57	2	.24	2
7039		max	B	0	1	-.187	2	.193	1	.013	1	.385	1
7040		min		-.001	2	-.386	1	.093	2	-.006	2	.187	2
7041	P1761	max	T	.451	1	.004	2	.226	1	1.61	1	.452	1
7042		min		.237	2	-.001	1	.117	2	1.574	2	.235	2

Envelope Plate/Shell Principal Stresses (Continued)

	Plate		Sur...	Sigma1 [ksi]	LC	Sigma2 [ksi]	LC	Tau Max [k...	LC	Angle [rad]	LC	Von Mises [ksi]	LC
7043		max	B	0	1	-.195	2	.197	1	.03	1	.395	1
7044		min		-.005	2	-.395	1	.095	2	-.014	2	.193	2
7045	P1762	max	T	.441	1	.003	2	.222	1	1.623	1	.442	1
7046		min		.232	2	-.003	1	.114	2	1.581	2	.231	2
7047		max	B	0	1	-.193	2	.194	1	.04	1	.388	1
7048		min		-.004	2	-.388	1	.094	2	-.012	2	.191	2
7049	P1763	max	T	.454	1	.001	2	.227	1	1.59	1	.454	1
7050		min		.24	2	0	1	.12	2	1.571	2	.24	2
7051		max	B	0	1	-.188	2	.192	1	.018	1	.385	1
7052		min		0	2	-.385	1	.094	2	-.006	2	.188	2
7053	P1764	max	T	.443	1	0	2	.222	1	1.596	1	.443	1
7054		min		.236	2	0	1	.117	2	1.574	2	.235	2
7055		max	B	0	1	-.186	2	.189	1	.023	1	.378	1
7056		min		0	2	-.378	1	.093	2	-.004	2	.186	2
7057	P1765	max	T	.424	1	.003	2	.214	1	1.638	1	.426	1
7058		min		.224	2	-.004	1	.111	2	1.583	2	.223	2
7059		max	B	.002	1	-.187	2	.189	1	.052	1	.377	1
7060		min		-.004	2	-.375	1	.092	2	-.015	2	.185	2
7061	P1766	max	T	.4	1	.002	2	.204	1	1.657	1	.404	1
7062		min		.212	2	-.007	1	.105	2	1.592	2	.211	2
7063		max	B	.005	1	-.178	2	.181	1	.068	1	.359	1
7064		min		-.003	2	-.357	1	.088	2	-.011	2	.177	2
7065	P1767	max	T	.425	1	0	2	.213	1	1.603	1	.426	1
7066		min		.227	2	-.001	1	.113	2	1.575	2	.227	2
7067		max	B	0	1	-.181	2	.183	1	.03	1	.365	1
7068		min		0	2	-.365	1	.09	2	-.005	2	.181	2
7069	P1768	max	T	.401	1	0	2	.201	1	1.613	1	.401	1
7070		min		.215	2	-.002	1	.107	2	1.576	2	.214	2
7071		max	B	.002	1	-.172	2	.174	1	.038	1	.347	1
7072		min		0	2	-.346	1	.086	2	-.007	2	.172	2
7073	P1769	max	T	.37	1	.001	2	.191	1	1.682	1	.376	1
7074		min		.196	2	-.011	1	.097	2	1.603	2	.195	2
7075		max	B	.009	1	-.166	2	.171	1	.09	1	.338	1
7076		min		-.002	2	-.333	1	.082	2	-.006	2	.165	2
7077	P1770	max	T	.335	1	0	2	.176	1	1.717	1	.344	1
7078		min		.176	2	-.018	1	.089	2	1.618	2	.177	2
7079		max	B	.014	1	-.151	2	.159	1	.121	1	.311	1
7080		min		0	2	-.304	1	.075	2	.004	2	.151	2
7081	P1771	max	T	.369	1	0	2	.186	1	1.626	1	.371	1
7082		min		.198	2	-.003	1	.099	2	1.577	2	.199	2
7083		max	B	.003	1	-.16	2	.162	1	.051	1	.323	1
7084		min		0	2	-.322	1	.08	2	-.008	2	.16	2
7085	P1772	max	T	.331	1	0	2	.168	1	1.645	1	.333	1
7086		min		.179	2	-.005	1	.089	2	1.586	2	.179	2
7087		max	B	.004	1	-.145	2	.148	1	.07	1	.293	1
7088		min		0	2	-.291	1	.073	2	0	2	.145	2
7089	P1773	max	T	.294	1	-.003	2	.16	1	1.767	1	.308	1
7090		min		.153	2	-.027	1	.078	2	1.644	2	.155	2
7091		max	B	.022	1	-.132	2	.146	1	.167	1	.281	1
7092		min		.002	2	-.27	1	.067	2	.022	2	.133	2
7093	P1774	max	T	.249	1	-.006	2	.145	1	1.84	1	.272	1
7094		min		.127	2	-.041	1	.067	2	1.686	2	.13	2
7095		max	B	.034	1	-.111	2	.133	1	.234	1	.251	1
7096		min		.004	2	-.232	1	.057	2	.056	2	.113	2
7097	P1775	max	T	.286	1	0	2	.147	1	1.675	1	.29	1
7098		min		.155	2	-.007	1	.077	2	1.597	2	.155	2
7099		max	B	.007	1	-.127	2	.131	1	.099	1	.258	1

Envelope Plate/Shell Principal Stresses (Continued)

	Plate		Sur...	Sigma1 [ksi]	LC	Sigma2 [ksi]	LC	Tau Max [k...	LC	Angle [rad]	LC	Von Mises [ksi]	LC
7100		min		0	2	-.255	1	.063	2	.009	2	.127	2
7101	P1776	max	T	.235	1	-.001	2	.123	1	1.724	1	.241	1
7102		min		.127	2	-.011	1	.064	2	1.618	2	.128	2
7103		max	B	.01	1	-.105	2	.112	1	.147	1	.218	1
7104		min		.001	2	-.213	1	.053	2	.029	2	.105	2
7105	P1777	max	T	.204	1	-.011	2	.134	1	1.943	1	.242	1
7106		min		.098	2	-.063	1	.055	2	1.762	2	.104	2
7107		max	B	.054	1	-.086	2	.123	1	.331	1	.224	1
7108		min		.008	2	-.193	1	.047	2	.12	2	.091	2
7109	P1778	max	T	.162	1	-.02	2	.131	1	2.077	1	.229	1
7110		min		.069	2	-.099	1	.045	2	1.899	2	.081	2
7111		max	B	.085	1	-.06	2	.12	1	.46	1	.211	1
7112		min		.015	2	-.156	1	.038	2	.244	2	.069	2
7113	P1779	max	T	.18	1	-.003	2	.1	1	1.811	1	.19	1
7114		min		.097	2	-.019	1	.05	2	1.659	2	.098	2
7115		max	B	.017	1	-.079	2	.092	1	.232	1	.175	1
7116		min		.002	2	-.166	1	.041	2	.069	2	.081	2
7117	P1780	max	T	.124	1	-.005	2	.08	1	1.973	1	.145	1
7118		min		.063	2	-.035	1	.034	2	1.756	2	.066	2
7119		max	B	.031	1	-.051	2	.075	1	.384	1	.137	1
7120		min		.005	2	-.119	1	.028	2	.168	2	.054	2
7121	P1781	max	T	.129	1	-.038	2	.142	1	2.222	1	.246	1
7122		min		.043	2	-.154	1	.041	2	2.12	2	.07	2
7123		max	B	.133	1	-.036	2	.129	1	.602	1	.224	1
7124		min		.029	2	-.126	1	.033	2	.465	2	.057	2
7125	P1782	max	T	.106	1	-.071	2	.169	1	2.353	2	.299	1
7126		min		.025	2	-.232	1	.048	2	2.346	1	.086	2
7127		max	B	.202	1	-.02	2	.153	1	.727	1	.27	1
7128		min		.056	2	-.105	1	.038	2	.723	2	.068	2
7129	P1783	max	T	.079	1	-.013	2	.074	1	2.229	1	.128	1
7130		min		.03	2	-.069	1	.022	2	2.032	2	.039	2
7131		max	B	.061	1	-.024	2	.07	1	.623	1	.121	1
7132		min		.012	2	-.079	1	.018	2	.465	2	.031	2
7133	P1784	max	T	.052	1	-.039	2	.092	1	-.63	2	.164	1
7134		min		.011	2	-.132	1	.025	2	-.667	1	.046	2
7135		max	B	.116	1	-.008	2	.085	1	.95	2	.151	1
7136		min		.035	2	-.054	1	.022	2	.86	1	.04	2
7137	P1785	max	T	.091	1	-.117	2	.211	1	-.64	2	.386	1
7138		min		.015	2	-.332	1	.066	2	-.709	1	.125	2
7139		max	B	.292	1	-.011	2	.192	1	.889	2	.347	1
7140		min		.096	2	-.092	1	.054	2	.816	1	.102	2
7141	P1786	max	T	.082	1	-.174	2	.267	1	-.566	2	.498	1
7142		min		.009	2	-.452	1	.092	2	-.658	1	.179	2
7143		max	B	.4	1	-.006	2	.243	1	.969	2	.449	1
7144		min		.146	2	-.086	1	.076	2	.869	1	.149	2
7145	P1787	max	T	.041	1	-.083	2	.13	1	-.411	2	.242	1
7146		min		.005	2	-.219	1	.044	2	-.524	1	.086	2
7147		max	B	.193	1	-.004	2	.119	1	1.153	2	.218	1
7148		min		.075	2	-.044	1	.039	2	1.005	1	.077	2
7149	P1788	max	T	.037	1	-.135	2	.179	1	-.339	2	.34	1
7150		min		.003	2	-.32	1	.069	2	-.456	1	.137	2
7151		max	B	.284	1	-.003	2	.163	1	1.217	2	.307	1
7152		min		.121	2	-.041	1	.062	2	1.077	1	.122	2
7153	P1789	max	T	.073	1	-.24	2	.33	1	-.535	2	.627	1
7154		min		.003	2	-.587	1	.122	2	-.635	1	.242	2
7155		max	B	.521	1	-.002	2	.301	1	1.002	2	.566	1
7156		min		.203	2	-.08	1	.102	2	.893	1	.204	2

Envelope Plate/Shell Principal Stresses (Continued)

	Plate		Sur...	Sigma1 [ksi]	LC	Sigma2 [ksi]	LC	Tau Max [k...	LC	Angle [rad]	LC	Von Mises [ksi]	LC
7157	P1790	max	T	.053	1	-.308	2	.386	1	-.529	2	.747	1
7158		min		-.005	2	-.719	1	.151	2	-.634	1	.305	2
7159		max	B	.637	1	.005	2	.351	1	1.008	2	.672	1
7160		min		.26	2	-.064	1	.127	2	.892	1	.257	2
7161	P1791	max	T	.037	1	-.191	2	.233	1	-.318	2	.448	1
7162		min		.002	2	-.428	1	.097	2	-.433	1	.193	2
7163		max	B	.381	1	-.003	2	.212	1	1.236	2	.404	1
7164		min		.169	2	-.043	1	.086	2	1.101	1	.17	2
7165	P1792	max	T	.04	1	-.245	2	.28	1	-.324	2	.541	1
7166		min		.002	2	-.52	1	.123	2	-.446	1	.246	2
7167		max	B	.46	1	-.003	2	.254	1	1.226	2	.485	1
7168		min		.213	2	-.048	1	.108	2	1.085	1	.214	2
7169	P1793	max	T	.011	1	-.362	2	.412	1	-.531	2	.818	1
7170		min		-.02	2	-.812	1	.171	2	-.635	1	.353	2
7171		max	B	.714	1	.018	2	.371	1	.999	2	.729	1
7172		min		.303	2	-.029	1	.142	2	.886	1	.294	2
7173	P1794	max	T	-.05	2	-.38	2	.378	1	-.49	2	.796	1
7174		min		-.075	1	-.831	1	.165	2	-.604	1	.358	2
7175		max	B	.732	1	.068	1	.332	1	.979	2	.701	1
7176		min		.316	2	.06	2	.128	2	.868	1	.291	2
7177	P1795	max	T	.026	1	-.279	2	.296	1	-.358	2	.58	1
7178		min		0	2	-.566	1	.139	2	-.463	1	.279	2
7179		max	B	.487	1	0	2	.261	1	1.184	2	.506	1
7180		min		.234	2	-.036	1	.117	2	1.062	1	.234	2
7181	P1796	max	T	.013	1	-.279	2	.288	1	-.38	2	.57	1
7182		min		0	2	-.564	1	.139	2	-.459	1	.279	2
7183		max	B	.466	1	.001	2	.242	1	1.13	2	.475	1
7184		min		.22	2	-.018	1	.109	2	1.042	1	.219	2
7185	P1797	max	T	-.085	2	-.26	2	.249	1	2.306	2	.604	1
7186		min		-.174	1	-.672	1	.087	2	2.221	1	.229	2
7187		max	B	.741	1	.119	1	.311	1	.643	2	.689	1
7188		min		.296	2	.058	2	.119	2	.606	1	.272	2
7189	P1798	max	T	-.105	2	-.439	2	.425	1	2.094	2	.998	1
7190		min		-.249	1	-1.099	1	.167	2	2.066	1	.397	2
7191		max	B	1.135	1	.196	1	.469	1	.531	2	1.05	1
7192		min		.46	2	.076	2	.192	2	.506	1	.427	2
7193	P1799	max	T	-.021	2	-.263	2	.247	1	-.341	2	.522	1
7194		min		-.05	1	-.545	1	.121	2	-.413	1	.253	2
7195		max	B	.457	1	.03	1	.214	1	1.099	2	.443	1
7196		min		.208	2	.014	2	.097	2	1.038	1	.202	2
7197	P1800	max	T	-.05	2	-.215	2	.176	1	-.349	2	.425	1
7198		min		-.12	1	-.472	1	.082	2	-.432	1	.195	2
7199		max	B	.43	1	.084	1	.173	1	1.039	2	.395	1
7200		min		.186	2	.033	2	.076	2	.993	1	.172	2
7201	P1801	max	T	-.129	2	-.495	2	.46	1	2.335	1	1.095	1
7202		min		-.291	1	-1.211	1	.183	2	-.78	2	.445	2
7203		max	B	1.254	1	.228	1	.513	1	.786	2	1.157	1
7204		min		.52	2	.092	2	.214	2	.765	1	.481	2
7205	P1802	max	T	-.044	2	-.147	2	.131	1	2.137	2	.32	1
7206		min		-.095	1	-.357	1	.051	2	2.135	1	.13	2
7207		max	B	.352	1	.053	1	.149	1	.7	2	.328	1
7208		min		.144	2	.019	2	.062	2	.659	1	.136	2
7209	P1803	max	T	-.044	2	-.147	2	.126	1	-.555	2	.31	1
7210		min		-.095	1	-.346	1	.052	2	-.628	1	.131	2
7211		max	B	.344	1	.051	1	.147	1	.877	2	.322	1
7212		min		.145	2	.02	2	.062	2	.853	1	.136	2
7213	P1804	max	T	-.019	2	-.081	2	.078	1	2.336	1	.18	1

Envelope Plate/Shell Principal Stresses (Continued)

	Plate		Sur...	Sigma1 [ksi]	LC	Sigma2 [ksi]	LC	Tau Max [k...	LC	Angle [rad]	LC	Von Mises [ksi]	LC
7214		min		-.039	1	-.196	1	.031	2	-.782	2	.074	2
7215		max	B	.198	1	.02	1	.089	1	.788	2	.189	1
7216		min		.082	2	.007	2	.038	2	.768	1	.079	2
7217	P1805	max	T	1.217	1	.534	1	.342	1	1.262	1	1.057	1
7218		min		.602	2	.258	2	.172	2	1.07	2	.523	2
7219		max	B	-.265	2	-.673	2	.396	1	-.325	1	1.165	1
7220		min		-.547	1	-1.338	1	.204	2	-.467	2	.587	2
7221	P1806	max	T	1.109	1	.463	1	.323	1	1.011	1	.964	1
7222		min		.643	2	.259	2	.192	2	.858	2	.56	2
7223		max	B	-.271	2	-.73	2	.392	1	-.535	1	1.101	1
7224		min		-.475	1	-1.259	1	.23	2	-.639	2	.639	2
7225	P1807	max	T	1.273	1	.464	1	.404	1	2.324	2	1.116	1
7226		min		.644	2	.244	2	.2	2	2.258	1	.563	2
7227		max	B	-.254	2	-.719	2	.395	1	1.077	2	1.142	1
7228		min		-.52	1	-1.309	1	.232	2	.924	1	.632	2
7229	P1808	max	T	1.077	1	.418	1	.33	1	-.609	2	.941	1
7230		min		.615	2	.25	2	.183	2	-.699	1	.535	2
7231		max	B	-.26	2	-.689	2	.326	1	1.258	2	.976	1
7232		min		-.47	1	-1.122	1	.214	2	1.123	1	.602	2
7233	P1809	max	T	2.901	1	1.071	1	.915	1	.827	1	2.541	1
7234		min		.632	2	.218	2	.207	2	.751	2	.556	2
7235		max	B	-.205	2	-.543	2	.831	1	-.43	2	2.387	1
7236		min		-1.072	1	-2.734	1	.169	2	-.656	1	.475	2
7237	P1810	max	T	2.598	1	.976	1	.811	1	.988	1	2.273	1
7238		min		.606	2	.219	2	.194	2	.93	2	.532	2
7239		max	B	-.207	2	-.53	2	.723	1	-.203	2	2.123	1
7240		min		-.991	1	-2.437	1	.162	2	-.474	1	.463	2
7241	P1811	max	T	2.729	1	1.097	1	.816	1	-.43	1	2.379	1
7242		min		.592	2	.23	2	.181	2	-.539	2	.517	2
7243		max	B	-.221	2	-.505	2	.776	1	1.164	2	2.294	1
7244		min		-1.082	1	-2.634	1	.142	2	1.156	1	.438	2
7245	P1812	max	T	2.757	1	1.042	1	.858	1	-.614	1	2.411	1
7246		min		.629	2	.233	2	.198	2	-.715	2	.551	2
7247		max	B	-.226	2	-.548	2	.821	1	.963	1	2.335	1
7248		min		-1.031	1	-2.673	1	.161	2	.942	2	.477	2
7249	P1813	max	T	.715	1	.484	1	.116	1	.49	1	.632	1
7250		min		.498	2	.299	2	.1	2	.347	2	.434	2
7251		max	B	-.289	2	-.587	2	.206	1	2.217	1	.75	1
7252		min		-.453	1	-.866	1	.149	2	2.12	2	.508	2
7253	P1814	max	T	.808	1	.461	1	.174	1	.781	1	.702	1
7254		min		.52	2	.276	2	.122	2	.608	2	.451	2
7255		max	B	-.272	2	-.615	2	.263	1	2.315	2	.84	1
7256		min		-.443	1	-.968	1	.171	2	-.723	1	.533	2
7257	P1815	max	T	.729	1	.512	1	.108	1	.739	1	.648	1
7258		min		.476	2	.303	2	.087	2	.499	2	.417	2
7259		max	B	-.293	2	-.575	2	.208	1	2.251	2	.777	1
7260		min		-.482	1	-.897	1	.141	2	-.763	1	.498	2
7261	P1816	max	T	1.018	1	.633	1	.192	1	1.374	1	.89	1
7262		min		.489	2	.29	2	.1	2	1.037	2	.426	2
7263		max	B	-.282	2	-.561	2	.254	1	-.256	1	.984	1
7264		min		-.625	1	-1.134	1	.14	2	-.478	2	.486	2
7265	P1817	max	T	.909	1	.508	1	.2	1	1.016	1	.789	1
7266		min		.519	2	.269	2	.125	2	.796	2	.449	2
7267		max	B	-.27	2	-.605	2	.279	1	-.534	1	.916	1
7268		min		-.5	1	-1.058	1	.167	2	-.67	2	.525	2
7269	P1818	max	T	.923	1	.601	1	.161	1	1.243	1	.812	1
7270		min		.476	2	.297	2	.09	2	.864	2	.417	2

Envelope Plate/Shell Principal Stresses (Continued)

	Plate		Sur...	Sigma1 [ksi]	LC	Sigma2 [ksi]	LC	Tau Max [k...	LC	Angle [rad]	LC	Von Mises [ksi]	LC
7271		max	B	-.287	2	-.554	2	.235	1	-.384	1	.915	1
7272		min		-.585	1	-1.054	1	.134	2	-.611	2	.48	2
7273	P1819	max	T	2.104	1	.968	1	.568	1	2.236	2	1.824	1
7274		min		.527	2	.245	2	.141	2	-.768	1	.457	2
7275		max	B	-.247	2	-.464	2	.534	1	.808	1	1.769	1
7276		min		-.974	1	-2.042	1	.108	2	.727	2	.402	2
7277	P1820	max	T	1.873	1	.982	1	.446	1	2.342	1	1.623	1
7278		min		.488	2	.263	2	.112	2	2.145	2	.423	2
7279		max	B	-.275	2	-.433	2	.411	1	.775	1	1.578	1
7280		min		-.997	1	-1.82	1	.079	2	.603	2	.38	2
7281	P1821	max	T	1.816	1	.904	1	.456	1	2.208	1	1.573	1
7282		min		.495	2	.265	2	.115	2	2.021	2	.429	2
7283		max	B	-.275	2	-.45	2	.425	1	.632	1	1.537	1
7284		min		-.925	1	-1.774	1	.087	2	.455	2	.393	2
7285	P1822	max	T	2.226	1	1.19	1	.518	1	-.408	1	1.929	1
7286		min		.493	2	.246	2	.123	2	-.563	2	.427	2
7287		max	B	-.254	2	-.416	2	.479	1	1.185	1	1.861	1
7288		min		-1.186	1	-2.144	1	.081	2	1.161	2	.363	2
7289	P1823	max	T	2.106	1	1.154	1	.476	1	-.533	1	1.827	1
7290		min		.488	2	.251	2	.118	2	-.7	2	.422	2
7291		max	B	-.262	2	-.405	2	.433	1	1.058	1	1.758	1
7292		min		-1.157	1	-2.023	1	.071	2	.989	2	.355	2
7293	P1824	max	T	2.243	1	1.049	1	.597	1	-.625	1	1.944	1
7294		min		.525	2	.235	2	.145	2	-.753	2	.455	2
7295		max	B	-.24	2	-.45	2	.558	1	.956	1	1.876	1
7296		min		-1.05	1	-2.166	1	.105	2	.908	2	.39	2
7297	P1825	max	T	2.37	1	1.255	1	.557	1	.424	1	2.053	1
7298		min		.485	2	.252	2	.117	2	.345	2	.42	2
7299		max	B	-.231	2	-.402	2	.492	1	2.275	2	1.936	1
7300		min		-1.247	1	-2.23	1	.085	2	2.054	1	.349	2
7301	P1826	max	T	2.288	1	1.228	1	.53	1	.546	1	1.983	1
7302		min		.475	2	.247	2	.114	2	.483	2	.412	2
7303		max	B	-.241	2	-.4	2	.455	1	2.182	1	1.868	1
7304		min		-1.24	1	-2.149	1	.08	2	-.698	2	.349	2
7305	P1827	max	T	2.476	1	1.158	1	.659	1	.628	1	2.146	1
7306		min		.519	2	.233	2	.143	2	.556	2	.45	2
7307		max	B	-.216	2	-.435	2	.585	1	2.272	1	2.014	1
7308		min		-1.155	1	-2.325	1	.11	2	-.639	2	.377	2
7309	P1828	max	T	2.393	1	1.067	1	.663	1	.763	1	2.076	1
7310		min		.527	2	.219	2	.154	2	.717	2	.459	2
7311		max	B	-.229	2	-.44	2	.564	1	-.442	2	1.931	1
7312		min		-1.101	1	-2.229	1	.105	2	-.728	1	.381	2
7313	P1829	max	T	2.158	1	1.085	1	.537	1	.801	1	1.869	1
7314		min		.496	2	.24	2	.128	2	.792	2	.429	2
7315		max	B	-.251	2	-.407	2	.423	1	-.278	2	1.723	1
7316		min		-1.136	1	-1.982	1	.078	2	-.685	1	.356	2
7317	P1830	max	T	2.127	1	1.016	1	.555	1	.929	1	1.843	1
7318		min		.498	2	.232	2	.133	2	.912	2	.432	2
7319		max	B	-.255	2	-.434	2	.445	1	-.135	2	1.715	1
7320		min		-1.086	1	-1.977	1	.09	2	-.54	1	.378	2
7321	P1831	max	T	1.357	1	.74	1	.309	1	1.806	2	1.177	1
7322		min		.49	2	.281	2	.105	2	1.698	1	.426	2
7323		max	B	-.242	2	-.54	2	.286	1	.699	2	1.157	1
7324		min		-.759	1	-1.331	1	.149	2	.381	1	.469	2
7325	P1832	max	T	1.229	1	.68	1	.274	1	1.958	2	1.066	1
7326		min		.466	2	.283	2	.092	2	1.815	1	.407	2
7327		max	B	-.258	2	-.543	2	.259	1	.83	2	1.076	1

Envelope Plate/Shell Principal Stresses (Continued)

	Plate		Sur...	Sigma1 [ksi]	LC	Sigma2 [ksi]	LC	Tau Max [k...	LC	Angle [rad]	LC	Von Mises [ksi]	LC
7328		min		-.72	1	-1.237	1	.143	2	.505	1	.471	2
7329	P1833	max	T	1.233	1	.59	1	.322	1	2.06	2	1.068	1
7330		min		.519	2	.262	2	.128	2	1.982	1	.449	2
7331		max	B	-.244	2	-.587	2	.318	1	.877	2	1.085	1
7332		min		-.617	1	-1.252	1	.172	2	.653	1	.511	2
7333	P1834	max	T	1.092	1	.489	1	.302	1	2.245	2	.947	1
7334		min		.526	2	.253	2	.136	2	2.16	1	.455	2
7335		max	B	-.266	2	-.592	2	.283	1	1.033	2	.967	1
7336		min		-.551	1	-1.117	1	.163	2	.831	1	.514	2
7337	P1835	max	T	.985	1	.52	1	.232	1	2.332	2	.853	1
7338		min		.485	2	.285	2	.1	2	2.173	1	.422	2
7339		max	B	-.286	2	-.547	2	.209	1	1.129	2	.867	1
7340		min		-.578	1	-.997	1	.131	2	.86	1	.474	2
7341	P1836	max	T	.919	1	.462	1	.228	1	2.336	1	.796	1
7342		min		.491	2	.275	2	.108	2	-.666	2	.426	2
7343		max	B	-.296	2	-.564	2	.208	1	1.259	2	.829	1
7344		min		-.539	1	-.955	1	.134	2	1.033	1	.489	2
7345	P1837	max	T	2.353	1	.895	1	.729	1	1.151	1	2.057	1
7346		min		.587	2	.217	2	.185	2	1.106	2	.514	2
7347		max	B	-.212	2	-.542	2	.646	1	.013	2	1.933	1
7348		min		-.931	1	-2.222	1	.165	2	-.286	1	.474	2
7349	P1838	max	T	2.183	1	.832	1	.675	1	1.297	1	1.908	1
7350		min		.591	2	.22	2	.185	2	1.265	2	.517	2
7351		max	B	-.211	2	-.569	2	.601	1	.186	2	1.803	1
7352		min		-.872	1	-2.073	1	.179	2	-.115	1	.498	2
7353	P1839	max	T	1.984	1	.769	1	.607	1	1.45	1	1.732	1
7354		min		.589	2	.227	2	.181	2	1.438	2	.514	2
7355		max	B	-.212	2	-.594	2	.548	1	.353	2	1.656	1
7356		min		-.81	1	-1.906	1	.191	2	.062	1	.522	2
7357	P1840	max	T	1.776	1	.708	1	.534	1	1.615	2	1.549	1
7358		min		.584	2	.234	2	.175	2	1.6	1	.509	2
7359		max	B	-.217	2	-.611	2	.489	1	.506	2	1.499	1
7360		min		-.748	1	-1.726	1	.197	2	.232	1	.537	2
7361	P1841	max	T	.799	1	.384	1	.207	1	.147	2	.692	1
7362		min		.597	2	.26	2	.168	2	.146	1	.518	2
7363		max	B	-.272	2	-.687	2	.269	1	1.954	1	.812	1
7364		min		-.397	1	-.934	1	.208	2	1.93	2	.599	2
7365	P1842	max	T	.821	1	.372	1	.224	1	-.037	2	.712	1
7366		min		.602	2	.256	2	.173	2	-.091	1	.524	2
7367		max	B	-.272	2	-.689	2	.265	1	1.774	2	.81	1
7368		min		-.402	1	-.933	1	.209	2	1.757	1	.602	2
7369	P1843	max	T	.872	1	.371	1	.251	1	-.226	2	.758	1
7370		min		.603	2	.253	2	.175	2	-.312	1	.524	2
7371		max	B	-.271	2	-.685	2	.27	1	1.608	2	.831	1
7372		min		-.418	1	-.957	1	.207	2	1.545	1	.598	2
7373	P1844	max	T	.944	1	.383	1	.28	1	-.407	2	.822	1
7374		min		.597	2	.25	2	.174	2	-.504	1	.519	2
7375		max	B	-.269	2	-.678	2	.284	1	1.444	2	.877	1
7376		min		-.441	1	-1.01	1	.204	2	1.338	1	.591	2
7377	P1845	max	T	1.956	1	.774	1	.591	1	1.966	1	1.706	1
7378		min		.586	2	.245	2	.17	2	1.823	2	.51	2
7379		max	B	-.247	2	-.567	2	.578	1	.371	1	1.695	1
7380		min		-.789	1	-1.945	1	.16	2	.227	2	.492	2
7381	P1846	max	T	1.767	1	.711	1	.528	1	1.812	1	1.54	1
7382		min		.588	2	.249	2	.169	2	1.651	2	.511	2
7383		max	B	-.251	2	-.593	2	.529	1	.209	1	1.555	1
7384		min		-.728	1	-1.786	1	.171	2	.05	2	.515	2

Envelope Plate/Shell Principal Stresses (Continued)

	Plate		Sur...	Sigma1 [ksi]	LC	Sigma2 [ksi]	LC	Tau Max [k...	LC	Angle [rad]	LC	Von Mises [ksi]	LC
7385	P1847	max	T	1.563	1	.65	1	.456	1	1.648	1	1.36	1
7386		min		.587	2	.252	2	.167	2	1.467	2	.51	2
7387		max	B	-.255	2	-.617	2	.474	1	.041	1	1.407	1
7388		min		-.668	1	-1.616	1	.181	2	-.125	2	.537	2
7389	P1848	max	T	1.363	1	.597	1	.383	1	1.483	1	1.184	1
7390		min		.582	2	.256	2	.163	2	1.285	2	.506	2
7391		max	B	-.259	2	-.635	2	.42	1	-.123	1	1.261	1
7392		min		-.611	1	-1.45	1	.188	2	-.285	2	.553	2
7393	P1849	max	T	2.857	1	1.169	1	.844	1	.241	1	2.487	1
7394		min		.565	2	.226	2	.169	2	.145	2	.492	2
7395		max	B	-.206	2	-.477	2	.79	1	1.985	2	2.37	1
7396		min		-1.145	1	-2.725	1	.136	2	1.853	1	.415	2
7397	P1850	max	T	2.859	1	1.169	1	.845	1	.083	1	2.49	1
7398		min		.566	2	.226	2	.17	2	-.023	2	.493	2
7399		max	B	-.208	2	-.481	2	.799	1	1.791	2	2.385	1
7400		min		-1.143	1	-2.741	1	.137	2	1.688	1	.418	2
7401	P1851	max	T	2.82	1	1.157	1	.832	1	-.082	1	2.455	1
7402		min		.568	2	.227	2	.171	2	-.195	2	.495	2
7403		max	B	-.212	2	-.483	2	.79	1	1.589	2	2.36	1
7404		min		-1.133	1	-2.712	1	.136	2	1.517	1	.419	2
7405	P1852	max	T	2.737	1	1.134	1	.802	1	-.24	1	2.382	1
7406		min		.568	2	.227	2	.17	2	-.356	2	.495	2
7407		max	B	-.217	2	-.484	2	.762	1	1.393	2	2.294	1
7408		min		-1.113	1	-2.638	1	.134	2	1.353	1	.42	2
7409	P1889	max	T	12.529	1	6.372	1	3.079	1	1.902	2	10.851	1
7410		min		4.468	2	1.762	2	1.353	2	1.502	1	3.898	2
7411		max	B	-2.012	2	-4.318	2	3.209	1	.217	2	11.104	1
7412		min		-6.404	1	-12.822	1	1.153	2	-.077	1	3.742	2
7413	P1890	max	T	5.335	1	4.074	1	1.091	2	-.203	1	4.829	1
7414		min		2.784	2	.601	2	.631	1	-.707	2	2.537	2
7415		max	B	-.767	2	-2.678	2	.955	2	1.362	1	4.879	1
7416		min		-4.29	1	-5.307	1	.509	1	.869	2	2.388	2
7417	P1891	max	T	3.479	1	.908	1	1.285	1	-.158	1	3.125	1
7418		min		1.976	2	-.106	2	1.041	2	-.57	2	2.03	2
7419		max	B	.024	2	-1.932	2	1.194	1	1.413	1	3.056	1
7420		min		-1.055	1	-3.444	1	.978	2	1.007	2	1.944	2
7421	P1892	max	T	2.136	1	-.165	1	1.15	1	-.166	1	2.223	1
7422		min		1.346	2	-.198	2	.772	2	-.522	2	1.455	2
7423		max	B	.156	2	-1.326	2	1.081	1	1.404	1	2.13	1
7424		min		.066	1	-2.096	1	.741	2	1.049	2	1.411	2
7425	P1893	max	T	1.244	1	-.132	2	.808	1	-.202	1	1.466	1
7426		min		.893	2	-.372	1	.513	2	-.453	2	.966	2
7427		max	B	.308	1	-.882	2	.754	1	1.365	1	1.381	1
7428		min		.111	2	-1.201	1	.497	2	1.113	2	.943	2
7429	P1894	max	T	.71	1	-.085	2	.495	1	-.222	1	.884	1
7430		min		.675	2	-.28	1	.38	2	-.433	2	.721	2
7431		max	B	.242	1	-.665	2	.454	1	1.343	1	.814	1
7432		min		.075	2	-.666	1	.37	2	1.127	2	.705	2
7433	P1895	max	T	.539	2	-.102	2	.321	2	-.27	1	.597	2
7434		min		.437	1	-.161	1	.299	1	-.423	2	.536	1
7435		max	B	.143	1	-.39	1	.313	2	1.287	1	.583	2
7436		min		.099	2	-.528	2	.267	1	1.135	2	.478	1
7437	P1896	max	T	.503	2	-.05	1	.286	2	-.286	1	.54	2
7438		min		.289	1	-.069	2	.17	1	-.432	2	.317	1
7439		max	B	.07	2	-.235	1	.278	2	1.25	1	.525	2
7440		min		.047	1	-.487	2	.141	1	1.127	2	.262	1
7441	P1896A	max	T	12.372	1	6.157	1	3.107	1	1.789	2	10.714	1

Envelope Plate/Shell Principal Stresses (Continued)

	Plate		Sur...	Sigma1 [ksi]	LC	Sigma2 [ksi]	LC	Tau Max [k...	LC	Angle [rad]	LC	Von Mises [ksi]	LC
7442		min		3.641	2	1.498	2	1.072	2	1.329	1	3.169	2
7443		max	B	-1.774	2	-3.468	2	3.239	1	.085	2	10.969	1
7444		min		-6.186	1	-12.665	1	.847	2	-.245	1	3.004	2
7445	P1897	max	T	4.986	1	3.796	1	1.021	2	-.451	1	4.51	1
7446		min		2.558	2	.517	2	.595	1	-.777	2	2.343	2
7447		max	B	-.681	2	-2.464	2	.892	2	1.091	1	4.558	1
7448		min		-4.011	1	-4.957	1	.473	1	.818	2	2.204	2
7449	P1898	max	T	3.149	1	.59	1	1.28	1	-.397	1	2.899	1
7450		min		2.062	2	-.124	2	1.093	2	-.648	2	2.127	2
7451		max	B	.042	2	-2.029	2	1.184	1	1.171	1	2.813	1
7452		min		-.742	1	-3.11	1	1.035	2	.937	2	2.05	2
7453	P1899	max	T	1.798	2	-.061	2	1.18	1	-.469	1	2.127	1
7454		min		1.77	1	-.589	1	.93	2	-.624	2	1.829	2
7455		max	B	.487	1	-1.727	1	1.107	1	1.097	1	2.015	1
7456		min		.014	2	-1.786	2	.9	2	.954	2	1.793	2
7457	P1900	max	T	1.365	2	.129	2	.835	1	-.507	1	1.474	1
7458		min		1.115	1	-.556	1	.618	2	-.669	2	1.305	2
7459		max	B	.495	1	-1.065	1	.78	1	1.057	1	1.381	1
7460		min		-.15	2	-1.359	2	.604	2	.902	2	1.29	2
7461	P1901	max	T	.967	2	.076	2	.591	1	-.402	2	1.033	1
7462		min		.73	1	-.452	1	.446	2	-.627	1	.932	2
7463		max	B	.41	1	-.682	1	.546	1	1.168	2	.956	1
7464		min		-.09	2	-.958	2	.434	2	.929	1	.916	2
7465	P1902	max	T	1.054	2	.031	2	.511	2	-.425	2	1.039	2
7466		min		.353	1	-.23	1	.291	1	-.704	1	.508	1
7467		max	B	.212	1	-.306	1	.501	2	1.144	2	1.021	2
7468		min		-.039	2	-1.04	2	.259	1	.841	1	.451	1
7469	P1903	max	T	.92	2	-.017	2	.469	2	-.425	2	.929	2
7470		min		.256	1	-.069	1	.162	1	-.661	1	.296	1
7471		max	B	.068	1	-.214	1	.459	2	1.143	2	.91	2
7472		min		.015	2	-.902	2	.141	1	.865	1	.255	1
7473	P1903A	max	T	12.077	1	5.678	1	3.2	1	1.65	2	10.466	1
7474		min		2.883	2	1.277	2	.803	2	1.174	1	2.502	2
7475		max	B	-1.559	2	-2.709	2	3.335	1	-.101	2	10.724	1
7476		min		-5.699	1	-12.37	1	.575	2	-.397	1	2.355	2
7477	P1904	max	T	4.31	1	3.286	1	.854	2	2.353	1	3.9	1
7478		min		2.14	2	.432	2	.512	1	2.288	2	1.96	2
7479		max	B	-.586	2	-2.063	2	.738	2	.763	2	3.952	1
7480		min		-3.478	1	-4.298	1	.41	1	.692	1	1.841	2
7481	P1905	max	T	2.281	1	-.128	2	1.238	1	-.685	1	2.385	1
7482		min		1.902	2	-.195	1	1.015	2	-.694	2	1.97	2
7483		max	B	.048	2	-1.886	2	1.136	1	.902	2	2.254	1
7484		min		.036	1	-2.236	1	.967	2	.873	1	1.911	2
7485	P1906	max	T	1.789	2	-.142	2	1.232	1	-.696	2	2.135	1
7486		min		1.193	1	-1.272	1	.965	2	-.734	1	1.864	2
7487		max	B	1.155	1	-1.135	1	1.145	1	.888	2	1.983	1
7488		min		.089	2	-1.782	2	.935	2	.827	1	1.828	2
7489	P1907	max	T	2.417	2	.809	2	1.205	1	2.133	1	2.265	1
7490		min		.324	1	-2.086	1	.804	2	-.586	2	2.131	2
7491		max	B	2.005	1	-.261	1	1.133	1	.998	2	2.148	1
7492		min		-.848	2	-2.424	2	.788	2	.541	1	2.13	2
7493	P1908	max	T	2.088	2	.532	2	.778	2	1.809	1	1.879	2
7494		min		.395	1	-.545	1	.47	1	-.69	2	.818	1
7495		max	B	.527	1	-.322	1	.77	2	.886	2	1.869	2
7496		min		-.541	2	-2.08	2	.424	1	.192	1	.742	1
7497	P1909	max	T	1.276	2	.093	2	.592	2	2.072	1	1.232	2
7498		min		.307	1	-.177	1	.242	1	-.573	2	.425	1

Envelope Plate/Shell Principal Stresses (Continued)

	Plate		Sur...	Sigma1 [ksi]	LC	Sigma2 [ksi]	LC	Tau Max [k...	LC	Angle [rad]	LC	Von Mises [ksi]	LC
7499		max	B	.162	1	-.261	1	.584	2	1.003	2	1.219	2
7500		min		-.098	2	-1.265	2	.212	1	.484	1	.37	1
7501	P1910	max	T	1.077	2	-.011	2	.544	2	2.215	1	1.083	2
7502		min		.188	1	-.069	1	.128	1	-.545	2	.23	1
7503		max	B	.066	1	-.163	1	.537	2	1.027	2	1.069	2
7504		min		.009	2	-1.064	2	.115	1	.619	1	.205	1
7505	P1910A	max	T	11.601	1	5.069	1	3.266	1	1.462	2	10.074	1
7506		min		2.265	2	1.081	2	.592	2	1.036	1	1.962	2
7507		max	B	-1.33	2	-2.123	2	3.407	1	-.38	2	10.335	1
7508		min		-5.076	1	-11.891	1	.397	2	-.532	1	1.858	2
7509	P1911	max	T	3.426	1	2.072	1	.677	1	2.205	2	2.989	1
7510		min		1.624	2	.34	2	.642	2	1.809	1	1.484	2
7511		max	B	-.48	2	-1.57	2	.669	1	.718	2	3.063	1
7512		min		-2.166	1	-3.504	1	.545	2	.136	1	1.393	2
7513	P1912	max	T	1.317	2	-.211	2	1.145	1	2.189	1	1.988	1
7514		min		1.268	1	-1.022	1	.764	2	-.769	2	1.434	2
7515		max	B	.873	1	-1.223	1	1.048	1	.84	2	1.823	1
7516		min		.139	2	-1.317	2	.728	2	.589	1	1.391	2
7517	P1913	max	T	1.562	2	-.024	2	1.517	1	1.996	1	3.266	1
7518		min		-.422	1	-3.457	1	.793	2	-.633	2	1.574	2
7519		max	B	3.346	1	.454	1	1.446	1	.962	2	3.144	1
7520		min		-.034	2	-1.581	2	.773	2	.398	1	1.564	2
7521	P1914	max	T	.537	2	.04	2	.576	1	1.851	1	1.451	1
7522		min		-.478	1	-1.63	1	.249	2	-.284	2	.518	2
7523		max	B	1.586	1	.469	1	.559	1	1.322	2	1.411	1
7524		min		-.059	2	-.547	2	.244	2	.249	1	.52	2
7525	P1915	max	T	1.114	2	.482	1	.708	2	1.963	2	1.291	2
7526		min		.806	1	-.301	2	.162	1	1.369	1	.702	1
7527		max	B	.316	2	-.752	1	.709	2	.391	2	1.289	2
7528		min		-.48	1	-1.102	2	.136	1	-.251	1	.659	1
7529	P1916	max	T	1.085	2	.031	2	.527	2	1.803	1	1.069	2
7530		min		.292	1	-.125	1	.208	1	-.758	2	.37	1
7531		max	B	.124	1	-.267	1	.523	2	.815	2	1.062	2
7532		min		-.03	2	-1.077	2	.196	1	.229	1	.346	1
7533	P1917	max	T	.909	2	.007	2	.451	2	1.981	1	.906	2
7534		min		.182	1	-.062	1	.122	1	-.696	2	.22	1
7535		max	B	.063	1	-.173	1	.448	2	.876	2	.899	2
7536		min		-.007	2	-.902	2	.118	1	.402	1	.211	1
7537	P1917A	max	T	10.711	1	3.987	1	3.362	1	1.241	2	9.376	1
7538		min		1.824	2	.869	2	.477	2	.942	1	1.58	2
7539		max	B	-1.061	2	-1.733	2	3.512	1	-.624	1	9.644	1
7540		min		-3.971	1	-10.995	1	.336	2	-.69	2	1.513	2
7541	P1918	max	T	2.977	1	.984	1	.996	1	2.076	2	2.627	1
7542		min		1.072	2	.284	2	.394	2	1.487	1	.962	2
7543		max	B	-.412	2	-1.035	2	1.044	1	.664	2	2.74	1
7544		min		-1.015	1	-3.102	1	.311	2	-.15	1	.903	2
7545	P1919	max	T	.509	2	-.478	2	1.822	1	2.21	2	4.118	1
7546		min		-.824	1	-4.468	1	.494	2	1.718	1	.855	2
7547		max	B	4.371	1	.812	1	1.78	1	.706	2	4.027	1
7548		min		.398	2	-.528	2	.463	2	.114	1	.805	2
7549	P1920	max	T	.021	2	-.359	2	1.07	1	2.101	2	2.682	1
7550		min		-.869	1	-3.009	1	.19	2	1.665	1	.37	2
7551		max	B	2.975	1	.873	1	1.051	1	.551	2	2.648	1
7552		min		.317	2	-.031	2	.174	2	.07	1	.334	2
7553	P1921	max	T	.143	1	.111	1	.274	2	1.953	2	.545	2
7554		min		.005	2	-.542	2	.016	1	1.135	1	.13	1
7555		max	B	.55	2	.007	2	.272	2	.366	2	.547	2

Envelope Plate/Shell Principal Stresses (Continued)

	Plate		Sur...	Sigma1 [ksi]	LC	Sigma2 [ksi]	LC	Tau Max [k...	LC	Angle [rad]	LC	Von Mises [ksi]	LC
7556		min		-.122	1	-.136	1	.007	1	-.254	1	.129	1
7557	P1922	max	T	.376	2	-.022	2	.23	1	2.177	2	.402	1
7558		min		.171	1	-.289	1	.199	2	1.358	1	.388	2
7559		max	B	.283	1	-.16	1	.221	1	.597	2	.388	1
7560		min		.022	2	-.369	2	.195	2	-.223	1	.38	2
7561	P1923	max	T	.481	2	-.017	2	.249	2	2.226	2	.489	2
7562		min		.201	1	-.124	1	.163	1	1.489	1	.284	1
7563		max	B	.129	1	-.195	1	.245	2	.651	2	.482	2
7564		min		.018	2	-.473	2	.162	1	-.096	1	.282	1
7565	P1924	max	T	.512	2	.002	2	.255	2	2.346	2	.511	2
7566		min		.114	1	-.099	1	.106	1	1.552	1	.184	1
7567		max	B	.102	1	-.113	1	.253	2	.774	2	.506	2
7568		min		-.002	2	-.507	2	.107	1	-.026	1	.186	1
7569	P1924A	max	T	9.369	1	2.752	1	3.309	1	1	2	8.341	1
7570		min		1.512	2	.657	2	.428	2	.866	1	1.313	2
7571		max	B	-.797	2	-1.47	2	3.471	1	2.174	2	8.616	1
7572		min		-2.7	1	-9.643	1	.337	2	-.698	1	1.274	2
7573	P1925	max	T	2.9	1	.138	2	1.82	1	1.72	2	3.332	1
7574		min		.663	2	-.739	1	.262	2	1.278	1	.606	2
7575		max	B	.753	1	-.591	2	1.901	1	.311	2	3.487	1
7576		min		-.285	2	-3.049	1	.153	2	-.325	1	.512	2
7577	P1926	max	T	-.06	2	-.915	2	2.659	1	1.849	2	6.236	1
7578		min		-1.545	1	-6.863	1	.428	2	1.663	1	.887	2
7579		max	B	6.76	1	1.529	1	2.615	1	.336	2	6.14	1
7580		min		.789	2	.038	2	.376	2	.067	1	.771	2
7581	P1927	max	T	.328	1	-.174	1	.251	1	2.013	2	.441	1
7582		min		-.071	2	-.408	2	.169	2	.654	1	.378	2
7583		max	B	.421	2	.08	2	.236	1	2.212	1	.415	1
7584		min		.166	1	-.306	1	.17	2	.429	2	.387	2
7585	P1928	max	T	.065	2	-.228	2	.269	1	2.293	2	.628	1
7586		min		-.15	1	-.689	1	.146	2	1.341	1	.266	2
7587		max	B	.679	1	.155	1	.262	1	.728	2	.617	1
7588		min		.221	2	-.06	2	.14	2	-.225	1	.256	2
7589	P1929	max	T	.135	2	-.144	2	.154	1	1.093	1	.29	1
7590		min		.042	1	-.266	1	.139	2	-.735	2	.241	2
7591		max	B	.264	1	-.039	1	.152	1	.836	2	.286	1
7592		min		.141	2	-.125	2	.133	2	-.488	1	.23	2
7593	P1930	max	T	.199	2	-.038	2	.163	1	1.105	1	.297	1
7594		min		.074	1	-.253	1	.118	2	-.671	2	.22	2
7595		max	B	.255	1	-.074	1	.164	1	.902	2	.298	1
7596		min		.036	2	-.191	2	.113	2	-.475	1	.211	2
7597	P1931	max	T	.219	2	-.023	2	.121	2	1.08	1	.231	2
7598		min		.049	1	-.168	1	.108	1	-.704	2	.196	1
7599		max	B	.17	1	-.049	1	.118	2	.87	2	.225	2
7600		min		.022	2	-.213	2	.11	1	-.495	1	.199	1
7601	P1931A	max	T	7.645	1	1.194	1	3.225	1	.817	1	7.123	1
7602		min		1.304	2	.425	2	.44	2	.808	2	1.152	2
7603		max	B	-.552	2	-1.257	2	3.399	1	2.006	2	7.413	1
7604		min		-1.107	1	-7.904	1	.352	2	-.747	1	1.091	2
7605	P1932	max	T	2.566	1	-.15	2	2.353	1	1.389	2	4.081	1
7606		min		.418	2	-2.14	1	.284	2	1.17	1	.509	2
7607		max	B	2.195	1	-.344	2	2.451	1	-.095	2	4.253	1
7608		min		-.005	2	-2.708	1	.17	2	-.422	1	.342	2
7609	P1933	max	T	-.031	2	-.729	2	1.68	1	1.782	2	3.569	1
7610		min		-.384	1	-3.745	1	.349	2	1.655	1	.714	2
7611		max	B	3.683	1	.316	1	1.684	1	.243	2	3.536	1
7612		min		.671	2	.042	2	.314	2	.06	1	.651	2

Envelope Plate/Shell Principal Stresses (Continued)

	Plate		Sur...	Sigma1 [ksi]	LC	Sigma2 [ksi]	LC	Tau Max [k...	LC	Angle [rad]	LC	Von Mises [ksi]	LC
7613	P1934	max	T	-.039	2	-.325	2	.143	2	2.192	2	.372	1
7614		min		-.243	1	-.428	1	.092	1	1.953	1	.307	2
7615		max	B	.43	1	.237	1	.13	2	.595	2	.373	1
7616		min		.314	2	.054	2	.096	1	.387	1	.291	2
7617	P1935	max	T	.042	2	-.222	2	.209	1	1.007	1	.437	1
7618		min		-.037	1	-.455	1	.132	2	-.744	2	.246	2
7619		max	B	.45	1	.039	1	.205	1	.827	2	.432	1
7620		min		.217	2	-.034	2	.125	2	-.56	1	.235	2
7621	P1936	max	T	.093	2	-.148	2	.175	1	.959	1	.36	1
7622		min		-.019	1	-.369	1	.12	2	-.615	2	.21	2
7623		max	B	.366	1	.02	1	.173	1	.969	2	.357	1
7624		min		.144	2	-.086	2	.115	2	-.614	1	.201	2
7625	P1937	max	T	.117	2	-.107	2	.149	1	.86	1	.284	1
7626		min		.033	1	-.266	1	.112	2	-.543	2	.194	2
7627		max	B	.266	1	-.033	1	.15	1	1.044	2	.284	1
7628		min		.105	2	-.111	2	.108	2	-.714	1	.187	2
7629	P1938	max	T	.109	2	-.066	2	.124	1	.811	1	.235	1
7630		min		.029	1	-.219	1	.088	2	-.519	2	.153	2
7631		max	B	.221	1	-.029	1	.125	1	1.072	2	.237	1
7632		min		.068	2	-.103	2	.085	2	-.764	1	.149	2
7633	P1938A	max	T	5.743	1	.321	2	3.038	1	.8	1	5.917	1
7634		min		1.164	2	-.334	1	.422	2	.653	2	1.041	2
7635		max	B	.473	1	-1.09	2	3.226	1	1.848	2	6.23	1
7636		min		-.449	2	-5.98	1	.32	2	-.765	1	.949	2
7637	P1939	max	T	1.758	1	-.664	2	2.621	1	1.156	2	4.621	1
7638		min		.109	2	-3.484	1	.386	2	1.009	1	.724	2
7639		max	B	3.561	1	-.019	2	2.727	1	-.358	2	4.797	1
7640		min		.496	2	-1.894	1	.257	2	-.575	1	.506	2
7641	P1940	max	T	-.129	2	-.456	2	1.064	1	1.192	2	2.26	1
7642		min		-.244	1	-2.373	1	.163	2	1.038	1	.407	2
7643		max	B	2.387	1	.293	1	1.047	1	-.31	2	2.255	1
7644		min		.406	2	.112	2	.147	2	-.548	1	.363	2
7645	P1941	max	T	-.003	2	-.231	2	.385	1	2.105	2	.854	1
7646		min		-.149	1	-.918	1	.114	2	1.306	1	.229	2
7647		max	B	.901	1	.148	1	.376	1	.568	2	.836	1
7648		min		.218	2	.008	2	.105	2	-.25	1	.214	2
7649	P1942	max	T	.047	2	-.202	2	.157	1	.86	1	.376	1
7650		min		-.102	1	-.417	1	.124	2	-.701	2	.229	2
7651		max	B	.41	1	.104	1	.153	1	.89	2	.369	1
7652		min		.195	2	-.041	2	.118	2	-.708	1	.219	2
7653	P1943	max	T	.071	2	-.158	2	.157	1	.804	1	.311	1
7654		min		.005	1	-.308	1	.115	2	-.614	2	.204	2
7655		max	B	.305	1	-.005	1	.155	1	.977	2	.307	1
7656		min		.156	2	-.066	2	.111	2	-.763	1	.197	2
7657	P1944	max	T	.082	2	-.128	2	.137	1	.767	1	.257	1
7658		min		.036	1	-.237	1	.105	2	-.541	2	.183	2
7659		max	B	.237	1	-.036	1	.137	1	2.339	1	.257	1
7660		min		.128	2	-.077	2	.103	2	1.053	2	.18	2
7661	P1945	max	T	.068	2	-.092	2	.112	1	.712	1	.209	1
7662		min		.037	1	-.187	1	.08	2	-.49	2	.139	2
7663		max	B	.189	1	-.037	1	.113	1	2.28	1	.21	1
7664		min		.096	2	-.064	2	.08	2	1.111	2	.139	2
7665	P1945A	max	T	3.759	1	.042	2	3.317	1	.819	1	5.763	1
7666		min		1.034	2	-2.875	1	.496	2	.601	2	1.013	2
7667		max	B	3.059	1	-.852	2	3.512	1	1.903	2	6.101	1
7668		min		-.247	2	-3.966	1	.302	2	-.75	1	.759	2
7669	P1946	max	T	2.207	1	-.688	2	2.393	1	1.117	2	4.148	1

Envelope Plate/Shell Principal Stresses (Continued)

	Plate		Sur...	Sigma1 [ksi]	LC	Sigma2 [ksi]	LC	Tau Max [k...	LC	Angle [rad]	LC	Von Mises [ksi]	LC
7670		min		.056	2	-2.579	1	.372	2	.848	1	.718	2
7671		max	B	2.702	1	.031	2	2.527	1	-.35	2	4.381	1
7672		min		.56	2	-2.352	1	.265	2	-.727	1	.546	2
7673	P1947	max	T	.052	2	-.048	2	.201	1	.985	1	.527	1
7674		min		-.194	1	-.597	1	.05	2	-.448	2	.087	2
7675		max	B	.581	1	.211	1	.185	1	1.097	2	.509	1
7676		min		.044	2	-.044	2	.044	2	-.565	1	.076	2
7677	P1948	max	T	-.007	2	-.142	2	.288	1	2.319	2	.651	1
7678		min		-.131	1	-.707	1	.067	2	.957	1	.138	2
7679		max	B	.7	1	.137	1	.281	1	.77	2	.642	1
7680		min		.136	2	-.002	2	.069	2	-.598	1	.137	2
7681	P1949	max	T	.055	2	-.165	2	.141	1	.961	1	.307	1
7682		min		-.046	1	-.328	1	.11	2	-.758	2	.199	2
7683		max	B	.32	1	.046	1	.137	1	.839	2	.3	1
7684		min		.161	2	-.055	2	.108	2	-.583	1	.194	2
7685	P1950	max	T	.059	2	-.151	2	.108	1	.796	1	.202	1
7686		min		.033	1	-.184	1	.105	2	-.659	2	.187	2
7687		max	B	.179	1	-.034	1	.107	1	.937	2	.198	1
7688		min		.15	2	-.057	2	.103	2	-.759	1	.185	2
7689	P1951	max	T	.074	1	-.131	1	.103	1	.824	1	.18	1
7690		min		.06	2	-.132	2	.096	2	-.598	2	.17	2
7691		max	B	.134	2	-.057	2	.103	1	1	2	.18	1
7692		min		.13	1	-.076	1	.096	2	-.74	1	.17	2
7693	P1952	max	T	.08	1	-.099	1	.089	1	.843	1	.155	1
7694		min		.046	2	-.103	2	.075	2	-.529	2	.132	2
7695		max	B	.109	2	-.043	2	.09	1	1.076	2	.156	1
7696		min		.1	1	-.08	1	.076	2	-.73	1	.136	2
7697	P1952A	max	T	3.374	1	-1.722	2	3.503	1	2.32	2	6.069	1
7698		min		2.166	2	-3.632	1	1.944	2	2.284	1	3.375	2
7699		max	B	3.948	1	-2.589	2	3.821	1	.739	2	6.62	1
7700		min		2.157	2	-3.695	1	2.373	2	.713	1	4.116	2
7701	P1953	max	T	2.291	1	-1.292	2	2.541	1	2.339	2	4.409	1
7702		min		1.531	2	-2.792	1	1.412	2	2.295	1	2.448	2
7703		max	B	2.986	1	-1.732	2	2.735	1	.762	2	4.744	1
7704		min		1.525	2	-2.485	1	1.629	2	.727	1	2.823	2
7705	P1954	max	T	-.101	2	-.5	2	.224	1	2.205	1	.539	1
7706		min		-.152	1	-.599	1	.2	2	2.125	2	.458	2
7707		max	B	.578	1	.171	1	.204	1	.623	1	.515	1
7708		min		.487	2	.111	2	.188	2	.556	2	.442	2
7709	P1955	max	T	.04	2	-.534	2	.323	1	2.236	2	.692	1
7710		min		-.085	1	-.731	1	.287	2	2.205	1	.555	2
7711		max	B	.727	1	.093	1	.317	1	.654	2	.685	1
7712		min		.543	2	-.033	2	.288	2	.619	1	.56	2
7713	P1956	max	T	.13	2	-.319	2	.224	2	2.263	2	.4	2
7714		min		.009	1	-.345	1	.177	1	2.204	1	.349	1
7715		max	B	.337	1	-.009	1	.222	2	.671	2	.396	2
7716		min		.316	2	-.127	2	.173	1	.605	1	.341	1
7717	P1957	max	T	.175	2	-.196	1	.196	2	2.309	1	.34	2
7718		min		.088	1	-.217	2	.142	1	2.295	2	.252	1
7719		max	B	.213	2	-.089	1	.194	2	.719	1	.337	2
7720		min		.192	1	-.175	2	.141	1	.705	2	.249	1
7721	P1958	max	T	.186	2	-.144	1	.18	2	2.262	1	.313	2
7722		min		.126	1	-.175	2	.135	1	2.258	2	.234	1
7723		max	B	.171	2	-.128	1	.18	2	.68	1	.312	2
7724		min		.142	1	-.189	2	.135	1	.67	2	.235	1
7725	P1959	max	T	.157	2	-.109	1	.145	2	2.228	1	.251	2
7726		min		.122	1	-.132	2	.115	1	2.227	2	.2	1

Envelope Plate/Shell Principal Stresses (Continued)

	Plate		Sur...	Sigma1 [ksi]	LC	Sigma2 [ksi]	LC	Tau Max [k...	LC	Angle [rad]	LC	Von Mises [ksi]	LC
7727		max	B	.128	2	-.123	1	.145	2	.652	1	.252	2
7728		min		.108	1	-.162	2	.116	1	.637	2	.201	1
7729	P1959A	max	T	5.496	1	-.181	2	3.179	1	2.306	1	5.974	1
7730		min		3.443	2	-.862	1	1.812	2	-.781	2	3.537	2
7731		max	B	1.125	1	-3.827	2	3.481	1	.743	2	6.474	1
7732		min		.567	2	-5.838	1	2.197	2	.724	1	4.14	2
7733	P1960	max	T	1.798	1	-1.876	2	2.817	1	2.161	2	4.985	1
7734		min		1.155	2	-3.837	1	1.516	2	2.131	1	2.65	2
7735		max	B	3.99	1	-1.341	2	2.984	1	.595	2	5.266	1
7736		min		2.112	2	-1.979	1	1.727	2	.572	1	3.016	2
7737	P1961	max	T	-.045	2	-1.327	2	1.135	1	2.136	2	2.38	1
7738		min		-.207	1	-2.476	1	.641	2	2.119	1	1.305	2
7739		max	B	2.516	1	.261	1	1.128	1	.59	2	2.397	1
7740		min		1.403	2	.078	2	.663	2	.566	1	1.366	2
7741	P1962	max	T	.034	2	-.598	2	.413	1	2.029	2	.891	1
7742		min		-.117	1	-.944	1	.316	2	1.881	1	.616	2
7743		max	B	.928	1	.116	1	.406	1	.435	2	.876	1
7744		min		.596	2	-.033	2	.314	2	.292	1	.613	2
7745	P1963	max	T	.129	2	-.371	2	.25	2	2.289	1	.449	2
7746		min		-.034	1	-.444	1	.205	1	2.281	2	.428	1
7747		max	B	.435	1	.039	1	.242	2	.711	1	.437	2
7748		min		.363	2	-.122	2	.198	1	.7	2	.417	1
7749	P1964	max	T	.162	2	-.315	2	.238	2	2.305	1	.42	2
7750		min		.064	1	-.337	1	.2	1	2.268	2	.373	1
7751		max	B	.331	1	-.063	1	.233	2	.728	1	.411	2
7752		min		.308	2	-.159	2	.197	1	.688	2	.367	1
7753	P1965	max	T	.148	2	-.263	1	.208	2	2.312	1	.365	2
7754		min		.081	1	-.268	2	.172	1	2.253	2	.312	1
7755		max	B	.262	2	-.082	1	.205	2	.737	1	.359	2
7756		min		.261	1	-.147	2	.171	1	.673	2	.31	1
7757	P1966	max	T	.108	2	-.204	1	.16	2	2.347	1	.282	2
7758		min		.068	1	-.212	2	.136	1	2.268	2	.246	1
7759		max	B	.206	2	-.068	1	.158	2	.774	1	.278	2
7760		min		.203	1	-.11	2	.136	1	.685	2	.245	1
7761	P1966A	max	T	7.568	1	.86	1	3.354	1	2.3	1	7.176	1
7762		min		4.641	2	.739	2	1.951	2	-.777	2	4.319	2
7763		max	B	-.439	2	-4.957	2	3.621	1	.724	2	7.599	1
7764		min		-.669	1	-7.911	1	2.259	2	.711	1	4.752	2
7765	P1967	max	T	2.604	1	-1.303	2	2.592	1	2.011	2	4.489	1
7766		min		1.497	2	-2.579	1	1.4	2	1.973	1	2.427	2
7767		max	B	2.7	1	-1.668	2	2.743	1	.447	2	4.751	1
7768		min		1.512	2	-2.785	1	1.59	2	.421	1	2.755	2
7769	P1968	max	T	-.236	2	-2.041	2	1.777	1	1.518	2	3.791	1
7770		min		-.435	1	-3.99	1	.902	2	1.495	1	1.934	2
7771		max	B	3.949	1	.354	1	1.797	1	-.022	2	3.784	1
7772		min		2.078	2	.176	2	.951	2	-.05	1	1.995	2
7773	P1969	max	T	.03	2	-.152	2	.091	2	2.349	2	.289	1
7774		min		-.22	1	-.328	1	.054	1	1.262	1	.17	2
7775		max	B	.33	1	.21	1	.077	2	.786	2	.29	1
7776		min		.134	2	-.02	2	.06	1	-.358	1	.145	2
7777	P1970	max	T	.193	2	-.384	2	.289	2	2.222	2	.513	1
7778		min		.047	1	-.488	1	.267	1	2.168	1	.509	2
7779		max	B	.48	1	-.043	1	.281	2	.649	2	.503	1
7780		min		.374	2	-.188	2	.262	1	.593	1	.496	2
7781	P1971	max	T	.132	2	-.38	2	.256	2	2.191	2	.46	2
7782		min		.036	1	-.417	1	.226	1	2.176	1	.436	1
7783		max	B	.412	1	-.034	1	.25	2	.617	2	.45	2

Envelope Plate/Shell Principal Stresses (Continued)

	Plate		Sur...	Sigma1 [ksi]	LC	Sigma2 [ksi]	LC	Tau Max [k...	LC	Angle [rad]	LC	Von Mises [ksi]	LC
7784		min		.372	2	-.128	2	.223	1	.604	1	.43	1
7785	P1972	max	T	.124	2	-.31	1	.226	2	2.238	1	.404	2
7786		min		.076	1	-.327	2	.193	1	2.209	2	.354	1
7787		max	B	.321	2	-.075	1	.222	2	.668	1	.397	2
7788		min		.309	1	-.123	2	.192	1	.635	2	.352	1
7789	P1973	max	T	.08	2	-.257	1	.181	2	2.269	1	.329	2
7790		min		.055	1	-.282	2	.156	1	2.231	2	.288	1
7791		max	B	.277	2	-.055	1	.179	2	.698	1	.325	2
7792		min		.256	1	-.08	2	.156	1	.656	2	.288	1
7793	P1973A	max	T	9.461	1	2.551	1	3.455	1	2.34	2	8.478	1
7794		min		5.656	2	1.547	2	2.054	2	2.261	1	5.063	2
7795		max	B	-1.344	2	-5.887	2	3.686	1	.688	2	8.835	1
7796		min		-2.422	1	-9.793	1	2.271	2	.671	1	5.343	2
7797	P1974	max	T	2.939	1	-.64	2	2.046	1	1.965	2	3.655	1
7798		min		1.576	2	-1.154	1	1.108	2	1.871	1	1.975	2
7799		max	B	1.225	1	-1.744	2	2.177	1	.383	2	3.888	1
7800		min		.81	2	-3.128	1	1.277	2	.326	1	2.26	2
7801	P1975	max	T	-1.036	2	-4.111	2	2.9	1	1.522	2	6.843	1
7802		min		-1.747	1	-7.548	1	1.537	2	1.493	1	3.704	2
7803		max	B	7.494	1	1.73	1	2.882	1	-.019	2	6.796	1
7804		min		4.216	2	1.027	2	1.595	2	-.051	1	3.808	2
7805	P1976	max	T	.659	2	-.042	2	.35	2	-.544	2	.681	2
7806		min		.557	1	-.135	1	.346	1	-.594	1	.635	1
7807		max	B	.124	1	-.539	1	.347	2	1.039	2	.679	2
7808		min		.03	2	-.663	2	.332	1	.992	1	.611	1
7809	P1977	max	T	.053	2	-.511	2	.317	1	2.065	2	.696	1
7810		min		-.11	1	-.744	1	.282	2	1.87	1	.54	2
7811		max	B	.734	1	.115	1	.309	1	.488	2	.684	1
7812		min		.505	2	-.048	2	.276	2	.294	1	.53	2
7813	P1978	max	T	.158	2	-.314	1	.247	2	2.203	2	.437	2
7814		min		.104	1	-.336	2	.209	1	2.099	1	.377	1
7815		max	B	.326	2	-.101	1	.241	2	.637	2	.426	2
7816		min		.309	1	-.155	2	.205	1	.536	1	.37	1
7817	P1979	max	T	.102	1	-.328	1	.237	2	2.161	2	.441	2
7818		min		.075	2	-.398	2	.215	1	2.056	1	.389	1
7819		max	B	.393	2	-.074	2	.234	2	.593	2	.435	2
7820		min		.328	1	-.102	1	.215	1	.491	1	.389	1
7821	P1980	max	T	.065	1	-.24	1	.205	2	2.219	2	.388	2
7822		min		.047	2	-.362	2	.153	1	2.086	1	.279	1
7823		max	B	.36	2	-.047	2	.204	2	.648	2	.386	2
7824		min		.241	1	-.066	1	.154	1	.516	1	.28	1
7825	P1980A	max	T	10.941	1	3.887	1	3.527	1	2.297	2	9.606	1
7826		min		6.326	2	2.068	2	2.129	2	2.196	1	5.587	2
7827		max	B	-1.973	2	-6.472	2	3.72	1	.639	2	9.918	1
7828		min		-3.821	1	-11.261	1	2.249	2	.605	1	5.745	2
7829	P1981	max	T	2.967	1	.651	1	1.158	1	1.995	2	2.701	1
7830		min		1.46	2	.221	2	.619	2	1.698	1	1.363	2
7831		max	B	-.069	2	-1.605	2	1.265	1	.368	2	2.884	1
7832		min		-.612	1	-3.141	1	.768	2	.177	1	1.572	2
7833	P1982	max	T	-.839	2	-3.026	2	2.022	1	1.614	2	4.665	1
7834		min		-1.062	1	-5.105	1	1.093	2	1.468	1	2.706	2
7835		max	B	5.056	1	1.029	1	2.014	1	.065	2	4.628	1
7836		min		3.127	2	.784	2	1.172	2	-.069	1	2.818	2
7837	P1983	max	T	-.565	2	-1.897	2	1.181	1	1.59	2	2.974	1
7838		min		-.978	1	-3.34	1	.666	2	1.501	1	1.687	2
7839		max	B	3.321	1	.983	1	1.169	1	.035	2	2.954	1
7840		min		1.928	2	.574	2	.677	2	-.046	1	1.715	2

Envelope Plate/Shell Principal Stresses (Continued)

	Plate		Sur...	Sigma1 [ksi]	LC	Sigma2 [ksi]	LC	Tau Max [k...	LC	Angle [rad]	LC	Von Mises [ksi]	LC
7841	P1984	max	T	.647	2	.162	1	.284	2	-.381	2	.611	2
7842		min		.374	1	.078	2	.106	1	-.431	1	.325	1
7843		max	B	-.091	2	-.375	1	.283	2	1.212	2	.617	2
7844		min		-.171	1	-.658	2	.102	1	1.199	1	.325	1
7845	P1985	max	T	.162	1	-.385	1	.274	1	2.237	2	.525	2
7846		min		.019	2	-.515	2	.267	2	1.905	1	.487	1
7847		max	B	.509	2	-.019	2	.265	1	.68	2	.518	2
7848		min		.379	1	-.152	1	.264	2	.346	1	.473	1
7849	P1986	max	T	.173	1	-.214	1	.278	2	2.296	2	.535	2
7850		min		.045	2	-.511	2	.194	1	1.858	1	.336	1
7851		max	B	.512	2	-.047	2	.279	2	.73	2	.537	2
7852		min		.219	1	-.169	1	.194	1	.298	1	.337	1
7853	P1987	max	T	.079	1	-.216	1	.287	2	2.251	2	.569	2
7854		min		.009	2	-.564	2	.147	1	1.868	1	.264	1
7855		max	B	.565	2	-.01	2	.287	2	.681	2	.57	2
7856		min		.218	1	-.079	1	.149	1	.298	1	.267	1
7857	P1987A	max	T	11.911	1	5.039	1	3.436	1	2.246	2	10.356	1
7858		min		6.596	2	2.41	2	2.093	2	2.112	1	5.781	2
7859		max	B	-2.414	2	-6.655	2	3.597	1	.584	2	10.635	1
7860		min		-5.021	1	-12.216	1	2.121	2	.522	1	5.835	2
7861	P1988	max	T	3.314	1	1.866	1	.724	1	2.192	2	2.877	1
7862		min		1.541	2	.612	2	.465	2	1.452	1	1.344	2
7863		max	B	-.546	2	-1.616	2	.796	1	.478	2	3.003	1
7864		min		-1.872	1	-3.464	1	.535	2	-.033	1	1.424	2
7865	P1989	max	T	.942	1	-.684	2	1.084	1	1.601	2	1.883	1
7866		min		-.192	2	-1.227	1	.246	2	1.027	1	.611	2
7867		max	B	1.111	1	.122	2	1.012	1	.058	2	1.755	1
7868		min		.772	2	-.912	1	.325	2	-.498	1	.719	2
7869	P1990	max	T	-.906	1	-3.154	2	1.631	1	1.554	2	3.798	1
7870		min		-1.244	2	-4.169	1	.955	2	1.231	1	2.752	2
7871		max	B	4.093	1	1.224	2	1.584	1	-.002	2	3.718	1
7872		min		3.216	2	.924	1	.996	2	-.309	1	2.812	2
7873	P1991	max	T	-.482	2	-1.65	2	.707	1	1.499	2	1.8	1
7874		min		-.613	1	-2.026	1	.584	2	1.349	1	1.469	2
7875		max	B	1.992	1	.6	1	.696	1	-.067	2	1.77	1
7876		min		1.659	2	.478	2	.591	2	-.196	1	1.48	2
7877	P1992	max	T	.882	1	.374	1	.717	2	-.451	2	1.242	2
7878		min		.696	2	-.737	2	.254	1	-.769	1	.767	1
7879		max	B	.751	2	-.716	2	.734	2	1.127	2	1.271	2
7880		min		-.343	1	-.862	1	.26	1	.865	1	.752	1
7881	P1993	max	T	.151	1	-.329	1	.515	2	2.211	2	1.046	2
7882		min		-.032	2	-1.061	2	.24	1	1.724	1	.425	1
7883		max	B	1.067	2	.032	2	.518	2	.642	2	1.052	2
7884		min		.332	1	-.132	1	.232	1	.174	1	.414	1
7885	P1994	max	T	.051	1	-.218	1	.432	2	2.201	2	.871	2
7886		min		-.013	2	-.878	2	.135	1	1.74	1	.248	1
7887		max	B	.881	2	.013	2	.434	2	.63	2	.874	2
7888		min		.223	1	-.046	1	.134	1	.185	1	.249	1
7889	P1994A	max	T	12.382	1	5.661	1	3.361	1	2.168	2	10.737	1
7890		min		6.422	2	2.388	2	2.017	2	1.986	1	5.622	2
7891		max	B	-2.467	2	-6.416	2	3.505	1	.503	2	11.001	1
7892		min		-5.67	1	-12.68	1	1.974	2	.398	1	5.605	2
7893	P1995	max	T	4.056	1	3.351	1	.593	2	.849	1	3.753	1
7894		min		2.113	2	.927	2	.353	1	-.616	2	1.834	2
7895		max	B	-1.023	2	-2.041	2	.509	2	.842	2	3.826	1
7896		min		-3.478	1	-4.098	1	.31	1	-.522	1	1.767	2
7897	P1996	max	T	1.861	1	-.28	1	1.07	1	.719	1	2.015	1

Envelope Plate/Shell Principal Stresses (Continued)

	Plate		Sur...	Sigma1 [ksi]	LC	Sigma2 [ksi]	LC	Tau Max [k...	LC	Angle [rad]	LC	Von Mises [ksi]	LC
7898		min		.087	2	-.289	2	.188	2	-.665	2	.341	2
7899		max	B	.281	2	-.075	2	.979	1	2.318	1	1.892	1
7900		min		.138	1	-1.819	1	.178	2	.7	2	.325	2
7901	P1997	max	T	.698	1	-.971	2	1.079	1	2.175	2	1.908	1
7902		min		-.726	2	-1.461	1	.122	2	.769	1	.875	2
7903		max	B	1.354	1	.705	2	.997	1	.488	2	1.763	1
7904		min		1.011	2	-.639	1	.153	2	-.783	1	.898	2
7905	P1998	max	T	-.369	1	-2.847	1	1.239	1	1.567	2	2.682	1
7906		min		-1.67	2	-3.004	2	.667	2	1.108	1	2.607	2
7907		max	B	3.054	2	1.664	2	1.183	1	.014	2	2.648	2
7908		min		2.789	1	.424	1	.695	2	-.435	1	2.603	1
7909	P1999	max	T	.005	1	-1.101	1	.767	2	2.066	2	1.977	2
7910		min		-.697	2	-2.231	2	.553	1	1.593	1	1.104	1
7911		max	B	2.266	2	.695	2	.786	2	.505	2	2.011	2
7912		min		1.114	1	.044	1	.535	1	.079	1	1.093	1
7913	P2000	max	T	.089	1	-.415	1	.532	2	2.025	2	1.141	2
7914		min		-.142	2	-1.206	2	.252	1	1.468	1	.465	1
7915		max	B	1.219	2	.142	2	.538	2	.459	2	1.154	2
7916		min		.416	1	-.058	1	.237	1	-.046	1	.448	1
7917	P2001	max	T	.021	1	-.252	1	.501	2	2.07	2	1.007	2
7918		min		-.01	2	-1.012	2	.137	1	1.646	1	.264	1
7919		max	B	1.017	2	.01	2	.503	2	.5	2	1.012	2
7920		min		.267	1	-.015	1	.141	1	.123	1	.274	1
7921	P2001A	max	T	12.598	1	6.153	1	3.223	1	2.089	2	10.911	1
7922		min		5.971	2	2.273	2	1.849	2	1.842	1	5.22	2
7923		max	B	-2.424	2	-5.904	2	3.356	1	.422	2	11.167	1
7924		min		-6.178	1	-12.891	1	1.74	2	.256	1	5.14	2
7925	P2002	max	T	4.775	1	3.886	1	.84	2	.326	1	4.399	1
7926		min		2.527	2	.847	2	.445	1	-.596	2	2.228	2
7927		max	B	-.992	2	-2.42	2	.714	2	1.96	1	4.456	1
7928		min		-4.096	1	-4.746	1	.325	1	.93	2	2.107	2
7929	P2003	max	T	2.856	1	.595	1	1.131	1	.355	1	2.61	1
7930		min		1.049	2	-.182	2	.615	2	-.43	2	1.151	2
7931		max	B	.111	2	-.991	2	1.035	1	1.934	1	2.525	1
7932		min		-.743	1	-2.814	1	.551	2	1.117	2	1.051	2
7933	P2004	max	T	1.38	1	-.711	1	1.046	1	.451	1	1.842	1
7934		min		-.062	2	-.772	2	.355	2	-.382	2	.743	2
7935		max	B	.744	2	.096	2	.973	1	2.031	1	1.723	1
7936		min		.613	1	-1.333	1	.324	2	1.152	2	.701	2
7937	P2005	max	T	.805	1	-.715	1	.76	1	.489	1	1.317	1
7938		min		-.282	2	-.795	2	.256	2	-.228	2	.698	2
7939		max	B	.785	2	.303	2	.703	1	2.068	1	1.218	1
7940		min		.655	1	-.751	1	.241	2	1.301	2	.686	2
7941	P2006	max	T	.534	1	-.571	2	.561	1	1.316	2	.972	1
7942		min		-.241	2	-.588	1	.165	2	.713	1	.497	2
7943		max	B	.581	2	.242	2	.518	1	2.307	1	.899	1
7944		min		.55	1	-.487	1	.17	2	-.204	2	.506	2
7945	P2007	max	T	.105	1	-.346	1	.337	2	1.871	2	.765	2
7946		min		-.157	2	-.831	2	.225	1	.962	1	.409	1
7947		max	B	.847	2	.153	2	.347	2	.307	2	.782	2
7948		min		.34	1	-.069	1	.205	1	-.542	1	.379	1
7949	P2008	max	T	.048	1	-.148	1	.363	2	1.957	2	.734	2
7950		min		-.014	2	-.74	2	.098	1	1.18	1	.177	1
7951		max	B	.751	2	.013	2	.369	2	.387	2	.745	2
7952		min		.17	1	-.03	1	.1	1	-.268	1	.187	1
7953	P2008A	max	T	12.612	1	6.369	1	3.121	1	1.999	2	10.922	1
7954		min		5.275	2	2.032	2	1.621	2	1.676	1	4.608	2

Envelope Plate/Shell Principal Stresses (Continued)

	Plate		Sur...	Sigma1 [ksi]	LC	Sigma2 [ksi]	LC	Tau Max [k...	LC	Angle [rad]	LC	Von Mises [ksi]	LC
7955		max	B	-2.239	2	-5.161	2	3.251	1	.325	2	11.175	1
7956		min		-6.401	1	-12.903	1	1.461	2	.093	1	4.482	2
7957	P2009	max	T	5.265	1	4.109	1	1.033	2	.021	1	4.793	1
7958		min		2.793	2	.727	2	.578	1	-.641	2	2.51	2
7959		max	B	-.888	2	-2.681	2	.897	2	1.598	1	4.844	1
7960		min		-4.324	1	-5.235	1	.455	1	.917	2	2.366	2
7961	P2010	max	T	3.37	1	.908	1	1.231	1	.089	1	3.02	1
7962		min		1.607	2	-.155	2	.881	2	-.487	2	1.69	2
7963		max	B	.077	2	-1.555	2	1.14	1	1.662	1	2.952	1
7964		min		-1.054	1	-3.334	1	.816	2	1.081	2	1.594	2
7965	P2011	max	T	2.027	1	-.202	1	1.114	1	.118	1	2.135	1
7966		min		.84	2	-.419	2	.629	2	-.387	2	1.11	2
7967		max	B	.381	2	-.812	2	1.044	1	1.691	1	2.039	1
7968		min		.103	1	-1.985	1	.596	2	1.177	2	1.055	2
7969	P2012	max	T	1.138	1	-.338	2	.774	1	.181	1	1.389	1
7970		min		.336	2	-.41	1	.337	2	-.306	2	.583	2
7971		max	B	.345	1	-.319	2	.72	1	1.755	1	1.301	1
7972		min		.321	2	-1.094	1	.32	2	1.248	2	.554	2
7973	P2013	max	T	.602	1	-.282	2	.455	1	.204	1	.801	1
7974		min		.114	2	-.307	1	.198	2	-.417	2	.353	2
7975		max	B	.28	2	-.106	2	.413	1	1.778	1	.73	1
7976		min		.27	1	-.557	1	.193	2	1.119	2	.345	2
7977	P2014	max	T	.335	1	-.161	1	.248	1	.253	1	.438	1
7978		min		.074	2	-.21	2	.142	2	-.695	2	.255	2
7979		max	B	.219	2	-.073	2	.215	1	1.836	1	.38	1
7980		min		.143	1	-.288	1	.146	2	.839	2	.263	2
7981	P2015	max	T	.177	1	-.044	1	.166	2	2.251	2	.3	2
7982		min		.08	2	-.252	2	.111	1	.223	1	.203	1
7983		max	B	.264	2	-.078	2	.171	2	1.828	1	.31	2
7984		min		.04	1	-.122	1	.081	1	.659	2	.147	1
7985	P2015A	max	T	-1.73	2	-4.278	2	2.245	1	-.154	1	8.977	1
7986		min		-5.846	1	-10.336	1	1.274	2	-.49	2	3.728	2
7987		max	B	10.563	1	5.872	1	2.346	1	1.433	1	9.167	1
7988		min		4.144	2	1.944	2	1.1	2	1.195	2	3.591	2
7989	P2016	max	T	-.797	2	-2.354	2	.955	1	2.075	2	4.866	1
7990		min		-3.622	1	-5.531	1	.778	2	1.585	1	2.073	2
7991		max	B	5.493	1	3.794	1	.85	1	.499	2	4.871	1
7992		min		2.256	2	.933	2	.661	2	.015	1	1.963	2
7993	P2017	max	T	-.211	2	-1.426	2	1.403	1	1.854	2	3.53	1
7994		min		-1.157	1	-3.963	1	.607	2	1.501	1	1.333	2
7995		max	B	3.92	1	1.271	1	1.325	1	.273	2	3.464	1
7996		min		1.386	2	.27	2	.558	2	-.07	1	1.272	2
7997	P2018	max	T	-.016	2	-.879	2	1.239	1	1.742	2	2.63	1
7998		min		-.281	1	-2.759	1	.432	2	1.476	1	.872	2
7999		max	B	2.718	1	.354	1	1.182	1	.168	2	2.559	1
8000		min		.857	2	.045	2	.406	2	-.094	1	.836	2
8001	P2019	max	T	.046	2	-.577	2	.987	1	1.712	2	1.973	1
8002		min		.004	1	-1.971	1	.312	2	1.471	1	.601	2
8003		max	B	1.93	1	.041	1	.945	1	.147	2	1.91	1
8004		min		.561	2	-.031	2	.296	2	-.098	1	.578	2
8005	P2020	max	T	.077	1	-.412	2	.783	1	1.733	2	1.528	1
8006		min		.059	2	-1.488	1	.236	2	1.478	1	.444	2
8007		max	B	1.447	1	-.051	1	.749	1	.175	2	1.474	1
8008		min		.399	2	-.052	2	.226	2	-.091	1	.427	2
8009	P2021	max	T	.07	1	-.328	2	.637	1	1.79	2	1.241	1
8010		min		.059	2	-1.204	1	.193	2	1.492	1	.361	2
8011		max	B	1.159	1	-.057	1	.608	1	.237	2	1.189	1

Envelope Plate/Shell Principal Stresses (Continued)

	Plate		Sur...	Sigma1 [ksi]	LC	Sigma2 [ksi]	LC	Tau Max [k...	LC	Angle [rad]	LC	Von Mises [ksi]	LC
8012		min		.316	2	-.057	2	.186	2	-.077	1	.348	2
8013	P2022	max	T	.04	2	-.277	2	.532	1	1.813	2	1.052	1
8014		min		.023	1	-1.041	1	.159	2	1.504	1	.3	2
8015		max	B	.99	1	-.019	1	.504	1	.26	2	.999	1
8016		min		.264	2	-.041	2	.153	2	-.065	1	.287	2
8017	P2022A	max	T	-2.051	2	-5.049	2	2.468	1	-.373	1	9.31	1
8018		min		-5.804	1	-10.739	1	1.499	2	-.607	2	4.398	2
8019		max	B	10.958	1	5.838	1	2.56	1	1.219	1	9.497	1
8020		min		4.945	2	2.235	2	1.355	2	1.069	2	4.289	2
8021	P2023	max	T	-.822	2	-2.336	2	.949	1	1.9	2	4.644	1
8022		min		-3.394	1	-5.293	1	.757	2	1.465	1	2.052	2
8023		max	B	5.247	1	3.568	1	.84	1	.331	2	4.642	1
8024		min		2.226	2	.964	2	.631	2	-.099	1	1.933	2
8025	P2024	max	T	-.124	2	-1.211	2	1.367	1	1.62	2	3.278	1
8026		min		-.9	1	-3.634	1	.543	2	1.29	1	1.154	2
8027		max	B	3.583	1	1.015	1	1.284	1	.038	2	3.198	1
8028		min		1.16	2	.185	2	.488	2	-.282	1	1.08	2
8029	P2025	max	T	.062	2	-.605	2	1.167	1	1.469	2	2.382	1
8030		min		-.095	1	-2.428	1	.333	2	1.23	1	.638	2
8031		max	B	2.381	1	.168	1	1.106	1	-.107	2	2.301	1
8032		min		.575	2	-.033	2	.304	2	-.341	1	.593	2
8033	P2026	max	T	.1	1	-.299	2	.882	1	1.448	2	1.716	1
8034		min		.083	2	-1.664	1	.191	2	1.219	1	.348	2
8035		max	B	1.62	1	-.055	1	.838	1	-.113	2	1.648	1
8036		min		.279	2	-.069	2	.174	2	-.349	1	.318	2
8037	P2027	max	T	.11	1	-.155	2	.66	1	1.579	2	1.269	1
8038		min		.07	2	-1.21	1	.112	2	1.244	1	.199	2
8039		max	B	1.169	1	-.065	2	.627	1	.046	2	1.213	1
8040		min		.141	2	-.085	1	.103	2	-.323	1	.182	2
8041	P2028	max	T	.075	2	-.112	2	.513	1	1.836	2	.992	1
8042		min		.072	1	-.954	1	.094	2	1.295	1	.164	2
8043		max	B	.911	1	-.06	1	.486	1	.314	2	.943	1
8044		min		.105	2	-.078	2	.091	2	-.27	1	.159	2
8045	P2029	max	T	.074	2	-.102	2	.42	1	1.975	2	.828	1
8046		min		.023	1	-.817	1	.088	2	1.346	1	.153	2
8047		max	B	.77	1	-.019	1	.395	1	.447	2	.78	1
8048		min		.095	2	-.08	2	.088	2	-.22	1	.152	2
8049	P2029A	max	T	-2.277	2	-5.746	2	2.818	1	-.558	1	9.752	1
8050		min		-5.624	1	-11.26	1	1.735	2	-.714	2	5.012	2
8051		max	B	11.474	1	5.66	1	2.907	1	1.036	1	9.937	1
8052		min		5.68	2	2.42	2	1.63	2	.956	2	4.937	2
8053	P2030	max	T	-.72	2	-2.075	2	.88	1	1.733	2	4.078	1
8054		min		-2.902	1	-4.663	1	.678	2	1.336	1	1.825	2
8055		max	B	4.606	1	3.079	1	.763	1	.174	2	4.064	1
8056		min		1.948	2	.867	2	.541	2	-.222	1	1.691	2
8057	P2031	max	T	.107	2	-.775	2	1.295	1	1.314	2	2.762	1
8058		min		-.318	1	-2.907	1	.441	2	1.05	1	.834	2
8059		max	B	2.843	1	.433	1	1.205	1	-.285	2	2.654	1
8060		min		.713	2	-.049	2	.381	2	-.525	1	.738	2
8061	P2032	max	T	.323	1	-.191	2	1.046	1	1.002	2	1.951	1
8062		min		.258	2	-1.769	1	.225	2	.939	1	.391	2
8063		max	B	1.71	1	-.236	2	.98	1	-.613	2	1.848	1
8064		min		.158	2	-.25	1	.197	2	-.635	1	.343	2
8065	P2033	max	T	.322	1	.043	2	.71	1	.894	1	1.289	1
8066		min		.213	2	-1.097	1	.085	2	.596	2	.195	2
8067		max	B	1.046	1	-.211	2	.662	1	2.058	2	1.21	1
8068		min		-.057	2	-.278	1	.077	2	-.678	1	.189	2

Envelope Plate/Shell Principal Stresses (Continued)

	Plate		Sur...	Sigma1 [ksi]	LC	Sigma2 [ksi]	LC	Tau Max [k...	LC	Angle [rad]	LC	Von Mises [ksi]	LC
8069	P2034	max	T	.2	2	.072	2	.441	1	.927	1	.809	1
8070		min		.177	1	-.705	1	.064	2	-.279	2	.175	2
8071		max	B	.662	1	-.152	1	.407	1	1.249	2	.75	1
8072		min		-.067	2	-.217	2	.075	2	-.642	1	.192	2
8073	P2035	max	T	.23	2	.02	2	.291	1	1.054	1	.548	1
8074		min		.074	1	-.507	1	.105	2	-.62	2	.221	2
8075		max	B	.468	1	-.063	1	.265	1	.954	2	.502	1
8076		min		-.017	2	-.245	2	.114	2	-.506	1	.237	2
8077	P2036	max	T	.235	2	-.011	2	.224	1	1.2	1	.438	1
8078		min		.021	1	-.427	1	.123	2	-.698	2	.241	2
8079		max	B	.388	1	-.019	1	.203	1	.881	2	.398	1
8080		min		.012	2	-.246	2	.129	2	-.356	1	.252	2
8081	P2036A	max	T	-2.344	2	-6.256	2	3.22	1	2.339	2	10.14	1
8082		min		-5.249	1	-11.689	1	1.956	2	-.701	1	5.474	2
8083		max	B	11.908	1	5.274	1	3.317	1	.893	1	10.335	1
8084		min		6.24	2	2.43	2	1.905	2	.863	2	5.448	2
8085	P2037	max	T	-.451	2	-1.459	2	.627	1	1.633	2	3.005	1
8086		min		-2.175	1	-3.428	1	.504	2	1.207	1	1.294	2
8087		max	B	3.355	1	2.354	1	.501	1	.12	2	2.983	1
8088		min		1.316	2	.601	2	.358	2	-.335	1	1.141	2
8089	P2038	max	T	.744	1	-.075	2	1.203	1	.894	2	2.133	1
8090		min		.646	2	-1.661	1	.361	2	.778	1	.687	2
8091		max	B	1.579	1	-.606	2	1.106	1	2.337	1	1.972	1
8092		min		.012	2	-.632	1	.309	2	-.76	2	.612	2
8093	P2039	max	T	1.124	1	.194	2	.987	1	.552	1	1.715	1
8094		min		.814	2	-.851	1	.31	2	.283	2	.737	2
8095		max	B	.778	1	-.825	2	.918	1	2.108	1	1.597	1
8096		min		-.208	2	-1.059	1	.309	2	1.792	2	.744	2
8097	P2040	max	T	.716	1	.137	2	.557	1	.376	1	.978	1
8098		min		.714	2	-.398	1	.289	2	-.183	2	.657	2
8099		max	B	.346	1	-.683	1	.515	1	1.923	1	.907	1
8100		min		-.137	2	-.735	2	.299	2	1.361	2	.677	2
8101	P2041	max	T	.595	2	.071	2	.262	2	.298	1	.563	2
8102		min		.343	1	-.141	1	.242	1	-.457	2	.431	1
8103		max	B	.104	1	-.329	1	.272	2	1.823	1	.581	2
8104		min		-.069	2	-.612	2	.217	1	1.103	2	.392	1
8105	P2042	max	T	.512	2	.018	2	.247	2	.254	1	.503	2
8106		min		.113	1	-.023	1	.068	1	-.608	2	.126	1
8107		max	B	-.002	1	-.114	1	.254	2	1.671	1	.517	2
8108		min		-.017	2	-.525	2	.056	1	.959	2	.113	1
8109	P2043	max	T	.464	2	.001	1	.232	2	1.938	1	.463	2
8110		min		.042	1	0	2	.02	1	-.678	2	.041	1
8111		max	B	0	2	-.068	1	.236	2	.893	2	.472	2
8112		min		-.003	1	-.472	2	.032	1	.571	1	.066	1
8113	P2043A	max	T	-2.287	2	-6.483	2	3.533	1	2.334	1	10.295	1
8114		min		-4.747	1	-11.813	1	2.098	2	2.269	2	5.695	2
8115		max	B	12.049	1	4.743	1	3.653	1	.789	2	10.513	1
8116		min		6.536	2	2.299	2	2.118	2	.787	1	5.742	2
8117	P2044	max	T	.101	2	-.436	2	.268	2	2.071	2	1.302	1
8118		min		-1.203	1	-1.382	1	.09	1	-.314	1	.494	2
8119		max	B	1.562	1	1.115	1	.304	2	1.062	1	1.393	1
8120		min		.462	2	-.146	2	.223	1	.805	2	.549	2
8121	P2045	max	T	2.546	1	1.199	2	.936	1	.472	1	2.285	1
8122		min		1.702	2	.675	1	.252	2	.359	2	1.514	2
8123		max	B	-.778	1	-1.727	2	.836	1	2.009	1	2.169	1
8124		min		-1.221	2	-2.451	1	.253	2	1.742	2	1.538	2
8125	P2046	max	T	2.329	1	.525	2	1.069	1	.071	1	2.239	1

Envelope Plate/Shell Principal Stresses (Continued)

	Plate		Sur...	Sigma1 [ksi]	LC	Sigma2 [ksi]	LC	Tau Max [k...	LC	Angle [rad]	LC	Von Mises [ksi]	LC
8126		min		1.708	2	.19	1	.591	2	-.183	2	1.515	2
8127		max	B	-.274	1	-1.743	2	1.008	1	1.613	1	2.166	1
8128		min		-.541	2	-2.29	1	.601	2	1.353	2	1.546	2
8129	P2047	max	T	1.337	1	.21	2	.574	1	-.281	1	1.253	1
8130		min		1.246	2	.188	1	.518	2	-.562	2	1.155	2
8131		max	B	-.211	2	-1.271	2	.559	1	1.252	1	1.244	1
8132		min		-.223	1	-1.341	1	.53	2	1	2	1.18	2
8133	P2048	max	T	.871	2	.056	1	.413	2	-.471	1	.849	2
8134		min		.725	1	.046	2	.335	1	-.685	2	.699	1
8135		max	B	-.044	2	-.741	1	.422	2	1.061	1	.867	2
8136		min		-.065	1	-.888	2	.338	1	.883	2	.711	1
8137	P2049	max	T	.714	2	.036	1	.351	2	-.647	1	.708	2
8138		min		.503	1	.012	2	.234	1	-.747	2	.486	1
8139		max	B	-.011	2	-.524	1	.357	2	.895	1	.72	2
8140		min		-.036	1	-.726	2	.244	1	.823	2	.507	1
8141	P2050	max	T	.63	2	.008	1	.315	2	2.351	1	.63	2
8142		min		.42	1	0	2	.206	1	-.782	2	.416	1
8143		max	B	0	2	-.438	1	.319	2	.789	2	.637	2
8144		min		-.007	1	-.637	2	.215	1	.772	1	.434	1
8145	P2050A	max	T	-1.664	2	-6.145	2	3.868	1	2.28	1	9.899	1
8146		min		-3.418	1	-11.155	1	2.24	2	2.244	2	5.505	2
8147		max	B	11.423	1	3.356	1	4.034	1	.755	2	10.169	1
8148		min		6.299	2	1.558	2	2.371	2	.732	1	5.683	2
8149	P2051	max	T	.693	2	-.392	2	.887	1	-.431	1	1.616	1
8150		min		.385	1	-1.388	1	.543	2	-.582	2	.952	2
8151		max	B	1.57	1	-.473	1	1.022	1	1.092	1	1.852	1
8152		min		.555	2	-.869	2	.712	2	1.043	2	1.244	2
8153	P2052	max	T	9.269	1	4.365	1	2.452	1	-.197	1	8.032	1
8154		min		6.178	2	3.107	2	1.535	2	-.287	2	5.35	2
8155		max	B	-3.072	2	-6.369	2	2.447	1	1.336	1	8.048	1
8156		min		-4.393	1	-9.288	1	1.649	2	1.256	2	5.517	2
8157	P2053	max	T	4.422	1	1.452	1	1.485	1	2.293	2	3.904	1
8158		min		3.172	2	.878	2	1.147	2	-.764	1	2.837	2
8159		max	B	-.872	2	-3.246	2	1.488	1	.775	1	3.957	1
8160		min		-1.516	1	-4.491	1	1.187	2	.711	2	2.909	2
8161	P2054	max	T	1.343	1	.218	1	.562	1	2.33	2	1.248	1
8162		min		1.131	2	.135	2	.498	2	-.673	1	1.07	2
8163		max	B	-.131	2	-1.153	2	.559	1	.874	1	1.253	1
8164		min		-.238	1	-1.355	1	.511	2	.759	2	1.093	2
8165	P2055	max	T	1.012	1	.117	1	.45	2	2.261	1	.959	1
8166		min		.956	2	.055	2	.447	1	2.22	2	.93	2
8167		max	B	-.053	2	-.973	2	.46	2	.672	1	.98	1
8168		min		-.121	1	-1.035	1	.457	1	.651	2	.948	2
8169	P2056	max	T	.766	2	.021	1	.383	2	2.259	1	.766	2
8170		min		.747	1	0	2	.363	1	2.247	2	.737	1
8171		max	B	.001	2	-.763	1	.389	2	.678	2	.778	2
8172		min		-.022	1	-.777	2	.37	1	.677	1	.752	1
8173	P2057	max	T	.674	2	.004	1	.339	2	2.231	2	.676	2
8174		min		.637	1	-.004	2	.317	1	2.207	1	.636	1
8175		max	B	.004	2	-.647	1	.343	2	.661	2	.684	2
8176		min		-.004	1	-.682	2	.321	1	.632	1	.645	1
8177	P2057A	max	T	-1.687	2	-5.723	2	3.569	1	2.172	1	9.211	1
8178		min		-3.26	1	-10.398	1	2.018	2	2.149	2	5.093	2
8179		max	B	10.673	1	3.155	1	3.759	1	.666	2	9.497	1
8180		min		5.93	2	1.519	2	2.205	2	.627	1	5.335	2
8181	P2058	max	T	5.427	1	.077	2	2.911	1	-.429	1	5.634	1
8182		min		3.605	2	-.395	1	1.764	2	-.44	2	3.567	2

Envelope Plate/Shell Principal Stresses (Continued)

	Plate		Sur...	Sigma1 [ksi]	LC	Sigma2 [ksi]	LC	Tau Max [k...	LC	Angle [rad]	LC	Von Mises [ksi]	LC
8183		max	B	.57	1	-3.812	2	3.046	1	1.121	2	5.829	1
8184		min		.097	2	-5.523	1	1.954	2	1.12	1	3.861	2
8185	P2059	max	T	4.963	1	1.4	1	1.781	1	-.127	1	4.432	1
8186		min		2.95	2	.809	2	1.07	2	-.154	2	2.64	2
8187		max	B	-.798	2	-2.994	2	1.79	1	1.421	1	4.419	1
8188		min		-1.359	1	-4.939	1	1.098	2	1.394	2	2.685	2
8189	P2060	max	T	1.181	1	-.245	1	.713	1	1.62	2	1.32	1
8190		min		.786	2	-.357	2	.572	2	1.575	1	1.013	2
8191		max	B	.399	2	-.808	2	.74	1	.043	2	1.373	1
8192		min		.248	1	-1.232	1	.603	2	-.014	1	1.065	2
8193	P2061	max	T	1.511	1	.298	1	.607	1	2.12	1	1.386	1
8194		min		1.149	2	.157	2	.496	2	2.114	2	1.079	2
8195		max	B	-.148	2	-1.177	2	.616	1	.543	2	1.413	1
8196		min		-.309	1	-1.542	1	.515	2	.538	1	1.11	2
8197	P2062	max	T	.865	1	.093	1	.386	1	2.055	2	.822	1
8198		min		.739	2	.039	2	.35	2	2.023	1	.72	2
8199		max	B	-.034	2	-.754	2	.394	1	.488	2	.84	1
8200		min		-.096	1	-.884	1	.36	2	.443	1	.737	2
8201	P2063	max	T	.746	1	.011	1	.367	1	2.107	2	.74	1
8202		min		.668	2	-.007	2	.337	2	2.063	1	.671	2
8203		max	B	.01	2	-.679	2	.372	1	.538	2	.751	1
8204		min		-.012	1	-.757	1	.345	2	.488	1	.684	2
8205	P2064	max	T	.641	1	-.002	1	.322	1	2.118	2	.642	1
8206		min		.59	2	-.01	2	.3	2	2.07	1	.595	2
8207		max	B	.011	2	-.598	2	.323	1	.548	2	.646	1
8208		min		.002	1	-.645	1	.304	2	.498	1	.604	2
8209	P2064A	max	T	-.345	2	-4.854	2	4.032	1	2.224	1	8.558	1
8210		min		-.914	1	-8.978	1	2.254	2	2.224	2	4.691	2
8211		max	B	9.301	1	.71	1	4.295	1	.707	2	8.967	1
8212		min		5.203	2	.03	2	2.586	2	.67	1	5.188	2
8213	P2065	max	T	5.562	1	.149	2	2.847	1	-.349	2	5.629	1
8214		min		3.59	2	-.132	1	1.72	2	-.369	1	3.517	2
8215		max	B	.295	1	-3.778	2	2.974	1	1.19	2	5.807	1
8216		min		.007	2	-5.654	1	1.893	2	1.175	1	3.782	2
8217	P2066	max	T	-.155	1	-1.16	2	.615	1	1.892	1	1.315	1
8218		min		-.158	2	-1.385	1	.501	2	1.877	2	1.09	2
8219		max	B	1.365	1	.171	2	.602	1	.298	1	1.292	1
8220		min		1.182	2	.161	1	.506	2	.291	2	1.107	2
8221	P2067	max	T	.598	1	.088	1	.255	1	2.216	1	.559	1
8222		min		.415	2	-.073	2	.244	2	2.194	2	.455	2
8223		max	B	.075	2	-.414	2	.244	1	.596	1	.55	1
8224		min		-.106	1	-.595	1	.244	2	.593	2	.456	2
8225	P2068	max	T	.577	1	.018	1	.279	1	1.892	2	.568	1
8226		min		.43	2	-.035	2	.233	2	1.742	1	.449	2
8227		max	B	.048	2	-.444	2	.293	1	.313	2	.594	1
8228		min		-.016	1	-.602	1	.246	2	.163	1	.47	2
8229	P2069	max	T	.609	1	.047	1	.281	1	2.011	2	.587	1
8230		min		.499	2	.005	2	.247	2	1.894	1	.497	2
8231		max	B	.002	2	-.513	2	.288	1	.438	2	.602	1
8232		min		-.048	1	-.625	1	.258	2	.319	1	.514	2
8233	P2070	max	T	.525	1	0	1	.263	1	2.048	2	.525	1
8234		min		.457	2	-.023	2	.24	2	1.941	1	.469	2
8235		max	B	.026	2	-.469	2	.267	1	.475	2	.534	1
8236		min		0	1	-.533	1	.247	2	.368	1	.482	2
8237	P2071	max	T	.483	1	-.01	1	.247	1	2.056	2	.488	1
8238		min		.426	2	-.024	2	.225	2	1.972	1	.438	2
8239		max	B	.024	2	-.436	2	.248	1	.482	2	.491	1

Envelope Plate/Shell Principal Stresses (Continued)

	Plate		Sur...	Sigma1 [ksi]	LC	Sigma2 [ksi]	LC	Tau Max [k...	LC	Angle [rad]	LC	Von Mises [ksi]	LC
8240		min		.01	1	-.486	1	.23	2	.401	1	.449	2
8241	P2071A	max	T	1.081	1	-3.306	2	3.724	1	2.266	2	6.971	1
8242		min		.805	2	-6.368	1	2.056	2	2.248	1	3.774	2
8243		max	B	6.704	1	-1.203	2	4.03	1	.722	2	7.475	1
8244		min		3.727	2	-1.356	1	2.465	2	.687	1	4.452	2
8245	P2072	max	T	4.09	1	-.494	2	2.696	1	-.546	2	4.873	1
8246		min		2.66	2	-1.301	1	1.577	2	-.584	1	2.938	2
8247		max	B	1.499	1	-2.861	2	2.875	1	.999	2	5.165	1
8248		min		.695	2	-4.25	1	1.778	2	.971	1	3.265	2
8249	P2073	max	T	-.112	2	-.68	2	.326	1	1.883	2	.716	1
8250		min		-.113	1	-.766	1	.284	2	1.872	1	.631	2
8251		max	B	.754	1	.122	2	.317	1	.288	2	.701	1
8252		min		.682	2	.121	1	.28	2	.268	1	.63	2
8253	P2074	max	T	.101	2	-.397	2	.26	1	2.133	2	.482	1
8254		min		.09	1	-.43	1	.249	2	2.068	1	.457	2
8255		max	B	.421	1	-.09	1	.255	1	.541	2	.472	1
8256		min		.4	2	-.095	2	.247	2	.468	1	.455	2
8257	P2075	max	T	.22	2	-.108	1	.189	2	2.233	2	.328	2
8258		min		.192	1	-.157	2	.15	1	2.12	1	.263	1
8259		max	B	.161	2	-.2	1	.191	2	.636	2	.333	2
8260		min		.106	1	-.222	2	.153	1	.51	1	.269	1
8261	P2076	max	T	.246	2	-.041	1	.166	2	2.14	2	.299	2
8262		min		.23	1	-.087	2	.136	1	1.939	1	.253	1
8263		max	B	.09	2	-.241	1	.172	2	.549	2	.308	2
8264		min		.042	1	-.253	2	.142	1	.352	1	.264	1
8265	P2077	max	T	.279	2	-.036	1	.177	2	2.138	2	.323	2
8266		min		.274	1	-.075	2	.155	1	1.997	1	.294	1
8267		max	B	.076	2	-.281	1	.182	2	.553	2	.332	2
8268		min		.037	1	-.287	2	.159	1	.42	1	.301	1
8269	P2078	max	T	.268	1	-.036	1	.16	2	2.106	2	.294	2
8270		min		.259	2	-.061	2	.152	1	2	1	.288	1
8271		max	B	.06	2	-.268	2	.164	2	.522	2	.303	2
8272		min		.036	1	-.27	1	.153	1	.428	1	.29	1
8273	P2078A	max	T	1.555	1	-.178	2	3.465	1	.856	1	6.299	1
8274		min		.793	2	-5.376	1	.485	2	.555	2	.895	2
8275		max	B	5.592	1	-.532	2	3.658	1	1.959	2	6.625	1
8276		min		-.077	2	-1.725	1	.227	2	-.719	1	.498	2
8277	P2079	max	T	3.925	1	-.505	2	2.566	1	.897	2	4.647	1
8278		min		.169	2	-1.207	1	.337	2	.588	1	.607	2
8279		max	B	1.346	1	-.05	2	2.689	1	2.171	1	4.848	1
8280		min		.404	2	-4.033	1	.227	2	-.57	2	.431	2
8281	P2080	max	T	.103	2	.002	2	.31	1	1.294	1	.698	1
8282		min		-.136	1	-.756	1	.05	2	-.453	2	.102	2
8283		max	B	.745	1	.14	1	.302	1	1.172	2	.686	1
8284		min		-.011	2	-.107	2	.048	2	-.246	1	.102	2
8285	P2081	max	T	.06	2	-.083	2	.233	1	1.098	1	.448	1
8286		min		.041	1	-.426	1	.072	2	-.741	2	.125	2
8287		max	B	.416	1	-.042	1	.229	1	.857	2	.438	1
8288		min		.075	2	-.065	2	.07	2	-.444	1	.121	2
8289	P2082	max	T	.133	1	-.113	1	.123	1	1.042	1	.213	1
8290		min		.046	2	-.128	2	.087	2	-.758	2	.156	2
8291		max	B	.125	2	-.05	2	.125	1	.84	2	.216	1
8292		min		.109	1	-.14	1	.088	2	-.489	1	.157	2
8293	P2083	max	T	.17	1	-.045	1	.107	1	1.24	1	.196	1
8294		min		.042	2	-.136	2	.089	2	-.699	2	.161	2
8295		max	B	.137	2	-.044	2	.112	1	.899	2	.205	1
8296		min		.044	1	-.179	1	.09	2	-.316	1	.163	2

Envelope Plate/Shell Principal Stresses (Continued)

	Plate		Sur...	Sigma1 [ksi]	LC	Sigma2 [ksi]	LC	Tau Max [k...	LC	Angle [rad]	LC	Von Mises [ksi]	LC
8297	P2084	max	T	.211	1	-.033	1	.122	1	1.155	1	.229	1
8298		min		.039	2	-.132	2	.085	2	-.642	2	.155	2
8299		max	B	.136	2	-.039	2	.124	1	.954	2	.233	1
8300		min		.033	1	-.215	1	.087	2	-.412	1	.159	2
8301	P2085	max	T	.21	1	-.031	1	.12	1	1.136	1	.226	1
8302		min		.029	2	-.113	2	.071	2	-.569	2	.13	2
8303		max	B	.121	2	-.027	2	.12	1	1.031	2	.226	1
8304		min		.031	1	-.209	1	.074	2	-.437	1	.136	2
8305	P2085A	max	T	.524	2	-.402	2	3.698	1	.884	1	7.601	1
8306		min		-.397	1	-7.792	1	.463	2	.506	2	.805	2
8307		max	B	8.021	1	.274	1	3.873	1	2.097	2	7.887	1
8308		min		.127	2	-.22	2	.173	2	-.694	1	.304	2
8309	P2086	max	T	5.35	1	-.112	1	2.731	1	.653	2	5.407	1
8310		min		.27	2	-.317	2	.293	2	.375	1	.508	2
8311		max	B	.238	2	-.12	2	2.811	1	2.317	2	5.51	1
8312		min		.23	1	-5.392	1	.179	2	1.969	1	.316	2
8313	P2087	max	T	.136	2	.017	2	.585	1	1.254	1	1.263	1
8314		min		-.169	1	-1.339	1	.06	2	-.215	2	.128	2
8315		max	B	1.313	1	.172	1	.57	1	1.373	2	1.236	1
8316		min		-.028	2	-.167	2	.07	2	-.295	1	.155	2
8317	P2088	max	T	.525	1	.061	1	.232	1	.926	1	.497	1
8318		min		.07	2	-.046	2	.058	2	-.535	2	.101	2
8319		max	B	.045	2	-.079	2	.221	1	1.058	2	.487	1
8320		min		-.081	1	-.522	1	.062	2	-.598	1	.109	2
8321	P2089	max	T	.499	1	-.003	1	.251	1	1.419	1	.5	1
8322		min		.031	2	-.106	2	.068	2	-.647	2	.124	2
8323		max	B	.106	2	-.041	2	.262	1	.956	2	.522	1
8324		min		.002	1	-.521	1	.074	2	-.143	1	.131	2
8325	P2090	max	T	.524	1	.036	1	.244	1	1.26	1	.507	1
8326		min		.017	2	-.136	2	.077	2	-.629	2	.146	2
8327		max	B	.142	2	-.023	2	.249	1	.952	2	.519	1
8328		min		-.039	1	-.537	1	.083	2	-.305	1	.155	2
8329	P2091	max	T	.445	1	-.003	1	.224	1	1.211	1	.446	1
8330		min		.018	2	-.145	2	.081	2	-.616	2	.155	2
8331		max	B	.151	2	-.021	2	.226	1	.963	2	.452	1
8332		min		.002	1	-.451	1	.086	2	-.357	1	.162	2
8333	P2092	max	T	.409	1	-.009	1	.209	1	1.173	1	.413	1
8334		min		.015	2	-.136	2	.075	2	-.575	2	.144	2
8335		max	B	.143	2	-.015	2	.209	1	1.009	2	.413	1
8336		min		.009	1	-.409	1	.079	2	-.398	1	.151	2
8337	P2092A	max	T	.24	2	-.603	2	3.214	1	.935	1	8.123	1
8338		min		-2.702	1	-9.13	1	.421	2	.429	2	.752	2
8339		max	B	9.356	1	2.636	1	3.36	1	2.242	2	8.356	1
8340		min		.355	2	.065	2	.145	2	-.647	1	.327	2
8341	P2093	max	T	5.289	1	-.358	2	2.828	1	.426	1	5.481	1
8342		min		.259	2	-.366	1	.309	2	.42	2	.537	2
8343		max	B	.492	1	-.092	2	2.91	1	2.061	2	5.59	1
8344		min		.272	2	-5.327	1	.182	2	2.019	1	.328	2
8345	P2094	max	T	4.691	1	1.318	1	1.686	1	.131	1	4.191	1
8346		min		.341	2	.1	2	.12	2	.059	2	.303	2
8347		max	B	-.085	2	-.285	2	1.688	1	1.723	1	4.165	1
8348		min		-1.278	1	-4.654	1	.1	2	1.581	2	.254	2
8349	P2095	max	T	1.062	1	-.06	2	.664	1	1.565	1	1.216	1
8350		min		.104	2	-.265	1	.082	2	-.185	2	.144	2
8351		max	B	.258	1	-.146	2	.683	1	1.393	2	1.258	1
8352		min		.058	2	-1.109	1	.102	2	.013	1	.182	2
8353	P2096	max	T	1.368	1	.267	1	.551	1	1.011	1	1.256	1

Envelope Plate/Shell Principal Stresses (Continued)

	Plate		Sur...	Sigma1 [ksi]	LC	Sigma2 [ksi]	LC	Tau Max [k...	LC	Angle [rad]	LC	Von Mises [ksi]	LC
8354		min		.017	2	-.164	2	.091	2	-.392	2	.174	2
8355		max	B	.174	2	-.028	2	.556	1	1.131	2	1.275	1
8356		min		-.281	1	-1.392	1	.101	2	-.546	1	.189	2
8357	P2097	max	T	.758	1	.082	1	.338	1	1.116	1	.721	1
8358		min		.01	2	-.185	2	.097	2	-.493	2	.19	2
8359		max	B	.19	2	-.015	2	.344	1	1.049	2	.735	1
8360		min		-.086	1	-.774	1	.102	2	-.442	1	.198	2
8361	P2098	max	T	.647	1	.008	1	.319	1	1.076	1	.643	1
8362		min		.008	2	-.191	2	.099	2	-.567	2	.195	2
8363		max	B	.196	2	-.01	2	.323	1	.989	2	.652	1
8364		min		-.01	1	-.657	1	.103	2	-.488	1	.201	2
8365	P2099	max	T	.552	1	-.002	1	.277	1	1.07	1	.553	1
8366		min		.006	2	-.183	2	.094	2	-.585	2	.186	2
8367		max	B	.188	2	-.007	2	.278	1	.983	2	.555	1
8368		min		.001	1	-.555	1	.097	2	-.499	1	.191	2
8369	P2099A	max	T	.024	2	-.873	2	3.509	1	.831	1	8.858	1
8370		min		-2.935	1	-9.953	1	.449	2	.318	2	.885	2
8371		max	B	10.186	1	2.9	1	3.643	1	2.18	2	9.09	1
8372		min		.65	2	.268	2	.191	2	-.747	1	.565	2
8373	P2100	max	T	.6	1	-.604	2	.953	1	.389	1	1.688	1
8374		min		.023	2	-1.306	1	.313	2	.084	2	.616	2
8375		max	B	1.432	1	.154	2	1.03	1	2.017	1	1.829	1
8376		min		.496	2	-.627	1	.171	2	1.615	2	.439	2
8377	P2101	max	T	8.831	1	4.034	1	2.399	1	.197	1	7.657	1
8378		min		.296	2	-.319	2	.307	2	-.142	2	.533	2
8379		max	B	.333	2	-.164	2	2.363	1	1.802	1	7.626	1
8380		min		-4.071	1	-8.797	1	.248	2	1.276	2	.438	2
8381	P2102	max	T	4.119	1	1.311	1	1.404	1	.75	1	3.644	1
8382		min		.121	2	-.306	2	.213	2	-.21	2	.381	2
8383		max	B	.308	2	-.119	2	1.394	1	2.354	1	3.678	1
8384		min		-1.38	1	-4.169	1	.214	2	1.277	2	.382	2
8385	P2103	max	T	1.215	1	.185	1	.515	1	.646	1	1.134	1
8386		min		.044	2	-.292	2	.168	2	-.386	2	.316	2
8387		max	B	.291	2	-.04	2	.507	1	2.244	1	1.132	1
8388		min		-.208	1	-1.221	1	.165	2	1.135	2	.313	2
8389	P2104	max	T	.891	1	.105	1	.393	1	.862	1	.844	1
8390		min		.017	2	-.288	2	.152	2	-.512	2	.297	2
8391		max	B	.288	2	-.016	2	.4	1	1.028	2	.861	1
8392		min		-.109	1	-.91	1	.152	2	-.687	1	.297	2
8393	P2105	max	T	.643	1	.018	1	.313	1	.865	1	.635	1
8394		min		.009	2	-.272	2	.14	2	-.595	2	.276	2
8395		max	B	.272	2	-.009	2	.319	1	.957	2	.648	1
8396		min		-.019	1	-.657	1	.14	2	-.69	1	.276	2
8397	P2106	max	T	.542	1	.003	1	.269	1	.927	1	.541	1
8398		min		.004	2	-.254	2	.129	2	-.645	2	.256	2
8399		max	B	.254	2	-.004	2	.274	1	.919	2	.549	1
8400		min		-.003	1	-.551	1	.129	2	-.639	1	.256	2
8401	P2106A	max	T	-.242	2	-1.225	2	3.189	1	.776	1	9.306	1
8402		min		-4.3	1	-10.679	1	.491	2	.178	2	1.123	2
8403		max	B	10.908	1	4.297	1	3.305	1	2.339	1	9.517	1
8404		min		1.009	2	.528	2	.241	2	2.019	2	.874	2
8405	P2107	max	T	-.116	2	-.894	2	.389	2	.072	1	1.209	1
8406		min		-.89	1	-1.376	1	.243	1	-.175	2	.842	2
8407		max	B	1.468	1	.899	1	.285	1	1.863	1	1.282	1
8408		min		.806	2	.281	2	.262	2	1.299	2	.709	2
8409	P2108	max	T	2.456	1	.56	1	.948	1	-.382	2	2.229	1
8410		min		.065	2	-.68	2	.372	2	-.428	1	.715	2

Envelope Plate/Shell Principal Stresses (Continued)

	Plate		Sur...	Sigma1 [ksi]	LC	Sigma2 [ksi]	LC	Tau Max [k...	LC	Angle [rad]	LC	Von Mises [ksi]	LC
8411		max	B	.681	2	-.015	2	.855	1	1.166	1	2.111	1
8412		min		-.65	1	-2.36	1	.348	2	1.111	2	.689	2
8413	P2109	max	T	2.215	1	.093	1	1.061	1	-.078	1	2.17	1
8414		min		.077	2	-.571	2	.324	2	-.466	2	.614	2
8415		max	B	.58	2	-.052	2	.999	1	1.518	1	2.088	1
8416		min		-.171	1	-2.169	1	.316	2	1.077	2	.608	2
8417	P2110	max	T	1.23	1	.126	1	.552	1	.241	1	1.173	1
8418		min		.05	2	-.474	2	.262	2	-.54	2	.501	2
8419		max	B	.468	2	-.037	2	.531	1	1.85	1	1.153	1
8420		min		-.163	1	-1.226	1	.253	2	1.007	2	.488	2
8421	P2111	max	T	.632	1	.03	1	.301	1	.409	1	.617	1
8422		min		.027	2	-.41	2	.218	2	-.625	2	.424	2
8423		max	B	.406	2	-.02	2	.3	1	2.025	1	.622	1
8424		min		-.042	1	-.642	1	.213	2	.927	2	.416	2
8425	P2112	max	T	.411	1	.027	1	.193	2	.587	1	.398	1
8426		min		.015	2	-.37	2	.192	1	-.694	2	.378	2
8427		max	B	.365	2	-.012	2	.2	1	2.197	1	.415	1
8428		min		-.029	1	-.429	1	.189	2	.865	2	.372	2
8429	P2113	max	T	.331	1	.008	1	.171	2	.765	1	.34	2
8430		min		.005	2	-.338	2	.161	1	-.749	2	.327	1
8431		max	B	.331	2	-.004	2	.171	1	2.348	1	.345	1
8432		min		-.007	1	-.349	1	.168	2	.817	2	.334	2
8433	P2113A	max	T	-.494	2	-1.656	2	2.914	1	.665	1	9.295	1
8434		min		-4.892	1	-10.719	1	.581	2	.035	2	1.472	2
8435		max	B	10.946	1	4.903	1	3.022	1	2.23	1	9.497	1
8436		min		1.445	2	.779	2	.333	2	1.821	2	1.253	2
8437	P2114	max	T	-.265	2	-1.259	2	.547	1	2.105	1	2.783	1
8438		min		-2.071	1	-3.164	1	.497	2	-.382	2	1.15	2
8439		max	B	3.11	1	2.234	1	.438	1	1.121	2	2.778	1
8440		min		1.179	2	.405	2	.387	2	.507	1	1.038	2
8441	P2115	max	T	.746	1	-.98	2	1.205	1	-.554	2	2.137	1
8442		min		-.045	2	-1.664	1	.468	2	-.731	1	.959	2
8443		max	B	1.593	1	.099	2	1.115	1	.971	2	1.989	1
8444		min		.973	2	-.636	1	.437	2	.847	1	.928	2
8445	P2116	max	T	1.093	1	-.771	2	1.006	1	-.538	1	1.745	1
8446		min		.029	2	-.92	1	.4	2	-.652	2	.786	2
8447		max	B	.853	1	-.003	2	.94	1	1.044	1	1.63	1
8448		min		.772	2	-1.027	1	.388	2	.897	2	.774	2
8449	P2117	max	T	.689	1	-.476	1	.582	1	-.391	1	1.014	1
8450		min		.04	2	-.627	2	.333	2	-.716	2	.647	2
8451		max	B	.623	2	-.023	2	.539	1	1.199	1	.941	1
8452		min		.426	1	-.653	1	.323	2	.842	2	.635	2
8453	P2118	max	T	.323	1	-.215	1	.28	2	-.356	1	.544	2
8454		min		.033	2	-.527	2	.269	1	-.775	2	.469	1
8455		max	B	.52	2	-.023	2	.272	2	1.247	1	.533	2
8456		min		.177	1	-.305	1	.241	1	.786	2	.423	1
8457	P2119	max	T	.103	1	-.093	1	.242	2	2.316	2	.473	2
8458		min		.023	2	-.461	2	.098	1	-.435	1	.17	1
8459		max	B	.453	2	-.019	2	.236	2	1.201	1	.462	2
8460		min		.062	1	-.096	1	.079	1	.74	2	.138	1
8461	P2120	max	T	.014	1	-.044	1	.211	2	2.266	2	.418	2
8462		min		.009	2	-.414	2	.029	1	2.122	1	.053	1
8463		max	B	.403	2	-.007	2	.205	2	.694	2	.407	2
8464		min		.017	1	-.014	1	.015	1	.352	1	.026	1
8465	P2120A	max	T	-.761	2	-2.183	2	2.572	1	.512	1	9.106	1
8466		min		-5.369	1	-10.513	1	.711	2	-.104	2	1.919	2
8467		max	B	10.742	1	5.385	1	2.679	1	2.079	1	9.303	1

Envelope Plate/Shell Principal Stresses (Continued)

	Plate		Sur...	Sigma1 [ksi]	LC	Sigma2 [ksi]	LC	Tau Max [k...	LC	Angle [rad]	LC	Von Mises [ksi]	LC
8468		min		1.982	2	1.035	2	.474	2	1.638	2	1.717	2
8469	P2121	max	T	-.417	2	-1.616	2	.8	1	1.942	1	3.873	1
8470		min		-2.817	1	-4.417	1	.599	2	-.556	2	1.453	2
8471		max	B	4.376	1	2.981	1	.697	1	.972	2	3.872	1
8472		min		1.536	2	.551	2	.493	2	.353	1	1.348	2
8473	P2122	max	T	-.125	2	-1.219	2	1.292	1	2.147	1	2.74	1
8474		min		-.288	1	-2.873	1	.547	2	-.728	2	1.161	2
8475		max	B	2.817	1	.4	1	1.208	1	.814	2	2.639	1
8476		min		1.202	2	.179	2	.512	2	.577	1	1.124	2
8477	P2123	max	T	.327	1	-.926	2	1.065	1	2.315	2	1.987	1
8478		min		-.012	2	-1.803	1	.457	2	2.234	1	.92	2
8479		max	B	1.749	1	.04	2	1.002	1	.729	2	1.889	1
8480		min		.922	2	-.254	1	.441	2	.665	1	.903	2
8481	P2124	max	T	.322	1	-.733	2	.738	1	2.268	1	1.343	1
8482		min		.029	2	-1.153	1	.381	2	2.254	2	.747	2
8483		max	B	1.105	1	-.012	2	.692	1	.698	1	1.268	1
8484		min		.727	2	-.278	1	.37	2	.676	2	.734	2
8485	P2125	max	T	.18	1	-.605	2	.473	1	2.235	1	.871	1
8486		min		.036	2	-.767	1	.32	2	2.208	2	.624	2
8487		max	B	.725	1	-.027	2	.44	1	.662	1	.813	1
8488		min		.597	2	-.155	1	.312	2	.634	2	.611	2
8489	P2126	max	T	.076	1	-.522	2	.321	1	2.174	2	.607	1
8490		min		.031	2	-.565	1	.276	2	2.123	1	.538	2
8491		max	B	.526	1	-.026	2	.295	1	.604	2	.561	1
8492		min		.511	2	-.065	1	.269	2	.545	1	.525	2
8493	P2127	max	T	.018	1	-.463	2	.248	1	2.132	2	.486	1
8494		min		.013	2	-.477	1	.238	2	1.991	1	.47	2
8495		max	B	.449	2	-.012	2	.231	2	.563	2	.455	2
8496		min		.437	1	-.016	1	.227	1	.411	1	.445	1
8497	P2127A	max	T	-1.057	2	-2.806	2	2.305	1	.314	1	8.906	1
8498		min		-5.655	1	-10.266	1	.874	2	-.237	2	2.454	2
8499		max	B	10.499	1	5.672	1	2.414	1	1.887	1	9.102	1
8500		min		2.622	2	1.314	2	.654	2	1.478	2	2.271	2
8501	P2128	max	T	-.564	2	-1.941	2	.892	1	1.814	1	4.504	1
8502		min		-3.338	1	-5.123	1	.688	2	-.724	2	1.729	2
8503		max	B	5.087	1	3.505	1	.791	1	.821	2	4.509	1
8504		min		1.857	2	.696	2	.581	2	.231	1	1.625	2
8505	P2129	max	T	-.186	2	-1.391	2	1.361	1	2.239	2	3.249	1
8506		min		-.875	1	-3.597	1	.603	2	1.912	1	1.308	2
8507		max	B	3.551	1	.987	1	1.282	1	.648	2	3.175	1
8508		min		1.367	2	.242	2	.563	2	.34	1	1.264	2
8509	P2130	max	T	-.036	2	-1.013	2	1.177	1	2.138	2	2.397	1
8510		min		-.086	1	-2.439	1	.488	2	1.951	1	.995	2
8511		max	B	2.394	1	.159	1	1.118	1	.557	2	2.319	1
8512		min		1.003	2	.064	2	.469	2	.379	1	.972	2
8513	P2131	max	T	.104	1	-.775	2	.898	1	2.084	2	1.746	1
8514		min		.024	2	-1.692	1	.399	2	1.954	1	.787	2
8515		max	B	1.65	1	-.008	2	.854	1	.51	2	1.68	1
8516		min		.767	2	-.059	1	.387	2	.382	1	.77	2
8517	P2132	max	T	.112	1	-.624	2	.677	1	2.05	2	1.302	1
8518		min		.041	2	-1.243	1	.332	2	1.928	1	.645	2
8519		max	B	1.202	1	-.032	2	.644	1	.48	2	1.247	1
8520		min		.614	2	-.086	1	.323	2	.354	1	.631	2
8521	P2133	max	T	.073	1	-.53	2	.529	1	2.033	2	1.024	1
8522		min		.04	2	-.986	1	.285	2	1.879	1	.551	2
8523		max	B	.943	1	-.035	2	.502	1	.466	2	.975	1
8524		min		.518	2	-.06	1	.277	2	.304	1	.536	2

Envelope Plate/Shell Principal Stresses (Continued)

	Plate		Sur...	Sigma1 [ksi]	LC	Sigma2 [ksi]	LC	Tau Max [k...	LC	Angle [rad]	LC	Von Mises [ksi]	LC
8525	P2134	max	T	.021	1	-.465	2	.433	1	2	2	.856	1
8526		min		.02	2	-.845	1	.243	2	1.827	1	.475	2
8527		max	B	.798	1	-.018	1	.408	1	.435	2	.807	1
8528		min		.45	2	-.019	2	.234	2	.253	1	.46	2
8529	P2134A	max	T	-1.385	2	-3.514	2	2.188	1	.084	1	8.839	1
8530		min		-5.798	1	-10.173	1	1.064	2	-.365	2	3.066	2
8531		max	B	10.406	1	5.817	1	2.295	1	1.664	1	9.033	1
8532		min		3.353	2	1.623	2	.865	2	1.331	2	2.904	2
8533	P2135	max	T	-.698	2	-2.202	2	.934	1	2.248	2	4.816	1
8534		min		-3.603	1	-5.47	1	.752	2	1.698	1	1.949	2
8535		max	B	5.436	1	3.773	1	.831	1	.664	2	4.824	1
8536		min		2.113	2	.831	2	.641	2	.122	1	1.843	2
8537	P2136	max	T	-.22	2	-1.472	2	1.4	1	2.055	2	3.518	1
8538		min		-1.148	1	-3.948	1	.626	2	1.703	1	1.375	2
8539		max	B	3.906	1	1.26	1	1.323	1	.471	2	3.453	1
8540		min		1.44	2	.278	2	.581	2	.131	1	1.324	2
8541	P2137	max	T	-.041	2	-1.006	2	1.242	1	1.952	2	2.633	1
8542		min		-.277	1	-2.761	1	.483	2	1.707	1	.987	2
8543		max	B	2.72	1	.35	1	1.185	1	.375	2	2.563	1
8544		min		.991	2	.069	2	.461	2	.136	1	.958	2
8545	P2138	max	T	.029	2	-.73	2	.992	1	1.907	2	1.981	1
8546		min		.005	1	-1.979	1	.379	2	1.705	1	.745	2
8547		max	B	1.939	1	.039	1	.95	1	.338	2	1.92	1
8548		min		.719	2	-.013	2	.366	2	.133	1	.725	2
8549	P2139	max	T	.077	1	-.565	2	.788	1	1.892	2	1.538	1
8550		min		.049	2	-1.498	1	.307	2	1.694	1	.591	2
8551		max	B	1.458	1	-.041	2	.755	1	.327	2	1.484	1
8552		min		.554	2	-.051	1	.297	2	.123	1	.575	2
8553	P2140	max	T	.07	1	-.469	2	.642	1	1.899	2	1.25	1
8554		min		.049	2	-1.214	1	.259	2	1.68	1	.495	2
8555		max	B	1.169	1	-.046	2	.613	1	.337	2	1.199	1
8556		min		.456	2	-.057	1	.251	2	.108	1	.481	2
8557	P2141	max	T	.028	2	-.406	2	.536	1	1.882	2	1.061	1
8558		min		.022	1	-1.05	1	.217	2	1.664	1	.42	2
8559		max	B	.999	1	-.018	1	.509	1	.321	2	1.008	1
8560		min		.39	2	-.028	2	.209	2	.093	1	.405	2

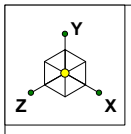

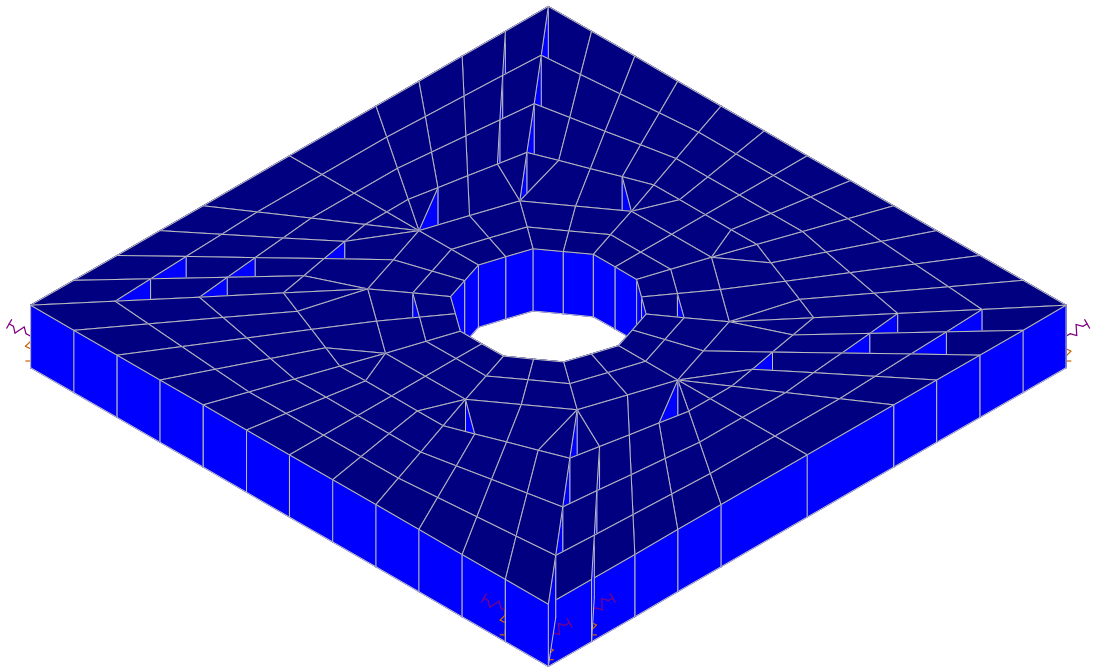

CEES		
JDY	242A Washer Plate	
	Washer Plate	242A Washer Plate V2.r3d

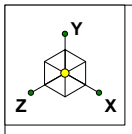

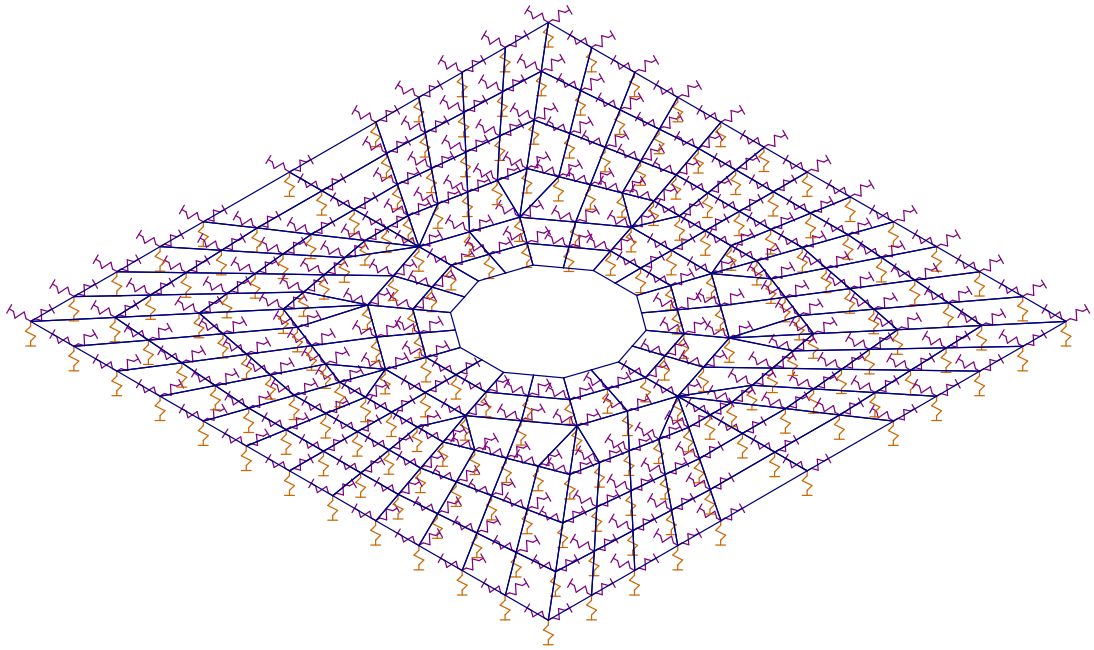

CEES		
JDY	242A Washer Plate	
	Washer Plate Boundary Conditions	242A Washer Plate V2.r3d

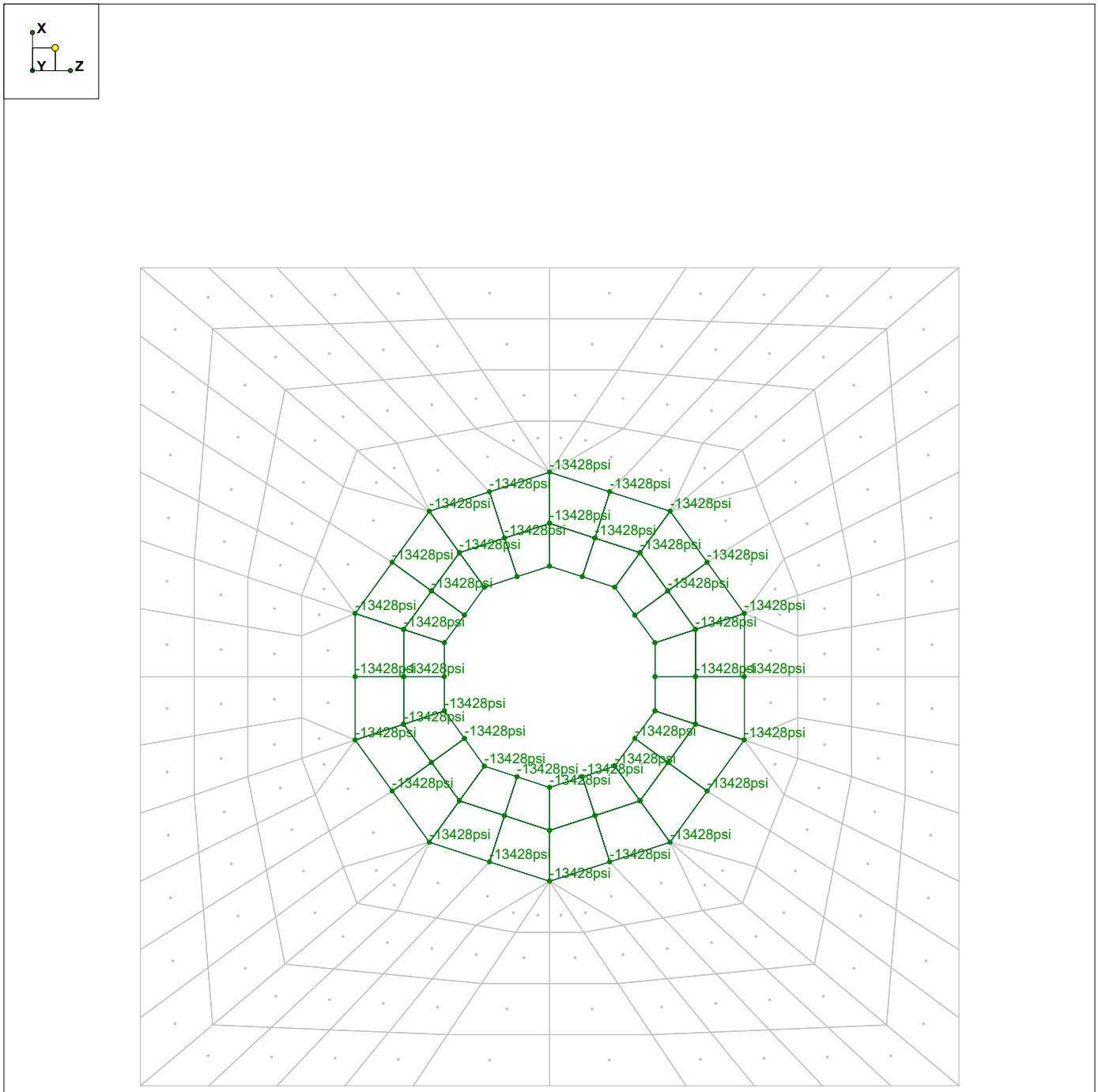

Loads: BLC 2, Washer

CEES		
JDY	242A Washer Plate	
	Washer Load Applied to These Plates	242A Washer Plate V2.r3d

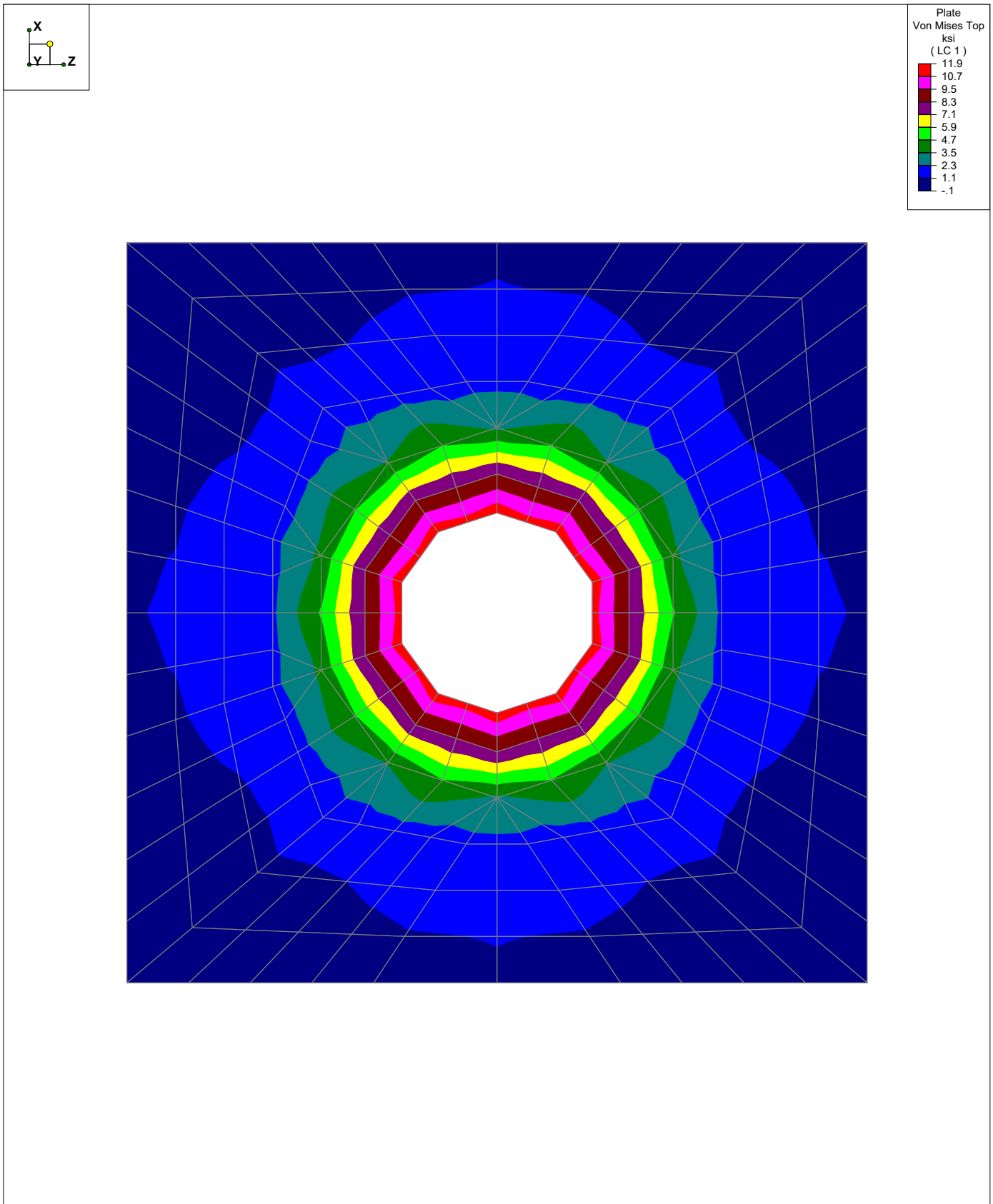

Results for LC 1, Washer Design Force

CEES	242A Washer Plate	
JDY		
		242A Washer Plate V2.r3d

Columbia Energy AND ENVIRONMENTAL SERVICES

Company : CEES
Designer : JDY
Job Number :
Model Name : 242A Washer Plate

Apr 20, 2020
9:47 AM
Checked By: RDL

General Material Properties

	Label	E [ksi]	G [ksi]	Nu	Therm (\1E5 F)	Density[k/ft^3]
1	gen_Conc3NW	3155	1372	.15	.6	.145
2	gen_Conc4NW	3644	1584	.15	.6	.145
3	gen_Conc3LW	2085	906	.15	.6	.11
4	gen_Conc4LW	2408	1047	.15	.6	.11
5	gen_Alum	10100	4077	.3	1.29	.173
6	gen_Steel	29000	11154	.3	.65	.49
7	gen_Plywood	1800	38	0	.3	.035
8	RIGID	1e+6		.3	0	0

Plate Surface Loads (BLC 2 : Washer)

	Plate Label	Direction	Magnitude[psi,F]
1	P191	Y	-13428
2	P192	Y	-13428
3	P193	Y	-13428
4	P194	Y	-13428
5	P195	Y	-13428
6	P196	Y	-13428
7	P199	Y	-13428
8	P200	Y	-13428
9	P177	Y	-13428
10	P178	Y	-13428
11	P179	Y	-13428
12	P180	Y	-13428
13	P181	Y	-13428
14	P182	Y	-13428
15	P183	Y	-13428
16	P184	Y	-13428
17	P187	Y	-13428
18	P188	Y	-13428
19	P189	Y	-13428
20	P190	Y	-13428
21	P213	Y	-13428
22	P214	Y	-13428
23	P215	Y	-13428
24	P216	Y	-13428
25	P197	Y	-13428
26	P198	Y	-13428
27	P201	Y	-13428
28	P202	Y	-13428
29	P203	Y	-13428
30	P204	Y	-13428
31	P205	Y	-13428
32	P206	Y	-13428
33	P207	Y	-13428
34	P208	Y	-13428
35	P185	Y	-13428
36	P186	Y	-13428
37	P209	Y	-13428
38	P210	Y	-13428
39	P211	Y	-13428
40	P212	Y	-13428

Columbia Energy AND ENVIRONMENTAL SERVICES

Company : CEES
Designer : JDY
Job Number :
Model Name : 242A Washer Plate

Apr 20, 2020
9:47 AM
Checked By: RDL

Basic Load Cases

	BLC Description	Category	X Gravity	Y Gravity	Z Gravity	Joint	Point	Distributed	Area(Me...	Surface(...
1	SW	DL	-1							
2	Washer	LL								40

Load Combinations

	Description	Sol...	PD...	S...	BLC	Fa...	BLC	Fa...	BLC	Fa...	BLC	Fa...	BLC	Fa...	BLC	Fa...	B...	Fa...	B...	Fa...	B...	Fa...	B...	Fa...
1	Washer Design Force	Yes	Y		DL	1.2	LL	1.6																

Joint Reactions (By Combination)

	LC	Joint Label	X [lb]	Y [lb]	Z [lb]	MX [lb-in]	MY [lb-in]	MZ [lb-in]
1	1	N21	.004	274.643	0	0	0	0
2	1	N22	.004	272.628	0	0	0	0
3	1	N23	.004	275.402	0	0	0	0
4	1	N24	.004	275.405	0	0	0	0
5	1	N25	.004	272.661	0	0	0	0
6	1	N26	.004	274.443	0	0	0	0
7	1	N27	.004	272.676	0	0	0	0
8	1	N28	.004	275.4	0	0	0	0
9	1	N29	.004	275.401	0	0	0	0
10	1	N30	.004	272.628	0	0	0	0
11	1	N31	.004	0	0	0	0	0
12	1	N32	.004	0	0	0	0	0
13	1	N33	.004	0	0	0	0	0
14	1	N34	.004	0	0	0	0	0
15	1	N35	.004	0	0	0	0	0
16	1	N36	.004	0	0	0	0	0
17	1	N37	.004	0	0	0	0	0
18	1	N38	.004	0	0	0	0	0
19	1	N39	.004	0	0	0	0	0
20	1	N40	.004	0	0	0	0	0
21	1	N41	.004	0	0	0	0	0
22	1	N42	.004	0	0	0	0	0
23	1	N43	.004	0	0	0	0	0
24	1	N44	.004	335.145	0	0	0	0
25	1	N45	.004	0	0	0	0	0
26	1	N46	.004	0	0	0	0	0
27	1	N47	.004	0	0	0	0	0
28	1	N48	.004	338.726	0	0	0	0
29	1	N49	.004	0	0	0	0	0
30	1	N50	.004	0	0	0	0	0
31	1	N51	.004	0	0	0	0	0
32	1	N52	.004	0	0	0	0	0
33	1	N53	.004	338.726	0	0	0	0
34	1	N54	.004	0	0	0	0	0
35	1	N55	.004	0	0	0	0	0
36	1	N56	.004	0	0	0	0	0
37	1	N57	.004	335.145	0	0	0	0
38	1	N58	.004	0	0	0	0	0
39	1	N59	.004	0	0	0	0	0
40	1	N60	.004	0	0	0	0	0
41	1	N61	.004	336.161	0	0	0	0
42	1	N62	.004	0	0	0	0	0
43	1	N63	.004	0	0	0	0	0
44	1	N64	.004	0	0	0	0	0

Joint Reactions (By Combination) (Continued)

	LC	Joint Label	X [lb]	Y [lb]	Z [lb]	MX [lb-in]	MY [lb-in]	MZ [lb-in]
45	1	N65	.004	335.148	0	0	0	0
46	1	N66	.004	0	0	0	0	0
47	1	N67	.004	0	0	0	0	0
48	1	N68	.004	0	0	0	0	0
49	1	N69	.004	338.813	0	0	0	0
50	1	N70	.004	0	0	0	0	0
51	1	N71	.004	0	0	0	0	0
52	1	N72	.004	0	0	0	0	0
53	1	N73	.004	0	0	0	0	0
54	1	N74	.004	338.784	0	0	0	0
55	1	N75	.004	0	0	0	0	0
56	1	N76	.004	0	0	0	0	0
57	1	N77	.004	0	0	0	0	0
58	1	N78	.004	335.152	0	0	0	0
59	1	N79	.004	0	0	0	0	0
60	1	N80	.004	0	0	0	0	0
61	1	N81	.004	0	0	0	0	0
62	1	N82	.004	336.164	0	0	0	0
63	1	N83	.004	0	0	0	0	0
64	1	N84	.004	0	0	0	0	0
65	1	N85	.004	0	0	0	0	0
66	1	N86	.004	0	0	0	0	0
67	1	N87	.004	0	0	0	0	0
68	1	N88	.004	0	0	0	0	0
69	1	N89	.004	0	0	0	0	0
70	1	N90	.004	0	0	0	0	0
71	1	N91	.004	0	0	0	0	0
72	1	N92	.004	0	0	0	0	0
73	1	N93	.004	0	0	0	0	0
74	1	N94	.004	0	0	0	0	0
75	1	N95	.004	0	0	0	0	0
76	1	N96	.004	0	0	0	0	0
77	1	N97	.004	0	0	0	0	0
78	1	N98	.004	0	0	0	0	0
79	1	N99	.004	0	0	0	0	0
80	1	N100	.004	0	0	0	0	0
81	1	N101	.004	0	0	0	0	0
82	1	N102	.004	0	0	0	0	0
83	1	N103	.004	0	0	0	0	0
84	1	N104	.004	0	0	0	0	0
85	1	N105	.004	0	0	0	0	0
86	1	N106	.004	0	0	0	0	0
87	1	N107	.004	0	0	0	0	0
88	1	N108	.004	0	0	0	0	0
89	1	N109	.004	0	0	0	0	0
90	1	N110	.004	0	0	0	0	0
91	1	N111	.004	0	0	0	0	0
92	1	N112	.004	0	0	0	0	0
93	1	N113	.004	0	0	0	0	0
94	1	N114	.004	0	0	0	0	0
95	1	N115	.004	0	0	0	0	0
96	1	N116	.004	0	0	0	0	0
97	1	N117	.004	0	0	0	0	0
98	1	N118	.004	0	0	0	0	0
99	1	N119	.004	0	0	0	0	0
100	1	N120	.004	0	0	0	0	0
101	1	N121	.004	0	0	0	0	0

Joint Reactions (By Combination) (Continued)

	LC	Joint Label	X [lb]	Y [lb]	Z [lb]	MX [lb-in]	MY [lb-in]	MZ [lb-in]
102	1	N122	.004	0	0	0	0	0
103	1	N123	.004	0	0	0	0	0
104	1	N124	.004	0	0	0	0	0
105	1	N125	.004	0	0	0	0	0
106	1	N126	.004	0	0	0	0	0
107	1	N127	.004	0	0	0	0	0
108	1	N128	.004	0	0	0	0	0
109	1	N129	.004	0	0	0	0	0
110	1	N130	.004	0	0	0	0	0
111	1	N131	.004	0	0	0	0	0
112	1	N132	.004	0	0	0	0	0
113	1	N133	.004	0	0	0	0	0
114	1	N134	.004	0	0	0	0	0
115	1	N135	.004	0	0	0	0	0
116	1	N136	.004	0	0	0	0	0
117	1	N137	.004	0	0	0	0	0
118	1	N138	.004	0	0	0	0	0
119	1	N139	.004	0	0	0	0	0
120	1	N140	.004	0	0	0	0	0
121	1	N141	.004	0	0	0	0	0
122	1	N142	.004	0	0	0	0	0
123	1	N143	.004	0	0	0	0	0
124	1	N144	.004	0	0	0	0	0
125	1	N145	.004	0	0	0	0	0
126	1	N146	.004	0	0	0	0	0
127	1	N147	.004	0	0	0	0	0
128	1	N148	.004	0	0	0	0	0
129	1	N149	.004	0	0	0	0	0
130	1	N150	.004	0	0	0	0	0
131	1	N151	.004	0	0	0	0	0
132	1	N152	.004	0	0	0	0	0
133	1	N153	.004	0	0	0	0	0
134	1	N154	.004	0	0	0	0	0
135	1	N155	.004	0	0	0	0	0
136	1	N156	.004	0	0	0	0	0
137	1	N157	.004	0	0	0	0	0
138	1	N158	.004	0	0	0	0	0
139	1	N159	.004	0	0	0	0	0
140	1	N160	.004	0	0	0	0	0
141	1	N161	.004	0	0	0	0	0
142	1	N162	.004	0	0	0	0	0
143	1	N163	.004	0	0	0	0	0
144	1	N164	.004	0	0	0	0	0
145	1	N165	.004	0	0	0	0	0
146	1	N166	.004	0	0	0	0	0
147	1	N167	.004	0	0	0	0	0
148	1	N168	.004	0	0	0	0	0
149	1	N169	.004	0	0	0	0	0
150	1	N170	.004	0	0	0	0	0
151	1	N171	.004	0	0	0	0	0
152	1	N172	.004	0	0	0	0	0
153	1	N173	.004	0	0	0	0	0
154	1	N174	.004	0	0	0	0	0
155	1	N175	.004	0	0	0	0	0
156	1	N176	.004	0	0	0	0	0
157	1	N177	.004	0	0	0	0	0
158	1	N178	.004	0	0	0	0	0

Joint Reactions (By Combination) (Continued)

	LC	Joint Label	X [lb]	Y [lb]	Z [lb]	MX [lb-in]	MY [lb-in]	MZ [lb-in]
159	1	N179	.004	0	0	0	0	0
160	1	N180	.004	0	0	0	0	0
161	1	N181	.004	0	0	0	0	0
162	1	N182	.004	0	0	0	0	0
163	1	N183	.004	0	0	0	0	0
164	1	N184	.004	0	0	0	0	0
165	1	N185	.004	0	0	0	0	0
166	1	N186	.004	0	0	0	0	0
167	1	N187	.004	0	0	0	0	0
168	1	N188	.004	0	0	0	0	0
169	1	N189	.004	0	0	0	0	0
170	1	N190	.004	0	0	0	0	0
171	1	N191	.004	0	0	0	0	0
172	1	N192	.004	0	0	0	0	0
173	1	N193	.004	0	0	0	0	0
174	1	N194	.004	0	0	0	0	0
175	1	N195	.004	0	0	0	0	0
176	1	N196	.004	0	0	0	0	0
177	1	N197	.004	0	0	0	0	0
178	1	N198	.004	0	0	0	0	0
179	1	N199	.004	0	0	0	0	0
180	1	N200	.004	0	0	0	0	0
181	1	N201	.004	0	0	0	0	0
182	1	N202	.004	0	0	0	0	0
183	1	N203	.004	0	0	0	0	0
184	1	N204	.004	0	0	0	0	0
185	1	N205	.004	0	0	0	0	0
186	1	N206	.004	0	0	0	0	0
187	1	N207	.004	0	0	0	0	0
188	1	N208	.004	0	0	0	0	0
189	1	N209	.004	0	0	0	0	0
190	1	N210	.004	0	0	0	0	0
191	1	N211	.004	0	0	0	0	0
192	1	N212	.004	0	0	0	0	0
193	1	N213	.004	0	0	0	0	0
194	1	N214	.004	0	0	0	0	0
195	1	N215	.004	0	0	0	0	0
196	1	N216	.004	0	0	0	0	0
197	1	N16	.004	902.044	0	0	0	0
198	1	N224	.004	1000.007	0	0	0	0
199	1	N15	.004	902.245	0	0	0	0
200	1	N225	.004	998.341	0	0	0	0
201	1	N14	.004	901.622	0	0	0	0
202	1	N226	.004	999.53	0	0	0	0
203	1	N13	.004	901.624	0	0	0	0
204	1	N228	.004	998.343	0	0	0	0
205	1	N12	.004	902.24	0	0	0	0
206	1	N217	.004	1000.005	0	0	0	0
207	1	N2	.004	902.039	0	0	0	0
208	1	N218	.004	1000.005	0	0	0	0
209	1	N20	.004	902.241	0	0	0	0
210	1	N219	.004	998.343	0	0	0	0
211	1	N19	.004	901.624	0	0	0	0
212	1	N220	.004	999.53	0	0	0	0
213	1	N18	.004	901.621	0	0	0	0
214	1	N222	.004	998.337	0	0	0	0
215	1	N17	.004	902.241	0	0	0	0

Joint Reactions (By Combination) (Continued)

	LC	Joint Label	X [lb]	Y [lb]	Z [lb]	MX [lb-in]	MY [lb-in]	MZ [lb-in]
216	1	N223	.004	999.998	0	0	0	0
217	1	Totals:	.906	25121.231	0			
218	1	COG (in):	X: 0	Y: 0	Z: 0			

Plate Principal Stresses (By Combination)

	LC	Plate Label	Loc	Sigma1[ksi]	Sigma2[ksi]	Tau Max[k...	Angle[rad]	Von Mises[ksi]
1	1	P1	T	.094	-.57	.332	.669	.622
3	1	P2	T	.03	-.242	.136	.6	.258
5	1	P3	T	.153	-.748	.451	.537	.835
7	1	P4	T	.041	-.42	.231	.445	.442
9	1	P5	T	.194	-.886	.54	.4	.998
11	1	P6	T	.059	-.61	.335	.347	.642
13	1	P7	T	.207	-1.006	.606	.3	1.124
15	1	P8	T	.049	-.794	.421	.243	.819
17	1	P9	T	.28	-1.118	.699	.132	1.281
19	1	P10	T	.076	-1	.538	.112	1.039
21	1	P11	T	.28	-1.118	.699	-.132	1.281
23	1	P12	T	.076	-1	.538	-.112	1.039
25	1	P13	T	.207	-1.006	.606	-.3	1.124
27	1	P14	T	.049	-.794	.421	-.243	.819
29	1	P15	T	.194	-.886	.54	-.4	.998
31	1	P16	T	.059	-.61	.335	-.347	.642
33	1	P17	T	.153	-.748	.451	-.537	.835
35	1	P18	T	.041	-.42	.231	-.445	.442
37	1	P19	T	.094	-.57	.332	-.669	.622
39	1	P20	T	.03	-.242	.136	-.6	.258
41	1	P21	T	.089	-.552	.32	2.324	.601
43	1	P22	T	.033	-.226	.129	2.253	.243
45	1	P23	T	.15	-.697	.423	2.178	.783
47	1	P24	T	.041	-.403	.222	2.038	.425
49	1	P25	T	.195	-.84	.517	2.035	.952
51	1	P26	T	.061	-.591	.326	1.925	.624
53	1	P27	T	.224	-.965	.594	1.925	1.094
55	1	P28	T	.068	-.777	.422	1.823	.813
57	1	P29	T	.26	-1.082	.671	1.789	1.232
59	1	P30	T	.068	-.937	.503	1.726	.973
61	1	P31	T	.276	-1.131	.704	1.644	1.292
63	1	P32	T	.072	-1.036	.554	1.624	1.074
65	1	P33	T	.276	-1.131	.704	1.497	1.292
67	1	P34	T	.072	-1.036	.554	1.518	1.074
69	1	P35	T	.26	-1.081	.671	1.352	1.232
71	1	P36	T	.068	-.937	.503	1.416	.973
73	1	P37	T	.224	-.964	.594	1.217	1.094
75	1	P38	T	.068	-.776	.422	1.319	.812
77	1	P39	T	.195	-.839	.517	1.107	.952
79	1	P40	T	.061	-.591	.326	1.217	.624
81	1	P41	T	.15	-.696	.423	.963	.782
83	1	P42	T	.041	-.403	.222	1.104	.425
85	1	P43	T	.089	-.552	.32	.818	.601
87	1	P44	T	.033	-.225	.129	.889	.243
89	1	P45	T	.094	-.57	.332	.669	.622
91	1	P46	T	.03	-.242	.136	.6	.258
93	1	P47	T	.153	-.748	.45	.537	.835
95	1	P48	T	.041	-.42	.231	.445	.442
97	1	P49	T	.194	-.886	.54	.4	.998

Plate Principal Stresses (By Combination) (Continued)

	LC	Plate Label	Loc	Sigma1[ksi]	Sigma2[ksi]	Tau Max[k...	Angle[rad]	Von Mises[ksi]
99	1	P50	T	.059	-.61	.335	.347	.642
101	1	P51	T	.208	-1.007	.607	.3	1.125
103	1	P52	T	.049	-.794	.421	.243	.819
105	1	P53	T	.28	-1.118	.699	.132	1.282
107	1	P54	T	.076	-1	.538	.112	1.04
109	1	P55	T	.279	-1.118	.699	-.133	1.281
111	1	P56	T	.076	-1	.538	-.113	1.04
113	1	P57	T	.207	-1.006	.606	-.3	1.124
115	1	P58	T	.049	-.793	.421	-.243	.819
117	1	P59	T	.194	-.886	.54	-.4	.998
119	1	P60	T	.059	-.61	.335	-.347	.642
121	1	P61	T	.153	-.748	.45	-.537	.835
123	1	P62	T	.041	-.42	.231	-.445	.442
125	1	P63	T	.094	-.57	.332	-.669	.622
127	1	P64	T	.03	-.242	.136	-.6	.258
129	1	P65	T	.089	-.552	.32	2.324	.601
131	1	P66	T	.033	-.225	.129	2.253	.243
133	1	P67	T	.15	-.696	.423	2.179	.782
135	1	P68	T	.041	-.403	.222	2.038	.425
137	1	P69	T	.195	-.839	.517	2.035	.952
139	1	P70	T	.061	-.591	.326	1.925	.624
141	1	P71	T	.224	-.964	.594	1.925	1.094
143	1	P72	T	.068	-.776	.422	1.823	.812
145	1	P73	T	.26	-1.081	.671	1.789	1.232
147	1	P74	T	.068	-.937	.503	1.726	.973
149	1	P75	T	.276	-1.131	.704	1.644	1.292
151	1	P76	T	.072	-1.036	.554	1.624	1.074
153	1	P77	T	.276	-1.131	.704	1.497	1.292
155	1	P78	T	.072	-1.036	.554	1.518	1.074
157	1	P79	T	.26	-1.082	.671	1.352	1.232
159	1	P80	T	.068	-.937	.503	1.416	.973
161	1	P81	T	.224	-.965	.594	1.217	1.094
163	1	P82	T	.068	-.777	.422	1.319	.813
165	1	P83	T	.195	-.84	.517	1.107	.952
167	1	P84	T	.061	-.591	.326	1.217	.624
169	1	P85	T	.15	-.697	.423	.963	.783
171	1	P86	T	.041	-.403	.222	1.103	.425
173	1	P87	T	.089	-.552	.32	.818	.601
175	1	P88	T	.033	-.226	.129	.889	.243
177	1	P89	T	.905	-1.8	1.353	-.483	2.386
179	1	P90	T	.356	-1.022	.689	-.462	1.238
181	1	P91	T	.876	-1.277	1.077	-.587	1.875
183	1	P92	T	.278	-1.03	.654	-.634	1.194
185	1	P93	T	.678	-1.378	1.028	-.732	1.814
187	1	P94	T	.295	-.954	.624	2.339	1.13
189	1	P95	T	.983	-1.705	1.344	2.305	2.356
191	1	P96	T	.302	-.96	.631	2.174	1.141
193	1	P97	T	1.039	-1.745	1.392	2.051	2.437
195	1	P98	T	.382	-1.093	.738	2.128	1.326
197	1	P99	T	.89	-1.557	1.223	1.924	2.145
199	1	P100	T	.52	-1.317	.918	1.951	1.64
201	1	P101	T	.872	-1.682	1.277	1.819	2.248
203	1	P102	T	.576	-1.381	.979	1.768	1.742
205	1	P103	T	1.185	-1.865	1.525	1.697	2.663
207	1	P104	T	.555	-1.322	.939	1.61	1.671
209	1	P105	T	1.185	-1.865	1.525	1.444	2.663
211	1	P106	T	.555	-1.322	.939	1.531	1.67

Plate Principal Stresses (By Combination) (Continued)

	LC	Plate Label	Loc	Sigma1[ksi]	Sigma2[ksi]	Tau Max[k...	Angle[rad]	Von Mises[ksi]
213	1	P107	T	.872	-1.682	1.277	1.323	2.248
215	1	P108	T	.576	-1.381	.979	1.373	1.742
217	1	P109	T	.89	-1.556	1.223	1.217	2.144
219	1	P110	T	.52	-1.316	.918	1.191	1.639
221	1	P111	T	1.039	-1.744	1.392	1.091	2.436
223	1	P112	T	.382	-1.093	.737	1.014	1.326
225	1	P113	T	.983	-1.704	1.344	.837	2.355
227	1	P114	T	.302	-.959	.631	.968	1.141
229	1	P115	T	.677	-1.377	1.027	.732	1.813
231	1	P116	T	.295	-.953	.624	.803	1.13
233	1	P117	T	.876	-1.275	1.076	.586	1.874
235	1	P118	T	.278	-1.03	.654	.634	1.193
237	1	P119	T	.905	-1.799	1.352	.482	2.384
239	1	P120	T	.355	-1.021	.688	.462	1.237
241	1	P121	T	1.165	-1.717	1.441	.23	2.511
243	1	P122	T	.385	-1.144	.764	.404	1.377
245	1	P123	T	.758	-1.575	1.167	.088	2.062
247	1	P124	T	.539	-1.298	.919	.249	1.636
249	1	P125	T	.773	-1.577	1.175	-.087	2.075
251	1	P126	T	.537	-1.299	.918	-.247	1.635
253	1	P127	T	1.166	-1.721	1.443	-.23	2.516
255	1	P128	T	.385	-1.143	.764	-.403	1.377
257	1	P129	T	.906	-1.8	1.353	-.482	2.386
259	1	P130	T	.355	-1.021	.688	-.462	1.238
261	1	P131	T	.877	-1.276	1.076	-.586	1.875
263	1	P132	T	.278	-1.03	.654	-.634	1.194
265	1	P133	T	.678	-1.377	1.027	-.732	1.814
267	1	P134	T	.295	-.953	.624	2.339	1.13
269	1	P135	T	.984	-1.704	1.344	2.305	2.355
271	1	P136	T	.302	-.959	.631	2.174	1.141
273	1	P137	T	1.039	-1.744	1.392	2.051	2.436
275	1	P138	T	.382	-1.093	.737	2.128	1.326
277	1	P139	T	.89	-1.556	1.223	1.924	2.145
279	1	P140	T	.52	-1.316	.918	1.951	1.639
281	1	P141	T	.872	-1.682	1.277	1.819	2.248
283	1	P142	T	.576	-1.381	.979	1.768	1.742
285	1	P143	T	1.185	-1.864	1.525	1.697	2.663
287	1	P144	T	.555	-1.322	.939	1.61	1.67
289	1	P145	T	1.185	-1.865	1.525	1.444	2.663
291	1	P146	T	.555	-1.322	.939	1.531	1.67
293	1	P147	T	.872	-1.682	1.277	1.323	2.248
295	1	P148	T	.576	-1.381	.979	1.373	1.742
297	1	P149	T	.89	-1.556	1.223	1.217	2.145
299	1	P150	T	.52	-1.317	.918	1.191	1.64
301	1	P151	T	1.039	-1.745	1.392	1.091	2.437
303	1	P152	T	.382	-1.093	.738	1.014	1.326
305	1	P153	T	.983	-1.705	1.344	.837	2.356
307	1	P154	T	.302	-.96	.631	.968	1.141
309	1	P155	T	.678	-1.378	1.028	.732	1.814
311	1	P156	T	.295	-.954	.624	.803	1.13
313	1	P157	T	.876	-1.277	1.077	.587	1.875
315	1	P158	T	.278	-1.03	.654	.634	1.194
317	1	P159	T	.905	-1.8	1.353	.483	2.386
319	1	P160	T	.356	-1.022	.689	.462	1.238
321	1	P161	T	1.165	-1.72	1.442	.23	2.513
323	1	P162	T	.386	-1.144	.765	.403	1.378
325	1	P163	T	.77	-1.579	1.174	.088	2.074

Plate Principal Stresses (By Combination) (Continued)

	LC	Plate Label	Loc	Sigma1[ksi]	Sigma2[ksi]	Tau Max[k...	Angle[rad]	Von Mises[ksi]
327	1	P164	T	.538	-1.299	.918	.246	1.636
329	1	P165	T	.77	-1.579	1.174	-.088	2.074
331	1	P166	T	.538	-1.299	.918	-.246	1.636
333	1	P167	T	1.165	-1.72	1.442	-.23	2.513
335	1	P168	T	.386	-1.144	.765	-.403	1.378
337	1	P169	T	.562	-1.39	.976	.097	1.741
339	1	P170	T	.562	-1.39	.976	-.097	1.741
341	1	P171	T	.562	-1.392	.977	-.097	1.742
343	1	P172	T	.567	-1.396	.981	.097	1.75
345	1	P173	T	.962	-1.567	1.264	-.041	2.211
347	1	P174	T	.958	-1.58	1.269	.039	2.219
349	1	P175	T	.956	-1.563	1.26	.042	2.203
351	1	P176	T	.956	-1.563	1.26	-.042	2.203
353	1	P177	T	5.226	-2.324	3.775	.468	6.697
355	1	P178	T	5.255	-2.388	3.822	.155	6.773
357	1	P179	T	5.255	-2.388	3.822	-.155	6.773
359	1	P180	T	5.226	-2.324	3.775	-.468	6.697
361	1	P181	T	5.174	-2.328	3.751	-.783	6.65
363	1	P182	T	5.195	-2.343	3.769	2.036	6.682
365	1	P183	T	5.231	-2.385	3.808	1.728	6.747
367	1	P184	T	5.231	-2.384	3.808	1.414	6.747
369	1	P185	T	5.857	-6.011	5.934	1.742	10.278
371	1	P186	T	5.857	-6.011	5.934	1.4	10.278
373	1	P187	T	5.195	-2.343	3.769	1.105	6.682
375	1	P188	T	5.174	-2.327	3.751	.783	6.65
377	1	P189	T	5.227	-2.324	3.775	.468	6.698
379	1	P190	T	5.254	-2.387	3.821	.155	6.771
381	1	P191	T	5.254	-2.39	3.822	-.155	6.773
383	1	P192	T	5.227	-2.325	3.776	-.468	6.699
385	1	P193	T	5.174	-2.327	3.751	-.783	6.651
387	1	P194	T	5.196	-2.343	3.769	2.036	6.682
389	1	P195	T	5.231	-2.384	3.808	1.728	6.747
391	1	P196	T	5.231	-2.385	3.808	1.414	6.747
393	1	P197	T	5.857	-6.011	5.934	1.742	10.278
395	1	P198	T	5.857	-6.011	5.934	1.4	10.278
397	1	P199	T	5.195	-2.343	3.769	1.105	6.682
399	1	P200	T	5.174	-2.328	3.751	.783	6.65
401	1	P201	T	5.85	-5.99	5.92	1.114	10.254
403	1	P202	T	5.842	-5.982	5.912	.771	10.24
405	1	P203	T	5.852	-6.006	5.929	.485	10.269
407	1	P204	T	5.848	-6.014	5.931	.143	10.273
409	1	P205	T	5.848	-6.014	5.931	-.143	10.273
411	1	P206	T	5.852	-6.006	5.929	-.485	10.269
413	1	P207	T	5.842	-5.982	5.912	-.771	10.24
415	1	P208	T	5.85	-5.99	5.92	2.027	10.254
417	1	P209	T	5.85	-5.99	5.92	1.114	10.254
419	1	P210	T	5.842	-5.982	5.912	.771	10.24
421	1	P211	T	5.852	-6.006	5.929	.485	10.27
423	1	P212	T	5.848	-6.014	5.931	.143	10.273
425	1	P213	T	5.848	-6.013	5.931	-.143	10.272
427	1	P214	T	5.852	-6.006	5.929	-.485	10.27
429	1	P215	T	5.842	-5.982	5.912	-.771	10.24
431	1	P216	T	5.85	-5.99	5.92	2.027	10.254

GENERAL NOTES: (UNLESS OTHERWISE SPECIFIED)

1. DIMENSIONS ARE IN INCHES, TOLERANCES SHALL BE AS FOLLOWS:
   FRACTIONS = ±1/8
   ANGLES = ±0.5°
2. REMOVE ALL BURRS AND BREAK SHARP EDGES.
3. CERTIFIED MATERIAL TEST REPORT (CMTR) REQUIRED FOR ALL PIPING MATERIALS.
4. SLOPE DOWN 1/8" PER 12" RUN (0.6'), IN DIRECTION OF ARROW.
5. PREPARE AND PAINT LIFT BAIL AND OPERATING SCREW HEADS. PRIME SURFACES WITH A SINGLE COAT OF INDUSTRIAL GRADE STEEL PRIMER. APPLY TWO FINISH COATS OF WATERBORNE ACRYLIC ENAMEL (AMERCOAT 220). FINISH COLOR SHALL BE YELLOW FOR LIFT BAILS AND CONNECTOR OPERATING SCREW HEAD. APPLY PAINT PER THE MANUFACTURER'S SPECIFICATIONS. POWDER COATING MAY BE SUBSTITUTED FOR PAINT.
6. LOCATE IDENTIFICATION LABELING AND WEIGHT LABELING IN APPROXIMATE LOCATION AS SHOWN.
   TEXT CONTENTS: H-14-111834 REV 1 XXX LBS, 41-5
   TEXT TYPE: BLOCK
   TEXT MATERIAL: ACRYLIC ENAMEL
   TEXT COLORS: BLACK ON YELLOW BACKGROUND
   TEXT SIZE: 1/2" HIGH CHARACTERS
7. ENSURE THAT THE COMPLETED JUMPER ASSEMBLY HANGS LEVEL WITHIN TWO DEGREES AS SUPPORTED BY THE LIFTING BAIL LOCATION. RELOCATE LIFTING BAIL TO BALANCE JUMPER BEFORE FINAL WELDING TO SUPPORT STRUCTURE. JUMPER ASSEMBLY SHOULD BE BIASED TO LEAN TOWARDS THE ANGLE SUPPORT LEG.
8. WEIGH THE FINAL JUMPER ASSEMBLY AND PAINT THE APPLICABLE ASSEMBLY WEIGHT, ROUNDED UP TO THE NEAREST TEN POUNDS, IN THE PAINT IDENTIFICATION LABEL.
9. FABRICATE AND TEST THE JUMPER ASSEMBLY IN ACCORDANCE WITH RPP-14541, JUMPER FABRICATION AND TESTING SPECIFICATION FOR TANK FARMS, UNLESS OTHERWISE NOTED.
10. WELD AND INSPECT PIPING IN ACCORDANCE WITH ASME B31.3, 2016 FOR CATEGORY NORMAL FLUID SERVICE. ALL WELDS SHALL BE VT ON FINAL PASS UNLESS OTHERWISE SPECIFIED. IN ADDITION, NOT LESS THAN 5% OF CIRCUMFERENTIAL BUTT AND MITER GROOVE CONTAINMENT BOUNDARY WELDS SHALL BE EXAMINED FULLY BY RANDOM RADIOGRAPHY (RT) IN ACCORDANCE WITH ASME B31.3, 2016, PARAGRAPH 344.5. USE OF BACKING RINGS IS NOT PERMITTED.
11. WELD AND INSPECT STRUCTURAL WELDS IN ACCORDANCE WITH AWS D1.1, 2017 OR AWS D1.6, 2007 STATICALLY LOADED CRITERIA. ALL WELDS SHALL BE VT ON FINAL PASS UNLESS OTHERWISE SPECIFIED. WELD PROCEDURES AND QUALIFICATIONS PER ASME B&PV CODE SECTION IX, 2017 ARE ACCEPTABLE.
12. DESIGN PRESSURE FOR THE JUMPER ASSEMBLY PIPING IS 400 PSIG. PERFORM A HYDROSTATIC PRESSURE TEST TO 600 +10/-0 PSIG. MAINTAIN PRESSURE FOR 10 MINUTES AND PERFORM VISUAL INSPECTION OF WELDS AND ASSOCIATED EQUIPMENT. VERIFY NO LEAKAGE IS PRESENT. THE TEST PRESSURE HAS BEEN DETERMINED IN ACCORDANCE WITH ASME B31.3, 2016, PARA 345.4.2(b), AT THE DESIGN TEMPERATURE OF 200°F.
13. WHERE A JUMPER JIG IS USED, QUALITY CONTROL INSPECTION SHALL DETERMINE WHETHER THE CRITICAL DIMENSIONS HAVE BEEN MET. INSPECT THE JIG DIMENSIONS PRIOR TO FABRICATION AND AFTER FABRICATION. VERIFY THE JUMPER CAN BE REMOVED AND REINSTALLED INTO THE JIG WITHOUT BINDING.
14. CONNECTOR HEADS SHALL BE IDENTIFIED WITH THE APPROPRIATE LETTER DESIGNATION FOR THAT SPECIFIC LOCATION. LETTER TEXT TO BE BLOCK ACRYLIC ENAMEL LETTERING, (BLACK ON YELLOW BACKGROUND), 1" TO 2" TALL AND POSITIONED ON TOP OF ADJACENT PIPE FOR CONNECTORS.
15. IN-PROCESS EXAMINATION SHALL BE PERFORMED IN ACCORDANCE WITH ASME B31.3, 2016 SECTION 344.7. LIQUID PENETRANT EXAMINATION SHALL BE PERFORMED ON THE ROOT PASS.
16. JUMPER INTERNALS (PRIMARY PRESSURE BOUNDARY) WHEN INSTALLED IS A CLASS 1, DIVISION 1, GROUP B HAZARDOUS LOCATION PER HNF-SD-WM-HC-017.
17. PRIOR TO LOCATING CONNECTOR HEADS (ITEMS 8 AND 9) AS DIMENSIONED VERIFICATION/AUTHORIZATION FROM THE TANK FARM CONTRACTOR IS REQUIRED. THE NECESSARY FIELD FIT DIMENSION IS YET TO BE CONFIRMED VIA LASER SCAN.
18. WELD IS A PIPING ATTACHMENT WELD. WELD AND INSPECT IN ACCORDANCE WITH ASME B31.3, 2016 FOR CATEGORY NORMAL FLUID SERVICE. WELD SHALL BE VT ON FINAL PASS, NO RT REQUIRED.

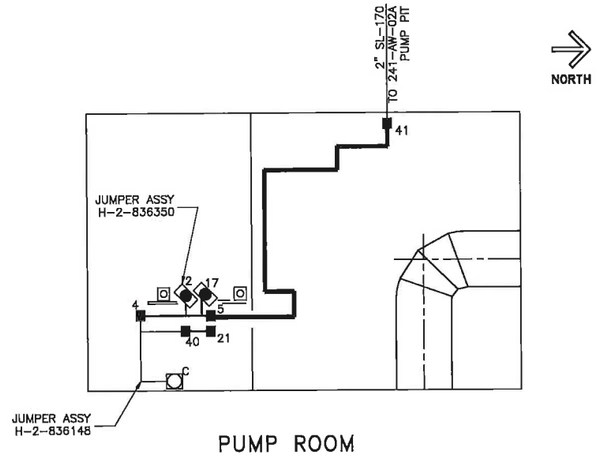

PUMP ROOM
242-A BUILDING
KEY PLAN
SCALE: NONE

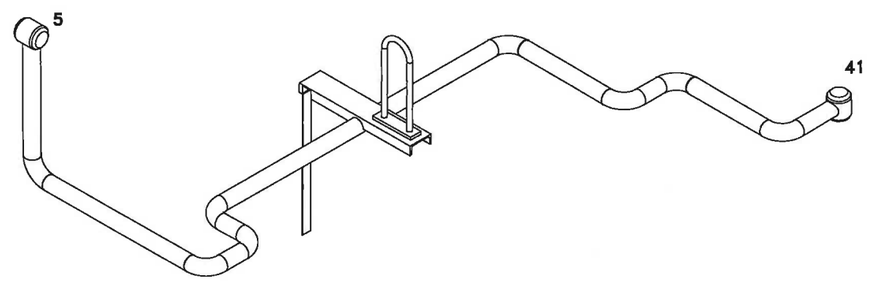

ISO VIEW
SCALE: NTS

PARTS LIST/MATERIAL LIST

QTY -020	QTY -010	PARTS / DASH NUMBER	NOMENCLATURE/DESCRIPTION	MATERIAL/REFERENCE	SHEET	ITEM NO
	X	-010	ASSEMBLY 41 TO 5		2	1
X	1	-020	DUNNAGE WELDMENT		2	2
						3
						4
						5
						6
	1	H-2-90161-060	LIFTING BAIL ASSEMBLY		2	7
	1	H-2-32420-010	2" HORIZONTAL CONNECTOR ASSEMBLY, ITEM 1, GASKET TYPE I		2	8
	1	H-2-32420-020	2" VERTICAL, CONNECTOR ASSEMBLY, ITEM 2, GASKET TYPE 1		2	9
	8		ELBOW, 2"ø SCH 40, 90°, LR, BW, SEAMLESS	ASTM A403 WP 304L	2	10
	AR		PIPE, 2"ø SCH 40, SEAMLESS	ASTM A312 TP 304L	2	11
1			CHANNEL, C4 X 5.4, 21" LONG	ASTM A276 OR A479 304/304L	2	12
	1		ANGLE, L1 1/2 X 1 1/2 X 3/16, 23" LONG	ASTM A276 OR A479 304/304L	2	13
2		-001	STIRRUP PLATE, 3/16 THK	ASTM A240 TP 304L	2	14

DWG NUMBER	TITLE
H-14-111830	DST WASTE TRANSFER LINE REPLACEMENT 241-AW TO 242-A EVAPORATOR DRAWING LIST

REF NUMBER	TITLE
H-2-99009	PIPING JUMPER ARRANGEMENT PUMP ROOM
RPP-CALC-63213	ASME B31.3 ANALYSES OF THE 41 TO 5 AND 43 TO 13A JUMPERS FOR THE 242-A EVAPORATOR PUMP ROOM
RPP-CALC-63214	242-A EVAPORATOR PUMP ROOM JUMPERS SUPPORTING ANALYSES
H-2-90161	STANDARD RIGID LIFTING BAILS
H-2-32420	ASSEMBLY HORIZONTAL & VERTICAL 2" CONNECTOR

REFERENCES

NEXT USED ON H-2-99009

REV NO	DESCRIPTION
0	INITIAL RELEASE PER EDT 882588

REVISIONS

BLDG NO 242-A

MODEL NO 8405

CAUTION: NOT COMPLETE WITHOUT CURRENT CHANGE DOCUMENTS FROM DATABASE

	NAME	DATE	COMPANY
DRAFTER	P. MCELROY	4-28-20	CH2M
DESIGN VERIFIER	JT FOSS	4-28-20	CH2M
DESIGN ENGINEER	J. HARRINGTON	4-28-20	CH2M

4/29/20

U.S. DEPARTMENT OF ENERGY
Office of River Protection

JUMPER ASSEMBLY
41 TO 5
242-A PUMP ROOM

SIZE	DRAWING NUMBER	SHEET	REV
F	H-14-111834	01	0

SCALE SHOWN

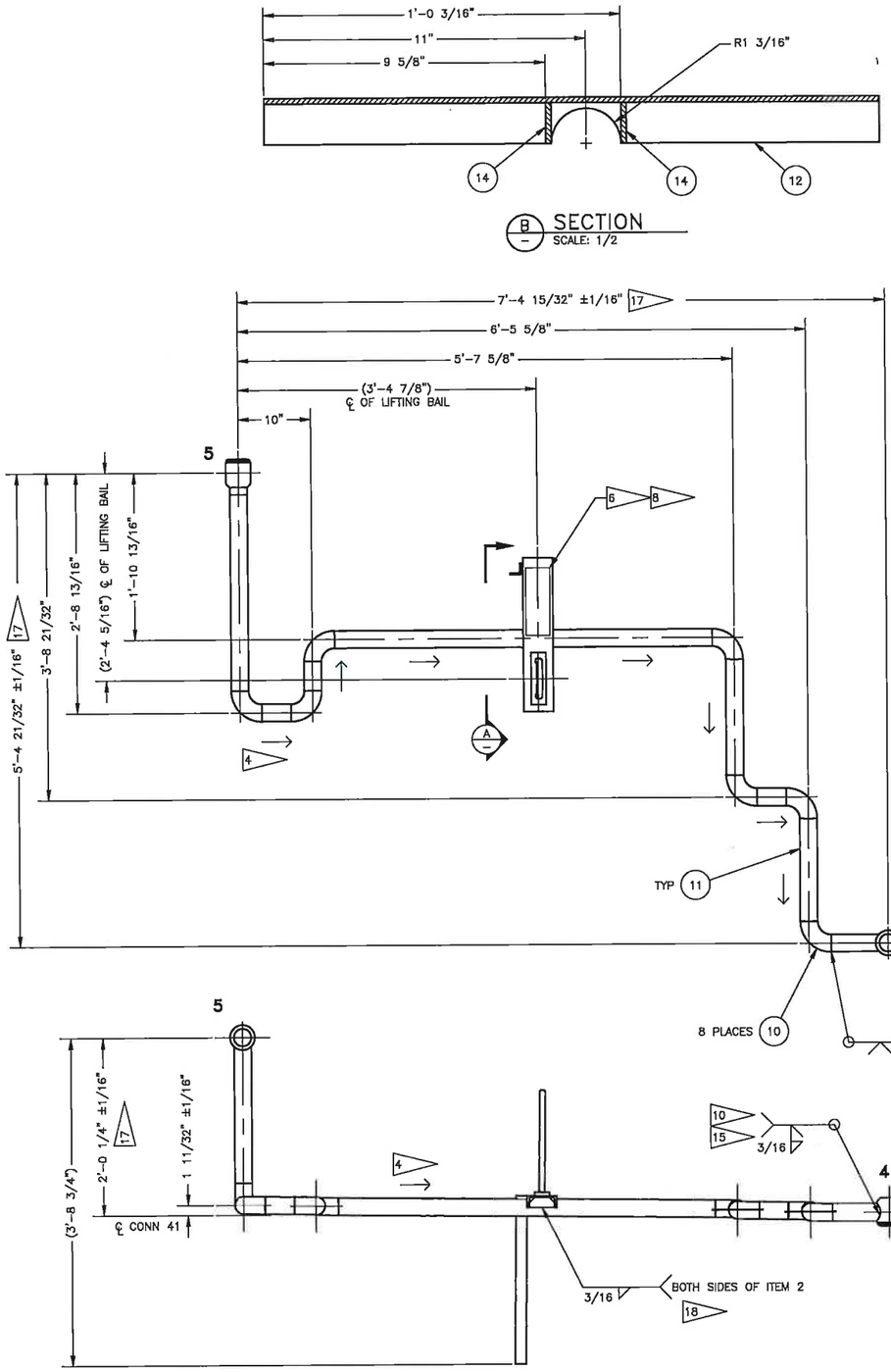

1 ASSEMBLY 41 TO 5 14
SCALE: 1/8

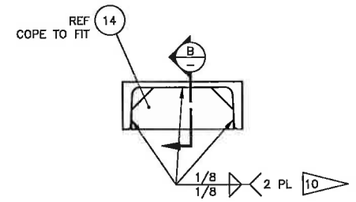

2 DUNNAGE WELDMENT
SCALE: 1/2

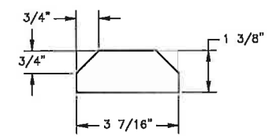

14 STIRRUP PLATE
SCALE: 1/2

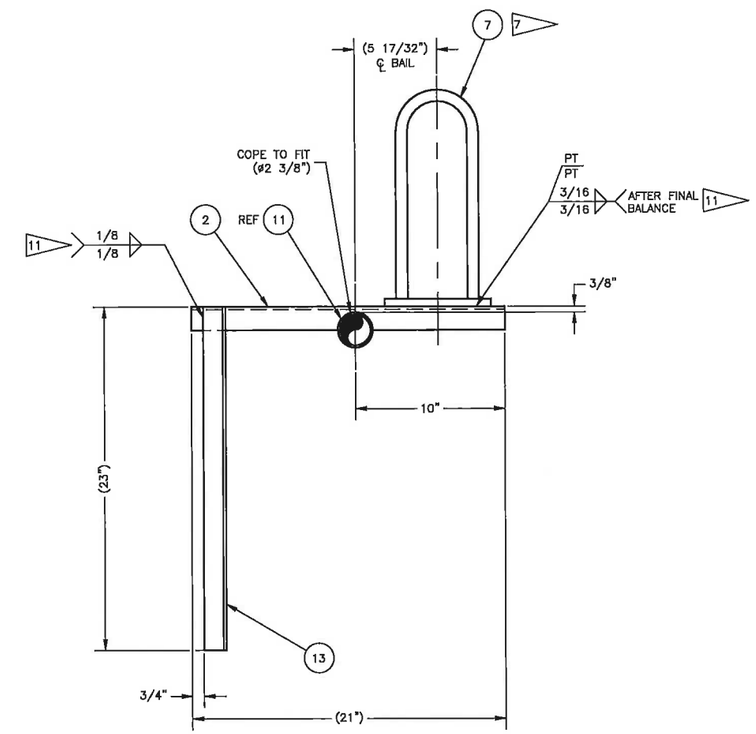

A SECTION
SCALE: 1/4

4/29/20

REV NO	DESCRIPTION
0	INITIAL RELEASE PER EDT 882588

REVISIONS

DWG NUMBER	TITLE

DRAWING TRACEABILITY LIST

REF NUMBER	TITLE

REFERENCES

NEXT USED ON

BLDG NO 242-A

INDEX NO 8405

CAUTION: NOT COMPLETE WITHOUT CURRENT CHANGE DOCUMENTS FROM DATABASE

	NAME	DATE	COMPANY
DRAWN	L MCELROY	4-28-20	CH2M
DESIGN ENGINEER	JT FOSS	4-28-20	CH2M
DESIGN REVIEWER	J HARRINGTON	4-28-20	CH2M

U.S. DEPARTMENT OF ENERGY
Office of River Protection

JUMPER ASSEMBLY
41 TO 5
242-A PUMP ROOM

SIZE	DRAWING NUMBER	SHEET	REV
F	H-14-111834	02	0

SCALE SHOWN

GENERAL NOTES: (UNLESS OTHERWISE SPECIFIED)

1. DIMENSIONS ARE IN INCHES, TOLERANCES SHALL BE AS FOLLOWS:
   FRACTIONS = ±1/8
   ANGLES = ±0.5°
2. REMOVE ALL BURRS AND BREAK SHARP EDGES.
3. CERTIFIED MATERIAL TEST REPORT (CMTR) REQUIRED FOR ALL PIPING MATERIALS.
4. DIP TUBE TO BE WELDED WITH 45° CUT PERPENDICULAR TO JUMPER AS SHOWN.
5. PREPARE AND PAINT LIFT BAIL AND OPERATING SCREW HEADS. PRIME SURFACES WITH A SINGLE COAT OF INDUSTRIAL GRADE STEEL PRIMER. APPLY TWO FINISH COATS OF WATERBORNE ACRYLIC ENAMEL (AMERCOAT 220). FINISH COLOR SHALL BE YELLOW FOR LIFT BAILS AND CONNECTOR OPERATING SCREW HEAD. APPLY PAINT PER THE MANUFACTURER'S SPECIFICATIONS. POWDER COATING MAY BE SUBSTITUTED FOR PAINT.
6. LOCATE IDENTIFICATION LABELING AND WEIGHT LABELING IN APPROXIMATE LOCATION AS SHOWN.
   TEXT CONTENTS: H-14-111835 REV 1 XXX LBS, 43-13A
   TEXT TYPE: BLOCK
   TEXT MATERIAL: ACRYLIC ENAMEL
   TEXT COLORS: BLACK ON YELLOW BACKGROUND
   TEXT SIZE: 1" HIGH CHARACTERS
7. ENSURE THAT THE COMPLETED JUMPER ASSEMBLY HANGS LEVEL WITHIN TWO DEGREES AS SUPPORTED BY THE LIFTING BAIL LOCATION. RELOCATE LIFTING BAIL TO BALANCE JUMPER BEFORE FINAL WELDING TO SUPPORT STRUCTURE.
8. WEIGH THE FINAL JUMPER ASSEMBLY AND PAINT THE APPLICABLE ASSEMBLY WEIGHT, ROUNDED UP TO THE NEAREST TEN POUNDS, IN THE PAINT IDENTIFICATION LABEL.
9. FABRICATE AND TEST THE JUMPER ASSEMBLY IN ACCORDANCE WITH RPP-14541, JUMPER FABRICATION AND TESTING SPECIFICATION FOR TANK FARMS, UNLESS OTHERWISE NOTED.
10. WELD AND INSPECT PIPING IN ACCORDANCE WITH ASME B31.3, 2016 FOR CATEGORY NORMAL FLUID SERVICE. ALL WELDS SHALL BE VT ON FINAL PASS UNLESS OTHERWISE SPECIFIED. IN ADDITION, NOT LESS THAN 5% OF CIRCUMFERENTIAL BUTT AND MITER GROOVE CONTAINMENT BOUNDARY WELDS SHALL BE EXAMINED FULLY BY RANDOM RADIOGRAPHY (RT) IN ACCORDANCE WITH ASME B31.3, 2016, PARAGRAPH 344.5. USE OF BACKING RINGS IS NOT PERMITTED.
11. WELD AND INSPECT STRUCTURAL WELDS IN ACCORDANCE WITH AWS D1.1, 2017 OR AWS D1.6, 2007 STATICALLY LOADED CRITERIA. ALL WELDS SHALL BE VT ON FINAL PASS UNLESS OTHERWISE SPECIFIED. WELD PROCEDURES AND QUALIFICATIONS PER ASME B&PV CODE SECTION IX, 2017 ARE ACCEPTABLE.
12. DESIGN PRESSURE FOR THE JUMPER ASSEMBLY PIPING IS 400 PSIG. PERFORM A HYDROSTATIC PRESSURE TEST TO 600 +10/-0 PSIG. MAINTAIN PRESSURE FOR 10 MINUTES AND PERFORM VISUAL INSPECTION OF WELDS AND ASSOCIATED EQUIPMENT. VERIFY NO LEAKAGE IS PRESENT. THE TEST PRESSURE HAS BEEN DETERMINED IN ACCORDANCE WITH ASME B31.3, 2016, PARA 345.4.2(b), AT THE DESIGN TEMPERATURE OF 200°F.
13. WHERE A JUMPER JIG IS USED, QUALITY CONTROL INSPECTION SHALL DETERMINE WHETHER THE CRITICAL DIMENSIONS HAVE BEEN MET. INSPECT THE JIG DIMENSIONS PRIOR TO FABRICATION AND AFTER FABRICATION. VERIFY THE JUMPER CAN BE REMOVED AND REINSTALLED INTO THE JIG WITHOUT BINDING.
14. CONNECTOR HEADS SHALL BE IDENTIFIED WITH THE APPROPRIATE LETTER DESIGNATION FOR THAT SPECIFIC LOCATION. LETTER TEXT TO BE BLOCK ACRYLIC ENAMEL LETTERING, (BLACK ON YELLOW BACKGROUND), 1" TO 2" TALL AND POSITIONED ON TOP OF ADJACENT PIPE FOR CONNECTORS.
15. IN-PROCESS EXAMINATION SHALL BE PERFORMED IN ACCORDANCE WITH ASME B31.3, 2016 SECTION 344.7. LIQUID PENETRANT EXAMINATION SHALL BE PERFORMED ON THE ROOT PASS.
16. JUMPER INTERNALS (PRIMARY PRESSURE BOUNDARY) WHEN INSTALLED IS A CLASS 1, DIVISION 1, GROUP B HAZARDOUS LOCATION PER HNF-SD-WM-HC-017.
17. PRIOR TO LOCATING CONNECTOR HEADS (ITEMS 8 AND 9) AS DIMENSIONED VERIFICATION/AUTHORIZATION FROM THE TANK FARM CONTRACTOR IS REQUIRED. THE NECESSARY FIELD FIT DIMENSION IS YET TO BE CONFIRMED VIA LASER SCAN.
18. WELD IS A PIPING ATTACHMENT WELD. WELD AND INSPECT IN ACCORDANCE WITH ASME B31.3, 2016 FOR CATEGORY NORMAL FLUID SERVICE. WELD SHALL BE VT ON FINAL PASS, NO RT REQUIRED.

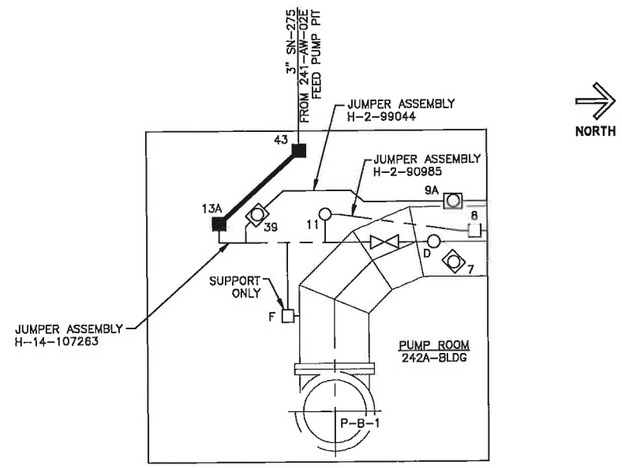

PUMP ROOM
242-A BUILDING
KEY PLAN
SCALE: NONE

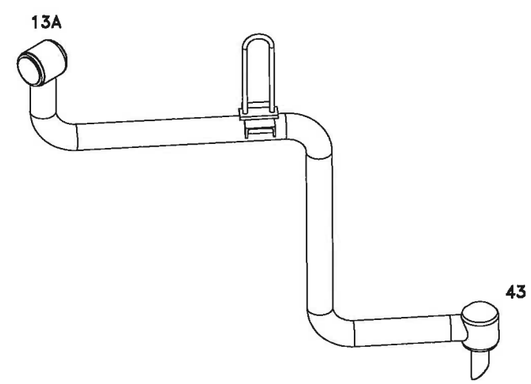

ISO VIEW
SCALE: NTS

PARTS LIST/MATERIAL LIST

QTY -020	QTY -010	PARTS / DASH NUMBER	NOMENCLATURE/DESCRIPTION	MATERIAL/REFERENCE	SHEET	ITEM NO
	X	-010	ASSEMBLY 43 TO 13A		2	1
X		-020	DUNNAGE WELDMENT		2	2
						3
						4
						5
	AR		PIPE, 2" SCH 40, SEAMLESS	ASTM A312 TP 304L	2	6
	1	H-2-90161-060	LIFTING BAIL ASSEMBLY		2	7
	1	H-2-32430-010	3" HORIZONTAL CONNECTOR ASSEMBLY, ITEM 1, GASKET TYPE I		2	8
	1	H-2-32430-050	3" VERTICAL, CONNECTOR ASSEMBLY, ITEM 5, GASKET TYPE 1, 3" IN 2" OUT		2	9
	3		ELBOW, 3"ø SCH 40, 90°, LR, BW, SEAMLESS	ASTM A403 WP 304L	2	10
	AR		PIPE, 3"ø SCH 40, SEAMLESS	ASTM A312 TP 304L	2	11
1			CHANNEL, C4 X 5.4, 6" LONG	ASTM A276 OR A479 304/304L	2	12
2		-001	STIRRUP PLATE, 3/16 THK	ASTM A240 TP 304L	2	13

REF NUMBER	TITLE
H-2-99009	PIPING JUMPER ARRANGEMENT PUMP ROOM
RPP-CALC-63213	ASME B31.3 ANALYSES OF THE 41 TO 5 AND 43 TO 13A JUMPERS FOR THE 242-A EVAPORATOR PUMP ROOM
RPP-CALC-63214	242-A EVAPORATOR PUMP ROOM JUMPERS SUPPORTING ANALYSES
H-2-90161	STANDARD RIGID LIFTING BAILS
H-2-32430	ASSEMBLY HORIZ AND VERT CONN 3" CONNECTOR

REFERENCES

DWG NUMBER	TITLE
H-14-111830	DST WASTE TRANSFER LINE REPLACEMENT 241-AW TO 242-A EVAPORATOR DRAWING LIST

REV NO	DESCRIPTION
0	INITIAL RELEASE PER EDT 882568

REVISIONS

4-29-20

BLDG NO 242-A

INDEX NO 8405

CAUTION: NOT COMPLETE WITHOUT CURRENT CHANGE DOCUMENTS FROM DATABASE

	NAME	DATE	COMPANY
DRAFTING	JJ FOSS	8-16-19	DOE
DRAFTING CHECKER			
DESIGN AUTHORITY			

U.S. DEPARTMENT OF ENERGY
Office of River Protection

JUMPER ASSEMBLY
43 TO 13A
242-A PUMP ROOM

SIZE	DRAWING NUMBER	SHEET	REV
F	H-14-111835	01	0

SCALE SHOWN

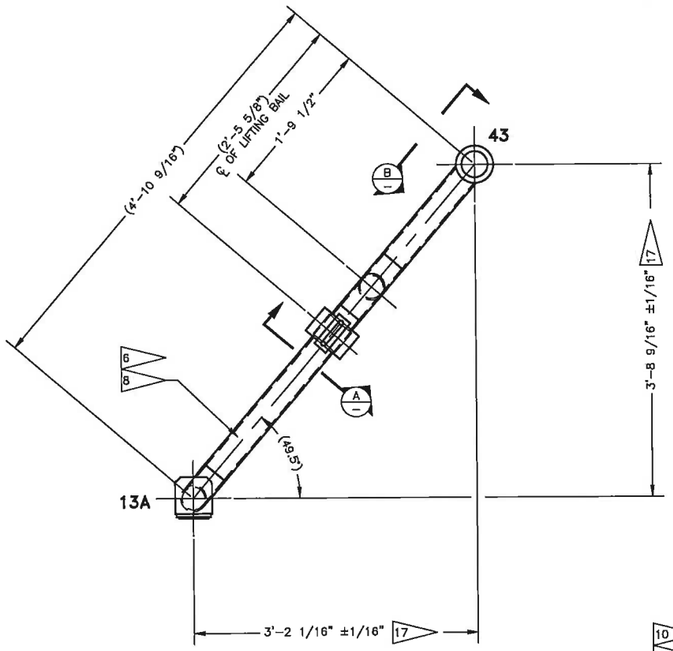

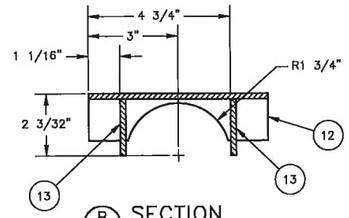

B SECTION
SCALE: 1/2

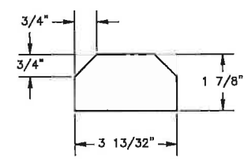

13 STIRRUP PLATE
SCALE: 1/2

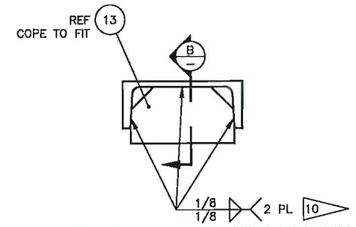

2 DUNNAGE WELDMENT
SCALE: 1/2

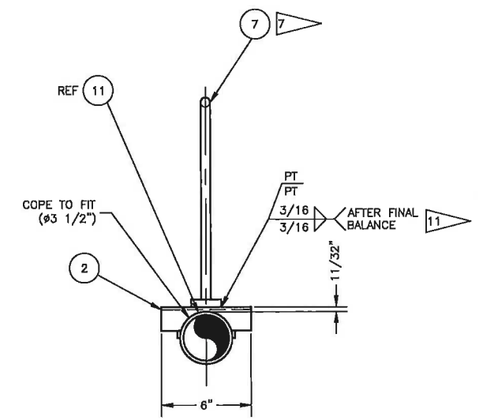

A SECTION
SCALE: 1/4

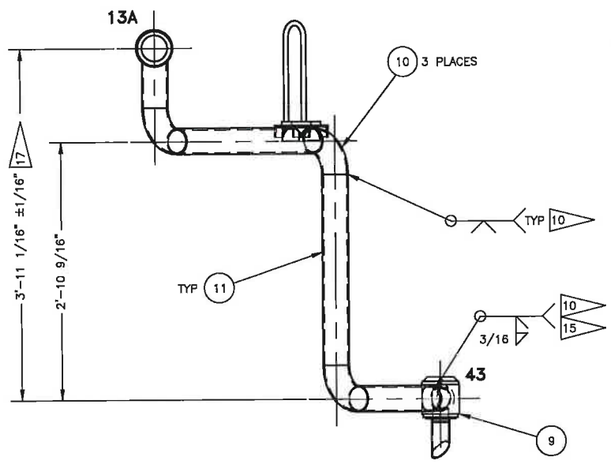

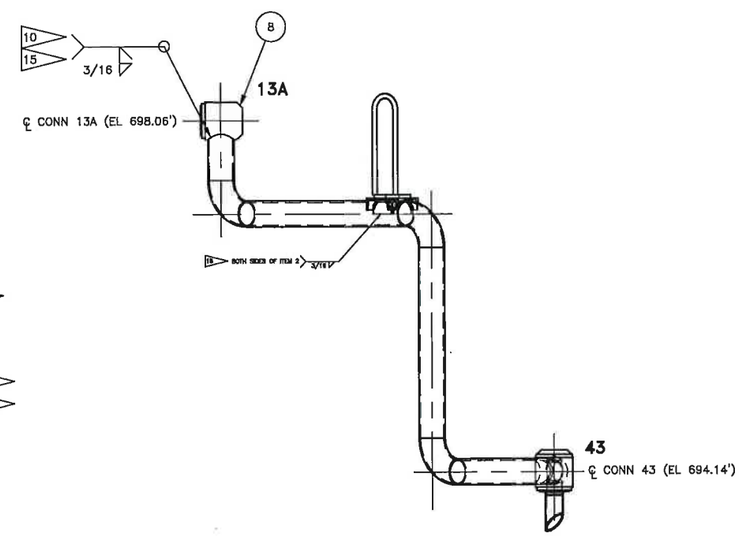

1 ASSEMBLY 43 TO 13A
SCALE: 1/8 14

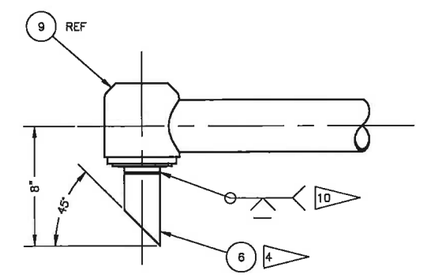

B VIEW
SCALE: 1/4

4/29/20

REV NO	DESCRIPTION
0	INITIAL RELEASE PER EDT 882588

DWG NUMBER	TITLE	REF NUMBER	TITLE
		REFERENCES	

BLDG NO 242-A
INDEX NO 8405

CAUTION: NOT COMPLETE WITHOUT CURRENT CHANGE DOCUMENTS FROM DATABASE

	NAME	DATE	COMPANY
DRAFTING	JT COSS	8-16-19	
DRAFTING CHECKER			
DESIGN AUTHORITY			

U.S. DEPARTMENT OF ENERGY
Office of River Protection

JUMPER ASSEMBLY
43 TO 13A
242-A PUMP ROOM

SIZE	DRAWING NUMBER	SHEET	REV
F	H-14-111835	02	0

RPP-CALC-63213
Revision 0

ASME B31.3 Analyses of the 41 to 5 and 43 to 13A Jumpers for the 242-A Evaporator Pump Room

Prepared by

JP Harrington
Columbia Energy and Environmental Services, Inc. for
Washington River Protection Solutions, LLC

Date Published
May 2020

RYAN D. LANG
STATE OF WASHINGTON
48191
REGISTERED
PROFESSIONAL ENGINEER
4/28/20

washington river protection solutions

Prepared for the U.S. Department of Energy
Office of River Protection

Contract No. DE-AC27-08RV14800

Columbia Energy AND ENVIRONMENTAL SERVICES

Design Verification Checklist

Doc. Number	Rev.	Title
RPP-CALC-63213	0	ASME B31.3 Analyses of the 41 to 5 and 43 to 13A Jumpers for the 242-A Evaporator Pump Room

Verification Method (Check One)

☒ Review ☐ Alternate Calculation ☐ Qualification Testing

Verification Results

Yes	No	NA	
☒	☐	☐	Design inputs correctly selected and cited and correctly incorporated.
☒	☐	☐	Input data were checked for consistency with original source information.
☐	☐	☒	Design inputs for interfacing organizations are specified
☒	☐	☐	Necessary assumptions are explicit, adequately described and supported.
☒	☐	☐	Unverified assumptions (requiring verification) are clearly identified.
☒	☐	☐	Analytical and technical approaches and results are reasonable and appropriate.
☒	☐	☐	The version or revision of each reference is cited
☒	☐	☐	Design output is reasonable for design inputs
☒	☐	☐	Results and conclusions address all points in the purpose.
☒	☐	☐	Conclusions are consistent with analytical results and applicable limits.
☒	☐	☐	Suitable materials, parts, processes, and inspection and testing criteria specified
☒	☐	☐	All comments have been adequately addressed and dispositioned
☒	☐	☐	Calculations are sufficiently detailed such that a technically qualified person could reproduce the calc.
☒	☐	☐	Design method(s) are appropriately used and documented.
☒	☐	☐	Computer Program(s) are appropriately used and results support design.
☒	☐	☐	For pre-verified computer programs the V&V document is referenced and specific computer used for the calculation is identified

Ensure calculations that use software include a paper printout, microfiche, CD-ROM, or other electronic file of the input data and identification to the computer, computer codes, and versions used, or provide alternate documentation to uniquely and clearly identify the exact coding and execution process.

Checker Name	Signature	Date
Ryan Lang		4/22/20

Columbia Energy
AND ENVIRONMENTAL SERVICES

Calculation No.:	RPP-CALC-63213	Project No.	2018719
Calculation Title:	ASME B31.3 Analyses of the 41 to 5 and 43 to 13A Jumpers for the 242-A Evaporator Pump Room	Project Title:	242-A Evaporator Slurry Line Replacement

Revision	0		1		2	
Originator	James Harrington Jim Harrington	04/22/2020 Date	Name	Date	Name	Date
Checker	Ryan Lang	04/22/2020 Date	Name	Date	Name	Date
Project Manager	Ralph Dunham	4/20/20 Date	Name	Date	Name	Date

ATTACHMENTS

Attachment No.	Title	No. of Pages
	N/A	

AFFECTED DOCUMENTS

Document No.	Document Title	Revision No.
	N/A	

RECORD OF REVISION

Revision No.	Description of Revision
0	Initial Release

TABLE OF CONTENTS

1.0 INTRODUCTION 1
2.0 OBJECTIVE/PURPOSE 1
3.0 SUMMARY OF RESULTS AND CONCLUSIONS 1
4.0 INPUT DATA 2
5.0 ENABLING ASSUMPTIONS 4
6.0 METHOD OF ANALYSIS 5
6.1 WEIGHT AND CENTER OF GRAVITY 5
6.2 WATER HAMMER ANALYSIS 5
6.2.1 Jumper Stability Check 6
6.2.2 Jumper Dead Weight Piping Stress 6
6.2.3 Column Separation Analysis 6
6.2.4 Fluid Momentum Loads 6
6.3 OVER-PRESSURIZATION ANALYSIS 6
6.4 SEISMIC MULTIPLIERS 7
6.5 PIPING ANALYSIS 7
6.6 WELD ANALYSES 8
6.7 REACTIONS ON PUREX CONNECTIONS 8
7.0 USE OF COMPUTER SOFTWARE 8
7.1 BENTLEY AUTOPIPE 8
7.2 MATHCAD 9
8.0 RESULTS 9
8.1 JUMPER WEIGHT AND CENTER OF GRAVITY 9
8.2 WATER HAMMER 9
8.2.1 Stability Check 9
8.2.2 Static Bending Stress 9
8.2.3 Fluid Momentum Loads 10
8.3 OVER-PRESSURIZATION 10
8.4 SEISMIC MULTIPLIER RESULTS 10
8.5 ASME B31.3 PIPING RESULTS 10
8.6 WELD RESULTS 10
8.7 PUREX CONNECTOR RESULTS 11
9.0 CONCLUSIONS 11
10.0 RECOMMENDATIONS 11
11.0 REFERENCES 11

LIST OF TABLES

Table 1. Calculation Organization. 1
Table 2. Jumper Components. 2
Table 3. PUREX Connector Stiffness. 7
Table 4. AutoPIPE Stress Summary. 10
Table 5. Connector Reaction Forces – RPP-8359 Coordinate System. 11

LIST OF APPENDICES

A MARKED UP PIPING AND INSTRUMENTATION DIAGRAM ..... A-i
B 242-A EVAPORATOR JUMPER ARRANGEMENT ..... B-i
C 242-A EVAPORATOR JUMPER ISOMETRIC ..... C-i
D1 242-A EVAPORATOR JUMPER WEIGHT AND CENTER OF GRAVITY D1-i
D2 AUTOPIPE ANALYSIS – STABILITY CHECK D2-i
D3 AUTOPIPE ANALYSIS – DEAD WEIGHT STRESS D3-i
D4 AUTOPIPE ANALYSIS – THERMAL CONTRACTION D4-i
D5 AUTOPIPE ANALYSIS – SUSTAINED AND OCCASIONAL SEISMIC D5-i
E **NOT USED** ..... E-i
F **NOT USED** ..... F-i
G1 FLUID MOMENTUM LOADS AT PUMP STARTUP G1-i
G2 CALCULATION OF SEISMIC MULTIPLIERS G2-i
H1 PIPING TO C-CHANNEL WELD ANALYSIS H1-i
H2 LIFTING BAIL WELD ANALYSIS H2-i
I1 PUREX CONNECTOR REACTION FORCES AND MOMENTS I1-i
I2 MINIMUM HYDROSTATIC TEST PRESSURE I2-i

LIST OF TERMS

Abbreviations and Acronyms

Columbia Energy	Columbia Energy and Environmental Services, Inc.
DST	double-shell tank
PUREX	plutonium-uranium extraction
SAC	specific administrative control
V&V	verification and validation
VI	vendor information

Units

”	inch
%	percent
°F	degrees Fahrenheit
deg	degree
ft	foot
g	gravitational force
gpm	gallons per minute
hp	horse power
in.	inch
ksi	kips per square inch
lb	pound
ml	milliliter
psi	pounds per square inch
psig	pounds per square inch gauge
rpm	revolutions per minute

1.0 INTRODUCTION

Future waste transfers in and out of the 242-A Evaporator are required to support near-term evaporator campaigns to allow for the reduction in total tank waste volume stored in the double-shell tanks (DST). Existing slurry line SL-167 failed a pneumatic pressure test in 2018 and requires replacement. Visual inspection of the back-up slurry line SL-168 revealed more corrosion than observed on SL-167 so SL-168 will require replacement as well. To ensure long-term success of the evaporator, a replacement feed line will also be installed. In support of the new transfer lines and waste routing, the replacement of the 242-A Evaporator jumpers is required.

2.0 OBJECTIVE/PURPOSE

Two new jumpers have been designed for installation in the 242-A Evaporator pump room (242-A Evaporator pump room) to route waste through the new supernate line SN-275 and the new slurry line SL-170. Additional analyses for the jumper replacement are documented in RPP-CALC-63214, *242-A Evaporator Pump Room Jumpers Supporting Analyses*.

Compliance of the replacement jumpers with TFC-ENG-STD-22, "Piping, Jumpers and Valves," and RPP-RPT-58773, *Assessment of Safety Significant Piping Jumpers to Assure Excess Load Capacity for Potential Water Hammer (Leak Check and Flush) Events*, is demonstrated in RPP-SPEC-63237, *242-A Evaporator Pump Room Design Requirements Compliance Matrix for the 41 to 5 and 43 to 13A Jumper Assemblies*.

This calculation document demonstrates design compliance with TFC-ENG-DESIGN-C-60, "Preparation of Piping Analysis for Waste Transfer Systems," and ASME B31.3, *Process Piping*, for the new jumper assemblies shown in H-14-111834, *Jumper Assembly 41 to 5 242-A Evaporator Pump Room*, and H-14-111835, *Jumper Assembly 43 to 13A 242-A Evaporator Pump Room.*

3.0 SUMMARY OF RESULTS AND CONCLUSIONS

This document compiles the calculations and analyses to demonstrate compliance with TFC-ENG-DESIGN-C-60 and ASME B31.3. Table 1 shows how this calculation is organized.

Table 1. Calculation Organization. (2 sheets)

Location	Title
Appendix A	Marked Up Piping and Instrumentation Diagram
Appendix B	242-A Evaporator Jumper Arrangement
Appendix C	242-A Evaporator Jumper Isometrics
Appendix D1	242-A Evaporator Weight and Center of Gravity Isometric and Nodes - Bentley AutoPIPE Piping Model - Bentley AutoPIPE
Appendix D2	AutoPIPE Analysis – Stability Check Isometric and Nodes and Stress - Bentley AutoPIPE (G + E, 60°F) Piping Model - Bentley AutoPIPE (G + E, 60°F)

Table 1. Calculation Organization. (2 sheets)

Location	Title
Appendix D3	AutoPIPE Analysis – Dead Weight Stress Isometric, Nodes and Stress - Bentley AutoPIPE (G, 60°F) Piping Model - Bentley AutoPIPE (G, 60°F)
Appendix D4	AutoPIPE Analysis – Thermal Contraction Isometric, Nodes and Stress - Bentley AutoPIPE (G+T, 80°F to -25°F) Piping Model - Bentley AutoPIPE, PUREX (G+T, 80°F to -25°F)
Appendix D5	AutoPIPE Analysis – Sustained & Occasional Seismic Isometric, Nodes and Stress - Bentley AutoPIPE (G+T+P+E, 60°F to 200°F) Piping Model - Bentley AutoPIPE, (G+T+P+E, 60°F to 200°F)
Appendix E	Not used
Appendix F	Not used
Appendix G1	Fluid Momentum Loads at Pump Startup
Appendix G2	Calculation of Seismic Multipliers
Appendix H1	Piping to C-Channel Weld Analysis
Appendix H2	Lifting Bail Weld Analysis
Appendix I1	PUREX Connector Reaction Forces and Moments
Appendix I2	Minimum Hydrostatic Test Pressure

4.0 INPUT DATA

The 242-A Evaporator pump room jumper assemblies 41 to 5 and 43 to 13A are designed in compliance with ASME B31.3. Table 2 lists the ASME B31.3-compliant components.

Table 2. Jumper Components.

Piping Components	Listed or Unlisted	ASME Standard or Unlisted Component Evaluation	Material	ASME B31.3 Section 345.4.2 Test Pressure (See Appendix I2)
Pipe	Listed	ASME B36.19	ASTM A312, TP 304L	600 psig
Fittings	Listed	ASME B16.9	ASTM A403, WP 304L	600 psig
2-inch PUREX Connectors	Unlisted	RPP-RPT-36800	ASTM A276, Type 304L	600 psig
3-inch PUREX Connectors	Unlisted	RPP-RPT-29063	ASTM A276, Type 304L	600 psig

The design inputs used throughout the analyses are as follows:

- Maximum head, at dead-head for AW-02E feed pump is 200 ft (Appendix G1)
- Maximum flow rate at run-out for AW-02E feed pump is 285.6 gpm (Appendix G1)
- Slurry pump P-B-2 discharge pressure is limited to ≤ 275 psig by a safety-significant pressure relief valve PSV-PB2-1 (HNF-14755, Section 4.4.6.3)

- Jumpers shall be analyzed for Natural Phenomena Design Category NDC-2, Seismic Design Category SDC-2, Limit State C (MT-50400, *Modification Traveler for the 242-A Evaporator Waste Transfer Line Replacement*)
- Importance factor is 1.5 (TFC-ENG-STD-06, Section 3.5.5.1)
- Response spectra horizontal S_{DS} is 0.588 (TFC-ENG-STD-06, Section 3.5.5.2)
- Component amplification factor A_p is 2.5 (ASCE/SEI 7-10, *Minimum Design Loads for Buildings and Other Structures*, Table 13.6-1, Welded piping in accordance with ASME B31)
- Component response modification factor R_p is 6 (TFC-ENG-DESIGN-C-60, Waiver #284)
- Seismic design category D shall be used (TFC-ENG-STD-06, Section 3.5.5.2)
- Soil site class C shall be used (TFC-ENG-STD-06, Section 3.5.5.2)
- Design pressure is 400 psig (TFC-ENG-STD-22, Section 3.2.3 3)
- Design temperature is 200 °F (TFC-ENG-STD-22, Section 3.2.3 3)
- Piping is installed within a covered concrete structure; therefore, wind and snow loads are neglected
- Minimum ambient temperature is -25 °F (TFC-ENG-STD-02, Section 3.1.1, and TFC-ENG-STD-06, Section 3.5.9)
- An ambient temperature of 60 °F is used for thermal expansion (TFC-ENG-DESIGN-C-60, Table 2(a))
- An ambient temperature of 80 °F is used for thermal contraction (TFC-ENG-DESIGN-C-60, Table 2(a))
- Service life is 25 years (MT-50400)
- Corrosion is 0.005 in. based on a 25-year service life (0.2 mils per year, TFC-ENG-STD-22, Section 3.5.2.1)
- Specific gravity of process fluid 1.60 (MT-50400, Table 2 and HNF-14755, *242-A Evaporator Documented Safety Analysis*)
- The outside diameter of 2-in., schedule 40 pipe is 2.375 in. and the wall thickness is 0.154 in. (ASTM A312/A312M-13a, *Standard Specification for Seamless, Welded, and Heavily Cold Worked Austenitic Stainless Steel Pipes*, Table X1.1)
- The outside diameter of 3-in., schedule 40 pipe is 3.5 in. and the wall thickness is 0.216 in. (ASTM A312/A312M-13a, Table X1.1)
- Weld filler material has an ultimate tensile strength of 70 ksi (AWS D1.6/D1.6M, *Structural Welding Code—Stainless Steel*)
- Weld filler material has allowable strength of 0.3*UTS = 21 ksi per Table 2.1 of AWS D1.6/D1.6M
- 304L stainless steel has a minimum yield strength of 25 ksi per ASTM A312/A312M-13a
- Stainless steel base metal has allowable strength of $0.4*F_Y$ = 10 ksi per Table 2.1 of AWS D1.6/D1.6M

- Forces and moments used in the weld analysis are taken from the results of the AutoPIPE® analysis
- The forces and moments used in the plutonium-uranium extraction (PUREX) connector analysis are taken from the results of the AutoPIPE analysis.

5.0 ENABLING ASSUMPTIONS

The piping within the 242-A Evaporator pump room is connected to the DST waste transfer system via wall nozzles and transfer lines. Operating procedures generated in accordance with TFC-OPS-OPER-C-49, "Development of Waste Retrieval and Transfer Operating Procedures," precludes manipulation of valves during waste transfers that could initiate a fluid transient (i.e., water hammer). This analysis assumes that future operating procedures for waste transfers to/from 242-A Evaporator pump room will be prepared in accordance with TFC-OPS-OPER-C-49, and no valves (with the exception of the AW-02E flow control valve FCV-160 and 242-A Evaporator valve HV-CA1-1 as discussed in Section 6.2 of this analysis) will be manipulated during the waste transfers. Therefore, no water hammer analyses for waste transfers into or out of the 242-A Evaporator pump room pit have been performed. As part of transfers and compliance with RPP-13033, *Tank Farm Documented Safety Analysis*, technical evaluations were performed to satisfy specific administrative control (SAC) 5.8.5, "Waste Transfer System Overpressure and Flow Transient Protection" (RPP-TE-57104, *SAC 5.8.5, DID 23, and DID 29 Evaluation for 242-A Operations using Tank Farm Waste Transfer Piping* and RPP-TE-58318, *Tank Farm Waste Transfer Overpressure Implementation Document*), to ensure that the equipment is to be operated within its design capacity.

Transfer line flushes and in-service leak checks may be performed that would manipulate valves upstream, or downstream of the 242-A Evaporator pump room piping and potentially initiate a fluid transient. Transients from transfer line flushes and leak checks have been evaluated for the DST transfer system in RPP-RPT-58773. This report concludes that transient analysis is not required so long as the prerequisite conditions are met:

- Flow rate and pressure within the waste transfer route are maintained at less than or equal to 40 gpm and 105 psig during system leak checks and flushes prior to closure of any valve.
- Flush water is provided from the service water building through the AP valve pit or the AN water supply. With these sources, no route-specific analysis is required for evaluation of water hammer loading on the safety-significant piping. Note that any modifications to the supply piping configuration from the AP service water building or the AN water supply may affect the conclusions of this analysis and would require evaluation. When flow rate is controlled as noted above, the installed waste transfer piping and jumpers have sufficient design margin that any postulated fast valve closure water hammer load can be accommodated without exceeding the ASME B31.3 code occasional load limits. This conclusion is limited to 2 in. and 3 in. Schedule 40 or higher piping installed throughout the existing tank farms. It does not apply to lower schedule or larger diameter piping that was not part of the evaluation.

® AutoPIPE is a registered trademark of Bentley Systems, Inc.

- New jumper designs will not require specific water hammer loading analysis for leak checks and flushes if simple supplemental rules are implemented to provide robust piping designs.

This analysis assumes the first two prerequisites will be controlled by the applicable work package(s) or procedure(s). Demonstration that the supplemental requirements contained in RPP-RPT-58773 have been met are documented in RPP-SPEC-63237. Transfer line flushes from the 242-A Evaporator are currently performed by filling the C-A-1 vessel with raw water and gravity draining to the feed and/or receiver tank through their respective transfer lines. The new transfer lines do not change the hydraulics of the transfer system to invalidate previous SAC 5.8.5 conclusions. Therefore, no water hammer analysis for transfer line flushes for in-service leak checks for the 242-A Evaporator pump room piping has been performed. The SAC 5.8.5 technical evaluation will require that these assumptions are integrated with the operating procedure/work control document to ensure the equipment it operated within the bounds of this analysis.

6.0 METHOD OF ANALYSIS

Multiple analyses are included in this document to demonstrate compliance with TFC-ENG-DESIGN-C-60 and ASME B31.3, as described in the following sections.

6.1 WEIGHT AND CENTER OF GRAVITY

A model of the individual jumper assemblies 41 to 5 and 43 to 13A and associated dunnage were constructed in the solid modeling software to determine the weight and center of gravity. These data were used to locate the lifting bail, provide input to the piping analysis and weld analyses. The final jumper weight and center of gravity will be determined during fabrication per the general notes on drawings H-14-111834 and H-14-111835.

6.2 WATER HAMMER ANALYSIS

There are two valves that may be manipulated during a waste transfer from the AW-02E pit to the 242-A Evaporator, FCV-160 and HV-CA1-1. Valves FCV-160 and HV-CA1-1 are evaluated against the screening criteria for valve operation transient in accordance with TFC-ENG-DESIGN-C-60 by hand calculation (RPP-CALC-63435, Appendix G3). Manipulation of other valves that could cause a flow disturbance is controlled by operating procedures generated via TFC-OPS-OPER-C-49 that do not close valves to dead head a pump during a waste transfer. The only events with valve closures are flushes and in-service leak checks. Valves will be manipulated during the in-service leak check to pressurize the piping system and perform a visual inspection for leaks in the 242-A Evaporator pump room jumper connections.

Per TFC-ENG-DESIGN-C-60, a specific water hammer analysis is bound by the analyses performed in RPP-RPT-58773 so long as all the requirements and prerequisite conditions listed in Appendix D of RPP-RPT-58773 are satisfied. The prerequisite conditions focus on the regulated flow rate of service water as well as the source of the service water. Demonstration that the supplemental requirements contained in RPP-RPT-58773 have been met are documented in RPP-SPEC-63237.

6.2.1 Jumper Stability Check

To satisfy the requirements of RPP-RPT-58773, Appendix D, requirement D5, a static load of 1 g value was applied in each of the three orthogonal directions in the AutoPIPE model (Appendix D2). Model convergence with a 1 g load is required to demonstrate stability of the jumper.

6.2.2 Jumper Dead Weight Piping Stress

To satisfy the requirements of RPP-RPT-58773, Appendix D, requirement D1, the stress-induced by the dead weight of the piping and dunnage shall not exceed 3,000 psi. A model of the piping was constructed in AutoPIPE (Appendix D3) to determine the maximum jumper stress from dead weight of the piping and dunnage.

6.2.3 Column Separation Analysis

The Documented Safety Analysis (RPP-13033) requires an evaluation via SAC 5.8.5 for the screening of over-pressurization of the safety-significant portions of the waste transfer system prior to operation. Existing evaluation (e.g., RPP-TE-57104) has documented that rapid valve closure during waste transfers does not occur or controls are in place to mitigate flow transients due to valve closure. This evaluation also screens for other types of transient initiators including high point column separation, plug flow, etc. The new transfer lines do not change the hydraulics of the transfer system to invalidate previous SAC 5.8.5 conclusions. The new jumper arrangement in AW-02E still provides the same controls (i.e., travel stops on AW02E-WT-FCV-160) to mitigate high point column separation on the feed line. Engineering controls in the 242-A pump room (i.e., vacuum breaker) are not impacted by this project for the mitigation of column separation only the slurry line. The safety-significant vacuum breaker, PSV-CA1-4, is installed in the pump room jumper C to 4-40 and protects the downstream piping from pressure transients from a column separation. Based on the similar nature of the piping configurations, the implementation of the same controls, it is not anticipated that future SAC 5.8.5 evaluations will restrict their use above current operational practices.

6.2.4 Fluid Momentum Loads

Fluid momentum loads from a transfer line flush, pump startup, and pump shutdown are evaluated in Appendix G1. The highest loads occur at pump startup and are conservatively calculated in accordance with TFC-ENG-DESIGN-C-60 by hand calculation, assuming an instantaneous pump start at the maximum flow rate.

6.3 OVER-PRESSURIZATION ANALYSIS

Over-pressurization of the 242-A Evaporator pump room supernate jumper (43 to 13A) was evaluated for pressures resulting from deadhead of the new AW-02E feed pump at with the maximum possible specific gravity waste. The resultant pressure is compared to the design pressure of the 242-A Evaporator pump room piping and immediately connected transfer line SN-275. The 242-A Evaporator slurry jumper (41 to 5) and immediately connected transfer line SL-170 are protected by a safety significant pressure relief valve PSV-PB2-1, which limits the pressure to 275 psi (HNF-14755, Section 4.4.6.3).

6.4 SEISMIC MULTIPLIERS

ASME B31.3 requires earthquake loads to be taken into account using methods described in ASCE/SEI 7-10. AutoPIPE requires a seismic multiplier as an input to analyze occasional seismic loads. Horizontal and vertical seismic multipliers were determined in accordance with TFC-ENG-STD-06 to SDC-2 criteria using hand calculation methods (Appendix G2).

6.5 PIPING ANALYSIS

Five models analyses were completed in Bentley AutoPIPE Nuclear for various loading conditions (Appendices D1 through D5). The models were created from drawings H-14-111834 and H-14-111835. The jumper weights and center of gravity models were used to determine the jumper weight, center of gravity, and the forces and moments on the welded connections during installation. Appendix D1 contains a graphic of the model, with nodes, the model inputs and outputs.

The remaining four models analyze various loading conditions after the jumpers are installed:

- Appendix D2 – Stability Check
- Appendix D3 – Dead Weight Stress
- Appendix D4 – Thermal Contraction
- Appendix D5 – Sustained and Occasional Seismic.

For all of the models, the stiffness factors shown in Table 3 at the PUREX connectors were applied.

Table 3. PUREX Connector Stiffness.

Connector Size	Kux (lb/in.)	Kuy (lb/in.)	Kuz (lb/in.)	Krotx (ft-lb/deg)	Kroty (ft-lb/deg)	Krotz (ft-lb/deg)
2-inch	1.35E+07	2.78E+04	2.78E+04	107	659	659
3-inch	1.9E+07	2.47E+04	2.47E+04	148	1332	1332

The connector stiffness values were taken from Table 3.5 of WHC-SD-W236A-DA-002, *Analysis of 2-, 3-, and 4in. ISB Jumper Connectors Under Operational and Seismic Loading Conditions*, as required by TFC-ENG-DESIGN-C-60, and applied to the model in the appropriate respective coordinate system.

The jumper stability model (Appendix D2) includes a 1 g seismic load in three orthogonal directions. This model is required to demonstrate jumper stability and satisfy the requirements of RPP-RPT-58773, Appendix D, requirement D5 (see also Section 6.2.1).

The dead weight bending model (Appendix D3) determines the stress resulting from dead weight only. The dead weight model includes the weight of the attached dunnage. This model is required to determine static stress and satisfy the requirements of RPP-RPT-58773, Appendix D, requirement D1 (see also Section 6.2.2)

The thermal contraction model (Appendix D4) represents a non-operating condition, where the temperature within the 242-A Evaporator pump room is not controlled. The thermal contraction

models empty jumpers (no liquid contents or pressure) and determines the stress resulting from thermal contraction from 80 °F to -25 °F.

The sustained and occasional seismic model (Appendix D5) includes thermal expansion (60 °F to 200 °F), sustained (dead weight and 400 psig), and occasional seismic loads. The seismic multipliers are calculated in Appendix G2 of this calculation. Seismic loads were applied in eight directions; four horizontal directions each with positive and negative vertical seismic loading.

6.6 WELD ANALYSES

The loads on the welded connections were determined in Bentley AutoPIPE (Appendices D1 and D5). For the lifting analysis of the welds attaching the lifting bails to the dunnage, the forces and moments were taken from Appendix D1. In accordance with RPP-8360, *Lifting Attachment and Lifted Item Evaluation*, Section 6.3.3, a 5% contingency was added to the jumper weight to account for uncertainty and 25% added to account for dynamic loads during hoisting and rigging.

For the welded attachment between the dunnage and piping, the highest forces and moments were used (Appendix D5) regardless of the associated load case (e.g., Fx from thermal and Fy from seismic). Analysis in this method produces conservative results.

The weld analyses are performed using the Blodgett (1976), *Design of Weldments*, weld-as-a-line method and hand calculations on the connection between the piping and dunnage (Appendix H1) and between the lift bail and dunnage (Appendix H2). The weld analyses are performed using allowable stresses per AWS D1.6/D1.6M, Table 2.1, for stainless steel.

6.7 REACTIONS ON PUREX CONNECTIONS

The loads on the PUREX connections were determined in Bentley AutoPIPE in Appendix I. Reaction forces and moments on the PUREX connectors were taken from Appendix D5. The calculated loads were compared to the allowable loads reported in RPP-8359, *Analysis of 3-inch by 3-inch PUREX Type Jumper Connector*; RPP-RPT-29063, *Qualification of 3-in. PUREX Connector to ASME B31.3* and RPP-RPT-36800, *Qualification of 2-in. PUREX Connector to ASME B31.3*.

7.0 USE OF COMPUTER SOFTWARE

7.1 BENTLEY AUTOPIPE

Bentley AutoPIPE Nuclear Version 12.00.00.16 was used to complete the ASME B31.3 analysis of the 242-A Evaporator pump room jumpers. The analysis was performed on Columbia Energy and Environmental Services, Inc. (Columbia Energy) desktop computer number CE-IT-10112. The validation acceptance test set for AutoPIPE Nuclear Version 12.00.00.16 was completed on computer CE-IT-10112 on May 27, 2019, and is documented in CEES-CALC-GEN-M-028, *Verification & Validation of Bentley AutoPIPE Nuclear Version 12.00.00.16*. The verification and validation (V&V) for AutoPIPE was completed on May 29, 2019, and is documented in Columbia Energy V&V report CEES-SVVR-19-003, *Bentley AutoPIPE Nuclear COTS Software V&V Report*.

7.2 MATHCAD

MathCAD® Version 15.0 computer software is used to display and format the PUREX nozzle analyses (Appendix I1) and weld analyses (Appendices H1 and H2). All MathCAD computations are checked with a handheld calculator.

8.0 RESULTS

8.1 JUMPER WEIGHT AND CENTER OF GRAVITY

The weights and center of gravities were calculated using AutoPIPE (Appendix D1). The dry weight of the 41 to 5 jumper assembly was calculated to be 135 lb. The center of gravity was used to locate the lifting bail as shown on H-14-111834. The dry weight of the 43 to 13A jumper assembly was calculated to be 183 lb. The center of gravity was used to locate the lifting bail as shown on H-14-111835.

8.2 WATER HAMMER

Per TFC-ENG-DESIGN-C-60, a specific water hammer analysis is bound by the analyses performed in RPP-RPT-58773 so long as the all of the requirements of RPP-RPT-58773, Appendix D, are satisfied. Demonstration that the supplemental requirements contained RPP-RPT-58773 have been met are documented in RPP-SPEC-63237.

8.2.1 Stability Check

In accordance with RPP-RPT-58773, Appendix D, requirement D5, a stability check was performed on the 242-A Evaporator pump room jumpers as documented in Appendix D2. A load equivalent to the weight of the jumper assembly (1 g) was applied in three orthogonal directions simultaneously to verify model convergence. There are no specific requirements for maximum stress under this loading condition per RPP-RPT-58773; stress values are reported to demonstrate model convergence only. The piping model passed the stability check.

8.2.2 Static Bending Stress

In accordance with RPP-RPT-58773, the bending stress caused by the dead weight of the jumpers was performed on the 242-A Evaporator pump room jumpers as documented in Appendix D3. The requirement in RPP-RPT-58773 states:

> Bending stress in the pipe jumper due to system weight alone, excluding pressure stress, should be 2300 psi or less. In some cases bending stresses due to weight may exceed 2300 psi, but shall be no greater than 3000 psi.

Maximum stress due to dead weight in the 41 to 5 jumper was calculated to be 1,326 psi and occurred at node A06, at the lift bail dunnage attachment point. Maximum stress due to dead weight in the 43 to 13A jumper was calculated to be 514 psi and occurred at node B07 F at the bend near connector 43.

® MathCAD is a registered trademark of Parametric Technologies Corporation Inc.

8.2.3 Fluid Momentum Loads

Fluid momentum loads from a transfer line flush, pump startup, and pump shutdown are evaluated in Appendix G1. The highest loads occur at pump startup and are conservatively calculated in accordance with TFC-ENG-DESIGN-C-60 by hand calculation, assuming an instantaneous pump start at the maximum flow rate and specific gravity. The resulting force from an instantaneous pump start bounds a line flush (limited to 40 gpm, per Table 3, requirement D10b) and pump shutdown. The maximum theoretical force has been conservatively calculated to be 25 lb. This force is small and bounded by the seismic analyses (Appendix D5).

8.3 OVER-PRESSURIZATION

The maximum pressure in the 242-A Evaporator pump room slurry piping is controlled by safety-significant pressure relief valve PSV-PB2-1 which limits the pressure to 275 psig; less than the 400 psig design pressure of the slurry piping. The maximum pressure in the supernate piping will occur when the AW-02E feed pump is dead headed. The pump dead head as tested with water was found to be 87 psig (Appendix G1, $200ft \div 2.31\frac{ft}{psi} = 87psi$). At a maximum specific gravity of 1.6 g/ml, the maximum installed pressure will be 139 psig (87 × 1.6); less than the 400 psig design pressure of the supernate piping. No over-pressure protection is required for installation of the new 242-A Evaporator jumpers.

8.4 SEISMIC MULTIPLIER RESULTS

The seismic multipliers are determined in Appendix G2 in accordance with TFC-ENG-STD-06 and ASCE/SEI 7-10, Chapter 13. The seismic multipliers are calculated to be 0.186 in the horizontal direction and 0.083 in the vertical direction. The seismic multipliers are used as inputs to the AutoPIPE model in Appendix D5.

8.5 ASME B31.3 PIPING RESULTS

The maximum stresses in the jumper results from thermal expansion (displacement stress) having a stress ratio of 0.27 relative to code allowable maximum stress as shown in Table 4. The jumper designs comply with ASME B31.3 (see Appendix D5).

Table 4. AutoPIPE Stress Summary.

Stress Type	Point	Stress (psi)	Allowable Stress (psi)	Ratio	Load Combination
Sustained	A09 F	2,993	16,700	0.18	GR+Max P
Displacement	B08 F	6,818	25,050	0.27	Max Range
Occasional	A06	3,531	22,211	0.16	Sus+E3
Hoop	B06 F	3,644	16,700	0.22	Max P

8.6 WELD RESULTS

The welds between the piping and c-channel are adequate as designed for hoisting and operating loads. The welded attachment of the piping to dunnage on the 41 to 5 jumper has a minimum

design ratio of 20.83. The welded attachment of the piping to dunnage on the 43 to 13A jumper has a minimum design ratio of 46.88. See Appendix H1.

The welds between the lifting bail and c-channel are adequate as designed. The jumper assemblies utilizes lifting bail, Item 6 listed on drawing H-2-90161, *Standard Rigid Lifting Bails.* The lifting bail has a lifting capacity of 340 lb. The 41 to 5 jumper design lifting weight is 177 lb. The 242A-WT-J-[41 to 5] lifting bail has a design margin of 1.92 and the lift bail weld has a design ratio of 59.86 relative to the weight of the jumper. The 43 to 13A jumper design lifting weight is 240 lb. The 242A-WT-J-[43 to 13A] lifting bail has a design margin of 1.42 and the lift bail weld has a design ratio of 44.16 relative to the weight of the jumper. See Appendix H2.

8.7 PUREX CONNECTOR RESULTS

The highest loading on the PUREX connections are displayed in Table 5 and occur from sustained and seismically induced stresses. The loading on the PUREX connectors is within allowable to maintain leak integrity. The maximum loading on the 3-inch connector is 9% of the allowable loading and occurs on connector 43 in the 242A-WT-J-[43 to 13A] jumper (GT1P1). The maximum force and moment on a 2-inch connector is 102 pounds at connector 5 and 86 foot-pounds at connector 5 in the 242A-WT-J-[41 to 5] jumper (GE7). See Appendix I1.

Table 5. Connector Reaction Forces – RPP-8359 Coordinate System.

Location	Point	Fx (lb)	Fy (lb)	Fz (lb)	Mx (ft-lb)	My (ft-lb)	Mz (ft-lb)
Connector 41	A13	-31	-84	-26	-73	2	49
Connector 5	A14	25	-14	-102	86	4	21
Connector 43	B00	-419	-491	12	12	-3	-49
Connector 13A	B13	268	-285	328	-38	0	21

9.0 CONCLUSIONS

This analysis in conjunction with RPP-CALC-63214 and RPP-SPEC-63237 shows the installation of jumpers 242A-WT-J-[41 to 5] (H-14-111834) and 242A-WT-J-[43 to 13A] (H-14-111835) complies with the requirements of ASME B31.3, TFC-ENG-DESIGN-C-60, and TFC-ENG-STD-22, and are within code allowable stresses for forces applied by gravity, thermal expansion, internal pressure, seismic, and impact loads.

10.0 RECOMMENDATIONS

None.

11.0 REFERENCES

ASCE/SEI 7-10, 2010, *Minimum Design Loads for Buildings and Other Structures,* American Society of Civil Engineers, Reston, Virginia.

ASME B16.9, 2018, *Factory-Made Wrought Buttwelding Fittings*, American Society of Mechanical Engineers, New York, New York.

ASME B31.3, 2016, *Process Piping*, American Society of Mechanical Engineers, New York, New York.

ASTM A312/A312M-13a, 2016, *Standard Specification for Seamless, Welded, and Heavily Cold Worked Austenitic Stainless Steel Pipes*, ASTM International, West Conshohocken, Pennsylvania.

AWS D1.6/D1.6M, 2017, *Structural Welding Code—Stainless Steel*, American Welding Society, Miami, Florida.

Blodgett, O.W., 1976, *Design of Weldments*, Eighth Printing, August, The James F. Lincoln Arc Welding Foundation, Cleveland, Ohio.

CEES-CALC-GEN-M-028, 2019, *Verification & Validation of Bentley AutoPIPE Nuclear Version 12.00.00.16*, Rev. 0, Columbia Energy and Environmental Services, Inc., Richland, Washington.

CEES-SVVR-19-003, 2019, *Bentley AutoPIPE Nuclear COTS Software V&V Report*, Columbia Energy and Environmental Services, Inc., Richland, Washington.

H-2-90161, 2018, *Standard Rigid Lifting Bails*, Sheet 1, Rev. 06, U.S. Department of Energy, Office of River Protection, Richland, Washington.

H-14-111834, 2020, *Jumper Assembly 41 to 5 242-A Evaporator Pump Room*, Sheets 1-2, Rev. 0, U.S. Department of Energy, Office of River Protection, Richland, Washington.

H-14-111835, 2020, *Jumper Assembly 43 to 13A 242-A Evaporator Pump Room*, Sheets 1-2, Rev. 0, U.S. Department of Energy, Office of River Protection, Richland, Washington.

HNF-14755, 2019, *242-A Evaporator Documented Safety Analysis*, Rev. 06F, Washington River Protection Solutions, LLC, Richland, Washington.

MT-50400, 2020, *242-A Evaporator Waste Transfer Line Replacement*, Rev. 01, Washington River Protection Solutions, LLC, Richland, Washington.

RPP-13033, 2019, *Tank Farm Documented Safety Analysis*, Rev. 07P, Washington River Protection Solutions, LLC, Richland, Washington.

RPP-8359, 2013, *Analysis of 3-inch by 3-inch PUREX Type Jumper Connector*, Rev. 00A, CH2M Hill Hanford Group, Inc., Richland, Washington.

RPP-8360, 2017, *Lifting Attachment and Lifted Item Evaluation*, Rev. 06, Washington River Protection Solutions, LLC, Richland, Washington.

RPP-CALC-63214, 2020, *242-A Evaporator Pump Room Jumpers Supporting Analyses*, Rev. 0, Washington River Protection Solutions, LLC, Richland, Washington.

RPP-CALC-63435, 2020, *ASME B31.3 Analyses of the (G)-(H)-J-PUMP, D-H and F-G Jumpers for the 241-AW-02E Feed Pump Pit*, Rev. 0, Washington River Protection Solutions, LLC, Richland, Washington.

RPP-RPT-29063, 2012, *Qualification of 3-in. PUREX Connector to ASME B31.3*, Rev. 1, Washington River Protection Solutions, LLC, Richland, Washington.

RPP-RPT-36800, 2011, *Qualification of 2-in. PUREX Connector to ASME B31.3*, Rev. 2, Washington River Protection Solutions, LLC, Richland, Washington.

RPP-RPT-58773, 2018, *Assessment of Safety Significant Piping Jumpers to Assure Excess Load Capacity for Potential Water Hammer (Leak Check and Flush) Events*, Rev. 2, Washington River Protection Solutions, LLC, Richland, Washington.

RPP-SPEC-63237, 2020, *242-A Evaporator Pump Room Design Requirements Compliance Matrix for the 41 to 5 and 43 to 13A Jumper Assemblies*, Rev. 0, Washington River Protection Solutions, LLC, Richland, Washington.

RPP-TE-57104, 2019, *SAC 5.8.5, DID 23, and DID 29 Evaluation for 242-A Operations using Tank Farm Waste Transfer Piping*, Rev. 06, Washington River Protection Solutions, LLC, Richland, Washington.

RPP-TE-58318, 2019, *Tank Farm Waste Transfer Overpressure Implementation Document*, Rev. 08, Washington River Protection Solutions, LLC, Richland, Washington.

TFC-ENG-DESIGN-C-60, 2020, "Preparation of Piping Analyses for Waste Transfer Systems," Rev. A-3, Washington River Protection Solutions, LLC, Richland, Washington.

TFC-ENG-STD-06, 2018, "Design Loads for Tank Farm Facilities," Rev. D-1, Washington River Protection Solutions, LLC, Richland, Washington.

TFC-ENG-STD-22, 2017, "Piping, Jumpers and Valves," Rev. G-2, Washington River Protection Solutions, LLC, Richland, Washington.

TFC-OPS-OPER-C-49, 2019, "Development of Waste Retrieval and Transfer Operating Procedures (Including Water and Chemical Additions)," Rev. C-10, Washington River Protection Solutions, LLC, Richland, Washington.

WHC-SD-W236A-DA-002, 1995, *Analysis of 2-,3-, and 4-in. ISB Jumper Connectors Under Operational and Seismic Loading Conditions*, Rev. 0, ICF Kaiser Hanford Company, Richland, Washington.

APPENDIX A

MARKED UP PIPING AND INSTRUMENTATION DIAGRAM

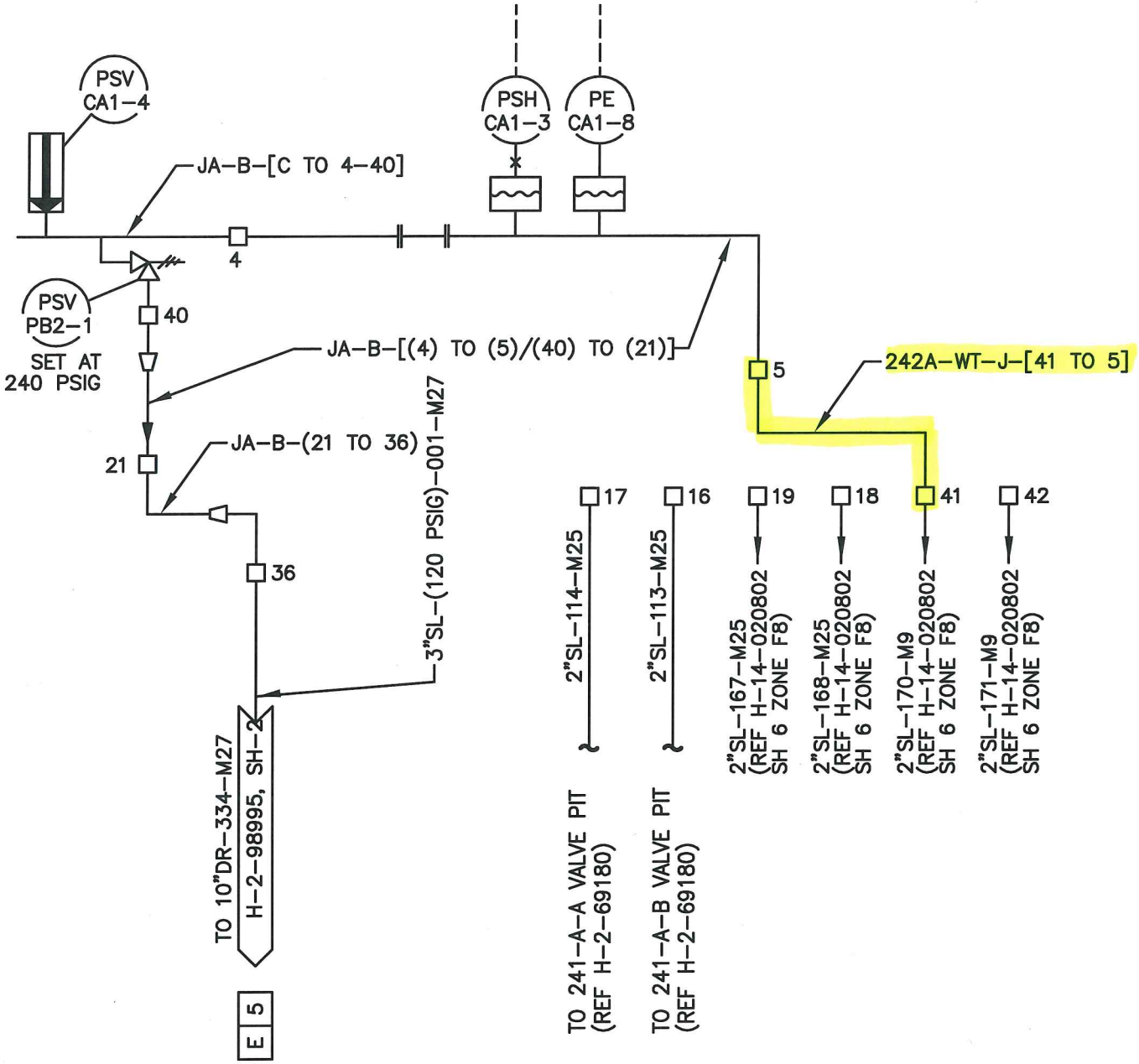

242-A PUMP ROOM

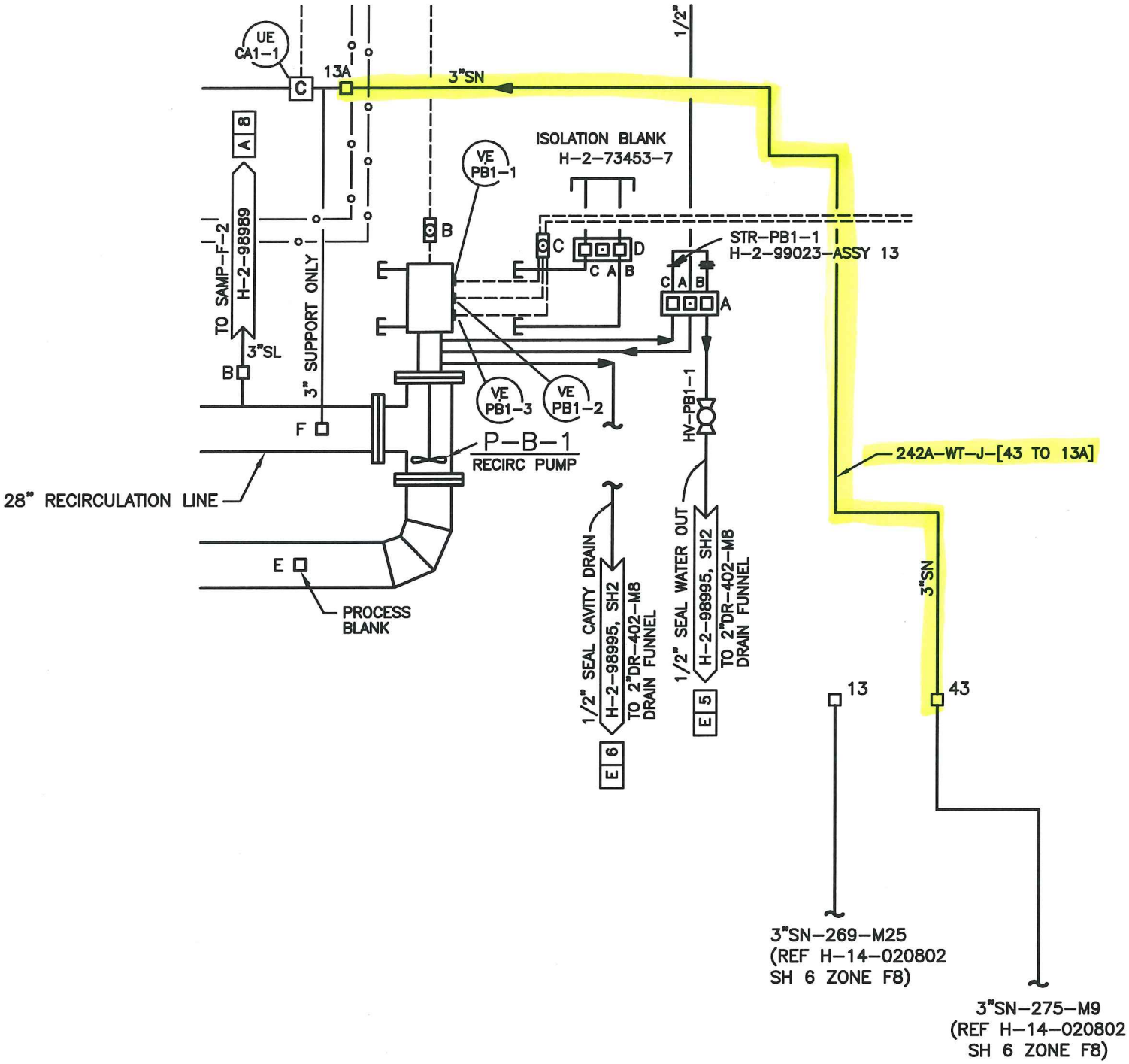

242-A PUMP ROOM

APPENDIX B

242-A EVAPORATOR JUMPER ARRANGEMENT

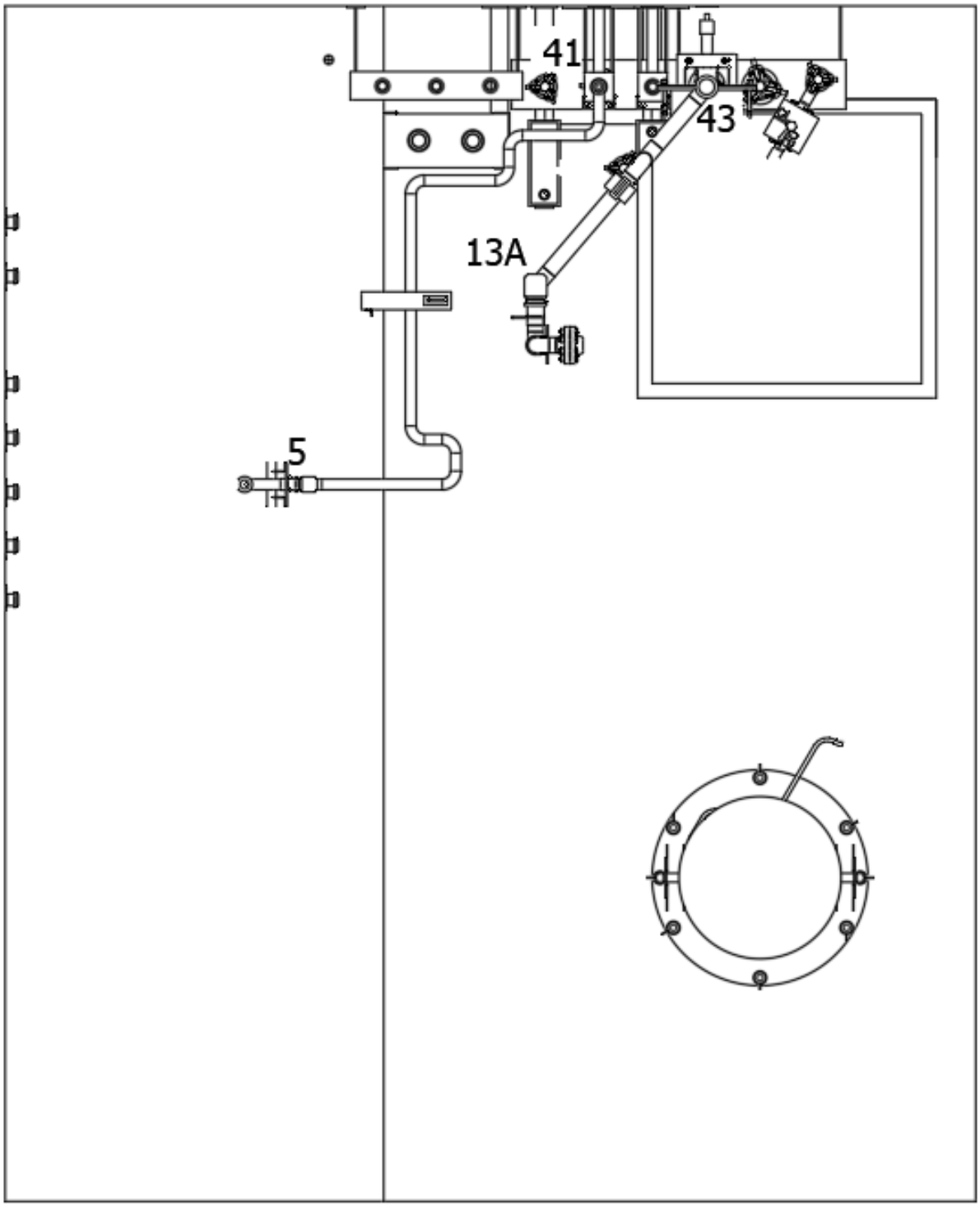
41
43
13A
5

APPENDIX C

242-A EVAPORATOR JUMPER ISOMETRICS

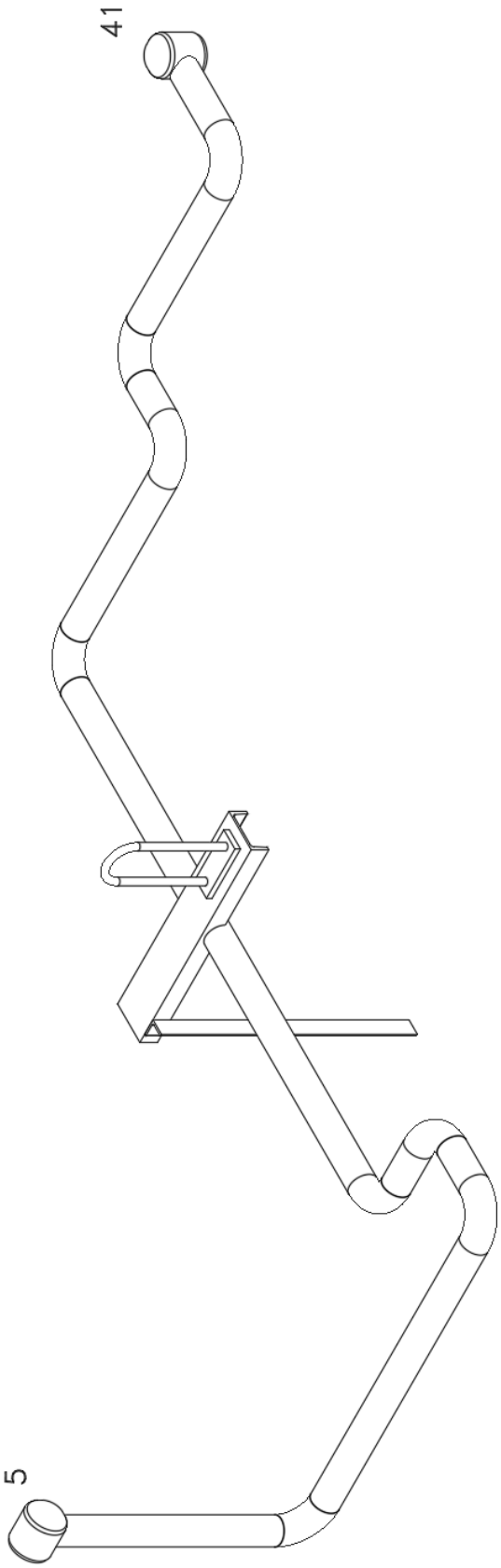
41
5

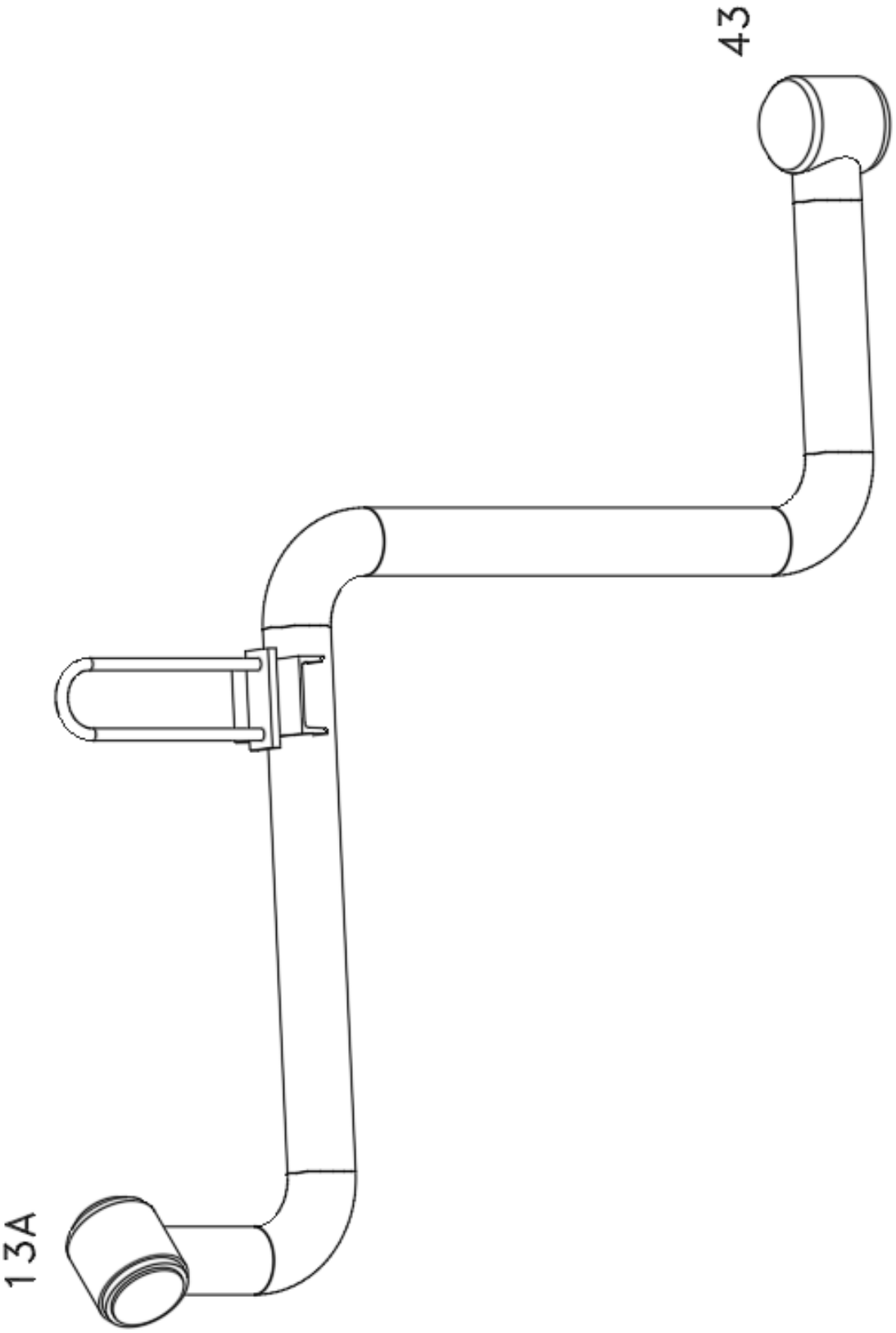
13A
43

APPENDIX D1

242-A EVAPORATOR JUMPER WEIGHT AND CENTER OF GRAVITY

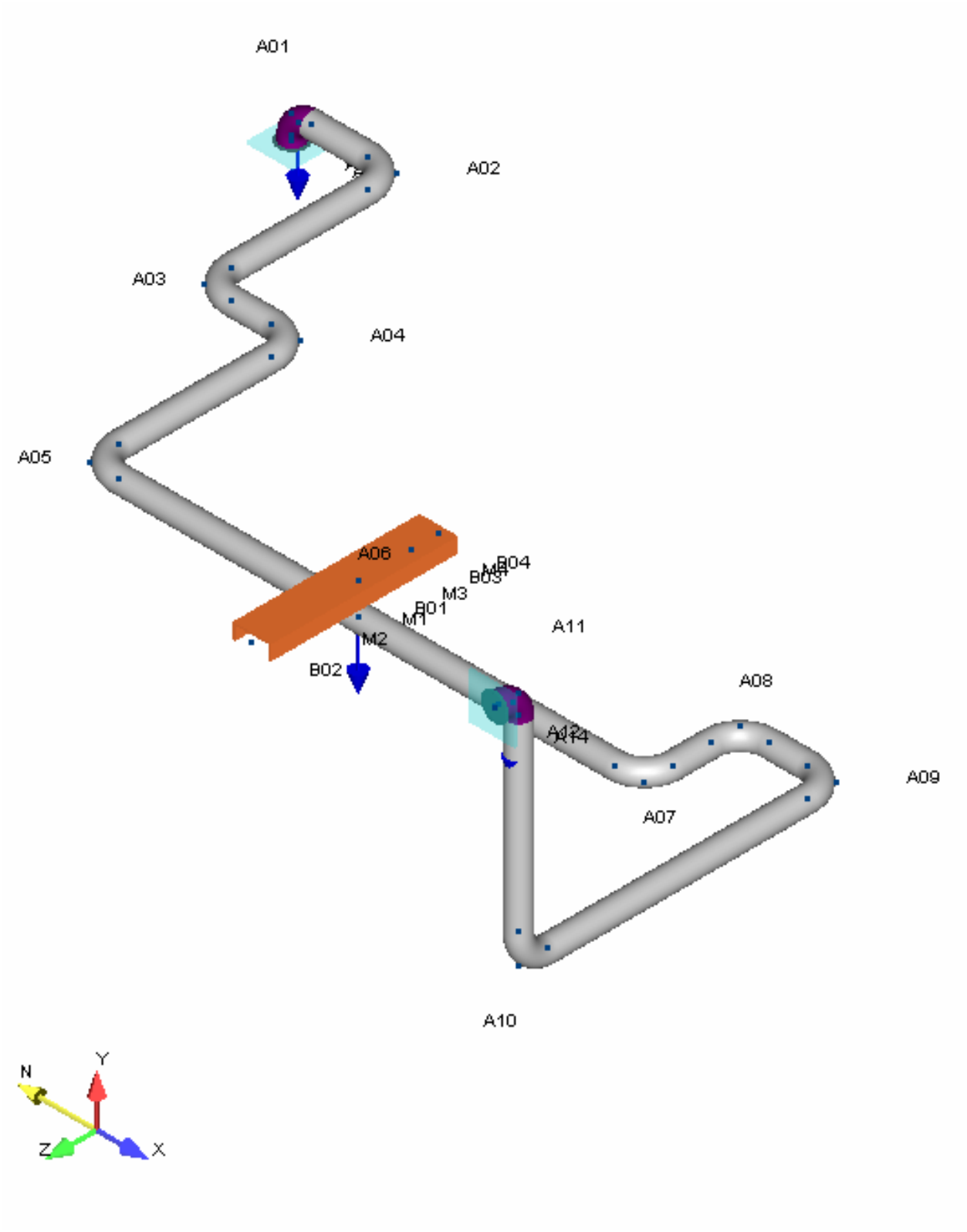
A01
A02
A03
A04
A05
A06
B04
B03
M4
M3
B01
M1
M2
B02
A11
A08
A14
A09
A07
A10
N
Y
Z
X

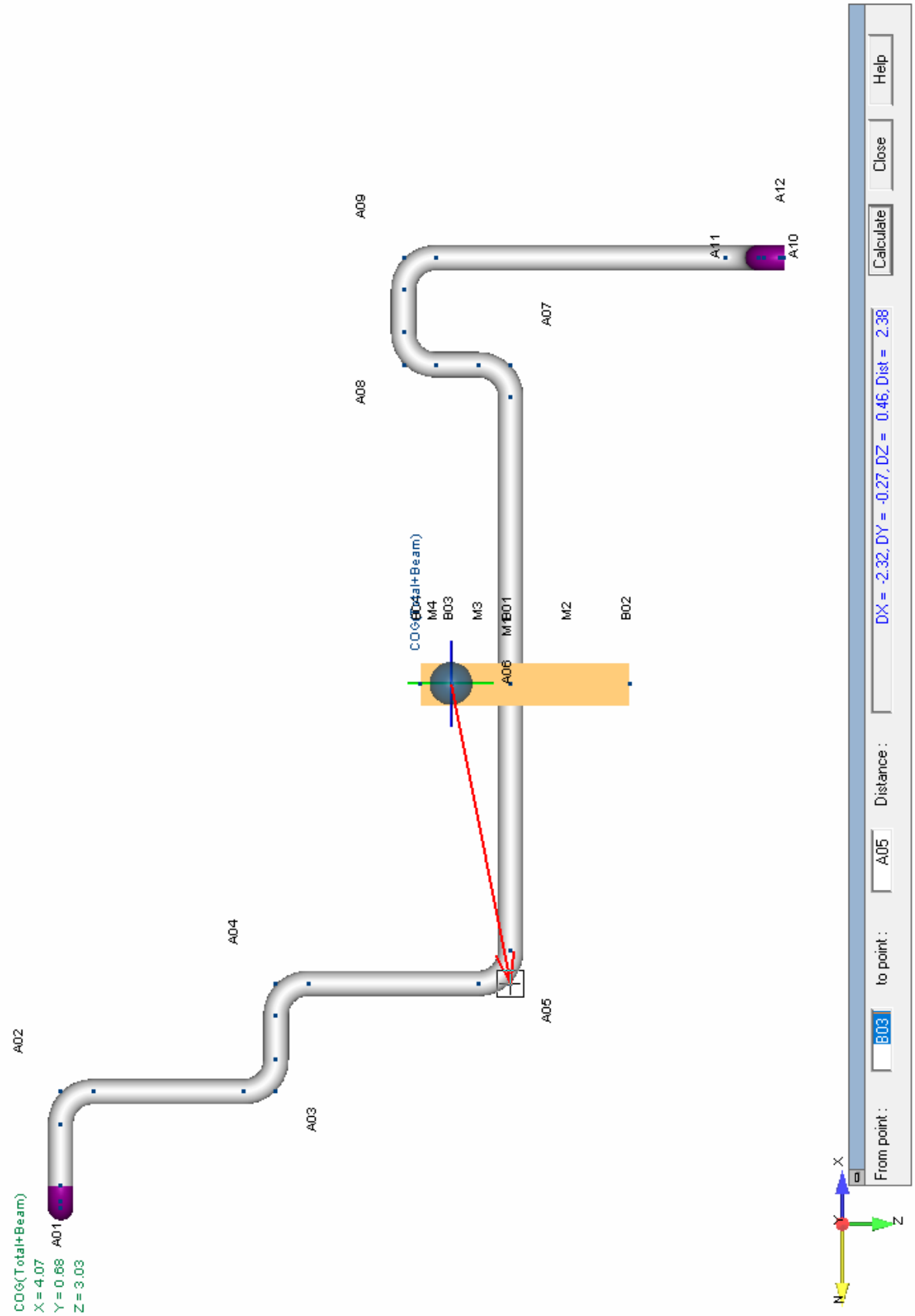
COG(Total+Beam)
X = 4.07
Y = 0.68
Z = 3.03
A01
A02
A03
A04
A05
A06
A07
A08
A09
A10
A11
A12
M2
M3
M4
B02
B03
From point :
B03
to point :
A05
Distance :
DX = -2.32, DY = -0.27, DZ = 0.46, Dist = 2.38
Calculate
Close
Help

```
242-A  41 to 5 CG                                                                                                  BENTLEY
08/14/2019 2018719                                                                                                 AutoPIPE Nuclear 12.00.00.16
12:54 PM
```

```
        *                              *******   **  *******   *******
       ***               **           **    **  **  **    **  **
      ** **             ******         **    **  **  **    **  **
     **   **    **   **  **   *****   *******   **  *******   *****
    *********   **   **  **  **   **  **        **  **        **
   **       **  **   **  **  **   **  **        **  **        **
  **         **  *****   **   *****   **        **  **        *******
```

Pipe Stress Analysis and Design Program

Version: 12.00.00.16

Edition: Nuclear

Developed and Maintained by

BENTLEY SYSTEMS, INCORPORATED
1065 N. PACIFIC CENTER DRIVE, SUITE 450
ANAHEIM, CA 92806

```
************************************************************
**                                                        **
**              AUTOPIPE SYSTEM INFORMATION               **
**                                                        **
************************************************************
```

SYSTEM NAME : 242-A 41 to 5 CG

PROJECT ID : 2018719

PREPARED BY : _____
JIM HARRINGTON

CHECKED BY : _____
RYAN LANG

1ST APPROVER : _____

2ND APPROVER : _____

PIPING CODE : ASME B31.3

YEAR : 2016

VERTICAL AXIS : Y

AMBIENT TEMPERATURE : 60.0 deg F

COMPONENT LIBRARY : AUTOPIPE

MATERIAL LIBRARY : B313-16

MODEL REVISION NUMBER : 0

T A B L E O F C O N T E N T S

Components..... 1
Coordinates..... 4
Segment Data..... 5
Pipe Properties..... 6
Material Properties..... 7
Material Allowables..... 8
Temperature and Pressure..... 9
Bend..... 10
Center of Gravity..... 11
Load Case Description..... 12
Analysis Summary..... 13
Restraint Reactions..... 17
Result Summary..... 18

```
-----------------------------------------------------------------------------------------------------------------
242-A  41 to 5 CG
08/14/2019 2018719                                                    BENTLEY
12:54 PM                                                              AutoPIPE Nuclear 12.00.00.16   MODEL  PAGE   1
-----------------------------------------------------------------------------------------------------------------

                 C O M P O N E N T   D A T A   L I S T I N G

 ---------------------------------------------------------------------------
 *** SEGMENT A

 ---------------------------------------------------------------------------
 From A00 to A01, DY= 0.20 ft                                          Run

 COMPONENT DATA (Run):
   Rigid (A00 to A01 N), Include weight= No, Include expansion= Yes

 PIPE DATA:
   Pipe Id= 2SCH40, Material= A312-TP304L, Composition= Austenitic Stainless, Poisson= 0.300, Nom Size= 2.000,
   OD= 2.375 inch, Sch= 40S, Wall Thk= 0.154 inch, Mill= 0.019 inch, Cor= 0.005 inch,
   Pipe Density= 501.00 lb/cu.ft, Pipe Unit Wgt= 3.74 lb/ft, Insul Thk= 0 inch, Cladding Thickness = 0 inch,
   Lining Thk= 0 inch, Long Weld E factor= 1.00, Long Weld W factor= 1.00, Long Modulus= 28.34083 E6 psi,
   Hoop Modulus= 28.34083 E6 psi, Shear Modulus= 10.90032 E6 psi, Sc= 16700.0 psi, Syc= 25000.0 psi,
   Suc= 70000.0 psi

 OPERATING DATA:
   P1= 0 psi, T1= 60.00 deg F, Exp1= 0 in/100ft, E1= 28.34083 E6 psi, Sh1= 16700.00 psi, Sy1= 25000.00 psi

 POINT DATA:
   A00, Coordinates, X= 0.00 ft, Y= 0.00 ft, Z= 0.00 ft

 ---------------------------------------------------------------------------
 From A01 to A02, DX= 0.90 ft                                          Bend

 COMPONENT DATA (Bend, TIP= A01, Near= A01 N, Mid= A01 M, Far= A01 F):
   Short Close, Radius= 2.00 inch, Number of cuts= 1, Bend angle= 90.00 deg, Mid point at 50.00 percent,
   End flanges= 0, Flex= 1.000, SIFI= 2.27, SIFO= 2.27
   Rigid (A01 N to A01 F), Include weight= No, Include expansion= Yes

 POINT DATA:
   A01, Coordinates, X= 0.00 ft, Y= 0.20 ft, Z= 0.00 ft
   A01 N, Coordinates, X= 0.00 ft, Y= 0.03 ft, Z= 0.00 ft
   A01 M, Coordinates, X= 0.05 ft, Y= 0.15 ft, Z= 0.00 ft
   A01 M, Added Weight= 29.00 lb
   A01 F, Coordinates, X= 0.17 ft, Y= 0.20 ft, Z= 0.00 ft

 ---------------------------------------------------------------------------
 From A02 to A03, DZ= 1.67 ft                                          Bend

 COMPONENT DATA (Bend, TIP= A02, Near= A02 N, Far= A02 F):
   Long Elbow, Radius= 3.00 inch, Bend angle= 90.00 deg, End flanges= 0, Flex= Auto, SIFI= 1.73, SIFO= 1.44

 POINT DATA:
   A02, Coordinates, X= 0.90 ft, Y= 0.20 ft, Z= 0.00 ft
   A02 N, Coordinates, X= 0.65 ft, Y= 0.20 ft, Z= 0.00 ft
   A02 F, Coordinates, X= 0.90 ft, Y= 0.20 ft, Z= 0.25 ft

 ---------------------------------------------------------------------------
 From A03 to A04, DX= 0.84 ft                                          Bend

 COMPONENT DATA (Bend, TIP= A03, Near= A03 N, Far= A03 F):
   Long Elbow, Radius= 3.00 inch, Bend angle= 90.00 deg, End flanges= 0, Flex= Auto, SIFI= 1.73, SIFO= 1.44
```

C O M P O N E N T D A T A L I S T I N G

```
 POINT DATA:
   A03, Coordinates, X= 0.90 ft, Y= 0.20 ft, Z= 1.67 ft
   A03 N, Coordinates, X= 0.90 ft, Y= 0.20 ft, Z= 1.42 ft
   A03 F, Coordinates, X= 1.15 ft, Y= 0.20 ft, Z= 1.67 ft

 ---------------------------------------------------------------------------
 From A04 to A05, DZ= 1.82 ft                                          Bend

 COMPONENT DATA (Bend, TIP= A04, Near= A04 N, Far= A04 F):
   Long Elbow, Radius= 3.00 inch, Bend angle= 90.00 deg, End flanges= 0, Flex= Auto, SIFI= 1.73, SIFO= 1.44

 POINT DATA:
   A04, Coordinates, X= 1.74 ft, Y= 0.20 ft, Z= 1.67 ft
   A04 N, Coordinates, X= 1.49 ft, Y= 0.20 ft, Z= 1.67 ft
   A04 F, Coordinates, X= 1.74 ft, Y= 0.20 ft, Z= 1.92 ft

 ---------------------------------------------------------------------------
 From A05 to A06, DX= 2.32 ft                                          Bend

 COMPONENT DATA (Bend, TIP= A05, Near= A05 N, Far= A05 F):
   Long Elbow, Radius= 3.00 inch, Bend angle= 90.00 deg, End flanges= 0, Flex= Auto, SIFI= 1.73, SIFO= 1.44

 POINT DATA:
   A05, Coordinates, X= 1.74 ft, Y= 0.20 ft, Z= 3.49 ft
   A05 N, Coordinates, X= 1.74 ft, Y= 0.20 ft, Z= 3.24 ft
   A05 F, Coordinates, X= 1.99 ft, Y= 0.20 ft, Z= 3.49 ft

 ---------------------------------------------------------------------------
 From A06 to A07, DX= 2.48 ft                                          Run

 POINT DATA:
   A06, Coordinates, X= 4.06 ft, Y= 0.20 ft, Z= 3.49 ft
   A06, Added Weight= 5.70 lb, DZ= -0.45 ft
   A06, Added Weight= 5.00 lb, DZ= 0.70 ft

 ---------------------------------------------------------------------------
 From A07 to A08, DZ= -0.83 ft                                         Bend

 COMPONENT DATA (Bend, TIP= A07, Near= A07 N, Far= A07 F):
   Long Elbow, Radius= 3.00 inch, Bend angle= 90.00 deg, End flanges= 0, Flex= Auto, SIFI= 1.73, SIFO= 1.44

 POINT DATA:
   A07, Coordinates, X= 6.54 ft, Y= 0.20 ft, Z= 3.49 ft
   A07 N, Coordinates, X= 6.29 ft, Y= 0.20 ft, Z= 3.49 ft
   A07 F, Coordinates, X= 6.54 ft, Y= 0.20 ft, Z= 3.24 ft

 ---------------------------------------------------------------------------
 From A08 to A09, DX= 0.83 ft                                          Bend

 COMPONENT DATA (Bend, TIP= A08, Near= A08 N, Far= A08 F):
   Long Elbow, Radius= 3.00 inch, Bend angle= 90.00 deg, End flanges= 0, Flex= Auto, SIFI= 1.73, SIFO= 1.44

 POINT DATA:
   A08, Coordinates, X= 6.54 ft, Y= 0.20 ft, Z= 2.66 ft
   A08 N, Coordinates, X= 6.54 ft, Y= 0.20 ft, Z= 2.91 ft
```

C O M P O N E N T D A T A L I S T I N G

A08 F, Coordinates, X= 6.79 ft, Y= 0.20 ft, Z= 2.66 ft

From A09 to A10, DZ= 2.75 ft Bend

COMPONENT DATA (Bend, TIP= A09, Near= A09 N, Far= A09 F):
Long Elbow, Radius= 3.00 inch, Bend angle= 90.00 deg, End flanges= 0, Flex= Auto, SIFI= 1.73, SIFO= 1.44

POINT DATA:
A09, Coordinates, X= 7.37 ft, Y= 0.20 ft, Z= 2.66 ft
A09 N, Coordinates, X= 7.12 ft, Y= 0.20 ft, Z= 2.66 ft
A09 F, Coordinates, X= 7.37 ft, Y= 0.20 ft, Z= 2.91 ft

From A10 to A11, DY= 2.04 ft Bend

COMPONENT DATA (Bend, TIP= A10, Near= A10 N, Far= A10 F):
Long Elbow, Radius= 3.00 inch, Bend angle= 90.00 deg, End flanges= 0, Flex= Auto, SIFI= 1.73, SIFO= 1.44

POINT DATA:
A10, Coordinates, X= 7.37 ft, Y= 0.20 ft, Z= 5.41 ft
A10 N, Coordinates, X= 7.37 ft, Y= 0.20 ft, Z= 5.16 ft
A10 F, Coordinates, X= 7.37 ft, Y= 0.45 ft, Z= 5.41 ft

From A11 to A12, DZ= 0.20 ft Bend

COMPONENT DATA (Bend, TIP= A11, Near= A11 N, Mid= A11 M, Far= A11 F):
Short Close, Radius= 2.00 inch, Number of cuts= 2, Bend angle= 90.00 deg, Mid point at 50.00 percent,
End flanges= 0, Flex= 1.000, SIFI= 2.27, SIFO= 2.27
Rigid (A11 N to A11 F), Include weight= No, Include expansion= Yes
Rigid (A11 F to A12), Include weight= No, Include expansion= Yes

POINT DATA:
A11, Coordinates, X= 7.37 ft, Y= 2.24 ft, Z= 5.41 ft
A11 N, Coordinates, X= 7.37 ft, Y= 2.07 ft, Z= 5.41 ft
A11 M, Coordinates, X= 7.37 ft, Y= 2.19 ft, Z= 5.46 ft
A11 M, Added Weight= 29.00 lb
A11 F, Coordinates, X= 7.37 ft, Y= 2.24 ft, Z= 5.58 ft
A12, Coordinates, X= 7.37 ft, Y= 2.24 ft, Z= 5.61 ft

Number of points in the system (Pipe + Frame + Soil): 45 + 5 + 0 = 50

Weight of Empty Pipes + Weight of Contents = Total Weight of System
125.9 lb + 0.0 lb = 125.9 lb

C O O R D I N A T E S D A T A L I S T I N G

POINT NAME	COORDINATE (ft) X	Y	Z
*** SEGMENT A			
A00	0.00	0.00	0.00
A01 N	0.00	0.03	0.00
A01	0.00	0.20	0.00
A01 M	0.05	0.15	0.00
A01 F	0.17	0.20	0.00
A02 N	0.65	0.20	0.00
A02	0.90	0.20	0.00
A02 F	0.90	0.20	0.25
A03 N	0.90	0.20	1.42
A03	0.90	0.20	1.67
A03 F	1.15	0.20	1.67
A04 N	1.49	0.20	1.67
A04	1.74	0.20	1.67
A04 F	1.74	0.20	1.92
A05 N	1.74	0.20	3.24
A05	1.74	0.20	3.49
A05 F	1.99	0.20	3.49
A06	4.06	0.20	3.49
A07 N	6.29	0.20	3.49
A07	6.54	0.20	3.49
A07 F	6.54	0.20	3.24
A08 N	6.54	0.20	2.91
A08	6.54	0.20	2.66
A08 F	6.79	0.20	2.66
A09 N	7.12	0.20	2.66
A09	7.37	0.20	2.66
A09 F	7.37	0.20	2.91
A10 N	7.37	0.20	5.16
A10	7.37	0.20	5.41
A10 F	7.37	0.45	5.41
A11 N	7.37	2.07	5.41
A11	7.37	2.24	5.41
A11 M	7.37	2.19	5.46
A11 F	7.37	2.24	5.58
A12	7.37	2.24	5.61

242-A 41 to 5 CG
08/14/2019 2018719 BENTLEY
12:54 PM AutoPIPE Nuclear 12.00.00.16 MODEL PAGE 5

S E G M E N T D A T A L I S T I N G

Segment Name	First Node	Last Node	Line Number	Apply Wind	Apply Bowing	Apply Buoyancy
A	A00	A12		No	No	No

```
---------------------------------------------------------------------------------------------------------------------
242-A  41 to 5 CG
08/14/2019 2018719                                                          BENTLEY
12:54 PM                                                                    AutoPIPE Nuclear 12.00.00.16   MODEL  PAGE   6
---------------------------------------------------------------------------------------------------------------------

                    P I P E   D A T A   L I S T I N G

 Pipe ID/     Nom/ O.D.  -----Thickness(inch)----- Spec  InsuDen/   Weight(lb/ft )    E/  Composition/
 Material     Sch  inch  W.Th. Corr Mill Insu Ling Grav/ LingDen/  Pipe/ Ling/ Total  W/  Steel Group/
 CladMaterial            Clad                      InsMt CladDen   Cont  Insu/        f   Tcr
 ---Line Class---                                       lb/cu.ft        Clad
 ------------ ---- ----- ----- ---- ---- ---- ---- ----- --------  ----- ----- ----- ---- --------------------

 Tag No. : <None>
 2SCH40      2.000 2.375 0.154 0.00 0.02    0    0     0    0.000   3.74     0  3.74 1.00 Austenitic Stainless
 A312-TP304L  40S                                          0.000      0     0       1.00 Austenitic
                            0                              0.000            0       1.00    850.000
```

242-A 41 to 5 CG
08/14/2019 2018719 BENTLEY
12:54 PM AutoPIPE Nuclear 12.00.00.16 MODEL PAGE 7

M A T E R I A L D A T A L I S T I N G

Material Name	Pipe ID	Density lb/cu.ft	Pois. Ratio	Temper. deg F	Modulus E6 psi Axial	Hoop	Shear	Expans. in/100ft	Composition
A312-TP304L	2SCH40	501.0	0.30	60.0	28.341	28.341	10.900		Austenitic Stainless

242-A 41 to 5 CG
08/14/2019 2018719 BENTLEY
12:54 PM AutoPIPE Nuclear 12.00.00.16 MODEL PAGE 8

M A T E R I A L A L L O W A B L E D A T A L I S T I N G

Material Name	Pipe ID	Temper. deg F	Allow. psi	Yield psi	Ultimate	Weld Reduction Factor W
A312-TP304L	2SCH40	60.0	16700.0	25000.0	70000.0	1.000
		60.0	16700.0	25000.0		1.000

OPERATING TEMPERATURE AND PRESSURE DATA
STRESSES IN psi

POINT NAME	CASE	PRESS. psi	TEMPER deg F	EXPAN. in/100ft	MODULUS E6 psi	ALLOW STRESS	YIELD STRESS
*** SEGMENT A							
A00	T1	0	60.00	0.000	28.341	16700	25000
A12	Same as previous point.						

u User-defined value
* Non-code material for allowable stress;
Non-standard material for expansion and modulus

242-A 41 to 5 CG
08/14/2019 2018719 BENTLEY
12:54 PM AutoPIPE Nuclear 12.00.00.16 MODEL PAGE 10

B E N D D A T A L I S T I N G

Point Name	Bend Type	Radius (in)	Angle (deg)	OD (in)	tnom (in)	Material	Flan^ /Cuts	SIF in	SIF out	Analysis Set	Flexibility (K)	Pressure Case
A01	*Close	2.00S	90.0	2.375	0.154	A312-TP304L	0/1	2.27	2.27	1	1.00u	None
A02	Elbow	3.00L	90.0	2.375	0.154	A312-TP304L	0/0	1.73	1.44	1	4.40	None
A03	Elbow	3.00L	90.0	2.375	0.154	A312-TP304L	0/0	1.73	1.44	1	4.40	None
A04	Elbow	3.00L	90.0	2.375	0.154	A312-TP304L	0/0	1.73	1.44	1	4.40	None
A05	Elbow	3.00L	90.0	2.375	0.154	A312-TP304L	0/0	1.73	1.44	1	4.40	None
A07	Elbow	3.00L	90.0	2.375	0.154	A312-TP304L	0/0	1.73	1.44	1	4.40	None
A08	Elbow	3.00L	90.0	2.375	0.154	A312-TP304L	0/0	1.73	1.44	1	4.40	None
A09	Elbow	3.00L	90.0	2.375	0.154	A312-TP304L	0/0	1.73	1.44	1	4.40	None
A10	Elbow	3.00L	90.0	2.375	0.154	A312-TP304L	0/0	1.73	1.44	1	4.40	None
A11	*Close	2.00S	90.0	2.375	0.154	A312-TP304L	0/2	2.27	2.27	1	1.00u	None

^ = Number of bend ends where either a flange or valve is within distance
(L/D) x Nominal diameter, where L/D is defined under Tools > Model options > Edit
u = User Flexibility factor (K) / User SIF present at point, check user-sif data listing.
* = Mid-point present
L = Long radius
S = Short radius

242-A 41 to 5 CG
08/14/2019 2018719
12:54 PM

BENTLEY
AutoPIPE Nuclear 12.00.00.16 MODEL PAGE 11

C E N T E R O F G R A V I T Y R E P O R T

Description		Weight (lb)	X CoG (ft)	Y CoG (ft)	Z CoG (ft)
Valve	:	0.00	0.00	0.00	0.00
Support	:	0.00	0.00	0.00	0.00
Flange	:	0.00	0.00	0.00	0.00
Flexible Joint	:	0.00	0.00	0.00	0.00
Additional Weight	:	68.70	3.76	1.02	2.86
Pipes (Run, Bend, Tee, Reducer)	:	57.15	4.43	0.32	3.14
PipeTot (Valve+Support+Flange+Flex. Jt.+Add. Wt.+Pipes)	:	125.85	4.07	0.70	2.99
Insulation	:	0.00	0.00	0.00	0.00
Cladding	:	0.00	0.00	0.00	0.00
Lining	:	0.00	0.00	0.00	0.00
Contents	:	0.00	0.00	0.00	0.00
Beam	:	8.76	4.06	0.47	3.60
PipeTot + Ins.	:	125.85	4.07	0.70	2.99
PipeTot + Ins. + Clad.	:	125.85	4.07	0.70	2.99
PipeTot + Ins. + Clad. + Lin.	:	125.85	4.07	0.70	2.99
PipeTot + Ins. + Clad. + Lin. + Cont.	:	125.85	4.07	0.70	2.99
PipeTot + Beam	:	134.62	4.07	0.68	3.03
PipeTot + Ins. + Beam	:	134.62	4.07	0.68	3.03
PipeTot + Ins. + Clad. + Beam	:	134.62	4.07	0.68	3.03
PipeTot + Ins. + Clad. + Lin. + Beam	:	134.62	4.07	0.68	3.03
PipeTot + Ins. + Clad. + Lin. + Cont. + Beam	:	134.62	4.07	0.68	3.03

NOTE: COG report only includes the currently visible beams and segments.
All pipe segments are included.
All beams are included.

L O A D C A S E D E S C R I P T I O N

Load Case	Load Case Name	Description
GR	Gravity	
T1	Thermal 1	
P1	Press 1	

A N A L Y S I S S U M M A R Y

Current model revision number : 0

Constant values used
Acceleration due to gravity..... 386.40000 in/s/s
Density of water for specific gravity Cal.. 62.400 lb/cu.ft
Density of sea water..... 62.400 lb/cu.ft
Density of ground water ..... 62.400 lb/cu.ft

Static - Analysis set number 1
Date and Time of analysis ..... Aug 14, 2019 12:54 PM
Model Revision Number 0
Number of load cases 3
Load cases analyzed ..... GR T1 P1
Description ..... Analysis Set No.1
Gaps/Friction/Soil considered ..... No
Hanger design run ..... No
Cut short included ..... No
Thermal bowing included ..... No
Include Bourdon rotational effect ..... No
Pipe radius for Bourdon calculation ... Mean
Weight of contents included ..... Yes
Fluid density factor for contents 1.00
Pressure stiffening case ..... None
Hot modulus case ..... None
Pressure Extension..... Yes
Water elevation for buoyancy loads .... Not considered
Use corroded thickness in analysis .... No
Rigid stiffness factor 1000.0
Support rigid stiffness (translation) . 0.100000E+11 lb/in
Support rigid stiffness (rotation) .... 0.100000E+11 ft-lb/deg
Anchor rigid stiffness (translation) .. 0.100000E+11 lb/in
Anchor rigid stiffness (rotation) ..... 0.100000E+11 ft-lb/deg
Remove Lift-Off Supports ..... No

CODE COMPLIANCE COMBINATIONS

<Description> Combination	Category	Method	Case/Combination	Factor	M/S	K-Factor	Allowable (psi)	D/A/P/C
GR + Max P{1}	Sustain	Sum	GR[1]	1.00			Automatic	Y Y Y Y
			Max Long	1.00				
Max Range	Expansion	Sum	Temp. Range	1.00			Automatic	Y Y Y Y
Amb to T1{1}	Expansion	Sum	T1[1]	1.00			Automatic	Y Y Y Y
Max P{1}	Hoop	Sum	Max Hoop	1.00			Automatic	Y Y Y Y

Notes:

D/A/P/C: [D]efault/[A]uto-Update/[P]rint options/[C]Consistent (Y=Yes, N=No)

NON-CODE COMBINATIONS

<Description> Combination	Method	Case/Combination	Factor	D/A/P/C
Gravity{1}	Sum	GR[1]	1.00	Y Y Y Y
<60.00 deg F> Thermal 1{1}	Sum	T1[1]	1.00	Y Y Y Y
Pressure 1{1}	Sum	P1[1]	1.00	Y Y Y Y
GRTP1{1}	Sum	GR[1]	1.00	Y Y Y Y
		T1[1]	1.00	
		P1[1]	1.00	

Notes:

D/A/P/C: [D]efault/[A]uto-Update/[P]rint options/[C]Consistent (Y=Yes, N=No)

CODE COMPLIANCE

```
Y - Factor ............................ 0.40
Design Pressure Factor ................ 1.00
Minimum stress ratio used in reports... 0.00
Number of stress points per span ...... 0
Include corrosion in stress calcs. .... Y
Include corrosion in Hoop stress calcs. Y
Include torsion in code stress ........ N
Include axial force in code stress .... N
Include sustain load margin ........... Only if allowable stress is exceeded
Use minimum sustained margin........... Y
Set sustained SIF=1 no bends .......... N
Set occasional SIF = 1 ................ N
Set occasional SIF = 0.75i ............ Y
Apply cold/hot modulus ratio .......... N
Disable auto code combinations ........ N
Disable auto non-code combinations .... N
No. of thermal ranges to report ....... 0
Include Max Range combination ......... Y
Total stress .......................... Octahedral
Direct shear .......................... None
Longitudinal pressure calculation ..... AxF/area
Use code case 178 ..................... Y
Inc. Axial Str and Pcase in Sustained.. Y
Use alternate occasional allowable .... N
Apply circumferential weld WC factor .. N
ASME B31J Enabled ..................... N
```

242-A 41 to 5 CG
08/14/2019 2018719
12:54 PM

BENTLEY
AutoPIPE Nuclear 12.00.00.16 RESULT PAGE 17

R E S T R A I N T R E A C T I O N S

Point name	Load combination	FORCES (lbf) X	Y	Z	Result	MOMENTS (ft-lb) X	Y	Z	Result
B03	Anchor Tag No.: <None>					Connected to: Ground			
	Gravity{1}	0	-135	0	135	0	0	-1	1
	Thermal 1{1}	0	0	0	0	0	0	0	0
	Pressure 1{1}	0	0	0	0	0	0	0	0
	GRTP1{1}	0	-135	0	135	0	0	-1	1

R E S U L T S U M M A R Y

Maximum restraint forces (lb)

Maximum X :	0	Point : B03	Load Comb.: Gravity{1}
Maximum Y :	-135	Point : B03	Load Comb.: Gravity{1}
Maximum Z :	0	Point : B03	Load Comb.: Gravity{1}
Max. total:	135	Point : B03	Load Comb.: Gravity{1}

Maximum restraint moments (ft-lb)

Maximum X :	0	Point : B03	Load Comb.: Gravity{1}
Maximum Y :	0	Point : B03	Load Comb.: Gravity{1}
Maximum Z :	-1	Point : B03	Load Comb.: Gravity{1}
Max. total:	1	Point : B03	Load Comb.: Gravity{1}

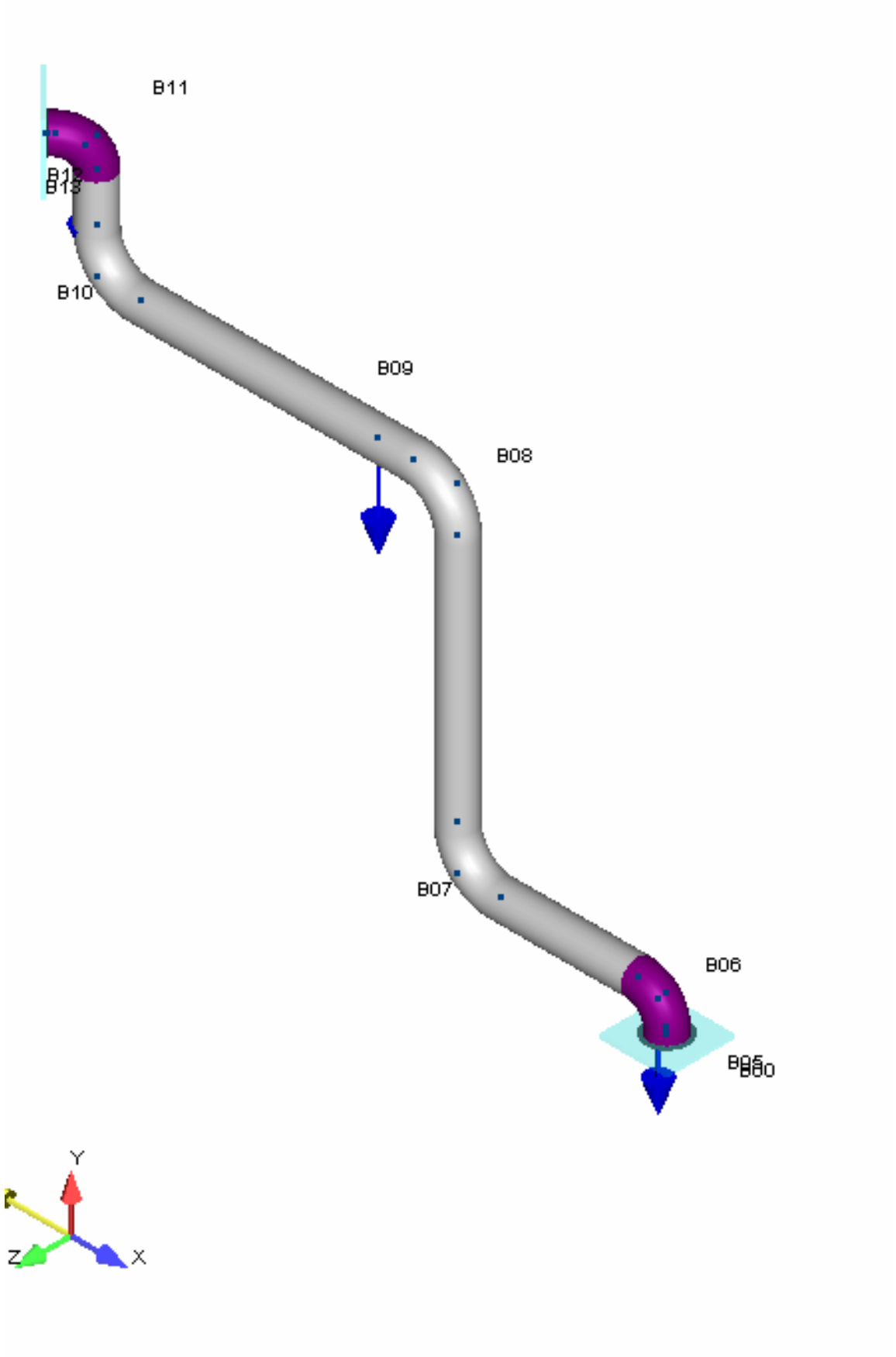
B11
B12
B13
B10
B09
B08
B07
B06
B05
B00
Y
Z
X

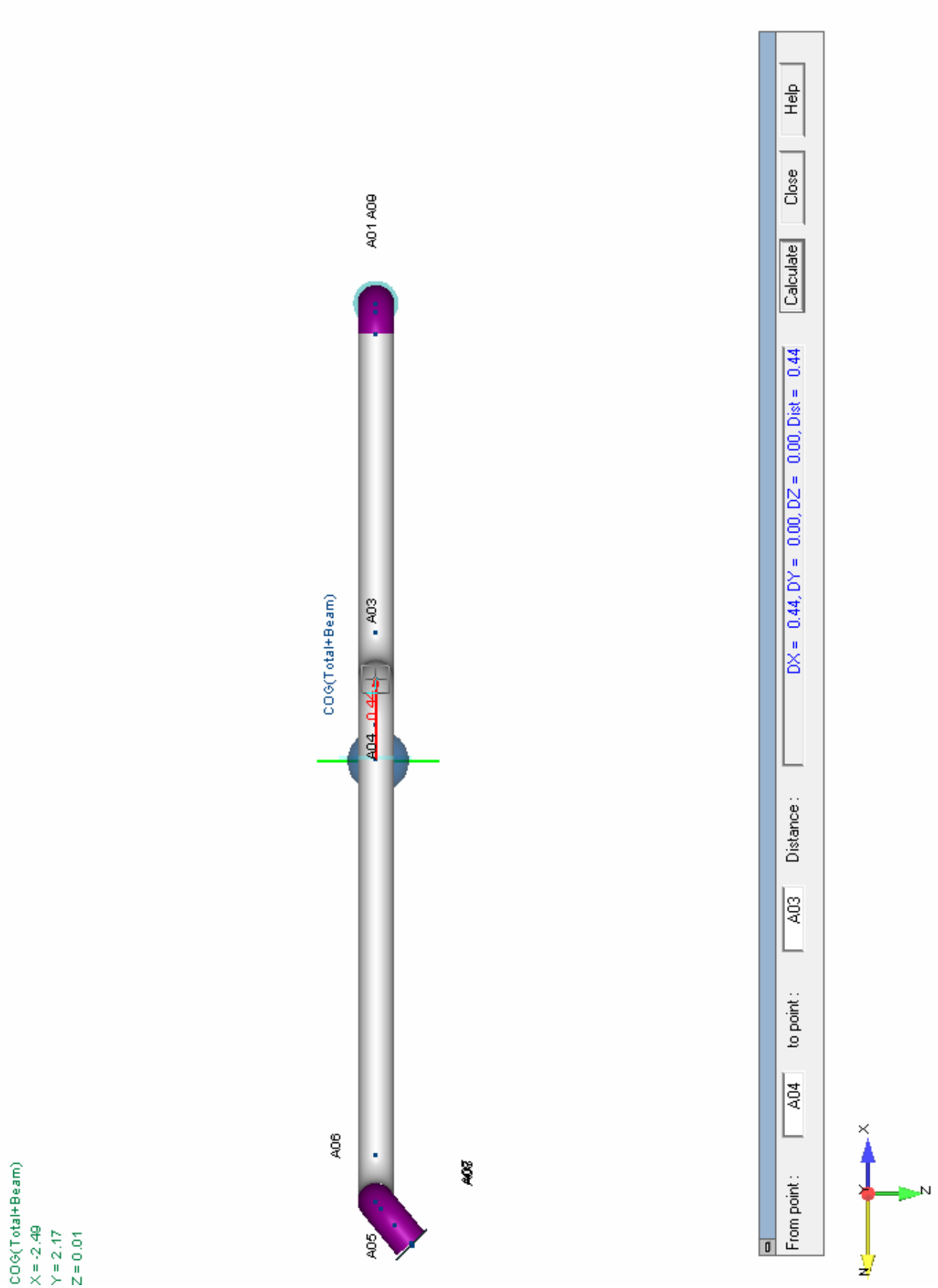
COG(Total+Beam)
X = -2.49
Y = 2.17
Z = 0.01
A05
A06
A04
0.44
A03
COG(Total+Beam)
A01 A09
From point :
A04
to point :
A03
Distance :
DX = 0.44, DY = 0.00, DZ = 0.00, Dist = 0.44
Calculate
Close
Help
X
Z
Y

```
242-A  43 to 13A CG                                                                                                  BENTLEY
08/14/2019 2018719                                                                                                   AutoPIPE Nuclear 12.00.00.16
02:23 PM
```

```
        *                              *******   **  *******   *******
       ***               **           **    **  **  **    **  **
      ** **             ******         **    **  **  **    **  **
     **   **    **   **  **   *****   *******   **  *******   *****
    *********   **   **  **  **   **  **        **  **        **
   **       **  **   **  **  **   **  **        **  **        **
  **         **  *****   **   *****   **        **  **        *******
```

Pipe Stress Analysis and Design Program

Version: 12.00.00.16

Edition: Nuclear

Developed and Maintained by

BENTLEY SYSTEMS, INCORPORATED
1065 N. PACIFIC CENTER DRIVE, SUITE 450
ANAHEIM, CA 92806

```
************************************************************
**                                                        **
**              AUTOPIPE SYSTEM INFORMATION               **
**                                                        **
************************************************************
```

SYSTEM NAME : 242-A 43 to 13A CG

PROJECT ID : 2018719

PREPARED BY : _____
JIM HARRINGTON

CHECKED BY : _____
RYAN LANG

1ST APPROVER : _____

2ND APPROVER : _____

PIPING CODE : ASME B31.3

YEAR : 2016

VERTICAL AXIS : Y

AMBIENT TEMPERATURE : 60.0 deg F

COMPONENT LIBRARY : AUTOPIPE

MATERIAL LIBRARY : B313-16

MODEL REVISION NUMBER : 2

242-A 43 to 13A CG
08/14/2019 2018719 BENTLEY
02:23 PM AutoPIPE Nuclear 12.00.00.16

T A B L E O F C O N T E N T S

Components..... 1
Coordinates..... 4
Segment Data..... 5
Pipe Properties..... 6
Material Properties..... 7
Material Allowables..... 8
Temperature and Pressure..... 9
Bend..... 10
Center of Gravity..... 11
Load Case Description..... 12
Analysis Summary..... 13
Restraint Reactions..... 17
Result Summary..... 18

```
-----------------------------------------------------------------------------------------------------------
242-A  43 to 13A CG
08/14/2019 2018719                                                    BENTLEY
02:23 PM                                                              AutoPIPE Nuclear 12.00.00.16   MODEL  PAGE   1
-----------------------------------------------------------------------------------------------------------

                 C O M P O N E N T   D A T A   L I S T I N G

 ---------------------------------------------------------------------------
 *** SEGMENT A

 ---------------------------------------------------------------------------
 From A09 to A00, DY= 0.01 ft                                          Flex

 COMPONENT DATA (Flex Jt):
   Length= 0.01 ft, Weight= 0 lb, Area= 0.0 sq.in, Kax= 19000000 lb/in, Kylat= 27800.0 lb/in,
   Kzlat= 27800.0 lb/in, Ktor= 107.0 ft-lb/deg, Kybend= 659.0 ft-lb/deg, Kzbend= 659.0 ft-lb/deg

 PIPE DATA:
   Pipe Id= 2SCH40, Material= A312-TP304L, Composition= Austenitic Stainless, Poisson= 0.300, Nom Size= 2.000,
   OD= 2.375 inch, Sch= 40S, Wall Thk= 0.154 inch, Mill= 0.019 inch, Cor= 0.005 inch,
   Pipe Density= 501.00 lb/cu.ft, Pipe Unit Wgt= 3.74 lb/ft, Insul Thk= 0 inch, Cladding Thickness = 0 inch,
   Lining Thk= 0 inch, Long Weld E factor= 1.00, Long Weld W factor= 1.00, Long Modulus= 28.34083 E6 psi,
   Hoop Modulus= 28.34083 E6 psi, Shear Modulus= 10.90032 E6 psi, Sc= 16700.0 psi, Syc= 25000.0 psi,
   Suc= 70000.0 psi

 OPERATING DATA:
   P1= 0 psi, T1= 60.00 deg F, Exp1= 0 in/100ft, E1= 28.34083 E6 psi, Sh1= 16700.00 psi, Sy1= 25000.00 psi

 POINT DATA:
   A09, Coordinates, X= 0.00 ft, Y= -0.01 ft, Z= 0.00 ft

 ---------------------------------------------------------------------------
 From A00 to A01, DY= 0.29 ft                                          Run

 COMPONENT DATA (Run):
   Rigid (A00 to A01 N), Include weight= No, Include expansion= Yes

 POINT DATA:
   A00, Coordinates, X= 0.00 ft, Y= 0.00 ft, Z= 0.00 ft

 ---------------------------------------------------------------------------
 From A01 to A02, DX= -2.04 ft                                         Bend

 COMPONENT DATA (Bend, TIP= A01, Near= A01 N, Mid= A01 M, Far= A01 F):
   Short Close, Radius= 2.00 inch, Number of cuts= 1, Bend angle= 90.00 deg, Mid point at 50.00 percent,
   End flanges= 0, Flex= 1.000, SIFI= 2.27, SIFO= 2.27
   Rigid (A01 N to A01 F), Include weight= No, Include expansion= Yes

 POINT DATA:
   A01, Coordinates, X= 0.00 ft, Y= 0.29 ft, Z= 0.00 ft
   A01 N, Coordinates, X= 0.00 ft, Y= 0.12 ft, Z= 0.00 ft
   A01 M, Coordinates, X= -0.05 ft, Y= 0.24 ft, Z= 0.00 ft
   A01 M, Added Weight= 77.00 lb
   A01 F, Coordinates, X= -0.17 ft, Y= 0.29 ft, Z= 0.00 ft

 ---------------------------------------------------------------------------
 From A02 to A03, DY= 2.88 ft                                          Bend

 COMPONENT DATA (Bend, TIP= A02, Near= A02 N, Far= A02 F):
   Long Elbow, Radius= 3.00 inch, Bend angle= 90.00 deg, End flanges= 0, Flex= Auto, SIFI= 1.73, SIFO= 1.44

 POINT DATA:
```

C O M P O N E N T D A T A L I S T I N G

A02, Coordinates, X= -2.04 ft, Y= 0.29 ft, Z= 0.00 ft
A02 N, Coordinates, X= -1.79 ft, Y= 0.29 ft, Z= 0.00 ft
A02 F, Coordinates, X= -2.04 ft, Y= 0.54 ft, Z= 0.00 ft

From A03 to A04, DX= -0.44 ft Bend

COMPONENT DATA (Bend, TIP= A03, Near= A03 N, Far= A03 F):
Long Elbow, Radius= 3.00 inch, Bend angle= 90.00 deg, End flanges= 0, Flex= Auto, SIFI= 1.73, SIFO= 1.44

POINT DATA:
A03, Coordinates, X= -2.04 ft, Y= 3.17 ft, Z= 0.00 ft
A03 N, Coordinates, X= -2.04 ft, Y= 2.92 ft, Z= 0.00 ft
A03 F, Coordinates, X= -2.29 ft, Y= 3.17 ft, Z= 0.00 ft

From A04 to A05, DX= -2.40 ft Run

POINT DATA:
A04, Coordinates, X= -2.48 ft, Y= 3.17 ft, Z= 0.00 ft

SUPPORT DATA:
A04, Anchor, Connected to: Ground, KTX= Rigid, KTY= Rigid, KTZ= Rigid, KRX= Rigid, KRY= Rigid, KRZ= Rigid

---

From A05 to A06, DY= 1.04 ft Bend

COMPONENT DATA (Bend, TIP= A05, Near= A05 N, Far= A05 F):
Long Elbow, Radius= 3.00 inch, Bend angle= 90.00 deg, End flanges= 0, Flex= Auto, SIFI= 1.73, SIFO= 1.44

POINT DATA:
A05, Coordinates, X= -4.88 ft, Y= 3.17 ft, Z= 0.00 ft
A05 N, Coordinates, X= -4.63 ft, Y= 3.17 ft, Z= 0.00 ft
A05 F, Coordinates, X= -4.88 ft, Y= 3.42 ft, Z= 0.00 ft

From A06 to A07, DX= -0.23 ft, DZ= 0.19 ft, L= 0.30 ft Bend

COMPONENT DATA (Bend, TIP= A06, Near= A06 N, Mid= A06 M, Far= A06 F):
Short Close, Radius= 2.00 inch, Number of cuts= 1, Bend angle= 90.00 deg, Mid point at 50.00 percent,
End flanges= 0, Flex= 1.000, SIFI= 2.27, SIFO= 2.27
Rigid (A06 N to A06 F), Include weight= No, Include expansion= Yes
Rigid (A06 F to A07), Include weight= No, Include expansion= Yes

POINT DATA:
A06, Coordinates, X= -4.88 ft, Y= 4.21 ft, Z= 0.00 ft
A06 N, Coordinates, X= -4.88 ft, Y= 4.04 ft, Z= 0.00 ft
A06 M, Coordinates, X= -4.92 ft, Y= 4.16 ft, Z= 0.03 ft
A06 M, Added Weight= 76.00 lb
A06 F, Coordinates, X= -5.01 ft, Y= 4.21 ft, Z= 0.11 ft

From A07 to A08, DX= -0.01 ft, DZ= 0.01 ft, L= 0.01 ft Flex

COMPONENT DATA (Flex Jt):

```
-----------------------------------------------------------------------------------------------------------------
242-A  43 to 13A CG
08/14/2019 2018719                                                          BENTLEY
02:23 PM                                                                    AutoPIPE Nuclear 12.00.00.16   MODEL  PAGE   3
-----------------------------------------------------------------------------------------------------------------

                 C O M P O N E N T   D A T A   L I S T I N G

   Length= 0.01 ft, Weight= 0 lb, Area= 0.0 sq.in, Kax= 19000000 lb/in, Kylat= 27800.0 lb/in,
   Kzlat= 27800.0 lb/in, Ktor= 107.0 ft-lb/deg, Kybend= 659.0 ft-lb/deg, Kzbend= 659.0 ft-lb/deg

 POINT DATA:
   A07, Coordinates, X= -5.11 ft, Y= 4.21 ft, Z= 0.19 ft
   A08, Coordinates, X= -5.12 ft, Y= 4.21 ft, Z= 0.20 ft

 ---------------------------------------------------------------------------

 Number of points in the system (Pipe + Frame + Soil): 27 + 0 + 0 = 27


 Weight of Empty Pipes + Weight of Contents = Total Weight of System
          183.4 lb     +         0.0 lb     =         183.4 lb
```

242-A 43 to 13A CG
08/14/2019 2018719 BENTLEY
02:23 PM AutoPIPE Nuclear 12.00.00.16 MODEL PAGE 4

C O O R D I N A T E S D A T A L I S T I N G

POINT NAME	COORDINATE (ft) X	Y	Z
*** SEGMENT A			
A09	0.00	-0.01	0.00
A00	0.00	0.00	0.00
A01 N	0.00	0.12	0.00
A01	0.00	0.29	0.00
A01 M	-0.05	0.24	0.00
A01 F	-0.17	0.29	0.00
A02 N	-1.79	0.29	0.00
A02	-2.04	0.29	0.00
A02 F	-2.04	0.54	0.00
A03 N	-2.04	2.92	0.00
A03	-2.04	3.17	0.00
A03 F	-2.29	3.17	0.00
A04	-2.48	3.17	0.00
A05 N	-4.63	3.17	0.00
A05	-4.88	3.17	0.00
A05 F	-4.88	3.42	0.00
A06 N	-4.88	4.04	0.00
A06	-4.88	4.21	0.00
A06 M	-4.92	4.16	0.03
A06 F	-5.01	4.21	0.11
A07	-5.11	4.21	0.19
A08	-5.12	4.21	0.20

S E G M E N T D A T A L I S T I N G

Segment Name	First Node	Last Node	Line Number	Apply Wind	Apply Bowing	Apply Buoyancy
A	A09	A08		No	No	No

```
---------------------------------------------------------------------------------------------------------------------
242-A  43 to 13A CG
08/14/2019 2018719                                                          BENTLEY
02:23 PM                                                                    AutoPIPE Nuclear 12.00.00.16   MODEL  PAGE   6
---------------------------------------------------------------------------------------------------------------------

                    P I P E   D A T A   L I S T I N G

 Pipe ID/     Nom/ O.D.  -----Thickness(inch)----- Spec  InsuDen/   Weight(lb/ft )    E/  Composition/
 Material     Sch  inch  W.Th. Corr Mill Insu Ling Grav/ LingDen/  Pipe/ Ling/ Total  W/  Steel Group/
 CladMaterial            Clad                      InsMt CladDen   Cont  Insu/        f   Tcr
 ---Line Class---                                        lb/cu.ft        Clad
 ------------ ---- ----- ----- ---- ---- ---- ---- ----- --------  ----- ----- ----- ---- --------------------

 Tag No. : <None>
 2SCH40      2.000 2.375 0.154 0.00 0.02    0    0     0    0.000   3.74     0  3.74 1.00 Austenitic Stainless
 A312-TP304L  40S                                          0.000      0     0       1.00 Austenitic
                            0                              0.000            0       1.00    850.000
```

242-A 43 to 13A CG
08/14/2019 2018719
02:23 PM

BENTLEY
AutoPIPE Nuclear 12.00.00.16 MODEL PAGE 7

M A T E R I A L D A T A L I S T I N G

Material Name	Pipe ID	Density lb/cu.ft	Pois. Ratio	Temper. deg F	Modulus E6 psi Axial	Hoop	Shear	Expans. in/100ft	Composition
A312-TP304L	2SCH40	501.0	0.30	60.0	28.341	28.341	10.900		Austenitic Stainless

M A T E R I A L A L L O W A B L E D A T A L I S T I N G

Material Name	Pipe ID	Temper. deg F	Allow. psi	Yield psi	Ultimate	Weld Reduction Factor W
A312-TP304L	2SCH40	60.0	16700.0	25000.0	70000.0	1.000
		60.0	16700.0	25000.0		1.000

OPERATING TEMPERATURE AND PRESSURE DATA
STRESSES IN psi

POINT NAME	CASE	PRESS. psi	TEMPER deg F	EXPAN. in/100ft	MODULUS E6 psi	ALLOW STRESS	YIELD STRESS
*** SEGMENT A							
A09	T1	0	60.00	0.000	28.341	16700	25000
A08	Same as previous point.						

u User-defined value
* Non-code material for allowable stress;
Non-standard material for expansion and modulus

B E N D D A T A L I S T I N G

Point Name	Bend Type	Radius (in)	Angle (deg)	OD (in)	tnom (in)	Material	Flan^ /Cuts	SIF in	SIF out	Analysis Set	Flexibility (K)	Pressure Case
A01	*Close	2.00S	90.0	2.375	0.154	A312-TP304L	0/1	2.27	2.27	1	1.00u	None
A02	Elbow	3.00L	90.0	2.375	0.154	A312-TP304L	0/0	1.73	1.44	1	4.40	None
A03	Elbow	3.00L	90.0	2.375	0.154	A312-TP304L	0/0	1.73	1.44	1	4.40	None
A05	Elbow	3.00L	90.0	2.375	0.154	A312-TP304L	0/0	1.73	1.44	1	4.40	None
A06	*Close	2.00S	90.0	2.375	0.154	A312-TP304L	0/1	2.27	2.27	1	1.00u	None

^ = Number of bend ends where either a flange or valve is within distance
(L/D) x Nominal diameter, where L/D is defined under Tools > Model options > Edit
u = User Flexibility factor (K) / User SIF present at point, check user-sif data listing.
* = Mid-point present
L = Long radius
S = Short radius

C E N T E R O F G R A V I T Y R E P O R T

Description		Weight (lb)	X CoG (ft)	Y CoG (ft)	Z CoG (ft)
Valve	:	0.00	0.00	0.00	0.00
Support	:	0.00	0.00	0.00	0.00
Flange	:	0.00	0.00	0.00	0.00
Flexible Joint	:	0.00	0.00	0.00	0.00
Additional Weight	:	153.00	-2.47	2.19	0.02
Pipes (Run, Bend, Tee, Reducer)	:	30.45	-2.59	2.08	0.00
PipeTot (Valve+Support+Flange+Flex. Jt.+Add. Wt.+Pipes)	:	183.45	-2.49	2.17	0.01
Insulation	:	0.00	0.00	0.00	0.00
Cladding	:	0.00	0.00	0.00	0.00
Lining	:	0.00	0.00	0.00	0.00
Contents	:	0.00	0.00	0.00	0.00
Beam	:	0.00	0.00	0.00	0.00
PipeTot + Ins.	:	183.45	-2.49	2.17	0.01
PipeTot + Ins. + Clad.	:	183.45	-2.49	2.17	0.01
PipeTot + Ins. + Clad. + Lin.	:	183.45	-2.49	2.17	0.01
PipeTot + Ins. + Clad. + Lin. + Cont.	:	183.45	-2.49	2.17	0.01
PipeTot + Beam	:	183.45	-2.49	2.17	0.01
PipeTot + Ins. + Beam	:	183.45	-2.49	2.17	0.01
PipeTot + Ins. + Clad. + Beam	:	183.45	-2.49	2.17	0.01
PipeTot + Ins. + Clad. + Lin. + Beam	:	183.45	-2.49	2.17	0.01
PipeTot + Ins. + Clad. + Lin. + Cont. + Beam	:	183.45	-2.49	2.17	0.01

NOTE: COG report only includes the currently visible beams and segments.
All pipe segments are included.
No beams present in the model.

L O A D C A S E D E S C R I P T I O N

Load Case	Load Case Name	Description
GR	Gravity	
T1	Thermal 1	
P1	Press 1	

```
-----------------------------------------------------------------------------------------------------------
242-A  43 to 13A CG
08/14/2019 2018719                                                    BENTLEY
02:23 PM                                                              AutoPIPE Nuclear 12.00.00.16   RESULT PAGE  13
-----------------------------------------------------------------------------------------------------------


                  A N A L Y S I S   S U M M A R Y


   Current model revision number : 2

     Constant values used
              Acceleration due to gravity................  386.40000 in/s/s
              Density of water for specific gravity Cal..     62.400 lb/cu.ft
              Density of sea water......................     62.400 lb/cu.ft
              Density of ground water ..................     62.400 lb/cu.ft

     Static - Analysis set number .................. 1
              Date and Time of analysis ............ Aug 14, 2019   2:23 PM
              Model Revision Number ................ 2
              Number of load cases ................. 3
              Load cases analyzed .................. GR T1 P1
              Description .......................... Analysis Set No.1
              Gaps/Friction/Soil considered ......... Yes
              Tolerance - Force, Displacement ....... 10.00 lbf  0.0010 in
              Friction - Scale Factor, Tolerance .... 1.00   0.10
              Ignore friction for cases E1,E2,E3 .... Yes
              Ignore friction for gravity case ...... Yes
              Hanger design run ..................... No
              Cut short included .................... No
              Thermal bowing included ............... No
              Include Bourdon rotational effect ..... No
              Pipe radius for Bourdon calculation ... Mean
              Occasional load analysis type ......... Nonlinear
              Non-linear analysis summary file ...... 242-A  43 to 13A CG.LOG
              Use default load sequence ............. Yes
              Base load cases for nonlinear analysis
                                                         GR   = None
                                                         T1   = GR
                                                         P1   = T1
              Weight of contents included ........... Yes
              Fluid density factor for contents ..... 1.00
              Pressure stiffening case .............. None
              Hot modulus case ...................... None
              Pressure Extension..................... Yes
              Water elevation for buoyancy loads .... Not considered
              Use corroded thickness in analysis .... No
              Rigid stiffness factor ................ 1000.0
              Support rigid stiffness (translation) . 0.100000E+11 lb/in
              Support rigid stiffness (rotation) .... 0.100000E+11 ft-lb/deg
              Anchor rigid stiffness (translation) .. 0.100000E+11 lb/in
              Anchor rigid stiffness (rotation) ..... 0.100000E+11 ft-lb/deg
              Remove Lift-Off Supports .............. No
```

242-A 43 to 13A CG
08/14/2019 2018719 BENTLEY
02:23 PM AutoPIPE Nuclear 12.00.00.16 RESULT PAGE 14

CODE COMPLIANCE COMBINATIONS

<Description> Combination	Category	Method	Case/Combination	Factor	M/S	K-Factor	Allowable (psi)	D/A/P/C
GR + Max P{1}	Sustain	Sum	GR[1]	1.00			Automatic	Y Y Y Y
			Max Long	1.00				
Max Range	Expansion	Sum	Temp. Range	1.00			Automatic	Y Y Y Y
Amb to T1{1}	Expansion	Sum	T1[1]	1.00			Automatic	Y Y Y Y
Max P{1}	Hoop	Sum	Max Hoop	1.00			Automatic	Y Y Y Y

Notes:

D/A/P/C: [D]efault/[A]uto-Update/[P]rint options/[C]Consistent (Y=Yes, N=No)

NON-CODE COMBINATIONS

<Description> Combination	Method	Case/Combination	Factor	D/A/P/C
Gravity{1}	Sum	GR[1]	1.00	Y Y Y Y
<60.00 deg F> Thermal 1{1}	Sum	T1[1]	1.00	Y Y Y N
Pressure 1{1}	Sum	P1[1]	1.00	Y Y Y N
GT1{1}	Sum	GR[1]	1.00	Y Y Y Y
		T1[1]	1.00	
GT1P1{1}	Sum	GR[1]	1.00	Y Y Y Y
		T1[1]	1.00	
		P1[1]	1.00	

Notes:

D/A/P/C: [D]efault/[A]uto-Update/[P]rint options/[C]Consistent (Y=Yes, N=No)

CODE COMPLIANCE

```
Y - Factor ............................ 0.40
Design Pressure Factor ................ 1.00
Minimum stress ratio used in reports... 0.00
Number of stress points per span ...... 0
Include corrosion in stress calcs. .... Y
Include corrosion in Hoop stress calcs. Y
Include torsion in code stress ........ N
Include axial force in code stress .... N
Include sustain load margin ........... Only if allowable stress is exceeded
Use minimum sustained margin........... Y
Set sustained SIF=1 no bends .......... N
Set occasional SIF = 1 ................ N
Set occasional SIF = 0.75i ............ Y
Apply cold/hot modulus ratio .......... N
Disable auto code combinations ........ N
Disable auto non-code combinations .... N
No. of thermal ranges to report ....... 0
Include Max Range combination ......... Y
Total stress .......................... Octahedral
Direct shear .......................... None
Longitudinal pressure calculation ..... AxF/area
Use code case 178 ..................... Y
Inc. Axial Str and Pcase in Sustained.. Y
Use alternate occasional allowable .... N
Apply circumferential weld WC factor .. N
ASME B31J Enabled ..................... N
```

242-A 43 to 13A CG
08/14/2019 2018719
02:23 PM

BENTLEY
AutoPIPE Nuclear 12.00.00.16 RESULT PAGE 17

R E S T R A I N T R E A C T I O N S

Point name	Load combination	FORCES (lbf) X	Y	Z	Result	MOMENTS (ft-lb) X	Y	Z	Result
A04	Anchor Tag No.: <None>					Connected to: Ground			
	Gravity{1}	0	-183	0	183	2	0	1	3
	Thermal 1{1}	0	0	0	0	0	0	0	0
	Pressure 1{1}	0	0	0	0	0	0	0	0
	GT1{1}	0	-183	0	183	2	0	1	3
	GT1P1{1}	0	-183	0	183	2	0	1	3

R E S U L T S U M M A R Y

Maximum restraint forces (lb)

Maximum X :	0	Point : A04	Load Comb.: Gravity{1}
Maximum Y :	-183	Point : A04	Load Comb.: Gravity{1}
Maximum Z :	0	Point : A04	Load Comb.: Gravity{1}
Max. total:	183	Point : A04	Load Comb.: Gravity{1}

Maximum restraint moments (ft-lb)

Maximum X :	2	Point : A04	Load Comb.: Gravity{1}
Maximum Y :	0	Point : A04	Load Comb.: Gravity{1}
Maximum Z :	1	Point : A04	Load Comb.: Gravity{1}
Max. total:	3	Point : A04	Load Comb.: Gravity{1}

APPENDIX D2

AUTOPIPE ANALYSIS – STABILITY CHECK

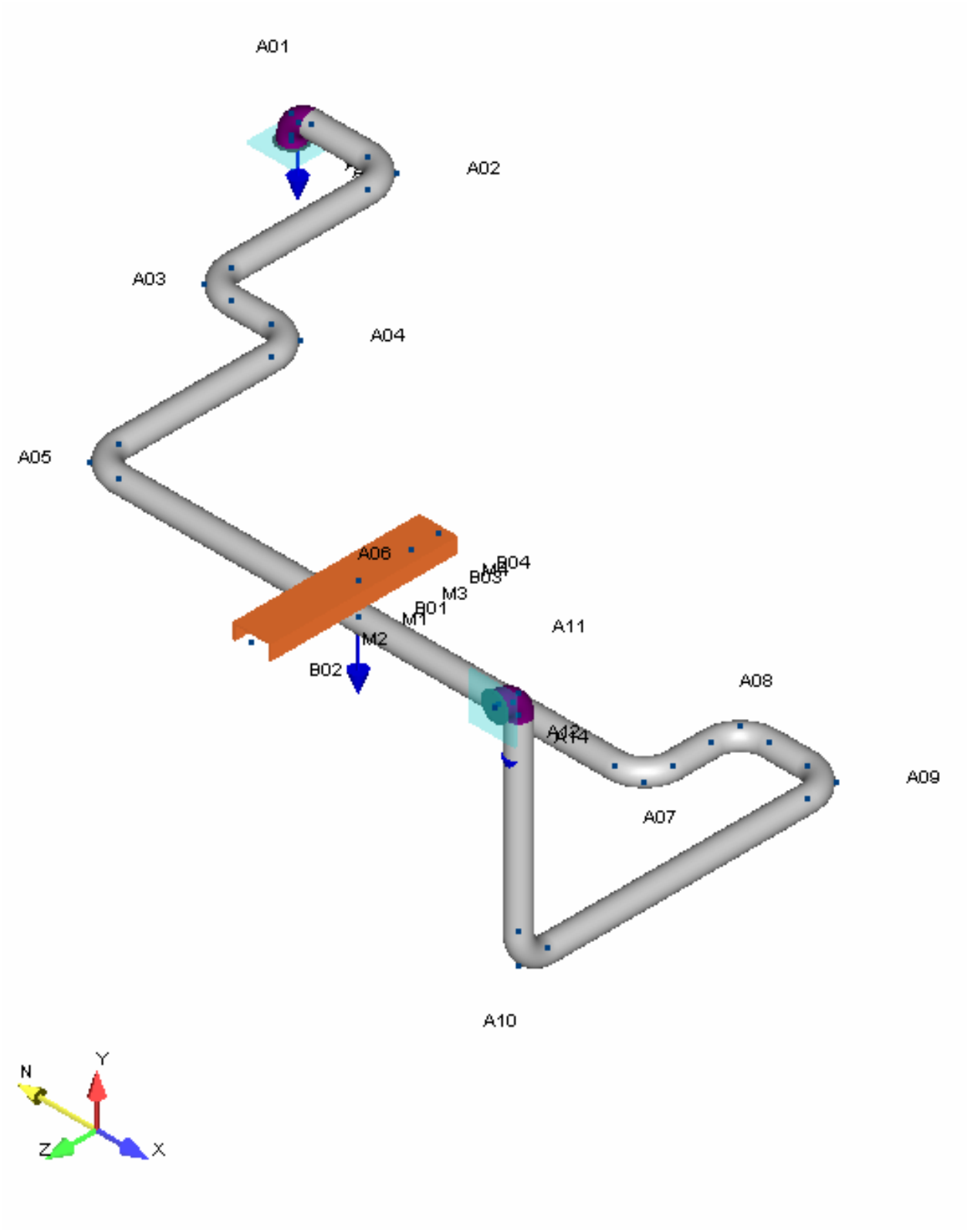
A01
A02
A03
A04
A05
A06
B04
B03
M4
M3
B01
M1
M2
B02
A11
A08
A14
A09
A07
A10
N
Y
Z
X

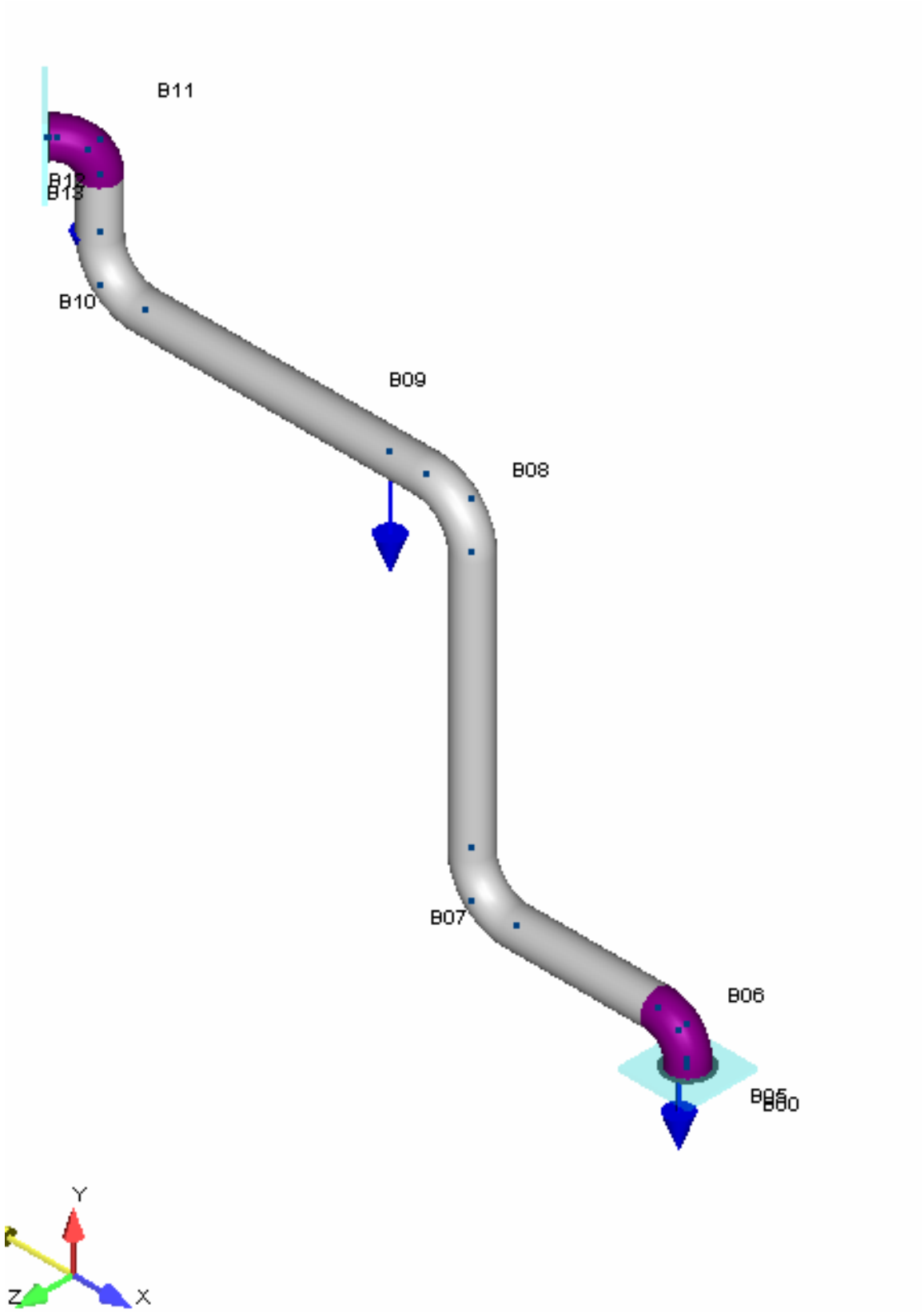
B11
B12
B13
B10
B09
B08
B07
B06
B05
B00
Y
Z
X

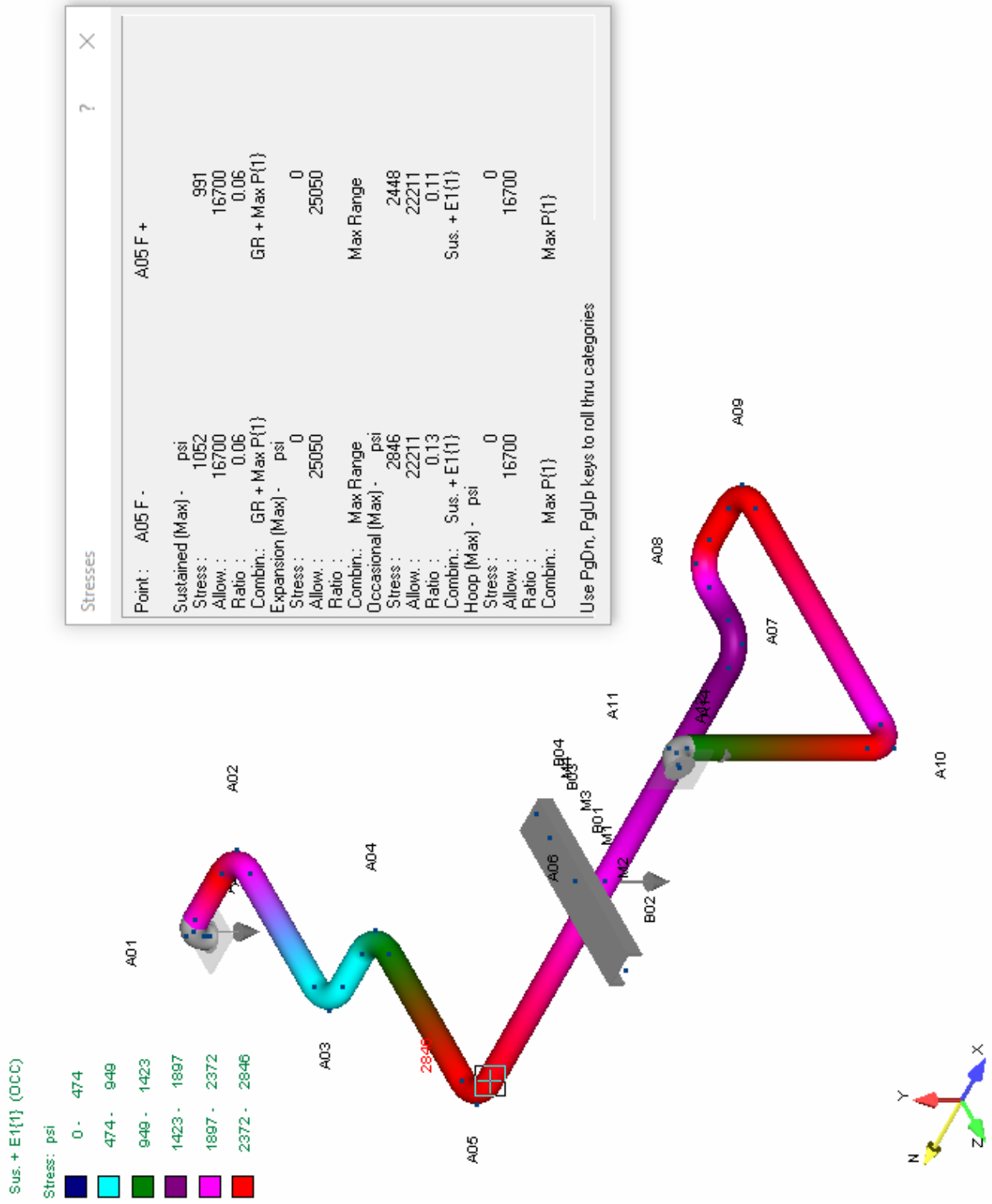
Sus. + E1{1} (OCC)
Stress: psi
0 - 474
474 - 949
949 - 1423
1423 - 1897
1897 - 2372
2372 - 2846
A01
A02
A03
A04
A05
A06
A07
A08
A09
A10
A11
B01
B02
B03
B04
M1
M2
M3
Stresses
Point : A05 F -
Sustained (Max) - psi
Stress : 1052
Allow. : 16700
Ratio : 0.06
Combin.: GR + Max P{1}
Expansion (Max) - psi
Stress : 0
Allow. : 25050
Ratio :
Combin.: Max Range
Occasional (Max) - psi
Stress : 2846
Allow. : 22211
Ratio : 0.13
Combin.: Sus. + E1{1}
Hoop (Max) - psi
Stress : 0
Allow. : 16700
Ratio :
Combin.: Max P{1}
A05 F +
991
16700
0.06
GR + Max P{1}
0
25050
Max Range
2448
22211
0.11
Sus. + E1{1}
0
16700
Max P{1}
Use PgDn, PgUp keys to roll thru categories

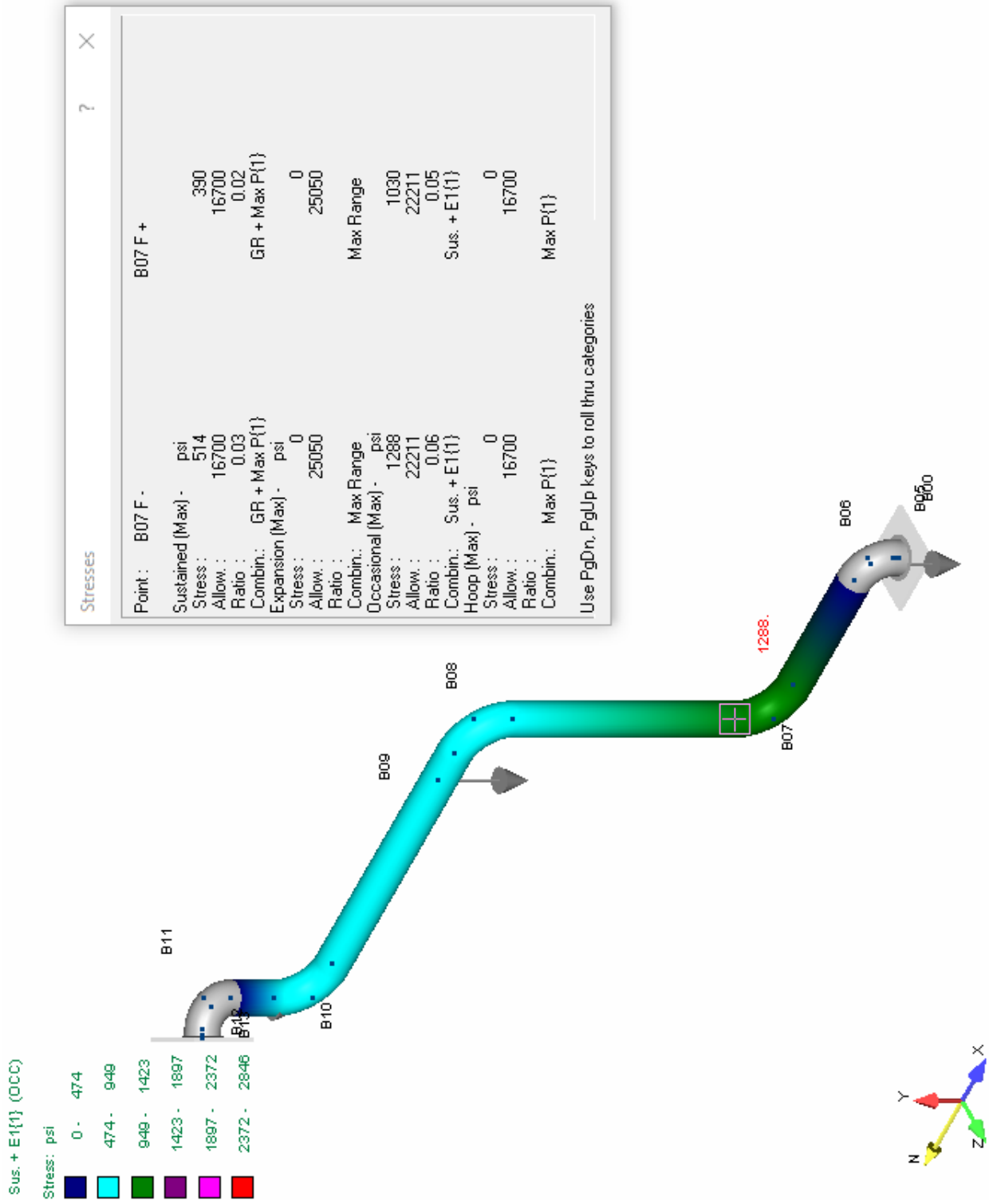
Sus. + E1{1} (OCC)
Stress: psi
0 - 474
474 - 949
949 - 1423
1423 - 1897
1897 - 2372
2372 - 2846
B11
B12
B10
B09
B08
1288.
B07
B06
B05
B00
Stresses
Point : B07 F - B07 F +
Sustained (Max) - psi
Stress : 514 390
Allow. : 16700 16700
Ratio : 0.03 0.02
Combin.: GR + Max P{1} GR + Max P{1}
Expansion (Max) - psi
Stress : 0 0
Allow. : 25050 25050
Ratio :
Combin.: Max Range Max Range
Occasional (Max) - psi
Stress : 1288 1030
Allow. : 22211 22211
Ratio : 0.06 0.05
Combin.: Sus. + E1{1} Sus. + E1{1}
Hoop (Max) - psi
Stress : 0 0
Allow. : 16700 16700
Ratio :
Combin.: Max P{1} Max P{1}
Use PgDn, PgUp keys to roll thru categories
Y
X
Z
N

```
242-A  Stability                                                                                                  BENTLEY
08/22/2019 2018719                                                                                                AutoPIPE Nuclear 12.00.00.16
11:02 AM
```

```
        *                              *******   **  *******   *******
       ***               **           **    **  **  **    **  **
      ** **             ******        **    **  **  **    **  **
     **   **    **   **  **   *****   *******   **  *******   *****
    *********   **   **  **  **   **  **        **  **        **
   **       **  **   **  **  **   **  **        **  **        **
  **         **  *****   **   *****   **        **  **        *******
```

Pipe Stress Analysis and Design Program

Version: 12.00.00.16

Edition: Nuclear

Developed and Maintained by

BENTLEY SYSTEMS, INCORPORATED
1065 N. PACIFIC CENTER DRIVE, SUITE 450
ANAHEIM, CA 92806

```
*************************************************************
**                                                         **
**              AUTOPIPE SYSTEM INFORMATION                **
**                                                         **
*************************************************************
```

SYSTEM NAME : 242-A Stability

PROJECT ID : 2018719

PREPARED BY : _____
JIM HARRINGTON

CHECKED BY : _____
RYAN LANG

1ST APPROVER : _____

2ND APPROVER : _____

PIPING CODE : ASME B31.3

YEAR : 2016

VERTICAL AXIS : Y

AMBIENT TEMPERATURE : 60.0 deg F

COMPONENT LIBRARY : AUTOPIPE

MATERIAL LIBRARY : B313-16

MODEL REVISION NUMBER : 1

T A B L E O F C O N T E N T S

Components..... 1
Coordinates..... 7
Segment Data..... 9
Pipe Properties..... 10
Material Properties..... 11
Material Allowables..... 12
Temperature and Pressure..... 13
Bend..... 14
Center of Gravity..... 15
Load Case Description..... 16
Analysis Summary..... 17
Result Summary..... 20

```
-----------------------------------------------------------------------------------------------------------------
242-A  Stability
08/22/2019 2018719                                                    BENTLEY
11:02 AM                                                              AutoPIPE Nuclear 12.00.00.16   MODEL  PAGE   1
-----------------------------------------------------------------------------------------------------------------

                 C O M P O N E N T   D A T A   L I S T I N G

 ---------------------------------------------------------------------------
 *** SEGMENT A

 ---------------------------------------------------------------------------
 From A13 to A00, DY= 0.01 ft                                          Flex

 COMPONENT DATA (Flex Jt):
   Length= 0.01 ft, Weight= 0 lb, Area= 0.0 sq.in, Kax= 13500000 lb/in, Kylat= 27800.0 lb/in,
   Kzlat= 27800.0 lb/in, Ktor= 107.0 ft-lb/deg, Kybend= 659.0 ft-lb/deg, Kzbend= 659.0 ft-lb/deg

 PIPE DATA:
   Pipe Id= 2SCH40, Material= A312-TP304L, Composition= Austenitic Stainless, Poisson= 0.300, Nom Size= 2.000,
   OD= 2.375 inch, Sch= 40S, Wall Thk= 0.154 inch, Mill= 0.019 inch, Cor= 0.005 inch,
   Pipe Density= 501.00 lb/cu.ft, Pipe Unit Wgt= 3.74 lb/ft, Insul Thk= 0 inch, Cladding Thickness = 0 inch,
   Lining Thk= 0 inch, Long Weld E factor= 1.00, Long Weld W factor= 1.00, Long Modulus= 28.34083 E6 psi,
   Hoop Modulus= 28.34083 E6 psi, Shear Modulus= 10.90032 E6 psi, Sc= 16700.0 psi, Syc= 25000.0 psi,
   Suc= 70000.0 psi

 OPERATING DATA:
   P1= 0 psi, T1= 60.00 deg F, Exp1= 0 in/100ft, E1= 28.34083 E6 psi, Sh1= 16700.00 psi, Sy1= 25000.00 psi

 POINT DATA:
   A13, Coordinates, X= 0.00 ft, Y= -0.01 ft, Z= 0.00 ft

 SUPPORT DATA:
   A13, Anchor, Connected to: Ground, KTX= Rigid, KTY= Rigid, KTZ= Rigid, KRX= Rigid, KRY= Rigid, KRZ= Rigid

 ---------------------------------------------------------------------------
 From A00 to A01, DY= 0.20 ft                                          Run

 COMPONENT DATA (Run):
   Rigid (A00 to A01 N), Include weight= No, Include expansion= Yes

 POINT DATA:
   A00, Coordinates, X= 0.00 ft, Y= 0.00 ft, Z= 0.00 ft

 ---------------------------------------------------------------------------
 From A01 to A02, DX= 0.90 ft                                          Bend

 COMPONENT DATA (Bend, TIP= A01, Near= A01 N, Mid= A01 M, Far= A01 F):
   Short Close, Radius= 2.00 inch, Number of cuts= 1, Bend angle= 90.00 deg, Mid point at 50.00 percent,
   End flanges= 0, Flex= 1.000, SIFI= 2.27, SIFO= 2.27
   Rigid (A01 N to A01 F), Include weight= No, Include expansion= Yes

 POINT DATA:
   A01, Coordinates, X= 0.00 ft, Y= 0.20 ft, Z= 0.00 ft
   A01 N, Coordinates, X= 0.00 ft, Y= 0.03 ft, Z= 0.00 ft
   A01 M, Coordinates, X= 0.05 ft, Y= 0.15 ft, Z= 0.00 ft
   A01 M, Added Weight= 29.00 lb
   A01 F, Coordinates, X= 0.17 ft, Y= 0.20 ft, Z= 0.00 ft

 ---------------------------------------------------------------------------
 From A02 to A03, DZ= 1.67 ft                                          Bend

 COMPONENT DATA (Bend, TIP= A02, Near= A02 N, Far= A02 F):
```

C O M P O N E N T D A T A L I S T I N G

Long Elbow, Radius= 3.00 inch, Bend angle= 90.00 deg, End flanges= 0, Flex= Auto, SIFI= 1.73, SIFO= 1.44

POINT DATA:
A02, Coordinates, X= 0.90 ft, Y= 0.20 ft, Z= 0.00 ft
A02 N, Coordinates, X= 0.65 ft, Y= 0.20 ft, Z= 0.00 ft
A02 F, Coordinates, X= 0.90 ft, Y= 0.20 ft, Z= 0.25 ft

From A03 to A04, DX= 0.84 ft Bend

COMPONENT DATA (Bend, TIP= A03, Near= A03 N, Far= A03 F):
Long Elbow, Radius= 3.00 inch, Bend angle= 90.00 deg, End flanges= 0, Flex= Auto, SIFI= 1.73, SIFO= 1.44

POINT DATA:
A03, Coordinates, X= 0.90 ft, Y= 0.20 ft, Z= 1.67 ft
A03 N, Coordinates, X= 0.90 ft, Y= 0.20 ft, Z= 1.42 ft
A03 F, Coordinates, X= 1.15 ft, Y= 0.20 ft, Z= 1.67 ft

From A04 to A05, DZ= 1.82 ft Bend

COMPONENT DATA (Bend, TIP= A04, Near= A04 N, Far= A04 F):
Long Elbow, Radius= 3.00 inch, Bend angle= 90.00 deg, End flanges= 0, Flex= Auto, SIFI= 1.73, SIFO= 1.44

POINT DATA:
A04, Coordinates, X= 1.74 ft, Y= 0.20 ft, Z= 1.67 ft
A04 N, Coordinates, X= 1.49 ft, Y= 0.20 ft, Z= 1.67 ft
A04 F, Coordinates, X= 1.74 ft, Y= 0.20 ft, Z= 1.92 ft

From A05 to A06, DX= 2.32 ft Bend

COMPONENT DATA (Bend, TIP= A05, Near= A05 N, Far= A05 F):
Long Elbow, Radius= 3.00 inch, Bend angle= 90.00 deg, End flanges= 0, Flex= Auto, SIFI= 1.73, SIFO= 1.44

POINT DATA:
A05, Coordinates, X= 1.74 ft, Y= 0.20 ft, Z= 3.49 ft
A05 N, Coordinates, X= 1.74 ft, Y= 0.20 ft, Z= 3.24 ft
A05 F, Coordinates, X= 1.99 ft, Y= 0.20 ft, Z= 3.49 ft

From A06 to A07, DX= 2.48 ft Run

POINT DATA:
A06, Coordinates, X= 4.06 ft, Y= 0.20 ft, Z= 3.49 ft
A06, Added Weight= 5.70 lb, DZ= -0.45 ft
A06, Added Weight= 5.00 lb, DZ= 0.70 ft

From A07 to A08, DZ= -0.83 ft Bend

COMPONENT DATA (Bend, TIP= A07, Near= A07 N, Far= A07 F):
Long Elbow, Radius= 3.00 inch, Bend angle= 90.00 deg, End flanges= 0, Flex= Auto, SIFI= 1.73, SIFO= 1.44

POINT DATA:

C O M P O N E N T D A T A L I S T I N G

A07, Coordinates, X= 6.54 ft, Y= 0.20 ft, Z= 3.49 ft
A07 N, Coordinates, X= 6.29 ft, Y= 0.20 ft, Z= 3.49 ft
A07 F, Coordinates, X= 6.54 ft, Y= 0.20 ft, Z= 3.24 ft

From A08 to A09, DX= 0.83 ft Bend

COMPONENT DATA (Bend, TIP= A08, Near= A08 N, Far= A08 F):
Long Elbow, Radius= 3.00 inch, Bend angle= 90.00 deg, End flanges= 0, Flex= Auto, SIFI= 1.73, SIFO= 1.44

POINT DATA:
A08, Coordinates, X= 6.54 ft, Y= 0.20 ft, Z= 2.66 ft
A08 N, Coordinates, X= 6.54 ft, Y= 0.20 ft, Z= 2.91 ft
A08 F, Coordinates, X= 6.79 ft, Y= 0.20 ft, Z= 2.66 ft

From A09 to A10, DZ= 2.75 ft Bend

COMPONENT DATA (Bend, TIP= A09, Near= A09 N, Far= A09 F):
Long Elbow, Radius= 3.00 inch, Bend angle= 90.00 deg, End flanges= 0, Flex= Auto, SIFI= 1.73, SIFO= 1.44

POINT DATA:
A09, Coordinates, X= 7.37 ft, Y= 0.20 ft, Z= 2.66 ft
A09 N, Coordinates, X= 7.12 ft, Y= 0.20 ft, Z= 2.66 ft
A09 F, Coordinates, X= 7.37 ft, Y= 0.20 ft, Z= 2.91 ft

From A10 to A11, DY= 2.04 ft Bend

COMPONENT DATA (Bend, TIP= A10, Near= A10 N, Far= A10 F):
Long Elbow, Radius= 3.00 inch, Bend angle= 90.00 deg, End flanges= 0, Flex= Auto, SIFI= 1.73, SIFO= 1.44

POINT DATA:
A10, Coordinates, X= 7.37 ft, Y= 0.20 ft, Z= 5.41 ft
A10 N, Coordinates, X= 7.37 ft, Y= 0.20 ft, Z= 5.16 ft
A10 F, Coordinates, X= 7.37 ft, Y= 0.45 ft, Z= 5.41 ft

From A11 to A12, DZ= 0.20 ft Bend

COMPONENT DATA (Bend, TIP= A11, Near= A11 N, Mid= A11 M, Far= A11 F):
Short Close, Radius= 2.00 inch, Number of cuts= 2, Bend angle= 90.00 deg, Mid point at 50.00 percent,
End flanges= 0, Flex= 1.000, SIFI= 2.27, SIFO= 2.27
Rigid (A11 N to A11 F), Include weight= No, Include expansion= Yes
Rigid (A11 F to A12), Include weight= No, Include expansion= Yes

POINT DATA:
A11, Coordinates, X= 7.37 ft, Y= 2.24 ft, Z= 5.41 ft
A11 N, Coordinates, X= 7.37 ft, Y= 2.07 ft, Z= 5.41 ft
A11 M, Coordinates, X= 7.37 ft, Y= 2.19 ft, Z= 5.46 ft
A11 M, Added Weight= 29.00 lb
A11 F, Coordinates, X= 7.37 ft, Y= 2.24 ft, Z= 5.58 ft

From A12 to A14, DZ= 0.01 ft Flex

C O M P O N E N T D A T A L I S T I N G

```
 COMPONENT DATA (Flex Jt):
   Length= 0.01 ft, Weight= 0 lb, Area= 0.0 sq.in, Kax= 13500000 lb/in, Kylat= 27800.0 lb/in,
   Kzlat= 27800.0 lb/in, Ktor= 107.0 ft-lb/deg, Kybend= 659.0 ft-lb/deg, Kzbend= 659.0 ft-lb/deg

 POINT DATA:
   A12, Coordinates, X= 7.37 ft, Y= 2.24 ft, Z= 5.61 ft
   A14, Coordinates, X= 7.37 ft, Y= 2.24 ft, Z= 5.62 ft

 SUPPORT DATA:
   A14, Anchor, Connected to: Ground, KTX= Rigid, KTY= Rigid, KTZ= Rigid, KRX= Rigid, KRY= Rigid, KRZ= Rigid

 ------------------------------------------------------------------------------
 ------------------------------------------------------------------------------
 *** SEGMENT B

 ------------------------------------------------------------------------------
 From B00 to B05, DY= 0.01 ft                                            Flex

 COMPONENT DATA (Flex Jt):
   Length= 0.01 ft, Weight= 0 lb, Area= 0.0 sq.in, Kax= 19000000 lb/in, Kylat= 24700.0 lb/in,
   Kzlat= 24700.0 lb/in, Ktor= 148.0 ft-lb/deg, Kybend= 1332.0 ft-lb/deg, Kzbend= 1332.0 ft-lb/deg

 PIPE DATA:
   Pipe Id= 3SCH40, Composition= Austenitic Stainless, Nom Size= 3.000, OD= 3.500 inch, Wall Thk= 0.216 inch,
   Mill= 0.027 inch, Pipe Density= 501.00 lb/cu.ft, Pipe Unit Wgt= 7.75 lb/ft

 POINT DATA:
   B00, Coordinates, X= 0.00 ft, Y= -0.01 ft, Z= -2.00 ft

 SUPPORT DATA:
   B00, Anchor, Connected to: Ground, KTX= Rigid, KTY= Rigid, KTZ= Rigid, KRX= Rigid, KRY= Rigid, KRZ= Rigid

 ------------------------------------------------------------------------------
 From B05 to B06, DY= 0.29 ft                                            Run

 COMPONENT DATA (Run):
   Rigid (B05 to B06 N), Include weight= No, Include expansion= Yes

 POINT DATA:
   B05, Coordinates, X= 0.00 ft, Y= 0.00 ft, Z= -2.00 ft

 ------------------------------------------------------------------------------
 From B06 to B07, DX= -1.79 ft                                           Bend

 COMPONENT DATA (Bend, TIP= B06, Near= B06 N, Mid= B06 M, Far= B06 F):
   Short Close, Radius= 3.00 inch, Number of cuts= 1, Bend angle= 90.00 deg, Mid point at 50.00 percent,
   End flanges= 0, Flex= 1.000, SIFI= 2.33, SIFO= 2.33
   Rigid (B06 N to B06 F), Include weight= No, Include expansion= Yes

 POINT DATA:
   B06, Coordinates, X= 0.00 ft, Y= 0.29 ft, Z= -2.00 ft
   B06 N, Coordinates, X= 0.00 ft, Y= 0.04 ft, Z= -2.00 ft
   B06 M, Coordinates, X= -0.07 ft, Y= 0.22 ft, Z= -2.00 ft
   B06 M, Added Weight= 77.00 lb
   B06 F, Coordinates, X= -0.25 ft, Y= 0.29 ft, Z= -2.00 ft
```

C O M P O N E N T D A T A L I S T I N G

```
 ---------------------------------------------------------------------------
 From B07 to B08, DY= 2.88 ft                                        Bend

 COMPONENT DATA (Bend, TIP= B07, Near= B07 N, Far= B07 F):
   Long Elbow, Radius= 4.50 inch, Bend angle= 90.00 deg, End flanges= 0, Flex= Auto, SIFI= 1.78, SIFO= 1.48

 POINT DATA:
   B07, Coordinates, X= -1.79 ft, Y= 0.29 ft, Z= -2.00 ft
   B07 N, Coordinates, X= -1.41 ft, Y= 0.29 ft, Z= -2.00 ft
   B07 F, Coordinates, X= -1.79 ft, Y= 0.67 ft, Z= -2.00 ft

 ---------------------------------------------------------------------------
 From B08 to B09, DX= -0.68 ft                                       Bend

 COMPONENT DATA (Bend, TIP= B08, Near= B08 N, Far= B08 F):
   Long Elbow, Radius= 4.50 inch, Bend angle= 90.00 deg, End flanges= 0, Flex= Auto, SIFI= 1.78, SIFO= 1.48

 POINT DATA:
   B08, Coordinates, X= -1.79 ft, Y= 3.17 ft, Z= -2.00 ft
   B08 N, Coordinates, X= -1.79 ft, Y= 2.80 ft, Z= -2.00 ft
   B08 F, Coordinates, X= -2.16 ft, Y= 3.17 ft, Z= -2.00 ft

 ---------------------------------------------------------------------------
 From B09 to B10, DX= -2.41 ft                                       Run

 POINT DATA:
   B09, Coordinates, X= -2.47 ft, Y= 3.17 ft, Z= -2.00 ft
   B09, Added Weight= 5.70 lb
   B09, Added Weight= 2.70 lb

 ---------------------------------------------------------------------------
 From B10 to B11, DY= 1.04 ft                                        Bend

 COMPONENT DATA (Bend, TIP= B10, Near= B10 N, Far= B10 F):
   Long Elbow, Radius= 4.50 inch, Bend angle= 90.00 deg, End flanges= 0, Flex= Auto, SIFI= 1.78, SIFO= 1.48

 POINT DATA:
   B10, Coordinates, X= -4.88 ft, Y= 3.17 ft, Z= -2.00 ft
   B10 N, Coordinates, X= -4.51 ft, Y= 3.17 ft, Z= -2.00 ft
   B10 F, Coordinates, X= -4.88 ft, Y= 3.55 ft, Z= -2.00 ft

 ---------------------------------------------------------------------------
 From B11 to B12, DX= -0.23 ft, DZ= 0.19 ft, L= 0.30 ft              Bend

 COMPONENT DATA (Bend, TIP= B11, Near= B11 N, Mid= B11 M, Far= B11 F):
   Short Close, Radius= 3.00 inch, Number of cuts= 1, Bend angle= 90.00 deg, Mid point at 50.00 percent,
   End flanges= 0, Flex= 1.000, SIFI= 2.33, SIFO= 2.33
   Rigid (B11 N to B11 F), Include weight= No, Include expansion= Yes
   Rigid (B11 F to B12), Include weight= No, Include expansion= Yes

 POINT DATA:
   B11, Coordinates, X= -4.88 ft, Y= 4.21 ft, Z= -2.00 ft
   B11 N, Coordinates, X= -4.88 ft, Y= 3.96 ft, Z= -2.00 ft
   B11 M, Coordinates, X= -4.94 ft, Y= 4.14 ft, Z= -1.95 ft
   B11 M, Added Weight= 76.00 lb
```

C O M P O N E N T D A T A L I S T I N G

B11 F, Coordinates, X= -5.07 ft, Y= 4.21 ft, Z= -1.84 ft

From B12 to B13, DX= -0.01 ft, DZ= 0.01 ft, L= 0.01 ft Flex

COMPONENT DATA (Flex Jt):
Length= 0.01 ft, Weight= 0 lb, Area= 0.0 sq.in, Kax= 19000000 lb/in, Kylat= 24700.0 lb/in,
Kzlat= 24700.0 lb/in, Ktor= 148.0 ft-lb/deg, Kybend= 1332.0 ft-lb/deg, Kzbend= 1332.0 ft-lb/deg

POINT DATA:
B12, Coordinates, X= -5.11 ft, Y= 4.21 ft, Z= -1.81 ft
B13, Coordinates, X= -5.12 ft, Y= 4.21 ft, Z= -1.80 ft

SUPPORT DATA:
B13, Anchor, Connected to: Ground, KTX= Rigid, KTY= Rigid, KTZ= Rigid, KRX= Rigid, KRY= Rigid, KRZ= Rigid

Number of points in the system (Pipe + Frame + Soil): 74 + 5 + 0 = 79

Weight of Empty Pipes + Weight of Contents = Total Weight of System
347.9 lb + 0.0 lb = 347.9 lb

C O O R D I N A T E S D A T A L I S T I N G

POINT NAME	COORDINATE (ft) X	Y	Z
*** SEGMENT A			
A13	0.00	-0.01	0.00
A00	0.00	0.00	0.00
A01 N	0.00	0.03	0.00
A01	0.00	0.20	0.00
A01 M	0.05	0.15	0.00
A01 F	0.17	0.20	0.00
A02 N	0.65	0.20	0.00
A02	0.90	0.20	0.00
A02 F	0.90	0.20	0.25
A03 N	0.90	0.20	1.42
A03	0.90	0.20	1.67
A03 F	1.15	0.20	1.67
A04 N	1.49	0.20	1.67
A04	1.74	0.20	1.67
A04 F	1.74	0.20	1.92
A05 N	1.74	0.20	3.24
A05	1.74	0.20	3.49
A05 F	1.99	0.20	3.49
A06	4.06	0.20	3.49
A07 N	6.29	0.20	3.49
A07	6.54	0.20	3.49
A07 F	6.54	0.20	3.24
A08 N	6.54	0.20	2.91
A08	6.54	0.20	2.66
A08 F	6.79	0.20	2.66
A09 N	7.12	0.20	2.66
A09	7.37	0.20	2.66
A09 F	7.37	0.20	2.91
A10 N	7.37	0.20	5.16
A10	7.37	0.20	5.41
A10 F	7.37	0.45	5.41
A11 N	7.37	2.07	5.41
A11	7.37	2.24	5.41
A11 M	7.37	2.19	5.46
A11 F	7.37	2.24	5.58
A12	7.37	2.24	5.61
A14	7.37	2.24	5.62
*** SEGMENT B			
B00	0.00	-0.01	-2.00
B05	0.00	0.00	-2.00
B06 N	0.00	0.04	-2.00
B06	0.00	0.29	-2.00
B06 M	-0.07	0.22	-2.00
B06 F	-0.25	0.29	-2.00
B07 N	-1.41	0.29	-2.00
B07	-1.79	0.29	-2.00
B07 F	-1.79	0.67	-2.00
B08 N	-1.79	2.80	-2.00
B08	-1.79	3.17	-2.00
B08 F	-2.16	3.17	-2.00

C O O R D I N A T E S D A T A L I S T I N G

POINT NAME	COORDINATE (ft) X	Y	Z
B09	-2.47	3.17	-2.00
B10 N	-4.51	3.17	-2.00
B10	-4.88	3.17	-2.00
B10 F	-4.88	3.55	-2.00
B11 N	-4.88	3.96	-2.00
B11	-4.88	4.21	-2.00
B11 M	-4.94	4.14	-1.95
B11 F	-5.07	4.21	-1.84
B12	-5.11	4.21	-1.81
B13	-5.12	4.21	-1.80

S E G M E N T D A T A L I S T I N G

Segment Name	First Node	Last Node	Line Number	Apply Wind	Apply Bowing	Apply Buoyancy
A	A13	A14		No	No	No
B	B00	B13		No	No	No

```
-----------------------------------------------------------------------------------------------------------------------
242-A  Stability
08/22/2019 2018719                                                          BENTLEY
11:02 AM                                                                    AutoPIPE Nuclear 12.00.00.16   MODEL  PAGE  10
-----------------------------------------------------------------------------------------------------------------------

                    P I P E   D A T A   L I S T I N G

 Pipe ID/     Nom/ O.D.  -----Thickness(inch)----- Spec  InsuDen/   Weight(lb/ft )    E/  Composition/
 Material     Sch  inch  W.Th. Corr Mill Insu Ling Grav/ LingDen/  Pipe/ Ling/ Total  W/  Steel Group/
 CladMaterial            Clad                        InsMt CladDen   Cont  Insu/        f   Tcr
 ---Line Class---                                          lb/cu.ft        Clad
 ------------ ---- ----- ----- ---- ---- ---- ---- ----- --------  ----- ----- ----- ---- --------------------

 Tag No. : <None>
 2SCH40      2.000 2.375 0.154 0.00 0.02    0    0     0    0.000   3.74     0  3.74 1.00 Austenitic Stainless
 A312-TP304L  40S                                          0.000      0     0       1.00 Austenitic
                            0                              0.000            0       1.00    850.000



 Tag No. : <None>
 3SCH40      3.000 3.500 0.216 0.00 0.03    0    0     0    0.000   7.75     0  7.75 1.00 Austenitic Stainless
 A312-TP304L  40S                                          0.000      0     0       1.00 Austenitic
                            0                              0.000            0       1.00    850.000
```

M A T E R I A L D A T A L I S T I N G

Material Name	Pipe ID	Density lb/cu.ft	Pois. Ratio	Temper. deg F	Modulus E6 psi Axial	Hoop	Shear	Expans. in/100ft	Composition
A312-TP304L	2SCH40	501.0	0.30	60.0	28.341	28.341	10.900		Austenitic Stainless
A312-TP304L	3SCH40	501.0	0.30	60.0	28.341	28.341	10.900		Austenitic Stainless

M A T E R I A L A L L O W A B L E D A T A L I S T I N G

Material Name	Pipe ID	Temper. deg F	Allow. psi	Yield psi	Ultimate	Weld Reduction Factor W
A312-TP304L	2SCH40	60.0	16700.0	25000.0	70000.0	1.000
		60.0	16700.0	25000.0		1.000
A312-TP304L	3SCH40	60.0	16700.0	25000.0	70000.0	1.000
		60.0	16700.0	25000.0		1.000

OPERATING TEMPERATURE AND PRESSURE DATA
STRESSES IN psi

POINT NAME	CASE	PRESS. psi	TEMPER deg F	EXPAN. in/100ft	MODULUS E6 psi	ALLOW STRESS	YIELD STRESS
*** SEGMENT A							
A13	T1	0	60.00	0.000	28.341	16700	25000
A14	Same as previous point.						
*** SEGMENT B							
B00	T1	0	60.00	0.000	28.341	16700	25000
B13	Same as previous point.						

u User-defined value
* Non-code material for allowable stress;
Non-standard material for expansion and modulus

242-A Stability
08/22/2019 2018719 BENTLEY
11:02 AM AutoPIPE Nuclear 12.00.00.16 MODEL PAGE 14

B E N D D A T A L I S T I N G

Point Name	Bend Type	Radius (in)	Angle (deg)	OD (in)	tnom (in)	Material	Flan^ /Cuts	SIF in	SIF out	Analysis Set	Flexibility (K)	Pressure Case
A01	*Close	2.00S	90.0	2.375	0.154	A312-TP304L	0/1	2.27	2.27	1	1.00u	None
A02	Elbow	3.00L	90.0	2.375	0.154	A312-TP304L	0/0	1.73	1.44	1	4.40	None
A03	Elbow	3.00L	90.0	2.375	0.154	A312-TP304L	0/0	1.73	1.44	1	4.40	None
A04	Elbow	3.00L	90.0	2.375	0.154	A312-TP304L	0/0	1.73	1.44	1	4.40	None
A05	Elbow	3.00L	90.0	2.375	0.154	A312-TP304L	0/0	1.73	1.44	1	4.40	None
A07	Elbow	3.00L	90.0	2.375	0.154	A312-TP304L	0/0	1.73	1.44	1	4.40	None
A08	Elbow	3.00L	90.0	2.375	0.154	A312-TP304L	0/0	1.73	1.44	1	4.40	None
A09	Elbow	3.00L	90.0	2.375	0.154	A312-TP304L	0/0	1.73	1.44	1	4.40	None
A10	Elbow	3.00L	90.0	2.375	0.154	A312-TP304L	0/0	1.73	1.44	1	4.40	None
A11	*Close	2.00S	90.0	2.375	0.154	A312-TP304L	0/2	2.27	2.27	1	1.00u	None
B06	*Close	3.00S	90.0	3.500	0.216	A312-TP304L	0/1	2.33	2.33	1	1.00u	None
B07	Elbow	4.50L	90.0	3.500	0.216	A312-TP304L	0/0	1.78	1.48	1	4.58	None
B08	Elbow	4.50L	90.0	3.500	0.216	A312-TP304L	0/0	1.78	1.48	1	4.58	None
B10	Elbow	4.50L	90.0	3.500	0.216	A312-TP304L	0/0	1.78	1.48	1	4.58	None
B11	*Close	3.00S	90.0	3.500	0.216	A312-TP304L	0/1	2.33	2.33	1	1.00u	None

^ = Number of bend ends where either a flange or valve is within distance
(L/D) x Nominal diameter, where L/D is defined under Tools > Model options > Edit
u = User Flexibility factor (K) / User SIF present at point, check user-sif data listing.
* = Mid-point present
L = Long radius
S = Short radius

C E N T E R O F G R A V I T Y R E P O R T

Description		Weight (lb)	X CoG (ft)	Y CoG (ft)	Z CoG (ft)
Valve	:	0.00	0.00	0.00	0.00
Support	:	0.00	0.00	0.00	0.00
Flange	:	0.00	0.00	0.00	0.00
Flexible Joint	:	0.00	0.00	0.00	0.00
Additional Weight	:	230.10	-0.62	1.86	-0.53
Pipes (Run, Bend, Tee, Reducer)	:	117.76	0.87	1.27	0.49
PipeTot (Valve+Support+Flange+Flex. Jt.+Add. Wt.+Pipes)	:	347.86	-0.12	1.66	-0.19
Insulation	:	0.00	0.00	0.00	0.00
Cladding	:	0.00	0.00	0.00	0.00
Lining	:	0.00	0.00	0.00	0.00
Contents	:	0.00	0.00	0.00	0.00
Beam	:	8.76	4.06	0.47	3.60
PipeTot + Ins.	:	347.86	-0.12	1.66	-0.19
PipeTot + Ins. + Clad.	:	347.86	-0.12	1.66	-0.19
PipeTot + Ins. + Clad. + Lin.	:	347.86	-0.12	1.66	-0.19
PipeTot + Ins. + Clad. + Lin. + Cont.	:	347.86	-0.12	1.66	-0.19
PipeTot + Beam	:	356.63	-0.02	1.63	-0.09
PipeTot + Ins. + Beam	:	356.63	-0.02	1.63	-0.09
PipeTot + Ins. + Clad. + Beam	:	356.63	-0.02	1.63	-0.09
PipeTot + Ins. + Clad. + Lin. + Beam	:	356.63	-0.02	1.63	-0.09
PipeTot + Ins. + Clad. + Lin. + Cont. + Beam	:	356.63	-0.02	1.63	-0.09

NOTE: COG report only includes the currently visible beams and segments.
All pipe segments are included.
All beams are included.

L O A D C A S E D E S C R I P T I O N

Load Case	Load Case Name	Description
GR	Gravity	
T1	Thermal 1	
E1	Earth 1	
P1	Press 1	

```
-----------------------------------------------------------------------------------------------------------
242-A  Stability
08/22/2019 2018719                                                    BENTLEY
11:02 AM                                                              AutoPIPE Nuclear 12.00.00.16   RESULT PAGE  17
-----------------------------------------------------------------------------------------------------------


                  A N A L Y S I S   S U M M A R Y


   Current model revision number : 1

     Constant values used
              Acceleration due to gravity................  386.40000 in/s/s
              Density of water for specific gravity Cal..     62.400 lb/cu.ft
              Density of sea water......................     62.400 lb/cu.ft
              Density of ground water ..................     62.400 lb/cu.ft

     Static - Analysis set number .................. 1
              Date and Time of analysis ............ Aug 22, 2019   10:57 AM
              Model Revision Number ................ 1
              Number of load cases ................. 2
              Load cases analyzed .................. GR E1
              Description .......................... Analysis Set No.1
              Gaps/Friction/Soil considered ......... Yes
              Tolerance - Force, Displacement ....... 10.00 lbf  0.0010 in
              Friction - Scale Factor, Tolerance .... 1.00   0.10
              Ignore friction for cases E1,E2,E3 .... Yes
              Ignore friction for gravity case ...... Yes
              Hanger design run ..................... No
              Cut short included .................... No
              Thermal bowing included ............... No
              Include Bourdon rotational effect ..... No
              Pipe radius for Bourdon calculation ... Mean
              Occasional load analysis type ......... Nonlinear
              Non-linear analysis summary file ...... 242-A  Stability.LOG
              Use default load sequence ............. Yes
              Base load cases for nonlinear analysis
                                                         GR   = None
                                                         E1   = GR
              Weight of contents included ........... Yes
              Fluid density factor for contents ..... 1.00
              Pressure stiffening case .............. None
              Hot modulus case ...................... None
              Pressure Extension..................... No
              Water elevation for buoyancy loads .... Not considered
              Use corroded thickness in analysis .... No
              Rigid stiffness factor ................ 1000.0
              Support rigid stiffness (translation) . 0.100000E+11 lb/in
              Support rigid stiffness (rotation) .... 0.100000E+11 ft-lb/deg
              Anchor rigid stiffness (translation) .. 0.100000E+11 lb/in
              Anchor rigid stiffness (rotation) ..... 0.100000E+11 ft-lb/deg
              Remove Lift-Off Supports .............. No
```

242-A Stability
08/22/2019 2018719 BENTLEY
11:02 AM AutoPIPE Nuclear 12.00.00.16 RESULT PAGE 18

CODE COMPLIANCE COMBINATIONS

<Description> Combination	Category	Method	Case/Combination	Factor	M/S	K-Factor	Allowable (psi)	D/A/P/C
GR + Max P{1}	Sustain	Sum	GR[1]	1.00			Automatic	Y Y Y Y
			Max Long	1.00				
Max Range	Expansion	Sum	Temp. Range	1.00			Automatic	Y Y Y Y
Sus. + E1{1}	Occasion	Abs sum	E1[1]	1.00		1.330	Automatic	Y Y Y Y
			Max Sus	1.00				

Notes:

D/A/P/C: [D]efault/[A]uto-Update/[P]rint options/[C]Consistent (Y=Yes, N=No)

NON-CODE COMBINATIONS

<Description> Combination	Method	Case/Combination	Factor	D/A/P/C
Gravity{1}	Sum	GR[1]	1.00	Y Y Y Y
< 1.00, 1.00, 1.00> Static Seismic 1{1}	Sum	E1[1]	1.00	Y Y Y N
GE1{1}	Sum	GR[1]	1.00	Y Y Y Y
		E1[1]	1.00	

Notes:

D/A/P/C: [D]efault/[A]uto-Update/[P]rint options/[C]Consistent (Y=Yes, N=No)

CODE COMPLIANCE

```
Y - Factor ............................ 0.40
Design Pressure Factor ................ 1.00
Minimum stress ratio used in reports... 0.00
Number of stress points per span ...... 0
Include corrosion in stress calcs. .... Y
Include corrosion in Hoop stress calcs. Y
Include torsion in code stress ........ N
Include axial force in code stress .... N
Include sustain load margin ........... Only if allowable stress is exceeded
Use minimum sustained margin........... Y
Set sustained SIF=1 no bends .......... N
Set occasional SIF = 1 ................ N
Set occasional SIF = 0.75i ............ Y
Apply cold/hot modulus ratio .......... N
Disable auto code combinations ........ N
Disable auto non-code combinations .... N
No. of thermal ranges to report ....... 0
Include Max Range combination ......... Y
Total stress .......................... Octahedral
Direct shear .......................... None
Longitudinal pressure calculation ..... AxF/area
Use code case 178 ..................... Y
Inc. Axial Str and Pcase in Sustained.. Axial forces
Use alternate occasional allowable .... N
Apply circumferential weld WC factor .. N
ASME B31J Enabled ..................... N
```

*** NOTE ***

No operating loads analyzed. Maximum specified
pressure will be used for sustained stress

*** Summary not available ***

APPENDIX D3

AUTOPIPE ANALYSIS – DEAD WEIGHT STRESS

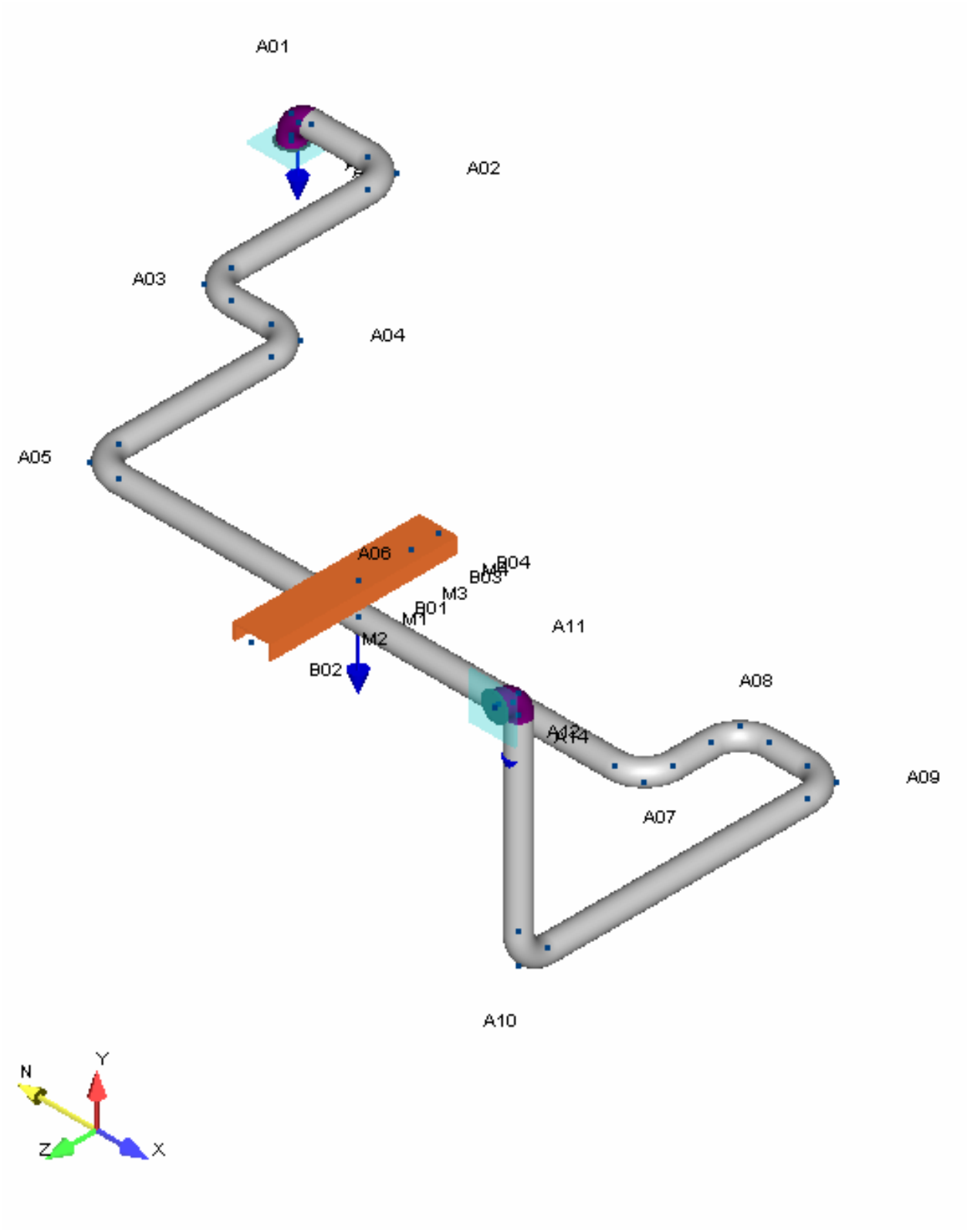
A01
A02
A03
A04
A05
A06
B04
B03
M4
M3
B01
M1
M2
B02
A11
A08
A14
A09
A07
A10
N
Y
Z
X

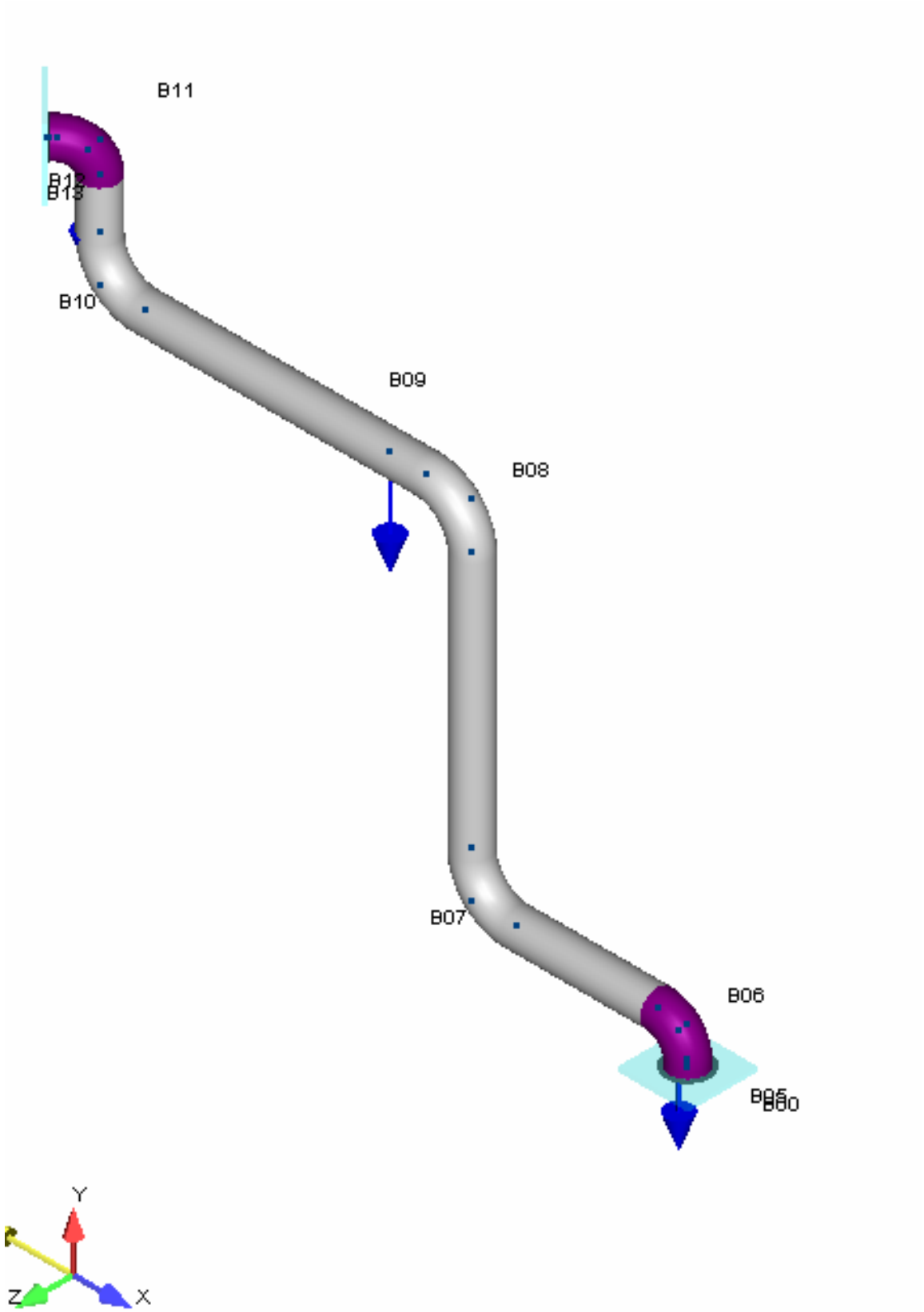
B11
B12
B13
B10
B09
B08
B07
B06
B05
B00
Y
Z
X

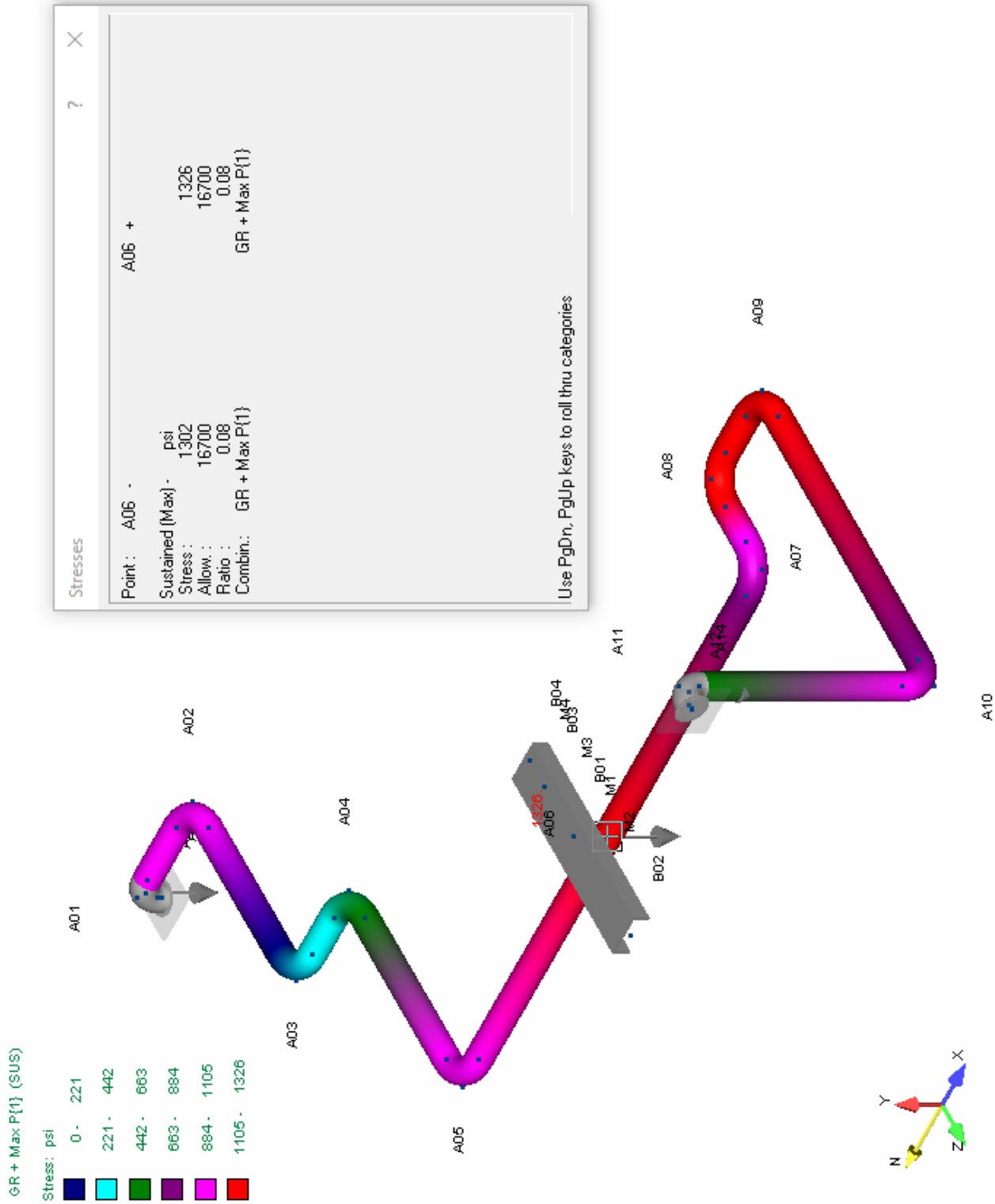
GR + Max P{1} (SUS)
Stress: psi
0 - 221
221 - 442
442 - 663
663 - 884
884 - 1105
1105 - 1326
Stresses
Point : A06 -
A06 +
Sustained (Max) - psi
Stress : 1302
Allow. : 16700
Ratio : 0.08
Combin.: GR + Max P{1}
1326
16700
0.08
GR + Max P{1}
Use PgDn, PgUp keys to roll thru categories
A01
A02
A03
A04
A05
A06
A07
A08
A09
A10
A11
A12
B01
B02
B03
B04
M1
M2
M3
M4
1326
X
Y
Z
N

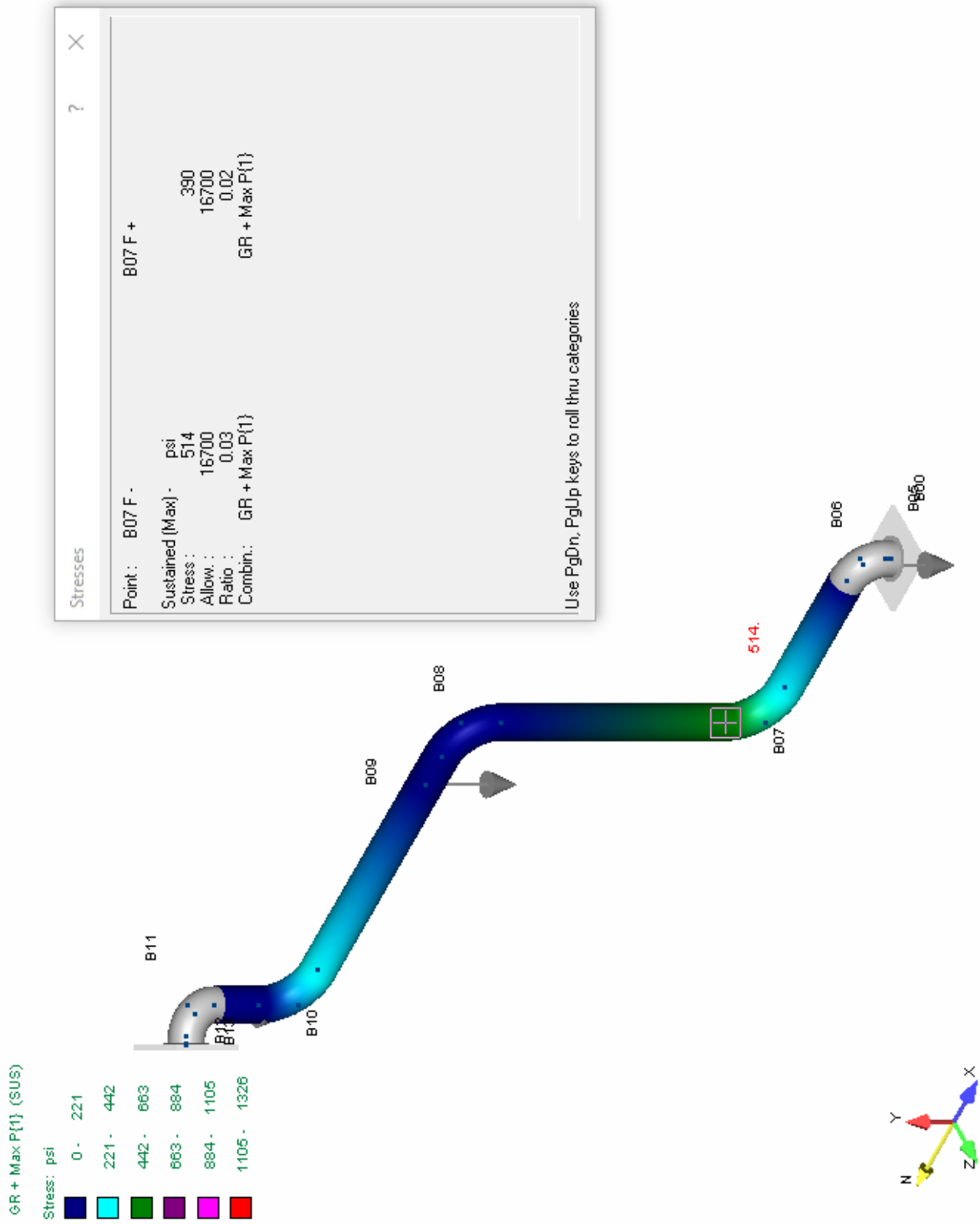
GR + Max P{1} (SUS)
Stress: psi
0 - 221
221 - 442
442 - 663
663 - 884
884 - 1105
1105 - 1326
B11
B10
B09
B08
514.
B07
B06
Stresses
Point : B07 F -
B07 F +
Sustained (Max) - psi
Stress : 514 390
Allow. : 16700 16700
Ratio : 0.03 0.02
Combin.: GR + Max P{1} GR + Max P{1}
Use PgDn, PgUp keys to roll thru categories
X
Y
Z

```
242-A  Dead Weight
08/22/2019 2018719                                                                                    BENTLEY
11:11 AM                                                                                              AutoPIPE Nuclear 12.00.00.16
```

```
        *                            *******   **  *******   *******
       ***               **          **    **  **  **    **  **
      ** **            ******        **    **  **  **    **  **
     **   **    **   **  **   *****  *******   **  *******   *****
    *********   **   **  **  **   **  **        **  **        **
   **       **  **   **  **  **   **  **        **  **        **
  **         **  *****   **   *****  **        **  **        *******
```

Pipe Stress Analysis and Design Program

Version: 12.00.00.16

Edition: Nuclear

Developed and Maintained by

BENTLEY SYSTEMS, INCORPORATED
1065 N. PACIFIC CENTER DRIVE, SUITE 450
ANAHEIM, CA 92806

```
************************************************************
**                                                        **
**              AUTOPIPE SYSTEM INFORMATION               **
**                                                        **
************************************************************
```

SYSTEM NAME : 242-A Dead Weight

PROJECT ID : 2018719

PREPARED BY : _____
JIM HARRINGTON

CHECKED BY : _____
RYAN LANG

1ST APPROVER : _____

2ND APPROVER : _____

PIPING CODE : ASME B31.3

YEAR : 2016

VERTICAL AXIS : Y

AMBIENT TEMPERATURE : 60.0 deg F

COMPONENT LIBRARY : AUTOPIPE

MATERIAL LIBRARY : B313-16

MODEL REVISION NUMBER : 1

T A B L E O F C O N T E N T S

Components..... 1
Coordinates..... 7
Segment Data..... 9
Pipe Properties..... 10
Material Properties..... 11
Material Allowables..... 12
Temperature and Pressure..... 13
Bend..... 14
Center of Gravity..... 15
Load Case Description..... 16
Analysis Summary..... 17
General Stress..... 21
Result Summary..... 24

```
-----------------------------------------------------------------------------------------------------------
242-A  Dead Weight
08/22/2019 2018719                                                    BENTLEY
11:11 AM                                                              AutoPIPE Nuclear 12.00.00.16   MODEL  PAGE   1
-----------------------------------------------------------------------------------------------------------

                 C O M P O N E N T   D A T A   L I S T I N G

 ---------------------------------------------------------------------------
 *** SEGMENT A

 ---------------------------------------------------------------------------
 From A13 to A00, DY= 0.01 ft                                          Flex

 COMPONENT DATA (Flex Jt):
   Length= 0.01 ft, Weight= 0 lb, Area= 0.0 sq.in, Kax= 13500000 lb/in, Kylat= 27800.0 lb/in,
   Kzlat= 27800.0 lb/in, Ktor= 107.0 ft-lb/deg, Kybend= 659.0 ft-lb/deg, Kzbend= 659.0 ft-lb/deg

 PIPE DATA:
   Pipe Id= 2SCH40, Material= A312-TP304L, Composition= Austenitic Stainless, Poisson= 0.300, Nom Size= 2.000,
   OD= 2.375 inch, Sch= 40S, Wall Thk= 0.154 inch, Mill= 0.019 inch, Cor= 0.005 inch,
   Pipe Density= 501.00 lb/cu.ft, Pipe Unit Wgt= 3.74 lb/ft, Insul Thk= 0 inch, Cladding Thickness = 0 inch,
   Lining Thk= 0 inch, Long Weld E factor= 1.00, Long Weld W factor= 1.00, Long Modulus= 28.34083 E6 psi,
   Hoop Modulus= 28.34083 E6 psi, Shear Modulus= 10.90032 E6 psi, Sc= 16700.0 psi, Syc= 25000.0 psi,
   Suc= 70000.0 psi

 OPERATING DATA:
   P1= 0 psi, T1= 60.00 deg F, Exp1= 0 in/100ft, E1= 28.34083 E6 psi, Sh1= 16700.00 psi, Sy1= 25000.00 psi

 POINT DATA:
   A13, Coordinates, X= 0.00 ft, Y= -0.01 ft, Z= 0.00 ft

 SUPPORT DATA:
   A13, Anchor, Connected to: Ground, KTX= Rigid, KTY= Rigid, KTZ= Rigid, KRX= Rigid, KRY= Rigid, KRZ= Rigid

 ---------------------------------------------------------------------------
 From A00 to A01, DY= 0.20 ft                                          Run

 COMPONENT DATA (Run):
   Rigid (A00 to A01 N), Include weight= No, Include expansion= Yes

 POINT DATA:
   A00, Coordinates, X= 0.00 ft, Y= 0.00 ft, Z= 0.00 ft

 ---------------------------------------------------------------------------
 From A01 to A02, DX= 0.90 ft                                          Bend

 COMPONENT DATA (Bend, TIP= A01, Near= A01 N, Mid= A01 M, Far= A01 F):
   Short Close, Radius= 2.00 inch, Number of cuts= 1, Bend angle= 90.00 deg, Mid point at 50.00 percent,
   End flanges= 0, Flex= 1.000, SIFI= 2.27, SIFO= 2.27
   Rigid (A01 N to A01 F), Include weight= No, Include expansion= Yes

 POINT DATA:
   A01, Coordinates, X= 0.00 ft, Y= 0.20 ft, Z= 0.00 ft
   A01 N, Coordinates, X= 0.00 ft, Y= 0.03 ft, Z= 0.00 ft
   A01 M, Coordinates, X= 0.05 ft, Y= 0.15 ft, Z= 0.00 ft
   A01 M, Added Weight= 29.00 lb
   A01 F, Coordinates, X= 0.17 ft, Y= 0.20 ft, Z= 0.00 ft

 ---------------------------------------------------------------------------
 From A02 to A03, DZ= 1.67 ft                                          Bend

 COMPONENT DATA (Bend, TIP= A02, Near= A02 N, Far= A02 F):
```

C O M P O N E N T D A T A L I S T I N G

```
  Long Elbow, Radius= 3.00 inch, Bend angle= 90.00 deg, End flanges= 0, Flex= Auto, SIFI= 1.73, SIFO= 1.44

 POINT DATA:
   A02, Coordinates, X= 0.90 ft, Y= 0.20 ft, Z= 0.00 ft
   A02 N, Coordinates, X= 0.65 ft, Y= 0.20 ft, Z= 0.00 ft
   A02 F, Coordinates, X= 0.90 ft, Y= 0.20 ft, Z= 0.25 ft

 ---------------------------------------------------------------------------
 From A03 to A04, DX= 0.84 ft                                          Bend

 COMPONENT DATA (Bend, TIP= A03, Near= A03 N, Far= A03 F):
   Long Elbow, Radius= 3.00 inch, Bend angle= 90.00 deg, End flanges= 0, Flex= Auto, SIFI= 1.73, SIFO= 1.44

 POINT DATA:
   A03, Coordinates, X= 0.90 ft, Y= 0.20 ft, Z= 1.67 ft
   A03 N, Coordinates, X= 0.90 ft, Y= 0.20 ft, Z= 1.42 ft
   A03 F, Coordinates, X= 1.15 ft, Y= 0.20 ft, Z= 1.67 ft

 ---------------------------------------------------------------------------
 From A04 to A05, DZ= 1.82 ft                                          Bend

 COMPONENT DATA (Bend, TIP= A04, Near= A04 N, Far= A04 F):
   Long Elbow, Radius= 3.00 inch, Bend angle= 90.00 deg, End flanges= 0, Flex= Auto, SIFI= 1.73, SIFO= 1.44

 POINT DATA:
   A04, Coordinates, X= 1.74 ft, Y= 0.20 ft, Z= 1.67 ft
   A04 N, Coordinates, X= 1.49 ft, Y= 0.20 ft, Z= 1.67 ft
   A04 F, Coordinates, X= 1.74 ft, Y= 0.20 ft, Z= 1.92 ft

 ---------------------------------------------------------------------------
 From A05 to A06, DX= 2.32 ft                                          Bend

 COMPONENT DATA (Bend, TIP= A05, Near= A05 N, Far= A05 F):
   Long Elbow, Radius= 3.00 inch, Bend angle= 90.00 deg, End flanges= 0, Flex= Auto, SIFI= 1.73, SIFO= 1.44

 POINT DATA:
   A05, Coordinates, X= 1.74 ft, Y= 0.20 ft, Z= 3.49 ft
   A05 N, Coordinates, X= 1.74 ft, Y= 0.20 ft, Z= 3.24 ft
   A05 F, Coordinates, X= 1.99 ft, Y= 0.20 ft, Z= 3.49 ft

 ---------------------------------------------------------------------------
 From A06 to A07, DX= 2.48 ft                                          Run

 POINT DATA:
   A06, Coordinates, X= 4.06 ft, Y= 0.20 ft, Z= 3.49 ft
   A06, Added Weight= 5.70 lb, DZ= -0.45 ft
   A06, Added Weight= 5.00 lb, DZ= 0.70 ft

 ---------------------------------------------------------------------------
 From A07 to A08, DZ= -0.83 ft                                         Bend

 COMPONENT DATA (Bend, TIP= A07, Near= A07 N, Far= A07 F):
   Long Elbow, Radius= 3.00 inch, Bend angle= 90.00 deg, End flanges= 0, Flex= Auto, SIFI= 1.73, SIFO= 1.44

 POINT DATA:
```

C O M P O N E N T D A T A L I S T I N G

A07, Coordinates, X= 6.54 ft, Y= 0.20 ft, Z= 3.49 ft
A07 N, Coordinates, X= 6.29 ft, Y= 0.20 ft, Z= 3.49 ft
A07 F, Coordinates, X= 6.54 ft, Y= 0.20 ft, Z= 3.24 ft

From A08 to A09, DX= 0.83 ft Bend

COMPONENT DATA (Bend, TIP= A08, Near= A08 N, Far= A08 F):
Long Elbow, Radius= 3.00 inch, Bend angle= 90.00 deg, End flanges= 0, Flex= Auto, SIFI= 1.73, SIFO= 1.44

POINT DATA:
A08, Coordinates, X= 6.54 ft, Y= 0.20 ft, Z= 2.66 ft
A08 N, Coordinates, X= 6.54 ft, Y= 0.20 ft, Z= 2.91 ft
A08 F, Coordinates, X= 6.79 ft, Y= 0.20 ft, Z= 2.66 ft

From A09 to A10, DZ= 2.75 ft Bend

COMPONENT DATA (Bend, TIP= A09, Near= A09 N, Far= A09 F):
Long Elbow, Radius= 3.00 inch, Bend angle= 90.00 deg, End flanges= 0, Flex= Auto, SIFI= 1.73, SIFO= 1.44

POINT DATA:
A09, Coordinates, X= 7.37 ft, Y= 0.20 ft, Z= 2.66 ft
A09 N, Coordinates, X= 7.12 ft, Y= 0.20 ft, Z= 2.66 ft
A09 F, Coordinates, X= 7.37 ft, Y= 0.20 ft, Z= 2.91 ft

From A10 to A11, DY= 2.04 ft Bend

COMPONENT DATA (Bend, TIP= A10, Near= A10 N, Far= A10 F):
Long Elbow, Radius= 3.00 inch, Bend angle= 90.00 deg, End flanges= 0, Flex= Auto, SIFI= 1.73, SIFO= 1.44

POINT DATA:
A10, Coordinates, X= 7.37 ft, Y= 0.20 ft, Z= 5.41 ft
A10 N, Coordinates, X= 7.37 ft, Y= 0.20 ft, Z= 5.16 ft
A10 F, Coordinates, X= 7.37 ft, Y= 0.45 ft, Z= 5.41 ft

From A11 to A12, DZ= 0.20 ft Bend

COMPONENT DATA (Bend, TIP= A11, Near= A11 N, Mid= A11 M, Far= A11 F):
Short Close, Radius= 2.00 inch, Number of cuts= 2, Bend angle= 90.00 deg, Mid point at 50.00 percent,
End flanges= 0, Flex= 1.000, SIFI= 2.27, SIFO= 2.27
Rigid (A11 N to A11 F), Include weight= No, Include expansion= Yes
Rigid (A11 F to A12), Include weight= No, Include expansion= Yes

POINT DATA:
A11, Coordinates, X= 7.37 ft, Y= 2.24 ft, Z= 5.41 ft
A11 N, Coordinates, X= 7.37 ft, Y= 2.07 ft, Z= 5.41 ft
A11 M, Coordinates, X= 7.37 ft, Y= 2.19 ft, Z= 5.46 ft
A11 M, Added Weight= 29.00 lb
A11 F, Coordinates, X= 7.37 ft, Y= 2.24 ft, Z= 5.58 ft

From A12 to A14, DZ= 0.01 ft Flex

C O M P O N E N T D A T A L I S T I N G

```
 COMPONENT DATA (Flex Jt):
   Length= 0.01 ft, Weight= 0 lb, Area= 0.0 sq.in, Kax= 13500000 lb/in, Kylat= 27800.0 lb/in,
   Kzlat= 27800.0 lb/in, Ktor= 107.0 ft-lb/deg, Kybend= 659.0 ft-lb/deg, Kzbend= 659.0 ft-lb/deg

 POINT DATA:
   A12, Coordinates, X= 7.37 ft, Y= 2.24 ft, Z= 5.61 ft
   A14, Coordinates, X= 7.37 ft, Y= 2.24 ft, Z= 5.62 ft

 SUPPORT DATA:
   A14, Anchor, Connected to: Ground, KTX= Rigid, KTY= Rigid, KTZ= Rigid, KRX= Rigid, KRY= Rigid, KRZ= Rigid

 ------------------------------------------------------------------------------
 ------------------------------------------------------------------------------
 *** SEGMENT B

 ------------------------------------------------------------------------------
 From B00 to B05, DY= 0.01 ft                                            Flex

 COMPONENT DATA (Flex Jt):
   Length= 0.01 ft, Weight= 0 lb, Area= 0.0 sq.in, Kax= 19000000 lb/in, Kylat= 24700.0 lb/in,
   Kzlat= 24700.0 lb/in, Ktor= 148.0 ft-lb/deg, Kybend= 1332.0 ft-lb/deg, Kzbend= 1332.0 ft-lb/deg

 PIPE DATA:
   Pipe Id= 3SCH40, Composition= Austenitic Stainless, Nom Size= 3.000, OD= 3.500 inch, Wall Thk= 0.216 inch,
   Mill= 0.027 inch, Pipe Density= 501.00 lb/cu.ft, Pipe Unit Wgt= 7.75 lb/ft

 POINT DATA:
   B00, Coordinates, X= 0.00 ft, Y= -0.01 ft, Z= -2.00 ft

 SUPPORT DATA:
   B00, Anchor, Connected to: Ground, KTX= Rigid, KTY= Rigid, KTZ= Rigid, KRX= Rigid, KRY= Rigid, KRZ= Rigid

 ------------------------------------------------------------------------------
 From B05 to B06, DY= 0.29 ft                                            Run

 COMPONENT DATA (Run):
   Rigid (B05 to B06 N), Include weight= No, Include expansion= Yes

 POINT DATA:
   B05, Coordinates, X= 0.00 ft, Y= 0.00 ft, Z= -2.00 ft

 ------------------------------------------------------------------------------
 From B06 to B07, DX= -1.79 ft                                           Bend

 COMPONENT DATA (Bend, TIP= B06, Near= B06 N, Mid= B06 M, Far= B06 F):
   Short Close, Radius= 3.00 inch, Number of cuts= 1, Bend angle= 90.00 deg, Mid point at 50.00 percent,
   End flanges= 0, Flex= 1.000, SIFI= 2.33, SIFO= 2.33
   Rigid (B06 N to B06 F), Include weight= No, Include expansion= Yes

 POINT DATA:
   B06, Coordinates, X= 0.00 ft, Y= 0.29 ft, Z= -2.00 ft
   B06 N, Coordinates, X= 0.00 ft, Y= 0.04 ft, Z= -2.00 ft
   B06 M, Coordinates, X= -0.07 ft, Y= 0.22 ft, Z= -2.00 ft
   B06 M, Added Weight= 77.00 lb
   B06 F, Coordinates, X= -0.25 ft, Y= 0.29 ft, Z= -2.00 ft
```

C O M P O N E N T D A T A L I S T I N G

```
 ---------------------------------------------------------------------------
 From B07 to B08, DY= 2.88 ft                                          Bend

 COMPONENT DATA (Bend, TIP= B07, Near= B07 N, Far= B07 F):
   Long Elbow, Radius= 4.50 inch, Bend angle= 90.00 deg, End flanges= 0, Flex= Auto, SIFI= 1.78, SIFO= 1.48

 POINT DATA:
   B07, Coordinates, X= -1.79 ft, Y= 0.29 ft, Z= -2.00 ft
   B07 N, Coordinates, X= -1.41 ft, Y= 0.29 ft, Z= -2.00 ft
   B07 F, Coordinates, X= -1.79 ft, Y= 0.67 ft, Z= -2.00 ft

 ---------------------------------------------------------------------------
 From B08 to B09, DX= -0.68 ft                                         Bend

 COMPONENT DATA (Bend, TIP= B08, Near= B08 N, Far= B08 F):
   Long Elbow, Radius= 4.50 inch, Bend angle= 90.00 deg, End flanges= 0, Flex= Auto, SIFI= 1.78, SIFO= 1.48

 POINT DATA:
   B08, Coordinates, X= -1.79 ft, Y= 3.17 ft, Z= -2.00 ft
   B08 N, Coordinates, X= -1.79 ft, Y= 2.80 ft, Z= -2.00 ft
   B08 F, Coordinates, X= -2.16 ft, Y= 3.17 ft, Z= -2.00 ft

 ---------------------------------------------------------------------------
 From B09 to B10, DX= -2.41 ft                                         Run

 POINT DATA:
   B09, Coordinates, X= -2.47 ft, Y= 3.17 ft, Z= -2.00 ft
   B09, Added Weight= 5.70 lb
   B09, Added Weight= 2.70 lb

 ---------------------------------------------------------------------------
 From B10 to B11, DY= 1.04 ft                                          Bend

 COMPONENT DATA (Bend, TIP= B10, Near= B10 N, Far= B10 F):
   Long Elbow, Radius= 4.50 inch, Bend angle= 90.00 deg, End flanges= 0, Flex= Auto, SIFI= 1.78, SIFO= 1.48

 POINT DATA:
   B10, Coordinates, X= -4.88 ft, Y= 3.17 ft, Z= -2.00 ft
   B10 N, Coordinates, X= -4.51 ft, Y= 3.17 ft, Z= -2.00 ft
   B10 F, Coordinates, X= -4.88 ft, Y= 3.55 ft, Z= -2.00 ft

 ---------------------------------------------------------------------------
 From B11 to B12, DX= -0.23 ft, DZ= 0.19 ft, L= 0.30 ft                Bend

 COMPONENT DATA (Bend, TIP= B11, Near= B11 N, Mid= B11 M, Far= B11 F):
   Short Close, Radius= 3.00 inch, Number of cuts= 1, Bend angle= 90.00 deg, Mid point at 50.00 percent,
   End flanges= 0, Flex= 1.000, SIFI= 2.33, SIFO= 2.33
   Rigid (B11 N to B11 F), Include weight= No, Include expansion= Yes
   Rigid (B11 F to B12), Include weight= No, Include expansion= Yes

 POINT DATA:
   B11, Coordinates, X= -4.88 ft, Y= 4.21 ft, Z= -2.00 ft
   B11 N, Coordinates, X= -4.88 ft, Y= 3.96 ft, Z= -2.00 ft
   B11 M, Coordinates, X= -4.94 ft, Y= 4.14 ft, Z= -1.95 ft
   B11 M, Added Weight= 76.00 lb
```

C O M P O N E N T D A T A L I S T I N G

B11 F, Coordinates, X= -5.07 ft, Y= 4.21 ft, Z= -1.84 ft

From B12 to B13, DX= -0.01 ft, DZ= 0.01 ft, L= 0.01 ft Flex

COMPONENT DATA (Flex Jt):
Length= 0.01 ft, Weight= 0 lb, Area= 0.0 sq.in, Kax= 19000000 lb/in, Kylat= 24700.0 lb/in,
Kzlat= 24700.0 lb/in, Ktor= 148.0 ft-lb/deg, Kybend= 1332.0 ft-lb/deg, Kzbend= 1332.0 ft-lb/deg

POINT DATA:
B12, Coordinates, X= -5.11 ft, Y= 4.21 ft, Z= -1.81 ft
B13, Coordinates, X= -5.12 ft, Y= 4.21 ft, Z= -1.80 ft

SUPPORT DATA:
B13, Anchor, Connected to: Ground, KTX= Rigid, KTY= Rigid, KTZ= Rigid, KRX= Rigid, KRY= Rigid, KRZ= Rigid

Number of points in the system (Pipe + Frame + Soil): 74 + 5 + 0 = 79

Weight of Empty Pipes + Weight of Contents = Total Weight of System
347.9 lb + 0.0 lb = 347.9 lb

C O O R D I N A T E S D A T A L I S T I N G

POINT NAME	COORDINATE (ft) X	Y	Z
*** SEGMENT A			
A13	0.00	-0.01	0.00
A00	0.00	0.00	0.00
A01 N	0.00	0.03	0.00
A01	0.00	0.20	0.00
A01 M	0.05	0.15	0.00
A01 F	0.17	0.20	0.00
A02 N	0.65	0.20	0.00
A02	0.90	0.20	0.00
A02 F	0.90	0.20	0.25
A03 N	0.90	0.20	1.42
A03	0.90	0.20	1.67
A03 F	1.15	0.20	1.67
A04 N	1.49	0.20	1.67
A04	1.74	0.20	1.67
A04 F	1.74	0.20	1.92
A05 N	1.74	0.20	3.24
A05	1.74	0.20	3.49
A05 F	1.99	0.20	3.49
A06	4.06	0.20	3.49
A07 N	6.29	0.20	3.49
A07	6.54	0.20	3.49
A07 F	6.54	0.20	3.24
A08 N	6.54	0.20	2.91
A08	6.54	0.20	2.66
A08 F	6.79	0.20	2.66
A09 N	7.12	0.20	2.66
A09	7.37	0.20	2.66
A09 F	7.37	0.20	2.91
A10 N	7.37	0.20	5.16
A10	7.37	0.20	5.41
A10 F	7.37	0.45	5.41
A11 N	7.37	2.07	5.41
A11	7.37	2.24	5.41
A11 M	7.37	2.19	5.46
A11 F	7.37	2.24	5.58
A12	7.37	2.24	5.61
A14	7.37	2.24	5.62
*** SEGMENT B			
B00	0.00	-0.01	-2.00
B05	0.00	0.00	-2.00
B06 N	0.00	0.04	-2.00
B06	0.00	0.29	-2.00
B06 M	-0.07	0.22	-2.00
B06 F	-0.25	0.29	-2.00
B07 N	-1.41	0.29	-2.00
B07	-1.79	0.29	-2.00
B07 F	-1.79	0.67	-2.00
B08 N	-1.79	2.80	-2.00
B08	-1.79	3.17	-2.00
B08 F	-2.16	3.17	-2.00

C O O R D I N A T E S D A T A L I S T I N G

POINT NAME	COORDINATE (ft) X	Y	Z
B09	-2.47	3.17	-2.00
B10 N	-4.51	3.17	-2.00
B10	-4.88	3.17	-2.00
B10 F	-4.88	3.55	-2.00
B11 N	-4.88	3.96	-2.00
B11	-4.88	4.21	-2.00
B11 M	-4.94	4.14	-1.95
B11 F	-5.07	4.21	-1.84
B12	-5.11	4.21	-1.81
B13	-5.12	4.21	-1.80

242-A Dead Weight
08/22/2019 2018719 BENTLEY
11:11 AM AutoPIPE Nuclear 12.00.00.16 MODEL PAGE 9

S E G M E N T D A T A L I S T I N G

Segment Name	First Node	Last Node	Line Number	Apply Wind	Apply Bowing	Apply Buoyancy
A	A13	A14		No	No	No
B	B00	B13		No	No	No

```
-----------------------------------------------------------------------------------------------------------------------
242-A  Dead Weight
08/22/2019 2018719                                                          BENTLEY
11:11 AM                                                                    AutoPIPE Nuclear 12.00.00.16   MODEL  PAGE  10
-----------------------------------------------------------------------------------------------------------------------

                    P I P E   D A T A   L I S T I N G

 Pipe ID/     Nom/ O.D.  -----Thickness(inch)----- Spec  InsuDen/   Weight(lb/ft )    E/  Composition/
 Material     Sch  inch  W.Th. Corr Mill Insu Ling Grav/ LingDen/  Pipe/ Ling/ Total  W/  Steel Group/
 CladMaterial            Clad                        InsMt CladDen   Cont  Insu/        f   Tcr
 ---Line Class---                                          lb/cu.ft        Clad
 ------------ ---- ----- ----- ---- ---- ---- ---- ----- --------  ----- ----- ----- ---- --------------------

 Tag No. : <None>
 2SCH40      2.000 2.375 0.154 0.00 0.02    0    0     0    0.000   3.74     0  3.74 1.00 Austenitic Stainless
 A312-TP304L  40S                                          0.000      0     0       1.00 Austenitic
                            0                              0.000            0       1.00    850.000



 Tag No. : <None>
 3SCH40      3.000 3.500 0.216 0.00 0.03    0    0     0    0.000   7.75     0  7.75 1.00 Austenitic Stainless
 A312-TP304L  40S                                          0.000      0     0       1.00 Austenitic
                            0                              0.000            0       1.00    850.000
```

M A T E R I A L D A T A L I S T I N G

Material Name	Pipe ID	Density lb/cu.ft	Pois. Ratio	Temper. deg F	Modulus E6 psi Axial	Hoop	Shear	Expans. in/100ft	Composition
A312-TP304L	2SCH40	501.0	0.30	60.0	28.341	28.341	10.900		Austenitic Stainless
A312-TP304L	3SCH40	501.0	0.30	60.0	28.341	28.341	10.900		Austenitic Stainless

M A T E R I A L A L L O W A B L E D A T A L I S T I N G

Material Name	Pipe ID	Temper. deg F	Allow. psi	Yield psi	Ultimate	Weld Reduction Factor W
A312-TP304L	2SCH40	60.0	16700.0	25000.0	70000.0	1.000
		60.0	16700.0	25000.0		1.000
A312-TP304L	3SCH40	60.0	16700.0	25000.0	70000.0	1.000
		60.0	16700.0	25000.0		1.000

OPERATING TEMPERATURE AND PRESSURE DATA
STRESSES IN psi

POINT NAME	CASE	PRESS. psi	TEMPER deg F	EXPAN. in/100ft	MODULUS E6 psi	ALLOW STRESS	YIELD STRESS
*** SEGMENT A							
A13	T1	0	60.00	0.000	28.341	16700	25000
A14	Same as previous point.						
*** SEGMENT B							
B00	T1	0	60.00	0.000	28.341	16700	25000
B13	Same as previous point.						

u User-defined value
* Non-code material for allowable stress;
Non-standard material for expansion and modulus

B E N D D A T A L I S T I N G

Point Name	Bend Type	Radius (in)	Angle (deg)	OD (in)	tnom (in)	Material	Flan^ /Cuts	SIF in	SIF out	Analysis Set	Flexibility (K)	Pressure Case
A01	*Close	2.00S	90.0	2.375	0.154	A312-TP304L	0/1	2.27	2.27	1	1.00u	None
A02	Elbow	3.00L	90.0	2.375	0.154	A312-TP304L	0/0	1.73	1.44	1	4.40	None
A03	Elbow	3.00L	90.0	2.375	0.154	A312-TP304L	0/0	1.73	1.44	1	4.40	None
A04	Elbow	3.00L	90.0	2.375	0.154	A312-TP304L	0/0	1.73	1.44	1	4.40	None
A05	Elbow	3.00L	90.0	2.375	0.154	A312-TP304L	0/0	1.73	1.44	1	4.40	None
A07	Elbow	3.00L	90.0	2.375	0.154	A312-TP304L	0/0	1.73	1.44	1	4.40	None
A08	Elbow	3.00L	90.0	2.375	0.154	A312-TP304L	0/0	1.73	1.44	1	4.40	None
A09	Elbow	3.00L	90.0	2.375	0.154	A312-TP304L	0/0	1.73	1.44	1	4.40	None
A10	Elbow	3.00L	90.0	2.375	0.154	A312-TP304L	0/0	1.73	1.44	1	4.40	None
A11	*Close	2.00S	90.0	2.375	0.154	A312-TP304L	0/2	2.27	2.27	1	1.00u	None
B06	*Close	3.00S	90.0	3.500	0.216	A312-TP304L	0/1	2.33	2.33	1	1.00u	None
B07	Elbow	4.50L	90.0	3.500	0.216	A312-TP304L	0/0	1.78	1.48	1	4.58	None
B08	Elbow	4.50L	90.0	3.500	0.216	A312-TP304L	0/0	1.78	1.48	1	4.58	None
B10	Elbow	4.50L	90.0	3.500	0.216	A312-TP304L	0/0	1.78	1.48	1	4.58	None
B11	*Close	3.00S	90.0	3.500	0.216	A312-TP304L	0/1	2.33	2.33	1	1.00u	None

^ = Number of bend ends where either a flange or valve is within distance
(L/D) x Nominal diameter, where L/D is defined under Tools > Model options > Edit
u = User Flexibility factor (K) / User SIF present at point, check user-sif data listing.
* = Mid-point present
L = Long radius
S = Short radius

C E N T E R O F G R A V I T Y R E P O R T

Description		Weight (lb)	X CoG (ft)	Y CoG (ft)	Z CoG (ft)
Valve	:	0.00	0.00	0.00	0.00
Support	:	0.00	0.00	0.00	0.00
Flange	:	0.00	0.00	0.00	0.00
Flexible Joint	:	0.00	0.00	0.00	0.00
Additional Weight	:	230.10	-0.62	1.86	-0.53
Pipes (Run, Bend, Tee, Reducer)	:	117.76	0.87	1.27	0.49
PipeTot (Valve+Support+Flange+Flex. Jt.+Add. Wt.+Pipes)	:	347.86	-0.12	1.66	-0.19
Insulation	:	0.00	0.00	0.00	0.00
Cladding	:	0.00	0.00	0.00	0.00
Lining	:	0.00	0.00	0.00	0.00
Contents	:	0.00	0.00	0.00	0.00
Beam	:	8.76	4.06	0.47	3.60
PipeTot + Ins.	:	347.86	-0.12	1.66	-0.19
PipeTot + Ins. + Clad.	:	347.86	-0.12	1.66	-0.19
PipeTot + Ins. + Clad. + Lin.	:	347.86	-0.12	1.66	-0.19
PipeTot + Ins. + Clad. + Lin. + Cont.	:	347.86	-0.12	1.66	-0.19
PipeTot + Beam	:	356.63	-0.02	1.63	-0.09
PipeTot + Ins. + Beam	:	356.63	-0.02	1.63	-0.09
PipeTot + Ins. + Clad. + Beam	:	356.63	-0.02	1.63	-0.09
PipeTot + Ins. + Clad. + Lin. + Beam	:	356.63	-0.02	1.63	-0.09
PipeTot + Ins. + Clad. + Lin. + Cont. + Beam	:	356.63	-0.02	1.63	-0.09

NOTE: COG report only includes the currently visible beams and segments.
All pipe segments are included.
All beams are included.

L O A D C A S E D E S C R I P T I O N

Load Case	Load Case Name	Description
GR	Gravity	
T1	Thermal 1	
P1	Press 1	

A N A L Y S I S S U M M A R Y

Current model revision number : 1

Constant values used
Acceleration due to gravity..... 386.40000 in/s/s
Density of water for specific gravity Cal.. 62.400 lb/cu.ft
Density of sea water..... 62.400 lb/cu.ft
Density of ground water ..... 62.400 lb/cu.ft

Static - Analysis set number 1
Date and Time of analysis ..... Aug 22, 2019 11:05 AM
Model Revision Number 1
Number of load cases 1
Load cases analyzed ..... GR
Description ..... Analysis Set No.1
Gaps/Friction/Soil considered ..... Yes
Tolerance - Force, Displacement ..... 10.00 lbf 0.0010 in
Friction - Scale Factor, Tolerance 1.00 0.10
Ignore friction for cases E1,E2,E3 .... Yes
Ignore friction for gravity case ..... Yes
Hanger design run ..... No
Cut short included ..... No
Thermal bowing included ..... No
Include Bourdon rotational effect ..... No
Pipe radius for Bourdon calculation ... Mean
Occasional load analysis type ..... Nonlinear
Non-linear analysis summary file ..... 242-A Dead Weight.LOG
Use default load sequence ..... Yes
Base load cases for nonlinear analysis
GR = None
Weight of contents included ..... Yes
Fluid density factor for contents 1.00
Pressure stiffening case ..... None
Hot modulus case ..... None
Pressure Extension..... No
Water elevation for buoyancy loads .... Not considered
Use corroded thickness in analysis .... No
Rigid stiffness factor 1000.0
Support rigid stiffness (translation) . 0.100000E+11 lb/in
Support rigid stiffness (rotation) .... 0.100000E+11 ft-lb/deg
Anchor rigid stiffness (translation) .. 0.100000E+11 lb/in
Anchor rigid stiffness (rotation) ..... 0.100000E+11 ft-lb/deg
Remove Lift-Off Supports ..... No

CODE COMPLIANCE COMBINATIONS

<Description> Combination	Category	Method	Case/Combination	Factor	M/S	K-Factor	Allowable (psi)	D/A/P/C
GR + Max P{1}	Sustain	Sum	GR[1]	1.00			Automatic	Y Y Y Y
			Max Long	1.00				
Max Range	Expansion	Sum	Temp. Range	1.00			Automatic	Y Y N Y

Notes:

D/A/P/C: [D]efault/[A]uto-Update/[P]rint options/[C]Consistent (Y=Yes, N=No)
Code combinations with print option = N are not evaluated

```
---------------------------------------------------------------------------------------------------------------
242-A  Dead Weight
08/22/2019 2018719                                                    BENTLEY
11:11 AM                                                              AutoPIPE Nuclear 12.00.00.16   RESULT PAGE  19
---------------------------------------------------------------------------------------------------------------

                              NON-CODE COMBINATIONS

  <Description>
  Combination                Method       Case/Combination     Factor  D/A/P/C
  -----------------------    -------- ------------------------ ------  -------
  Gravity{1}                 Sum      GR[1]                      1.00  Y Y Y Y


  Notes:

  D/A/P/C: [D]efault/[A]uto-Update/[P]rint options/[C]Consistent (Y=Yes, N=No)
```

CODE COMPLIANCE

```
Y - Factor ............................ 0.40
Design Pressure Factor ................ 1.00
Minimum stress ratio used in reports... 0.00
Number of stress points per span ...... 0
Include corrosion in stress calcs. .... Y
Include corrosion in Hoop stress calcs. Y
Include torsion in code stress ........ N
Include axial force in code stress .... N
Include sustain load margin ........... Only if allowable stress is exceeded
Use minimum sustained margin........... Y
Set sustained SIF=1 no bends .......... N
Set occasional SIF = 1 ................ N
Set occasional SIF = 0.75i ............ Y
Apply cold/hot modulus ratio .......... N
Disable auto code combinations ........ N
Disable auto non-code combinations .... N
No. of thermal ranges to report ....... 0
Include Max Range combination ......... Y
Total stress .......................... Octahedral
Direct shear .......................... None
Longitudinal pressure calculation ..... AxF/area
Use code case 178 ..................... Y
Inc. Axial Str and Pcase in Sustained.. Axial forces
Use alternate occasional allowable .... N
Apply circumferential weld WC factor .. N
ASME B31J Enabled ..................... N
```

*** NOTE ***

No operating loads analyzed. Maximum specified
pressure will be used for sustained stress

242-A Dead Weight
08/22/2019 2018719
11:11 AM

BENTLEY
AutoPIPE Nuclear 12.00.00.16 RESULT PAGE 21

G E N E R A L P I P E S T R E S S R E P O R T
(Stress in psi)

Point name	Load combination	Hoop Stress	Longitudinal Max	Longitudinal Min	Shear Stress	Principal Max	Principal Min	Total Stress	Loc
*** Segment A begin ***									
A01 F	SIFI= 1.00 SIFO= 1.00								
	Gravity{1}	0	455	-442	503	779	-770	982	3
A02 N-	SIFI= 1.00 SIFO= 1.00								
	Gravity{1}	0	137	-124	503	576	-568	881	34
A02 N+	SIFI= 1.73 SIFO= 1.44								
	Gravity{1}	0	208	-195	503	617	-609	895	304
A02 F-	SIFI= 1.73 SIFO= 1.44								
	Gravity{1}	0	1221	-1212	30	1221	-1213	1222	274
A02 F+	SIFI= 1.00 SIFO= 1.00								
	Gravity{1}	0	846	-837	30	847	-838	848	4
A03 N-	SIFI= 1.00 SIFO= 1.00								
	Gravity{1}	0	181	-172	30	186	-177	188	320
A03 N+	SIFI= 1.73 SIFO= 1.44								
	Gravity{1}	0	281	-272	30	284	-276	286	50
A03 F-	SIFI= 1.73 SIFO= 1.44								
	Gravity{1}	0	361	-348	0	361	-348	361	303
A03 F+	SIFI= 1.00 SIFO= 1.00								
	Gravity{1}	0	237	-224	0	237	-224	237	213
A04 N-	SIFI= 1.00 SIFO= 1.00								
	Gravity{1}	0	384	-371	0	384	-371	384	194
A04 N+	SIFI= 1.73 SIFO= 1.44								
	Gravity{1}	0	558	-545	0	558	-545	558	104
A04 F-	SIFI= 1.73 SIFO= 1.44								
	Gravity{1}	0	254	-245	243	401	-395	492	131
A04 F+	SIFI= 1.00 SIFO= 1.00								
	Gravity{1}	0	163	-154	243	338	-332	452	221
A05 N-	SIFI= 1.00 SIFO= 1.00								
	Gravity{1}	0	727	-718	243	801	-793	840	205
A05 N+	SIFI= 1.73 SIFO= 1.44								
	Gravity{1}	0	1087	-1078	243	1139	-1130	1166	295
A05 F-	SIFI= 1.73 SIFO= 1.44								
	Gravity{1}	0	992	-979	371	1116	-1104	1182	299

242-A Dead Weight
08/22/2019 2018719
11:11 AM

BENTLEY
AutoPIPE Nuclear 12.00.00.16 RESULT PAGE 22

G E N E R A L P I P E S T R E S S R E P O R T
(Stress in psi)

Point name	Load combination	Hoop Stress	Longitudinal Max	Longitudinal Min	Shear Stress	Principal Max	Principal Min	Total Stress	Loc
A05 F+	SIFI= 1.00 SIFO= 1.00 Gravity{1}	0	657	-644	371	824	-813	919	209
A06 -	SIFI= 1.00 SIFO= 1.00 Gravity{1}	0	1070	-1057	371	1186	-1174	1248	186
A06 +	SIFI= 1.00 SIFO= 1.00 Gravity{1}	0	1070	-1057	392	1198	-1186	1267	186
A07 N-	SIFI= 1.00 SIFO= 1.00 Gravity{1}	0	269	-256	392	549	-540	730	154
A07 N+	SIFI= 1.73 SIFO= 1.44 Gravity{1}	0	400	-387	392	640	-631	788	244
A07 F-	SIFI= 1.73 SIFO= 1.44 Gravity{1}	0	1336	-1345	59	1338	-1347	1348	281
A07 F+	SIFI= 1.00 SIFO= 1.00 Gravity{1}	0	917	-926	59	921	-929	931	191
A08 N-	SIFI= 1.00 SIFO= 1.00 Gravity{1}	0	1090	-1099	59	1094	-1102	1104	192
A08 N+	SIFI= 1.73 SIFO= 1.44 Gravity{1}	0	1590	-1599	59	1592	-1601	1602	102
A08 F-	SIFI= 1.73 SIFO= 1.44 Gravity{1}	0	506	-493	602	906	-897	1159	357
A08 F+	SIFI= 1.00 SIFO= 1.00 Gravity{1}	0	295	-282	602	767	-759	1084	87
A09 N-	SIFI= 1.00 SIFO= 1.00 Gravity{1}	0	386	-373	602	826	-817	1112	58
A09 N+	SIFI= 1.73 SIFO= 1.44 Gravity{1}	0	635	-622	602	998	-989	1221	328
A09 F-	SIFI= 1.73 SIFO= 1.44 Gravity{1}	0	1617	-1608	176	1636	-1627	1645	74
A09 F+	SIFI= 1.00 SIFO= 1.00 Gravity{1}	0	1103	-1094	176	1130	-1122	1144	164
A10 N-	SIFI= 1.00 SIFO= 1.00 Gravity{1}	0	534	-526	176	587	-579	615	357
A10 N+	SIFI= 1.73 SIFO= 1.44 Gravity{1}	0	922	-913	176	954	-946	971	357

242-A Dead Weight
08/22/2019 2018719
11:11 AM

BENTLEY
AutoPIPE Nuclear 12.00.00.16 RESULT PAGE 23

G E N E R A L P I P E S T R E S S R E P O R T
(Stress in psi)

Point name	Load combination	Hoop Stress	Longitudinal Max	Longitudinal Min	Shear Stress	Principal Max	Principal Min	Total Stress	Loc
A10 F-	SIFI= 1.73 SIFO= 1.44								
	Gravity{1}	0	1341	-1269	32	1342	-1269	1342	24
A10 F+	SIFI= 1.00 SIFO= 1.00								
	Gravity{1}	0	809	-737	32	811	-738	811	204
A11 N	SIFI= 1.00 SIFO= 1.00								
	Gravity{1}	0	591	-507	32	593	-510	594	188
*** Segment A end ***									
*** Segment B begin ***									
B06 F	SIFI= 1.00 SIFO= 1.00								
	Gravity{1}	0	106	-122	8	107	-123	123	181
B07 N-	SIFI= 1.00 SIFO= 1.00								
	Gravity{1}	0	293	-309	8	293	-309	309	360
B07 N+	SIFI= 1.78 SIFO= 1.48								
	Gravity{1}	0	526	-542	8	526	-542	542	360
B07 F-	SIFI= 1.78 SIFO= 1.48								
	Gravity{1}	0	641	-678	1	641	-678	678	3
B07 F+	SIFI= 1.00 SIFO= 1.00								
	Gravity{1}	0	353	-390	1	353	-390	390	93
B08 N-	SIFI= 1.00 SIFO= 1.00								
	Gravity{1}	0	96	-119	1	96	-119	119	99
B08 N+	SIFI= 1.78 SIFO= 1.48								
	Gravity{1}	0	179	-202	1	179	-202	202	189
B08 F-	SIFI= 1.78 SIFO= 1.48								
	Gravity{1}	0	201	-217	8	201	-217	217	179
B08 F+	SIFI= 1.00 SIFO= 1.00								
	Gravity{1}	0	109	-126	8	110	-126	126	359
B09	SIFI= 1.00 SIFO= 1.00								
	Gravity{1}	0	150	-166	8	151	-167	167	359
B10 N-	SIFI= 1.00 SIFO= 1.00								
	Gravity{1}	0	170	-186	8	170	-186	186	359
B10 N+	SIFI= 1.78 SIFO= 1.48								
	Gravity{1}	0	308	-324	8	308	-324	324	359
B10 F-	SIFI= 1.78 SIFO= 1.48								
	Gravity{1}	0	201	-190	2	201	-190	201	189

```
-----------------------------------------------------------------------------------------------------------------------
242-A  Dead Weight
08/22/2019 2018719                                                                    BENTLEY
11:11 AM                                                                              AutoPIPE Nuclear 12.00.00.16   RESULT PAGE  24
-----------------------------------------------------------------------------------------------------------------------

           G E N E R A L   P I P E   S T R E S S   R E P O R T
                                      (Stress in psi    )
 Point     Load                     Hoop    Longitudinal   Shear     Principal    Total
 name   combination               Stress    Max     Min   Stress   Max     Min   Stress  Loc
 ------ ----------------------    ------  ------  ------  ------  ------ ------  ------  ---

 B10 F+ SIFI= 1.00   SIFO= 1.00
        Gravity{1}                     0     116    -105       2     116   -105     116  279

 B11 N  SIFI= 1.00   SIFO= 1.00
        Gravity{1}                     0      67     -53       2      67    -53      67  286

 *** Segment B  end   ***

                           *** Summary not available ***
```

APPENDIX D4

AUTOPIPE ANALYSIS – THERMAL CONTRACTION

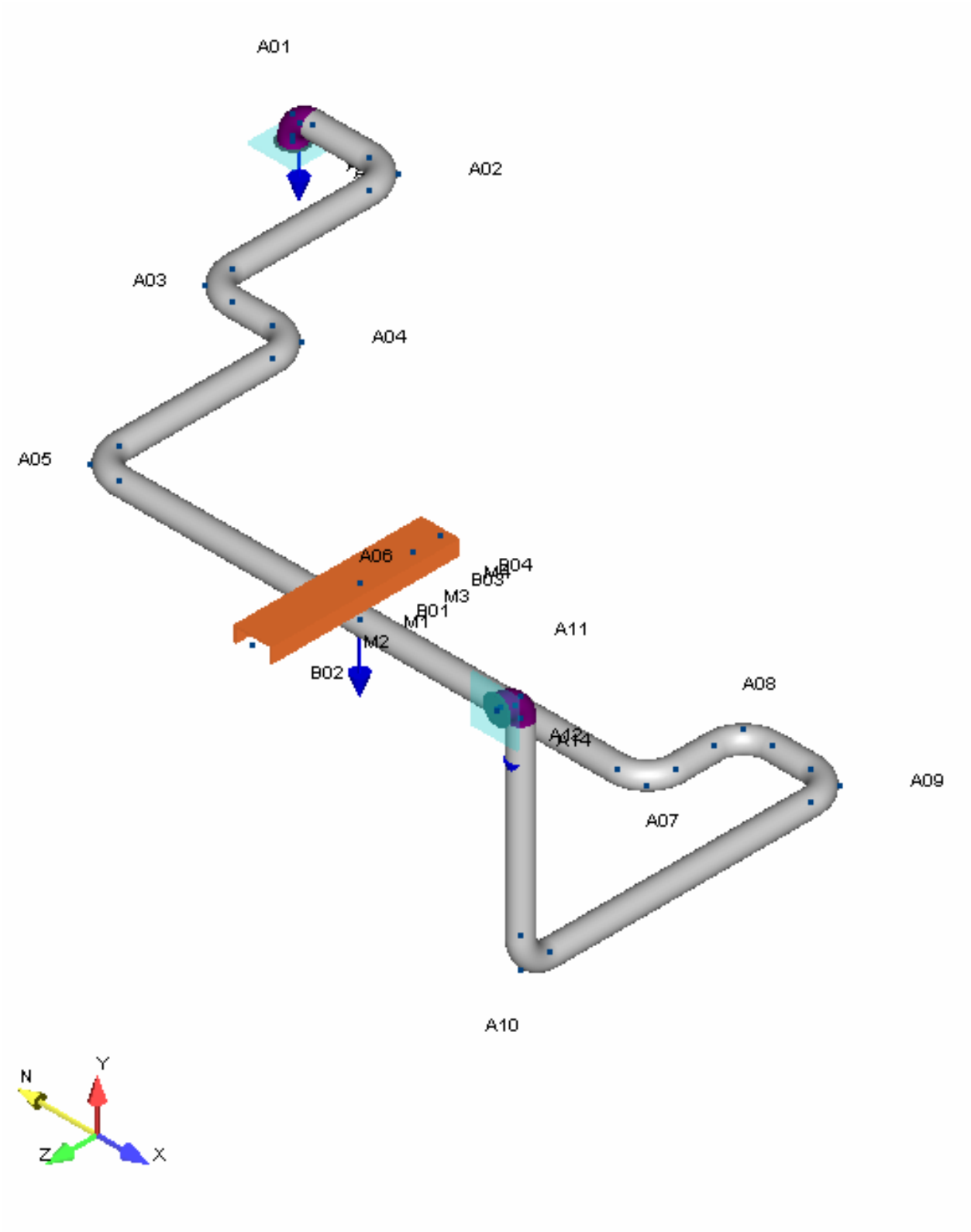
A01
A02
A03
A04
A05
A06
B04
B03
M3
B01
M1
M2
B02
A11
A08
A09
A07
A10
N
Y
Z
X

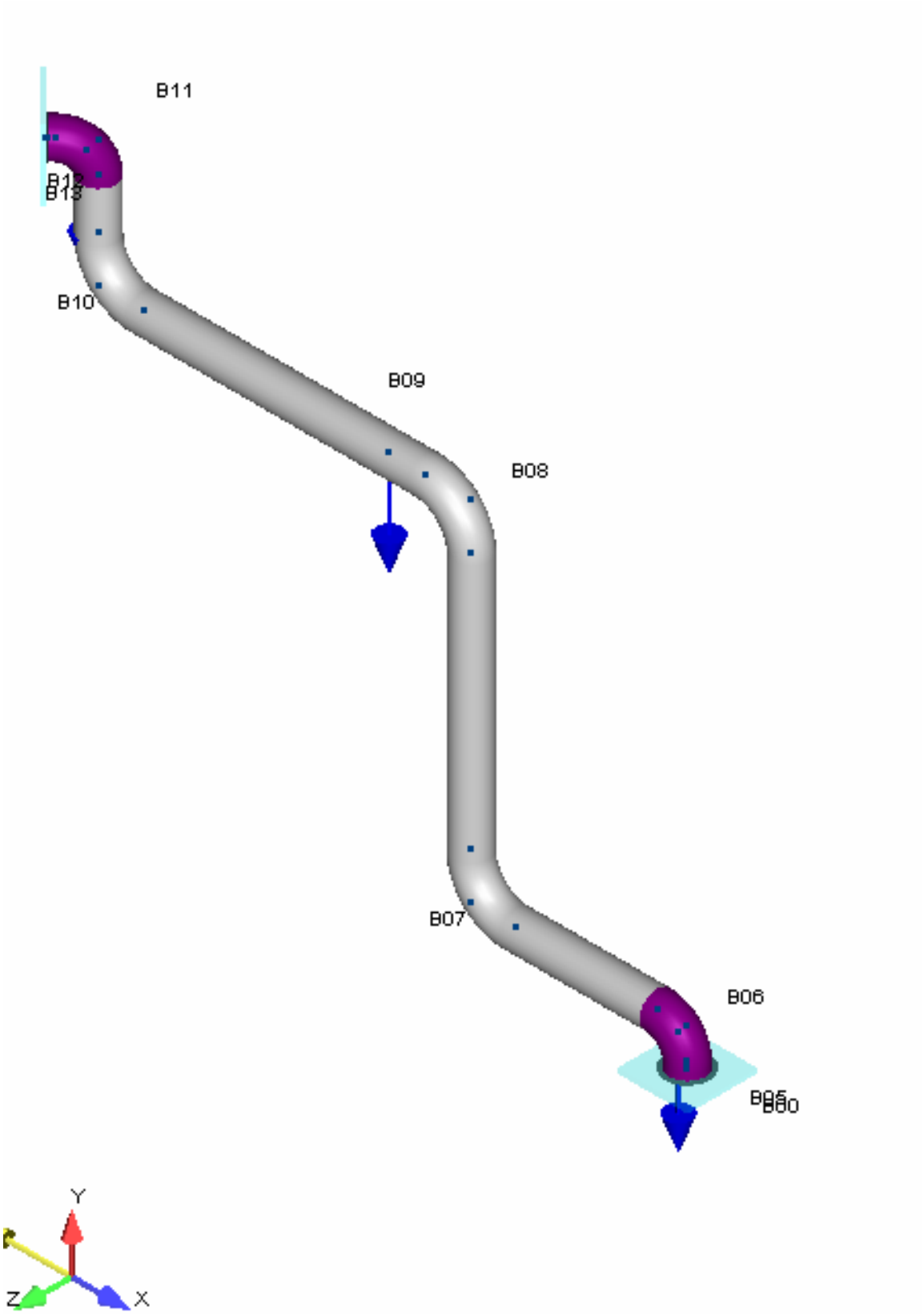
B11
B12
B13
B10
B09
B08
B07
B06
B05
B00
Y
Z
X

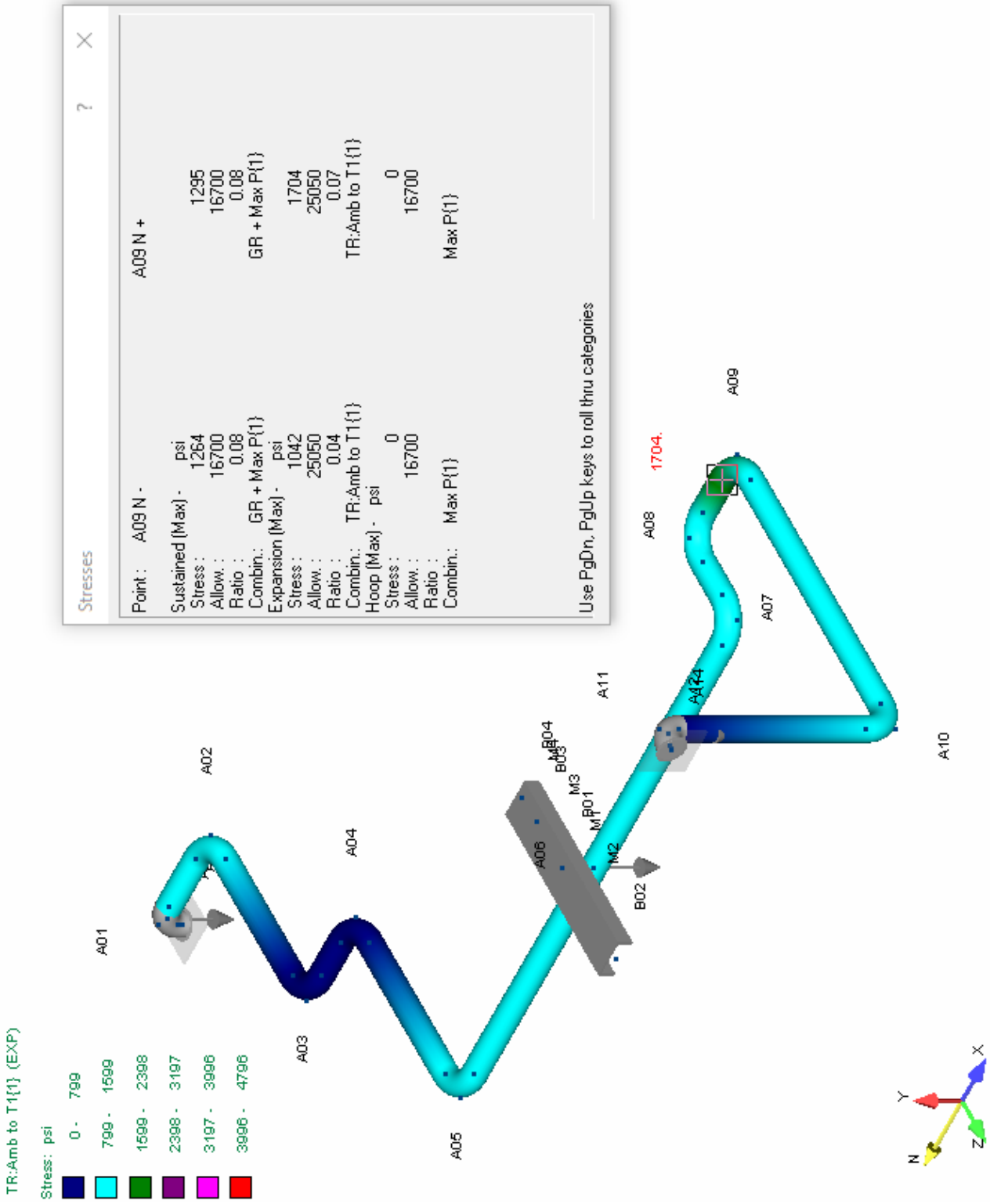
TR:Amb to T1{1} (EXP)
Stress: psi
0 - 799
799 - 1599
1599 - 2398
2398 - 3197
3197 - 3996
3996 - 4796
A01
A02
A03
A04
A05
A06
A07
A08
A09
A10
A11
A12
B01
B02
B03
B04
M1
M2
M3
M4
1704.
Stresses
Point : A09 N - A09 N +
Sustained (Max) - psi
Stress : 1264 1295
Allow. : 16700 16700
Ratio : 0.08 0.08
Combin.: GR + Max P{1} GR + Max P{1}
Expansion (Max) - psi
Stress : 1042 1704
Allow. : 25050 25050
Ratio : 0.04 0.07
Combin.: TR:Amb to T1{1} TR:Amb to T1{1}
Hoop (Max) - psi
Stress : 0 0
Allow. : 16700 16700
Ratio :
Combin.: Max P{1} Max P{1}
Use PgDn, PgUp keys to roll thru categories
X
Y
Z
N

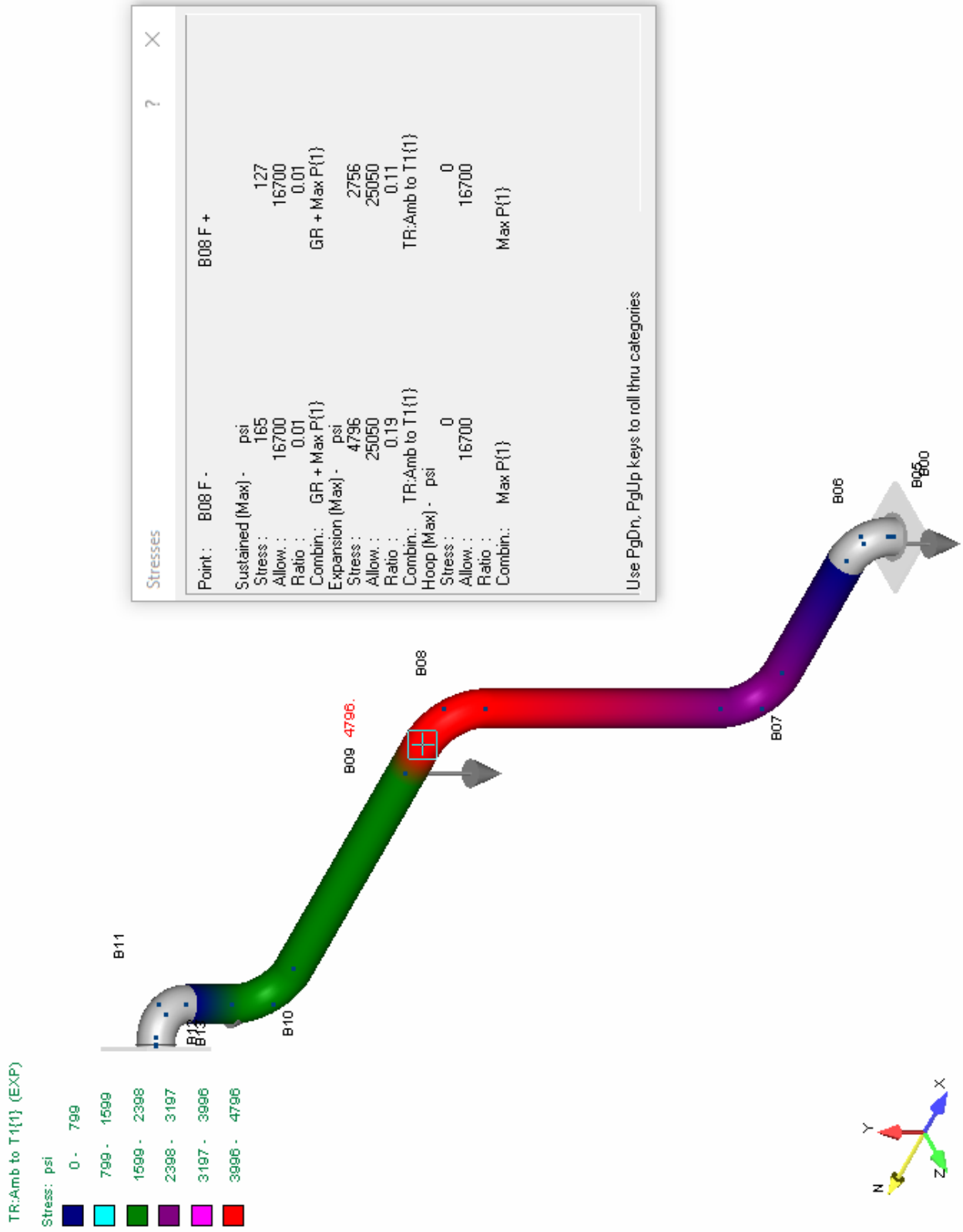
TR:Amb to T1{1} (EXP)
Stress: psi
0 - 799
799 - 1599
1599 - 2398
2398 - 3197
3197 - 3996
3996 - 4796
B11
B12
B13
B10
B09 4796.
B08
B07
B06
B05
B00
Stresses
Point : B08 F - B08 F +
Sustained (Max) - psi
Stress : 165 127
Allow. : 16700 16700
Ratio : 0.01 0.01
Combin.: GR + Max P{1} GR + Max P{1}
Expansion (Max) - psi
Stress : 4796 2756
Allow. : 25050 25050
Ratio : 0.19 0.11
Combin.: TR:Amb to T1{1} TR:Amb to T1{1}
Hoop (Max) - psi
Stress : 0 0
Allow. : 16700 16700
Ratio :
Combin.: Max P{1} Max P{1}
Use PgDn, PgUp keys to roll thru categories
Y
X
Z
N

```
242-A  Low Temp                                                                                                  BENTLEY
08/22/2019 2018719                                                                                               AutoPIPE Nuclear 12.00.00.16
11:19 AM
```

```
        *                             *******   **  *******   *******
       ***               **           **    **  **  **    **  **
      ** **             ******         **    **  **  **    **  **
     **   **    **   **  **   *****   *******   **  *******   *****
    *********   **   **  **  **   **  **        **  **        **
   **       **  **   **  **  **   **  **        **  **        **
  **         **  *****   **   *****   **        **  **        *******
```

Pipe Stress Analysis and Design Program

Version: 12.00.00.16

Edition: Nuclear

Developed and Maintained by

BENTLEY SYSTEMS, INCORPORATED
1065 N. PACIFIC CENTER DRIVE, SUITE 450
ANAHEIM, CA 92806

```
---------------------------------------------------------------------------------------------------------------
242-A  Low Temp
08/22/2019 2018719                                                                                BENTLEY
11:19 AM                                                                                          AutoPIPE Nuclear 12.00.00.16
---------------------------------------------------------------------------------------------------------------
```

```
*************************************************************
**                                                         **
**              AUTOPIPE SYSTEM INFORMATION                **
**                                                         **
*************************************************************
```

SYSTEM NAME : 242-A Low Temp

PROJECT ID : 2018719

PREPARED BY : _____
JIM HARRINGTON

CHECKED BY : _____
RYAN LANG

1ST APPROVER : _____

2ND APPROVER : _____

PIPING CODE : ASME B31.3

YEAR : 2016

VERTICAL AXIS : Y

AMBIENT TEMPERATURE : 80.0 deg F

COMPONENT LIBRARY : AUTOPIPE

MATERIAL LIBRARY : B313-16

MODEL REVISION NUMBER : 1

242-A Low Temp
08/22/2019 2018719 BENTLEY
11:19 AM AutoPIPE Nuclear 12.00.00.16

T A B L E O F C O N T E N T S

Components..... 1
Coordinates..... 7
Segment Data..... 9
Pipe Properties..... 10
Material Properties..... 11
Material Allowables..... 12
Temperature and Pressure..... 13
Bend..... 14
Center of Gravity..... 15
Load Case Description..... 16
Analysis Summary..... 17
Restraint Reactions..... 21
Code Compliance..... 22
Result Summary..... 28

```
-----------------------------------------------------------------------------------------------------------------
242-A  Low Temp
08/22/2019 2018719                                                    BENTLEY
11:19 AM                                                              AutoPIPE Nuclear 12.00.00.16   MODEL  PAGE   1
-----------------------------------------------------------------------------------------------------------------

                 C O M P O N E N T   D A T A   L I S T I N G

 ---------------------------------------------------------------------------
 *** SEGMENT A

 ---------------------------------------------------------------------------
 From A13 to A00, DY= 0.01 ft                                          Flex

 COMPONENT DATA (Flex Jt):
   Length= 0.01 ft, Weight= 0 lb, Area= 0.0 sq.in, Kax= 13500000 lb/in, Kylat= 27800.0 lb/in,
   Kzlat= 27800.0 lb/in, Ktor= 107.0 ft-lb/deg, Kybend= 659.0 ft-lb/deg, Kzbend= 659.0 ft-lb/deg

 PIPE DATA:
   Pipe Id= 2SCH40, Material= A312-TP304L, Composition= Austenitic Stainless, Poisson= 0.300, Nom Size= 2.000,
   OD= 2.375 inch, Sch= 40S, Wall Thk= 0.154 inch, Mill= 0.019 inch, Cor= 0.005 inch,
   Pipe Density= 501.00 lb/cu.ft, Pipe Unit Wgt= 3.74 lb/ft, Insul Thk= 0 inch, Cladding Thickness = 0 inch,
   Lining Thk= 0 inch, Long Weld E factor= 1.00, Long Weld W factor= 1.00, Long Modulus= 28.24615 E6 psi,
   Hoop Modulus= 28.24615 E6 psi, Shear Modulus= 10.86390 E6 psi, Sc= 16700.0 psi, Syc= 25000.0 psi,
   Suc= 70000.0 psi

 OPERATING DATA:
   P1= 0 psi, T1= -25.00 deg F, Exp1= -1.05769 in/100ft, E1= 28.68792 E6 psi, Sh1= 16700.00 psi,
   Sy1= 25000.00 psi

 POINT DATA:
   A13, Coordinates, X= 0.00 ft, Y= -0.01 ft, Z= 0.00 ft

 SUPPORT DATA:
   A13, Anchor, Connected to: Ground, KTX= Rigid, KTY= Rigid, KTZ= Rigid, KRX= Rigid, KRY= Rigid, KRZ= Rigid

 ---------------------------------------------------------------------------
 From A00 to A01, DY= 0.20 ft                                          Run

 COMPONENT DATA (Run):
   Rigid (A00 to A01 N), Include weight= No, Include expansion= Yes

 POINT DATA:
   A00, Coordinates, X= 0.00 ft, Y= 0.00 ft, Z= 0.00 ft

 ---------------------------------------------------------------------------
 From A01 to A02, DX= 0.90 ft                                          Bend

 COMPONENT DATA (Bend, TIP= A01, Near= A01 N, Mid= A01 M, Far= A01 F):
   Short Close, Radius= 2.00 inch, Number of cuts= 1, Bend angle= 90.00 deg, Mid point at 50.00 percent,
   End flanges= 0, Flex= 1.000, SIFI= 2.27, SIFO= 2.27
   Rigid (A01 N to A01 F), Include weight= No, Include expansion= Yes

 POINT DATA:
   A01, Coordinates, X= 0.00 ft, Y= 0.20 ft, Z= 0.00 ft
   A01 N, Coordinates, X= 0.00 ft, Y= 0.03 ft, Z= 0.00 ft
   A01 M, Coordinates, X= 0.05 ft, Y= 0.15 ft, Z= 0.00 ft
   A01 M, Added Weight= 29.00 lb
   A01 F, Coordinates, X= 0.17 ft, Y= 0.20 ft, Z= 0.00 ft

 ---------------------------------------------------------------------------
 From A02 to A03, DZ= 1.67 ft                                          Bend
```

C O M P O N E N T D A T A L I S T I N G

```
 COMPONENT DATA (Bend, TIP= A02, Near= A02 N, Far= A02 F):
   Long Elbow, Radius= 3.00 inch, Bend angle= 90.00 deg, End flanges= 0, Flex= Auto, SIFI= 1.73, SIFO= 1.44

 POINT DATA:
   A02, Coordinates, X= 0.90 ft, Y= 0.20 ft, Z= 0.00 ft
   A02 N, Coordinates, X= 0.65 ft, Y= 0.20 ft, Z= 0.00 ft
   A02 F, Coordinates, X= 0.90 ft, Y= 0.20 ft, Z= 0.25 ft

 ---------------------------------------------------------------------------
 From A03 to A04, DX= 0.84 ft                                          Bend

 COMPONENT DATA (Bend, TIP= A03, Near= A03 N, Far= A03 F):
   Long Elbow, Radius= 3.00 inch, Bend angle= 90.00 deg, End flanges= 0, Flex= Auto, SIFI= 1.73, SIFO= 1.44

 POINT DATA:
   A03, Coordinates, X= 0.90 ft, Y= 0.20 ft, Z= 1.67 ft
   A03 N, Coordinates, X= 0.90 ft, Y= 0.20 ft, Z= 1.42 ft
   A03 F, Coordinates, X= 1.15 ft, Y= 0.20 ft, Z= 1.67 ft

 ---------------------------------------------------------------------------
 From A04 to A05, DZ= 1.82 ft                                          Bend

 COMPONENT DATA (Bend, TIP= A04, Near= A04 N, Far= A04 F):
   Long Elbow, Radius= 3.00 inch, Bend angle= 90.00 deg, End flanges= 0, Flex= Auto, SIFI= 1.73, SIFO= 1.44

 POINT DATA:
   A04, Coordinates, X= 1.74 ft, Y= 0.20 ft, Z= 1.67 ft
   A04 N, Coordinates, X= 1.49 ft, Y= 0.20 ft, Z= 1.67 ft
   A04 F, Coordinates, X= 1.74 ft, Y= 0.20 ft, Z= 1.92 ft

 ---------------------------------------------------------------------------
 From A05 to A06, DX= 2.32 ft                                          Bend

 COMPONENT DATA (Bend, TIP= A05, Near= A05 N, Far= A05 F):
   Long Elbow, Radius= 3.00 inch, Bend angle= 90.00 deg, End flanges= 0, Flex= Auto, SIFI= 1.73, SIFO= 1.44

 POINT DATA:
   A05, Coordinates, X= 1.74 ft, Y= 0.20 ft, Z= 3.49 ft
   A05 N, Coordinates, X= 1.74 ft, Y= 0.20 ft, Z= 3.24 ft
   A05 F, Coordinates, X= 1.99 ft, Y= 0.20 ft, Z= 3.49 ft

 ---------------------------------------------------------------------------
 From A06 to A07, DX= 2.48 ft                                          Run

 POINT DATA:
   A06, Coordinates, X= 4.06 ft, Y= 0.20 ft, Z= 3.49 ft
   A06, Added Weight= 5.70 lb, DZ= -0.45 ft
   A06, Added Weight= 5.00 lb, DZ= 0.70 ft

 ---------------------------------------------------------------------------
 From A07 to A08, DZ= -0.83 ft                                         Bend

 COMPONENT DATA (Bend, TIP= A07, Near= A07 N, Far= A07 F):
   Long Elbow, Radius= 3.00 inch, Bend angle= 90.00 deg, End flanges= 0, Flex= Auto, SIFI= 1.73, SIFO= 1.44
```

C O M P O N E N T D A T A L I S T I N G

```
POINT DATA:
  A07, Coordinates, X= 6.54 ft, Y= 0.20 ft, Z= 3.49 ft
  A07 N, Coordinates, X= 6.29 ft, Y= 0.20 ft, Z= 3.49 ft
  A07 F, Coordinates, X= 6.54 ft, Y= 0.20 ft, Z= 3.24 ft

-----------------------------------------------------------------------------
From A08 to A09, DX= 0.83 ft                                            Bend

COMPONENT DATA (Bend, TIP= A08, Near= A08 N, Far= A08 F):
  Long Elbow, Radius= 3.00 inch, Bend angle= 90.00 deg, End flanges= 0, Flex= Auto, SIFI= 1.73, SIFO= 1.44

POINT DATA:
  A08, Coordinates, X= 6.54 ft, Y= 0.20 ft, Z= 2.66 ft
  A08 N, Coordinates, X= 6.54 ft, Y= 0.20 ft, Z= 2.91 ft
  A08 F, Coordinates, X= 6.79 ft, Y= 0.20 ft, Z= 2.66 ft

-----------------------------------------------------------------------------
From A09 to A10, DZ= 2.75 ft                                            Bend

COMPONENT DATA (Bend, TIP= A09, Near= A09 N, Far= A09 F):
  Long Elbow, Radius= 3.00 inch, Bend angle= 90.00 deg, End flanges= 0, Flex= Auto, SIFI= 1.73, SIFO= 1.44

POINT DATA:
  A09, Coordinates, X= 7.37 ft, Y= 0.20 ft, Z= 2.66 ft
  A09 N, Coordinates, X= 7.12 ft, Y= 0.20 ft, Z= 2.66 ft
  A09 F, Coordinates, X= 7.37 ft, Y= 0.20 ft, Z= 2.91 ft

-----------------------------------------------------------------------------
From A10 to A11, DY= 2.04 ft                                            Bend

COMPONENT DATA (Bend, TIP= A10, Near= A10 N, Far= A10 F):
  Long Elbow, Radius= 3.00 inch, Bend angle= 90.00 deg, End flanges= 0, Flex= Auto, SIFI= 1.73, SIFO= 1.44

POINT DATA:
  A10, Coordinates, X= 7.37 ft, Y= 0.20 ft, Z= 5.41 ft
  A10 N, Coordinates, X= 7.37 ft, Y= 0.20 ft, Z= 5.16 ft
  A10 F, Coordinates, X= 7.37 ft, Y= 0.45 ft, Z= 5.41 ft

-----------------------------------------------------------------------------
From A11 to A12, DZ= 0.20 ft                                            Bend

COMPONENT DATA (Bend, TIP= A11, Near= A11 N, Mid= A11 M, Far= A11 F):
  Short Close, Radius= 2.00 inch, Number of cuts= 2, Bend angle= 90.00 deg, Mid point at 50.00 percent,
  End flanges= 0, Flex= 1.000, SIFI= 2.27, SIFO= 2.27
  Rigid (A11 N to A11 F), Include weight= No, Include expansion= Yes
  Rigid (A11 F to A12), Include weight= No, Include expansion= Yes

POINT DATA:
  A11, Coordinates, X= 7.37 ft, Y= 2.24 ft, Z= 5.41 ft
  A11 N, Coordinates, X= 7.37 ft, Y= 2.07 ft, Z= 5.41 ft
  A11 M, Coordinates, X= 7.37 ft, Y= 2.19 ft, Z= 5.46 ft
  A11 M, Added Weight= 29.00 lb
  A11 F, Coordinates, X= 7.37 ft, Y= 2.24 ft, Z= 5.58 ft

-----------------------------------------------------------------------------
```

C O M P O N E N T D A T A L I S T I N G

```
From A12 to A14, DZ= 0.01 ft                                          Flex

COMPONENT DATA (Flex Jt):
  Length= 0.01 ft, Weight= 0 lb, Area= 0.0 sq.in, Kax= 13500000 lb/in, Kylat= 27800.0 lb/in,
  Kzlat= 27800.0 lb/in, Ktor= 107.0 ft-lb/deg, Kybend= 659.0 ft-lb/deg, Kzbend= 659.0 ft-lb/deg

POINT DATA:
  A12, Coordinates, X= 7.37 ft, Y= 2.24 ft, Z= 5.61 ft
  A14, Coordinates, X= 7.37 ft, Y= 2.24 ft, Z= 5.62 ft

SUPPORT DATA:
  A14, Anchor, Connected to: Ground, KTX= Rigid, KTY= Rigid, KTZ= Rigid, KRX= Rigid, KRY= Rigid, KRZ= Rigid

-----------------------------------------------------------------------------
-----------------------------------------------------------------------------
*** SEGMENT B

-----------------------------------------------------------------------------
From B00 to B05, DY= 0.01 ft                                          Flex

COMPONENT DATA (Flex Jt):
  Length= 0.01 ft, Weight= 0 lb, Area= 0.0 sq.in, Kax= 19000000 lb/in, Kylat= 24700.0 lb/in,
  Kzlat= 24700.0 lb/in, Ktor= 148.0 ft-lb/deg, Kybend= 1332.0 ft-lb/deg, Kzbend= 1332.0 ft-lb/deg

PIPE DATA:
  Pipe Id= 3SCH40, Composition= Austenitic Stainless, Nom Size= 3.000, OD= 3.500 inch, Wall Thk= 0.216 inch,
  Mill= 0.027 inch, Pipe Density= 501.00 lb/cu.ft, Pipe Unit Wgt= 7.75 lb/ft

POINT DATA:
  B00, Coordinates, X= 0.00 ft, Y= -0.01 ft, Z= -2.00 ft

SUPPORT DATA:
  B00, Anchor, Connected to: Ground, KTX= Rigid, KTY= Rigid, KTZ= Rigid, KRX= Rigid, KRY= Rigid, KRZ= Rigid

-----------------------------------------------------------------------------
From B05 to B06, DY= 0.29 ft                                          Run

COMPONENT DATA (Run):
  Rigid (B05 to B06 N), Include weight= No, Include expansion= Yes

POINT DATA:
  B05, Coordinates, X= 0.00 ft, Y= 0.00 ft, Z= -2.00 ft

-----------------------------------------------------------------------------
From B06 to B07, DX= -1.79 ft                                         Bend

COMPONENT DATA (Bend, TIP= B06, Near= B06 N, Mid= B06 M, Far= B06 F):
  Short Close, Radius= 3.00 inch, Number of cuts= 1, Bend angle= 90.00 deg, Mid point at 50.00 percent,
  End flanges= 0, Flex= 1.000, SIFI= 2.33, SIFO= 2.33
  Rigid (B06 N to B06 F), Include weight= No, Include expansion= Yes

POINT DATA:
  B06, Coordinates, X= 0.00 ft, Y= 0.29 ft, Z= -2.00 ft
  B06 N, Coordinates, X= 0.00 ft, Y= 0.04 ft, Z= -2.00 ft
  B06 M, Coordinates, X= -0.07 ft, Y= 0.22 ft, Z= -2.00 ft
```

C O M P O N E N T D A T A L I S T I N G

B06 M, Added Weight= 77.00 lb
B06 F, Coordinates, X= -0.25 ft, Y= 0.29 ft, Z= -2.00 ft

From B07 to B08, DY= 2.88 ft Bend

COMPONENT DATA (Bend, TIP= B07, Near= B07 N, Far= B07 F):
Long Elbow, Radius= 4.50 inch, Bend angle= 90.00 deg, End flanges= 0, Flex= Auto, SIFI= 1.78, SIFO= 1.48

POINT DATA:
B07, Coordinates, X= -1.79 ft, Y= 0.29 ft, Z= -2.00 ft
B07 N, Coordinates, X= -1.41 ft, Y= 0.29 ft, Z= -2.00 ft
B07 F, Coordinates, X= -1.79 ft, Y= 0.67 ft, Z= -2.00 ft

From B08 to B09, DX= -0.68 ft Bend

COMPONENT DATA (Bend, TIP= B08, Near= B08 N, Far= B08 F):
Long Elbow, Radius= 4.50 inch, Bend angle= 90.00 deg, End flanges= 0, Flex= Auto, SIFI= 1.78, SIFO= 1.48

POINT DATA:
B08, Coordinates, X= -1.79 ft, Y= 3.17 ft, Z= -2.00 ft
B08 N, Coordinates, X= -1.79 ft, Y= 2.80 ft, Z= -2.00 ft
B08 F, Coordinates, X= -2.16 ft, Y= 3.17 ft, Z= -2.00 ft

From B09 to B10, DX= -2.41 ft Run

POINT DATA:
B09, Coordinates, X= -2.47 ft, Y= 3.17 ft, Z= -2.00 ft
B09, Added Weight= 5.70 lb
B09, Added Weight= 2.70 lb

From B10 to B11, DY= 1.04 ft Bend

COMPONENT DATA (Bend, TIP= B10, Near= B10 N, Far= B10 F):
Long Elbow, Radius= 4.50 inch, Bend angle= 90.00 deg, End flanges= 0, Flex= Auto, SIFI= 1.78, SIFO= 1.48

POINT DATA:
B10, Coordinates, X= -4.88 ft, Y= 3.17 ft, Z= -2.00 ft
B10 N, Coordinates, X= -4.51 ft, Y= 3.17 ft, Z= -2.00 ft
B10 F, Coordinates, X= -4.88 ft, Y= 3.55 ft, Z= -2.00 ft

From B11 to B12, DX= -0.23 ft, DZ= 0.19 ft, L= 0.30 ft Bend

COMPONENT DATA (Bend, TIP= B11, Near= B11 N, Mid= B11 M, Far= B11 F):
Short Close, Radius= 3.00 inch, Number of cuts= 1, Bend angle= 90.00 deg, Mid point at 50.00 percent,
End flanges= 0, Flex= 1.000, SIFI= 2.33, SIFO= 2.33
Rigid (B11 N to B11 F), Include weight= No, Include expansion= Yes
Rigid (B11 F to B12), Include weight= No, Include expansion= Yes

POINT DATA:
B11, Coordinates, X= -4.88 ft, Y= 4.21 ft, Z= -2.00 ft

C O M P O N E N T D A T A L I S T I N G

B11 N, Coordinates, X= -4.88 ft, Y= 3.96 ft, Z= -2.00 ft
B11 M, Coordinates, X= -4.94 ft, Y= 4.14 ft, Z= -1.95 ft
B11 M, Added Weight= 76.00 lb
B11 F, Coordinates, X= -5.07 ft, Y= 4.21 ft, Z= -1.84 ft

From B12 to B13, DX= -0.01 ft, DZ= 0.01 ft, L= 0.01 ft Flex

COMPONENT DATA (Flex Jt):
Length= 0.01 ft, Weight= 0 lb, Area= 0.0 sq.in, Kax= 19000000 lb/in, Kylat= 24700.0 lb/in,
Kzlat= 24700.0 lb/in, Ktor= 148.0 ft-lb/deg, Kybend= 1332.0 ft-lb/deg, Kzbend= 1332.0 ft-lb/deg

POINT DATA:
B12, Coordinates, X= -5.11 ft, Y= 4.21 ft, Z= -1.81 ft
B13, Coordinates, X= -5.12 ft, Y= 4.21 ft, Z= -1.80 ft

SUPPORT DATA:
B13, Anchor, Connected to: Ground, KTX= Rigid, KTY= Rigid, KTZ= Rigid, KRX= Rigid, KRY= Rigid, KRZ= Rigid

---

Number of points in the system (Pipe + Frame + Soil): 74 + 5 + 0 = 79

Weight of Empty Pipes + Weight of Contents = Total Weight of System
347.9 lb + 0.0 lb = 347.9 lb

C O O R D I N A T E S D A T A L I S T I N G

POINT NAME	COORDINATE (ft) X	Y	Z
*** SEGMENT A			
A13	0.00	-0.01	0.00
A00	0.00	0.00	0.00
A01 N	0.00	0.03	0.00
A01	0.00	0.20	0.00
A01 M	0.05	0.15	0.00
A01 F	0.17	0.20	0.00
A02 N	0.65	0.20	0.00
A02	0.90	0.20	0.00
A02 F	0.90	0.20	0.25
A03 N	0.90	0.20	1.42
A03	0.90	0.20	1.67
A03 F	1.15	0.20	1.67
A04 N	1.49	0.20	1.67
A04	1.74	0.20	1.67
A04 F	1.74	0.20	1.92
A05 N	1.74	0.20	3.24
A05	1.74	0.20	3.49
A05 F	1.99	0.20	3.49
A06	4.06	0.20	3.49
A07 N	6.29	0.20	3.49
A07	6.54	0.20	3.49
A07 F	6.54	0.20	3.24
A08 N	6.54	0.20	2.91
A08	6.54	0.20	2.66
A08 F	6.79	0.20	2.66
A09 N	7.12	0.20	2.66
A09	7.37	0.20	2.66
A09 F	7.37	0.20	2.91
A10 N	7.37	0.20	5.16
A10	7.37	0.20	5.41
A10 F	7.37	0.45	5.41
A11 N	7.37	2.07	5.41
A11	7.37	2.24	5.41
A11 M	7.37	2.19	5.46
A11 F	7.37	2.24	5.58
A12	7.37	2.24	5.61
A14	7.37	2.24	5.62
*** SEGMENT B			
B00	0.00	-0.01	-2.00
B05	0.00	0.00	-2.00
B06 N	0.00	0.04	-2.00
B06	0.00	0.29	-2.00
B06 M	-0.07	0.22	-2.00
B06 F	-0.25	0.29	-2.00
B07 N	-1.41	0.29	-2.00
B07	-1.79	0.29	-2.00
B07 F	-1.79	0.67	-2.00
B08 N	-1.79	2.80	-2.00
B08	-1.79	3.17	-2.00
B08 F	-2.16	3.17	-2.00

242-A Low Temp
08/22/2019 2018719 BENTLEY
11:19 AM AutoPIPE Nuclear 12.00.00.16 MODEL PAGE 8

C O O R D I N A T E S D A T A L I S T I N G

POINT NAME	COORDINATE (ft) X	Y	Z
B09	-2.47	3.17	-2.00
B10 N	-4.51	3.17	-2.00
B10	-4.88	3.17	-2.00
B10 F	-4.88	3.55	-2.00
B11 N	-4.88	3.96	-2.00
B11	-4.88	4.21	-2.00
B11 M	-4.94	4.14	-1.95
B11 F	-5.07	4.21	-1.84
B12	-5.11	4.21	-1.81
B13	-5.12	4.21	-1.80

242-A Low Temp
08/22/2019 2018719 BENTLEY
11:19 AM AutoPIPE Nuclear 12.00.00.16 MODEL PAGE 9

S E G M E N T D A T A L I S T I N G

Segment Name	First Node	Last Node	Line Number	Apply Wind	Apply Bowing	Apply Buoyancy
A	A13	A14		No	No	No
B	B00	B13		No	No	No

```
-----------------------------------------------------------------------------------------------------------------------
242-A  Low Temp
08/22/2019 2018719                                                          BENTLEY
11:19 AM                                                                    AutoPIPE Nuclear 12.00.00.16   MODEL  PAGE  10
-----------------------------------------------------------------------------------------------------------------------

                    P I P E   D A T A   L I S T I N G

 Pipe ID/     Nom/ O.D.  -----Thickness(inch)----- Spec  InsuDen/   Weight(lb/ft )    E/  Composition/
 Material     Sch  inch  W.Th. Corr Mill Insu Ling Grav/ LingDen/  Pipe/ Ling/ Total  W/  Steel Group/
 CladMaterial            Clad                        InsMt CladDen   Cont  Insu/        f   Tcr
 ---Line Class---                                          lb/cu.ft        Clad
 ------------ ---- ----- ----- ---- ---- ---- ---- ----- --------  ----- ----- ----- ---- --------------------

 Tag No. : <None>
 2SCH40      2.000 2.375 0.154 0.00 0.02    0    0     0    0.000   3.74     0  3.74 1.00 Austenitic Stainless
 A312-TP304L  40S                                          0.000      0     0       1.00 Austenitic
                            0                              0.000            0       1.00    850.000



 Tag No. : <None>
 3SCH40      3.000 3.500 0.216 0.00 0.03    0    0     0    0.000   7.75     0  7.75 1.00 Austenitic Stainless
 A312-TP304L  40S                                          0.000      0     0       1.00 Austenitic
                            0                              0.000            0       1.00    850.000
```

M A T E R I A L D A T A L I S T I N G

Material Name	Pipe ID	Density lb/cu.ft	Pois. Ratio	Temper. deg F	Modulus E6 psi Axial	Hoop	Shear	Expans. in/100ft	Composition
A312-TP304L	2SCH40	501.0	0.30	80.0	28.246	28.246	10.864		Austenitic Stainless
				-25.0	28.688			-1.0577	
A312-TP304L	3SCH40	501.0	0.30	80.0	28.246	28.246	10.864		Austenitic Stainless
				-25.0	28.688			-1.0577	

M A T E R I A L A L L O W A B L E D A T A L I S T I N G

Material Name	Pipe ID	Temper. deg F	Allow. psi	Yield psi	Ultimate	Weld Reduction Factor W
A312-TP304L	2SCH40	80.0	16700.0	25000.0	70000.0	1.000
		-25.0	16700.0	25000.0		1.000
A312-TP304L	3SCH40	80.0	16700.0	25000.0	70000.0	1.000
		-25.0	16700.0	25000.0		1.000

OPERATING TEMPERATURE AND PRESSURE DATA
STRESSES IN psi

POINT NAME	CASE	PRESS. psi	TEMPER deg F	EXPAN. in/100ft	MODULUS E6 psi	ALLOW STRESS	YIELD STRESS
*** SEGMENT A							
A13	T1	0	-25.00	-1.058	28.688	16700	25000
A14	Same as previous point.						
*** SEGMENT B							
B00	T1	0	-25.00	-1.058	28.688	16700	25000
B13	Same as previous point.						

u User-defined value
* Non-code material for allowable stress;
Non-standard material for expansion and modulus

242-A Low Temp
08/22/2019 2018719
11:19 AM

BENTLEY
AutoPIPE Nuclear 12.00.00.16 MODEL PAGE 14

B E N D D A T A L I S T I N G

Point Name	Bend Type	Radius (in)	Angle (deg)	OD (in)	tnom (in)	Material	Flan^ /Cuts	SIF in	SIF out	Analysis Set	Flexibility (K)	Pressure Case
A01	*Close	2.00S	90.0	2.375	0.154	A312-TP304L	0/1	2.27	2.27	1	1.00u	None
A02	Elbow	3.00L	90.0	2.375	0.154	A312-TP304L	0/0	1.73	1.44	1	4.40	None
A03	Elbow	3.00L	90.0	2.375	0.154	A312-TP304L	0/0	1.73	1.44	1	4.40	None
A04	Elbow	3.00L	90.0	2.375	0.154	A312-TP304L	0/0	1.73	1.44	1	4.40	None
A05	Elbow	3.00L	90.0	2.375	0.154	A312-TP304L	0/0	1.73	1.44	1	4.40	None
A07	Elbow	3.00L	90.0	2.375	0.154	A312-TP304L	0/0	1.73	1.44	1	4.40	None
A08	Elbow	3.00L	90.0	2.375	0.154	A312-TP304L	0/0	1.73	1.44	1	4.40	None
A09	Elbow	3.00L	90.0	2.375	0.154	A312-TP304L	0/0	1.73	1.44	1	4.40	None
A10	Elbow	3.00L	90.0	2.375	0.154	A312-TP304L	0/0	1.73	1.44	1	4.40	None
A11	*Close	2.00S	90.0	2.375	0.154	A312-TP304L	0/2	2.27	2.27	1	1.00u	None
B06	*Close	3.00S	90.0	3.500	0.216	A312-TP304L	0/1	2.33	2.33	1	1.00u	None
B07	Elbow	4.50L	90.0	3.500	0.216	A312-TP304L	0/0	1.78	1.48	1	4.58	None
B08	Elbow	4.50L	90.0	3.500	0.216	A312-TP304L	0/0	1.78	1.48	1	4.58	None
B10	Elbow	4.50L	90.0	3.500	0.216	A312-TP304L	0/0	1.78	1.48	1	4.58	None
B11	*Close	3.00S	90.0	3.500	0.216	A312-TP304L	0/1	2.33	2.33	1	1.00u	None

^ = Number of bend ends where either a flange or valve is within distance
(L/D) x Nominal diameter, where L/D is defined under Tools > Model options > Edit
u = User Flexibility factor (K) / User SIF present at point, check user-sif data listing.
* = Mid-point present
L = Long radius
S = Short radius

C E N T E R O F G R A V I T Y R E P O R T

Description		Weight (lb)	X CoG (ft)	Y CoG (ft)	Z CoG (ft)
Valve	:	0.00	0.00	0.00	0.00
Support	:	0.00	0.00	0.00	0.00
Flange	:	0.00	0.00	0.00	0.00
Flexible Joint	:	0.00	0.00	0.00	0.00
Additional Weight	:	230.10	-0.62	1.86	-0.53
Pipes (Run, Bend, Tee, Reducer)	:	117.76	0.87	1.27	0.49
PipeTot (Valve+Support+Flange+Flex. Jt.+Add. Wt.+Pipes)	:	347.86	-0.12	1.66	-0.19
Insulation	:	0.00	0.00	0.00	0.00
Cladding	:	0.00	0.00	0.00	0.00
Lining	:	0.00	0.00	0.00	0.00
Contents	:	0.00	0.00	0.00	0.00
Beam	:	8.76	4.06	0.47	3.60
PipeTot + Ins.	:	347.86	-0.12	1.66	-0.19
PipeTot + Ins. + Clad.	:	347.86	-0.12	1.66	-0.19
PipeTot + Ins. + Clad. + Lin.	:	347.86	-0.12	1.66	-0.19
PipeTot + Ins. + Clad. + Lin. + Cont.	:	347.86	-0.12	1.66	-0.19
PipeTot + Beam	:	356.63	-0.02	1.63	-0.09
PipeTot + Ins. + Beam	:	356.63	-0.02	1.63	-0.09
PipeTot + Ins. + Clad. + Beam	:	356.63	-0.02	1.63	-0.09
PipeTot + Ins. + Clad. + Lin. + Beam	:	356.63	-0.02	1.63	-0.09
PipeTot + Ins. + Clad. + Lin. + Cont. + Beam	:	356.63	-0.02	1.63	-0.09

NOTE: COG report only includes the currently visible beams and segments.
All pipe segments are included.
All beams are included.

L O A D C A S E D E S C R I P T I O N

Load Case	Load Case Name	Description
GR	Gravity	
T1	Thermal 1	
P1	Press 1	

A N A L Y S I S S U M M A R Y

```
Current model revision number : 1

  Constant values used
           Acceleration due to gravity................  386.40000 in/s/s
           Density of water for specific gravity Cal..     62.400 lb/cu.ft
           Density of sea water......................     62.400 lb/cu.ft
           Density of ground water ..................     62.400 lb/cu.ft

  Static - Analysis set number .................. 1
           Date and Time of analysis ............ Aug 22, 2019   11:15 AM
           Model Revision Number ................ 1
           Number of load cases ................. 3
           Load cases analyzed .................. GR T1 P1
           Description .......................... Analysis Set No.1
           Gaps/Friction/Soil considered ......... Yes
           Tolerance - Force, Displacement ....... 10.00 lbf  0.0010 in
           Friction - Scale Factor, Tolerance .... 1.00   0.10
           Ignore friction for cases E1,E2,E3 .... Yes
           Ignore friction for gravity case ...... Yes
           Hanger design run ..................... No
           Cut short included .................... No
           Thermal bowing included ............... No
           Include Bourdon rotational effect ..... No
           Pipe radius for Bourdon calculation ... Mean
           Occasional load analysis type ......... Nonlinear
           Non-linear analysis summary file ...... 242-A  Low Temp.LOG
           Use default load sequence ............. Yes
           Base load cases for nonlinear analysis
                                                      GR   = None
                                                      T1   = GR
                                                      P1   = T1
           Weight of contents included ........... Yes
           Fluid density factor for contents ..... 1.00
           Pressure stiffening case .............. None
           Hot modulus case ...................... None
           Pressure Extension..................... Yes
           Water elevation for buoyancy loads .... Not considered
           Use corroded thickness in analysis .... No
           Rigid stiffness factor ................ 1000.0
           Support rigid stiffness (translation) . 0.100000E+11 lb/in
           Support rigid stiffness (rotation) .... 0.100000E+11 ft-lb/deg
           Anchor rigid stiffness (translation) .. 0.100000E+11 lb/in
           Anchor rigid stiffness (rotation) ..... 0.100000E+11 ft-lb/deg
           Remove Lift-Off Supports .............. No
```

242-A Low Temp
08/22/2019 2018719 BENTLEY
11:19 AM AutoPIPE Nuclear 12.00.00.16 RESULT PAGE 18

CODE COMPLIANCE COMBINATIONS

<Description> Combination	Category	Method	Case/Combination	Factor	M/S	K-Factor	Allowable (psi)	D/A/P/C
GR + Max P{1}	Sustain	Sum	GR[1]	1.00			Automatic	Y Y Y Y
			Max Long	1.00				
Max Range	Expansion	Sum	Temp. Range	1.00			Automatic	Y Y Y Y
Amb to T1{1}	Expansion	Sum	T1[1]	1.00			Automatic	Y Y Y Y
Max P{1}	Hoop	Sum	Max Hoop	1.00			Automatic	Y Y Y Y

Notes:

D/A/P/C: [D]efault/[A]uto-Update/[P]rint options/[C]Consistent (Y=Yes, N=No)

NON-CODE COMBINATIONS

<Description> Combination	Method	Case/Combination	Factor	D/A/P/C
Gravity{1}	Sum	GR[1]	1.00	Y Y Y Y
<-25.00 deg F> Thermal 1{1}	Sum	T1[1]	1.00	Y Y Y N
Pressure 1{1}	Sum	P1[1]	1.00	Y Y Y N
GT1{1}	Sum	GR[1]	1.00	Y Y Y Y
		T1[1]	1.00	
GT1P1{1}	Sum	GR[1]	1.00	Y Y Y Y
		T1[1]	1.00	
		P1[1]	1.00	

Notes:

D/A/P/C: [D]efault/[A]uto-Update/[P]rint options/[C]Consistent (Y=Yes, N=No)

CODE COMPLIANCE

```
Y - Factor ............................ 0.40
Design Pressure Factor ................ 1.00
Minimum stress ratio used in reports... 0.00
Number of stress points per span ...... 0
Include corrosion in stress calcs. .... Y
Include corrosion in Hoop stress calcs. Y
Include torsion in code stress ........ N
Include axial force in code stress .... N
Include sustain load margin ........... Only if allowable stress is exceeded
Use minimum sustained margin........... Y
Set sustained SIF=1 no bends .......... N
Set occasional SIF = 1 ................ N
Set occasional SIF = 0.75i ............ Y
Apply cold/hot modulus ratio .......... N
Disable auto code combinations ........ N
Disable auto non-code combinations .... N
No. of thermal ranges to report ....... 0
Include Max Range combination ......... Y
Total stress .......................... Octahedral
Direct shear .......................... None
Longitudinal pressure calculation ..... AxF/area
Use code case 178 ..................... Y
Inc. Axial Str and Pcase in Sustained.. Y
Use alternate occasional allowable .... N
Apply circumferential weld WC factor .. N
ASME B31J Enabled ..................... N
```

R E S T R A I N T R E A C T I O N S

Point name	Load combination	FORCES (lbf) X	Y	Z	Result	MOMENTS (ft-lb) X	Y	Z	Result
A13	Anchor Tag No.: <None>					Connected to: Ground			
	Gravity{1}	7	-62	5	62	47	0	-29	55
	Thermal 1{1}	19	5	12	23	-8	2	4	10
	Pressure 1{1}	0	0	0	0	0	0	0	0
	GT1{1}	26	-57	17	65	38	3	-25	46
	GT1P1{1}	26	-57	17	65	38	3	-25	46
A14	Anchor Tag No.: <None>					Connected to: Ground			
	Gravity{1}	-7	-73	-5	73	-38	4	2	38
	Thermal 1{1}	-19	-5	-12	23	9	14	-11	20
	Pressure 1{1}	0	0	0	0	0	0	0	0
	GT1{1}	-26	-78	-17	84	-29	18	-9	36
	GT1P1{1}	-26	-78	-17	84	-29	18	-9	36
B00	Anchor Tag No.: <None>					Connected to: Ground			
	Gravity{1}	17	-132	0	133	-2	0	30	30
	Thermal 1{1}	-275	231	8	359	7	2	-3	8
	Pressure 1{1}	0	0	0	0	0	0	0	0
	GT1{1}	-257	99	8	276	5	2	27	27
	GT1P1{1}	-257	99	8	276	5	2	27	27
B13	Anchor Tag No.: <None>					Connected to: Ground			
	Gravity{1}	-17	-90	0	92	-12	3	-14	19
	Thermal 1{1}	275	-231	-8	359	-19	-15	-19	31
	Pressure 1{1}	0	0	0	0	0	0	0	0
	GT1{1}	257	-321	-8	412	-31	-12	-33	47
	GT1P1{1}	257	-321	-8	412	-31	-12	-33	47

242-A Low Temp
08/22/2019 2018719
11:19 AM

BENTLEY
AutoPIPE Nuclear 12.00.00.16 RESULT PAGE 22

ASME B31.3 (2016) CODE COMPLIANCE
(Moments in ft-lb , Force in lbf) (Stress in psi)

Point name	Load combination	Axial Force	In-Pl. Moment	Out-Pl. Moment	Torsion Moment	S.I.F In	S.I.F Out	Index/SIF Ax.	Index/SIF Tor.	Eq. no.	Load type	Code Stress	Code Allow.
*** Segment A begin ***													
A01 F	Max P{1}									(3a)	HOOP	0	16700
	GR + Max P{1}	7	20	1	46	1.00	1.00	1.00	1.00	23a	SUST	1104	16700
	TR:Amb to T1{1}	19	7	4	11	1.00	1.00	1.00	1.00	(17)	DISP	309	25050
	Amb to T1{1}	19	7	4	11	1.00	1.00	1.00	1.00	(17)	DISP	309	25050
A02 N-	Max P{1}									(3a)	HOOP	0	16700
	GR + Max P{1}	7	5	3	46	1.00	1.00	1.00	1.00	23a	SUST	1015	16700
	TR:Amb to T1{1}	19	5	10	11	1.00	1.00	1.00	1.00	(17)	DISP	353	25050
	Amb to T1{1}	19	5	10	11	1.00	1.00	1.00	1.00	(17)	DISP	353	25050
A02 N+	Max P{1}									(3a)	HOOP	0	16700
	GR + Max P{1}	7	3	5	46	1.30	1.08	1.00	1.00	23a	SUST	1018	16700
	TR:Amb to T1{1}	19	10	5	11	1.73	1.44	1.00	1.00	(17)	DISP	491	25050
	Amb to T1{1}	19	10	5	11	1.73	1.44	1.00	1.00	(17)	DISP	491	25050
A02 F-	Max P{1}									(3a)	HOOP	0	16700
	GR + Max P{1}	5	3	38	3	1.30	1.08	1.00	1.00	23a	SUST	919	16700
	TR:Amb to T1{1}	12	9	10	4	1.73	1.44	1.00	1.00	(17)	DISP	459	25050
	Amb to T1{1}	12	9	10	4	1.73	1.44	1.00	1.00	(17)	DISP	459	25050
A02 F+	Max P{1}									(3a)	HOOP	0	16700
	GR + Max P{1}	5	38	3	3	1.00	1.00	1.00	1.00	23a	SUST	849	16700
	TR:Amb to T1{1}	12	10	9	4	1.00	1.00	1.00	1.00	(17)	DISP	302	25050
	Amb to T1{1}	12	10	9	4	1.00	1.00	1.00	1.00	(17)	DISP	302	25050
A03 N-	Max P{1}									(3a)	HOOP	0	16700
	GR + Max P{1}	5	6	5	3	1.00	1.00	1.00	1.00	23a	SUST	191	16700
	TR:Amb to T1{1}	12	4	14	4	1.00	1.00	1.00	1.00	(17)	DISP	329	25050
	Amb to T1{1}	12	4	14	4	1.00	1.00	1.00	1.00	(17)	DISP	329	25050
A03 N+	Max P{1}									(3a)	HOOP	0	16700
	GR + Max P{1}	5	5	6	3	1.30	1.08	1.00	1.00	23a	SUST	221	16700
	TR:Amb to T1{1}	12	14	4	4	1.73	1.44	1.00	1.00	(17)	DISP	543	25050
	Amb to T1{1}	12	14	4	4	1.73	1.44	1.00	1.00	(17)	DISP	543	25050
A03 F-	Max P{1}									(3a)	HOOP	0	16700
	GR + Max P{1}	7	6	9	0	1.30	1.08	1.00	1.00	23a	SUST	272	16700
	TR:Amb to T1{1}	19	15	3	3	1.73	1.44	1.00	1.00	(17)	DISP	599	25050
	Amb to T1{1}	19	15	3	3	1.73	1.44	1.00	1.00	(17)	DISP	599	25050
A03 F+	Max P{1}									(3a)	HOOP	0	16700
	GR + Max P{1}	7	9	6	0	1.00	1.00	1.00	1.00	23a	SUST	237	16700
	TR:Amb to T1{1}	19	3	15	3	1.00	1.00	1.00	1.00	(17)	DISP	358	25050
	Amb to T1{1}	19	3	15	3	1.00	1.00	1.00	1.00	(17)	DISP	358	25050

242-A Low Temp
08/22/2019 2018719 BENTLEY
11:19 AM AutoPIPE Nuclear 12.00.00.16 RESULT PAGE 23

ASME B31.3 (2016) CODE COMPLIANCE
(Moments in ft-lb , Force in lbf) (Stress in psi)

Point name	Load combination	Axial Force	In-Pl. Moment	Out-Pl. Moment	Torsion Moment	S.I.F In	S.I.F Out	Index/SIF Ax.	Index/SIF Tor.	Eq. no.	Load type	Code Stress	Code Allow.
A04 N-	Max P{1}									(3a)	HOOP	0	16700
	GR + Max P{1}	7	17	4	0	1.00	1.00	1.00	1.00	23a	SUST	383	16700
	TR:Amb to T1{1}	19	1	11	3	1.00	1.00	1.00	1.00	(17)	DISP	266	25050
	Amb to T1{1}	19	1	11	3	1.00	1.00	1.00	1.00	(17)	DISP	266	25050
A04 N+	Max P{1}									(3a)	HOOP	0	16700
	GR + Max P{1}	7	4	17	0	1.30	1.08	1.00	1.00	23a	SUST	420	16700
	TR:Amb to T1{1}	19	11	1	3	1.73	1.44	1.00	1.00	(17)	DISP	440	25050
	Amb to T1{1}	19	11	1	3	1.73	1.44	1.00	1.00	(17)	DISP	440	25050
A04 F-	Max P{1}									(3a)	HOOP	0	16700
	GR + Max P{1}	5	5	5	22	1.30	1.08	1.00	1.00	23a	SUST	522	16700
	TR:Amb to T1{1}	12	13	2	0	1.73	1.44	1.00	1.00	(17)	DISP	493	25050
	Amb to T1{1}	12	13	2	0	1.73	1.44	1.00	1.00	(17)	DISP	493	25050
A04 F+	Max P{1}									(3a)	HOOP	0	16700
	GR + Max P{1}	5	5	5	22	1.00	1.00	1.00	1.00	23a	SUST	512	16700
	TR:Amb to T1{1}	12	2	13	0	1.00	1.00	1.00	1.00	(17)	DISP	291	25050
	Amb to T1{1}	12	2	13	0	1.00	1.00	1.00	1.00	(17)	DISP	291	25050
A05 N-	Max P{1}									(3a)	HOOP	0	16700
	GR + Max P{1}	5	30	14	22	1.00	1.00	1.00	1.00	23a	SUST	874	16700
	TR:Amb to T1{1}	12	5	38	0	1.00	1.00	1.00	1.00	(17)	DISP	836	25050
	Amb to T1{1}	12	5	38	0	1.00	1.00	1.00	1.00	(17)	DISP	836	25050
A05 N+	Max P{1}									(3a)	HOOP	0	16700
	GR + Max P{1}	5	14	30	22	1.30	1.08	1.00	1.00	23a	SUST	949	16700
	TR:Amb to T1{1}	12	38	5	0	1.73	1.44	1.00	1.00	(17)	DISP	1436	25050
	Amb to T1{1}	12	38	5	0	1.73	1.44	1.00	1.00	(17)	DISP	1436	25050
A05 F-	Max P{1}									(3a)	HOOP	0	16700
	GR + Max P{1}	7	14	26	34	1.30	1.08	1.00	1.00	23a	SUST	1051	16700
	TR:Amb to T1{1}	19	40	2	6	1.73	1.44	1.00	1.00	(17)	DISP	1504	25050
	Amb to T1{1}	19	40	2	6	1.73	1.44	1.00	1.00	(17)	DISP	1504	25050
A05 F+	Max P{1}									(3a)	HOOP	0	16700
	GR + Max P{1}	7	26	14	34	1.00	1.00	1.00	1.00	23a	SUST	990	16700
	TR:Amb to T1{1}	19	2	40	6	1.00	1.00	1.00	1.00	(17)	DISP	882	25050
	Amb to T1{1}	19	2	40	6	1.00	1.00	1.00	1.00	(17)	DISP	882	25050
A06 -	Max P{1}									(3a)	HOOP	0	16700
	GR + Max P{1}	7	48	5	34	1.00	1.00	1.00	1.00	23a	SUST	1302	16700
	TR:Amb to T1{1}	19	12	14	6	1.00	1.00	1.00	1.00	(17)	DISP	433	25050
	Amb to T1{1}	19	12	14	6	1.00	1.00	1.00	1.00	(17)	DISP	433	25050
A06 +	Max P{1}									(3a)	HOOP	0	16700
	GR + Max P{1}	7	48	5	36	1.00	1.00	1.00	1.00	23a	SUST	1326	16700
	TR:Amb to T1{1}	19	12	14	6	1.00	1.00	1.00	1.00	(17)	DISP	433	25050
	Amb to T1{1}	19	12	14	6	1.00	1.00	1.00	1.00	(17)	DISP	433	25050

ASME B31.3 (2016) CODE COMPLIANCE
(Moments in ft-lb , Force in lbf) (Stress in psi)

Point name	Load combination	Axial Force	In-Pl. Moment	Out-Pl. Moment	Torsion Moment	S.I.F In	S.I.F Out	Index/SIF Ax.	Index/SIF Tor.	Eq. no.	Load type	Code Stress	Code Allow.
A07 N-	Max P{1}									(3a)	HOOP	0	16700
	GR + Max P{1}	7	11	5	36	1.00	1.00	1.00	1.00	23a	SUST	828	16700
	TR:Amb to T1{1}	19	23	13	6	1.00	1.00	1.00	1.00	(17)	DISP	596	25050
	Amb to T1{1}	19	23	13	6	1.00	1.00	1.00	1.00	(17)	DISP	596	25050
A07 N+	Max P{1}									(3a)	HOOP	0	16700
	GR + Max P{1}	7	5	11	36	1.30	1.08	1.00	1.00	23a	SUST	839	16700
	TR:Amb to T1{1}	19	13	23	6	1.73	1.44	1.00	1.00	(17)	DISP	886	25050
	Amb to T1{1}	19	13	23	6	1.73	1.44	1.00	1.00	(17)	DISP	886	25050
A07 F-	Max P{1}									(3a)	HOOP	0	16700
	GR + Max P{1}	5	8	41	5	1.30	1.08	1.00	1.00	23a	SUST	1016	16700
	TR:Amb to T1{1}	12	21	5	24	1.73	1.44	1.00	1.00	(17)	DISP	963	25050
	Amb to T1{1}	12	21	5	24	1.73	1.44	1.00	1.00	(17)	DISP	963	25050
A07 F+	Max P{1}									(3a)	HOOP	0	16700
	GR + Max P{1}	5	41	8	5	1.00	1.00	1.00	1.00	23a	SUST	932	16700
	TR:Amb to T1{1}	12	5	21	24	1.00	1.00	1.00	1.00	(17)	DISP	701	25050
	Amb to T1{1}	12	5	21	24	1.00	1.00	1.00	1.00	(17)	DISP	701	25050
A08 N-	Max P{1}									(3a)	HOOP	0	16700
	GR + Max P{1}	5	49	10	5	1.00	1.00	1.00	1.00	23a	SUST	1105	16700
	TR:Amb to T1{1}	12	3	28	24	1.00	1.00	1.00	1.00	(17)	DISP	794	25050
	Amb to T1{1}	12	3	28	24	1.00	1.00	1.00	1.00	(17)	DISP	794	25050
A08 N+	Max P{1}									(3a)	HOOP	0	16700
	GR + Max P{1}	5	10	49	5	1.30	1.08	1.00	1.00	23a	SUST	1205	16700
	TR:Amb to T1{1}	12	28	3	24	1.73	1.44	1.00	1.00	(17)	DISP	1160	25050
	Amb to T1{1}	12	28	3	24	1.73	1.44	1.00	1.00	(17)	DISP	1160	25050
A08 F-	Max P{1}									(3a)	HOOP	0	16700
	GR + Max P{1}	7	13	1	55	1.30	1.08	1.00	1.00	23a	SUST	1262	16700
	TR:Amb to T1{1}	19	36	25	2	1.73	1.44	1.00	1.00	(17)	DISP	1547	25050
	Amb to T1{1}	19	36	25	2	1.73	1.44	1.00	1.00	(17)	DISP	1547	25050
A08 F+	Max P{1}									(3a)	HOOP	0	16700
	GR + Max P{1}	7	1	13	55	1.00	1.00	1.00	1.00	23a	SUST	1239	16700
	TR:Amb to T1{1}	19	25	36	2	1.00	1.00	1.00	1.00	(17)	DISP	950	25050
	Amb to T1{1}	19	25	36	2	1.00	1.00	1.00	1.00	(17)	DISP	950	25050
A09 N-	Max P{1}									(3a)	HOOP	0	16700
	GR + Max P{1}	7	9	15	55	1.00	1.00	1.00	1.00	23a	SUST	1264	16700
	TR:Amb to T1{1}	19	27	40	2	1.00	1.00	1.00	1.00	(17)	DISP	1042	25050
	Amb to T1{1}	19	27	40	2	1.00	1.00	1.00	1.00	(17)	DISP	1042	25050
A09 N+	Max P{1}									(3a)	HOOP	0	16700
	GR + Max P{1}	7	15	9	55	1.30	1.08	1.00	1.00	23a	SUST	1295	16700
	TR:Amb to T1{1}	19	40	27	2	1.73	1.44	1.00	1.00	(17)	DISP	1704	25050
	Amb to T1{1}	19	40	27	2	1.73	1.44	1.00	1.00	(17)	DISP	1704	25050

242-A Low Temp
08/22/2019 2018719 BENTLEY
11:19 AM AutoPIPE Nuclear 12.00.00.16 RESULT PAGE 25

ASME B31.3 (2016) CODE COMPLIANCE
(Moments in ft-lb , Force in lbf) (Stress in psi)

Point name	Load combination	Axial Force	In-Pl. Moment	Out-Pl. Moment	Torsion Moment	S.I.F In	S.I.F Out	Index/SIF Ax.	Index/SIF Tor.	Eq. no.	Load type	Code Stress	Code Allow.
A09 F-	Max P{1}									(3a)	HOOP	0	16700
	GR + Max P{1}	5	14	48	16	1.30	1.08	1.00	1.00	23a	SUST	1263	16700
	TR:Amb to T1{1}	12	38	3	28	1.73	1.44	1.00	1.00	(17)	DISP	1543	25050
	Amb to T1{1}	12	38	3	28	1.73	1.44	1.00	1.00	(17)	DISP	1543	25050
A09 F+	Max P{1}									(3a)	HOOP	0	16700
	GR + Max P{1}	5	48	14	16	1.00	1.00	1.00	1.00	23a	SUST	1157	16700
	TR:Amb to T1{1}	12	3	38	28	1.00	1.00	1.00	1.00	(17)	DISP	1020	25050
	Amb to T1{1}	12	3	38	28	1.00	1.00	1.00	1.00	(17)	DISP	1020	25050
A10 N-	Max P{1}									(3a)	HOOP	0	16700
	GR + Max P{1}	5	24	1	16	1.00	1.00	1.00	1.00	23a	SUST	640	16700
	TR:Amb to T1{1}	12	14	5	28	1.00	1.00	1.00	1.00	(17)	DISP	686	25050
	Amb to T1{1}	12	14	5	28	1.00	1.00	1.00	1.00	(17)	DISP	686	25050
A10 N+	Max P{1}									(3a)	HOOP	0	16700
	GR + Max P{1}	5	24	1	16	1.30	1.08	1.00	1.00	23a	SUST	777	16700
	TR:Amb to T1{1}	12	14	5	28	1.73	1.44	1.00	1.00	(17)	DISP	822	25050
	Amb to T1{1}	12	14	5	28	1.73	1.44	1.00	1.00	(17)	DISP	822	25050
A10 F-	Max P{1}									(3a)	HOOP	0	16700
	GR + Max P{1}	38	32	14	3	1.30	1.08	1.00	1.00	23a	SUST	1017	16700
	TR:Amb to T1{1}	5	12	23	10	1.73	1.44	1.00	1.00	(17)	DISP	881	25050
	Amb to T1{1}	5	12	23	10	1.73	1.44	1.00	1.00	(17)	DISP	881	25050
A10 F+	Max P{1}									(3a)	HOOP	0	16700
	GR + Max P{1}	38	32	14	3	1.00	1.00	1.00	1.00	23a	SUST	812	16700
	TR:Amb to T1{1}	5	12	23	10	1.00	1.00	1.00	1.00	(17)	DISP	605	25050
	Amb to T1{1}	5	12	23	10	1.00	1.00	1.00	1.00	(17)	DISP	605	25050
A11 N	Max P{1}									(3a)	HOOP	0	16700
	GR + Max P{1}	44	25	3	3	1.00	1.00	1.00	1.00	23a	SUST	596	16700
	TR:Amb to T1{1}	5	8	8	10	1.00	1.00	1.00	1.00	(17)	DISP	322	25050
	Amb to T1{1}	5	8	8	10	1.00	1.00	1.00	1.00	(17)	DISP	322	25050

*** Segment A end ***

*** Segment B begin ***

B06 F	Max P{1}									(3a)	HOOP	0	16700
	GR + Max P{1}	17	16	0	2	1.00	1.00	1.00	1.00	23a	SUST	124	16700
	TR:Amb to T1{1}	275	28	0	5	1.00	1.00	1.00	1.00	(17)	DISP	321	25050
	Amb to T1{1}	275	28	0	5	1.00	1.00	1.00	1.00	(17)	DISP	321	25050
B07 N-	Max P{1}									(3a)	HOOP	0	16700
	GR + Max P{1}	17	42	0	2	1.00	1.00	1.00	1.00	23a	SUST	309	16700
	TR:Amb to T1{1}	275	241	10	5	1.00	1.00	1.00	1.00	(17)	DISP	1801	25050
	Amb to T1{1}	275	241	10	5	1.00	1.00	1.00	1.00	(17)	DISP	1801	25050

242-A Low Temp
08/22/2019 2018719 BENTLEY
11:19 AM AutoPIPE Nuclear 12.00.00.16 RESULT PAGE 26

ASME B31.3 (2016) CODE COMPLIANCE
(Moments in ft-lb , Force in lbf) (Stress in psi)

Point name	Load combination	Axial Force	In-Pl. Moment	Out-Pl. Moment	Torsion Moment	S.I.F In	S.I.F Out	Index/SIF Ax.	Index/SIF Tor.	Eq. no.	Load type	Code Stress	Code Allow.
B07 N+	Max P{1}									(3a)	HOOP	0	16700
	GR + Max P{1}	17	42	0	2	1.33	1.11	1.00	1.00	23a	SUST	408	16700
	TR:Amb to T1{1}	275	241	10	5	1.78	1.48	1.00	1.00	(17)	DISP	3104	25050
	Amb to T1{1}	275	241	10	5	1.78	1.48	1.00	1.00	(17)	DISP	3104	25050
B07 F-	Max P{1}									(3a)	HOOP	0	16700
	GR + Max P{1}	41	52	2	0	1.33	1.11	1.00	1.00	23a	SUST	513	16700
	TR:Amb to T1{1}	231	224	2	13	1.78	1.48	1.00	1.00	(17)	DISP	2880	25050
	Amb to T1{1}	231	224	2	13	1.78	1.48	1.00	1.00	(17)	DISP	2880	25050
B07 F+	Max P{1}									(3a)	HOOP	0	16700
	GR + Max P{1}	41	2	52	0	1.00	1.00	1.00	1.00	23a	SUST	390	16700
	TR:Amb to T1{1}	231	2	224	13	1.00	1.00	1.00	1.00	(17)	DISP	1668	25050
	Amb to T1{1}	231	2	224	13	1.00	1.00	1.00	1.00	(17)	DISP	1668	25050
B08 N-	Max P{1}									(3a)	HOOP	0	16700
	GR + Max P{1}	25	2	15	0	1.00	1.00	1.00	1.00	23a	SUST	119	16700
	TR:Amb to T1{1}	231	16	361	13	1.00	1.00	1.00	1.00	(17)	DISP	2620	25050
	Amb to T1{1}	231	16	361	13	1.00	1.00	1.00	1.00	(17)	DISP	2620	25050
B08 N+	Max P{1}									(3a)	HOOP	0	16700
	GR + Max P{1}	25	15	2	0	1.33	1.11	1.00	1.00	23a	SUST	154	16700
	TR:Amb to T1{1}	231	361	16	13	1.78	1.48	1.00	1.00	(17)	DISP	4571	25050
	Amb to T1{1}	231	361	16	13	1.78	1.48	1.00	1.00	(17)	DISP	4571	25050
B08 F-	Max P{1}									(3a)	HOOP	0	16700
	GR + Max P{1}	17	17	0	2	1.33	1.11	1.00	1.00	23a	SUST	165	16700
	TR:Amb to T1{1}	275	377	16	19	1.78	1.48	1.00	1.00	(17)	DISP	4796	25050
	Amb to T1{1}	275	377	16	19	1.78	1.48	1.00	1.00	(17)	DISP	4796	25050
B08 F+	Max P{1}									(3a)	HOOP	0	16700
	GR + Max P{1}	17	17	0	2	1.00	1.00	1.00	1.00	23a	SUST	127	16700
	TR:Amb to T1{1}	275	377	16	19	1.00	1.00	1.00	1.00	(17)	DISP	2756	25050
	Amb to T1{1}	275	377	16	19	1.00	1.00	1.00	1.00	(17)	DISP	2756	25050
B09	Max P{1}									(3a)	HOOP	0	16700
	GR + Max P{1}	17	22	0	2	1.00	1.00	1.00	1.00	23a	SUST	167	16700
	TR:Amb to T1{1}	275	307	18	19	1.00	1.00	1.00	1.00	(17)	DISP	2268	25050
	Amb to T1{1}	275	307	18	19	1.00	1.00	1.00	1.00	(17)	DISP	2268	25050
B10 N-	Max P{1}									(3a)	HOOP	0	16700
	GR + Max P{1}	17	25	0	2	1.00	1.00	1.00	1.00	23a	SUST	186	16700
	TR:Amb to T1{1}	275	163	35	19	1.00	1.00	1.00	1.00	(17)	DISP	1290	25050
	Amb to T1{1}	275	163	35	19	1.00	1.00	1.00	1.00	(17)	DISP	1290	25050
B10 N+	Max P{1}									(3a)	HOOP	0	16700
	GR + Max P{1}	17	25	0	2	1.33	1.11	1.00	1.00	23a	SUST	245	16700
	TR:Amb to T1{1}	275	163	35	19	1.78	1.48	1.00	1.00	(17)	DISP	2174	25050
	Amb to T1{1}	275	163	35	19	1.78	1.48	1.00	1.00	(17)	DISP	2174	25050

242-A Low Temp
08/22/2019 2018719 BENTLEY
11:19 AM AutoPIPE Nuclear 12.00.00.16 RESULT PAGE 27

ASME B31.3 (2016) CODE COMPLIANCE
(Moments in ft-lb , Force in lbf) (Stress in psi)

Point name	Load combination	Axial Force	In-Pl. Moment	Out-Pl. Moment	Torsion Moment	S.I.F In	S.I.F Out	Index/SIF Ax.	Index/SIF Tor.	Eq. no.	Load type	Code Stress	Code Allow.
B10 F-	Max P{1}									(3a)	HOOP	0	16700
	GR + Max P{1}	11	15	2	0	1.33	1.11	1.00	1.00	23a	SUST	151	16700
	TR:Amb to T1{1}	231	146	22	38	1.78	1.48	1.00	1.00	(17)	DISP	1947	25050
	Amb to T1{1}	231	146	22	38	1.78	1.48	1.00	1.00	(17)	DISP	1947	25050
B10 F+	Max P{1}									(3a)	HOOP	0	16700
	GR + Max P{1}	11	2	15	0	1.00	1.00	1.00	1.00	23a	SUST	115	16700
	TR:Amb to T1{1}	231	22	146	38	1.00	1.00	1.00	1.00	(17)	DISP	1165	25050
	Amb to T1{1}	231	22	146	38	1.00	1.00	1.00	1.00	(17)	DISP	1165	25050
B11 N	Max P{1}									(3a)	HOOP	0	16700
	GR + Max P{1}	14	2	8	0	1.00	1.00	1.00	1.00	23a	SUST	66	16700
	TR:Amb to T1{1}	231	26	32	38	1.00	1.00	1.00	1.00	(17)	DISP	472	25050
	Amb to T1{1}	231	26	32	38	1.00	1.00	1.00	1.00	(17)	DISP	472	25050

*** Segment B end ***

R E S U L T S U M M A R Y

Maximum restraint forces (lb)

Maximum X :	-275	Point : B00	Load Comb.: Thermal 1{1}
Maximum Y :	-321	Point : B13	Load Comb.: GT1{1}
Maximum Z :	17	Point : A13	Load Comb.: GT1{1}
Max. total:	412	Point : B13	Load Comb.: GT1{1}

Maximum restraint moments (ft-lb)

Maximum X :	47	Point : A13	Load Comb.: Gravity{1}
Maximum Y :	18	Point : A14	Load Comb.: GT1{1}
Maximum Z :	-33	Point : B13	Load Comb.: GT1{1}
Max. total:	55	Point : A13	Load Comb.: Gravity{1}

R E S U L T S U M M A R Y

Maximum sustained stress

```
Point            : A06
Stress    psi    : 1326
Allowable psi    : 16700
Ratio            : 0.08
Load combination : GR + Max P{1}
```

Maximum displacement stress

```
Point            : B08 F
Stress    psi    : 4796
Allowable psi    : 25050
Ratio            : 0.19
Load combination : Max Range
```

Maximum hoop stress

```
Point            : A01 F
Stress    psi    : 0
Allowable psi    : 16700
Ratio            : 0.00
Load combination : Max P{1}
```

R E S U L T S U M M A R Y

Maximum sustained stress ratio

```
Point            : A06
Stress    psi    : 1326
Allowable psi    : 16700
Ratio            : 0.08
Load combination : GR + Max P{1}
```

Maximum displacement stress ratio

```
Point            : B08 F
Stress    psi    : 4796
Allowable psi    : 25050
Ratio            : 0.19
Load combination : Max Range
```

Maximum hoop stress ratio

```
Point            : A01 F
Stress    psi    : 0
Allowable psi    : 16700
Ratio            : 0.00
Load combination : Max P{1}
```

```
* * * The system satisfies ASME B31.3 (2016) code requirements * * *
* * * for the selected options                                  * * *
```

Warnings:
(1) Maximum hoop stress ratio is zero

APPENDIX D5

AUTOPIPE ANALYSIS – SUSTAINED AND OCCASIONAL SEISMIC

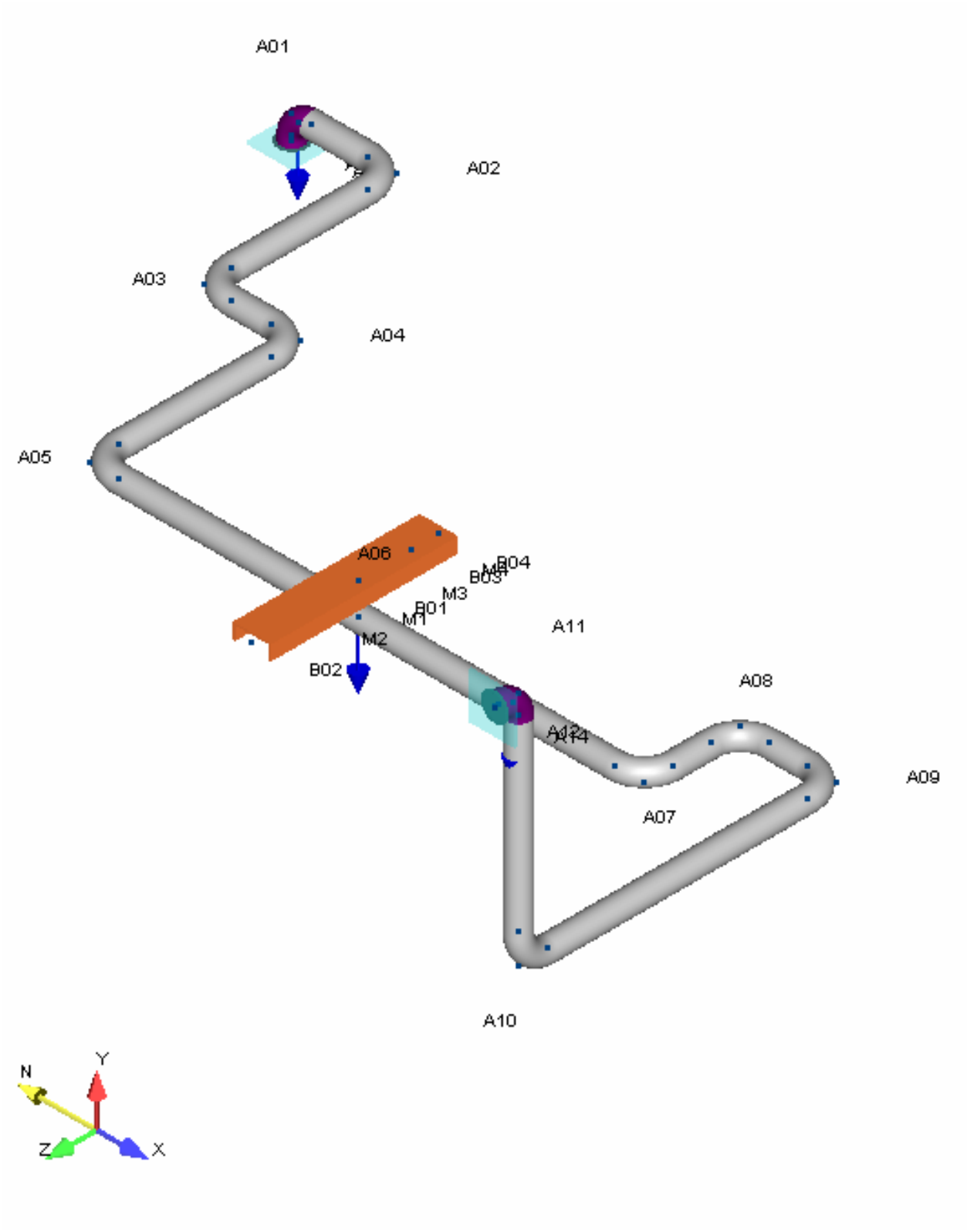
A01
A02
A03
A04
A05
A06
B04
B03
M4
M3
B01
M1
M2
B02
A11
A08
A12
A14
A09
A07
A10
N
Y
Z
X

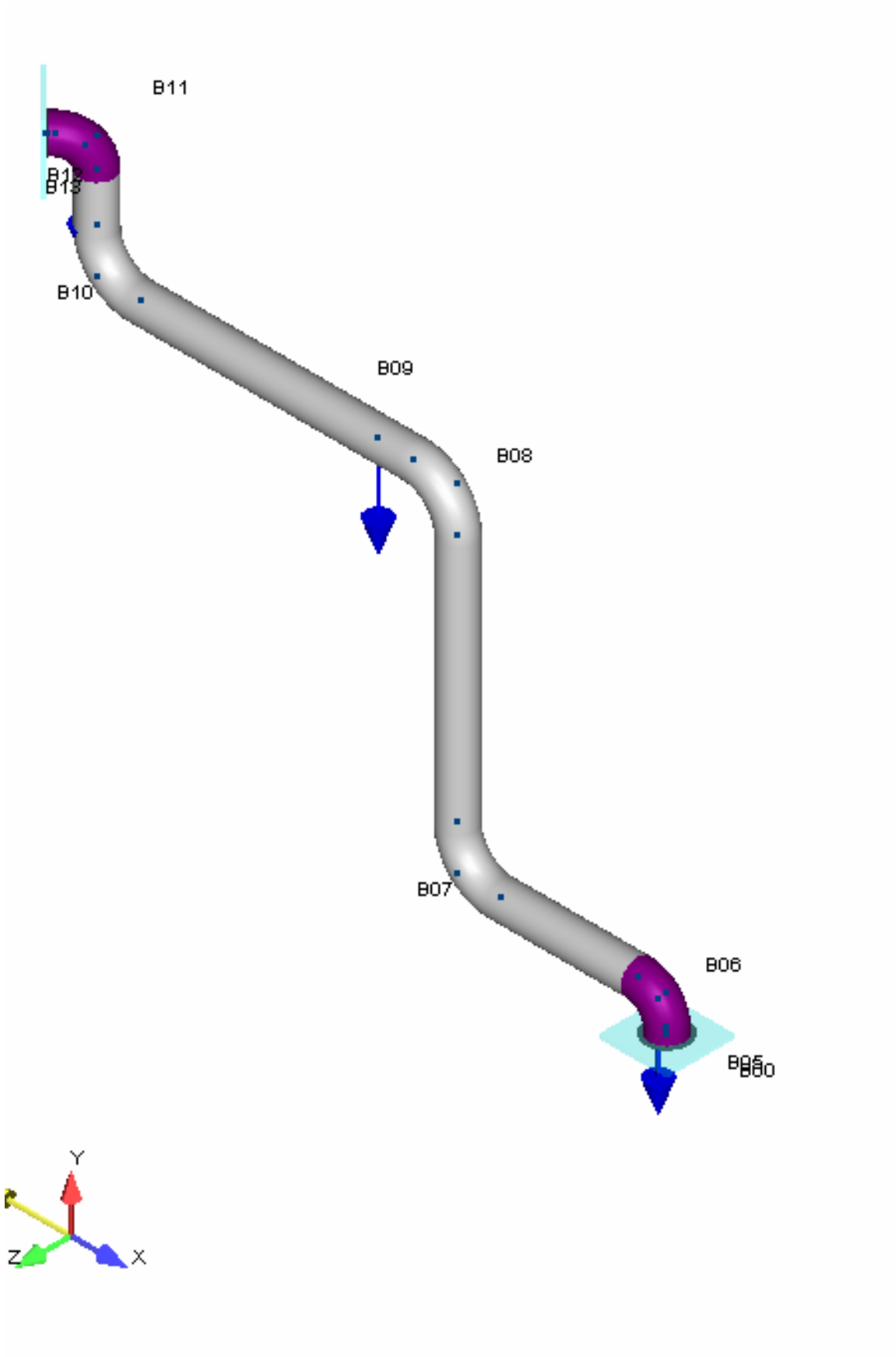
B11
B12
B13
B10
B09
B08
B07
B06
B05
B00
Y
Z
X

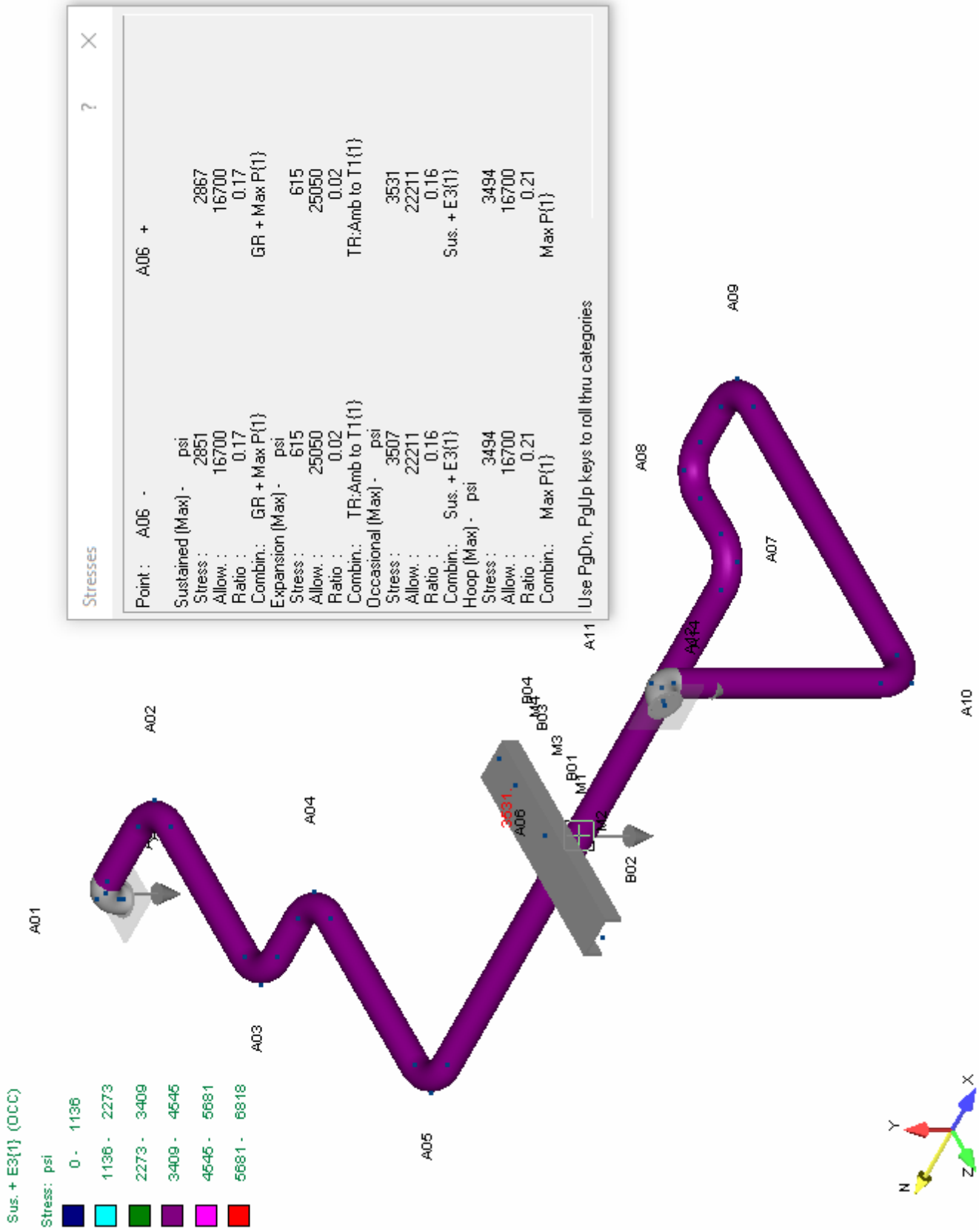
Sus. + E3{1} (OCC)
Stress: psi
0 - 1136
1136 - 2273
2273 - 3409
3409 - 4545
4545 - 5681
5681 - 6818
A01
A02
A03
A04
A05
A06
A07
A08
A09
A10
A11
B01
B02
B03
B04
M1
M2
M3
M4
3531
Stresses
Point : A06 - A06 +
Sustained (Max) - psi
Stress : 2851 2867
Allow. : 16700 16700
Ratio : 0.17 0.17
Combin.: GR + Max P{1} GR + Max P{1}
Expansion (Max) - psi
Stress : 615 615
Allow. : 25050 25050
Ratio : 0.02 0.02
Combin.: TR:Amb to T1{1} TR:Amb to T1{1}
Occasional (Max) - psi
Stress : 3507 3531
Allow. : 22211 22211
Ratio : 0.16 0.16
Combin.: Sus. + E3{1} Sus. + E3{1}
Hoop (Max) - psi
Stress : 3494 3494
Allow. : 16700 16700
Ratio : 0.21 0.21
Combin.: Max P{1} Max P{1}
Use PgDn, PgUp keys to roll thru categories
X
Y
Z
N

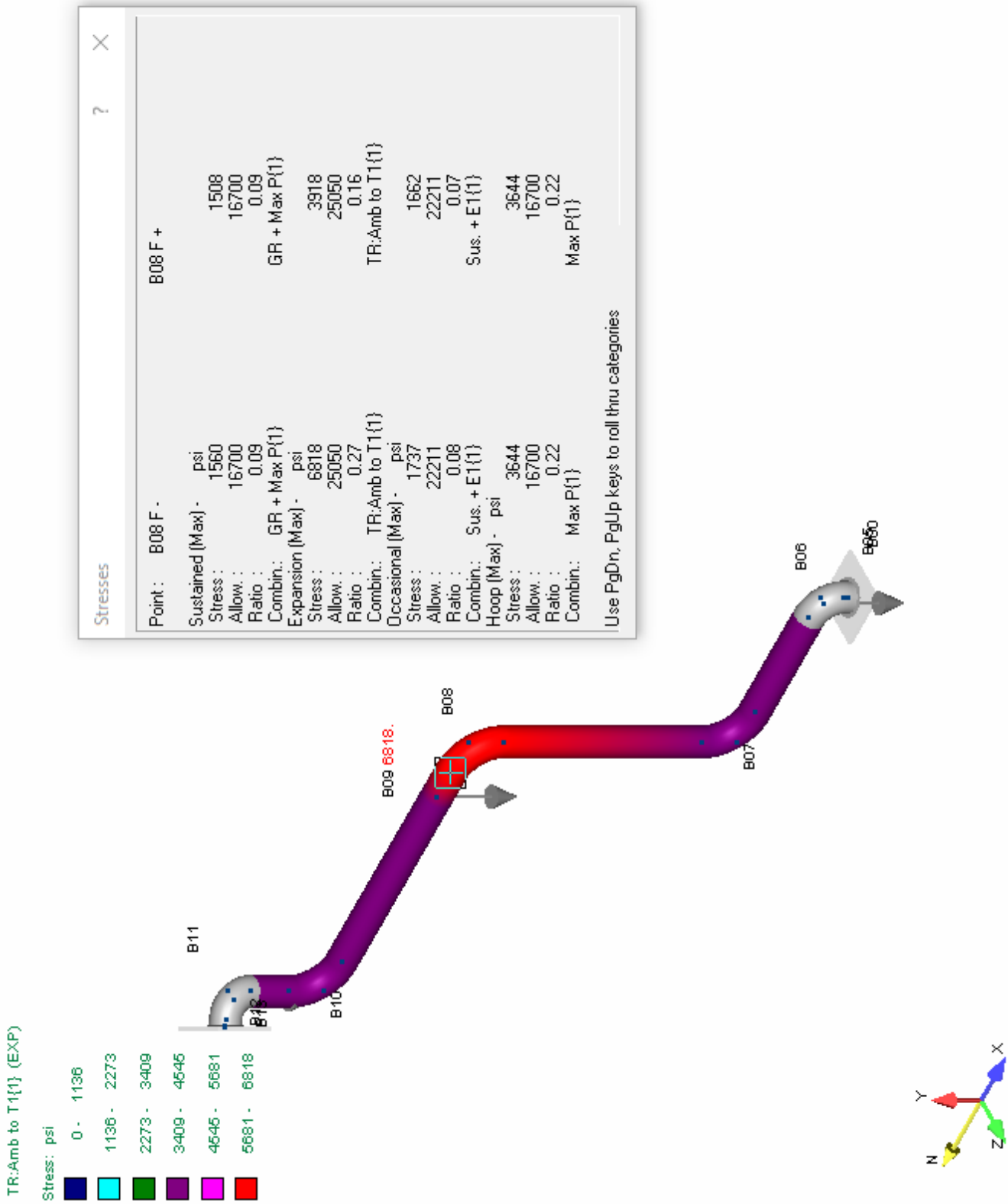
TR:Amb to T1{1} (EXP)
Stress: psi
0 - 1136
1136 - 2273
2273 - 3409
3409 - 4545
4545 - 5681
5681 - 6818
B11
B10
B09 6818.
B08
B07
B06
Stresses
Point : B08 F - B08 F +
Sustained (Max) - psi
Stress : 1560 1508
Allow. : 16700 16700
Ratio : 0.09 0.09
Combin.: GR + Max P{1} GR + Max P{1}
Expansion (Max) - psi
Stress : 6818 3918
Allow. : 25050 25050
Ratio : 0.27 0.16
Combin.: TR:Amb to T1{1} TR:Amb to T1{1}
Occasional (Max) - psi
Stress : 1737 1662
Allow. : 22211 22211
Ratio : 0.08 0.07
Combin.: Sus. + E1{1} Sus. + E1{1}
Hoop (Max) - psi
Stress : 3644 3644
Allow. : 16700 16700
Ratio : 0.22 0.22
Combin.: Max P{1} Max P{1}
Use PgDn, PgUp keys to roll thru categories
X
Y
Z

```
242-A  Sustained and Seismic
10/10/2019 2018719                                                                    BENTLEY
01:36 PM                                                                              AutoPIPE Nuclear 12.00.00.16
```

```
        *                             *******   **  *******   *******
       ***               **           **    **  **  **    **  **
      ** **             ******         **    **  **  **    **  **
     **   **    **   **  **   *****   *******   **  *******   *****
    *********   **   **  **  **   **  **        **  **        **
   **       **  **   **  **  **   **  **        **  **        **
  **         **  *****   **   *****   **        **  **        *******
```

Pipe Stress Analysis and Design Program

Version: 12.00.00.16

Edition: Nuclear

Developed and Maintained by

BENTLEY SYSTEMS, INCORPORATED
1065 N. PACIFIC CENTER DRIVE, SUITE 450
ANAHEIM, CA 92806

```
************************************************************
**                                                        **
**              AUTOPIPE SYSTEM INFORMATION               **
**                                                        **
************************************************************
```

SYSTEM NAME : 242-A Sustained and Seismic

PROJECT ID : 2018719

PREPARED BY : _____
JIM HARRINGTON

CHECKED BY : _____
RYAN LANG

1ST APPROVER : _____

2ND APPROVER : _____

PIPING CODE : ASME B31.3

YEAR : 2016

VERTICAL AXIS : Y

AMBIENT TEMPERATURE : 60.0 deg F

COMPONENT LIBRARY : AUTOPIPE

MATERIAL LIBRARY : B313-16

MODEL REVISION NUMBER : 1

242-A Sustained and Seismic
10/10/2019 2018719 BENTLEY
01:36 PM AutoPIPE Nuclear 12.00.00.16

T A B L E O F C O N T E N T S

Components..... 1
Coordinates..... 7
Segment Data..... 9
Pipe Properties..... 10
Material Properties..... 11
Material Allowables..... 12
Temperature and Pressure..... 13
Bend..... 14
Center of Gravity..... 15
Load Case Description..... 16
Analysis Summary..... 17
Restraint Reactions..... 22
Code Compliance..... 24
Result Summary..... 38

```
-----------------------------------------------------------------------------------------------------------
242-A  Sustained and Seismic
10/10/2019 2018719                                                    BENTLEY
01:36 PM                                                              AutoPIPE Nuclear 12.00.00.16   MODEL  PAGE   1
-----------------------------------------------------------------------------------------------------------

                 C O M P O N E N T   D A T A   L I S T I N G

 ---------------------------------------------------------------------------
 *** SEGMENT A

 ---------------------------------------------------------------------------
 From A13 to A00, DY= 0.01 ft                                          Flex

 COMPONENT DATA (Flex Jt):
   Length= 0.01 ft, Weight= 0 lb, Area= 0.0 sq.in, Kax= 13500000 lb/in, Kylat= 27800.0 lb/in,
   Kzlat= 27800.0 lb/in, Ktor= 107.0 ft-lb/deg, Kybend= 659.0 ft-lb/deg, Kzbend= 659.0 ft-lb/deg

 PIPE DATA:
   Pipe Id= 2SCH40, Material= A312-TP304L, Composition= Austenitic Stainless, Poisson= 0.300, Nom Size= 2.000,
   OD= 2.375 inch, Sch= 40S, Wall Thk= 0.154 inch, Mill= 0.019 inch, Cor= 0.005 inch,
   Pipe Density= 501.00 lb/cu.ft, Pipe Unit Wgt= 3.74 lb/ft, Content Sp Gr= 1.600, Content Unit Wgt= 2.33 lb/ft,
   Insul Thk= 0 inch, Cladding Thickness = 0 inch, Lining Thk= 0 inch, Long Weld E factor= 1.00,
   Long Weld W factor= 1.00, Long Modulus= 28.34083 E6 psi, Hoop Modulus= 28.34083 E6 psi,
   Shear Modulus= 10.90032 E6 psi, Sc= 16700.0 psi, Syc= 25000.0 psi, Suc= 70000.0 psi

 OPERATING DATA:
   P1= 400.00 psi, T1= 200.00 deg F, Exp1= 1.50000 in/100ft, E1= 27.60000 E6 psi, Sh1= 16700.00 psi,
   Sy1= 21400.00 psi

 POINT DATA:
   A13, Coordinates, X= 0.00 ft, Y= -0.01 ft, Z= 0.00 ft

 SUPPORT DATA:
   A13, Anchor, Connected to: Ground, KTX= Rigid, KTY= Rigid, KTZ= Rigid, KRX= Rigid, KRY= Rigid, KRZ= Rigid

 ---------------------------------------------------------------------------
 From A00 to A01, DY= 0.20 ft                                          Run

 COMPONENT DATA (Run):
   Rigid (A00 to A01 N), Include weight= No, Include expansion= Yes

 POINT DATA:
   A00, Coordinates, X= 0.00 ft, Y= 0.00 ft, Z= 0.00 ft

 ---------------------------------------------------------------------------
 From A01 to A02, DX= 0.90 ft                                          Bend

 COMPONENT DATA (Bend, TIP= A01, Near= A01 N, Mid= A01 M, Far= A01 F):
   Short Close, Radius= 2.00 inch, Number of cuts= 1, Bend angle= 90.00 deg, Mid point at 50.00 percent,
   End flanges= 0, Flex= 1.000, SIFI= 2.27, SIFO= 2.27
   Rigid (A01 N to A01 F), Include weight= No, Include expansion= Yes

 POINT DATA:
   A01, Coordinates, X= 0.00 ft, Y= 0.20 ft, Z= 0.00 ft
   A01 N, Coordinates, X= 0.00 ft, Y= 0.03 ft, Z= 0.00 ft
   A01 M, Coordinates, X= 0.05 ft, Y= 0.15 ft, Z= 0.00 ft
   A01 M, Added Weight= 29.00 lb
   A01 F, Coordinates, X= 0.17 ft, Y= 0.20 ft, Z= 0.00 ft

 ---------------------------------------------------------------------------
 From A02 to A03, DZ= 1.67 ft                                          Bend
```

C O M P O N E N T D A T A L I S T I N G

```
 COMPONENT DATA (Bend, TIP= A02, Near= A02 N, Far= A02 F):
   Long Elbow, Radius= 3.00 inch, Bend angle= 90.00 deg, End flanges= 0, Flex= Auto, SIFI= 1.73, SIFO= 1.44

 POINT DATA:
   A02, Coordinates, X= 0.90 ft, Y= 0.20 ft, Z= 0.00 ft
   A02 N, Coordinates, X= 0.65 ft, Y= 0.20 ft, Z= 0.00 ft
   A02 F, Coordinates, X= 0.90 ft, Y= 0.20 ft, Z= 0.25 ft

 ---------------------------------------------------------------------------
 From A03 to A04, DX= 0.84 ft                                          Bend

 COMPONENT DATA (Bend, TIP= A03, Near= A03 N, Far= A03 F):
   Long Elbow, Radius= 3.00 inch, Bend angle= 90.00 deg, End flanges= 0, Flex= Auto, SIFI= 1.73, SIFO= 1.44

 POINT DATA:
   A03, Coordinates, X= 0.90 ft, Y= 0.20 ft, Z= 1.67 ft
   A03 N, Coordinates, X= 0.90 ft, Y= 0.20 ft, Z= 1.42 ft
   A03 F, Coordinates, X= 1.15 ft, Y= 0.20 ft, Z= 1.67 ft

 ---------------------------------------------------------------------------
 From A04 to A05, DZ= 1.82 ft                                          Bend

 COMPONENT DATA (Bend, TIP= A04, Near= A04 N, Far= A04 F):
   Long Elbow, Radius= 3.00 inch, Bend angle= 90.00 deg, End flanges= 0, Flex= Auto, SIFI= 1.73, SIFO= 1.44

 POINT DATA:
   A04, Coordinates, X= 1.74 ft, Y= 0.20 ft, Z= 1.67 ft
   A04 N, Coordinates, X= 1.49 ft, Y= 0.20 ft, Z= 1.67 ft
   A04 F, Coordinates, X= 1.74 ft, Y= 0.20 ft, Z= 1.92 ft

 ---------------------------------------------------------------------------
 From A05 to A06, DX= 2.32 ft                                          Bend

 COMPONENT DATA (Bend, TIP= A05, Near= A05 N, Far= A05 F):
   Long Elbow, Radius= 3.00 inch, Bend angle= 90.00 deg, End flanges= 0, Flex= Auto, SIFI= 1.73, SIFO= 1.44

 POINT DATA:
   A05, Coordinates, X= 1.74 ft, Y= 0.20 ft, Z= 3.49 ft
   A05 N, Coordinates, X= 1.74 ft, Y= 0.20 ft, Z= 3.24 ft
   A05 F, Coordinates, X= 1.99 ft, Y= 0.20 ft, Z= 3.49 ft

 ---------------------------------------------------------------------------
 From A06 to A07, DX= 2.48 ft                                          Run

 POINT DATA:
   A06, Coordinates, X= 4.06 ft, Y= 0.20 ft, Z= 3.49 ft
   A06, Added Weight= 5.70 lb, DZ= -0.45 ft
   A06, Added Weight= 5.00 lb, DZ= 0.70 ft

 ---------------------------------------------------------------------------
 From A07 to A08, DZ= -0.83 ft                                         Bend

 COMPONENT DATA (Bend, TIP= A07, Near= A07 N, Far= A07 F):
   Long Elbow, Radius= 3.00 inch, Bend angle= 90.00 deg, End flanges= 0, Flex= Auto, SIFI= 1.73, SIFO= 1.44
```

C O M P O N E N T D A T A L I S T I N G

```
 POINT DATA:
   A07, Coordinates, X= 6.54 ft, Y= 0.20 ft, Z= 3.49 ft
   A07 N, Coordinates, X= 6.29 ft, Y= 0.20 ft, Z= 3.49 ft
   A07 F, Coordinates, X= 6.54 ft, Y= 0.20 ft, Z= 3.24 ft

 ---------------------------------------------------------------------------
 From A08 to A09, DX= 0.83 ft                                          Bend

 COMPONENT DATA (Bend, TIP= A08, Near= A08 N, Far= A08 F):
   Long Elbow, Radius= 3.00 inch, Bend angle= 90.00 deg, End flanges= 0, Flex= Auto, SIFI= 1.73, SIFO= 1.44

 POINT DATA:
   A08, Coordinates, X= 6.54 ft, Y= 0.20 ft, Z= 2.66 ft
   A08 N, Coordinates, X= 6.54 ft, Y= 0.20 ft, Z= 2.91 ft
   A08 F, Coordinates, X= 6.79 ft, Y= 0.20 ft, Z= 2.66 ft

 ---------------------------------------------------------------------------
 From A09 to A10, DZ= 2.75 ft                                          Bend

 COMPONENT DATA (Bend, TIP= A09, Near= A09 N, Far= A09 F):
   Long Elbow, Radius= 3.00 inch, Bend angle= 90.00 deg, End flanges= 0, Flex= Auto, SIFI= 1.73, SIFO= 1.44

 POINT DATA:
   A09, Coordinates, X= 7.37 ft, Y= 0.20 ft, Z= 2.66 ft
   A09 N, Coordinates, X= 7.12 ft, Y= 0.20 ft, Z= 2.66 ft
   A09 F, Coordinates, X= 7.37 ft, Y= 0.20 ft, Z= 2.91 ft

 ---------------------------------------------------------------------------
 From A10 to A11, DY= 2.04 ft                                          Bend

 COMPONENT DATA (Bend, TIP= A10, Near= A10 N, Far= A10 F):
   Long Elbow, Radius= 3.00 inch, Bend angle= 90.00 deg, End flanges= 0, Flex= Auto, SIFI= 1.73, SIFO= 1.44

 POINT DATA:
   A10, Coordinates, X= 7.37 ft, Y= 0.20 ft, Z= 5.41 ft
   A10 N, Coordinates, X= 7.37 ft, Y= 0.20 ft, Z= 5.16 ft
   A10 F, Coordinates, X= 7.37 ft, Y= 0.45 ft, Z= 5.41 ft

 ---------------------------------------------------------------------------
 From A11 to A12, DZ= 0.20 ft                                          Bend

 COMPONENT DATA (Bend, TIP= A11, Near= A11 N, Mid= A11 M, Far= A11 F):
   Short Close, Radius= 2.00 inch, Number of cuts= 2, Bend angle= 90.00 deg, Mid point at 50.00 percent,
   End flanges= 0, Flex= 1.000, SIFI= 2.27, SIFO= 2.27
   Rigid (A11 N to A11 F), Include weight= No, Include expansion= Yes
   Rigid (A11 F to A12), Include weight= No, Include expansion= Yes

 POINT DATA:
   A11, Coordinates, X= 7.37 ft, Y= 2.24 ft, Z= 5.41 ft
   A11 N, Coordinates, X= 7.37 ft, Y= 2.07 ft, Z= 5.41 ft
   A11 M, Coordinates, X= 7.37 ft, Y= 2.19 ft, Z= 5.46 ft
   A11 M, Added Weight= 29.00 lb
   A11 F, Coordinates, X= 7.37 ft, Y= 2.24 ft, Z= 5.58 ft

 ---------------------------------------------------------------------------
```

C O M P O N E N T D A T A L I S T I N G

```
From A12 to A14, DZ= 0.01 ft                                          Flex

COMPONENT DATA (Flex Jt):
  Length= 0.01 ft, Weight= 0 lb, Area= 0.0 sq.in, Kax= 13500000 lb/in, Kylat= 27800.0 lb/in,
  Kzlat= 27800.0 lb/in, Ktor= 107.0 ft-lb/deg, Kybend= 659.0 ft-lb/deg, Kzbend= 659.0 ft-lb/deg

POINT DATA:
  A12, Coordinates, X= 7.37 ft, Y= 2.24 ft, Z= 5.61 ft
  A14, Coordinates, X= 7.37 ft, Y= 2.24 ft, Z= 5.62 ft

SUPPORT DATA:
  A14, Anchor, Connected to: Ground, KTX= Rigid, KTY= Rigid, KTZ= Rigid, KRX= Rigid, KRY= Rigid, KRZ= Rigid

-----------------------------------------------------------------------------
-----------------------------------------------------------------------------
*** SEGMENT B

-----------------------------------------------------------------------------
From B00 to B05, DY= 0.01 ft                                          Flex

COMPONENT DATA (Flex Jt):
  Length= 0.01 ft, Weight= 0 lb, Area= 0.0 sq.in, Kax= 19000000 lb/in, Kylat= 24700.0 lb/in,
  Kzlat= 24700.0 lb/in, Ktor= 148.0 ft-lb/deg, Kybend= 1332.0 ft-lb/deg, Kzbend= 1332.0 ft-lb/deg

PIPE DATA:
  Pipe Id= 3SCH40, Composition= Austenitic Stainless, Nom Size= 3.000, OD= 3.500 inch, Wall Thk= 0.216 inch,
  Mill= 0.027 inch, Pipe Density= 501.00 lb/cu.ft, Pipe Unit Wgt= 7.75 lb/ft, Content Sp Gr= 1.600,
  Content Unit Wgt= 5.13 lb/ft

POINT DATA:
  B00, Coordinates, X= 0.00 ft, Y= -0.01 ft, Z= -2.00 ft

SUPPORT DATA:
  B00, Anchor, Connected to: Ground, KTX= Rigid, KTY= Rigid, KTZ= Rigid, KRX= Rigid, KRY= Rigid, KRZ= Rigid

-----------------------------------------------------------------------------
From B05 to B06, DY= 0.29 ft                                          Run

COMPONENT DATA (Run):
  Rigid (B05 to B06 N), Include weight= No, Include expansion= Yes

POINT DATA:
  B05, Coordinates, X= 0.00 ft, Y= 0.00 ft, Z= -2.00 ft

-----------------------------------------------------------------------------
From B06 to B07, DX= -1.79 ft                                         Bend

COMPONENT DATA (Bend, TIP= B06, Near= B06 N, Mid= B06 M, Far= B06 F):
  Short Close, Radius= 3.00 inch, Number of cuts= 1, Bend angle= 90.00 deg, Mid point at 50.00 percent,
  End flanges= 0, Flex= 1.000, SIFI= 2.33, SIFO= 2.33
  Rigid (B06 N to B06 F), Include weight= No, Include expansion= Yes

POINT DATA:
  B06, Coordinates, X= 0.00 ft, Y= 0.29 ft, Z= -2.00 ft
  B06 N, Coordinates, X= 0.00 ft, Y= 0.04 ft, Z= -2.00 ft
```

C O M P O N E N T D A T A L I S T I N G

B06 M, Coordinates, X= -0.07 ft, Y= 0.22 ft, Z= -2.00 ft
B06 M, Added Weight= 77.00 lb
B06 F, Coordinates, X= -0.25 ft, Y= 0.29 ft, Z= -2.00 ft

From B07 to B08, DY= 2.88 ft Bend

COMPONENT DATA (Bend, TIP= B07, Near= B07 N, Far= B07 F):
Long Elbow, Radius= 4.50 inch, Bend angle= 90.00 deg, End flanges= 0, Flex= Auto, SIFI= 1.78, SIFO= 1.48

POINT DATA:
B07, Coordinates, X= -1.79 ft, Y= 0.29 ft, Z= -2.00 ft
B07 N, Coordinates, X= -1.41 ft, Y= 0.29 ft, Z= -2.00 ft
B07 F, Coordinates, X= -1.79 ft, Y= 0.67 ft, Z= -2.00 ft

From B08 to B09, DX= -0.68 ft Bend

COMPONENT DATA (Bend, TIP= B08, Near= B08 N, Far= B08 F):
Long Elbow, Radius= 4.50 inch, Bend angle= 90.00 deg, End flanges= 0, Flex= Auto, SIFI= 1.78, SIFO= 1.48

POINT DATA:
B08, Coordinates, X= -1.79 ft, Y= 3.17 ft, Z= -2.00 ft
B08 N, Coordinates, X= -1.79 ft, Y= 2.80 ft, Z= -2.00 ft
B08 F, Coordinates, X= -2.16 ft, Y= 3.17 ft, Z= -2.00 ft

From B09 to B10, DX= -2.41 ft Run

POINT DATA:
B09, Coordinates, X= -2.47 ft, Y= 3.17 ft, Z= -2.00 ft
B09, Added Weight= 5.70 lb
B09, Added Weight= 2.70 lb

From B10 to B11, DY= 1.04 ft Bend

COMPONENT DATA (Bend, TIP= B10, Near= B10 N, Far= B10 F):
Long Elbow, Radius= 4.50 inch, Bend angle= 90.00 deg, End flanges= 0, Flex= Auto, SIFI= 1.78, SIFO= 1.48

POINT DATA:
B10, Coordinates, X= -4.88 ft, Y= 3.17 ft, Z= -2.00 ft
B10 N, Coordinates, X= -4.51 ft, Y= 3.17 ft, Z= -2.00 ft
B10 F, Coordinates, X= -4.88 ft, Y= 3.55 ft, Z= -2.00 ft

From B11 to B12, DX= -0.23 ft, DZ= 0.19 ft, L= 0.30 ft Bend

COMPONENT DATA (Bend, TIP= B11, Near= B11 N, Mid= B11 M, Far= B11 F):
Short Close, Radius= 3.00 inch, Number of cuts= 1, Bend angle= 90.00 deg, Mid point at 50.00 percent,
End flanges= 0, Flex= 1.000, SIFI= 2.33, SIFO= 2.33
Rigid (B11 N to B11 F), Include weight= No, Include expansion= Yes
Rigid (B11 F to B12), Include weight= No, Include expansion= Yes

POINT DATA:

C O M P O N E N T D A T A L I S T I N G

B11, Coordinates, X= -4.88 ft, Y= 4.21 ft, Z= -2.00 ft
B11 N, Coordinates, X= -4.88 ft, Y= 3.96 ft, Z= -2.00 ft
B11 M, Coordinates, X= -4.94 ft, Y= 4.14 ft, Z= -1.95 ft
B11 M, Added Weight= 76.00 lb
B11 F, Coordinates, X= -5.07 ft, Y= 4.21 ft, Z= -1.84 ft

From B12 to B13, DX= -0.01 ft, DZ= 0.01 ft, L= 0.01 ft Flex

COMPONENT DATA (Flex Jt):
Length= 0.01 ft, Weight= 0 lb, Area= 0.0 sq.in, Kax= 19000000 lb/in, Kylat= 24700.0 lb/in,
Kzlat= 24700.0 lb/in, Ktor= 148.0 ft-lb/deg, Kybend= 1332.0 ft-lb/deg, Kzbend= 1332.0 ft-lb/deg

POINT DATA:
B12, Coordinates, X= -5.11 ft, Y= 4.21 ft, Z= -1.81 ft
B13, Coordinates, X= -5.12 ft, Y= 4.21 ft, Z= -1.80 ft

SUPPORT DATA:
B13, Anchor, Connected to: Ground, KTX= Rigid, KTY= Rigid, KTZ= Rigid, KRX= Rigid, KRY= Rigid, KRZ= Rigid

---

Number of points in the system (Pipe + Frame + Soil): 74 + 5 + 0 = 79

Weight of Empty Pipes	+	Weight of Contents	=	Total Weight of System
347.9 lb	+	75.8 lb	=	423.7 lb

C O O R D I N A T E S D A T A L I S T I N G

POINT NAME	COORDINATE (ft) X	Y	Z
*** SEGMENT A			
A13	0.00	-0.01	0.00
A00	0.00	0.00	0.00
A01 N	0.00	0.03	0.00
A01	0.00	0.20	0.00
A01 M	0.05	0.15	0.00
A01 F	0.17	0.20	0.00
A02 N	0.65	0.20	0.00
A02	0.90	0.20	0.00
A02 F	0.90	0.20	0.25
A03 N	0.90	0.20	1.42
A03	0.90	0.20	1.67
A03 F	1.15	0.20	1.67
A04 N	1.49	0.20	1.67
A04	1.74	0.20	1.67
A04 F	1.74	0.20	1.92
A05 N	1.74	0.20	3.24
A05	1.74	0.20	3.49
A05 F	1.99	0.20	3.49
A06	4.06	0.20	3.49
A07 N	6.29	0.20	3.49
A07	6.54	0.20	3.49
A07 F	6.54	0.20	3.24
A08 N	6.54	0.20	2.91
A08	6.54	0.20	2.66
A08 F	6.79	0.20	2.66
A09 N	7.12	0.20	2.66
A09	7.37	0.20	2.66
A09 F	7.37	0.20	2.91
A10 N	7.37	0.20	5.16
A10	7.37	0.20	5.41
A10 F	7.37	0.45	5.41
A11 N	7.37	2.07	5.41
A11	7.37	2.24	5.41
A11 M	7.37	2.19	5.46
A11 F	7.37	2.24	5.58
A12	7.37	2.24	5.61
A14	7.37	2.24	5.62
*** SEGMENT B			
B00	0.00	-0.01	-2.00
B05	0.00	0.00	-2.00
B06 N	0.00	0.04	-2.00
B06	0.00	0.29	-2.00
B06 M	-0.07	0.22	-2.00
B06 F	-0.25	0.29	-2.00
B07 N	-1.41	0.29	-2.00
B07	-1.79	0.29	-2.00
B07 F	-1.79	0.67	-2.00
B08 N	-1.79	2.80	-2.00
B08	-1.79	3.17	-2.00
B08 F	-2.16	3.17	-2.00

C O O R D I N A T E S D A T A L I S T I N G

POINT NAME	COORDINATE (ft) X	Y	Z
B09	-2.47	3.17	-2.00
B10 N	-4.51	3.17	-2.00
B10	-4.88	3.17	-2.00
B10 F	-4.88	3.55	-2.00
B11 N	-4.88	3.96	-2.00
B11	-4.88	4.21	-2.00
B11 M	-4.94	4.14	-1.95
B11 F	-5.07	4.21	-1.84
B12	-5.11	4.21	-1.81
B13	-5.12	4.21	-1.80

S E G M E N T D A T A L I S T I N G

Segment Name	First Node	Last Node	Line Number	Apply Wind	Apply Bowing	Apply Buoyancy
A	A13	A14		No	No	No
B	B00	B13		No	No	No

```
-----------------------------------------------------------------------------------------------------------------------
242-A  Sustained and Seismic
10/10/2019 2018719                                                                  BENTLEY
01:36 PM                                                                            AutoPIPE Nuclear 12.00.00.16   MODEL  PAGE  10
-----------------------------------------------------------------------------------------------------------------------

                    P I P E   D A T A   L I S T I N G

 Pipe ID/     Nom/ O.D.  -----Thickness(inch)----- Spec  InsuDen/   Weight(lb/ft )    E/  Composition/
 Material     Sch  inch  W.Th. Corr Mill Insu Ling Grav/ LingDen/  Pipe/ Ling/ Total  W/  Steel Group/
 CladMaterial            Clad                      InsMt CladDen   Cont  Insu/        f   Tcr
 ---Line Class---                                       lb/cu.ft        Clad
 ------------ ---- ----- ----- ---- ---- ---- ---- ----- --------  ----- ----- ----- ---- --------------------

 Tag No. : <None>
 2SCH40      2.000 2.375 0.154 0.00 0.02    0    0  1.60    0.000   3.74     0  6.07 1.00 Austenitic Stainless
 A312-TP304L  40S                                          0.000   2.33     0       1.00 Austenitic
                            0                              0.000            0       1.00    850.000


 Tag No. : <None>
 3SCH40      3.000 3.500 0.216 0.00 0.03    0    0  1.60    0.000   7.75     0 12.88 1.00 Austenitic Stainless
 A312-TP304L  40S                                          0.000   5.13     0       1.00 Austenitic
                            0                              0.000            0       1.00    850.000
```

M A T E R I A L D A T A L I S T I N G

Material Name	Pipe ID	Density lb/cu.ft	Pois. Ratio	Temper. deg F	Modulus E6 psi Axial	Hoop	Shear	Expans. in/100ft	Composition
A312-TP304L	2SCH40	501.0	0.30	60.0	28.341	28.341	10.900		Austenitic Stainless
				200.0	27.600			1.5000	
A312-TP304L	3SCH40	501.0	0.30	60.0	28.341	28.341	10.900		Austenitic Stainless
				200.0	27.600			1.5000	

M A T E R I A L A L L O W A B L E D A T A L I S T I N G

Material Name	Pipe ID	Temper. deg F	Allow. psi	Yield psi	Ultimate	Weld Reduction Factor W
A312-TP304L	2SCH40	60.0	16700.0	25000.0	70000.0	1.000
		200.0	16700.0	21400.0		1.000
A312-TP304L	3SCH40	60.0	16700.0	25000.0	70000.0	1.000
		200.0	16700.0	21400.0		1.000

OPERATING TEMPERATURE AND PRESSURE DATA
STRESSES IN psi

POINT NAME	CASE	PRESS. psi	TEMPER deg F	EXPAN. in/100ft	MODULUS E6 psi	ALLOW STRESS	YIELD STRESS
*** SEGMENT A							
A13	T1	400	200	1.500	27.600	16700	21400
A14	Same as previous point.						
*** SEGMENT B							
B00	T1	400	200	1.500	27.600	16700	21400
B13	Same as previous point.						

u User-defined value
* Non-code material for allowable stress;
Non-standard material for expansion and modulus

B E N D D A T A L I S T I N G

Point Name	Bend Type	Radius (in)	Angle (deg)	OD (in)	tnom (in)	Material	Flan^ /Cuts	SIF in	SIF out	Analysis Set	Flexibility (K)	Pressure Case
A01	*Close	2.00S	90.0	2.375	0.154	A312-TP304L	0/1	2.27	2.27	1	1.00u	None
A02	Elbow	3.00L	90.0	2.375	0.154	A312-TP304L	0/0	1.73	1.44	1	4.40	None
A03	Elbow	3.00L	90.0	2.375	0.154	A312-TP304L	0/0	1.73	1.44	1	4.40	None
A04	Elbow	3.00L	90.0	2.375	0.154	A312-TP304L	0/0	1.73	1.44	1	4.40	None
A05	Elbow	3.00L	90.0	2.375	0.154	A312-TP304L	0/0	1.73	1.44	1	4.40	None
A07	Elbow	3.00L	90.0	2.375	0.154	A312-TP304L	0/0	1.73	1.44	1	4.40	None
A08	Elbow	3.00L	90.0	2.375	0.154	A312-TP304L	0/0	1.73	1.44	1	4.40	None
A09	Elbow	3.00L	90.0	2.375	0.154	A312-TP304L	0/0	1.73	1.44	1	4.40	None
A10	Elbow	3.00L	90.0	2.375	0.154	A312-TP304L	0/0	1.73	1.44	1	4.40	None
A11	*Close	2.00S	90.0	2.375	0.154	A312-TP304L	0/2	2.27	2.27	1	1.00u	None
B06	*Close	3.00S	90.0	3.500	0.216	A312-TP304L	0/1	2.33	2.33	1	1.00u	None
B07	Elbow	4.50L	90.0	3.500	0.216	A312-TP304L	0/0	1.78	1.48	1	4.58	None
B08	Elbow	4.50L	90.0	3.500	0.216	A312-TP304L	0/0	1.78	1.48	1	4.58	None
B10	Elbow	4.50L	90.0	3.500	0.216	A312-TP304L	0/0	1.78	1.48	1	4.58	None
B11	*Close	3.00S	90.0	3.500	0.216	A312-TP304L	0/1	2.33	2.33	1	1.00u	None

^ = Number of bend ends where either a flange or valve is within distance
(L/D) x Nominal diameter, where L/D is defined under Tools > Model options > Edit
u = User Flexibility factor (K) / User SIF present at point, check user-sif data listing.
* = Mid-point present
L = Long radius
S = Short radius

C E N T E R O F G R A V I T Y R E P O R T

Description		Weight (lb)	X CoG (ft)	Y CoG (ft)	Z CoG (ft)
Valve	:	0.00	0.00	0.00	0.00
Support	:	0.00	0.00	0.00	0.00
Flange	:	0.00	0.00	0.00	0.00
Flexible Joint	:	0.00	0.00	0.00	0.00
Additional Weight	:	230.10	-0.62	1.86	-0.53
Pipes (Run, Bend, Tee, Reducer)	:	117.76	0.87	1.27	0.49
PipeTot (Valve+Support+Flange+Flex. Jt.+Add. Wt.+Pipes)	:	347.86	-0.12	1.66	-0.19
Insulation	:	0.00	0.00	0.00	0.00
Cladding	:	0.00	0.00	0.00	0.00
Lining	:	0.00	0.00	0.00	0.00
Contents	:	75.81	0.76	1.30	0.41
Beam	:	8.76	4.06	0.47	3.60
PipeTot + Ins.	:	347.86	-0.12	1.66	-0.19
PipeTot + Ins. + Clad.	:	347.86	-0.12	1.66	-0.19
PipeTot + Ins. + Clad. + Lin.	:	347.86	-0.12	1.66	-0.19
PipeTot + Ins. + Clad. + Lin. + Cont.	:	423.67	0.04	1.60	-0.08
PipeTot + Beam	:	356.63	-0.02	1.63	-0.09
PipeTot + Ins. + Beam	:	356.63	-0.02	1.63	-0.09
PipeTot + Ins. + Clad. + Beam	:	356.63	-0.02	1.63	-0.09
PipeTot + Ins. + Clad. + Lin. + Beam	:	356.63	-0.02	1.63	-0.09
PipeTot + Ins. + Clad. + Lin. + Cont. + Beam	:	432.43	0.12	1.57	-0.00

NOTE: COG report only includes the currently visible beams and segments.
All pipe segments are included.
All beams are included.

L O A D C A S E D E S C R I P T I O N

Load Case	Load Case Name	Description
GR	Gravity	
T1	Thermal 1	
E1	Earth 1	
E2	Earth 2	
E3	Earth 3	
E4	Earth 4	
E5	Earth 5	
E6	Earth 6	
E7	Earth 7	
E8	Earth 8	
P1	Press 1	

```
-----------------------------------------------------------------------------------------------------------
242-A  Sustained and Seismic
10/10/2019 2018719                                                    BENTLEY
01:36 PM                                                              AutoPIPE Nuclear 12.00.00.16   RESULT PAGE  17
-----------------------------------------------------------------------------------------------------------


                  A N A L Y S I S   S U M M A R Y


   Current model revision number : 1

     Constant values used
              Acceleration due to gravity................  386.40000 in/s/s
              Density of water for specific gravity Cal..     62.400 lb/cu.ft
              Density of sea water......................     62.400 lb/cu.ft
              Density of ground water ..................     62.400 lb/cu.ft

     Static - Analysis set number .................. 1
              Date and Time of analysis ............ Oct 10, 2019   10:55 AM
              Model Revision Number ................ 1
              Number of load cases ................. 11
              Load cases analyzed .................. GR T1 E1 E2 E3 E4 E5 E6 E7 E8 P1
              Description .......................... Analysis Set No.1
              Gaps/Friction/Soil considered ......... Yes
              Tolerance - Force, Displacement ....... 10.00 lbf  0.0010 in
              Friction - Scale Factor, Tolerance .... 1.00   0.10
              Ignore friction for cases E1,E2,E3 .... Yes
              Ignore friction for gravity case ...... Yes
              Hanger design run ..................... No
              Cut short included .................... No
              Thermal bowing included ............... No
              Include Bourdon rotational effect ..... No
              Pipe radius for Bourdon calculation ... Mean
              Occasional load analysis type ......... Nonlinear
              Non-linear analysis summary file ......
                242-A  Sustained and Seismic.LOG
              Use default load sequence ............ Yes
              Base load cases for nonlinear analysis
                                                        GR   = None
                                                        T1   = GR
                                                        E1   = GR
                                                        E2   = GR
                                                        E3   = GR
                                                        E4   = GR
                                                        E5   = GR
                                                        E6   = GR
                                                        E7   = GR
                                                        E8   = GR
                                                        P1   = T1
              Weight of contents included ........... Yes
              Fluid density factor for contents ..... 1.00
              Pressure stiffening case .............. None
              Hot modulus case ...................... None
              Pressure Extension..................... Yes
              Water elevation for buoyancy loads .... Not considered
              Use corroded thickness in analysis .... No
              Rigid stiffness factor ................ 1000.0
              Support rigid stiffness (translation) . 0.100000E+11 lb/in
              Support rigid stiffness (rotation) .... 0.100000E+11 ft-lb/deg
              Anchor rigid stiffness (translation) .. 0.100000E+11 lb/in
              Anchor rigid stiffness (rotation) ..... 0.100000E+11 ft-lb/deg
              Remove Lift-Off Supports .............. No
```

CODE COMPLIANCE COMBINATIONS

<Description> Combination	Category	Method	Case/Combination	Factor	M/S	K-Factor	Allowable (psi)	D/A/P/C
GR + Max P{1}	Sustain	Sum	GR[1]	1.00			Automatic	Y Y Y Y
			Max Long	1.00				
Max Range	Expansion	Sum	Temp. Range	1.00			Automatic	Y Y Y Y
Amb to T1{1}	Expansion	Sum	T1[1]	1.00			Automatic	Y Y Y Y
Sus. + E1{1}	Occasion	Abs sum	E1[1]	1.00		1.330	Automatic	Y Y Y Y
			Max Sus	1.00				
Sus. + E2{1}	Occasion	Abs sum	E2[1]	1.00		1.330	Automatic	Y Y Y Y
			Max Sus	1.00				
Sus. + E3{1}	Occasion	Abs sum	E3[1]	1.00		1.330	Automatic	Y Y Y Y
			Max Sus	1.00				
Sus. + E4{1}	Occasion	Abs sum	E4[1]	1.00		1.330	Automatic	Y Y Y Y
			Max Sus	1.00				
Sus. + E5{1}	Occasion	Abs sum	E5[1]	1.00		1.330	Automatic	Y Y Y Y
			Max Sus	1.00				
Sus. + E6{1}	Occasion	Abs sum	E6[1]	1.00		1.330	Automatic	Y Y Y Y
			Max Sus	1.00				
Sus. + E7{1}	Occasion	Abs sum	E7[1]	1.00		1.330	Automatic	Y Y Y Y
			Max Sus	1.00				
Sus. + E8{1}	Occasion	Abs sum	E8[1]	1.00		1.330	Automatic	Y Y Y Y
			Max Sus	1.00				
Max P{1}	Hoop	Sum	Max Hoop	1.00			Automatic	Y Y Y Y

Notes:

D/A/P/C: [D]efault/[A]uto-Update/[P]rint options/[C]Consistent (Y=Yes, N=No)

NON-CODE COMBINATIONS

<Description> Combination	Method	Case/Combination	Factor	D/A/P/C
Gravity{1}	Sum	GR[1]	1.00	Y Y Y Y
<200.00 deg F> Thermal 1{1}	Sum	T1[1]	1.00	Y Y Y N
< 0.19, 0.08, 0.19> Static Seismic 1{1}	Sum	E1[1]	1.00	Y Y Y N
< 0.19, 0.08, -0.19> Static Seismic 2{1}	Sum	E2[1]	1.00	Y Y Y N
< -0.19, 0.08, 0.19> Static Seismic 3{1}	Sum	E3[1]	1.00	Y Y Y N
< -0.19, 0.08, -0.19> Static Seismic 4{1}	Sum	E4[1]	1.00	Y Y Y N
< 0.19, -0.08, 0.19> Static Seismic 5{1}	Sum	E5[1]	1.00	Y Y Y N
< 0.19, -0.08, -0.19> Static Seismic 6{1}	Sum	E6[1]	1.00	Y Y Y N
< -0.19, -0.08, 0.19> Static Seismic 7{1}	Sum	E7[1]	1.00	Y Y Y N
< -0.19, -0.08, -0.19> Static Seismic 8{1}	Sum	E8[1]	1.00	Y Y Y N
Pressure 1{1}	Sum	P1[1]	1.00	Y Y Y N
GT1{1}	Sum	GR[1]	1.00	Y Y Y Y
		T1[1]	1.00	
GE1{1}	Sum	GR[1]	1.00	Y Y Y Y
		E1[1]	1.00	
GE2{1}	Sum	GR[1]	1.00	Y Y Y Y
		E2[1]	1.00	
GE3{1}	Sum	GR[1]	1.00	Y Y Y Y
		E3[1]	1.00	
GE4{1}	Sum	GR[1]	1.00	Y Y Y Y
		E4[1]	1.00	
GE5{1}	Sum	GR[1]	1.00	Y Y Y Y
		E5[1]	1.00	
GE6{1}	Sum	GR[1]	1.00	Y Y Y Y
		E6[1]	1.00	

```
-----------------------------------------------------------------------------------------------------------------------
242-A  Sustained and Seismic
10/10/2019 2018719                                                                  BENTLEY
01:36 PM                                                                            AutoPIPE Nuclear 12.00.00.16   RESULT PAGE  20
-----------------------------------------------------------------------------------------------------------------------

                              NON-CODE COMBINATIONS

  <Description>
  Combination                Method       Case/Combination     Factor  D/A/P/C
  -----------------------    -------- ------------------------ ------  -------
  GE7{1}                     Sum      GR[1]                      1.00  Y Y Y Y
                                      E7[1]                      1.00

  GE8{1}                     Sum      GR[1]                      1.00  Y Y Y Y
                                      E8[1]                      1.00

  GT1P1{1}                   Sum      GR[1]                      1.00  Y Y Y Y
                                      T1[1]                      1.00
                                      P1[1]                      1.00


  Notes:

  D/A/P/C: [D]efault/[A]uto-Update/[P]rint options/[C]Consistent (Y=Yes, N=No)
```

CODE COMPLIANCE

```
Y - Factor ............................ 0.40
Design Pressure Factor ................ 1.00
Minimum stress ratio used in reports... 0.00
Number of stress points per span ...... 0
Include corrosion in stress calcs. .... Y
Include corrosion in Hoop stress calcs. Y
Include torsion in code stress ........ N
Include axial force in code stress .... N
Include sustain load margin ........... Only if allowable stress is exceeded
Use minimum sustained margin........... Y
Set sustained SIF=1 no bends .......... N
Set occasional SIF = 1 ................ N
Set occasional SIF = 0.75i ............ Y
Apply cold/hot modulus ratio .......... N
Disable auto code combinations ........ N
Disable auto non-code combinations .... N
No. of thermal ranges to report ....... 0
Include Max Range combination ......... Y
Total stress .......................... Octahedral
Direct shear .......................... None
Longitudinal pressure calculation ..... AxF/area
Use code case 178 ..................... Y
Inc. Axial Str and Pcase in Sustained.. Y
Use alternate occasional allowable .... N
Apply circumferential weld WC factor .. N
ASME B31J Enabled ..................... N
```

R E S T R A I N T R E A C T I O N S

Point name	Load combination	FORCES (lbf) X	Y	Z	Result	MOMENTS (ft-lb) X	Y	Z	Result
A13	Anchor Tag No.: <None>					Connected to: Ground			
	Gravity{1}	9	-77	6	78	64	0	-41	76
	Thermal 1{1}	-27	-7	-18	33	12	-3	-6	14
	Static Seismic 1{1}	20	6	19	28	-1	2	-1	2
	Static Seismic 2{1}	16	6	-12	21	-1	8	4	10
	Static Seismic 3{1}	-18	7	11	22	-10	-9	3	13
	Static Seismic 4{1}	-22	7	-20	31	-10	-2	8	12
	Static Seismic 5{1}	22	-7	20	31	10	2	-8	12
	Static Seismic 6{1}	18	-7	-11	22	10	9	-3	13
	Static Seismic 7{1}	-16	-6	12	21	1	-8	-4	10
	Static Seismic 8{1}	-20	-6	-19	28	1	-2	1	2
	Pressure 1{1}	0	0	0	0	0	0	0	0
	GT1{1}	-18	-84	-11	87	76	-3	-47	89
	GE1{1}	30	-71	25	81	63	2	-42	76
	GE2{1}	25	-71	-5	76	63	9	-37	74
	GE3{1}	-9	-70	17	72	54	-8	-39	67
	GE4{1}	-13	-70	-14	72	54	-1	-33	64
	GE5{1}	31	-84	26	93	73	2	-49	88
	GE6{1}	27	-84	-4	88	74	9	-44	86
	GE7{1}	-7	-83	18	85	65	-8	-46	79
	GE8{1}	-11	-83	-13	84	65	-1	-40	76
	GT1P1{1}	-18	-84	-12	87	76	-3	-47	89
A14	Anchor Tag No.: <None>					Connected to: Ground			
	Gravity{1}	-9	-93	-6	94	-55	6	3	55
	Thermal 1{1}	27	7	18	33	-12	-20	16	28
	Static Seismic 1{1}	11	9	13	19	-3	-6	2	7
	Static Seismic 2{1}	15	8	-20	27	31	-16	7	35
	Static Seismic 3{1}	-14	7	21	26	-22	15	-7	27
	Static Seismic 4{1}	-10	7	-12	17	12	5	-3	14
	Static Seismic 5{1}	10	-7	12	17	-12	-5	3	14
	Static Seismic 6{1}	14	-7	-21	26	22	-15	7	27
	Static Seismic 7{1}	-15	-8	20	27	-31	16	-7	35
	Static Seismic 8{1}	-11	-9	-13	19	3	6	-2	7
	Pressure 1{1}	0	0	0	0	0	0	0	0
	GT1{1}	18	-86	11	89	-67	-14	18	71
	GE1{1}	2	-85	7	85	-58	0	5	58
	GE2{1}	6	-85	-26	89	-24	-10	9	27
	GE3{1}	-23	-86	15	91	-77	20	-5	79
	GE4{1}	-19	-86	-18	90	-42	11	0	44
	GE5{1}	1	-100	5	100	-67	0	5	67
	GE6{1}	5	-100	-27	104	-33	-9	10	35
	GE7{1}	-25	-102	14	106	-86	21	-4	88
	GE8{1}	-20	-102	-19	106	-52	12	0	53
	GT1P1{1}	18	-86	12	89	-67	-15	19	71

242-A Sustained and Seismic
10/10/2019 2018719 BENTLEY
01:36 PM AutoPIPE Nuclear 12.00.00.16 RESULT PAGE 23

R E S T R A I N T R E A C T I O N S

Point name	Load combination	FORCES (lbf) X	Y	Z	Result	MOMENTS (ft-lb) X	Y	Z	Result
B00	Anchor Tag No.: <None>					Connected to: Ground			
	Gravity{1}	23	-158	0	160	-2	0	44	44
	Thermal 1{1}	391	-328	-12	510	-10	-3	5	12
	Static Seismic 1{1}	22	14	24	35	6	1	-9	11
	Static Seismic 2{1}	16	17	-23	33	-4	-1	-7	9
	Static Seismic 3{1}	-20	9	23	31	5	1	0	5
	Static Seismic 4{1}	-25	12	-24	37	-6	-1	1	6
	Static Seismic 5{1}	25	-12	24	37	6	1	-1	6
	Static Seismic 6{1}	20	-9	-23	31	-5	-1	0	5
	Static Seismic 7{1}	-16	-17	23	33	4	1	7	9
	Static Seismic 8{1}	-22	-14	-24	35	-6	-1	9	11
	Pressure 1{1}	5	-4	0	7	0	0	0	0
	GT1{1}	414	-487	-12	639	-12	-3	49	51
	GE1{1}	44	-145	24	153	4	1	35	35
	GE2{1}	39	-141	-23	148	-7	-1	37	37
	GE3{1}	3	-150	23	151	3	1	44	44
	GE4{1}	-2	-146	-25	148	-8	-1	46	46
	GE5{1}	48	-171	24	179	3	1	43	43
	GE6{1}	42	-167	-23	174	-7	0	44	44
	GE7{1}	7	-176	23	178	2	1	52	52
	GE8{1}	1	-172	-25	174	-8	-1	53	53
	GT1P1{1}	419	-491	-12	646	-12	-3	49	51
B13	Anchor Tag No.: <None>					Connected to: Ground			
	Gravity{1}	-23	-104	0	106	-16	3	-18	25
	Thermal 1{1}	-391	328	12	510	26	21	27	43
	Static Seismic 1{1}	27	8	24	37	0	-9	2	9
	Static Seismic 2{1}	33	4	-26	42	6	6	7	11
	Static Seismic 3{1}	-29	13	26	41	-4	-6	-4	8
	Static Seismic 4{1}	-23	9	-24	35	2	8	1	9
	Static Seismic 5{1}	23	-9	24	35	-2	-8	-1	9
	Static Seismic 6{1}	29	-13	-26	41	4	6	4	8
	Static Seismic 7{1}	-33	-4	26	42	-6	-6	-7	11
	Static Seismic 8{1}	-27	-8	-24	37	0	9	-2	9
	Pressure 1{1}	-5	4	0	7	0	0	0	1
	GT1{1}	-414	225	12	471	11	24	9	28
	GE1{1}	4	-96	25	99	-15	-6	-16	23
	GE2{1}	10	-99	-26	103	-10	9	-12	18
	GE3{1}	-52	-91	26	108	-20	-3	-22	30
	GE4{1}	-46	-94	-24	108	-14	12	-18	25
	GE5{1}	1	-113	25	116	-18	-5	-19	27
	GE6{1}	6	-117	-26	120	-12	9	-15	21
	GE7{1}	-56	-108	26	124	-22	-2	-25	34
	GE8{1}	-50	-112	-24	125	-16	12	-21	29
	GT1P1{1}	-419	229	12	477	11	25	9	28

242-A Sustained and Seismic
10/10/2019 2018719 BENTLEY
01:36 PM AutoPIPE Nuclear 12.00.00.16 RESULT PAGE 24

ASME B31.3 (2016) CODE COMPLIANCE
(Moments in ft-lb , Force in lbf) (Stress in psi)

Point name	Load combination	Axial Force	In-Pl. Moment	Out-Pl. Moment	Torsion Moment	S.I.F In	S.I.F Out	Index/SIF Ax.	Index/SIF Tor.	Eq. no.	Load type	Code Stress	Code Allow.
*** Segment A begin ***													
A01 F	Max P{1}									(3a)	HOOP	3494	16700
	GR + Max P{1}	1364	30	1	63	1.00	1.00	1.00	1.00	23a	SUST	2404	16700
	TR:Amb to T1{1}	27	10	6	16	1.00	1.00	1.00	1.00	(17)	DISP	439	25050
	Amb to T1{1}	27	10	6	16	1.00	1.00	1.00	1.00	(17)	DISP	439	25050
	Sus. + E1{1}	15	32	5	67	1.00	1.00			23a	OCC	2563	22211
	Sus. + E2{1}	11	37	9	64	1.00	1.00			23a	OCC	2634	22211
	Sus. + E3{1}	12	32	9	75	1.00	1.00			23a	OCC	2720	22211
	Sus. + E4{1}	17	33	6	68	1.00	1.00			23a	OCC	2580	22211
	Sus. + E5{1}	17	33	6	68	1.00	1.00			23a	OCC	2580	22211
	Sus. + E6{1}	12	32	9	75	1.00	1.00			23a	OCC	2720	22211
	Sus. + E7{1}	11	37	9	64	1.00	1.00			23a	OCC	2634	22211
	Sus. + E8{1}	15	32	5	67	1.00	1.00			23a	OCC	2563	22211
A02 N-	Max P{1}									(3a)	HOOP	3494	16700
	GR + Max P{1}	1364	8	4	63	1.00	1.00	1.00	1.00	23a	SUST	2035	16700
	TR:Amb to T1{1}	27	7	15	16	1.00	1.00	1.00	1.00	(17)	DISP	502	25050
	Amb to T1{1}	27	7	15	16	1.00	1.00	1.00	1.00	(17)	DISP	502	25050
	Sus. + E1{1}	14	8	15	67	1.00	1.00			23a	OCC	2303	22211
	Sus. + E2{1}	10	13	9	64	1.00	1.00			23a	OCC	2199	22211
	Sus. + E3{1}	12	12	9	75	1.00	1.00			23a	OCC	2337	22211
	Sus. + E4{1}	16	8	15	68	1.00	1.00			23a	OCC	2326	22211
	Sus. + E5{1}	16	8	15	68	1.00	1.00			23a	OCC	2326	22211
	Sus. + E6{1}	12	12	9	75	1.00	1.00			23a	OCC	2337	22211
	Sus. + E7{1}	10	13	9	64	1.00	1.00			23a	OCC	2199	22211
	Sus. + E8{1}	14	8	15	67	1.00	1.00			23a	OCC	2303	22211
A02 N+	Max P{1}									(3a)	HOOP	3494	16700
	GR + Max P{1}	1364	4	8	63	1.30	1.08	1.00	1.00	23a	SUST	2055	16700
	TR:Amb to T1{1}	27	15	7	16	1.73	1.44	1.00	1.00	(17)	DISP	697	25050
	Amb to T1{1}	27	15	7	16	1.73	1.44	1.00	1.00	(17)	DISP	697	25050
	Sus. + E1{1}	14	15	8	67	1.30	1.08			23a	OCC	2387	22211
	Sus. + E2{1}	10	9	13	64	1.30	1.08			23a	OCC	2244	22211
	Sus. + E3{1}	12	9	12	75	1.30	1.08			23a	OCC	2374	22211
	Sus. + E4{1}	16	15	8	68	1.30	1.08			23a	OCC	2414	22211
	Sus. + E5{1}	16	15	8	68	1.30	1.08			23a	OCC	2414	22211
	Sus. + E6{1}	12	9	12	75	1.30	1.08			23a	OCC	2374	22211
	Sus. + E7{1}	10	9	13	64	1.30	1.08			23a	OCC	2244	22211
	Sus. + E8{1}	14	15	8	67	1.30	1.08			23a	OCC	2387	22211

242-A Sustained and Seismic
10/10/2019 2018719 BENTLEY
01:36 PM AutoPIPE Nuclear 12.00.00.16 RESULT PAGE 25

ASME B31.3 (2016) CODE COMPLIANCE
(Moments in ft-lb , Force in lbf) (Stress in psi)

Point name	Load combination	Axial Force	In-Pl. Moment	Out-Pl. Moment	Torsion Moment	S.I.F In	S.I.F Out	Index/SIF Ax.	Index/SIF Tor.	Eq. no.	Load type	Code Stress	Code Allow.
A02 F-	Max P{1}									(3a)	HOOP	3494	16700
	GR + Max P{1}	1361	3	52	4	1.30	1.08	1.00	1.00	23a	SUST	2544	16700
	TR:Amb to T1{1}	18	12	14	5	1.73	1.44	1.00	1.00	(17)	DISP	652	25050
	Amb to T1{1}	18	12	14	5	1.73	1.44	1.00	1.00	(17)	DISP	652	25050
	Sus. + E1{1}	13	14	56	4	1.30	1.08			23a	OCC	2863	22211
	Sus. + E2{1}	5	4	54	8	1.30	1.08			23a	OCC	2660	22211
	Sus. + E3{1}	4	5	63	9	1.30	1.08			23a	OCC	2828	22211
	Sus. + E4{1}	14	14	56	4	1.30	1.08			23a	OCC	2885	22211
	Sus. + E5{1}	14	14	56	4	1.30	1.08			23a	OCC	2885	22211
	Sus. + E6{1}	4	5	63	9	1.30	1.08			23a	OCC	2828	22211
	Sus. + E7{1}	5	4	54	8	1.30	1.08			23a	OCC	2660	22211
	Sus. + E8{1}	13	14	56	4	1.30	1.08			23a	OCC	2863	22211
A02 F+	Max P{1}									(3a)	HOOP	3494	16700
	GR + Max P{1}	1361	52	3	4	1.00	1.00	1.00	1.00	23a	SUST	2449	16700
	TR:Amb to T1{1}	18	14	12	5	1.00	1.00	1.00	1.00	(17)	DISP	429	25050
	Amb to T1{1}	18	14	12	5	1.00	1.00	1.00	1.00	(17)	DISP	429	25050
	Sus. + E1{1}	13	56	14	4	1.00	1.00			23a	OCC	2702	22211
	Sus. + E2{1}	5	54	4	8	1.00	1.00			23a	OCC	2562	22211
	Sus. + E3{1}	4	63	5	9	1.00	1.00			23a	OCC	2715	22211
	Sus. + E4{1}	14	56	14	4	1.00	1.00			23a	OCC	2720	22211
	Sus. + E5{1}	14	56	14	4	1.00	1.00			23a	OCC	2720	22211
	Sus. + E6{1}	4	63	5	9	1.00	1.00			23a	OCC	2715	22211
	Sus. + E7{1}	5	54	4	8	1.00	1.00			23a	OCC	2562	22211
	Sus. + E8{1}	13	56	14	4	1.00	1.00			23a	OCC	2702	22211
A03 N-	Max P{1}									(3a)	HOOP	3494	16700
	GR + Max P{1}	1361	6	7	4	1.00	1.00	1.00	1.00	23a	SUST	1507	16700
	TR:Amb to T1{1}	18	6	20	5	1.00	1.00	1.00	1.00	(17)	DISP	468	25050
	Amb to T1{1}	18	6	20	5	1.00	1.00	1.00	1.00	(17)	DISP	468	25050
	Sus. + E1{1}	11	7	12	4	1.00	1.00			23a	OCC	1639	22211
	Sus. + E2{1}	4	11	17	8	1.00	1.00			23a	OCC	1780	22211
	Sus. + E3{1}	3	12	18	9	1.00	1.00			23a	OCC	1815	22211
	Sus. + E4{1}	12	6	13	4	1.00	1.00			23a	OCC	1664	22211
	Sus. + E5{1}	12	6	13	4	1.00	1.00			23a	OCC	1664	22211
	Sus. + E6{1}	3	12	18	9	1.00	1.00			23a	OCC	1815	22211
	Sus. + E7{1}	4	11	17	8	1.00	1.00			23a	OCC	1780	22211
	Sus. + E8{1}	11	7	12	4	1.00	1.00			23a	OCC	1639	22211
A03 N+	Max P{1}									(3a)	HOOP	3494	16700
	GR + Max P{1}	1361	7	6	4	1.30	1.08	1.00	1.00	23a	SUST	1549	16700
	TR:Amb to T1{1}	18	20	6	5	1.73	1.44	1.00	1.00	(17)	DISP	773	25050
	Amb to T1{1}	18	20	6	5	1.73	1.44	1.00	1.00	(17)	DISP	773	25050
	Sus. + E1{1}	11	12	7	4	1.30	1.08			23a	OCC	1716	22211
	Sus. + E2{1}	4	17	11	8	1.30	1.08			23a	OCC	1883	22211
	Sus. + E3{1}	3	18	12	9	1.30	1.08			23a	OCC	1924	22211
	Sus. + E4{1}	12	13	6	4	1.30	1.08			23a	OCC	1749	22211
	Sus. + E5{1}	12	13	6	4	1.30	1.08			23a	OCC	1749	22211
	Sus. + E6{1}	3	18	12	9	1.30	1.08			23a	OCC	1924	22211
	Sus. + E7{1}	4	17	11	8	1.30	1.08			23a	OCC	1883	22211
	Sus. + E8{1}	11	12	7	4	1.30	1.08			23a	OCC	1716	22211

242-A Sustained and Seismic
10/10/2019 2018719 BENTLEY
01:36 PM AutoPIPE Nuclear 12.00.00.16 RESULT PAGE 26

ASME B31.3 (2016) CODE COMPLIANCE
(Moments in ft-lb , Force in lbf) (Stress in psi)

Point name	Load combination	Axial Force	In-Pl. Moment	Out-Pl. Moment	Torsion Moment	S.I.F In	S.I.F Out	Index/SIF Ax.	Index/SIF Tor.	Eq. no.	Load type	Code Stress	Code Allow.
A03 F-	Max P{1}									(3a)	HOOP	3494	16700
	GR + Max P{1}	1364	8	12	3	1.30	1.08	1.00	1.00	23a	SUST	1670	16700
	TR:Amb to T1{1}	27	22	4	4	1.73	1.44	1.00	1.00	(17)	DISP	852	25050
	Amb to T1{1}	27	22	4	4	1.73	1.44	1.00	1.00	(17)	DISP	852	25050
	Sus. + E1{1}	12	13	12	3	1.30	1.08			23a	OCC	1847	22211
	Sus. + E2{1}	8	21	16	8	1.30	1.08			23a	OCC	2084	22211
	Sus. + E3{1}	10	22	18	8	1.30	1.08			23a	OCC	2130	22211
	Sus. + E4{1}	14	15	14	4	1.30	1.08			23a	OCC	1890	22211
	Sus. + E5{1}	14	15	14	4	1.30	1.08			23a	OCC	1890	22211
	Sus. + E6{1}	10	22	18	8	1.30	1.08			23a	OCC	2130	22211
	Sus. + E7{1}	8	21	16	8	1.30	1.08			23a	OCC	2084	22211
	Sus. + E8{1}	12	13	12	3	1.30	1.08			23a	OCC	1847	22211
A03 F+	Max P{1}									(3a)	HOOP	3494	16700
	GR + Max P{1}	1364	12	8	3	1.00	1.00	1.00	1.00	23a	SUST	1624	16700
	TR:Amb to T1{1}	27	4	22	4	1.00	1.00	1.00	1.00	(17)	DISP	510	25050
	Amb to T1{1}	27	4	22	4	1.00	1.00	1.00	1.00	(17)	DISP	510	25050
	Sus. + E1{1}	12	12	13	3	1.00	1.00			23a	OCC	1763	22211
	Sus. + E2{1}	8	16	21	8	1.00	1.00			23a	OCC	1958	22211
	Sus. + E3{1}	10	18	22	8	1.00	1.00			23a	OCC	1995	22211
	Sus. + E4{1}	14	14	15	4	1.00	1.00			23a	OCC	1798	22211
	Sus. + E5{1}	14	14	15	4	1.00	1.00			23a	OCC	1798	22211
	Sus. + E6{1}	10	18	22	8	1.00	1.00			23a	OCC	1995	22211
	Sus. + E7{1}	8	16	21	8	1.00	1.00			23a	OCC	1958	22211
	Sus. + E8{1}	12	12	13	3	1.00	1.00			23a	OCC	1763	22211
A04 N-	Max P{1}									(3a)	HOOP	3494	16700
	GR + Max P{1}	1364	23	6	3	1.00	1.00	1.00	1.00	23a	SUST	1831	16700
	TR:Amb to T1{1}	27	1	16	4	1.00	1.00	1.00	1.00	(17)	DISP	378	25050
	Amb to T1{1}	27	1	16	4	1.00	1.00	1.00	1.00	(17)	DISP	378	25050
	Sus. + E1{1}	12	24	8	3	1.00	1.00			23a	OCC	1895	22211
	Sus. + E2{1}	8	26	20	8	1.00	1.00			23a	OCC	2183	22211
	Sus. + E3{1}	9	30	21	8	1.00	1.00			23a	OCC	2227	22211
	Sus. + E4{1}	13	26	9	4	1.00	1.00			23a	OCC	1941	22211
	Sus. + E5{1}	13	26	9	4	1.00	1.00			23a	OCC	1941	22211
	Sus. + E6{1}	9	30	21	8	1.00	1.00			23a	OCC	2227	22211
	Sus. + E7{1}	8	26	20	8	1.00	1.00			23a	OCC	2183	22211
	Sus. + E8{1}	12	24	8	3	1.00	1.00			23a	OCC	1895	22211
A04 N+	Max P{1}									(3a)	HOOP	3494	16700
	GR + Max P{1}	1364	6	23	3	1.30	1.08	1.00	1.00	23a	SUST	1881	16700
	TR:Amb to T1{1}	27	16	1	4	1.73	1.44	1.00	1.00	(17)	DISP	625	25050
	Amb to T1{1}	27	16	1	4	1.73	1.44	1.00	1.00	(17)	DISP	625	25050
	Sus. + E1{1}	12	8	24	3	1.30	1.08			23a	OCC	1958	22211
	Sus. + E2{1}	8	20	26	8	1.30	1.08			23a	OCC	2321	22211
	Sus. + E3{1}	9	21	30	8	1.30	1.08			23a	OCC	2370	22211
	Sus. + E4{1}	13	9	26	4	1.30	1.08			23a	OCC	2009	22211
	Sus. + E5{1}	13	9	26	4	1.30	1.08			23a	OCC	2009	22211
	Sus. + E6{1}	9	21	30	8	1.30	1.08			23a	OCC	2370	22211
	Sus. + E7{1}	8	20	26	8	1.30	1.08			23a	OCC	2321	22211
	Sus. + E8{1}	12	8	24	3	1.30	1.08			23a	OCC	1958	22211

242-A Sustained and Seismic
10/10/2019 2018719 BENTLEY
01:36 PM AutoPIPE Nuclear 12.00.00.16 RESULT PAGE 27

ASME B31.3 (2016) CODE COMPLIANCE
(Moments in ft-lb , Force in lbf) (Stress in psi)

Point name	Load combination	Axial Force	In-Pl. Moment	Out-Pl. Moment	Torsion Moment	S.I.F In	S.I.F Out	Index/SIF Ax.	Index/SIF Tor.	Eq. no.	Load type	Code Stress	Code Allow.
A04 F-	Max P{1}									(3a)	HOOP	3494	16700
	GR + Max P{1}	1361	6	10	31	1.30	1.08	1.00	1.00	23a	SUST	1742	16700
	TR:Amb to T1{1}	18	18	2	1	1.73	1.44	1.00	1.00	(17)	DISP	702	25050
	Amb to T1{1}	18	18	2	1	1.73	1.44	1.00	1.00	(17)	DISP	702	25050
	Sus. + E1{1}	10	9	10	32	1.30	1.08			23a	OCC	1828	22211
	Sus. + E2{1}	3	23	16	34	1.30	1.08			23a	OCC	2251	22211
	Sus. + E3{1}	2	24	15	39	1.30	1.08			23a	OCC	2295	22211
	Sus. + E4{1}	11	10	12	34	1.30	1.08			23a	OCC	1890	22211
	Sus. + E5{1}	11	10	12	34	1.30	1.08			23a	OCC	1890	22211
	Sus. + E6{1}	2	24	15	39	1.30	1.08			23a	OCC	2295	22211
	Sus. + E7{1}	3	23	16	34	1.30	1.08			23a	OCC	2251	22211
	Sus. + E8{1}	10	9	10	32	1.30	1.08			23a	OCC	1828	22211
A04 F+	Max P{1}									(3a)	HOOP	3494	16700
	GR + Max P{1}	1361	10	6	31	1.00	1.00	1.00	1.00	23a	SUST	1707	16700
	TR:Amb to T1{1}	18	2	18	1	1.00	1.00	1.00	1.00	(17)	DISP	413	25050
	Amb to T1{1}	18	2	18	1	1.00	1.00	1.00	1.00	(17)	DISP	413	25050
	Sus. + E1{1}	10	10	9	32	1.00	1.00			23a	OCC	1778	22211
	Sus. + E2{1}	3	16	23	34	1.00	1.00			23a	OCC	2108	22211
	Sus. + E3{1}	2	15	24	39	1.00	1.00			23a	OCC	2151	22211
	Sus. + E4{1}	11	12	10	34	1.00	1.00			23a	OCC	1836	22211
	Sus. + E5{1}	11	12	10	34	1.00	1.00			23a	OCC	1836	22211
	Sus. + E6{1}	2	15	24	39	1.00	1.00			23a	OCC	2151	22211
	Sus. + E7{1}	3	16	23	34	1.00	1.00			23a	OCC	2108	22211
	Sus. + E8{1}	10	10	9	32	1.00	1.00			23a	OCC	1778	22211
A05 N-	Max P{1}									(3a)	HOOP	3494	16700
	GR + Max P{1}	1361	43	18	31	1.00	1.00	1.00	1.00	23a	SUST	2424	16700
	TR:Amb to T1{1}	18	7	54	1	1.00	1.00	1.00	1.00	(17)	DISP	1189	25050
	Amb to T1{1}	18	7	54	1	1.00	1.00	1.00	1.00	(17)	DISP	1189	25050
	Sus. + E1{1}	8	44	34	32	1.00	1.00			23a	OCC	2798	22211
	Sus. + E2{1}	1	51	43	34	1.00	1.00			23a	OCC	3012	22211
	Sus. + E3{1}	0	44	46	39	1.00	1.00			23a	OCC	3074	22211
	Sus. + E4{1}	10	49	37	34	1.00	1.00			23a	OCC	2890	22211
	Sus. + E5{1}	10	49	37	34	1.00	1.00			23a	OCC	2890	22211
	Sus. + E6{1}	0	44	46	39	1.00	1.00			23a	OCC	3074	22211
	Sus. + E7{1}	1	51	43	34	1.00	1.00			23a	OCC	3012	22211
	Sus. + E8{1}	8	44	34	32	1.00	1.00			23a	OCC	2798	22211
A05 N+	Max P{1}									(3a)	HOOP	3494	16700
	GR + Max P{1}	1361	18	43	31	1.30	1.08	1.00	1.00	23a	SUST	2539	16700
	TR:Amb to T1{1}	18	54	7	1	1.73	1.44	1.00	1.00	(17)	DISP	2043	25050
	Amb to T1{1}	18	54	7	1	1.73	1.44	1.00	1.00	(17)	DISP	2043	25050
	Sus. + E1{1}	8	34	44	32	1.30	1.08			23a	OCC	3022	22211
	Sus. + E2{1}	1	43	51	34	1.30	1.08			23a	OCC	3290	22211
	Sus. + E3{1}	0	46	44	39	1.30	1.08			23a	OCC	3370	22211
	Sus. + E4{1}	10	37	49	34	1.30	1.08			23a	OCC	3130	22211
	Sus. + E5{1}	10	37	49	34	1.30	1.08			23a	OCC	3130	22211
	Sus. + E6{1}	0	46	44	39	1.30	1.08			23a	OCC	3370	22211
	Sus. + E7{1}	1	43	51	34	1.30	1.08			23a	OCC	3290	22211
	Sus. + E8{1}	8	34	44	32	1.30	1.08			23a	OCC	3022	22211

242-A Sustained and Seismic
10/10/2019 2018719 BENTLEY
01:36 PM AutoPIPE Nuclear 12.00.00.16 RESULT PAGE 28

ASME B31.3 (2016) CODE COMPLIANCE
(Moments in ft-lb , Force in lbf) (Stress in psi)

Point name	Load combination	Axial Force	In-Pl. Moment	Out-Pl. Moment	Torsion Moment	S.I.F In	S.I.F Out	Index/SIF Ax.	Index/SIF Tor.	Eq. no.	Load type	Code Stress	Code Allow.
A05 F-	Max P{1}									(3a)	HOOP	3494	16700
	GR + Max P{1}	1364	19	35	48	1.30	1.08	1.00	1.00	23a	SUST	2535	16700
	TR:Amb to T1{1}	27	57	2	9	1.73	1.44	1.00	1.00	(17)	DISP	2138	25050
	Amb to T1{1}	27	57	2	9	1.73	1.44	1.00	1.00	(17)	DISP	2138	25050
	Sus. + E1{1}	9	35	37	50	1.30	1.08			23a	OCC	3030	22211
	Sus. + E2{1}	5	46	38	56	1.30	1.08			23a	OCC	3332	22211
	Sus. + E3{1}	7	49	44	48	1.30	1.08			23a	OCC	3427	22211
	Sus. + E4{1}	11	39	40	54	1.30	1.08			23a	OCC	3145	22211
	Sus. + E5{1}	11	39	40	54	1.30	1.08			23a	OCC	3145	22211
	Sus. + E6{1}	7	49	44	48	1.30	1.08			23a	OCC	3427	22211
	Sus. + E7{1}	5	46	38	56	1.30	1.08			23a	OCC	3332	22211
	Sus. + E8{1}	9	35	37	50	1.30	1.08			23a	OCC	3030	22211
A05 F+	Max P{1}									(3a)	HOOP	3494	16700
	GR + Max P{1}	1364	35	19	48	1.00	1.00	1.00	1.00	23a	SUST	2429	16700
	TR:Amb to T1{1}	27	2	57	9	1.00	1.00	1.00	1.00	(17)	DISP	1255	25050
	Amb to T1{1}	27	2	57	9	1.00	1.00	1.00	1.00	(17)	DISP	1255	25050
	Sus. + E1{1}	9	37	35	50	1.00	1.00			23a	OCC	2814	22211
	Sus. + E2{1}	5	38	46	56	1.00	1.00			23a	OCC	3055	22211
	Sus. + E3{1}	7	44	49	48	1.00	1.00			23a	OCC	3126	22211
	Sus. + E4{1}	11	40	39	54	1.00	1.00			23a	OCC	2913	22211
	Sus. + E5{1}	11	40	39	54	1.00	1.00			23a	OCC	2913	22211
	Sus. + E6{1}	7	44	49	48	1.00	1.00			23a	OCC	3126	22211
	Sus. + E7{1}	5	38	46	56	1.00	1.00			23a	OCC	3055	22211
	Sus. + E8{1}	9	37	35	50	1.00	1.00			23a	OCC	2814	22211
A06 -	Max P{1}									(3a)	HOOP	3494	16700
	GR + Max P{1}	1364	61	6	48	1.00	1.00	1.00	1.00	23a	SUST	2851	16700
	TR:Amb to T1{1}	27	17	20	9	1.00	1.00	1.00	1.00	(17)	DISP	615	25050
	Amb to T1{1}	27	17	20	9	1.00	1.00	1.00	1.00	(17)	DISP	615	25050
	Sus. + E1{1}	7	63	9	50	1.00	1.00			23a	OCC	2939	22211
	Sus. + E2{1}	3	63	32	56	1.00	1.00			23a	OCC	3452	22211
	Sus. + E3{1}	4	73	33	48	1.00	1.00			23a	OCC	3507	22211
	Sus. + E4{1}	9	69	10	54	1.00	1.00			23a	OCC	3097	22211
	Sus. + E5{1}	9	69	10	54	1.00	1.00			23a	OCC	3097	22211
	Sus. + E6{1}	4	73	33	48	1.00	1.00			23a	OCC	3507	22211
	Sus. + E7{1}	3	63	32	56	1.00	1.00			23a	OCC	3452	22211
	Sus. + E8{1}	7	63	9	50	1.00	1.00			23a	OCC	2939	22211
A06 +	Max P{1}									(3a)	HOOP	3494	16700
	GR + Max P{1}	1364	61	6	50	1.00	1.00	1.00	1.00	23a	SUST	2867	16700
	TR:Amb to T1{1}	27	17	20	9	1.00	1.00	1.00	1.00	(17)	DISP	615	25050
	Amb to T1{1}	27	17	20	9	1.00	1.00	1.00	1.00	(17)	DISP	615	25050
	Sus. + E1{1}	4	62	9	51	1.00	1.00			23a	OCC	2950	22211
	Sus. + E2{1}	1	63	33	58	1.00	1.00			23a	OCC	3478	22211
	Sus. + E3{1}	1	73	34	50	1.00	1.00			23a	OCC	3531	22211
	Sus. + E4{1}	5	69	10	57	1.00	1.00			23a	OCC	3127	22211
	Sus. + E5{1}	5	69	10	57	1.00	1.00			23a	OCC	3127	22211
	Sus. + E6{1}	1	73	34	50	1.00	1.00			23a	OCC	3531	22211
	Sus. + E7{1}	1	63	33	58	1.00	1.00			23a	OCC	3478	22211
	Sus. + E8{1}	4	62	9	51	1.00	1.00			23a	OCC	2950	22211

242-A Sustained and Seismic
10/10/2019 2018719 BENTLEY
01:36 PM AutoPIPE Nuclear 12.00.00.16 RESULT PAGE 29

ASME B31.3 (2016) CODE COMPLIANCE
(Moments in ft-lb , Force in lbf) (Stress in psi)

Point name	Load combination	Axial Force	In-Pl. Moment	Out-Pl. Moment	Torsion Moment	S.I.F In	S.I.F Out	Index/SIF Ax.	Index/SIF Tor.	Eq. no.	Load type	Code Stress	Code Allow.
A07 N-	Max P{1}									(3a)	HOOP	3494	16700
	GR + Max P{1}	1364	15	7	50	1.00	1.00	1.00	1.00	23a	SUST	2004	16700
	TR:Amb to T1{1}	27	32	19	9	1.00	1.00	1.00	1.00	(17)	DISP	848	25050
	Amb to T1{1}	27	32	19	9	1.00	1.00	1.00	1.00	(17)	DISP	848	25050
	Sus. + E1{1}	1	19	8	51	1.00	1.00			23a	OCC	2101	22211
	Sus. + E2{1}	3	23	19	58	1.00	1.00			23a	OCC	2372	22211
	Sus. + E3{1}	2	26	18	50	1.00	1.00			23a	OCC	2334	22211
	Sus. + E4{1}	3	22	7	57	1.00	1.00			23a	OCC	2213	22211
	Sus. + E5{1}	3	22	7	57	1.00	1.00			23a	OCC	2213	22211
	Sus. + E6{1}	2	26	18	50	1.00	1.00			23a	OCC	2334	22211
	Sus. + E7{1}	3	23	19	58	1.00	1.00			23a	OCC	2372	22211
	Sus. + E8{1}	1	19	8	51	1.00	1.00			23a	OCC	2101	22211
A07 N+	Max P{1}									(3a)	HOOP	3494	16700
	GR + Max P{1}	1364	7	15	50	1.30	1.08	1.00	1.00	23a	SUST	2042	16700
	TR:Amb to T1{1}	27	19	32	9	1.73	1.44	1.00	1.00	(17)	DISP	1261	25050
	Amb to T1{1}	27	19	32	9	1.73	1.44	1.00	1.00	(17)	DISP	1261	25050
	Sus. + E1{1}	1	8	19	51	1.30	1.08			23a	OCC	2148	22211
	Sus. + E2{1}	3	19	23	58	1.30	1.08			23a	OCC	2475	22211
	Sus. + E3{1}	2	18	26	50	1.30	1.08			23a	OCC	2436	22211
	Sus. + E4{1}	3	7	22	57	1.30	1.08			23a	OCC	2260	22211
	Sus. + E5{1}	3	7	22	57	1.30	1.08			23a	OCC	2260	22211
	Sus. + E6{1}	2	18	26	50	1.30	1.08			23a	OCC	2436	22211
	Sus. + E7{1}	3	19	23	58	1.30	1.08			23a	OCC	2475	22211
	Sus. + E8{1}	1	8	19	51	1.30	1.08			23a	OCC	2148	22211
A07 F-	Max P{1}									(3a)	HOOP	3494	16700
	GR + Max P{1}	1349	11	57	8	1.30	1.08	1.00	1.00	23a	SUST	2691	16700
	TR:Amb to T1{1}	18	30	7	34	1.73	1.44	1.00	1.00	(17)	DISP	1371	25050
	Amb to T1{1}	18	30	7	34	1.73	1.44	1.00	1.00	(17)	DISP	1371	25050
	Sus. + E1{1}	1	12	59	13	1.30	1.08			23a	OCC	2813	22211
	Sus. + E2{1}	8	21	66	17	1.30	1.08			23a	OCC	3121	22211
	Sus. + E3{1}	9	19	57	18	1.30	1.08			23a	OCC	3034	22211
	Sus. + E4{1}	0	11	64	14	1.30	1.08			23a	OCC	2911	22211
	Sus. + E5{1}	0	11	64	14	1.30	1.08			23a	OCC	2911	22211
	Sus. + E6{1}	9	19	57	18	1.30	1.08			23a	OCC	3034	22211
	Sus. + E7{1}	8	21	66	17	1.30	1.08			23a	OCC	3121	22211
	Sus. + E8{1}	1	12	59	13	1.30	1.08			23a	OCC	2813	22211
A07 F+	Max P{1}									(3a)	HOOP	3494	16700
	GR + Max P{1}	1349	57	11	8	1.00	1.00	1.00	1.00	23a	SUST	2576	16700
	TR:Amb to T1{1}	18	7	30	34	1.00	1.00	1.00	1.00	(17)	DISP	998	25050
	Amb to T1{1}	18	7	30	34	1.00	1.00	1.00	1.00	(17)	DISP	998	25050
	Sus. + E1{1}	1	59	12	13	1.00	1.00			23a	OCC	2694	22211
	Sus. + E2{1}	8	66	21	17	1.00	1.00			23a	OCC	2950	22211
	Sus. + E3{1}	9	57	19	18	1.00	1.00			23a	OCC	2878	22211
	Sus. + E4{1}	0	64	11	14	1.00	1.00			23a	OCC	2785	22211
	Sus. + E5{1}	0	64	11	14	1.00	1.00			23a	OCC	2785	22211
	Sus. + E6{1}	9	57	19	18	1.00	1.00			23a	OCC	2878	22211
	Sus. + E7{1}	8	66	21	17	1.00	1.00			23a	OCC	2950	22211
	Sus. + E8{1}	1	59	12	13	1.00	1.00			23a	OCC	2694	22211

242-A Sustained and Seismic
10/10/2019 2018719 BENTLEY
01:36 PM AutoPIPE Nuclear 12.00.00.16 RESULT PAGE 30

ASME B31.3 (2016) CODE COMPLIANCE
(Moments in ft-lb , Force in lbf) (Stress in psi)

Point name	Load combination	Axial Force	In-Pl. Moment	Out-Pl. Moment	Torsion Moment	S.I.F In	S.I.F Out	Index/SIF Ax.	Index/SIF Tor.	Eq. no.	Load type	Code Stress	Code Allow.
A08 N-	Max P{1}									(3a)	HOOP	3494	16700
	GR + Max P{1}	1349	67	14	8	1.00	1.00	1.00	1.00	23a	SUST	2805	16700
	TR:Amb to T1{1}	18	5	39	34	1.00	1.00	1.00	1.00	(17)	DISP	1130	25050
	Amb to T1{1}	18	5	39	34	1.00	1.00	1.00	1.00	(17)	DISP	1130	25050
	Sus. + E1{1}	1	70	15	13	1.00	1.00			23a	OCC	2935	22211
	Sus. + E2{1}	9	77	25	17	1.00	1.00			23a	OCC	3211	22211
	Sus. + E3{1}	10	68	23	18	1.00	1.00			23a	OCC	3118	22211
	Sus. + E4{1}	0	75	15	14	1.00	1.00			23a	OCC	3025	22211
	Sus. + E5{1}	0	75	15	14	1.00	1.00			23a	OCC	3025	22211
	Sus. + E6{1}	10	68	23	18	1.00	1.00			23a	OCC	3118	22211
	Sus. + E7{1}	9	77	25	17	1.00	1.00			23a	OCC	3211	22211
	Sus. + E8{1}	1	70	15	13	1.00	1.00			23a	OCC	2935	22211
A08 N+	Max P{1}									(3a)	HOOP	3494	16700
	GR + Max P{1}	1349	14	67	8	1.30	1.08	1.00	1.00	23a	SUST	2942	16700
	TR:Amb to T1{1}	18	39	5	34	1.73	1.44	1.00	1.00	(17)	DISP	1651	25050
	Amb to T1{1}	18	39	5	34	1.73	1.44	1.00	1.00	(17)	DISP	1651	25050
	Sus. + E1{1}	1	15	70	13	1.30	1.08			23a	OCC	3077	22211
	Sus. + E2{1}	9	25	77	17	1.30	1.08			23a	OCC	3413	22211
	Sus. + E3{1}	10	23	68	18	1.30	1.08			23a	OCC	3302	22211
	Sus. + E4{1}	0	15	75	14	1.30	1.08			23a	OCC	3176	22211
	Sus. + E5{1}	0	15	75	14	1.30	1.08			23a	OCC	3176	22211
	Sus. + E6{1}	10	23	68	18	1.30	1.08			23a	OCC	3302	22211
	Sus. + E7{1}	9	25	77	17	1.30	1.08			23a	OCC	3413	22211
	Sus. + E8{1}	1	15	70	13	1.30	1.08			23a	OCC	3077	22211
A08 F-	Max P{1}									(3a)	HOOP	3494	16700
	GR + Max P{1}	1364	17	0	75	1.30	1.08	1.00	1.00	23a	SUST	2445	16700
	TR:Amb to T1{1}	27	51	36	3	1.73	1.44	1.00	1.00	(17)	DISP	2201	25050
	Amb to T1{1}	27	51	36	3	1.73	1.44	1.00	1.00	(17)	DISP	2201	25050
	Sus. + E1{1}	0	19	6	79	1.30	1.08			23a	OCC	2612	22211
	Sus. + E2{1}	4	28	10	86	1.30	1.08			23a	OCC	2905	22211
	Sus. + E3{1}	3	25	10	76	1.30	1.08			23a	OCC	2767	22211
	Sus. + E4{1}	1	19	6	83	1.30	1.08			23a	OCC	2676	22211
	Sus. + E5{1}	1	19	6	83	1.30	1.08			23a	OCC	2676	22211
	Sus. + E6{1}	3	25	10	76	1.30	1.08			23a	OCC	2767	22211
	Sus. + E7{1}	4	28	10	86	1.30	1.08			23a	OCC	2905	22211
	Sus. + E8{1}	0	19	6	79	1.30	1.08			23a	OCC	2612	22211
A08 F+	Max P{1}									(3a)	HOOP	3494	16700
	GR + Max P{1}	1364	0	17	75	1.00	1.00	1.00	1.00	23a	SUST	2362	16700
	TR:Amb to T1{1}	27	36	51	3	1.00	1.00	1.00	1.00	(17)	DISP	1352	25050
	Amb to T1{1}	27	36	51	3	1.00	1.00	1.00	1.00	(17)	DISP	1352	25050
	Sus. + E1{1}	0	6	19	79	1.00	1.00			23a	OCC	2519	22211
	Sus. + E2{1}	4	10	28	86	1.00	1.00			23a	OCC	2769	22211
	Sus. + E3{1}	3	10	25	76	1.00	1.00			23a	OCC	2639	22211
	Sus. + E4{1}	1	6	19	83	1.00	1.00			23a	OCC	2586	22211
	Sus. + E5{1}	1	6	19	83	1.00	1.00			23a	OCC	2586	22211
	Sus. + E6{1}	3	10	25	76	1.00	1.00			23a	OCC	2639	22211
	Sus. + E7{1}	4	10	28	86	1.00	1.00			23a	OCC	2769	22211
	Sus. + E8{1}	0	6	19	79	1.00	1.00			23a	OCC	2519	22211

242-A Sustained and Seismic
10/10/2019 2018719 BENTLEY
01:36 PM AutoPIPE Nuclear 12.00.00.16 RESULT PAGE 31

ASME B31.3 (2016) CODE COMPLIANCE
(Moments in ft-lb , Force in lbf) (Stress in psi)

Point name	Load combination	Axial Force	In-Pl. Moment	Out-Pl. Moment	Torsion Moment	S.I.F In	S.I.F Out	Index/SIF Ax.	Index/SIF Tor.	Eq. no.	Load type	Code Stress	Code Allow.
A09 N-	Max P{1}									(3a)	HOOP	3494	16700
	GR + Max P{1}	1364	11	19	75	1.00	1.00	1.00	1.00	23a	SUST	2444	16700
	TR:Amb to T1{1}	27	38	56	3	1.00	1.00	1.00	1.00	(17)	DISP	1482	25050
	Amb to T1{1}	27	38	56	3	1.00	1.00	1.00	1.00	(17)	DISP	1482	25050
	Sus. + E1{1}	1	18	21	79	1.00	1.00			23a	OCC	2626	22211
	Sus. + E2{1}	5	22	27	86	1.00	1.00			23a	OCC	2833	22211
	Sus. + E3{1}	3	21	24	76	1.00	1.00			23a	OCC	2668	22211
	Sus. + E4{1}	1	16	21	83	1.00	1.00			23a	OCC	2659	22211
	Sus. + E5{1}	1	16	21	83	1.00	1.00			23a	OCC	2659	22211
	Sus. + E6{1}	3	21	24	76	1.00	1.00			23a	OCC	2668	22211
	Sus. + E7{1}	5	22	27	86	1.00	1.00			23a	OCC	2833	22211
	Sus. + E8{1}	1	18	21	79	1.00	1.00			23a	OCC	2626	22211
A09 N+	Max P{1}									(3a)	HOOP	3494	16700
	GR + Max P{1}	1364	19	11	75	1.30	1.08	1.00	1.00	23a	SUST	2535	16700
	TR:Amb to T1{1}	27	56	38	3	1.73	1.44	1.00	1.00	(17)	DISP	2424	25050
	Amb to T1{1}	27	56	38	3	1.73	1.44	1.00	1.00	(17)	DISP	2424	25050
	Sus. + E1{1}	1	21	18	79	1.30	1.08			23a	OCC	2731	22211
	Sus. + E2{1}	5	27	22	86	1.30	1.08			23a	OCC	2960	22211
	Sus. + E3{1}	3	24	21	76	1.30	1.08			23a	OCC	2786	22211
	Sus. + E4{1}	1	21	16	83	1.30	1.08			23a	OCC	2756	22211
	Sus. + E5{1}	1	21	16	83	1.30	1.08			23a	OCC	2756	22211
	Sus. + E6{1}	3	24	21	76	1.30	1.08			23a	OCC	2786	22211
	Sus. + E7{1}	5	27	22	86	1.30	1.08			23a	OCC	2960	22211
	Sus. + E8{1}	1	21	18	79	1.30	1.08			23a	OCC	2731	22211
A09 F-	Max P{1}									(3a)	HOOP	3494	16700
	GR + Max P{1}	1361	19	66	21	1.30	1.08	1.00	1.00	23a	SUST	2993	16700
	TR:Amb to T1{1}	18	54	5	40	1.73	1.44	1.00	1.00	(17)	DISP	2194	25050
	Amb to T1{1}	18	54	5	40	1.73	1.44	1.00	1.00	(17)	DISP	2194	25050
	Sus. + E1{1}	2	21	69	29	1.30	1.08			23a	OCC	3194	22211
	Sus. + E2{1}	10	22	76	33	1.30	1.08			23a	OCC	3377	22211
	Sus. + E3{1}	11	19	66	29	1.30	1.08			23a	OCC	3182	22211
	Sus. + E4{1}	1	19	74	25	1.30	1.08			23a	OCC	3204	22211
	Sus. + E5{1}	1	19	74	25	1.30	1.08			23a	OCC	3204	22211
	Sus. + E6{1}	11	19	66	29	1.30	1.08			23a	OCC	3182	22211
	Sus. + E7{1}	10	22	76	33	1.30	1.08			23a	OCC	3377	22211
	Sus. + E8{1}	2	21	69	29	1.30	1.08			23a	OCC	3194	22211
A09 F+	Max P{1}									(3a)	HOOP	3494	16700
	GR + Max P{1}	1361	66	19	21	1.00	1.00	1.00	1.00	23a	SUST	2845	16700
	TR:Amb to T1{1}	18	5	54	40	1.00	1.00	1.00	1.00	(17)	DISP	1452	25050
	Amb to T1{1}	18	5	54	40	1.00	1.00	1.00	1.00	(17)	DISP	1452	25050
	Sus. + E1{1}	2	69	21	29	1.00	1.00			23a	OCC	3039	22211
	Sus. + E2{1}	10	76	22	33	1.00	1.00			23a	OCC	3210	22211
	Sus. + E3{1}	11	66	19	29	1.00	1.00			23a	OCC	3034	22211
	Sus. + E4{1}	1	74	19	25	1.00	1.00			23a	OCC	3043	22211
	Sus. + E5{1}	1	74	19	25	1.00	1.00			23a	OCC	3043	22211
	Sus. + E6{1}	11	66	19	29	1.00	1.00			23a	OCC	3034	22211
	Sus. + E7{1}	10	76	22	33	1.00	1.00			23a	OCC	3210	22211
	Sus. + E8{1}	2	69	21	29	1.00	1.00			23a	OCC	3039	22211

242-A Sustained and Seismic
10/10/2019 2018719 BENTLEY
01:36 PM AutoPIPE Nuclear 12.00.00.16 RESULT PAGE 32

ASME B31.3 (2016) CODE COMPLIANCE
(Moments in ft-lb , Force in lbf) (Stress in psi)

Point name	Load combination	Axial Force	In-Pl. Moment	Out-Pl. Moment	Torsion Moment	S.I.F In	S.I.F Out	Index/SIF Ax.	Index/SIF Tor.	Eq. no.	Load type	Code Stress	Code Allow.
A10 N-	Max P{1}									(3a)	HOOP	3494	16700
	GR + Max P{1}	1361	36	1	21	1.00	1.00	1.00	1.00	23a	SUST	2139	16700
	TR:Amb to T1{1}	18	20	7	40	1.00	1.00	1.00	1.00	(17)	DISP	976	25050
	Amb to T1{1}	18	20	7	40	1.00	1.00	1.00	1.00	(17)	DISP	976	25050
	Sus. + E1{1}	5	43	4	29	1.00	1.00			23a	OCC	2383	22211
	Sus. + E2{1}	12	36	12	33	1.00	1.00			23a	OCC	2501	22211
	Sus. + E3{1}	13	42	12	29	1.00	1.00			23a	OCC	2476	22211
	Sus. + E4{1}	4	37	4	25	1.00	1.00			23a	OCC	2256	22211
	Sus. + E5{1}	4	37	4	25	1.00	1.00			23a	OCC	2256	22211
	Sus. + E6{1}	13	42	12	29	1.00	1.00			23a	OCC	2476	22211
	Sus. + E7{1}	12	36	12	33	1.00	1.00			23a	OCC	2501	22211
	Sus. + E8{1}	5	43	4	29	1.00	1.00			23a	OCC	2383	22211
A10 N+	Max P{1}									(3a)	HOOP	3494	16700
	GR + Max P{1}	1361	36	1	21	1.30	1.08	1.00	1.00	23a	SUST	2368	16700
	TR:Amb to T1{1}	18	20	7	40	1.73	1.44	1.00	1.00	(17)	DISP	1170	25050
	Amb to T1{1}	18	20	7	40	1.73	1.44	1.00	1.00	(17)	DISP	1170	25050
	Sus. + E1{1}	5	43	4	29	1.30	1.08			23a	OCC	2646	22211
	Sus. + E2{1}	12	36	12	33	1.30	1.08			23a	OCC	2744	22211
	Sus. + E3{1}	13	42	12	29	1.30	1.08			23a	OCC	2737	22211
	Sus. + E4{1}	4	37	4	25	1.30	1.08			23a	OCC	2490	22211
	Sus. + E5{1}	4	37	4	25	1.30	1.08			23a	OCC	2490	22211
	Sus. + E6{1}	13	42	12	29	1.30	1.08			23a	OCC	2737	22211
	Sus. + E7{1}	12	36	12	33	1.30	1.08			23a	OCC	2744	22211
	Sus. + E8{1}	5	43	4	29	1.30	1.08			23a	OCC	2646	22211
A10 F-	Max P{1}									(3a)	HOOP	3494	16700
	GR + Max P{1}	1410	47	18	3	1.30	1.08	1.00	1.00	23a	SUST	2775	16700
	TR:Amb to T1{1}	7	18	33	14	1.73	1.44	1.00	1.00	(17)	DISP	1254	25050
	Amb to T1{1}	7	18	33	14	1.73	1.44	1.00	1.00	(17)	DISP	1254	25050
	Sus. + E1{1}	5	54	25	7	1.30	1.08			23a	OCC	3052	22211
	Sus. + E2{1}	5	52	28	16	1.30	1.08			23a	OCC	3165	22211
	Sus. + E3{1}	4	51	25	16	1.30	1.08			23a	OCC	3106	22211
	Sus. + E4{1}	4	48	22	7	1.30	1.08			23a	OCC	2895	22211
	Sus. + E5{1}	4	48	22	7	1.30	1.08			23a	OCC	2895	22211
	Sus. + E6{1}	4	51	25	16	1.30	1.08			23a	OCC	3106	22211
	Sus. + E7{1}	5	52	28	16	1.30	1.08			23a	OCC	3165	22211
	Sus. + E8{1}	5	54	25	7	1.30	1.08			23a	OCC	3052	22211
A10 F+	Max P{1}									(3a)	HOOP	3494	16700
	GR + Max P{1}	1410	47	18	3	1.00	1.00	1.00	1.00	23a	SUST	2471	16700
	TR:Amb to T1{1}	7	18	33	14	1.00	1.00	1.00	1.00	(17)	DISP	861	25050
	Amb to T1{1}	7	18	33	14	1.00	1.00	1.00	1.00	(17)	DISP	861	25050
	Sus. + E1{1}	5	54	25	7	1.00	1.00			23a	OCC	2708	22211
	Sus. + E2{1}	5	52	28	16	1.00	1.00			23a	OCC	2842	22211
	Sus. + E3{1}	4	51	25	16	1.00	1.00			23a	OCC	2789	22211
	Sus. + E4{1}	4	48	22	7	1.00	1.00			23a	OCC	2585	22211
	Sus. + E5{1}	4	48	22	7	1.00	1.00			23a	OCC	2585	22211
	Sus. + E6{1}	4	51	25	16	1.00	1.00			23a	OCC	2789	22211
	Sus. + E7{1}	5	52	28	16	1.00	1.00			23a	OCC	2842	22211
	Sus. + E8{1}	5	54	25	7	1.00	1.00			23a	OCC	2708	22211

242-A Sustained and Seismic
10/10/2019 2018719 BENTLEY
01:36 PM AutoPIPE Nuclear 12.00.00.16 RESULT PAGE 33

ASME B31.3 (2016) CODE COMPLIANCE
(Moments in ft-lb , Force in lbf) (Stress in psi)

Point name	Load combination	Axial Force	In-Pl. Moment	Out-Pl. Moment	Torsion Moment	S.I.F In	S.I.F Out	Index/SIF Ax.	Index/SIF Tor.	Eq. no.	Load type	Code Stress	Code Allow.
A11 N	Max P{1}									(3a)	HOOP	3494	16700
	GR + Max P{1}	1419	38	4	3	1.00	1.00	1.00	1.00	23a	SUST	2197	16700
	TR:Amb to T1{1}	7	11	11	14	1.00	1.00	1.00	1.00	(17)	DISP	457	25050
	Amb to T1{1}	7	11	11	14	1.00	1.00	1.00	1.00	(17)	DISP	457	25050
	Sus. + E1{1}	6	41	5	7	1.00	1.00			23a	OCC	2318	22211
	Sus. + E2{1}	6	64	9	16	1.00	1.00			23a	OCC	2861	22211
	Sus. + E3{1}	5	58	10	16	1.00	1.00			23a	OCC	2737	22211
	Sus. + E4{1}	5	47	6	7	1.00	1.00			23a	OCC	2428	22211
	Sus. + E5{1}	5	47	6	7	1.00	1.00			23a	OCC	2428	22211
	Sus. + E6{1}	5	58	10	16	1.00	1.00			23a	OCC	2737	22211
	Sus. + E7{1}	6	64	9	16	1.00	1.00			23a	OCC	2861	22211
	Sus. + E8{1}	6	41	5	7	1.00	1.00			23a	OCC	2318	22211
*** Segment A end ***													
*** Segment B begin ***													
B06 F	Max P{1}									(3a)	HOOP	3644	16700
	GR + Max P{1}	2948	25	0	2	1.00	1.00	1.00	1.00	23a	SUST	1533	16700
	TR:Amb to T1{1}	391	40	0	7	1.00	1.00	1.00	1.00	(17)	DISP	456	25050
	Amb to T1{1}	391	40	0	7	1.00	1.00	1.00	1.00	(17)	DISP	456	25050
	Sus. + E1{1}	7	27	3	3	1.00	1.00			23a	OCC	1555	22211
	Sus. + E2{1}	1	26	3	4	1.00	1.00			23a	OCC	1554	22211
	Sus. + E3{1}	5	29	3	3	1.00	1.00			23a	OCC	1567	22211
	Sus. + E4{1}	11	29	3	3	1.00	1.00			23a	OCC	1566	22211
	Sus. + E5{1}	11	29	3	3	1.00	1.00			23a	OCC	1566	22211
	Sus. + E6{1}	5	29	3	3	1.00	1.00			23a	OCC	1567	22211
	Sus. + E7{1}	1	26	3	4	1.00	1.00			23a	OCC	1554	22211
	Sus. + E8{1}	7	27	3	3	1.00	1.00			23a	OCC	1555	22211
B07 N-	Max P{1}									(3a)	HOOP	3644	16700
	GR + Max P{1}	2948	66	1	2	1.00	1.00	1.00	1.00	23a	SUST	1819	16700
	TR:Amb to T1{1}	391	342	14	7	1.00	1.00	1.00	1.00	(17)	DISP	2561	25050
	Amb to T1{1}	391	342	14	7	1.00	1.00	1.00	1.00	(17)	DISP	2561	25050
	Sus. + E1{1}	4	73	13	3	1.00	1.00			23a	OCC	1923	22211
	Sus. + E2{1}	1	77	12	4	1.00	1.00			23a	OCC	1933	22211
	Sus. + E3{1}	2	67	12	3	1.00	1.00			23a	OCC	1899	22211
	Sus. + E4{1}	8	69	13	3	1.00	1.00			23a	OCC	1915	22211
	Sus. + E5{1}	8	69	13	3	1.00	1.00			23a	OCC	1915	22211
	Sus. + E6{1}	2	67	12	3	1.00	1.00			23a	OCC	1899	22211
	Sus. + E7{1}	1	77	12	4	1.00	1.00			23a	OCC	1933	22211
	Sus. + E8{1}	4	73	13	3	1.00	1.00			23a	OCC	1923	22211

242-A Sustained and Seismic
10/10/2019 2018719 BENTLEY
01:36 PM AutoPIPE Nuclear 12.00.00.16 RESULT PAGE 34

ASME B31.3 (2016) CODE COMPLIANCE
(Moments in ft-lb , Force in lbf) (Stress in psi)

Point name	Load combination	Axial Force	In-Pl. Moment	Out-Pl. Moment	Torsion Moment	S.I.F In	S.I.F Out	Index/SIF Ax.	Index/SIF Tor.	Eq. no.	Load type	Code Stress	Code Allow.
B07 N+	Max P{1}									(3a)	HOOP	3644	16700
	GR + Max P{1}	2948	66	1	2	1.33	1.11	1.00	1.00	23a	SUST	1974	16700
	TR:Amb to T1{1}	391	342	14	7	1.78	1.48	1.00	1.00	(17)	DISP	4412	25050
	Amb to T1{1}	391	342	14	7	1.78	1.48	1.00	1.00	(17)	DISP	4412	25050
	Sus. + E1{1}	4	73	13	3	1.33	1.11			23a	OCC	2095	22211
	Sus. + E2{1}	1	77	12	4	1.33	1.11			23a	OCC	2114	22211
	Sus. + E3{1}	2	67	12	3	1.33	1.11			23a	OCC	2063	22211
	Sus. + E4{1}	8	69	13	3	1.33	1.11			23a	OCC	2082	22211
	Sus. + E5{1}	8	69	13	3	1.33	1.11			23a	OCC	2082	22211
	Sus. + E6{1}	2	67	12	3	1.33	1.11			23a	OCC	2063	22211
	Sus. + E7{1}	1	77	12	4	1.33	1.11			23a	OCC	2114	22211
	Sus. + E8{1}	4	73	13	3	1.33	1.11			23a	OCC	2095	22211
B07 F-	Max P{1}									(3a)	HOOP	3644	16700
	GR + Max P{1}	2913	81	2	1	1.33	1.11	1.00	1.00	23a	SUST	2100	16700
	TR:Amb to T1{1}	328	319	2	18	1.78	1.48	1.00	1.00	(17)	DISP	4094	25050
	Amb to T1{1}	328	319	2	18	1.78	1.48	1.00	1.00	(17)	DISP	4094	25050
	Sus. + E1{1}	6	91	5	16	1.33	1.11			23a	OCC	2249	22211
	Sus. + E2{1}	9	95	5	14	1.33	1.11			23a	OCC	2269	22211
	Sus. + E3{1}	1	82	5	14	1.33	1.11			23a	OCC	2196	22211
	Sus. + E4{1}	4	83	5	16	1.33	1.11			23a	OCC	2212	22211
	Sus. + E5{1}	4	83	5	16	1.33	1.11			23a	OCC	2212	22211
	Sus. + E6{1}	1	82	5	14	1.33	1.11			23a	OCC	2196	22211
	Sus. + E7{1}	9	95	5	14	1.33	1.11			23a	OCC	2269	22211
	Sus. + E8{1}	6	91	5	16	1.33	1.11			23a	OCC	2249	22211
B07 F+	Max P{1}									(3a)	HOOP	3644	16700
	GR + Max P{1}	2913	2	81	1	1.00	1.00	1.00	1.00	23a	SUST	1909	16700
	TR:Amb to T1{1}	328	2	319	18	1.00	1.00	1.00	1.00	(17)	DISP	2371	25050
	Amb to T1{1}	328	2	319	18	1.00	1.00	1.00	1.00	(17)	DISP	2371	25050
	Sus. + E1{1}	6	5	91	16	1.00	1.00			23a	OCC	2043	22211
	Sus. + E2{1}	9	5	95	14	1.00	1.00			23a	OCC	2051	22211
	Sus. + E3{1}	1	5	82	14	1.00	1.00			23a	OCC	2004	22211
	Sus. + E4{1}	4	5	83	16	1.00	1.00			23a	OCC	2020	22211
	Sus. + E5{1}	4	5	83	16	1.00	1.00			23a	OCC	2020	22211
	Sus. + E6{1}	1	5	82	14	1.00	1.00			23a	OCC	2004	22211
	Sus. + E7{1}	9	5	95	14	1.00	1.00			23a	OCC	2051	22211
	Sus. + E8{1}	6	5	91	16	1.00	1.00			23a	OCC	2043	22211
B08 N-	Max P{1}									(3a)	HOOP	3644	16700
	GR + Max P{1}	2941	1	21	1	1.00	1.00	1.00	1.00	23a	SUST	1497	16700
	TR:Amb to T1{1}	328	23	513	18	1.00	1.00	1.00	1.00	(17)	DISP	3725	25050
	Amb to T1{1}	328	23	513	18	1.00	1.00	1.00	1.00	(17)	DISP	3725	25050
	Sus. + E1{1}	3	11	32	16	1.00	1.00			23a	OCC	1650	22211
	Sus. + E2{1}	7	8	24	14	1.00	1.00			23a	OCC	1605	22211
	Sus. + E3{1}	2	8	22	14	1.00	1.00			23a	OCC	1602	22211
	Sus. + E4{1}	2	12	28	16	1.00	1.00			23a	OCC	1635	22211
	Sus. + E5{1}	2	12	28	16	1.00	1.00			23a	OCC	1635	22211
	Sus. + E6{1}	2	8	22	14	1.00	1.00			23a	OCC	1602	22211
	Sus. + E7{1}	7	8	24	14	1.00	1.00			23a	OCC	1605	22211
	Sus. + E8{1}	3	11	32	16	1.00	1.00			23a	OCC	1650	22211

242-A Sustained and Seismic
10/10/2019 2018719 BENTLEY
01:36 PM AutoPIPE Nuclear 12.00.00.16 RESULT PAGE 35

ASME B31.3 (2016) CODE COMPLIANCE
(Moments in ft-lb , Force in lbf) (Stress in psi)

Point name	Load combination	Axial Force	In-Pl. Moment	Out-Pl. Moment	Torsion Moment	S.I.F In	S.I.F Out	Index/SIF Ax.	Index/SIF Tor.	Eq. no.	Load type	Code Stress	Code Allow.
B08 N+	Max P{1}									(3a)	HOOP	3644	16700
	GR + Max P{1}	2941	21	1	1	1.33	1.11	1.00	1.00	23a	SUST	1546	16700
	TR:Amb to T1{1}	328	513	23	18	1.78	1.48	1.00	1.00	(17)	DISP	6499	25050
	Amb to T1{1}	328	513	23	18	1.78	1.48	1.00	1.00	(17)	DISP	6499	25050
	Sus. + E1{1}	3	32	11	16	1.33	1.11			23a	OCC	1718	22211
	Sus. + E2{1}	7	24	8	14	1.33	1.11			23a	OCC	1659	22211
	Sus. + E3{1}	2	22	8	14	1.33	1.11			23a	OCC	1654	22211
	Sus. + E4{1}	2	28	12	16	1.33	1.11			23a	OCC	1695	22211
	Sus. + E5{1}	2	28	12	16	1.33	1.11			23a	OCC	1695	22211
	Sus. + E6{1}	2	22	8	14	1.33	1.11			23a	OCC	1654	22211
	Sus. + E7{1}	7	24	8	14	1.33	1.11			23a	OCC	1659	22211
	Sus. + E8{1}	3	32	11	16	1.33	1.11			23a	OCC	1718	22211
B08 F-	Max P{1}									(3a)	HOOP	3644	16700
	GR + Max P{1}	2948	22	1	1	1.33	1.11	1.00	1.00	23a	SUST	1560	16700
	TR:Amb to T1{1}	391	537	22	27	1.78	1.48	1.00	1.00	(17)	DISP	6818	25050
	Amb to T1{1}	391	537	22	27	1.78	1.48	1.00	1.00	(17)	DISP	6818	25050
	Sus. + E1{1}	4	33	16	11	1.33	1.11			23a	OCC	1737	22211
	Sus. + E2{1}	9	24	13	8	1.33	1.11			23a	OCC	1673	22211
	Sus. + E3{1}	5	24	13	8	1.33	1.11			23a	OCC	1672	22211
	Sus. + E4{1}	0	29	16	11	1.33	1.11			23a	OCC	1713	22211
	Sus. + E5{1}	0	29	16	11	1.33	1.11			23a	OCC	1713	22211
	Sus. + E6{1}	5	24	13	8	1.33	1.11			23a	OCC	1672	22211
	Sus. + E7{1}	9	24	13	8	1.33	1.11			23a	OCC	1673	22211
	Sus. + E8{1}	4	33	16	11	1.33	1.11			23a	OCC	1737	22211
B08 F+	Max P{1}									(3a)	HOOP	3644	16700
	GR + Max P{1}	2948	22	1	1	1.00	1.00	1.00	1.00	23a	SUST	1508	16700
	TR:Amb to T1{1}	391	537	22	27	1.00	1.00	1.00	1.00	(17)	DISP	3918	25050
	Amb to T1{1}	391	537	22	27	1.00	1.00	1.00	1.00	(17)	DISP	3918	25050
	Sus. + E1{1}	4	33	16	11	1.00	1.00			23a	OCC	1662	22211
	Sus. + E2{1}	9	24	13	8	1.00	1.00			23a	OCC	1612	22211
	Sus. + E3{1}	5	24	13	8	1.00	1.00			23a	OCC	1611	22211
	Sus. + E4{1}	0	29	16	11	1.00	1.00			23a	OCC	1646	22211
	Sus. + E5{1}	0	29	16	11	1.00	1.00			23a	OCC	1646	22211
	Sus. + E6{1}	5	24	13	8	1.00	1.00			23a	OCC	1611	22211
	Sus. + E7{1}	9	24	13	8	1.00	1.00			23a	OCC	1612	22211
	Sus. + E8{1}	4	33	16	11	1.00	1.00			23a	OCC	1662	22211
B09	Max P{1}									(3a)	HOOP	3644	16700
	GR + Max P{1}	2948	30	1	1	1.00	1.00	1.00	1.00	23a	SUST	1565	16700
	TR:Amb to T1{1}	391	436	26	27	1.00	1.00	1.00	1.00	(17)	DISP	3224	25050
	Amb to T1{1}	391	436	26	27	1.00	1.00	1.00	1.00	(17)	DISP	3224	25050
	Sus. + E1{1}	4	42	16	11	1.00	1.00			23a	OCC	1720	22211
	Sus. + E2{1}	10	34	13	8	1.00	1.00			23a	OCC	1668	22211
	Sus. + E3{1}	6	32	13	8	1.00	1.00			23a	OCC	1662	22211
	Sus. + E4{1}	0	36	16	11	1.00	1.00			23a	OCC	1700	22211
	Sus. + E5{1}	0	36	16	11	1.00	1.00			23a	OCC	1700	22211
	Sus. + E6{1}	6	32	13	8	1.00	1.00			23a	OCC	1662	22211
	Sus. + E7{1}	10	34	13	8	1.00	1.00			23a	OCC	1668	22211
	Sus. + E8{1}	4	42	16	11	1.00	1.00			23a	OCC	1720	22211

242-A Sustained and Seismic
10/10/2019 2018719 BENTLEY
01:36 PM AutoPIPE Nuclear 12.00.00.16 RESULT PAGE 36

ASME B31.3 (2016) CODE COMPLIANCE
(Moments in ft-lb , Force in lbf) (Stress in psi)

Point name	Load combination	Axial Force	In-Pl. Moment	Out-Pl. Moment	Torsion Moment	S.I.F In	S.I.F Out	Index/SIF Ax.	Index/SIF Tor.	Eq. no.	Load type	Code Stress	Code Allow.
B10 N-	Max P{1}									(3a)	HOOP	3644	16700
	GR + Max P{1}	2948	36	2	1	1.00	1.00	1.00	1.00	23a	SUST	1605	16700
	TR:Amb to T1{1}	391	232	50	27	1.00	1.00	1.00	1.00	(17)	DISP	1833	25050
	Amb to T1{1}	391	232	50	27	1.00	1.00	1.00	1.00	(17)	DISP	1833	25050
	Sus. + E1{1}	11	49	6	11	1.00	1.00			23a	OCC	1731	22211
	Sus. + E2{1}	16	48	4	8	1.00	1.00			23a	OCC	1716	22211
	Sus. + E3{1}	13	43	4	8	1.00	1.00			23a	OCC	1681	22211
	Sus. + E4{1}	7	44	6	11	1.00	1.00			23a	OCC	1703	22211
	Sus. + E5{1}	7	44	6	11	1.00	1.00			23a	OCC	1703	22211
	Sus. + E6{1}	13	43	4	8	1.00	1.00			23a	OCC	1681	22211
	Sus. + E7{1}	16	48	4	8	1.00	1.00			23a	OCC	1716	22211
	Sus. + E8{1}	11	49	6	11	1.00	1.00			23a	OCC	1731	22211
B10 N+	Max P{1}									(3a)	HOOP	3644	16700
	GR + Max P{1}	2948	36	2	1	1.33	1.11	1.00	1.00	23a	SUST	1689	16700
	TR:Amb to T1{1}	391	232	50	27	1.78	1.48	1.00	1.00	(17)	DISP	3090	25050
	Amb to T1{1}	391	232	50	27	1.78	1.48	1.00	1.00	(17)	DISP	3090	25050
	Sus. + E1{1}	11	49	6	11	1.33	1.11			23a	OCC	1841	22211
	Sus. + E2{1}	16	48	4	8	1.33	1.11			23a	OCC	1828	22211
	Sus. + E3{1}	13	43	4	8	1.33	1.11			23a	OCC	1779	22211
	Sus. + E4{1}	7	44	6	11	1.33	1.11			23a	OCC	1800	22211
	Sus. + E5{1}	7	44	6	11	1.33	1.11			23a	OCC	1800	22211
	Sus. + E6{1}	13	43	4	8	1.33	1.11			23a	OCC	1779	22211
	Sus. + E7{1}	16	48	4	8	1.33	1.11			23a	OCC	1828	22211
	Sus. + E8{1}	11	49	6	11	1.33	1.11			23a	OCC	1841	22211
B10 F-	Max P{1}									(3a)	HOOP	3644	16700
	GR + Max P{1}	2994	20	1	2	1.33	1.11	1.00	1.00	23a	SUST	1564	16700
	TR:Amb to T1{1}	328	208	31	54	1.78	1.48	1.00	1.00	(17)	DISP	2767	25050
	Amb to T1{1}	328	208	31	54	1.78	1.48	1.00	1.00	(17)	DISP	2767	25050
	Sus. + E1{1}	1	29	8	3	1.33	1.11			23a	OCC	1663	22211
	Sus. + E2{1}	2	28	4	8	1.33	1.11			23a	OCC	1650	22211
	Sus. + E3{1}	6	25	4	8	1.33	1.11			23a	OCC	1629	22211
	Sus. + E4{1}	3	26	8	3	1.33	1.11			23a	OCC	1643	22211
	Sus. + E5{1}	3	26	8	3	1.33	1.11			23a	OCC	1643	22211
	Sus. + E6{1}	6	25	4	8	1.33	1.11			23a	OCC	1629	22211
	Sus. + E7{1}	2	28	4	8	1.33	1.11			23a	OCC	1650	22211
	Sus. + E8{1}	1	29	8	3	1.33	1.11			23a	OCC	1663	22211
B10 F+	Max P{1}									(3a)	HOOP	3644	16700
	GR + Max P{1}	2994	1	20	2	1.00	1.00	1.00	1.00	23a	SUST	1517	16700
	TR:Amb to T1{1}	328	31	208	54	1.00	1.00	1.00	1.00	(17)	DISP	1656	25050
	Amb to T1{1}	328	31	208	54	1.00	1.00	1.00	1.00	(17)	DISP	1656	25050
	Sus. + E1{1}	1	8	29	3	1.00	1.00			23a	OCC	1595	22211
	Sus. + E2{1}	2	4	28	8	1.00	1.00			23a	OCC	1589	22211
	Sus. + E3{1}	6	4	25	8	1.00	1.00			23a	OCC	1574	22211
	Sus. + E4{1}	3	8	26	3	1.00	1.00			23a	OCC	1582	22211
	Sus. + E5{1}	3	8	26	3	1.00	1.00			23a	OCC	1582	22211
	Sus. + E6{1}	6	4	25	8	1.00	1.00			23a	OCC	1574	22211
	Sus. + E7{1}	2	4	28	8	1.00	1.00			23a	OCC	1589	22211
	Sus. + E8{1}	1	8	29	3	1.00	1.00			23a	OCC	1595	22211

242-A Sustained and Seismic
10/10/2019 2018719 BENTLEY
01:36 PM AutoPIPE Nuclear 12.00.00.16 RESULT PAGE 37

ASME B31.3 (2016) CODE COMPLIANCE
(Moments in ft-lb , Force in lbf) (Stress in psi)

Point name	Load combination	Axial Force	In-Pl. Moment	Out-Pl. Moment	Torsion Moment	S.I.F In	S.I.F Out	Index/SIF Ax.	Index/SIF Tor.	Eq. no.	Load type	Code Stress	Code Allow.
B11 N	Max P{1}									(3a)	HOOP	3644	16700
	GR + Max P{1}	3000	1	8	2	1.00	1.00	1.00	1.00	23a	SUST	1436	16700
	TR:Amb to T1{1}	328	36	46	54	1.00	1.00	1.00	1.00	(17)	DISP	671	25050
	Amb to T1{1}	328	36	46	54	1.00	1.00	1.00	1.00	(17)	DISP	671	25050
	Sus. + E1{1}	2	4	12	3	1.00	1.00			23a	OCC	1469	22211
	Sus. + E2{1}	2	3	9	8	1.00	1.00			23a	OCC	1482	22211
	Sus. + E3{1}	7	3	10	8	1.00	1.00			23a	OCC	1484	22211
	Sus. + E4{1}	3	4	11	3	1.00	1.00			23a	OCC	1464	22211
	Sus. + E5{1}	3	4	11	3	1.00	1.00			23a	OCC	1464	22211
	Sus. + E6{1}	7	3	10	8	1.00	1.00			23a	OCC	1484	22211
	Sus. + E7{1}	2	3	9	8	1.00	1.00			23a	OCC	1482	22211
	Sus. + E8{1}	2	4	12	3	1.00	1.00			23a	OCC	1469	22211

*** Segment B end ***

R E S U L T S U M M A R Y

Maximum restraint forces (lb)

Maximum X :	419	Point : B00	Load Comb.: GT1P1{1}
Maximum Y :	-491	Point : B00	Load Comb.: GT1P1{1}
Maximum Z :	-27	Point : A14	Load Comb.: GE6{1}
Max. total:	646	Point : B00	Load Comb.: GT1P1{1}

Maximum restraint moments (ft-lb)

Maximum X :	-86	Point : A14	Load Comb.: GE7{1}
Maximum Y :	25	Point : B13	Load Comb.: GT1P1{1}
Maximum Z :	53	Point : B00	Load Comb.: GE8{1}
Max. total:	89	Point : A13	Load Comb.: GT1P1{1}

R E S U L T S U M M A R Y

Maximum sustained stress

```
Point            : A09 F
Stress    psi    : 2993
Allowable psi    : 16700
Ratio            : 0.18
Load combination : GR + Max P{1}
```

Maximum displacement stress

```
Point            : B08 F
Stress    psi    : 6818
Allowable psi    : 25050
Ratio            : 0.27
Load combination : Max Range
```

Maximum occasional stress

```
Point            : A06
Stress    psi    : 3531
Allowable psi    : 22211
Ratio            : 0.16
Load combination : Sus. + E3{1}
```

Maximum hoop stress

```
Point            : B06 F
Stress    psi    : 3644
Allowable psi    : 16700
Ratio            : 0.22
Load combination : Max P{1}
```

R E S U L T S U M M A R Y

Maximum sustained stress ratio

```
Point            : A09 F
Stress    psi    : 2993
Allowable psi    : 16700
Ratio            : 0.18
Load combination : GR + Max P{1}
```

Maximum displacement stress ratio

```
Point            : B08 F
Stress    psi    : 6818
Allowable psi    : 25050
Ratio            : 0.27
Load combination : Max Range
```

Maximum occasional stress ratio

```
Point            : A06
Stress    psi    : 3531
Allowable psi    : 22211
Ratio            : 0.16
Load combination : Sus. + E3{1}
```

Maximum hoop stress ratio

```
Point            : B06 F
Stress    psi    : 3644
Allowable psi    : 16700
Ratio            : 0.22
Load combination : Max P{1}
```

* * * The system satisfies ASME B31.3 (2016) code requirements * * *
* * * for the selected options * * *

APPENDIX E

****NOT USED****

APPENDIX F

****NOT USED****

APPENDIX G1

FLUID MOMENTUM LOADS AT PUMP STARTUP

Fluid Momentum Loads

Startup of a transfer pump and transfer line flushes will both create fluid momentum loads in the 242-A jumpers. As the pipe is filled with fluid, there will be loads placed on pipe turns as the slug flow changes direction. The magnitude of the load is a function of the fluid mass, flow rate, and velocity. The flow rate of a flush from the AP service water building is limited to 40 gpm, as required by RPP-RPT-58773 Appendix D, requirement D10. The maximum flow rate from the pump will be significantly higher and with denser fluids, therefore the fluid momentum loads from the pump are higher (bounding) than from a transfer line flush. The maximum pump flow rate recorded by the manufacturer is 286 gpm (see Attachment 1). Conservatively assuming an instantaneous pump flow initiation, zero flow to maximum flow, the fluid momentum load on a change in flow direction can be calculated as:

$$F = \frac{\partial M}{\partial t} * V$$

$$\frac{\partial M}{\partial t} = \rho * A * V$$

Therefore,

$$F = \rho * A * V^2$$

Where:

F = Force

ρ = Density (62.4 lbm/ft^3 x 1.6 = 99.84 lbm/ft^3)

A = Area of Pipe (3-inch)

V = Velocity (286 gallons-per minute in 3-inch schedule 40 pipe)

$$V = \frac{286\frac{gal}{min}}{\frac{\pi(3.068\ in)^2}{4}}\left(231\frac{in^3}{gal}\right)\left(\frac{1\ min}{60\ sec}\right)\left(\frac{1\ ft}{12\ in}\right) = 12.41\frac{ft}{sec}$$

$$F = \frac{99.84\frac{lbm}{ft^3} * \pi * \frac{(3.068\ in)^2}{4} * (12.41\frac{ft}{sec})^2}{32.2\frac{lbm * ft}{lbf * sec^2} * 144\frac{in^2}{ft^2}} = 24.5\ lbf$$

The dynamic force of less than 25 pounds acting on a change in flow direction (elbow) during pump startup, pump shutdown, or transfer line flush is small compared to the mass of the piping system and other occasional loads on the pipe. Fluid momentum loads resulting from a pump start, pump shutdown, or transfer line flush are insignificant, bound by other occasional loads, and do not require further analysis.

Attachment 1

Manufacturer Data

HiLine Engineering & Fabrication, Inc.

HEF Curve #	0
Stages	4
Submergence (ft)	1
Pump Length (ft)	46
Bowl Length (ft)	3.33
Tank Press (psia)	14.277

At Exit of Bowl Assembly - Water		HEF-0 Curve Column loss (estimated)
Flow (gpm)	head (ft)	head (ft)
285.6	85	32
273.9	94	31
261.7	103	29
248.9	112	28
234.6	121	26
218.7	130	24
201.9	139	21
182.6	148	19
161.2	157	16
135.9	166	13
106.5	175	9
71.5	184	5
31.7	193	2
0	200	0

APPENDIX G2

CALCULATION OF SEISMIC MULTIPLIERS

Seismic Multipliers

ASME B31.3 requires earthquake loads to be taken into account as described in ASCE 7. The objective of this calculation is to determine the seismic multipliers for input to the AutoPIPE analysis. This analysis was performed per TFC-ENG-STD-06 to SDC-2 criteria in accordance with Section 3.5.5.1. The component response modification factor is modified for limit state C in accordance with TFC-ENG-STD-06, Table 6 (see Attachment 1 of this Appendix). $R_p/1.2 = 6.0/1.2 = 5.0$.

In accordance with ASCE 7, Equation 13.3-1 the seismic force is determined using the following equation:

$$F_p = \frac{0.4 a_p S_{DS} W_p}{\frac{R_p}{I_P}} (1 + 2\frac{z}{h})$$

Where:

F_p= Seismic design force

a_p= Component amplification factor (2.5)

S_{DS}= Seismic response spectra (0.588)

W_p= Component operating weight

R_p= Component response modification factor modified for limit state C (5.0)

I_p= Importance factor (1.5)

z= Maximum elevation with respect to grade

h= Average height of structure with respect to the base

Modifying the equation to solve for a seismic multiplier and given that the attachments are in the same horizontal plane of the piping ("z" is set to zero):

$$F_{multiplier} = \frac{0.4 a_p I_P S_{DS}}{R_p}$$

$$F_{multiplier} = \frac{0.4(2.5)(1.5)(0.588)}{5.0} = 0.176$$

Equations 13-3-2 and 13-3-3, from ASCE 7 for seismic force *not less than/not greater than* respectively, are reduced to provide a multiplier rather than a force. These bounding multipliers become:

$$F_p^{Greater} = 1.6 S_{DS} I_P = 1.6(0.588)(1.5) = 1.411$$

$$F_p^{Less} = 0.3 S_{DS} I_P = 0.3(0.588)(1.5) = 0.265$$

Therefore the value of $F_p = 0.265$ will be used as the seismic multiplier for the horizontal design force.

The concurrent vertical force seismic multiplier as defined in ASCE 7 Section 13.3.1 is determined using the following equation:

$$F_{Vmultiplier} = \pm 0.2 S_{DS} = \pm 0.2(0.588) = \pm 0.118$$

Since the allowable stress design method is being used the seismic load shall be multiplied by 0.7 (ASCE 7, Section 13.1.7), the seismic multipliers are therefore

$$F_{P\ horizontal} = 0.265(0.7) = 0.186$$

$$P_{P\ vertical} = 0.118(0.7) = 0.083$$

Attachment 1.

Email to Jason Engeman providing direction to modify R_p for Limit State C

James P. Harrington

To: Engeman, Jason K
Subject: RE: ASME B31.3 Calculation Comments

From: Langevin, Ann S <ann_s_langevin@rl.gov>
Sent: Thursday, March 12, 2020 2:51 PM
To: Engeman, Jason K <jason_k_engeman@rl.gov>
Cc: Scott, Mark A <mark_a_scott@rl.gov>
Subject: RE: ASME B31.3 Calculation Comments

Jason
As noted in the waiver, Rp needs to be modified in the same way that R is modified for Limit State. They have essentially the same definition in ASCE 7 as follows:

> *R* = response modification coefficient as given in Tables 12.2-1, 12.14-1, 15.4-1, and 15.4-2
>
> *Rp* = component response modification factor that varies from 1.00 to 12 (select appropriate value from Table 13.5-1 or 13.6-1)

Thanks

Ann Langevin, P.E.
Phone: (509) 376-2236
Cell: (509) 554-6852
Office: Room B-132/2620 Fermi Bldg
Ann_S_Langevin@rl.gov

APPENDIX H1

PIPING TO C-CHANNEL WELD ANALYSIS

Piping to C-Channel Weld Analysis

Support:	242-A

For conservatism, worst case loads/reactions will be evaluated. The loads/reactions may not be present at the same node nor under the same loading condition. The loads/reactions on the welds are taken from the AutoPIPE results using the highest absolute value on any given node or member associated with each weld group.

A "weld as a line" method of weld analysis will be used. This process is used to evaluate the area of the weld as a line and determine the weld size from the results. The square root of the sum of the squares of the resultant stresses in the primary directions (X, Y & Z) is found, providing the resultant stress to evaluate the weld group. A byproduct of the weld as a line process is a missing dimension (in); for instance, area will have units of inches and moment of inertia will have units of in^3. Refer to Blodgett's for weld as a line methodology.

The weld length is conservatively based on the outside diameter of the pipe rather than the arc length.

Allowable weld stress is 0.3*UTSweld filler per or 0.4*YSbase metal per AWS D1.6 Table 2.1.

Weld filler metal is 70ksi ultimate tensile strength per AWS D1.6, Table 3.3.

Define values used repetitively

Weld filler ultimate tensile strength, minimum	E70XX	$= UTS_{weldfiller}$ =	**70000**	psi
Fillet weld, max allowable stress		$= 0.3 * UTS_{weldfiller}$ =	21000	psi
Stainless steel yield strength, minimum	A312	$= YS_{basemetal}$ =	**25000**	psi
Fillet weld, max allowable stress		$= 0.4 * YS_{basemetal}$ =	10000	psi

Use base metal allowable for fillet weld max allowable.

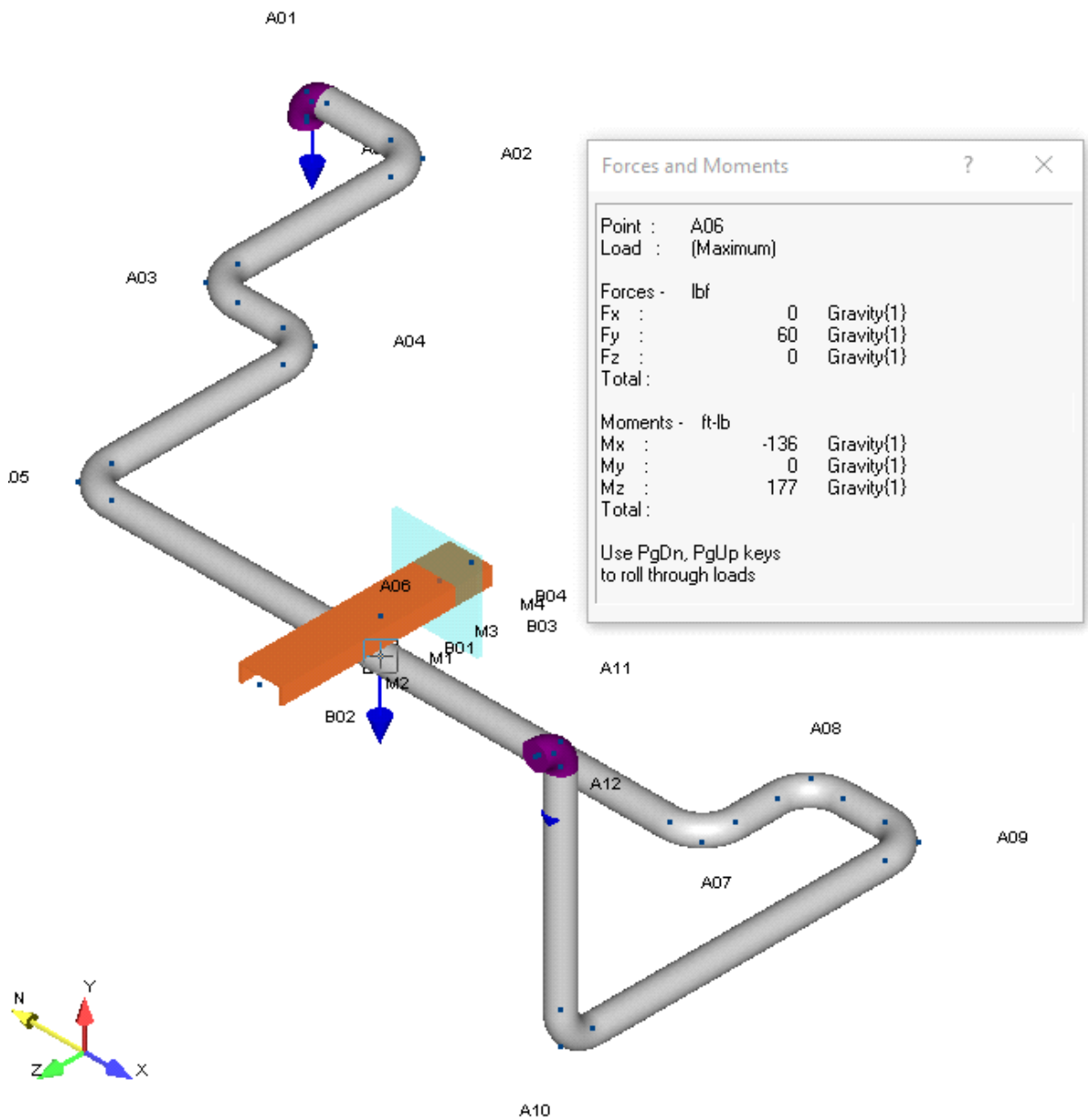

Figure 1. Jumper Assembly 41 to 5 C-Channel Weld Attachment at Point A06.

The Autopipe results at Point A06 are as follows:

$F_x := 0\text{lbf}$ $F_y := 60\text{lbf}$ $F_z := 0\text{lbf}$ $M_x := -136\text{ft}\cdot\text{lbf}$ $M_y := 0\text{ft}\cdot\text{lbf}$ $M_z := 177\text{ft}\cdot\text{lbf}$

Evaluate fillet weld of c-channel (Item 12) to pipe (Item 11)		41 to 5
The worst case has been evaluated for adequacy.		242-A
Reference Drawing:	H-14-111834	
Reference Detail/Sheet:	Section A, Sheet 2	
Item Numbers:	Items 11 and 12	

Weld Group Diagram

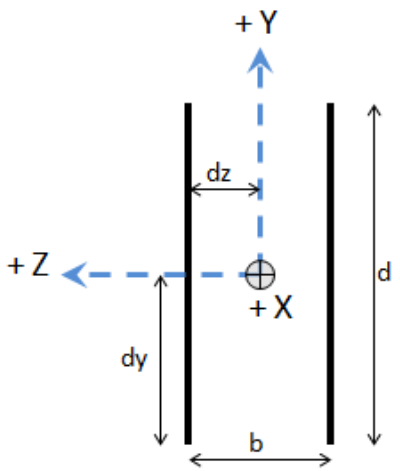

d = 2.375 in
b = 4 in

Determine Weld Group CG location

$d_y = d/2$ 1.19 in
$d_z = b/2$ 2.00 in

Determine mass properties of weld group

Line	Length (in)	I_{yo} (in^3)	I_{zo} (in^3)	About Z-Axis $L(d_y)^2$	About Y-Axis $L(d_z)^2$	$I_z = I_{zo} + L(d_y)^2$ (in^3)	$I_y = I_{yo} + L(d_z)^2$ (in^3)
L1	2.38	0.000	1.116	0.000	9.500	1.116	9.500
L2	2.38	0.000	1.116	0.000	9.500	1.116	9.500
					Total	2.233	19.000
A_w=	4.75 in				I_p =	21.233	in^3

Determine resultant stress on weld group

Input from AutoPIPE									
Loads from AutoPIPE, transposed as necessary to align with weld group coordinate system			**Node**	**From Direction**	**Section**	**Stress** (lb/in)	**Basis**	**Influenced Direction**	**Resultant Stress, SRSS** (lb/in)
Px=	60	lbs.	A06	Y	N/A	12.6	Px/Aw	X	
Py=	0	lbs.	A06	Z	N/A	0.0	Py/Aw	Y	
Pz=	0	lbs.	A06	X	N/A	0.0	Pz/Aw	Z	
Mx_y=	0	in-lbs.	A06	MY	N/A	0.0	Mx*dz/Ip	Y	**103.6**
Mx_z=	0	in-lbs.	A06	MY	N/A	0.0	Mx*dy/Ip	Z	
My=	177	in-lbs.	A06	MZ	N/A	18.6	My*dz/Iy	X	
Mz=	136	in-lbs.	A06	MX	N/A	72.3	Mz*dy/Iz	X	

Determine minimum allowable weld size (W)

$\sigma_r = (0.707)(W)(F_w)$ Solve for W: $W = (\sigma_r)/(0.707Fw) =$ 0.015 in

The 0.1875 inch weld is adequate

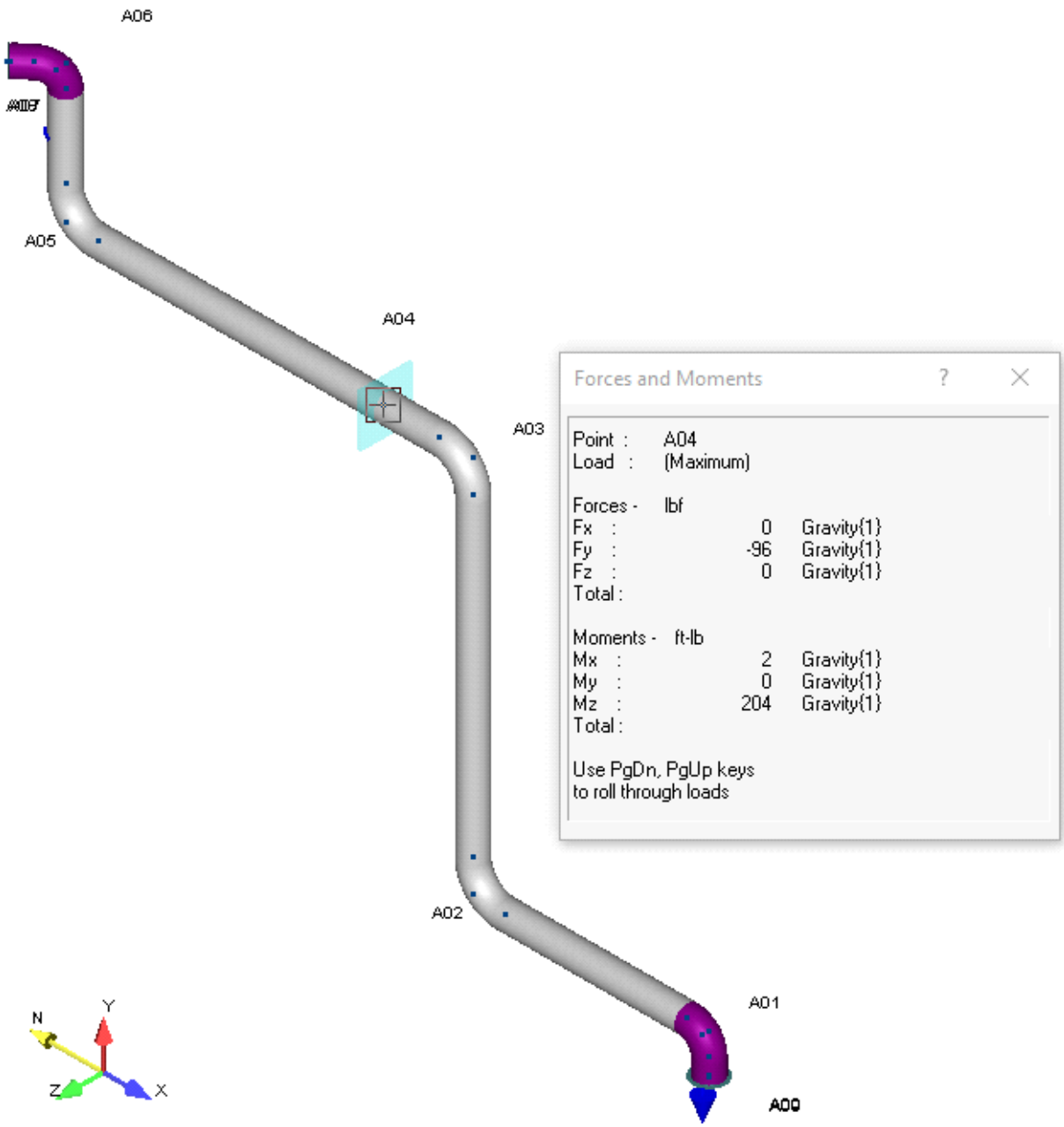

Figure 2. Jumper Assembly 43 to 13A C-Channel Weld Attachment at Point A04.

The Autopipe results at Point A04 are as follows:

$F_x := 0\text{lbf}$ $F_y := -96\text{lbf}$ $F_z := 0\text{lbf}$ $M_x := 2\text{ft}\cdot\text{lbf}$ $M_y := 0\text{ft}\cdot\text{lbf}$ $M_z := 204\text{ft}\cdot\text{lbf}$

Evaluate fillet weld of c-channel (Item 12) to pipe (Item 11)		43 to 13A
The worst case has been evaluated for adequacy.		242-A
Reference Drawing:	H-14-111835	
Reference Detail/Sheet:	Section A, Sheet 2	
Item Numbers:	Items 11 and 12	

Weld Group Diagram

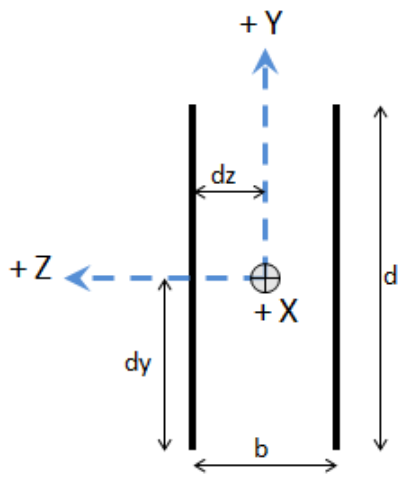

d = 3.5 in
b = 4 in

Determine Weld Group CG location

d_y=d/2 1.75 in
d_z=b/2 2.00 in

Determine mass properties of weld group

Line	Length (in)	I_{yo} (in^3)	I_{zo} (in^3)	About Z-Axis $L(d_y)^2$	About Y-Axis $L(d_z)^2$	$I_z=I_{zo}+L(d_y)^2$ (in^3)	$I_y=I_{yo}+L(d_z)^2$ (in^3)
L1	3.50	0.000	3.573	0.000	14.000	3.573	14.000
L2	3.50	0.000	3.573	0.000	14.000	3.573	14.000
					Total	7.146	28.000
A_w=	7.00 in				I_p =	35.146	in^3

Determine resultant stress on weld group

Input from AutoPIPE									
Loads from AutoPIPE, transposed as necessary to align with weld group coordinate system			**Node**	**From Direction**	**Section**	**Stress** (lb/in)	**Basis**	**Influenced Direction**	**Resultant Stress, SRSS** (lb/in)
Px=	96	lbs.	A04	Y	N/A	13.7	Px/Aw	X	
Py=	0	lbs.	A04	Z	N/A	0.0	Py/Aw	Y	
Pz=	0	lbs.	A04	X	N/A	0.0	Pz/Aw	Z	
Mx_y=	0	in-lbs.	A04	MY	N/A	0.0	Mx*dz/Ip	Y	**28.8**
Mx_z=	0	in-lbs.	A04	MY	N/A	0.0	Mx*dy/Ip	Z	
My=	204	in-lbs.	A04	MZ	N/A	14.6	My*dz/Iy	X	
Mz=	2	in-lbs.	A04	MX	N/A	0.5	Mz*dy/Iz	X	

Determine minimum allowable weld size (W)

$\sigma_r = (0.707)(W)(F_w)$ Solve for W: $W = (\sigma_r)/(0.707Fw) =$ 0.004 in

The 0.1875 inch weld is adequate

APPENDIX H2

LIFTING BAIL WELD ANALYSIS

Lifting Bail Weld Analysis

Two new jumpers are to be installed in the 242-A evaporator pump room. The jumper assemblies are balanced to be picked from a single lifting bail. The jumpers utilize lifting bail, H-2-90161-060, *Standard Rigid Lifting Bails*, which is rated for 340 pounds. Per the requirements of RPP-8360, Section 6.3.3 4, the jumper assembly design weight shall include a 25% dynamic and 5% contingency factor increase.

The lifting bail welded attachment is located at the jumper center of gravity by design. The bail is welded to the jumper c-channel dunnage in two places with a 3/16-inch fillet weld in accordance with AWS D1.6. The strength of the weld is governed by the weaker of the joined materials. The lifting bail plate is fabricated from ASTM A276 and the jumper structural dunnage is fabricated using ASTM A276. The weld is only stressed during installation and removal and is placed in pure tension. The allowable stress on the weld is lesser of 30% of the tensile strength of the filler metal or 40% of the yield strength of the base metal (AWS D1.6, Table 2.1); 21 ksi and 10 ksi, respectively. The 242-A jumpers are lifted using an H-2-90161, item 6 lifting bail having a rated vertical lifting capacity of 340 lbs. For conservatism, the weld requirement calculation for the lift bail is based on the rated capacity of the lift bail versus the jumper weight.

Define variables

$F_{T_filler} := 70ksi$ — Minimum tensile strength of weld filler (AWS D1.6, Table 3.3)

$F_{Y_A276} := 25ksi$ — Minimum yield strength of ASTM A276 TP 304L (ASTM A276)

$F_{Y_A312} := 25ksi$ — Minimum yield strength of ASTM A312 TP 304L (ASTM A312)

$\sigma_{all} := \min(0.3 \cdot F_{T_filler}, 0.4 \cdot F_{Y_A276}, 0.4 \cdot F_{Y_A312})$

$\sigma_{all} = 10 \cdot ksi$ — Allowable weld stress (AWS D1.6, Table 2.1)

$P_{rated} := 340lbf$ — Rated capacity of lift bail (H-2-90161)

$W_1 := 135lbf$ — Calculated weight of 41 to 5 jumper assembly (App D1-1)

$W_2 := 183lbf$ — Calculated weight of 43 to 13A jumper assembly (App D1-2)

$W_{D1} := W_1 \cdot 1.05 \cdot 1.25 = 177.19\,lbf$ — Design weight of 41 to 5 jumper assembly

$W_{D2} := W_2 \cdot 1.05 \cdot 1.25 = 240.19\,lbf$ — Design weight of 43 to 13A jumper assembly

Determine the lift bail design margin based on jumper assembly weight

$DM_1 := \frac{P_{rated}}{W_{D1}} = 1.92$ — Lift bail design margin for 41 to 5 jumper

$DM_2 := \frac{P_{rated}}{W_{D2}} = 1.42$ — Lift bail design margin for 43 to 13A jumper

Determine the minimum weld size for the lift bail to c-channel welds

$w := \frac{3}{16}in$ Fillet weld size

$w_{eff} := w \cdot \frac{\sqrt{2}}{2} = 0.133 \cdot in$ Effective fillet weld size

$A_{w_req} := \frac{P_{rated}}{\sigma_{all}} = 0.034 \cdot in^2$ Required weld area

$w_{L_1} := 2 \cdot 4in = 8 \cdot in$ Weld length for 41 to 5 lift bail

$w_{L_2} := 2 \cdot 4in = 8 \cdot in$ Weld length for 43 to 13A lift bail

$w_{min_1} := \frac{A_{w_req}}{w_{L_1}} = 0.004 \cdot in$ Minimum weld size for 41 to 5 lift bail

$w_{min_2} := \frac{A_{w_req}}{w_{L_2}} = 0.004 \cdot in$ Minimum weld size for 43 to 13A lift bail

$DM_w_1 := \frac{w_{eff}}{w_{min_1}} = 31.20$ Design margin for 41 to 5 lift bail weld

$DM_w_2 := \frac{w_{eff}}{w_{min_2}} = 31.20$ Design margin for 43 to 13A lift bail weld

Determine the design ratio for the lift bail welded attachment relative to the weight of the jumpers

$DR_1 := DM_1 \cdot DM_w_1 = 59.86$ Design ratio for R1-A-(B) lift bail weld

$DR_2 := DM_2 \cdot DM_w_2 = 44.16$ Design ratio for R14-R15-(A) lift bail weld

APPENDIX I1

PUREX CONNECTOR REACTION FORCES AND MOMENTS

Reactions on PUREX Connections

Sustained loading of the 242-A piping imparts forces and moments on the PUREX connections in the jumpers. Piping imparted loads were acquired from AutoPIPE at the PUREX connection locations. Reaction forces were determined from the "worst case" results acquired from AutoPIPE output (Appendix D5).
The 2-inch PUREX connector allowable stress is determined by the application of a 400 pound load in three directions and a 350 foot-pound load in two directions as documented in RPP-RPT-36800, *Qualification of 2-in. PUREX Connector to ASME B31.3*.
Table I1-1 identifies the 3-inch PUREX connector allowable external loads evaluated in RPP 8359, *Analysis of 3-inch by 3-inch PUREX Type Jumper Connector*, and RPP-RPT-29063, *Qualification of 3 in. PUREX Connector to ASME B31.3* which require comparison to those identified during waste transfer system jumper designs. Use of piping analysis external load outputs requires conversion to the coordinate system shown in Figure I1-1 as used in the RPP-8359 ANSYS model.

Table I1-1. 3-Inch Connector Allowable External Loads.

Nozzle Reaction Component	Reaction Direction	Allowable Nozzle Reaction
F_X	Lateral Force	16,000 lbs
F_Y	Axial Force	12,500 lbs compression (F_{Yc})
		or
		11,250 lbs tension (F_{Yt})
F_Z	Lateral Force	16,000 lbs
M_X	Lateral Moment	750 ft-lbs
M_Y	Torsion	N/A
M_Z	Lateral Moment	750 ft-lbs

$F_{L_3all} := 16000\,lbf$ Allowable lateral force for 3-inch connector

$F_{At_3all} := 11250\,lbf$ Allowable axial tensile force for 3-inch connector

$F_{Ac_3all} := 12500\,lbf$ Allowable axial compressive force for 3-inch connector

$M_{L_3all} := 750\,ft \cdot lbf$ Allowable lateral moment for 3-inch connector

Figure I1-1. Connector Coordinate System.

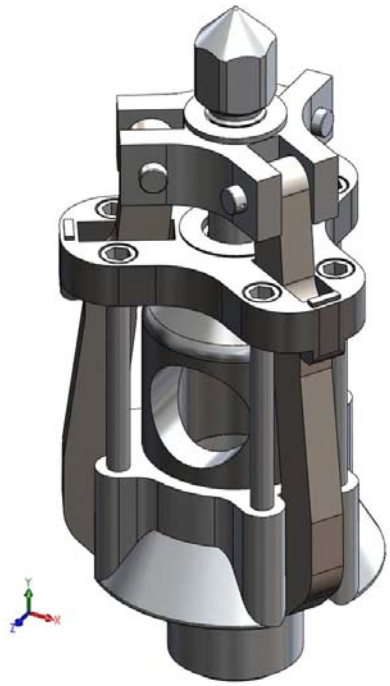

In accordance with RPP-8359 and testing data from RPP-RPT-29063, any combination of the five components of jumper reactions are acceptable if the absolute sum of the ratios of the components of axial force, the lateral force, and the bending moments to the limits shown above is less than 1.0. The two components of lateral force and the two components of bending moments should be combined by the square-root-of-the-sum-of-the-squares (SRSS) method. If axial force (FYt) is tension (decreases the gasket compression), use the value of the applied axial force for FYt and set axial compression force FYc = 0. If the axial force increase the gasket compression, use the value of the applied axial force for FYc and use FYt = 0. The combined loads can be evaluated using the following interaction ratio (IR) equations. IR1 evaluates the connector under tension in the axial direction. IR2 evaluates the connector under compression in the axial direction. IR3 evaluates the connector with combined lateral forces and bending moments.

$$IR_1 = \frac{F_{Yt}}{F_{At_all}} < 1.0$$

Interaction ratio equation for axial tension

$$IR_2 = \frac{F_{Yc}}{F_{Ac_all}} < 1.0$$

Interaction ratio equation for axial compression

$$IR_3 = \frac{|F_{Yt}|}{F_{At_all}} + \frac{\sqrt{F_X^2 + F_Z^2}}{F_{L_all}} + \frac{\sqrt{M_X^2 + M_Z^2}}{M_{L_all}} < 1.0$$

Interaction ratio equation for combined lateral forces and bending moments

Analysis of PUREX Connector Loads

Reaction forces on PUREX Connectors 41, 5, 43 and 13A were determined from AutoPIPE. The coordinate system for the AutoPIPE data reported is shown in Appendix D5. PUREX connector reaction forces and moments for the respective load combinations (e.g. “GTP1”, “Thermal 1”, “GE8” Appendix D5) are shown in Table I1-2 and Table I1-3. Only the highest resultant load combination is presented in Tables I1-2 and I1-3.

Table I1-2. 3-Inch Connector Reaction Forces – AutoPIPE Local Coordinate System.

Location	Point	F_X lbs	F_Y lbs	F_Z lbs	M_X ft-lbs	M_Y ft-lbs	M_Z ft-lbs	Load Combination
Connector 43	B00	491	12	-419	3	-49	12	GT1P1
Connector 13A	B13	285	328	268	0	21	-38	Thermal

Table I1-3. 2-Inch Connector Reaction Forces – AutoPIPE Local Coordinate System.

Location	Point	F_X lbs	F_Y lbs	F_Z lbs	M_X ft-lbs	M_Y ft-lbs	M_Z ft-lbs	Load Combination
Connector 41	A13	84	-26	-31	-2	49	-73	GE5
Connector 5	A14	14	-102	25	-4	21	86	GE7

To evaluate the PUREX connector loads, the forces and moments are converted from the local AutoPIPE coordinate system to the coordinate system defined in RPP-8359 and shown in Figure I1-1.

Table I1-4. 3-Inch Connector Reaction Forces – RPP-8359 Coordinate System.

Location	Point	F_X lbs	F_Y lbs	F_Z lbs	M_X ft-lbs	M_Y ft-lbs	M_Z ft-lbs
Connector 43	B00	-419	-491	12	12	-3	-49
Connector 13A	B13	268	-285	328	-38	0	21

Table I1-5. 2-Inch Connector Reaction Forces – RPP-8359 Coordinate System.

Location	Point	F_X lbs	F_Y lbs	F_Z lbs	M_X ft-lbs	M_Y ft-lbs	M_Z ft-lbs
Connector 41	A13	-31	-84	-26	-73	2	49
Connector 5	A14	25	-14	-102	86	4	21

The 2-inch connector maximum forces and moments are all below the 400 pound allowable force and 350 foot-pound allowable moment loads defined in RPP-RPT-36800. The maximum force on a 2-inch connector is 102 pounds and occurs on connector 5 in the 242AB-WT-J-[41 to 5] jumper. The maximum moment on a 2-inch connector is 86 foot-pounds and occurs on connector 5 in the 242AB-WT-J-[41 to 5] jumper.

The 3-inch connectors are evaluated using the interaction equations defined in RPP-8359.

Define the forces and moments on the 3-inch connectors using the values from Table I1-4.

$$F_{Yt_3} := \begin{pmatrix} 0 \\ 0 \end{pmatrix} \cdot lbf \qquad F_{Yc_3} := \begin{pmatrix} 491 \\ 285 \end{pmatrix} \cdot lbf \qquad F_{X_3} := \begin{pmatrix} 419 \\ 268 \end{pmatrix} \cdot lbf \qquad F_{Z_3} := \begin{pmatrix} 12 \\ 328 \end{pmatrix} \cdot lbf$$

$$M_{X_3} := \begin{pmatrix} 12 \\ 38 \end{pmatrix} \cdot ft \cdot lbf \qquad M_{Z_3} := \begin{pmatrix} 49 \\ 21 \end{pmatrix} \cdot ft \cdot lbf$$

$$IR_{1_3} := \frac{F_{Yt_3}}{F_{At_3all}} = \begin{pmatrix} 0 \\ 0 \end{pmatrix}$$ **Interaction ratio < 1.0, OK**

$$IR_{2_3} := \frac{F_{Yc_3}}{F_{Ac_3all}} = \begin{pmatrix} 0.039 \\ 0.023 \end{pmatrix}$$ **Interaction ratio < 1.0, OK**

$$IR_{3_3} := \frac{F_{Yt_3}}{F_{At_3all}} + \frac{\sqrt{F_{X_3}^2 + F_{Z_3}^2}}{F_{L_3all}} + \frac{\sqrt{M_{X_3}^2 + M_{Z_3}^2}}{M_{L_3all}} = \begin{pmatrix} 0.093 \\ 0.084 \end{pmatrix}$$ **Interaction ratio < 1.0, OK**

The loading on the 3-inch PUREX connectors is within allowable to maintain leak integrity. The maximum loading is 9% of the allowable loading and occurs on Connector 43 in the 242A-WT-J-[43 to 13A] jumper.

```
242-A  Sustained and Seismic
10/10/2019 2018719                                                                    BENTLEY
11:09 AM                                                                              AutoPIPE Nuclear 12.00.00.16
```

```
        *                             *******   **  *******   *******
       ***               **           **    **  **  **    **  **
      ** **             ******         **    **  **  **    **  **
     **   **    **   **  **   *****   *******   **  *******   *****
    *********   **   **  **  **   **  **        **  **        **
   **       **  **   **  **  **   **  **        **  **        **
  **         **  *****   **   *****   **        **  **        *******
```

Pipe Stress Analysis and Design Program

Version: 12.00.00.16

Edition: Nuclear

Developed and Maintained by

BENTLEY SYSTEMS, INCORPORATED
1065 N. PACIFIC CENTER DRIVE, SUITE 450
ANAHEIM, CA 92806

```
************************************************************
**                                                        **
**              AUTOPIPE SYSTEM INFORMATION               **
**                                                        **
************************************************************
```

SYSTEM NAME : 242-A Sustained and Seismic

PROJECT ID : 2018719

PREPARED BY : _____
JIM HARRINGTON

CHECKED BY : _____
RYAN LANG

1ST APPROVER : _____

2ND APPROVER : _____

PIPING CODE : ASME B31.3

YEAR : 2016

VERTICAL AXIS : Y

AMBIENT TEMPERATURE : 60.0 deg F

COMPONENT LIBRARY : AUTOPIPE

MATERIAL LIBRARY : B313-16

MODEL REVISION NUMBER : 1

242-A Sustained and Seismic
10/10/2019 2018719 BENTLEY
11:09 AM AutoPIPE Nuclear 12.00.00.16

T A B L E O F C O N T E N T S

Forces & Moments..... 1

242-A Sustained and Seismic
10/10/2019 2018719
11:09 AM

BENTLEY
AutoPIPE Nuclear 12.00.00.16 RESULT PAGE 1

L O C A L F O R C E S & M O M E N T S

Point name	Load combination	FORCES (lbf) X	Y	Z	Result	MOMENTS (ft-lb) X	Y	Z	Result
*** Segment A begin ***									
A13	Gravity{1}	77	-6	-9	78	0	41	-64	76
	Thermal 1{1}	7	18	27	33	3	6	-12	14
	Static Seismic 1{1}	-6	-19	-20	28	-2	1	1	2
	Static Seismic 2{1}	-6	12	-16	21	-8	-4	1	10
	Static Seismic 3{1}	-7	-11	18	22	9	-3	10	13
	Static Seismic 4{1}	-7	20	22	31	2	-8	10	12
	Static Seismic 5{1}	7	-20	-22	31	-2	8	-10	12
	Static Seismic 6{1}	7	11	-18	22	-9	3	-10	13
	Static Seismic 7{1}	6	-12	16	21	8	4	-1	10
	Static Seismic 8{1}	6	19	20	28	2	-1	-1	2
	Pressure 1{1}	0	0	0	0	0	0	0	0
	GT1{1}	84	11	18	87	3	47	-76	89
	GE1{1}	71	-25	-30	81	-2	42	-63	76
	GE2{1}	71	5	-25	76	-9	37	-63	74
	GE3{1}	70	-17	9	72	8	39	-54	67
	GE4{1}	70	14	13	72	1	33	-54	64
	GE5{1}	84	-26	-31	93	-2	49	-73	88
	GE6{1}	84	4	-27	88	-9	44	-74	86
	GE7{1}	83	-18	7	85	8	46	-65	79
	GE8{1}	83	13	11	84	1	40	-65	76
	GT1P1{1}	84	12	18	87	3	47	-76	89
A14	Gravity{1}	-6	-93	9	94	3	6	55	55
	Thermal 1{1}	18	7	-27	33	16	-20	12	28
	Static Seismic 1{1}	13	9	-11	19	2	-6	3	7
	Static Seismic 2{1}	-20	8	-15	27	7	-16	-31	35
	Static Seismic 3{1}	21	7	14	26	-7	15	22	27
	Static Seismic 4{1}	-12	7	10	17	-3	5	-12	14
	Static Seismic 5{1}	12	-7	-10	17	3	-5	12	14
	Static Seismic 6{1}	-21	-7	-14	26	7	-15	-22	27
	Static Seismic 7{1}	20	-8	15	27	-7	16	31	35
	Static Seismic 8{1}	-13	-9	11	19	-2	6	-3	7
	Pressure 1{1}	0	0	0	0	0	0	0	0
	GT1{1}	11	-86	-18	89	18	-14	67	71
	GE1{1}	7	-85	-2	85	5	0	58	58
	GE2{1}	-26	-85	-6	89	9	-10	24	27
	GE3{1}	15	-86	23	91	-5	20	77	79
	GE4{1}	-18	-86	19	90	0	11	42	44
	GE5{1}	5	-100	-1	100	5	0	67	67
	GE6{1}	-27	-100	-5	104	10	-9	33	35
	GE7{1}	14	-102	25	106	-4	21	86	88
	GE8{1}	-19	-102	20	106	0	12	52	53
	GT1P1{1}	12	-86	-18	89	19	-15	67	71
*** Segment A end ***									
*** Segment B begin ***									

242-A Sustained and Seismic
10/10/2019 2018719 BENTLEY
11:09 AM AutoPIPE Nuclear 12.00.00.16 RESULT PAGE 2

L O C A L F O R C E S & M O M E N T S

Point name	Load combination	FORCES (lbf) X	Y	Z	Result	MOMENTS (ft-lb) X	Y	Z	Result
B00	Gravity{1}	158	0	-23	160	0	-44	2	44
	Thermal 1{1}	328	12	-391	510	3	-5	10	12
	Static Seismic 1{1}	-14	-24	-22	35	-1	9	-6	11
	Static Seismic 2{1}	-17	23	-16	33	1	7	4	9
	Static Seismic 3{1}	-9	-23	20	31	-1	0	-5	5
	Static Seismic 4{1}	-12	24	25	37	1	-1	6	6
	Static Seismic 5{1}	12	-24	-25	37	-1	1	-6	6
	Static Seismic 6{1}	9	23	-20	31	1	0	5	5
	Static Seismic 7{1}	17	-23	16	33	-1	-7	-4	9
	Static Seismic 8{1}	14	24	22	35	1	-9	6	11
	Pressure 1{1}	4	0	-5	7	0	0	0	0
	GT1{1}	487	12	-414	639	3	-49	12	51
	GE1{1}	145	-24	-44	153	-1	-35	-4	35
	GE2{1}	141	23	-39	148	1	-37	7	37
	GE3{1}	150	-23	-3	151	-1	-44	-3	44
	GE4{1}	146	25	2	148	1	-46	8	46
	GE5{1}	171	-24	-48	179	-1	-43	-3	43
	GE6{1}	167	23	-42	174	0	-44	7	44
	GE7{1}	176	-23	-7	178	-1	-52	-2	52
	GE8{1}	172	25	-1	174	1	-53	8	53
	GT1P1{1}	491	12	-419	646	3	-49	12	51
B13	Gravity{1}	16	-104	16	106	-2	3	24	25
	Thermal 1{1}	285	328	268	510	0	21	-38	43
	Static Seismic 1{1}	-2	8	-36	37	1	-9	-2	9
	Static Seismic 2{1}	-42	4	-5	42	0	6	-9	11
	Static Seismic 3{1}	39	13	2	41	0	-6	5	8
	Static Seismic 4{1}	-1	9	34	35	-1	8	-2	9
	Static Seismic 5{1}	1	-9	-34	35	1	-8	2	9
	Static Seismic 6{1}	-39	-13	-2	41	0	6	-5	8
	Static Seismic 7{1}	42	-4	5	42	0	-6	9	11
	Static Seismic 8{1}	2	-8	36	37	-1	9	2	9
	Pressure 1{1}	4	4	4	7	0	0	-1	1
	GT1{1}	301	225	284	471	-1	24	-14	28
	GE1{1}	14	-96	-20	99	0	-6	22	23
	GE2{1}	-25	-99	11	103	-2	9	15	18
	GE3{1}	55	-91	18	108	-2	-3	29	30
	GE4{1}	16	-94	50	108	-3	12	22	25
	GE5{1}	17	-113	-18	116	-1	-5	26	27
	GE6{1}	-23	-117	14	120	-2	9	19	21
	GE7{1}	58	-108	21	124	-2	-2	33	34
	GE8{1}	18	-112	53	125	-3	12	26	29
	GT1P1{1}	305	229	288	477	-1	25	-14	28

*** Segment B end ***

APPENDIX I2

MINIMUM HYDROSTATIC TEST PRESSURE

Minimum Hydrostatic Test Pressure

Determine the minimum hydrostatic test pressure in accordance with ASME B31.3, Section 345.4.2.

The minimum hydrostatic test pressure is determined in accordance with Section 345.4.2 (a) where the test pressure is not less than 1.5 times the design pressure and Section 345.4.2 (b) where the design temperature is greater than the test temperature. The minimum test pressure is calculated using equation 24.

$$P_T = 1.5 \frac{PS_T}{S}$$ ASME B31.3, Section 345.4.2, equation 24

Where:

P = Internal design gage pressure
P_T = Minimum test gage pressure
S = allowable stress at component design temperature
S_T = allowable stress at test temperature

$P := 400psi$ Design Pressure

Define the yield strength at room temperature for all piping components using ASME B31.3 Table A-1

$S_{Y_304L} := 25ksi$ Yield strength of ASTM A312, A276 and A403, Type 304L

Define the yield strength at design temperature for all piping components using ASME BPV, Section II Pt D, Table Y-1

$F_{Y_304L} := 21.4ksi$ Yield strength at design temperature of ASTM A312, A276 and A403, Type 304L

Define the allowable stress at room temperature for all piping components using ASME B31.3 Table A-1

$S_{T_304L} := 16.7ksi$ Allowable stress at test temperature of ASTM A312, A276 and A403, Type 304L

Determine the allowable stress at design temperature for all piping components per ASME B31.3, Table A-1.

The allowable stress at design temperature listed in ASME B31.3, Table A-1 is printed in italics. Per Table A-1 Note (4a) stress values printed in italics exceed two-thirds of the expected yield strength at temperature and are therefore determined in accordance with Section 302.3.2 (d) (3) and (e).

$$S_304L := \min\left(0.9 \cdot F_{Y_304L}, \frac{2}{3} \cdot S_{Y_304L}\right)$$

$S_304L = 16.67 \cdot ksi$ Allowable stress at design temperature of ASTM A312, A276 and A403, Type 304L

Determine the test gage pressure at room temperature for all piping components per ASME B31.3, Section 345.4.2 (b) using equation 24

$$P_{T_304L} := 1.5 \cdot P \cdot \frac{S_{T_304L}}{S_304L}$$

$$P_{T_304L} = 601 \cdot psi$$

Minimum test gage pressure for ASTM A312, A276 and A403, Type 304L

The calculated allowable stress at design temperature is equal to two-thirds of the yield strength at room temperature. Mathcad carries the decimal place whereas ASME B31.3, Table A-1 rounds the number to the nearest tenth. The ratio of ST to S goes to 1.0 and the minimum test gage pressure is 600 psi.

RPP-CALC-63214
Revision 0

242-A Evaporator Pump Room Jumpers Supporting Analyses

Prepared by

JS Hardman
Columbia Energy and Environmental Services, Inc. for
Washington River Protection Solutions, LLC

Date Published
April 2020

Prepared for the U.S. Department of Energy
Office of River Protection

Contract No. DE-AC27-08RV14800

Columbia Energy AND ENVIRONMENTAL SERVICES

Design Verification Checklist

Doc. Number	Rev.	Title
RPP-CALC-63214	0	242-A Evaporator Pump Room Jumpers Supporting Analyses

Verification Method (Check One)

☒ Review ☐ Alternate Calculation ☐ Qualification Testing

Verification Results

Yes	No	NA	
☒	☐	☐	Design inputs correctly selected and cited and correctly incorporated.
☒	☐	☐	Input data were checked for consistency with original source information.
☐	☐	☒	Design inputs for interfacing organizations are specified
☐	☐	☒	Necessary assumptions are explicit, adequately described and supported.
☐	☐	☒	Unverified assumptions (requiring verification) are clearly identified.
☒	☐	☐	Analytical and technical approaches and results are reasonable and appropriate.
☒	☐	☐	The version or revision of each reference is cited
☒	☐	☐	Design output is reasonable for design inputs
☒	☐	☐	Results and conclusions address all points in the purpose.
☒	☐	☐	Conclusions are consistent with analytical results and applicable limits.
☒	☐	☐	Suitable materials, parts, processes, and inspection and testing criteria specified
☒	☐	☐	All comments have been adequately addressed and dispositioned
☒	☐	☐	Calculations are sufficiently detailed such that a technically qualified person could reproduce the calc.
☒	☐	☐	Design method(s) are appropriately used and documented.
☒	☐	☐	Computer Program(s) are appropriately used and results support design.
☒	☐	☐	For pre-verified computer programs the V&V document is referenced and specific computer used for the calculation is identified

Ensure calculations that use software include a paper printout, microfiche, CD-ROM, or other electronic file of the input data and identification to the computer, computer codes, and versions used, or provide alternate documentation to uniquely and clearly identify the exact coding and execution process.

Checker Name	Signature	Date
Ryan Lang		4/27/2020

Columbia Energy
AND ENVIRONMENTAL SERVICES

Calculation No.:	RPP-CALC-63214	Project No.	2018719
Calculation Title:	242-A Evaporator Pump Room Jumpers Supporting Analyses	Project Title:	242-A Evaporator Slurry Line Replacement

Revision	0		1		2	
Originator	Jeff Hardman	4/27/2020 Date	Name	Date	Name	Date
Checker	Jim Harrington	04/27/2020 Date	Name	Date	Name	Date
Project Manager	Ralph Dunham	4/27/20 Date	Name	Date	Name	Date

ATTACHMENTS

Attachment No.	Title	No. of Pages
	N/A	

AFFECTED DOCUMENTS

Document No.	Document Title	Revision No.
	N/A	

RECORD OF REVISION

Revision No.	Description of Revision
0	Initial Release

TABLE OF CONTENTS

1.0 INTRODUCTION 1

2.0 OBJECTIVE 1

3.0 COMPUTER SOFTWARE 1
3.1 DETERMINATION OF NOZZLE LOCATIONS 1

4.0 RESULTS 3
4.1 DETERMINATION OF NOZZLE LOCATIONS 3

5.0 CONCLUSIONS.....3

6.0 REFERENCES 3

LIST OF TABLES

Table 1. As-Built Nozzle Locations.....2

LIST OF TERMS

Abbreviations and Acronyms

DST	double-shell tank
PUREX	plutonium-uranium extraction

Units

’	foot
”	inch

1.0 INTRODUCTION

Future waste transfers in and out of the 242-A Evaporator are required to support near-term evaporator campaigns to allow for the reduction in total tank waste volume stored in the double-shell tanks (DST). Existing slurry line SL-167 failed a pneumatic pressure test in 2018 and requires replacement. Visual inspection of the back-up slurry line SL-168 revealed more corrosion than observed on SL-167, so SL-168 will require replacement as well. To ensure long-term success of the evaporator, a replacement feed line will also be installed. In support of the new transfer lines and waste routing, the replacement of the 242-A Evaporator jumpers is required.

The analyses contained in this document supplement the ASME B31.3, *Process Piping,* analysis documented in RPP-CALC-63213, *ASME B31.3 Analyses of the 41 to 5 and 43 to 13A Jumpers for the 242-A Evaporator Pump Room.*

Compliance of the replacement jumper with TFC-ENG-STD-22, "Piping, Jumpers and Valves," is demonstrated in RPP-SPEC-63237, *242-A Evaporator Pump Room Design Requirements Compliance Matrix for the 41 to 5 and 43 to 13A Jumper Assemblies*.

2.0 OBJECTIVE

This calculation, in conjunction with RPP-CALC-63213 and RPP-SPEC-63237, documents the basis for the jumper design. This calculation includes the following:

- Determination of nozzle locations

3.0 COMPUTER SOFTWARE

None.

3.1 DETERMINATION OF NOZZLE LOCATIONS

Facility drawings were reviewed to determine the 242-A Evaporator pump room wall nozzles 41 and 43 and intermediate nozzles 5 and 13A locations in preparation of the jumper design. New wall nozzles 41 and 43 will be installed in the 242-A Evaporator pump room wall to support the installation of new transfer lines. The as-designed location for wall nozzles 41 and 43 are used within this document. Following the installation of new wall nozzles 41 and 43, the locations of the nozzles will be verified by laser scan. Update of this calculation may be required based upon the final as-installed locations for the new wall nozzles 41 and 43 and relative locations for the adjoining 242-A Evaporator pump room wall nozzles. Adjustments to the final dimensions of the jumper assemblies may be required.

The as-built nozzle locations for the 242-A Evaporator pump room are contained in Table 1. The As-designed locations for wall nozzles 41 and 43 are identified in ECN-715004, *Core Drill and Install Wall Nozzle 41, 42 and 43 Assemblies at 242-A Evaporator Pump Room*. The

X (East-West), Y (North-South), and Z (Vertical) distances are taken from the datum as shown on H-2-99009, *Piping Jumper Arrangement, Pump Room.*

The locations of intermediate nozzles 5 and 13A are based on the design dimensions from H-2-99043, *Jumper Assembly 21 to 36 P-B-2 Safety Relief Valve*, in conjunction with H-2-836350, *Jumper Assembly (4 to 5/40 to 21)*, and H-14-107263, *Jumper Assembly D to 13A Evaporator Feed.* The locations of the intermediate nozzles 5 and 13A are intended to be verified via the laser scan.

The centerline offset for a 2-inch plutonium-uranium extraction (PUREX) process connector is 2-7/16 inches, as corrected from Section 8.0 of SD-RE-DGS-002, *Jumper Design Guide*.

The centerline offset for a 3-inch PUREX process connector is 3-9/16 inches, as corrected from Section 8.0 of SD-RE-DGS-002.

Table 1. As-Built Nozzle Locations.

Nozzle ID	X (Distance from Datum)	Y (Distance from Datum)	Z (Distance from Datum)
41 (As-Designed)	0’ – 6 0/64”	5’ – 0 0/64”	1’ – 1 32/64”
43 (As-Designed)	0’ – 6 0/64”	7’ – 0 0/64”	1’ – 4 0/64”
5	7’ – 10 38/64”	-0’ – 6 63/64”	3’ – 4 18/64”
13A	4’ – 6 8/64”	3’ – 9 61/64”	5’ – 6 47/64”

Nozzle 41 to Nozzle 5 distance (X direction)

7’	10 38/64”	
-0’	6 0/64”	
7’	4 38/64”	

Nozzle 41 to Nozzle 5 distance (Y direction)

5’	0 0/64”	
+0’	6 63/64”	
-0’	2 28/64”	2” PUREX process connector head centerline offset
5’	4 35/64”	

Nozzle 41 to Nozzle 5 distance (Z direction)

3’	4 18/64”	
-1’	1 32/64”	
-0’	2 28/64”	2” PUREX process connector head centerline offset
2’	0 22/64”	

Nozzle 43 to Nozzle 13A distance (X direction)

4’	6 8/64”	
-0’	6 0/64”	
-0’	3 36/64”	3” PUREX process connector head centerline offset
3’	8 36/64”	

Nozzle 43 to Nozzle 13A distance (Y direction)

7’	0 0/64”	
-3’	9 61/64”	
3’	2 3/64”	

Nozzle 43 to Nozzle 13A distance (Z direction)

5’	6 47/64”	
-1’	4 0/64”	
-0’	3 36/64”	3” PUREX process connector head centerline offset
3’	11 11/64”	

4.0 RESULTS

4.1 DETERMINATION OF NOZZLE LOCATIONS

The jumper design shown in H-14-111834, *Jumper Assembly, 41 to 5, 242-A Pump Room*, and H-14-111835, *Jumper Assembly, 43 to 13A, 242-A Pump Room*, are based on the dimensions determined in Section 3.1.

5.0 CONCLUSIONS

This analysis in conjunction with RPP-CALC-63213 and RPP-SPEC-63237 shows the installation of jumpers 242A-WT-J-[41 to 5] (H-14-111834) and 242A-WT-J-[43 to 13A] (H-14-111835) comply with the applicable procedures and standards.

6.0 REFERENCES

ASME B31.3, 2016, *Process Piping*, American Society of Mechanical Engineers, New York, New York.

ECN-715004, 2020, *Core Drill and Install Wall Nozzle 41, 42 and 43 Assemblies at 242-A Evaporator Pump Room*, Rev. 1, U.S. Department of Energy, Office of River Protection, Richland, Washington.

H-2-99009, 2014, *Piping Jumper Arrangement, Pump Room*, Sheet 1, Rev. 5, U.S. Department of Energy, Office of River Protection, Richland, Washington.

H-2-99009, 2014, *Piping Jumper Arrangement, Pump Room*, Sheet 2, Rev. 0, U.S. Department of Energy, Office of River Protection, Richland, Washington.

H-2-99043, 1992, *Jumper Assembly 21 to 36 P-B-2 Safety Relief Valve*, Sheet 1, Rev. 2, U.S. Department of Energy, Richland Operations Office, Richland, Washington.

H-2-836350, 2014, *Jumper Assembly (4 to 5/40 to21)*, Sheets 1-7, Rev. 1, U.S. Department of Energy, Office of River Protection, Richland, Washington.

H-14-107263, 2014, *Jumper Assembly D to 13A Evaporator Feed*, Sheets 1-2, Rev. 3, U.S. Department of Energy, Office of River Protection, Richland, Washington

H-14-111834, 2020, *Jumper Assembly 41 to 5, 242-A Pump Room*, Sheets 1-2, Rev. 0, U.S. Department of Energy, Office of River Protection, Richland, Washington.

H-14-111835, 2020, *Jumper Assembly 43 to 13A, 242-A Pump Room*, Sheets 1-2, Rev. 0, U.S. Department of Energy, Office of River Protection, Richland, Washington

RPP-CALC-63213, 2020, *ASME B31.3 Analyses of the 41 To 5 and 43 to 13A Jumpers for the 242-A Evaporator Pump Room*, Rev. 0, Washington River Protection Solutions, LLC, Richland, Washington.

RPP-SPEC-63237, 2020, *242-A Evaporator Pump Room Design Requirements Compliance Matrix for the 41 to 5 and 43 to 13A Jumper Assemblies*, Rev. 0, Washington River Protection Solutions, LLC, Richland, Washington.

SD-RE-DGS-002, 1988, *Jumper Design Guide*, Rev. 3, Rockwell Hanford Operations, Richland, Washington.

TFC-ENG-STD-22, 2017, "Piping, Jumpers and Valves," Rev. G-2, Washington River Protection Solutions, LLC, Richland, Washington.

DOCUMENT RELEASE AND CHANGE FORM

Prepared For the U.S. Department of Energy, Assistant Secretary for Environmental Management
By Washington River Protection Solutions, LLC., PO Box 850, Richland, WA 99352
Contractor For U.S. Department of Energy, Office of River Protection, under Contract DE-AC27-08RV14800

TRADEMARK DISCLAIMER: Reference herein to any specific commercial product, process, or service by trade name, trademark, manufacturer, or otherwise, does not necessarily constitute or imply its endorsement, recommendation, or favoring by the United States government or any agency thereof or its contractors or subcontractors. Printed in the United States of America.

Release Stamp

1. **Doc No:** RPP-RPT-61521 **Rev.** 00

2. **Title:**
Material Compatibility Report for Project T1P207, DST Replacement Waste Transfer Lines 241-AW to 242-A Evaporator

3. **Project Number:** T1P207 ☐N/A

4. **Design Verification Required:** ☐Yes ☒No

5. **USQ Number:** ☒ N/A N/A-9

6. **PrHA Number** **Rev.** ☒ N/A

Clearance Review Restriction Type: undefined

7. **Approvals**

Title	Name	Signature	Date
Checker	Hardman, Jeffrey S	*Hardman, Jeffrey S*	05/04/2020
Design Authority	Engeman, Jason K	*Engeman, Jason K*	05/04/2020
Environmental Protection	Heninger, Steve D	*Heninger, Steve D*	04/30/2020
Originator	Campbell, John T	*Campbell, John T*	05/04/2020
Other Approver	Huntington, Nikki L	*Huntington, Nikki L*	05/04/2020
Radiological Control	Franz, James A	*Franz, James A*	04/30/2020
Responsible Manager	Huntington, Matthew R	*Huntington, Matthew R*	05/04/2020
USQ Evaluator	Wheeler, Ronnie	*Wheeler, Ronnie*	05/04/2020

8. **Description of Change and Justification**

Initial release of RPP-RPT-61521 for the Material Compatibility Report for project T1P207, DST Replacement Waste Transfer Lines 241-AW to 242-A Evaporator.

9. **TBDs or Holds** ☒N/A

10. **Related Structures, Systems, and Components**

a. **Related Building/Facilities** ☐N/A	b. **Related Systems** ☐N/A	c. **Related Equipment ID Nos. (EIN)** ☐N/A
241-AW 241-AW-02A 241-AW-02E 241-AW-B 242-A	241-WT	242A-WT-J-[41 TO 5] 242A-WT-J-[43 TO 13A] AW02A-WT-J-[ENC-DR] AW02A-WT-J-[F-Z] AW02A-WT-J-[H-J-L-(X)] AW02A-WT-J-[K-V-Y-2] AW02A-WT-J-[P-R] AW02A-WT-J-[S-T] AW02A-WT-J-[U-X-(Y)] AW02A-WT-J-[W-(Z)-1] AW02A-WT-TKR-101 ((1-2)) AW02A-WT-V-110 AW02A-WT-V-111 AW02A-WT-V-112 AW02A-WT-V-113 AW02A-WT-V-114 AW02A-WT-V-115 AW02A-WT-V-116 AW02A-WT-V-117 AW02A-WT-V-118 AW02A-WT-V-119 AW02A-WT-V-120 AW02A-WT-V-414 AW02A-WT-V-415 AW02A-WT-V-416 AW02E-WT-FCV-160 AW02E-WT-J-[(G)-(H)-PUMP-TKR] AW02E-WT-J-[B-G] AW02E-WT-J-[D-H] AW02E-WT-J-[F-G] AW02E-WT-P-102-1 AW02E-WT-V-107 AW02E-WT-V-108 AW02E-WT-V-109 AWVPB-WT-J-[R14-R15-(A)] AWVPB-WT-J-[R1-A-(B)] AWVPB-WT-J-[R4-B-(C)]

DOCUMENT RELEASE AND CHANGE FORM

Doc No: RPP-RPT-61521 **Rev.** 00

10. **Related Structures, Systems, and Components**

a. **Related Building/Facilities** ☐N/A	b. **Related Systems** ☐N/A	c. **Related Equipment ID Nos. (EIN)** ☐N/A
		AWVPB-WT-J-[R6-R9-C] AWVPB-WT-V-220 AWVPB-WT-V-221 AWVPB-WT-V-222 AWVPB-WT-V-223 AWVPB-WT-V-224 AWVPB-WT-V-225 AWVPB-WT-V-226 AWVPB-WT-V-227 AWVPB-WT-V-228 AWVPB-WT-V-229

11. **Impacted Documents – Engineering** ☒N/A

Document Number	Rev.	Title

12. **Impacted Documents (Outside SPF):**

N/A

13. **Related Documents** ☐N/A

Document Number	Rev.	Title
MT-50400	01	242-A Evaporator Waste Transfer Line Replacement

14. **Distribution**

Name	Organization
Campbell, John T	
Engeman, Jason K	TANK FARM PROJECTS ENGINEERING
Franz, James A	TFP RADCON
Hardman, Jeffrey S	
Heninger, Steve D	RETRVL & CLOSURE/PROJ ENV CMPL
Huntington, Matthew R	TANK FARM PROJECTS ENGINEERING
Huntington, Nikki L	COGNIZANT SYSTEM ENGINEERING

RPP-RPT-61521
Revision 0

Material Compatibility and Corrosion Protection Report for Project T1P207, DST Replacement Waste Transfer Lines 241-AW to 242-A Evaporator

Prepared by

JT Campbell

Columbia Energy & Environmental Services for
Washington River Protection Solutions, LLC

Date Published

April 2020

Prepared for the U.S. Department of Energy

Office of River Protection

Contract No. DE-AC27-08RV14800

MATERIAL COMPATIBILITY AND CORROSION PROTECTION REPORT FOR PROJECT T1P207, DST REPLACEMENT WASTE TRANSFER LINES 241-AW TO 242-A EVAPORATOR

April 2020

Prepared by

Columbia Energy & Environmental Services, Inc.

1806 Terminal Drive

Richland, Washington 99354

(509) 946-7111

prepared for

Washington River Protection Solutions, LLC

TABLE OF CONTENTS

1.0 INTRODUCTION 1

2.0 MATERIAL EVALUATION 1

2.1 242-A PUMP ROOM WALL NOZZLE ASSEMBLIES 2
2.2 AW STRUCTURES WALL NOZZLE ASSEMBLIES 2
2.3 JUMPER ASSEMBLY 41 TO 5, 242-A EVAPORATOR PUMP ROOM 2
2.4 JUMPER ASSEMBLY 43 TO 13A, 242-A EVAPORATOR PUMP ROOM.....2
2.5 JUMPER ASSEMBLY H-J-L-(X), 241-AW-02A PUMP PIT 3
2.6 JUMPER ASSEMBLY U-X-(Y), 241-AW-02A PUMP PIT.....3
2.7 JUMPER ASSEMBLY K-V-Y-2, 241-AW-02A PUMP PIT 4
2.8 JUMPER ASSEMBLY W-(Z)-1, 241-AW-02A PUMP PIT 4
2.9 JUMPER ASSEMBLY F-Z, 241-AW-02A PUMP PIT.....5
2.10 JUMPER ASSEMBLIES ENC-DR, 241-AW-02A PUMP PIT.....5
2.11 TANK RETURN ASSEMBLY TKR-101(1-2), 241-AW-02A PUMP PIT.....5
2.12 JUMPER ASSEMBLY R1-A-(B), 241-AW-B VALVE PIT.....5
2.13 JUMPER ASSEMBLY R4-B-(C), 241-AW-B VALVE PIT 6
2.14 JUMPER ASSEMBLY R6-R9-C, 241-AW-B VALVE PIT.....6
2.15 JUMPER ASSEMBLY R14-R15-(A), 241-AW-B VALVE PIT.....7
2.16 JUMPER ASSEMBLY F-G, 241-AW-02E FEED PUMP PIT.....7
2.17 DST REPLACEMENT TRANSFER LINES 8

3.0 EXTERNAL CORROSION PROTECTION 8

4.0 CONCLUSIONS.....9

5.0 REFERENCES 9

LIST OF APPENDICES

A Email Justification for the Use of EPR in Temperatures At or Above 200°F ..... A-i

LIST OF TERMS

DST	double-shell tank
EPR	ethylene propylene rubber
NaOH	sodium hydroxide
PBM	Pittsburgh Brass Manufacturer
PUREX	plutonium uranium extraction

1.0 INTRODUCTION

This document provides the material compatibility evaluation for the double-shell tank (DST) replacement transfer lines, tank returns, wall nozzles, and jumpers in and between the 241-AW-Tank Farm and 242-A Evaporator. Component chemical compatibility with the waste and corrosion protection ensures that no waste confinement failures or chemical agent hazards occur due to incompatibility or improper selection of the materials.

2.0 MATERIAL EVALUATION

There are multiple pieces of equipment under evaluation for material compatibility as part of this project:

- New wall nozzles
  - 242-A Evaporator pump room
  - AW structures
- 242-A Evaporator pump room jumpers
  - 41 to 5
  - 43 to 13A
- 241-AW-02A pump pit jumpers
  - H-J-L-(X)
  - U-X-(Y)
  - K-V-Y-2
  - W-(Z)-1
  - F-Z
  - ENC-DR
- Tank return (241-AW-02A pump pit)
  - TKR-101(1-2)
- 241-AW-B valve pit jumpers
  - R1-A-(B)
  - R4-B-(C)
  - R6-R9-C
  - R14-R15-(A)
- 241-AW-02E feed pump pit jumper
  - F-G
- DST replacement transfer lines
  - SL-170
  - SL-171
  - SL-172
  - SN-275.

Materials of construction requirements for the primary pressure boundary are contained in engineering standards TFC-ENG-STD-34, *Standard for the Selection of Non-Metallic Materials in Contact with Tank Waste*, and TFC-ENG-STD-22, *Piping, Jumpers, and Valves*.

2.1 242-A Pump Room Wall Nozzle Assemblies

The new 242-A Evaporator pump room wall nozzles, shown on H-14-111832, *Wall Nozzle Assemblies 242-A Pump Room*, are constructed from stainless steel, which is evaluated as compatible with tank waste in accordance with RPP-RPT-42297, *Safety-Significant Waste Transfer Primary Piping – Functions and Requirements Evaluation Document*, and RPP-25153, *Volume 3: IQRPE DST System Integrity Assessment – Waste Compatibility*. The nozzle encasements are constructed from carbon steel, which is evaluated as compatible with tank waste in accordance with RPP-RPT-42297 and RPP-25153. The termination of the nozzle encasements are plutonium-uranium extraction (PUREX) nozzles, and are constructed from stainless steel, which is evaluated as compatible with tank waste in accordance with RPP-RPT-42297 and RPP-25153.

2.2 AW Structures Wall Nozzle Assemblies

The new AW structure wall nozzles, shown on H-14-111833, *Wall Nozzle Assemblies AW Structures*, are constructed from stainless steel, which is evaluated as compatible with tank waste in accordance with RPP-RPT-42297 and RPP-25153. The nozzle encasements are constructed from carbon steel, which is evaluated as compatible with tank waste in accordance with RPP-RPT-42297 and RPP-25153. The termination of the nozzle encasements are PUREX nozzles, and are constructed from stainless steel, which is evaluated as compatible with tank waste in accordance with RPP-RPT-42297 and RPP-25153.

2.3 Jumper Assembly 41 to 5, 242-A Evaporator Pump Room

The new 242-A pump room jumper, shown on H-14-111834, *Jumper Assembly 41 to 5 242-A Pump Room*, is constructed from stainless steel, which is evaluated as compatible with tank waste in accordance with RPP-RPT-42297 and RPP-25153. The PUREX connectors that make up the mechanical connections of the jumper are constructed from stainless steel, which is evaluated as compatible with tank waste in accordance with RPP-RPT-42297 and RPP-25153. The PUREX gaskets are constructed from Teflon®, which is listed in TFC-ENG-STD-34 as acceptable for use in PUREX connectors.

2.4 Jumper Assembly 43 to 13A, 242-A Evaporator Pump Room

The new 242-A pump room jumper, shown on H-14-111835, *Jumper Assembly 43 to 13A 242-A Pump Room*, is constructed from stainless steel, which is evaluated as compatible with tank waste in accordance with RPP-RPT-42297 and RPP-25153. The PUREX connectors that make up the mechanical connections of the jumper are constructed from stainless steel, which is evaluated as compatible with tank waste in accordance with RPP-RPT-42297 and RPP-25153.

®Teflon is a registered trademark of E. I. du Pont de Nemours and Company.

The PUREX gaskets are constructed from Teflon, which is listed in TFC-ENG-STD-34 as acceptable for use in PUREX connectors.

2.5 Jumper Assembly H-J-L-(X), 241-AW-02A Pump Pit

The new 241-AW-02A pump pit jumper, shown on H-14-111836, *Jumper Assembly H-J-L-(X) 241-AW-02A Pump Pit*, is constructed from stainless steel, which is evaluated as compatible with tank waste in accordance with RPP-RPT-42297 and RPP-25153. The PUREX connectors that make up the mechanical connections of the jumper are constructed from stainless steel, which is evaluated as compatible with tank waste in accordance with RPP-RPT-42297 and RPP-25153. The PUREX gaskets are constructed from Teflon, which is listed in TFC-ENG-STD-34 as acceptable for use in PUREX connectors.

There are multiple valves installed within the H-J-L-(X) jumper. There are two 3-inch 3-way Pittsburgh Brass Manufacturer (PBM) ball valves with part number C-MPH-K4B-S05G02--K285 (C-MPH-K4B-S05G02- -V101). There are two 3-inch 2-way PBM ball valves with part number C-SPH-K5B-S--G02--K283 (C-SPH-K5B-S- -G02- -V099).[1] They are constructed from stainless steel materials that are compliant with the requirements of TFC-ENG-STD-22. The valves also include the following non-metallic components: ethylene propylene rubber (EPR) O-rings, Tefzel® seats, Kynar® gaskets, seals, packing, and cavity fillers. These non-metallic components are listed in TFC-ENG-STD-34 as radiation resistant for all applications. The upper temperature limit for EPR is based upon sodium nitrate test data cited within the current version of TFC-ENG-STD-34 of 176 °F.[2] Tefzel is chemically resistant to 250 °F. Kynar is chemically resistant to 275 °F for all chemicals except sodium hydroxide (NaOH). Data in literature is limited to 176 °F in 15 weight% NaOH; the test report for W-314 shows good resistance to 200 °F in 15 weight% NaOH.

2.6 Jumper Assembly U-X-(Y), 241-AW-02A Pump Pit

The new 241-AW-02A pump pit jumper, shown on H-14-111837, *Jumper Assembly U-X-(Y) 241-AW-02A Pump Pit*, is constructed from stainless steel, which is evaluated as compatible with tank waste in accordance with RPP-RPT-42297 and RPP-25153. The PUREX connectors that make up the mechanical connections of the jumper are constructed from stainless steel, which is evaluated as compatible with tank waste in accordance with RPP-RPT-42297 and RPP-25153. The PUREX gaskets are constructed from Teflon, which is listed in TFC-ENG-STD-34 as acceptable for use in PUREX connectors.

There are multiple valves installed within the U-X-(Y) jumper. There is one 3-inch 3-way PBM ball valve with part number C-MPH-K4B-S05G02--K285 (C-MPH-K4B-S05G02- -V101). There is one 3-inch 2-way PBM ball valve with part number C-SPH-K5B-S--G02--K283 (C-SPH-K5B-S- -G02- -V099). They are constructed from stainless steel materials that are compliant with the requirements of TFC-ENG-STD-22. The valves also include the following

---

[1] Valve numbers in parentheses represent updated part numbers from the manufacturer. Either valve may be used depending on WRPS stockpiles.

® Tefzel is a registered trademark of E. I. du Pont de Nemours and Company.

® Kynar is a registered trademark of The Arkema Group.

[2] See Attachment A for email justification of EPR use in temperatures at or above 200°F.

non-metallic components: EPR O-rings, Tefzel seats, Kynar gaskets, seals, packing, and cavity fillers. These non-metallic components are listed in TFC-ENG-STD-34 as radiation resistant for all applications. The upper temperature limit for EPR is based upon sodium nitrate test data cited within the current version of TFC-ENG-STD-34 of 176 °F. Tefzel is chemically resistant to 250 °F. Kynar is chemically resistant to 275 °F for all chemicals except NaOH. Data in literature is limited to 176° F in 15 weight% NaOH; the test report for W-314 shows good resistance to 200 °F in 15 weight% NaOH.

2.7 Jumper Assembly K-V-Y-2, 241-AW-02A Pump Pit

The new 241-AW-02A pump pit jumper, shown on H-14-111838, *Jumper Assembly K-V-Y-2 241-AW-02A Pump Pit*, is constructed from stainless steel, which is evaluated as compatible with tank waste in accordance with RPP-RPT-42297 and RPP-25153. The PUREX connectors that make up the mechanical connections of the jumper are constructed from stainless steel, which is evaluated as compatible with tank waste in accordance with RPP-RPT-42297 and RPP-25153. The PUREX gaskets are constructed from Teflon, which is listed in TFC-ENG-STD-34 as acceptable for use in PUREX connectors.

There are multiple valves installed within the K-V-Y-2 jumper. There are two 3-inch 3-way PBM ball valves with part number C-MPH-K4B-S05G02--K285 (C-MPH-K4B-S05G02- -V101). There are two 3-inch 2-way PBM ball valves with part number C-SPH-K5B-S--G02--K283 (C-SPH-K5B-S- -G02- -V099). They are constructed from stainless steel materials that are compliant with the requirements of TFC-ENG-STD-22. The valves also include the following non-metallic components: EPR O-rings, Tefzel seats, Kynar gaskets, seals, packing, and cavity fillers. These non-metallic components are listed in TFC-ENG-STD-34 as radiation resistant for all applications. The upper temperature limit for EPR is based upon sodium nitrate test data cited within the current version of TFC-ENG-STD-34 of 176 °F. Tefzel is chemically resistant to 250 °F. Kynar is chemically resistant to 275 °F for all chemicals except NaOH. Data in literature is limited to 176 °F in 15 weight% NaOH; the test report for W-314 shows good resistance to 200 °F in 15 weight% NaOH.

2.8 Jumper Assembly W-(Z)-1, 241-AW-02A Pump Pit

The new 241-AW-02A pump pit jumper, shown on H-14-111839, *Jumper Assembly W-(Z)-1 241-AW-02A Pump Pit*, is constructed from stainless steel, which is evaluated as compatible with tank waste in accordance with RPP-RPT-42297 and RPP-25153. The PUREX connectors which make up the mechanical connections of the jumper are constructed from stainless steel, which is evaluated as compatible with tank waste in accordance with RPP-RPT-42297 and RPP-25153. The PUREX gaskets are constructed from Teflon, which is listed in TFC-ENG-STD-34 as acceptable for use in PUREX connectors.

There is one valve installed within the W-(Z)-1 jumper. There is one 2-inch 3-way PBM ball valve with part number C-MPH-H4B-S05G02--K284 (C-MPH-H4B-S05G02- -V100). The valve is constructed from stainless steel materials that are compliant with the requirements of TFC-ENG-STD-22. The valve also includes the following non-metallic components: EPR O-rings, Tefzel seats, Kynar gaskets, seals, packing, and cavity fillers. These non-metallic components are listed in TFC-ENG-STD-34 as radiation resistant for all applications. The upper temperature limit for EPR is based upon sodium nitrate test data cited within the current version

of TFC-ENG-STD-34 of 176 °F. Tefzel is chemically resistant to 250 °F. Kynar is chemically resistant to 275 °F for all chemicals except NaOH. Data in literature is limited to 176 °F in 15 weight% NaOH; the test report for W-314 shows good resistance to 200 °F in 15 weight% NaOH.

2.9 Jumper Assembly F-Z, 241-AW-02A Pump Pit

The new 241-AW-02A pump pit jumper, shown on H-14-111840, *Jumper Assembly F-Z 241-AW-02A Pump Pit*, is constructed from stainless steel, which is evaluated as compatible with tank waste in accordance with RPP-RPT-42297 and RPP-25153. The PUREX connectors that make up the mechanical connections of the jumper are constructed from stainless steel, which is evaluated as compatible with tank waste in accordance with RPP-RPT-42297 and RPP-25153. The PUREX gaskets are constructed from Teflon, which is listed in TFC-ENG-STD-34 as acceptable for use in PUREX connectors.

2.10 Jumper Assemblies ENC-DR, 241-AW-02A Pump Pit

The new 241-AW-02A pump pit jumper, shown on H-14-111841, *Jumper Assembly ENC-DR 241-AW-02A Pump Pit*, is constructed from stainless steel, which is evaluated as compatible with tank waste in accordance with RPP-RPT-42297 and RPP-25153. The PUREX connectors that make up the mechanical connections of the jumper are constructed from stainless steel, which is evaluated as compatible with tank waste in accordance with RPP-RPT-42297 and RPP-25153. The PUREX gaskets are constructed from Teflon, which is listed in TFC-ENG-STD-34 as acceptable for use in PUREX connectors.

There is one valve installed within the ENC-DR jumper. There is one 2-inch 2-way PBM ball valve with part number SPH-H5B-J--G02—V353 (C-SPH-H5B-S- -G02- -V098). The valve is constructed from stainless steel materials that are compliant with the requirements of TFC-ENG-STD-22. The valve also includes the following non-metallic components: EPR O-rings, Teflon seats, Kynar gaskets, seals, packing, and cavity fillers. The encasement drain valve does not contact tank waste. The encasement drain valve provides isolation during maintenance encasement pressure testing. Therefore compliance with TFC-ENG-STD-34 is not required.

The ENC-DR jumper is used in three locations: AW02A-WT-V-416 (Item 1), AW02A-WT-V-415 (Item 2), and AW02A-WT-V-414 (Item 3).

2.11 Tank Return Assembly TKR-101(1-2), 241-AW-02A Pump Pit

The new 241-AW-02A pump pit tank return, shown on H-14-111846, *Tank Return Assembly TKR-101(1-2) 241-AW-02A Pump Pit*, is constructed from stainless steel, which is evaluated as compatible with tank waste in accordance with RPP-RPT-42297 and RPP-25153. The PUREX connectors that make up the mechanical connections of the tanks returns are constructed from stainless steel, which is evaluated as compatible with tank waste in accordance with RPP-RPT-42297 and RPP-25153.

2.12 Jumper Assembly R1-A-(B), 241-AW-B Valve Pit

The new 241-AW-B valve pit jumper, shown on H-14-111847, *Jumper Assembly R1-A-(B) 241-AW-B Valve Pit*, is constructed from stainless steel, which is evaluated as compatible with tank waste in accordance with RPP-RPT-42297 and RPP-25153. The PUREX connectors that

make up the mechanical connections of the jumper are constructed from stainless steel, which is evaluated as compatible with tank waste in accordance with RPP-RPT-42297 and RPP-25153. The PUREX gaskets are constructed from Teflon, which is listed in TFC-ENG-STD-34 as acceptable for use in PUREX connectors.

There are multiple valves installed within the R1-A-(B) jumper. There is one 3-inch 3-way PBM ball valve with part number C-MPH-K4B-S05G02--K285 (C-MPH-K4B-S05G02- -V101). There is one 3-inch 2-way PBM ball valve with part number C-SPH-K5B-S--G02--K283 (C-SPH-K5B-S- -G02- -V099). They are constructed from stainless steel materials that are compliant with the requirements of TFC-ENG-STD-22. The valves also include the following non-metallic components: EPR O-rings, Tefzel seats, Kynar gaskets, seals, packing, and cavity fillers. These non-metallic components are listed in TFC-ENG-STD-34 as radiation resistant for all applications. The upper temperature limit for EPR is based upon sodium nitrate test data cited within the current version of TFC-ENG-STD-34 of 176 °F. Tefzel is chemically resistant to 250 °F. Kynar is chemically resistant to 275 °F for all chemicals except NaOH. Data in literature is limited to 176 °F in 15 weight% NaOH; the test report for W-314 shows good resistance to 200 °F in 15 weight% NaOH.

2.13 Jumper Assembly R4-B-(C), 241-AW-B Valve Pit

The new 241-AW-B valve pit jumper, shown on H-14-111848, *Jumper Assembly R4-B-(C) 241-AW-B Valve Pit*, is constructed from stainless steel, which is evaluated as compatible with tank waste in accordance with RPP-RPT-42297 and RPP-25153. The PUREX connectors that make up the mechanical connections of the jumper are constructed from stainless steel, which is evaluated as compatible with tank waste in accordance with RPP-RPT-42297 and RPP-25153. The PUREX gaskets are constructed from Teflon, which is listed in TFC-ENG-STD-34 as acceptable for use in PUREX connectors.

There are multiple valves installed within the R4-B-(C) jumper. There is one 2-inch 3-way PBM ball valve with part number C-MPH-H4B-S05G02--K284 (C-MPH-H4B-S05G02- -V100). There is one 2-inch 2-way PBM ball valve with part number C-SPH-H5B-S--G02--K282 (C-SPH-H5B-S- -G02- -V098). They are constructed from stainless steel materials that are compliant with the requirements of TFC-ENG-STD-22. The valves also include the following non-metallic components: EPR O-rings, Tefzel seats, Kynar gaskets, seals, packing, and cavity fillers. These non-metallic components are listed in TFC-ENG-STD-34 as radiation resistant for all applications. The upper temperature limit for EPR is based upon sodium nitrate test data cited within the current version of TFC-ENG-STD-34 of 176 °F. Tefzel is chemically resistant to 250 °F. Kynar is chemically resistant to 275 °F for all chemicals except NaOH. Data in literature is limited to 176 °F in 15 weight% NaOH; the test report for W-314 shows good resistance to 200 °F in 15 weight% NaOH.

2.14 Jumper Assembly R6-R9-C, 241-AW-B Valve Pit

The new 241-AW-B valve pit jumper, shown on H-14-111849, *Jumper Assembly R6-R9-C 241-AW-B Valve Pit*, is constructed from stainless steel, which is evaluated as compatible with tank waste in accordance with RPP-RPT-42297 and RPP-25153. The PUREX connectors that make up the mechanical connections of the jumper are constructed from stainless steel, which is evaluated as compatible with tank waste in accordance with RPP-RPT-42297 and RPP-25153.

The PUREX gaskets are constructed from Teflon, which is listed in TFC-ENG-STD-34 as acceptable for use in PUREX connectors.

There are multiple valves installed within the R6-R9-C jumper. There is one 2-inch 3-way PBM ball valve with part number C-MPH-H4B-S05G02--K284 (C-MPH-H4B-S05G02- -V100). There are two 2-inch 2-way PBM ball valves with part number C-SPH-H5B-S--G02--K282 (C-SPH-H5B-S- -G02- -V098). They are constructed from stainless steel materials that are compliant with the requirements of TFC-ENG-STD-22. The valves also include the following non-metallic components: EPR O-rings, Tefzel seats, Kynar gaskets, seals, packing, and cavity fillers. These non-metallic components are listed in TFC-ENG-STD-34 as radiation resistant for all applications. The upper temperature limit for EPR is based upon sodium nitrate test data cited within the current version of TFC-ENG-STD-34 of 176 °F. Tefzel is chemically resistant to 250 °F. Kynar is chemically resistant to 275 °F for all chemicals except NaOH. Data in literature is limited to 176 °F in 15 weight% NaOH; the test report for W-314 shows good resistance to 200 °F in 15 weight% NaOH.

2.15 Jumper Assembly R14-R15-(A), 241-AW-B Valve Pit

The new 241-AW-B valve pit jumper, shown on H-14-111850, *Jumper Assembly R14-R15-(A) 241-AW-B Valve Pit*, is constructed from stainless steel, which is evaluated as compatible with tank waste in accordance with RPP-RPT-42297 and RPP-25153. The PUREX connectors that make up the mechanical connections of the jumper are constructed from stainless steel, which is evaluated as compatible with tank waste in accordance with RPP-RPT-42297 and RPP-25153. The PUREX gaskets are constructed from Teflon, which is listed in TFC-ENG-STD-34 as acceptable for use in PUREX connectors.

There are multiple valves installed within the R14-R15-(A) jumper. There is one 3-inch 3-way PBM ball valve with part number C-MPH-K4B-S05G02--K285 (C-MPH-K4B-S05G02- -V101). There are two 3-inch 2-way PBM ball valves with part number C-SPH-K5B-S--G02--K283 (C-SPH-K5B-S- -G02- -V099). They are constructed from stainless steel materials that are compliant with the requirements of TFC-ENG-STD-22. The valves also include the following non-metallic components: EPR O-rings, Tefzel seats, Kynar gaskets, seals, packing, and cavity fillers. These non-metallic components are listed in TFC-ENG-STD-34 as radiation resistant for all applications. The upper temperature limit for EPR is based upon sodium nitrate test data cited within the current version of TFC-ENG-STD-34 of 176 °F. Tefzel is chemically resistant to 250 °F. Kynar is chemically resistant to 275 °F for all chemicals except NaOH. Data in literature is limited to 176 °F in 15 weight% NaOH; the test report for W-314 shows good resistance to 200 °F in 15 weight% NaOH.

2.16 Jumper Assembly F-G, 241-AW-02E Feed Pump Pit

The new 241-AW-02E feed pump pit jumper, shown on H-14-111856, *Jumper Assembly F-G 241-AW-02E Feed Pump Pit*, is constructed from stainless steel, which is evaluated as compatible with tank waste in accordance with RPP-RPT-42297 and RPP-25153. The PUREX connectors that make up the mechanical connections of the jumper are constructed from stainless steel, which is evaluated as compatible with tank waste in accordance with RPP-RPT-42297 and RPP-25153. The PUREX gaskets are constructed from Teflon, which is listed in TFC-ENG-STD-34 as acceptable for use in PUREX connectors.

2.17 DST Replacement Transfer Lines

The new DST replacement transfer lines, shown on H-14-111862, *241-AW Transfer Line Pipe-in-Pipe Assemblies And Details*, are constructed from stainless steel primary piping and carbon steel encasement piping, which are evaluated as compatible with tank waste in accordance with RPP-RPT-42297 and RPP-25153.

3.0 EXTERNAL CORROSION PROTECTION

Provisions for external corrosion control of the carbon steel transfer piping will be through the application of a protective coating in conjunction with the installation of impressed current linear anodes. A protective coating will be applied to the transfer line encasement. The transfer line pipe coating will consist of a shop applied fusion bonded epoxy (Scotchkote 6233P) and an Abrasion Resistance Overcoat (Scotchkote 6352HF). Field joints between transfer line spool pieces and the wall nozzle assemblies will be coated with Scotchkote Liquid Epoxy 323. Wall nozzles embedded into the reinforced concrete wall at the 242-A Evaporator and tank farms pits will be coated with an epoxy coating (Scotchkote 134 and/or Scotchkote 323). This combination of coating material will provide a robust barrier between the steel pipeline surface and the surrounding pipeline backfill environment. The pipeline will be grouted in place in a core drilled through the concrete pit and 242-A Evaporator walls. The coatings will continue to provide protection to the pipeline within this transition, particularly since the pipeline will be cast-in-place.

As a means of supplementing the corrosion protection properties of the external coating, the application of cathodic protection will ensure that corrosion protection current will be provided to any coating holidays that may be present or develop in the future. The cathodic protection system was designed by a NACE Certified Cathodic Protection Specialist and Washington State Registered Professional Engineer. The cathodic protection system will consist of linear anodes that parallel the piping up to the exterior surface of the pit wall and will incorporate test stations for verification of proper system operation. The pipeline grouting material will allow for protective current passage to the pipeline surfaces within the concrete wall transition.

Within the pit, the piping will be constructed using type 304L austenitic stainless steel. The bare stainless steel piping will be supported above the pit floor using coated carbon steel dunnage. The carbon steel will be coated with an industrial grade primer along with two finish coats of waterborne acrylic enamel (Amercoat 220). The carbon and stainless steels will come into direct metallic contact with each other. However, the opportunity for a galvanic corrosion cell to develop is negligible. In order for corrosion between these dissimilar metals to occur, an electrolyte must be present. As the pit is dry and the pipe and pipe dunnage within the pits will not be in contact with soil, transfer of ionic and electronic current cannot occur, resulting in no corrosion.

As an additional means of protection, the in-pit jumpers have a design corrosion allowance of 0.2 mil per year for their 25 year service life (minimum 5 mils corrosion allowance). Per MT-50400, the buried piping has a design life of 50 years (minimum 10 mils corrosion allowance).

4.0 CONCLUSIONS

This evaluation shows the new DST replacement transfer lines, tank returns, wall nozzles, and jumpers meet the waste compatibility requirements and standards identified in TFC-ENG-STD-22 and should be utilized for waste transfers between the 241-AW Tank Farm and 242-A Evaporator.

5.0 REFERENCES

H-14-111832, 2020, *Wall Nozzle Assemblies 242-A Pump Room,* Rev. 1, Washington River Protection Solutions, LLC, Richland, Washington.

H-14-111833, 2020, *Wall Nozzle Assemblies AW Structures,* Rev. 1, Washington River Protection Solutions, LLC, Richland, Washington.

H-14-111834, 2020, *Jumper Assembly 41 to 5 242-A Pump Room,* Rev. 0, Washington River Protection Solutions, LLC, Richland, Washington.

H-14-111835, 2020, *Jumper Assembly 43 TO 13A 242-A Pump Room,* Rev. 0, Washington River Protection Solutions, LLC, Richland, Washington.

H-14-111836, 2020, *Jumper Assembly H-J-L-(X) 241-AW-02A Pump Pit,* Rev. 0, Washington River Protection Solutions, LLC, Richland, Washington.

H-14-111837, 2020, *Jumper Assembly U-X-(Y) 241-AW-02A Pump Pit,* Rev. 0, Washington River Protection Solutions, LLC, Richland, Washington.

H-14-111838, 2020, *Jumper Assembly K-V-Y-2 241-AW-02A Pump Pit,* Rev. 0, Washington River Protection Solutions, LLC, Richland, Washington.

H-14-111839, 2020, *Jumper Assembly W-(Z)-1 241-AW-02A Pump Pit,* Rev. 0, Washington River Protection Solutions, LLC, Richland, Washington.

H-14-111840, 2020, *Jumper Assembly F-Z 241-AW-02A Pump Pit*, Rev. 0, Washington River Protection Solutions, LLC, Richland, Washington.

H-14-111841, 2020, *Jumper Assembly ENC-DR 241-AW-02A Pump Pit,* Rev. 0, Washington River Protection Solutions, LLC, Richland, Washington.

H-14-111846, 2020, *Tank Return Assembly TKR-101(1-2) 241-AW-02A Pump Pit,* Rev. 0, Washington River Protection Solutions, LLC, Richland, Washington.

H-14-111847, 2020, *Jumper Assembly R1-A-(B) 241-AW-B Valve Pit,* Rev. 0, Washington River Protection Solutions, LLC, Richland, Washington.

H-14-111848, 2020, *Jumper Assembly R4-B-(C) 241-AW-B Valve Pit,* Rev. 0, Washington River Protection Solutions, LLC, Richland, Washington.

H-14-111849, 2020, *Jumper Assembly R6-R9-C 241-AW-B Valve Pit,* Rev. 0, Washington River Protection Solutions, LLC, Richland, Washington.

H-14-111850, 2020, *Jumper Assembly R14-R15-(A) 241-AW-B Valve Pit,* Rev. 0, Washington River Protection Solutions, LLC, Richland, Washington.

H-14-111856, 2020, *Jumper Assembly F-G 241-AW-02E Feed Pump Pit*, Rev. 0, Washington River Protection Solutions, LLC, Richland, Washington.

H-14-111862, 2020, *DST Replacement Transfer Lines Pipe-in-Pipe Assemblies and Details 241-AW to 242-A Evaporator*, Rev. 0, Washington River Protection Solutions, LLC, Richland, Washington.

RPP-25153, 2007, *Volume 3: IQRPE DST System Integrity Assessment – Waste Compatibility*, Rev. 1, CH2M Hill Hanford Group, Inc., Richland, Washington.

RPP-RPT-42297, 2017, *Safety-Significant Waste Transfer Primary Piping – Functions and Requirements Evaluation Document*, Rev. 19, Washington River Protection Solutions, LLC, Richland, Washington.

TFC-ENG-STD-22, 2017, *Piping, Jumpers, and Valves*, Rev. G-2, Washington River Protection Solutions, LLC, Richland, Washington.

TFC-ENG-STD-34, 2017, *Standard for the Selection of Non-Metallic Materials in Contact with Tank Waste*, Rev. A-1, Washington River Protection Solutions, LLC, Richland, Washington.

Appendix A

Email Justification for the Use of EPR in Temperatures at or Above 200 °F

John Campbell

From: Venetz, Theodore J <theodore_j_venetz@rl.gov>
Sent: Wednesday, September 4, 2019 7:40 AM
To: Engeman, Jason K; John Campbell
Cc: John Elsen; Greg Bogen; Ralph Dunham
Subject: RE: Material Compatibility and STD-34

Jason,
I think you pretty well captured it. Chemical exposure data is limited. Many manufactures will state their material was tested for chemical exposure per an applicable ASTM and give some qualitative rating like "satisfactory" or "acceptable" , without adding that that ASTM only tests at room temperature. Test data at elevated temperatures is hard to find. Even harder is data where they quantify the damage as function of temperature. The " A" rating given EPR by Pruett for NaNO2 exposure (1st column below) indicates less than values; <15% swelling, <15% loss of tensile strength, little or no chemical attack for 100% solution at 176F, or pretty darn good performance. The exposure rating given by Schweitzer for NaNO2 contact when tested up to 220F (3rd column below); R= resistant is qualitative in nature but gives confidence in acceptable performance.

Ted

From: Engeman, Jason K <jason_k_engeman@rl.gov>
Sent: Tuesday, September 03, 2019 4:57 PM
To: John Campbell (jcampbell@columbia-energy.com) <jcampbell@columbia-energy.com>; Venetz, Theodore J <theodore_j_venetz@rl.gov>
Cc: John Elsen (jelsen@columbia-energy.com) <jelsen@columbia-energy.com>; Greg Bogen <gbogen@columbia-energy.com>; Dunham, Ralph (F0464) <rdunham@columbia-energy.com>
Subject: FW: Material Compatibility and STD-34

John,

I reached out to Ted Venetz, the author of STD-34 and it was not his intent to limit the use of EPR to 176 deg F. What he was trying to do was highlight/capture industry testing in various solutions and the performance of materials. Performance of the EPR in NaOH, NaNO3, and NaNO2 were all done with excellent results. The 176 deg F comes from that specific test and a specific concentration that went up to 176, but not past that for NaNO2. That does not mean the material is limited solely because of that one test. All indications and vendor type information out there supports the use of EPR in temperatures at or exceeding 200 deg F.

Ted – If you disagree with this or have anything to add to it, please chime in.

Thanks

Jason

From: Venetz, Theodore J <theodore_j_venetz@rl.gov>
Sent: Tuesday, September 03, 2019 10:12 AM
To: Engeman, Jason K <jason_k_engeman@rl.gov>
Subject: RE: Material Compatibility and STD-34

Some latitude in the STD

H.2 Limitations on Use of the Chemical Resistance Tables

Explanation of the data is included in legends that follow the table. For example, "A" resistance values indicate excellent resistance with small quantifiable change (<10% to 15%) in physical properties, "B" indicates good resistance. One reference, Schweitzer, P.A., "Corrosion Resistance Tables: Metals, Nonmetals, Coatings, Mortars, Plastics, Elastomers and Linings, and Fabrics," uses only "R" to indicate recommended. Most tests were of fairly short exposure, sometimes only three to seven days and focused on acute effects, immediate change or failure, and not on long-term or latent effects.

Maximum use temperatures listed are usually the limits of available test data and not necessarily limits of upper usability temperature.

Data are often given at conditions of "100% concentration" or "concentrated" or "saturated." Since saturation varies with temperature, to aid in non-metallic materials compatibility evaluations, saturation curves for the compounds of interest are included after the table.

Sources for the chemical resistance data were chosen because they evaluate resistance as various temperature values and have the range of chemicals present in the DST supernatant waste. DuPont and Arkema are the manufacturers of Tefzel and polyvinylidene fluoride (PVDF), respectively, and provide comprehensive resistance data. American Society for Testing and Materials (ASTM) standard test regulations assume a room of 23°C (73.4°F) (ASTM D543-06, "Standard Practices for Evaluating the Resistance of Plastics to Chemical Reagents") for testing and results are limited. Double-shell tank supernatant is most often at higher temperatures and chemical resistance declines over increasing temperatures.

Detailed tables in H

Material	Chemical Resistance Guide for Elastomers III[a]	Chemical Resistance Guide for Plastics[b]	Corrosion Resistance Tables: Metals, Nonmetals, Coatings, Mortars, Plastics, Elastomers and Linings, and Fabrics[c]	Tefzel Chemical Use Temperature Guide[d]	Kynar PVI Chemical Resistanc Chart[e]
NaNO₃ Summary Resistance Data (cont.)					
UHMWPE			R to 150°F		
NaOH Summary Resistance Data					
EPDM (EPR)	A to 100% to 130°F AB conc. 130-310°F A to 50% to 212°F B 30-50% at 212°F AB 10% at 140°F		conc. 10% 310°F conc. 15% 310°F		
Teflon (TEF, PTFE)	A to 100% to 300°F	A to 100% to 480°F	conc. 10% 480°F		
		50%conc.			
$NaNO_3$ Summary Resistance Data					
EPDM (EPR)	A to 100% to 200°F		R to 290°F		9, 43% to 2
Teflon (TEF, PTFE)	A to 100% to	A to 100% to 500°F	R to 480°F		9

UHMWPE		A to 100% to 70°F	R to 150°F		
$NaNO_2$ Summary Resistance Data					
EPDM (EPR)	A to 100% to 176°F		R to 220°F		
Teflon (TFE, PTFE)	A to 300°F	A to 100% to 500°F	R to 480°F		

From: Engeman, Jason K <jason_k_engeman@rl.gov>
Sent: Tuesday, September 03, 2019 9:45 AM
To: Venetz, Theodore J <theodore_j_venetz@rl.gov>
Subject: FW: Material Compatibility and STD-34

From: John Campbell <jcampbell@columbia-energy.com>
Sent: Friday, August 30, 2019 8:50 AM
To: Engeman, Jason K <jason_k_engeman@rl.gov>; Huntington, Matthew R <matthew_r_huntington@rl.gov>
Cc: John Elsen <jelsen@columbia-energy.com>; Dunham, Ralph (F0464) <rdunham@columbia-energy.com>; Greg Bogen <gbogen@columbia-energy.com>
Subject: Material Compatibility and STD-34

Jason/Matt,

In writing the material compatibility report and reviewing the standards to make sure what I was saying was in line, I found something that might be an issue. When comparing the non-metallic materials of the PBM valves (EPR, Kynar, Tefzel) against STD-34 the rated temperature for EPR is listed as 176°F per Table 1.

Table 1. Summary of Non-Metallic Materials Qualifications for Normal, Reasonably Bounding Conditions.

Non-Metallic Material	Summary Qualifications from Literature Sources
Ethylene propylene (EP), ethylene-propylene rubber (EPR), ethylene-propylene-diene monomer (EPDM)[2]	Useable in concentrated solutions to 176°F. Radiation resistant for all applications.
Teflon[3] (PTFE, TFE)	Chemically resistant to 300°F. Low values for radiation resistance are ~1.5×10^4 Rad, other sources indicate higher values, avoid continuous exposure, qualified by prior field use. Approved only for use in PUREX connectors. New applications require technical justification approved by the chief engineer or a designee.[2] Existing installations prior to the issuance of this standard that use Teflon components may continue to be used until replacement or failure.
Teflon[4] with 50% 316 SS (Reinforced Teflon)	Treat as Teflon, SS reinforcement acceptable, others must be evaluated.
Viton A (fluoro copolymer)	Chemically resistant to 176°F, but limited to 150°F in conc. NaF, to 150°F in 15 wt% NaOH. Radiation resistant to ~5×10^6 Rad, minimum, avoid continuous exposure.
Kynar[5], Kynar with EPR O-ring (PVDF)	Chemically resistant to 275°F for all chemicals except NaOH. Data in literature limited to 176°F in 15 wt% NaOH, test report for W-314 shows good resistance to 200°F in 15 wt% NaOH.[3] Radiation resistant for all applications, highest resistance.

How do we want to address this?

John Campbell
Mechanical Engineer

Columbia Energy
AND ENVIRONMENTAL SERVICES

1806 Terminal Drive
Richland, WA 99354
Office: 509.946.7111
Fax: 509.946.9365
www.columbia-energy.com

Legal Notice: Files and attachments may only be used for the intent for which they were transmitted. No unauthorized reuse, redistribution or modification is permitted without express prior written approval of Columbia Energy and Environmental Services.

RPP-CALC-63211
Revision 0

ASME B31.3 Analyses of the New SL-170, SL-171, SL-172 and SN-275 Waste Transfer Lines in 241-AW Tank Farm

Prepared by

JP Harrington
Columbia Energy and Environmental Services, Inc. for
Washington River Protection Solutions, LLC

Date Published
May 2020

RYAN D. LANG
STATE OF WASHINGTON
48191
REGISTERED
PROFESSIONAL ENGINEER
4/27/20

washington river protection solutions

Prepared for the U.S. Department of Energy
Office of River Protection

Contract No. DE-AC27-08RV14800

Columbia Energy AND ENVIRONMENTAL SERVICES

Design Verification Checklist

Doc. Number	Rev.	Title
RPP-CALC-63211	0	ASME B31.3 Analyses of the New SL-170, SL-171, SL-172 and SN-275 Waste Transfer Lines in 241-AW Tank Farm

Verification Method (Check One)

☒ Review ☐ Alternate Calculation ☐ Qualification Testing

Verification Results

Yes	No	NA	
☒	☐	☐	Design inputs correctly selected and cited and correctly incorporated.
☒	☐	☐	Input data were checked for consistency with original source information.
☐	☐	☒	Design inputs for interfacing organizations are specified
☒	☐	☐	Necessary assumptions are explicit, adequately described and supported.
☒	☐	☐	Unverified assumptions (requiring verification) are clearly identified.
☒	☐	☐	Analytical and technical approaches and results are reasonable and appropriate.
☒	☐	☐	The version or revision of each reference is cited
☒	☐	☐	Design output is reasonable for design inputs
☒	☐	☐	Results and conclusions address all points in the purpose.
☒	☐	☐	Conclusions are consistent with analytical results and applicable limits.
☒	☐	☐	Suitable materials, parts, processes, and inspection and testing criteria specified
☒	☐	☐	All comments have been adequately addressed and dispositioned
☒	☐	☐	Calculations are sufficiently detailed such that a technically qualified person could reproduce the calc.
☒	☐	☐	Design method(s) are appropriately used and documented.
☒	☐	☐	Computer Program(s) are appropriately used and results support design.
☒	☐	☐	For pre-verified computer programs the V&V document is referenced and specific computer used for the calculation is identified

Ensure calculations that use software include a paper printout, microfiche, CD-ROM, or other electronic file of the input data and identification to the computer, computer codes, and versions used, or provide alternate documentation to uniquely and clearly identify the exact coding and execution process.

Checker Name	Signature	Date
Ryan Lang		4/27/20

Columbia Energy
AND ENVIRONMENTAL SERVICES

Calculation No.:	RPP-CALC-63211	Project No.	2018716
Calculation Title:	ASME B31.3 Analyses of the New SL-170, SL-171, SL-172 and SN-275 Waste Transfer Lines in 241-AW Tank Farm	Project Title:	242-A Evaporator Slurry Line Replacement

Revision	0		1		2	
Originator	James Harrington	04/27/2020				
	Jim Harrington	Date	Name	Date	Name	Date
Checker		4/27/2020				
	Ryan Lang	Date	Name	Date	Name	Date
Project Manager		4/27/20				
	Ralph Dunham	Date	Name	Date	Name	Date

ATTACHMENTS

Attachment No.	Title	No. of Pages
	N/A	

AFFECTED DOCUMENTS

Document No.	Document Title	Revision No.
	N/A	

RECORD OF REVISION

Revision No.	Description of Revision
0	Initial Release

TABLE OF CONTENTS

1.0 INTRODUCTION 1
2.0 OBJECTIVE/PURPOSE 1
3.0 SUMMARY OF RESULTS AND CONCLUSIONS 1
4.0 INPUT DATA 3
5.0 ENABLING ASSUMPTIONS 4
6.0 METHOD OF ANALYSIS 6
6.1 WATER HAMMER ANALYSIS 6
6.1.1 Piping Stability Check 6
6.1.2 Column Separation Analysis 6
6.1.3 Fluid Momentum Loads 7
6.2 OVER-PRESSURIZATION ANALYSIS 7
6.3 SEISMIC MULTIPLIERS 7
6.4 PIPING ANALYSIS 7
6.5 WELD ANALYSES 8
6.6 CURVED PIPE WALL THICKNESS ANALYSIS 9
6.7 ENCASEMENT CLOSURE ANALYSIS 9
6.8 PIPE SUPPORT ANALYSIS 9
6.9 THERMAL EXPANSION ANALYSIS 9
7.0 USE OF COMPUTER SOFTWARE 9
7.1 BENTLEY AUTOPIPE 9
7.2 MATHCAD 10
8.0 RESULTS 10
8.1 WATER HAMMER 10
8.1.1 Stability Check 10
8.1.2 Fluid Momentum Loads 10
8.2 OVER-PRESSURIZATION 10
8.3 SEISMIC MULTIPLIER RESULTS 11
8.4 ASME B31.3 PIPING RESULTS 11
8.5 WELD RESULTS 11
8.6 CURVED PIPE WALL THICKNESS RESULTS 11
8.7 ENCASEMENT CLOSURE RESULTS 11
8.8 PIPE SUPPORT RESULTS 12
8.9 THERMAL EXPANSION ANALYSIS 12
9.0 CONCLUSIONS 12
10.0 RECOMMENDATIONS 12
11.0 REFERENCES 12

LIST OF TABLES

Table 1. Calculation Organization. 2
Table 2. Transfer Line Components. 3
Table 3. AutoPIPE Stress Summary. 11

LIST OF APPENDICES

A MARKED UP PIPING AND INSTRUMENTATION DIAGRAM ..... A-i
B TRANSFER LINE PIPING ARRANGEMENT ..... B-i
C TRANSFER LINE PIPING ISOMETRIC ..... C-i
D1 AUTOPIPE ANALYSIS – PRIMARY PIPING STABILITY CHECK D1-i
D2 AUTOPIPE ANALYSIS – PRIMARY PIPING THERMAL CONTRACTION D2-i
D3 AUTOPIPE ANALYSIS – PRIMARY PIPING SUSTAINED AND OCCASIONAL SEISMIC D3-i
D4 AUTOPIPE ANALYSIS – ENCASEMENT DRAIN AND TEST PORT STABILITY CHECK D4-i
D5 AUTOPIPE ANALYSIS – ENCASEMENT DRAIN AND TEST PORT THERMAL CONTRACTION D5-i
D6 AUTOPIPE ANALYSIS – ENCASEMENT DRAIN AND TEST PORT SUSTAINED AND OCCASIONAL SEISMIC D6-i
D7 AUTOPIPE ANALYSIS – ENCASEMENT STABILITY CHECK D7-i
D8 AUTOPIPE ANALYSIS – ENCASEMENT THERMAL CONTRACTION D8-i
D9 AUTOPIPE ANALYSIS – ENCASEMENT SUSTAINED D9-i
E **NOT USED** ..... E-i
F **NOT USED** ..... F-i
G1 FLUID MOMENTUM LOADS AT PUMP STARTUP G1-i
G2 CALCULATION OF SEISMIC MULTIPLIERS G2-i
H PIPING TO KICK PLATE WELD ANALYSES ..... H-i
I1 MINIMUM HYDROSTATIC TEST PRESSURE I1-i
I2 NOZZLE CLOSURE ANALYSIS I2-i
I3 PIPE SUPPORT ANALYSIS I3-i
I4 THERMAL EXPANSION OF PIPE I4-i
J MINIMUM WALL THICKNESS FOR PIPE BENDS ..... J-i

LIST OF FIGURES

Figure 1. Pipe Support..... 8

LIST OF TERMS

Abbreviations and Acronyms

AISC	American Institute of Steel Construction
AW-02A pit	241-AW-02A central pump pit
AW-02E pit	241-AW-02E feed pump pit
AW-B pit	241-AW-B valve pit
CDF	controlled density fill
Columbia Energy	Columbia Energy and Environmental Services, Inc.
DST	double-shell tank
SAC	Specific Administrative Control
V&V	verification and validation

Units

”	inch
%	percent
°F	degrees Fahrenheit
deg	degree
ft	foot
g	gravitational force
gpm	gallons per minute
in.	inch
ksi	kips per square inch
lb	pound
psi	pounds per square inch
psig	pounds per square inch gauge

1.0 INTRODUCTION

Future waste transfers in and out of the 242-A Evaporator are required to allow for the reduction in total tank waste volume stored in the double-shell tanks (DST). Existing slurry line SL-167 failed a pneumatic pressure test in 2018 and requires replacement. Visual inspection of back-up slurry line SL-168 revealed more corrosion than observed on SL-167 so SL-168 will require replacement as well. To ensure long-term success of the evaporator, a replacement feed line will also be installed.

2.0 OBJECTIVE/PURPOSE

Two new slurry lines, AW02A-WT-WTL-SL-170 and AW02A-WT-WTL-SL-171, have been designed for installation between the 242-A Evaporator and the 241-AW-02A central pump pit (AW-02A pit). One new supernate line, AW02E-WT-WTL-SN-275, has been designed for installation between the 242-A Evaporator and the 241-AW-02E feed pump pit (AW-02E pit). One new slurry line, AWVPB-WT-WTL-SL-172, has been designed for installation between the AW-02A pit and the 241-AW-B valve pit (AW-B pit). Additional analyses for the waste transfer line replacement are documented in RPP-CALC-63212, *241-AW Tank Farm Waste Transfer Lines SL-170, SL-171, SL-172 and SN-275 Supporting Analyses*.

Compliance of the replacement waste transfer lines and associated nozzle assemblies with TFC-ENG-STD-22, "Piping, Jumpers and Valves," and RPP-RPT-58773, *Assessment of Safety Significant Piping Jumpers to Assure Excess Load Capacity for Potential Water Hammer (Leak Check and Flush) Events,* is demonstrated in RPP-SPEC-63236, *241-AW and 242-A Evaporator Wall Nozzle Assemblies and Transfer Lines Design Requirements Compliance Matrix*.

This calculation document demonstrates design compliance with TFC-ENG-DESIGN-C-60, "Preparation of Piping Analysis for Waste Transfer Systems," and ASME B31.3, *Process Piping*, for the new waste transfer line assemblies.

3.0 SUMMARY OF RESULTS AND CONCLUSIONS

This document compiles the calculations and analyses to demonstrate compliance with TFC-ENG-DESIGN-C-60 and ASME B31.3. Table 1 shows how this calculation is organized.

Table 1. Calculation Organization.

Location	Title
Appendix A	Marked Up Piping and Instrumentation Diagram
Appendix B	Transfer Line Piping Arrangement
Appendix C	Transfer Line Piping Isometric
Appendix D1	AutoPIPE Analysis – Primary Piping Stability Check Isometric, Nodes and Stress - Bentley AutoPIPE (G + E, 60°F) Piping Model - Bentley AutoPIPE (G + E, 60°F)
Appendix D2	AutoPIPE Analysis – Primary Piping Thermal Contraction Isometric, Nodes and Stress - Bentley AutoPIPE (G+T, 80°F to 30°F) Piping Model - Bentley AutoPIPE (G+T, 80°F to 30°F)
Appendix D3	AutoPIPE Analysis – Primary Piping Sustained & Occasional Seismic Isometric, Nodes and Stress - Bentley AutoPIPE (G+T+P+E, 60°F to 200°F) Piping Model - Bentley AutoPIPE, (G+T+P+E, 60°F to 200°F)
Appendix D4	AutoPIPE Analysis – Encasement Drain and Test Port Stability Check Isometric, Nodes and Stress - Bentley AutoPIPE (G + E, 60°F) Piping Model - Bentley AutoPIPE (G + E, 60°F)
Appendix D5	AutoPIPE Analysis – Encasement Drain and Test Port Thermal Contraction Isometric, Nodes and Stress - Bentley AutoPIPE (G+T, 80°F to 30°F) Piping Model - Bentley AutoPIPE (G+T, 80°F to 30°F)
Appendix D6	AutoPIPE Analysis – Encasement Drain and Test Port Sustained & Occasional Seismic Isometric, Nodes and Stress - Bentley AutoPIPE (G+T+P+E, 60°F to 200°F) Piping Model - Bentley AutoPIPE, (G+T+P+E, 60°F to 200°F)
Appendix D7	AutoPIPE Analysis – Encasement Stability Check Isometric, Nodes and Stress - Bentley AutoPIPE (G + E, 60°F) Piping Model - Bentley AutoPIPE (G + E, 60°F)
Appendix D8	AutoPIPE Analysis – Encasement Thermal Contraction Isometric, Nodes and Stress - Bentley AutoPIPE (G+T, 80°F to 30°F) Piping Model - Bentley AutoPIPE (G+T, 80°F to 30°F)
Appendix D9	AutoPIPE Analysis – Encasement Sustained Isometric, Nodes and Stress - Bentley AutoPIPE (G+T+P, 60°F to 200°F) Piping Model - Bentley AutoPIPE, (G+T+P, 60°F to 200°F)
Appendix E	Not used
Appendix F	Not used
Appendix G1	Fluid Momentum Loads at Pump Startup
Appendix G2	Calculation of Seismic Multipliers
Appendix H	Piping to Kick Plate Weld Analyses
Appendix I1	Minimum Hydrostatic Test Pressure
Appendix I2	Nozzle Closure Analysis
Appendix I3	Pipe Support Analysis
Appendix I4	Thermal Expansion of Pipe
Appendix J	Minimum Wall Thickness for Pipe Bends

4.0 INPUT DATA

The new transfer lines and associated nozzle assemblies are designed in compliance with ASME B31.3. Table 2 lists the ASME B31.3-compliant components.

Table 2. Transfer Line Components.

Piping Components	Listed or Unlisted	ASME Standard or Unlisted Component Evaluation	Material	ASME B31.3 Section 345.4.2 Test Pressure (see Appendix I1)
Pipe	Listed	ASME B36.19	ASTM A312, TP 316L	930 psig
Pipe	Listed	ASME B36.10	ASTM A53 or ASTM A106	90 psig
Fittings	Listed	ASME B16.9	ASTM A403, WP 304L	930 psig
2-inch PUREX Connectors	Unlisted	RPP-RPT-36800	ASTM A276, Type 304L	930 psig
3-inch PUREX Connectors	Unlisted	RPP-RPT-29063	ASTM A276, Type 304L	930 psig
Closure plate	Unlisted	RPP-CALC-63211, Appendix I2	ASTM A36	90 psig
Weldolet/Laterolet	Listed	MSS SP-97	ASTM A105	90 psig
Pipe cap	Listed	ASME B16.11	ASTM A105	90 psig

The design inputs used throughout the analyses are as follows:

- Maximum head at dead-head is 200 ft (Appendix G1)
- Maximum pump flow rate at run-out is 285.6 gpm (Appendix G1)
- Slurry Pump P-B-2 discharge pressure is limited to ≤275 psig by a safety significant pressure relief valve PSV-PB2-1 (HNF-14755, section 4.4.6.3)
- Transfer line piping shall be analyzed for natural phenomena design category NDC-2, seismic design category SDC-2, limit state C (MT-50400, "Modification Traveler for the 242-A Evaporator Waste Transfer Line Replacement")
- Importance factor is 1.5 (TFC-ENG-STD-06, "Design Loads for Tank Farm Facilities," Section 3.5.5.1)
- Response spectra horizontal S_{DS} is 0.588 (TFC-ENG-STD-06, Section 3.5.5.2)
- Component amplification factor A_p is 2.5 (ASCE/SEI 7-10, *Minimum Design Loads for Buildings and Other Structures*, Table 13.6-1, welded piping in accordance with ASME B31)
- Component response modification factor R_p is 6 (TFC-ENG-DESIGN-C-60, Waiver #284)
- Seismic design category D shall be used (TFC-ENG-STD-06, Section 3.5.5.2)
- Soil site class C shall be used (TFC-ENG-STD-06, Section 3.5.5.2)
- Design pressure primary piping is 620 psig (MT-50400, Table 4)
- Design pressure encasement piping is 60 psig (MT-50400, Table 4)

- Design temperature is 200 °F (MT-50400, Table 4)
- Piping is buried; therefore, wind and snow loads are neglected
- Minimum ambient temperature is -25 °F (TFC-ENG-STD-06, Section 3.5.9)
- Minimum ambient temperature is 30 °F for depths of 36 in. and below (TFC-ENG-STD-02, "Environmental/Seasonal Requirements for TOC Systems, Structures, and Components," Table 2)
- An ambient temperature of 60 °F is used for thermal expansion (TFC-ENG-DESIGN-C-60, Table 2(a))
- An ambient temperature of 80 °F is used for thermal contraction (TFC-ENG-DESIGN-C-60, Table 2(a))
- Service life is 50 years (MT-50400)
- Corrosion is 0.01 in. based on a 50-year service life (0.2 mils per year, TFC-ENG-STD-22, Section 3.5.2.1)
- Specific gravity of process fluid 1.60 (MT-50400, Table 2 and HNF-14755, *242-A Evaporator Documented Safety Analysis*)
- The outside diameter of 2-in., schedule 40 pipe is 2.375 in. and the wall thickness is 0.154 in. (ASTM A312/A312M-13a, *Standard Specification for Seamless, Welded, and Heavily Cold Worked Austenitic Stainless Steel Pipes*, Table X1.1)
- The outside diameter of 3 in., schedule 40 pipe is 3.5 in. and the wall thickness is 0.216 in. (ASTM A312/A312M-13a, Table X1.1)
- The outside diameter of 4-in., schedule 40 pipe is 4.5 in. and the wall thickness is 0.237 in. (ASTM A53/A53M-02, *Standard Specification for Pipe, Steel, Black and Hot-Dipped, Zinc-Coated, Welded and Seamless*)
- The outside diameter of 6-in., schedule 40 pipe is 6.625 in. and the wall thickness is 0.280 in. (ASTM A53/A53M-02)
- Weld filler material has an ultimate tensile strength of 70 ksi (AWS D1.6, *Structural Welding Code—Stainless Steel*)
- Weld filler material has allowable strength of 0.3*UTS = 21 ksi per Table 2.1 of AWS D1.6
- 316L stainless steel has a minimum yield strength of 25 ksi per ASTM A312/A312M-13a
- Stainless steel base metal has allowable strength of $0.4*F_Y$ = 10 ksi per AWS D1.6, Table 2.130
- Forces and moments used in the weld analysis are taken from the results of the AutoPIPE® analysis.

5.0 ENABLING ASSUMPTIONS

Operating procedures generated in accordance with TFC-OPS-OPER-C-49, "Development of Waste Retrieval and Transfer Operating Procedures," precludes manipulation of valves during waste transfers that could initiate a fluid transient (i.e., water hammer). This analysis assumes

® AutoPIPE is a registered trademark of Bentley Systems, Inc.

that future operating procedures for waste transfers to/from the 242-A Evaporator will be prepared in accordance with TFC-OPS-OPER-C-49, and no valves (with the exception of the AW-02E flow control valve FCV-160 and 242-A Evaporator valve HV-CA1-1 as discussed in Section 6.1 of this analysis) will be manipulated during the waste transfers. Therefore, no water hammer analyses for the new waste transfer lines have been performed. As part of transfers and compliance with RPP-13033, *Tank Farm Documented Safety Analysis*, technical evaluations were performed to satisfy specific administrative control (SAC) 5.8.5, "Waste Transfer System Overpressure and Flow Transient Protection" (RPP-TE-57104*, SAC 5.8.5, DID 23, and DID 29 Evaluation for 242-A Operations using Tank Farm Waste Transfer Piping*, and RPP-TE-58318, *Tank Farm Waste Transfer Overpressure Implementation Document*), to ensure that the equipment is to be operated within its design capacity.

Transfer line flushes and in-service leak checks may be performed that would manipulate valves within the 241-AW Tank Farm piping and potentially initiate a fluid transient. Transients from transfer line flushes and leak checks have been evaluated for the DST transfer system in RPP-RPT-58773. This report concludes that transient analysis is not required so long as the prerequisite conditions are met:

- Flow rate and pressure within the waste transfer route are maintained at less than or equal to 40 gpm and 105 psig during system leak checks and flushes prior to closure of any valve.
- Flush water is provided from the service water building through the AP valve pit or the AN water supply. With these sources, no route-specific analysis is required for evaluation of water hammer loading on the safety-significant piping. Note that any modifications to the supply piping configuration from the AP service water building or the AN water supply may affect the conclusions of this analysis and would require evaluation. When flow rate is controlled as noted above, the installed waste transfer piping and jumpers have sufficient design margin that any postulated fast valve closure water hammer load can be accommodated without exceeding the ASME B31.3 code occasional load limits. This conclusion is limited to 2-in. and 3-in. schedule 40 or higher piping installed throughout the existing tank farms. It does not apply to lower-schedule or larger-diameter piping that was not part of the evaluation.
- New jumper designs will not require specific water hammer loading analysis for leak checks and flushes if simple supplemental rules are implemented to provide robust piping designs.

This analysis assumes the first two prerequisites will be controlled by the applicable work package(s) or procedure(s). Demonstration that the supplemental requirements contained in RPP-RPT-58773 have been met are documented in RPP-SPEC-63236. Transfer line flushes from the 242-A Evaporator are currently performed by filling the C-A-1 vessel with raw water and gravity draining to the feed and/or receiver tank through their respective transfer lines. The new transfer lines do not change the hydraulics of the transfer system to invalidate previous SAC 5.8.5 conclusions. Therefore, no water hammer analysis for transfer line flushes for in-service leak checks for the 242-A Evaporator pump room piping has been performed. The SAC 5.8.5 technical evaluation will require that these assumptions be integrated with the operating procedure/work control document to ensure the equipment it operated within the bounds of this analysis.

6.0 METHOD OF ANALYSIS

Multiple analyses are included in this document to demonstrate compliance with TFC-ENG-DESIGN-C-60 and ASME B31.3, as described in the following sections.

6.1 WATER HAMMER ANALYSIS

There are two valves that may be manipulated during a waste transfer from the AW-02E pit to the 242-A Evaporator, FCV-160 and HV-CA1-1. Valves FCV-160 and HV-CA1-1 are evaluated against the screening criteria for valve operation transient in accordance with TFC-ENG-DESIGN-C-60 by hand calculation (RPP-CALC-63435, Appendix G3). Manipulation of other valves that could cause a flow disturbance is controlled by operating procedures generated via TFC-OPS-OPER-C-49 that do not close valves to dead head a pump during a waste transfer. The only events with valve closures are flushes and in-service leak checks. Valves will be manipulated during the in-service leak check to pressurize the transfer line piping system and perform a visual inspection for leaks in the individual pit connections.

Per TFC-ENG-DESIGN-C-60, a specific water hammer analysis is bound by the analyses performed in RPP-RPT-58773 so long as all the requirements and prerequisite conditions listed in Appendix D of RPP-RPT-58773 are satisfied. The prerequisite conditions focus on the regulated flow rate of service water as well as the source of the service water. Demonstration that the supplemental requirements contained in RPP-RPT-58773 have been met are documented in RPP-SPEC-63236.

6.1.1 Piping Stability Check

To satisfy the requirements of RPP-RPT-58773, Appendix D, requirement D5, a static load of 1 g value was applied in each of the three orthogonal directions in the AutoPIPE model (Appendices D1, D4, and D7). Model convergence with a 1 g load is required to demonstrate stability of the transfer line piping.

6.1.2 Column Separation Analysis

The Documented Safety Analysis (RPP-13033) requires an evaluation via SAC 5.8.5 for the screening of over-pressurization of the safety-significant portions of the waste transfer system prior to operation. Existing evaluation (e.g., RPP-TE-57104) has documented that rapid valve closure during waste transfers does not occur or controls are in place to mitigate flow transients due to valve closure. This evaluation also screens for other types of transient initiators including high point column separation, plug flow, etc. The new transfer lines do not change the hydraulics of the transfer system to invalidate previous SAC 5.8.5 conclusions. The new jumper arrangement in AW-02E still provides the same controls (i.e., travel stops on AW02E-WT-FCV-160) to mitigate high point column separation on the feed line. Engineering controls in the 242-A pump room (i.e., vacuum breaker) are not impacted by this project for the mitigation of column separation only the slurry line. The safety-significant vacuum breaker, PSV-CA1-4, is installed in the pump room jumper C to 4-40 and protects the downstream piping from pressure transients from a column separation. Based on the similar nature of the piping configurations, the implementation of the same controls, it is not anticipated that future SAC 5.8.5 evaluations will restrict their use above current operational practices.

6.1.3 Fluid Momentum Loads

Fluid momentum loads from a transfer line flush, pump startup, and pump shutdown are evaluated in Appendix G1. The highest loads occur at pump startup and are conservatively calculated in accordance with TFC-ENG-DESIGN-C-60 by hand calculation, assuming an instantaneous pump start at the maximum flow rate.

6.2 OVER-PRESSURIZATION ANALYSIS

Over-pressurization of the transfer lines was evaluated for pressures resulting from deadhead of the new AW-02E feed pump with the maximum possible specific gravity waste. The resultant pressure is compared to the design pressure of the new transfer lines. The new slurry transfer lines SL-170 and SL-171, which route waste from the 242-A Evaporator to the AW-02A central pump pit are protected by a safety-significant pressure relief valve PSV-PB2-1, which limits the pressure to 275 psi (HNF-14755, Section 4.4.6.3).

6.3 SEISMIC MULTIPLIERS

ASME B31.3 requires earthquake loads to be taken into account using methods described in ASCE/SEI 7-10. AutoPIPE requires a seismic multiplier as an input to analyze occasional seismic loads. Horizontal and vertical seismic multipliers were determined in accordance with TFC-ENG-STD-06 to SDC-2 criteria using hand calculation methods (Appendix G2).

6.4 PIPING ANALYSIS

Nine models' analyses were completed in Bentley AutoPIPE Nuclear for various loading conditions (Appendices D1 through D9). The models were created from drawings H-14-111832, *Wall Nozzle Assemblies 242-A Pump Room*; H-14-111833, *Wall Nozzle Assemblies AW Structures*; H-14-111860, *DST Replacement Transfer Lines Plan and Profile 241-AW to 242-A Evaporator*; H-14-111861, *DST Replacement Transfer Lines Supports 241-AW to 242-A Evaporator*; and H-14-111862, *242-A Evaporator Replacement Transfer Lines Pipe-In-Pipe Assemblies and Details 241-AW to 242-A Evaporator*, and analyze the following loading conditions:

- Appendix D1 – Primary Piping Stability Check
- Appendix D2 – Primary Piping Thermal Contraction
- Appendix D3 – Primary Piping Sustained and Occasional Seismic
- Appendix D4 – Encasement Drain and Test Port Piping Stability Check
- Appendix D5 – Encasement Drain and Test Port Piping Thermal Contraction
- Appendix D6 – Encasement Drain and Test Port Piping Sustained and Occasional Seismic
- Appendix D7 – Encasement Stability Check
- Appendix D8 – Encasement Thermal Contraction
- Appendix D9 – Encasement Piping Sustained.

The primary piping is centered in the encasement piping using two types of pipe supports, flat plate type supports and guide supports (see Figure 1). The primary line is supported near each end of a bend with a pipe flat plate pipe support to allow for thermal growth into or away from a bend. The pipe support is modeled as a v-stop with gap settings equal to the annulus space in the vertical up and lateral directions. The guide supports are modeled as a guide support with gap in

the vertical up and lateral directions equal to half the distance of the gap between the top fin and the encasement pipe

Figure 1. Pipe Support.

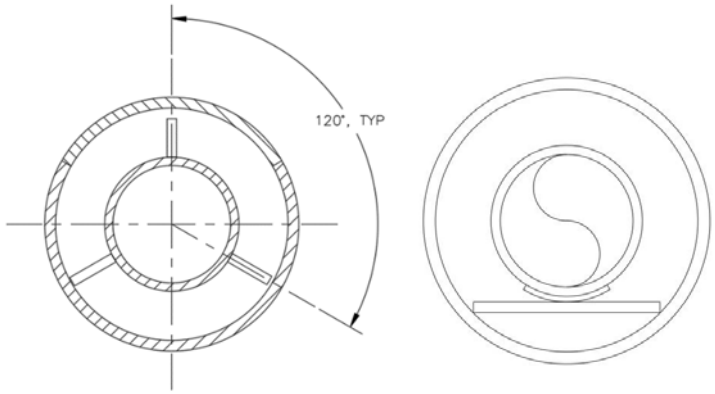

The piping stability models (Appendices D1, D4, and D7) include a 1 g seismic load in three orthogonal directions. The models are required to demonstrate piping stability and satisfy the requirements of RPP-RPT-58773, Appendix D, requirement D5.

The thermal contraction models (Appendices D2, D5, and D8) represent a non-operating condition. The thermal contraction models empty piping (no liquid contents or pressure) and determines the stress resulting from thermal contraction from 80 °F to 30 °F.

The sustained and occasional seismic models (Appendices D3, D6, and D9) include thermal expansion (60 °F to 200 °F) and sustained (dead weight and 620 psig on the primary piping). Appendices D3 and D6 include occasional seismic loads. Appendix D9 does not include occasional seismic loads since the piping is fully encased in controlled density fill (CDF). The seismic multipliers are calculated in Appendix G2. Seismic loads were applied in eight directions, four horizontal directions each with positive and negative vertical seismic loading.

The encasement piping is fully encapsulated in CDF which will act like an anchor to the piping. The CDF will restrain the piping from upward, downward, and lateral movement. The encasement pipe is coated with a fusion bonded epoxy layer that has a low coefficient of friction and will allow some linear expansion/contraction of the encasement piping. The encasement piping bends are wrapped with 1-inch thick insulation as shown on H-14-111860 to absorb thermal expansion and contraction. The AutoPIPE model of the encasement piping is provided to show ASME B31.3 compliance for sustained and thermal loading. The thermal expansion and contraction of the pipe from installed to design temperature is determined in Appendix I4.

6.5 WELD ANALYSES

The loads on the welded connections were determined in Bentley AutoPIPE (Appendix D3). For the welded attachment between the kick plate and piping, the highest forces and moments were used (Appendix D3) regardless of the associated load case (e.g., Fx from thermal and Fy from seismic). Analysis in this method produces conservative results.

The weld analyses are performed using the Blodgett (1976), *Design of Weldments*, weld-as-a-line method and hand calculations on the connection between the piping and kick plate

(Appendix H). The weld analyses are performed using allowable stresses per AWS D1.1/D1.1M, *Structural Welding Code-Steel,* Table 2.3, for carbon steel and AWS D1.6/D1.6M, Table 2.1, for stainless steel.

6.6 CURVED PIPE WALL THICKNESS ANALYSIS

Per ASME B31.3, Section 304.2.1, the minimum required thickness of a bend after bending, in its finished form, shall be determined in accordance with Equations (2) and (3c). The minimum wall thickness analysis is determined in Appendix J of this calculation.

6.7 ENCASEMENT CLOSURE ANALYSIS

The encasement closures are analyzed in accordance with ASME B31.3, Section 304.4.1 and ASME BPVC (2017), *Boiler and Pressure Vessel Code*, Code UG-34. The pressure design thickness and minimum weld size for the encasement closure plates are determined in Appendix I2 of this calculation.

6.8 PIPE SUPPORT ANALYSIS

The pipe supports (H-14-111862, Item 20) and pipe guides (H-14-111862, Item 17 and Item 19) are analyzed in Appendix I3. The loads on the pipe supports were determined in Bentley AutoPIPE (Appendix D3). The supports and guides are analyzed for shear and bending in accordance with the 2012 American Institute of Steel Construction (AISC) *Steel Construction Manual*. The pipe support and guide weld analyses are performed using Blodgett (1976) weld-as-a-line method and hand calculations. The weld analyses are performed using allowable stresses per AWS D1.6/D1.6M, Table 2.1. For the welded attachments, the highest forces and moments were used (Appendix D3) regardless of the associated load case (e.g., Fx from thermal and Fy from seismic). Analysis in this method produces conservative results.

6.9 THERMAL EXPANSION ANALYSIS

The thermal expansion and contraction of the primary and encasement piping is determined in Appendix I4. The thermal expansion data is taken from ASME B31.3, Table C-1. Thermal expansion is determined using an installation temperature of 60 ºF to a design temperature of 200 ºF. Thermal contraction is determined using an installation temperature of 80 ºF to a design temperature of 30 ºF. Thermal expansion and contraction data is used to ensure the spacing between the primary and encasement piping is adequate for the design temperatures.

7.0 USE OF COMPUTER SOFTWARE

7.1 BENTLEY AUTOPIPE

Bentley AutoPIPE Nuclear Version 12.00.00.16 was used to complete the ASME B31.3 analysis of the transfer line piping. The analysis was performed on Columbia Energy and Environmental Services, Inc. (Columbia Energy) desktop computer number CE-IT-10112. The validation acceptance test set for AutoPIPE Nuclear Version 12.00.00.16 was completed on computer CE-IT-10112 on May 27, 2019 and is documented in CEES-CALC-GEN-M-028, *Verification & Validation of Bentley AutoPIPE Nuclear Version 12.00.00.16*. The verification and validation (V&V) for AutoPIPE was completed on May 29, 2019 and is documented in Columbia Energy V&V report CEES-SVVR-19-003, *Bentley AutoPIPE Nuclear COTS Software V&V Report*.

7.2 MATHCAD

MathCAD® Version 15.0 computer software is used to display and format the piping to kick plate weld analyses (Appendices H). All MathCAD computations are checked with a handheld calculator.

8.0 RESULTS

8.1 WATER HAMMER

Per TFC-ENG-DESIGN-C-60, a specific water hammer analysis is bound by the analyses performed in RPP-RPT-58773 so long as the all of the requirements of RPP-RPT-58773, Appendix D, are satisfied. Demonstration that the supplemental requirements contained RPP-RPT-58773 have been met are documented in RPP-SPEC-63236.

8.1.1 Stability Check

In accordance with RPP-RPT-58773, Appendix D, requirement D5, a stability check was performed on the transfer line piping as documented in Appendices D1, D4, and D7 of this report. A load equivalent to the weight of the piping assembly (1 g) was applied in three orthogonal directions simultaneously to verify model convergence. There are no specific requirements for maximum stress under this loading condition per RPP-RPT-58773; stress values are reported to demonstrate model convergence only. The transfer line piping model passed the stability check.

8.1.2 Fluid Momentum Loads

Fluid momentum loads from a transfer line flush, pump startup, and pump shutdown are evaluated in Appendix G1. The highest loads occur at pump startup and are conservatively calculated in accordance with TFC-ENG-DESIGN-C-60 by hand calculation, assuming an instantaneous pump start at the maximum flow rate and specific gravity. The resulting force from an instantaneous pump start bounds a line flush (limited to 40 gpm, per Table 3, requirement D10b) and pump shutdown. The maximum theoretical force has been conservatively calculated to be 25 lb. This force is small and bounded by the seismic analyses (Appendix D3).

8.2 OVER-PRESSURIZATION

The maximum pressure in the 242-A Evaporator pump room slurry piping is controlled by a safety significant pressure relief valve PSV-PB2-1, which limits the pressure to 275 psig; less than the 620 psig design pressure of the slurry piping. The maximum pressure in the supernate piping will occur when the pump is deadheaded. The pump dead head as tested with water was found to be 87 psig (Appendix G1, $200ft \div 2.31\frac{ft}{psi} = 87psi$). At a maximum specific gravity of 1.6 g/ml, the maximum installed pressure will be 139 psig (87 × 1.6), which is less than the 620 psig design pressure of the new transfer line piping. The maximum installed pressure is also less than the 275 psig design pressure for M-25 supernate piping per B-120-C7, *Construction Specification for the 241-AW Tank Farm Completion Project B-120*, for other existing 241-AW

® MathCAD is a registered trademark of Parametric Technologies Corporation Inc.

Tank Farm transfer lines. No over-pressure protection is required for the installation of the new transfer lines.

8.3 SEISMIC MULTIPLIER RESULTS

The seismic multipliers are determined in Appendix G2 in accordance with TFC-ENG-STD-06 and ASCE/SEI 7-10, Chapter 13. The seismic multipliers are calculated to be 0.186 in the horizontal direction and 0.083 in the vertical direction. The seismic multipliers are used as inputs to the AutoPIPE model in Appendix D3.

8.4 ASME B31.3 PIPING RESULTS

The maximum stresses in the transfer line piping results from seismic loads (occasional stress) having a stress ratio of 0.71 relative to code allowable maximum stress as shown in Table 3. The transfer line piping design complies with ASME B31.3. See Appendix D3.

Table 3. AutoPIPE Stress Summary.

Stress Type	Point	Stress (psi)	Allowable Stress (psi)	Ratio	Load Combination
Sustained	A24	4,516	16,700	0.27	GR+Max P
Displacement	B56 N	7,530	25,050	0.30	Max Range
Occasional	B62	15,686	22,211	0.71	Sus+E3
Hoop	B00	5,813	16,700	0.35	Max P

8.5 WELD RESULTS

The welds between the piping and kick plate are adequate as designed for operating loads. The welded attachment of the 2-in.-diameter transfer line piping to the kick plate has a minimum design ratio of 15.4. The welded attachment of the 3-in.-diameter transfer line piping to the kick plate has a minimum design ratio of 6.75. The piping kick plate is welded in accordance with ASME B31.3. See Appendix H.

8.6 CURVED PIPE WALL THICKNESS RESULTS

The minimum wall thickness for curved sections of 1-in.-diameter schedule 40 pipe is 0.012 in. The minimum wall thickness for curved sections of 2-in.-diameter schedule 40 pipe is 0.054 in. The minimum wall thickness for curved sections of 3-in.-diameter schedule 40 pipe is 0.076 in. The 4-in.-diameter schedule 40 pipe is 0.017 in. The minimum wall thickness for curved sections of 6-in.-diameter schedule 40 pipe is 0.020 in. See Appendix J.

8.7 ENCASEMENT CLOSURE RESULTS

The encasement closures are adequate as designed for operational loads. The 6-in. encasement enclosure has a design ratio of 3.07 for pressure design thickness and a design ratio of 1.72 for minimum weld thickness. The 4-in. encasement enclosure has a design ratio of 3.46 for pressure design thickness and a design ratio of 2.19 for minimum weld thickness. See Appendix I2.

8.8 PIPE SUPPORT RESULTS

The pipe supports (H-14-111862, Item 20) and pipe guides (H-14-111862, Item 17 and Item 19) are adequate as designed for operational loads. The pipe support member has a minimum design ratio of 3.74 to AISC allowables and a minimum design ratio of 10.14 to weld allowables. The pipe guide member has a minimum design ratio of 2.14 to AISC allowables and a minimum design ratio of 3.96 to weld allowables. See Appendix I3.

8.9 THERMAL EXPANSION ANALYSIS

The annulus space between the 3-in. primary and 6-in. encasement piping is 1.28 in. The annulus space between the 2-in. primary and 4-in. encasement piping is 0.83 in. The thermal expansion from 60 ºF to 200 ºF for stainless steel pipe is 1.50 in. per 100 ft. The thermal expansion from 60 ºF to 200 ºF for carbon steel pipe is 1.08 in. per 100 ft. The thermal contraction from 80 ºF to 30 ºF for stainless steel pipe is 0.51 in. per 100 ft. The thermal expansion from 80 ºF to 30 ºF for carbon steel pipe is 0.38 in. per 100 ft. See Appendix I4.

Considering only the thermal expansion of the stainless steel primary piping and the annulus between the 2-in. and 4-in. piping for conservatism. The longest run of pipe between an anchor point and a single bend is less than 26-feet, which results in thermal expansion of 0.39 in. ($26ft \times \frac{1.5in}{100ft} = 0.39in$) which is less than the 0.83 in. of annulus space available. The longest straight run of piping between two bends is less than 100 ft. In a straight run between bends there is 1.66 in. of annulus space available ($0.83in \times 2 = 1.66in$); therefore, the primary piping will not contact the encasement piping at the bend locations due to thermal expansion or contraction and the 1-in.-thick wrap at the encasement bends is adequate to absorb thermal growth.

9.0 CONCLUSIONS

This analysis, in conjunction with RPP-CALC-63212 and RPP-SPEC-63236, shows that the installation of replacement transfer lines AW02A-WT-WTL-SL-170, AW02A-WT-WTL-SL-171, AWVPB-WT-WTL-SL-172, and AW02E-WT-WTL-SN-275 complies with the requirements of ASME B31.3, TFC-ENG-DESIGN-C-60, and TFC-ENG-STD-22, and is within code allowable stresses for forces applied by gravity, thermal expansion, internal pressure, seismic, and impact loads.

10.0 RECOMMENDATIONS

None.

11.0 REFERENCES

AISC, 2012, *Steel Construction Manual*, Fourteenth Edition, American Institute of Steel Construction, Chicago, Illinois.

ASCE/SEI 7-10, 2010, *Minimum Design Loads for Buildings and Other Structures,* American Society of Civil Engineers, Reston, Virginia.

ASME B16.11, 2016, *Forged Fittings, Socket-Welded and Threaded*, American Society of Mechanical Engineers, New York, New York.

ASME B31.3, 2016, *Process Piping*, American Society of Mechanical Engineers, New York, New York.

ASME B36.10M-2018, 2018, *Welded and Seamless Wrought Steel Pipe*, American Society of Mechanical Engineers, New York, New York.

ASME B36.19M-2018, 2018, *Stainless Steel Pipe*, American Society of Mechanical Engineers, New York, New York.

ASME BPVC, 2017, *Boiler and Pressure Vessel Code*, American Society of Mechanical Engineers, New York, New York.

ASTM A36/A36M-19, 2019, *Standard Specification for Carbon Structural Steel*, ASTM International, West Conshohocken, Pennsylvania.

ASTM A53/A53M-13, 2013, *Standard Specification for Pipe, Steel, Black and Hot-Dipped, Zinc-Coated, Welded and Seamless*, ASTM International, West Conshohocken, Pennsylvania.

ASTM A105/A105M-18, *Standard Specification For Carbon Steel Forgings For Piping Applications,* ASTM International, West Conshohocken, Pennsylvania.

ASTM A106/A106M-19, *Standard Specification For Seamless Carbon Steel Pipe For High-Temperature Service,* ASTM International, West Conshohocken, Pennsylvania.

ASTM A276/A276M-17, *Standard Specification for Stainless Steel Bars and Shapes,* ASTM International, West Conshohocken, Pennsylvania.

ASTM A312/A312M-19, *Standard Specification for Seamless, Welded, and Heavily Cold Worked Austenitic Stainless Steel Pipes*, ASTM International, West Conshohocken, Pennsylvania.

ASTM A403/ A403M-20, *Standard Specification for Wrought Austenitic Stainless Steel Piping Fittings*, ASTM International, West Conshohocken, Pennsylvania.

AWS D1.1/D1.1M, 2015, *Structural Welding Code—Steel*, American Welding Society, Miami, Florida.

AWS D1.6/D1.6M, 2017, *Structural Welding Code—Stainless Steel*, American Welding Society, Miami, Florida.

B-120-C7, 1977, *Construction Specification for the 241-AW Tank Farm Completion Project B-120*, Rev. 1, Vitro Engineering Corporation, Richland, Washington.

Blodgett, O.W., 1976, *Design of Weldments*, Eighth Printing, August, The James F. Lincoln Arc Welding Foundation, Cleveland, Ohio.

CEES-CALC-GEN-M-028, 2019, *Verification & Validation of Bentley AutoPIPE Nuclear Version 12.00.00.16,* Rev. 0, Columbia Energy and Environmental Services, Inc., Richland, Washington.

CEES-SVVR-19-003, 2019, *Bentley AutoPIPE Nuclear COTS Software V&V Report*, Columbia Energy and Environmental Services, Inc., Richland, Washington.

H-14-111832, 2020, *Wall Nozzle Assemblies 242-A Pump Room*, Sheets 1-14, Rev. 1, U.S. Department of Energy, Office of River Protection, Richland, Washington.

H-14-111833, *Wall Nozzle Assemblies AW Structures*, Sheets 1-11, Rev. 1, U.S. Department of Energy, Office of River Protection, Richland, Washington.

H-14-111860, 2020, *DST Replacement Transfer Lines Plan and Profile 241-AW to 242-A Evaporator,* Sheets 1-3, Rev. 0, U.S. Department of Energy, Office of River Protection, Richland, Washington.

H-14-111861, 2020, *DST Replacement Transfer Lines Supports 241-AW to 242-A Evaporator,* Sheets 1-3, Rev. 0, U.S. Department of Energy, Office of River Protection, Richland, Washington.

H-14-111862, 2020, *DST Replacement Transfer Lines Pipe-In Pipe Assemblies and Details 241-AW to 242-A Evaporator,* Sheets 1-5, Rev. 0, U.S. Department of Energy, Office of River Protection, Richland, Washington.

HNF-14755, 2019, *242-A Evaporator Documented Safety Analysis*, Rev. 06F, Washington River Protection Solutions, LLC, Richland, Washington.

MSS SP-97, 2012, *Integrally Reinforced Forged Branch Outlet Fittings - Socket Welding, Threaded, And Buttwelding Ends,* Manufacturers Standardization Society of the Valve and Fittings Industry, Inc., NE Vienna, Virginia.

MT-50400, 2020, "242-A Evaporator Waste Transfer Line Replacement," Rev. 01, Washington River Protection Solutions, LLC, Richland, Washington.

RPP-13033, 2019, *Tank Farm Documented Safety Analysis*, Rev. 07P, Washington River Protection Solutions, LLC, Richland, Washington.

RPP-CALC-63212, 2020, *241-AW Tank Farm Waste Transfer Lines SL-170, SL-171, SL-172 and SN-275 Supporting Analyses,* Rev. 0, Washington River Protection Solutions, LLC, Richland, Washington.

RPP-RPT-58773, 2018, *Assessment of Safety Significant Piping Jumpers to Assure Excess Load Capacity for Potential Water Hammer (Leak Check and Flush) Events*, Rev. 2, Washington River Protection Solutions, LLC, Richland, Washington.

RPP-SPEC-63236, 2020, *241-AW and 242-A Evaporator Wall Nozzle Assemblies and Transfer Lines Design Requirements Compliance Matrix,* Rev. 0, Washington River Protection Solutions, LLC, Richland, Washington.

RPP-TE-58318, 2019, *Tank Farm Waste Transfer Overpressure Implementation Document*, Rev. 8, Washington River Protection Solutions, LLC, Richland, Washington.

TFC-ENG-DESIGN-C-60, 2020, "Preparation of Piping Analyses for Waste Transfer Systems," Rev. A-3, Washington River Protection Solutions, LLC, Richland, Washington.

TFC-ENG-STD-02, 2017, "Environmental/Seasonal Requirements for TOC Systems, Structures, and Components," Rev. A-12, Washington River Protection Solutions, LLC, Richland, Washington.

TFC-ENG-STD-06, 2017, "Design Loads for Tank Farm Facilities," Rev. D-1, Washington River Protection Solutions, LLC, Richland, Washington.

TFC-ENG-STD-22, 2017, "Piping, Jumpers and Valves," Rev. G-2, Washington River Protection Solutions, LLC, Richland, Washington.

TFC-OPS-OPER-C-49, 2019, "Development of Waste Retrieval and Transfer Operating Procedures (Including Water and Chemical Additions)," Rev. C-10, Washington River Protection Solutions, LLC, Richland, Washington.

APPENDIX A

MARKED UP PIPING AND INSTRUMENTATION DIAGRAM

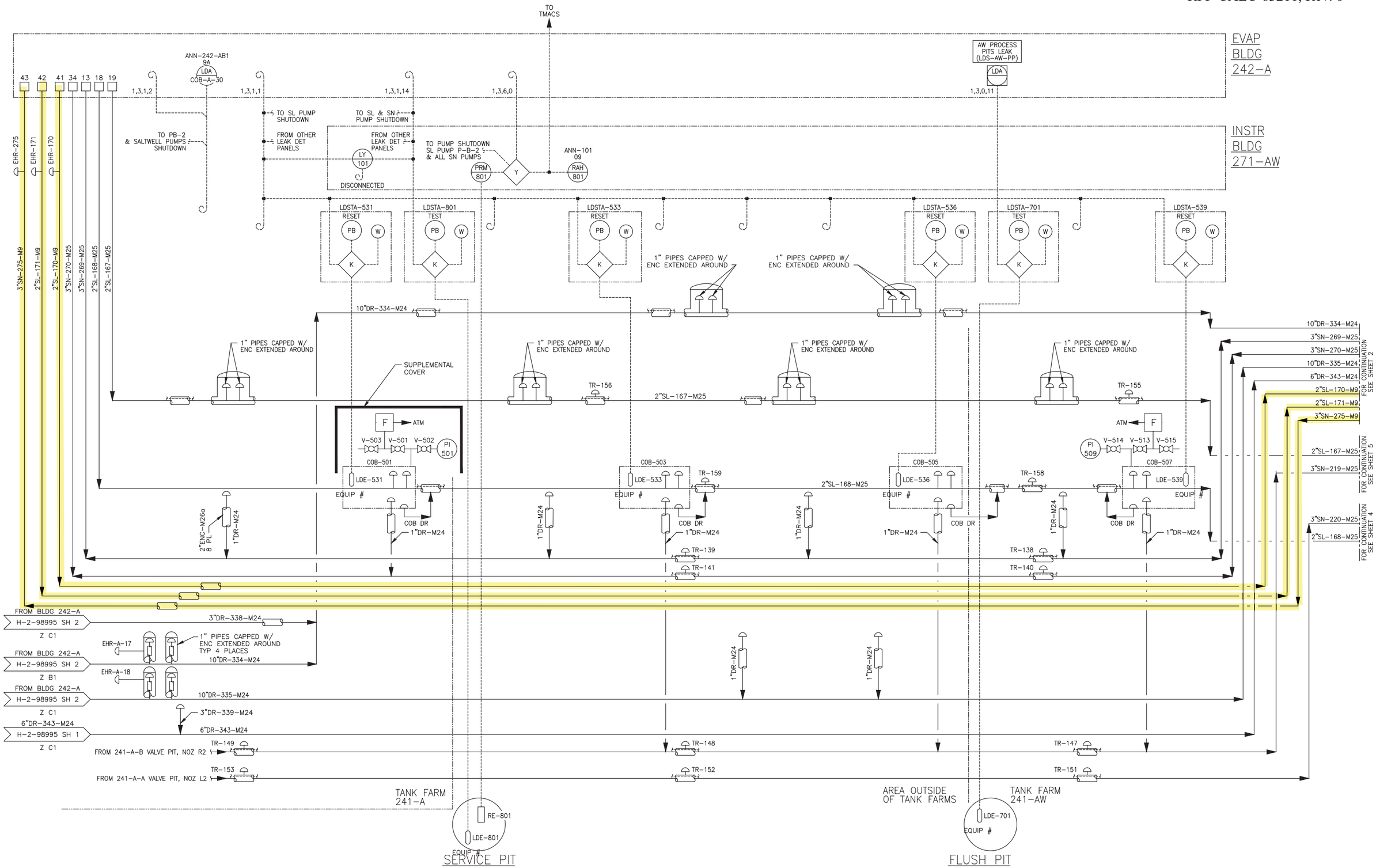
TO TMACS
EVAP BLDG 242-A
INSTR BLDG 271-AW
ANN-242-AB1 9A
LDA
COB-A-30
AW PROCESS PITS LEAK (LDS-AW-PP)
TO SL PUMP SHUTDOWN
TO SL & SN PUMP SHUTDOWN
TO PB-2 & SALTWELL PUMPS SHUTDOWN
FROM OTHER LEAK DET PANELS
LY 101
DISCONNECTED
TO PUMP SHUTDOWN SL PUMP P-B-2 & ALL SN PUMPS
PRM 801
ANN-101 09
RAH 801
LDSTA-531 RESET
LDSTA-801 TEST
LDSTA-533 RESET
LDSTA-536 RESET
LDSTA-701 TEST
LDSTA-539 RESET
1" PIPES CAPPED W/ ENC EXTENDED AROUND
10"DR-334-M24
SUPPLEMENTAL COVER
TR-156
TR-155
2"SL-167-M25
2"SL-168-M25
COB-501
COB-503
COB-505
COB-507
LDE-531
LDE-533
LDE-536
LDE-539
EQUIP #
COB DR
1"DR-M24
TR-159
TR-158
TR-139
TR-141
TR-138
TR-140
FROM BLDG 242-A H-2-98995 SH 2 Z C1
FROM BLDG 242-A H-2-98995 SH 2 Z B1
FROM BLDG 242-A H-2-98995 SH 2 Z C1
FROM BLDG 242-A H-2-98995 SH 1 Z C1
3"DR-338-M24
EHR-A-17
EHR-A-18
10"DR-335-M24
3"DR-339-M24
6"DR-343-M24
TR-149
TR-148
TR-147
TR-153
TR-152
TR-151
FROM 241-A-B VALVE PIT, NOZ R2
FROM 241-A-A VALVE PIT, NOZ L2
TANK FARM 241-A
AREA OUTSIDE OF TANK FARMS
TANK FARM 241-AW
RE-801
LDE-801
LDE-701
SERVICE PIT
EIN EQUIPMENT LOCATION: AW801
FLUSH PIT
EIN EQUIPMENT LOCATION: AWFP
FOR CONTINUATION SEE SHEET 2
FOR CONTINUATION SEE SHEET 5
FOR CONTINUATION SEE SHEET 4

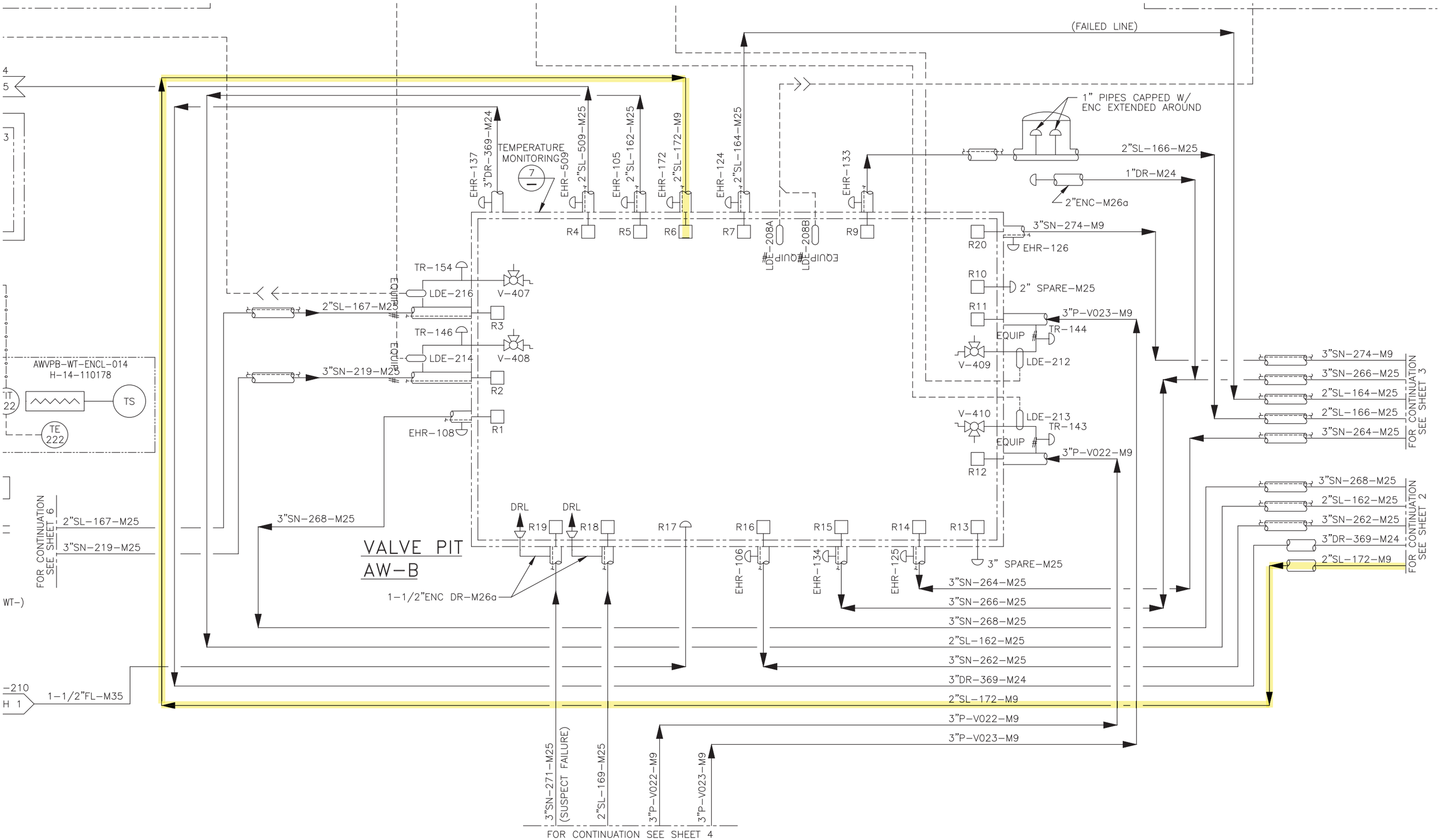
(FAILED LINE)
1" PIPES CAPPED W/ ENC EXTENDED AROUND
2"SL-166-M25
1"DR-M24
2"ENC-M26a
3"SN-274-M9
EHR-126
2" SPARE-M25
3"P-V023-M9
TR-144
EQUIP #
LDE-212
V-409
LDE-213
TR-143
V-410
3"P-V022-M9
3" SPARE-M25
EHR-137
3"DR-369-M24
TEMPERATURE MONITORING
EHR-509
2"SL-509-M25
EHR-105
2"SL-162-M25
EHR-172
2"SL-172-M9
EHR-124
2"SL-164-M25
EHR-133
LDE-208A
LDE-208B
R4
R5
R6
R7
R9
R20
R10
R11
R12
R13
R14
R15
R16
R17
R18
R19
R3
R2
R1
TR-154
V-407
LDE-216
2"SL-167-M25
TR-146
V-408
LDE-214
3"SN-219-M25
EHR-108
AWVPB-WT-ENCL-014
H-14-110178
TS
TE 222
3"SN-268-M25
DRL
VALVE PIT
AW-B
1-1/2"ENC DR-M26a
EHR-106
EHR-134
EHR-125
3"SN-264-M25
3"SN-266-M25
3"SN-268-M25
2"SL-162-M25
3"SN-262-M25
3"DR-369-M24
2"SL-172-M9
3"P-V022-M9
3"P-V023-M9
3"SN-271-M25
(SUSPECT FAILURE)
2"SL-169-M25
FOR CONTINUATION SEE SHEET 4
FOR CONTINUATION SEE SHEET 3
FOR CONTINUATION SEE SHEET 2
FOR CONTINUATION SEE SHEET 6
1-1/2"FL-M35

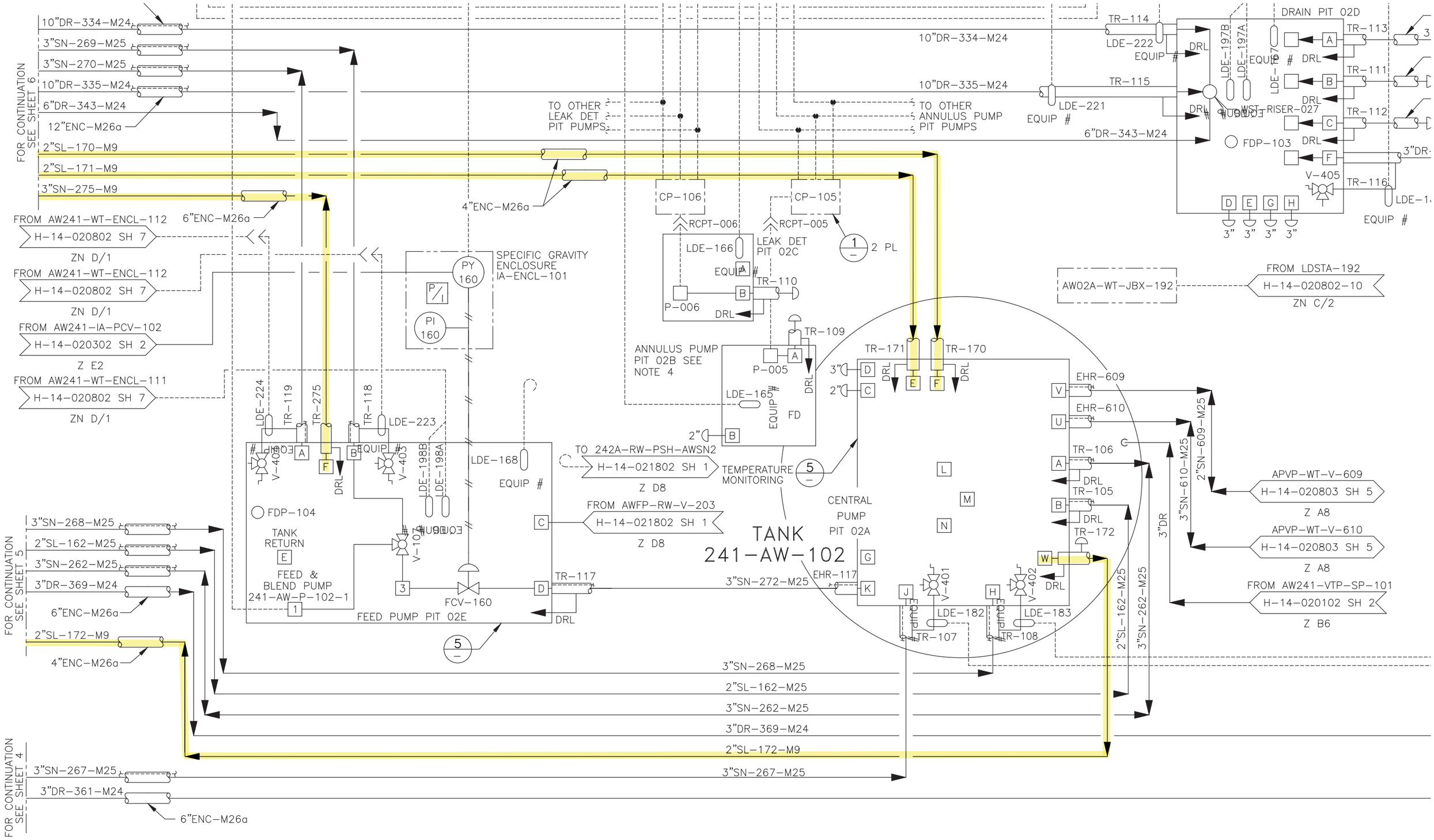
10"DR-334-M24
3"SN-269-M25
3"SN-270-M25
10"DR-335-M24
6"DR-343-M24
12"ENC-M26a
2"SL-170-M9
2"SL-171-M9
3"SN-275-M9
FOR CONTINUATION SEE SHEET 6
FROM AW241-WT-ENCL-112
H-14-020802 SH 7
ZN D/1
FROM AW241-WT-ENCL-112
H-14-020802 SH 7
ZN D/1
FROM AW241-IA-PCV-102
H-14-020302 SH 2
Z E2
FROM AW241-WT-ENCL-111
H-14-020802 SH 7
ZN D/1
6"ENC-M26a
4"ENC-M26a
SPECIFIC GRAVITY ENCLOSURE IA-ENCL-101
PY 160
PI 160
TO OTHER LEAK DET PIT PUMPS
TO OTHER ANNULUS PUMP PIT PUMPS
CP-106
CP-105
RCPT-006
RCPT-005
LDE-166
LEAK DET PIT 02C
EQUIP #
TR-110
P-006
DRL
2 PL
TR-114
LDE-222
TR-115
LDE-221
DRAIN PIT 02D
LDE-197B
LDE-197A
LDE-197
WST-RISER-027
FDP-103
TR-113
TR-111
TR-112
3"DR-
V-405
TR-116
LDE-1
3" 3" 3" 3"
AW02A-WT-JBX-192
FROM LDSTA-192
H-14-020802-10
ZN C/2
TR-109
ANNULUS PUMP PIT 02B SEE NOTE 4
P-005
LDE-165
FD
TR-171
TR-170
EHR-609
EHR-610
TR-106
TR-105
TR-172
APVP-WT-V-609
H-14-020803 SH 5
Z A8
APVP-WT-V-610
H-14-020803 SH 5
Z A8
FROM AW241-VTP-SP-101
H-14-020102 SH 2
Z B6
2"SN-609-M25
3"SN-610-M25
3"DR
2"SL-162-M25
3"SN-262-M25
LDE-224
TR-119
TR-275
TR-118
LDE-223
V-404
V-403
LDE-198B
LDE-198A
LDE-168
TO 242A-RW-PSH-AWSN2
H-14-021802 SH 1
Z D8
TEMPERATURE MONITORING
FDP-104
TANK RETURN
FEED & BLEND PUMP 241-AW-P-102-1
FEED PUMP PIT 02E
V-107
FCV-160
FROM AWFP-RW-V-203
H-14-021802 SH 1
Z D8
TANK 241-AW-102
CENTRAL PUMP PIT 02A
TR-117
3"SN-272-M25
EHR-117
V-401
V-402
LDE-182
LDE-183
TR-107
TR-108
3"SN-268-M25
2"SL-162-M25
3"SN-262-M25
3"DR-369-M24
2"SL-172-M9
3"SN-267-M25
3"DR-361-M24
FOR CONTINUATION SEE SHEET 5
FOR CONTINUATION SEE SHEET 4

APPENDIX B

TRANSFER LINE PIPING ARRANGEMENT

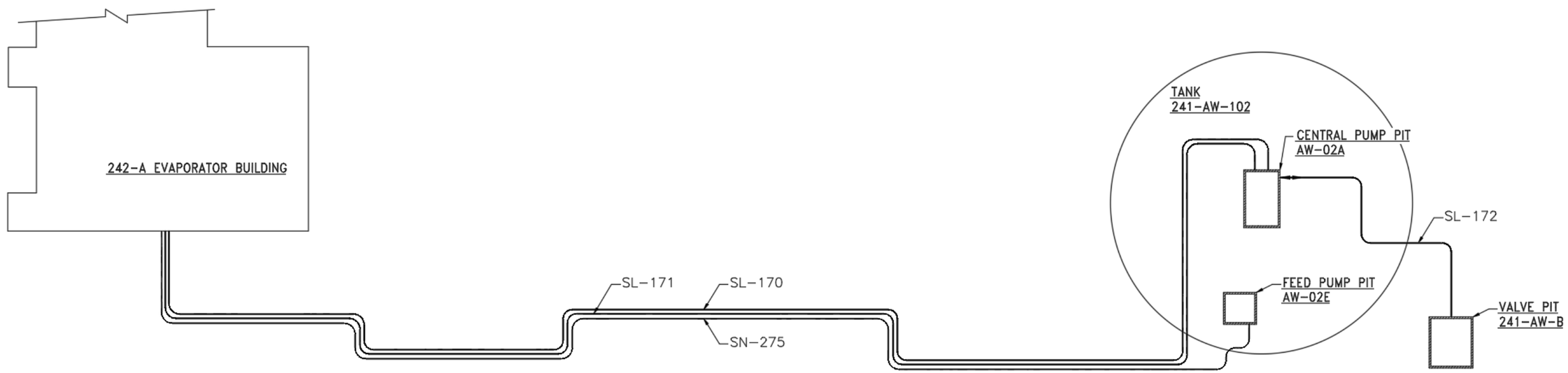
242-A EVAPORATOR BUILDING
SL-171
SL-170
SN-275
TANK
241-AW-102
CENTRAL PUMP PIT
AW-02A
SL-172
FEED PUMP PIT
AW-02E
VALVE PIT
241-AW-B

APPENDIX C

TRANSFER LINE PIPING ISOMETRIC

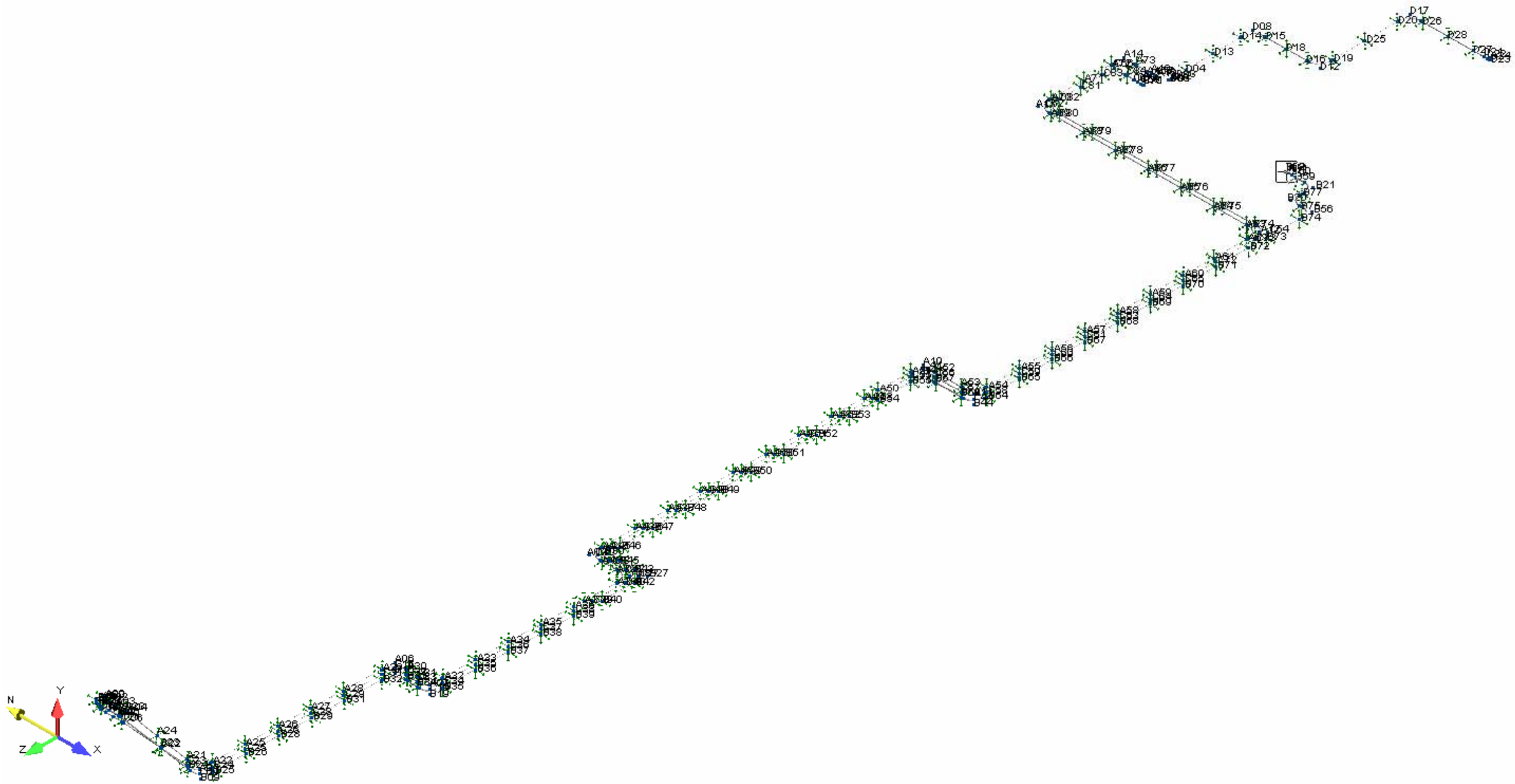
N
Y
Z
X

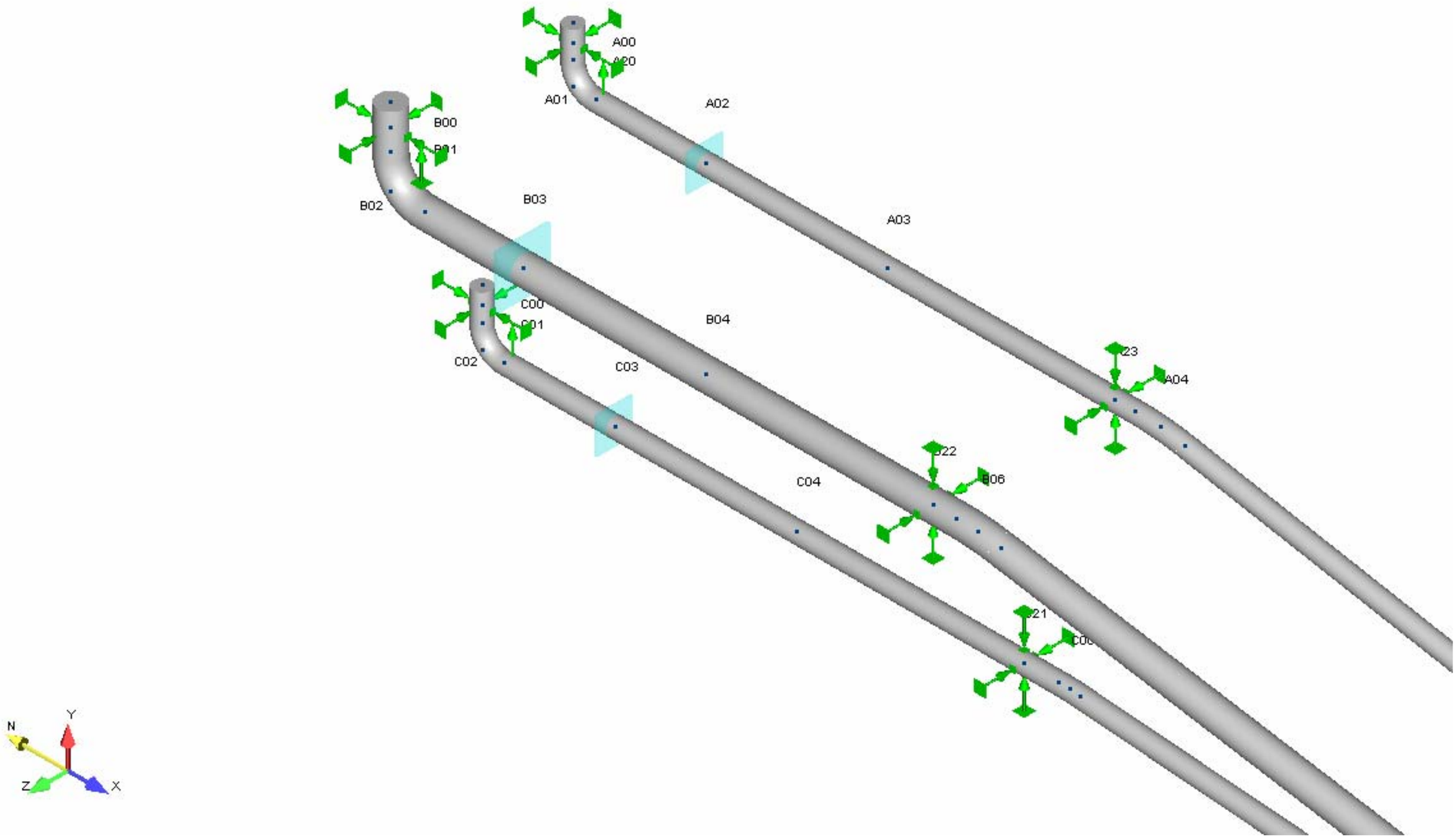
A00
A01
A02
A03
A04
B00
B01
B02
B03
B04
B06
C00
C01
C02
C03
C04
N
Y
Z
X

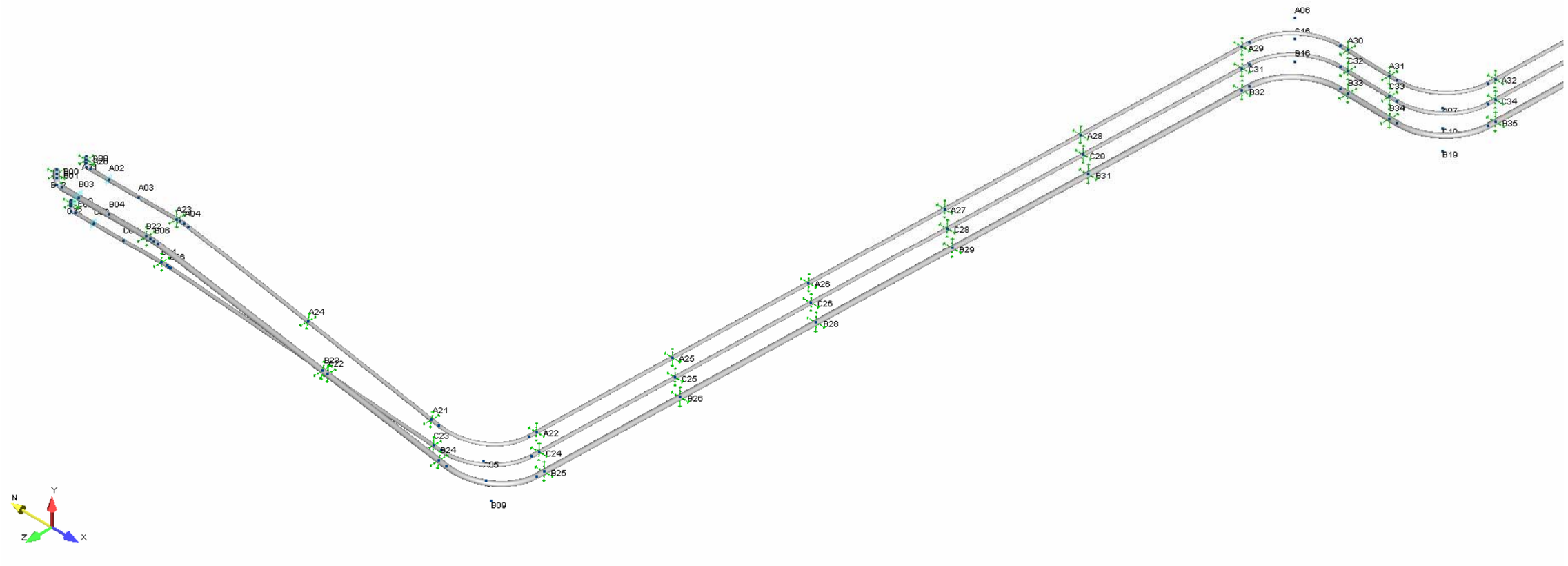
A06
A29
B16
A30
C32
A31
C31
B32
B33
C33
A32
C34
B34
B35
B19
A28
C29
B31
A27
C28
B29
A26
C26
B28
A25
C25
B26
A24
B22
A21
C23
B24
A22
C24
B25
B09
A02
B03
A03
B04
A04
B06
N
Y
Z
X

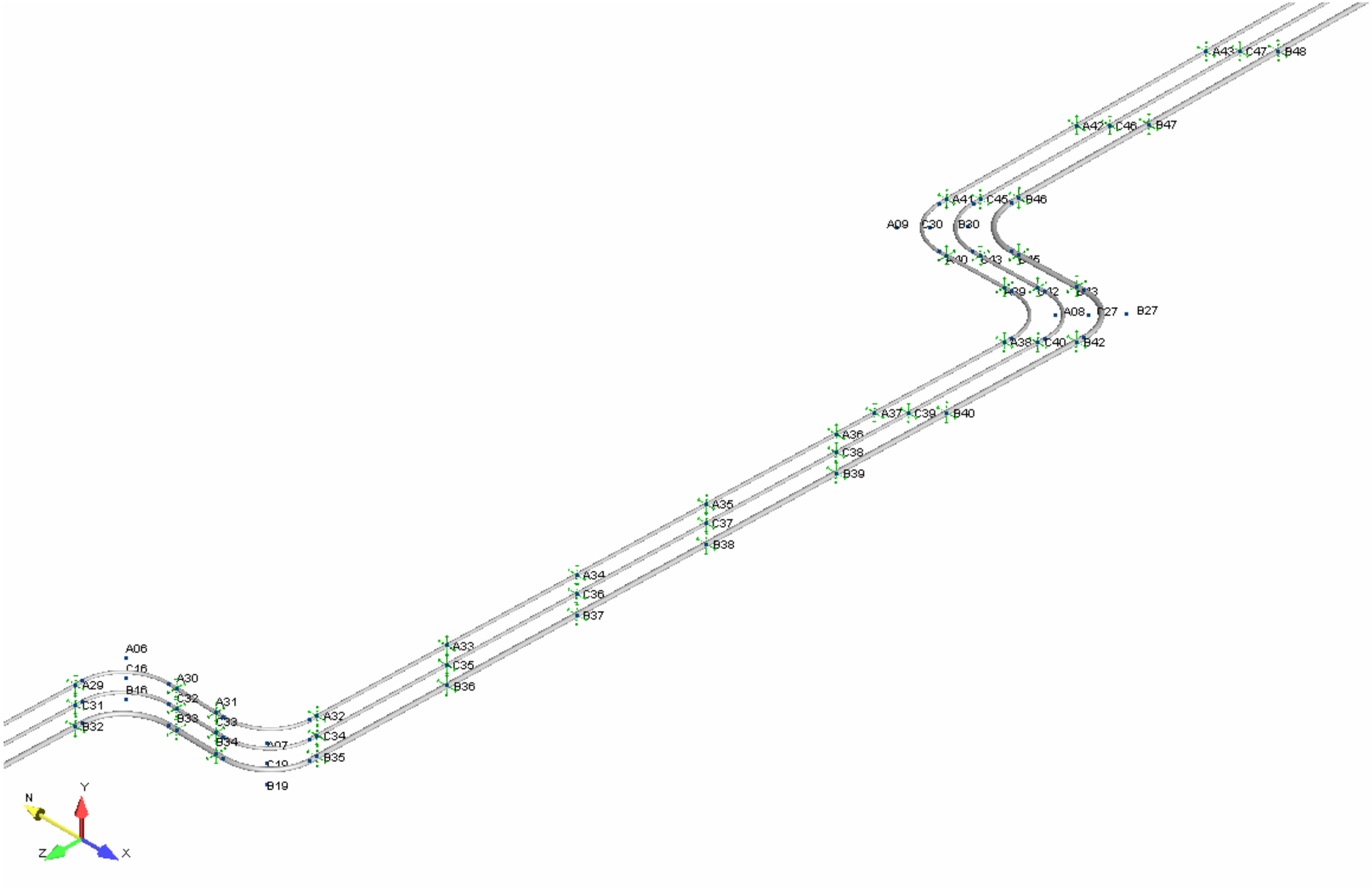
A43
C47
B48
A42
C46
B47
A41
C45
B46
A09
C30
B30
A08
C27
B27
A38
C40
B42
A37
C39
B40
A36
C38
B39
A35
C37
B38
A34
C36
B37
A33
C35
B36
A06
C16
B16
A29
C31
B32
A30
C32
B33
A31
C33
B34
A32
C34
B35
A07
C19
B19
N
Y
Z
X

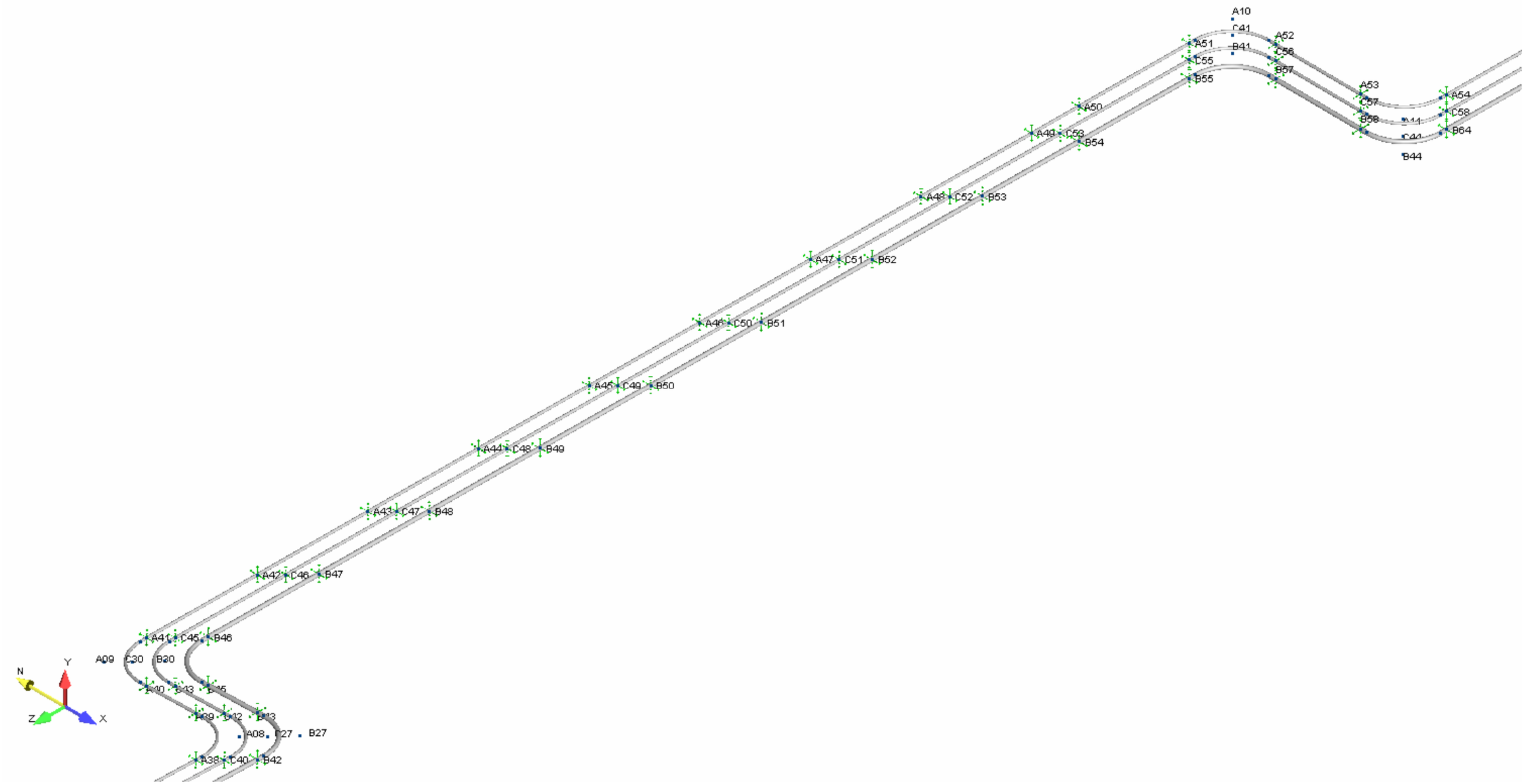
A10
C41
B41
A51
C55
B55
A52
C56
B57
A53
C57
B58
A54
C58
B64
B44
A50
A49
C53
B54
A48
C52
B53
A47
C51
B52
A46
C50
B51
A45
C49
B50
A44
C48
B49
A43
C47
B48
A42
C46
B47
A41
C45
B46
A09
C30
B30
A08
C27
B27
A38
C40
B42
N
Y
Z
X

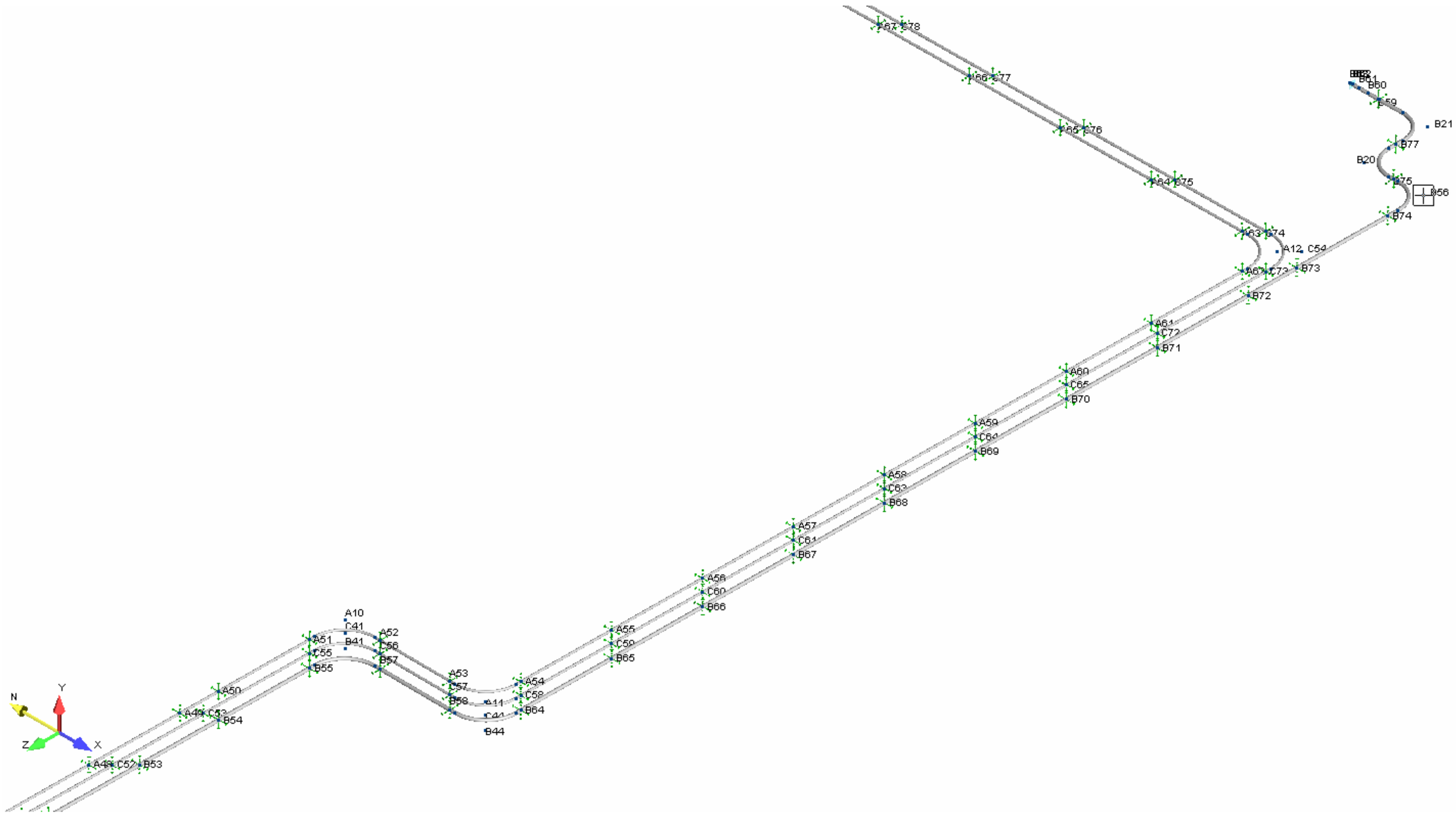
A67 C78
A66 C77
A65 C76
A64 C75
A63 C74
A12
C54
A62 C73
B73
B72
A61
C72
B71
A60
C65
B70
A59
C64
B69
A58
C63
B68
A57
C61
B67
A56
C60
B66
A55
C59
B65
A54
C58
B64
A11
C44
B44
A53
C57
B58
A52
C56
B57
A10
C41
B41
A51
C55
B55
A50
A49 C53
B54
A48 C52 B53
B21
B77
B20
B75
B56
B74
N
Y
Z
X

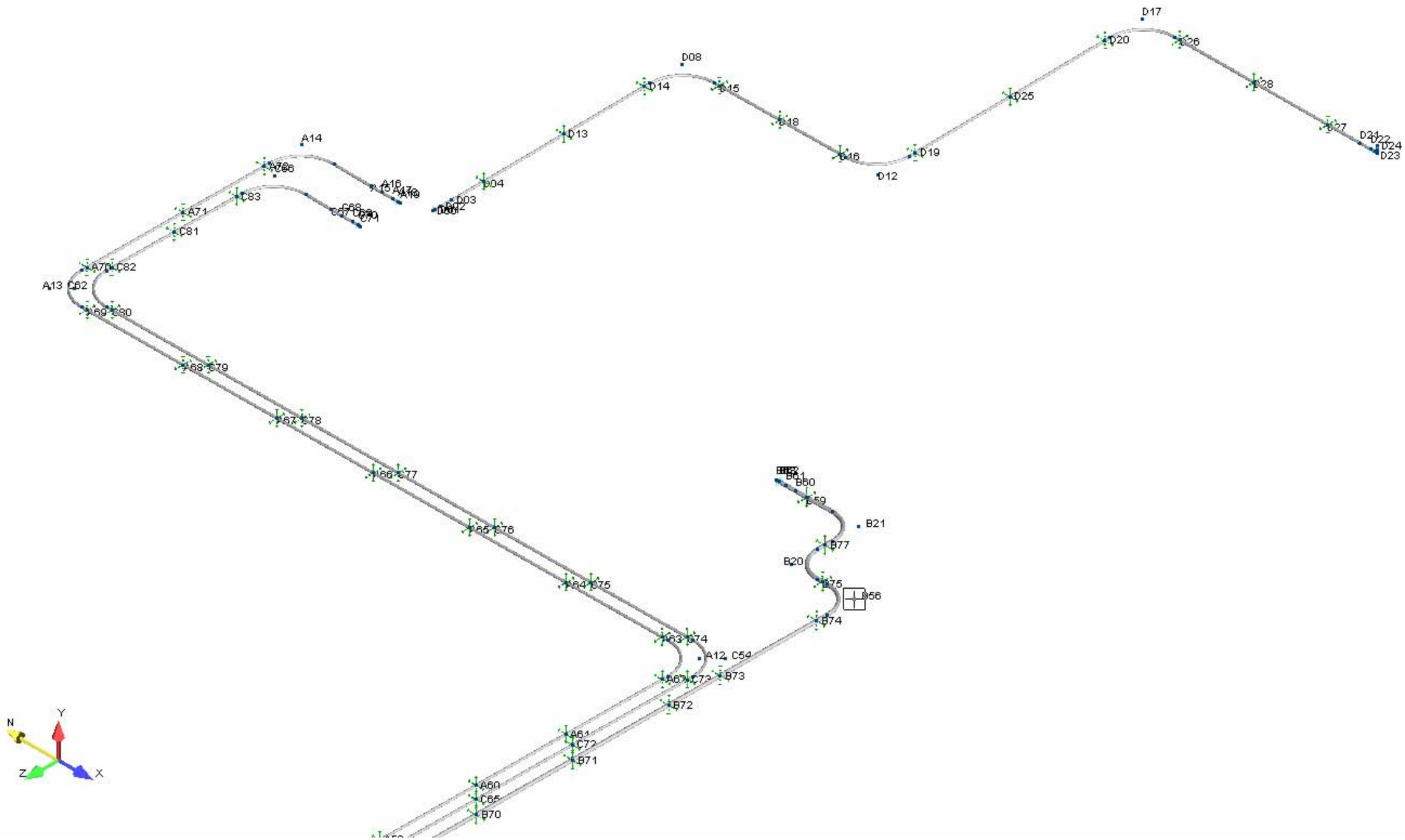
D17
D20
D26
D08
D14
D15
D28
D25
D13
D18
D27
D21
D22
D24
D23
A14
D16
D19
D12
D04
D03
C83
A71
C81
A70
C82
A13
C62
C69
C80
C68
C79
C67
C78
C66
C77
C65
C76
C64
C75
B60
C59
B21
B77
B20
C75
B56
B74
C63
C74
A12
C54
A67
C73
B73
B72
A61
C72
B71
A60
C65
B70
N
Y
Z
X

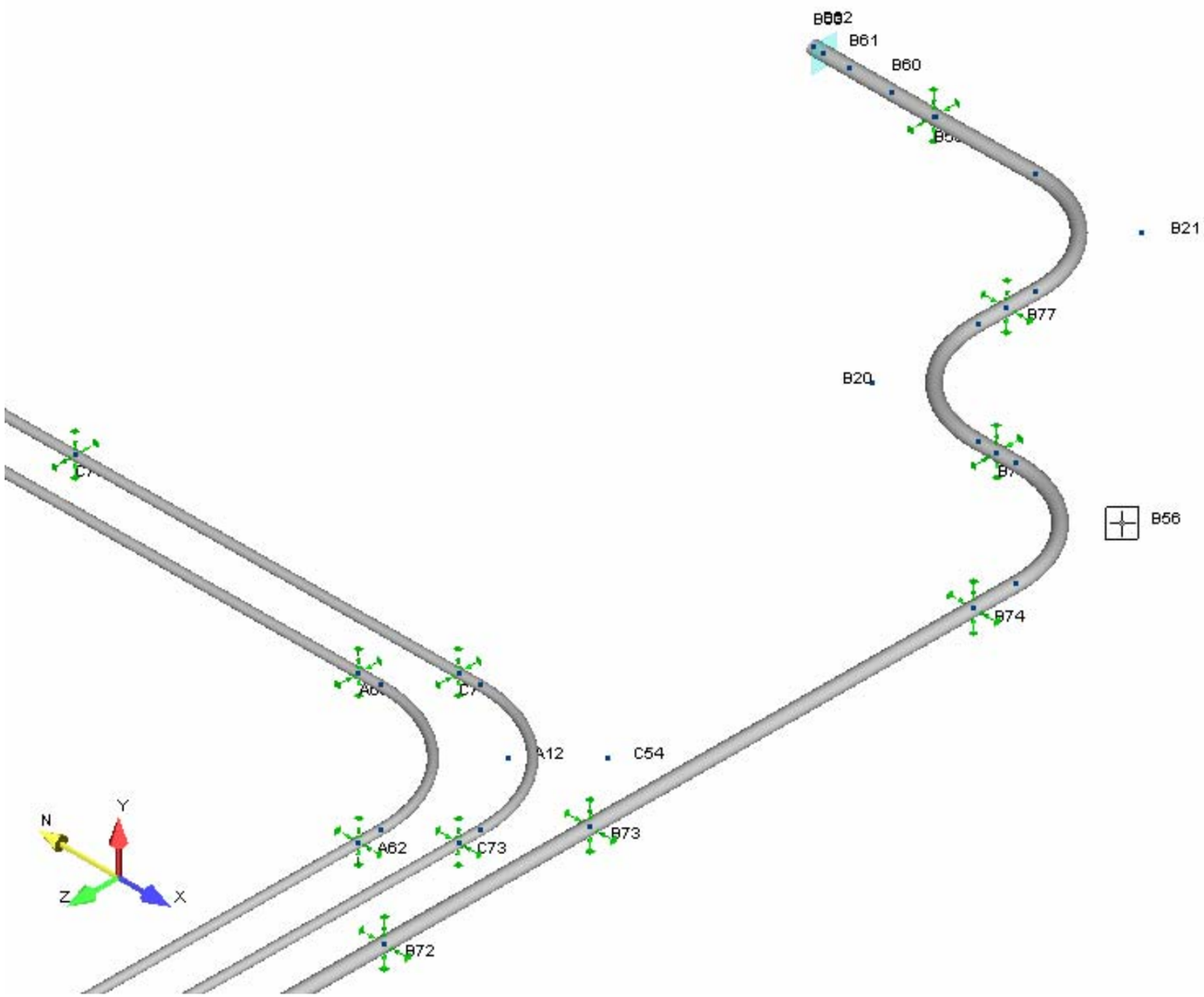
B61
B60
B21
B77
B20
B56
B74
A12
C54
B73
A62
C73
B72
N
Y
Z
X

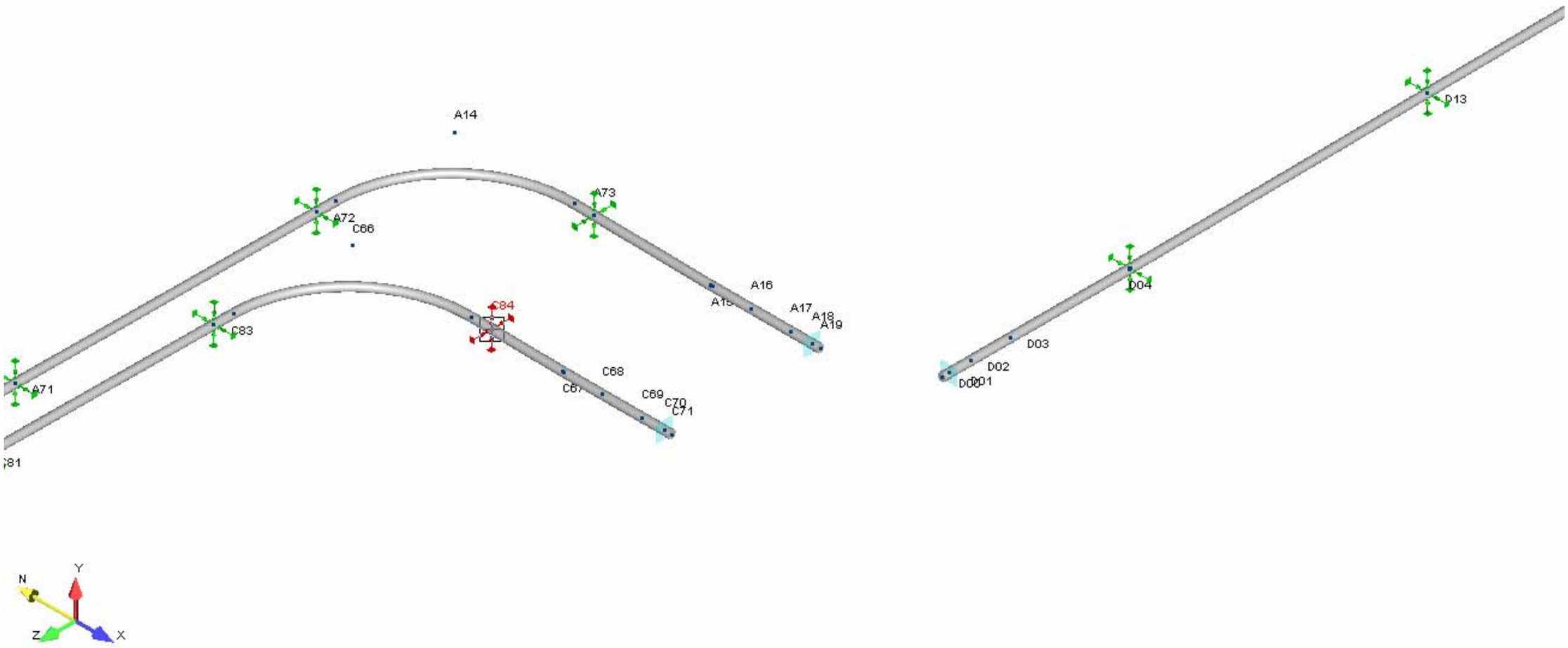
A14
A72
C66
A73
A16
A15
A17
A18
A19
C83
C84
C68
C67
C69
C70
C71
A71
C81
D13
D04
D03
D02
D01
D00
N
Y
Z
X

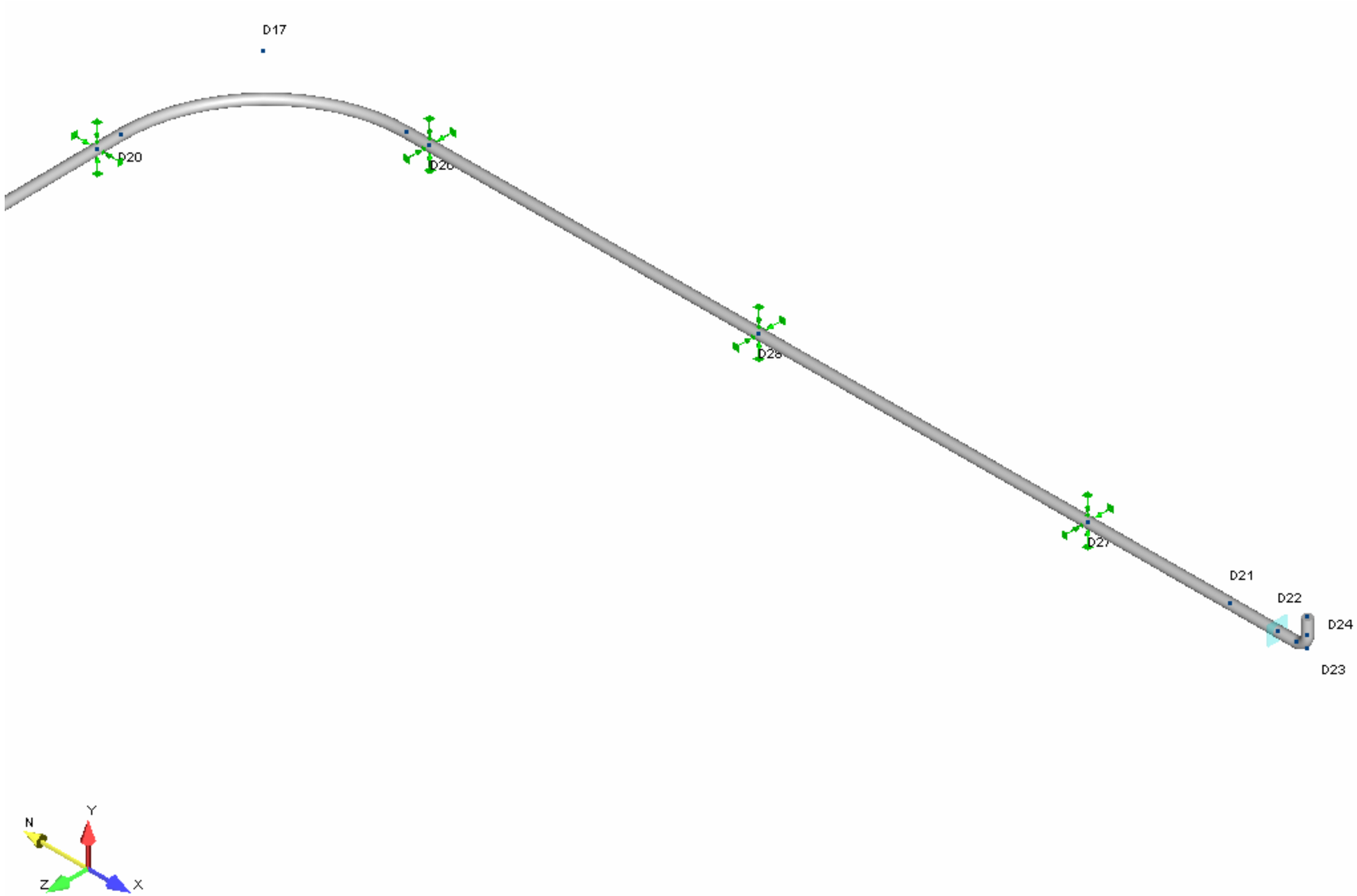
D17
D20
D20
D26
D27
D21
D22
D24
D23
N
Y
Z
X

APPENDIX D1

AUTOPIPE ANALYSIS – PRIMARY PIPING STABILITY CHECK

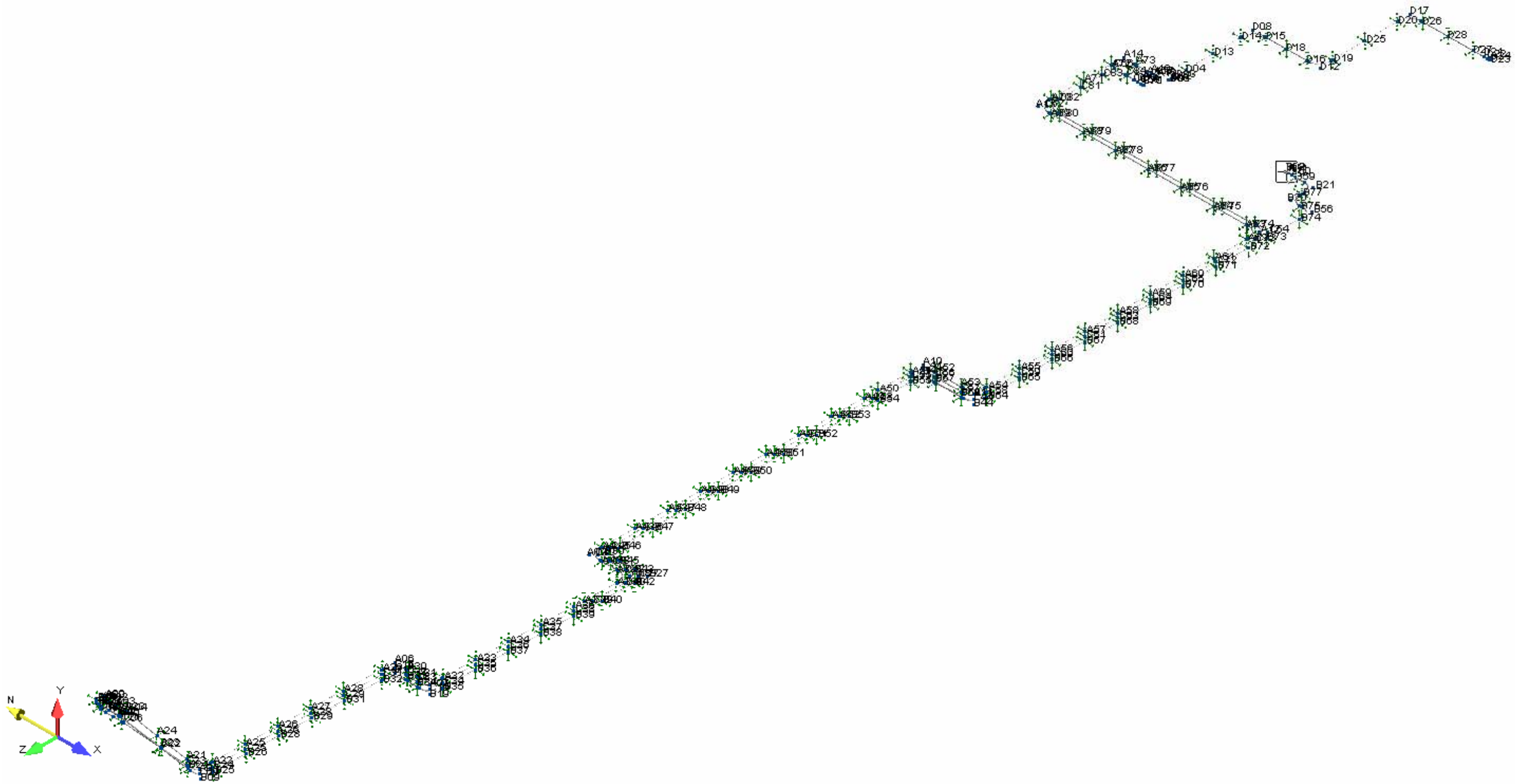
N
Y
Z
X

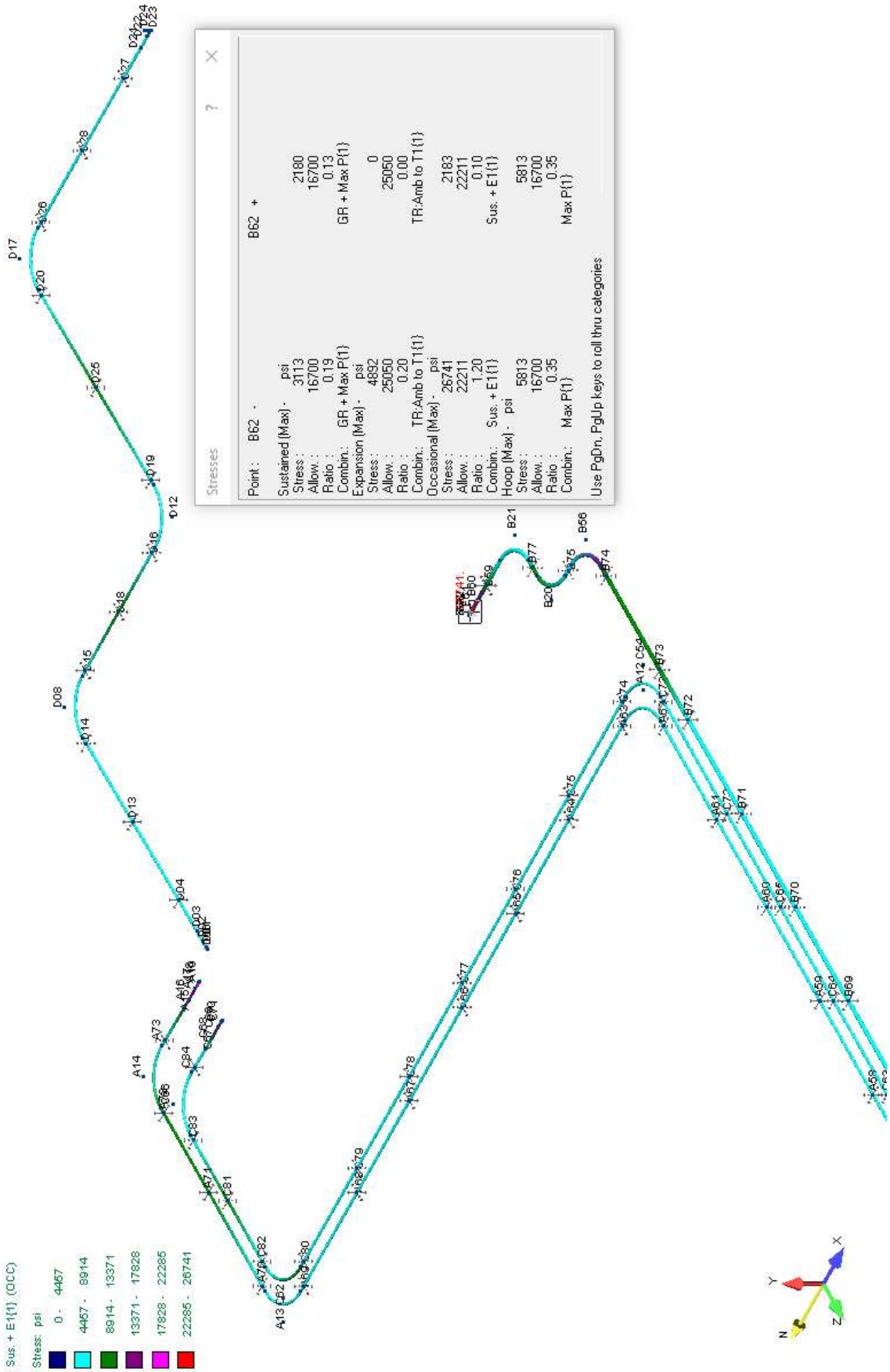
Sus. + E1(1) (OCC)
Stress: psi
0 - 4457
4457 - 8914
8914 - 13371
13371 - 17828
17828 - 22285
22285 - 26741
Stresses
Point : B62 - B62 +
Sustained (Max) - psi
Stress : 3113 2180
Allow. : 16700 16700
Ratio : 0.19 0.13
Combin.: GR + Max P(1) GR + Max P(1)
Expansion (Max) - psi
Stress : 4892 0
Allow. : 25050 25050
Ratio : 0.20 0.00
Combin.: TR:Amb to T1(1) TR:Amb to T1(1)
Occasional (Max) - psi
Stress : 26741 2183
Allow. : 22211 22211
Ratio : 1.20 0.10
Combin.: Sus. + E1(1) Sus. + E1(1)
Hoop (Max) - psi
Stress : 5813 5813
Allow. : 16700 16700
Ratio : 0.35 0.35
Combin.: Max P(1) Max P(1)
Use PgDn, PgUp keys to roll thru categories

```
---------------------------------------------------------------------------------------------------------------
Primary Piping Stability
04/23/2020 2018719                                                                                  BENTLEY
03:06 PM                                                                                            AutoPIPE Nuclear 12.00.00.16
---------------------------------------------------------------------------------------------------------------
```

```
        *                            *******   **  *******   *******
       ***               **          **    **  **  **    **  **
      ** **            ******        **    **  **  **    **  **
     **   **    **   **  **   *****  *******   **  *******   *****
    *********   **   **  **  **   **  **        **  **        **
   **       **  **   **  **  **   **  **        **  **        **
  **         **  *****   **   *****  **        **  **        *******
```

Pipe Stress Analysis and Design Program

Version: 12.00.00.16

Edition: Nuclear

Developed and Maintained by

BENTLEY SYSTEMS, INCORPORATED
1065 N. PACIFIC CENTER DRIVE, SUITE 450
ANAHEIM, CA 92806

```
**********************************************************
**                                                      **
**              AUTOPIPE SYSTEM INFORMATION             **
**                                                      **
**********************************************************
```

SYSTEM NAME : Primary Piping Stability

PROJECT ID : 2018719

PREPARED BY : _____
JIM HARRINGTON

CHECKED BY : _____
RYAN LANG

1ST APPROVER : _____

2ND APPROVER : _____

PIPING CODE : ASME B31.3

YEAR : 2016

VERTICAL AXIS : Y

AMBIENT TEMPERATURE : 60.0 deg F

COMPONENT LIBRARY : AUTOPIPE

MATERIAL LIBRARY : B313-16

MODEL REVISION NUMBER : 8

T A B L E O F C O N T E N T S

Components..... 1
Coordinates..... 47
Segment Data..... 54
Pipe Properties..... 55
Material Properties..... 56
Material Allowables..... 57
Temperature and Pressure..... 58
Loads Summary..... 59
Support..... 60
Bend..... 74
Load Case Description..... 75
Analysis Summary..... 76
Result Summary..... 79

```
-----------------------------------------------------------------------------------------------------------
Primary Piping Stability
04/23/2020 2018719                                                    BENTLEY
03:06 PM                                                              AutoPIPE Nuclear 12.00.00.16   MODEL  PAGE   1
-----------------------------------------------------------------------------------------------------------

                C O M P O N E N T   D A T A   L I S T I N G

 ---------------------------------------------------------------------------
 *** SEGMENT A

 ---------------------------------------------------------------------------
 From A00 to A20, DY= -0.19 ft                                          Run

 PIPE DATA:
   Pipe Id= 2SCH40, Material= A312-TP316L, Composition= Austenitic Stainless, Poisson= 0.300, Nom Size= 2.000,
   OD= 2.375 inch, Sch= 40S, Wall Thk= 0.154 inch, Mill= 0.019 inch, Cor= 0.010 inch,
   Pipe Density= 501.00 lb/cu.ft, Pipe Unit Wgt= 3.74 lb/ft, Content Sp Gr= 1.600, Content Unit Wgt= 2.33 lb/ft,
   Insul Thk= 0 inch, Cladding Thickness = 0 inch, Lining Thk= 0 inch, Long Weld E factor= 1.00,
   Long Weld W factor= 1.00, Long Modulus= 28.34083 E6 psi, Hoop Modulus= 28.34083 E6 psi,
   Shear Modulus= 10.90032 E6 psi, Sc= 16700.0 psi, Syc= 25000.0 psi, Suc= 70000.0 psi

 OPERATING DATA:
   P1= 620.00 psi, T1= 200.00 deg F, Exp1= 1.50000 in/100ft, E1= 27.60000 E6 psi, Sh1= 16700.00 psi,
   Sy1= 21300.00 psi

 POINT DATA:
   A00, Coordinates, X= 0.00 ft, Y= 693.68 ft, Z= 0.00 ft

 ---------------------------------------------------------------------------
 From A20 to A01, DY= -0.42 ft                                          Run

 POINT DATA:
   A20, Coordinates, X= 0.00 ft, Y= 693.49 ft, Z= 0.00 ft

 SUPPORT DATA:
   A20, V-Stop, Support Id= A20  1, Connected to Ground, Comp.Wt = 0.000 lb, Gap-Below= 0.00 inch,
   Gap-Above= 100.00 inch, Friction= 0.00, Gaps setting= Weightless
   A20, Guide, Support Id= A20  2, Connected to Ground, Comp.Wt = 0.000 lb, Stiffness= RIGID, Gap -Z= 0.00 inch,
   Gap +Z= 0.00 inch, Gap -X= 1.00 inch, Gap +X= 1.00 inch, Friction= 0.80, Gaps setting= Weightless

 ---------------------------------------------------------------------------
 From A01 to A02, DX= 1.46 ft                                           Bend

 COMPONENT DATA (Bend, TIP= A01, Near= A01 N, Far= A01 F):
   Long Elbow, Radius= 3.00 inch, Bend angle= 90.00 deg, End flanges= 0, Flex= Auto, SIFI= 1.73, SIFO= 1.44

 POINT DATA:
   A01, Coordinates, X= 0.00 ft, Y= 693.07 ft, Z= 0.00 ft
   A01 N, Coordinates, X= 0.00 ft, Y= 693.32 ft, Z= 0.00 ft
   A01 F, Coordinates, X= 0.25 ft, Y= 693.07 ft, Z= 0.00 ft

 ---------------------------------------------------------------------------
 From A02 to A03, DX= 2.00 ft                                           Run

 POINT DATA:
   A02, Coordinates, X= 1.46 ft, Y= 693.07 ft, Z= 0.00 ft

 SUPPORT DATA:
   A02, Anchor, Connected to: Ground, KTX= Rigid, KTY= Rigid, KTZ= Rigid, KRX= Rigid, KRY= Rigid, KRZ= Rigid

 ---------------------------------------------------------------------------
 From A03 to A23, DX= 2.50 ft                                           Run
```

C O M P O N E N T D A T A L I S T I N G

POINT DATA:
A03, Coordinates, X= 3.46 ft, Y= 693.07 ft, Z= 0.00 ft

From A23 to A04, DX= 0.50 ft Run

POINT DATA:
A23, Coordinates, X= 5.96 ft, Y= 693.07 ft, Z= 0.00 ft

SUPPORT DATA:
A23, Guide, Support Id= A23 1, Connected to Ground, Comp.Wt = 0.000 lb, Stiffness= RIGID,
Gap-Down= 0.00 inch, Gap-Above= 0.83 inch, Gap-Left= 0.83 inch, Gap-Right= 0.83 inch, Friction= 0.80,
Gaps setting= Weightless

From A04 to A24, DX= 8.18 ft, DY= -1.51 ft, L= 8.32 ft Bend

COMPONENT DATA (Bend, TIP= A04, Near= A04 N, Far= A04 F):
Elbow, Radius= 36.00 inch, Bend angle= 10.46 deg, End flanges= 0, Flex= Auto, SIFI= 1.00, SIFO= 1.00

POINT DATA:
A04, Coordinates, X= 6.46 ft, Y= 693.07 ft, Z= 0.00 ft
A04 N, Coordinates, X= 6.19 ft, Y= 693.07 ft, Z= 0.00 ft
A04 F, Coordinates, X= 6.73 ft, Y= 693.02 ft, Z= 0.00 ft

From A24 to A21, DX= 8.18 ft, DY= -1.51 ft, L= 8.32 ft Run

POINT DATA:
A24, Coordinates, X= 14.64 ft, Y= 691.56 ft, Z= 0.00 ft

SUPPORT DATA:
A24, Guide, Support Id= A24 1, Connected to Ground, Comp.Wt = 0.000 lb, Stiffness= RIGID,
Gap-Down= 0.00 inch, Gap-Above= 0.06 inch, Gap-Left= 0.03 inch, Gap-Right= 0.03 inch, Friction= 0.80,
Gaps setting= Weightless

From A21 to A05, DX= 3.44 ft, DY= -0.64 ft, L= 3.50 ft Run

POINT DATA:
A21, Coordinates, X= 22.82 ft, Y= 690.05 ft, Z= 0.00 ft

SUPPORT DATA:
A21, Guide, Support Id= A21 1, Connected to Ground, Comp.Wt = 0.000 lb, Stiffness= RIGID,
Gap-Down= 0.00 inch, Gap-Above= 0.83 inch, Gap-Left= 0.83 inch, Gap-Right= 0.83 inch, Friction= 0.80,
Gaps setting= Weightless

From A05 to A22, DY= -0.10 ft, DZ= -3.50 ft, L= 3.50 ft Bend

COMPONENT DATA (Bend, TIP= A05, Near= A05 N, Far= A05 F):
Elbow, Radius= 36.00 inch, Bend angle= 89.70 deg, End flanges= 0, Flex= Auto, SIFI= 1.00, SIFO= 1.00

POINT DATA:
A05, Coordinates, X= 26.26 ft, Y= 689.41 ft, Z= 0.00 ft

C O M P O N E N T D A T A L I S T I N G

A05 N, Coordinates, X= 23.33 ft, Y= 689.96 ft, Z= 0.00 ft
A05 F, Coordinates, X= 26.26 ft, Y= 689.32 ft, Z= -2.98 ft

From A22 to A25, DY= -0.26 ft, DZ= -9.00 ft, L= 9.00 ft Run

POINT DATA:
A22, Coordinates, X= 26.26 ft, Y= 689.31 ft, Z= -3.50 ft

SUPPORT DATA:
A22, Guide, Support Id= A22 2, Connected to Ground, Comp.Wt = 0.000 lb, Stiffness= RIGID,
Gap-Down= 0.00 inch, Gap-Above= 0.83 inch, Gap-Left= 0.83 inch, Gap-Right= 0.83 inch, Friction= 0.80,
Gaps setting= Weightless

From A25 to A26, DY= -0.26 ft, DZ= -9.00 ft, L= 9.00 ft Run

POINT DATA:
A25, Coordinates, X= 26.26 ft, Y= 689.05 ft, Z= -12.50 ft

SUPPORT DATA:
A25, Guide, Support Id= A25 2, Connected to Ground, Comp.Wt = 0.000 lb, Stiffness= RIGID,
Gap-Down= 0.00 inch, Gap-Above= 0.06 inch, Gap-Left= 0.03 inch, Gap-Right= 0.03 inch, Friction= 0.80,
Gaps setting= Weightless

From A26 to A27, DY= -0.26 ft, DZ= -9.00 ft, L= 9.00 ft Run

POINT DATA:
A26, Coordinates, X= 26.26 ft, Y= 688.79 ft, Z= -21.50 ft

SUPPORT DATA:
A26, Guide, Support Id= A26 2, Connected to Ground, Comp.Wt = 0.000 lb, Stiffness= RIGID,
Gap-Down= 0.00 inch, Gap-Above= 0.06 inch, Gap-Left= 0.03 inch, Gap-Right= 0.03 inch, Friction= 0.80,
Gaps setting= Weightless

From A27 to A28, DY= -0.26 ft, DZ= -9.00 ft, L= 9.00 ft Run

POINT DATA:
A27, Coordinates, X= 26.26 ft, Y= 688.53 ft, Z= -30.50 ft

SUPPORT DATA:
A27, Guide, Support Id= A27 2, Connected to Ground, Comp.Wt = 0.000 lb, Stiffness= RIGID,
Gap-Down= 0.00 inch, Gap-Above= 0.06 inch, Gap-Left= 0.03 inch, Gap-Right= 0.03 inch, Friction= 0.80,
Gaps setting= Weightless

From A28 to A29, DY= -0.31 ft, DZ= -10.67 ft, L= 10.67 ft Run

POINT DATA:
A28, Coordinates, X= 26.26 ft, Y= 688.27 ft, Z= -39.50 ft

SUPPORT DATA:
A28, Guide, Support Id= A28 2, Connected to Ground, Comp.Wt = 0.000 lb, Stiffness= RIGID,

C O M P O N E N T D A T A L I S T I N G

Gap-Down= 0.00 inch, Gap-Above= 0.06 inch, Gap-Left= 0.03 inch, Gap-Right= 0.03 inch, Friction= 0.80,
Gaps setting= Weightless

From A29 to A06, DY= -0.10 ft, DZ= -3.50 ft, L= 3.50 ft Run

POINT DATA:
A29, Coordinates, X= 26.26 ft, Y= 687.96 ft, Z= -50.17 ft

SUPPORT DATA:
A29, Guide, Support Id= A29 1, Connected to Ground, Comp.Wt = 0.000 lb, Stiffness= RIGID,
Gap-Down= 0.00 inch, Gap-Above= 0.83 inch, Gap-Left= 0.83 inch, Gap-Right= 0.83 inch, Friction= 0.80,
Gaps setting= Weightless

From A06 to A30, DX= 3.50 ft, DY= -0.10 ft, L= 3.50 ft Bend

COMPONENT DATA (Bend, TIP= A06, Near= A06 N, Far= A06 F):
Elbow, Radius= 36.00 inch, Bend angle= 89.95 deg, End flanges= 0, Flex= Auto, SIFI= 1.00, SIFO= 1.00

POINT DATA:
A06, Coordinates, X= 26.26 ft, Y= 687.86 ft, Z= -53.67 ft
A06 N, Coordinates, X= 26.26 ft, Y= 687.95 ft, Z= -50.67 ft
A06 F, Coordinates, X= 29.26 ft, Y= 687.77 ft, Z= -53.67 ft

From A30 to A31, DX= 2.76 ft, DY= -0.08 ft, L= 2.76 ft Run

POINT DATA:
A30, Coordinates, X= 29.76 ft, Y= 687.76 ft, Z= -53.67 ft

SUPPORT DATA:
A30, Guide, Support Id= A30 1, Connected to Ground, Comp.Wt = 0.000 lb, Stiffness= RIGID,
Gap-Down= 0.00 inch, Gap-Above= 0.83 inch, Gap-Left= 0.83 inch, Gap-Right= 0.83 inch, Friction= 0.80,
Gaps setting= Weightless

From A31 to A07, DX= 3.50 ft, DY= -0.10 ft, L= 3.50 ft Run

POINT DATA:
A31, Coordinates, X= 32.52 ft, Y= 687.68 ft, Z= -53.67 ft

SUPPORT DATA:
A31, Guide, Support Id= A31 1, Connected to Ground, Comp.Wt = 0.000 lb, Stiffness= RIGID,
Gap-Down= 0.00 inch, Gap-Above= 0.83 inch, Gap-Left= 0.83 inch, Gap-Right= 0.83 inch, Friction= 0.80,
Gaps setting= Weightless

From A07 to A32, DY= -0.11 ft, DZ= -3.50 ft, L= 3.50 ft Bend

COMPONENT DATA (Bend, TIP= A07, Near= A07 N, Far= A07 F):
Elbow, Radius= 36.00 inch, Bend angle= 89.95 deg, End flanges= 0, Flex= Auto, SIFI= 1.00, SIFO= 1.00

POINT DATA:
A07, Coordinates, X= 36.02 ft, Y= 687.58 ft, Z= -53.67 ft

C O M P O N E N T D A T A L I S T I N G

A07 N, Coordinates, X= 33.02 ft, Y= 687.67 ft, Z= -53.67 ft
A07 F, Coordinates, X= 36.02 ft, Y= 687.49 ft, Z= -56.67 ft

From A32 to A33, DY= -0.27 ft, DZ= -9.00 ft, L= 9.00 ft Run

POINT DATA:
A32, Coordinates, X= 36.02 ft, Y= 687.47 ft, Z= -57.17 ft

SUPPORT DATA:
A32, Guide, Support Id= A32 1, Connected to Ground, Comp.Wt = 0.000 lb, Stiffness= RIGID,
Gap-Down= 0.00 inch, Gap-Above= 0.83 inch, Gap-Left= 0.83 inch, Gap-Right= 0.83 inch, Friction= 0.80,
Gaps setting= Weightless

From A33 to A34, DY= -0.27 ft, DZ= -9.00 ft, L= 9.00 ft Run

POINT DATA:
A33, Coordinates, X= 36.02 ft, Y= 687.20 ft, Z= -66.17 ft

SUPPORT DATA:
A33, Guide, Support Id= A33 2, Connected to Ground, Comp.Wt = 0.000 lb, Stiffness= RIGID,
Gap-Down= 0.00 inch, Gap-Above= 0.06 inch, Gap-Left= 0.03 inch, Gap-Right= 0.03 inch, Friction= 0.80,
Gaps setting= Weightless

From A34 to A35, DY= -0.27 ft, DZ= -9.00 ft, L= 9.00 ft Run

POINT DATA:
A34, Coordinates, X= 36.02 ft, Y= 686.93 ft, Z= -75.17 ft

SUPPORT DATA:
A34, Guide, Support Id= A34 2, Connected to Ground, Comp.Wt = 0.000 lb, Stiffness= RIGID,
Gap-Down= 0.00 inch, Gap-Above= 0.06 inch, Gap-Left= 0.03 inch, Gap-Right= 0.03 inch, Friction= 0.80,
Gaps setting= Weightless

From A35 to A36, DY= -0.28 ft, DZ= -9.00 ft, L= 9.00 ft Run

POINT DATA:
A35, Coordinates, X= 36.02 ft, Y= 686.66 ft, Z= -84.17 ft

SUPPORT DATA:
A35, Guide, Support Id= A35 2, Connected to Ground, Comp.Wt = 0.000 lb, Stiffness= RIGID,
Gap-Down= 0.00 inch, Gap-Above= 0.06 inch, Gap-Left= 0.03 inch, Gap-Right= 0.03 inch, Friction= 0.80,
Gaps setting= Weightless

From A36 to A37, DY= -0.08 ft, DZ= -2.68 ft, L= 2.68 ft Run

POINT DATA:
A36, Coordinates, X= 36.02 ft, Y= 686.38 ft, Z= -93.17 ft

SUPPORT DATA:
A36, Guide, Support Id= A36 2, Connected to Ground, Comp.Wt = 0.000 lb, Stiffness= RIGID,

C O M P O N E N T D A T A L I S T I N G

Gap-Down= 0.00 inch, Gap-Above= 0.06 inch, Gap-Left= 0.03 inch, Gap-Right= 0.03 inch, Friction= 0.80,
Gaps setting= Weightless

From A37 to A38, DY= -0.27 ft, DZ= -8.99 ft, L= 8.99 ft Run

POINT DATA:
A37, Coordinates, X= 36.02 ft, Y= 686.30 ft, Z= -95.85 ft

SUPPORT DATA:
A37, Guide, Support Id= A37 2, Connected to Ground, Comp.Wt = 0.000 lb, Stiffness= RIGID,
Gap-Down= 0.00 inch, Gap-Above= 0.06 inch, Gap-Left= 0.03 inch, Gap-Right= 0.03 inch, Friction= 0.80,
Gaps setting= Weightless

From A38 to A08, DY= -0.11 ft, DZ= -3.50 ft, L= 3.50 ft Run

POINT DATA:
A38, Coordinates, X= 36.02 ft, Y= 686.03 ft, Z= -104.84 ft

SUPPORT DATA:
A38, Guide, Support Id= A38 1, Connected to Ground, Comp.Wt = 0.000 lb, Stiffness= RIGID,
Gap-Down= 0.00 inch, Gap-Above= 0.83 inch, Gap-Left= 0.83 inch, Gap-Right= 0.83 inch, Friction= 0.80,
Gaps setting= Weightless

From A08 to A39, DX= -3.50 ft, DY= -0.09 ft, L= 3.50 ft Bend

COMPONENT DATA (Bend, TIP= A08, Near= A08 N, Far= A08 F):
Elbow, Radius= 36.00 inch, Bend angle= 89.95 deg, End flanges= 0, Flex= Auto, SIFI= 1.00, SIFO= 1.00

POINT DATA:
A08, Coordinates, X= 36.02 ft, Y= 685.92 ft, Z= -108.34 ft
A08 N, Coordinates, X= 36.02 ft, Y= 686.01 ft, Z= -105.34 ft
A08 F, Coordinates, X= 33.02 ft, Y= 685.84 ft, Z= -108.34 ft

From A39 to A40, DX= -4.00 ft, DY= -0.10 ft, L= 4.00 ft Run

POINT DATA:
A39, Coordinates, X= 32.52 ft, Y= 685.83 ft, Z= -108.34 ft

SUPPORT DATA:
A39, Guide, Support Id= A39 1, Connected to Ground, Comp.Wt = 0.000 lb, Stiffness= RIGID,
Gap-Down= 0.00 inch, Gap-Above= 0.83 inch, Gap-Left= 0.83 inch, Gap-Right= 0.83 inch, Friction= 0.80,
Gaps setting= Weightless

From A40 to A09, DX= -3.50 ft, DY= -0.09 ft, L= 3.50 ft Run

POINT DATA:
A40, Coordinates, X= 28.52 ft, Y= 685.73 ft, Z= -108.34 ft

SUPPORT DATA:
A40, Guide, Support Id= A40 1, Connected to Ground, Comp.Wt = 0.000 lb, Stiffness= RIGID,

C O M P O N E N T D A T A L I S T I N G

```
  Gap-Down= 0.00 inch, Gap-Above= 0.83 inch, Gap-Left= 0.83 inch, Gap-Right= 0.83 inch, Friction= 0.80,
  Gaps setting= Weightless

 ------------------------------------------------------------------------------
 From A09 to A41, DY= -0.03 ft, DZ= -3.50 ft, L= 3.50 ft                  Bend

 COMPONENT DATA (Bend, TIP= A09, Near= A09 N, Far= A09 F):
   Elbow, Radius= 36.00 inch, Bend angle= 89.99 deg, End flanges= 0, Flex= Auto, SIFI= 1.00, SIFO= 1.00

 POINT DATA:
   A09, Coordinates, X= 25.02 ft, Y= 685.64 ft, Z= -108.34 ft
   A09 N, Coordinates, X= 28.02 ft, Y= 685.72 ft, Z= -108.34 ft
   A09 F, Coordinates, X= 25.02 ft, Y= 685.61 ft, Z= -111.34 ft

 ------------------------------------------------------------------------------
 From A41 to A42, DY= -0.07 ft, DZ= -9.00 ft, L= 9.00 ft                  Run

 POINT DATA:
   A41, Coordinates, X= 25.02 ft, Y= 685.61 ft, Z= -111.84 ft

 SUPPORT DATA:
   A41, Guide, Support Id= A41  1, Connected to Ground, Comp.Wt = 0.000 lb, Stiffness= RIGID,
   Gap-Down= 0.00 inch, Gap-Above= 0.83 inch, Gap-Left= 0.83 inch, Gap-Right= 0.83 inch, Friction= 0.80,
   Gaps setting= Weightless

 ------------------------------------------------------------------------------
 From A42 to A43, DY= -0.07 ft, DZ= -9.00 ft, L= 9.00 ft                  Run

 POINT DATA:
   A42, Coordinates, X= 25.02 ft, Y= 685.54 ft, Z= -120.84 ft

 SUPPORT DATA:
   A42, Guide, Support Id= A42  2, Connected to Ground, Comp.Wt = 0.000 lb, Stiffness= RIGID,
   Gap-Down= 0.00 inch, Gap-Above= 0.06 inch, Gap-Left= 0.03 inch, Gap-Right= 0.03 inch, Friction= 0.80,
   Gaps setting= Weightless

 ------------------------------------------------------------------------------
 From A43 to A44, DY= -0.07 ft, DZ= -9.00 ft, L= 9.00 ft                  Run

 POINT DATA:
   A43, Coordinates, X= 25.02 ft, Y= 685.47 ft, Z= -129.84 ft

 SUPPORT DATA:
   A43, Guide, Support Id= A43  2, Connected to Ground, Comp.Wt = 0.000 lb, Stiffness= RIGID,
   Gap-Down= 0.00 inch, Gap-Above= 0.06 inch, Gap-Left= 0.03 inch, Gap-Right= 0.03 inch, Friction= 0.80,
   Gaps setting= Weightless

 ------------------------------------------------------------------------------
 From A44 to A45, DY= -0.07 ft, DZ= -9.00 ft, L= 9.00 ft                  Run

 POINT DATA:
   A44, Coordinates, X= 25.02 ft, Y= 685.40 ft, Z= -138.84 ft

 SUPPORT DATA:
   A44, Guide, Support Id= A44  2, Connected to Ground, Comp.Wt = 0.000 lb, Stiffness= RIGID,
```

C O M P O N E N T D A T A L I S T I N G

Gap-Down= 0.00 inch, Gap-Above= 0.06 inch, Gap-Left= 0.03 inch, Gap-Right= 0.03 inch, Friction= 0.80,
Gaps setting= Weightless

From A45 to A46, DY= -0.07 ft, DZ= -9.00 ft, L= 9.00 ft Run

POINT DATA:
A45, Coordinates, X= 25.02 ft, Y= 685.33 ft, Z= -147.84 ft

SUPPORT DATA:
A45, Guide, Support Id= A45 2, Connected to Ground, Comp.Wt = 0.000 lb, Stiffness= RIGID,
Gap-Down= 0.00 inch, Gap-Above= 0.06 inch, Gap-Left= 0.03 inch, Gap-Right= 0.03 inch, Friction= 0.80,
Gaps setting= Weightless

From A46 to A47, DY= -0.07 ft, DZ= -9.00 ft, L= 9.00 ft Run

POINT DATA:
A46, Coordinates, X= 25.02 ft, Y= 685.26 ft, Z= -156.84 ft

SUPPORT DATA:
A46, Guide, Support Id= A46 2, Connected to Ground, Comp.Wt = 0.000 lb, Stiffness= RIGID,
Gap-Down= 0.00 inch, Gap-Above= 0.06 inch, Gap-Left= 0.03 inch, Gap-Right= 0.03 inch, Friction= 0.80,
Gaps setting= Weightless

From A47 to A48, DY= -0.07 ft, DZ= -9.00 ft, L= 9.00 ft Run

POINT DATA:
A47, Coordinates, X= 25.02 ft, Y= 685.19 ft, Z= -165.84 ft

SUPPORT DATA:
A47, Guide, Support Id= A47 2, Connected to Ground, Comp.Wt = 0.000 lb, Stiffness= RIGID,
Gap-Down= 0.00 inch, Gap-Above= 0.06 inch, Gap-Left= 0.03 inch, Gap-Right= 0.03 inch, Friction= 0.80,
Gaps setting= Weightless

From A48 to A49, DY= -0.07 ft, DZ= -9.00 ft, L= 9.00 ft Run

POINT DATA:
A48, Coordinates, X= 25.02 ft, Y= 685.12 ft, Z= -174.84 ft

SUPPORT DATA:
A48, Guide, Support Id= A48 2, Connected to Ground, Comp.Wt = 0.000 lb, Stiffness= RIGID,
Gap-Down= 0.00 inch, Gap-Above= 0.06 inch, Gap-Left= 0.03 inch, Gap-Right= 0.03 inch, Friction= 0.80,
Gaps setting= Weightless

From A49 to A50, DX= 0 ft, DY= -0.03 ft, DZ= -3.83 ft, L= 3.83 ft Run

POINT DATA:
A49, Coordinates, X= 25.02 ft, Y= 685.05 ft, Z= -183.84 ft

SUPPORT DATA:
A49, Guide, Support Id= A49 2, Connected to Ground, Comp.Wt = 0.000 lb, Stiffness= RIGID,

C O M P O N E N T D A T A L I S T I N G

```
  Gap-Down= 0.00 inch, Gap-Above= 0.06 inch, Gap-Left= 0.03 inch, Gap-Right= 0.03 inch, Friction= 0.80,
  Gaps setting= Weightless

 ------------------------------------------------------------------------------
 From A50 to A51, DY= -0.07 ft, DZ= -9.00 ft, L= 9.00 ft                  Run

 POINT DATA:
   A50, Coordinates, X= 25.02 ft, Y= 685.02 ft, Z= -187.67 ft

 SUPPORT DATA:
   A50, Guide, Support Id= A50  2, Connected to Ground, Comp.Wt = 0.000 lb, Stiffness= RIGID,
   Gap-Down= 0.00 inch, Gap-Above= 0.06 inch, Gap-Left= 0.03 inch, Gap-Right= 0.03 inch, Friction= 0.80,
   Gaps setting= Weightless

 ------------------------------------------------------------------------------
 From A51 to A10, DY= -0.03 ft, DZ= -3.50 ft, L= 3.50 ft                  Run

 POINT DATA:
   A51, Coordinates, X= 25.02 ft, Y= 684.95 ft, Z= -196.67 ft

 SUPPORT DATA:
   A51, Guide, Support Id= A51  1, Connected to Ground, Comp.Wt = 0.000 lb, Stiffness= RIGID,
   Gap-Down= 0.00 inch, Gap-Above= 0.83 inch, Gap-Left= 0.83 inch, Gap-Right= 0.83 inch, Friction= 0.80,
   Gaps setting= Weightless

 ------------------------------------------------------------------------------
 From A10 to A52, DX= 3.50 ft, DY= -0.03 ft, L= 3.50 ft                   Bend

 COMPONENT DATA (Bend, TIP= A10, Near= A10 N, Far= A10 F):
   Elbow, Radius= 36.00 inch, Bend angle= 90.00 deg, End flanges= 0, Flex= Auto, SIFI= 1.00, SIFO= 1.00

 POINT DATA:
   A10, Coordinates, X= 25.02 ft, Y= 684.92 ft, Z= -200.17 ft
   A10 N, Coordinates, X= 25.02 ft, Y= 684.95 ft, Z= -197.17 ft
   A10 F, Coordinates, X= 28.02 ft, Y= 684.89 ft, Z= -200.17 ft

 ------------------------------------------------------------------------------
 From A52 to A53, DX= 6.91 ft, DY= -0.05 ft, L= 6.91 ft                   Run

 POINT DATA:
   A52, Coordinates, X= 28.52 ft, Y= 684.89 ft, Z= -200.17 ft

 SUPPORT DATA:
   A52, Guide, Support Id= A52  1, Connected to Ground, Comp.Wt = 0.000 lb, Stiffness= RIGID,
   Gap-Down= 0.00 inch, Gap-Above= 0.83 inch, Gap-Left= 0.83 inch, Gap-Right= 0.83 inch, Friction= 0.80,
   Gaps setting= Weightless

 ------------------------------------------------------------------------------
 From A53 to A11, DX= 3.50 ft, DY= -0.02 ft, L= 3.50 ft                   Run

 POINT DATA:
   A53, Coordinates, X= 35.43 ft, Y= 684.84 ft, Z= -200.17 ft

 SUPPORT DATA:
   A53, Guide, Support Id= A53  1, Connected to Ground, Comp.Wt = 0.000 lb, Stiffness= RIGID,
```

C O M P O N E N T D A T A L I S T I N G

```
  Gap-Down= 0.00 inch, Gap-Above= 0.83 inch, Gap-Left= 0.83 inch, Gap-Right= 0.83 inch, Friction= 0.80,
  Gaps setting= Weightless

 ------------------------------------------------------------------------------
 From A11 to A54, DY= -0.03 ft, DZ= -3.50 ft, L= 3.50 ft                  Bend

 COMPONENT DATA (Bend, TIP= A11, Near= A11 N, Far= A11 F):
   Elbow, Radius= 36.00 inch, Bend angle= 90.00 deg, End flanges= 0, Flex= Auto, SIFI= 1.00, SIFO= 1.00

 POINT DATA:
   A11, Coordinates, X= 38.93 ft, Y= 684.82 ft, Z= -200.17 ft
   A11 N, Coordinates, X= 35.93 ft, Y= 684.84 ft, Z= -200.17 ft
   A11 F, Coordinates, X= 38.93 ft, Y= 684.79 ft, Z= -203.17 ft

 ------------------------------------------------------------------------------
 From A54 to A55, DY= -0.07 ft, DZ= -9.00 ft, L= 9.00 ft                  Run

 POINT DATA:
   A54, Coordinates, X= 38.93 ft, Y= 684.79 ft, Z= -203.67 ft

 SUPPORT DATA:
   A54, Guide, Support Id= A54  1, Connected to Ground, Comp.Wt = 0.000 lb, Stiffness= RIGID,
   Gap-Down= 0.00 inch, Gap-Above= 0.83 inch, Gap-Left= 0.83 inch, Gap-Right= 0.83 inch, Friction= 0.80,
   Gaps setting= Weightless

 ------------------------------------------------------------------------------
 From A55 to A56, DY= -0.07 ft, DZ= -9.00 ft, L= 9.00 ft                  Run

 POINT DATA:
   A55, Coordinates, X= 38.93 ft, Y= 684.72 ft, Z= -212.67 ft

 SUPPORT DATA:
   A55, Guide, Support Id= A55  1, Connected to Ground, Comp.Wt = 0.000 lb, Stiffness= RIGID,
   Gap-Down= 0.00 inch, Gap-Above= 0.06 inch, Gap-Left= 0.03 inch, Gap-Right= 0.03 inch, Friction= 0.80,
   Gaps setting= Weightless

 ------------------------------------------------------------------------------
 From A56 to A57, DY= -0.07 ft, DZ= -9.00 ft, L= 9.00 ft                  Run

 POINT DATA:
   A56, Coordinates, X= 38.93 ft, Y= 684.65 ft, Z= -221.67 ft

 SUPPORT DATA:
   A56, Guide, Support Id= A56  1, Connected to Ground, Comp.Wt = 0.000 lb, Stiffness= RIGID,
   Gap-Down= 0.00 inch, Gap-Above= 0.06 inch, Gap-Left= 0.03 inch, Gap-Right= 0.03 inch, Friction= 0.80,
   Gaps setting= Weightless

 ------------------------------------------------------------------------------
 From A57 to A58, DY= -0.07 ft, DZ= -9.00 ft, L= 9.00 ft                  Run

 POINT DATA:
   A57, Coordinates, X= 38.93 ft, Y= 684.58 ft, Z= -230.67 ft

 SUPPORT DATA:
   A57, Guide, Support Id= A57  1, Connected to Ground, Comp.Wt = 0.000 lb, Stiffness= RIGID,
```

C O M P O N E N T D A T A L I S T I N G

Gap-Down= 0.00 inch, Gap-Above= 0.06 inch, Gap-Left= 0.03 inch, Gap-Right= 0.03 inch, Friction= 0.80,
Gaps setting= Weightless

From A58 to A59, DY= -0.07 ft, DZ= -9.00 ft, L= 9.00 ft Run

POINT DATA:
A58, Coordinates, X= 38.93 ft, Y= 684.51 ft, Z= -239.67 ft

SUPPORT DATA:
A58, Guide, Support Id= A58 1, Connected to Ground, Comp.Wt = 0.000 lb, Stiffness= RIGID,
Gap-Down= 0.00 inch, Gap-Above= 0.06 inch, Gap-Left= 0.03 inch, Gap-Right= 0.03 inch, Friction= 0.80,
Gaps setting= Weightless

From A59 to A60, DY= -0.07 ft, DZ= -9.00 ft, L= 9.00 ft Run

POINT DATA:
A59, Coordinates, X= 38.93 ft, Y= 684.44 ft, Z= -248.67 ft

SUPPORT DATA:
A59, Guide, Support Id= A59 1, Connected to Ground, Comp.Wt = 0.000 lb, Stiffness= RIGID,
Gap-Down= 0.00 inch, Gap-Above= 0.06 inch, Gap-Left= 0.03 inch, Gap-Right= 0.03 inch, Friction= 0.80,
Gaps setting= Weightless

From A60 to A61, DX= 0 ft, DY= -0.06 ft, DZ= -8.40 ft, L= 8.40 ft Run

POINT DATA:
A60, Coordinates, X= 38.93 ft, Y= 684.37 ft, Z= -257.67 ft

SUPPORT DATA:
A60, Guide, Support Id= A60 1, Connected to Ground, Comp.Wt = 0.000 lb, Stiffness= RIGID,
Gap-Down= 0.00 inch, Gap-Above= 0.06 inch, Gap-Left= 0.03 inch, Gap-Right= 0.03 inch, Friction= 0.80,
Gaps setting= Weightless

From A61 to A62, DY= -0.06 ft, DZ= -9.00 ft, L= 9.00 ft Run

POINT DATA:
A61, Coordinates, X= 38.93 ft, Y= 684.31 ft, Z= -266.07 ft

SUPPORT DATA:
A61, Guide, Support Id= A61 1, Connected to Ground, Comp.Wt = 0.000 lb, Stiffness= RIGID,
Gap-Down= 0.00 inch, Gap-Above= 0.06 inch, Gap-Left= 0.03 inch, Gap-Right= 0.03 inch, Friction= 0.80,
Gaps setting= Weightless

From A62 to A12, DY= -0.03 ft, DZ= -3.50 ft, L= 3.50 ft Run

POINT DATA:
A62, Coordinates, X= 38.93 ft, Y= 684.25 ft, Z= -275.07 ft

SUPPORT DATA:
A62, Guide, Support Id= A62 1, Connected to Ground, Comp.Wt = 0.000 lb, Stiffness= RIGID,

C O M P O N E N T D A T A L I S T I N G

```
  Gap-Down= 0.00 inch, Gap-Above= 0.83 inch, Gap-Left= 0.83 inch, Gap-Right= 0.83 inch, Friction= 0.80,
  Gaps setting= Weightless

 ------------------------------------------------------------------------------
 From A12 to A63, DX= -3.50 ft, DY= -0.03 ft, L= 3.50 ft                  Bend

 COMPONENT DATA (Bend, TIP= A12, Near= A12 N, Far= A12 F):
   Elbow, Radius= 36.00 inch, Bend angle= 90.00 deg, End flanges= 0, Flex= Auto, SIFI= 1.00, SIFO= 1.00

 POINT DATA:
   A12, Coordinates, X= 38.93 ft, Y= 684.22 ft, Z= -278.57 ft
   A12 N, Coordinates, X= 38.93 ft, Y= 684.25 ft, Z= -275.57 ft
   A12 F, Coordinates, X= 35.93 ft, Y= 684.19 ft, Z= -278.57 ft

 ------------------------------------------------------------------------------
 From A63 to A64, DX= -9.00 ft, DY= -0.07 ft, L= 9.00 ft                  Run

 POINT DATA:
   A63, Coordinates, X= 35.43 ft, Y= 684.19 ft, Z= -278.57 ft

 SUPPORT DATA:
   A63, Guide, Support Id= A63  1, Connected to Ground, Comp.Wt = 0.000 lb, Stiffness= RIGID,
   Gap-Down= 0.00 inch, Gap-Above= 0.83 inch, Gap-Left= 0.83 inch, Gap-Right= 0.83 inch, Friction= 0.80,
   Gaps setting= Weightless

 ------------------------------------------------------------------------------
 From A64 to A65, DX= -9.00 ft, DY= -0.07 ft, L= 9.00 ft                  Run

 POINT DATA:
   A64, Coordinates, X= 26.43 ft, Y= 684.12 ft, Z= -278.57 ft

 SUPPORT DATA:
   A64, Guide, Support Id= A64  2, Connected to Ground, Comp.Wt = 0.000 lb, Stiffness= RIGID,
   Gap-Down= 0.00 inch, Gap-Above= 0.06 inch, Gap-Left= 0.03 inch, Gap-Right= 0.03 inch, Friction= 0.80,
   Gaps setting= Weightless

 ------------------------------------------------------------------------------
 From A65 to A66, DX= -9.00 ft, DY= -0.06 ft, L= 9.00 ft                  Run

 POINT DATA:
   A65, Coordinates, X= 17.43 ft, Y= 684.05 ft, Z= -278.57 ft

 SUPPORT DATA:
   A65, Guide, Support Id= A65  2, Connected to Ground, Comp.Wt = 0.000 lb, Stiffness= RIGID,
   Gap-Down= 0.00 inch, Gap-Above= 0.06 inch, Gap-Left= 0.03 inch, Gap-Right= 0.03 inch, Friction= 0.80,
   Gaps setting= Weightless

 ------------------------------------------------------------------------------
 From A66 to A67, DX= -9.00 ft, DY= -0.07 ft, L= 9.00 ft                  Run

 POINT DATA:
   A66, Coordinates, X= 8.43 ft, Y= 683.99 ft, Z= -278.57 ft

 SUPPORT DATA:
   A66, Guide, Support Id= A66  2, Connected to Ground, Comp.Wt = 0.000 lb, Stiffness= RIGID,
```

C O M P O N E N T D A T A L I S T I N G

```
  Gap-Down= 0.00 inch, Gap-Above= 0.06 inch, Gap-Left= 0.03 inch, Gap-Right= 0.03 inch, Friction= 0.80,
  Gaps setting= Weightless

 ------------------------------------------------------------------------------
 From A67 to A68, DX= -8.78 ft, DY= -0.06 ft, L= 8.78 ft                  Run

 POINT DATA:
   A67, Coordinates, X= -0.57 ft, Y= 683.92 ft, Z= -278.57 ft

 SUPPORT DATA:
   A67, Guide, Support Id= A67  2, Connected to Ground, Comp.Wt = 0.000 lb, Stiffness= RIGID,
   Gap-Down= 0.00 inch, Gap-Above= 0.06 inch, Gap-Left= 0.03 inch, Gap-Right= 0.03 inch, Friction= 0.80,
   Gaps setting= Weightless

 ------------------------------------------------------------------------------
 From A68 to A69, DX= -9.00 ft, DY= -0.06 ft, L= 9.00 ft                  Run

 POINT DATA:
   A68, Coordinates, X= -9.35 ft, Y= 683.86 ft, Z= -278.57 ft

 SUPPORT DATA:
   A68, Guide, Support Id= A68  2, Connected to Ground, Comp.Wt = 0.000 lb, Stiffness= RIGID,
   Gap-Down= 0.00 inch, Gap-Above= 0.06 inch, Gap-Left= 0.03 inch, Gap-Right= 0.03 inch, Friction= 0.80,
   Gaps setting= Weightless

 ------------------------------------------------------------------------------
 From A69 to A13, DX= -3.50 ft, DY= -0.03 ft, L= 3.50 ft                  Run

 POINT DATA:
   A69, Coordinates, X= -18.35 ft, Y= 683.80 ft, Z= -278.57 ft

 SUPPORT DATA:
   A69, Guide, Support Id= A69  1, Connected to Ground, Comp.Wt = 0.000 lb, Stiffness= RIGID,
   Gap-Down= 0.00 inch, Gap-Above= 0.83 inch, Gap-Left= 0.83 inch, Gap-Right= 0.83 inch, Friction= 0.80,
   Gaps setting= Weightless

 ------------------------------------------------------------------------------
 From A13 to A70, DY= -0.02 ft, DZ= -3.50 ft, L= 3.50 ft                  Bend

 COMPONENT DATA (Bend, TIP= A13, Near= A13 N, Far= A13 F):
   Elbow, Radius= 36.00 inch, Bend angle= 90.00 deg, End flanges= 0, Flex= Auto, SIFI= 1.00, SIFO= 1.00

 POINT DATA:
   A13, Coordinates, X= -21.85 ft, Y= 683.77 ft, Z= -278.57 ft
   A13 N, Coordinates, X= -18.85 ft, Y= 683.80 ft, Z= -278.57 ft
   A13 F, Coordinates, X= -21.85 ft, Y= 683.75 ft, Z= -281.57 ft

 ------------------------------------------------------------------------------
 From A70 to A71, DY= -0.05 ft, DZ= -9.00 ft, L= 9.00 ft                  Run

 POINT DATA:
   A70, Coordinates, X= -21.85 ft, Y= 683.75 ft, Z= -282.07 ft

 SUPPORT DATA:
   A70, Guide, Support Id= A70  1, Connected to Ground, Comp.Wt = 0.000 lb, Stiffness= RIGID,
```

C O M P O N E N T D A T A L I S T I N G

```
  Gap-Down= 0.00 inch, Gap-Above= 0.83 inch, Gap-Left= 0.83 inch, Gap-Right= 0.83 inch, Friction= 0.80,
  Gaps setting= Weightless

 ------------------------------------------------------------------------------
 From A71 to A72, DY= -0.05 ft, DZ= -7.59 ft, L= 7.59 ft                  Run

 POINT DATA:
   A71, Coordinates, X= -21.85 ft, Y= 683.70 ft, Z= -291.07 ft

 SUPPORT DATA:
   A71, Guide, Support Id= A71  2, Connected to Ground, Comp.Wt = 0.000 lb, Stiffness= RIGID,
   Gap-Down= 0.00 inch, Gap-Above= 0.06 inch, Gap-Left= 0.03 inch, Gap-Right= 0.03 inch, Friction= 0.80,
   Gaps setting= Weightless

 ------------------------------------------------------------------------------
 From A72 to A14, DY= -0.02 ft, DZ= -3.50 ft, L= 3.50 ft                  Run

 POINT DATA:
   A72, Coordinates, X= -21.85 ft, Y= 683.65 ft, Z= -298.66 ft

 SUPPORT DATA:
   A72, Guide, Support Id= A72  1, Connected to Ground, Comp.Wt = 0.000 lb, Stiffness= RIGID,
   Gap-Down= 0.00 inch, Gap-Above= 0.83 inch, Gap-Left= 0.83 inch, Gap-Right= 0.83 inch, Friction= 0.80,
   Gaps setting= Weightless

 ------------------------------------------------------------------------------
 From A14 to A73, DX= 3.50 ft, DY= -0.06 ft, L= 3.50 ft                   Bend

 COMPONENT DATA (Bend, TIP= A14, Near= A14 N, Far= A14 F):
   Elbow, Radius= 36.00 inch, Bend angle= 89.99 deg, End flanges= 0, Flex= Auto, SIFI= 1.00, SIFO= 1.00

 POINT DATA:
   A14, Coordinates, X= -21.85 ft, Y= 683.63 ft, Z= -302.16 ft
   A14 N, Coordinates, X= -21.85 ft, Y= 683.65 ft, Z= -299.16 ft
   A14 F, Coordinates, X= -18.85 ft, Y= 683.58 ft, Z= -302.16 ft

 ------------------------------------------------------------------------------
 From A73 to A15, DX= 2.96 ft, DY= -0.05 ft, L= 2.96 ft                   Run

 POINT DATA:
   A73, Coordinates, X= -18.35 ft, Y= 683.57 ft, Z= -302.16 ft

 SUPPORT DATA:
   A73, Guide, Support Id= A73  1, Connected to Ground, Comp.Wt = 0.000 lb, Stiffness= RIGID,
   Gap-Down= 0.00 inch, Gap-Above= 0.83 inch, Gap-Left= 0.83 inch, Gap-Right= 0.83 inch, Friction= 0.80,
   Gaps setting= Weightless

 ------------------------------------------------------------------------------
 From A15 to A16, DX= 1.00 ft                                             Bend

 COMPONENT DATA (Bend, TIP= A15, Near= A15 N, Far= A15 F):
   Elbow, Radius= 36.00 inch, Bend angle= 0.97 deg, End flanges= 0, Flex= Auto, SIFI= 1.00, SIFO= 1.00

 POINT DATA:
   A15, Coordinates, X= -15.39 ft, Y= 683.52 ft, Z= -302.16 ft
```

C O M P O N E N T D A T A L I S T I N G

A15 N, Coordinates, X= -15.42 ft, Y= 683.52 ft, Z= -302.16 ft
A15 F, Coordinates, X= -15.36 ft, Y= 683.52 ft, Z= -302.16 ft

---

From A16 to A17, DX= 1.00 ft Run

POINT DATA:
A16, Coordinates, X= -14.39 ft, Y= 683.52 ft, Z= -302.16 ft

From A17 to A18, DX= 0.55 ft Run

POINT DATA:
A17, Coordinates, X= -13.39 ft, Y= 683.52 ft, Z= -302.16 ft

From A18 to A19, DX= 0.19 ft Run

POINT DATA:
A18, Coordinates, X= -12.84 ft, Y= 683.52 ft, Z= -302.16 ft
A19, Coordinates, X= -12.65 ft, Y= 683.52 ft, Z= -302.16 ft

SUPPORT DATA:
A18, Anchor, Connected to: Ground, KTX= Rigid, KTY= Rigid, KTZ= Rigid, KRX= Rigid, KRY= Rigid, KRZ= Rigid

---

*** SEGMENT B , LINE # RIGID

From B00 to B01, DY= -0.25 ft Run

PIPE DATA:
Pipe Id= 3SCH40, Composition= Austenitic Stainless, Nom Size= 3.000, OD= 3.500 inch, Wall Thk= 0.216 inch,
Mill= 0.027 inch, Pipe Density= 501.00 lb/cu.ft, Pipe Unit Wgt= 7.75 lb/ft, Content Sp Gr= 1.600,
Content Unit Wgt= 5.13 lb/ft

POINT DATA:
B00, Coordinates, X= 0.00 ft, Y= 693.93 ft, Z= 2.00 ft

From B01 to B02, DY= -0.61 ft Run

POINT DATA:
B01, Coordinates, X= 0.00 ft, Y= 693.68 ft, Z= 2.00 ft

SUPPORT DATA:
B01, V-Stop, Support Id= B01 1, Connected to Ground, Comp.Wt = 0.000 lb, Gap-Below= 0.00 inch,
Gap-Above= 100.00 inch, Friction= 0.00, Gaps setting= Weightless
B01, Guide, Support Id= B01 2, Connected to Ground, Comp.Wt = 0.000 lb, Stiffness= RIGID, Gap -Z= 0.00 inch,
Gap +Z= 0.00 inch, Gap -X= 1.00 inch, Gap +X= 1.00 inch, Friction= 0.80, Gaps setting= Weightless

---

From B02 to B03, DX= 1.46 ft Bend

C O M P O N E N T D A T A L I S T I N G

COMPONENT DATA (Bend, TIP= B02, Near= B02 N, Far= B02 F):
Long Elbow, Radius= 4.50 inch, Bend angle= 90.00 deg, End flanges= 0, Flex= Auto, SIFI= 1.78, SIFO= 1.48

POINT DATA:
B02, Coordinates, X= 0.00 ft, Y= 693.07 ft, Z= 2.00 ft
B02 N, Coordinates, X= 0.00 ft, Y= 693.44 ft, Z= 2.00 ft
B02 F, Coordinates, X= 0.38 ft, Y= 693.07 ft, Z= 2.00 ft

From B03 to B04, DX= 2.00 ft Run

POINT DATA:
B03, Coordinates, X= 1.46 ft, Y= 693.07 ft, Z= 2.00 ft

SUPPORT DATA:
B03, Anchor, Connected to: Ground, KTX= Rigid, KTY= Rigid, KTZ= Rigid, KRX= Rigid, KRY= Rigid, KRZ= Rigid

---

From B04 to B22, DX= 2.50 ft Run

POINT DATA:
B04, Coordinates, X= 3.46 ft, Y= 693.07 ft, Z= 2.00 ft

From B22 to B06, DX= 0.50 ft Run

POINT DATA:
B22, Coordinates, X= 5.96 ft, Y= 693.07 ft, Z= 2.00 ft

SUPPORT DATA:
B22, Guide, Support Id= B22 2, Connected to Ground, Comp.Wt = 0.000 lb, Stiffness= RIGID,
Gap-Down= 0.00 inch, Gap-Above= 1.28 inch, Gap-Left= 1.28 inch, Gap-Right= 1.28 inch, Friction= 0.80,
Gaps setting= Weightless

From B06 to B23, DX= 11.15 ft, DY= -1.83 ft, L= 11.30 ft Bend

COMPONENT DATA (Bend, TIP= B06, Near= B06 N, Far= B06 F):
Elbow, Radius= 36.00 inch, Bend angle= 9.32 deg, End flanges= 0, Flex= Auto, SIFI= 1.00, SIFO= 1.00

POINT DATA:
B06, Coordinates, X= 6.46 ft, Y= 693.07 ft, Z= 2.00 ft
B06 N, Coordinates, X= 6.22 ft, Y= 693.07 ft, Z= 2.00 ft
B06 F, Coordinates, X= 6.70 ft, Y= 693.03 ft, Z= 2.00 ft

From B23 to B24, DX= 7.70 ft, DY= -1.26 ft, L= 7.80 ft Run

POINT DATA:
B23, Coordinates, X= 17.61 ft, Y= 691.24 ft, Z= 2.00 ft

SUPPORT DATA:
B23, Guide, Support Id= B23 2, Connected to Ground, Comp.Wt = 0.000 lb, Stiffness= RIGID,
Gap-Down= 0.00 inch, Gap-Above= 0.31 inch, Gap-Left= 0.16 inch, Gap-Right= 0.16 inch, Friction= 0.80,
Gaps setting= Weightless

C O M P O N E N T D A T A L I S T I N G

From B24 to B09, DX= 3.45 ft, DY= -0.57 ft, L= 3.50 ft Run

POINT DATA:
B24, Coordinates, X= 25.31 ft, Y= 689.98 ft, Z= 2.00 ft

SUPPORT DATA:
B24, Guide, Support Id= B24 2, Connected to Ground, Comp.Wt = 0.000 lb, Stiffness= RIGID,
Gap-Down= 0.00 inch, Gap-Above= 1.28 inch, Gap-Left= 1.28 inch, Gap-Right= 1.28 inch, Friction= 0.80,
Gaps setting= Weightless

From B09 to B25, DY= -0.10 ft, DZ= -3.50 ft, L= 3.50 ft Bend

COMPONENT DATA (Bend, TIP= B09, Near= B09 N, Far= B09 F):
Elbow, Radius= 36.00 inch, Bend angle= 89.73 deg, End flanges= 0, Flex= Auto, SIFI= 1.00, SIFO= 1.00

POINT DATA:
B09, Coordinates, X= 28.76 ft, Y= 689.41 ft, Z= 2.00 ft
B09 N, Coordinates, X= 25.81 ft, Y= 689.90 ft, Z= 2.00 ft
B09 F, Coordinates, X= 28.76 ft, Y= 689.32 ft, Z= -0.98 ft

From B25 to B26, DY= -0.26 ft, DZ= -9.00 ft, L= 9.00 ft Run

POINT DATA:
B25, Coordinates, X= 28.76 ft, Y= 689.31 ft, Z= -1.50 ft

SUPPORT DATA:
B25, Guide, Support Id= B25 2, Connected to Ground, Comp.Wt = 0.000 lb, Stiffness= RIGID,
Gap-Down= 0.00 inch, Gap-Above= 1.28 inch, Gap-Left= 1.28 inch, Gap-Right= 1.28 inch, Friction= 0.80,
Gaps setting= Weightless

From B26 to B28, DY= -0.26 ft, DZ= -9.00 ft, L= 9.00 ft Run

POINT DATA:
B26, Coordinates, X= 28.76 ft, Y= 689.05 ft, Z= -10.50 ft

SUPPORT DATA:
B26, Guide, Support Id= B26 1, Connected to Ground, Comp.Wt = 0.000 lb, Stiffness= RIGID,
Gap-Down= 0.00 inch, Gap-Above= 0.31 inch, Gap-Left= 0.16 inch, Gap-Right= 0.16 inch, Friction= 0.80,
Gaps setting= Weightless

From B28 to B29, DY= -0.26 ft, DZ= -9.00 ft, L= 9.00 ft Run

POINT DATA:
B28, Coordinates, X= 28.76 ft, Y= 688.79 ft, Z= -19.50 ft

SUPPORT DATA:
B28, Guide, Support Id= B28 1, Connected to Ground, Comp.Wt = 0.000 lb, Stiffness= RIGID,
Gap-Down= 0.00 inch, Gap-Above= 0.31 inch, Gap-Left= 0.16 inch, Gap-Right= 0.16 inch, Friction= 0.80,
Gaps setting= Weightless

C O M P O N E N T D A T A L I S T I N G

From B29 to B31, DY= -0.27 ft, DZ= -9.00 ft, L= 9.00 ft Run

POINT DATA:
B29, Coordinates, X= 28.76 ft, Y= 688.53 ft, Z= -28.50 ft

SUPPORT DATA:
B29, Guide, Support Id= B29 1, Connected to Ground, Comp.Wt = 0.000 lb, Stiffness= RIGID,
Gap-Down= 0.00 inch, Gap-Above= 0.31 inch, Gap-Left= 0.16 inch, Gap-Right= 0.16 inch, Friction= 0.80,
Gaps setting= Weightless

From B31 to B32, DY= -0.30 ft, DZ= -10.17 ft, L= 10.17 ft Run

POINT DATA:
B31, Coordinates, X= 28.76 ft, Y= 688.26 ft, Z= -37.50 ft

SUPPORT DATA:
B31, Guide, Support Id= B31 1, Connected to Ground, Comp.Wt = 0.000 lb, Stiffness= RIGID,
Gap-Down= 0.00 inch, Gap-Above= 0.31 inch, Gap-Left= 0.16 inch, Gap-Right= 0.16 inch, Friction= 0.80,
Gaps setting= Weightless

From B32 to B16, DY= -0.10 ft, DZ= -3.50 ft, L= 3.50 ft Run

POINT DATA:
B32, Coordinates, X= 28.76 ft, Y= 687.96 ft, Z= -47.67 ft

SUPPORT DATA:
B32, Guide, Support Id= B32 2, Connected to Ground, Comp.Wt = 0.000 lb, Stiffness= RIGID,
Gap-Down= 0.00 inch, Gap-Above= 1.28 inch, Gap-Left= 1.28 inch, Gap-Right= 1.28 inch, Friction= 0.80,
Gaps setting= Weightless

From B16 to B33, DX= 3.50 ft, DY= -0.08 ft, L= 3.50 ft Bend

COMPONENT DATA (Bend, TIP= B16, Near= B16 N, Far= B16 F):
Elbow, Radius= 36.00 inch, Bend angle= 89.96 deg, End flanges= 0, Flex= Auto, SIFI= 1.00, SIFO= 1.00

POINT DATA:
B16, Coordinates, X= 28.76 ft, Y= 687.86 ft, Z= -51.17 ft
B16 N, Coordinates, X= 28.76 ft, Y= 687.95 ft, Z= -48.17 ft
B16 F, Coordinates, X= 31.76 ft, Y= 687.79 ft, Z= -51.17 ft

From B33 to B34, DX= 2.76 ft, DY= -0.06 ft, L= 2.76 ft Run

POINT DATA:
B33, Coordinates, X= 32.26 ft, Y= 687.78 ft, Z= -51.17 ft

SUPPORT DATA:
B33, Guide, Support Id= B33 2, Connected to Ground, Comp.Wt = 0.000 lb, Stiffness= RIGID,
Gap-Down= 0.00 inch, Gap-Above= 1.28 inch, Gap-Left= 1.28 inch, Gap-Right= 1.28 inch, Friction= 0.80,
Gaps setting= Weightless

C O M P O N E N T D A T A L I S T I N G

From B34 to B19, DX= 3.50 ft, DY= -0.08 ft, L= 3.50 ft Run

POINT DATA:
B34, Coordinates, X= 35.02 ft, Y= 687.72 ft, Z= -51.17 ft

SUPPORT DATA:
B34, Guide, Support Id= B34 2, Connected to Ground, Comp.Wt = 0.000 lb, Stiffness= RIGID,
Gap-Down= 0.00 inch, Gap-Above= 1.28 inch, Gap-Left= 1.28 inch, Gap-Right= 1.28 inch, Friction= 0.80,
Gaps setting= Weightless

From B19 to B35, DY= -0.10 ft, DZ= -3.50 ft, L= 3.50 ft Bend

COMPONENT DATA (Bend, TIP= B19, Near= B19 N, Far= B19 F):
Elbow, Radius= 36.00 inch, Bend angle= 89.96 deg, End flanges= 0, Flex= Auto, SIFI= 1.00, SIFO= 1.00

POINT DATA:
B19, Coordinates, X= 38.52 ft, Y= 687.64 ft, Z= -51.17 ft
B19 N, Coordinates, X= 35.52 ft, Y= 687.71 ft, Z= -51.17 ft
B19 F, Coordinates, X= 38.52 ft, Y= 687.55 ft, Z= -54.17 ft

From B35 to B36, DY= -0.25 ft, DZ= -9.00 ft, L= 9.00 ft Run

POINT DATA:
B35, Coordinates, X= 38.52 ft, Y= 687.54 ft, Z= -54.67 ft

SUPPORT DATA:
B35, Guide, Support Id= B35 2, Connected to Ground, Comp.Wt = 0.000 lb, Stiffness= RIGID,
Gap-Down= 0.00 inch, Gap-Above= 1.28 inch, Gap-Left= 1.28 inch, Gap-Right= 1.28 inch, Friction= 0.80,
Gaps setting= Weightless

From B36 to B37, DY= -0.25 ft, DZ= -9.00 ft, L= 9.00 ft Run

POINT DATA:
B36, Coordinates, X= 38.52 ft, Y= 687.29 ft, Z= -63.67 ft

SUPPORT DATA:
B36, Guide, Support Id= B36 2, Connected to Ground, Comp.Wt = 0.000 lb, Stiffness= RIGID,
Gap-Down= 0.00 inch, Gap-Above= 0.31 inch, Gap-Left= 0.16 inch, Gap-Right= 0.16 inch, Friction= 0.80,
Gaps setting= Weightless

From B37 to B38, DY= -0.25 ft, DZ= -9.00 ft, L= 9.00 ft Run

POINT DATA:
B37, Coordinates, X= 38.52 ft, Y= 687.04 ft, Z= -72.67 ft

SUPPORT DATA:
B37, Guide, Support Id= B37 2, Connected to Ground, Comp.Wt = 0.000 lb, Stiffness= RIGID,
Gap-Down= 0.00 inch, Gap-Above= 0.31 inch, Gap-Left= 0.16 inch, Gap-Right= 0.16 inch, Friction= 0.80,
Gaps setting= Weightless

C O M P O N E N T D A T A L I S T I N G

From B38 to B39, DY= -0.25 ft, DZ= -9.00 ft, L= 9.00 ft Run

POINT DATA:
B38, Coordinates, X= 38.52 ft, Y= 686.79 ft, Z= -81.67 ft

SUPPORT DATA:
B38, Guide, Support Id= B38 2, Connected to Ground, Comp.Wt = 0.000 lb, Stiffness= RIGID,
Gap-Down= 0.00 inch, Gap-Above= 0.31 inch, Gap-Left= 0.16 inch, Gap-Right= 0.16 inch, Friction= 0.80,
Gaps setting= Weightless

From B39 to B40, DY= -0.22 ft, DZ= -7.67 ft, L= 7.67 ft Run

POINT DATA:
B39, Coordinates, X= 38.52 ft, Y= 686.54 ft, Z= -90.67 ft

SUPPORT DATA:
B39, Guide, Support Id= B39 2, Connected to Ground, Comp.Wt = 0.000 lb, Stiffness= RIGID,
Gap-Down= 0.00 inch, Gap-Above= 0.31 inch, Gap-Left= 0.16 inch, Gap-Right= 0.16 inch, Friction= 0.80,
Gaps setting= Weightless

From B40 to B42, DY= -0.25 ft, DZ= -9.00 ft, L= 9.00 ft Run

POINT DATA:
B40, Coordinates, X= 38.52 ft, Y= 686.32 ft, Z= -98.34 ft

SUPPORT DATA:
B40, Guide, Support Id= B40 1, Connected to Ground, Comp.Wt = 0.000 lb, Stiffness= RIGID,
Gap-Down= 0.00 inch, Gap-Above= 0.31 inch, Gap-Left= 0.16 inch, Gap-Right= 0.16 inch, Friction= 0.80,
Gaps setting= Weightless

From B42 to B27, DY= -0.10 ft, DZ= -3.50 ft, L= 3.50 ft Run

POINT DATA:
B42, Coordinates, X= 38.52 ft, Y= 686.07 ft, Z= -107.34 ft

SUPPORT DATA:
B42, Guide, Support Id= B42 1, Connected to Ground, Comp.Wt = 0.000 lb, Stiffness= RIGID,
Gap-Down= 0.00 inch, Gap-Above= 1.28 inch, Gap-Left= 1.28 inch, Gap-Right= 1.28 inch, Friction= 0.80,
Gaps setting= Weightless

From B27 to B43, DX= -3.50 ft, DY= -0.09 ft, L= 3.50 ft Bend

COMPONENT DATA (Bend, TIP= B27, Near= B27 N, Far= B27 F):
Elbow, Radius= 36.00 inch, Bend angle= 89.96 deg, End flanges= 0, Flex= Auto, SIFI= 1.00, SIFO= 1.00

POINT DATA:
B27, Coordinates, X= 38.52 ft, Y= 685.97 ft, Z= -110.84 ft
B27 N, Coordinates, X= 38.52 ft, Y= 686.06 ft, Z= -107.84 ft
B27 F, Coordinates, X= 35.52 ft, Y= 685.89 ft, Z= -110.84 ft

C O M P O N E N T D A T A L I S T I N G

From B43 to B45, DX= -4.00 ft, DY= -0.10 ft, L= 4.00 ft Run

POINT DATA:
B43, Coordinates, X= 35.02 ft, Y= 685.88 ft, Z= -110.84 ft

SUPPORT DATA:
B43, Guide, Support Id= B43 1, Connected to Ground, Comp.Wt = 0.000 lb, Stiffness= RIGID,
Gap-Down= 0.00 inch, Gap-Above= 1.28 inch, Gap-Left= 1.28 inch, Gap-Right= 1.28 inch, Friction= 0.80,
Gaps setting= Weightless

From B45 to B30, DX= -3.50 ft, DY= -0.08 ft, L= 3.50 ft Run

POINT DATA:
B45, Coordinates, X= 31.02 ft, Y= 685.78 ft, Z= -110.84 ft

SUPPORT DATA:
B45, Guide, Support Id= B45 1, Connected to Ground, Comp.Wt = 0.000 lb, Stiffness= RIGID,
Gap-Down= 0.00 inch, Gap-Above= 1.28 inch, Gap-Left= 1.28 inch, Gap-Right= 1.28 inch, Friction= 0.80,
Gaps setting= Weightless

From B30 to B46, DY= -0.03 ft, DZ= -3.50 ft, L= 3.50 ft Bend

COMPONENT DATA (Bend, TIP= B30, Near= B30 N, Far= B30 F):
Elbow, Radius= 36.00 inch, Bend angle= 89.99 deg, End flanges= 0, Flex= Auto, SIFI= 1.00, SIFO= 1.00

POINT DATA:
B30, Coordinates, X= 27.52 ft, Y= 685.70 ft, Z= -110.84 ft
B30 N, Coordinates, X= 30.52 ft, Y= 685.77 ft, Z= -110.84 ft
B30 F, Coordinates, X= 27.52 ft, Y= 685.67 ft, Z= -113.84 ft

From B46 to B47, DY= -0.08 ft, DZ= -9.00 ft, L= 9.00 ft Run

POINT DATA:
B46, Coordinates, X= 27.52 ft, Y= 685.67 ft, Z= -114.34 ft

SUPPORT DATA:
B46, Guide, Support Id= B46 2, Connected to Ground, Comp.Wt = 0.000 lb, Stiffness= RIGID,
Gap-Down= 0.00 inch, Gap-Above= 1.28 inch, Gap-Left= 1.28 inch, Gap-Right= 1.28 inch, Friction= 0.80,
Gaps setting= Weightless

From B47 to B48, DY= -0.08 ft, DZ= -9.00 ft, L= 9.00 ft Run

POINT DATA:
B47, Coordinates, X= 27.52 ft, Y= 685.59 ft, Z= -123.34 ft

SUPPORT DATA:
B47, Guide, Support Id= B47 2, Connected to Ground, Comp.Wt = 0.000 lb, Stiffness= RIGID,
Gap-Down= 0.00 inch, Gap-Above= 0.31 inch, Gap-Left= 0.16 inch, Gap-Right= 0.16 inch, Friction= 0.80,
Gaps setting= Weightless

C O M P O N E N T D A T A L I S T I N G

From B48 to B49, DY= -0.08 ft, DZ= -9.00 ft, L= 9.00 ft Run

POINT DATA:
B48, Coordinates, X= 27.52 ft, Y= 685.51 ft, Z= -132.34 ft

SUPPORT DATA:
B48, Guide, Support Id= B48 2, Connected to Ground, Comp.Wt = 0.000 lb, Stiffness= RIGID,
Gap-Down= 0.00 inch, Gap-Above= 0.31 inch, Gap-Left= 0.16 inch, Gap-Right= 0.16 inch, Friction= 0.80,
Gaps setting= Weightless

From B49 to B50, DY= -0.08 ft, DZ= -9.00 ft, L= 9.00 ft Run

POINT DATA:
B49, Coordinates, X= 27.52 ft, Y= 685.43 ft, Z= -141.34 ft

SUPPORT DATA:
B49, Guide, Support Id= B49 2, Connected to Ground, Comp.Wt = 0.000 lb, Stiffness= RIGID,
Gap-Down= 0.00 inch, Gap-Above= 0.31 inch, Gap-Left= 0.16 inch, Gap-Right= 0.16 inch, Friction= 0.80,
Gaps setting= Weightless

From B50 to B51, DY= -0.07 ft, DZ= -9.00 ft, L= 9.00 ft Run

POINT DATA:
B50, Coordinates, X= 27.52 ft, Y= 685.35 ft, Z= -150.34 ft

SUPPORT DATA:
B50, Guide, Support Id= B50 2, Connected to Ground, Comp.Wt = 0.000 lb, Stiffness= RIGID,
Gap-Down= 0.00 inch, Gap-Above= 0.31 inch, Gap-Left= 0.16 inch, Gap-Right= 0.16 inch, Friction= 0.80,
Gaps setting= Weightless

From B51 to B52, DY= -0.08 ft, DZ= -9.00 ft, L= 9.00 ft Run

POINT DATA:
B51, Coordinates, X= 27.52 ft, Y= 685.28 ft, Z= -159.34 ft

SUPPORT DATA:
B51, Guide, Support Id= B51 2, Connected to Ground, Comp.Wt = 0.000 lb, Stiffness= RIGID,
Gap-Down= 0.00 inch, Gap-Above= 0.31 inch, Gap-Left= 0.16 inch, Gap-Right= 0.16 inch, Friction= 0.80,
Gaps setting= Weightless

From B52 to B53, DY= -0.07 ft, DZ= -9.00 ft, L= 9.00 ft Run

POINT DATA:
B52, Coordinates, X= 27.52 ft, Y= 685.20 ft, Z= -168.34 ft

SUPPORT DATA:
B52, Guide, Support Id= B52 2, Connected to Ground, Comp.Wt = 0.000 lb, Stiffness= RIGID,
Gap-Down= 0.00 inch, Gap-Above= 0.31 inch, Gap-Left= 0.16 inch, Gap-Right= 0.16 inch, Friction= 0.80,
Gaps setting= Weightless

C O M P O N E N T D A T A L I S T I N G

From B53 to B54, DX= 0 ft, DY= -0.07 ft, DZ= -7.83 ft, L= 7.83 ft Run

POINT DATA:
B53, Coordinates, X= 27.52 ft, Y= 685.13 ft, Z= -177.34 ft

SUPPORT DATA:
B53, Guide, Support Id= B53 2, Connected to Ground, Comp.Wt = 0.000 lb, Stiffness= RIGID,
Gap-Down= 0.00 inch, Gap-Above= 0.31 inch, Gap-Left= 0.16 inch, Gap-Right= 0.16 inch, Friction= 0.80,
Gaps setting= Weightless

From B54 to B55, DY= -0.07 ft, DZ= -9.00 ft, L= 9.00 ft Run

POINT DATA:
B54, Coordinates, X= 27.52 ft, Y= 685.06 ft, Z= -185.17 ft

SUPPORT DATA:
B54, Guide, Support Id= B54 2, Connected to Ground, Comp.Wt = 0.000 lb, Stiffness= RIGID,
Gap-Down= 0.00 inch, Gap-Above= 0.31 inch, Gap-Left= 0.16 inch, Gap-Right= 0.16 inch, Friction= 0.80,
Gaps setting= Weightless

From B55 to B41, DY= -0.03 ft, DZ= -3.50 ft, L= 3.50 ft Run

POINT DATA:
B55, Coordinates, X= 27.52 ft, Y= 684.99 ft, Z= -194.17 ft

SUPPORT DATA:
B55, Guide, Support Id= B55 1, Connected to Ground, Comp.Wt = 0.000 lb, Stiffness= RIGID,
Gap-Down= 0.00 inch, Gap-Above= 1.28 inch, Gap-Left= 1.28 inch, Gap-Right= 1.28 inch, Friction= 0.80,
Gaps setting= Weightless

From B41 to B57, DX= 3.50 ft, DY= -0.02 ft, L= 3.50 ft Bend

COMPONENT DATA (Bend, TIP= B41, Near= B41 N, Far= B41 F):
Elbow, Radius= 36.00 inch, Bend angle= 90.00 deg, End flanges= 0, Flex= Auto, SIFI= 1.00, SIFO= 1.00

POINT DATA:
B41, Coordinates, X= 27.52 ft, Y= 684.96 ft, Z= -197.67 ft
B41 N, Coordinates, X= 27.52 ft, Y= 684.99 ft, Z= -194.67 ft
B41 F, Coordinates, X= 30.52 ft, Y= 684.94 ft, Z= -197.67 ft

From B57 to B58, DX= 6.91 ft, DY= -0.05 ft, L= 6.91 ft Run

POINT DATA:
B57, Coordinates, X= 31.02 ft, Y= 684.94 ft, Z= -197.67 ft

SUPPORT DATA:
B57, Guide, Support Id= B57 1, Connected to Ground, Comp.Wt = 0.000 lb, Stiffness= RIGID,
Gap-Down= 0.00 inch, Gap-Above= 1.28 inch, Gap-Left= 1.28 inch, Gap-Right= 1.28 inch, Friction= 0.80,
Gaps setting= Weightless

C O M P O N E N T D A T A L I S T I N G

From B58 to B44, DX= 3.50 ft, DY= -0.02 ft, L= 3.50 ft Run

POINT DATA:
B58, Coordinates, X= 37.93 ft, Y= 684.89 ft, Z= -197.67 ft

SUPPORT DATA:
B58, Guide, Support Id= B58 1, Connected to Ground, Comp.Wt = 0.000 lb, Stiffness= RIGID,
Gap-Down= 0.00 inch, Gap-Above= 1.28 inch, Gap-Left= 1.28 inch, Gap-Right= 1.28 inch, Friction= 0.80,
Gaps setting= Weightless

From B44 to B64, DY= -0.02 ft, DZ= -3.50 ft, L= 3.50 ft Bend

COMPONENT DATA (Bend, TIP= B44, Near= B44 N, Far= B44 F):
Elbow, Radius= 36.00 inch, Bend angle= 90.00 deg, End flanges= 0, Flex= Auto, SIFI= 1.00, SIFO= 1.00

POINT DATA:
B44, Coordinates, X= 41.43 ft, Y= 684.87 ft, Z= -197.67 ft
B44 N, Coordinates, X= 38.43 ft, Y= 684.89 ft, Z= -197.67 ft
B44 F, Coordinates, X= 41.43 ft, Y= 684.85 ft, Z= -200.67 ft

From B64 to B65, DY= -0.06 ft, DZ= -9.00 ft, L= 9.00 ft Run

POINT DATA:
B64, Coordinates, X= 41.43 ft, Y= 684.85 ft, Z= -201.17 ft

SUPPORT DATA:
B64, Guide, Support Id= B64 1, Connected to Ground, Comp.Wt = 0.000 lb, Stiffness= RIGID,
Gap-Down= 0.00 inch, Gap-Above= 1.28 inch, Gap-Left= 1.28 inch, Gap-Right= 1.28 inch, Friction= 0.80,
Gaps setting= Weightless

From B65 to B66, DY= -0.06 ft, DZ= -9.00 ft, L= 9.00 ft Run

POINT DATA:
B65, Coordinates, X= 41.43 ft, Y= 684.79 ft, Z= -210.17 ft

SUPPORT DATA:
B65, Guide, Support Id= B65 1, Connected to Ground, Comp.Wt = 0.000 lb, Stiffness= RIGID,
Gap-Down= 0.00 inch, Gap-Above= 0.31 inch, Gap-Left= 0.16 inch, Gap-Right= 0.16 inch, Friction= 0.80,
Gaps setting= Weightless

From B66 to B67, DY= -0.06 ft, DZ= -9.00 ft, L= 9.00 ft Run

POINT DATA:
B66, Coordinates, X= 41.43 ft, Y= 684.73 ft, Z= -219.17 ft

SUPPORT DATA:
B66, Guide, Support Id= B66 1, Connected to Ground, Comp.Wt = 0.000 lb, Stiffness= RIGID,
Gap-Down= 0.00 inch, Gap-Above= 0.31 inch, Gap-Left= 0.16 inch, Gap-Right= 0.16 inch, Friction= 0.80,
Gaps setting= Weightless

C O M P O N E N T D A T A L I S T I N G

From B67 to B68, DY= -0.06 ft, DZ= -9.00 ft, L= 9.00 ft Run

POINT DATA:
B67, Coordinates, X= 41.43 ft, Y= 684.67 ft, Z= -228.17 ft

SUPPORT DATA:
B67, Guide, Support Id= B67 1, Connected to Ground, Comp.Wt = 0.000 lb, Stiffness= RIGID,
Gap-Down= 0.00 inch, Gap-Above= 0.31 inch, Gap-Left= 0.16 inch, Gap-Right= 0.16 inch, Friction= 0.80,
Gaps setting= Weightless

From B68 to B69, DY= -0.06 ft, DZ= -9.00 ft, L= 9.00 ft Run

POINT DATA:
B68, Coordinates, X= 41.43 ft, Y= 684.61 ft, Z= -237.17 ft

SUPPORT DATA:
B68, Guide, Support Id= B68 1, Connected to Ground, Comp.Wt = 0.000 lb, Stiffness= RIGID,
Gap-Down= 0.00 inch, Gap-Above= 0.31 inch, Gap-Left= 0.16 inch, Gap-Right= 0.16 inch, Friction= 0.80,
Gaps setting= Weightless

From B69 to B70, DY= -0.06 ft, DZ= -9.00 ft, L= 9.00 ft Run

POINT DATA:
B69, Coordinates, X= 41.43 ft, Y= 684.55 ft, Z= -246.17 ft

SUPPORT DATA:
B69, Guide, Support Id= B69 1, Connected to Ground, Comp.Wt = 0.000 lb, Stiffness= RIGID,
Gap-Down= 0.00 inch, Gap-Above= 0.31 inch, Gap-Left= 0.16 inch, Gap-Right= 0.16 inch, Friction= 0.80,
Gaps setting= Weightless

From B70 to B71, DY= -0.06 ft, DZ= -9.00 ft, L= 9.00 ft Run

POINT DATA:
B70, Coordinates, X= 41.43 ft, Y= 684.49 ft, Z= -255.17 ft

SUPPORT DATA:
B70, Guide, Support Id= B70 1, Connected to Ground, Comp.Wt = 0.000 lb, Stiffness= RIGID,
Gap-Down= 0.00 inch, Gap-Above= 0.31 inch, Gap-Left= 0.16 inch, Gap-Right= 0.16 inch, Friction= 0.80,
Gaps setting= Weightless

From B71 to B72, DY= -0.05 ft, DZ= -9.00 ft, L= 9.00 ft Run

POINT DATA:
B71, Coordinates, X= 41.43 ft, Y= 684.43 ft, Z= -264.17 ft

SUPPORT DATA:
B71, Guide, Support Id= B71 1, Connected to Ground, Comp.Wt = 0.000 lb, Stiffness= RIGID,
Gap-Down= 0.00 inch, Gap-Above= 0.31 inch, Gap-Left= 0.16 inch, Gap-Right= 0.16 inch, Friction= 0.80,
Gaps setting= Weightless

C O M P O N E N T D A T A L I S T I N G

From B72 to B73, DX= 0 ft, DY= -0.03 ft, DZ= -4.83 ft, L= 4.83 ft Run

POINT DATA:
B72, Coordinates, X= 41.43 ft, Y= 684.38 ft, Z= -273.17 ft

SUPPORT DATA:
B72, Guide, Support Id= B72 1, Connected to Ground, Comp.Wt = 0.000 lb, Stiffness= RIGID,
Gap-Down= 0.00 inch, Gap-Above= 0.31 inch, Gap-Left= 0.16 inch, Gap-Right= 0.16 inch, Friction= 0.80,
Gaps setting= Weightless

From B73 to B74, DY= -0.06 ft, DZ= -9.00 ft, L= 9.00 ft Run

POINT DATA:
B73, Coordinates, X= 41.43 ft, Y= 684.35 ft, Z= -278.00 ft

SUPPORT DATA:
B73, Guide, Support Id= B73 1, Connected to Ground, Comp.Wt = 0.000 lb, Stiffness= RIGID,
Gap-Down= 0.00 inch, Gap-Above= 0.31 inch, Gap-Left= 0.16 inch, Gap-Right= 0.16 inch, Friction= 0.80,
Gaps setting= Weightless

From B74 to B56, DY= -0.02 ft, DZ= -3.50 ft, L= 3.50 ft Run

POINT DATA:
B74, Coordinates, X= 41.43 ft, Y= 684.29 ft, Z= -287.00 ft

SUPPORT DATA:
B74, Guide, Support Id= B74 1, Connected to Ground, Comp.Wt = 0.000 lb, Stiffness= RIGID,
Gap-Down= 0.00 inch, Gap-Above= 1.28 inch, Gap-Left= 1.28 inch, Gap-Right= 1.28 inch, Friction= 0.80,
Gaps setting= Weightless

From B56 to B75, DX= -2.95 ft, DY= -0.03 ft, L= 2.95 ft Bend

COMPONENT DATA (Bend, TIP= B56, Near= B56 N, Far= B56 F):
Elbow, Radius= 30.00 inch, Bend angle= 90.00 deg, End flanges= 0, Flex= Auto, SIFI= 1.00, SIFO= 1.00

POINT DATA:
B56, Coordinates, X= 41.43 ft, Y= 684.27 ft, Z= -290.50 ft
B56 N, Coordinates, X= 41.43 ft, Y= 684.28 ft, Z= -288.00 ft
B56 F, Coordinates, X= 38.93 ft, Y= 684.24 ft, Z= -290.50 ft

From B75 to B20, DX= -2.94 ft, DY= -0.05 ft, L= 2.94 ft Run

POINT DATA:
B75, Coordinates, X= 38.48 ft, Y= 684.24 ft, Z= -290.50 ft

SUPPORT DATA:
B75, Guide, Support Id= B75 1, Connected to Ground, Comp.Wt = 0.000 lb, Stiffness= RIGID,
Gap-Down= 0.00 inch, Gap-Above= 1.28 inch, Gap-Left= 1.28 inch, Gap-Right= 1.28 inch, Friction= 0.80,
Gaps setting= Weightless

C O M P O N E N T D A T A L I S T I N G

```
 ---------------------------------------------------------------------------
 From B20 to B77, DY= -0.06 ft, DZ= -3.17 ft, L= 3.17 ft                Bend

 COMPONENT DATA (Bend, TIP= B20, Near= B20 N, Far= B20 F):
   Elbow, Radius= 30.00 inch, Bend angle= 89.98 deg, End flanges= 0, Flex= Auto, SIFI= 1.00, SIFO= 1.00

 POINT DATA:
   B20, Coordinates, X= 35.54 ft, Y= 684.19 ft, Z= -290.50 ft
   B20 N, Coordinates, X= 38.04 ft, Y= 684.23 ft, Z= -290.50 ft
   B20 F, Coordinates, X= 35.54 ft, Y= 684.14 ft, Z= -293.00 ft

 ---------------------------------------------------------------------------
 From B77 to B21, DY= -0.06 ft, DZ= -3.16 ft, L= 3.16 ft                Run

 POINT DATA:
   B77, Coordinates, X= 35.54 ft, Y= 684.13 ft, Z= -293.67 ft

 SUPPORT DATA:
   B77, Guide, Support Id= B77  1, Connected to Ground, Comp.Wt = 0.000 lb, Stiffness= RIGID,
   Gap-Down= 0.00 inch, Gap-Above= 0.31 inch, Gap-Left= 0.16 inch, Gap-Right= 0.16 inch, Friction= 0.80,
   Gaps setting= Weightless

 ---------------------------------------------------------------------------
 From B21 to B59, DX= -4.85 ft, DY= -0.07 ft, L= 4.85 ft                Bend

 COMPONENT DATA (Bend, TIP= B21, Near= B21 N, Far= B21 F):
   Elbow, Radius= 30.00 inch, Bend angle= 89.98 deg, End flanges= 0, Flex= Auto, SIFI= 1.00, SIFO= 1.00

 POINT DATA:
   B21, Coordinates, X= 35.54 ft, Y= 684.07 ft, Z= -296.83 ft
   B21 N, Coordinates, X= 35.54 ft, Y= 684.12 ft, Z= -294.33 ft
   B21 F, Coordinates, X= 33.04 ft, Y= 684.03 ft, Z= -296.83 ft

 ---------------------------------------------------------------------------
 From B59 to B60, DX= -1.00 ft                                          Bend

 COMPONENT DATA (Bend, TIP= B59, Near= B59 N, Mid= B59 M, Far= B59 F):
   Elbow, Radius= 36.00 inch, Bend angle= 0.83 deg, Mid point at 50.00 percent, End flanges= 0, Flex= Auto,
   SIFI= 1.00, SIFO= 1.00

 POINT DATA:
   B59, Coordinates, X= 30.69 ft, Y= 684.00 ft, Z= -296.83 ft
   B59 N, Coordinates, X= 30.71 ft, Y= 684.00 ft, Z= -296.83 ft
   B59 M, Coordinates, X= 30.69 ft, Y= 684.00 ft, Z= -296.83 ft
   B59 F, Coordinates, X= 30.67 ft, Y= 684.00 ft, Z= -296.83 ft

 SUPPORT DATA:
   B59 F, Guide, Support Id= B59 F1, Connected to Ground, Comp.Wt = 0.000 lb, Stiffness= RIGID,
   Gap-Down= 0.00 inch, Gap-Above= 1.28 inch, Gap-Left= 1.28 inch, Gap-Right= 1.28 inch, Friction= 0.80,
   Gaps setting= Weightless

 ---------------------------------------------------------------------------
 From B60 to B61, DX= -1.00 ft                                          Run

 POINT DATA:
```

C O M P O N E N T D A T A L I S T I N G

B60, Coordinates, X= 29.69 ft, Y= 684.00 ft, Z= -296.83 ft

From B61 to B62, DX= -0.61 ft Run

POINT DATA:
B61, Coordinates, X= 28.69 ft, Y= 684.00 ft, Z= -296.83 ft

From B62 to B63, DX= -0.25 ft Run

POINT DATA:
B62, Coordinates, X= 28.08 ft, Y= 684.00 ft, Z= -296.83 ft
B63, Coordinates, X= 27.83 ft, Y= 684.00 ft, Z= -296.83 ft

SUPPORT DATA:
B62, Anchor, Connected to: Ground, KTX= Rigid, KTY= Rigid, KTZ= Rigid, KRX= Rigid, KRY= Rigid, KRZ= Rigid

---

*** SEGMENT C

From C00 to C01, DY= -0.19 ft Run

PIPE DATA:
Pipe Id= 2SCH40, Composition= Austenitic Stainless, Nom Size= 2.000, OD= 2.375 inch, Wall Thk= 0.154 inch,
Mill= 0.019 inch, Pipe Density= 501.00 lb/cu.ft, Pipe Unit Wgt= 3.74 lb/ft, Content Sp Gr= 1.600,
Content Unit Wgt= 2.33 lb/ft

POINT DATA:
C00, Coordinates, X= 0.00 ft, Y= 691.68 ft, Z= 1.00 ft

From C01 to C02, DY= -0.42 ft Run

POINT DATA:
C01, Coordinates, X= 0.00 ft, Y= 691.49 ft, Z= 1.00 ft

SUPPORT DATA:
C01, V-Stop, Support Id= C01 1, Connected to Ground, Comp.Wt = 0.000 lb, Gap-Below= 0.00 inch,
Gap-Above= 100.00 inch, Friction= 0.00, Gaps setting= Weightless
C01, Guide, Support Id= C01 2, Connected to Ground, Comp.Wt = 0.000 lb, Stiffness= RIGID, Gap -Z= 0.00 inch,
Gap +Z= 0.00 inch, Gap -X= 1.00 inch, Gap +X= 1.00 inch, Friction= 0.80, Gaps setting= Weightless

---

From C02 to C03, DX= 1.46 ft Bend

COMPONENT DATA (Bend, TIP= C02, Near= C02 N, Far= C02 F):
Long Elbow, Radius= 3.00 inch, Bend angle= 90.00 deg, End flanges= 0, Flex= Auto, SIFI= 1.73, SIFO= 1.44

POINT DATA:
C02, Coordinates, X= 0.00 ft, Y= 691.07 ft, Z= 1.00 ft
C02 N, Coordinates, X= 0.00 ft, Y= 691.32 ft, Z= 1.00 ft
C02 F, Coordinates, X= 0.25 ft, Y= 691.07 ft, Z= 1.00 ft

C O M P O N E N T D A T A L I S T I N G

```
 ------------------------------------------------------------------------------
 From C03 to C04, DX= 2.00 ft                                          Run

 POINT DATA:
   C03, Coordinates, X= 1.46 ft, Y= 691.07 ft, Z= 1.00 ft

 SUPPORT DATA:
   C03, Anchor, Connected to: Ground, KTX= Rigid, KTY= Rigid, KTZ= Rigid, KRX= Rigid, KRY= Rigid, KRZ= Rigid

 ------------------------------------------------------------------------------
 From C04 to C21, DX= 2.50 ft                                          Run

 POINT DATA:
   C04, Coordinates, X= 3.46 ft, Y= 691.07 ft, Z= 1.00 ft

 ------------------------------------------------------------------------------
 From C21 to C06, DX= 0.50 ft                                          Run

 POINT DATA:
   C21, Coordinates, X= 5.96 ft, Y= 691.07 ft, Z= 1.00 ft

 SUPPORT DATA:
   C21, Guide, Support Id= C21  2, Connected to Ground, Comp.Wt = 0.000 lb, Stiffness= RIGID,
   Gap-Down= 0.00 inch, Gap-Above= 0.83 inch, Gap-Left= 0.83 inch, Gap-Right= 0.83 inch, Friction= 0.80,
   Gaps setting= Weightless

 ------------------------------------------------------------------------------
 From C06 to C22, DX= 10.49 ft, DY= -0.85 ft, L= 10.52 ft              Bend

 COMPONENT DATA (Bend, TIP= C06, Near= C06 N, Far= C06 F):
   Elbow, Radius= 36.00 inch, Bend angle= 4.63 deg, End flanges= 0, Flex= Auto, SIFI= 1.00, SIFO= 1.00

 POINT DATA:
   C06, Coordinates, X= 6.46 ft, Y= 691.07 ft, Z= 1.00 ft
   C06 N, Coordinates, X= 6.34 ft, Y= 691.07 ft, Z= 1.00 ft
   C06 F, Coordinates, X= 6.58 ft, Y= 691.06 ft, Z= 1.00 ft

 ------------------------------------------------------------------------------
 From C22 to C23, DX= 6.99 ft, DY= -0.57 ft, L= 7.01 ft                Run

 POINT DATA:
   C22, Coordinates, X= 16.95 ft, Y= 690.22 ft, Z= 1.00 ft

 SUPPORT DATA:
   C22, Guide, Support Id= C22  2, Connected to Ground, Comp.Wt = 0.000 lb, Stiffness= RIGID,
   Gap-Down= 0.00 inch, Gap-Above= 0.06 inch, Gap-Left= 0.03 inch, Gap-Right= 0.03 inch, Friction= 0.80,
   Gaps setting= Weightless

 ------------------------------------------------------------------------------
 From C23 to C09, DX= 3.49 ft, DY= -0.28 ft, L= 3.50 ft                Run

 POINT DATA:
   C23, Coordinates, X= 23.94 ft, Y= 689.65 ft, Z= 1.00 ft

 SUPPORT DATA:
```

C O M P O N E N T D A T A L I S T I N G

C23, Guide, Support Id= C23 2, Connected to Ground, Comp.Wt = 0.000 lb, Stiffness= RIGID,
Gap-Down= 0.00 inch, Gap-Above= 0.83 inch, Gap-Left= 0.83 inch, Gap-Right= 0.83 inch, Friction= 0.80,
Gaps setting= Weightless

From C09 to C24, DY= -0.10 ft, DZ= -3.50 ft, L= 3.50 ft Bend

COMPONENT DATA (Bend, TIP= C09, Near= C09 N, Far= C09 F):
Elbow, Radius= 36.00 inch, Bend angle= 89.87 deg, End flanges= 0, Flex= Auto, SIFI= 1.00, SIFO= 1.00

POINT DATA:
C09, Coordinates, X= 27.43 ft, Y= 689.37 ft, Z= 1.00 ft
C09 N, Coordinates, X= 24.45 ft, Y= 689.61 ft, Z= 1.00 ft
C09 F, Coordinates, X= 27.43 ft, Y= 689.28 ft, Z= -1.99 ft

From C24 to C25, DY= -0.26 ft, DZ= -9.00 ft, L= 9.00 ft Run

POINT DATA:
C24, Coordinates, X= 27.43 ft, Y= 689.27 ft, Z= -2.50 ft

SUPPORT DATA:
C24, Guide, Support Id= C24 2, Connected to Ground, Comp.Wt = 0.000 lb, Stiffness= RIGID,
Gap-Down= 0.00 inch, Gap-Above= 0.83 inch, Gap-Left= 0.83 inch, Gap-Right= 0.83 inch, Friction= 0.80,
Gaps setting= Weightless

From C25 to C26, DY= -0.26 ft, DZ= -9.00 ft, L= 9.00 ft Run

POINT DATA:
C25, Coordinates, X= 27.43 ft, Y= 689.01 ft, Z= -11.50 ft

SUPPORT DATA:
C25, Guide, Support Id= C25 2, Connected to Ground, Comp.Wt = 0.000 lb, Stiffness= RIGID,
Gap-Down= 0.00 inch, Gap-Above= 0.06 inch, Gap-Left= 0.03 inch, Gap-Right= 0.03 inch, Friction= 0.80,
Gaps setting= Weightless

From C26 to C28, DY= -0.26 ft, DZ= -9.00 ft, L= 9.00 ft Run

POINT DATA:
C26, Coordinates, X= 27.43 ft, Y= 688.75 ft, Z= -20.50 ft

SUPPORT DATA:
C26, Guide, Support Id= C26 2, Connected to Ground, Comp.Wt = 0.000 lb, Stiffness= RIGID,
Gap-Down= 0.00 inch, Gap-Above= 0.06 inch, Gap-Left= 0.03 inch, Gap-Right= 0.03 inch, Friction= 0.80,
Gaps setting= Weightless

From C28 to C29, DY= -0.27 ft, DZ= -9.00 ft, L= 9.00 ft Run

POINT DATA:
C28, Coordinates, X= 27.43 ft, Y= 688.49 ft, Z= -29.50 ft

SUPPORT DATA:

C O M P O N E N T D A T A L I S T I N G

C28, Guide, Support Id= C28 2, Connected to Ground, Comp.Wt = 0.000 lb, Stiffness= RIGID,
Gap-Down= 0.00 inch, Gap-Above= 0.06 inch, Gap-Left= 0.03 inch, Gap-Right= 0.03 inch, Friction= 0.80,
Gaps setting= Weightless

From C29 to C31, DY= -0.31 ft, DZ= -10.50 ft, L= 10.50 ft Run

POINT DATA:
C29, Coordinates, X= 27.43 ft, Y= 688.22 ft, Z= -38.50 ft

SUPPORT DATA:
C29, Guide, Support Id= C29 2, Connected to Ground, Comp.Wt = 0.000 lb, Stiffness= RIGID,
Gap-Down= 0.00 inch, Gap-Above= 0.06 inch, Gap-Left= 0.03 inch, Gap-Right= 0.03 inch, Friction= 0.80,
Gaps setting= Weightless

From C31 to C16, DY= -0.10 ft, DZ= -3.50 ft, L= 3.50 ft Run

POINT DATA:
C31, Coordinates, X= 27.43 ft, Y= 687.91 ft, Z= -49.00 ft

SUPPORT DATA:
C31, Guide, Support Id= C31 2, Connected to Ground, Comp.Wt = 0.000 lb, Stiffness= RIGID,
Gap-Down= 0.00 inch, Gap-Above= 0.83 inch, Gap-Left= 0.83 inch, Gap-Right= 0.83 inch, Friction= 0.80,
Gaps setting= Weightless

From C16 to C32, DX= 3.50 ft, DY= -0.08 ft, L= 3.50 ft Bend

COMPONENT DATA (Bend, TIP= C16, Near= C16 N, Far= C16 F):
Elbow, Radius= 36.00 inch, Bend angle= 89.96 deg, End flanges= 0, Flex= Auto, SIFI= 1.00, SIFO= 1.00

POINT DATA:
C16, Coordinates, X= 27.43 ft, Y= 687.81 ft, Z= -52.50 ft
C16 N, Coordinates, X= 27.43 ft, Y= 687.90 ft, Z= -49.50 ft
C16 F, Coordinates, X= 30.43 ft, Y= 687.74 ft, Z= -52.50 ft

From C32 to C33, DX= 2.76 ft, DY= -0.07 ft, L= 2.76 ft Run

POINT DATA:
C32, Coordinates, X= 30.93 ft, Y= 687.73 ft, Z= -52.50 ft

SUPPORT DATA:
C32, Guide, Support Id= C32 2, Connected to Ground, Comp.Wt = 0.000 lb, Stiffness= RIGID,
Gap-Down= 0.00 inch, Gap-Above= 0.83 inch, Gap-Left= 0.83 inch, Gap-Right= 0.83 inch, Friction= 0.80,
Gaps setting= Weightless

From C33 to C19, DX= 3.50 ft, DY= -0.08 ft, L= 3.50 ft Run

POINT DATA:
C33, Coordinates, X= 33.69 ft, Y= 687.66 ft, Z= -52.50 ft

SUPPORT DATA:

C O M P O N E N T D A T A L I S T I N G

C33, Guide, Support Id= C33 2, Connected to Ground, Comp.Wt = 0.000 lb, Stiffness= RIGID,
Gap-Down= 0.00 inch, Gap-Above= 0.83 inch, Gap-Left= 0.83 inch, Gap-Right= 0.83 inch, Friction= 0.80,
Gaps setting= Weightless

From C19 to C34, DY= -0.10 ft, DZ= -3.50 ft, L= 3.50 ft Bend

COMPONENT DATA (Bend, TIP= C19, Near= C19 N, Far= C19 F):
Elbow, Radius= 36.00 inch, Bend angle= 89.96 deg, End flanges= 0, Flex= Auto, SIFI= 1.00, SIFO= 1.00

POINT DATA:
C19, Coordinates, X= 37.19 ft, Y= 687.58 ft, Z= -52.50 ft
C19 N, Coordinates, X= 34.19 ft, Y= 687.65 ft, Z= -52.50 ft
C19 F, Coordinates, X= 37.19 ft, Y= 687.49 ft, Z= -55.50 ft

From C34 to C35, DY= -0.26 ft, DZ= -9.00 ft, L= 9.00 ft Run

POINT DATA:
C34, Coordinates, X= 37.19 ft, Y= 687.48 ft, Z= -56.00 ft

SUPPORT DATA:
C34, Guide, Support Id= C34 2, Connected to Ground, Comp.Wt = 0.000 lb, Stiffness= RIGID,
Gap-Down= 0.00 inch, Gap-Above= 0.83 inch, Gap-Left= 0.83 inch, Gap-Right= 0.83 inch, Friction= 0.80,
Gaps setting= Weightless

From C35 to C36, DY= -0.26 ft, DZ= -9.00 ft, L= 9.00 ft Run

POINT DATA:
C35, Coordinates, X= 37.19 ft, Y= 687.22 ft, Z= -65.00 ft

SUPPORT DATA:
C35, Guide, Support Id= C35 2, Connected to Ground, Comp.Wt = 0.000 lb, Stiffness= RIGID,
Gap-Down= 0.00 inch, Gap-Above= 0.06 inch, Gap-Left= 0.03 inch, Gap-Right= 0.03 inch, Friction= 0.80,
Gaps setting= Weightless

From C36 to C37, DY= -0.26 ft, DZ= -9.00 ft, L= 9.00 ft Run

POINT DATA:
C36, Coordinates, X= 37.19 ft, Y= 686.96 ft, Z= -74.00 ft

SUPPORT DATA:
C36, Guide, Support Id= C36 2, Connected to Ground, Comp.Wt = 0.000 lb, Stiffness= RIGID,
Gap-Down= 0.00 inch, Gap-Above= 0.06 inch, Gap-Left= 0.03 inch, Gap-Right= 0.03 inch, Friction= 0.80,
Gaps setting= Weightless

From C37 to C38, DY= -0.26 ft, DZ= -9.00 ft, L= 9.00 ft Run

POINT DATA:
C37, Coordinates, X= 37.19 ft, Y= 686.70 ft, Z= -83.00 ft

SUPPORT DATA:

C O M P O N E N T D A T A L I S T I N G

C37, Guide, Support Id= C37 2, Connected to Ground, Comp.Wt = 0.000 lb, Stiffness= RIGID,
Gap-Down= 0.00 inch, Gap-Above= 0.06 inch, Gap-Left= 0.03 inch, Gap-Right= 0.03 inch, Friction= 0.80,
Gaps setting= Weightless

From C38 to C39, DY= -0.15 ft, DZ= -5.01 ft, L= 5.01 ft Run

POINT DATA:
C38, Coordinates, X= 37.19 ft, Y= 686.44 ft, Z= -92.00 ft

SUPPORT DATA:
C38, Guide, Support Id= C38 2, Connected to Ground, Comp.Wt = 0.000 lb, Stiffness= RIGID,
Gap-Down= 0.00 inch, Gap-Above= 0.06 inch, Gap-Left= 0.03 inch, Gap-Right= 0.03 inch, Friction= 0.80,
Gaps setting= Weightless

From C39 to C40, DY= -0.27 ft, DZ= -8.99 ft, L= 8.99 ft Run

POINT DATA:
C39, Coordinates, X= 37.19 ft, Y= 686.29 ft, Z= -97.01 ft

SUPPORT DATA:
C39, Guide, Support Id= C39 2, Connected to Ground, Comp.Wt = 0.000 lb, Stiffness= RIGID,
Gap-Down= 0.00 inch, Gap-Above= 0.06 inch, Gap-Left= 0.03 inch, Gap-Right= 0.03 inch, Friction= 0.80,
Gaps setting= Weightless

From C40 to C27, DY= -0.10 ft, DZ= -3.50 ft, L= 3.50 ft Run

POINT DATA:
C40, Coordinates, X= 37.19 ft, Y= 686.02 ft, Z= -106.00 ft

SUPPORT DATA:
C40, Guide, Support Id= C40 2, Connected to Ground, Comp.Wt = 0.000 lb, Stiffness= RIGID,
Gap-Down= 0.00 inch, Gap-Above= 0.83 inch, Gap-Left= 0.83 inch, Gap-Right= 0.83 inch, Friction= 0.80,
Gaps setting= Weightless

From C27 to C42, DX= -3.50 ft, DY= -0.09 ft, L= 3.50 ft Bend

COMPONENT DATA (Bend, TIP= C27, Near= C27 N, Far= C27 F):
Elbow, Radius= 36.00 inch, Bend angle= 89.96 deg, End flanges= 0, Flex= Auto, SIFI= 1.00, SIFO= 1.00

POINT DATA:
C27, Coordinates, X= 37.19 ft, Y= 685.92 ft, Z= -109.50 ft
C27 N, Coordinates, X= 37.19 ft, Y= 686.01 ft, Z= -106.50 ft
C27 F, Coordinates, X= 34.19 ft, Y= 685.84 ft, Z= -109.50 ft

From C42 to C43, DX= -4.00 ft, DY= -0.10 ft, L= 4.00 ft Run

POINT DATA:
C42, Coordinates, X= 33.69 ft, Y= 685.83 ft, Z= -109.50 ft

SUPPORT DATA:

C O M P O N E N T D A T A L I S T I N G

C42, Guide, Support Id= C42 2, Connected to Ground, Comp.Wt = 0.000 lb, Stiffness= RIGID,
Gap-Down= 0.00 inch, Gap-Above= 0.83 inch, Gap-Left= 0.83 inch, Gap-Right= 0.83 inch, Friction= 0.80,
Gaps setting= Weightless

From C43 to C30, DX= -3.50 ft, DY= -0.09 ft, L= 3.50 ft Run

POINT DATA:
C43, Coordinates, X= 29.69 ft, Y= 685.73 ft, Z= -109.50 ft

SUPPORT DATA:
C43, Guide, Support Id= C43 2, Connected to Ground, Comp.Wt = 0.000 lb, Stiffness= RIGID,
Gap-Down= 0.00 inch, Gap-Above= 0.83 inch, Gap-Left= 0.83 inch, Gap-Right= 0.83 inch, Friction= 0.80,
Gaps setting= Weightless

From C30 to C45, DY= -0.03 ft, DZ= -3.50 ft, L= 3.50 ft Bend

COMPONENT DATA (Bend, TIP= C30, Near= C30 N, Far= C30 F):
Elbow, Radius= 36.00 inch, Bend angle= 89.99 deg, End flanges= 0, Flex= Auto, SIFI= 1.00, SIFO= 1.00

POINT DATA:
C30, Coordinates, X= 26.19 ft, Y= 685.64 ft, Z= -109.50 ft
C30 N, Coordinates, X= 29.19 ft, Y= 685.72 ft, Z= -109.50 ft
C30 F, Coordinates, X= 26.19 ft, Y= 685.61 ft, Z= -112.50 ft

From C45 to C46, DY= -0.07 ft, DZ= -9.00 ft, L= 9.00 ft Run

POINT DATA:
C45, Coordinates, X= 26.19 ft, Y= 685.61 ft, Z= -113.00 ft

SUPPORT DATA:
C45, Guide, Support Id= C45 2, Connected to Ground, Comp.Wt = 0.000 lb, Stiffness= RIGID,
Gap-Down= 0.00 inch, Gap-Above= 0.83 inch, Gap-Left= 0.83 inch, Gap-Right= 0.83 inch, Friction= 0.80,
Gaps setting= Weightless

From C46 to C47, DY= -0.07 ft, DZ= -9.00 ft, L= 9.00 ft Run

POINT DATA:
C46, Coordinates, X= 26.19 ft, Y= 685.54 ft, Z= -122.00 ft

SUPPORT DATA:
C46, Guide, Support Id= C46 2, Connected to Ground, Comp.Wt = 0.000 lb, Stiffness= RIGID,
Gap-Down= 0.00 inch, Gap-Above= 0.06 inch, Gap-Left= 0.03 inch, Gap-Right= 0.03 inch, Friction= 0.80,
Gaps setting= Weightless

From C47 to C48, DY= -0.07 ft, DZ= -9.00 ft, L= 9.00 ft Run

POINT DATA:
C47, Coordinates, X= 26.19 ft, Y= 685.47 ft, Z= -131.00 ft

SUPPORT DATA:

C O M P O N E N T D A T A L I S T I N G

C47, Guide, Support Id= C47 2, Connected to Ground, Comp.Wt = 0.000 lb, Stiffness= RIGID,
Gap-Down= 0.00 inch, Gap-Above= 0.06 inch, Gap-Left= 0.03 inch, Gap-Right= 0.03 inch, Friction= 0.80,
Gaps setting= Weightless

From C48 to C49, DY= -0.07 ft, DZ= -9.00 ft, L= 9.00 ft Run

POINT DATA:
C48, Coordinates, X= 26.19 ft, Y= 685.40 ft, Z= -140.00 ft

SUPPORT DATA:
C48, Guide, Support Id= C48 2, Connected to Ground, Comp.Wt = 0.000 lb, Stiffness= RIGID,
Gap-Down= 0.00 inch, Gap-Above= 0.06 inch, Gap-Left= 0.03 inch, Gap-Right= 0.03 inch, Friction= 0.80,
Gaps setting= Weightless

From C49 to C50, DY= -0.07 ft, DZ= -9.00 ft, L= 9.00 ft Run

POINT DATA:
C49, Coordinates, X= 26.19 ft, Y= 685.33 ft, Z= -149.00 ft

SUPPORT DATA:
C49, Guide, Support Id= C49 2, Connected to Ground, Comp.Wt = 0.000 lb, Stiffness= RIGID,
Gap-Down= 0.00 inch, Gap-Above= 0.06 inch, Gap-Left= 0.03 inch, Gap-Right= 0.03 inch, Friction= 0.80,
Gaps setting= Weightless

From C50 to C51, DY= -0.07 ft, DZ= -9.00 ft, L= 9.00 ft Run

POINT DATA:
C50, Coordinates, X= 26.19 ft, Y= 685.26 ft, Z= -158.00 ft

SUPPORT DATA:
C50, Guide, Support Id= C50 2, Connected to Ground, Comp.Wt = 0.000 lb, Stiffness= RIGID,
Gap-Down= 0.00 inch, Gap-Above= 0.06 inch, Gap-Left= 0.03 inch, Gap-Right= 0.03 inch, Friction= 0.80,
Gaps setting= Weightless

From C51 to C52, DY= -0.08 ft, DZ= -9.00 ft, L= 9.00 ft Run

POINT DATA:
C51, Coordinates, X= 26.19 ft, Y= 685.19 ft, Z= -167.00 ft

SUPPORT DATA:
C51, Guide, Support Id= C51 2, Connected to Ground, Comp.Wt = 0.000 lb, Stiffness= RIGID,
Gap-Down= 0.00 inch, Gap-Above= 0.06 inch, Gap-Left= 0.03 inch, Gap-Right= 0.03 inch, Friction= 0.80,
Gaps setting= Weightless

From C52 to C53, DY= -0.07 ft, DZ= -9.00 ft, L= 9.00 ft Run

POINT DATA:
C52, Coordinates, X= 26.19 ft, Y= 685.11 ft, Z= -176.00 ft

SUPPORT DATA:

C O M P O N E N T D A T A L I S T I N G

C52, Guide, Support Id= C52 2, Connected to Ground, Comp.Wt = 0.000 lb, Stiffness= RIGID,
Gap-Down= 0.00 inch, Gap-Above= 0.06 inch, Gap-Left= 0.03 inch, Gap-Right= 0.03 inch, Friction= 0.80,
Gaps setting= Weightless

From C53 to C55, DX= 0 ft, DY= -0.09 ft, DZ= -10.50 ft, L= 10.50 ft Run

POINT DATA:
C53, Coordinates, X= 26.19 ft, Y= 685.04 ft, Z= -185.00 ft

SUPPORT DATA:
C53, Guide, Support Id= C53 2, Connected to Ground, Comp.Wt = 0.000 lb, Stiffness= RIGID,
Gap-Down= 0.00 inch, Gap-Above= 0.06 inch, Gap-Left= 0.03 inch, Gap-Right= 0.03 inch, Friction= 0.80,
Gaps setting= Weightless

From C55 to C41, DY= -0.03 ft, DZ= -3.50 ft, L= 3.50 ft Run

POINT DATA:
C55, Coordinates, X= 26.19 ft, Y= 684.95 ft, Z= -195.50 ft

SUPPORT DATA:
C55, Guide, Support Id= C55 2, Connected to Ground, Comp.Wt = 0.000 lb, Stiffness= RIGID,
Gap-Down= 0.00 inch, Gap-Above= 0.83 inch, Gap-Left= 0.83 inch, Gap-Right= 0.83 inch, Friction= 0.80,
Gaps setting= Weightless

From C41 to C56, DX= 3.50 ft, DY= -0.03 ft, L= 3.50 ft Bend

COMPONENT DATA (Bend, TIP= C41, Near= C41 N, Far= C41 F):
Elbow, Radius= 36.00 inch, Bend angle= 90.00 deg, End flanges= 0, Flex= Auto, SIFI= 1.00, SIFO= 1.00

POINT DATA:
C41, Coordinates, X= 26.19 ft, Y= 684.92 ft, Z= -199.00 ft
C41 N, Coordinates, X= 26.19 ft, Y= 684.95 ft, Z= -196.00 ft
C41 F, Coordinates, X= 29.19 ft, Y= 684.89 ft, Z= -199.00 ft

From C56 to C57, DX= 6.91 ft, DY= -0.05 ft, L= 6.91 ft Run

POINT DATA:
C56, Coordinates, X= 29.69 ft, Y= 684.89 ft, Z= -199.00 ft

SUPPORT DATA:
C56, Guide, Support Id= C56 2, Connected to Ground, Comp.Wt = 0.000 lb, Stiffness= RIGID,
Gap-Down= 0.00 inch, Gap-Above= 0.83 inch, Gap-Left= 0.83 inch, Gap-Right= 0.83 inch, Friction= 0.80,
Gaps setting= Weightless

From C57 to C44, DX= 3.50 ft, DY= -0.02 ft, L= 3.50 ft Run

POINT DATA:
C57, Coordinates, X= 36.60 ft, Y= 684.84 ft, Z= -199.00 ft

SUPPORT DATA:

C O M P O N E N T D A T A L I S T I N G

C57, Guide, Support Id= C57 2, Connected to Ground, Comp.Wt = 0.000 lb, Stiffness= RIGID,
Gap-Down= 0.00 inch, Gap-Above= 0.83 inch, Gap-Left= 0.83 inch, Gap-Right= 0.83 inch, Friction= 0.80,
Gaps setting= Weightless

From C44 to C58, DY= -0.03 ft, DZ= -3.50 ft, L= 3.50 ft Bend

COMPONENT DATA (Bend, TIP= C44, Near= C44 N, Far= C44 F):
Elbow, Radius= 36.00 inch, Bend angle= 90.00 deg, End flanges= 0, Flex= Auto, SIFI= 1.00, SIFO= 1.00

POINT DATA:
C44, Coordinates, X= 40.10 ft, Y= 684.82 ft, Z= -199.00 ft
C44 N, Coordinates, X= 37.10 ft, Y= 684.84 ft, Z= -199.00 ft
C44 F, Coordinates, X= 40.10 ft, Y= 684.79 ft, Z= -202.00 ft

From C58 to C59, DY= -0.07 ft, DZ= -9.00 ft, L= 9.00 ft Run

POINT DATA:
C58, Coordinates, X= 40.10 ft, Y= 684.79 ft, Z= -202.50 ft

SUPPORT DATA:
C58, Guide, Support Id= C58 2, Connected to Ground, Comp.Wt = 0.000 lb, Stiffness= RIGID,
Gap-Down= 0.00 inch, Gap-Above= 0.83 inch, Gap-Left= 0.83 inch, Gap-Right= 0.83 inch, Friction= 0.80,
Gaps setting= Weightless

From C59 to C60, DY= -0.07 ft, DZ= -9.00 ft, L= 9.00 ft Run

POINT DATA:
C59, Coordinates, X= 40.10 ft, Y= 684.72 ft, Z= -211.50 ft

SUPPORT DATA:
C59, Guide, Support Id= C59 2, Connected to Ground, Comp.Wt = 0.000 lb, Stiffness= RIGID,
Gap-Down= 0.00 inch, Gap-Above= 0.06 inch, Gap-Left= 0.03 inch, Gap-Right= 0.03 inch, Friction= 0.80,
Gaps setting= Weightless

From C60 to C61, DY= -0.07 ft, DZ= -9.00 ft, L= 9.00 ft Run

POINT DATA:
C60, Coordinates, X= 40.10 ft, Y= 684.65 ft, Z= -220.50 ft

SUPPORT DATA:
C60, Guide, Support Id= C60 2, Connected to Ground, Comp.Wt = 0.000 lb, Stiffness= RIGID,
Gap-Down= 0.00 inch, Gap-Above= 0.06 inch, Gap-Left= 0.03 inch, Gap-Right= 0.03 inch, Friction= 0.80,
Gaps setting= Weightless

From C61 to C63, DY= -0.06 ft, DZ= -9.00 ft, L= 9.00 ft Run

POINT DATA:
C61, Coordinates, X= 40.10 ft, Y= 684.58 ft, Z= -229.50 ft

SUPPORT DATA:

C O M P O N E N T D A T A L I S T I N G

C61, Guide, Support Id= C61 1, Connected to Ground, Comp.Wt = 0.000 lb, Stiffness= RIGID,
Gap-Down= 0.00 inch, Gap-Above= 0.06 inch, Gap-Left= 0.03 inch, Gap-Right= 0.03 inch, Friction= 0.80,
Gaps setting= Weightless

From C63 to C64, DY= -0.07 ft, DZ= -9.00 ft, L= 9.00 ft Run

POINT DATA:
C63, Coordinates, X= 40.10 ft, Y= 684.52 ft, Z= -238.50 ft

SUPPORT DATA:
C63, Guide, Support Id= C63 1, Connected to Ground, Comp.Wt = 0.000 lb, Stiffness= RIGID,
Gap-Down= 0.00 inch, Gap-Above= 0.06 inch, Gap-Left= 0.03 inch, Gap-Right= 0.03 inch, Friction= 0.80,
Gaps setting= Weightless

From C64 to C65, DY= -0.06 ft, DZ= -9.00 ft, L= 9.00 ft Run

POINT DATA:
C64, Coordinates, X= 40.10 ft, Y= 684.45 ft, Z= -247.50 ft

SUPPORT DATA:
C64, Guide, Support Id= C64 2, Connected to Ground, Comp.Wt = 0.000 lb, Stiffness= RIGID,
Gap-Down= 0.00 inch, Gap-Above= 0.06 inch, Gap-Left= 0.03 inch, Gap-Right= 0.03 inch, Friction= 0.80,
Gaps setting= Weightless

From C65 to C72, DY= -0.07 ft, DZ= -9.00 ft, L= 9.00 ft Run

POINT DATA:
C65, Coordinates, X= 40.10 ft, Y= 684.39 ft, Z= -256.50 ft

SUPPORT DATA:
C65, Guide, Support Id= C65 1, Connected to Ground, Comp.Wt = 0.000 lb, Stiffness= RIGID,
Gap-Down= 0.00 inch, Gap-Above= 0.06 inch, Gap-Left= 0.03 inch, Gap-Right= 0.03 inch, Friction= 0.80,
Gaps setting= Weightless

From C72 to C73, DX= 0 ft, DY= -0.08 ft, DZ= -10.74 ft, L= 10.74 ft Run

POINT DATA:
C72, Coordinates, X= 40.10 ft, Y= 684.32 ft, Z= -265.50 ft

SUPPORT DATA:
C72, Guide, Support Id= C72 1, Connected to Ground, Comp.Wt = 0.000 lb, Stiffness= RIGID,
Gap-Down= 0.00 inch, Gap-Above= 0.06 inch, Gap-Left= 0.03 inch, Gap-Right= 0.03 inch, Friction= 0.80,
Gaps setting= Weightless

From C73 to C54, DY= -0.02 ft, DZ= -3.50 ft, L= 3.50 ft Run

POINT DATA:
C73, Coordinates, X= 40.10 ft, Y= 684.24 ft, Z= -276.24 ft

SUPPORT DATA:

C O M P O N E N T D A T A L I S T I N G

C73, Guide, Support Id= C73 1, Connected to Ground, Comp.Wt = 0.000 lb, Stiffness= RIGID,
Gap-Down= 0.00 inch, Gap-Above= 0.83 inch, Gap-Left= 0.83 inch, Gap-Right= 0.83 inch, Friction= 0.80,
Gaps setting= Weightless

From C54 to C74, DX= -3.50 ft, DY= -0.03 ft, L= 3.50 ft Bend

COMPONENT DATA (Bend, TIP= C54, Near= C54 N, Far= C54 F):
Elbow, Radius= 36.00 inch, Bend angle= 90.00 deg, End flanges= 0, Flex= Auto, SIFI= 1.00, SIFO= 1.00

POINT DATA:
C54, Coordinates, X= 40.10 ft, Y= 684.22 ft, Z= -279.74 ft
C54 N, Coordinates, X= 40.10 ft, Y= 684.24 ft, Z= -276.74 ft
C54 F, Coordinates, X= 37.10 ft, Y= 684.19 ft, Z= -279.74 ft

From C74 to C75, DX= -9.00 ft, DY= -0.07 ft, L= 9.00 ft Run

POINT DATA:
C74, Coordinates, X= 36.60 ft, Y= 684.19 ft, Z= -279.74 ft

SUPPORT DATA:
C74, Guide, Support Id= C74 1, Connected to Ground, Comp.Wt = 0.000 lb, Stiffness= RIGID,
Gap-Down= 0.00 inch, Gap-Above= 0.83 inch, Gap-Left= 0.83 inch, Gap-Right= 0.83 inch, Friction= 0.80,
Gaps setting= Weightless

From C75 to C76, DX= -9.00 ft, DY= -0.07 ft, L= 9.00 ft Run

POINT DATA:
C75, Coordinates, X= 27.60 ft, Y= 684.12 ft, Z= -279.74 ft

SUPPORT DATA:
C75, Guide, Support Id= C75 1, Connected to Ground, Comp.Wt = 0.000 lb, Stiffness= RIGID,
Gap-Down= 0.00 inch, Gap-Above= 0.06 inch, Gap-Left= 0.03 inch, Gap-Right= 0.03 inch, Friction= 0.80,
Gaps setting= Weightless

From C76 to C77, DX= -9.00 ft, DY= -0.06 ft, L= 9.00 ft Run

POINT DATA:
C76, Coordinates, X= 18.60 ft, Y= 684.05 ft, Z= -279.74 ft

SUPPORT DATA:
C76, Guide, Support Id= C76 1, Connected to Ground, Comp.Wt = 0.000 lb, Stiffness= RIGID,
Gap-Down= 0.00 inch, Gap-Above= 0.06 inch, Gap-Left= 0.03 inch, Gap-Right= 0.03 inch, Friction= 0.80,
Gaps setting= Weightless

From C77 to C78, DX= -9.00 ft, DY= -0.07 ft, L= 9.00 ft Run

POINT DATA:
C77, Coordinates, X= 9.60 ft, Y= 683.99 ft, Z= -279.74 ft

SUPPORT DATA:

C O M P O N E N T D A T A L I S T I N G

C77, Guide, Support Id= C77 1, Connected to Ground, Comp.Wt = 0.000 lb, Stiffness= RIGID,
Gap-Down= 0.00 inch, Gap-Above= 0.06 inch, Gap-Left= 0.03 inch, Gap-Right= 0.03 inch, Friction= 0.80,
Gaps setting= Weightless

From C78 to C79, DX= -8.78 ft, DY= -0.06 ft, L= 8.78 ft Run

POINT DATA:
C78, Coordinates, X= 0.60 ft, Y= 683.92 ft, Z= -279.74 ft

SUPPORT DATA:
C78, Guide, Support Id= C78 1, Connected to Ground, Comp.Wt = 0.000 lb, Stiffness= RIGID,
Gap-Down= 0.00 inch, Gap-Above= 0.06 inch, Gap-Left= 0.03 inch, Gap-Right= 0.03 inch, Friction= 0.80,
Gaps setting= Weightless

From C79 to C80, DX= -9.00 ft, DY= -0.06 ft, L= 9.00 ft Run

POINT DATA:
C79, Coordinates, X= -8.18 ft, Y= 683.86 ft, Z= -279.74 ft

SUPPORT DATA:
C79, Guide, Support Id= C79 1, Connected to Ground, Comp.Wt = 0.000 lb, Stiffness= RIGID,
Gap-Down= 0.00 inch, Gap-Above= 0.06 inch, Gap-Left= 0.03 inch, Gap-Right= 0.03 inch, Friction= 0.80,
Gaps setting= Weightless

From C80 to C62, DX= -3.50 ft, DY= -0.03 ft, L= 3.50 ft Run

POINT DATA:
C80, Coordinates, X= -17.18 ft, Y= 683.80 ft, Z= -279.74 ft

SUPPORT DATA:
C80, Guide, Support Id= C80 1, Connected to Ground, Comp.Wt = 0.000 lb, Stiffness= RIGID,
Gap-Down= 0.00 inch, Gap-Above= 0.83 inch, Gap-Left= 0.83 inch, Gap-Right= 0.83 inch, Friction= 0.80,
Gaps setting= Weightless

From C62 to C82, DY= -0.03 ft, DZ= -3.50 ft, L= 3.50 ft Bend

COMPONENT DATA (Bend, TIP= C62, Near= C62 N, Far= C62 F):
Elbow, Radius= 36.00 inch, Bend angle= 90.00 deg, End flanges= 0, Flex= Auto, SIFI= 1.00, SIFO= 1.00

POINT DATA:
C62, Coordinates, X= -20.68 ft, Y= 683.77 ft, Z= -279.74 ft
C62 N, Coordinates, X= -17.68 ft, Y= 683.80 ft, Z= -279.74 ft
C62 F, Coordinates, X= -20.68 ft, Y= 683.74 ft, Z= -282.74 ft

---

From C82 to C81, DY= -0.05 ft, DZ= -5.84 ft, L= 5.84 ft Run

POINT DATA:
C82, Coordinates, X= -20.68 ft, Y= 683.74 ft, Z= -283.24 ft

SUPPORT DATA:

C O M P O N E N T D A T A L I S T I N G

C82, Guide, Support Id= C82 1, Connected to Ground, Comp.Wt = 0.000 lb, Stiffness= RIGID,
Gap-Down= 0.00 inch, Gap-Above= 0.83 inch, Gap-Left= 0.83 inch, Gap-Right= 0.83 inch, Friction= 0.80,
Gaps setting= Weightless

From C81 to C83, DY= -0.04 ft, DZ= -5.83 ft, L= 5.83 ft Run

POINT DATA:
C81, Coordinates, X= -20.68 ft, Y= 683.69 ft, Z= -289.08 ft

SUPPORT DATA:
C81, Guide, Support Id= C81 1, Connected to Ground, Comp.Wt = 0.000 lb, Stiffness= RIGID,
Gap-Down= 0.00 inch, Gap-Above= 0.06 inch, Gap-Left= 0.03 inch, Gap-Right= 0.03 inch, Friction= 0.80,
Gaps setting= Weightless

From C83 to C66, DY= -0.03 ft, DZ= -3.50 ft, L= 3.50 ft Run

POINT DATA:
C83, Coordinates, X= -20.68 ft, Y= 683.65 ft, Z= -294.91 ft

SUPPORT DATA:
C83, Guide, Support Id= C83 1, Connected to Ground, Comp.Wt = 0.000 lb, Stiffness= RIGID,
Gap-Down= 0.00 inch, Gap-Above= 0.83 inch, Gap-Left= 0.83 inch, Gap-Right= 0.83 inch, Friction= 0.80,
Gaps setting= Weightless

From C66 to C84, DX= 3.50 ft, DY= -0.07 ft, L= 3.50 ft Bend

COMPONENT DATA (Bend, TIP= C66, Near= C66 N, Far= C66 F):
Elbow, Radius= 36.00 inch, Bend angle= 89.99 deg, End flanges= 0, Flex= Auto, SIFI= 1.00, SIFO= 1.00

POINT DATA:
C66, Coordinates, X= -20.68 ft, Y= 683.62 ft, Z= -298.41 ft
C66 N, Coordinates, X= -20.68 ft, Y= 683.65 ft, Z= -295.41 ft
C66 F, Coordinates, X= -17.68 ft, Y= 683.56 ft, Z= -298.41 ft

---

From C84 to C67, DX= 1.80 ft, DY= -0.03 ft, L= 1.80 ft Run

POINT DATA:
C84, Coordinates, X= -17.18 ft, Y= 683.55 ft, Z= -298.41 ft

SUPPORT DATA:
C84, Guide, Support Id= C84 1, Connected to Ground, Comp.Wt = 0.000 lb, Stiffness= RIGID,
Gap-Down= 0.00 inch, Gap-Above= 0.83 inch, Gap-Left= 0.83 inch, Gap-Right= 0.83 inch, Friction= 0.80,
Gaps setting= Weightless

From C67 to C68, DX= 1.00 ft Bend

COMPONENT DATA (Bend, TIP= C67, Near= C67 N, Mid= C67 M, Far= C67 F):
Elbow, Radius= 36.00 inch, Bend angle= 0.96 deg, Mid point at 50.00 percent, End flanges= 0, Flex= Auto,
SIFI= 1.00, SIFO= 1.00

C O M P O N E N T D A T A L I S T I N G

POINT DATA:
C67, Coordinates, X= -15.38 ft, Y= 683.52 ft, Z= -298.41 ft
C67 N, Coordinates, X= -15.40 ft, Y= 683.52 ft, Z= -298.41 ft
C67 M, Coordinates, X= -15.38 ft, Y= 683.52 ft, Z= -298.41 ft
C67 F, Coordinates, X= -15.36 ft, Y= 683.52 ft, Z= -298.41 ft

---

From C68 to C69, DX= 1.00 ft Run

POINT DATA:
C68, Coordinates, X= -14.38 ft, Y= 683.52 ft, Z= -298.41 ft

From C69 to C70, DX= 0.55 ft Run

POINT DATA:
C69, Coordinates, X= -13.38 ft, Y= 683.52 ft, Z= -298.41 ft

From C70 to C71, DX= 0.19 ft Run

POINT DATA:
C70, Coordinates, X= -12.83 ft, Y= 683.52 ft, Z= -298.41 ft
C71, Coordinates, X= -12.64 ft, Y= 683.52 ft, Z= -298.41 ft

SUPPORT DATA:
C70, Anchor, Connected to: Ground, KTX= Rigid, KTY= Rigid, KTZ= Rigid, KRX= Rigid, KRY= Rigid, KRZ= Rigid

---

*** SEGMENT D

From D00 to D01, DZ= -0.19 ft Run

PIPE DATA:
Pipe Id= 2SCH40, Composition= Austenitic Stainless, Pipe Density= 501.00 lb/cu.ft, Pipe Unit Wgt= 3.74 lb/ft,
Content Sp Gr= 1.600, Content Unit Wgt= 2.33 lb/ft

POINT DATA:
D00, Coordinates, X= -10.49 ft, Y= 683.52 ft, Z= -303.06 ft

From D01 to D02, DZ= -0.55 ft Run

POINT DATA:
D01, Coordinates, X= -10.49 ft, Y= 683.52 ft, Z= -303.25 ft

SUPPORT DATA:
D01, Anchor, Connected to: Ground, KTX= Rigid, KTY= Rigid, KTZ= Rigid, KRX= Rigid, KRY= Rigid, KRZ= Rigid

---

From D02 to D03, DZ= -1.00 ft Run

POINT DATA:

C O M P O N E N T D A T A L I S T I N G

D02, Coordinates, X= -10.49 ft, Y= 683.52 ft, Z= -303.80 ft

From D03 to D04, DZ= -3.00 ft Run

POINT DATA:
D03, Coordinates, X= -10.49 ft, Y= 683.52 ft, Z= -304.80 ft

From D04 to D13, DY= 0.09 ft, DZ= -7.50 ft, L= 7.50 ft Bend

COMPONENT DATA (Bend, TIP= D04, Near= D04 N, Mid= D04 M, Far= D04 F):
Elbow, Radius= 36.00 inch, Bend angle= 0.69 deg, Mid point at 50.00 percent, End flanges= 0, Flex= Auto,
SIFI= 1.00, SIFO= 1.00

POINT DATA:
D04, Coordinates, X= -10.49 ft, Y= 683.52 ft, Z= -307.80 ft
D04 N, Coordinates, X= -10.49 ft, Y= 683.52 ft, Z= -307.78 ft
D04 M, Coordinates, X= -10.49 ft, Y= 683.52 ft, Z= -307.80 ft
D04 F, Coordinates, X= -10.49 ft, Y= 683.52 ft, Z= -307.82 ft

SUPPORT DATA:
D04 M, Guide, Support Id= D04 M1, Connected to Ground, Comp.Wt = 0.000 lb, Stiffness= RIGID,
Gap -Z= 0.00 inch, Gap +Z= 0.83 inch, Gap -X= 0.83 inch, Gap +X= 0.83 inch, Friction= 0.80,
Gaps setting= Weightless

From D13 to D14, DY= 0.10 ft, DZ= -7.53 ft, L= 7.53 ft Run

POINT DATA:
D13, Coordinates, X= -10.49 ft, Y= 683.61 ft, Z= -315.30 ft

SUPPORT DATA:
D13, Guide, Support Id= D13 1, Connected to Ground, Comp.Wt = 0.000 lb, Stiffness= RIGID,
Gap-Down= 0.00 inch, Gap-Above= 0.06 inch, Gap-Left= 0.03 inch, Gap-Right= 0.03 inch, Friction= 0.80,
Gaps setting= Weightless

From D14 to D08, DY= 0.04 ft, DZ= -3.50 ft, L= 3.50 ft Run

POINT DATA:
D14, Coordinates, X= -10.49 ft, Y= 683.71 ft, Z= -322.83 ft

SUPPORT DATA:
D14, Guide, Support Id= D14 2, Connected to Ground, Comp.Wt = 0.000 lb, Stiffness= RIGID,
Gap-Down= 0.00 inch, Gap-Above= 0.83 inch, Gap-Left= 0.83 inch, Gap-Right= 0.83 inch, Friction= 0.80,
Gaps setting= Weightless

From D08 to D15, DX= 3.50 ft, DY= 0.03 ft, L= 3.50 ft Bend

COMPONENT DATA (Bend, TIP= D08, Near= D08 N, Far= D08 F):
Elbow, Radius= 36.00 inch, Bend angle= 89.99 deg, End flanges= 0, Flex= Auto, SIFI= 1.00, SIFO= 1.00

POINT DATA:

C O M P O N E N T D A T A L I S T I N G

D08, Coordinates, X= -10.49 ft, Y= 683.75 ft, Z= -326.33 ft
D08 N, Coordinates, X= -10.49 ft, Y= 683.72 ft, Z= -323.33 ft
D08 F, Coordinates, X= -7.49 ft, Y= 683.78 ft, Z= -326.33 ft

From D15 to D18, DX= 5.65 ft, DY= 0.05 ft, L= 5.65 ft Run

POINT DATA:
D15, Coordinates, X= -6.99 ft, Y= 683.78 ft, Z= -326.33 ft

SUPPORT DATA:
D15, Guide, Support Id= D15 2, Connected to Ground, Comp.Wt = 0.000 lb, Stiffness= RIGID,
Gap-Down= 0.00 inch, Gap-Above= 0.83 inch, Gap-Left= 0.83 inch, Gap-Right= 0.83 inch, Friction= 0.80,
Gaps setting= Weightless

From D18 to D16, DX= 5.65 ft, DY= 0.06 ft, L= 5.65 ft Run

POINT DATA:
D18, Coordinates, X= -1.34 ft, Y= 683.83 ft, Z= -326.33 ft

SUPPORT DATA:
D18, Guide, Support Id= D18 1, Connected to Ground, Comp.Wt = 0.000 lb, Stiffness= RIGID,
Gap-Down= 0.00 inch, Gap-Above= 0.06 inch, Gap-Left= 0.03 inch, Gap-Right= 0.03 inch, Friction= 0.80,
Gaps setting= Weightless

From D16 to D12, DX= 3.50 ft, DY= 0.04 ft, L= 3.50 ft Run

POINT DATA:
D16, Coordinates, X= 4.31 ft, Y= 683.89 ft, Z= -326.33 ft

SUPPORT DATA:
D16, Guide, Support Id= D16 1, Connected to Ground, Comp.Wt = 0.000 lb, Stiffness= RIGID,
Gap-Down= 0.00 inch, Gap-Above= 0.83 inch, Gap-Left= 0.83 inch, Gap-Right= 0.83 inch, Friction= 0.80,
Gaps setting= Weightless

From D12 to D19, DY= 0.05 ft, DZ= -3.50 ft, L= 3.50 ft Bend

COMPONENT DATA (Bend, TIP= D12, Near= D12 N, Far= D12 F):
Elbow, Radius= 36.00 inch, Bend angle= 89.99 deg, End flanges= 0, Flex= Auto, SIFI= 1.00, SIFO= 1.00

POINT DATA:
D12, Coordinates, X= 7.81 ft, Y= 683.93 ft, Z= -326.33 ft
D12 N, Coordinates, X= 4.81 ft, Y= 683.90 ft, Z= -326.33 ft
D12 F, Coordinates, X= 7.81 ft, Y= 683.97 ft, Z= -329.33 ft

From D19 to D25, DY= 0.12 ft, DZ= -8.87 ft, L= 8.87 ft Run

POINT DATA:
D19, Coordinates, X= 7.81 ft, Y= 683.98 ft, Z= -329.83 ft

SUPPORT DATA:

C O M P O N E N T D A T A L I S T I N G

D19, Guide, Support Id= D19 2, Connected to Ground, Comp.Wt = 0.000 lb, Stiffness= RIGID,
Gap-Down= 0.00 inch, Gap-Above= 0.83 inch, Gap-Left= 0.83 inch, Gap-Right= 0.83 inch, Friction= 0.80,
Gaps setting= Weightless

From D25 to D20, DY= 0.11 ft, DZ= -8.86 ft, L= 8.86 ft Run

POINT DATA:
D25, Coordinates, X= 7.81 ft, Y= 684.10 ft, Z= -338.70 ft

SUPPORT DATA:
D25, Guide, Support Id= D25 1, Connected to Ground, Comp.Wt = 0.000 lb, Stiffness= RIGID,
Gap-Down= 0.00 inch, Gap-Above= 0.06 inch, Gap-Left= 0.03 inch, Gap-Right= 0.03 inch, Friction= 0.80,
Gaps setting= Weightless

From D20 to D17, DY= 0.04 ft, DZ= -3.50 ft, L= 3.50 ft Run

POINT DATA:
D20, Coordinates, X= 7.81 ft, Y= 684.21 ft, Z= -347.56 ft

SUPPORT DATA:
D20, Guide, Support Id= D20 1, Connected to Ground, Comp.Wt = 0.000 lb, Stiffness= RIGID,
Gap-Down= 0.00 inch, Gap-Above= 0.83 inch, Gap-Left= 0.83 inch, Gap-Right= 0.83 inch, Friction= 0.80,
Gaps setting= Weightless

From D17 to D26, DX= 3.50 ft, DY= 0.02 ft, L= 3.50 ft Bend

COMPONENT DATA (Bend, TIP= D17, Near= D17 N, Far= D17 F):
Elbow, Radius= 36.00 inch, Bend angle= 90.00 deg, End flanges= 0, Flex= Auto, SIFI= 1.00, SIFO= 1.00

POINT DATA:
D17, Coordinates, X= 7.81 ft, Y= 684.25 ft, Z= -351.06 ft
D17 N, Coordinates, X= 7.81 ft, Y= 684.22 ft, Z= -348.06 ft
D17 F, Coordinates, X= 10.81 ft, Y= 684.27 ft, Z= -351.06 ft

From D26 to D28, DX= 6.93 ft, DY= 0.03 ft, L= 6.93 ft Run

POINT DATA:
D26, Coordinates, X= 11.31 ft, Y= 684.27 ft, Z= -351.06 ft

SUPPORT DATA:
D26, Guide, Support Id= D26 1, Connected to Ground, Comp.Wt = 0.000 lb, Stiffness= RIGID,
Gap-Down= 0.00 inch, Gap-Above= 0.83 inch, Gap-Left= 0.83 inch, Gap-Right= 0.83 inch, Friction= 0.80,
Gaps setting= Weightless

From D28 to D27, DX= 6.92 ft, DY= 0.03 ft, L= 6.92 ft Run

POINT DATA:
D28, Coordinates, X= 18.24 ft, Y= 684.30 ft, Z= -351.06 ft

SUPPORT DATA:

C O M P O N E N T D A T A L I S T I N G

D28, Guide, Support Id= D28 1, Connected to Ground, Comp.Wt = 0.000 lb, Stiffness= RIGID,
Gap-Down= 0.00 inch, Gap-Above= 0.06 inch, Gap-Left= 0.03 inch, Gap-Right= 0.03 inch, Friction= 0.80,
Gaps setting= Weightless

From D27 to D21, DX= 3.00 ft, DY= 0.01 ft, L= 3.00 ft Run

POINT DATA:
D27, Coordinates, X= 25.16 ft, Y= 684.33 ft, Z= -351.06 ft

SUPPORT DATA:
D27, Guide, Support Id= D27 1, Connected to Ground, Comp.Wt = 0.000 lb, Stiffness= RIGID,
Gap-Down= 0.00 inch, Gap-Above= 0.83 inch, Gap-Left= 0.83 inch, Gap-Right= 0.83 inch, Friction= 0.80,
Gaps setting= Weightless

From D21 to D22, DX= 1.00 ft Run

POINT DATA:
D21, Coordinates, X= 28.16 ft, Y= 684.34 ft, Z= -351.06 ft

From D22 to D23, DX= 0.63 ft Run

POINT DATA:
D22, Coordinates, X= 29.16 ft, Y= 684.34 ft, Z= -351.06 ft

SUPPORT DATA:
D22, Anchor, Connected to: Ground, KTX= Rigid, KTY= Rigid, KTZ= Rigid, KRX= Rigid, KRY= Rigid, KRZ= Rigid

---

From D23 to D24, DY= 0.57 ft Bend

COMPONENT DATA (Bend, TIP= D23, Near= D23 N, Far= D23 F):
Long Elbow, Radius= 3.00 inch, Bend angle= 90.00 deg, End flanges= 0, Flex= Auto, SIFI= 1.73, SIFO= 1.44

POINT DATA:
D23, Coordinates, X= 29.79 ft, Y= 684.34 ft, Z= -351.06 ft
D23 N, Coordinates, X= 29.54 ft, Y= 684.34 ft, Z= -351.06 ft
D23 F, Coordinates, X= 29.79 ft, Y= 684.59 ft, Z= -351.06 ft
D24, Coordinates, X= 29.79 ft, Y= 684.91 ft, Z= -351.06 ft

Number of points in the system (Pipe + Frame + Soil): 371 + 0 + 0 = 371

Weight of Empty Pipes	+	Weight of Contents	=	Total Weight of System
6282.4 lb	+	4019.3 lb	=	10301.7 lb

C O O R D I N A T E S D A T A L I S T I N G

POINT NAME	COORDINATE (ft) X	Y	Z
*** SEGMENT A			
A00	0.00	693.68	0.00
A20	0.00	693.49	0.00
A01 N	0.00	693.32	0.00
A01	0.00	693.07	0.00
A01 F	0.25	693.07	0.00
A02	1.46	693.07	0.00
A03	3.46	693.07	0.00
A23	5.96	693.07	0.00
A04 N	6.19	693.07	0.00
A04	6.46	693.07	0.00
A04 F	6.73	693.02	0.00
A24	14.64	691.56	0.00
A21	22.82	690.05	0.00
A05 N	23.33	689.96	0.00
A05	26.26	689.41	0.00
A05 F	26.26	689.32	-2.98
A22	26.26	689.31	-3.50
A25	26.26	689.05	-12.50
A26	26.26	688.79	-21.50
A27	26.26	688.53	-30.50
A28	26.26	688.27	-39.50
A29	26.26	687.96	-50.17
A06 N	26.26	687.95	-50.67
A06	26.26	687.86	-53.67
A06 F	29.26	687.77	-53.67
A30	29.76	687.76	-53.67
A31	32.52	687.68	-53.67
A07 N	33.02	687.67	-53.67
A07	36.02	687.58	-53.67
A07 F	36.02	687.49	-56.67
A32	36.02	687.47	-57.17
A33	36.02	687.20	-66.17
A34	36.02	686.93	-75.17
A35	36.02	686.66	-84.17
A36	36.02	686.38	-93.17
A37	36.02	686.30	-95.85
A38	36.02	686.03	-104.84
A08 N	36.02	686.01	-105.34
A08	36.02	685.92	-108.34
A08 F	33.02	685.84	-108.34
A39	32.52	685.83	-108.34
A40	28.52	685.73	-108.34
A09 N	28.02	685.72	-108.34
A09	25.02	685.64	-108.34
A09 F	25.02	685.61	-111.34
A41	25.02	685.61	-111.84
A42	25.02	685.54	-120.84
A43	25.02	685.47	-129.84
A44	25.02	685.40	-138.84
A45	25.02	685.33	-147.84
A46	25.02	685.26	-156.84

C O O R D I N A T E S D A T A L I S T I N G

POINT NAME	COORDINATE (ft) X	Y	Z
A47	25.02	685.19	-165.84
A48	25.02	685.12	-174.84
A49	25.02	685.05	-183.84
A50	25.02	685.02	-187.67
A51	25.02	684.95	-196.67
A10 N	25.02	684.95	-197.17
A10	25.02	684.92	-200.17
A10 F	28.02	684.89	-200.17
A52	28.52	684.89	-200.17
A53	35.43	684.84	-200.17
A11 N	35.93	684.84	-200.17
A11	38.93	684.82	-200.17
A11 F	38.93	684.79	-203.17
A54	38.93	684.79	-203.67
A55	38.93	684.72	-212.67
A56	38.93	684.65	-221.67
A57	38.93	684.58	-230.67
A58	38.93	684.51	-239.67
A59	38.93	684.44	-248.67
A60	38.93	684.37	-257.67
A61	38.93	684.31	-266.07
A62	38.93	684.25	-275.07
A12 N	38.93	684.25	-275.57
A12	38.93	684.22	-278.57
A12 F	35.93	684.19	-278.57
A63	35.43	684.19	-278.57
A64	26.43	684.12	-278.57
A65	17.43	684.05	-278.57
A66	8.43	683.99	-278.57
A67	-0.57	683.92	-278.57
A68	-9.35	683.86	-278.57
A69	-18.35	683.80	-278.57
A13 N	-18.85	683.80	-278.57
A13	-21.85	683.77	-278.57
A13 F	-21.85	683.75	-281.57
A70	-21.85	683.75	-282.07
A71	-21.85	683.70	-291.07
A72	-21.85	683.65	-298.66
A14 N	-21.85	683.65	-299.16
A14	-21.85	683.63	-302.16
A14 F	-18.85	683.58	-302.16
A73	-18.35	683.57	-302.16
A15 N	-15.42	683.52	-302.16
A15	-15.39	683.52	-302.16
A15 F	-15.36	683.52	-302.16
A16	-14.39	683.52	-302.16
A17	-13.39	683.52	-302.16
A18	-12.84	683.52	-302.16
A19	-12.65	683.52	-302.16

*** SEGMENT B , LINE # RIGID

B00	0.00	693.93	2.00

C O O R D I N A T E S D A T A L I S T I N G

POINT NAME	COORDINATE (ft) X	Y	Z
B01	0.00	693.68	2.00
B02 N	0.00	693.44	2.00
B02	0.00	693.07	2.00
B02 F	0.38	693.07	2.00
B03	1.46	693.07	2.00
B04	3.46	693.07	2.00
B22	5.96	693.07	2.00
B06 N	6.22	693.07	2.00
B06	6.46	693.07	2.00
B06 F	6.70	693.03	2.00
B23	17.61	691.24	2.00
B24	25.31	689.98	2.00
B09 N	25.81	689.90	2.00
B09	28.76	689.41	2.00
B09 F	28.76	689.32	-0.98
B25	28.76	689.31	-1.50
B26	28.76	689.05	-10.50
B28	28.76	688.79	-19.50
B29	28.76	688.53	-28.50
B31	28.76	688.26	-37.50
B32	28.76	687.96	-47.67
B16 N	28.76	687.95	-48.17
B16	28.76	687.86	-51.17
B16 F	31.76	687.79	-51.17
B33	32.26	687.78	-51.17
B34	35.02	687.72	-51.17
B19 N	35.52	687.71	-51.17
B19	38.52	687.64	-51.17
B19 F	38.52	687.55	-54.17
B35	38.52	687.54	-54.67
B36	38.52	687.29	-63.67
B37	38.52	687.04	-72.67
B38	38.52	686.79	-81.67
B39	38.52	686.54	-90.67
B40	38.52	686.32	-98.34
B42	38.52	686.07	-107.34
B27 N	38.52	686.06	-107.84
B27	38.52	685.97	-110.84
B27 F	35.52	685.89	-110.84
B43	35.02	685.88	-110.84
B45	31.02	685.78	-110.84
B30 N	30.52	685.77	-110.84
B30	27.52	685.70	-110.84
B30 F	27.52	685.67	-113.84
B46	27.52	685.67	-114.34
B47	27.52	685.59	-123.34
B48	27.52	685.51	-132.34
B49	27.52	685.43	-141.34
B50	27.52	685.35	-150.34
B51	27.52	685.28	-159.34
B52	27.52	685.20	-168.34
B53	27.52	685.13	-177.34

C O O R D I N A T E S D A T A L I S T I N G

POINT NAME	COORDINATE (ft) X	Y	Z
B54	27.52	685.06	-185.17
B55	27.52	684.99	-194.17
B41 N	27.52	684.99	-194.67
B41	27.52	684.96	-197.67
B41 F	30.52	684.94	-197.67
B57	31.02	684.94	-197.67
B58	37.93	684.89	-197.67
B44 N	38.43	684.89	-197.67
B44	41.43	684.87	-197.67
B44 F	41.43	684.85	-200.67
B64	41.43	684.85	-201.17
B65	41.43	684.79	-210.17
B66	41.43	684.73	-219.17
B67	41.43	684.67	-228.17
B68	41.43	684.61	-237.17
B69	41.43	684.55	-246.17
B70	41.43	684.49	-255.17
B71	41.43	684.43	-264.17
B72	41.43	684.38	-273.17
B73	41.43	684.35	-278.00
B74	41.43	684.29	-287.00
B56 N	41.43	684.28	-288.00
B56	41.43	684.27	-290.50
B56 F	38.93	684.24	-290.50
B75	38.48	684.24	-290.50
B20 N	38.04	684.23	-290.50
B20	35.54	684.19	-290.50
B20 F	35.54	684.14	-293.00
B77	35.54	684.13	-293.67
B21 N	35.54	684.12	-294.33
B21	35.54	684.07	-296.83
B21 F	33.04	684.03	-296.83
B59 N	30.71	684.00	-296.83
B59	30.69	684.00	-296.83
B59 M	30.69	684.00	-296.83
B59 F	30.67	684.00	-296.83
B60	29.69	684.00	-296.83
B61	28.69	684.00	-296.83
B62	28.08	684.00	-296.83
B63	27.83	684.00	-296.83
*** SEGMENT C			
C00	0.00	691.68	1.00
C01	0.00	691.49	1.00
C02 N	0.00	691.32	1.00
C02	0.00	691.07	1.00
C02 F	0.25	691.07	1.00
C03	1.46	691.07	1.00
C04	3.46	691.07	1.00
C21	5.96	691.07	1.00
C06 N	6.34	691.07	1.00
C06	6.46	691.07	1.00

C O O R D I N A T E S D A T A L I S T I N G

POINT NAME	COORDINATE (ft) X	Y	Z
C06 F	6.58	691.06	1.00
C22	16.95	690.22	1.00
C23	23.94	689.65	1.00
C09 N	24.45	689.61	1.00
C09	27.43	689.37	1.00
C09 F	27.43	689.28	-1.99
C24	27.43	689.27	-2.50
C25	27.43	689.01	-11.50
C26	27.43	688.75	-20.50
C28	27.43	688.49	-29.50
C29	27.43	688.22	-38.50
C31	27.43	687.91	-49.00
C16 N	27.43	687.90	-49.50
C16	27.43	687.81	-52.50
C16 F	30.43	687.74	-52.50
C32	30.93	687.73	-52.50
C33	33.69	687.66	-52.50
C19 N	34.19	687.65	-52.50
C19	37.19	687.58	-52.50
C19 F	37.19	687.49	-55.50
C34	37.19	687.48	-56.00
C35	37.19	687.22	-65.00
C36	37.19	686.96	-74.00
C37	37.19	686.70	-83.00
C38	37.19	686.44	-92.00
C39	37.19	686.29	-97.01
C40	37.19	686.02	-106.00
C27 N	37.19	686.01	-106.50
C27	37.19	685.92	-109.50
C27 F	34.19	685.84	-109.50
C42	33.69	685.83	-109.50
C43	29.69	685.73	-109.50
C30 N	29.19	685.72	-109.50
C30	26.19	685.64	-109.50
C30 F	26.19	685.61	-112.50
C45	26.19	685.61	-113.00
C46	26.19	685.54	-122.00
C47	26.19	685.47	-131.00
C48	26.19	685.40	-140.00
C49	26.19	685.33	-149.00
C50	26.19	685.26	-158.00
C51	26.19	685.19	-167.00
C52	26.19	685.11	-176.00
C53	26.19	685.04	-185.00
C55	26.19	684.95	-195.50
C41 N	26.19	684.95	-196.00
C41	26.19	684.92	-199.00
C41 F	29.19	684.89	-199.00
C56	29.69	684.89	-199.00
C57	36.60	684.84	-199.00
C44 N	37.10	684.84	-199.00
C44	40.10	684.82	-199.00

C O O R D I N A T E S D A T A L I S T I N G

POINT NAME	COORDINATE (ft) X	Y	Z
C44 F	40.10	684.79	-202.00
C58	40.10	684.79	-202.50
C59	40.10	684.72	-211.50
C60	40.10	684.65	-220.50
C61	40.10	684.58	-229.50
C63	40.10	684.52	-238.50
C64	40.10	684.45	-247.50
C65	40.10	684.39	-256.50
C72	40.10	684.32	-265.50
C73	40.10	684.24	-276.24
C54 N	40.10	684.24	-276.74
C54	40.10	684.22	-279.74
C54 F	37.10	684.19	-279.74
C74	36.60	684.19	-279.74
C75	27.60	684.12	-279.74
C76	18.60	684.05	-279.74
C77	9.60	683.99	-279.74
C78	0.60	683.92	-279.74
C79	-8.18	683.86	-279.74
C80	-17.18	683.80	-279.74
C62 N	-17.68	683.80	-279.74
C62	-20.68	683.77	-279.74
C62 F	-20.68	683.74	-282.74
C82	-20.68	683.74	-283.24
C81	-20.68	683.69	-289.08
C83	-20.68	683.65	-294.91
C66 N	-20.68	683.65	-295.41
C66	-20.68	683.62	-298.41
C66 F	-17.68	683.56	-298.41
C84	-17.18	683.55	-298.41
C67 N	-15.40	683.52	-298.41
C67	-15.38	683.52	-298.41
C67 M	-15.38	683.52	-298.41
C67 F	-15.36	683.52	-298.41
C68	-14.38	683.52	-298.41
C69	-13.38	683.52	-298.41
C70	-12.83	683.52	-298.41
C71	-12.64	683.52	-298.41
*** SEGMENT D			
D00	-10.49	683.52	-303.06
D01	-10.49	683.52	-303.25
D02	-10.49	683.52	-303.80
D03	-10.49	683.52	-304.80
D04 N	-10.49	683.52	-307.78
D04	-10.49	683.52	-307.80
D04 M	-10.49	683.52	-307.80
D04 F	-10.49	683.52	-307.82
D13	-10.49	683.61	-315.30
D14	-10.49	683.71	-322.83
D08 N	-10.49	683.72	-323.33
D08	-10.49	683.75	-326.33

C O O R D I N A T E S D A T A L I S T I N G

POINT NAME	COORDINATE (ft) X	Y	Z
D08 F	-7.49	683.78	-326.33
D15	-6.99	683.78	-326.33
D18	-1.34	683.83	-326.33
D16	4.31	683.89	-326.33
D12 N	4.81	683.90	-326.33
D12	7.81	683.93	-326.33
D12 F	7.81	683.97	-329.33
D19	7.81	683.98	-329.83
D25	7.81	684.10	-338.70
D20	7.81	684.21	-347.56
D17 N	7.81	684.22	-348.06
D17	7.81	684.25	-351.06
D17 F	10.81	684.27	-351.06
D26	11.31	684.27	-351.06
D28	18.24	684.30	-351.06
D27	25.16	684.33	-351.06
D21	28.16	684.34	-351.06
D22	29.16	684.34	-351.06
D23 N	29.54	684.34	-351.06
D23	29.79	684.34	-351.06
D23 F	29.79	684.59	-351.06
D24	29.79	684.91	-351.06

S E G M E N T D A T A L I S T I N G

Segment Name	First Node	Last Node	Line Number	Apply Wind	Apply Bowing	Apply Buoyancy
A	A00	A19		No	No	No
B	B00	B63	RIGID	No	No	No
C	C00	C71		No	No	No
D	D00	D24		No	No	No

```
-----------------------------------------------------------------------------------------------------------------------
Primary Piping Stability
04/23/2020 2018719                                                                  BENTLEY
03:06 PM                                                                            AutoPIPE Nuclear 12.00.00.16   MODEL  PAGE  55
-----------------------------------------------------------------------------------------------------------------------

                    P I P E   D A T A   L I S T I N G

 Pipe ID/     Nom/ O.D.  -----Thickness(inch)----- Spec  InsuDen/   Weight(lb/ft )    E/  Composition/
 Material     Sch  inch  W.Th. Corr Mill Insu Ling Grav/ LingDen/  Pipe/ Ling/ Total  W/  Steel Group/
 CladMaterial            Clad                      InsMt CladDen   Cont  Insu/        f   Tcr
 ---Line Class---                                       lb/cu.ft        Clad
 ------------ ---- ----- ----- ---- ---- ---- ---- ----- --------  ----- ----- ----- ---- --------------------

 Tag No. : <None>
 2SCH40      2.000 2.375 0.154 0.01 0.02    0    0  1.60    0.000   3.74     0  6.07 1.00 Austenitic Stainless
 A312-TP316L  40S                                          0.000   2.33     0       1.00 Austenitic
                           0                               0.000            0       1.00      0.000



 Tag No. : <None>
 3SCH40      3.000 3.500 0.216 0.01 0.03    0    0  1.60    0.000   7.75     0 12.88 1.00 Austenitic Stainless
 A312-TP316L  40S                                          0.000   5.13     0       1.00 Austenitic
                           0                               0.000            0       1.00      0.000
```

M A T E R I A L D A T A L I S T I N G

Material Name	Pipe ID	Density lb/cu.ft	Pois. Ratio	Temper. deg F	Modulus E6 psi Axial	Hoop	Shear	Expans. in/100ft	Composition
A312-TP316L	2SCH40	501.0	0.30	60.0	28.341	28.341	10.900		Austenitic Stainless
				200.0	27.600			1.5000	
A312-TP316L	3SCH40	501.0	0.30	60.0	28.341	28.341	10.900		Austenitic Stainless
				200.0	27.600			1.5000	

M A T E R I A L A L L O W A B L E D A T A L I S T I N G

Material Name	Pipe ID	Temper. deg F	Allow. psi	Yield psi	Ultimate	Weld Reduction Factor W
A312-TP316L	2SCH40	60.0	16700.0	25000.0	70000.0	1.000
		200.0	16700.0	21300.0		1.000
A312-TP316L	3SCH40	60.0	16700.0	25000.0	70000.0	1.000
		200.0	16700.0	21300.0		1.000

OPERATING TEMPERATURE AND PRESSURE DATA
STRESSES IN psi

POINT NAME	CASE	PRESS. psi	TEMPER deg F	EXPAN. in/100ft	MODULUS E6 psi	ALLOW STRESS	YIELD STRESS
*** SEGMENT A							
A00	T1	620	200	1.500	27.600	16700	21300
A19	Same as previous point.						
*** SEGMENT B , LINE # RIGID							
B00	T1	620	200	1.500	27.600	16700	21300
B63	Same as previous point.						
*** SEGMENT C							
C00	T1	620	200	1.500	27.600	16700	21300
C71	Same as previous point.						
*** SEGMENT D							
D00	T1	620	200	1.500	27.600	16700	21300
D24	Same as previous point.						

u User-defined value
* Non-code material for allowable stress;
Non-standard material for expansion and modulus

L O A D S S U M M A R Y D A T A L I S T I N G

EARTHQUAKE LOAD CASES :

Number of load cases : 1

Load case 1 - E1

Seismic Code : User-defined

X-Resultant = 1.000 Y-Resultant = 1.000 Z-Resultant = 1.000

```
-----------------------------------------------------------------------------------------------------------------------
Primary Piping Stability
04/23/2020 2018719                                                                    BENTLEY
03:06 PM                                                                              AutoPIPE Nuclear 12.00.00.16   MODEL  PAGE  60
-----------------------------------------------------------------------------------------------------------------------

                              S U P P O R T   D A T A   L I S T I N G

 Point Support  Support Conn.to Comp.Wt  Stiff.     Gap 1   Gap 2  Fric. GapSet Preload Ld.Var Size    Figure
 Name   Type      ID     /Dir    (lb)               (in)    (in)   Fact. /#hgr   (lbf)
 ----- -------- ------- ------- ------- ---------- ------- ------- ----- ------ ------- ------ ---- ------------

 Tag No.: <None>                                 Attachment ID: <None>
 A20   V-stop   A20  1  Ground    0.000 Rigid        0.000 100.000  0.00  Weightless

 Tag No.: <None>                                 Attachment ID: <None>
 A20   Guide-V  A20  2  Ground    0.000 Rigid        0.000   0.000  0.80  Weightless
       Guide-H  A20  2  Ground    0.000 Rigid        1.000   1.000  0.80  Weightless
            Gap Dir.: (Gap1_V=-Z, Gap2_V=+Z, Gap1_H=-X, Gap2_H=+X)

 Tag No.: <None>                                 Attachment ID: <None>
 A23   Guide-V  A23  1  Ground    0.000 Rigid        0.000   0.830  0.80  Weightless
       Guide-H  A23  1  Ground    0.000 Rigid        0.830   0.830  0.80  Weightless

 Tag No.: <None>                                 Attachment ID: <None>
 A24   Guide-V  A24  1  Ground    0.000 Rigid        0.000   0.063  0.80  Weightless
       Guide-H  A24  1  Ground    0.000 Rigid        0.031   0.031  0.80  Weightless

 Tag No.: <None>                                 Attachment ID: <None>
 A21   Guide-V  A21  1  Ground    0.000 Rigid        0.000   0.830  0.80  Weightless
       Guide-H  A21  1  Ground    0.000 Rigid        0.830   0.830  0.80  Weightless

 Tag No.: <None>                                 Attachment ID: <None>
 A22   Guide-V  A22  2  Ground    0.000 Rigid        0.000   0.830  0.80  Weightless
       Guide-H  A22  2  Ground    0.000 Rigid        0.830   0.830  0.80  Weightless

 Tag No.: <None>                                 Attachment ID: <None>
 A25   Guide-V  A25  2  Ground    0.000 Rigid        0.000   0.063  0.80  Weightless
       Guide-H  A25  2  Ground    0.000 Rigid        0.031   0.031  0.80  Weightless

 Tag No.: <None>                                 Attachment ID: <None>
 A26   Guide-V  A26  2  Ground    0.000 Rigid        0.000   0.063  0.80  Weightless
       Guide-H  A26  2  Ground    0.000 Rigid        0.031   0.031  0.80  Weightless

 Tag No.: <None>                                 Attachment ID: <None>
 A27   Guide-V  A27  2  Ground    0.000 Rigid        0.000   0.063  0.80  Weightless
       Guide-H  A27  2  Ground    0.000 Rigid        0.031   0.031  0.80  Weightless

 Tag No.: <None>                                 Attachment ID: <None>
 A28   Guide-V  A28  2  Ground    0.000 Rigid        0.000   0.063  0.80  Weightless
       Guide-H  A28  2  Ground    0.000 Rigid        0.031   0.031  0.80  Weightless

 Tag No.: <None>                                 Attachment ID: <None>
 A29   Guide-V  A29  1  Ground    0.000 Rigid        0.000   0.830  0.80  Weightless
       Guide-H  A29  1  Ground    0.000 Rigid        0.830   0.830  0.80  Weightless

 Tag No.: <None>                                 Attachment ID: <None>
 A30   Guide-V  A30  1  Ground    0.000 Rigid        0.000   0.830  0.80  Weightless
       Guide-H  A30  1  Ground    0.000 Rigid        0.830   0.830  0.80  Weightless

 Tag No.: <None>                                 Attachment ID: <None>
 A31   Guide-V  A31  1  Ground    0.000 Rigid        0.000   0.830  0.80  Weightless
       Guide-H  A31  1  Ground    0.000 Rigid        0.830   0.830  0.80  Weightless
```

S U P P O R T D A T A L I S T I N G

Point Name	Support Type	Support ID	Conn.to /Dir	Comp.Wt (lb)	Stiff.	Gap 1 (in)	Gap 2 (in)	Fric. Fact.	GapSet /#hgr	Preload (lbf)	Ld.Var	Size	Figure
Tag No.: <None>						Attachment ID: <None>							
A32	Guide-V	A32 1	Ground	0.000	Rigid	0.000	0.830	0.80	Weightless				
	Guide-H	A32 1	Ground	0.000	Rigid	0.830	0.830	0.80	Weightless				
Tag No.: <None>						Attachment ID: <None>							
A33	Guide-V	A33 2	Ground	0.000	Rigid	0.000	0.063	0.80	Weightless				
	Guide-H	A33 2	Ground	0.000	Rigid	0.031	0.031	0.80	Weightless				
Tag No.: <None>						Attachment ID: <None>							
A34	Guide-V	A34 2	Ground	0.000	Rigid	0.000	0.063	0.80	Weightless				
	Guide-H	A34 2	Ground	0.000	Rigid	0.031	0.031	0.80	Weightless				
Tag No.: <None>						Attachment ID: <None>							
A35	Guide-V	A35 2	Ground	0.000	Rigid	0.000	0.063	0.80	Weightless				
	Guide-H	A35 2	Ground	0.000	Rigid	0.031	0.031	0.80	Weightless				
Tag No.: <None>						Attachment ID: <None>							
A36	Guide-V	A36 2	Ground	0.000	Rigid	0.000	0.063	0.80	Weightless				
	Guide-H	A36 2	Ground	0.000	Rigid	0.031	0.031	0.80	Weightless				
Tag No.: <None>						Attachment ID: <None>							
A37	Guide-V	A37 2	Ground	0.000	Rigid	0.000	0.063	0.80	Weightless				
	Guide-H	A37 2	Ground	0.000	Rigid	0.031	0.031	0.80	Weightless				
Tag No.: <None>						Attachment ID: <None>							
A38	Guide-V	A38 1	Ground	0.000	Rigid	0.000	0.830	0.80	Weightless				
	Guide-H	A38 1	Ground	0.000	Rigid	0.830	0.830	0.80	Weightless				
Tag No.: <None>						Attachment ID: <None>							
A39	Guide-V	A39 1	Ground	0.000	Rigid	0.000	0.830	0.80	Weightless				
	Guide-H	A39 1	Ground	0.000	Rigid	0.830	0.830	0.80	Weightless				
Tag No.: <None>						Attachment ID: <None>							
A40	Guide-V	A40 1	Ground	0.000	Rigid	0.000	0.830	0.80	Weightless				
	Guide-H	A40 1	Ground	0.000	Rigid	0.830	0.830	0.80	Weightless				
Tag No.: <None>						Attachment ID: <None>							
A41	Guide-V	A41 1	Ground	0.000	Rigid	0.000	0.830	0.80	Weightless				
	Guide-H	A41 1	Ground	0.000	Rigid	0.830	0.830	0.80	Weightless				
Tag No.: <None>						Attachment ID: <None>							
A42	Guide-V	A42 2	Ground	0.000	Rigid	0.000	0.063	0.80	Weightless				
	Guide-H	A42 2	Ground	0.000	Rigid	0.031	0.031	0.80	Weightless				
Tag No.: <None>						Attachment ID: <None>							
A43	Guide-V	A43 2	Ground	0.000	Rigid	0.000	0.063	0.80	Weightless				
	Guide-H	A43 2	Ground	0.000	Rigid	0.031	0.031	0.80	Weightless				
Tag No.: <None>						Attachment ID: <None>							
A44	Guide-V	A44 2	Ground	0.000	Rigid	0.000	0.063	0.80	Weightless				
	Guide-H	A44 2	Ground	0.000	Rigid	0.031	0.031	0.80	Weightless				

S U P P O R T D A T A L I S T I N G

Point Name	Support Type	Support ID	Conn.to /Dir	Comp.Wt (lb)	Stiff.	Gap 1 (in)	Gap 2 (in)	Fric. Fact.	GapSet /#hgr	Preload (lbf)	Ld.Var	Size	Figure
Tag No.: <None>						Attachment ID: <None>							
A45	Guide-V	A45 2	Ground	0.000	Rigid	0.000	0.063	0.80	Weightless				
	Guide-H	A45 2	Ground	0.000	Rigid	0.031	0.031	0.80	Weightless				
Tag No.: <None>						Attachment ID: <None>							
A46	Guide-V	A46 2	Ground	0.000	Rigid	0.000	0.063	0.80	Weightless				
	Guide-H	A46 2	Ground	0.000	Rigid	0.031	0.031	0.80	Weightless				
Tag No.: <None>						Attachment ID: <None>							
A47	Guide-V	A47 2	Ground	0.000	Rigid	0.000	0.063	0.80	Weightless				
	Guide-H	A47 2	Ground	0.000	Rigid	0.031	0.031	0.80	Weightless				
Tag No.: <None>						Attachment ID: <None>							
A48	Guide-V	A48 2	Ground	0.000	Rigid	0.000	0.063	0.80	Weightless				
	Guide-H	A48 2	Ground	0.000	Rigid	0.031	0.031	0.80	Weightless				
Tag No.: <None>						Attachment ID: <None>							
A49	Guide-V	A49 2	Ground	0.000	Rigid	0.000	0.063	0.80	Weightless				
	Guide-H	A49 2	Ground	0.000	Rigid	0.031	0.031	0.80	Weightless				
Tag No.: <None>						Attachment ID: <None>							
A50	Guide-V	A50 2	Ground	0.000	Rigid	0.000	0.063	0.80	Weightless				
	Guide-H	A50 2	Ground	0.000	Rigid	0.031	0.031	0.80	Weightless				
Tag No.: <None>						Attachment ID: <None>							
A51	Guide-V	A51 1	Ground	0.000	Rigid	0.000	0.830	0.80	Weightless				
	Guide-H	A51 1	Ground	0.000	Rigid	0.830	0.830	0.80	Weightless				
Tag No.: <None>						Attachment ID: <None>							
A52	Guide-V	A52 1	Ground	0.000	Rigid	0.000	0.830	0.80	Weightless				
	Guide-H	A52 1	Ground	0.000	Rigid	0.830	0.830	0.80	Weightless				
Tag No.: <None>						Attachment ID: <None>							
A53	Guide-V	A53 1	Ground	0.000	Rigid	0.000	0.830	0.80	Weightless				
	Guide-H	A53 1	Ground	0.000	Rigid	0.830	0.830	0.80	Weightless				
Tag No.: <None>						Attachment ID: <None>							
A54	Guide-V	A54 1	Ground	0.000	Rigid	0.000	0.830	0.80	Weightless				
	Guide-H	A54 1	Ground	0.000	Rigid	0.830	0.830	0.80	Weightless				
Tag No.: <None>						Attachment ID: <None>							
A55	Guide-V	A55 1	Ground	0.000	Rigid	0.000	0.063	0.80	Weightless				
	Guide-H	A55 1	Ground	0.000	Rigid	0.031	0.031	0.80	Weightless				
Tag No.: <None>						Attachment ID: <None>							
A56	Guide-V	A56 1	Ground	0.000	Rigid	0.000	0.063	0.80	Weightless				
	Guide-H	A56 1	Ground	0.000	Rigid	0.031	0.031	0.80	Weightless				
Tag No.: <None>						Attachment ID: <None>							
A57	Guide-V	A57 1	Ground	0.000	Rigid	0.000	0.063	0.80	Weightless				
	Guide-H	A57 1	Ground	0.000	Rigid	0.031	0.031	0.80	Weightless				

S U P P O R T D A T A L I S T I N G

Point Name	Support Type	Support ID	Conn.to /Dir	Comp.Wt (lb)	Stiff.	Gap 1 (in)	Gap 2 (in)	Fric. Fact.	GapSet /#hgr	Preload (lbf)	Ld.Var	Size	Figure
Tag No.: <None>						Attachment ID: <None>							
A58	Guide-V	A58 1	Ground	0.000	Rigid	0.000	0.063	0.80	Weightless				
	Guide-H	A58 1	Ground	0.000	Rigid	0.031	0.031	0.80	Weightless				
Tag No.: <None>						Attachment ID: <None>							
A59	Guide-V	A59 1	Ground	0.000	Rigid	0.000	0.063	0.80	Weightless				
	Guide-H	A59 1	Ground	0.000	Rigid	0.031	0.031	0.80	Weightless				
Tag No.: <None>						Attachment ID: <None>							
A60	Guide-V	A60 1	Ground	0.000	Rigid	0.000	0.063	0.80	Weightless				
	Guide-H	A60 1	Ground	0.000	Rigid	0.031	0.031	0.80	Weightless				
Tag No.: <None>						Attachment ID: <None>							
A61	Guide-V	A61 1	Ground	0.000	Rigid	0.000	0.063	0.80	Weightless				
	Guide-H	A61 1	Ground	0.000	Rigid	0.031	0.031	0.80	Weightless				
Tag No.: <None>						Attachment ID: <None>							
A62	Guide-V	A62 1	Ground	0.000	Rigid	0.000	0.830	0.80	Weightless				
	Guide-H	A62 1	Ground	0.000	Rigid	0.830	0.830	0.80	Weightless				
Tag No.: <None>						Attachment ID: <None>							
A63	Guide-V	A63 1	Ground	0.000	Rigid	0.000	0.830	0.80	Weightless				
	Guide-H	A63 1	Ground	0.000	Rigid	0.830	0.830	0.80	Weightless				
Tag No.: <None>						Attachment ID: <None>							
A64	Guide-V	A64 2	Ground	0.000	Rigid	0.000	0.063	0.80	Weightless				
	Guide-H	A64 2	Ground	0.000	Rigid	0.031	0.031	0.80	Weightless				
Tag No.: <None>						Attachment ID: <None>							
A65	Guide-V	A65 2	Ground	0.000	Rigid	0.000	0.063	0.80	Weightless				
	Guide-H	A65 2	Ground	0.000	Rigid	0.031	0.031	0.80	Weightless				
Tag No.: <None>						Attachment ID: <None>							
A66	Guide-V	A66 2	Ground	0.000	Rigid	0.000	0.063	0.80	Weightless				
	Guide-H	A66 2	Ground	0.000	Rigid	0.031	0.031	0.80	Weightless				
Tag No.: <None>						Attachment ID: <None>							
A67	Guide-V	A67 2	Ground	0.000	Rigid	0.000	0.063	0.80	Weightless				
	Guide-H	A67 2	Ground	0.000	Rigid	0.031	0.031	0.80	Weightless				
Tag No.: <None>						Attachment ID: <None>							
A68	Guide-V	A68 2	Ground	0.000	Rigid	0.000	0.063	0.80	Weightless				
	Guide-H	A68 2	Ground	0.000	Rigid	0.031	0.031	0.80	Weightless				
Tag No.: <None>						Attachment ID: <None>							
A69	Guide-V	A69 1	Ground	0.000	Rigid	0.000	0.830	0.80	Weightless				
	Guide-H	A69 1	Ground	0.000	Rigid	0.830	0.830	0.80	Weightless				
Tag No.: <None>						Attachment ID: <None>							
A70	Guide-V	A70 1	Ground	0.000	Rigid	0.000	0.830	0.80	Weightless				
	Guide-H	A70 1	Ground	0.000	Rigid	0.830	0.830	0.80	Weightless				

```
-----------------------------------------------------------------------------------------------------------------
Primary Piping Stability
04/23/2020 2018719                                                    BENTLEY
03:06 PM                                                              AutoPIPE Nuclear 12.00.00.16   MODEL  PAGE  64
-----------------------------------------------------------------------------------------------------------------

                              S U P P O R T   D A T A   L I S T I N G

 Point Support  Support Conn.to Comp.Wt  Stiff.     Gap 1   Gap 2  Fric. GapSet Preload Ld.Var Size    Figure
 Name   Type      ID     /Dir    (lb)               (in)    (in)   Fact. /#hgr   (lbf)
 ----- -------- ------- ------- ------- ---------- ------- ------- ----- ------ ------- ------ ---- ------------
 Tag No.: <None>                                 Attachment ID: <None>
 A71   Guide-V  A71  2  Ground    0.000 Rigid        0.000   0.063  0.80  Weightless
       Guide-H  A71  2  Ground    0.000 Rigid        0.031   0.031  0.80  Weightless

 Tag No.: <None>                                 Attachment ID: <None>
 A72   Guide-V  A72  1  Ground    0.000 Rigid        0.000   0.830  0.80  Weightless
       Guide-H  A72  1  Ground    0.000 Rigid        0.830   0.830  0.80  Weightless

 Tag No.: <None>                                 Attachment ID: <None>
 A73   Guide-V  A73  1  Ground    0.000 Rigid        0.000   0.830  0.80  Weightless
       Guide-H  A73  1  Ground    0.000 Rigid        0.830   0.830  0.80  Weightless

 Tag No.: <None>                                 Attachment ID: <None>
 B01   V-stop   B01  1  Ground    0.000 Rigid        0.000 100.000  0.00  Weightless

 Tag No.: <None>                                 Attachment ID: <None>
 B01   Guide-V  B01  2  Ground    0.000 Rigid        0.000   0.000  0.80  Weightless
       Guide-H  B01  2  Ground    0.000 Rigid        1.000   1.000  0.80  Weightless
            Gap Dir.: (Gap1_V=-Z, Gap2_V=+Z, Gap1_H=-X, Gap2_H=+X)

 Tag No.: <None>                                 Attachment ID: <None>
 B22   Guide-V  B22  2  Ground    0.000 Rigid        0.000   1.280  0.80  Weightless
       Guide-H  B22  2  Ground    0.000 Rigid        1.280   1.280  0.80  Weightless

 Tag No.: <None>                                 Attachment ID: <None>
 B23   Guide-V  B23  2  Ground    0.000 Rigid        0.000   0.313  0.80  Weightless
       Guide-H  B23  2  Ground    0.000 Rigid        0.156   0.156  0.80  Weightless

 Tag No.: <None>                                 Attachment ID: <None>
 B24   Guide-V  B24  2  Ground    0.000 Rigid        0.000   1.280  0.80  Weightless
       Guide-H  B24  2  Ground    0.000 Rigid        1.280   1.280  0.80  Weightless

 Tag No.: <None>                                 Attachment ID: <None>
 B25   Guide-V  B25  2  Ground    0.000 Rigid        0.000   1.280  0.80  Weightless
       Guide-H  B25  2  Ground    0.000 Rigid        1.280   1.280  0.80  Weightless

 Tag No.: <None>                                 Attachment ID: <None>
 B26   Guide-V  B26  1  Ground    0.000 Rigid        0.000   0.313  0.80  Weightless
       Guide-H  B26  1  Ground    0.000 Rigid        0.156   0.156  0.80  Weightless

 Tag No.: <None>                                 Attachment ID: <None>
 B28   Guide-V  B28  1  Ground    0.000 Rigid        0.000   0.313  0.80  Weightless
       Guide-H  B28  1  Ground    0.000 Rigid        0.156   0.156  0.80  Weightless

 Tag No.: <None>                                 Attachment ID: <None>
 B29   Guide-V  B29  1  Ground    0.000 Rigid        0.000   0.313  0.80  Weightless
       Guide-H  B29  1  Ground    0.000 Rigid        0.156   0.156  0.80  Weightless

 Tag No.: <None>                                 Attachment ID: <None>
 B31   Guide-V  B31  1  Ground    0.000 Rigid        0.000   0.313  0.80  Weightless
       Guide-H  B31  1  Ground    0.000 Rigid        0.156   0.156  0.80  Weightless
```

S U P P O R T D A T A L I S T I N G

Point Name	Support Type	Support ID	Conn.to /Dir	Comp.Wt (lb)	Stiff.	Gap 1 (in)	Gap 2 (in)	Fric. Fact.	GapSet /#hgr	Preload (lbf)	Ld.Var	Size	Figure
Tag No.: <None>						Attachment ID: <None>							
B32	Guide-V	B32 2	Ground	0.000	Rigid	0.000	1.280	0.80	Weightless				
	Guide-H	B32 2	Ground	0.000	Rigid	1.280	1.280	0.80	Weightless				
Tag No.: <None>						Attachment ID: <None>							
B33	Guide-V	B33 2	Ground	0.000	Rigid	0.000	1.280	0.80	Weightless				
	Guide-H	B33 2	Ground	0.000	Rigid	1.280	1.280	0.80	Weightless				
Tag No.: <None>						Attachment ID: <None>							
B34	Guide-V	B34 2	Ground	0.000	Rigid	0.000	1.280	0.80	Weightless				
	Guide-H	B34 2	Ground	0.000	Rigid	1.280	1.280	0.80	Weightless				
Tag No.: <None>						Attachment ID: <None>							
B35	Guide-V	B35 2	Ground	0.000	Rigid	0.000	1.280	0.80	Weightless				
	Guide-H	B35 2	Ground	0.000	Rigid	1.280	1.280	0.80	Weightless				
Tag No.: <None>						Attachment ID: <None>							
B36	Guide-V	B36 2	Ground	0.000	Rigid	0.000	0.313	0.80	Weightless				
	Guide-H	B36 2	Ground	0.000	Rigid	0.156	0.156	0.80	Weightless				
Tag No.: <None>						Attachment ID: <None>							
B37	Guide-V	B37 2	Ground	0.000	Rigid	0.000	0.313	0.80	Weightless				
	Guide-H	B37 2	Ground	0.000	Rigid	0.156	0.156	0.80	Weightless				
Tag No.: <None>						Attachment ID: <None>							
B38	Guide-V	B38 2	Ground	0.000	Rigid	0.000	0.313	0.80	Weightless				
	Guide-H	B38 2	Ground	0.000	Rigid	0.156	0.156	0.80	Weightless				
Tag No.: <None>						Attachment ID: <None>							
B39	Guide-V	B39 2	Ground	0.000	Rigid	0.000	0.313	0.80	Weightless				
	Guide-H	B39 2	Ground	0.000	Rigid	0.156	0.156	0.80	Weightless				
Tag No.: <None>						Attachment ID: <None>							
B40	Guide-V	B40 1	Ground	0.000	Rigid	0.000	0.313	0.80	Weightless				
	Guide-H	B40 1	Ground	0.000	Rigid	0.156	0.156	0.80	Weightless				
Tag No.: <None>						Attachment ID: <None>							
B42	Guide-V	B42 1	Ground	0.000	Rigid	0.000	1.280	0.80	Weightless				
	Guide-H	B42 1	Ground	0.000	Rigid	1.280	1.280	0.80	Weightless				
Tag No.: <None>						Attachment ID: <None>							
B43	Guide-V	B43 1	Ground	0.000	Rigid	0.000	1.280	0.80	Weightless				
	Guide-H	B43 1	Ground	0.000	Rigid	1.280	1.280	0.80	Weightless				
Tag No.: <None>						Attachment ID: <None>							
B45	Guide-V	B45 1	Ground	0.000	Rigid	0.000	1.280	0.80	Weightless				
	Guide-H	B45 1	Ground	0.000	Rigid	1.280	1.280	0.80	Weightless				
Tag No.: <None>						Attachment ID: <None>							
B46	Guide-V	B46 2	Ground	0.000	Rigid	0.000	1.280	0.80	Weightless				
	Guide-H	B46 2	Ground	0.000	Rigid	1.280	1.280	0.80	Weightless				

S U P P O R T D A T A L I S T I N G

Point Name	Support Type	Support ID	Conn.to /Dir	Comp.Wt (lb)	Stiff.	Gap 1 (in)	Gap 2 (in)	Fric. Fact.	GapSet /#hgr	Preload (lbf)	Ld.Var	Size	Figure
Tag No.: <None>						Attachment ID: <None>							
B47	Guide-V	B47 2	Ground	0.000	Rigid	0.000	0.313	0.80	Weightless				
	Guide-H	B47 2	Ground	0.000	Rigid	0.156	0.156	0.80	Weightless				
Tag No.: <None>						Attachment ID: <None>							
B48	Guide-V	B48 2	Ground	0.000	Rigid	0.000	0.313	0.80	Weightless				
	Guide-H	B48 2	Ground	0.000	Rigid	0.156	0.156	0.80	Weightless				
Tag No.: <None>						Attachment ID: <None>							
B49	Guide-V	B49 2	Ground	0.000	Rigid	0.000	0.313	0.80	Weightless				
	Guide-H	B49 2	Ground	0.000	Rigid	0.156	0.156	0.80	Weightless				
Tag No.: <None>						Attachment ID: <None>							
B50	Guide-V	B50 2	Ground	0.000	Rigid	0.000	0.313	0.80	Weightless				
	Guide-H	B50 2	Ground	0.000	Rigid	0.156	0.156	0.80	Weightless				
Tag No.: <None>						Attachment ID: <None>							
B51	Guide-V	B51 2	Ground	0.000	Rigid	0.000	0.313	0.80	Weightless				
	Guide-H	B51 2	Ground	0.000	Rigid	0.156	0.156	0.80	Weightless				
Tag No.: <None>						Attachment ID: <None>							
B52	Guide-V	B52 2	Ground	0.000	Rigid	0.000	0.313	0.80	Weightless				
	Guide-H	B52 2	Ground	0.000	Rigid	0.156	0.156	0.80	Weightless				
Tag No.: <None>						Attachment ID: <None>							
B53	Guide-V	B53 2	Ground	0.000	Rigid	0.000	0.313	0.80	Weightless				
	Guide-H	B53 2	Ground	0.000	Rigid	0.156	0.156	0.80	Weightless				
Tag No.: <None>						Attachment ID: <None>							
B54	Guide-V	B54 2	Ground	0.000	Rigid	0.000	0.313	0.80	Weightless				
	Guide-H	B54 2	Ground	0.000	Rigid	0.156	0.156	0.80	Weightless				
Tag No.: <None>						Attachment ID: <None>							
B55	Guide-V	B55 1	Ground	0.000	Rigid	0.000	1.280	0.80	Weightless				
	Guide-H	B55 1	Ground	0.000	Rigid	1.280	1.280	0.80	Weightless				
Tag No.: <None>						Attachment ID: <None>							
B57	Guide-V	B57 1	Ground	0.000	Rigid	0.000	1.280	0.80	Weightless				
	Guide-H	B57 1	Ground	0.000	Rigid	1.280	1.280	0.80	Weightless				
Tag No.: <None>						Attachment ID: <None>							
B58	Guide-V	B58 1	Ground	0.000	Rigid	0.000	1.280	0.80	Weightless				
	Guide-H	B58 1	Ground	0.000	Rigid	1.280	1.280	0.80	Weightless				
Tag No.: <None>						Attachment ID: <None>							
B64	Guide-V	B64 1	Ground	0.000	Rigid	0.000	1.280	0.80	Weightless				
	Guide-H	B64 1	Ground	0.000	Rigid	1.280	1.280	0.80	Weightless				
Tag No.: <None>						Attachment ID: <None>							
B65	Guide-V	B65 1	Ground	0.000	Rigid	0.000	0.313	0.80	Weightless				
	Guide-H	B65 1	Ground	0.000	Rigid	0.156	0.156	0.80	Weightless				

S U P P O R T D A T A L I S T I N G

Point Name	Support Type	Support ID	Conn.to /Dir	Comp.Wt (lb)	Stiff.	Gap 1 (in)	Gap 2 (in)	Fric. Fact.	GapSet /#hgr	Preload (lbf)	Ld.Var	Size	Figure
Tag No.: <None>						Attachment ID: <None>							
B66	Guide-V	B66 1	Ground	0.000	Rigid	0.000	0.313	0.80	Weightless				
	Guide-H	B66 1	Ground	0.000	Rigid	0.156	0.156	0.80	Weightless				
Tag No.: <None>						Attachment ID: <None>							
B67	Guide-V	B67 1	Ground	0.000	Rigid	0.000	0.313	0.80	Weightless				
	Guide-H	B67 1	Ground	0.000	Rigid	0.156	0.156	0.80	Weightless				
Tag No.: <None>						Attachment ID: <None>							
B68	Guide-V	B68 1	Ground	0.000	Rigid	0.000	0.313	0.80	Weightless				
	Guide-H	B68 1	Ground	0.000	Rigid	0.156	0.156	0.80	Weightless				
Tag No.: <None>						Attachment ID: <None>							
B69	Guide-V	B69 1	Ground	0.000	Rigid	0.000	0.313	0.80	Weightless				
	Guide-H	B69 1	Ground	0.000	Rigid	0.156	0.156	0.80	Weightless				
Tag No.: <None>						Attachment ID: <None>							
B70	Guide-V	B70 1	Ground	0.000	Rigid	0.000	0.313	0.80	Weightless				
	Guide-H	B70 1	Ground	0.000	Rigid	0.156	0.156	0.80	Weightless				
Tag No.: <None>						Attachment ID: <None>							
B71	Guide-V	B71 1	Ground	0.000	Rigid	0.000	0.313	0.80	Weightless				
	Guide-H	B71 1	Ground	0.000	Rigid	0.156	0.156	0.80	Weightless				
Tag No.: <None>						Attachment ID: <None>							
B72	Guide-V	B72 1	Ground	0.000	Rigid	0.000	0.313	0.80	Weightless				
	Guide-H	B72 1	Ground	0.000	Rigid	0.156	0.156	0.80	Weightless				
Tag No.: <None>						Attachment ID: <None>							
B73	Guide-V	B73 1	Ground	0.000	Rigid	0.000	0.313	0.80	Weightless				
	Guide-H	B73 1	Ground	0.000	Rigid	0.156	0.156	0.80	Weightless				
Tag No.: <None>						Attachment ID: <None>							
B74	Guide-V	B74 1	Ground	0.000	Rigid	0.000	1.280	0.80	Weightless				
	Guide-H	B74 1	Ground	0.000	Rigid	1.280	1.280	0.80	Weightless				
Tag No.: <None>						Attachment ID: <None>							
B75	Guide-V	B75 1	Ground	0.000	Rigid	0.000	1.280	0.80	Weightless				
	Guide-H	B75 1	Ground	0.000	Rigid	1.280	1.280	0.80	Weightless				
Tag No.: <None>						Attachment ID: <None>							
B77	Guide-V	B77 1	Ground	0.000	Rigid	0.000	0.313	0.80	Weightless				
	Guide-H	B77 1	Ground	0.000	Rigid	0.156	0.156	0.80	Weightless				
Tag No.: <None>						Attachment ID: <None>							
B59 F	Guide-V	B59 F1	Ground	0.000	Rigid	0.000	1.280	0.80	Weightless				
	Guide-H	B59 F1	Ground	0.000	Rigid	1.280	1.280	0.80	Weightless				
Tag No.: <None>						Attachment ID: <None>							
C01	V-stop	C01 1	Ground	0.000	Rigid	0.000	100.000	0.00	Weightless				
Tag No.: <None>						Attachment ID: <None>							

```
-----------------------------------------------------------------------------------------------------------------
Primary Piping Stability
04/23/2020 2018719                                                          BENTLEY
03:06 PM                                                                    AutoPIPE Nuclear 12.00.00.16   MODEL  PAGE  68
-----------------------------------------------------------------------------------------------------------------

                              S U P P O R T   D A T A   L I S T I N G

 Point Support  Support Conn.to Comp.Wt  Stiff.     Gap 1   Gap 2  Fric. GapSet Preload Ld.Var Size    Figure
 Name   Type      ID     /Dir    (lb)              (in)    (in)   Fact. /#hgr   (lbf)
 ----- -------- ------- ------- ------- ---------- ------- ------- ----- ------ ------- ------ ---- ------------
 C01   Guide-V  C01  2  Ground    0.000 Rigid        0.000   0.000  0.80  Weightless
       Guide-H  C01  2  Ground    0.000 Rigid        1.000   1.000  0.80  Weightless
            Gap Dir.: (Gap1_V=-Z, Gap2_V=+Z, Gap1_H=-X, Gap2_H=+X)

 Tag No.: <None>                                 Attachment ID: <None>
 C21   Guide-V  C21  2  Ground    0.000 Rigid        0.000   0.830  0.80  Weightless
       Guide-H  C21  2  Ground    0.000 Rigid        0.830   0.830  0.80  Weightless

 Tag No.: <None>                                 Attachment ID: <None>
 C22   Guide-V  C22  2  Ground    0.000 Rigid        0.000   0.063  0.80  Weightless
       Guide-H  C22  2  Ground    0.000 Rigid        0.031   0.031  0.80  Weightless

 Tag No.: <None>                                 Attachment ID: <None>
 C23   Guide-V  C23  2  Ground    0.000 Rigid        0.000   0.830  0.80  Weightless
       Guide-H  C23  2  Ground    0.000 Rigid        0.830   0.830  0.80  Weightless

 Tag No.: <None>                                 Attachment ID: <None>
 C24   Guide-V  C24  2  Ground    0.000 Rigid        0.000   0.830  0.80  Weightless
       Guide-H  C24  2  Ground    0.000 Rigid        0.830   0.830  0.80  Weightless

 Tag No.: <None>                                 Attachment ID: <None>
 C25   Guide-V  C25  2  Ground    0.000 Rigid        0.000   0.063  0.80  Weightless
       Guide-H  C25  2  Ground    0.000 Rigid        0.031   0.031  0.80  Weightless

 Tag No.: <None>                                 Attachment ID: <None>
 C26   Guide-V  C26  2  Ground    0.000 Rigid        0.000   0.063  0.80  Weightless
       Guide-H  C26  2  Ground    0.000 Rigid        0.031   0.031  0.80  Weightless

 Tag No.: <None>                                 Attachment ID: <None>
 C28   Guide-V  C28  2  Ground    0.000 Rigid        0.000   0.063  0.80  Weightless
       Guide-H  C28  2  Ground    0.000 Rigid        0.031   0.031  0.80  Weightless

 Tag No.: <None>                                 Attachment ID: <None>
 C29   Guide-V  C29  2  Ground    0.000 Rigid        0.000   0.063  0.80  Weightless
       Guide-H  C29  2  Ground    0.000 Rigid        0.031   0.031  0.80  Weightless

 Tag No.: <None>                                 Attachment ID: <None>
 C31   Guide-V  C31  2  Ground    0.000 Rigid        0.000   0.830  0.80  Weightless
       Guide-H  C31  2  Ground    0.000 Rigid        0.830   0.830  0.80  Weightless

 Tag No.: <None>                                 Attachment ID: <None>
 C32   Guide-V  C32  2  Ground    0.000 Rigid        0.000   0.830  0.80  Weightless
       Guide-H  C32  2  Ground    0.000 Rigid        0.830   0.830  0.80  Weightless

 Tag No.: <None>                                 Attachment ID: <None>
 C33   Guide-V  C33  2  Ground    0.000 Rigid        0.000   0.830  0.80  Weightless
       Guide-H  C33  2  Ground    0.000 Rigid        0.830   0.830  0.80  Weightless

 Tag No.: <None>                                 Attachment ID: <None>
 C34   Guide-V  C34  2  Ground    0.000 Rigid        0.000   0.830  0.80  Weightless
       Guide-H  C34  2  Ground    0.000 Rigid        0.830   0.830  0.80  Weightless
```

S U P P O R T D A T A L I S T I N G

Point Name	Support Type	Support ID	Conn.to /Dir	Comp.Wt (lb)	Stiff.	Gap 1 (in)	Gap 2 (in)	Fric. Fact.	GapSet /#hgr	Preload (lbf)	Ld.Var	Size	Figure
Tag No.: <None>						Attachment ID: <None>							
C35	Guide-V	C35 2	Ground	0.000	Rigid	0.000	0.063	0.80	Weightless				
	Guide-H	C35 2	Ground	0.000	Rigid	0.031	0.031	0.80	Weightless				
Tag No.: <None>						Attachment ID: <None>							
C36	Guide-V	C36 2	Ground	0.000	Rigid	0.000	0.063	0.80	Weightless				
	Guide-H	C36 2	Ground	0.000	Rigid	0.031	0.031	0.80	Weightless				
Tag No.: <None>						Attachment ID: <None>							
C37	Guide-V	C37 2	Ground	0.000	Rigid	0.000	0.063	0.80	Weightless				
	Guide-H	C37 2	Ground	0.000	Rigid	0.031	0.031	0.80	Weightless				
Tag No.: <None>						Attachment ID: <None>							
C38	Guide-V	C38 2	Ground	0.000	Rigid	0.000	0.063	0.80	Weightless				
	Guide-H	C38 2	Ground	0.000	Rigid	0.031	0.031	0.80	Weightless				
Tag No.: <None>						Attachment ID: <None>							
C39	Guide-V	C39 2	Ground	0.000	Rigid	0.000	0.063	0.80	Weightless				
	Guide-H	C39 2	Ground	0.000	Rigid	0.031	0.031	0.80	Weightless				
Tag No.: <None>						Attachment ID: <None>							
C40	Guide-V	C40 2	Ground	0.000	Rigid	0.000	0.830	0.80	Weightless				
	Guide-H	C40 2	Ground	0.000	Rigid	0.830	0.830	0.80	Weightless				
Tag No.: <None>						Attachment ID: <None>							
C42	Guide-V	C42 2	Ground	0.000	Rigid	0.000	0.830	0.80	Weightless				
	Guide-H	C42 2	Ground	0.000	Rigid	0.830	0.830	0.80	Weightless				
Tag No.: <None>						Attachment ID: <None>							
C43	Guide-V	C43 2	Ground	0.000	Rigid	0.000	0.830	0.80	Weightless				
	Guide-H	C43 2	Ground	0.000	Rigid	0.830	0.830	0.80	Weightless				
Tag No.: <None>						Attachment ID: <None>							
C45	Guide-V	C45 2	Ground	0.000	Rigid	0.000	0.830	0.80	Weightless				
	Guide-H	C45 2	Ground	0.000	Rigid	0.830	0.830	0.80	Weightless				
Tag No.: <None>						Attachment ID: <None>							
C46	Guide-V	C46 2	Ground	0.000	Rigid	0.000	0.063	0.80	Weightless				
	Guide-H	C46 2	Ground	0.000	Rigid	0.031	0.031	0.80	Weightless				
Tag No.: <None>						Attachment ID: <None>							
C47	Guide-V	C47 2	Ground	0.000	Rigid	0.000	0.063	0.80	Weightless				
	Guide-H	C47 2	Ground	0.000	Rigid	0.031	0.031	0.80	Weightless				
Tag No.: <None>						Attachment ID: <None>							
C48	Guide-V	C48 2	Ground	0.000	Rigid	0.000	0.063	0.80	Weightless				
	Guide-H	C48 2	Ground	0.000	Rigid	0.031	0.031	0.80	Weightless				
Tag No.: <None>						Attachment ID: <None>							
C49	Guide-V	C49 2	Ground	0.000	Rigid	0.000	0.063	0.80	Weightless				
	Guide-H	C49 2	Ground	0.000	Rigid	0.031	0.031	0.80	Weightless				

S U P P O R T D A T A L I S T I N G

Point Name	Support Type	Support ID	Conn.to /Dir	Comp.Wt (lb)	Stiff.	Gap 1 (in)	Gap 2 (in)	Fric. Fact.	GapSet /#hgr	Preload (lbf)	Ld.Var	Size	Figure
Tag No.: <None>						Attachment ID: <None>							
C50	Guide-V	C50 2	Ground	0.000	Rigid	0.000	0.063	0.80	Weightless				
	Guide-H	C50 2	Ground	0.000	Rigid	0.031	0.031	0.80	Weightless				
Tag No.: <None>						Attachment ID: <None>							
C51	Guide-V	C51 2	Ground	0.000	Rigid	0.000	0.063	0.80	Weightless				
	Guide-H	C51 2	Ground	0.000	Rigid	0.031	0.031	0.80	Weightless				
Tag No.: <None>						Attachment ID: <None>							
C52	Guide-V	C52 2	Ground	0.000	Rigid	0.000	0.063	0.80	Weightless				
	Guide-H	C52 2	Ground	0.000	Rigid	0.031	0.031	0.80	Weightless				
Tag No.: <None>						Attachment ID: <None>							
C53	Guide-V	C53 2	Ground	0.000	Rigid	0.000	0.063	0.80	Weightless				
	Guide-H	C53 2	Ground	0.000	Rigid	0.031	0.031	0.80	Weightless				
Tag No.: <None>						Attachment ID: <None>							
C55	Guide-V	C55 2	Ground	0.000	Rigid	0.000	0.830	0.80	Weightless				
	Guide-H	C55 2	Ground	0.000	Rigid	0.830	0.830	0.80	Weightless				
Tag No.: <None>						Attachment ID: <None>							
C56	Guide-V	C56 2	Ground	0.000	Rigid	0.000	0.830	0.80	Weightless				
	Guide-H	C56 2	Ground	0.000	Rigid	0.830	0.830	0.80	Weightless				
Tag No.: <None>						Attachment ID: <None>							
C57	Guide-V	C57 2	Ground	0.000	Rigid	0.000	0.830	0.80	Weightless				
	Guide-H	C57 2	Ground	0.000	Rigid	0.830	0.830	0.80	Weightless				
Tag No.: <None>						Attachment ID: <None>							
C58	Guide-V	C58 2	Ground	0.000	Rigid	0.000	0.830	0.80	Weightless				
	Guide-H	C58 2	Ground	0.000	Rigid	0.830	0.830	0.80	Weightless				
Tag No.: <None>						Attachment ID: <None>							
C59	Guide-V	C59 2	Ground	0.000	Rigid	0.000	0.063	0.80	Weightless				
	Guide-H	C59 2	Ground	0.000	Rigid	0.031	0.031	0.80	Weightless				
Tag No.: <None>						Attachment ID: <None>							
C60	Guide-V	C60 2	Ground	0.000	Rigid	0.000	0.063	0.80	Weightless				
	Guide-H	C60 2	Ground	0.000	Rigid	0.031	0.031	0.80	Weightless				
Tag No.: <None>						Attachment ID: <None>							
C61	Guide-V	C61 1	Ground	0.000	Rigid	0.000	0.063	0.80	Weightless				
	Guide-H	C61 1	Ground	0.000	Rigid	0.031	0.031	0.80	Weightless				
Tag No.: <None>						Attachment ID: <None>							
C63	Guide-V	C63 1	Ground	0.000	Rigid	0.000	0.063	0.80	Weightless				
	Guide-H	C63 1	Ground	0.000	Rigid	0.031	0.031	0.80	Weightless				
Tag No.: <None>						Attachment ID: <None>							
C64	Guide-V	C64 2	Ground	0.000	Rigid	0.000	0.063	0.80	Weightless				
	Guide-H	C64 2	Ground	0.000	Rigid	0.031	0.031	0.80	Weightless				

S U P P O R T D A T A L I S T I N G

Point Name	Support Type	Support ID	Conn.to /Dir	Comp.Wt (lb)	Stiff.	Gap 1 (in)	Gap 2 (in)	Fric. Fact.	GapSet /#hgr	Preload (lbf)	Ld.Var	Size	Figure
Tag No.: <None>						Attachment ID: <None>							
C65	Guide-V	C65 1	Ground	0.000	Rigid	0.000	0.063	0.80	Weightless				
	Guide-H	C65 1	Ground	0.000	Rigid	0.031	0.031	0.80	Weightless				
Tag No.: <None>						Attachment ID: <None>							
C72	Guide-V	C72 1	Ground	0.000	Rigid	0.000	0.063	0.80	Weightless				
	Guide-H	C72 1	Ground	0.000	Rigid	0.031	0.031	0.80	Weightless				
Tag No.: <None>						Attachment ID: <None>							
C73	Guide-V	C73 1	Ground	0.000	Rigid	0.000	0.830	0.80	Weightless				
	Guide-H	C73 1	Ground	0.000	Rigid	0.830	0.830	0.80	Weightless				
Tag No.: <None>						Attachment ID: <None>							
C74	Guide-V	C74 1	Ground	0.000	Rigid	0.000	0.830	0.80	Weightless				
	Guide-H	C74 1	Ground	0.000	Rigid	0.830	0.830	0.80	Weightless				
Tag No.: <None>						Attachment ID: <None>							
C75	Guide-V	C75 1	Ground	0.000	Rigid	0.000	0.063	0.80	Weightless				
	Guide-H	C75 1	Ground	0.000	Rigid	0.031	0.031	0.80	Weightless				
Tag No.: <None>						Attachment ID: <None>							
C76	Guide-V	C76 1	Ground	0.000	Rigid	0.000	0.063	0.80	Weightless				
	Guide-H	C76 1	Ground	0.000	Rigid	0.031	0.031	0.80	Weightless				
Tag No.: <None>						Attachment ID: <None>							
C77	Guide-V	C77 1	Ground	0.000	Rigid	0.000	0.063	0.80	Weightless				
	Guide-H	C77 1	Ground	0.000	Rigid	0.031	0.031	0.80	Weightless				
Tag No.: <None>						Attachment ID: <None>							
C78	Guide-V	C78 1	Ground	0.000	Rigid	0.000	0.063	0.80	Weightless				
	Guide-H	C78 1	Ground	0.000	Rigid	0.031	0.031	0.80	Weightless				
Tag No.: <None>						Attachment ID: <None>							
C79	Guide-V	C79 1	Ground	0.000	Rigid	0.000	0.063	0.80	Weightless				
	Guide-H	C79 1	Ground	0.000	Rigid	0.031	0.031	0.80	Weightless				
Tag No.: <None>						Attachment ID: <None>							
C80	Guide-V	C80 1	Ground	0.000	Rigid	0.000	0.830	0.80	Weightless				
	Guide-H	C80 1	Ground	0.000	Rigid	0.830	0.830	0.80	Weightless				
Tag No.: <None>						Attachment ID: <None>							
C82	Guide-V	C82 1	Ground	0.000	Rigid	0.000	0.830	0.80	Weightless				
	Guide-H	C82 1	Ground	0.000	Rigid	0.830	0.830	0.80	Weightless				
Tag No.: <None>						Attachment ID: <None>							
C81	Guide-V	C81 1	Ground	0.000	Rigid	0.000	0.063	0.80	Weightless				
	Guide-H	C81 1	Ground	0.000	Rigid	0.031	0.031	0.80	Weightless				
Tag No.: <None>						Attachment ID: <None>							
C83	Guide-V	C83 1	Ground	0.000	Rigid	0.000	0.830	0.80	Weightless				
	Guide-H	C83 1	Ground	0.000	Rigid	0.830	0.830	0.80	Weightless				

S U P P O R T D A T A L I S T I N G

```
 Point Support  Support Conn.to Comp.Wt  Stiff.     Gap 1   Gap 2  Fric. GapSet Preload Ld.Var Size    Figure
 Name   Type      ID     /Dir    (lb)               (in)    (in)   Fact. /#hgr   (lbf)
 ----- -------- ------- ------- ------- ---------- ------- ------- ----- ------ ------- ------ ---- ------------
 Tag No.: <None>                                 Attachment ID: <None>
 C84   Guide-V  C84  1  Ground    0.000 Rigid        0.000   0.830  0.80  Weightless
       Guide-H  C84  1  Ground    0.000 Rigid        0.830   0.830  0.80  Weightless

 Tag No.: <None>                                 Attachment ID: <None>
 D04 M Guide-V  D04 M1  Ground    0.000 Rigid        0.000   0.830  0.80  Weightless
       Guide-H  D04 M1  Ground    0.000 Rigid        0.830   0.830  0.80  Weightless
            Gap Dir.: (Gap1_V=-Z, Gap2_V=+Z, Gap1_H=-X, Gap2_H=+X)

 Tag No.: <None>                                 Attachment ID: <None>
 D13   Guide-V  D13  1  Ground    0.000 Rigid        0.000   0.063  0.80  Weightless
       Guide-H  D13  1  Ground    0.000 Rigid        0.031   0.031  0.80  Weightless

 Tag No.: <None>                                 Attachment ID: <None>
 D14   Guide-V  D14  2  Ground    0.000 Rigid        0.000   0.830  0.80  Weightless
       Guide-H  D14  2  Ground    0.000 Rigid        0.830   0.830  0.80  Weightless

 Tag No.: <None>                                 Attachment ID: <None>
 D15   Guide-V  D15  2  Ground    0.000 Rigid        0.000   0.830  0.80  Weightless
       Guide-H  D15  2  Ground    0.000 Rigid        0.830   0.830  0.80  Weightless

 Tag No.: <None>                                 Attachment ID: <None>
 D18   Guide-V  D18  1  Ground    0.000 Rigid        0.000   0.063  0.80  Weightless
       Guide-H  D18  1  Ground    0.000 Rigid        0.031   0.031  0.80  Weightless

 Tag No.: <None>                                 Attachment ID: <None>
 D16   Guide-V  D16  1  Ground    0.000 Rigid        0.000   0.830  0.80  Weightless
       Guide-H  D16  1  Ground    0.000 Rigid        0.830   0.830  0.80  Weightless

 Tag No.: <None>                                 Attachment ID: <None>
 D19   Guide-V  D19  2  Ground    0.000 Rigid        0.000   0.830  0.80  Weightless
       Guide-H  D19  2  Ground    0.000 Rigid        0.830   0.830  0.80  Weightless

 Tag No.: <None>                                 Attachment ID: <None>
 D25   Guide-V  D25  1  Ground    0.000 Rigid        0.000   0.063  0.80  Weightless
       Guide-H  D25  1  Ground    0.000 Rigid        0.031   0.031  0.80  Weightless

 Tag No.: <None>                                 Attachment ID: <None>
 D20   Guide-V  D20  1  Ground    0.000 Rigid        0.000   0.830  0.80  Weightless
       Guide-H  D20  1  Ground    0.000 Rigid        0.830   0.830  0.80  Weightless

 Tag No.: <None>                                 Attachment ID: <None>
 D26   Guide-V  D26  1  Ground    0.000 Rigid        0.000   0.830  0.80  Weightless
       Guide-H  D26  1  Ground    0.000 Rigid        0.830   0.830  0.80  Weightless

 Tag No.: <None>                                 Attachment ID: <None>
 D28   Guide-V  D28  1  Ground    0.000 Rigid        0.000   0.063  0.80  Weightless
       Guide-H  D28  1  Ground    0.000 Rigid        0.031   0.031  0.80  Weightless

 Tag No.: <None>                                 Attachment ID: <None>
 D27   Guide-V  D27  1  Ground    0.000 Rigid        0.000   0.830  0.80  Weightless
       Guide-H  D27  1  Ground    0.000 Rigid        0.830   0.830  0.80  Weightless
```

S U P P O R T D A T A L I S T I N G

Point Name	Support Type	Support ID	Conn.to /Dir	Comp.Wt (lb)	Stiff.	Gap 1 (in)	Gap 2 (in)	Fric. Fact.	GapSet /#hgr	Preload (lbf)	Ld.Var	Size	Figure

Spring Manufacturer: Anvil/Grinnell
NOTE 1: No soil supports present in the system.
Gap 1 : V-stop,Guide-V=down, Linestop,Incline,Tie/link=backward, Guide-H=Left
Gap 2 : V-stop,Guide-V=Up , Linestop,Incline,Tie/link=forward , Guide-H=Right
Stiffness units for rotation support: ft-lb/deg, all others: lb/in

B E N D D A T A L I S T I N G

Point Name	Bend Type	Radius (in)	Angle (deg)	OD (in)	tnom (in)	Material	Flan^ /Cuts	SIF in	SIF out	Analysis Set	Flexibility (K)	Pressure Case
A01	Elbow	3.00L	90.0	2.375	0.154	A312-TP316L	0/0	1.73	1.44	1	4.40	None
A04	Elbow	36.00	10.5	2.375	0.154	A312-TP316L	0/0	1.00	1.00	1	1.00	None
A05	Elbow	36.00	89.7	2.375	0.154	A312-TP316L	0/0	1.00	1.00	1	1.00	None
A06	Elbow	36.00	90.0	2.375	0.154	A312-TP316L	0/0	1.00	1.00	1	1.00	None
A07	Elbow	36.00	89.9	2.375	0.154	A312-TP316L	0/0	1.00	1.00	1	1.00	None
A08	Elbow	36.00	90.0	2.375	0.154	A312-TP316L	0/0	1.00	1.00	1	1.00	None
A09	Elbow	36.00	90.0	2.375	0.154	A312-TP316L	0/0	1.00	1.00	1	1.00	None
A10	Elbow	36.00	90.0	2.375	0.154	A312-TP316L	0/0	1.00	1.00	1	1.00	None
A11	Elbow	36.00	90.0	2.375	0.154	A312-TP316L	0/0	1.00	1.00	1	1.00	None
A12	Elbow	36.00	90.0	2.375	0.154	A312-TP316L	0/0	1.00	1.00	1	1.00	None
A13	Elbow	36.00	90.0	2.375	0.154	A312-TP316L	0/0	1.00	1.00	1	1.00	None
A14	Elbow	36.00	90.0	2.375	0.154	A312-TP316L	0/0	1.00	1.00	1	1.00	None
A15	Elbow	36.00	1.0	2.375	0.154	A312-TP316L	0/0	1.00	1.00	1	1.00	None
B02	Elbow	4.50L	90.0	3.500	0.216	A312-TP316L	0/0	1.78	1.48	1	4.58	None
B06	Elbow	36.00	9.3	3.500	0.216	A312-TP316L	0/0	1.00	1.00	1	1.00	None
B09	Elbow	36.00	89.7	3.500	0.216	A312-TP316L	0/0	1.00	1.00	1	1.00	None
B16	Elbow	36.00	90.0	3.500	0.216	A312-TP316L	0/0	1.00	1.00	1	1.00	None
B19	Elbow	36.00	90.0	3.500	0.216	A312-TP316L	0/0	1.00	1.00	1	1.00	None
B27	Elbow	36.00	90.0	3.500	0.216	A312-TP316L	0/0	1.00	1.00	1	1.00	None
B30	Elbow	36.00	90.0	3.500	0.216	A312-TP316L	0/0	1.00	1.00	1	1.00	None
B41	Elbow	36.00	90.0	3.500	0.216	A312-TP316L	0/0	1.00	1.00	1	1.00	None
B44	Elbow	36.00	90.0	3.500	0.216	A312-TP316L	0/0	1.00	1.00	1	1.00	None
B56	Elbow	30.00	90.0	3.500	0.216	A312-TP316L	0/0	1.00	1.00	1	1.00	None
B20	Elbow	30.00	90.0	3.500	0.216	A312-TP316L	0/0	1.00	1.00	1	1.00	None
B21	Elbow	30.00	90.0	3.500	0.216	A312-TP316L	0/0	1.00	1.00	1	1.00	None
B59	*Elbow	36.00	0.8	3.500	0.216	A312-TP316L	0/0	1.00	1.00	1	1.00	None
C02	Elbow	3.00L	90.0	2.375	0.154	A312-TP316L	0/0	1.73	1.44	1	4.40	None
C06	Elbow	36.00	4.6	2.375	0.154	A312-TP316L	0/0	1.00	1.00	1	1.00	None
C09	Elbow	36.00	89.9	2.375	0.154	A312-TP316L	0/0	1.00	1.00	1	1.00	None
C16	Elbow	36.00	90.0	2.375	0.154	A312-TP316L	0/0	1.00	1.00	1	1.00	None
C19	Elbow	36.00	90.0	2.375	0.154	A312-TP316L	0/0	1.00	1.00	1	1.00	None
C27	Elbow	36.00	90.0	2.375	0.154	A312-TP316L	0/0	1.00	1.00	1	1.00	None
C30	Elbow	36.00	90.0	2.375	0.154	A312-TP316L	0/0	1.00	1.00	1	1.00	None
C41	Elbow	36.00	90.0	2.375	0.154	A312-TP316L	0/0	1.00	1.00	1	1.00	None
C44	Elbow	36.00	90.0	2.375	0.154	A312-TP316L	0/0	1.00	1.00	1	1.00	None
C54	Elbow	36.00	90.0	2.375	0.154	A312-TP316L	0/0	1.00	1.00	1	1.00	None
C62	Elbow	36.00	90.0	2.375	0.154	A312-TP316L	0/0	1.00	1.00	1	1.00	None
C66	Elbow	36.00	90.0	2.375	0.154	A312-TP316L	0/0	1.00	1.00	1	1.00	None
C67	*Elbow	36.00	1.0	2.375	0.154	A312-TP316L	0/0	1.00	1.00	1	1.00	None
D04	*Elbow	36.00	0.7	2.375	0.154	A312-TP316L	0/0	1.00	1.00	1	1.00	None
D08	Elbow	36.00	90.0	2.375	0.154	A312-TP316L	0/0	1.00	1.00	1	1.00	None
D12	Elbow	36.00	90.0	2.375	0.154	A312-TP316L	0/0	1.00	1.00	1	1.00	None
D17	Elbow	36.00	90.0	2.375	0.154	A312-TP316L	0/0	1.00	1.00	1	1.00	None
D23	Elbow	3.00L	90.0	2.375	0.154	A312-TP316L	0/0	1.73	1.44	1	4.40	None

^ = Number of bend ends where either a flange or valve is within distance
(L/D) x Nominal diameter, where L/D is defined under Tools > Model options > Edit
* = Mid-point present
L = Long radius

L O A D C A S E D E S C R I P T I O N

Load Case	Load Case Name	Description
GR	Gravity	
T1	Thermal 1	
E1	Earth 1	
P1	Press 1	

A N A L Y S I S S U M M A R Y

```
Current model revision number : 8

  Constant values used
          Acceleration due to gravity................  386.40000 in/s/s
          Density of water for specific gravity Cal..     62.400 lb/cu.ft
          Density of sea water.......................     62.400 lb/cu.ft
          Density of ground water ...................     62.400 lb/cu.ft

  Static - Analysis set number ................... 1
          Date and Time of analysis ............. Apr 23, 2020   3:03 PM
          Model Revision Number ................. 8
          Number of load cases .................. 4
          Load cases analyzed ................... GR T1 E1 P1
          Description ........................... Analysis Set No.1
          Gaps/Friction/Soil considered ......... Yes
          Tolerance - Force, Displacement ....... 10.00 lbf  0.0010 in
          Friction - Scale Factor, Tolerance .... 1.00   0.10
          Ignore friction for cases E1,E2,E3 .... Yes
          Ignore friction for gravity case ...... Yes
          Hanger design run ..................... No
          Cut short included .................... No
          Thermal bowing included ............... No
          Include Bourdon rotational effect ..... No
          Pipe radius for Bourdon calculation ... Mean
          Occasional load analysis type ......... Nonlinear
          Non-linear analysis summary file ......
            Primary Piping Stability.LOG
          Use default load sequence ............. Yes
          Base load cases for nonlinear analysis
                                                     GR   = None
                                                     T1   = GR
                                                     E1   = GR
                                                     P1   = T1
          Weight of contents included ........... No
          Pressure stiffening case .............. None
          Hot modulus case ...................... None
          Pressure Extension..................... Yes
          Water elevation for buoyancy loads .... Not considered
          Use corroded thickness in analysis .... Yes
          Rigid stiffness factor ................ 1000.0
          Support rigid stiffness (translation) . 0.100000E+11 lb/in
          Support rigid stiffness (rotation) .... 0.100000E+11 ft-lb/deg
          Anchor rigid stiffness (translation) .. 0.100000E+11 lb/in
          Anchor rigid stiffness (rotation) ..... 0.100000E+11 ft-lb/deg
          Remove Lift-Off Supports .............. No
```

CODE COMPLIANCE COMBINATIONS

<Description> Combination	Category	Method	Case/Combination	Factor	M/S	K-Factor	Allowable (psi)	D/A/P/C
GR + Max P{1}	Sustain	Sum	GR[1]	1.00			Automatic	Y Y Y Y
			Max Long	1.00				
Max Range	Expansion	Sum	Temp. Range	1.00			Automatic	Y Y Y Y
Amb to T1{1}	Expansion	Sum	T1[1]	1.00			Automatic	Y Y Y Y
Sus. + E1{1}	Occasion	Abs sum	E1[1]	1.00		1.330	Automatic	Y Y Y Y
			Max Sus	1.00				
Max P{1}	Hoop	Sum	Max Hoop	1.00			Automatic	Y Y Y Y

Notes:

D/A/P/C: [D]efault/[A]uto-Update/[P]rint options/[C]Consistent (Y=Yes, N=No)

NON-CODE COMBINATIONS

<Description> Combination	Method	Case/Combination	Factor	D/A/P/C
Gravity{1}	Sum	GR[1]	1.00	Y Y Y Y
<200.00 deg F> Thermal 1{1}	Sum	T1[1]	1.00	Y Y N N
< 1.00, 1.00, 1.00> Static Seismic 1{1}	Sum	E1[1]	1.00	Y Y N N
Pressure 1{1}	Sum	P1[1]	1.00	Y Y N N
GT1{1}	Sum	GR[1]	1.00	Y Y Y Y
		T1[1]	1.00	
GE1{1}	Sum	GR[1]	1.00	Y Y Y Y
		E1[1]	1.00	
GT1P1{1}	Sum	GR[1]	1.00	Y Y Y Y
		T1[1]	1.00	
		P1[1]	1.00	

Notes:

D/A/P/C: [D]efault/[A]uto-Update/[P]rint options/[C]Consistent (Y=Yes, N=No)

CODE COMPLIANCE

```
Y - Factor ............................ 0.40
Design Pressure Factor ................ 1.00
Minimum stress ratio used in reports... 0.00
Number of stress points per span ...... 0
Include corrosion in stress calcs. .... Y
Include corrosion in Hoop stress calcs. Y
Include torsion in code stress ........ N
Include axial force in code stress .... Y
Include sustain load margin ........... Only if allowable stress is exceeded
Use minimum sustained margin........... Y
Set sustained SIF=1 no bends .......... N
Set occasional SIF = 1 ................ N
Set occasional SIF = 0.75i ............ Y
Apply cold/hot modulus ratio .......... N
Disable auto code combinations ........ N
Disable auto non-code combinations .... N
No. of thermal ranges to report ....... 0
Include Max Range combination ......... Y
Total stress .......................... Octahedral
Direct shear .......................... None
Longitudinal pressure calculation ..... AxF/area
Use code case 178 ..................... Y
Inc. Axial Str and Pcase in Sustained.. Y
Use alternate occasional allowable .... N
Apply circumferential weld WC factor .. N
ASME B31J Enabled ..................... N
```

*** Summary not available ***

APPENDIX D2

AUTOPIPE ANALYSIS – PRIMARY PIPING THERMAL CONTRACTION

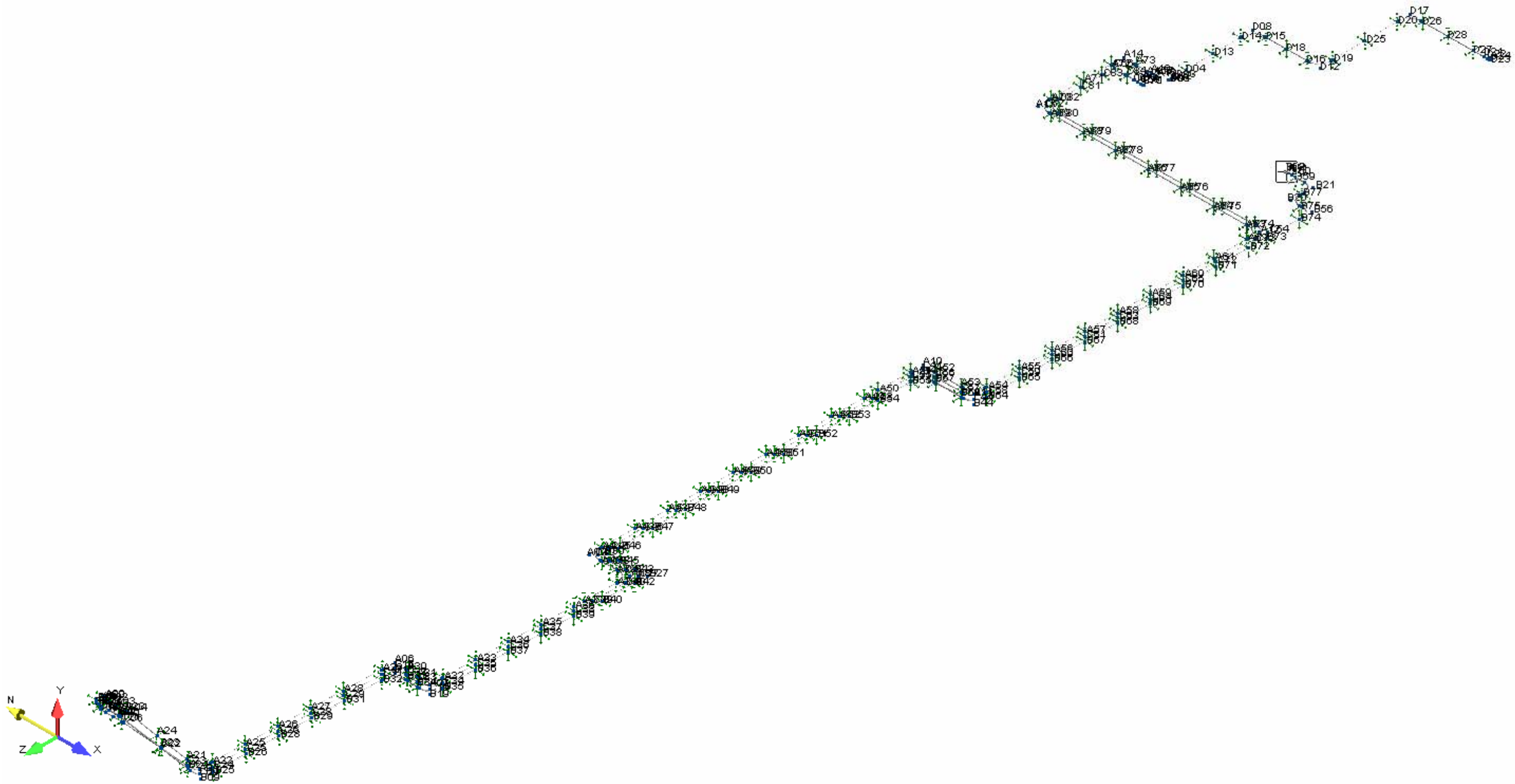
N
Y
Z
X

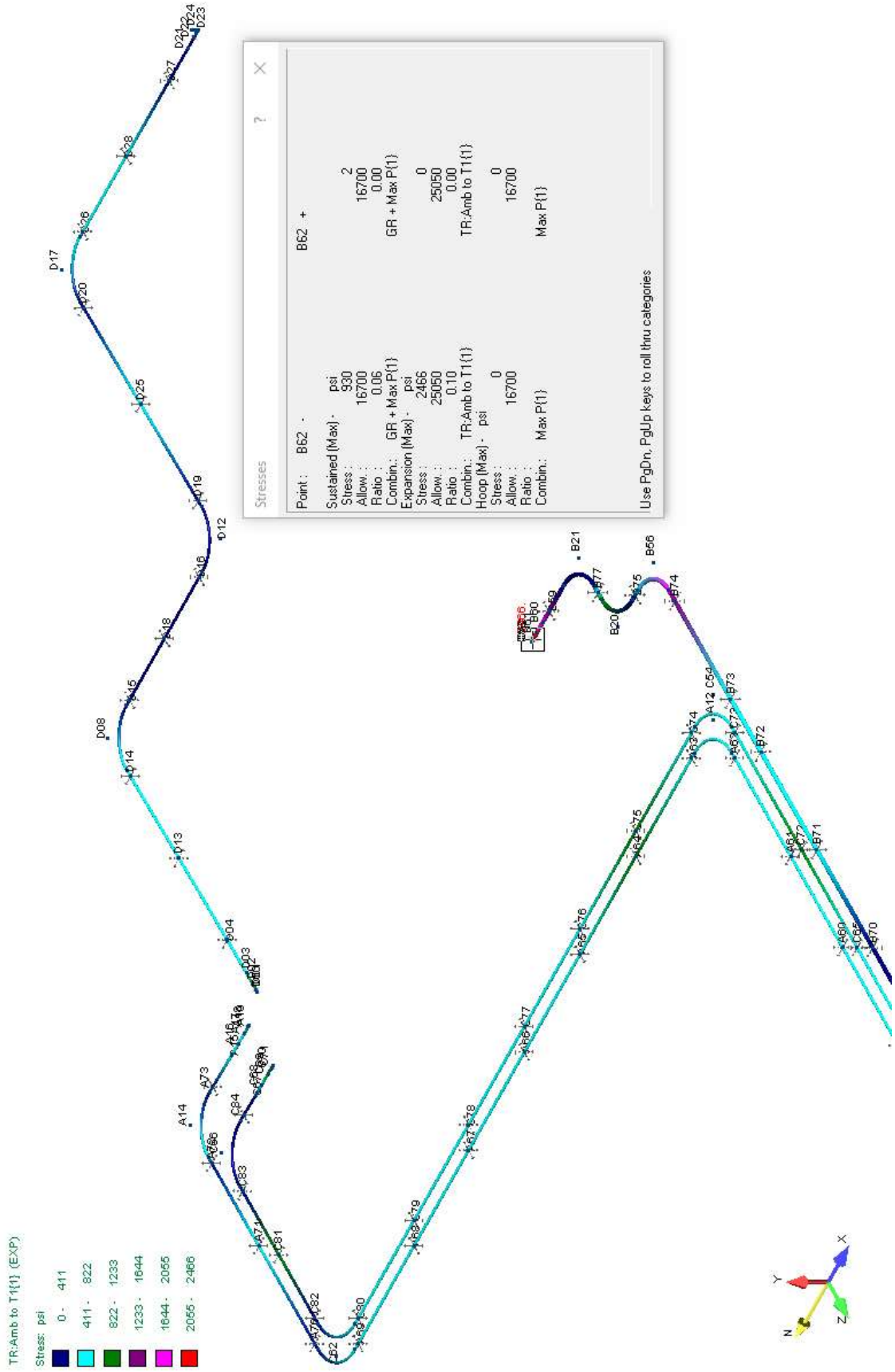
TR:Amb to T1{1} (EXP)
Stress: psi
0 - 411
411 - 822
822 - 1233
1233 - 1644
1644 - 2055
2055 - 2466
Stresses
Point : B62 - B62 +
Sustained (Max) - psi
Stress : 930 2
Allow : 16700 16700
Ratio : 0.06 0.00
Combin.: GR + Max P{1} GR + Max P{1}
Expansion (Max) - psi
Stress : 2466 0
Allow : 25050 25050
Ratio : 0.10 0.00
Combin.: TR:Amb to T1{1} TR:Amb to T1{1}
Hoop (Max) - psi
Stress : 0 0
Allow : 16700 16700
Ratio :
Combin.: Max P{1} Max P{1}
Use PgDn, PgUp keys to roll thru categories

```
Primary Piping Low Temp
04/23/2020 2018719                                                                    BENTLEY
03:23 PM                                                                              AutoPIPE Nuclear 12.00.00.16
```

```
        *                            *******   **  *******   *******
       ***              **           **    **  **  **    **  **
      ** **            ******         **    **  **  **    **  **
     **   **    **   **  **   *****   *******   **  *******   *****
    *********   **   **  **  **   **  **        **  **        **
   **       **  **   **  **  **   **  **        **  **        **
  **         **  *****   **   *****   **        **  **        *******
```

Pipe Stress Analysis and Design Program

Version: 12.00.00.16

Edition: Nuclear

Developed and Maintained by

BENTLEY SYSTEMS, INCORPORATED
1065 N. PACIFIC CENTER DRIVE, SUITE 450
ANAHEIM, CA 92806

```
*********************************************************
**                                                     **
**              AUTOPIPE SYSTEM INFORMATION            **
**                                                     **
*********************************************************
```

SYSTEM NAME : Primary Piping Low Temp

PROJECT ID : 2018719

PREPARED BY : _____
JIM HARRINGTON

CHECKED BY : _____
RYAN LANG

1ST APPROVER : _____

2ND APPROVER : _____

PIPING CODE : ASME B31.3

YEAR : 2016

VERTICAL AXIS : Y

AMBIENT TEMPERATURE : 80.0 deg F

COMPONENT LIBRARY : AUTOPIPE

MATERIAL LIBRARY : B313-16

MODEL REVISION NUMBER : 1

T A B L E O F C O N T E N T S

Components..... 1
Coordinates..... 47
Segment Data..... 54
Pipe Properties..... 55
Material Properties..... 56
Material Allowables..... 57
Temperature and Pressure..... 58
Support..... 59
Bend..... 73
Load Case Description..... 74
Analysis Summary..... 75
Restraint Reactions..... 79
Code Compliance..... 97
Result Summary..... 152

```
-----------------------------------------------------------------------------------------------------------------
Primary Piping Low Temp
04/23/2020 2018719                                                    BENTLEY
03:23 PM                                                              AutoPIPE Nuclear 12.00.00.16   MODEL  PAGE   1
-----------------------------------------------------------------------------------------------------------------

                C O M P O N E N T   D A T A   L I S T I N G

 ---------------------------------------------------------------------------
 *** SEGMENT A

 ---------------------------------------------------------------------------
 From A00 to A20, DY= -0.19 ft                                          Run

 PIPE DATA:
   Pipe Id= 2SCH40, Material= A312-TP316L, Composition= Austenitic Stainless, Poisson= 0.300, Nom Size= 2.000,
   OD= 2.375 inch, Sch= 40S, Wall Thk= 0.154 inch, Mill= 0.019 inch, Cor= 0.010 inch,
   Pipe Density= 501.00 lb/cu.ft, Pipe Unit Wgt= 3.74 lb/ft, Insul Thk= 0 inch, Cladding Thickness = 0 inch,
   Lining Thk= 0 inch, Long Weld E factor= 1.00, Long Weld W factor= 1.00, Long Modulus= 28.24615 E6 psi,
   Hoop Modulus= 28.24615 E6 psi, Shear Modulus= 10.86390 E6 psi, Sc= 16700.0 psi, Syc= 25000.0 psi,
   Suc= 70000.0 psi

 OPERATING DATA:
   P1= 0 psi, T1= 30.00 deg F, Exp1= -0.50769 in/100ft, E1= 28.46333 E6 psi, Sh1= 16700.00 psi,
   Sy1= 25000.00 psi

 POINT DATA:
   A00, Coordinates, X= 0.00 ft, Y= 693.68 ft, Z= 0.00 ft

 ---------------------------------------------------------------------------
 From A20 to A01, DY= -0.42 ft                                          Run

 POINT DATA:
   A20, Coordinates, X= 0.00 ft, Y= 693.49 ft, Z= 0.00 ft

 SUPPORT DATA:
   A20, V-Stop, Support Id= A20  1, Connected to Ground, Comp.Wt = 0.000 lb, Gap-Below= 0.00 inch,
   Gap-Above= 100.00 inch, Friction= 0.00, Gaps setting= Weightless
   A20, Guide, Support Id= A20  2, Connected to Ground, Comp.Wt = 0.000 lb, Stiffness= RIGID, Gap -Z= 0.00 inch,
   Gap +Z= 0.00 inch, Gap -X= 1.00 inch, Gap +X= 1.00 inch, Friction= 0.80, Gaps setting= Weightless

 ---------------------------------------------------------------------------
 From A01 to A02, DX= 1.46 ft                                           Bend

 COMPONENT DATA (Bend, TIP= A01, Near= A01 N, Far= A01 F):
   Long Elbow, Radius= 3.00 inch, Bend angle= 90.00 deg, End flanges= 0, Flex= Auto, SIFI= 1.73, SIFO= 1.44

 POINT DATA:
   A01, Coordinates, X= 0.00 ft, Y= 693.07 ft, Z= 0.00 ft
   A01 N, Coordinates, X= 0.00 ft, Y= 693.32 ft, Z= 0.00 ft
   A01 F, Coordinates, X= 0.25 ft, Y= 693.07 ft, Z= 0.00 ft

 ---------------------------------------------------------------------------
 From A02 to A03, DX= 2.00 ft                                           Run

 POINT DATA:
   A02, Coordinates, X= 1.46 ft, Y= 693.07 ft, Z= 0.00 ft

 SUPPORT DATA:
   A02, Anchor, Connected to: Ground, KTX= Rigid, KTY= Rigid, KTZ= Rigid, KRX= Rigid, KRY= Rigid, KRZ= Rigid

 ---------------------------------------------------------------------------
 From A03 to A23, DX= 2.50 ft                                           Run
```

C O M P O N E N T D A T A L I S T I N G

POINT DATA:
A03, Coordinates, X= 3.46 ft, Y= 693.07 ft, Z= 0.00 ft

From A23 to A04, DX= 0.50 ft Run

POINT DATA:
A23, Coordinates, X= 5.96 ft, Y= 693.07 ft, Z= 0.00 ft

SUPPORT DATA:
A23, Guide, Support Id= A23 1, Connected to Ground, Comp.Wt = 0.000 lb, Stiffness= RIGID,
Gap-Down= 0.00 inch, Gap-Above= 0.83 inch, Gap-Left= 0.83 inch, Gap-Right= 0.83 inch, Friction= 0.80,
Gaps setting= Weightless

From A04 to A24, DX= 8.18 ft, DY= -1.51 ft, L= 8.32 ft Bend

COMPONENT DATA (Bend, TIP= A04, Near= A04 N, Far= A04 F):
Elbow, Radius= 36.00 inch, Bend angle= 10.46 deg, End flanges= 0, Flex= Auto, SIFI= 1.00, SIFO= 1.00

POINT DATA:
A04, Coordinates, X= 6.46 ft, Y= 693.07 ft, Z= 0.00 ft
A04 N, Coordinates, X= 6.19 ft, Y= 693.07 ft, Z= 0.00 ft
A04 F, Coordinates, X= 6.73 ft, Y= 693.02 ft, Z= 0.00 ft

From A24 to A21, DX= 8.18 ft, DY= -1.51 ft, L= 8.32 ft Run

POINT DATA:
A24, Coordinates, X= 14.64 ft, Y= 691.56 ft, Z= 0.00 ft

SUPPORT DATA:
A24, Guide, Support Id= A24 1, Connected to Ground, Comp.Wt = 0.000 lb, Stiffness= RIGID,
Gap-Down= 0.00 inch, Gap-Above= 0.06 inch, Gap-Left= 0.03 inch, Gap-Right= 0.03 inch, Friction= 0.80,
Gaps setting= Weightless

From A21 to A05, DX= 3.44 ft, DY= -0.64 ft, L= 3.50 ft Run

POINT DATA:
A21, Coordinates, X= 22.82 ft, Y= 690.05 ft, Z= 0.00 ft

SUPPORT DATA:
A21, Guide, Support Id= A21 1, Connected to Ground, Comp.Wt = 0.000 lb, Stiffness= RIGID,
Gap-Down= 0.00 inch, Gap-Above= 0.83 inch, Gap-Left= 0.83 inch, Gap-Right= 0.83 inch, Friction= 0.80,
Gaps setting= Weightless

From A05 to A22, DY= -0.10 ft, DZ= -3.50 ft, L= 3.50 ft Bend

COMPONENT DATA (Bend, TIP= A05, Near= A05 N, Far= A05 F):
Elbow, Radius= 36.00 inch, Bend angle= 89.70 deg, End flanges= 0, Flex= Auto, SIFI= 1.00, SIFO= 1.00

POINT DATA:
A05, Coordinates, X= 26.26 ft, Y= 689.41 ft, Z= 0.00 ft

C O M P O N E N T D A T A L I S T I N G

A05 N, Coordinates, X= 23.33 ft, Y= 689.96 ft, Z= 0.00 ft
A05 F, Coordinates, X= 26.26 ft, Y= 689.32 ft, Z= -2.98 ft

From A22 to A25, DY= -0.26 ft, DZ= -9.00 ft, L= 9.00 ft Run

POINT DATA:
A22, Coordinates, X= 26.26 ft, Y= 689.31 ft, Z= -3.50 ft

SUPPORT DATA:
A22, Guide, Support Id= A22 2, Connected to Ground, Comp.Wt = 0.000 lb, Stiffness= RIGID,
Gap-Down= 0.00 inch, Gap-Above= 0.83 inch, Gap-Left= 0.83 inch, Gap-Right= 0.83 inch, Friction= 0.80,
Gaps setting= Weightless

From A25 to A26, DY= -0.26 ft, DZ= -9.00 ft, L= 9.00 ft Run

POINT DATA:
A25, Coordinates, X= 26.26 ft, Y= 689.05 ft, Z= -12.50 ft

SUPPORT DATA:
A25, Guide, Support Id= A25 2, Connected to Ground, Comp.Wt = 0.000 lb, Stiffness= RIGID,
Gap-Down= 0.00 inch, Gap-Above= 0.06 inch, Gap-Left= 0.03 inch, Gap-Right= 0.03 inch, Friction= 0.80,
Gaps setting= Weightless

From A26 to A27, DY= -0.26 ft, DZ= -9.00 ft, L= 9.00 ft Run

POINT DATA:
A26, Coordinates, X= 26.26 ft, Y= 688.79 ft, Z= -21.50 ft

SUPPORT DATA:
A26, Guide, Support Id= A26 2, Connected to Ground, Comp.Wt = 0.000 lb, Stiffness= RIGID,
Gap-Down= 0.00 inch, Gap-Above= 0.06 inch, Gap-Left= 0.03 inch, Gap-Right= 0.03 inch, Friction= 0.80,
Gaps setting= Weightless

From A27 to A28, DY= -0.26 ft, DZ= -9.00 ft, L= 9.00 ft Run

POINT DATA:
A27, Coordinates, X= 26.26 ft, Y= 688.53 ft, Z= -30.50 ft

SUPPORT DATA:
A27, Guide, Support Id= A27 2, Connected to Ground, Comp.Wt = 0.000 lb, Stiffness= RIGID,
Gap-Down= 0.00 inch, Gap-Above= 0.06 inch, Gap-Left= 0.03 inch, Gap-Right= 0.03 inch, Friction= 0.80,
Gaps setting= Weightless

From A28 to A29, DY= -0.31 ft, DZ= -10.67 ft, L= 10.67 ft Run

POINT DATA:
A28, Coordinates, X= 26.26 ft, Y= 688.27 ft, Z= -39.50 ft

SUPPORT DATA:
A28, Guide, Support Id= A28 2, Connected to Ground, Comp.Wt = 0.000 lb, Stiffness= RIGID,

C O M P O N E N T D A T A L I S T I N G

Gap-Down= 0.00 inch, Gap-Above= 0.06 inch, Gap-Left= 0.03 inch, Gap-Right= 0.03 inch, Friction= 0.80,
Gaps setting= Weightless

From A29 to A06, DY= -0.10 ft, DZ= -3.50 ft, L= 3.50 ft Run

POINT DATA:
A29, Coordinates, X= 26.26 ft, Y= 687.96 ft, Z= -50.17 ft

SUPPORT DATA:
A29, Guide, Support Id= A29 1, Connected to Ground, Comp.Wt = 0.000 lb, Stiffness= RIGID,
Gap-Down= 0.00 inch, Gap-Above= 0.83 inch, Gap-Left= 0.83 inch, Gap-Right= 0.83 inch, Friction= 0.80,
Gaps setting= Weightless

From A06 to A30, DX= 3.50 ft, DY= -0.10 ft, L= 3.50 ft Bend

COMPONENT DATA (Bend, TIP= A06, Near= A06 N, Far= A06 F):
Elbow, Radius= 36.00 inch, Bend angle= 89.95 deg, End flanges= 0, Flex= Auto, SIFI= 1.00, SIFO= 1.00

POINT DATA:
A06, Coordinates, X= 26.26 ft, Y= 687.86 ft, Z= -53.67 ft
A06 N, Coordinates, X= 26.26 ft, Y= 687.95 ft, Z= -50.67 ft
A06 F, Coordinates, X= 29.26 ft, Y= 687.77 ft, Z= -53.67 ft

From A30 to A31, DX= 2.76 ft, DY= -0.08 ft, L= 2.76 ft Run

POINT DATA:
A30, Coordinates, X= 29.76 ft, Y= 687.76 ft, Z= -53.67 ft

SUPPORT DATA:
A30, Guide, Support Id= A30 1, Connected to Ground, Comp.Wt = 0.000 lb, Stiffness= RIGID,
Gap-Down= 0.00 inch, Gap-Above= 0.83 inch, Gap-Left= 0.83 inch, Gap-Right= 0.83 inch, Friction= 0.80,
Gaps setting= Weightless

From A31 to A07, DX= 3.50 ft, DY= -0.10 ft, L= 3.50 ft Run

POINT DATA:
A31, Coordinates, X= 32.52 ft, Y= 687.68 ft, Z= -53.67 ft

SUPPORT DATA:
A31, Guide, Support Id= A31 1, Connected to Ground, Comp.Wt = 0.000 lb, Stiffness= RIGID,
Gap-Down= 0.00 inch, Gap-Above= 0.83 inch, Gap-Left= 0.83 inch, Gap-Right= 0.83 inch, Friction= 0.80,
Gaps setting= Weightless

From A07 to A32, DY= -0.11 ft, DZ= -3.50 ft, L= 3.50 ft Bend

COMPONENT DATA (Bend, TIP= A07, Near= A07 N, Far= A07 F):
Elbow, Radius= 36.00 inch, Bend angle= 89.95 deg, End flanges= 0, Flex= Auto, SIFI= 1.00, SIFO= 1.00

POINT DATA:
A07, Coordinates, X= 36.02 ft, Y= 687.58 ft, Z= -53.67 ft

C O M P O N E N T D A T A L I S T I N G

A07 N, Coordinates, X= 33.02 ft, Y= 687.67 ft, Z= -53.67 ft
A07 F, Coordinates, X= 36.02 ft, Y= 687.49 ft, Z= -56.67 ft

From A32 to A33, DY= -0.27 ft, DZ= -9.00 ft, L= 9.00 ft Run

POINT DATA:
A32, Coordinates, X= 36.02 ft, Y= 687.47 ft, Z= -57.17 ft

SUPPORT DATA:
A32, Guide, Support Id= A32 1, Connected to Ground, Comp.Wt = 0.000 lb, Stiffness= RIGID,
Gap-Down= 0.00 inch, Gap-Above= 0.83 inch, Gap-Left= 0.83 inch, Gap-Right= 0.83 inch, Friction= 0.80,
Gaps setting= Weightless

From A33 to A34, DY= -0.27 ft, DZ= -9.00 ft, L= 9.00 ft Run

POINT DATA:
A33, Coordinates, X= 36.02 ft, Y= 687.20 ft, Z= -66.17 ft

SUPPORT DATA:
A33, Guide, Support Id= A33 2, Connected to Ground, Comp.Wt = 0.000 lb, Stiffness= RIGID,
Gap-Down= 0.00 inch, Gap-Above= 0.06 inch, Gap-Left= 0.03 inch, Gap-Right= 0.03 inch, Friction= 0.80,
Gaps setting= Weightless

From A34 to A35, DY= -0.27 ft, DZ= -9.00 ft, L= 9.00 ft Run

POINT DATA:
A34, Coordinates, X= 36.02 ft, Y= 686.93 ft, Z= -75.17 ft

SUPPORT DATA:
A34, Guide, Support Id= A34 2, Connected to Ground, Comp.Wt = 0.000 lb, Stiffness= RIGID,
Gap-Down= 0.00 inch, Gap-Above= 0.06 inch, Gap-Left= 0.03 inch, Gap-Right= 0.03 inch, Friction= 0.80,
Gaps setting= Weightless

From A35 to A36, DY= -0.28 ft, DZ= -9.00 ft, L= 9.00 ft Run

POINT DATA:
A35, Coordinates, X= 36.02 ft, Y= 686.66 ft, Z= -84.17 ft

SUPPORT DATA:
A35, Guide, Support Id= A35 2, Connected to Ground, Comp.Wt = 0.000 lb, Stiffness= RIGID,
Gap-Down= 0.00 inch, Gap-Above= 0.06 inch, Gap-Left= 0.03 inch, Gap-Right= 0.03 inch, Friction= 0.80,
Gaps setting= Weightless

From A36 to A37, DY= -0.08 ft, DZ= -2.68 ft, L= 2.68 ft Run

POINT DATA:
A36, Coordinates, X= 36.02 ft, Y= 686.38 ft, Z= -93.17 ft

SUPPORT DATA:
A36, Guide, Support Id= A36 2, Connected to Ground, Comp.Wt = 0.000 lb, Stiffness= RIGID,

C O M P O N E N T D A T A L I S T I N G

```
  Gap-Down= 0.00 inch, Gap-Above= 0.06 inch, Gap-Left= 0.03 inch, Gap-Right= 0.03 inch, Friction= 0.80,
  Gaps setting= Weightless

 ------------------------------------------------------------------------------
 From A37 to A38, DY= -0.27 ft, DZ= -8.99 ft, L= 8.99 ft                  Run

 POINT DATA:
   A37, Coordinates, X= 36.02 ft, Y= 686.30 ft, Z= -95.85 ft

 SUPPORT DATA:
   A37, Guide, Support Id= A37  2, Connected to Ground, Comp.Wt = 0.000 lb, Stiffness= RIGID,
   Gap-Down= 0.00 inch, Gap-Above= 0.06 inch, Gap-Left= 0.03 inch, Gap-Right= 0.03 inch, Friction= 0.80,
   Gaps setting= Weightless

 ------------------------------------------------------------------------------
 From A38 to A08, DY= -0.11 ft, DZ= -3.50 ft, L= 3.50 ft                  Run

 POINT DATA:
   A38, Coordinates, X= 36.02 ft, Y= 686.03 ft, Z= -104.84 ft

 SUPPORT DATA:
   A38, Guide, Support Id= A38  1, Connected to Ground, Comp.Wt = 0.000 lb, Stiffness= RIGID,
   Gap-Down= 0.00 inch, Gap-Above= 0.83 inch, Gap-Left= 0.83 inch, Gap-Right= 0.83 inch, Friction= 0.80,
   Gaps setting= Weightless

 ------------------------------------------------------------------------------
 From A08 to A39, DX= -3.50 ft, DY= -0.09 ft, L= 3.50 ft                  Bend

 COMPONENT DATA (Bend, TIP= A08, Near= A08 N, Far= A08 F):
   Elbow, Radius= 36.00 inch, Bend angle= 89.95 deg, End flanges= 0, Flex= Auto, SIFI= 1.00, SIFO= 1.00

 POINT DATA:
   A08, Coordinates, X= 36.02 ft, Y= 685.92 ft, Z= -108.34 ft
   A08 N, Coordinates, X= 36.02 ft, Y= 686.01 ft, Z= -105.34 ft
   A08 F, Coordinates, X= 33.02 ft, Y= 685.84 ft, Z= -108.34 ft

 ------------------------------------------------------------------------------
 From A39 to A40, DX= -4.00 ft, DY= -0.10 ft, L= 4.00 ft                  Run

 POINT DATA:
   A39, Coordinates, X= 32.52 ft, Y= 685.83 ft, Z= -108.34 ft

 SUPPORT DATA:
   A39, Guide, Support Id= A39  1, Connected to Ground, Comp.Wt = 0.000 lb, Stiffness= RIGID,
   Gap-Down= 0.00 inch, Gap-Above= 0.83 inch, Gap-Left= 0.83 inch, Gap-Right= 0.83 inch, Friction= 0.80,
   Gaps setting= Weightless

 ------------------------------------------------------------------------------
 From A40 to A09, DX= -3.50 ft, DY= -0.09 ft, L= 3.50 ft                  Run

 POINT DATA:
   A40, Coordinates, X= 28.52 ft, Y= 685.73 ft, Z= -108.34 ft

 SUPPORT DATA:
   A40, Guide, Support Id= A40  1, Connected to Ground, Comp.Wt = 0.000 lb, Stiffness= RIGID,
```

C O M P O N E N T D A T A L I S T I N G

```
  Gap-Down= 0.00 inch, Gap-Above= 0.83 inch, Gap-Left= 0.83 inch, Gap-Right= 0.83 inch, Friction= 0.80,
  Gaps setting= Weightless

 ------------------------------------------------------------------------------
 From A09 to A41, DY= -0.03 ft, DZ= -3.50 ft, L= 3.50 ft                  Bend

 COMPONENT DATA (Bend, TIP= A09, Near= A09 N, Far= A09 F):
   Elbow, Radius= 36.00 inch, Bend angle= 89.99 deg, End flanges= 0, Flex= Auto, SIFI= 1.00, SIFO= 1.00

 POINT DATA:
   A09, Coordinates, X= 25.02 ft, Y= 685.64 ft, Z= -108.34 ft
   A09 N, Coordinates, X= 28.02 ft, Y= 685.72 ft, Z= -108.34 ft
   A09 F, Coordinates, X= 25.02 ft, Y= 685.61 ft, Z= -111.34 ft

 ------------------------------------------------------------------------------
 From A41 to A42, DY= -0.07 ft, DZ= -9.00 ft, L= 9.00 ft                  Run

 POINT DATA:
   A41, Coordinates, X= 25.02 ft, Y= 685.61 ft, Z= -111.84 ft

 SUPPORT DATA:
   A41, Guide, Support Id= A41  1, Connected to Ground, Comp.Wt = 0.000 lb, Stiffness= RIGID,
   Gap-Down= 0.00 inch, Gap-Above= 0.83 inch, Gap-Left= 0.83 inch, Gap-Right= 0.83 inch, Friction= 0.80,
   Gaps setting= Weightless

 ------------------------------------------------------------------------------
 From A42 to A43, DY= -0.07 ft, DZ= -9.00 ft, L= 9.00 ft                  Run

 POINT DATA:
   A42, Coordinates, X= 25.02 ft, Y= 685.54 ft, Z= -120.84 ft

 SUPPORT DATA:
   A42, Guide, Support Id= A42  2, Connected to Ground, Comp.Wt = 0.000 lb, Stiffness= RIGID,
   Gap-Down= 0.00 inch, Gap-Above= 0.06 inch, Gap-Left= 0.03 inch, Gap-Right= 0.03 inch, Friction= 0.80,
   Gaps setting= Weightless

 ------------------------------------------------------------------------------
 From A43 to A44, DY= -0.07 ft, DZ= -9.00 ft, L= 9.00 ft                  Run

 POINT DATA:
   A43, Coordinates, X= 25.02 ft, Y= 685.47 ft, Z= -129.84 ft

 SUPPORT DATA:
   A43, Guide, Support Id= A43  2, Connected to Ground, Comp.Wt = 0.000 lb, Stiffness= RIGID,
   Gap-Down= 0.00 inch, Gap-Above= 0.06 inch, Gap-Left= 0.03 inch, Gap-Right= 0.03 inch, Friction= 0.80,
   Gaps setting= Weightless

 ------------------------------------------------------------------------------
 From A44 to A45, DY= -0.07 ft, DZ= -9.00 ft, L= 9.00 ft                  Run

 POINT DATA:
   A44, Coordinates, X= 25.02 ft, Y= 685.40 ft, Z= -138.84 ft

 SUPPORT DATA:
   A44, Guide, Support Id= A44  2, Connected to Ground, Comp.Wt = 0.000 lb, Stiffness= RIGID,
```

C O M P O N E N T D A T A L I S T I N G

Gap-Down= 0.00 inch, Gap-Above= 0.06 inch, Gap-Left= 0.03 inch, Gap-Right= 0.03 inch, Friction= 0.80,
Gaps setting= Weightless

From A45 to A46, DY= -0.07 ft, DZ= -9.00 ft, L= 9.00 ft Run

POINT DATA:
A45, Coordinates, X= 25.02 ft, Y= 685.33 ft, Z= -147.84 ft

SUPPORT DATA:
A45, Guide, Support Id= A45 2, Connected to Ground, Comp.Wt = 0.000 lb, Stiffness= RIGID,
Gap-Down= 0.00 inch, Gap-Above= 0.06 inch, Gap-Left= 0.03 inch, Gap-Right= 0.03 inch, Friction= 0.80,
Gaps setting= Weightless

From A46 to A47, DY= -0.07 ft, DZ= -9.00 ft, L= 9.00 ft Run

POINT DATA:
A46, Coordinates, X= 25.02 ft, Y= 685.26 ft, Z= -156.84 ft

SUPPORT DATA:
A46, Guide, Support Id= A46 2, Connected to Ground, Comp.Wt = 0.000 lb, Stiffness= RIGID,
Gap-Down= 0.00 inch, Gap-Above= 0.06 inch, Gap-Left= 0.03 inch, Gap-Right= 0.03 inch, Friction= 0.80,
Gaps setting= Weightless

From A47 to A48, DY= -0.07 ft, DZ= -9.00 ft, L= 9.00 ft Run

POINT DATA:
A47, Coordinates, X= 25.02 ft, Y= 685.19 ft, Z= -165.84 ft

SUPPORT DATA:
A47, Guide, Support Id= A47 2, Connected to Ground, Comp.Wt = 0.000 lb, Stiffness= RIGID,
Gap-Down= 0.00 inch, Gap-Above= 0.06 inch, Gap-Left= 0.03 inch, Gap-Right= 0.03 inch, Friction= 0.80,
Gaps setting= Weightless

From A48 to A49, DY= -0.07 ft, DZ= -9.00 ft, L= 9.00 ft Run

POINT DATA:
A48, Coordinates, X= 25.02 ft, Y= 685.12 ft, Z= -174.84 ft

SUPPORT DATA:
A48, Guide, Support Id= A48 2, Connected to Ground, Comp.Wt = 0.000 lb, Stiffness= RIGID,
Gap-Down= 0.00 inch, Gap-Above= 0.06 inch, Gap-Left= 0.03 inch, Gap-Right= 0.03 inch, Friction= 0.80,
Gaps setting= Weightless

From A49 to A50, DX= 0 ft, DY= -0.03 ft, DZ= -3.83 ft, L= 3.83 ft Run

POINT DATA:
A49, Coordinates, X= 25.02 ft, Y= 685.05 ft, Z= -183.84 ft

SUPPORT DATA:
A49, Guide, Support Id= A49 2, Connected to Ground, Comp.Wt = 0.000 lb, Stiffness= RIGID,

C O M P O N E N T D A T A L I S T I N G

Gap-Down= 0.00 inch, Gap-Above= 0.06 inch, Gap-Left= 0.03 inch, Gap-Right= 0.03 inch, Friction= 0.80,
Gaps setting= Weightless

From A50 to A51, DY= -0.07 ft, DZ= -9.00 ft, L= 9.00 ft Run

POINT DATA:
A50, Coordinates, X= 25.02 ft, Y= 685.02 ft, Z= -187.67 ft

SUPPORT DATA:
A50, Guide, Support Id= A50 2, Connected to Ground, Comp.Wt = 0.000 lb, Stiffness= RIGID,
Gap-Down= 0.00 inch, Gap-Above= 0.06 inch, Gap-Left= 0.03 inch, Gap-Right= 0.03 inch, Friction= 0.80,
Gaps setting= Weightless

From A51 to A10, DY= -0.03 ft, DZ= -3.50 ft, L= 3.50 ft Run

POINT DATA:
A51, Coordinates, X= 25.02 ft, Y= 684.95 ft, Z= -196.67 ft

SUPPORT DATA:
A51, Guide, Support Id= A51 1, Connected to Ground, Comp.Wt = 0.000 lb, Stiffness= RIGID,
Gap-Down= 0.00 inch, Gap-Above= 0.83 inch, Gap-Left= 0.83 inch, Gap-Right= 0.83 inch, Friction= 0.80,
Gaps setting= Weightless

From A10 to A52, DX= 3.50 ft, DY= -0.03 ft, L= 3.50 ft Bend

COMPONENT DATA (Bend, TIP= A10, Near= A10 N, Far= A10 F):
Elbow, Radius= 36.00 inch, Bend angle= 90.00 deg, End flanges= 0, Flex= Auto, SIFI= 1.00, SIFO= 1.00

POINT DATA:
A10, Coordinates, X= 25.02 ft, Y= 684.92 ft, Z= -200.17 ft
A10 N, Coordinates, X= 25.02 ft, Y= 684.95 ft, Z= -197.17 ft
A10 F, Coordinates, X= 28.02 ft, Y= 684.89 ft, Z= -200.17 ft

From A52 to A53, DX= 6.91 ft, DY= -0.05 ft, L= 6.91 ft Run

POINT DATA:
A52, Coordinates, X= 28.52 ft, Y= 684.89 ft, Z= -200.17 ft

SUPPORT DATA:
A52, Guide, Support Id= A52 1, Connected to Ground, Comp.Wt = 0.000 lb, Stiffness= RIGID,
Gap-Down= 0.00 inch, Gap-Above= 0.83 inch, Gap-Left= 0.83 inch, Gap-Right= 0.83 inch, Friction= 0.80,
Gaps setting= Weightless

From A53 to A11, DX= 3.50 ft, DY= -0.02 ft, L= 3.50 ft Run

POINT DATA:
A53, Coordinates, X= 35.43 ft, Y= 684.84 ft, Z= -200.17 ft

SUPPORT DATA:
A53, Guide, Support Id= A53 1, Connected to Ground, Comp.Wt = 0.000 lb, Stiffness= RIGID,

C O M P O N E N T D A T A L I S T I N G

```
  Gap-Down= 0.00 inch, Gap-Above= 0.83 inch, Gap-Left= 0.83 inch, Gap-Right= 0.83 inch, Friction= 0.80,
  Gaps setting= Weightless

 ------------------------------------------------------------------------------
 From A11 to A54, DY= -0.03 ft, DZ= -3.50 ft, L= 3.50 ft                  Bend

 COMPONENT DATA (Bend, TIP= A11, Near= A11 N, Far= A11 F):
   Elbow, Radius= 36.00 inch, Bend angle= 90.00 deg, End flanges= 0, Flex= Auto, SIFI= 1.00, SIFO= 1.00

 POINT DATA:
   A11, Coordinates, X= 38.93 ft, Y= 684.82 ft, Z= -200.17 ft
   A11 N, Coordinates, X= 35.93 ft, Y= 684.84 ft, Z= -200.17 ft
   A11 F, Coordinates, X= 38.93 ft, Y= 684.79 ft, Z= -203.17 ft

 ------------------------------------------------------------------------------
 From A54 to A55, DY= -0.07 ft, DZ= -9.00 ft, L= 9.00 ft                  Run

 POINT DATA:
   A54, Coordinates, X= 38.93 ft, Y= 684.79 ft, Z= -203.67 ft

 SUPPORT DATA:
   A54, Guide, Support Id= A54  1, Connected to Ground, Comp.Wt = 0.000 lb, Stiffness= RIGID,
   Gap-Down= 0.00 inch, Gap-Above= 0.83 inch, Gap-Left= 0.83 inch, Gap-Right= 0.83 inch, Friction= 0.80,
   Gaps setting= Weightless

 ------------------------------------------------------------------------------
 From A55 to A56, DY= -0.07 ft, DZ= -9.00 ft, L= 9.00 ft                  Run

 POINT DATA:
   A55, Coordinates, X= 38.93 ft, Y= 684.72 ft, Z= -212.67 ft

 SUPPORT DATA:
   A55, Guide, Support Id= A55  1, Connected to Ground, Comp.Wt = 0.000 lb, Stiffness= RIGID,
   Gap-Down= 0.00 inch, Gap-Above= 0.06 inch, Gap-Left= 0.03 inch, Gap-Right= 0.03 inch, Friction= 0.80,
   Gaps setting= Weightless

 ------------------------------------------------------------------------------
 From A56 to A57, DY= -0.07 ft, DZ= -9.00 ft, L= 9.00 ft                  Run

 POINT DATA:
   A56, Coordinates, X= 38.93 ft, Y= 684.65 ft, Z= -221.67 ft

 SUPPORT DATA:
   A56, Guide, Support Id= A56  1, Connected to Ground, Comp.Wt = 0.000 lb, Stiffness= RIGID,
   Gap-Down= 0.00 inch, Gap-Above= 0.06 inch, Gap-Left= 0.03 inch, Gap-Right= 0.03 inch, Friction= 0.80,
   Gaps setting= Weightless

 ------------------------------------------------------------------------------
 From A57 to A58, DY= -0.07 ft, DZ= -9.00 ft, L= 9.00 ft                  Run

 POINT DATA:
   A57, Coordinates, X= 38.93 ft, Y= 684.58 ft, Z= -230.67 ft

 SUPPORT DATA:
   A57, Guide, Support Id= A57  1, Connected to Ground, Comp.Wt = 0.000 lb, Stiffness= RIGID,
```

C O M P O N E N T D A T A L I S T I N G

Gap-Down= 0.00 inch, Gap-Above= 0.06 inch, Gap-Left= 0.03 inch, Gap-Right= 0.03 inch, Friction= 0.80,
Gaps setting= Weightless

From A58 to A59, DY= -0.07 ft, DZ= -9.00 ft, L= 9.00 ft Run

POINT DATA:
A58, Coordinates, X= 38.93 ft, Y= 684.51 ft, Z= -239.67 ft

SUPPORT DATA:
A58, Guide, Support Id= A58 1, Connected to Ground, Comp.Wt = 0.000 lb, Stiffness= RIGID,
Gap-Down= 0.00 inch, Gap-Above= 0.06 inch, Gap-Left= 0.03 inch, Gap-Right= 0.03 inch, Friction= 0.80,
Gaps setting= Weightless

From A59 to A60, DY= -0.07 ft, DZ= -9.00 ft, L= 9.00 ft Run

POINT DATA:
A59, Coordinates, X= 38.93 ft, Y= 684.44 ft, Z= -248.67 ft

SUPPORT DATA:
A59, Guide, Support Id= A59 1, Connected to Ground, Comp.Wt = 0.000 lb, Stiffness= RIGID,
Gap-Down= 0.00 inch, Gap-Above= 0.06 inch, Gap-Left= 0.03 inch, Gap-Right= 0.03 inch, Friction= 0.80,
Gaps setting= Weightless

From A60 to A61, DX= 0 ft, DY= -0.06 ft, DZ= -8.40 ft, L= 8.40 ft Run

POINT DATA:
A60, Coordinates, X= 38.93 ft, Y= 684.37 ft, Z= -257.67 ft

SUPPORT DATA:
A60, Guide, Support Id= A60 1, Connected to Ground, Comp.Wt = 0.000 lb, Stiffness= RIGID,
Gap-Down= 0.00 inch, Gap-Above= 0.06 inch, Gap-Left= 0.03 inch, Gap-Right= 0.03 inch, Friction= 0.80,
Gaps setting= Weightless

From A61 to A62, DY= -0.06 ft, DZ= -9.00 ft, L= 9.00 ft Run

POINT DATA:
A61, Coordinates, X= 38.93 ft, Y= 684.31 ft, Z= -266.07 ft

SUPPORT DATA:
A61, Guide, Support Id= A61 1, Connected to Ground, Comp.Wt = 0.000 lb, Stiffness= RIGID,
Gap-Down= 0.00 inch, Gap-Above= 0.06 inch, Gap-Left= 0.03 inch, Gap-Right= 0.03 inch, Friction= 0.80,
Gaps setting= Weightless

From A62 to A12, DY= -0.03 ft, DZ= -3.50 ft, L= 3.50 ft Run

POINT DATA:
A62, Coordinates, X= 38.93 ft, Y= 684.25 ft, Z= -275.07 ft

SUPPORT DATA:
A62, Guide, Support Id= A62 1, Connected to Ground, Comp.Wt = 0.000 lb, Stiffness= RIGID,

C O M P O N E N T D A T A L I S T I N G

```
  Gap-Down= 0.00 inch, Gap-Above= 0.83 inch, Gap-Left= 0.83 inch, Gap-Right= 0.83 inch, Friction= 0.80,
  Gaps setting= Weightless

 ------------------------------------------------------------------------------
 From A12 to A63, DX= -3.50 ft, DY= -0.03 ft, L= 3.50 ft                  Bend

 COMPONENT DATA (Bend, TIP= A12, Near= A12 N, Far= A12 F):
   Elbow, Radius= 36.00 inch, Bend angle= 90.00 deg, End flanges= 0, Flex= Auto, SIFI= 1.00, SIFO= 1.00

 POINT DATA:
   A12, Coordinates, X= 38.93 ft, Y= 684.22 ft, Z= -278.57 ft
   A12 N, Coordinates, X= 38.93 ft, Y= 684.25 ft, Z= -275.57 ft
   A12 F, Coordinates, X= 35.93 ft, Y= 684.19 ft, Z= -278.57 ft

 ------------------------------------------------------------------------------
 From A63 to A64, DX= -9.00 ft, DY= -0.07 ft, L= 9.00 ft                  Run

 POINT DATA:
   A63, Coordinates, X= 35.43 ft, Y= 684.19 ft, Z= -278.57 ft

 SUPPORT DATA:
   A63, Guide, Support Id= A63  1, Connected to Ground, Comp.Wt = 0.000 lb, Stiffness= RIGID,
   Gap-Down= 0.00 inch, Gap-Above= 0.83 inch, Gap-Left= 0.83 inch, Gap-Right= 0.83 inch, Friction= 0.80,
   Gaps setting= Weightless

 ------------------------------------------------------------------------------
 From A64 to A65, DX= -9.00 ft, DY= -0.07 ft, L= 9.00 ft                  Run

 POINT DATA:
   A64, Coordinates, X= 26.43 ft, Y= 684.12 ft, Z= -278.57 ft

 SUPPORT DATA:
   A64, Guide, Support Id= A64  2, Connected to Ground, Comp.Wt = 0.000 lb, Stiffness= RIGID,
   Gap-Down= 0.00 inch, Gap-Above= 0.06 inch, Gap-Left= 0.03 inch, Gap-Right= 0.03 inch, Friction= 0.80,
   Gaps setting= Weightless

 ------------------------------------------------------------------------------
 From A65 to A66, DX= -9.00 ft, DY= -0.06 ft, L= 9.00 ft                  Run

 POINT DATA:
   A65, Coordinates, X= 17.43 ft, Y= 684.05 ft, Z= -278.57 ft

 SUPPORT DATA:
   A65, Guide, Support Id= A65  2, Connected to Ground, Comp.Wt = 0.000 lb, Stiffness= RIGID,
   Gap-Down= 0.00 inch, Gap-Above= 0.06 inch, Gap-Left= 0.03 inch, Gap-Right= 0.03 inch, Friction= 0.80,
   Gaps setting= Weightless

 ------------------------------------------------------------------------------
 From A66 to A67, DX= -9.00 ft, DY= -0.07 ft, L= 9.00 ft                  Run

 POINT DATA:
   A66, Coordinates, X= 8.43 ft, Y= 683.99 ft, Z= -278.57 ft

 SUPPORT DATA:
   A66, Guide, Support Id= A66  2, Connected to Ground, Comp.Wt = 0.000 lb, Stiffness= RIGID,
```

C O M P O N E N T D A T A L I S T I N G

Gap-Down= 0.00 inch, Gap-Above= 0.06 inch, Gap-Left= 0.03 inch, Gap-Right= 0.03 inch, Friction= 0.80,
Gaps setting= Weightless

From A67 to A68, DX= -8.78 ft, DY= -0.06 ft, L= 8.78 ft Run

POINT DATA:
A67, Coordinates, X= -0.57 ft, Y= 683.92 ft, Z= -278.57 ft

SUPPORT DATA:
A67, Guide, Support Id= A67 2, Connected to Ground, Comp.Wt = 0.000 lb, Stiffness= RIGID,
Gap-Down= 0.00 inch, Gap-Above= 0.06 inch, Gap-Left= 0.03 inch, Gap-Right= 0.03 inch, Friction= 0.80,
Gaps setting= Weightless

From A68 to A69, DX= -9.00 ft, DY= -0.06 ft, L= 9.00 ft Run

POINT DATA:
A68, Coordinates, X= -9.35 ft, Y= 683.86 ft, Z= -278.57 ft

SUPPORT DATA:
A68, Guide, Support Id= A68 2, Connected to Ground, Comp.Wt = 0.000 lb, Stiffness= RIGID,
Gap-Down= 0.00 inch, Gap-Above= 0.06 inch, Gap-Left= 0.03 inch, Gap-Right= 0.03 inch, Friction= 0.80,
Gaps setting= Weightless

From A69 to A13, DX= -3.50 ft, DY= -0.03 ft, L= 3.50 ft Run

POINT DATA:
A69, Coordinates, X= -18.35 ft, Y= 683.80 ft, Z= -278.57 ft

SUPPORT DATA:
A69, Guide, Support Id= A69 1, Connected to Ground, Comp.Wt = 0.000 lb, Stiffness= RIGID,
Gap-Down= 0.00 inch, Gap-Above= 0.83 inch, Gap-Left= 0.83 inch, Gap-Right= 0.83 inch, Friction= 0.80,
Gaps setting= Weightless

From A13 to A70, DY= -0.02 ft, DZ= -3.50 ft, L= 3.50 ft Bend

COMPONENT DATA (Bend, TIP= A13, Near= A13 N, Far= A13 F):
Elbow, Radius= 36.00 inch, Bend angle= 90.00 deg, End flanges= 0, Flex= Auto, SIFI= 1.00, SIFO= 1.00

POINT DATA:
A13, Coordinates, X= -21.85 ft, Y= 683.77 ft, Z= -278.57 ft
A13 N, Coordinates, X= -18.85 ft, Y= 683.80 ft, Z= -278.57 ft
A13 F, Coordinates, X= -21.85 ft, Y= 683.75 ft, Z= -281.57 ft

---

From A70 to A71, DY= -0.05 ft, DZ= -9.00 ft, L= 9.00 ft Run

POINT DATA:
A70, Coordinates, X= -21.85 ft, Y= 683.75 ft, Z= -282.07 ft

SUPPORT DATA:
A70, Guide, Support Id= A70 1, Connected to Ground, Comp.Wt = 0.000 lb, Stiffness= RIGID,

C O M P O N E N T D A T A L I S T I N G

```
  Gap-Down= 0.00 inch, Gap-Above= 0.83 inch, Gap-Left= 0.83 inch, Gap-Right= 0.83 inch, Friction= 0.80,
  Gaps setting= Weightless

 ------------------------------------------------------------------------------
 From A71 to A72, DY= -0.05 ft, DZ= -7.59 ft, L= 7.59 ft                  Run

 POINT DATA:
   A71, Coordinates, X= -21.85 ft, Y= 683.70 ft, Z= -291.07 ft

 SUPPORT DATA:
   A71, Guide, Support Id= A71  2, Connected to Ground, Comp.Wt = 0.000 lb, Stiffness= RIGID,
   Gap-Down= 0.00 inch, Gap-Above= 0.06 inch, Gap-Left= 0.03 inch, Gap-Right= 0.03 inch, Friction= 0.80,
   Gaps setting= Weightless

 ------------------------------------------------------------------------------
 From A72 to A14, DY= -0.02 ft, DZ= -3.50 ft, L= 3.50 ft                  Run

 POINT DATA:
   A72, Coordinates, X= -21.85 ft, Y= 683.65 ft, Z= -298.66 ft

 SUPPORT DATA:
   A72, Guide, Support Id= A72  1, Connected to Ground, Comp.Wt = 0.000 lb, Stiffness= RIGID,
   Gap-Down= 0.00 inch, Gap-Above= 0.83 inch, Gap-Left= 0.83 inch, Gap-Right= 0.83 inch, Friction= 0.80,
   Gaps setting= Weightless

 ------------------------------------------------------------------------------
 From A14 to A73, DX= 3.50 ft, DY= -0.06 ft, L= 3.50 ft                   Bend

 COMPONENT DATA (Bend, TIP= A14, Near= A14 N, Far= A14 F):
   Elbow, Radius= 36.00 inch, Bend angle= 89.99 deg, End flanges= 0, Flex= Auto, SIFI= 1.00, SIFO= 1.00

 POINT DATA:
   A14, Coordinates, X= -21.85 ft, Y= 683.63 ft, Z= -302.16 ft
   A14 N, Coordinates, X= -21.85 ft, Y= 683.65 ft, Z= -299.16 ft
   A14 F, Coordinates, X= -18.85 ft, Y= 683.58 ft, Z= -302.16 ft

 ------------------------------------------------------------------------------
 From A73 to A15, DX= 2.96 ft, DY= -0.05 ft, L= 2.96 ft                   Run

 POINT DATA:
   A73, Coordinates, X= -18.35 ft, Y= 683.57 ft, Z= -302.16 ft

 SUPPORT DATA:
   A73, Guide, Support Id= A73  1, Connected to Ground, Comp.Wt = 0.000 lb, Stiffness= RIGID,
   Gap-Down= 0.00 inch, Gap-Above= 0.83 inch, Gap-Left= 0.83 inch, Gap-Right= 0.83 inch, Friction= 0.80,
   Gaps setting= Weightless

 ------------------------------------------------------------------------------
 From A15 to A16, DX= 1.00 ft                                             Bend

 COMPONENT DATA (Bend, TIP= A15, Near= A15 N, Far= A15 F):
   Elbow, Radius= 36.00 inch, Bend angle= 0.97 deg, End flanges= 0, Flex= Auto, SIFI= 1.00, SIFO= 1.00

 POINT DATA:
   A15, Coordinates, X= -15.39 ft, Y= 683.52 ft, Z= -302.16 ft
```

C O M P O N E N T D A T A L I S T I N G

A15 N, Coordinates, X= -15.42 ft, Y= 683.52 ft, Z= -302.16 ft
A15 F, Coordinates, X= -15.36 ft, Y= 683.52 ft, Z= -302.16 ft

---

From A16 to A17, DX= 1.00 ft Run

POINT DATA:
A16, Coordinates, X= -14.39 ft, Y= 683.52 ft, Z= -302.16 ft

From A17 to A18, DX= 0.55 ft Run

POINT DATA:
A17, Coordinates, X= -13.39 ft, Y= 683.52 ft, Z= -302.16 ft

From A18 to A19, DX= 0.19 ft Run

POINT DATA:
A18, Coordinates, X= -12.84 ft, Y= 683.52 ft, Z= -302.16 ft
A19, Coordinates, X= -12.65 ft, Y= 683.52 ft, Z= -302.16 ft

SUPPORT DATA:
A18, Anchor, Connected to: Ground, KTX= Rigid, KTY= Rigid, KTZ= Rigid, KRX= Rigid, KRY= Rigid, KRZ= Rigid

---

*** SEGMENT B , LINE # RIGID

From B00 to B01, DY= -0.25 ft Run

PIPE DATA:
Pipe Id= 3SCH40, Composition= Austenitic Stainless, Nom Size= 3.000, OD= 3.500 inch, Wall Thk= 0.216 inch,
Mill= 0.027 inch, Pipe Density= 501.00 lb/cu.ft, Pipe Unit Wgt= 7.75 lb/ft

POINT DATA:
B00, Coordinates, X= 0.00 ft, Y= 693.93 ft, Z= 2.00 ft

From B01 to B02, DY= -0.61 ft Run

POINT DATA:
B01, Coordinates, X= 0.00 ft, Y= 693.68 ft, Z= 2.00 ft

SUPPORT DATA:
B01, V-Stop, Support Id= B01 1, Connected to Ground, Comp.Wt = 0.000 lb, Gap-Below= 0.00 inch,
Gap-Above= 100.00 inch, Friction= 0.00, Gaps setting= Weightless
B01, Guide, Support Id= B01 2, Connected to Ground, Comp.Wt = 0.000 lb, Stiffness= RIGID, Gap -Z= 0.00 inch,
Gap +Z= 0.00 inch, Gap -X= 1.00 inch, Gap +X= 1.00 inch, Friction= 0.80, Gaps setting= Weightless

---

From B02 to B03, DX= 1.46 ft Bend

COMPONENT DATA (Bend, TIP= B02, Near= B02 N, Far= B02 F):

C O M P O N E N T D A T A L I S T I N G

Long Elbow, Radius= 4.50 inch, Bend angle= 90.00 deg, End flanges= 0, Flex= Auto, SIFI= 1.78, SIFO= 1.48

POINT DATA:
B02, Coordinates, X= 0.00 ft, Y= 693.07 ft, Z= 2.00 ft
B02 N, Coordinates, X= 0.00 ft, Y= 693.44 ft, Z= 2.00 ft
B02 F, Coordinates, X= 0.38 ft, Y= 693.07 ft, Z= 2.00 ft

From B03 to B04, DX= 2.00 ft Run

POINT DATA:
B03, Coordinates, X= 1.46 ft, Y= 693.07 ft, Z= 2.00 ft

SUPPORT DATA:
B03, Anchor, Connected to: Ground, KTX= Rigid, KTY= Rigid, KTZ= Rigid, KRX= Rigid, KRY= Rigid, KRZ= Rigid

---

From B04 to B22, DX= 2.50 ft Run

POINT DATA:
B04, Coordinates, X= 3.46 ft, Y= 693.07 ft, Z= 2.00 ft

From B22 to B06, DX= 0.50 ft Run

POINT DATA:
B22, Coordinates, X= 5.96 ft, Y= 693.07 ft, Z= 2.00 ft

SUPPORT DATA:
B22, Guide, Support Id= B22 2, Connected to Ground, Comp.Wt = 0.000 lb, Stiffness= RIGID,
Gap-Down= 0.00 inch, Gap-Above= 1.28 inch, Gap-Left= 1.28 inch, Gap-Right= 1.28 inch, Friction= 0.80,
Gaps setting= Weightless

From B06 to B23, DX= 11.15 ft, DY= -1.83 ft, L= 11.30 ft Bend

COMPONENT DATA (Bend, TIP= B06, Near= B06 N, Far= B06 F):
Elbow, Radius= 36.00 inch, Bend angle= 9.32 deg, End flanges= 0, Flex= Auto, SIFI= 1.00, SIFO= 1.00

POINT DATA:
B06, Coordinates, X= 6.46 ft, Y= 693.07 ft, Z= 2.00 ft
B06 N, Coordinates, X= 6.22 ft, Y= 693.07 ft, Z= 2.00 ft
B06 F, Coordinates, X= 6.70 ft, Y= 693.03 ft, Z= 2.00 ft

From B23 to B24, DX= 7.70 ft, DY= -1.26 ft, L= 7.80 ft Run

POINT DATA:
B23, Coordinates, X= 17.61 ft, Y= 691.24 ft, Z= 2.00 ft

SUPPORT DATA:
B23, Guide, Support Id= B23 2, Connected to Ground, Comp.Wt = 0.000 lb, Stiffness= RIGID,
Gap-Down= 0.00 inch, Gap-Above= 0.31 inch, Gap-Left= 0.16 inch, Gap-Right= 0.16 inch, Friction= 0.80,
Gaps setting= Weightless

C O M P O N E N T D A T A L I S T I N G

From B24 to B09, DX= 3.45 ft, DY= -0.57 ft, L= 3.50 ft Run

POINT DATA:
B24, Coordinates, X= 25.31 ft, Y= 689.98 ft, Z= 2.00 ft

SUPPORT DATA:
B24, Guide, Support Id= B24 2, Connected to Ground, Comp.Wt = 0.000 lb, Stiffness= RIGID,
Gap-Down= 0.00 inch, Gap-Above= 1.28 inch, Gap-Left= 1.28 inch, Gap-Right= 1.28 inch, Friction= 0.80,
Gaps setting= Weightless

From B09 to B25, DY= -0.10 ft, DZ= -3.50 ft, L= 3.50 ft Bend

COMPONENT DATA (Bend, TIP= B09, Near= B09 N, Far= B09 F):
Elbow, Radius= 36.00 inch, Bend angle= 89.73 deg, End flanges= 0, Flex= Auto, SIFI= 1.00, SIFO= 1.00

POINT DATA:
B09, Coordinates, X= 28.76 ft, Y= 689.41 ft, Z= 2.00 ft
B09 N, Coordinates, X= 25.81 ft, Y= 689.90 ft, Z= 2.00 ft
B09 F, Coordinates, X= 28.76 ft, Y= 689.32 ft, Z= -0.98 ft

From B25 to B26, DY= -0.26 ft, DZ= -9.00 ft, L= 9.00 ft Run

POINT DATA:
B25, Coordinates, X= 28.76 ft, Y= 689.31 ft, Z= -1.50 ft

SUPPORT DATA:
B25, Guide, Support Id= B25 2, Connected to Ground, Comp.Wt = 0.000 lb, Stiffness= RIGID,
Gap-Down= 0.00 inch, Gap-Above= 1.28 inch, Gap-Left= 1.28 inch, Gap-Right= 1.28 inch, Friction= 0.80,
Gaps setting= Weightless

From B26 to B28, DY= -0.26 ft, DZ= -9.00 ft, L= 9.00 ft Run

POINT DATA:
B26, Coordinates, X= 28.76 ft, Y= 689.05 ft, Z= -10.50 ft

SUPPORT DATA:
B26, Guide, Support Id= B26 1, Connected to Ground, Comp.Wt = 0.000 lb, Stiffness= RIGID,
Gap-Down= 0.00 inch, Gap-Above= 0.31 inch, Gap-Left= 0.16 inch, Gap-Right= 0.16 inch, Friction= 0.80,
Gaps setting= Weightless

From B28 to B29, DY= -0.26 ft, DZ= -9.00 ft, L= 9.00 ft Run

POINT DATA:
B28, Coordinates, X= 28.76 ft, Y= 688.79 ft, Z= -19.50 ft

SUPPORT DATA:
B28, Guide, Support Id= B28 1, Connected to Ground, Comp.Wt = 0.000 lb, Stiffness= RIGID,
Gap-Down= 0.00 inch, Gap-Above= 0.31 inch, Gap-Left= 0.16 inch, Gap-Right= 0.16 inch, Friction= 0.80,
Gaps setting= Weightless

C O M P O N E N T D A T A L I S T I N G

From B29 to B31, DY= -0.27 ft, DZ= -9.00 ft, L= 9.00 ft Run

POINT DATA:
B29, Coordinates, X= 28.76 ft, Y= 688.53 ft, Z= -28.50 ft

SUPPORT DATA:
B29, Guide, Support Id= B29 1, Connected to Ground, Comp.Wt = 0.000 lb, Stiffness= RIGID,
Gap-Down= 0.00 inch, Gap-Above= 0.31 inch, Gap-Left= 0.16 inch, Gap-Right= 0.16 inch, Friction= 0.80,
Gaps setting= Weightless

From B31 to B32, DY= -0.30 ft, DZ= -10.17 ft, L= 10.17 ft Run

POINT DATA:
B31, Coordinates, X= 28.76 ft, Y= 688.26 ft, Z= -37.50 ft

SUPPORT DATA:
B31, Guide, Support Id= B31 1, Connected to Ground, Comp.Wt = 0.000 lb, Stiffness= RIGID,
Gap-Down= 0.00 inch, Gap-Above= 0.31 inch, Gap-Left= 0.16 inch, Gap-Right= 0.16 inch, Friction= 0.80,
Gaps setting= Weightless

From B32 to B16, DY= -0.10 ft, DZ= -3.50 ft, L= 3.50 ft Run

POINT DATA:
B32, Coordinates, X= 28.76 ft, Y= 687.96 ft, Z= -47.67 ft

SUPPORT DATA:
B32, Guide, Support Id= B32 2, Connected to Ground, Comp.Wt = 0.000 lb, Stiffness= RIGID,
Gap-Down= 0.00 inch, Gap-Above= 1.28 inch, Gap-Left= 1.28 inch, Gap-Right= 1.28 inch, Friction= 0.80,
Gaps setting= Weightless

From B16 to B33, DX= 3.50 ft, DY= -0.08 ft, L= 3.50 ft Bend

COMPONENT DATA (Bend, TIP= B16, Near= B16 N, Far= B16 F):
Elbow, Radius= 36.00 inch, Bend angle= 89.96 deg, End flanges= 0, Flex= Auto, SIFI= 1.00, SIFO= 1.00

POINT DATA:
B16, Coordinates, X= 28.76 ft, Y= 687.86 ft, Z= -51.17 ft
B16 N, Coordinates, X= 28.76 ft, Y= 687.95 ft, Z= -48.17 ft
B16 F, Coordinates, X= 31.76 ft, Y= 687.79 ft, Z= -51.17 ft

From B33 to B34, DX= 2.76 ft, DY= -0.06 ft, L= 2.76 ft Run

POINT DATA:
B33, Coordinates, X= 32.26 ft, Y= 687.78 ft, Z= -51.17 ft

SUPPORT DATA:
B33, Guide, Support Id= B33 2, Connected to Ground, Comp.Wt = 0.000 lb, Stiffness= RIGID,
Gap-Down= 0.00 inch, Gap-Above= 1.28 inch, Gap-Left= 1.28 inch, Gap-Right= 1.28 inch, Friction= 0.80,
Gaps setting= Weightless

C O M P O N E N T D A T A L I S T I N G

From B34 to B19, DX= 3.50 ft, DY= -0.08 ft, L= 3.50 ft Run

POINT DATA:
B34, Coordinates, X= 35.02 ft, Y= 687.72 ft, Z= -51.17 ft

SUPPORT DATA:
B34, Guide, Support Id= B34 2, Connected to Ground, Comp.Wt = 0.000 lb, Stiffness= RIGID,
Gap-Down= 0.00 inch, Gap-Above= 1.28 inch, Gap-Left= 1.28 inch, Gap-Right= 1.28 inch, Friction= 0.80,
Gaps setting= Weightless

From B19 to B35, DY= -0.10 ft, DZ= -3.50 ft, L= 3.50 ft Bend

COMPONENT DATA (Bend, TIP= B19, Near= B19 N, Far= B19 F):
Elbow, Radius= 36.00 inch, Bend angle= 89.96 deg, End flanges= 0, Flex= Auto, SIFI= 1.00, SIFO= 1.00

POINT DATA:
B19, Coordinates, X= 38.52 ft, Y= 687.64 ft, Z= -51.17 ft
B19 N, Coordinates, X= 35.52 ft, Y= 687.71 ft, Z= -51.17 ft
B19 F, Coordinates, X= 38.52 ft, Y= 687.55 ft, Z= -54.17 ft

From B35 to B36, DY= -0.25 ft, DZ= -9.00 ft, L= 9.00 ft Run

POINT DATA:
B35, Coordinates, X= 38.52 ft, Y= 687.54 ft, Z= -54.67 ft

SUPPORT DATA:
B35, Guide, Support Id= B35 2, Connected to Ground, Comp.Wt = 0.000 lb, Stiffness= RIGID,
Gap-Down= 0.00 inch, Gap-Above= 1.28 inch, Gap-Left= 1.28 inch, Gap-Right= 1.28 inch, Friction= 0.80,
Gaps setting= Weightless

From B36 to B37, DY= -0.25 ft, DZ= -9.00 ft, L= 9.00 ft Run

POINT DATA:
B36, Coordinates, X= 38.52 ft, Y= 687.29 ft, Z= -63.67 ft

SUPPORT DATA:
B36, Guide, Support Id= B36 2, Connected to Ground, Comp.Wt = 0.000 lb, Stiffness= RIGID,
Gap-Down= 0.00 inch, Gap-Above= 0.31 inch, Gap-Left= 0.16 inch, Gap-Right= 0.16 inch, Friction= 0.80,
Gaps setting= Weightless

From B37 to B38, DY= -0.25 ft, DZ= -9.00 ft, L= 9.00 ft Run

POINT DATA:
B37, Coordinates, X= 38.52 ft, Y= 687.04 ft, Z= -72.67 ft

SUPPORT DATA:
B37, Guide, Support Id= B37 2, Connected to Ground, Comp.Wt = 0.000 lb, Stiffness= RIGID,
Gap-Down= 0.00 inch, Gap-Above= 0.31 inch, Gap-Left= 0.16 inch, Gap-Right= 0.16 inch, Friction= 0.80,
Gaps setting= Weightless

C O M P O N E N T D A T A L I S T I N G

From B38 to B39, DY= -0.25 ft, DZ= -9.00 ft, L= 9.00 ft Run

POINT DATA:
B38, Coordinates, X= 38.52 ft, Y= 686.79 ft, Z= -81.67 ft

SUPPORT DATA:
B38, Guide, Support Id= B38 2, Connected to Ground, Comp.Wt = 0.000 lb, Stiffness= RIGID,
Gap-Down= 0.00 inch, Gap-Above= 0.31 inch, Gap-Left= 0.16 inch, Gap-Right= 0.16 inch, Friction= 0.80,
Gaps setting= Weightless

From B39 to B40, DY= -0.22 ft, DZ= -7.67 ft, L= 7.67 ft Run

POINT DATA:
B39, Coordinates, X= 38.52 ft, Y= 686.54 ft, Z= -90.67 ft

SUPPORT DATA:
B39, Guide, Support Id= B39 2, Connected to Ground, Comp.Wt = 0.000 lb, Stiffness= RIGID,
Gap-Down= 0.00 inch, Gap-Above= 0.31 inch, Gap-Left= 0.16 inch, Gap-Right= 0.16 inch, Friction= 0.80,
Gaps setting= Weightless

From B40 to B42, DY= -0.25 ft, DZ= -9.00 ft, L= 9.00 ft Run

POINT DATA:
B40, Coordinates, X= 38.52 ft, Y= 686.32 ft, Z= -98.34 ft

SUPPORT DATA:
B40, Guide, Support Id= B40 1, Connected to Ground, Comp.Wt = 0.000 lb, Stiffness= RIGID,
Gap-Down= 0.00 inch, Gap-Above= 0.31 inch, Gap-Left= 0.16 inch, Gap-Right= 0.16 inch, Friction= 0.80,
Gaps setting= Weightless

From B42 to B27, DY= -0.10 ft, DZ= -3.50 ft, L= 3.50 ft Run

POINT DATA:
B42, Coordinates, X= 38.52 ft, Y= 686.07 ft, Z= -107.34 ft

SUPPORT DATA:
B42, Guide, Support Id= B42 1, Connected to Ground, Comp.Wt = 0.000 lb, Stiffness= RIGID,
Gap-Down= 0.00 inch, Gap-Above= 1.28 inch, Gap-Left= 1.28 inch, Gap-Right= 1.28 inch, Friction= 0.80,
Gaps setting= Weightless

From B27 to B43, DX= -3.50 ft, DY= -0.09 ft, L= 3.50 ft Bend

COMPONENT DATA (Bend, TIP= B27, Near= B27 N, Far= B27 F):
Elbow, Radius= 36.00 inch, Bend angle= 89.96 deg, End flanges= 0, Flex= Auto, SIFI= 1.00, SIFO= 1.00

POINT DATA:
B27, Coordinates, X= 38.52 ft, Y= 685.97 ft, Z= -110.84 ft
B27 N, Coordinates, X= 38.52 ft, Y= 686.06 ft, Z= -107.84 ft
B27 F, Coordinates, X= 35.52 ft, Y= 685.89 ft, Z= -110.84 ft

C O M P O N E N T D A T A L I S T I N G

From B43 to B45, DX= -4.00 ft, DY= -0.10 ft, L= 4.00 ft Run

POINT DATA:
B43, Coordinates, X= 35.02 ft, Y= 685.88 ft, Z= -110.84 ft

SUPPORT DATA:
B43, Guide, Support Id= B43 1, Connected to Ground, Comp.Wt = 0.000 lb, Stiffness= RIGID,
Gap-Down= 0.00 inch, Gap-Above= 1.28 inch, Gap-Left= 1.28 inch, Gap-Right= 1.28 inch, Friction= 0.80,
Gaps setting= Weightless

From B45 to B30, DX= -3.50 ft, DY= -0.08 ft, L= 3.50 ft Run

POINT DATA:
B45, Coordinates, X= 31.02 ft, Y= 685.78 ft, Z= -110.84 ft

SUPPORT DATA:
B45, Guide, Support Id= B45 1, Connected to Ground, Comp.Wt = 0.000 lb, Stiffness= RIGID,
Gap-Down= 0.00 inch, Gap-Above= 1.28 inch, Gap-Left= 1.28 inch, Gap-Right= 1.28 inch, Friction= 0.80,
Gaps setting= Weightless

From B30 to B46, DY= -0.03 ft, DZ= -3.50 ft, L= 3.50 ft Bend

COMPONENT DATA (Bend, TIP= B30, Near= B30 N, Far= B30 F):
Elbow, Radius= 36.00 inch, Bend angle= 89.99 deg, End flanges= 0, Flex= Auto, SIFI= 1.00, SIFO= 1.00

POINT DATA:
B30, Coordinates, X= 27.52 ft, Y= 685.70 ft, Z= -110.84 ft
B30 N, Coordinates, X= 30.52 ft, Y= 685.77 ft, Z= -110.84 ft
B30 F, Coordinates, X= 27.52 ft, Y= 685.67 ft, Z= -113.84 ft

From B46 to B47, DY= -0.08 ft, DZ= -9.00 ft, L= 9.00 ft Run

POINT DATA:
B46, Coordinates, X= 27.52 ft, Y= 685.67 ft, Z= -114.34 ft

SUPPORT DATA:
B46, Guide, Support Id= B46 2, Connected to Ground, Comp.Wt = 0.000 lb, Stiffness= RIGID,
Gap-Down= 0.00 inch, Gap-Above= 1.28 inch, Gap-Left= 1.28 inch, Gap-Right= 1.28 inch, Friction= 0.80,
Gaps setting= Weightless

From B47 to B48, DY= -0.08 ft, DZ= -9.00 ft, L= 9.00 ft Run

POINT DATA:
B47, Coordinates, X= 27.52 ft, Y= 685.59 ft, Z= -123.34 ft

SUPPORT DATA:
B47, Guide, Support Id= B47 2, Connected to Ground, Comp.Wt = 0.000 lb, Stiffness= RIGID,
Gap-Down= 0.00 inch, Gap-Above= 0.31 inch, Gap-Left= 0.16 inch, Gap-Right= 0.16 inch, Friction= 0.80,
Gaps setting= Weightless

C O M P O N E N T D A T A L I S T I N G

From B48 to B49, DY= -0.08 ft, DZ= -9.00 ft, L= 9.00 ft Run

POINT DATA:
B48, Coordinates, X= 27.52 ft, Y= 685.51 ft, Z= -132.34 ft

SUPPORT DATA:
B48, Guide, Support Id= B48 2, Connected to Ground, Comp.Wt = 0.000 lb, Stiffness= RIGID,
Gap-Down= 0.00 inch, Gap-Above= 0.31 inch, Gap-Left= 0.16 inch, Gap-Right= 0.16 inch, Friction= 0.80,
Gaps setting= Weightless

From B49 to B50, DY= -0.08 ft, DZ= -9.00 ft, L= 9.00 ft Run

POINT DATA:
B49, Coordinates, X= 27.52 ft, Y= 685.43 ft, Z= -141.34 ft

SUPPORT DATA:
B49, Guide, Support Id= B49 2, Connected to Ground, Comp.Wt = 0.000 lb, Stiffness= RIGID,
Gap-Down= 0.00 inch, Gap-Above= 0.31 inch, Gap-Left= 0.16 inch, Gap-Right= 0.16 inch, Friction= 0.80,
Gaps setting= Weightless

From B50 to B51, DY= -0.07 ft, DZ= -9.00 ft, L= 9.00 ft Run

POINT DATA:
B50, Coordinates, X= 27.52 ft, Y= 685.35 ft, Z= -150.34 ft

SUPPORT DATA:
B50, Guide, Support Id= B50 2, Connected to Ground, Comp.Wt = 0.000 lb, Stiffness= RIGID,
Gap-Down= 0.00 inch, Gap-Above= 0.31 inch, Gap-Left= 0.16 inch, Gap-Right= 0.16 inch, Friction= 0.80,
Gaps setting= Weightless

From B51 to B52, DY= -0.08 ft, DZ= -9.00 ft, L= 9.00 ft Run

POINT DATA:
B51, Coordinates, X= 27.52 ft, Y= 685.28 ft, Z= -159.34 ft

SUPPORT DATA:
B51, Guide, Support Id= B51 2, Connected to Ground, Comp.Wt = 0.000 lb, Stiffness= RIGID,
Gap-Down= 0.00 inch, Gap-Above= 0.31 inch, Gap-Left= 0.16 inch, Gap-Right= 0.16 inch, Friction= 0.80,
Gaps setting= Weightless

From B52 to B53, DY= -0.07 ft, DZ= -9.00 ft, L= 9.00 ft Run

POINT DATA:
B52, Coordinates, X= 27.52 ft, Y= 685.20 ft, Z= -168.34 ft

SUPPORT DATA:
B52, Guide, Support Id= B52 2, Connected to Ground, Comp.Wt = 0.000 lb, Stiffness= RIGID,
Gap-Down= 0.00 inch, Gap-Above= 0.31 inch, Gap-Left= 0.16 inch, Gap-Right= 0.16 inch, Friction= 0.80,
Gaps setting= Weightless

C O M P O N E N T D A T A L I S T I N G

From B53 to B54, DX= 0 ft, DY= -0.07 ft, DZ= -7.83 ft, L= 7.83 ft Run

POINT DATA:
B53, Coordinates, X= 27.52 ft, Y= 685.13 ft, Z= -177.34 ft

SUPPORT DATA:
B53, Guide, Support Id= B53 2, Connected to Ground, Comp.Wt = 0.000 lb, Stiffness= RIGID,
Gap-Down= 0.00 inch, Gap-Above= 0.31 inch, Gap-Left= 0.16 inch, Gap-Right= 0.16 inch, Friction= 0.80,
Gaps setting= Weightless

From B54 to B55, DY= -0.07 ft, DZ= -9.00 ft, L= 9.00 ft Run

POINT DATA:
B54, Coordinates, X= 27.52 ft, Y= 685.06 ft, Z= -185.17 ft

SUPPORT DATA:
B54, Guide, Support Id= B54 2, Connected to Ground, Comp.Wt = 0.000 lb, Stiffness= RIGID,
Gap-Down= 0.00 inch, Gap-Above= 0.31 inch, Gap-Left= 0.16 inch, Gap-Right= 0.16 inch, Friction= 0.80,
Gaps setting= Weightless

From B55 to B41, DY= -0.03 ft, DZ= -3.50 ft, L= 3.50 ft Run

POINT DATA:
B55, Coordinates, X= 27.52 ft, Y= 684.99 ft, Z= -194.17 ft

SUPPORT DATA:
B55, Guide, Support Id= B55 1, Connected to Ground, Comp.Wt = 0.000 lb, Stiffness= RIGID,
Gap-Down= 0.00 inch, Gap-Above= 1.28 inch, Gap-Left= 1.28 inch, Gap-Right= 1.28 inch, Friction= 0.80,
Gaps setting= Weightless

From B41 to B57, DX= 3.50 ft, DY= -0.02 ft, L= 3.50 ft Bend

COMPONENT DATA (Bend, TIP= B41, Near= B41 N, Far= B41 F):
Elbow, Radius= 36.00 inch, Bend angle= 90.00 deg, End flanges= 0, Flex= Auto, SIFI= 1.00, SIFO= 1.00

POINT DATA:
B41, Coordinates, X= 27.52 ft, Y= 684.96 ft, Z= -197.67 ft
B41 N, Coordinates, X= 27.52 ft, Y= 684.99 ft, Z= -194.67 ft
B41 F, Coordinates, X= 30.52 ft, Y= 684.94 ft, Z= -197.67 ft

From B57 to B58, DX= 6.91 ft, DY= -0.05 ft, L= 6.91 ft Run

POINT DATA:
B57, Coordinates, X= 31.02 ft, Y= 684.94 ft, Z= -197.67 ft

SUPPORT DATA:
B57, Guide, Support Id= B57 1, Connected to Ground, Comp.Wt = 0.000 lb, Stiffness= RIGID,
Gap-Down= 0.00 inch, Gap-Above= 1.28 inch, Gap-Left= 1.28 inch, Gap-Right= 1.28 inch, Friction= 0.80,
Gaps setting= Weightless

C O M P O N E N T D A T A L I S T I N G

From B58 to B44, DX= 3.50 ft, DY= -0.02 ft, L= 3.50 ft Run

POINT DATA:
B58, Coordinates, X= 37.93 ft, Y= 684.89 ft, Z= -197.67 ft

SUPPORT DATA:
B58, Guide, Support Id= B58 1, Connected to Ground, Comp.Wt = 0.000 lb, Stiffness= RIGID,
Gap-Down= 0.00 inch, Gap-Above= 1.28 inch, Gap-Left= 1.28 inch, Gap-Right= 1.28 inch, Friction= 0.80,
Gaps setting= Weightless

From B44 to B64, DY= -0.02 ft, DZ= -3.50 ft, L= 3.50 ft Bend

COMPONENT DATA (Bend, TIP= B44, Near= B44 N, Far= B44 F):
Elbow, Radius= 36.00 inch, Bend angle= 90.00 deg, End flanges= 0, Flex= Auto, SIFI= 1.00, SIFO= 1.00

POINT DATA:
B44, Coordinates, X= 41.43 ft, Y= 684.87 ft, Z= -197.67 ft
B44 N, Coordinates, X= 38.43 ft, Y= 684.89 ft, Z= -197.67 ft
B44 F, Coordinates, X= 41.43 ft, Y= 684.85 ft, Z= -200.67 ft

From B64 to B65, DY= -0.06 ft, DZ= -9.00 ft, L= 9.00 ft Run

POINT DATA:
B64, Coordinates, X= 41.43 ft, Y= 684.85 ft, Z= -201.17 ft

SUPPORT DATA:
B64, Guide, Support Id= B64 1, Connected to Ground, Comp.Wt = 0.000 lb, Stiffness= RIGID,
Gap-Down= 0.00 inch, Gap-Above= 1.28 inch, Gap-Left= 1.28 inch, Gap-Right= 1.28 inch, Friction= 0.80,
Gaps setting= Weightless

From B65 to B66, DY= -0.06 ft, DZ= -9.00 ft, L= 9.00 ft Run

POINT DATA:
B65, Coordinates, X= 41.43 ft, Y= 684.79 ft, Z= -210.17 ft

SUPPORT DATA:
B65, Guide, Support Id= B65 1, Connected to Ground, Comp.Wt = 0.000 lb, Stiffness= RIGID,
Gap-Down= 0.00 inch, Gap-Above= 0.31 inch, Gap-Left= 0.16 inch, Gap-Right= 0.16 inch, Friction= 0.80,
Gaps setting= Weightless

From B66 to B67, DY= -0.06 ft, DZ= -9.00 ft, L= 9.00 ft Run

POINT DATA:
B66, Coordinates, X= 41.43 ft, Y= 684.73 ft, Z= -219.17 ft

SUPPORT DATA:
B66, Guide, Support Id= B66 1, Connected to Ground, Comp.Wt = 0.000 lb, Stiffness= RIGID,
Gap-Down= 0.00 inch, Gap-Above= 0.31 inch, Gap-Left= 0.16 inch, Gap-Right= 0.16 inch, Friction= 0.80,
Gaps setting= Weightless

C O M P O N E N T D A T A L I S T I N G

From B67 to B68, DY= -0.06 ft, DZ= -9.00 ft, L= 9.00 ft Run

POINT DATA:
B67, Coordinates, X= 41.43 ft, Y= 684.67 ft, Z= -228.17 ft

SUPPORT DATA:
B67, Guide, Support Id= B67 1, Connected to Ground, Comp.Wt = 0.000 lb, Stiffness= RIGID,
Gap-Down= 0.00 inch, Gap-Above= 0.31 inch, Gap-Left= 0.16 inch, Gap-Right= 0.16 inch, Friction= 0.80,
Gaps setting= Weightless

From B68 to B69, DY= -0.06 ft, DZ= -9.00 ft, L= 9.00 ft Run

POINT DATA:
B68, Coordinates, X= 41.43 ft, Y= 684.61 ft, Z= -237.17 ft

SUPPORT DATA:
B68, Guide, Support Id= B68 1, Connected to Ground, Comp.Wt = 0.000 lb, Stiffness= RIGID,
Gap-Down= 0.00 inch, Gap-Above= 0.31 inch, Gap-Left= 0.16 inch, Gap-Right= 0.16 inch, Friction= 0.80,
Gaps setting= Weightless

From B69 to B70, DY= -0.06 ft, DZ= -9.00 ft, L= 9.00 ft Run

POINT DATA:
B69, Coordinates, X= 41.43 ft, Y= 684.55 ft, Z= -246.17 ft

SUPPORT DATA:
B69, Guide, Support Id= B69 1, Connected to Ground, Comp.Wt = 0.000 lb, Stiffness= RIGID,
Gap-Down= 0.00 inch, Gap-Above= 0.31 inch, Gap-Left= 0.16 inch, Gap-Right= 0.16 inch, Friction= 0.80,
Gaps setting= Weightless

From B70 to B71, DY= -0.06 ft, DZ= -9.00 ft, L= 9.00 ft Run

POINT DATA:
B70, Coordinates, X= 41.43 ft, Y= 684.49 ft, Z= -255.17 ft

SUPPORT DATA:
B70, Guide, Support Id= B70 1, Connected to Ground, Comp.Wt = 0.000 lb, Stiffness= RIGID,
Gap-Down= 0.00 inch, Gap-Above= 0.31 inch, Gap-Left= 0.16 inch, Gap-Right= 0.16 inch, Friction= 0.80,
Gaps setting= Weightless

From B71 to B72, DY= -0.05 ft, DZ= -9.00 ft, L= 9.00 ft Run

POINT DATA:
B71, Coordinates, X= 41.43 ft, Y= 684.43 ft, Z= -264.17 ft

SUPPORT DATA:
B71, Guide, Support Id= B71 1, Connected to Ground, Comp.Wt = 0.000 lb, Stiffness= RIGID,
Gap-Down= 0.00 inch, Gap-Above= 0.31 inch, Gap-Left= 0.16 inch, Gap-Right= 0.16 inch, Friction= 0.80,
Gaps setting= Weightless

C O M P O N E N T D A T A L I S T I N G

From B72 to B73, DX= 0 ft, DY= -0.03 ft, DZ= -4.83 ft, L= 4.83 ft Run

POINT DATA:
B72, Coordinates, X= 41.43 ft, Y= 684.38 ft, Z= -273.17 ft

SUPPORT DATA:
B72, Guide, Support Id= B72 1, Connected to Ground, Comp.Wt = 0.000 lb, Stiffness= RIGID,
Gap-Down= 0.00 inch, Gap-Above= 0.31 inch, Gap-Left= 0.16 inch, Gap-Right= 0.16 inch, Friction= 0.80,
Gaps setting= Weightless

From B73 to B74, DY= -0.06 ft, DZ= -9.00 ft, L= 9.00 ft Run

POINT DATA:
B73, Coordinates, X= 41.43 ft, Y= 684.35 ft, Z= -278.00 ft

SUPPORT DATA:
B73, Guide, Support Id= B73 1, Connected to Ground, Comp.Wt = 0.000 lb, Stiffness= RIGID,
Gap-Down= 0.00 inch, Gap-Above= 0.31 inch, Gap-Left= 0.16 inch, Gap-Right= 0.16 inch, Friction= 0.80,
Gaps setting= Weightless

From B74 to B56, DY= -0.02 ft, DZ= -3.50 ft, L= 3.50 ft Run

POINT DATA:
B74, Coordinates, X= 41.43 ft, Y= 684.29 ft, Z= -287.00 ft

SUPPORT DATA:
B74, Guide, Support Id= B74 1, Connected to Ground, Comp.Wt = 0.000 lb, Stiffness= RIGID,
Gap-Down= 0.00 inch, Gap-Above= 1.28 inch, Gap-Left= 1.28 inch, Gap-Right= 1.28 inch, Friction= 0.80,
Gaps setting= Weightless

From B56 to B75, DX= -2.95 ft, DY= -0.03 ft, L= 2.95 ft Bend

COMPONENT DATA (Bend, TIP= B56, Near= B56 N, Far= B56 F):
Elbow, Radius= 30.00 inch, Bend angle= 90.00 deg, End flanges= 0, Flex= Auto, SIFI= 1.00, SIFO= 1.00

POINT DATA:
B56, Coordinates, X= 41.43 ft, Y= 684.27 ft, Z= -290.50 ft
B56 N, Coordinates, X= 41.43 ft, Y= 684.28 ft, Z= -288.00 ft
B56 F, Coordinates, X= 38.93 ft, Y= 684.24 ft, Z= -290.50 ft

From B75 to B20, DX= -2.94 ft, DY= -0.05 ft, L= 2.94 ft Run

POINT DATA:
B75, Coordinates, X= 38.48 ft, Y= 684.24 ft, Z= -290.50 ft

SUPPORT DATA:
B75, Guide, Support Id= B75 1, Connected to Ground, Comp.Wt = 0.000 lb, Stiffness= RIGID,
Gap-Down= 0.00 inch, Gap-Above= 1.28 inch, Gap-Left= 1.28 inch, Gap-Right= 1.28 inch, Friction= 0.80,
Gaps setting= Weightless

C O M P O N E N T D A T A L I S T I N G

From B20 to B77, DY= -0.06 ft, DZ= -3.17 ft, L= 3.17 ft Bend

COMPONENT DATA (Bend, TIP= B20, Near= B20 N, Far= B20 F):
Elbow, Radius= 30.00 inch, Bend angle= 89.98 deg, End flanges= 0, Flex= Auto, SIFI= 1.00, SIFO= 1.00

POINT DATA:
B20, Coordinates, X= 35.54 ft, Y= 684.19 ft, Z= -290.50 ft
B20 N, Coordinates, X= 38.04 ft, Y= 684.23 ft, Z= -290.50 ft
B20 F, Coordinates, X= 35.54 ft, Y= 684.14 ft, Z= -293.00 ft

From B77 to B21, DY= -0.06 ft, DZ= -3.16 ft, L= 3.16 ft Run

POINT DATA:
B77, Coordinates, X= 35.54 ft, Y= 684.13 ft, Z= -293.67 ft

SUPPORT DATA:
B77, Guide, Support Id= B77 1, Connected to Ground, Comp.Wt = 0.000 lb, Stiffness= RIGID,
Gap-Down= 0.00 inch, Gap-Above= 0.31 inch, Gap-Left= 0.16 inch, Gap-Right= 0.16 inch, Friction= 0.80,
Gaps setting= Weightless

From B21 to B59, DX= -4.85 ft, DY= -0.07 ft, L= 4.85 ft Bend

COMPONENT DATA (Bend, TIP= B21, Near= B21 N, Far= B21 F):
Elbow, Radius= 30.00 inch, Bend angle= 89.98 deg, End flanges= 0, Flex= Auto, SIFI= 1.00, SIFO= 1.00

POINT DATA:
B21, Coordinates, X= 35.54 ft, Y= 684.07 ft, Z= -296.83 ft
B21 N, Coordinates, X= 35.54 ft, Y= 684.12 ft, Z= -294.33 ft
B21 F, Coordinates, X= 33.04 ft, Y= 684.03 ft, Z= -296.83 ft

From B59 to B60, DX= -1.00 ft Bend

COMPONENT DATA (Bend, TIP= B59, Near= B59 N, Mid= B59 M, Far= B59 F):
Elbow, Radius= 36.00 inch, Bend angle= 0.83 deg, Mid point at 50.00 percent, End flanges= 0, Flex= Auto,
SIFI= 1.00, SIFO= 1.00

POINT DATA:
B59, Coordinates, X= 30.69 ft, Y= 684.00 ft, Z= -296.83 ft
B59 N, Coordinates, X= 30.71 ft, Y= 684.00 ft, Z= -296.83 ft
B59 M, Coordinates, X= 30.69 ft, Y= 684.00 ft, Z= -296.83 ft
B59 F, Coordinates, X= 30.67 ft, Y= 684.00 ft, Z= -296.83 ft

SUPPORT DATA:
B59 F, Guide, Support Id= B59 F1, Connected to Ground, Comp.Wt = 0.000 lb, Stiffness= RIGID,
Gap-Down= 0.00 inch, Gap-Above= 1.28 inch, Gap-Left= 1.28 inch, Gap-Right= 1.28 inch, Friction= 0.80,
Gaps setting= Weightless

From B60 to B61, DX= -1.00 ft Run

POINT DATA:

C O M P O N E N T D A T A L I S T I N G

B60, Coordinates, X= 29.69 ft, Y= 684.00 ft, Z= -296.83 ft

From B61 to B62, DX= -0.61 ft Run

POINT DATA:
B61, Coordinates, X= 28.69 ft, Y= 684.00 ft, Z= -296.83 ft

From B62 to B63, DX= -0.25 ft Run

POINT DATA:
B62, Coordinates, X= 28.08 ft, Y= 684.00 ft, Z= -296.83 ft
B63, Coordinates, X= 27.83 ft, Y= 684.00 ft, Z= -296.83 ft

SUPPORT DATA:
B62, Anchor, Connected to: Ground, KTX= Rigid, KTY= Rigid, KTZ= Rigid, KRX= Rigid, KRY= Rigid, KRZ= Rigid

---

*** SEGMENT C

From C00 to C01, DY= -0.19 ft Run

PIPE DATA:
Pipe Id= 2SCH40, Composition= Austenitic Stainless, Nom Size= 2.000, OD= 2.375 inch, Wall Thk= 0.154 inch,
Mill= 0.019 inch, Pipe Density= 501.00 lb/cu.ft, Pipe Unit Wgt= 3.74 lb/ft

POINT DATA:
C00, Coordinates, X= 0.00 ft, Y= 691.68 ft, Z= 1.00 ft

From C01 to C02, DY= -0.42 ft Run

POINT DATA:
C01, Coordinates, X= 0.00 ft, Y= 691.49 ft, Z= 1.00 ft

SUPPORT DATA:
C01, V-Stop, Support Id= C01 1, Connected to Ground, Comp.Wt = 0.000 lb, Gap-Below= 0.00 inch,
Gap-Above= 100.00 inch, Friction= 0.00, Gaps setting= Weightless
C01, Guide, Support Id= C01 2, Connected to Ground, Comp.Wt = 0.000 lb, Stiffness= RIGID, Gap -Z= 0.00 inch,
Gap +Z= 0.00 inch, Gap -X= 1.00 inch, Gap +X= 1.00 inch, Friction= 0.80, Gaps setting= Weightless

---

From C02 to C03, DX= 1.46 ft Bend

COMPONENT DATA (Bend, TIP= C02, Near= C02 N, Far= C02 F):
Long Elbow, Radius= 3.00 inch, Bend angle= 90.00 deg, End flanges= 0, Flex= Auto, SIFI= 1.73, SIFO= 1.44

POINT DATA:
C02, Coordinates, X= 0.00 ft, Y= 691.07 ft, Z= 1.00 ft
C02 N, Coordinates, X= 0.00 ft, Y= 691.32 ft, Z= 1.00 ft
C02 F, Coordinates, X= 0.25 ft, Y= 691.07 ft, Z= 1.00 ft

C O M P O N E N T D A T A L I S T I N G

```
 ------------------------------------------------------------------------------
 From C03 to C04, DX= 2.00 ft                                          Run

 POINT DATA:
   C03, Coordinates, X= 1.46 ft, Y= 691.07 ft, Z= 1.00 ft

 SUPPORT DATA:
   C03, Anchor, Connected to: Ground, KTX= Rigid, KTY= Rigid, KTZ= Rigid, KRX= Rigid, KRY= Rigid, KRZ= Rigid

 ------------------------------------------------------------------------------
 From C04 to C21, DX= 2.50 ft                                          Run

 POINT DATA:
   C04, Coordinates, X= 3.46 ft, Y= 691.07 ft, Z= 1.00 ft

 ------------------------------------------------------------------------------
 From C21 to C06, DX= 0.50 ft                                          Run

 POINT DATA:
   C21, Coordinates, X= 5.96 ft, Y= 691.07 ft, Z= 1.00 ft

 SUPPORT DATA:
   C21, Guide, Support Id= C21  2, Connected to Ground, Comp.Wt = 0.000 lb, Stiffness= RIGID,
   Gap-Down= 0.00 inch, Gap-Above= 0.83 inch, Gap-Left= 0.83 inch, Gap-Right= 0.83 inch, Friction= 0.80,
   Gaps setting= Weightless

 ------------------------------------------------------------------------------
 From C06 to C22, DX= 10.49 ft, DY= -0.85 ft, L= 10.52 ft              Bend

 COMPONENT DATA (Bend, TIP= C06, Near= C06 N, Far= C06 F):
   Elbow, Radius= 36.00 inch, Bend angle= 4.63 deg, End flanges= 0, Flex= Auto, SIFI= 1.00, SIFO= 1.00

 POINT DATA:
   C06, Coordinates, X= 6.46 ft, Y= 691.07 ft, Z= 1.00 ft
   C06 N, Coordinates, X= 6.34 ft, Y= 691.07 ft, Z= 1.00 ft
   C06 F, Coordinates, X= 6.58 ft, Y= 691.06 ft, Z= 1.00 ft

 ------------------------------------------------------------------------------
 From C22 to C23, DX= 6.99 ft, DY= -0.57 ft, L= 7.01 ft                Run

 POINT DATA:
   C22, Coordinates, X= 16.95 ft, Y= 690.22 ft, Z= 1.00 ft

 SUPPORT DATA:
   C22, Guide, Support Id= C22  2, Connected to Ground, Comp.Wt = 0.000 lb, Stiffness= RIGID,
   Gap-Down= 0.00 inch, Gap-Above= 0.06 inch, Gap-Left= 0.03 inch, Gap-Right= 0.03 inch, Friction= 0.80,
   Gaps setting= Weightless

 ------------------------------------------------------------------------------
 From C23 to C09, DX= 3.49 ft, DY= -0.28 ft, L= 3.50 ft                Run

 POINT DATA:
   C23, Coordinates, X= 23.94 ft, Y= 689.65 ft, Z= 1.00 ft

 SUPPORT DATA:
```

C O M P O N E N T D A T A L I S T I N G

C23, Guide, Support Id= C23 2, Connected to Ground, Comp.Wt = 0.000 lb, Stiffness= RIGID,
Gap-Down= 0.00 inch, Gap-Above= 0.83 inch, Gap-Left= 0.83 inch, Gap-Right= 0.83 inch, Friction= 0.80,
Gaps setting= Weightless

From C09 to C24, DY= -0.10 ft, DZ= -3.50 ft, L= 3.50 ft Bend

COMPONENT DATA (Bend, TIP= C09, Near= C09 N, Far= C09 F):
Elbow, Radius= 36.00 inch, Bend angle= 89.87 deg, End flanges= 0, Flex= Auto, SIFI= 1.00, SIFO= 1.00

POINT DATA:
C09, Coordinates, X= 27.43 ft, Y= 689.37 ft, Z= 1.00 ft
C09 N, Coordinates, X= 24.45 ft, Y= 689.61 ft, Z= 1.00 ft
C09 F, Coordinates, X= 27.43 ft, Y= 689.28 ft, Z= -1.99 ft

From C24 to C25, DY= -0.26 ft, DZ= -9.00 ft, L= 9.00 ft Run

POINT DATA:
C24, Coordinates, X= 27.43 ft, Y= 689.27 ft, Z= -2.50 ft

SUPPORT DATA:
C24, Guide, Support Id= C24 2, Connected to Ground, Comp.Wt = 0.000 lb, Stiffness= RIGID,
Gap-Down= 0.00 inch, Gap-Above= 0.83 inch, Gap-Left= 0.83 inch, Gap-Right= 0.83 inch, Friction= 0.80,
Gaps setting= Weightless

From C25 to C26, DY= -0.26 ft, DZ= -9.00 ft, L= 9.00 ft Run

POINT DATA:
C25, Coordinates, X= 27.43 ft, Y= 689.01 ft, Z= -11.50 ft

SUPPORT DATA:
C25, Guide, Support Id= C25 2, Connected to Ground, Comp.Wt = 0.000 lb, Stiffness= RIGID,
Gap-Down= 0.00 inch, Gap-Above= 0.06 inch, Gap-Left= 0.03 inch, Gap-Right= 0.03 inch, Friction= 0.80,
Gaps setting= Weightless

From C26 to C28, DY= -0.26 ft, DZ= -9.00 ft, L= 9.00 ft Run

POINT DATA:
C26, Coordinates, X= 27.43 ft, Y= 688.75 ft, Z= -20.50 ft

SUPPORT DATA:
C26, Guide, Support Id= C26 2, Connected to Ground, Comp.Wt = 0.000 lb, Stiffness= RIGID,
Gap-Down= 0.00 inch, Gap-Above= 0.06 inch, Gap-Left= 0.03 inch, Gap-Right= 0.03 inch, Friction= 0.80,
Gaps setting= Weightless

From C28 to C29, DY= -0.27 ft, DZ= -9.00 ft, L= 9.00 ft Run

POINT DATA:
C28, Coordinates, X= 27.43 ft, Y= 688.49 ft, Z= -29.50 ft

SUPPORT DATA:

C O M P O N E N T D A T A L I S T I N G

C28, Guide, Support Id= C28 2, Connected to Ground, Comp.Wt = 0.000 lb, Stiffness= RIGID,
Gap-Down= 0.00 inch, Gap-Above= 0.06 inch, Gap-Left= 0.03 inch, Gap-Right= 0.03 inch, Friction= 0.80,
Gaps setting= Weightless

From C29 to C31, DY= -0.31 ft, DZ= -10.50 ft, L= 10.50 ft Run

POINT DATA:
C29, Coordinates, X= 27.43 ft, Y= 688.22 ft, Z= -38.50 ft

SUPPORT DATA:
C29, Guide, Support Id= C29 2, Connected to Ground, Comp.Wt = 0.000 lb, Stiffness= RIGID,
Gap-Down= 0.00 inch, Gap-Above= 0.06 inch, Gap-Left= 0.03 inch, Gap-Right= 0.03 inch, Friction= 0.80,
Gaps setting= Weightless

From C31 to C16, DY= -0.10 ft, DZ= -3.50 ft, L= 3.50 ft Run

POINT DATA:
C31, Coordinates, X= 27.43 ft, Y= 687.91 ft, Z= -49.00 ft

SUPPORT DATA:
C31, Guide, Support Id= C31 2, Connected to Ground, Comp.Wt = 0.000 lb, Stiffness= RIGID,
Gap-Down= 0.00 inch, Gap-Above= 0.83 inch, Gap-Left= 0.83 inch, Gap-Right= 0.83 inch, Friction= 0.80,
Gaps setting= Weightless

From C16 to C32, DX= 3.50 ft, DY= -0.08 ft, L= 3.50 ft Bend

COMPONENT DATA (Bend, TIP= C16, Near= C16 N, Far= C16 F):
Elbow, Radius= 36.00 inch, Bend angle= 89.96 deg, End flanges= 0, Flex= Auto, SIFI= 1.00, SIFO= 1.00

POINT DATA:
C16, Coordinates, X= 27.43 ft, Y= 687.81 ft, Z= -52.50 ft
C16 N, Coordinates, X= 27.43 ft, Y= 687.90 ft, Z= -49.50 ft
C16 F, Coordinates, X= 30.43 ft, Y= 687.74 ft, Z= -52.50 ft

From C32 to C33, DX= 2.76 ft, DY= -0.07 ft, L= 2.76 ft Run

POINT DATA:
C32, Coordinates, X= 30.93 ft, Y= 687.73 ft, Z= -52.50 ft

SUPPORT DATA:
C32, Guide, Support Id= C32 2, Connected to Ground, Comp.Wt = 0.000 lb, Stiffness= RIGID,
Gap-Down= 0.00 inch, Gap-Above= 0.83 inch, Gap-Left= 0.83 inch, Gap-Right= 0.83 inch, Friction= 0.80,
Gaps setting= Weightless

From C33 to C19, DX= 3.50 ft, DY= -0.08 ft, L= 3.50 ft Run

POINT DATA:
C33, Coordinates, X= 33.69 ft, Y= 687.66 ft, Z= -52.50 ft

SUPPORT DATA:

C O M P O N E N T D A T A L I S T I N G

C33, Guide, Support Id= C33 2, Connected to Ground, Comp.Wt = 0.000 lb, Stiffness= RIGID,
Gap-Down= 0.00 inch, Gap-Above= 0.83 inch, Gap-Left= 0.83 inch, Gap-Right= 0.83 inch, Friction= 0.80,
Gaps setting= Weightless

From C19 to C34, DY= -0.10 ft, DZ= -3.50 ft, L= 3.50 ft Bend

COMPONENT DATA (Bend, TIP= C19, Near= C19 N, Far= C19 F):
Elbow, Radius= 36.00 inch, Bend angle= 89.96 deg, End flanges= 0, Flex= Auto, SIFI= 1.00, SIFO= 1.00

POINT DATA:
C19, Coordinates, X= 37.19 ft, Y= 687.58 ft, Z= -52.50 ft
C19 N, Coordinates, X= 34.19 ft, Y= 687.65 ft, Z= -52.50 ft
C19 F, Coordinates, X= 37.19 ft, Y= 687.49 ft, Z= -55.50 ft

From C34 to C35, DY= -0.26 ft, DZ= -9.00 ft, L= 9.00 ft Run

POINT DATA:
C34, Coordinates, X= 37.19 ft, Y= 687.48 ft, Z= -56.00 ft

SUPPORT DATA:
C34, Guide, Support Id= C34 2, Connected to Ground, Comp.Wt = 0.000 lb, Stiffness= RIGID,
Gap-Down= 0.00 inch, Gap-Above= 0.83 inch, Gap-Left= 0.83 inch, Gap-Right= 0.83 inch, Friction= 0.80,
Gaps setting= Weightless

From C35 to C36, DY= -0.26 ft, DZ= -9.00 ft, L= 9.00 ft Run

POINT DATA:
C35, Coordinates, X= 37.19 ft, Y= 687.22 ft, Z= -65.00 ft

SUPPORT DATA:
C35, Guide, Support Id= C35 2, Connected to Ground, Comp.Wt = 0.000 lb, Stiffness= RIGID,
Gap-Down= 0.00 inch, Gap-Above= 0.06 inch, Gap-Left= 0.03 inch, Gap-Right= 0.03 inch, Friction= 0.80,
Gaps setting= Weightless

From C36 to C37, DY= -0.26 ft, DZ= -9.00 ft, L= 9.00 ft Run

POINT DATA:
C36, Coordinates, X= 37.19 ft, Y= 686.96 ft, Z= -74.00 ft

SUPPORT DATA:
C36, Guide, Support Id= C36 2, Connected to Ground, Comp.Wt = 0.000 lb, Stiffness= RIGID,
Gap-Down= 0.00 inch, Gap-Above= 0.06 inch, Gap-Left= 0.03 inch, Gap-Right= 0.03 inch, Friction= 0.80,
Gaps setting= Weightless

From C37 to C38, DY= -0.26 ft, DZ= -9.00 ft, L= 9.00 ft Run

POINT DATA:
C37, Coordinates, X= 37.19 ft, Y= 686.70 ft, Z= -83.00 ft

SUPPORT DATA:

C O M P O N E N T D A T A L I S T I N G

C37, Guide, Support Id= C37 2, Connected to Ground, Comp.Wt = 0.000 lb, Stiffness= RIGID,
Gap-Down= 0.00 inch, Gap-Above= 0.06 inch, Gap-Left= 0.03 inch, Gap-Right= 0.03 inch, Friction= 0.80,
Gaps setting= Weightless

From C38 to C39, DY= -0.15 ft, DZ= -5.01 ft, L= 5.01 ft Run

POINT DATA:
C38, Coordinates, X= 37.19 ft, Y= 686.44 ft, Z= -92.00 ft

SUPPORT DATA:
C38, Guide, Support Id= C38 2, Connected to Ground, Comp.Wt = 0.000 lb, Stiffness= RIGID,
Gap-Down= 0.00 inch, Gap-Above= 0.06 inch, Gap-Left= 0.03 inch, Gap-Right= 0.03 inch, Friction= 0.80,
Gaps setting= Weightless

From C39 to C40, DY= -0.27 ft, DZ= -8.99 ft, L= 8.99 ft Run

POINT DATA:
C39, Coordinates, X= 37.19 ft, Y= 686.29 ft, Z= -97.01 ft

SUPPORT DATA:
C39, Guide, Support Id= C39 2, Connected to Ground, Comp.Wt = 0.000 lb, Stiffness= RIGID,
Gap-Down= 0.00 inch, Gap-Above= 0.06 inch, Gap-Left= 0.03 inch, Gap-Right= 0.03 inch, Friction= 0.80,
Gaps setting= Weightless

From C40 to C27, DY= -0.10 ft, DZ= -3.50 ft, L= 3.50 ft Run

POINT DATA:
C40, Coordinates, X= 37.19 ft, Y= 686.02 ft, Z= -106.00 ft

SUPPORT DATA:
C40, Guide, Support Id= C40 2, Connected to Ground, Comp.Wt = 0.000 lb, Stiffness= RIGID,
Gap-Down= 0.00 inch, Gap-Above= 0.83 inch, Gap-Left= 0.83 inch, Gap-Right= 0.83 inch, Friction= 0.80,
Gaps setting= Weightless

From C27 to C42, DX= -3.50 ft, DY= -0.09 ft, L= 3.50 ft Bend

COMPONENT DATA (Bend, TIP= C27, Near= C27 N, Far= C27 F):
Elbow, Radius= 36.00 inch, Bend angle= 89.96 deg, End flanges= 0, Flex= Auto, SIFI= 1.00, SIFO= 1.00

POINT DATA:
C27, Coordinates, X= 37.19 ft, Y= 685.92 ft, Z= -109.50 ft
C27 N, Coordinates, X= 37.19 ft, Y= 686.01 ft, Z= -106.50 ft
C27 F, Coordinates, X= 34.19 ft, Y= 685.84 ft, Z= -109.50 ft

From C42 to C43, DX= -4.00 ft, DY= -0.10 ft, L= 4.00 ft Run

POINT DATA:
C42, Coordinates, X= 33.69 ft, Y= 685.83 ft, Z= -109.50 ft

SUPPORT DATA:

C O M P O N E N T D A T A L I S T I N G

C42, Guide, Support Id= C42 2, Connected to Ground, Comp.Wt = 0.000 lb, Stiffness= RIGID,
Gap-Down= 0.00 inch, Gap-Above= 0.83 inch, Gap-Left= 0.83 inch, Gap-Right= 0.83 inch, Friction= 0.80,
Gaps setting= Weightless

From C43 to C30, DX= -3.50 ft, DY= -0.09 ft, L= 3.50 ft Run

POINT DATA:
C43, Coordinates, X= 29.69 ft, Y= 685.73 ft, Z= -109.50 ft

SUPPORT DATA:
C43, Guide, Support Id= C43 2, Connected to Ground, Comp.Wt = 0.000 lb, Stiffness= RIGID,
Gap-Down= 0.00 inch, Gap-Above= 0.83 inch, Gap-Left= 0.83 inch, Gap-Right= 0.83 inch, Friction= 0.80,
Gaps setting= Weightless

From C30 to C45, DY= -0.03 ft, DZ= -3.50 ft, L= 3.50 ft Bend

COMPONENT DATA (Bend, TIP= C30, Near= C30 N, Far= C30 F):
Elbow, Radius= 36.00 inch, Bend angle= 89.99 deg, End flanges= 0, Flex= Auto, SIFI= 1.00, SIFO= 1.00

POINT DATA:
C30, Coordinates, X= 26.19 ft, Y= 685.64 ft, Z= -109.50 ft
C30 N, Coordinates, X= 29.19 ft, Y= 685.72 ft, Z= -109.50 ft
C30 F, Coordinates, X= 26.19 ft, Y= 685.61 ft, Z= -112.50 ft

From C45 to C46, DY= -0.07 ft, DZ= -9.00 ft, L= 9.00 ft Run

POINT DATA:
C45, Coordinates, X= 26.19 ft, Y= 685.61 ft, Z= -113.00 ft

SUPPORT DATA:
C45, Guide, Support Id= C45 2, Connected to Ground, Comp.Wt = 0.000 lb, Stiffness= RIGID,
Gap-Down= 0.00 inch, Gap-Above= 0.83 inch, Gap-Left= 0.83 inch, Gap-Right= 0.83 inch, Friction= 0.80,
Gaps setting= Weightless

From C46 to C47, DY= -0.07 ft, DZ= -9.00 ft, L= 9.00 ft Run

POINT DATA:
C46, Coordinates, X= 26.19 ft, Y= 685.54 ft, Z= -122.00 ft

SUPPORT DATA:
C46, Guide, Support Id= C46 2, Connected to Ground, Comp.Wt = 0.000 lb, Stiffness= RIGID,
Gap-Down= 0.00 inch, Gap-Above= 0.06 inch, Gap-Left= 0.03 inch, Gap-Right= 0.03 inch, Friction= 0.80,
Gaps setting= Weightless

From C47 to C48, DY= -0.07 ft, DZ= -9.00 ft, L= 9.00 ft Run

POINT DATA:
C47, Coordinates, X= 26.19 ft, Y= 685.47 ft, Z= -131.00 ft

SUPPORT DATA:

C O M P O N E N T D A T A L I S T I N G

C47, Guide, Support Id= C47 2, Connected to Ground, Comp.Wt = 0.000 lb, Stiffness= RIGID,
Gap-Down= 0.00 inch, Gap-Above= 0.06 inch, Gap-Left= 0.03 inch, Gap-Right= 0.03 inch, Friction= 0.80,
Gaps setting= Weightless

From C48 to C49, DY= -0.07 ft, DZ= -9.00 ft, L= 9.00 ft Run

POINT DATA:
C48, Coordinates, X= 26.19 ft, Y= 685.40 ft, Z= -140.00 ft

SUPPORT DATA:
C48, Guide, Support Id= C48 2, Connected to Ground, Comp.Wt = 0.000 lb, Stiffness= RIGID,
Gap-Down= 0.00 inch, Gap-Above= 0.06 inch, Gap-Left= 0.03 inch, Gap-Right= 0.03 inch, Friction= 0.80,
Gaps setting= Weightless

From C49 to C50, DY= -0.07 ft, DZ= -9.00 ft, L= 9.00 ft Run

POINT DATA:
C49, Coordinates, X= 26.19 ft, Y= 685.33 ft, Z= -149.00 ft

SUPPORT DATA:
C49, Guide, Support Id= C49 2, Connected to Ground, Comp.Wt = 0.000 lb, Stiffness= RIGID,
Gap-Down= 0.00 inch, Gap-Above= 0.06 inch, Gap-Left= 0.03 inch, Gap-Right= 0.03 inch, Friction= 0.80,
Gaps setting= Weightless

From C50 to C51, DY= -0.07 ft, DZ= -9.00 ft, L= 9.00 ft Run

POINT DATA:
C50, Coordinates, X= 26.19 ft, Y= 685.26 ft, Z= -158.00 ft

SUPPORT DATA:
C50, Guide, Support Id= C50 2, Connected to Ground, Comp.Wt = 0.000 lb, Stiffness= RIGID,
Gap-Down= 0.00 inch, Gap-Above= 0.06 inch, Gap-Left= 0.03 inch, Gap-Right= 0.03 inch, Friction= 0.80,
Gaps setting= Weightless

From C51 to C52, DY= -0.08 ft, DZ= -9.00 ft, L= 9.00 ft Run

POINT DATA:
C51, Coordinates, X= 26.19 ft, Y= 685.19 ft, Z= -167.00 ft

SUPPORT DATA:
C51, Guide, Support Id= C51 2, Connected to Ground, Comp.Wt = 0.000 lb, Stiffness= RIGID,
Gap-Down= 0.00 inch, Gap-Above= 0.06 inch, Gap-Left= 0.03 inch, Gap-Right= 0.03 inch, Friction= 0.80,
Gaps setting= Weightless

From C52 to C53, DY= -0.07 ft, DZ= -9.00 ft, L= 9.00 ft Run

POINT DATA:
C52, Coordinates, X= 26.19 ft, Y= 685.11 ft, Z= -176.00 ft

SUPPORT DATA:

C O M P O N E N T D A T A L I S T I N G

C52, Guide, Support Id= C52 2, Connected to Ground, Comp.Wt = 0.000 lb, Stiffness= RIGID,
Gap-Down= 0.00 inch, Gap-Above= 0.06 inch, Gap-Left= 0.03 inch, Gap-Right= 0.03 inch, Friction= 0.80,
Gaps setting= Weightless

From C53 to C55, DX= 0 ft, DY= -0.09 ft, DZ= -10.50 ft, L= 10.50 ft Run

POINT DATA:
C53, Coordinates, X= 26.19 ft, Y= 685.04 ft, Z= -185.00 ft

SUPPORT DATA:
C53, Guide, Support Id= C53 2, Connected to Ground, Comp.Wt = 0.000 lb, Stiffness= RIGID,
Gap-Down= 0.00 inch, Gap-Above= 0.06 inch, Gap-Left= 0.03 inch, Gap-Right= 0.03 inch, Friction= 0.80,
Gaps setting= Weightless

From C55 to C41, DY= -0.03 ft, DZ= -3.50 ft, L= 3.50 ft Run

POINT DATA:
C55, Coordinates, X= 26.19 ft, Y= 684.95 ft, Z= -195.50 ft

SUPPORT DATA:
C55, Guide, Support Id= C55 2, Connected to Ground, Comp.Wt = 0.000 lb, Stiffness= RIGID,
Gap-Down= 0.00 inch, Gap-Above= 0.83 inch, Gap-Left= 0.83 inch, Gap-Right= 0.83 inch, Friction= 0.80,
Gaps setting= Weightless

From C41 to C56, DX= 3.50 ft, DY= -0.03 ft, L= 3.50 ft Bend

COMPONENT DATA (Bend, TIP= C41, Near= C41 N, Far= C41 F):
Elbow, Radius= 36.00 inch, Bend angle= 90.00 deg, End flanges= 0, Flex= Auto, SIFI= 1.00, SIFO= 1.00

POINT DATA:
C41, Coordinates, X= 26.19 ft, Y= 684.92 ft, Z= -199.00 ft
C41 N, Coordinates, X= 26.19 ft, Y= 684.95 ft, Z= -196.00 ft
C41 F, Coordinates, X= 29.19 ft, Y= 684.89 ft, Z= -199.00 ft

From C56 to C57, DX= 6.91 ft, DY= -0.05 ft, L= 6.91 ft Run

POINT DATA:
C56, Coordinates, X= 29.69 ft, Y= 684.89 ft, Z= -199.00 ft

SUPPORT DATA:
C56, Guide, Support Id= C56 2, Connected to Ground, Comp.Wt = 0.000 lb, Stiffness= RIGID,
Gap-Down= 0.00 inch, Gap-Above= 0.83 inch, Gap-Left= 0.83 inch, Gap-Right= 0.83 inch, Friction= 0.80,
Gaps setting= Weightless

From C57 to C44, DX= 3.50 ft, DY= -0.02 ft, L= 3.50 ft Run

POINT DATA:
C57, Coordinates, X= 36.60 ft, Y= 684.84 ft, Z= -199.00 ft

SUPPORT DATA:

C O M P O N E N T D A T A L I S T I N G

C57, Guide, Support Id= C57 2, Connected to Ground, Comp.Wt = 0.000 lb, Stiffness= RIGID,
Gap-Down= 0.00 inch, Gap-Above= 0.83 inch, Gap-Left= 0.83 inch, Gap-Right= 0.83 inch, Friction= 0.80,
Gaps setting= Weightless

From C44 to C58, DY= -0.03 ft, DZ= -3.50 ft, L= 3.50 ft Bend

COMPONENT DATA (Bend, TIP= C44, Near= C44 N, Far= C44 F):
Elbow, Radius= 36.00 inch, Bend angle= 90.00 deg, End flanges= 0, Flex= Auto, SIFI= 1.00, SIFO= 1.00

POINT DATA:
C44, Coordinates, X= 40.10 ft, Y= 684.82 ft, Z= -199.00 ft
C44 N, Coordinates, X= 37.10 ft, Y= 684.84 ft, Z= -199.00 ft
C44 F, Coordinates, X= 40.10 ft, Y= 684.79 ft, Z= -202.00 ft

From C58 to C59, DY= -0.07 ft, DZ= -9.00 ft, L= 9.00 ft Run

POINT DATA:
C58, Coordinates, X= 40.10 ft, Y= 684.79 ft, Z= -202.50 ft

SUPPORT DATA:
C58, Guide, Support Id= C58 2, Connected to Ground, Comp.Wt = 0.000 lb, Stiffness= RIGID,
Gap-Down= 0.00 inch, Gap-Above= 0.83 inch, Gap-Left= 0.83 inch, Gap-Right= 0.83 inch, Friction= 0.80,
Gaps setting= Weightless

From C59 to C60, DY= -0.07 ft, DZ= -9.00 ft, L= 9.00 ft Run

POINT DATA:
C59, Coordinates, X= 40.10 ft, Y= 684.72 ft, Z= -211.50 ft

SUPPORT DATA:
C59, Guide, Support Id= C59 2, Connected to Ground, Comp.Wt = 0.000 lb, Stiffness= RIGID,
Gap-Down= 0.00 inch, Gap-Above= 0.06 inch, Gap-Left= 0.03 inch, Gap-Right= 0.03 inch, Friction= 0.80,
Gaps setting= Weightless

From C60 to C61, DY= -0.07 ft, DZ= -9.00 ft, L= 9.00 ft Run

POINT DATA:
C60, Coordinates, X= 40.10 ft, Y= 684.65 ft, Z= -220.50 ft

SUPPORT DATA:
C60, Guide, Support Id= C60 2, Connected to Ground, Comp.Wt = 0.000 lb, Stiffness= RIGID,
Gap-Down= 0.00 inch, Gap-Above= 0.06 inch, Gap-Left= 0.03 inch, Gap-Right= 0.03 inch, Friction= 0.80,
Gaps setting= Weightless

From C61 to C63, DY= -0.06 ft, DZ= -9.00 ft, L= 9.00 ft Run

POINT DATA:
C61, Coordinates, X= 40.10 ft, Y= 684.58 ft, Z= -229.50 ft

SUPPORT DATA:

C O M P O N E N T D A T A L I S T I N G

C61, Guide, Support Id= C61 1, Connected to Ground, Comp.Wt = 0.000 lb, Stiffness= RIGID,
Gap-Down= 0.00 inch, Gap-Above= 0.06 inch, Gap-Left= 0.03 inch, Gap-Right= 0.03 inch, Friction= 0.80,
Gaps setting= Weightless

From C63 to C64, DY= -0.07 ft, DZ= -9.00 ft, L= 9.00 ft Run

POINT DATA:
C63, Coordinates, X= 40.10 ft, Y= 684.52 ft, Z= -238.50 ft

SUPPORT DATA:
C63, Guide, Support Id= C63 1, Connected to Ground, Comp.Wt = 0.000 lb, Stiffness= RIGID,
Gap-Down= 0.00 inch, Gap-Above= 0.06 inch, Gap-Left= 0.03 inch, Gap-Right= 0.03 inch, Friction= 0.80,
Gaps setting= Weightless

From C64 to C65, DY= -0.06 ft, DZ= -9.00 ft, L= 9.00 ft Run

POINT DATA:
C64, Coordinates, X= 40.10 ft, Y= 684.45 ft, Z= -247.50 ft

SUPPORT DATA:
C64, Guide, Support Id= C64 2, Connected to Ground, Comp.Wt = 0.000 lb, Stiffness= RIGID,
Gap-Down= 0.00 inch, Gap-Above= 0.06 inch, Gap-Left= 0.03 inch, Gap-Right= 0.03 inch, Friction= 0.80,
Gaps setting= Weightless

From C65 to C72, DY= -0.07 ft, DZ= -9.00 ft, L= 9.00 ft Run

POINT DATA:
C65, Coordinates, X= 40.10 ft, Y= 684.39 ft, Z= -256.50 ft

SUPPORT DATA:
C65, Guide, Support Id= C65 1, Connected to Ground, Comp.Wt = 0.000 lb, Stiffness= RIGID,
Gap-Down= 0.00 inch, Gap-Above= 0.06 inch, Gap-Left= 0.03 inch, Gap-Right= 0.03 inch, Friction= 0.80,
Gaps setting= Weightless

From C72 to C73, DX= 0 ft, DY= -0.08 ft, DZ= -10.74 ft, L= 10.74 ft Run

POINT DATA:
C72, Coordinates, X= 40.10 ft, Y= 684.32 ft, Z= -265.50 ft

SUPPORT DATA:
C72, Guide, Support Id= C72 1, Connected to Ground, Comp.Wt = 0.000 lb, Stiffness= RIGID,
Gap-Down= 0.00 inch, Gap-Above= 0.06 inch, Gap-Left= 0.03 inch, Gap-Right= 0.03 inch, Friction= 0.80,
Gaps setting= Weightless

From C73 to C54, DY= -0.02 ft, DZ= -3.50 ft, L= 3.50 ft Run

POINT DATA:
C73, Coordinates, X= 40.10 ft, Y= 684.24 ft, Z= -276.24 ft

SUPPORT DATA:

C O M P O N E N T D A T A L I S T I N G

C73, Guide, Support Id= C73 1, Connected to Ground, Comp.Wt = 0.000 lb, Stiffness= RIGID,
Gap-Down= 0.00 inch, Gap-Above= 0.83 inch, Gap-Left= 0.83 inch, Gap-Right= 0.83 inch, Friction= 0.80,
Gaps setting= Weightless

From C54 to C74, DX= -3.50 ft, DY= -0.03 ft, L= 3.50 ft Bend

COMPONENT DATA (Bend, TIP= C54, Near= C54 N, Far= C54 F):
Elbow, Radius= 36.00 inch, Bend angle= 90.00 deg, End flanges= 0, Flex= Auto, SIFI= 1.00, SIFO= 1.00

POINT DATA:
C54, Coordinates, X= 40.10 ft, Y= 684.22 ft, Z= -279.74 ft
C54 N, Coordinates, X= 40.10 ft, Y= 684.24 ft, Z= -276.74 ft
C54 F, Coordinates, X= 37.10 ft, Y= 684.19 ft, Z= -279.74 ft

From C74 to C75, DX= -9.00 ft, DY= -0.07 ft, L= 9.00 ft Run

POINT DATA:
C74, Coordinates, X= 36.60 ft, Y= 684.19 ft, Z= -279.74 ft

SUPPORT DATA:
C74, Guide, Support Id= C74 1, Connected to Ground, Comp.Wt = 0.000 lb, Stiffness= RIGID,
Gap-Down= 0.00 inch, Gap-Above= 0.83 inch, Gap-Left= 0.83 inch, Gap-Right= 0.83 inch, Friction= 0.80,
Gaps setting= Weightless

From C75 to C76, DX= -9.00 ft, DY= -0.07 ft, L= 9.00 ft Run

POINT DATA:
C75, Coordinates, X= 27.60 ft, Y= 684.12 ft, Z= -279.74 ft

SUPPORT DATA:
C75, Guide, Support Id= C75 1, Connected to Ground, Comp.Wt = 0.000 lb, Stiffness= RIGID,
Gap-Down= 0.00 inch, Gap-Above= 0.06 inch, Gap-Left= 0.03 inch, Gap-Right= 0.03 inch, Friction= 0.80,
Gaps setting= Weightless

From C76 to C77, DX= -9.00 ft, DY= -0.06 ft, L= 9.00 ft Run

POINT DATA:
C76, Coordinates, X= 18.60 ft, Y= 684.05 ft, Z= -279.74 ft

SUPPORT DATA:
C76, Guide, Support Id= C76 1, Connected to Ground, Comp.Wt = 0.000 lb, Stiffness= RIGID,
Gap-Down= 0.00 inch, Gap-Above= 0.06 inch, Gap-Left= 0.03 inch, Gap-Right= 0.03 inch, Friction= 0.80,
Gaps setting= Weightless

From C77 to C78, DX= -9.00 ft, DY= -0.07 ft, L= 9.00 ft Run

POINT DATA:
C77, Coordinates, X= 9.60 ft, Y= 683.99 ft, Z= -279.74 ft

SUPPORT DATA:

C O M P O N E N T D A T A L I S T I N G

C77, Guide, Support Id= C77 1, Connected to Ground, Comp.Wt = 0.000 lb, Stiffness= RIGID,
Gap-Down= 0.00 inch, Gap-Above= 0.06 inch, Gap-Left= 0.03 inch, Gap-Right= 0.03 inch, Friction= 0.80,
Gaps setting= Weightless

From C78 to C79, DX= -8.78 ft, DY= -0.06 ft, L= 8.78 ft Run

POINT DATA:
C78, Coordinates, X= 0.60 ft, Y= 683.92 ft, Z= -279.74 ft

SUPPORT DATA:
C78, Guide, Support Id= C78 1, Connected to Ground, Comp.Wt = 0.000 lb, Stiffness= RIGID,
Gap-Down= 0.00 inch, Gap-Above= 0.06 inch, Gap-Left= 0.03 inch, Gap-Right= 0.03 inch, Friction= 0.80,
Gaps setting= Weightless

From C79 to C80, DX= -9.00 ft, DY= -0.06 ft, L= 9.00 ft Run

POINT DATA:
C79, Coordinates, X= -8.18 ft, Y= 683.86 ft, Z= -279.74 ft

SUPPORT DATA:
C79, Guide, Support Id= C79 1, Connected to Ground, Comp.Wt = 0.000 lb, Stiffness= RIGID,
Gap-Down= 0.00 inch, Gap-Above= 0.06 inch, Gap-Left= 0.03 inch, Gap-Right= 0.03 inch, Friction= 0.80,
Gaps setting= Weightless

From C80 to C62, DX= -3.50 ft, DY= -0.03 ft, L= 3.50 ft Run

POINT DATA:
C80, Coordinates, X= -17.18 ft, Y= 683.80 ft, Z= -279.74 ft

SUPPORT DATA:
C80, Guide, Support Id= C80 1, Connected to Ground, Comp.Wt = 0.000 lb, Stiffness= RIGID,
Gap-Down= 0.00 inch, Gap-Above= 0.83 inch, Gap-Left= 0.83 inch, Gap-Right= 0.83 inch, Friction= 0.80,
Gaps setting= Weightless

From C62 to C82, DY= -0.03 ft, DZ= -3.50 ft, L= 3.50 ft Bend

COMPONENT DATA (Bend, TIP= C62, Near= C62 N, Far= C62 F):
Elbow, Radius= 36.00 inch, Bend angle= 90.00 deg, End flanges= 0, Flex= Auto, SIFI= 1.00, SIFO= 1.00

POINT DATA:
C62, Coordinates, X= -20.68 ft, Y= 683.77 ft, Z= -279.74 ft
C62 N, Coordinates, X= -17.68 ft, Y= 683.80 ft, Z= -279.74 ft
C62 F, Coordinates, X= -20.68 ft, Y= 683.74 ft, Z= -282.74 ft

---

From C82 to C81, DY= -0.05 ft, DZ= -5.84 ft, L= 5.84 ft Run

POINT DATA:
C82, Coordinates, X= -20.68 ft, Y= 683.74 ft, Z= -283.24 ft

SUPPORT DATA:

C O M P O N E N T D A T A L I S T I N G

C82, Guide, Support Id= C82 1, Connected to Ground, Comp.Wt = 0.000 lb, Stiffness= RIGID,
Gap-Down= 0.00 inch, Gap-Above= 0.83 inch, Gap-Left= 0.83 inch, Gap-Right= 0.83 inch, Friction= 0.80,
Gaps setting= Weightless

From C81 to C83, DY= -0.04 ft, DZ= -5.83 ft, L= 5.83 ft Run

POINT DATA:
C81, Coordinates, X= -20.68 ft, Y= 683.69 ft, Z= -289.08 ft

SUPPORT DATA:
C81, Guide, Support Id= C81 1, Connected to Ground, Comp.Wt = 0.000 lb, Stiffness= RIGID,
Gap-Down= 0.00 inch, Gap-Above= 0.06 inch, Gap-Left= 0.03 inch, Gap-Right= 0.03 inch, Friction= 0.80,
Gaps setting= Weightless

From C83 to C66, DY= -0.03 ft, DZ= -3.50 ft, L= 3.50 ft Run

POINT DATA:
C83, Coordinates, X= -20.68 ft, Y= 683.65 ft, Z= -294.91 ft

SUPPORT DATA:
C83, Guide, Support Id= C83 1, Connected to Ground, Comp.Wt = 0.000 lb, Stiffness= RIGID,
Gap-Down= 0.00 inch, Gap-Above= 0.83 inch, Gap-Left= 0.83 inch, Gap-Right= 0.83 inch, Friction= 0.80,
Gaps setting= Weightless

From C66 to C84, DX= 3.50 ft, DY= -0.07 ft, L= 3.50 ft Bend

COMPONENT DATA (Bend, TIP= C66, Near= C66 N, Far= C66 F):
Elbow, Radius= 36.00 inch, Bend angle= 89.99 deg, End flanges= 0, Flex= Auto, SIFI= 1.00, SIFO= 1.00

POINT DATA:
C66, Coordinates, X= -20.68 ft, Y= 683.62 ft, Z= -298.41 ft
C66 N, Coordinates, X= -20.68 ft, Y= 683.65 ft, Z= -295.41 ft
C66 F, Coordinates, X= -17.68 ft, Y= 683.56 ft, Z= -298.41 ft

---

From C84 to C67, DX= 1.80 ft, DY= -0.03 ft, L= 1.80 ft Run

POINT DATA:
C84, Coordinates, X= -17.18 ft, Y= 683.55 ft, Z= -298.41 ft

SUPPORT DATA:
C84, Guide, Support Id= C84 1, Connected to Ground, Comp.Wt = 0.000 lb, Stiffness= RIGID,
Gap-Down= 0.00 inch, Gap-Above= 0.83 inch, Gap-Left= 0.83 inch, Gap-Right= 0.83 inch, Friction= 0.80,
Gaps setting= Weightless

From C67 to C68, DX= 1.00 ft Bend

COMPONENT DATA (Bend, TIP= C67, Near= C67 N, Mid= C67 M, Far= C67 F):
Elbow, Radius= 36.00 inch, Bend angle= 0.96 deg, Mid point at 50.00 percent, End flanges= 0, Flex= Auto,
SIFI= 1.00, SIFO= 1.00

C O M P O N E N T D A T A L I S T I N G

POINT DATA:
C67, Coordinates, X= -15.38 ft, Y= 683.52 ft, Z= -298.41 ft
C67 N, Coordinates, X= -15.40 ft, Y= 683.52 ft, Z= -298.41 ft
C67 M, Coordinates, X= -15.38 ft, Y= 683.52 ft, Z= -298.41 ft
C67 F, Coordinates, X= -15.36 ft, Y= 683.52 ft, Z= -298.41 ft

---

From C68 to C69, DX= 1.00 ft Run

POINT DATA:
C68, Coordinates, X= -14.38 ft, Y= 683.52 ft, Z= -298.41 ft

From C69 to C70, DX= 0.55 ft Run

POINT DATA:
C69, Coordinates, X= -13.38 ft, Y= 683.52 ft, Z= -298.41 ft

From C70 to C71, DX= 0.19 ft Run

POINT DATA:
C70, Coordinates, X= -12.83 ft, Y= 683.52 ft, Z= -298.41 ft
C71, Coordinates, X= -12.64 ft, Y= 683.52 ft, Z= -298.41 ft

SUPPORT DATA:
C70, Anchor, Connected to: Ground, KTX= Rigid, KTY= Rigid, KTZ= Rigid, KRX= Rigid, KRY= Rigid, KRZ= Rigid

---

*** SEGMENT D

From D00 to D01, DZ= -0.19 ft Run

PIPE DATA:
Pipe Id= 2SCH40, Composition= Austenitic Stainless, Pipe Density= 501.00 lb/cu.ft, Pipe Unit Wgt= 3.74 lb/ft

POINT DATA:
D00, Coordinates, X= -10.49 ft, Y= 683.52 ft, Z= -303.06 ft

From D01 to D02, DZ= -0.55 ft Run

POINT DATA:
D01, Coordinates, X= -10.49 ft, Y= 683.52 ft, Z= -303.25 ft

SUPPORT DATA:
D01, Anchor, Connected to: Ground, KTX= Rigid, KTY= Rigid, KTZ= Rigid, KRX= Rigid, KRY= Rigid, KRZ= Rigid

---

From D02 to D03, DZ= -1.00 ft Run

POINT DATA:
D02, Coordinates, X= -10.49 ft, Y= 683.52 ft, Z= -303.80 ft

C O M P O N E N T D A T A L I S T I N G

From D03 to D04, DZ= -3.00 ft Run

POINT DATA:
D03, Coordinates, X= -10.49 ft, Y= 683.52 ft, Z= -304.80 ft

From D04 to D13, DY= 0.09 ft, DZ= -7.50 ft, L= 7.50 ft Bend

COMPONENT DATA (Bend, TIP= D04, Near= D04 N, Mid= D04 M, Far= D04 F):
Elbow, Radius= 36.00 inch, Bend angle= 0.69 deg, Mid point at 50.00 percent, End flanges= 0, Flex= Auto,
SIFI= 1.00, SIFO= 1.00

POINT DATA:
D04, Coordinates, X= -10.49 ft, Y= 683.52 ft, Z= -307.80 ft
D04 N, Coordinates, X= -10.49 ft, Y= 683.52 ft, Z= -307.78 ft
D04 M, Coordinates, X= -10.49 ft, Y= 683.52 ft, Z= -307.80 ft
D04 F, Coordinates, X= -10.49 ft, Y= 683.52 ft, Z= -307.82 ft

SUPPORT DATA:
D04 M, Guide, Support Id= D04 M1, Connected to Ground, Comp.Wt = 0.000 lb, Stiffness= RIGID,
Gap -Z= 0.00 inch, Gap +Z= 0.83 inch, Gap -X= 0.83 inch, Gap +X= 0.83 inch, Friction= 0.80,
Gaps setting= Weightless

From D13 to D14, DY= 0.10 ft, DZ= -7.53 ft, L= 7.53 ft Run

POINT DATA:
D13, Coordinates, X= -10.49 ft, Y= 683.61 ft, Z= -315.30 ft

SUPPORT DATA:
D13, Guide, Support Id= D13 1, Connected to Ground, Comp.Wt = 0.000 lb, Stiffness= RIGID,
Gap-Down= 0.00 inch, Gap-Above= 0.06 inch, Gap-Left= 0.03 inch, Gap-Right= 0.03 inch, Friction= 0.80,
Gaps setting= Weightless

From D14 to D08, DY= 0.04 ft, DZ= -3.50 ft, L= 3.50 ft Run

POINT DATA:
D14, Coordinates, X= -10.49 ft, Y= 683.71 ft, Z= -322.83 ft

SUPPORT DATA:
D14, Guide, Support Id= D14 2, Connected to Ground, Comp.Wt = 0.000 lb, Stiffness= RIGID,
Gap-Down= 0.00 inch, Gap-Above= 0.83 inch, Gap-Left= 0.83 inch, Gap-Right= 0.83 inch, Friction= 0.80,
Gaps setting= Weightless

From D08 to D15, DX= 3.50 ft, DY= 0.03 ft, L= 3.50 ft Bend

COMPONENT DATA (Bend, TIP= D08, Near= D08 N, Far= D08 F):
Elbow, Radius= 36.00 inch, Bend angle= 89.99 deg, End flanges= 0, Flex= Auto, SIFI= 1.00, SIFO= 1.00

POINT DATA:
D08, Coordinates, X= -10.49 ft, Y= 683.75 ft, Z= -326.33 ft
D08 N, Coordinates, X= -10.49 ft, Y= 683.72 ft, Z= -323.33 ft

C O M P O N E N T D A T A L I S T I N G

D08 F, Coordinates, X= -7.49 ft, Y= 683.78 ft, Z= -326.33 ft

From D15 to D18, DX= 5.65 ft, DY= 0.05 ft, L= 5.65 ft Run

POINT DATA:
D15, Coordinates, X= -6.99 ft, Y= 683.78 ft, Z= -326.33 ft

SUPPORT DATA:
D15, Guide, Support Id= D15 2, Connected to Ground, Comp.Wt = 0.000 lb, Stiffness= RIGID,
Gap-Down= 0.00 inch, Gap-Above= 0.83 inch, Gap-Left= 0.83 inch, Gap-Right= 0.83 inch, Friction= 0.80,
Gaps setting= Weightless

From D18 to D16, DX= 5.65 ft, DY= 0.06 ft, L= 5.65 ft Run

POINT DATA:
D18, Coordinates, X= -1.34 ft, Y= 683.83 ft, Z= -326.33 ft

SUPPORT DATA:
D18, Guide, Support Id= D18 1, Connected to Ground, Comp.Wt = 0.000 lb, Stiffness= RIGID,
Gap-Down= 0.00 inch, Gap-Above= 0.06 inch, Gap-Left= 0.03 inch, Gap-Right= 0.03 inch, Friction= 0.80,
Gaps setting= Weightless

From D16 to D12, DX= 3.50 ft, DY= 0.04 ft, L= 3.50 ft Run

POINT DATA:
D16, Coordinates, X= 4.31 ft, Y= 683.89 ft, Z= -326.33 ft

SUPPORT DATA:
D16, Guide, Support Id= D16 1, Connected to Ground, Comp.Wt = 0.000 lb, Stiffness= RIGID,
Gap-Down= 0.00 inch, Gap-Above= 0.83 inch, Gap-Left= 0.83 inch, Gap-Right= 0.83 inch, Friction= 0.80,
Gaps setting= Weightless

From D12 to D19, DY= 0.05 ft, DZ= -3.50 ft, L= 3.50 ft Bend

COMPONENT DATA (Bend, TIP= D12, Near= D12 N, Far= D12 F):
Elbow, Radius= 36.00 inch, Bend angle= 89.99 deg, End flanges= 0, Flex= Auto, SIFI= 1.00, SIFO= 1.00

POINT DATA:
D12, Coordinates, X= 7.81 ft, Y= 683.93 ft, Z= -326.33 ft
D12 N, Coordinates, X= 4.81 ft, Y= 683.90 ft, Z= -326.33 ft
D12 F, Coordinates, X= 7.81 ft, Y= 683.97 ft, Z= -329.33 ft

From D19 to D25, DY= 0.12 ft, DZ= -8.87 ft, L= 8.87 ft Run

POINT DATA:
D19, Coordinates, X= 7.81 ft, Y= 683.98 ft, Z= -329.83 ft

SUPPORT DATA:
D19, Guide, Support Id= D19 2, Connected to Ground, Comp.Wt = 0.000 lb, Stiffness= RIGID,
Gap-Down= 0.00 inch, Gap-Above= 0.83 inch, Gap-Left= 0.83 inch, Gap-Right= 0.83 inch, Friction= 0.80,

C O M P O N E N T D A T A L I S T I N G

Gaps setting= Weightless

From D25 to D20, DY= 0.11 ft, DZ= -8.86 ft, L= 8.86 ft Run

POINT DATA:
D25, Coordinates, X= 7.81 ft, Y= 684.10 ft, Z= -338.70 ft

SUPPORT DATA:
D25, Guide, Support Id= D25 1, Connected to Ground, Comp.Wt = 0.000 lb, Stiffness= RIGID,
Gap-Down= 0.00 inch, Gap-Above= 0.06 inch, Gap-Left= 0.03 inch, Gap-Right= 0.03 inch, Friction= 0.80,
Gaps setting= Weightless

From D20 to D17, DY= 0.04 ft, DZ= -3.50 ft, L= 3.50 ft Run

POINT DATA:
D20, Coordinates, X= 7.81 ft, Y= 684.21 ft, Z= -347.56 ft

SUPPORT DATA:
D20, Guide, Support Id= D20 1, Connected to Ground, Comp.Wt = 0.000 lb, Stiffness= RIGID,
Gap-Down= 0.00 inch, Gap-Above= 0.83 inch, Gap-Left= 0.83 inch, Gap-Right= 0.83 inch, Friction= 0.80,
Gaps setting= Weightless

From D17 to D26, DX= 3.50 ft, DY= 0.02 ft, L= 3.50 ft Bend

COMPONENT DATA (Bend, TIP= D17, Near= D17 N, Far= D17 F):
Elbow, Radius= 36.00 inch, Bend angle= 90.00 deg, End flanges= 0, Flex= Auto, SIFI= 1.00, SIFO= 1.00

POINT DATA:
D17, Coordinates, X= 7.81 ft, Y= 684.25 ft, Z= -351.06 ft
D17 N, Coordinates, X= 7.81 ft, Y= 684.22 ft, Z= -348.06 ft
D17 F, Coordinates, X= 10.81 ft, Y= 684.27 ft, Z= -351.06 ft

From D26 to D28, DX= 6.93 ft, DY= 0.03 ft, L= 6.93 ft Run

POINT DATA:
D26, Coordinates, X= 11.31 ft, Y= 684.27 ft, Z= -351.06 ft

SUPPORT DATA:
D26, Guide, Support Id= D26 1, Connected to Ground, Comp.Wt = 0.000 lb, Stiffness= RIGID,
Gap-Down= 0.00 inch, Gap-Above= 0.83 inch, Gap-Left= 0.83 inch, Gap-Right= 0.83 inch, Friction= 0.80,
Gaps setting= Weightless

From D28 to D27, DX= 6.92 ft, DY= 0.03 ft, L= 6.92 ft Run

POINT DATA:
D28, Coordinates, X= 18.24 ft, Y= 684.30 ft, Z= -351.06 ft

SUPPORT DATA:
D28, Guide, Support Id= D28 1, Connected to Ground, Comp.Wt = 0.000 lb, Stiffness= RIGID,
Gap-Down= 0.00 inch, Gap-Above= 0.06 inch, Gap-Left= 0.03 inch, Gap-Right= 0.03 inch, Friction= 0.80,

C O M P O N E N T D A T A L I S T I N G

Gaps setting= Weightless

From D27 to D21, DX= 3.00 ft, DY= 0.01 ft, L= 3.00 ft Run

POINT DATA:
D27, Coordinates, X= 25.16 ft, Y= 684.33 ft, Z= -351.06 ft

SUPPORT DATA:
D27, Guide, Support Id= D27 1, Connected to Ground, Comp.Wt = 0.000 lb, Stiffness= RIGID,
Gap-Down= 0.00 inch, Gap-Above= 0.83 inch, Gap-Left= 0.83 inch, Gap-Right= 0.83 inch, Friction= 0.80,
Gaps setting= Weightless

From D21 to D22, DX= 1.00 ft Run

POINT DATA:
D21, Coordinates, X= 28.16 ft, Y= 684.34 ft, Z= -351.06 ft

From D22 to D23, DX= 0.63 ft Run

POINT DATA:
D22, Coordinates, X= 29.16 ft, Y= 684.34 ft, Z= -351.06 ft

SUPPORT DATA:
D22, Anchor, Connected to: Ground, KTX= Rigid, KTY= Rigid, KTZ= Rigid, KRX= Rigid, KRY= Rigid, KRZ= Rigid

From D23 to D24, DY= 0.57 ft Bend

COMPONENT DATA (Bend, TIP= D23, Near= D23 N, Far= D23 F):
Long Elbow, Radius= 3.00 inch, Bend angle= 90.00 deg, End flanges= 0, Flex= Auto, SIFI= 1.73, SIFO= 1.44

POINT DATA:
D23, Coordinates, X= 29.79 ft, Y= 684.34 ft, Z= -351.06 ft
D23 N, Coordinates, X= 29.54 ft, Y= 684.34 ft, Z= -351.06 ft
D23 F, Coordinates, X= 29.79 ft, Y= 684.59 ft, Z= -351.06 ft
D24, Coordinates, X= 29.79 ft, Y= 684.91 ft, Z= -351.06 ft

Number of points in the system (Pipe + Frame + Soil): 371 + 0 + 0 = 371

Weight of Empty Pipes	+	Weight of Contents	=	Total Weight of System
6282.4 lb	+	0.0 lb	=	6282.4 lb

C O O R D I N A T E S D A T A L I S T I N G

POINT NAME	COORDINATE (ft) X	Y	Z
*** SEGMENT A			
A00	0.00	693.68	0.00
A20	0.00	693.49	0.00
A01 N	0.00	693.32	0.00
A01	0.00	693.07	0.00
A01 F	0.25	693.07	0.00
A02	1.46	693.07	0.00
A03	3.46	693.07	0.00
A23	5.96	693.07	0.00
A04 N	6.19	693.07	0.00
A04	6.46	693.07	0.00
A04 F	6.73	693.02	0.00
A24	14.64	691.56	0.00
A21	22.82	690.05	0.00
A05 N	23.33	689.96	0.00
A05	26.26	689.41	0.00
A05 F	26.26	689.32	-2.98
A22	26.26	689.31	-3.50
A25	26.26	689.05	-12.50
A26	26.26	688.79	-21.50
A27	26.26	688.53	-30.50
A28	26.26	688.27	-39.50
A29	26.26	687.96	-50.17
A06 N	26.26	687.95	-50.67
A06	26.26	687.86	-53.67
A06 F	29.26	687.77	-53.67
A30	29.76	687.76	-53.67
A31	32.52	687.68	-53.67
A07 N	33.02	687.67	-53.67
A07	36.02	687.58	-53.67
A07 F	36.02	687.49	-56.67
A32	36.02	687.47	-57.17
A33	36.02	687.20	-66.17
A34	36.02	686.93	-75.17
A35	36.02	686.66	-84.17
A36	36.02	686.38	-93.17
A37	36.02	686.30	-95.85
A38	36.02	686.03	-104.84
A08 N	36.02	686.01	-105.34
A08	36.02	685.92	-108.34
A08 F	33.02	685.84	-108.34
A39	32.52	685.83	-108.34
A40	28.52	685.73	-108.34
A09 N	28.02	685.72	-108.34
A09	25.02	685.64	-108.34
A09 F	25.02	685.61	-111.34
A41	25.02	685.61	-111.84
A42	25.02	685.54	-120.84
A43	25.02	685.47	-129.84
A44	25.02	685.40	-138.84
A45	25.02	685.33	-147.84
A46	25.02	685.26	-156.84

C O O R D I N A T E S D A T A L I S T I N G

POINT NAME	COORDINATE (ft) X	Y	Z
A47	25.02	685.19	-165.84
A48	25.02	685.12	-174.84
A49	25.02	685.05	-183.84
A50	25.02	685.02	-187.67
A51	25.02	684.95	-196.67
A10 N	25.02	684.95	-197.17
A10	25.02	684.92	-200.17
A10 F	28.02	684.89	-200.17
A52	28.52	684.89	-200.17
A53	35.43	684.84	-200.17
A11 N	35.93	684.84	-200.17
A11	38.93	684.82	-200.17
A11 F	38.93	684.79	-203.17
A54	38.93	684.79	-203.67
A55	38.93	684.72	-212.67
A56	38.93	684.65	-221.67
A57	38.93	684.58	-230.67
A58	38.93	684.51	-239.67
A59	38.93	684.44	-248.67
A60	38.93	684.37	-257.67
A61	38.93	684.31	-266.07
A62	38.93	684.25	-275.07
A12 N	38.93	684.25	-275.57
A12	38.93	684.22	-278.57
A12 F	35.93	684.19	-278.57
A63	35.43	684.19	-278.57
A64	26.43	684.12	-278.57
A65	17.43	684.05	-278.57
A66	8.43	683.99	-278.57
A67	-0.57	683.92	-278.57
A68	-9.35	683.86	-278.57
A69	-18.35	683.80	-278.57
A13 N	-18.85	683.80	-278.57
A13	-21.85	683.77	-278.57
A13 F	-21.85	683.75	-281.57
A70	-21.85	683.75	-282.07
A71	-21.85	683.70	-291.07
A72	-21.85	683.65	-298.66
A14 N	-21.85	683.65	-299.16
A14	-21.85	683.63	-302.16
A14 F	-18.85	683.58	-302.16
A73	-18.35	683.57	-302.16
A15 N	-15.42	683.52	-302.16
A15	-15.39	683.52	-302.16
A15 F	-15.36	683.52	-302.16
A16	-14.39	683.52	-302.16
A17	-13.39	683.52	-302.16
A18	-12.84	683.52	-302.16
A19	-12.65	683.52	-302.16

*** SEGMENT B , LINE # RIGID

B00	0.00	693.93	2.00

C O O R D I N A T E S D A T A L I S T I N G

POINT NAME	COORDINATE (ft) X	Y	Z
B01	0.00	693.68	2.00
B02 N	0.00	693.44	2.00
B02	0.00	693.07	2.00
B02 F	0.38	693.07	2.00
B03	1.46	693.07	2.00
B04	3.46	693.07	2.00
B22	5.96	693.07	2.00
B06 N	6.22	693.07	2.00
B06	6.46	693.07	2.00
B06 F	6.70	693.03	2.00
B23	17.61	691.24	2.00
B24	25.31	689.98	2.00
B09 N	25.81	689.90	2.00
B09	28.76	689.41	2.00
B09 F	28.76	689.32	-0.98
B25	28.76	689.31	-1.50
B26	28.76	689.05	-10.50
B28	28.76	688.79	-19.50
B29	28.76	688.53	-28.50
B31	28.76	688.26	-37.50
B32	28.76	687.96	-47.67
B16 N	28.76	687.95	-48.17
B16	28.76	687.86	-51.17
B16 F	31.76	687.79	-51.17
B33	32.26	687.78	-51.17
B34	35.02	687.72	-51.17
B19 N	35.52	687.71	-51.17
B19	38.52	687.64	-51.17
B19 F	38.52	687.55	-54.17
B35	38.52	687.54	-54.67
B36	38.52	687.29	-63.67
B37	38.52	687.04	-72.67
B38	38.52	686.79	-81.67
B39	38.52	686.54	-90.67
B40	38.52	686.32	-98.34
B42	38.52	686.07	-107.34
B27 N	38.52	686.06	-107.84
B27	38.52	685.97	-110.84
B27 F	35.52	685.89	-110.84
B43	35.02	685.88	-110.84
B45	31.02	685.78	-110.84
B30 N	30.52	685.77	-110.84
B30	27.52	685.70	-110.84
B30 F	27.52	685.67	-113.84
B46	27.52	685.67	-114.34
B47	27.52	685.59	-123.34
B48	27.52	685.51	-132.34
B49	27.52	685.43	-141.34
B50	27.52	685.35	-150.34
B51	27.52	685.28	-159.34
B52	27.52	685.20	-168.34
B53	27.52	685.13	-177.34

C O O R D I N A T E S D A T A L I S T I N G

POINT NAME	COORDINATE (ft) X	Y	Z
B54	27.52	685.06	-185.17
B55	27.52	684.99	-194.17
B41 N	27.52	684.99	-194.67
B41	27.52	684.96	-197.67
B41 F	30.52	684.94	-197.67
B57	31.02	684.94	-197.67
B58	37.93	684.89	-197.67
B44 N	38.43	684.89	-197.67
B44	41.43	684.87	-197.67
B44 F	41.43	684.85	-200.67
B64	41.43	684.85	-201.17
B65	41.43	684.79	-210.17
B66	41.43	684.73	-219.17
B67	41.43	684.67	-228.17
B68	41.43	684.61	-237.17
B69	41.43	684.55	-246.17
B70	41.43	684.49	-255.17
B71	41.43	684.43	-264.17
B72	41.43	684.38	-273.17
B73	41.43	684.35	-278.00
B74	41.43	684.29	-287.00
B56 N	41.43	684.28	-288.00
B56	41.43	684.27	-290.50
B56 F	38.93	684.24	-290.50
B75	38.48	684.24	-290.50
B20 N	38.04	684.23	-290.50
B20	35.54	684.19	-290.50
B20 F	35.54	684.14	-293.00
B77	35.54	684.13	-293.67
B21 N	35.54	684.12	-294.33
B21	35.54	684.07	-296.83
B21 F	33.04	684.03	-296.83
B59 N	30.71	684.00	-296.83
B59	30.69	684.00	-296.83
B59 M	30.69	684.00	-296.83
B59 F	30.67	684.00	-296.83
B60	29.69	684.00	-296.83
B61	28.69	684.00	-296.83
B62	28.08	684.00	-296.83
B63	27.83	684.00	-296.83
*** SEGMENT C			
C00	0.00	691.68	1.00
C01	0.00	691.49	1.00
C02 N	0.00	691.32	1.00
C02	0.00	691.07	1.00
C02 F	0.25	691.07	1.00
C03	1.46	691.07	1.00
C04	3.46	691.07	1.00
C21	5.96	691.07	1.00
C06 N	6.34	691.07	1.00
C06	6.46	691.07	1.00

C O O R D I N A T E S D A T A L I S T I N G

POINT NAME	COORDINATE (ft) X	Y	Z
C06 F	6.58	691.06	1.00
C22	16.95	690.22	1.00
C23	23.94	689.65	1.00
C09 N	24.45	689.61	1.00
C09	27.43	689.37	1.00
C09 F	27.43	689.28	-1.99
C24	27.43	689.27	-2.50
C25	27.43	689.01	-11.50
C26	27.43	688.75	-20.50
C28	27.43	688.49	-29.50
C29	27.43	688.22	-38.50
C31	27.43	687.91	-49.00
C16 N	27.43	687.90	-49.50
C16	27.43	687.81	-52.50
C16 F	30.43	687.74	-52.50
C32	30.93	687.73	-52.50
C33	33.69	687.66	-52.50
C19 N	34.19	687.65	-52.50
C19	37.19	687.58	-52.50
C19 F	37.19	687.49	-55.50
C34	37.19	687.48	-56.00
C35	37.19	687.22	-65.00
C36	37.19	686.96	-74.00
C37	37.19	686.70	-83.00
C38	37.19	686.44	-92.00
C39	37.19	686.29	-97.01
C40	37.19	686.02	-106.00
C27 N	37.19	686.01	-106.50
C27	37.19	685.92	-109.50
C27 F	34.19	685.84	-109.50
C42	33.69	685.83	-109.50
C43	29.69	685.73	-109.50
C30 N	29.19	685.72	-109.50
C30	26.19	685.64	-109.50
C30 F	26.19	685.61	-112.50
C45	26.19	685.61	-113.00
C46	26.19	685.54	-122.00
C47	26.19	685.47	-131.00
C48	26.19	685.40	-140.00
C49	26.19	685.33	-149.00
C50	26.19	685.26	-158.00
C51	26.19	685.19	-167.00
C52	26.19	685.11	-176.00
C53	26.19	685.04	-185.00
C55	26.19	684.95	-195.50
C41 N	26.19	684.95	-196.00
C41	26.19	684.92	-199.00
C41 F	29.19	684.89	-199.00
C56	29.69	684.89	-199.00
C57	36.60	684.84	-199.00
C44 N	37.10	684.84	-199.00
C44	40.10	684.82	-199.00

C O O R D I N A T E S D A T A L I S T I N G

POINT NAME	COORDINATE (ft) X	Y	Z
C44 F	40.10	684.79	-202.00
C58	40.10	684.79	-202.50
C59	40.10	684.72	-211.50
C60	40.10	684.65	-220.50
C61	40.10	684.58	-229.50
C63	40.10	684.52	-238.50
C64	40.10	684.45	-247.50
C65	40.10	684.39	-256.50
C72	40.10	684.32	-265.50
C73	40.10	684.24	-276.24
C54 N	40.10	684.24	-276.74
C54	40.10	684.22	-279.74
C54 F	37.10	684.19	-279.74
C74	36.60	684.19	-279.74
C75	27.60	684.12	-279.74
C76	18.60	684.05	-279.74
C77	9.60	683.99	-279.74
C78	0.60	683.92	-279.74
C79	-8.18	683.86	-279.74
C80	-17.18	683.80	-279.74
C62 N	-17.68	683.80	-279.74
C62	-20.68	683.77	-279.74
C62 F	-20.68	683.74	-282.74
C82	-20.68	683.74	-283.24
C81	-20.68	683.69	-289.08
C83	-20.68	683.65	-294.91
C66 N	-20.68	683.65	-295.41
C66	-20.68	683.62	-298.41
C66 F	-17.68	683.56	-298.41
C84	-17.18	683.55	-298.41
C67 N	-15.40	683.52	-298.41
C67	-15.38	683.52	-298.41
C67 M	-15.38	683.52	-298.41
C67 F	-15.36	683.52	-298.41
C68	-14.38	683.52	-298.41
C69	-13.38	683.52	-298.41
C70	-12.83	683.52	-298.41
C71	-12.64	683.52	-298.41
*** SEGMENT D			
D00	-10.49	683.52	-303.06
D01	-10.49	683.52	-303.25
D02	-10.49	683.52	-303.80
D03	-10.49	683.52	-304.80
D04 N	-10.49	683.52	-307.78
D04	-10.49	683.52	-307.80
D04 M	-10.49	683.52	-307.80
D04 F	-10.49	683.52	-307.82
D13	-10.49	683.61	-315.30
D14	-10.49	683.71	-322.83
D08 N	-10.49	683.72	-323.33
D08	-10.49	683.75	-326.33

C O O R D I N A T E S D A T A L I S T I N G

POINT NAME	COORDINATE (ft) X	Y	Z
D08 F	-7.49	683.78	-326.33
D15	-6.99	683.78	-326.33
D18	-1.34	683.83	-326.33
D16	4.31	683.89	-326.33
D12 N	4.81	683.90	-326.33
D12	7.81	683.93	-326.33
D12 F	7.81	683.97	-329.33
D19	7.81	683.98	-329.83
D25	7.81	684.10	-338.70
D20	7.81	684.21	-347.56
D17 N	7.81	684.22	-348.06
D17	7.81	684.25	-351.06
D17 F	10.81	684.27	-351.06
D26	11.31	684.27	-351.06
D28	18.24	684.30	-351.06
D27	25.16	684.33	-351.06
D21	28.16	684.34	-351.06
D22	29.16	684.34	-351.06
D23 N	29.54	684.34	-351.06
D23	29.79	684.34	-351.06
D23 F	29.79	684.59	-351.06
D24	29.79	684.91	-351.06

S E G M E N T D A T A L I S T I N G

Segment Name	First Node	Last Node	Line Number	Apply Wind	Apply Bowing	Apply Buoyancy
A	A00	A19		No	No	No
B	B00	B63	RIGID	No	No	No
C	C00	C71		No	No	No
D	D00	D24		No	No	No

```
-----------------------------------------------------------------------------------------------------------------------
Primary Piping Low Temp
04/23/2020 2018719                                                                  BENTLEY
03:23 PM                                                                            AutoPIPE Nuclear 12.00.00.16   MODEL  PAGE  55
-----------------------------------------------------------------------------------------------------------------------

                    P I P E   D A T A   L I S T I N G

 Pipe ID/     Nom/ O.D.  -----Thickness(inch)----- Spec  InsuDen/   Weight(lb/ft )    E/  Composition/
 Material     Sch  inch  W.Th. Corr Mill Insu Ling Grav/ LingDen/  Pipe/ Ling/ Total  W/  Steel Group/
 CladMaterial            Clad                      InsMt CladDen   Cont  Insu/        f   Tcr
 ---Line Class---                                        lb/cu.ft        Clad
 ------------ ---- ----- ----- ---- ---- ---- ---- ----- --------  ----- ----- ----- ---- --------------------

 Tag No. : <None>
 2SCH40      2.000 2.375 0.154 0.01 0.02    0    0     0    0.000   3.74     0  3.74 1.00 Austenitic Stainless
 A312-TP316L  40S                                          0.000      0     0       1.00 Austenitic
                           0                               0.000            0       1.00      0.000


 Tag No. : <None>
 3SCH40      3.000 3.500 0.216 0.01 0.03    0    0     0    0.000   7.75     0  7.75 1.00 Austenitic Stainless
 A312-TP316L  40S                                          0.000      0     0       1.00 Austenitic
                           0                               0.000            0       1.00      0.000
```

M A T E R I A L D A T A L I S T I N G

Material Name	Pipe ID	Density lb/cu.ft	Pois. Ratio	Temper. deg F	Modulus E6 psi Axial	Hoop	Shear	Expans. in/100ft	Composition
A312-TP316L	2SCH40	501.0	0.30	80.0	28.246	28.246	10.864		Austenitic Stainless
				30.0	28.463			-0.5077	
A312-TP316L	3SCH40	501.0	0.30	80.0	28.246	28.246	10.864		Austenitic Stainless
				30.0	28.463			-0.5077	

M A T E R I A L A L L O W A B L E D A T A L I S T I N G

Material Name	Pipe ID	Temper. deg F	Allow. psi	Yield psi	Ultimate	Weld Reduction Factor W
A312-TP316L	2SCH40	80.0	16700.0	25000.0	70000.0	1.000
		30.0	16700.0	25000.0		1.000
A312-TP316L	3SCH40	80.0	16700.0	25000.0	70000.0	1.000
		30.0	16700.0	25000.0		1.000

OPERATING TEMPERATURE AND PRESSURE DATA
STRESSES IN psi

POINT NAME	CASE	PRESS. psi	TEMPER deg F	EXPAN. in/100ft	MODULUS E6 psi	ALLOW STRESS	YIELD STRESS
*** SEGMENT A							
A00	T1	0	30.00	-0.508	28.463	16700	25000
A19	Same as previous point.						
*** SEGMENT B , LINE # RIGID							
B00	T1	0	30.00	-0.508	28.463	16700	25000
B63	Same as previous point.						
*** SEGMENT C							
C00	T1	0	30.00	-0.508	28.463	16700	25000
C71	Same as previous point.						
*** SEGMENT D							
D00	T1	0	30.00	-0.508	28.463	16700	25000
D24	Same as previous point.						

u User-defined value
* Non-code material for allowable stress;
Non-standard material for expansion and modulus

S U P P O R T D A T A L I S T I N G

```
 Point Support  Support Conn.to Comp.Wt  Stiff.     Gap 1   Gap 2  Fric. GapSet Preload Ld.Var Size    Figure
 Name   Type      ID     /Dir    (lb)               (in)    (in)   Fact. /#hgr   (lbf)
 ----- -------- ------- ------- ------- ---------- ------- ------- ----- ------ ------- ------ ---- ------------

 Tag No.: <None>                                Attachment ID: <None>
 A20   V-stop   A20  1  Ground    0.000 Rigid        0.000 100.000  0.00  Weightless

 Tag No.: <None>                                Attachment ID: <None>
 A20   Guide-V  A20  2  Ground    0.000 Rigid        0.000   0.000  0.80  Weightless
       Guide-H  A20  2  Ground    0.000 Rigid        1.000   1.000  0.80  Weightless
            Gap Dir.: (Gap1_V=-Z, Gap2_V=+Z, Gap1_H=-X, Gap2_H=+X)

 Tag No.: <None>                                Attachment ID: <None>
 A23   Guide-V  A23  1  Ground    0.000 Rigid        0.000   0.830  0.80  Weightless
       Guide-H  A23  1  Ground    0.000 Rigid        0.830   0.830  0.80  Weightless

 Tag No.: <None>                                Attachment ID: <None>
 A24   Guide-V  A24  1  Ground    0.000 Rigid        0.000   0.063  0.80  Weightless
       Guide-H  A24  1  Ground    0.000 Rigid        0.031   0.031  0.80  Weightless

 Tag No.: <None>                                Attachment ID: <None>
 A21   Guide-V  A21  1  Ground    0.000 Rigid        0.000   0.830  0.80  Weightless
       Guide-H  A21  1  Ground    0.000 Rigid        0.830   0.830  0.80  Weightless

 Tag No.: <None>                                Attachment ID: <None>
 A22   Guide-V  A22  2  Ground    0.000 Rigid        0.000   0.830  0.80  Weightless
       Guide-H  A22  2  Ground    0.000 Rigid        0.830   0.830  0.80  Weightless

 Tag No.: <None>                                Attachment ID: <None>
 A25   Guide-V  A25  2  Ground    0.000 Rigid        0.000   0.063  0.80  Weightless
       Guide-H  A25  2  Ground    0.000 Rigid        0.031   0.031  0.80  Weightless

 Tag No.: <None>                                Attachment ID: <None>
 A26   Guide-V  A26  2  Ground    0.000 Rigid        0.000   0.063  0.80  Weightless
       Guide-H  A26  2  Ground    0.000 Rigid        0.031   0.031  0.80  Weightless

 Tag No.: <None>                                Attachment ID: <None>
 A27   Guide-V  A27  2  Ground    0.000 Rigid        0.000   0.063  0.80  Weightless
       Guide-H  A27  2  Ground    0.000 Rigid        0.031   0.031  0.80  Weightless

 Tag No.: <None>                                Attachment ID: <None>
 A28   Guide-V  A28  2  Ground    0.000 Rigid        0.000   0.063  0.80  Weightless
       Guide-H  A28  2  Ground    0.000 Rigid        0.031   0.031  0.80  Weightless

 Tag No.: <None>                                Attachment ID: <None>
 A29   Guide-V  A29  1  Ground    0.000 Rigid        0.000   0.830  0.80  Weightless
       Guide-H  A29  1  Ground    0.000 Rigid        0.830   0.830  0.80  Weightless

 Tag No.: <None>                                Attachment ID: <None>
 A30   Guide-V  A30  1  Ground    0.000 Rigid        0.000   0.830  0.80  Weightless
       Guide-H  A30  1  Ground    0.000 Rigid        0.830   0.830  0.80  Weightless

 Tag No.: <None>                                Attachment ID: <None>
 A31   Guide-V  A31  1  Ground    0.000 Rigid        0.000   0.830  0.80  Weightless
       Guide-H  A31  1  Ground    0.000 Rigid        0.830   0.830  0.80  Weightless
```

S U P P O R T D A T A L I S T I N G

Point Name	Support Type	Support ID	Conn.to /Dir	Comp.Wt (lb)	Stiff.	Gap 1 (in)	Gap 2 (in)	Fric. Fact.	GapSet /#hgr	Preload (lbf)	Ld.Var	Size	Figure
Tag No.: <None>						Attachment ID: <None>							
A32	Guide-V	A32 1	Ground	0.000	Rigid	0.000	0.830	0.80	Weightless				
	Guide-H	A32 1	Ground	0.000	Rigid	0.830	0.830	0.80	Weightless				
Tag No.: <None>						Attachment ID: <None>							
A33	Guide-V	A33 2	Ground	0.000	Rigid	0.000	0.063	0.80	Weightless				
	Guide-H	A33 2	Ground	0.000	Rigid	0.031	0.031	0.80	Weightless				
Tag No.: <None>						Attachment ID: <None>							
A34	Guide-V	A34 2	Ground	0.000	Rigid	0.000	0.063	0.80	Weightless				
	Guide-H	A34 2	Ground	0.000	Rigid	0.031	0.031	0.80	Weightless				
Tag No.: <None>						Attachment ID: <None>							
A35	Guide-V	A35 2	Ground	0.000	Rigid	0.000	0.063	0.80	Weightless				
	Guide-H	A35 2	Ground	0.000	Rigid	0.031	0.031	0.80	Weightless				
Tag No.: <None>						Attachment ID: <None>							
A36	Guide-V	A36 2	Ground	0.000	Rigid	0.000	0.063	0.80	Weightless				
	Guide-H	A36 2	Ground	0.000	Rigid	0.031	0.031	0.80	Weightless				
Tag No.: <None>						Attachment ID: <None>							
A37	Guide-V	A37 2	Ground	0.000	Rigid	0.000	0.063	0.80	Weightless				
	Guide-H	A37 2	Ground	0.000	Rigid	0.031	0.031	0.80	Weightless				
Tag No.: <None>						Attachment ID: <None>							
A38	Guide-V	A38 1	Ground	0.000	Rigid	0.000	0.830	0.80	Weightless				
	Guide-H	A38 1	Ground	0.000	Rigid	0.830	0.830	0.80	Weightless				
Tag No.: <None>						Attachment ID: <None>							
A39	Guide-V	A39 1	Ground	0.000	Rigid	0.000	0.830	0.80	Weightless				
	Guide-H	A39 1	Ground	0.000	Rigid	0.830	0.830	0.80	Weightless				
Tag No.: <None>						Attachment ID: <None>							
A40	Guide-V	A40 1	Ground	0.000	Rigid	0.000	0.830	0.80	Weightless				
	Guide-H	A40 1	Ground	0.000	Rigid	0.830	0.830	0.80	Weightless				
Tag No.: <None>						Attachment ID: <None>							
A41	Guide-V	A41 1	Ground	0.000	Rigid	0.000	0.830	0.80	Weightless				
	Guide-H	A41 1	Ground	0.000	Rigid	0.830	0.830	0.80	Weightless				
Tag No.: <None>						Attachment ID: <None>							
A42	Guide-V	A42 2	Ground	0.000	Rigid	0.000	0.063	0.80	Weightless				
	Guide-H	A42 2	Ground	0.000	Rigid	0.031	0.031	0.80	Weightless				
Tag No.: <None>						Attachment ID: <None>							
A43	Guide-V	A43 2	Ground	0.000	Rigid	0.000	0.063	0.80	Weightless				
	Guide-H	A43 2	Ground	0.000	Rigid	0.031	0.031	0.80	Weightless				
Tag No.: <None>						Attachment ID: <None>							
A44	Guide-V	A44 2	Ground	0.000	Rigid	0.000	0.063	0.80	Weightless				
	Guide-H	A44 2	Ground	0.000	Rigid	0.031	0.031	0.80	Weightless				

S U P P O R T D A T A L I S T I N G

Point Name	Support Type	Support ID	Conn.to /Dir	Comp.Wt (lb)	Stiff.	Gap 1 (in)	Gap 2 (in)	Fric. Fact.	GapSet /#hgr	Preload (lbf)	Ld.Var	Size	Figure
Tag No.: <None>						Attachment ID: <None>							
A45	Guide-V	A45 2	Ground	0.000	Rigid	0.000	0.063	0.80	Weightless				
	Guide-H	A45 2	Ground	0.000	Rigid	0.031	0.031	0.80	Weightless				
Tag No.: <None>						Attachment ID: <None>							
A46	Guide-V	A46 2	Ground	0.000	Rigid	0.000	0.063	0.80	Weightless				
	Guide-H	A46 2	Ground	0.000	Rigid	0.031	0.031	0.80	Weightless				
Tag No.: <None>						Attachment ID: <None>							
A47	Guide-V	A47 2	Ground	0.000	Rigid	0.000	0.063	0.80	Weightless				
	Guide-H	A47 2	Ground	0.000	Rigid	0.031	0.031	0.80	Weightless				
Tag No.: <None>						Attachment ID: <None>							
A48	Guide-V	A48 2	Ground	0.000	Rigid	0.000	0.063	0.80	Weightless				
	Guide-H	A48 2	Ground	0.000	Rigid	0.031	0.031	0.80	Weightless				
Tag No.: <None>						Attachment ID: <None>							
A49	Guide-V	A49 2	Ground	0.000	Rigid	0.000	0.063	0.80	Weightless				
	Guide-H	A49 2	Ground	0.000	Rigid	0.031	0.031	0.80	Weightless				
Tag No.: <None>						Attachment ID: <None>							
A50	Guide-V	A50 2	Ground	0.000	Rigid	0.000	0.063	0.80	Weightless				
	Guide-H	A50 2	Ground	0.000	Rigid	0.031	0.031	0.80	Weightless				
Tag No.: <None>						Attachment ID: <None>							
A51	Guide-V	A51 1	Ground	0.000	Rigid	0.000	0.830	0.80	Weightless				
	Guide-H	A51 1	Ground	0.000	Rigid	0.830	0.830	0.80	Weightless				
Tag No.: <None>						Attachment ID: <None>							
A52	Guide-V	A52 1	Ground	0.000	Rigid	0.000	0.830	0.80	Weightless				
	Guide-H	A52 1	Ground	0.000	Rigid	0.830	0.830	0.80	Weightless				
Tag No.: <None>						Attachment ID: <None>							
A53	Guide-V	A53 1	Ground	0.000	Rigid	0.000	0.830	0.80	Weightless				
	Guide-H	A53 1	Ground	0.000	Rigid	0.830	0.830	0.80	Weightless				
Tag No.: <None>						Attachment ID: <None>							
A54	Guide-V	A54 1	Ground	0.000	Rigid	0.000	0.830	0.80	Weightless				
	Guide-H	A54 1	Ground	0.000	Rigid	0.830	0.830	0.80	Weightless				
Tag No.: <None>						Attachment ID: <None>							
A55	Guide-V	A55 1	Ground	0.000	Rigid	0.000	0.063	0.80	Weightless				
	Guide-H	A55 1	Ground	0.000	Rigid	0.031	0.031	0.80	Weightless				
Tag No.: <None>						Attachment ID: <None>							
A56	Guide-V	A56 1	Ground	0.000	Rigid	0.000	0.063	0.80	Weightless				
	Guide-H	A56 1	Ground	0.000	Rigid	0.031	0.031	0.80	Weightless				
Tag No.: <None>						Attachment ID: <None>							
A57	Guide-V	A57 1	Ground	0.000	Rigid	0.000	0.063	0.80	Weightless				
	Guide-H	A57 1	Ground	0.000	Rigid	0.031	0.031	0.80	Weightless				

S U P P O R T D A T A L I S T I N G

Point Name	Support Type	Support ID	Conn.to /Dir	Comp.Wt (lb)	Stiff.	Gap 1 (in)	Gap 2 (in)	Fric. Fact.	GapSet /#hgr	Preload (lbf)	Ld.Var	Size	Figure
Tag No.: <None>						Attachment ID: <None>							
A58	Guide-V	A58 1	Ground	0.000	Rigid	0.000	0.063	0.80	Weightless				
	Guide-H	A58 1	Ground	0.000	Rigid	0.031	0.031	0.80	Weightless				
Tag No.: <None>						Attachment ID: <None>							
A59	Guide-V	A59 1	Ground	0.000	Rigid	0.000	0.063	0.80	Weightless				
	Guide-H	A59 1	Ground	0.000	Rigid	0.031	0.031	0.80	Weightless				
Tag No.: <None>						Attachment ID: <None>							
A60	Guide-V	A60 1	Ground	0.000	Rigid	0.000	0.063	0.80	Weightless				
	Guide-H	A60 1	Ground	0.000	Rigid	0.031	0.031	0.80	Weightless				
Tag No.: <None>						Attachment ID: <None>							
A61	Guide-V	A61 1	Ground	0.000	Rigid	0.000	0.063	0.80	Weightless				
	Guide-H	A61 1	Ground	0.000	Rigid	0.031	0.031	0.80	Weightless				
Tag No.: <None>						Attachment ID: <None>							
A62	Guide-V	A62 1	Ground	0.000	Rigid	0.000	0.830	0.80	Weightless				
	Guide-H	A62 1	Ground	0.000	Rigid	0.830	0.830	0.80	Weightless				
Tag No.: <None>						Attachment ID: <None>							
A63	Guide-V	A63 1	Ground	0.000	Rigid	0.000	0.830	0.80	Weightless				
	Guide-H	A63 1	Ground	0.000	Rigid	0.830	0.830	0.80	Weightless				
Tag No.: <None>						Attachment ID: <None>							
A64	Guide-V	A64 2	Ground	0.000	Rigid	0.000	0.063	0.80	Weightless				
	Guide-H	A64 2	Ground	0.000	Rigid	0.031	0.031	0.80	Weightless				
Tag No.: <None>						Attachment ID: <None>							
A65	Guide-V	A65 2	Ground	0.000	Rigid	0.000	0.063	0.80	Weightless				
	Guide-H	A65 2	Ground	0.000	Rigid	0.031	0.031	0.80	Weightless				
Tag No.: <None>						Attachment ID: <None>							
A66	Guide-V	A66 2	Ground	0.000	Rigid	0.000	0.063	0.80	Weightless				
	Guide-H	A66 2	Ground	0.000	Rigid	0.031	0.031	0.80	Weightless				
Tag No.: <None>						Attachment ID: <None>							
A67	Guide-V	A67 2	Ground	0.000	Rigid	0.000	0.063	0.80	Weightless				
	Guide-H	A67 2	Ground	0.000	Rigid	0.031	0.031	0.80	Weightless				
Tag No.: <None>						Attachment ID: <None>							
A68	Guide-V	A68 2	Ground	0.000	Rigid	0.000	0.063	0.80	Weightless				
	Guide-H	A68 2	Ground	0.000	Rigid	0.031	0.031	0.80	Weightless				
Tag No.: <None>						Attachment ID: <None>							
A69	Guide-V	A69 1	Ground	0.000	Rigid	0.000	0.830	0.80	Weightless				
	Guide-H	A69 1	Ground	0.000	Rigid	0.830	0.830	0.80	Weightless				
Tag No.: <None>						Attachment ID: <None>							
A70	Guide-V	A70 1	Ground	0.000	Rigid	0.000	0.830	0.80	Weightless				
	Guide-H	A70 1	Ground	0.000	Rigid	0.830	0.830	0.80	Weightless				

```
-----------------------------------------------------------------------------------------------------------------
Primary Piping Low Temp
04/23/2020 2018719                                                    BENTLEY
03:23 PM                                                              AutoPIPE Nuclear 12.00.00.16   MODEL  PAGE  63
-----------------------------------------------------------------------------------------------------------------

                              S U P P O R T   D A T A   L I S T I N G

 Point Support  Support Conn.to Comp.Wt  Stiff.     Gap 1   Gap 2  Fric. GapSet Preload Ld.Var Size    Figure
 Name   Type      ID     /Dir    (lb)               (in)    (in)   Fact. /#hgr   (lbf)
 ----- -------- ------- ------- ------- ---------- ------- ------- ----- ------ ------- ------ ---- ------------
 Tag No.: <None>                                 Attachment ID: <None>
 A71   Guide-V  A71  2  Ground    0.000 Rigid        0.000   0.063  0.80  Weightless
       Guide-H  A71  2  Ground    0.000 Rigid        0.031   0.031  0.80  Weightless

 Tag No.: <None>                                 Attachment ID: <None>
 A72   Guide-V  A72  1  Ground    0.000 Rigid        0.000   0.830  0.80  Weightless
       Guide-H  A72  1  Ground    0.000 Rigid        0.830   0.830  0.80  Weightless

 Tag No.: <None>                                 Attachment ID: <None>
 A73   Guide-V  A73  1  Ground    0.000 Rigid        0.000   0.830  0.80  Weightless
       Guide-H  A73  1  Ground    0.000 Rigid        0.830   0.830  0.80  Weightless

 Tag No.: <None>                                 Attachment ID: <None>
 B01   V-stop   B01  1  Ground    0.000 Rigid        0.000 100.000  0.00  Weightless

 Tag No.: <None>                                 Attachment ID: <None>
 B01   Guide-V  B01  2  Ground    0.000 Rigid        0.000   0.000  0.80  Weightless
       Guide-H  B01  2  Ground    0.000 Rigid        1.000   1.000  0.80  Weightless
            Gap Dir.: (Gap1_V=-Z, Gap2_V=+Z, Gap1_H=-X, Gap2_H=+X)

 Tag No.: <None>                                 Attachment ID: <None>
 B22   Guide-V  B22  2  Ground    0.000 Rigid        0.000   1.280  0.80  Weightless
       Guide-H  B22  2  Ground    0.000 Rigid        1.280   1.280  0.80  Weightless

 Tag No.: <None>                                 Attachment ID: <None>
 B23   Guide-V  B23  2  Ground    0.000 Rigid        0.000   0.313  0.80  Weightless
       Guide-H  B23  2  Ground    0.000 Rigid        0.156   0.156  0.80  Weightless

 Tag No.: <None>                                 Attachment ID: <None>
 B24   Guide-V  B24  2  Ground    0.000 Rigid        0.000   1.280  0.80  Weightless
       Guide-H  B24  2  Ground    0.000 Rigid        1.280   1.280  0.80  Weightless

 Tag No.: <None>                                 Attachment ID: <None>
 B25   Guide-V  B25  2  Ground    0.000 Rigid        0.000   1.280  0.80  Weightless
       Guide-H  B25  2  Ground    0.000 Rigid        1.280   1.280  0.80  Weightless

 Tag No.: <None>                                 Attachment ID: <None>
 B26   Guide-V  B26  1  Ground    0.000 Rigid        0.000   0.313  0.80  Weightless
       Guide-H  B26  1  Ground    0.000 Rigid        0.156   0.156  0.80  Weightless

 Tag No.: <None>                                 Attachment ID: <None>
 B28   Guide-V  B28  1  Ground    0.000 Rigid        0.000   0.313  0.80  Weightless
       Guide-H  B28  1  Ground    0.000 Rigid        0.156   0.156  0.80  Weightless

 Tag No.: <None>                                 Attachment ID: <None>
 B29   Guide-V  B29  1  Ground    0.000 Rigid        0.000   0.313  0.80  Weightless
       Guide-H  B29  1  Ground    0.000 Rigid        0.156   0.156  0.80  Weightless

 Tag No.: <None>                                 Attachment ID: <None>
 B31   Guide-V  B31  1  Ground    0.000 Rigid        0.000   0.313  0.80  Weightless
       Guide-H  B31  1  Ground    0.000 Rigid        0.156   0.156  0.80  Weightless
```

S U P P O R T D A T A L I S T I N G

Point Name	Support Type	Support ID	Conn.to /Dir	Comp.Wt (lb)	Stiff.	Gap 1 (in)	Gap 2 (in)	Fric. Fact.	GapSet /#hgr	Preload (lbf)	Ld.Var	Size	Figure
Tag No.: <None>						Attachment ID: <None>							
B32	Guide-V	B32 2	Ground	0.000	Rigid	0.000	1.280	0.80	Weightless				
	Guide-H	B32 2	Ground	0.000	Rigid	1.280	1.280	0.80	Weightless				
Tag No.: <None>						Attachment ID: <None>							
B33	Guide-V	B33 2	Ground	0.000	Rigid	0.000	1.280	0.80	Weightless				
	Guide-H	B33 2	Ground	0.000	Rigid	1.280	1.280	0.80	Weightless				
Tag No.: <None>						Attachment ID: <None>							
B34	Guide-V	B34 2	Ground	0.000	Rigid	0.000	1.280	0.80	Weightless				
	Guide-H	B34 2	Ground	0.000	Rigid	1.280	1.280	0.80	Weightless				
Tag No.: <None>						Attachment ID: <None>							
B35	Guide-V	B35 2	Ground	0.000	Rigid	0.000	1.280	0.80	Weightless				
	Guide-H	B35 2	Ground	0.000	Rigid	1.280	1.280	0.80	Weightless				
Tag No.: <None>						Attachment ID: <None>							
B36	Guide-V	B36 2	Ground	0.000	Rigid	0.000	0.313	0.80	Weightless				
	Guide-H	B36 2	Ground	0.000	Rigid	0.156	0.156	0.80	Weightless				
Tag No.: <None>						Attachment ID: <None>							
B37	Guide-V	B37 2	Ground	0.000	Rigid	0.000	0.313	0.80	Weightless				
	Guide-H	B37 2	Ground	0.000	Rigid	0.156	0.156	0.80	Weightless				
Tag No.: <None>						Attachment ID: <None>							
B38	Guide-V	B38 2	Ground	0.000	Rigid	0.000	0.313	0.80	Weightless				
	Guide-H	B38 2	Ground	0.000	Rigid	0.156	0.156	0.80	Weightless				
Tag No.: <None>						Attachment ID: <None>							
B39	Guide-V	B39 2	Ground	0.000	Rigid	0.000	0.313	0.80	Weightless				
	Guide-H	B39 2	Ground	0.000	Rigid	0.156	0.156	0.80	Weightless				
Tag No.: <None>						Attachment ID: <None>							
B40	Guide-V	B40 1	Ground	0.000	Rigid	0.000	0.313	0.80	Weightless				
	Guide-H	B40 1	Ground	0.000	Rigid	0.156	0.156	0.80	Weightless				
Tag No.: <None>						Attachment ID: <None>							
B42	Guide-V	B42 1	Ground	0.000	Rigid	0.000	1.280	0.80	Weightless				
	Guide-H	B42 1	Ground	0.000	Rigid	1.280	1.280	0.80	Weightless				
Tag No.: <None>						Attachment ID: <None>							
B43	Guide-V	B43 1	Ground	0.000	Rigid	0.000	1.280	0.80	Weightless				
	Guide-H	B43 1	Ground	0.000	Rigid	1.280	1.280	0.80	Weightless				
Tag No.: <None>						Attachment ID: <None>							
B45	Guide-V	B45 1	Ground	0.000	Rigid	0.000	1.280	0.80	Weightless				
	Guide-H	B45 1	Ground	0.000	Rigid	1.280	1.280	0.80	Weightless				
Tag No.: <None>						Attachment ID: <None>							
B46	Guide-V	B46 2	Ground	0.000	Rigid	0.000	1.280	0.80	Weightless				
	Guide-H	B46 2	Ground	0.000	Rigid	1.280	1.280	0.80	Weightless				

S U P P O R T D A T A L I S T I N G

Point Name	Support Type	Support ID	Conn.to /Dir	Comp.Wt (lb)	Stiff.	Gap 1 (in)	Gap 2 (in)	Fric. Fact.	GapSet /#hgr	Preload (lbf)	Ld.Var	Size	Figure
Tag No.: <None>						Attachment ID: <None>							
B47	Guide-V	B47 2	Ground	0.000	Rigid	0.000	0.313	0.80	Weightless				
	Guide-H	B47 2	Ground	0.000	Rigid	0.156	0.156	0.80	Weightless				
Tag No.: <None>						Attachment ID: <None>							
B48	Guide-V	B48 2	Ground	0.000	Rigid	0.000	0.313	0.80	Weightless				
	Guide-H	B48 2	Ground	0.000	Rigid	0.156	0.156	0.80	Weightless				
Tag No.: <None>						Attachment ID: <None>							
B49	Guide-V	B49 2	Ground	0.000	Rigid	0.000	0.313	0.80	Weightless				
	Guide-H	B49 2	Ground	0.000	Rigid	0.156	0.156	0.80	Weightless				
Tag No.: <None>						Attachment ID: <None>							
B50	Guide-V	B50 2	Ground	0.000	Rigid	0.000	0.313	0.80	Weightless				
	Guide-H	B50 2	Ground	0.000	Rigid	0.156	0.156	0.80	Weightless				
Tag No.: <None>						Attachment ID: <None>							
B51	Guide-V	B51 2	Ground	0.000	Rigid	0.000	0.313	0.80	Weightless				
	Guide-H	B51 2	Ground	0.000	Rigid	0.156	0.156	0.80	Weightless				
Tag No.: <None>						Attachment ID: <None>							
B52	Guide-V	B52 2	Ground	0.000	Rigid	0.000	0.313	0.80	Weightless				
	Guide-H	B52 2	Ground	0.000	Rigid	0.156	0.156	0.80	Weightless				
Tag No.: <None>						Attachment ID: <None>							
B53	Guide-V	B53 2	Ground	0.000	Rigid	0.000	0.313	0.80	Weightless				
	Guide-H	B53 2	Ground	0.000	Rigid	0.156	0.156	0.80	Weightless				
Tag No.: <None>						Attachment ID: <None>							
B54	Guide-V	B54 2	Ground	0.000	Rigid	0.000	0.313	0.80	Weightless				
	Guide-H	B54 2	Ground	0.000	Rigid	0.156	0.156	0.80	Weightless				
Tag No.: <None>						Attachment ID: <None>							
B55	Guide-V	B55 1	Ground	0.000	Rigid	0.000	1.280	0.80	Weightless				
	Guide-H	B55 1	Ground	0.000	Rigid	1.280	1.280	0.80	Weightless				
Tag No.: <None>						Attachment ID: <None>							
B57	Guide-V	B57 1	Ground	0.000	Rigid	0.000	1.280	0.80	Weightless				
	Guide-H	B57 1	Ground	0.000	Rigid	1.280	1.280	0.80	Weightless				
Tag No.: <None>						Attachment ID: <None>							
B58	Guide-V	B58 1	Ground	0.000	Rigid	0.000	1.280	0.80	Weightless				
	Guide-H	B58 1	Ground	0.000	Rigid	1.280	1.280	0.80	Weightless				
Tag No.: <None>						Attachment ID: <None>							
B64	Guide-V	B64 1	Ground	0.000	Rigid	0.000	1.280	0.80	Weightless				
	Guide-H	B64 1	Ground	0.000	Rigid	1.280	1.280	0.80	Weightless				
Tag No.: <None>						Attachment ID: <None>							
B65	Guide-V	B65 1	Ground	0.000	Rigid	0.000	0.313	0.80	Weightless				
	Guide-H	B65 1	Ground	0.000	Rigid	0.156	0.156	0.80	Weightless				

```
-----------------------------------------------------------------------------------------------------------------------
Primary Piping Low Temp
04/23/2020 2018719                                                                    BENTLEY
03:23 PM                                                                              AutoPIPE Nuclear 12.00.00.16   MODEL  PAGE  66
-----------------------------------------------------------------------------------------------------------------------

                              S U P P O R T   D A T A   L I S T I N G

 Point Support  Support Conn.to Comp.Wt  Stiff.     Gap 1   Gap 2  Fric. GapSet Preload Ld.Var Size    Figure
 Name   Type      ID     /Dir    (lb)               (in)    (in)   Fact. /#hgr   (lbf)
 ----- -------- ------- ------- ------- ---------- ------- ------- ----- ------ ------- ------ ---- ------------
 Tag No.: <None>                                  Attachment ID: <None>
 B66   Guide-V  B66  1  Ground    0.000 Rigid        0.000   0.313  0.80  Weightless
       Guide-H  B66  1  Ground    0.000 Rigid        0.156   0.156  0.80  Weightless

 Tag No.: <None>                                  Attachment ID: <None>
 B67   Guide-V  B67  1  Ground    0.000 Rigid        0.000   0.313  0.80  Weightless
       Guide-H  B67  1  Ground    0.000 Rigid        0.156   0.156  0.80  Weightless

 Tag No.: <None>                                  Attachment ID: <None>
 B68   Guide-V  B68  1  Ground    0.000 Rigid        0.000   0.313  0.80  Weightless
       Guide-H  B68  1  Ground    0.000 Rigid        0.156   0.156  0.80  Weightless

 Tag No.: <None>                                  Attachment ID: <None>
 B69   Guide-V  B69  1  Ground    0.000 Rigid        0.000   0.313  0.80  Weightless
       Guide-H  B69  1  Ground    0.000 Rigid        0.156   0.156  0.80  Weightless

 Tag No.: <None>                                  Attachment ID: <None>
 B70   Guide-V  B70  1  Ground    0.000 Rigid        0.000   0.313  0.80  Weightless
       Guide-H  B70  1  Ground    0.000 Rigid        0.156   0.156  0.80  Weightless

 Tag No.: <None>                                  Attachment ID: <None>
 B71   Guide-V  B71  1  Ground    0.000 Rigid        0.000   0.313  0.80  Weightless
       Guide-H  B71  1  Ground    0.000 Rigid        0.156   0.156  0.80  Weightless

 Tag No.: <None>                                  Attachment ID: <None>
 B72   Guide-V  B72  1  Ground    0.000 Rigid        0.000   0.313  0.80  Weightless
       Guide-H  B72  1  Ground    0.000 Rigid        0.156   0.156  0.80  Weightless

 Tag No.: <None>                                  Attachment ID: <None>
 B73   Guide-V  B73  1  Ground    0.000 Rigid        0.000   0.313  0.80  Weightless
       Guide-H  B73  1  Ground    0.000 Rigid        0.156   0.156  0.80  Weightless

 Tag No.: <None>                                  Attachment ID: <None>
 B74   Guide-V  B74  1  Ground    0.000 Rigid        0.000   1.280  0.80  Weightless
       Guide-H  B74  1  Ground    0.000 Rigid        1.280   1.280  0.80  Weightless

 Tag No.: <None>                                  Attachment ID: <None>
 B75   Guide-V  B75  1  Ground    0.000 Rigid        0.000   1.280  0.80  Weightless
       Guide-H  B75  1  Ground    0.000 Rigid        1.280   1.280  0.80  Weightless

 Tag No.: <None>                                  Attachment ID: <None>
 B77   Guide-V  B77  1  Ground    0.000 Rigid        0.000   0.313  0.80  Weightless
       Guide-H  B77  1  Ground    0.000 Rigid        0.156   0.156  0.80  Weightless

 Tag No.: <None>                                  Attachment ID: <None>
 B59 F Guide-V  B59 F1  Ground    0.000 Rigid        0.000   1.280  0.80  Weightless
       Guide-H  B59 F1  Ground    0.000 Rigid        1.280   1.280  0.80  Weightless

 Tag No.: <None>                                  Attachment ID: <None>
 C01   V-stop   C01  1  Ground    0.000 Rigid        0.000 100.000  0.00  Weightless

 Tag No.: <None>                                  Attachment ID: <None>
```

```
-----------------------------------------------------------------------------------------------------------------------
Primary Piping Low Temp
04/23/2020 2018719                                                                    BENTLEY
03:23 PM                                                                              AutoPIPE Nuclear 12.00.00.16   MODEL  PAGE  67
-----------------------------------------------------------------------------------------------------------------------

                              S U P P O R T   D A T A   L I S T I N G

 Point Support  Support Conn.to Comp.Wt  Stiff.     Gap 1   Gap 2  Fric. GapSet Preload Ld.Var Size    Figure
 Name   Type      ID     /Dir    (lb)              (in)    (in)   Fact. /#hgr   (lbf)
 ----- -------- ------- ------- ------- ---------- ------- ------- ----- ------ ------- ------ ---- ------------
 C01   Guide-V  C01  2  Ground    0.000 Rigid        0.000   0.000  0.80  Weightless
       Guide-H  C01  2  Ground    0.000 Rigid        1.000   1.000  0.80  Weightless
            Gap Dir.: (Gap1_V=-Z, Gap2_V=+Z, Gap1_H=-X, Gap2_H=+X)

 Tag No.: <None>                                 Attachment ID: <None>
 C21   Guide-V  C21  2  Ground    0.000 Rigid        0.000   0.830  0.80  Weightless
       Guide-H  C21  2  Ground    0.000 Rigid        0.830   0.830  0.80  Weightless

 Tag No.: <None>                                 Attachment ID: <None>
 C22   Guide-V  C22  2  Ground    0.000 Rigid        0.000   0.063  0.80  Weightless
       Guide-H  C22  2  Ground    0.000 Rigid        0.031   0.031  0.80  Weightless

 Tag No.: <None>                                 Attachment ID: <None>
 C23   Guide-V  C23  2  Ground    0.000 Rigid        0.000   0.830  0.80  Weightless
       Guide-H  C23  2  Ground    0.000 Rigid        0.830   0.830  0.80  Weightless

 Tag No.: <None>                                 Attachment ID: <None>
 C24   Guide-V  C24  2  Ground    0.000 Rigid        0.000   0.830  0.80  Weightless
       Guide-H  C24  2  Ground    0.000 Rigid        0.830   0.830  0.80  Weightless

 Tag No.: <None>                                 Attachment ID: <None>
 C25   Guide-V  C25  2  Ground    0.000 Rigid        0.000   0.063  0.80  Weightless
       Guide-H  C25  2  Ground    0.000 Rigid        0.031   0.031  0.80  Weightless

 Tag No.: <None>                                 Attachment ID: <None>
 C26   Guide-V  C26  2  Ground    0.000 Rigid        0.000   0.063  0.80  Weightless
       Guide-H  C26  2  Ground    0.000 Rigid        0.031   0.031  0.80  Weightless

 Tag No.: <None>                                 Attachment ID: <None>
 C28   Guide-V  C28  2  Ground    0.000 Rigid        0.000   0.063  0.80  Weightless
       Guide-H  C28  2  Ground    0.000 Rigid        0.031   0.031  0.80  Weightless

 Tag No.: <None>                                 Attachment ID: <None>
 C29   Guide-V  C29  2  Ground    0.000 Rigid        0.000   0.063  0.80  Weightless
       Guide-H  C29  2  Ground    0.000 Rigid        0.031   0.031  0.80  Weightless

 Tag No.: <None>                                 Attachment ID: <None>
 C31   Guide-V  C31  2  Ground    0.000 Rigid        0.000   0.830  0.80  Weightless
       Guide-H  C31  2  Ground    0.000 Rigid        0.830   0.830  0.80  Weightless

 Tag No.: <None>                                 Attachment ID: <None>
 C32   Guide-V  C32  2  Ground    0.000 Rigid        0.000   0.830  0.80  Weightless
       Guide-H  C32  2  Ground    0.000 Rigid        0.830   0.830  0.80  Weightless

 Tag No.: <None>                                 Attachment ID: <None>
 C33   Guide-V  C33  2  Ground    0.000 Rigid        0.000   0.830  0.80  Weightless
       Guide-H  C33  2  Ground    0.000 Rigid        0.830   0.830  0.80  Weightless

 Tag No.: <None>                                 Attachment ID: <None>
 C34   Guide-V  C34  2  Ground    0.000 Rigid        0.000   0.830  0.80  Weightless
       Guide-H  C34  2  Ground    0.000 Rigid        0.830   0.830  0.80  Weightless
```

S U P P O R T D A T A L I S T I N G

Point Name	Support Type	Support ID	Conn.to /Dir	Comp.Wt (lb)	Stiff.	Gap 1 (in)	Gap 2 (in)	Fric. Fact.	GapSet /#hgr	Preload (lbf)	Ld.Var	Size	Figure
Tag No.: <None>						Attachment ID: <None>							
C35	Guide-V	C35 2	Ground	0.000	Rigid	0.000	0.063	0.80	Weightless				
	Guide-H	C35 2	Ground	0.000	Rigid	0.031	0.031	0.80	Weightless				
Tag No.: <None>						Attachment ID: <None>							
C36	Guide-V	C36 2	Ground	0.000	Rigid	0.000	0.063	0.80	Weightless				
	Guide-H	C36 2	Ground	0.000	Rigid	0.031	0.031	0.80	Weightless				
Tag No.: <None>						Attachment ID: <None>							
C37	Guide-V	C37 2	Ground	0.000	Rigid	0.000	0.063	0.80	Weightless				
	Guide-H	C37 2	Ground	0.000	Rigid	0.031	0.031	0.80	Weightless				
Tag No.: <None>						Attachment ID: <None>							
C38	Guide-V	C38 2	Ground	0.000	Rigid	0.000	0.063	0.80	Weightless				
	Guide-H	C38 2	Ground	0.000	Rigid	0.031	0.031	0.80	Weightless				
Tag No.: <None>						Attachment ID: <None>							
C39	Guide-V	C39 2	Ground	0.000	Rigid	0.000	0.063	0.80	Weightless				
	Guide-H	C39 2	Ground	0.000	Rigid	0.031	0.031	0.80	Weightless				
Tag No.: <None>						Attachment ID: <None>							
C40	Guide-V	C40 2	Ground	0.000	Rigid	0.000	0.830	0.80	Weightless				
	Guide-H	C40 2	Ground	0.000	Rigid	0.830	0.830	0.80	Weightless				
Tag No.: <None>						Attachment ID: <None>							
C42	Guide-V	C42 2	Ground	0.000	Rigid	0.000	0.830	0.80	Weightless				
	Guide-H	C42 2	Ground	0.000	Rigid	0.830	0.830	0.80	Weightless				
Tag No.: <None>						Attachment ID: <None>							
C43	Guide-V	C43 2	Ground	0.000	Rigid	0.000	0.830	0.80	Weightless				
	Guide-H	C43 2	Ground	0.000	Rigid	0.830	0.830	0.80	Weightless				
Tag No.: <None>						Attachment ID: <None>							
C45	Guide-V	C45 2	Ground	0.000	Rigid	0.000	0.830	0.80	Weightless				
	Guide-H	C45 2	Ground	0.000	Rigid	0.830	0.830	0.80	Weightless				
Tag No.: <None>						Attachment ID: <None>							
C46	Guide-V	C46 2	Ground	0.000	Rigid	0.000	0.063	0.80	Weightless				
	Guide-H	C46 2	Ground	0.000	Rigid	0.031	0.031	0.80	Weightless				
Tag No.: <None>						Attachment ID: <None>							
C47	Guide-V	C47 2	Ground	0.000	Rigid	0.000	0.063	0.80	Weightless				
	Guide-H	C47 2	Ground	0.000	Rigid	0.031	0.031	0.80	Weightless				
Tag No.: <None>						Attachment ID: <None>							
C48	Guide-V	C48 2	Ground	0.000	Rigid	0.000	0.063	0.80	Weightless				
	Guide-H	C48 2	Ground	0.000	Rigid	0.031	0.031	0.80	Weightless				
Tag No.: <None>						Attachment ID: <None>							
C49	Guide-V	C49 2	Ground	0.000	Rigid	0.000	0.063	0.80	Weightless				
	Guide-H	C49 2	Ground	0.000	Rigid	0.031	0.031	0.80	Weightless				

S U P P O R T D A T A L I S T I N G

Point Name	Support Type	Support ID	Conn.to /Dir	Comp.Wt (lb)	Stiff.	Gap 1 (in)	Gap 2 (in)	Fric. Fact.	GapSet /#hgr	Preload (lbf)	Ld.Var	Size	Figure
Tag No.: <None>						Attachment ID: <None>							
C50	Guide-V	C50 2	Ground	0.000	Rigid	0.000	0.063	0.80	Weightless				
	Guide-H	C50 2	Ground	0.000	Rigid	0.031	0.031	0.80	Weightless				
Tag No.: <None>						Attachment ID: <None>							
C51	Guide-V	C51 2	Ground	0.000	Rigid	0.000	0.063	0.80	Weightless				
	Guide-H	C51 2	Ground	0.000	Rigid	0.031	0.031	0.80	Weightless				
Tag No.: <None>						Attachment ID: <None>							
C52	Guide-V	C52 2	Ground	0.000	Rigid	0.000	0.063	0.80	Weightless				
	Guide-H	C52 2	Ground	0.000	Rigid	0.031	0.031	0.80	Weightless				
Tag No.: <None>						Attachment ID: <None>							
C53	Guide-V	C53 2	Ground	0.000	Rigid	0.000	0.063	0.80	Weightless				
	Guide-H	C53 2	Ground	0.000	Rigid	0.031	0.031	0.80	Weightless				
Tag No.: <None>						Attachment ID: <None>							
C55	Guide-V	C55 2	Ground	0.000	Rigid	0.000	0.830	0.80	Weightless				
	Guide-H	C55 2	Ground	0.000	Rigid	0.830	0.830	0.80	Weightless				
Tag No.: <None>						Attachment ID: <None>							
C56	Guide-V	C56 2	Ground	0.000	Rigid	0.000	0.830	0.80	Weightless				
	Guide-H	C56 2	Ground	0.000	Rigid	0.830	0.830	0.80	Weightless				
Tag No.: <None>						Attachment ID: <None>							
C57	Guide-V	C57 2	Ground	0.000	Rigid	0.000	0.830	0.80	Weightless				
	Guide-H	C57 2	Ground	0.000	Rigid	0.830	0.830	0.80	Weightless				
Tag No.: <None>						Attachment ID: <None>							
C58	Guide-V	C58 2	Ground	0.000	Rigid	0.000	0.830	0.80	Weightless				
	Guide-H	C58 2	Ground	0.000	Rigid	0.830	0.830	0.80	Weightless				
Tag No.: <None>						Attachment ID: <None>							
C59	Guide-V	C59 2	Ground	0.000	Rigid	0.000	0.063	0.80	Weightless				
	Guide-H	C59 2	Ground	0.000	Rigid	0.031	0.031	0.80	Weightless				
Tag No.: <None>						Attachment ID: <None>							
C60	Guide-V	C60 2	Ground	0.000	Rigid	0.000	0.063	0.80	Weightless				
	Guide-H	C60 2	Ground	0.000	Rigid	0.031	0.031	0.80	Weightless				
Tag No.: <None>						Attachment ID: <None>							
C61	Guide-V	C61 1	Ground	0.000	Rigid	0.000	0.063	0.80	Weightless				
	Guide-H	C61 1	Ground	0.000	Rigid	0.031	0.031	0.80	Weightless				
Tag No.: <None>						Attachment ID: <None>							
C63	Guide-V	C63 1	Ground	0.000	Rigid	0.000	0.063	0.80	Weightless				
	Guide-H	C63 1	Ground	0.000	Rigid	0.031	0.031	0.80	Weightless				
Tag No.: <None>						Attachment ID: <None>							
C64	Guide-V	C64 2	Ground	0.000	Rigid	0.000	0.063	0.80	Weightless				
	Guide-H	C64 2	Ground	0.000	Rigid	0.031	0.031	0.80	Weightless				

S U P P O R T D A T A L I S T I N G

Point Name	Support Type	Support ID	Conn.to /Dir	Comp.Wt (lb)	Stiff.	Gap 1 (in)	Gap 2 (in)	Fric. Fact.	GapSet /#hgr	Preload (lbf)	Ld.Var	Size	Figure
Tag No.: <None>						Attachment ID: <None>							
C65	Guide-V	C65 1	Ground	0.000	Rigid	0.000	0.063	0.80	Weightless				
	Guide-H	C65 1	Ground	0.000	Rigid	0.031	0.031	0.80	Weightless				
Tag No.: <None>						Attachment ID: <None>							
C72	Guide-V	C72 1	Ground	0.000	Rigid	0.000	0.063	0.80	Weightless				
	Guide-H	C72 1	Ground	0.000	Rigid	0.031	0.031	0.80	Weightless				
Tag No.: <None>						Attachment ID: <None>							
C73	Guide-V	C73 1	Ground	0.000	Rigid	0.000	0.830	0.80	Weightless				
	Guide-H	C73 1	Ground	0.000	Rigid	0.830	0.830	0.80	Weightless				
Tag No.: <None>						Attachment ID: <None>							
C74	Guide-V	C74 1	Ground	0.000	Rigid	0.000	0.830	0.80	Weightless				
	Guide-H	C74 1	Ground	0.000	Rigid	0.830	0.830	0.80	Weightless				
Tag No.: <None>						Attachment ID: <None>							
C75	Guide-V	C75 1	Ground	0.000	Rigid	0.000	0.063	0.80	Weightless				
	Guide-H	C75 1	Ground	0.000	Rigid	0.031	0.031	0.80	Weightless				
Tag No.: <None>						Attachment ID: <None>							
C76	Guide-V	C76 1	Ground	0.000	Rigid	0.000	0.063	0.80	Weightless				
	Guide-H	C76 1	Ground	0.000	Rigid	0.031	0.031	0.80	Weightless				
Tag No.: <None>						Attachment ID: <None>							
C77	Guide-V	C77 1	Ground	0.000	Rigid	0.000	0.063	0.80	Weightless				
	Guide-H	C77 1	Ground	0.000	Rigid	0.031	0.031	0.80	Weightless				
Tag No.: <None>						Attachment ID: <None>							
C78	Guide-V	C78 1	Ground	0.000	Rigid	0.000	0.063	0.80	Weightless				
	Guide-H	C78 1	Ground	0.000	Rigid	0.031	0.031	0.80	Weightless				
Tag No.: <None>						Attachment ID: <None>							
C79	Guide-V	C79 1	Ground	0.000	Rigid	0.000	0.063	0.80	Weightless				
	Guide-H	C79 1	Ground	0.000	Rigid	0.031	0.031	0.80	Weightless				
Tag No.: <None>						Attachment ID: <None>							
C80	Guide-V	C80 1	Ground	0.000	Rigid	0.000	0.830	0.80	Weightless				
	Guide-H	C80 1	Ground	0.000	Rigid	0.830	0.830	0.80	Weightless				
Tag No.: <None>						Attachment ID: <None>							
C82	Guide-V	C82 1	Ground	0.000	Rigid	0.000	0.830	0.80	Weightless				
	Guide-H	C82 1	Ground	0.000	Rigid	0.830	0.830	0.80	Weightless				
Tag No.: <None>						Attachment ID: <None>							
C81	Guide-V	C81 1	Ground	0.000	Rigid	0.000	0.063	0.80	Weightless				
	Guide-H	C81 1	Ground	0.000	Rigid	0.031	0.031	0.80	Weightless				
Tag No.: <None>						Attachment ID: <None>							
C83	Guide-V	C83 1	Ground	0.000	Rigid	0.000	0.830	0.80	Weightless				
	Guide-H	C83 1	Ground	0.000	Rigid	0.830	0.830	0.80	Weightless				

```
-----------------------------------------------------------------------------------------------------------------------
Primary Piping Low Temp
04/23/2020 2018719                                                                    BENTLEY
03:23 PM                                                                              AutoPIPE Nuclear 12.00.00.16   MODEL  PAGE  71
-----------------------------------------------------------------------------------------------------------------------

                              S U P P O R T   D A T A   L I S T I N G

 Point Support  Support Conn.to Comp.Wt  Stiff.     Gap 1   Gap 2  Fric. GapSet Preload Ld.Var Size    Figure
 Name   Type      ID     /Dir    (lb)               (in)    (in)   Fact. /#hgr   (lbf)
 ----- -------- ------- ------- ------- ---------- ------- ------- ----- ------ ------- ------ ---- ------------
 Tag No.: <None>                                  Attachment ID: <None>
 C84   Guide-V  C84  1  Ground    0.000 Rigid        0.000   0.830  0.80  Weightless
       Guide-H  C84  1  Ground    0.000 Rigid        0.830   0.830  0.80  Weightless

 Tag No.: <None>                                  Attachment ID: <None>
 D04 M Guide-V  D04 M1  Ground    0.000 Rigid        0.000   0.830  0.80  Weightless
       Guide-H  D04 M1  Ground    0.000 Rigid        0.830   0.830  0.80  Weightless
            Gap Dir.: (Gap1_V=-Z, Gap2_V=+Z, Gap1_H=-X, Gap2_H=+X)

 Tag No.: <None>                                  Attachment ID: <None>
 D13   Guide-V  D13  1  Ground    0.000 Rigid        0.000   0.063  0.80  Weightless
       Guide-H  D13  1  Ground    0.000 Rigid        0.031   0.031  0.80  Weightless

 Tag No.: <None>                                  Attachment ID: <None>
 D14   Guide-V  D14  2  Ground    0.000 Rigid        0.000   0.830  0.80  Weightless
       Guide-H  D14  2  Ground    0.000 Rigid        0.830   0.830  0.80  Weightless

 Tag No.: <None>                                  Attachment ID: <None>
 D15   Guide-V  D15  2  Ground    0.000 Rigid        0.000   0.830  0.80  Weightless
       Guide-H  D15  2  Ground    0.000 Rigid        0.830   0.830  0.80  Weightless

 Tag No.: <None>                                  Attachment ID: <None>
 D18   Guide-V  D18  1  Ground    0.000 Rigid        0.000   0.063  0.80  Weightless
       Guide-H  D18  1  Ground    0.000 Rigid        0.031   0.031  0.80  Weightless

 Tag No.: <None>                                  Attachment ID: <None>
 D16   Guide-V  D16  1  Ground    0.000 Rigid        0.000   0.830  0.80  Weightless
       Guide-H  D16  1  Ground    0.000 Rigid        0.830   0.830  0.80  Weightless

 Tag No.: <None>                                  Attachment ID: <None>
 D19   Guide-V  D19  2  Ground    0.000 Rigid        0.000   0.830  0.80  Weightless
       Guide-H  D19  2  Ground    0.000 Rigid        0.830   0.830  0.80  Weightless

 Tag No.: <None>                                  Attachment ID: <None>
 D25   Guide-V  D25  1  Ground    0.000 Rigid        0.000   0.063  0.80  Weightless
       Guide-H  D25  1  Ground    0.000 Rigid        0.031   0.031  0.80  Weightless

 Tag No.: <None>                                  Attachment ID: <None>
 D20   Guide-V  D20  1  Ground    0.000 Rigid        0.000   0.830  0.80  Weightless
       Guide-H  D20  1  Ground    0.000 Rigid        0.830   0.830  0.80  Weightless

 Tag No.: <None>                                  Attachment ID: <None>
 D26   Guide-V  D26  1  Ground    0.000 Rigid        0.000   0.830  0.80  Weightless
       Guide-H  D26  1  Ground    0.000 Rigid        0.830   0.830  0.80  Weightless

 Tag No.: <None>                                  Attachment ID: <None>
 D28   Guide-V  D28  1  Ground    0.000 Rigid        0.000   0.063  0.80  Weightless
       Guide-H  D28  1  Ground    0.000 Rigid        0.031   0.031  0.80  Weightless

 Tag No.: <None>                                  Attachment ID: <None>
 D27   Guide-V  D27  1  Ground    0.000 Rigid        0.000   0.830  0.80  Weightless
       Guide-H  D27  1  Ground    0.000 Rigid        0.830   0.830  0.80  Weightless
```

S U P P O R T D A T A L I S T I N G

Point Name	Support Type	Support ID	Conn.to /Dir	Comp.Wt (lb)	Stiff.	Gap 1 (in)	Gap 2 (in)	Fric. Fact.	GapSet /#hgr	Preload (lbf)	Ld.Var	Size	Figure

Spring Manufacturer: Anvil/Grinnell
NOTE 1: No soil supports present in the system.
Gap 1 : V-stop,Guide-V=down, Linestop,Incline,Tie/link=backward, Guide-H=Left
Gap 2 : V-stop,Guide-V=Up , Linestop,Incline,Tie/link=forward , Guide-H=Right
Stiffness units for rotation support: ft-lb/deg, all others: lb/in

B E N D D A T A L I S T I N G

Point Name	Bend Type	Radius (in)	Angle (deg)	OD (in)	tnom (in)	Material	Flan^ /Cuts	SIF in	SIF out	Analysis Set	Flexibility (K)	Pressure Case
A01	Elbow	3.00L	90.0	2.375	0.154	A312-TP316L	0/0	1.73	1.44	1	4.40	None
A04	Elbow	36.00	10.5	2.375	0.154	A312-TP316L	0/0	1.00	1.00	1	1.00	None
A05	Elbow	36.00	89.7	2.375	0.154	A312-TP316L	0/0	1.00	1.00	1	1.00	None
A06	Elbow	36.00	90.0	2.375	0.154	A312-TP316L	0/0	1.00	1.00	1	1.00	None
A07	Elbow	36.00	89.9	2.375	0.154	A312-TP316L	0/0	1.00	1.00	1	1.00	None
A08	Elbow	36.00	90.0	2.375	0.154	A312-TP316L	0/0	1.00	1.00	1	1.00	None
A09	Elbow	36.00	90.0	2.375	0.154	A312-TP316L	0/0	1.00	1.00	1	1.00	None
A10	Elbow	36.00	90.0	2.375	0.154	A312-TP316L	0/0	1.00	1.00	1	1.00	None
A11	Elbow	36.00	90.0	2.375	0.154	A312-TP316L	0/0	1.00	1.00	1	1.00	None
A12	Elbow	36.00	90.0	2.375	0.154	A312-TP316L	0/0	1.00	1.00	1	1.00	None
A13	Elbow	36.00	90.0	2.375	0.154	A312-TP316L	0/0	1.00	1.00	1	1.00	None
A14	Elbow	36.00	90.0	2.375	0.154	A312-TP316L	0/0	1.00	1.00	1	1.00	None
A15	Elbow	36.00	1.0	2.375	0.154	A312-TP316L	0/0	1.00	1.00	1	1.00	None
B02	Elbow	4.50L	90.0	3.500	0.216	A312-TP316L	0/0	1.78	1.48	1	4.58	None
B06	Elbow	36.00	9.3	3.500	0.216	A312-TP316L	0/0	1.00	1.00	1	1.00	None
B09	Elbow	36.00	89.7	3.500	0.216	A312-TP316L	0/0	1.00	1.00	1	1.00	None
B16	Elbow	36.00	90.0	3.500	0.216	A312-TP316L	0/0	1.00	1.00	1	1.00	None
B19	Elbow	36.00	90.0	3.500	0.216	A312-TP316L	0/0	1.00	1.00	1	1.00	None
B27	Elbow	36.00	90.0	3.500	0.216	A312-TP316L	0/0	1.00	1.00	1	1.00	None
B30	Elbow	36.00	90.0	3.500	0.216	A312-TP316L	0/0	1.00	1.00	1	1.00	None
B41	Elbow	36.00	90.0	3.500	0.216	A312-TP316L	0/0	1.00	1.00	1	1.00	None
B44	Elbow	36.00	90.0	3.500	0.216	A312-TP316L	0/0	1.00	1.00	1	1.00	None
B56	Elbow	30.00	90.0	3.500	0.216	A312-TP316L	0/0	1.00	1.00	1	1.00	None
B20	Elbow	30.00	90.0	3.500	0.216	A312-TP316L	0/0	1.00	1.00	1	1.00	None
B21	Elbow	30.00	90.0	3.500	0.216	A312-TP316L	0/0	1.00	1.00	1	1.00	None
B59	*Elbow	36.00	0.8	3.500	0.216	A312-TP316L	0/0	1.00	1.00	1	1.00	None
C02	Elbow	3.00L	90.0	2.375	0.154	A312-TP316L	0/0	1.73	1.44	1	4.40	None
C06	Elbow	36.00	4.6	2.375	0.154	A312-TP316L	0/0	1.00	1.00	1	1.00	None
C09	Elbow	36.00	89.9	2.375	0.154	A312-TP316L	0/0	1.00	1.00	1	1.00	None
C16	Elbow	36.00	90.0	2.375	0.154	A312-TP316L	0/0	1.00	1.00	1	1.00	None
C19	Elbow	36.00	90.0	2.375	0.154	A312-TP316L	0/0	1.00	1.00	1	1.00	None
C27	Elbow	36.00	90.0	2.375	0.154	A312-TP316L	0/0	1.00	1.00	1	1.00	None
C30	Elbow	36.00	90.0	2.375	0.154	A312-TP316L	0/0	1.00	1.00	1	1.00	None
C41	Elbow	36.00	90.0	2.375	0.154	A312-TP316L	0/0	1.00	1.00	1	1.00	None
C44	Elbow	36.00	90.0	2.375	0.154	A312-TP316L	0/0	1.00	1.00	1	1.00	None
C54	Elbow	36.00	90.0	2.375	0.154	A312-TP316L	0/0	1.00	1.00	1	1.00	None
C62	Elbow	36.00	90.0	2.375	0.154	A312-TP316L	0/0	1.00	1.00	1	1.00	None
C66	Elbow	36.00	90.0	2.375	0.154	A312-TP316L	0/0	1.00	1.00	1	1.00	None
C67	*Elbow	36.00	1.0	2.375	0.154	A312-TP316L	0/0	1.00	1.00	1	1.00	None
D04	*Elbow	36.00	0.7	2.375	0.154	A312-TP316L	0/0	1.00	1.00	1	1.00	None
D08	Elbow	36.00	90.0	2.375	0.154	A312-TP316L	0/0	1.00	1.00	1	1.00	None
D12	Elbow	36.00	90.0	2.375	0.154	A312-TP316L	0/0	1.00	1.00	1	1.00	None
D17	Elbow	36.00	90.0	2.375	0.154	A312-TP316L	0/0	1.00	1.00	1	1.00	None
D23	Elbow	3.00L	90.0	2.375	0.154	A312-TP316L	0/0	1.73	1.44	1	4.40	None

^ = Number of bend ends where either a flange or valve is within distance
(L/D) x Nominal diameter, where L/D is defined under Tools > Model options > Edit
* = Mid-point present
L = Long radius

L O A D C A S E D E S C R I P T I O N

Load Case	Load Case Name	Description
GR	Gravity	
T1	Thermal 1	
P1	Press 1	

A N A L Y S I S S U M M A R Y

```
Current model revision number : 1

  Constant values used
          Acceleration due to gravity...............  386.40000 in/s/s
          Density of water for specific gravity Cal..     62.400 lb/cu.ft
          Density of sea water......................     62.400 lb/cu.ft
          Density of ground water ..................     62.400 lb/cu.ft

  Static - Analysis set number .................. 1
          Date and Time of analysis ............ Apr 23, 2020   3:20 PM
          Model Revision Number ................ 1
          Number of load cases ................. 3
          Load cases analyzed .................. GR T1 P1
          Description .......................... Analysis Set No.1
          Gaps/Friction/Soil considered ......... Yes
          Tolerance - Force, Displacement ....... 10.00 lbf  0.0010 in
          Friction - Scale Factor, Tolerance .... 1.00   0.10
          Ignore friction for cases E1,E2,E3 .... Yes
          Ignore friction for gravity case ...... Yes
          Hanger design run ..................... No
          Cut short included .................... No
          Thermal bowing included ............... No
          Include Bourdon rotational effect ..... No
          Pipe radius for Bourdon calculation ... Mean
          Occasional load analysis type ......... Nonlinear
          Non-linear analysis summary file ......
            Primary Piping Low Temp.LOG
          Use default load sequence ............ Yes
          Base load cases for nonlinear analysis
                                                    GR   = None
                                                    T1   = GR
                                                    P1   = T1
          Weight of contents included ........... Yes
          Fluid density factor for contents ..... 1.00
          Pressure stiffening case .............. None
          Hot modulus case ...................... None
          Pressure Extension..................... Yes
          Water elevation for buoyancy loads .... Not considered
          Use corroded thickness in analysis .... Yes
          Rigid stiffness factor ................ 1000.0
          Support rigid stiffness (translation) . 0.100000E+11 lb/in
          Support rigid stiffness (rotation) .... 0.100000E+11 ft-lb/deg
          Anchor rigid stiffness (translation) .. 0.100000E+11 lb/in
          Anchor rigid stiffness (rotation) ..... 0.100000E+11 ft-lb/deg
          Remove Lift-Off Supports .............. No
```

CODE COMPLIANCE COMBINATIONS

<Description> Combination	Category	Method	Case/Combination	Factor	M/S	K-Factor	Allowable (psi)	D/A/P/C
GR + Max P{1}	Sustain	Sum	GR[1]	1.00			Automatic	Y Y Y Y
			Max Long	1.00				
Max Range	Expansion	Sum	Temp. Range	1.00			Automatic	Y Y Y Y
Amb to T1{1}	Expansion	Sum	T1[1]	1.00			Automatic	Y Y Y Y
Max P{1}	Hoop	Sum	Max Hoop	1.00			Automatic	Y Y Y Y

Notes:

D/A/P/C: [D]efault/[A]uto-Update/[P]rint options/[C]Consistent (Y=Yes, N=No)

NON-CODE COMBINATIONS

<Description> Combination	Method	Case/Combination	Factor	D/A/P/C
Gravity{1}	Sum	GR[1]	1.00	Y Y Y Y
<30.00 deg F> Thermal 1{1}	Sum	T1[1]	1.00	Y Y N N
Pressure 1{1}	Sum	P1[1]	1.00	Y Y N N
GT1{1}	Sum	GR[1]	1.00	Y Y Y Y
		T1[1]	1.00	
GT1P1{1}	Sum	GR[1]	1.00	Y Y Y Y
		T1[1]	1.00	
		P1[1]	1.00	

Notes:

D/A/P/C: [D]efault/[A]uto-Update/[P]rint options/[C]Consistent (Y=Yes, N=No)

CODE COMPLIANCE

```
Y - Factor ............................ 0.40
Design Pressure Factor ................ 1.00
Minimum stress ratio used in reports... 0.00
Number of stress points per span ...... 0
Include corrosion in stress calcs. .... Y
Include corrosion in Hoop stress calcs. Y
Include torsion in code stress ........ N
Include axial force in code stress .... Y
Include sustain load margin ........... Only if allowable stress is exceeded
Use minimum sustained margin........... Y
Set sustained SIF=1 no bends .......... N
Set occasional SIF = 1 ................ N
Set occasional SIF = 0.75i ............ Y
Apply cold/hot modulus ratio .......... N
Disable auto code combinations ........ N
Disable auto non-code combinations .... N
No. of thermal ranges to report ....... 0
Include Max Range combination ......... Y
Total stress .......................... Octahedral
Direct shear .......................... None
Longitudinal pressure calculation ..... AxF/area
Use code case 178 ..................... Y
Inc. Axial Str and Pcase in Sustained.. Y
Use alternate occasional allowable .... N
Apply circumferential weld WC factor .. N
ASME B31J Enabled ..................... N
```

R E S T R A I N T R E A C T I O N S

Point name	Load combination	FORCES (lbf) X	Y	Z	Result	MOMENTS (ft-lb) X	Y	Z	Result
A20	V - Stop Tag No.: <None> [ID: A20 1]								
	Gravity{1}	0	-4	0	4	0	0	0	0
	GT1{1}	0	-24	0	24	0	0	0	0
	GT1P1{1}	0	-24	0	24	0	0	0	0
A20	Guide Tag No.: <None> [ID: A20 2]								
	Gravity{1}	0	0	0	0	0	0	0	0
	GT1{1}	0	0	0	0	0	0	0	0
	GT1P1{1}	0	0	0	0	0	0	0	0
A02	Anchor Tag No.: <None>					Connected to: Ground			
	Gravity{1}	18	-7	7	20	-1	-25	2	25
	GT1{1}	136	14	6	137	-3	-27	-26	37
	GT1P1{1}	137	14	6	138	-3	-27	-26	37
A23	Guide Tag No.: <None> [ID: A23 1]								
	Gravity{1}	0	-32	0	32	0	0	0	0
	GT1{1}	-38	-48	5	62	0	0	0	0
	GT1P1{1}	-38	-48	4	62	0	0	0	0
A24	Guide Tag No.: <None> [ID: A24 1]								
	Gravity{1}	-6	-32	-18	37	0	0	0	0
	GT1{1}	-50	-22	-26	60	0	0	0	0
	GT1P1{1}	-49	-22	-25	59	0	0	0	0
A21	Guide Tag No.: <None> [ID: A21 1]								
	Gravity{1}	-5	-28	0	29	0	0	0	0
	GT1{1}	-26	-32	-22	47	0	0	0	0
	GT1P1{1}	-28	-31	-19	46	0	0	0	0
A22	Guide Tag No.: <None> [ID: A22 2]								
	Gravity{1}	0	-22	1	22	0	0	0	0
	GT1{1}	-7	-13	-7	16	0	0	0	0
	GT1P1{1}	-8	-13	-6	17	0	0	0	0
A25	Guide Tag No.: <None> [ID: A25 2]								
	Gravity{1}	-7	-36	1	36	0	0	0	0
	GT1{1}	-20	-39	-45	62	0	0	0	0
	GT1P1{1}	-19	-39	-45	62	0	0	0	0
A26	Guide Tag No.: <None> [ID: A26 2]								
	Gravity{1}	0	-33	1	34	0	0	0	0
	GT1{1}	6	-34	-25	42	0	0	0	0
	GT1P1{1}	6	-34	-28	44	0	0	0	0
A27	Guide Tag No.: <None> [ID: A27 2]								
	Gravity{1}	0	-32	1	32	0	0	0	0
	GT1{1}	-4	-32	26	41	0	0	0	0
	GT1P1{1}	-4	-32	26	41	0	0	0	0

R E S T R A I N T R E A C T I O N S

Point name	Load combination	FORCES (lbf) X	Y	Z	Result	MOMENTS (ft-lb) X	Y	Z	Result
A28	Guide Tag No.: <None> [ID: A28 2]								
	Gravity{1}	3	-39	1	39	0	0	0	0
	GT1{1}	10	-38	40	56	0	0	0	0
	GT1P1{1}	11	-38	40	56	0	0	0	0
A29	Guide Tag No.: <None> [ID: A29 1]								
	Gravity{1}	0	-31	1	31	0	0	0	0
	GT1{1}	14	-32	23	42	0	0	0	0
	GT1P1{1}	13	-33	24	43	0	0	0	0
A30	Guide Tag No.: <None> [ID: A30 1]								
	Gravity{1}	0	-10	0	10	0	0	0	0
	GT1{1}	1	-6	5	8	0	0	0	0
	GT1P1{1}	1	-6	4	7	0	0	0	0
A31	Guide Tag No.: <None> [ID: A31 1]								
	Gravity{1}	-1	-21	0	21	0	0	0	0
	GT1{1}	-2	-26	-21	33	0	0	0	0
	GT1P1{1}	1	-26	-22	34	0	0	0	0
A32	Guide Tag No.: <None> [ID: A32 1]								
	Gravity{1}	0	-24	1	24	0	0	0	0
	GT1{1}	-9	-23	-14	29	0	0	0	0
	GT1P1{1}	-11	-23	-14	29	0	0	0	0
A33	Guide Tag No.: <None> [ID: A33 2]								
	Gravity{1}	-2	-36	1	36	0	0	0	0
	GT1{1}	-15	-38	-40	57	0	0	0	0
	GT1P1{1}	-15	-38	-41	57	0	0	0	0
A34	Guide Tag No.: <None> [ID: A34 2]								
	Gravity{1}	0	-33	1	33	0	0	0	0
	GT1{1}	4	-33	-25	42	0	0	0	0
	GT1P1{1}	4	-33	-27	43	0	0	0	0
A35	Guide Tag No.: <None> [ID: A35 2]								
	Gravity{1}	0	-35	1	35	0	0	0	0
	GT1{1}	2	-34	28	45	0	0	0	0
	GT1P1{1}	2	-34	29	45	0	0	0	0
A36	Guide Tag No.: <None> [ID: A36 2]								
	Gravity{1}	0	-19	1	19	0	0	0	0
	GT1{1}	3	-18	15	24	0	0	0	0
	GT1P1{1}	3	-19	15	24	0	0	0	0
A37	Guide Tag No.: <None> [ID: A37 2]								
	Gravity{1}	-1	-25	1	25	0	0	0	0
	GT1{1}	-13	-23	30	40	0	0	0	0
	GT1P1{1}	-14	-23	31	41	0	0	0	0

R E S T R A I N T R E A C T I O N S

Point name	Load combination	FORCES (lbf) X	Y	Z	Result	MOMENTS (ft-lb) X	Y	Z	Result
A38	Guide Tag No.: <None> [ID: A38 1]								
	Gravity{1}	0	-26	1	26	0	0	0	0
	GT1{1}	-11	-28	21	36	0	0	0	0
	GT1P1{1}	-11	-28	21	37	0	0	0	0
A39	Guide Tag No.: <None> [ID: A39 1]								
	Gravity{1}	0	-20	0	20	0	0	0	0
	GT1{1}	0	-16	13	21	0	0	0	0
	GT1P1{1}	1	-16	13	20	0	0	0	0
A40	Guide Tag No.: <None> [ID: A40 1]								
	Gravity{1}	0	-15	0	15	0	0	0	0
	GT1{1}	3	-18	-14	23	0	0	0	0
	GT1P1{1}	3	-18	-14	23	0	0	0	0
A41	Guide Tag No.: <None> [ID: A41 1]								
	Gravity{1}	0	-28	0	28	0	0	0	0
	GT1{1}	10	-27	-19	34	0	0	0	0
	GT1P1{1}	10	-27	-19	34	0	0	0	0
A42	Guide Tag No.: <None> [ID: A42 2]								
	Gravity{1}	-1	-35	0	35	0	0	0	0
	GT1{1}	8	-35	-27	45	0	0	0	0
	GT1P1{1}	8	-35	-27	45	0	0	0	0
A43	Guide Tag No.: <None> [ID: A43 2]								
	Gravity{1}	0	-33	0	33	0	0	0	0
	GT1{1}	0	-33	-27	43	0	0	0	0
	GT1P1{1}	0	-33	-26	43	0	0	0	0
A44	Guide Tag No.: <None> [ID: A44 2]								
	Gravity{1}	0	-34	0	34	0	0	0	0
	GT1{1}	-1	-34	-28	44	0	0	0	0
	GT1P1{1}	-1	-34	-27	43	0	0	0	0
A45	Guide Tag No.: <None> [ID: A45 2]								
	Gravity{1}	0	-34	0	34	0	0	0	0
	GT1{1}	0	-34	-31	46	0	0	0	0
	GT1P1{1}	0	-34	-27	43	0	0	0	0
A46	Guide Tag No.: <None> [ID: A46 2]								
	Gravity{1}	0	-34	0	34	0	0	0	0
	GT1{1}	0	-34	26	42	0	0	0	0
	GT1P1{1}	0	-34	20	39	0	0	0	0
A47	Guide Tag No.: <None> [ID: A47 2]								
	Gravity{1}	0	-33	0	33	0	0	0	0
	GT1{1}	0	-33	26	42	0	0	0	0
	GT1P1{1}	0	-33	27	43	0	0	0	0

R E S T R A I N T R E A C T I O N S

Point name	Load combination	FORCES (lbf) X	Y	Z	Result	MOMENTS (ft-lb) X	Y	Z	Result
A48	Guide Tag No.: <None> [ID: A48 2]								
	Gravity{1}	0	-35	0	35	0	0	0	0
	GT1{1}	-1	-35	28	45	0	0	0	0
	GT1P1{1}	-1	-35	29	45	0	0	0	0
A49	Guide Tag No.: <None> [ID: A49 2]								
	Gravity{1}	0	-21	0	21	0	0	0	0
	GT1{1}	1	-21	17	27	0	0	0	0
	GT1P1{1}	1	-21	17	27	0	0	0	0
A50	Guide Tag No.: <None> [ID: A50 2]								
	Gravity{1}	-2	-26	0	26	0	0	0	0
	GT1{1}	5	-25	20	33	0	0	0	0
	GT1P1{1}	4	-25	20	33	0	0	0	0
A51	Guide Tag No.: <None> [ID: A51 1]								
	Gravity{1}	0	-27	0	27	0	0	0	0
	GT1{1}	9	-28	21	36	0	0	0	0
	GT1P1{1}	9	-28	21	36	0	0	0	0
A52	Guide Tag No.: <None> [ID: A52 1]								
	Gravity{1}	0	-23	0	23	0	0	0	0
	GT1{1}	3	-22	17	28	0	0	0	0
	GT1P1{1}	3	-22	18	29	0	0	0	0
A53	Guide Tag No.: <None> [ID: A53 1]								
	Gravity{1}	0	-24	0	24	0	0	0	0
	GT1{1}	-2	-24	-20	31	0	0	0	0
	GT1P1{1}	-3	-24	-19	31	0	0	0	0
A54	Guide Tag No.: <None> [ID: A54 1]								
	Gravity{1}	0	-26	0	26	0	0	0	0
	GT1{1}	-9	-26	-18	33	0	0	0	0
	GT1P1{1}	-9	-26	-18	33	0	0	0	0
A55	Guide Tag No.: <None> [ID: A55 1]								
	Gravity{1}	2	-35	0	36	0	0	0	0
	GT1{1}	-6	-36	-28	46	0	0	0	0
	GT1P1{1}	-6	-36	-28	46	0	0	0	0
A56	Guide Tag No.: <None> [ID: A56 1]								
	Gravity{1}	0	-33	0	33	0	0	0	0
	GT1{1}	1	-33	-26	42	0	0	0	0
	GT1P1{1}	1	-33	-26	42	0	0	0	0
A57	Guide Tag No.: <None> [ID: A57 1]								
	Gravity{1}	0	-34	0	34	0	0	0	0
	GT1{1}	1	-34	-27	43	0	0	0	0
	GT1P1{1}	1	-34	-27	43	0	0	0	0

R E S T R A I N T R E A C T I O N S

Point name	Load combination	FORCES (lbf) X	Y	Z	Result	MOMENTS (ft-lb) X	Y	Z	Result
A58	Guide Tag No.: <None> [ID: A58 1]								
	Gravity{1}	0	-33	0	33	0	0	0	0
	GT1{1}	0	-33	5	34	0	0	0	0
	GT1P1{1}	0	-33	5	34	0	0	0	0
A59	Guide Tag No.: <None> [ID: A59 1]								
	Gravity{1}	0	-34	0	34	0	0	0	0
	GT1{1}	1	-34	28	44	0	0	0	0
	GT1P1{1}	1	-34	28	44	0	0	0	0
A60	Guide Tag No.: <None> [ID: A60 1]								
	Gravity{1}	1	-32	0	32	0	0	0	0
	GT1{1}	3	-31	28	42	0	0	0	0
	GT1P1{1}	3	-31	28	42	0	0	0	0
A61	Guide Tag No.: <None> [ID: A61 1]								
	Gravity{1}	0	-35	0	35	0	0	0	0
	GT1{1}	-8	-34	27	44	0	0	0	0
	GT1P1{1}	-8	-34	27	44	0	0	0	0
A62	Guide Tag No.: <None> [ID: A62 1]								
	Gravity{1}	0	-25	0	25	0	0	0	0
	GT1{1}	-14	-26	16	34	0	0	0	0
	GT1P1{1}	-14	-26	16	34	0	0	0	0
A63	Guide Tag No.: <None> [ID: A63 1]								
	Gravity{1}	0	-26	0	26	0	0	0	0
	GT1{1}	-13	-25	16	32	0	0	0	0
	GT1P1{1}	-13	-25	16	32	0	0	0	0
A64	Guide Tag No.: <None> [ID: A64 2]								
	Gravity{1}	0	-36	-9	37	0	0	0	0
	GT1{1}	-28	-36	2	46	0	0	0	0
	GT1P1{1}	-28	-36	2	46	0	0	0	0
A65	Guide Tag No.: <None> [ID: A65 2]								
	Gravity{1}	0	-33	4	33	0	0	0	0
	GT1{1}	-26	-33	-2	42	0	0	0	0
	GT1P1{1}	-26	-33	-2	42	0	0	0	0
A66	Guide Tag No.: <None> [ID: A66 2]								
	Gravity{1}	0	-34	0	34	0	0	0	0
	GT1{1}	-8	-34	1	35	0	0	0	0
	GT1P1{1}	-8	-34	1	35	0	0	0	0
A67	Guide Tag No.: <None> [ID: A67 2]								
	Gravity{1}	0	-32	0	32	0	0	0	0
	GT1{1}	27	-32	2	42	0	0	0	0
	GT1P1{1}	27	-32	2	42	0	0	0	0

R E S T R A I N T R E A C T I O N S

Point name	Load combination	FORCES (lbf) X	Y	Z	Result	MOMENTS (ft-lb) X	Y	Z	Result
A68	Guide Tag No.: <None>	[ID: A68 2]							
	Gravity{1}	0	-36	1	36	0	0	0	0
	GT1{1}	28	-35	-5	45	0	0	0	0
	GT1P1{1}	28	-35	-5	45	0	0	0	0
A69	Guide Tag No.: <None>	[ID: A69 1]							
	Gravity{1}	0	-25	0	25	0	0	0	0
	GT1{1}	18	-26	-11	33	0	0	0	0
	GT1P1{1}	18	-26	-11	33	0	0	0	0
A70	Guide Tag No.: <None>	[ID: A70 1]							
	Gravity{1}	0	-27	0	27	0	0	0	0
	GT1{1}	19	-26	-8	33	0	0	0	0
	GT1P1{1}	19	-26	-8	33	0	0	0	0
A71	Guide Tag No.: <None>	[ID: A71 2]							
	Gravity{1}	-5	-34	0	35	0	0	0	0
	GT1{1}	4	-34	-11	36	0	0	0	0
	GT1P1{1}	4	-34	-11	36	0	0	0	0
A72	Guide Tag No.: <None>	[ID: A72 1]							
	Gravity{1}	0	-23	0	23	0	0	0	0
	GT1{1}	14	-24	13	31	0	0	0	0
	GT1P1{1}	14	-24	13	31	0	0	0	0
A73	Guide Tag No.: <None>	[ID: A73 1]							
	Gravity{1}	0	-21	0	21	0	0	0	0
	GT1{1}	9	-20	13	26	0	0	0	0
	GT1P1{1}	9	-20	13	26	0	0	0	0
A18	Anchor Tag No.: <None>					Connected to: Ground			
	Gravity{1}	3	-11	-2	11	0	-10	9	13
	GT1{1}	-27	-11	6	29	0	32	9	33
	GT1P1{1}	-27	-11	6	29	0	32	9	33
B01	V - Stop Tag No.: <None>	[ID: B01 1]							
	Gravity{1}	0	-9	0	9	0	0	0	0
	GT1{1}	0	-134	0	134	0	0	0	0
	GT1P1{1}	0	-134	0	134	0	0	0	0
B01	Guide Tag No.: <None>	[ID: B01 2]							
	Gravity{1}	0	0	0	0	0	0	0	0
	GT1{1}	0	0	0	0	0	0	0	0
	GT1P1{1}	0	0	0	0	0	0	0	0
B03	Anchor Tag No.: <None>					Connected to: Ground			
	Gravity{1}	27	-2	4	27	1	37	22	43
	GT1{1}	327	126	0	351	-7	26	-154	156
	GT1P1{1}	327	126	0	351	-7	26	-154	156

R E S T R A I N T R E A C T I O N S

Point name	Load combination	FORCES (lbf) X	Y	Z	Result	MOMENTS (ft-lb) X	Y	Z	Result
B22	Guide Tag No.: <None>	[ID: B22 2]							
	Gravity{1}	0	-91	0	91	0	0	0	0
	GT1{1}	-101	-128	15	164	0	0	0	0
	GT1P1{1}	-101	-128	15	164	0	0	0	0
B23	Guide Tag No.: <None>	[ID: B23 2]							
	Gravity{1}	-12	-76	-22	80	0	0	0	0
	GT1{1}	-108	-50	-57	132	0	0	0	0
	GT1P1{1}	-108	-50	-57	132	0	0	0	0
B24	Guide Tag No.: <None>	[ID: B24 2]							
	Gravity{1}	-9	-57	0	58	0	0	0	0
	GT1{1}	-71	-79	-44	114	0	0	0	0
	GT1P1{1}	-71	-79	-44	114	0	0	0	0
B25	Guide Tag No.: <None>	[ID: B25 2]							
	Gravity{1}	0	-43	1	43	0	0	0	0
	GT1{1}	-7	-10	-4	13	0	0	0	0
	GT1P1{1}	-7	-10	-4	13	0	0	0	0
B26	Guide Tag No.: <None>	[ID: B26 1]							
	Gravity{1}	-2	-75	2	75	0	0	0	0
	GT1{1}	-59	-86	-111	152	0	0	0	0
	GT1P1{1}	-59	-86	-111	152	0	0	0	0
B28	Guide Tag No.: <None>	[ID: B28 1]							
	Gravity{1}	0	-69	2	69	0	0	0	0
	GT1{1}	22	-68	-34	79	0	0	0	0
	GT1P1{1}	22	-68	-34	79	0	0	0	0
B29	Guide Tag No.: <None>	[ID: B29 1]							
	Gravity{1}	0	-67	2	67	0	0	0	0
	GT1{1}	-4	-66	56	87	0	0	0	0
	GT1P1{1}	-4	-66	56	87	0	0	0	0
B31	Guide Tag No.: <None>	[ID: B31 1]							
	Gravity{1}	0	-81	2	81	0	0	0	0
	GT1{1}	27	-77	60	101	0	0	0	0
	GT1P1{1}	27	-77	60	101	0	0	0	0
B32	Guide Tag No.: <None>	[ID: B32 2]							
	Gravity{1}	0	-53	2	53	0	0	0	0
	GT1{1}	26	-59	42	78	0	0	0	0
	GT1P1{1}	26	-59	42	78	0	0	0	0
B33	Guide Tag No.: <None>	[ID: B33 2]							
	Gravity{1}	-1	-31	0	31	0	0	0	0
	GT1{1}	2	-12	10	16	0	0	0	0
	GT1P1{1}	2	-12	10	16	0	0	0	0

R E S T R A I N T R E A C T I O N S

Point name	Load combination	FORCES (lbf) X	Y	Z	Result	MOMENTS (ft-lb) X	Y	Z	Result
B34	Guide Tag No.: <None> [ID: B34 2]								
	Gravity{1}	-1	-46	0	46	0	0	0	0
	GT1{1}	-4	-67	-53	86	0	0	0	0
	GT1P1{1}	-4	-67	-53	86	0	0	0	0
B35	Guide Tag No.: <None> [ID: B35 2]								
	Gravity{1}	0	-44	1	44	0	0	0	0
	GT1{1}	-17	-37	-22	46	0	0	0	0
	GT1P1{1}	-17	-37	-22	46	0	0	0	0
B36	Guide Tag No.: <None> [ID: B36 2]								
	Gravity{1}	0	-76	2	76	0	0	0	0
	GT1{1}	-34	-80	-51	101	0	0	0	0
	GT1P1{1}	-34	-80	-51	101	0	0	0	0
B37	Guide Tag No.: <None> [ID: B37 2]								
	Gravity{1}	0	-67	2	67	0	0	0	0
	GT1{1}	-4	-68	-51	86	0	0	0	0
	GT1P1{1}	-4	-68	-51	86	0	0	0	0
B38	Guide Tag No.: <None> [ID: B38 2]								
	Gravity{1}	0	-73	2	73	0	0	0	0
	GT1{1}	10	-72	30	78	0	0	0	0
	GT1P1{1}	10	-72	28	78	0	0	0	0
B39	Guide Tag No.: <None> [ID: B39 2]								
	Gravity{1}	0	-61	2	61	0	0	0	0
	GT1{1}	-6	-60	51	79	0	0	0	0
	GT1P1{1}	-6	-60	51	79	0	0	0	0
B40	Guide Tag No.: <None> [ID: B40 1]								
	Gravity{1}	0	-70	2	70	0	0	0	0
	GT1{1}	-27	-67	49	87	0	0	0	0
	GT1P1{1}	-28	-67	49	87	0	0	0	0
B42	Guide Tag No.: <None> [ID: B42 1]								
	Gravity{1}	0	-50	1	50	0	0	0	0
	GT1{1}	-25	-57	41	75	0	0	0	0
	GT1P1{1}	-26	-57	41	75	0	0	0	0
B43	Guide Tag No.: <None> [ID: B43 1]								
	Gravity{1}	1	-47	0	47	0	0	0	0
	GT1{1}	0	-33	26	42	0	0	0	0
	GT1P1{1}	1	-33	26	42	0	0	0	0
B45	Guide Tag No.: <None> [ID: B45 1]								
	Gravity{1}	1	-29	0	29	0	0	0	0
	GT1{1}	6	-39	-30	50	0	0	0	0
	GT1P1{1}	6	-39	-31	50	0	0	0	0

R E S T R A I N T R E A C T I O N S

Point name	Load combination	FORCES (lbf) X	Y	Z	Result	MOMENTS (ft-lb) X	Y	Z	Result
B46	Guide Tag No.: <None> [ID: B46 2]								
	Gravity{1}	0	-59	1	59	0	0	0	0
	GT1{1}	20	-54	-37	68	0	0	0	0
	GT1P1{1}	20	-53	-37	68	0	0	0	0
B47	Guide Tag No.: <None> [ID: B47 2]								
	Gravity{1}	-2	-72	1	72	0	0	0	0
	GT1{1}	24	-73	-52	93	0	0	0	0
	GT1P1{1}	24	-73	-52	93	0	0	0	0
B48	Guide Tag No.: <None> [ID: B48 2]								
	Gravity{1}	-1	-69	1	69	0	0	0	0
	GT1{1}	5	-70	-54	88	0	0	0	0
	GT1P1{1}	6	-70	-54	88	0	0	0	0
B49	Guide Tag No.: <None> [ID: B49 2]								
	Gravity{1}	0	-70	1	70	0	0	0	0
	GT1{1}	-5	-70	-57	91	0	0	0	0
	GT1P1{1}	-4	-70	-57	90	0	0	0	0
B50	Guide Tag No.: <None> [ID: B50 2]								
	Gravity{1}	0	-70	1	70	0	0	0	0
	GT1{1}	0	-70	-49	86	0	0	0	0
	GT1P1{1}	0	-70	-52	88	0	0	0	0
B51	Guide Tag No.: <None> [ID: B51 2]								
	Gravity{1}	0	-69	1	69	0	0	0	0
	GT1{1}	-1	-69	58	90	0	0	0	0
	GT1P1{1}	0	-69	64	94	0	0	0	0
B52	Guide Tag No.: <None> [ID: B52 2]								
	Gravity{1}	-2	-72	1	72	0	0	0	0
	GT1{1}	-6	-71	64	96	0	0	0	0
	GT1P1{1}	-6	-71	65	97	0	0	0	0
B53	Guide Tag No.: <None> [ID: B53 2]								
	Gravity{1}	-1	-62	1	62	0	0	0	0
	GT1{1}	7	-62	51	81	0	0	0	0
	GT1P1{1}	6	-62	51	81	0	0	0	0
B54	Guide Tag No.: <None> [ID: B54 2]								
	Gravity{1}	0	-70	1	70	0	0	0	0
	GT1{1}	22	-68	51	88	0	0	0	0
	GT1P1{1}	22	-68	51	88	0	0	0	0
B55	Guide Tag No.: <None> [ID: B55 1]								
	Gravity{1}	0	-53	0	53	0	0	0	0
	GT1{1}	20	-56	41	72	0	0	0	0
	GT1P1{1}	20	-56	41	72	0	0	0	0

R E S T R A I N T R E A C T I O N S

Point name	Load combination	FORCES (lbf) X	Y	Z	Result	MOMENTS (ft-lb) X	Y	Z	Result
B57	Guide Tag No.: <None> [ID: B57 1]								
	Gravity{1}	0	-51	0	51	0	0	0	0
	GT1{1}	3	-47	38	60	0	0	0	0
	GT1P1{1}	3	-47	38	60	0	0	0	0
B58	Guide Tag No.: <None> [ID: B58 1]								
	Gravity{1}	0	-47	0	47	0	0	0	0
	GT1{1}	-6	-51	-40	65	0	0	0	0
	GT1P1{1}	-6	-51	-40	65	0	0	0	0
B64	Guide Tag No.: <None> [ID: B64 1]								
	Gravity{1}	0	-55	0	55	0	0	0	0
	GT1{1}	-17	-53	-38	67	0	0	0	0
	GT1P1{1}	-17	-53	-38	67	0	0	0	0
B65	Guide Tag No.: <None> [ID: B65 1]								
	Gravity{1}	0	-73	0	73	0	0	0	0
	GT1{1}	-22	-74	-54	95	0	0	0	0
	GT1P1{1}	-22	-74	-54	95	0	0	0	0
B66	Guide Tag No.: <None> [ID: B66 1]								
	Gravity{1}	3	-69	0	69	0	0	0	0
	GT1{1}	-5	-69	-53	87	0	0	0	0
	GT1P1{1}	-5	-69	-53	87	0	0	0	0
B67	Guide Tag No.: <None> [ID: B67 1]								
	Gravity{1}	1	-70	0	70	0	0	0	0
	GT1{1}	5	-70	-58	92	0	0	0	0
	GT1P1{1}	5	-70	-58	92	0	0	0	0
B68	Guide Tag No.: <None> [ID: B68 1]								
	Gravity{1}	0	-70	0	70	0	0	0	0
	GT1{1}	0	-70	-54	88	0	0	0	0
	GT1P1{1}	0	-70	-54	88	0	0	0	0
B69	Guide Tag No.: <None> [ID: B69 1]								
	Gravity{1}	0	-70	0	70	0	0	0	0
	GT1{1}	0	-70	-52	87	0	0	0	0
	GT1P1{1}	0	-70	-51	87	0	0	0	0
B70	Guide Tag No.: <None> [ID: B70 1]								
	Gravity{1}	0	-69	0	69	0	0	0	0
	GT1{1}	1	-68	65	94	0	0	0	0
	GT1P1{1}	1	-68	63	93	0	0	0	0
B71	Guide Tag No.: <None> [ID: B71 1]								
	Gravity{1}	1	-73	0	73	0	0	0	0
	GT1{1}	8	-72	68	99	0	0	0	0
	GT1P1{1}	8	-72	67	99	0	0	0	0

R E S T R A I N T R E A C T I O N S

Point name	Load combination	FORCES (lbf) X	Y	Z	Result	MOMENTS (ft-lb) X	Y	Z	Result
B72	Guide Tag No.: <None>	[ID: B72 1]							
	Gravity{1}	2	-50	0	50	0	0	0	0
	GT1{1}	-11	-50	40	65	0	0	0	0
	GT1P1{1}	-11	-50	40	65	0	0	0	0
B73	Guide Tag No.: <None>	[ID: B73 1]							
	Gravity{1}	0	-55	0	55	0	0	0	0
	GT1{1}	-24	-53	37	69	0	0	0	0
	GT1P1{1}	-24	-53	37	69	0	0	0	0
B74	Guide Tag No.: <None>	[ID: B74 1]							
	Gravity{1}	0	-59	0	59	0	0	0	0
	GT1{1}	-40	-67	37	87	0	0	0	0
	GT1P1{1}	-40	-67	37	87	0	0	0	0
B75	Guide Tag No.: <None>	[ID: B75 1]							
	Gravity{1}	1	-37	0	37	0	0	0	0
	GT1{1}	-13	-23	12	29	0	0	0	0
	GT1P1{1}	-13	-23	12	29	0	0	0	0
B77	Guide Tag No.: <None>	[ID: B77 1]							
	Gravity{1}	0	-44	1	44	0	0	0	0
	GT1{1}	-32	-59	36	76	0	0	0	0
	GT1P1{1}	-32	-59	36	76	0	0	0	0
B59 F	Guide Tag No.: <None>	[ID: B59 F1]							
	Gravity{1}	0	-63	0	63	0	0	0	0
	GT1{1}	-19	-43	29	55	0	0	0	0
	GT1P1{1}	-18	-43	29	55	0	0	0	0
B62	Anchor Tag No.: <None>					Connected to: Ground			
	Gravity{1}	-4	11	-16	20	-9	130	15	131
	GT1{1}	130	0	48	139	-6	-215	6	216
	GT1P1{1}	130	0	48	139	-6	-218	6	218
C01	V - Stop Tag No.: <None>	[ID: C01 1]							
	Gravity{1}	0	-4	0	4	0	0	0	0
	GT1{1}	0	-24	0	24	0	0	0	0
	GT1P1{1}	0	-24	0	24	0	0	0	0
C01	Guide Tag No.: <None>	[ID: C01 2]							
	Gravity{1}	0	0	0	0	0	0	0	0
	GT1{1}	0	0	0	0	0	0	0	0
	GT1P1{1}	0	0	0	0	0	0	0	0
C03	Anchor Tag No.: <None>					Connected to: Ground			
	Gravity{1}	11	-3	5	12	-1	-24	8	25
	GT1{1}	131	18	3	133	-2	-25	-20	32
	GT1P1{1}	132	18	3	133	-2	-25	-20	32

Primary Piping Low Temp
04/23/2020 2018719 BENTLEY
03:23 PM AutoPIPE Nuclear 12.00.00.16 RESULT PAGE 90

R E S T R A I N T R E A C T I O N S

Point name	Load combination	FORCES (lbf) X	Y	Z	Result	MOMENTS (ft-lb) X	Y	Z	Result
C21	Guide Tag No.: <None> [ID: C21 2]								
	Gravity{1}	0	-39	0	39	0	0	0	0
	GT1{1}	-37	-47	6	60	0	0	0	0
	GT1P1{1}	-37	-47	5	60	0	0	0	0
C22	Guide Tag No.: <None> [ID: C22 2]								
	Gravity{1}	-3	-36	-17	40	0	0	0	0
	GT1{1}	-53	-31	-29	68	0	0	0	0
	GT1P1{1}	-53	-31	-28	67	0	0	0	0
C23	Guide Tag No.: <None> [ID: C23 2]								
	Gravity{1}	-2	-22	0	22	0	0	0	0
	GT1{1}	-17	-25	-15	34	0	0	0	0
	GT1P1{1}	-17	-25	-14	34	0	0	0	0
C24	Guide Tag No.: <None> [ID: C24 2]								
	Gravity{1}	0	-25	1	25	0	0	0	0
	GT1{1}	-11	-21	-11	26	0	0	0	0
	GT1P1{1}	-12	-21	-10	26	0	0	0	0
C25	Guide Tag No.: <None> [ID: C25 2]								
	Gravity{1}	-7	-35	1	36	0	0	0	0
	GT1{1}	-18	-38	-43	60	0	0	0	0
	GT1P1{1}	-18	-38	-43	60	0	0	0	0
C26	Guide Tag No.: <None> [ID: C26 2]								
	Gravity{1}	0	-34	1	34	0	0	0	0
	GT1{1}	5	-34	-25	43	0	0	0	0
	GT1P1{1}	5	-34	-27	44	0	0	0	0
C28	Guide Tag No.: <None> [ID: C28 2]								
	Gravity{1}	0	-32	1	32	0	0	0	0
	GT1{1}	-4	-32	25	41	0	0	0	0
	GT1P1{1}	-4	-32	25	41	0	0	0	0
C29	Guide Tag No.: <None> [ID: C29 2]								
	Gravity{1}	3	-39	1	39	0	0	0	0
	GT1{1}	11	-37	41	56	0	0	0	0
	GT1P1{1}	11	-37	40	56	0	0	0	0
C31	Guide Tag No.: <None> [ID: C31 2]								
	Gravity{1}	0	-31	1	31	0	0	0	0
	GT1{1}	14	-32	23	42	0	0	0	0
	GT1P1{1}	13	-32	24	42	0	0	0	0
C32	Guide Tag No.: <None> [ID: C32 2]								
	Gravity{1}	0	-10	0	10	0	0	0	0
	GT1{1}	1	-6	5	8	0	0	0	0
	GT1P1{1}	1	-6	5	8	0	0	0	0

R E S T R A I N T R E A C T I O N S

Point name	Load combination	FORCES (lbf) X	Y	Z	Result	MOMENTS (ft-lb) X	Y	Z	Result
C33	Guide Tag No.: <None> [ID: C33 2]								
	Gravity{1}	0	-20	0	20	0	0	0	0
	GT1{1}	-2	-25	-20	32	0	0	0	0
	GT1P1{1}	0	-25	-21	32	0	0	0	0
C34	Guide Tag No.: <None> [ID: C34 2]								
	Gravity{1}	0	-25	1	25	0	0	0	0
	GT1{1}	-9	-23	-15	29	0	0	0	0
	GT1P1{1}	-10	-24	-15	30	0	0	0	0
C35	Guide Tag No.: <None> [ID: C35 2]								
	Gravity{1}	-2	-36	1	36	0	0	0	0
	GT1{1}	-15	-38	-40	57	0	0	0	0
	GT1P1{1}	-15	-38	-42	58	0	0	0	0
C36	Guide Tag No.: <None> [ID: C36 2]								
	Gravity{1}	0	-33	1	33	0	0	0	0
	GT1{1}	4	-33	-25	42	0	0	0	0
	GT1P1{1}	4	-33	-28	43	0	0	0	0
C37	Guide Tag No.: <None> [ID: C37 2]								
	Gravity{1}	0	-35	1	36	0	0	0	0
	GT1{1}	0	-35	23	42	0	0	0	0
	GT1P1{1}	1	-35	26	44	0	0	0	0
C38	Guide Tag No.: <None> [ID: C38 2]								
	Gravity{1}	0	-24	1	24	0	0	0	0
	GT1{1}	4	-24	20	31	0	0	0	0
	GT1P1{1}	4	-24	19	31	0	0	0	0
C39	Guide Tag No.: <None> [ID: C39 2]								
	Gravity{1}	-1	-28	1	28	0	0	0	0
	GT1{1}	-13	-26	33	44	0	0	0	0
	GT1P1{1}	-14	-26	33	44	0	0	0	0
C40	Guide Tag No.: <None> [ID: C40 2]								
	Gravity{1}	0	-27	1	27	0	0	0	0
	GT1{1}	-11	-29	21	38	0	0	0	0
	GT1P1{1}	-11	-29	21	38	0	0	0	0
C42	Guide Tag No.: <None> [ID: C42 2]								
	Gravity{1}	0	-19	0	19	0	0	0	0
	GT1{1}	0	-15	12	20	0	0	0	0
	GT1P1{1}	0	-15	12	19	0	0	0	0
C43	Guide Tag No.: <None> [ID: C43 2]								
	Gravity{1}	0	-16	0	16	0	0	0	0
	GT1{1}	3	-18	-14	23	0	0	0	0
	GT1P1{1}	3	-18	-15	24	0	0	0	0

R E S T R A I N T R E A C T I O N S

Point name	Load combination	FORCES (lbf) X	Y	Z	Result	MOMENTS (ft-lb) X	Y	Z	Result
C45	Guide Tag No.: <None> [ID: C45 2]								
	Gravity{1}	0	-28	0	28	0	0	0	0
	GT1{1}	10	-27	-19	34	0	0	0	0
	GT1P1{1}	10	-27	-19	34	0	0	0	0
C46	Guide Tag No.: <None> [ID: C46 2]								
	Gravity{1}	0	-35	0	35	0	0	0	0
	GT1{1}	8	-35	-27	45	0	0	0	0
	GT1P1{1}	8	-35	-27	45	0	0	0	0
C47	Guide Tag No.: <None> [ID: C47 2]								
	Gravity{1}	0	-33	0	33	0	0	0	0
	GT1{1}	0	-33	-26	43	0	0	0	0
	GT1P1{1}	0	-33	-26	43	0	0	0	0
C48	Guide Tag No.: <None> [ID: C48 2]								
	Gravity{1}	0	-34	0	34	0	0	0	0
	GT1{1}	-1	-34	-27	43	0	0	0	0
	GT1P1{1}	-1	-34	-27	43	0	0	0	0
C49	Guide Tag No.: <None> [ID: C49 2]								
	Gravity{1}	0	-34	0	34	0	0	0	0
	GT1{1}	0	-34	-29	45	0	0	0	0
	GT1P1{1}	0	-34	-27	43	0	0	0	0
C50	Guide Tag No.: <None> [ID: C50 2]								
	Gravity{1}	0	-34	0	34	0	0	0	0
	GT1{1}	0	-33	27	43	0	0	0	0
	GT1P1{1}	0	-33	27	43	0	0	0	0
C51	Guide Tag No.: <None> [ID: C51 2]								
	Gravity{1}	0	-34	0	34	0	0	0	0
	GT1{1}	-1	-34	28	44	0	0	0	0
	GT1P1{1}	0	-34	28	44	0	0	0	0
C52	Guide Tag No.: <None> [ID: C52 2]								
	Gravity{1}	0	-32	0	32	0	0	0	0
	GT1{1}	-1	-32	26	41	0	0	0	0
	GT1P1{1}	-1	-32	26	41	0	0	0	0
C53	Guide Tag No.: <None> [ID: C53 2]								
	Gravity{1}	-1	-39	0	39	0	0	0	0
	GT1{1}	5	-39	31	50	0	0	0	0
	GT1P1{1}	5	-39	31	50	0	0	0	0
C55	Guide Tag No.: <None> [ID: C55 2]								
	Gravity{1}	0	-30	0	30	0	0	0	0
	GT1{1}	10	-31	23	40	0	0	0	0
	GT1P1{1}	10	-31	23	40	0	0	0	0

R E S T R A I N T R E A C T I O N S

Point name	Load combination	FORCES (lbf) X	Y	Z	Result	MOMENTS (ft-lb) X	Y	Z	Result
C56	Guide Tag No.: <None> [ID: C56 2]								
	Gravity{1}	0	-22	0	22	0	0	0	0
	GT1{1}	2	-21	16	26	0	0	0	0
	GT1P1{1}	3	-21	16	27	0	0	0	0
C57	Guide Tag No.: <None> [ID: C57 2]								
	Gravity{1}	0	-24	0	24	0	0	0	0
	GT1{1}	-2	-25	-20	32	0	0	0	0
	GT1P1{1}	-3	-25	-20	32	0	0	0	0
C58	Guide Tag No.: <None> [ID: C58 2]								
	Gravity{1}	0	-26	0	26	0	0	0	0
	GT1{1}	-9	-25	-18	32	0	0	0	0
	GT1P1{1}	-9	-25	-18	32	0	0	0	0
C59	Guide Tag No.: <None> [ID: C59 2]								
	Gravity{1}	2	-36	0	36	0	0	0	0
	GT1{1}	-7	-36	-28	46	0	0	0	0
	GT1P1{1}	-6	-36	-28	46	0	0	0	0
C60	Guide Tag No.: <None> [ID: C60 2]								
	Gravity{1}	0	-33	0	33	0	0	0	0
	GT1{1}	1	-33	-26	42	0	0	0	0
	GT1P1{1}	1	-33	-26	42	0	0	0	0
C61	Guide Tag No.: <None> [ID: C61 1]								
	Gravity{1}	0	-34	0	34	0	0	0	0
	GT1{1}	1	-34	-27	43	0	0	0	0
	GT1P1{1}	1	-34	-27	43	0	0	0	0
C63	Guide Tag No.: <None> [ID: C63 1]								
	Gravity{1}	0	-33	0	33	0	0	0	0
	GT1{1}	0	-34	-2	34	0	0	0	0
	GT1P1{1}	0	-34	-2	34	0	0	0	0
C64	Guide Tag No.: <None> [ID: C64 2]								
	Gravity{1}	0	-34	0	34	0	0	0	0
	GT1{1}	0	-34	28	44	0	0	0	0
	GT1P1{1}	0	-34	28	44	0	0	0	0
C65	Guide Tag No.: <None> [ID: C65 1]								
	Gravity{1}	1	-32	0	32	0	0	0	0
	GT1{1}	3	-32	28	42	0	0	0	0
	GT1P1{1}	3	-32	28	42	0	0	0	0
C72	Guide Tag No.: <None> [ID: C72 1]								
	Gravity{1}	1	-40	0	40	0	0	0	0
	GT1{1}	-6	-40	32	51	0	0	0	0
	GT1P1{1}	-6	-40	32	51	0	0	0	0

R E S T R A I N T R E A C T I O N S

Point name	Load combination	FORCES (lbf) X	Y	Z	Result	MOMENTS (ft-lb) X	Y	Z	Result
C73	Guide Tag No.: <None> [ID: C73 1]								
	Gravity{1}	0	-30	0	30	0	0	0	0
	GT1{1}	-16	-31	19	40	0	0	0	0
	GT1P1{1}	-16	-31	19	40	0	0	0	0
C74	Guide Tag No.: <None> [ID: C74 1]								
	Gravity{1}	0	-24	0	24	0	0	0	0
	GT1{1}	-11	-23	14	29	0	0	0	0
	GT1P1{1}	-11	-23	14	29	0	0	0	0
C75	Guide Tag No.: <None> [ID: C75 1]								
	Gravity{1}	0	-37	-8	38	0	0	0	0
	GT1{1}	-29	-37	3	47	0	0	0	0
	GT1P1{1}	-29	-37	3	47	0	0	0	0
C76	Guide Tag No.: <None> [ID: C76 1]								
	Gravity{1}	0	-33	3	33	0	0	0	0
	GT1{1}	-26	-33	-3	42	0	0	0	0
	GT1P1{1}	-26	-33	-3	42	0	0	0	0
C77	Guide Tag No.: <None> [ID: C77 1]								
	Gravity{1}	0	-34	1	34	0	0	0	0
	GT1{1}	-11	-34	1	36	0	0	0	0
	GT1P1{1}	-12	-34	1	36	0	0	0	0
C78	Guide Tag No.: <None> [ID: C78 1]								
	Gravity{1}	0	-33	0	33	0	0	0	0
	GT1{1}	28	-32	2	43	0	0	0	0
	GT1P1{1}	28	-32	2	43	0	0	0	0
C79	Guide Tag No.: <None> [ID: C79 1]								
	Gravity{1}	0	-35	1	35	0	0	0	0
	GT1{1}	27	-34	-6	44	0	0	0	0
	GT1P1{1}	27	-34	-6	44	0	0	0	0
C80	Guide Tag No.: <None> [ID: C80 1]								
	Gravity{1}	0	-28	0	28	0	0	0	0
	GT1{1}	20	-28	-12	37	0	0	0	0
	GT1P1{1}	20	-28	-12	37	0	0	0	0
C82	Guide Tag No.: <None> [ID: C82 1]								
	Gravity{1}	0	-20	0	20	0	0	0	0
	GT1{1}	14	-19	-5	24	0	0	0	0
	GT1P1{1}	14	-19	-5	24	0	0	0	0
C81	Guide Tag No.: <None> [ID: C81 1]								
	Gravity{1}	-5	-22	0	23	0	0	0	0
	GT1{1}	13	-22	-12	29	0	0	0	0
	GT1P1{1}	13	-22	-12	29	0	0	0	0

R E S T R A I N T R E A C T I O N S

Point name	Load combination	FORCES (lbf) X	Y	Z	Result	MOMENTS (ft-lb) X	Y	Z	Result
C83	Guide Tag No.: <None> [ID: C83 1]								
	Gravity{1}	0	-22	0	22	0	0	0	0
	GT1{1}	15	-23	11	29	0	0	0	0
	GT1P1{1}	15	-23	11	29	0	0	0	0
C84	Guide Tag No.: <None> [ID: C84 1]								
	Gravity{1}	0	-20	0	20	0	0	0	0
	GT1{1}	9	-19	12	24	0	0	0	0
	GT1P1{1}	9	-19	12	24	0	0	0	0
C70	Anchor Tag No.: <None>					Connected to: Ground			
	Gravity{1}	2	-7	-2	8	-1	-8	3	9
	GT1{1}	-31	-7	10	34	-1	37	4	38
	GT1P1{1}	-31	-7	10	34	-1	38	4	38
D01	Anchor Tag No.: <None>					Connected to: Ground			
	Gravity{1}	-1	-25	1	25	-51	5	0	51
	GT1{1}	-2	-24	-62	67	-49	10	0	50
	GT1P1{1}	-2	-24	-62	67	-49	10	0	50
D04 M	Guide Tag No.: <None> [ID: D04 M1]								
	Gravity{1}	0	0	0	0	0	0	0	0
	GT1{1}	0	0	0	0	0	0	0	0
	GT1P1{1}	0	0	0	0	0	0	0	0
D13	Guide Tag No.: <None> [ID: D13 1]								
	Gravity{1}	0	-38	-1	38	0	0	0	0
	GT1{1}	6	-38	29	49	0	0	0	0
	GT1P1{1}	6	-38	29	49	0	0	0	0
D14	Guide Tag No.: <None> [ID: D14 2]								
	Gravity{1}	0	-22	0	22	0	0	0	0
	GT1{1}	9	-22	14	27	0	0	0	0
	GT1P1{1}	9	-22	14	27	0	0	0	0
D15	Guide Tag No.: <None> [ID: D15 2]								
	Gravity{1}	0	-22	0	22	0	0	0	0
	GT1{1}	6	-22	17	29	0	0	0	0
	GT1P1{1}	6	-22	17	29	0	0	0	0
D18	Guide Tag No.: <None> [ID: D18 1]								
	Gravity{1}	0	-21	0	21	0	0	0	0
	GT1{1}	2	-21	4	21	0	0	0	0
	GT1P1{1}	2	-21	4	21	0	0	0	0
D16	Guide Tag No.: <None> [ID: D16 1]								
	Gravity{1}	0	-19	0	19	0	0	0	0
	GT1{1}	-7	-19	-13	24	0	0	0	0
	GT1P1{1}	-7	-19	-13	24	0	0	0	0

R E S T R A I N T R E A C T I O N S

Point name	Load combination	FORCES (lbf) X	Y	Z	Result	MOMENTS (ft-lb) X	Y	Z	Result
D19	Guide Tag No.: <None> [ID: D19 2]								
	Gravity{1}	0	-27	0	27	0	0	0	0
	GT1{1}	-15	-28	-16	36	0	0	0	0
	GT1P1{1}	-15	-28	-16	36	0	0	0	0
D25	Guide Tag No.: <None> [ID: D25 1]								
	Gravity{1}	0	-36	0	36	0	0	0	0
	GT1{1}	3	-36	2	36	0	0	0	0
	GT1P1{1}	3	-36	2	36	0	0	0	0
D20	Guide Tag No.: <None> [ID: D20 1]								
	Gravity{1}	0	-27	0	27	0	0	0	0
	GT1{1}	19	-26	9	34	0	0	0	0
	GT1P1{1}	19	-26	9	34	0	0	0	0
D26	Guide Tag No.: <None> [ID: D26 1]								
	Gravity{1}	0	-22	0	22	0	0	0	0
	GT1{1}	15	-22	10	28	0	0	0	0
	GT1P1{1}	15	-22	10	28	0	0	0	0
D28	Guide Tag No.: <None> [ID: D28 1]								
	Gravity{1}	0	-28	0	28	0	0	0	0
	GT1{1}	30	-28	10	42	0	0	0	0
	GT1P1{1}	30	-28	10	42	0	0	0	0
D27	Guide Tag No.: <None> [ID: D27 1]								
	Gravity{1}	0	-22	0	22	0	0	0	0
	GT1{1}	17	-22	-3	28	0	0	0	0
	GT1P1{1}	17	-22	-3	28	0	0	0	0
D22	Anchor Tag No.: <None>					Connected to: Ground			
	Gravity{1}	0	-9	1	9	0	7	0	7
	GT1{1}	-83	-9	0	83	0	2	0	2
	GT1P1{1}	-83	-9	0	83	0	2	0	2

```
-----------------------------------------------------------------------------------------------------------------------
Primary Piping Low Temp
04/23/2020 2018719                                                    BENTLEY
03:23 PM                                                              AutoPIPE Nuclear 12.00.00.16   RESULT PAGE  97
-----------------------------------------------------------------------------------------------------------------------

                              ASME B31.3 (2016)  CODE COMPLIANCE
              (Moments in ft-lb  , Force in lbf  )     (Stress in psi     )
 Point     Load                    Axial  In-Pl. Out-Pl. Torsion   S.I.F   Index/SIF  Eq. Load   Code   Code
 name   combination                Force  Moment  Moment  Moment  In  Out   Ax. Tor.  no. type  Stress Allow.
 ------ ----------------------    ------- ------- ------- ------- ---- ---- ---- ---- ---- ----  ------ ------

 *** Segment A  begin ***

 A00    Max P{1}                                                                      (3a) HOOP       0  16700
        GR + Max P{1}                    0       0       0       0 1.00 1.00 1.00 1.00  23a SUST       0  16700
        TR:Amb to T1{1}                  0       0       0       0 1.00 1.00 1.00 1.00 (17) DISP       0  25050
        Amb to T1{1}                     0       0       0       0 1.00 1.00 1.00 1.00 (17) DISP       0  25050

 A20  - Max P{1}                                                                      (3a) HOOP       0  16700
        GR + Max P{1}                    1       0       0       0 1.00 1.00 1.00 1.00  23a SUST       1  16700
        TR:Amb to T1{1}                  0       0       0       0 1.00 1.00 1.00 1.00 (17) DISP       0  25050
        Amb to T1{1}                     0       0       0       0 1.00 1.00 1.00 1.00 (17) DISP       0  25050

 A20  + Max P{1}                                                                      (3a) HOOP       0  16700
        GR + Max P{1}                    3       0       0       0 1.00 1.00 1.00 1.00  23a SUST       3  16700
        TR:Amb to T1{1}                 20       0       0       0 1.00 1.00 1.00 1.00 (17) DISP      19  25050
        Amb to T1{1}                    20       0       0       0 1.00 1.00 1.00 1.00 (17) DISP      19  25050

 A01 N- Max P{1}                                                                      (3a) HOOP       0  16700
        GR + Max P{1}                    3       0       0       0 1.00 1.00 1.00 1.00  23a SUST       3  16700
        TR:Amb to T1{1}                 20       0       0       0 1.00 1.00 1.00 1.00 (17) DISP      19  25050
        Amb to T1{1}                    20       0       0       0 1.00 1.00 1.00 1.00 (17) DISP      19  25050

 A01 N+ Max P{1}                                                                      (3a) HOOP       0  16700
        GR + Max P{1}                    3       0       0       0 1.30 1.08 1.00 1.00  23a SUST       3  16700
        TR:Amb to T1{1}                 20       0       0       0 1.73 1.44 1.00 1.00 (17) DISP      19  25050
        Amb to T1{1}                    20       0       0       0 1.73 1.44 1.00 1.00 (17) DISP      19  25050

 A01 F- Max P{1}                                                                      (3a) HOOP       0  16700
        GR + Max P{1}                    0       0       0       0 1.30 1.08 1.00 1.00  23a SUST      12  16700
        TR:Amb to T1{1}                  0       5       0       0 1.73 1.44 1.00 1.00 (17) DISP     187  25050
        Amb to T1{1}                     0       5       0       0 1.73 1.44 1.00 1.00 (17) DISP     187  25050

 A01 F+ Max P{1}                                                                      (3a) HOOP       0  16700
        GR + Max P{1}                    0       0       0       0 1.00 1.00 1.00 1.00  23a SUST       9  16700
        TR:Amb to T1{1}                  0       5       0       0 1.00 1.00 1.00 1.00 (17) DISP     108  25050
        Amb to T1{1}                     0       5       0       0 1.00 1.00 1.00 1.00 (17) DISP     108  25050

 A02  - Max P{1}                                                                      (3a) HOOP       0  16700
        GR + Max P{1}                    0       1       0       0 1.00 1.00 1.00 1.00  23a SUST      23  16700
        TR:Amb to T1{1}                  0      29       0       0 1.00 1.00 1.00 1.00 (17) DISP     630  25050
        Amb to T1{1}                     0      29       0       0 1.00 1.00 1.00 1.00 (17) DISP     630  25050

 A02  + Max P{1}                                                                      (3a) HOOP       0  16700
        GR + Max P{1}                   19       0      25       1 1.00 1.00 1.00 1.00  23a SUST     588  16700
        TR:Amb to T1{1}                118       2       1       2 1.00 1.00 1.00 1.00 (17) DISP     170  25050
        Amb to T1{1}                   118       2       1       2 1.00 1.00 1.00 1.00 (17) DISP     170  25050
```

Primary Piping Low Temp
04/23/2020 2018719 BENTLEY
03:23 PM AutoPIPE Nuclear 12.00.00.16 RESULT PAGE 98

ASME B31.3 (2016) CODE COMPLIANCE
(Moments in ft-lb , Force in lbf) (Stress in psi)

Point name	Load combination	Axial Force	In-Pl. Moment	Out-Pl. Moment	Torsion Moment	S.I.F In	S.I.F Out	Index/SIF Ax.	Index/SIF Tor.	Eq. no.	Load type	Code Stress	Code Allow.
A03	Max P{1}									(3a)	HOOP	0	16700
	GR + Max P{1}	19	1	12	1	1.00	1.00	1.00	1.00	23a	SUST	284	16700
	TR:Amb to T1{1}	118	1	4	2	1.00	1.00	1.00	1.00	(17)	DISP	192	25050
	Amb to T1{1}	118	1	4	2	1.00	1.00	1.00	1.00	(17)	DISP	192	25050
A23 -	Max P{1}									(3a)	HOOP	0	16700
	GR + Max P{1}	19	20	5	1	1.00	1.00	1.00	1.00	23a	SUST	486	16700
	TR:Amb to T1{1}	118	4	6	2	1.00	1.00	1.00	1.00	(17)	DISP	274	25050
	Amb to T1{1}	118	4	6	2	1.00	1.00	1.00	1.00	(17)	DISP	274	25050
A23 +	Max P{1}									(3a)	HOOP	0	16700
	GR + Max P{1}	19	20	5	1	1.00	1.00	1.00	1.00	23a	SUST	485	16700
	TR:Amb to T1{1}	80	4	6	2	1.00	1.00	1.00	1.00	(17)	DISP	239	25050
	Amb to T1{1}	80	4	6	2	1.00	1.00	1.00	1.00	(17)	DISP	239	25050
A04 N-	Max P{1}									(3a)	HOOP	0	16700
	GR + Max P{1}	19	16	7	1	1.00	1.00	1.00	1.00	23a	SUST	404	16700
	TR:Amb to T1{1}	80	1	5	2	1.00	1.00	1.00	1.00	(17)	DISP	193	25050
	Amb to T1{1}	80	1	5	2	1.00	1.00	1.00	1.00	(17)	DISP	193	25050
A04 N+	Max P{1}									(3a)	HOOP	0	16700
	GR + Max P{1}	19	16	7	1	1.00	1.00	1.00	1.00	23a	SUST	404	16700
	TR:Amb to T1{1}	80	1	5	2	1.00	1.00	1.00	1.00	(17)	DISP	193	25050
	Amb to T1{1}	80	1	5	2	1.00	1.00	1.00	1.00	(17)	DISP	193	25050
A04 F-	Max P{1}									(3a)	HOOP	0	16700
	GR + Max P{1}	21	7	9	2	1.00	1.00	1.00	1.00	23a	SUST	296	16700
	TR:Amb to T1{1}	81	3	3	1	1.00	1.00	1.00	1.00	(17)	DISP	175	25050
	Amb to T1{1}	81	3	3	1	1.00	1.00	1.00	1.00	(17)	DISP	175	25050
A04 F+	Max P{1}									(3a)	HOOP	0	16700
	GR + Max P{1}	21	7	9	2	1.00	1.00	1.00	1.00	23a	SUST	296	16700
	TR:Amb to T1{1}	81	3	3	1	1.00	1.00	1.00	1.00	(17)	DISP	175	25050
	Amb to T1{1}	81	3	3	1	1.00	1.00	1.00	1.00	(17)	DISP	175	25050
A24 -	Max P{1}									(3a)	HOOP	0	16700
	GR + Max P{1}	16	24	58	2	1.00	1.00	1.00	1.00	23a	SUST	1430	16700
	TR:Amb to T1{1}	81	2	28	1	1.00	1.00	1.00	1.00	(17)	DISP	676	25050
	Amb to T1{1}	81	2	28	1	1.00	1.00	1.00	1.00	(17)	DISP	676	25050
A24 +	Max P{1}									(3a)	HOOP	0	16700
	GR + Max P{1}	16	24	58	2	1.00	1.00	1.00	1.00	23a	SUST	1431	16700
	TR:Amb to T1{1}	37	2	28	1	1.00	1.00	1.00	1.00	(17)	DISP	634	25050
	Amb to T1{1}	37	2	28	1	1.00	1.00	1.00	1.00	(17)	DISP	634	25050
A21 -	Max P{1}									(3a)	HOOP	0	16700
	GR + Max P{1}	11	20	33	2	1.00	1.00	1.00	1.00	23a	SUST	894	16700
	TR:Amb to T1{1}	37	16	6	1	1.00	1.00	1.00	1.00	(17)	DISP	395	25050
	Amb to T1{1}	37	16	6	1	1.00	1.00	1.00	1.00	(17)	DISP	395	25050

Primary Piping Low Temp
04/23/2020 2018719 BENTLEY
03:23 PM AutoPIPE Nuclear 12.00.00.16 RESULT PAGE 99

ASME B31.3 (2016) CODE COMPLIANCE
(Moments in ft-lb , Force in lbf) (Stress in psi)

Point name	Load combination	Axial Force	In-Pl. Moment	Out-Pl. Moment	Torsion Moment	S.I.F In	S.I.F Out	Index/SIF Ax.	Index/SIF Tor.	Eq. no.	Load type	Code Stress	Code Allow.
A21	+ Max P{1}									(3a)	HOOP	0	16700
	GR + Max P{1}	9	20	33	2	1.00	1.00	1.00	1.00	23a	SUST	893	16700
	TR:Amb to T1{1}	17	16	6	1	1.00	1.00	1.00	1.00	(17)	DISP	377	25050
	Amb to T1{1}	17	16	6	1	1.00	1.00	1.00	1.00	(17)	DISP	377	25050
A05 N-	Max P{1}									(3a)	HOOP	0	16700
	GR + Max P{1}	9	14	38	2	1.00	1.00	1.00	1.00	23a	SUST	921	16700
	TR:Amb to T1{1}	17	13	19	1	1.00	1.00	1.00	1.00	(17)	DISP	503	25050
	Amb to T1{1}	17	13	19	1	1.00	1.00	1.00	1.00	(17)	DISP	503	25050
A05 N+	Max P{1}									(3a)	HOOP	0	16700
	GR + Max P{1}	9	38	15	2	1.00	1.00	1.00	1.00	23a	SUST	921	16700
	TR:Amb to T1{1}	17	18	14	1	1.00	1.00	1.00	1.00	(17)	DISP	503	25050
	Amb to T1{1}	17	18	14	1	1.00	1.00	1.00	1.00	(17)	DISP	503	25050
A05 F-	Max P{1}									(3a)	HOOP	0	16700
	GR + Max P{1}	9	44	1	0	1.00	1.00	1.00	1.00	23a	SUST	1014	16700
	TR:Amb to T1{1}	26	46	13	1	1.00	1.00	1.00	1.00	(17)	DISP	1046	25050
	Amb to T1{1}	26	46	13	1	1.00	1.00	1.00	1.00	(17)	DISP	1046	25050
A05 F+	Max P{1}									(3a)	HOOP	0	16700
	GR + Max P{1}	9	10	43	0	1.00	1.00	1.00	1.00	23a	SUST	1014	16700
	TR:Amb to T1{1}	26	5	48	1	1.00	1.00	1.00	1.00	(17)	DISP	1046	25050
	Amb to T1{1}	26	5	48	1	1.00	1.00	1.00	1.00	(17)	DISP	1046	25050
A22	- Max P{1}									(3a)	HOOP	0	16700
	GR + Max P{1}	8	13	40	0	1.00	1.00	1.00	1.00	23a	SUST	960	16700
	TR:Amb to T1{1}	26	9	40	1	1.00	1.00	1.00	1.00	(17)	DISP	892	25050
	Amb to T1{1}	26	9	40	1	1.00	1.00	1.00	1.00	(17)	DISP	892	25050
A22	+ Max P{1}									(3a)	HOOP	0	16700
	GR + Max P{1}	8	13	40	0	1.00	1.00	1.00	1.00	23a	SUST	959	16700
	TR:Amb to T1{1}	33	9	40	1	1.00	1.00	1.00	1.00	(17)	DISP	899	25050
	Amb to T1{1}	33	9	40	1	1.00	1.00	1.00	1.00	(17)	DISP	899	25050
A25	- Max P{1}									(3a)	HOOP	0	16700
	GR + Max P{1}	7	28	8	0	1.00	1.00	1.00	1.00	23a	SUST	677	16700
	TR:Amb to T1{1}	33	2	35	1	1.00	1.00	1.00	1.00	(17)	DISP	780	25050
	Amb to T1{1}	33	2	35	1	1.00	1.00	1.00	1.00	(17)	DISP	780	25050
A25	+ Max P{1}									(3a)	HOOP	0	16700
	GR + Max P{1}	7	28	8	0	1.00	1.00	1.00	1.00	23a	SUST	677	16700
	TR:Amb to T1{1}	79	2	35	1	1.00	1.00	1.00	1.00	(17)	DISP	822	25050
	Amb to T1{1}	79	2	35	1	1.00	1.00	1.00	1.00	(17)	DISP	822	25050
A26	- Max P{1}									(3a)	HOOP	0	16700
	GR + Max P{1}	6	25	3	0	1.00	1.00	1.00	1.00	23a	SUST	575	16700
	TR:Amb to T1{1}	79	1	6	1	1.00	1.00	1.00	1.00	(17)	DISP	204	25050
	Amb to T1{1}	79	1	6	1	1.00	1.00	1.00	1.00	(17)	DISP	204	25050

ASME B31.3 (2016) CODE COMPLIANCE
(Moments in ft-lb , Force in lbf) (Stress in psi)

Point name	Load combination	Axial Force	In-Pl. Moment	Out-Pl. Moment	Torsion Moment	S.I.F In	S.I.F Out	Index/SIF Ax.	Index/SIF Tor.	Eq. no.	Load type	Code Stress	Code Allow.
A26	+ Max P{1}									(3a)	HOOP	0	16700
	GR + Max P{1}	9	25	3	0	1.00	1.00	1.00	1.00	23a	SUST	578	16700
	TR:Amb to T1{1}	105	1	6	1	1.00	1.00	1.00	1.00	(17)	DISP	228	25050
	Amb to T1{1}	105	1	6	1	1.00	1.00	1.00	1.00	(17)	DISP	228	25050
A27	- Max P{1}									(3a)	HOOP	0	16700
	GR + Max P{1}	8	23	1	0	1.00	1.00	1.00	1.00	23a	SUST	528	16700
	TR:Amb to T1{1}	105	0	4	1	1.00	1.00	1.00	1.00	(17)	DISP	188	25050
	Amb to T1{1}	105	0	4	1	1.00	1.00	1.00	1.00	(17)	DISP	188	25050
A27	+ Max P{1}									(3a)	HOOP	0	16700
	GR + Max P{1}	9	23	1	0	1.00	1.00	1.00	1.00	23a	SUST	529	16700
	TR:Amb to T1{1}	79	0	4	1	1.00	1.00	1.00	1.00	(17)	DISP	164	25050
	Amb to T1{1}	79	0	4	1	1.00	1.00	1.00	1.00	(17)	DISP	164	25050
A28	- Max P{1}									(3a)	HOOP	0	16700
	GR + Max P{1}	8	35	9	0	1.00	1.00	1.00	1.00	23a	SUST	817	16700
	TR:Amb to T1{1}	79	1	18	1	1.00	1.00	1.00	1.00	(17)	DISP	466	25050
	Amb to T1{1}	79	1	18	1	1.00	1.00	1.00	1.00	(17)	DISP	466	25050
A28	+ Max P{1}									(3a)	HOOP	0	16700
	GR + Max P{1}	8	35	9	0	1.00	1.00	1.00	1.00	23a	SUST	817	16700
	TR:Amb to T1{1}	40	1	18	1	1.00	1.00	1.00	1.00	(17)	DISP	430	25050
	Amb to T1{1}	40	1	18	1	1.00	1.00	1.00	1.00	(17)	DISP	430	25050
A29	- Max P{1}									(3a)	HOOP	0	16700
	GR + Max P{1}	7	23	26	0	1.00	1.00	1.00	1.00	23a	SUST	795	16700
	TR:Amb to T1{1}	40	2	29	1	1.00	1.00	1.00	1.00	(17)	DISP	667	25050
	Amb to T1{1}	40	2	29	1	1.00	1.00	1.00	1.00	(17)	DISP	667	25050
A29	+ Max P{1}									(3a)	HOOP	0	16700
	GR + Max P{1}	6	23	26	0	1.00	1.00	1.00	1.00	23a	SUST	794	16700
	TR:Amb to T1{1}	17	2	29	1	1.00	1.00	1.00	1.00	(17)	DISP	646	25050
	Amb to T1{1}	17	2	29	1	1.00	1.00	1.00	1.00	(17)	DISP	646	25050
A06 N-	Max P{1}									(3a)	HOOP	0	16700
	GR + Max P{1}	6	17	27	0	1.00	1.00	1.00	1.00	23a	SUST	728	16700
	TR:Amb to T1{1}	17	2	39	1	1.00	1.00	1.00	1.00	(17)	DISP	847	25050
	Amb to T1{1}	17	2	39	1	1.00	1.00	1.00	1.00	(17)	DISP	847	25050
A06 N+	Max P{1}									(3a)	HOOP	0	16700
	GR + Max P{1}	6	27	18	0	1.00	1.00	1.00	1.00	23a	SUST	728	16700
	TR:Amb to T1{1}	17	39	3	1	1.00	1.00	1.00	1.00	(17)	DISP	847	25050
	Amb to T1{1}	17	39	3	1	1.00	1.00	1.00	1.00	(17)	DISP	847	25050
A06 F-	Max P{1}									(3a)	HOOP	0	16700
	GR + Max P{1}	1	15	1	4	1.00	1.00	1.00	1.00	23a	SUST	346	16700
	TR:Amb to T1{1}	19	43	4	0	1.00	1.00	1.00	1.00	(17)	DISP	942	25050
	Amb to T1{1}	19	43	4	0	1.00	1.00	1.00	1.00	(17)	DISP	942	25050

ASME B31.3 (2016) CODE COMPLIANCE
(Moments in ft-lb , Force in lbf) (Stress in psi)

Point name	Load combination	Axial Force	In-Pl. Moment	Out-Pl. Moment	Torsion Moment	S.I.F In	S.I.F Out	Index/SIF Ax.	Index/SIF Tor.	Eq. no.	Load type	Code Stress	Code Allow.
A06 F+	Max P{1}									(3a)	HOOP	0	16700
	GR + Max P{1}	1	1	15	4	1.00	1.00	1.00	1.00	23a	SUST	346	16700
	TR:Amb to T1{1}	19	2	43	0	1.00	1.00	1.00	1.00	(17)	DISP	942	25050
	Amb to T1{1}	19	2	43	0	1.00	1.00	1.00	1.00	(17)	DISP	942	25050
A30 -	Max P{1}									(3a)	HOOP	0	16700
	GR + Max P{1}	1	5	12	4	1.00	1.00	1.00	1.00	23a	SUST	303	16700
	TR:Amb to T1{1}	19	3	34	0	1.00	1.00	1.00	1.00	(17)	DISP	757	25050
	Amb to T1{1}	19	3	34	0	1.00	1.00	1.00	1.00	(17)	DISP	757	25050
A30 +	Max P{1}									(3a)	HOOP	0	16700
	GR + Max P{1}	1	5	12	4	1.00	1.00	1.00	1.00	23a	SUST	302	16700
	TR:Amb to T1{1}	20	3	34	0	1.00	1.00	1.00	1.00	(17)	DISP	758	25050
	Amb to T1{1}	20	3	34	0	1.00	1.00	1.00	1.00	(17)	DISP	758	25050
A31 -	Max P{1}									(3a)	HOOP	0	16700
	GR + Max P{1}	1	16	5	4	1.00	1.00	1.00	1.00	23a	SUST	383	16700
	TR:Amb to T1{1}	20	4	1	0	1.00	1.00	1.00	1.00	(17)	DISP	112	25050
	Amb to T1{1}	20	4	1	0	1.00	1.00	1.00	1.00	(17)	DISP	112	25050
A31 +	Max P{1}									(3a)	HOOP	0	16700
	GR + Max P{1}	3	16	5	4	1.00	1.00	1.00	1.00	23a	SUST	386	16700
	TR:Amb to T1{1}	19	4	1	0	1.00	1.00	1.00	1.00	(17)	DISP	111	25050
	Amb to T1{1}	19	4	1	0	1.00	1.00	1.00	1.00	(17)	DISP	111	25050
A07 N-	Max P{1}									(3a)	HOOP	0	16700
	GR + Max P{1}	3	10	8	4	1.00	1.00	1.00	1.00	23a	SUST	313	16700
	TR:Amb to T1{1}	19	3	18	0	1.00	1.00	1.00	1.00	(17)	DISP	400	25050
	Amb to T1{1}	19	3	18	0	1.00	1.00	1.00	1.00	(17)	DISP	400	25050
A07 N+	Max P{1}									(3a)	HOOP	0	16700
	GR + Max P{1}	3	8	10	4	1.00	1.00	1.00	1.00	23a	SUST	313	16700
	TR:Amb to T1{1}	19	18	4	0	1.00	1.00	1.00	1.00	(17)	DISP	400	25050
	Amb to T1{1}	19	18	4	0	1.00	1.00	1.00	1.00	(17)	DISP	400	25050
A07 F-	Max P{1}									(3a)	HOOP	0	16700
	GR + Max P{1}	7	20	8	0	1.00	1.00	1.00	1.00	23a	SUST	485	16700
	TR:Amb to T1{1}	34	63	4	0	1.00	1.00	1.00	1.00	(17)	DISP	1375	25050
	Amb to T1{1}	34	63	4	0	1.00	1.00	1.00	1.00	(17)	DISP	1375	25050
A07 F+	Max P{1}									(3a)	HOOP	0	16700
	GR + Max P{1}	7	9	19	0	1.00	1.00	1.00	1.00	23a	SUST	485	16700
	TR:Amb to T1{1}	34	2	63	0	1.00	1.00	1.00	1.00	(17)	DISP	1375	25050
	Amb to T1{1}	34	2	63	0	1.00	1.00	1.00	1.00	(17)	DISP	1375	25050
A32 -	Max P{1}									(3a)	HOOP	0	16700
	GR + Max P{1}	7	13	18	0	1.00	1.00	1.00	1.00	23a	SUST	503	16700
	TR:Amb to T1{1}	34	3	53	0	1.00	1.00	1.00	1.00	(17)	DISP	1175	25050
	Amb to T1{1}	34	3	53	0	1.00	1.00	1.00	1.00	(17)	DISP	1175	25050

ASME B31.3 (2016) CODE COMPLIANCE
(Moments in ft-lb , Force in lbf) (Stress in psi)

Point name	Load combination	Axial Force	In-Pl. Moment	Out-Pl. Moment	Torsion Moment	S.I.F In	S.I.F Out	Index/SIF Ax.	Index/SIF Tor.	Eq. no.	Load type	Code Stress	Code Allow.
A32	+ Max P{1}									(3a)	HOOP	0	16700
	GR + Max P{1}	6	13	18	0	1.00	1.00	1.00	1.00	23a	SUST	502	16700
	TR:Amb to T1{1}	49	3	53	0	1.00	1.00	1.00	1.00	(17)	DISP	1189	25050
	Amb to T1{1}	49	3	53	0	1.00	1.00	1.00	1.00	(17)	DISP	1189	25050
A33	- Max P{1}									(3a)	HOOP	0	16700
	GR + Max P{1}	5	29	0	0	1.00	1.00	1.00	1.00	23a	SUST	652	16700
	TR:Amb to T1{1}	49	1	28	0	1.00	1.00	1.00	1.00	(17)	DISP	647	25050
	Amb to T1{1}	49	1	28	0	1.00	1.00	1.00	1.00	(17)	DISP	647	25050
A33	+ Max P{1}									(3a)	HOOP	0	16700
	GR + Max P{1}	6	29	0	0	1.00	1.00	1.00	1.00	23a	SUST	653	16700
	TR:Amb to T1{1}	90	1	28	0	1.00	1.00	1.00	1.00	(17)	DISP	685	25050
	Amb to T1{1}	90	1	28	0	1.00	1.00	1.00	1.00	(17)	DISP	685	25050
A34	- Max P{1}									(3a)	HOOP	0	16700
	GR + Max P{1}	5	24	2	0	1.00	1.00	1.00	1.00	23a	SUST	549	16700
	TR:Amb to T1{1}	90	0	4	0	1.00	1.00	1.00	1.00	(17)	DISP	180	25050
	Amb to T1{1}	90	0	4	0	1.00	1.00	1.00	1.00	(17)	DISP	180	25050
A34	+ Max P{1}									(3a)	HOOP	0	16700
	GR + Max P{1}	6	24	2	0	1.00	1.00	1.00	1.00	23a	SUST	551	16700
	TR:Amb to T1{1}	116	0	4	0	1.00	1.00	1.00	1.00	(17)	DISP	204	25050
	Amb to T1{1}	116	0	4	0	1.00	1.00	1.00	1.00	(17)	DISP	204	25050
A35	- Max P{1}									(3a)	HOOP	0	16700
	GR + Max P{1}	5	27	1	0	1.00	1.00	1.00	1.00	23a	SUST	623	16700
	TR:Amb to T1{1}	116	0	5	0	1.00	1.00	1.00	1.00	(17)	DISP	206	25050
	Amb to T1{1}	116	0	5	0	1.00	1.00	1.00	1.00	(17)	DISP	206	25050
A35	+ Max P{1}									(3a)	HOOP	0	16700
	GR + Max P{1}	5	27	1	0	1.00	1.00	1.00	1.00	23a	SUST	623	16700
	TR:Amb to T1{1}	89	0	5	0	1.00	1.00	1.00	1.00	(17)	DISP	181	25050
	Amb to T1{1}	89	0	5	0	1.00	1.00	1.00	1.00	(17)	DISP	181	25050
A36	- Max P{1}									(3a)	HOOP	0	16700
	GR + Max P{1}	4	17	5	0	1.00	1.00	1.00	1.00	23a	SUST	405	16700
	TR:Amb to T1{1}	89	0	13	0	1.00	1.00	1.00	1.00	(17)	DISP	358	25050
	Amb to T1{1}	89	0	13	0	1.00	1.00	1.00	1.00	(17)	DISP	358	25050
A36	+ Max P{1}									(3a)	HOOP	0	16700
	GR + Max P{1}	4	17	5	0	1.00	1.00	1.00	1.00	23a	SUST	405	16700
	TR:Amb to T1{1}	74	0	13	0	1.00	1.00	1.00	1.00	(17)	DISP	344	25050
	Amb to T1{1}	74	0	13	0	1.00	1.00	1.00	1.00	(17)	DISP	344	25050
A37	- Max P{1}									(3a)	HOOP	0	16700
	GR + Max P{1}	4	23	5	0	1.00	1.00	1.00	1.00	23a	SUST	529	16700
	TR:Amb to T1{1}	74	1	25	0	1.00	1.00	1.00	1.00	(17)	DISP	612	25050
	Amb to T1{1}	74	1	25	0	1.00	1.00	1.00	1.00	(17)	DISP	612	25050

Primary Piping Low Temp
04/23/2020 2018719 BENTLEY
03:23 PM AutoPIPE Nuclear 12.00.00.16 RESULT PAGE 103

ASME B31.3 (2016) CODE COMPLIANCE
(Moments in ft-lb , Force in lbf) (Stress in psi)

Point name	Load combination	Axial Force	In-Pl. Moment	Out-Pl. Moment	Torsion Moment	S.I.F In	S.I.F Out	Index/SIF Ax.	Index/SIF Tor.	Eq. no.	Load type	Code Stress	Code Allow.
A37 +	Max P{1}									(3a)	HOOP	0	16700
	GR + Max P{1}	3	23	5	0	1.00	1.00	1.00	1.00	23a	SUST	528	16700
	TR:Amb to T1{1}	44	1	25	0	1.00	1.00	1.00	1.00	(17)	DISP	584	25050
	Amb to T1{1}	44	1	25	0	1.00	1.00	1.00	1.00	(17)	DISP	584	25050
A38 -	Max P{1}									(3a)	HOOP	0	16700
	GR + Max P{1}	2	14	8	0	1.00	1.00	1.00	1.00	23a	SUST	359	16700
	TR:Amb to T1{1}	44	3	46	0	1.00	1.00	1.00	1.00	(17)	DISP	1033	25050
	Amb to T1{1}	44	3	46	0	1.00	1.00	1.00	1.00	(17)	DISP	1033	25050
A38 +	Max P{1}									(3a)	HOOP	0	16700
	GR + Max P{1}	1	14	8	0	1.00	1.00	1.00	1.00	23a	SUST	359	16700
	TR:Amb to T1{1}	25	3	46	0	1.00	1.00	1.00	1.00	(17)	DISP	1015	25050
	Amb to T1{1}	25	3	46	0	1.00	1.00	1.00	1.00	(17)	DISP	1015	25050
A08 N-	Max P{1}									(3a)	HOOP	0	16700
	GR + Max P{1}	1	9	8	0	1.00	1.00	1.00	1.00	23a	SUST	275	16700
	TR:Amb to T1{1}	25	2	56	0	1.00	1.00	1.00	1.00	(17)	DISP	1221	25050
	Amb to T1{1}	25	2	56	0	1.00	1.00	1.00	1.00	(17)	DISP	1221	25050
A08 N+	Max P{1}									(3a)	HOOP	0	16700
	GR + Max P{1}	1	8	9	0	1.00	1.00	1.00	1.00	23a	SUST	275	16700
	TR:Amb to T1{1}	25	56	3	0	1.00	1.00	1.00	1.00	(17)	DISP	1221	25050
	Amb to T1{1}	25	56	3	0	1.00	1.00	1.00	1.00	(17)	DISP	1221	25050
A08 F-	Max P{1}									(3a)	HOOP	0	16700
	GR + Max P{1}	1	8	8	2	1.00	1.00	1.00	1.00	23a	SUST	254	16700
	TR:Amb to T1{1}	19	40	4	0	1.00	1.00	1.00	1.00	(17)	DISP	880	25050
	Amb to T1{1}	19	40	4	0	1.00	1.00	1.00	1.00	(17)	DISP	880	25050
A08 F+	Max P{1}									(3a)	HOOP	0	16700
	GR + Max P{1}	1	8	8	2	1.00	1.00	1.00	1.00	23a	SUST	254	16700
	TR:Amb to T1{1}	19	3	40	0	1.00	1.00	1.00	1.00	(17)	DISP	880	25050
	Amb to T1{1}	19	3	40	0	1.00	1.00	1.00	1.00	(17)	DISP	880	25050
A39	Max P{1}									(3a)	HOOP	0	16700
	GR + Max P{1}	1	13	7	2	1.00	1.00	1.00	1.00	23a	SUST	334	16700
	TR:Amb to T1{1}	19	4	28	0	1.00	1.00	1.00	1.00	(17)	DISP	619	25050
	Amb to T1{1}	19	4	28	0	1.00	1.00	1.00	1.00	(17)	DISP	619	25050
A40 -	Max P{1}									(3a)	HOOP	0	16700
	GR + Max P{1}	0	8	2	2	1.00	1.00	1.00	1.00	23a	SUST	183	16700
	TR:Amb to T1{1}	19	2	19	0	1.00	1.00	1.00	1.00	(17)	DISP	420	25050
	Amb to T1{1}	19	2	19	0	1.00	1.00	1.00	1.00	(17)	DISP	420	25050
A40 +	Max P{1}									(3a)	HOOP	0	16700
	GR + Max P{1}	0	8	2	2	1.00	1.00	1.00	1.00	23a	SUST	183	16700
	TR:Amb to T1{1}	17	2	19	0	1.00	1.00	1.00	1.00	(17)	DISP	418	25050
	Amb to T1{1}	17	2	19	0	1.00	1.00	1.00	1.00	(17)	DISP	418	25050

Primary Piping Low Temp
04/23/2020 2018719 BENTLEY
03:23 PM AutoPIPE Nuclear 12.00.00.16 RESULT PAGE 104

ASME B31.3 (2016) CODE COMPLIANCE
(Moments in ft-lb , Force in lbf) (Stress in psi)

Point name	Load combination	Axial Force	In-Pl. Moment	Out-Pl. Moment	Torsion Moment	S.I.F In	S.I.F Out	Index/SIF Ax.	Index/SIF Tor.	Eq. no.	Load type	Code Stress	Code Allow.
A09 N-	Max P{1}									(3a)	HOOP	0	16700
	GR + Max P{1}	0	3	1	2	1.00	1.00	1.00	1.00	23a	SUST	93	16700
	TR:Amb to T1{1}	17	2	32	0	1.00	1.00	1.00	1.00	(17)	DISP	693	25050
	Amb to T1{1}	17	2	32	0	1.00	1.00	1.00	1.00	(17)	DISP	693	25050
A09 N+	Max P{1}									(3a)	HOOP	0	16700
	GR + Max P{1}	0	1	3	2	1.00	1.00	1.00	1.00	23a	SUST	93	16700
	TR:Amb to T1{1}	17	32	2	0	1.00	1.00	1.00	1.00	(17)	DISP	693	25050
	Amb to T1{1}	17	32	2	0	1.00	1.00	1.00	1.00	(17)	DISP	693	25050
A09 F-	Max P{1}									(3a)	HOOP	0	16700
	GR + Max P{1}	1	4	13	0	1.00	1.00	1.00	1.00	23a	SUST	314	16700
	TR:Amb to T1{1}	26	58	2	0	1.00	1.00	1.00	1.00	(17)	DISP	1270	25050
	Amb to T1{1}	26	58	2	0	1.00	1.00	1.00	1.00	(17)	DISP	1270	25050
A09 F+	Max P{1}									(3a)	HOOP	0	16700
	GR + Max P{1}	1	13	4	0	1.00	1.00	1.00	1.00	23a	SUST	314	16700
	TR:Amb to T1{1}	26	1	58	0	1.00	1.00	1.00	1.00	(17)	DISP	1270	25050
	Amb to T1{1}	26	1	58	0	1.00	1.00	1.00	1.00	(17)	DISP	1270	25050
A41 -	Max P{1}									(3a)	HOOP	0	16700
	GR + Max P{1}	1	19	4	0	1.00	1.00	1.00	1.00	23a	SUST	435	16700
	TR:Amb to T1{1}	26	2	50	0	1.00	1.00	1.00	1.00	(17)	DISP	1090	25050
	Amb to T1{1}	26	2	50	0	1.00	1.00	1.00	1.00	(17)	DISP	1090	25050
A41 +	Max P{1}									(3a)	HOOP	0	16700
	GR + Max P{1}	1	19	4	0	1.00	1.00	1.00	1.00	23a	SUST	435	16700
	TR:Amb to T1{1}	45	2	50	0	1.00	1.00	1.00	1.00	(17)	DISP	1107	25050
	Amb to T1{1}	45	2	50	0	1.00	1.00	1.00	1.00	(17)	DISP	1107	25050
A42 -	Max P{1}									(3a)	HOOP	0	16700
	GR + Max P{1}	1	27	2	0	1.00	1.00	1.00	1.00	23a	SUST	611	16700
	TR:Amb to T1{1}	45	0	14	0	1.00	1.00	1.00	1.00	(17)	DISP	345	25050
	Amb to T1{1}	45	0	14	0	1.00	1.00	1.00	1.00	(17)	DISP	345	25050
A42 +	Max P{1}									(3a)	HOOP	0	16700
	GR + Max P{1}	0	27	2	0	1.00	1.00	1.00	1.00	23a	SUST	611	16700
	TR:Amb to T1{1}	72	0	14	0	1.00	1.00	1.00	1.00	(17)	DISP	371	25050
	Amb to T1{1}	72	0	14	0	1.00	1.00	1.00	1.00	(17)	DISP	371	25050
A43 -	Max P{1}									(3a)	HOOP	0	16700
	GR + Max P{1}	0	25	0	0	1.00	1.00	1.00	1.00	23a	SUST	560	16700
	TR:Amb to T1{1}	72	0	5	0	1.00	1.00	1.00	1.00	(17)	DISP	172	25050
	Amb to T1{1}	72	0	5	0	1.00	1.00	1.00	1.00	(17)	DISP	172	25050
A43 +	Max P{1}									(3a)	HOOP	0	16700
	GR + Max P{1}	0	25	0	0	1.00	1.00	1.00	1.00	23a	SUST	560	16700
	TR:Amb to T1{1}	99	0	5	0	1.00	1.00	1.00	1.00	(17)	DISP	197	25050
	Amb to T1{1}	99	0	5	0	1.00	1.00	1.00	1.00	(17)	DISP	197	25050

ASME B31.3 (2016) CODE COMPLIANCE
(Moments in ft-lb , Force in lbf) (Stress in psi)

Point name	Load combination	Axial Force	In-Pl. Moment	Out-Pl. Moment	Torsion Moment	S.I.F In	S.I.F Out	Index/SIF Ax.	Index/SIF Tor.	Eq. no.	Load type	Code Stress	Code Allow.
A44	- Max P{1}									(3a)	HOOP	0	16700
	GR + Max P{1}	1	25	1	0	1.00	1.00	1.00	1.00	23a	SUST	574	16700
	TR:Amb to T1{1}	99	0	1	0	1.00	1.00	1.00	1.00	(17)	DISP	112	25050
	Amb to T1{1}	99	0	1	0	1.00	1.00	1.00	1.00	(17)	DISP	112	25050
A44	+ Max P{1}									(3a)	HOOP	0	16700
	GR + Max P{1}	2	25	1	0	1.00	1.00	1.00	1.00	23a	SUST	575	16700
	TR:Amb to T1{1}	127	0	1	0	1.00	1.00	1.00	1.00	(17)	DISP	138	25050
	Amb to T1{1}	127	0	1	0	1.00	1.00	1.00	1.00	(17)	DISP	138	25050
A45	- Max P{1}									(3a)	HOOP	0	16700
	GR + Max P{1}	2	25	1	0	1.00	1.00	1.00	1.00	23a	SUST	571	16700
	TR:Amb to T1{1}	127	0	0	0	1.00	1.00	1.00	1.00	(17)	DISP	120	25050
	Amb to T1{1}	127	0	0	0	1.00	1.00	1.00	1.00	(17)	DISP	120	25050
A45	+ Max P{1}									(3a)	HOOP	0	16700
	GR + Max P{1}	6	25	1	0	1.00	1.00	1.00	1.00	23a	SUST	575	16700
	TR:Amb to T1{1}	159	0	0	0	1.00	1.00	1.00	1.00	(17)	DISP	149	25050
	Amb to T1{1}	159	0	0	0	1.00	1.00	1.00	1.00	(17)	DISP	149	25050
A46	- Max P{1}									(3a)	HOOP	0	16700
	GR + Max P{1}	6	25	0	0	1.00	1.00	1.00	1.00	23a	SUST	581	16700
	TR:Amb to T1{1}	159	0	0	0	1.00	1.00	1.00	1.00	(17)	DISP	148	25050
	Amb to T1{1}	159	0	0	0	1.00	1.00	1.00	1.00	(17)	DISP	148	25050
A46	+ Max P{1}									(3a)	HOOP	0	16700
	GR + Max P{1}	0	25	0	0	1.00	1.00	1.00	1.00	23a	SUST	575	16700
	TR:Amb to T1{1}	133	0	0	0	1.00	1.00	1.00	1.00	(17)	DISP	124	25050
	Amb to T1{1}	133	0	0	0	1.00	1.00	1.00	1.00	(17)	DISP	124	25050
A47	- Max P{1}									(3a)	HOOP	0	16700
	GR + Max P{1}	1	25	0	0	1.00	1.00	1.00	1.00	23a	SUST	556	16700
	TR:Amb to T1{1}	133	0	1	0	1.00	1.00	1.00	1.00	(17)	DISP	140	25050
	Amb to T1{1}	133	0	1	0	1.00	1.00	1.00	1.00	(17)	DISP	140	25050
A47	+ Max P{1}									(3a)	HOOP	0	16700
	GR + Max P{1}	1	25	0	0	1.00	1.00	1.00	1.00	23a	SUST	556	16700
	TR:Amb to T1{1}	107	0	1	0	1.00	1.00	1.00	1.00	(17)	DISP	116	25050
	Amb to T1{1}	107	0	1	0	1.00	1.00	1.00	1.00	(17)	DISP	116	25050
A48	- Max P{1}									(3a)	HOOP	0	16700
	GR + Max P{1}	2	28	1	0	1.00	1.00	1.00	1.00	23a	SUST	630	16700
	TR:Amb to T1{1}	107	0	1	0	1.00	1.00	1.00	1.00	(17)	DISP	126	25050
	Amb to T1{1}	107	0	1	0	1.00	1.00	1.00	1.00	(17)	DISP	126	25050
A48	+ Max P{1}									(3a)	HOOP	0	16700
	GR + Max P{1}	2	28	1	0	1.00	1.00	1.00	1.00	23a	SUST	630	16700
	TR:Amb to T1{1}	80	0	1	0	1.00	1.00	1.00	1.00	(17)	DISP	100	25050
	Amb to T1{1}	80	0	1	0	1.00	1.00	1.00	1.00	(17)	DISP	100	25050

ASME B31.3 (2016) CODE COMPLIANCE
(Moments in ft-lb , Force in lbf) (Stress in psi)

Point name	Load combination	Axial Force	In-Pl. Moment	Out-Pl. Moment	Torsion Moment	S.I.F In	S.I.F Out	Index/SIF Ax.	Index/SIF Tor.	Eq. no.	Load type	Code Stress	Code Allow.
A49 -	Max P{1}									(3a)	HOOP	0	16700
	GR + Max P{1}	2	16	0	0	1.00	1.00	1.00	1.00	23a	SUST	357	16700
	TR:Amb to T1{1}	80	0	12	0	1.00	1.00	1.00	1.00	(17)	DISP	324	25050
	Amb to T1{1}	80	0	12	0	1.00	1.00	1.00	1.00	(17)	DISP	324	25050
A49 +	Max P{1}									(3a)	HOOP	0	16700
	GR + Max P{1}	3	16	0	0	1.00	1.00	1.00	1.00	23a	SUST	358	16700
	TR:Amb to T1{1}	63	0	12	0	1.00	1.00	1.00	1.00	(17)	DISP	308	25050
	Amb to T1{1}	63	0	12	0	1.00	1.00	1.00	1.00	(17)	DISP	308	25050
A50 -	Max P{1}									(3a)	HOOP	0	16700
	GR + Max P{1}	3	21	1	0	1.00	1.00	1.00	1.00	23a	SUST	476	16700
	TR:Amb to T1{1}	63	1	11	0	1.00	1.00	1.00	1.00	(17)	DISP	293	25050
	Amb to T1{1}	63	1	11	0	1.00	1.00	1.00	1.00	(17)	DISP	293	25050
A50 +	Max P{1}									(3a)	HOOP	0	16700
	GR + Max P{1}	3	21	1	0	1.00	1.00	1.00	1.00	23a	SUST	476	16700
	TR:Amb to T1{1}	43	1	11	0	1.00	1.00	1.00	1.00	(17)	DISP	274	25050
	Amb to T1{1}	43	1	11	0	1.00	1.00	1.00	1.00	(17)	DISP	274	25050
A51 -	Max P{1}									(3a)	HOOP	0	16700
	GR + Max P{1}	3	16	17	0	1.00	1.00	1.00	1.00	23a	SUST	532	16700
	TR:Amb to T1{1}	43	1	45	0	1.00	1.00	1.00	1.00	(17)	DISP	1010	25050
	Amb to T1{1}	43	1	45	0	1.00	1.00	1.00	1.00	(17)	DISP	1010	25050
A51 +	Max P{1}									(3a)	HOOP	0	16700
	GR + Max P{1}	3	16	17	0	1.00	1.00	1.00	1.00	23a	SUST	532	16700
	TR:Amb to T1{1}	23	1	45	0	1.00	1.00	1.00	1.00	(17)	DISP	991	25050
	Amb to T1{1}	23	1	45	0	1.00	1.00	1.00	1.00	(17)	DISP	991	25050
A10 N-	Max P{1}									(3a)	HOOP	0	16700
	GR + Max P{1}	3	11	18	0	1.00	1.00	1.00	1.00	23a	SUST	479	16700
	TR:Amb to T1{1}	23	1	53	0	1.00	1.00	1.00	1.00	(17)	DISP	1152	25050
	Amb to T1{1}	23	1	53	0	1.00	1.00	1.00	1.00	(17)	DISP	1152	25050
A10 N+	Max P{1}									(3a)	HOOP	0	16700
	GR + Max P{1}	3	18	10	0	1.00	1.00	1.00	1.00	23a	SUST	479	16700
	TR:Amb to T1{1}	23	53	1	0	1.00	1.00	1.00	1.00	(17)	DISP	1152	25050
	Amb to T1{1}	23	53	1	0	1.00	1.00	1.00	1.00	(17)	DISP	1152	25050
A10 F-	Max P{1}									(3a)	HOOP	0	16700
	GR + Max P{1}	2	13	7	2	1.00	1.00	1.00	1.00	23a	SUST	331	16700
	TR:Amb to T1{1}	15	30	1	0	1.00	1.00	1.00	1.00	(17)	DISP	665	25050
	Amb to T1{1}	15	30	1	0	1.00	1.00	1.00	1.00	(17)	DISP	665	25050
A10 F+	Max P{1}									(3a)	HOOP	0	16700
	GR + Max P{1}	2	6	13	2	1.00	1.00	1.00	1.00	23a	SUST	331	16700
	TR:Amb to T1{1}	15	1	30	0	1.00	1.00	1.00	1.00	(17)	DISP	665	25050
	Amb to T1{1}	15	1	30	0	1.00	1.00	1.00	1.00	(17)	DISP	665	25050

ASME B31.3 (2016) CODE COMPLIANCE
(Moments in ft-lb , Force in lbf) (Stress in psi)

Point name	Load combination	Axial Force	In-Pl. Moment	Out-Pl. Moment	Torsion Moment	S.I.F In	S.I.F Out	Index/SIF Ax.	Index/SIF Tor.	Eq. no.	Load type	Code Stress	Code Allow.
A52 -	Max P{1}									(3a)	HOOP	0	16700
	GR + Max P{1}	2	11	11	2	1.00	1.00	1.00	1.00	23a	SUST	365	16700
	TR:Amb to T1{1}	15	1	19	0	1.00	1.00	1.00	1.00	(17)	DISP	425	25050
	Amb to T1{1}	15	1	19	0	1.00	1.00	1.00	1.00	(17)	DISP	425	25050
A52 +	Max P{1}									(3a)	HOOP	0	16700
	GR + Max P{1}	1	11	11	2	1.00	1.00	1.00	1.00	23a	SUST	365	16700
	TR:Amb to T1{1}	18	1	19	0	1.00	1.00	1.00	1.00	(17)	DISP	427	25050
	Amb to T1{1}	18	1	19	0	1.00	1.00	1.00	1.00	(17)	DISP	427	25050
A53 -	Max P{1}									(3a)	HOOP	0	16700
	GR + Max P{1}	2	12	13	2	1.00	1.00	1.00	1.00	23a	SUST	393	16700
	TR:Amb to T1{1}	18	1	16	0	1.00	1.00	1.00	1.00	(17)	DISP	369	25050
	Amb to T1{1}	18	1	16	0	1.00	1.00	1.00	1.00	(17)	DISP	369	25050
A53 +	Max P{1}									(3a)	HOOP	0	16700
	GR + Max P{1}	2	12	13	2	1.00	1.00	1.00	1.00	23a	SUST	394	16700
	TR:Amb to T1{1}	16	1	16	0	1.00	1.00	1.00	1.00	(17)	DISP	367	25050
	Amb to T1{1}	16	1	16	0	1.00	1.00	1.00	1.00	(17)	DISP	367	25050
A11 N-	Max P{1}									(3a)	HOOP	0	16700
	GR + Max P{1}	2	7	15	2	1.00	1.00	1.00	1.00	23a	SUST	369	16700
	TR:Amb to T1{1}	16	1	29	0	1.00	1.00	1.00	1.00	(17)	DISP	631	25050
	Amb to T1{1}	16	1	29	0	1.00	1.00	1.00	1.00	(17)	DISP	631	25050
A11 N+	Max P{1}									(3a)	HOOP	0	16700
	GR + Max P{1}	2	15	7	2	1.00	1.00	1.00	1.00	23a	SUST	369	16700
	TR:Amb to T1{1}	16	29	1	0	1.00	1.00	1.00	1.00	(17)	DISP	631	25050
	Amb to T1{1}	16	29	1	0	1.00	1.00	1.00	1.00	(17)	DISP	631	25050
A11 F-	Max P{1}									(3a)	HOOP	0	16700
	GR + Max P{1}	4	19	10	0	1.00	1.00	1.00	1.00	23a	SUST	484	16700
	TR:Amb to T1{1}	25	55	1	0	1.00	1.00	1.00	1.00	(17)	DISP	1209	25050
	Amb to T1{1}	25	55	1	0	1.00	1.00	1.00	1.00	(17)	DISP	1209	25050
A11 F+	Max P{1}									(3a)	HOOP	0	16700
	GR + Max P{1}	4	10	19	0	1.00	1.00	1.00	1.00	23a	SUST	484	16700
	TR:Amb to T1{1}	25	1	55	0	1.00	1.00	1.00	1.00	(17)	DISP	1209	25050
	Amb to T1{1}	25	1	55	0	1.00	1.00	1.00	1.00	(17)	DISP	1209	25050
A54 -	Max P{1}									(3a)	HOOP	0	16700
	GR + Max P{1}	4	15	18	0	1.00	1.00	1.00	1.00	23a	SUST	526	16700
	TR:Amb to T1{1}	25	1	47	0	1.00	1.00	1.00	1.00	(17)	DISP	1040	25050
	Amb to T1{1}	25	1	47	0	1.00	1.00	1.00	1.00	(17)	DISP	1040	25050
A54 +	Max P{1}									(3a)	HOOP	0	16700
	GR + Max P{1}	4	15	18	0	1.00	1.00	1.00	1.00	23a	SUST	526	16700
	TR:Amb to T1{1}	43	1	47	0	1.00	1.00	1.00	1.00	(17)	DISP	1057	25050
	Amb to T1{1}	43	1	47	0	1.00	1.00	1.00	1.00	(17)	DISP	1057	25050

ASME B31.3 (2016) CODE COMPLIANCE
(Moments in ft-lb , Force in lbf) (Stress in psi)

Point name	Load combination	Axial Force	In-Pl. Moment	Out-Pl. Moment	Torsion Moment	S.I.F In	S.I.F Out	Index/SIF Ax.	Index/SIF Tor.	Eq. no.	Load type	Code Stress	Code Allow.
A55	- Max P{1}									(3a)	HOOP	0	16700
	GR + Max P{1}	4	28	2	0	1.00	1.00	1.00	1.00	23a	SUST	639	16700
	TR:Amb to T1{1}	43	0	15	0	1.00	1.00	1.00	1.00	(17)	DISP	366	25050
	Amb to T1{1}	43	0	15	0	1.00	1.00	1.00	1.00	(17)	DISP	366	25050
A55	+ Max P{1}									(3a)	HOOP	0	16700
	GR + Max P{1}	4	28	2	0	1.00	1.00	1.00	1.00	23a	SUST	638	16700
	TR:Amb to T1{1}	71	0	15	0	1.00	1.00	1.00	1.00	(17)	DISP	392	25050
	Amb to T1{1}	71	0	15	0	1.00	1.00	1.00	1.00	(17)	DISP	392	25050
A56	- Max P{1}									(3a)	HOOP	0	16700
	GR + Max P{1}	4	24	1	0	1.00	1.00	1.00	1.00	23a	SUST	558	16700
	TR:Amb to T1{1}	71	0	3	0	1.00	1.00	1.00	1.00	(17)	DISP	136	25050
	Amb to T1{1}	71	0	3	0	1.00	1.00	1.00	1.00	(17)	DISP	136	25050
A56	+ Max P{1}									(3a)	HOOP	0	16700
	GR + Max P{1}	4	24	1	0	1.00	1.00	1.00	1.00	23a	SUST	558	16700
	TR:Amb to T1{1}	97	0	3	0	1.00	1.00	1.00	1.00	(17)	DISP	161	25050
	Amb to T1{1}	97	0	3	0	1.00	1.00	1.00	1.00	(17)	DISP	161	25050
A57	- Max P{1}									(3a)	HOOP	0	16700
	GR + Max P{1}	4	25	1	0	1.00	1.00	1.00	1.00	23a	SUST	581	16700
	TR:Amb to T1{1}	97	0	1	0	1.00	1.00	1.00	1.00	(17)	DISP	113	25050
	Amb to T1{1}	97	0	1	0	1.00	1.00	1.00	1.00	(17)	DISP	113	25050
A57	+ Max P{1}									(3a)	HOOP	0	16700
	GR + Max P{1}	4	25	1	0	1.00	1.00	1.00	1.00	23a	SUST	581	16700
	TR:Amb to T1{1}	125	0	1	0	1.00	1.00	1.00	1.00	(17)	DISP	138	25050
	Amb to T1{1}	125	0	1	0	1.00	1.00	1.00	1.00	(17)	DISP	138	25050
A58	- Max P{1}									(3a)	HOOP	0	16700
	GR + Max P{1}	5	25	0	0	1.00	1.00	1.00	1.00	23a	SUST	569	16700
	TR:Amb to T1{1}	125	0	0	0	1.00	1.00	1.00	1.00	(17)	DISP	122	25050
	Amb to T1{1}	125	0	0	0	1.00	1.00	1.00	1.00	(17)	DISP	122	25050
A58	+ Max P{1}									(3a)	HOOP	0	16700
	GR + Max P{1}	4	25	0	0	1.00	1.00	1.00	1.00	23a	SUST	569	16700
	TR:Amb to T1{1}	119	0	0	0	1.00	1.00	1.00	1.00	(17)	DISP	117	25050
	Amb to T1{1}	119	0	0	0	1.00	1.00	1.00	1.00	(17)	DISP	117	25050
A59	- Max P{1}									(3a)	HOOP	0	16700
	GR + Max P{1}	4	26	1	0	1.00	1.00	1.00	1.00	23a	SUST	592	16700
	TR:Amb to T1{1}	119	0	1	0	1.00	1.00	1.00	1.00	(17)	DISP	129	25050
	Amb to T1{1}	119	0	1	0	1.00	1.00	1.00	1.00	(17)	DISP	129	25050
A59	+ Max P{1}									(3a)	HOOP	0	16700
	GR + Max P{1}	4	26	1	0	1.00	1.00	1.00	1.00	23a	SUST	592	16700
	TR:Amb to T1{1}	92	0	1	0	1.00	1.00	1.00	1.00	(17)	DISP	103	25050
	Amb to T1{1}	92	0	1	0	1.00	1.00	1.00	1.00	(17)	DISP	103	25050

ASME B31.3 (2016) CODE COMPLIANCE
(Moments in ft-lb , Force in lbf) (Stress in psi)

Point name	Load combination	Axial Force	In-Pl. Moment	Out-Pl. Moment	Torsion Moment	S.I.F In	S.I.F Out	Index/SIF Ax.	Index/SIF Tor.	Eq. no.	Load type	Code Stress	Code Allow.
A60	- Max P{1}									(3a)	HOOP	0	16700
	GR + Max P{1}	5	22	1	0	1.00	1.00	1.00	1.00	23a	SUST	507	16700
	TR:Amb to T1{1}	92	0	3	0	1.00	1.00	1.00	1.00	(17)	DISP	151	25050
	Amb to T1{1}	92	0	3	0	1.00	1.00	1.00	1.00	(17)	DISP	151	25050
A60	+ Max P{1}									(3a)	HOOP	0	16700
	GR + Max P{1}	5	22	1	0	1.00	1.00	1.00	1.00	23a	SUST	507	16700
	TR:Amb to T1{1}	64	0	3	0	1.00	1.00	1.00	1.00	(17)	DISP	126	25050
	Amb to T1{1}	64	0	3	0	1.00	1.00	1.00	1.00	(17)	DISP	126	25050
A61	- Max P{1}									(3a)	HOOP	0	16700
	GR + Max P{1}	5	27	11	0	1.00	1.00	1.00	1.00	23a	SUST	671	16700
	TR:Amb to T1{1}	64	0	21	0	1.00	1.00	1.00	1.00	(17)	DISP	518	25050
	Amb to T1{1}	64	0	21	0	1.00	1.00	1.00	1.00	(17)	DISP	518	25050
A61	+ Max P{1}									(3a)	HOOP	0	16700
	GR + Max P{1}	5	27	11	0	1.00	1.00	1.00	1.00	23a	SUST	671	16700
	TR:Amb to T1{1}	37	0	21	0	1.00	1.00	1.00	1.00	(17)	DISP	493	25050
	Amb to T1{1}	37	0	21	0	1.00	1.00	1.00	1.00	(17)	DISP	493	25050
A62	- Max P{1}									(3a)	HOOP	0	16700
	GR + Max P{1}	5	12	23	0	1.00	1.00	1.00	1.00	23a	SUST	584	16700
	TR:Amb to T1{1}	37	1	27	0	1.00	1.00	1.00	1.00	(17)	DISP	614	25050
	Amb to T1{1}	37	1	27	0	1.00	1.00	1.00	1.00	(17)	DISP	614	25050
A62	+ Max P{1}									(3a)	HOOP	0	16700
	GR + Max P{1}	5	12	23	0	1.00	1.00	1.00	1.00	23a	SUST	584	16700
	TR:Amb to T1{1}	22	1	27	0	1.00	1.00	1.00	1.00	(17)	DISP	599	25050
	Amb to T1{1}	22	1	27	0	1.00	1.00	1.00	1.00	(17)	DISP	599	25050
A12 N-	Max P{1}									(3a)	HOOP	0	16700
	GR + Max P{1}	5	7	23	0	1.00	1.00	1.00	1.00	23a	SUST	556	16700
	TR:Amb to T1{1}	22	1	37	0	1.00	1.00	1.00	1.00	(17)	DISP	805	25050
	Amb to T1{1}	22	1	37	0	1.00	1.00	1.00	1.00	(17)	DISP	805	25050
A12 N+	Max P{1}									(3a)	HOOP	0	16700
	GR + Max P{1}	5	23	7	0	1.00	1.00	1.00	1.00	23a	SUST	556	16700
	TR:Amb to T1{1}	22	37	1	0	1.00	1.00	1.00	1.00	(17)	DISP	805	25050
	Amb to T1{1}	22	37	1	0	1.00	1.00	1.00	1.00	(17)	DISP	805	25050
A12 F-	Max P{1}									(3a)	HOOP	0	16700
	GR + Max P{1}	1	11	8	1	1.00	1.00	1.00	1.00	23a	SUST	321	16700
	TR:Amb to T1{1}	19	30	1	0	1.00	1.00	1.00	1.00	(17)	DISP	652	25050
	Amb to T1{1}	19	30	1	0	1.00	1.00	1.00	1.00	(17)	DISP	652	25050
A12 F+	Max P{1}									(3a)	HOOP	0	16700
	GR + Max P{1}	1	8	11	1	1.00	1.00	1.00	1.00	23a	SUST	321	16700
	TR:Amb to T1{1}	19	1	30	0	1.00	1.00	1.00	1.00	(17)	DISP	652	25050
	Amb to T1{1}	19	1	30	0	1.00	1.00	1.00	1.00	(17)	DISP	652	25050

Primary Piping Low Temp
04/23/2020 2018719 BENTLEY
03:23 PM AutoPIPE Nuclear 12.00.00.16 RESULT PAGE 110

ASME B31.3 (2016) CODE COMPLIANCE
(Moments in ft-lb , Force in lbf) (Stress in psi)

Point name	Load combination	Axial Force	In-Pl. Moment	Out-Pl. Moment	Torsion Moment	S.I.F In	S.I.F Out	Index/SIF Ax.	Index/SIF Tor.	Eq. no.	Load type	Code Stress	Code Allow.
A63	- Max P{1}									(3a)	HOOP	0	16700
	GR + Max P{1}	1	13	9	1	1.00	1.00	1.00	1.00	23a	SUST	363	16700
	TR:Amb to T1{1}	19	1	19	0	1.00	1.00	1.00	1.00	(17)	DISP	422	25050
	Amb to T1{1}	19	1	19	0	1.00	1.00	1.00	1.00	(17)	DISP	422	25050
A63	+ Max P{1}									(3a)	HOOP	0	16700
	GR + Max P{1}	1	13	9	1	1.00	1.00	1.00	1.00	23a	SUST	363	16700
	TR:Amb to T1{1}	32	1	19	0	1.00	1.00	1.00	1.00	(17)	DISP	434	25050
	Amb to T1{1}	32	1	19	0	1.00	1.00	1.00	1.00	(17)	DISP	434	25050
A64	- Max P{1}									(3a)	HOOP	0	16700
	GR + Max P{1}	2	28	38	1	1.00	1.00	1.00	1.00	23a	SUST	1070	16700
	TR:Amb to T1{1}	32	0	35	0	1.00	1.00	1.00	1.00	(17)	DISP	780	25050
	Amb to T1{1}	32	0	35	0	1.00	1.00	1.00	1.00	(17)	DISP	780	25050
A64	+ Max P{1}									(3a)	HOOP	0	16700
	GR + Max P{1}	2	28	38	1	1.00	1.00	1.00	1.00	23a	SUST	1070	16700
	TR:Amb to T1{1}	61	0	35	0	1.00	1.00	1.00	1.00	(17)	DISP	807	25050
	Amb to T1{1}	61	0	35	0	1.00	1.00	1.00	1.00	(17)	DISP	807	25050
A65	- Max P{1}									(3a)	HOOP	0	16700
	GR + Max P{1}	2	24	3	1	1.00	1.00	1.00	1.00	23a	SUST	556	16700
	TR:Amb to T1{1}	61	0	7	0	1.00	1.00	1.00	1.00	(17)	DISP	202	25050
	Amb to T1{1}	61	0	7	0	1.00	1.00	1.00	1.00	(17)	DISP	202	25050
A65	+ Max P{1}									(3a)	HOOP	0	16700
	GR + Max P{1}	2	24	3	1	1.00	1.00	1.00	1.00	23a	SUST	556	16700
	TR:Amb to T1{1}	87	0	7	0	1.00	1.00	1.00	1.00	(17)	DISP	227	25050
	Amb to T1{1}	87	0	7	0	1.00	1.00	1.00	1.00	(17)	DISP	227	25050
A66	- Max P{1}									(3a)	HOOP	0	16700
	GR + Max P{1}	2	26	1	1	1.00	1.00	1.00	1.00	23a	SUST	586	16700
	TR:Amb to T1{1}	87	0	1	0	1.00	1.00	1.00	1.00	(17)	DISP	104	25050
	Amb to T1{1}	87	0	1	0	1.00	1.00	1.00	1.00	(17)	DISP	104	25050
A66	+ Max P{1}									(3a)	HOOP	0	16700
	GR + Max P{1}	2	26	1	1	1.00	1.00	1.00	1.00	23a	SUST	586	16700
	TR:Amb to T1{1}	96	0	1	0	1.00	1.00	1.00	1.00	(17)	DISP	112	25050
	Amb to T1{1}	96	0	1	0	1.00	1.00	1.00	1.00	(17)	DISP	112	25050
A67	- Max P{1}									(3a)	HOOP	0	16700
	GR + Max P{1}	2	23	0	1	1.00	1.00	1.00	1.00	23a	SUST	534	16700
	TR:Amb to T1{1}	96	0	0	0	1.00	1.00	1.00	1.00	(17)	DISP	94	25050
	Amb to T1{1}	96	0	0	0	1.00	1.00	1.00	1.00	(17)	DISP	94	25050
A67	+ Max P{1}									(3a)	HOOP	0	16700
	GR + Max P{1}	2	23	0	1	1.00	1.00	1.00	1.00	23a	SUST	534	16700
	TR:Amb to T1{1}	68	0	0	0	1.00	1.00	1.00	1.00	(17)	DISP	68	25050
	Amb to T1{1}	68	0	0	0	1.00	1.00	1.00	1.00	(17)	DISP	68	25050

Primary Piping Low Temp
04/23/2020 2018719 BENTLEY
03:23 PM AutoPIPE Nuclear 12.00.00.16 RESULT PAGE 111

ASME B31.3 (2016) CODE COMPLIANCE
(Moments in ft-lb , Force in lbf) (Stress in psi)

Point name	Load combination	Axial Force	In-Pl. Moment	Out-Pl. Moment	Torsion Moment	S.I.F In	S.I.F Out	Index/SIF Ax.	Index/SIF Tor.	Eq. no.	Load type	Code Stress	Code Allow.
A68 -	Max P{1}									(3a)	HOOP	0	16700
	GR + Max P{1}	3	28	0	1	1.00	1.00	1.00	1.00	23a	SUST	639	16700
	TR:Amb to T1{1}	68	0	16	0	1.00	1.00	1.00	1.00	(17)	DISP	406	25050
	Amb to T1{1}	68	0	16	0	1.00	1.00	1.00	1.00	(17)	DISP	406	25050
A68 +	Max P{1}									(3a)	HOOP	0	16700
	GR + Max P{1}	3	28	0	1	1.00	1.00	1.00	1.00	23a	SUST	639	16700
	TR:Amb to T1{1}	41	0	16	0	1.00	1.00	1.00	1.00	(17)	DISP	380	25050
	Amb to T1{1}	41	0	16	0	1.00	1.00	1.00	1.00	(17)	DISP	380	25050
A69 -	Max P{1}									(3a)	HOOP	0	16700
	GR + Max P{1}	3	12	13	1	1.00	1.00	1.00	1.00	23a	SUST	402	16700
	TR:Amb to T1{1}	41	1	26	0	1.00	1.00	1.00	1.00	(17)	DISP	595	25050
	Amb to T1{1}	41	1	26	0	1.00	1.00	1.00	1.00	(17)	DISP	595	25050
A69 +	Max P{1}									(3a)	HOOP	0	16700
	GR + Max P{1}	3	12	13	1	1.00	1.00	1.00	1.00	23a	SUST	402	16700
	TR:Amb to T1{1}	23	1	26	0	1.00	1.00	1.00	1.00	(17)	DISP	579	25050
	Amb to T1{1}	23	1	26	0	1.00	1.00	1.00	1.00	(17)	DISP	579	25050
A13 N-	Max P{1}									(3a)	HOOP	0	16700
	GR + Max P{1}	3	7	14	1	1.00	1.00	1.00	1.00	23a	SUST	352	16700
	TR:Amb to T1{1}	23	0	34	0	1.00	1.00	1.00	1.00	(17)	DISP	744	25050
	Amb to T1{1}	23	0	34	0	1.00	1.00	1.00	1.00	(17)	DISP	744	25050
A13 N+	Max P{1}									(3a)	HOOP	0	16700
	GR + Max P{1}	3	14	7	1	1.00	1.00	1.00	1.00	23a	SUST	352	16700
	TR:Amb to T1{1}	23	34	1	0	1.00	1.00	1.00	1.00	(17)	DISP	744	25050
	Amb to T1{1}	23	34	1	0	1.00	1.00	1.00	1.00	(17)	DISP	744	25050
A13 F-	Max P{1}									(3a)	HOOP	0	16700
	GR + Max P{1}	1	9	9	1	1.00	1.00	1.00	1.00	23a	SUST	291	16700
	TR:Amb to T1{1}	15	11	1	0	1.00	1.00	1.00	1.00	(17)	DISP	257	25050
	Amb to T1{1}	15	11	1	0	1.00	1.00	1.00	1.00	(17)	DISP	257	25050
A13 F+	Max P{1}									(3a)	HOOP	0	16700
	GR + Max P{1}	1	9	9	1	1.00	1.00	1.00	1.00	23a	SUST	291	16700
	TR:Amb to T1{1}	15	1	11	0	1.00	1.00	1.00	1.00	(17)	DISP	257	25050
	Amb to T1{1}	15	1	11	0	1.00	1.00	1.00	1.00	(17)	DISP	257	25050
A70 -	Max P{1}									(3a)	HOOP	0	16700
	GR + Max P{1}	1	14	8	1	1.00	1.00	1.00	1.00	23a	SUST	363	16700
	TR:Amb to T1{1}	15	1	0	0	1.00	1.00	1.00	1.00	(17)	DISP	35	25050
	Amb to T1{1}	15	1	0	0	1.00	1.00	1.00	1.00	(17)	DISP	35	25050
A70 +	Max P{1}									(3a)	HOOP	0	16700
	GR + Max P{1}	1	14	8	1	1.00	1.00	1.00	1.00	23a	SUST	363	16700
	TR:Amb to T1{1}	24	1	0	0	1.00	1.00	1.00	1.00	(17)	DISP	42	25050
	Amb to T1{1}	24	1	0	0	1.00	1.00	1.00	1.00	(17)	DISP	42	25050

Primary Piping Low Temp
04/23/2020 2018719 BENTLEY
03:23 PM AutoPIPE Nuclear 12.00.00.16 RESULT PAGE 112

ASME B31.3 (2016) CODE COMPLIANCE
(Moments in ft-lb , Force in lbf) (Stress in psi)

Point name	Load combination	Axial Force	In-Pl. Moment	Out-Pl. Moment	Torsion Moment	S.I.F In	S.I.F Out	Index/SIF Ax.	Index/SIF Tor.	Eq. no.	Load type	Code Stress	Code Allow.
A71 -	Max P{1}									(3a)	HOOP	0	16700
	GR + Max P{1}	2	26	18	1	1.00	1.00	1.00	1.00	23a	SUST	725	16700
	TR:Amb to T1{1}	24	0	35	0	1.00	1.00	1.00	1.00	(17)	DISP	762	25050
	Amb to T1{1}	24	0	35	0	1.00	1.00	1.00	1.00	(17)	DISP	762	25050
A71 +	Max P{1}									(3a)	HOOP	0	16700
	GR + Max P{1}	2	26	18	1	1.00	1.00	1.00	1.00	23a	SUST	725	16700
	TR:Amb to T1{1}	35	0	35	0	1.00	1.00	1.00	1.00	(17)	DISP	772	25050
	Amb to T1{1}	35	0	35	0	1.00	1.00	1.00	1.00	(17)	DISP	772	25050
A72 -	Max P{1}									(3a)	HOOP	0	16700
	GR + Max P{1}	2	13	1	1	1.00	1.00	1.00	1.00	23a	SUST	290	16700
	TR:Amb to T1{1}	35	1	10	0	1.00	1.00	1.00	1.00	(17)	DISP	246	25050
	Amb to T1{1}	35	1	10	0	1.00	1.00	1.00	1.00	(17)	DISP	246	25050
A72 +	Max P{1}									(3a)	HOOP	0	16700
	GR + Max P{1}	2	13	1	1	1.00	1.00	1.00	1.00	23a	SUST	290	16700
	TR:Amb to T1{1}	21	1	10	0	1.00	1.00	1.00	1.00	(17)	DISP	234	25050
	Amb to T1{1}	21	1	10	0	1.00	1.00	1.00	1.00	(17)	DISP	234	25050
A14 N-	Max P{1}									(3a)	HOOP	0	16700
	GR + Max P{1}	2	8	0	1	1.00	1.00	1.00	1.00	23a	SUST	178	16700
	TR:Amb to T1{1}	21	0	20	0	1.00	1.00	1.00	1.00	(17)	DISP	446	25050
	Amb to T1{1}	21	0	20	0	1.00	1.00	1.00	1.00	(17)	DISP	446	25050
A14 N+	Max P{1}									(3a)	HOOP	0	16700
	GR + Max P{1}	2	1	8	1	1.00	1.00	1.00	1.00	23a	SUST	178	16700
	TR:Amb to T1{1}	21	20	1	0	1.00	1.00	1.00	1.00	(17)	DISP	446	25050
	Amb to T1{1}	21	20	1	0	1.00	1.00	1.00	1.00	(17)	DISP	446	25050
A14 F-	Max P{1}									(3a)	HOOP	0	16700
	GR + Max P{1}	2	2	6	0	1.00	1.00	1.00	1.00	23a	SUST	134	16700
	TR:Amb to T1{1}	20	15	1	0	1.00	1.00	1.00	1.00	(17)	DISP	344	25050
	Amb to T1{1}	20	15	1	0	1.00	1.00	1.00	1.00	(17)	DISP	344	25050
A14 F+	Max P{1}									(3a)	HOOP	0	16700
	GR + Max P{1}	2	6	2	0	1.00	1.00	1.00	1.00	23a	SUST	134	16700
	TR:Amb to T1{1}	20	1	15	0	1.00	1.00	1.00	1.00	(17)	DISP	344	25050
	Amb to T1{1}	20	1	15	0	1.00	1.00	1.00	1.00	(17)	DISP	344	25050
A73 -	Max P{1}									(3a)	HOOP	0	16700
	GR + Max P{1}	3	10	1	0	1.00	1.00	1.00	1.00	23a	SUST	236	16700
	TR:Amb to T1{1}	20	1	4	0	1.00	1.00	1.00	1.00	(17)	DISP	117	25050
	Amb to T1{1}	20	1	4	0	1.00	1.00	1.00	1.00	(17)	DISP	117	25050
A73 +	Max P{1}									(3a)	HOOP	0	16700
	GR + Max P{1}	3	10	1	0	1.00	1.00	1.00	1.00	23a	SUST	236	16700
	TR:Amb to T1{1}	29	1	4	0	1.00	1.00	1.00	1.00	(17)	DISP	126	25050
	Amb to T1{1}	29	1	4	0	1.00	1.00	1.00	1.00	(17)	DISP	126	25050

ASME B31.3 (2016) CODE COMPLIANCE
(Moments in ft-lb , Force in lbf) (Stress in psi)

Point name	Load combination	Axial Force	In-Pl. Moment	Out-Pl. Moment	Torsion Moment	S.I.F In	S.I.F Out	Index/SIF Ax.	Index/SIF Tor.	Eq. no.	Load type	Code Stress	Code Allow.
A15 N-	Max P{1}									(3a)	HOOP	0	16700
	GR + Max P{1}	3	5	5	0	1.00	1.00	1.00	1.00	23a	SUST	152	16700
	TR:Amb to T1{1}	29	0	20	0	1.00	1.00	1.00	1.00	(17)	DISP	455	25050
	Amb to T1{1}	29	0	20	0	1.00	1.00	1.00	1.00	(17)	DISP	455	25050
A15 N+	Max P{1}									(3a)	HOOP	0	16700
	GR + Max P{1}	3	5	5	0	1.00	1.00	1.00	1.00	23a	SUST	152	16700
	TR:Amb to T1{1}	29	0	20	0	1.00	1.00	1.00	1.00	(17)	DISP	455	25050
	Amb to T1{1}	29	0	20	0	1.00	1.00	1.00	1.00	(17)	DISP	455	25050
A15 F-	Max P{1}									(3a)	HOOP	0	16700
	GR + Max P{1}	3	5	5	0	1.00	1.00	1.00	1.00	23a	SUST	153	16700
	TR:Amb to T1{1}	29	0	20	0	1.00	1.00	1.00	1.00	(17)	DISP	464	25050
	Amb to T1{1}	29	0	20	0	1.00	1.00	1.00	1.00	(17)	DISP	464	25050
A15 F+	Max P{1}									(3a)	HOOP	0	16700
	GR + Max P{1}	3	5	5	0	1.00	1.00	1.00	1.00	23a	SUST	153	16700
	TR:Amb to T1{1}	29	0	20	0	1.00	1.00	1.00	1.00	(17)	DISP	464	25050
	Amb to T1{1}	29	0	20	0	1.00	1.00	1.00	1.00	(17)	DISP	464	25050
A16	Max P{1}									(3a)	HOOP	0	16700
	GR + Max P{1}	3	2	7	0	1.00	1.00	1.00	1.00	23a	SUST	162	16700
	TR:Amb to T1{1}	29	0	29	0	1.00	1.00	1.00	1.00	(17)	DISP	638	25050
	Amb to T1{1}	29	0	29	0	1.00	1.00	1.00	1.00	(17)	DISP	638	25050
A17	Max P{1}									(3a)	HOOP	0	16700
	GR + Max P{1}	3	4	9	0	1.00	1.00	1.00	1.00	23a	SUST	219	16700
	TR:Amb to T1{1}	29	0	37	0	1.00	1.00	1.00	1.00	(17)	DISP	816	25050
	Amb to T1{1}	29	0	37	0	1.00	1.00	1.00	1.00	(17)	DISP	816	25050
A18 -	Max P{1}									(3a)	HOOP	0	16700
	GR + Max P{1}	3	9	10	0	1.00	1.00	1.00	1.00	23a	SUST	303	16700
	TR:Amb to T1{1}	29	0	41	0	1.00	1.00	1.00	1.00	(17)	DISP	914	25050
	Amb to T1{1}	29	0	41	0	1.00	1.00	1.00	1.00	(17)	DISP	914	25050
A18 +	Max P{1}									(3a)	HOOP	0	16700
	GR + Max P{1}	0	0	0	0	1.00	1.00	1.00	1.00	23a	SUST	2	16700
	TR:Amb to T1{1}	0	0	0	0	1.00	1.00	1.00	1.00	(17)	DISP	0	25050
	Amb to T1{1}	0	0	0	0	1.00	1.00	1.00	1.00	(17)	DISP	0	25050
A19	Max P{1}									(3a)	HOOP	0	16700
	GR + Max P{1}	0	0	0	0	1.00	1.00	1.00	1.00	23a	SUST	0	16700
	TR:Amb to T1{1}	0	0	0	0	1.00	1.00	1.00	1.00	(17)	DISP	0	25050
	Amb to T1{1}	0	0	0	0	1.00	1.00	1.00	1.00	(17)	DISP	0	25050

*** Segment A end ***

*** Segment B begin *** Line # RIGID

ASME B31.3 (2016) CODE COMPLIANCE
(Moments in ft-lb , Force in lbf) (Stress in psi)

Point name	Load combination	Axial Force	In-Pl. Moment	Out-Pl. Moment	Torsion Moment	S.I.F In	S.I.F Out	Index/SIF Ax.	Index/SIF Tor.	Eq. no.	Load type	Code Stress	Code Allow.
B00	Max P{1}									(3a)	HOOP	0	16700
	GR + Max P{1}	0	0	0	0	1.00	1.00	1.00	1.00	23a	SUST	0	16700
	TR:Amb to T1{1}	0	0	0	0	1.00	1.00	1.00	1.00	(17)	DISP	0	25050
	Amb to T1{1}	0	0	0	0	1.00	1.00	1.00	1.00	(17)	DISP	0	25050
B01 -	Max P{1}									(3a)	HOOP	0	16700
	GR + Max P{1}	2	0	0	0	1.00	1.00	1.00	1.00	23a	SUST	1	16700
	TR:Amb to T1{1}	0	0	0	0	1.00	1.00	1.00	1.00	(17)	DISP	0	25050
	Amb to T1{1}	0	0	0	0	1.00	1.00	1.00	1.00	(17)	DISP	0	25050
B01 +	Max P{1}									(3a)	HOOP	0	16700
	GR + Max P{1}	8	0	0	0	1.00	1.00	1.00	1.00	23a	SUST	4	16700
	TR:Amb to T1{1}	125	0	0	0	1.00	1.00	1.00	1.00	(17)	DISP	56	25050
	Amb to T1{1}	125	0	0	0	1.00	1.00	1.00	1.00	(17)	DISP	56	25050
B02 N-	Max P{1}									(3a)	HOOP	0	16700
	GR + Max P{1}	6	0	0	0	1.00	1.00	1.00	1.00	23a	SUST	3	16700
	TR:Amb to T1{1}	125	0	0	0	1.00	1.00	1.00	1.00	(17)	DISP	56	25050
	Amb to T1{1}	125	0	0	0	1.00	1.00	1.00	1.00	(17)	DISP	56	25050
B02 N+	Max P{1}									(3a)	HOOP	0	16700
	GR + Max P{1}	6	0	0	0	1.33	1.11	1.00	1.00	23a	SUST	3	16700
	TR:Amb to T1{1}	125	0	0	0	1.78	1.48	1.00	1.00	(17)	DISP	56	25050
	Amb to T1{1}	125	0	0	0	1.78	1.48	1.00	1.00	(17)	DISP	56	25050
B02 F-	Max P{1}									(3a)	HOOP	0	16700
	GR + Max P{1}	0	1	0	0	1.33	1.11	1.00	1.00	23a	SUST	10	16700
	TR:Amb to T1{1}	0	47	0	0	1.78	1.48	1.00	1.00	(17)	DISP	578	25050
	Amb to T1{1}	0	47	0	0	1.78	1.48	1.00	1.00	(17)	DISP	578	25050
B02 F+	Max P{1}									(3a)	HOOP	0	16700
	GR + Max P{1}	0	1	0	0	1.00	1.00	1.00	1.00	23a	SUST	8	16700
	TR:Amb to T1{1}	0	47	0	0	1.00	1.00	1.00	1.00	(17)	DISP	325	25050
	Amb to T1{1}	0	47	0	0	1.00	1.00	1.00	1.00	(17)	DISP	325	25050
B03 -	Max P{1}									(3a)	HOOP	0	16700
	GR + Max P{1}	0	2	0	0	1.00	1.00	1.00	1.00	23a	SUST	16	16700
	TR:Amb to T1{1}	0	182	0	0	1.00	1.00	1.00	1.00	(17)	DISP	1267	25050
	Amb to T1{1}	0	182	0	0	1.00	1.00	1.00	1.00	(17)	DISP	1267	25050
B03 +	Max P{1}									(3a)	HOOP	0	16700
	GR + Max P{1}	27	20	37	1	1.00	1.00	1.00	1.00	23a	SUST	314	16700
	TR:Amb to T1{1}	300	6	10	8	1.00	1.00	1.00	1.00	(17)	DISP	225	25050
	Amb to T1{1}	300	6	10	8	1.00	1.00	1.00	1.00	(17)	DISP	225	25050
B04	Max P{1}									(3a)	HOOP	0	16700
	GR + Max P{1}	27	5	44	1	1.00	1.00	1.00	1.00	23a	SUST	332	16700
	TR:Amb to T1{1}	300	2	17	8	1.00	1.00	1.00	1.00	(17)	DISP	263	25050
	Amb to T1{1}	300	2	17	8	1.00	1.00	1.00	1.00	(17)	DISP	263	25050

Primary Piping Low Temp
04/23/2020 2018719 BENTLEY
03:23 PM AutoPIPE Nuclear 12.00.00.16 RESULT PAGE 115

ASME B31.3 (2016) CODE COMPLIANCE
(Moments in ft-lb , Force in lbf) (Stress in psi)

Point name	Load combination	Axial Force	In-Pl. Moment	Out-Pl. Moment	Torsion Moment	S.I.F In	S.I.F Out	Index/SIF Ax.	Index/SIF Tor.	Eq. no.	Load type	Code Stress	Code Allow.
B22 -	Max P{1}									(3a)	HOOP	0	16700
	GR + Max P{1}	27	81	53	1	1.00	1.00	1.00	1.00	23a	SUST	711	16700
	TR:Amb to T1{1}	300	12	26	8	1.00	1.00	1.00	1.00	(17)	DISP	341	25050
	Amb to T1{1}	300	12	26	8	1.00	1.00	1.00	1.00	(17)	DISP	341	25050
B22 +	Max P{1}									(3a)	HOOP	0	16700
	GR + Max P{1}	27	81	53	1	1.00	1.00	1.00	1.00	23a	SUST	711	16700
	TR:Amb to T1{1}	199	12	26	8	1.00	1.00	1.00	1.00	(17)	DISP	297	25050
	Amb to T1{1}	199	12	26	8	1.00	1.00	1.00	1.00	(17)	DISP	297	25050
B06 N-	Max P{1}									(3a)	HOOP	0	16700
	GR + Max P{1}	27	68	54	1	1.00	1.00	1.00	1.00	23a	SUST	640	16700
	TR:Amb to T1{1}	199	4	23	8	1.00	1.00	1.00	1.00	(17)	DISP	261	25050
	Amb to T1{1}	199	4	23	8	1.00	1.00	1.00	1.00	(17)	DISP	261	25050
B06 N+	Max P{1}									(3a)	HOOP	0	16700
	GR + Max P{1}	27	68	54	1	1.00	1.00	1.00	1.00	23a	SUST	640	16700
	TR:Amb to T1{1}	199	4	23	8	1.00	1.00	1.00	1.00	(17)	DISP	261	25050
	Amb to T1{1}	199	4	23	8	1.00	1.00	1.00	1.00	(17)	DISP	261	25050
B06 F-	Max P{1}									(3a)	HOOP	0	16700
	GR + Max P{1}	34	46	55	8	1.00	1.00	1.00	1.00	23a	SUST	539	16700
	TR:Amb to T1{1}	202	5	19	5	1.00	1.00	1.00	1.00	(17)	DISP	228	25050
	Amb to T1{1}	202	5	19	5	1.00	1.00	1.00	1.00	(17)	DISP	228	25050
B06 F+	Max P{1}									(3a)	HOOP	0	16700
	GR + Max P{1}	34	46	55	8	1.00	1.00	1.00	1.00	23a	SUST	539	16700
	TR:Amb to T1{1}	202	5	19	5	1.00	1.00	1.00	1.00	(17)	DISP	228	25050
	Amb to T1{1}	202	5	19	5	1.00	1.00	1.00	1.00	(17)	DISP	228	25050
B23 -	Max P{1}									(3a)	HOOP	0	16700
	GR + Max P{1}	20	70	95	8	1.00	1.00	1.00	1.00	23a	SUST	863	16700
	TR:Amb to T1{1}	202	9	107	5	1.00	1.00	1.00	1.00	(17)	DISP	840	25050
	Amb to T1{1}	202	9	107	5	1.00	1.00	1.00	1.00	(17)	DISP	840	25050
B23 +	Max P{1}									(3a)	HOOP	0	16700
	GR + Max P{1}	20	70	95	8	1.00	1.00	1.00	1.00	23a	SUST	863	16700
	TR:Amb to T1{1}	103	9	107	4	1.00	1.00	1.00	1.00	(17)	DISP	795	25050
	Amb to T1{1}	103	9	107	4	1.00	1.00	1.00	1.00	(17)	DISP	795	25050
B24 -	Max P{1}									(3a)	HOOP	0	16700
	GR + Max P{1}	10	50	49	8	1.00	1.00	1.00	1.00	23a	SUST	513	16700
	TR:Amb to T1{1}	103	64	74	4	1.00	1.00	1.00	1.00	(17)	DISP	728	25050
	Amb to T1{1}	103	64	74	4	1.00	1.00	1.00	1.00	(17)	DISP	728	25050
B24 +	Max P{1}									(3a)	HOOP	0	16700
	GR + Max P{1}	10	50	49	8	1.00	1.00	1.00	1.00	23a	SUST	513	16700
	TR:Amb to T1{1}	46	64	74	4	1.00	1.00	1.00	1.00	(17)	DISP	702	25050
	Amb to T1{1}	46	64	74	4	1.00	1.00	1.00	1.00	(17)	DISP	702	25050

Primary Piping Low Temp
04/23/2020 2018719 BENTLEY
03:23 PM AutoPIPE Nuclear 12.00.00.16 RESULT PAGE 116

ASME B31.3 (2016) CODE COMPLIANCE
(Moments in ft-lb , Force in lbf) (Stress in psi)

Point name	Load combination	Axial Force	In-Pl. Moment	Out-Pl. Moment	Torsion Moment	S.I.F In	S.I.F Out	Index/SIF Ax.	Index/SIF Tor.	Eq. no.	Load type	Code Stress	Code Allow.
B09 N-	Max P{1}									(3a)	HOOP	0	16700
	GR + Max P{1}	9	35	58	8	1.00	1.00	1.00	1.00	23a	SUST	500	16700
	TR:Amb to T1{1}	46	53	108	4	1.00	1.00	1.00	1.00	(17)	DISP	859	25050
	Amb to T1{1}	46	53	108	4	1.00	1.00	1.00	1.00	(17)	DISP	859	25050
B09 N+	Max P{1}									(3a)	HOOP	0	16700
	GR + Max P{1}	9	57	37	8	1.00	1.00	1.00	1.00	23a	SUST	500	16700
	TR:Amb to T1{1}	46	107	56	4	1.00	1.00	1.00	1.00	(17)	DISP	859	25050
	Amb to T1{1}	46	107	56	4	1.00	1.00	1.00	1.00	(17)	DISP	859	25050
B09 F-	Max P{1}									(3a)	HOOP	0	16700
	GR + Max P{1}	18	97	2	3	1.00	1.00	1.00	1.00	23a	SUST	709	16700
	TR:Amb to T1{1}	68	171	55	4	1.00	1.00	1.00	1.00	(17)	DISP	1279	25050
	Amb to T1{1}	68	171	55	4	1.00	1.00	1.00	1.00	(17)	DISP	1279	25050
B09 F+	Max P{1}									(3a)	HOOP	0	16700
	GR + Max P{1}	18	13	96	3	1.00	1.00	1.00	1.00	23a	SUST	709	16700
	TR:Amb to T1{1}	68	27	177	4	1.00	1.00	1.00	1.00	(17)	DISP	1279	25050
	Amb to T1{1}	68	27	177	4	1.00	1.00	1.00	1.00	(17)	DISP	1279	25050
B25 -	Max P{1}									(3a)	HOOP	0	16700
	GR + Max P{1}	18	19	93	3	1.00	1.00	1.00	1.00	23a	SUST	698	16700
	TR:Amb to T1{1}	68	41	156	4	1.00	1.00	1.00	1.00	(17)	DISP	1151	25050
	Amb to T1{1}	68	41	156	4	1.00	1.00	1.00	1.00	(17)	DISP	1151	25050
B25 +	Max P{1}									(3a)	HOOP	0	16700
	GR + Max P{1}	18	19	93	2	1.00	1.00	1.00	1.00	23a	SUST	698	16700
	TR:Amb to T1{1}	72	41	156	4	1.00	1.00	1.00	1.00	(17)	DISP	1153	25050
	Amb to T1{1}	72	41	156	4	1.00	1.00	1.00	1.00	(17)	DISP	1153	25050
B26 -	Max P{1}									(3a)	HOOP	0	16700
	GR + Max P{1}	16	61	49	2	1.00	1.00	1.00	1.00	23a	SUST	573	16700
	TR:Amb to T1{1}	72	11	162	4	1.00	1.00	1.00	1.00	(17)	DISP	1163	25050
	Amb to T1{1}	72	11	162	4	1.00	1.00	1.00	1.00	(17)	DISP	1163	25050
B26 +	Max P{1}									(3a)	HOOP	0	16700
	GR + Max P{1}	16	61	49	2	1.00	1.00	1.00	1.00	23a	SUST	573	16700
	TR:Amb to T1{1}	186	11	162	4	1.00	1.00	1.00	1.00	(17)	DISP	1214	25050
	Amb to T1{1}	186	11	162	4	1.00	1.00	1.00	1.00	(17)	DISP	1214	25050
B28 -	Max P{1}									(3a)	HOOP	0	16700
	GR + Max P{1}	14	52	27	2	1.00	1.00	1.00	1.00	23a	SUST	432	16700
	TR:Amb to T1{1}	186	3	31	4	1.00	1.00	1.00	1.00	(17)	DISP	304	25050
	Amb to T1{1}	186	3	31	4	1.00	1.00	1.00	1.00	(17)	DISP	304	25050
B28 +	Max P{1}									(3a)	HOOP	0	16700
	GR + Max P{1}	14	52	27	2	1.00	1.00	1.00	1.00	23a	SUST	432	16700
	TR:Amb to T1{1}	222	3	31	4	1.00	1.00	1.00	1.00	(17)	DISP	320	25050
	Amb to T1{1}	222	3	31	4	1.00	1.00	1.00	1.00	(17)	DISP	320	25050

Primary Piping Low Temp
04/23/2020 2018719 BENTLEY
03:23 PM AutoPIPE Nuclear 12.00.00.16 RESULT PAGE 117

ASME B31.3 (2016) CODE COMPLIANCE
(Moments in ft-lb , Force in lbf) (Stress in psi)

Point name	Load combination	Axial Force	In-Pl. Moment	Out-Pl. Moment	Torsion Moment	S.I.F In	S.I.F Out	Index/SIF Ax.	Index/SIF Tor.	Eq. no.	Load type	Code Stress	Code Allow.
B29 -	Max P{1}									(3a)	HOOP	0	16700
	GR + Max P{1}	12	47	6	2	1.00	1.00	1.00	1.00	23a	SUST	349	16700
	TR:Amb to T1{1}	222	2	23	4	1.00	1.00	1.00	1.00	(17)	DISP	261	25050
	Amb to T1{1}	222	2	23	4	1.00	1.00	1.00	1.00	(17)	DISP	261	25050
B29 +	Max P{1}									(3a)	HOOP	0	16700
	GR + Max P{1}	12	47	6	2	1.00	1.00	1.00	1.00	23a	SUST	349	16700
	TR:Amb to T1{1}	168	2	23	4	1.00	1.00	1.00	1.00	(17)	DISP	236	25050
	Amb to T1{1}	168	2	23	4	1.00	1.00	1.00	1.00	(17)	DISP	236	25050
B31 -	Max P{1}									(3a)	HOOP	0	16700
	GR + Max P{1}	10	71	16	2	1.00	1.00	1.00	1.00	23a	SUST	535	16700
	TR:Amb to T1{1}	168	3	46	4	1.00	1.00	1.00	1.00	(17)	DISP	399	25050
	Amb to T1{1}	168	3	46	4	1.00	1.00	1.00	1.00	(17)	DISP	399	25050
B31 +	Max P{1}									(3a)	HOOP	0	16700
	GR + Max P{1}	10	71	16	2	1.00	1.00	1.00	1.00	23a	SUST	535	16700
	TR:Amb to T1{1}	110	3	46	4	1.00	1.00	1.00	1.00	(17)	DISP	374	25050
	Amb to T1{1}	110	3	46	4	1.00	1.00	1.00	1.00	(17)	DISP	374	25050
B32 -	Max P{1}									(3a)	HOOP	0	16700
	GR + Max P{1}	8	28	41	2	1.00	1.00	1.00	1.00	23a	SUST	364	16700
	TR:Amb to T1{1}	110	12	198	4	1.00	1.00	1.00	1.00	(17)	DISP	1433	25050
	Amb to T1{1}	110	12	198	4	1.00	1.00	1.00	1.00	(17)	DISP	1433	25050
B32 +	Max P{1}									(3a)	HOOP	0	16700
	GR + Max P{1}	8	28	41	2	1.00	1.00	1.00	1.00	23a	SUST	364	16700
	TR:Amb to T1{1}	69	12	198	4	1.00	1.00	1.00	1.00	(17)	DISP	1414	25050
	Amb to T1{1}	69	12	198	4	1.00	1.00	1.00	1.00	(17)	DISP	1414	25050
B16 N-	Max P{1}									(3a)	HOOP	0	16700
	GR + Max P{1}	7	20	42	2	1.00	1.00	1.00	1.00	23a	SUST	342	16700
	TR:Amb to T1{1}	69	9	224	4	1.00	1.00	1.00	1.00	(17)	DISP	1589	25050
	Amb to T1{1}	69	9	224	4	1.00	1.00	1.00	1.00	(17)	DISP	1589	25050
B16 N+	Max P{1}									(3a)	HOOP	0	16700
	GR + Max P{1}	7	42	21	2	1.00	1.00	1.00	1.00	23a	SUST	342	16700
	TR:Amb to T1{1}	69	223	14	4	1.00	1.00	1.00	1.00	(17)	DISP	1589	25050
	Amb to T1{1}	69	223	14	4	1.00	1.00	1.00	1.00	(17)	DISP	1589	25050
B16 F-	Max P{1}									(3a)	HOOP	0	16700
	GR + Max P{1}	2	29	25	18	1.00	1.00	1.00	1.00	23a	SUST	304	16700
	TR:Amb to T1{1}	51	167	18	0	1.00	1.00	1.00	1.00	(17)	DISP	1188	25050
	Amb to T1{1}	51	167	18	0	1.00	1.00	1.00	1.00	(17)	DISP	1188	25050
B16 F+	Max P{1}									(3a)	HOOP	0	16700
	GR + Max P{1}	2	25	28	18	1.00	1.00	1.00	1.00	23a	SUST	304	16700
	TR:Amb to T1{1}	51	13	167	0	1.00	1.00	1.00	1.00	(17)	DISP	1188	25050
	Amb to T1{1}	51	13	167	0	1.00	1.00	1.00	1.00	(17)	DISP	1188	25050

Primary Piping Low Temp
04/23/2020 2018719 BENTLEY
03:23 PM AutoPIPE Nuclear 12.00.00.16 RESULT PAGE 118

ASME B31.3 (2016) CODE COMPLIANCE
(Moments in ft-lb , Force in lbf) (Stress in psi)

Point name	Load combination	Axial Force	In-Pl. Moment	Out-Pl. Moment	Torsion Moment	S.I.F In	S.I.F Out	Index/SIF Ax.	Index/SIF Tor.	Eq. no.	Load type	Code Stress	Code Allow.
B33	Max P{1}									(3a)	HOOP	0	16700
	GR + Max P{1}	2	37	24	18	1.00	1.00	1.00	1.00	23a	SUST	350	16700
	TR:Amb to T1{1}	51	16	132	0	1.00	1.00	1.00	1.00	(17)	DISP	950	25050
	Amb to T1{1}	51	16	132	0	1.00	1.00	1.00	1.00	(17)	DISP	950	25050
B34 -	Max P{1}									(3a)	HOOP	0	16700
	GR + Max P{1}	1	52	5	18	1.00	1.00	1.00	1.00	23a	SUST	404	16700
	TR:Amb to T1{1}	52	17	32	0	1.00	1.00	1.00	1.00	(17)	DISP	276	25050
	Amb to T1{1}	52	17	32	0	1.00	1.00	1.00	1.00	(17)	DISP	276	25050
B34 +	Max P{1}									(3a)	HOOP	0	16700
	GR + Max P{1}	1	52	5	18	1.00	1.00	1.00	1.00	23a	SUST	404	16700
	TR:Amb to T1{1}	50	17	32	0	1.00	1.00	1.00	1.00	(17)	DISP	275	25050
	Amb to T1{1}	50	17	32	0	1.00	1.00	1.00	1.00	(17)	DISP	275	25050
B19 N-	Max P{1}									(3a)	HOOP	0	16700
	GR + Max P{1}	1	38	1	18	1.00	1.00	1.00	1.00	23a	SUST	307	16700
	TR:Amb to T1{1}	50	13	89	0	1.00	1.00	1.00	1.00	(17)	DISP	647	25050
	Amb to T1{1}	50	13	89	0	1.00	1.00	1.00	1.00	(17)	DISP	647	25050
B19 N+	Max P{1}									(3a)	HOOP	0	16700
	GR + Max P{1}	1	2	38	18	1.00	1.00	1.00	1.00	23a	SUST	307	16700
	TR:Amb to T1{1}	50	88	15	0	1.00	1.00	1.00	1.00	(17)	DISP	647	25050
	Amb to T1{1}	50	88	15	0	1.00	1.00	1.00	1.00	(17)	DISP	647	25050
B19 F-	Max P{1}									(3a)	HOOP	0	16700
	GR + Max P{1}	7	18	9	1	1.00	1.00	1.00	1.00	23a	SUST	147	16700
	TR:Amb to T1{1}	113	278	15	0	1.00	1.00	1.00	1.00	(17)	DISP	1992	25050
	Amb to T1{1}	113	278	15	0	1.00	1.00	1.00	1.00	(17)	DISP	1992	25050
B19 F+	Max P{1}									(3a)	HOOP	0	16700
	GR + Max P{1}	7	10	17	1	1.00	1.00	1.00	1.00	23a	SUST	147	16700
	TR:Amb to T1{1}	113	9	279	0	1.00	1.00	1.00	1.00	(17)	DISP	1992	25050
	Amb to T1{1}	113	9	279	0	1.00	1.00	1.00	1.00	(17)	DISP	1992	25050
B35 -	Max P{1}									(3a)	HOOP	0	16700
	GR + Max P{1}	7	16	17	1	1.00	1.00	1.00	1.00	23a	SUST	171	16700
	TR:Amb to T1{1}	113	12	254	0	1.00	1.00	1.00	1.00	(17)	DISP	1819	25050
	Amb to T1{1}	113	12	254	0	1.00	1.00	1.00	1.00	(17)	DISP	1819	25050
B35 +	Max P{1}									(3a)	HOOP	0	16700
	GR + Max P{1}	7	16	17	1	1.00	1.00	1.00	1.00	23a	SUST	171	16700
	TR:Amb to T1{1}	137	12	254	0	1.00	1.00	1.00	1.00	(17)	DISP	1830	25050
	Amb to T1{1}	137	12	254	0	1.00	1.00	1.00	1.00	(17)	DISP	1830	25050
B36 -	Max P{1}									(3a)	HOOP	0	16700
	GR + Max P{1}	5	62	11	1	1.00	1.00	1.00	1.00	23a	SUST	460	16700
	TR:Amb to T1{1}	137	3	42	0	1.00	1.00	1.00	1.00	(17)	DISP	356	25050
	Amb to T1{1}	137	3	42	0	1.00	1.00	1.00	1.00	(17)	DISP	356	25050

ASME B31.3 (2016) CODE COMPLIANCE
(Moments in ft-lb , Force in lbf) (Stress in psi)

Point name	Load combination	Axial Force	In-Pl. Moment	Out-Pl. Moment	Torsion Moment	S.I.F In	S.I.F Out	Index/SIF Ax.	Index/SIF Tor.	Eq. no.	Load type	Code Stress	Code Allow.
B36	+ Max P{1}									(3a)	HOOP	0	16700
	GR + Max P{1}	5	62	11	1	1.00	1.00	1.00	1.00	23a	SUST	460	16700
	TR:Amb to T1{1}	190	3	42	0	1.00	1.00	1.00	1.00	(17)	DISP	380	25050
	Amb to T1{1}	190	3	42	0	1.00	1.00	1.00	1.00	(17)	DISP	380	25050
B37	- Max P{1}									(3a)	HOOP	0	16700
	GR + Max P{1}	3	49	5	1	1.00	1.00	1.00	1.00	23a	SUST	356	16700
	TR:Amb to T1{1}	190	1	36	0	1.00	1.00	1.00	1.00	(17)	DISP	332	25050
	Amb to T1{1}	190	1	36	0	1.00	1.00	1.00	1.00	(17)	DISP	332	25050
B37	+ Max P{1}									(3a)	HOOP	0	16700
	GR + Max P{1}	3	49	5	1	1.00	1.00	1.00	1.00	23a	SUST	356	16700
	TR:Amb to T1{1}	243	1	36	0	1.00	1.00	1.00	1.00	(17)	DISP	356	25050
	Amb to T1{1}	243	1	36	0	1.00	1.00	1.00	1.00	(17)	DISP	356	25050
B38	- Max P{1}									(3a)	HOOP	0	16700
	GR + Max P{1}	1	57	2	1	1.00	1.00	1.00	1.00	23a	SUST	411	16700
	TR:Amb to T1{1}	243	0	10	0	1.00	1.00	1.00	1.00	(17)	DISP	179	25050
	Amb to T1{1}	243	0	10	0	1.00	1.00	1.00	1.00	(17)	DISP	179	25050
B38	+ Max P{1}									(3a)	HOOP	0	16700
	GR + Max P{1}	2	57	2	1	1.00	1.00	1.00	1.00	23a	SUST	412	16700
	TR:Amb to T1{1}	215	0	10	0	1.00	1.00	1.00	1.00	(17)	DISP	166	25050
	Amb to T1{1}	215	0	10	0	1.00	1.00	1.00	1.00	(17)	DISP	166	25050
B39	- Max P{1}									(3a)	HOOP	0	16700
	GR + Max P{1}	0	40	9	1	1.00	1.00	1.00	1.00	23a	SUST	296	16700
	TR:Amb to T1{1}	215	1	37	0	1.00	1.00	1.00	1.00	(17)	DISP	355	25050
	Amb to T1{1}	215	1	37	0	1.00	1.00	1.00	1.00	(17)	DISP	355	25050
B39	+ Max P{1}									(3a)	HOOP	0	16700
	GR + Max P{1}	0	40	9	1	1.00	1.00	1.00	1.00	23a	SUST	296	16700
	TR:Amb to T1{1}	166	1	37	0	1.00	1.00	1.00	1.00	(17)	DISP	333	25050
	Amb to T1{1}	166	1	37	0	1.00	1.00	1.00	1.00	(17)	DISP	333	25050
B40	- Max P{1}									(3a)	HOOP	0	16700
	GR + Max P{1}	1	55	13	1	1.00	1.00	1.00	1.00	23a	SUST	408	16700
	TR:Amb to T1{1}	166	4	35	0	1.00	1.00	1.00	1.00	(17)	DISP	317	25050
	Amb to T1{1}	166	4	35	0	1.00	1.00	1.00	1.00	(17)	DISP	317	25050
B40	+ Max P{1}									(3a)	HOOP	0	16700
	GR + Max P{1}	1	55	13	1	1.00	1.00	1.00	1.00	23a	SUST	407	16700
	TR:Amb to T1{1}	119	4	35	0	1.00	1.00	1.00	1.00	(17)	DISP	296	25050
	Amb to T1{1}	119	4	35	0	1.00	1.00	1.00	1.00	(17)	DISP	296	25050
B42	- Max P{1}									(3a)	HOOP	0	16700
	GR + Max P{1}	3	21	10	1	1.00	1.00	1.00	1.00	23a	SUST	166	16700
	TR:Amb to T1{1}	119	12	209	0	1.00	1.00	1.00	1.00	(17)	DISP	1511	25050
	Amb to T1{1}	119	12	209	0	1.00	1.00	1.00	1.00	(17)	DISP	1511	25050

Primary Piping Low Temp
04/23/2020 2018719 BENTLEY
03:23 PM AutoPIPE Nuclear 12.00.00.16 RESULT PAGE 120

ASME B31.3 (2016) CODE COMPLIANCE
(Moments in ft-lb , Force in lbf) (Stress in psi)

Point name	Load combination	Axial Force	In-Pl. Moment	Out-Pl. Moment	Torsion Moment	S.I.F In	S.I.F Out	Index/SIF Ax.	Index/SIF Tor.	Eq. no.	Load type	Code Stress	Code Allow.
B42	+ Max P{1}									(3a)	HOOP	0	16700
	GR + Max P{1}	3	21	10	1	1.00	1.00	1.00	1.00	23a	SUST	166	16700
	TR:Amb to T1{1}	80	12	209	0	1.00	1.00	1.00	1.00	(17)	DISP	1494	25050
	Amb to T1{1}	80	12	209	0	1.00	1.00	1.00	1.00	(17)	DISP	1494	25050
B27	N- Max P{1}									(3a)	HOOP	0	16700
	GR + Max P{1}	3	12	9	1	1.00	1.00	1.00	1.00	23a	SUST	111	16700
	TR:Amb to T1{1}	80	8	236	0	1.00	1.00	1.00	1.00	(17)	DISP	1676	25050
	Amb to T1{1}	80	8	236	0	1.00	1.00	1.00	1.00	(17)	DISP	1676	25050
B27	N+ Max P{1}									(3a)	HOOP	0	16700
	GR + Max P{1}	3	9	12	1	1.00	1.00	1.00	1.00	23a	SUST	111	16700
	TR:Amb to T1{1}	80	235	14	0	1.00	1.00	1.00	1.00	(17)	DISP	1676	25050
	Amb to T1{1}	80	235	14	0	1.00	1.00	1.00	1.00	(17)	DISP	1676	25050
B27	F- Max P{1}									(3a)	HOOP	0	16700
	GR + Max P{1}	0	3	25	6	1.00	1.00	1.00	1.00	23a	SUST	188	16700
	TR:Amb to T1{1}	53	154	16	1	1.00	1.00	1.00	1.00	(17)	DISP	1102	25050
	Amb to T1{1}	53	154	16	1	1.00	1.00	1.00	1.00	(17)	DISP	1102	25050
B27	F+ Max P{1}									(3a)	HOOP	0	16700
	GR + Max P{1}	0	25	2	6	1.00	1.00	1.00	1.00	23a	SUST	188	16700
	TR:Amb to T1{1}	53	11	154	1	1.00	1.00	1.00	1.00	(17)	DISP	1102	25050
	Amb to T1{1}	53	11	154	1	1.00	1.00	1.00	1.00	(17)	DISP	1102	25050
B43	Max P{1}									(3a)	HOOP	0	16700
	GR + Max P{1}	0	37	4	6	1.00	1.00	1.00	1.00	23a	SUST	272	16700
	TR:Amb to T1{1}	53	15	114	1	1.00	1.00	1.00	1.00	(17)	DISP	827	25050
	Amb to T1{1}	53	15	114	1	1.00	1.00	1.00	1.00	(17)	DISP	827	25050
B45	- Max P{1}									(3a)	HOOP	0	16700
	GR + Max P{1}	2	15	15	6	1.00	1.00	1.00	1.00	23a	SUST	164	16700
	TR:Amb to T1{1}	54	10	98	1	1.00	1.00	1.00	1.00	(17)	DISP	708	25050
	Amb to T1{1}	54	10	98	1	1.00	1.00	1.00	1.00	(17)	DISP	708	25050
B45	+ Max P{1}									(3a)	HOOP	0	16700
	GR + Max P{1}	2	15	15	6	1.00	1.00	1.00	1.00	23a	SUST	164	16700
	TR:Amb to T1{1}	48	10	98	1	1.00	1.00	1.00	1.00	(17)	DISP	706	25050
	Amb to T1{1}	48	10	98	1	1.00	1.00	1.00	1.00	(17)	DISP	706	25050
B30	N- Max P{1}									(3a)	HOOP	0	16700
	GR + Max P{1}	2	7	17	6	1.00	1.00	1.00	1.00	23a	SUST	138	16700
	TR:Amb to T1{1}	48	8	140	1	1.00	1.00	1.00	1.00	(17)	DISP	996	25050
	Amb to T1{1}	48	8	140	1	1.00	1.00	1.00	1.00	(17)	DISP	996	25050
B30	N+ Max P{1}									(3a)	HOOP	0	16700
	GR + Max P{1}	2	17	6	6	1.00	1.00	1.00	1.00	23a	SUST	138	16700
	TR:Amb to T1{1}	48	140	9	1	1.00	1.00	1.00	1.00	(17)	DISP	996	25050
	Amb to T1{1}	48	140	9	1	1.00	1.00	1.00	1.00	(17)	DISP	996	25050

ASME B31.3 (2016) CODE COMPLIANCE
(Moments in ft-lb , Force in lbf) (Stress in psi)

Point name	Load combination	Axial Force	In-Pl. Moment	Out-Pl. Moment	Torsion Moment	S.I.F In	S.I.F Out	Index/SIF Ax.	Index/SIF Tor.	Eq. no.	Load type	Code Stress	Code Allow.
B30 F-	Max P{1}									(3a)	HOOP	0	16700
	GR + Max P{1}	3	17	30	0	1.00	1.00	1.00	1.00	23a	SUST	248	16700
	TR:Amb to T1{1}	84	246	10	0	1.00	1.00	1.00	1.00	(17)	DISP	1750	25050
	Amb to T1{1}	84	246	10	0	1.00	1.00	1.00	1.00	(17)	DISP	1750	25050
B30 F+	Max P{1}									(3a)	HOOP	0	16700
	GR + Max P{1}	3	29	18	0	1.00	1.00	1.00	1.00	23a	SUST	248	16700
	TR:Amb to T1{1}	84	5	246	0	1.00	1.00	1.00	1.00	(17)	DISP	1750	25050
	Amb to T1{1}	84	5	246	0	1.00	1.00	1.00	1.00	(17)	DISP	1750	25050
B46 -	Max P{1}									(3a)	HOOP	0	16700
	GR + Max P{1}	3	41	16	0	1.00	1.00	1.00	1.00	23a	SUST	319	16700
	TR:Amb to T1{1}	84	7	222	0	1.00	1.00	1.00	1.00	(17)	DISP	1583	25050
	Amb to T1{1}	84	7	222	0	1.00	1.00	1.00	1.00	(17)	DISP	1583	25050
B46 +	Max P{1}									(3a)	HOOP	0	16700
	GR + Max P{1}	3	41	16	0	1.00	1.00	1.00	1.00	23a	SUST	319	16700
	TR:Amb to T1{1}	121	7	222	0	1.00	1.00	1.00	1.00	(17)	DISP	1600	25050
	Amb to T1{1}	121	7	222	0	1.00	1.00	1.00	1.00	(17)	DISP	1600	25050
B47 -	Max P{1}									(3a)	HOOP	0	16700
	GR + Max P{1}	3	55	1	0	1.00	1.00	1.00	1.00	23a	SUST	402	16700
	TR:Amb to T1{1}	121	2	26	0	1.00	1.00	1.00	1.00	(17)	DISP	238	25050
	Amb to T1{1}	121	2	26	0	1.00	1.00	1.00	1.00	(17)	DISP	238	25050
B47 +	Max P{1}									(3a)	HOOP	0	16700
	GR + Max P{1}	3	55	1	0	1.00	1.00	1.00	1.00	23a	SUST	402	16700
	TR:Amb to T1{1}	173	2	26	0	1.00	1.00	1.00	1.00	(17)	DISP	262	25050
	Amb to T1{1}	173	2	26	0	1.00	1.00	1.00	1.00	(17)	DISP	262	25050
B48 -	Max P{1}									(3a)	HOOP	0	16700
	GR + Max P{1}	4	52	1	0	1.00	1.00	1.00	1.00	23a	SUST	376	16700
	TR:Amb to T1{1}	173	0	38	0	1.00	1.00	1.00	1.00	(17)	DISP	341	25050
	Amb to T1{1}	173	0	38	0	1.00	1.00	1.00	1.00	(17)	DISP	341	25050
B48 +	Max P{1}									(3a)	HOOP	0	16700
	GR + Max P{1}	4	52	1	0	1.00	1.00	1.00	1.00	23a	SUST	376	16700
	TR:Amb to T1{1}	227	0	38	0	1.00	1.00	1.00	1.00	(17)	DISP	366	25050
	Amb to T1{1}	227	0	38	0	1.00	1.00	1.00	1.00	(17)	DISP	366	25050
B49 -	Max P{1}									(3a)	HOOP	0	16700
	GR + Max P{1}	5	52	2	0	1.00	1.00	1.00	1.00	23a	SUST	376	16700
	TR:Amb to T1{1}	227	0	1	0	1.00	1.00	1.00	1.00	(17)	DISP	112	25050
	Amb to T1{1}	227	0	1	0	1.00	1.00	1.00	1.00	(17)	DISP	112	25050
B49 +	Max P{1}									(3a)	HOOP	0	16700
	GR + Max P{1}	5	52	2	0	1.00	1.00	1.00	1.00	23a	SUST	377	16700
	TR:Amb to T1{1}	285	0	1	0	1.00	1.00	1.00	1.00	(17)	DISP	138	25050
	Amb to T1{1}	285	0	1	0	1.00	1.00	1.00	1.00	(17)	DISP	138	25050

ASME B31.3 (2016) CODE COMPLIANCE
(Moments in ft-lb , Force in lbf) (Stress in psi)

Point name	Load combination	Axial Force	In-Pl. Moment	Out-Pl. Moment	Torsion Moment	S.I.F In	S.I.F Out	Index/SIF Ax.	Index/SIF Tor.	Eq. no.	Load type	Code Stress	Code Allow.
B50	- Max P{1}									(3a)	HOOP	0	16700
	GR + Max P{1}	6	54	1	0	1.00	1.00	1.00	1.00	23a	SUST	393	16700
	TR:Amb to T1{1}	285	0	0	0	1.00	1.00	1.00	1.00	(17)	DISP	129	25050
	Amb to T1{1}	285	0	0	0	1.00	1.00	1.00	1.00	(17)	DISP	129	25050
B50	+ Max P{1}									(3a)	HOOP	0	16700
	GR + Max P{1}	2	54	1	0	1.00	1.00	1.00	1.00	23a	SUST	391	16700
	TR:Amb to T1{1}	334	0	0	0	1.00	1.00	1.00	1.00	(17)	DISP	151	25050
	Amb to T1{1}	334	0	0	0	1.00	1.00	1.00	1.00	(17)	DISP	151	25050
B51	- Max P{1}									(3a)	HOOP	0	16700
	GR + Max P{1}	2	50	1	0	1.00	1.00	1.00	1.00	23a	SUST	363	16700
	TR:Amb to T1{1}	334	0	0	0	1.00	1.00	1.00	1.00	(17)	DISP	153	25050
	Amb to T1{1}	334	0	0	0	1.00	1.00	1.00	1.00	(17)	DISP	153	25050
B51	+ Max P{1}									(3a)	HOOP	0	16700
	GR + Max P{1}	8	50	1	0	1.00	1.00	1.00	1.00	23a	SUST	366	16700
	TR:Amb to T1{1}	277	0	0	0	1.00	1.00	1.00	1.00	(17)	DISP	128	25050
	Amb to T1{1}	277	0	0	0	1.00	1.00	1.00	1.00	(17)	DISP	128	25050
B52	- Max P{1}									(3a)	HOOP	0	16700
	GR + Max P{1}	9	57	6	0	1.00	1.00	1.00	1.00	23a	SUST	415	16700
	TR:Amb to T1{1}	277	1	4	0	1.00	1.00	1.00	1.00	(17)	DISP	152	25050
	Amb to T1{1}	277	1	4	0	1.00	1.00	1.00	1.00	(17)	DISP	152	25050
B52	+ Max P{1}									(3a)	HOOP	0	16700
	GR + Max P{1}	10	57	6	0	1.00	1.00	1.00	1.00	23a	SUST	416	16700
	TR:Amb to T1{1}	214	1	4	0	1.00	1.00	1.00	1.00	(17)	DISP	124	25050
	Amb to T1{1}	214	1	4	0	1.00	1.00	1.00	1.00	(17)	DISP	124	25050
B53	- Max P{1}									(3a)	HOOP	0	16700
	GR + Max P{1}	10	41	13	0	1.00	1.00	1.00	1.00	23a	SUST	317	16700
	TR:Amb to T1{1}	214	1	41	0	1.00	1.00	1.00	1.00	(17)	DISP	380	25050
	Amb to T1{1}	214	1	41	0	1.00	1.00	1.00	1.00	(17)	DISP	380	25050
B53	+ Max P{1}									(3a)	HOOP	0	16700
	GR + Max P{1}	11	41	13	0	1.00	1.00	1.00	1.00	23a	SUST	317	16700
	TR:Amb to T1{1}	163	1	41	0	1.00	1.00	1.00	1.00	(17)	DISP	357	25050
	Amb to T1{1}	163	1	41	0	1.00	1.00	1.00	1.00	(17)	DISP	357	25050
B54	- Max P{1}									(3a)	HOOP	0	16700
	GR + Max P{1}	11	54	42	0	1.00	1.00	1.00	1.00	23a	SUST	496	16700
	TR:Amb to T1{1}	163	2	14	0	1.00	1.00	1.00	1.00	(17)	DISP	172	25050
	Amb to T1{1}	163	2	14	0	1.00	1.00	1.00	1.00	(17)	DISP	172	25050
B54	+ Max P{1}									(3a)	HOOP	0	16700
	GR + Max P{1}	12	54	42	0	1.00	1.00	1.00	1.00	23a	SUST	497	16700
	TR:Amb to T1{1}	113	2	14	0	1.00	1.00	1.00	1.00	(17)	DISP	150	25050
	Amb to T1{1}	113	2	14	0	1.00	1.00	1.00	1.00	(17)	DISP	150	25050

ASME B31.3 (2016) CODE COMPLIANCE
(Moments in ft-lb , Force in lbf) (Stress in psi)

Point name	Load combination	Axial Force	In-Pl. Moment	Out-Pl. Moment	Torsion Moment	S.I.F In	S.I.F Out	Index/SIF Ax.	Index/SIF Tor.	Eq. no.	Load type	Code Stress	Code Allow.
B55 -	Max P{1}									(3a)	HOOP	0	16700
	GR + Max P{1}	12	28	72	0	1.00	1.00	1.00	1.00	23a	SUST	562	16700
	TR:Amb to T1{1}	113	5	216	0	1.00	1.00	1.00	1.00	(17)	DISP	1554	25050
	Amb to T1{1}	113	5	216	0	1.00	1.00	1.00	1.00	(17)	DISP	1554	25050
B55 +	Max P{1}									(3a)	HOOP	0	16700
	GR + Max P{1}	12	28	72	0	1.00	1.00	1.00	1.00	23a	SUST	562	16700
	TR:Amb to T1{1}	72	5	216	0	1.00	1.00	1.00	1.00	(17)	DISP	1536	25050
	Amb to T1{1}	72	5	216	0	1.00	1.00	1.00	1.00	(17)	DISP	1536	25050
B41 N-	Max P{1}									(3a)	HOOP	0	16700
	GR + Max P{1}	12	18	73	0	1.00	1.00	1.00	1.00	23a	SUST	550	16700
	TR:Amb to T1{1}	72	4	239	0	1.00	1.00	1.00	1.00	(17)	DISP	1693	25050
	Amb to T1{1}	72	4	239	0	1.00	1.00	1.00	1.00	(17)	DISP	1693	25050
B41 N+	Max P{1}									(3a)	HOOP	0	16700
	GR + Max P{1}	12	73	17	0	1.00	1.00	1.00	1.00	23a	SUST	550	16700
	TR:Amb to T1{1}	72	239	5	0	1.00	1.00	1.00	1.00	(17)	DISP	1693	25050
	Amb to T1{1}	72	239	5	0	1.00	1.00	1.00	1.00	(17)	DISP	1693	25050
B41 F-	Max P{1}									(3a)	HOOP	0	16700
	GR + Max P{1}	3	46	18	5	1.00	1.00	1.00	1.00	23a	SUST	357	16700
	TR:Amb to T1{1}	45	158	6	0	1.00	1.00	1.00	1.00	(17)	DISP	1123	25050
	Amb to T1{1}	45	158	6	0	1.00	1.00	1.00	1.00	(17)	DISP	1123	25050
B41 F+	Max P{1}									(3a)	HOOP	0	16700
	GR + Max P{1}	3	17	46	5	1.00	1.00	1.00	1.00	23a	SUST	357	16700
	TR:Amb to T1{1}	45	4	158	0	1.00	1.00	1.00	1.00	(17)	DISP	1123	25050
	Amb to T1{1}	45	4	158	0	1.00	1.00	1.00	1.00	(17)	DISP	1123	25050
B57 -	Max P{1}									(3a)	HOOP	0	16700
	GR + Max P{1}	3	28	40	5	1.00	1.00	1.00	1.00	23a	SUST	355	16700
	TR:Amb to T1{1}	45	6	122	0	1.00	1.00	1.00	1.00	(17)	DISP	873	25050
	Amb to T1{1}	45	6	122	0	1.00	1.00	1.00	1.00	(17)	DISP	873	25050
B57 +	Max P{1}									(3a)	HOOP	0	16700
	GR + Max P{1}	3	28	40	5	1.00	1.00	1.00	1.00	23a	SUST	355	16700
	TR:Amb to T1{1}	49	6	122	0	1.00	1.00	1.00	1.00	(17)	DISP	875	25050
	Amb to T1{1}	49	6	122	0	1.00	1.00	1.00	1.00	(17)	DISP	875	25050
B58 -	Max P{1}									(3a)	HOOP	0	16700
	GR + Max P{1}	4	22	46	5	1.00	1.00	1.00	1.00	23a	SUST	373	16700
	TR:Amb to T1{1}	49	5	115	0	1.00	1.00	1.00	1.00	(17)	DISP	822	25050
	Amb to T1{1}	49	5	115	0	1.00	1.00	1.00	1.00	(17)	DISP	822	25050
B58 +	Max P{1}									(3a)	HOOP	0	16700
	GR + Max P{1}	4	22	46	5	1.00	1.00	1.00	1.00	23a	SUST	373	16700
	TR:Amb to T1{1}	43	5	115	0	1.00	1.00	1.00	1.00	(17)	DISP	820	25050
	Amb to T1{1}	43	5	115	0	1.00	1.00	1.00	1.00	(17)	DISP	820	25050

ASME B31.3 (2016) CODE COMPLIANCE
(Moments in ft-lb , Force in lbf) (Stress in psi)

Point name	Load combination	Axial Force	In-Pl. Moment	Out-Pl. Moment	Torsion Moment	S.I.F In	S.I.F Out	Index/SIF Ax.	Index/SIF Tor.	Eq. no.	Load type	Code Stress	Code Allow.
B44 N-	Max P{1}									(3a)	HOOP	0	16700
	GR + Max P{1}	4	13	52	5	1.00	1.00	1.00	1.00	23a	SUST	393	16700
	TR:Amb to T1{1}	43	4	152	0	1.00	1.00	1.00	1.00	(17)	DISP	1078	25050
	Amb to T1{1}	43	4	152	0	1.00	1.00	1.00	1.00	(17)	DISP	1078	25050
B44 N+	Max P{1}									(3a)	HOOP	0	16700
	GR + Max P{1}	4	52	12	5	1.00	1.00	1.00	1.00	23a	SUST	393	16700
	TR:Amb to T1{1}	43	152	5	0	1.00	1.00	1.00	1.00	(17)	DISP	1078	25050
	Amb to T1{1}	43	152	5	0	1.00	1.00	1.00	1.00	(17)	DISP	1078	25050
B44 F-	Max P{1}									(3a)	HOOP	0	16700
	GR + Max P{1}	13	77	23	0	1.00	1.00	1.00	1.00	23a	SUST	587	16700
	TR:Amb to T1{1}	74	245	5	1	1.00	1.00	1.00	1.00	(17)	DISP	1741	25050
	Amb to T1{1}	74	245	5	1	1.00	1.00	1.00	1.00	(17)	DISP	1741	25050
B44 F+	Max P{1}									(3a)	HOOP	0	16700
	GR + Max P{1}	13	22	77	0	1.00	1.00	1.00	1.00	23a	SUST	587	16700
	TR:Amb to T1{1}	74	4	245	1	1.00	1.00	1.00	1.00	(17)	DISP	1741	25050
	Amb to T1{1}	74	4	245	1	1.00	1.00	1.00	1.00	(17)	DISP	1741	25050
B64 -	Max P{1}									(3a)	HOOP	0	16700
	GR + Max P{1}	13	33	75	0	1.00	1.00	1.00	1.00	23a	SUST	599	16700
	TR:Amb to T1{1}	74	5	224	1	1.00	1.00	1.00	1.00	(17)	DISP	1592	25050
	Amb to T1{1}	74	5	224	1	1.00	1.00	1.00	1.00	(17)	DISP	1592	25050
B64 +	Max P{1}									(3a)	HOOP	0	16700
	GR + Max P{1}	13	33	75	0	1.00	1.00	1.00	1.00	23a	SUST	599	16700
	TR:Amb to T1{1}	112	5	224	0	1.00	1.00	1.00	1.00	(17)	DISP	1609	25050
	Amb to T1{1}	112	5	224	0	1.00	1.00	1.00	1.00	(17)	DISP	1609	25050
B65 -	Max P{1}									(3a)	HOOP	0	16700
	GR + Max P{1}	13	58	37	0	1.00	1.00	1.00	1.00	23a	SUST	500	16700
	TR:Amb to T1{1}	112	1	10	0	1.00	1.00	1.00	1.00	(17)	DISP	118	25050
	Amb to T1{1}	112	1	10	0	1.00	1.00	1.00	1.00	(17)	DISP	118	25050
B65 +	Max P{1}									(3a)	HOOP	0	16700
	GR + Max P{1}	13	58	37	0	1.00	1.00	1.00	1.00	23a	SUST	500	16700
	TR:Amb to T1{1}	167	1	10	0	1.00	1.00	1.00	1.00	(17)	DISP	142	25050
	Amb to T1{1}	167	1	10	0	1.00	1.00	1.00	1.00	(17)	DISP	142	25050
B66 -	Max P{1}									(3a)	HOOP	0	16700
	GR + Max P{1}	13	51	3	0	1.00	1.00	1.00	1.00	23a	SUST	375	16700
	TR:Amb to T1{1}	167	0	44	0	1.00	1.00	1.00	1.00	(17)	DISP	379	25050
	Amb to T1{1}	167	0	44	0	1.00	1.00	1.00	1.00	(17)	DISP	379	25050
B66 +	Max P{1}									(3a)	HOOP	0	16700
	GR + Max P{1}	13	51	3	0	1.00	1.00	1.00	1.00	23a	SUST	375	16700
	TR:Amb to T1{1}	220	0	44	0	1.00	1.00	1.00	1.00	(17)	DISP	403	25050
	Amb to T1{1}	220	0	44	0	1.00	1.00	1.00	1.00	(17)	DISP	403	25050

ASME B31.3 (2016) CODE COMPLIANCE
(Moments in ft-lb , Force in lbf) (Stress in psi)

Point name	Load combination	Axial Force	In-Pl. Moment	Out-Pl. Moment	Torsion Moment	S.I.F In	S.I.F Out	Index/SIF Ax.	Index/SIF Tor.	Eq. no.	Load type	Code Stress	Code Allow.
B67	- Max P{1}									(3a)	HOOP	0	16700
	GR + Max P{1}	14	53	2	0	1.00	1.00	1.00	1.00	23a	SUST	388	16700
	TR:Amb to T1{1}	220	0	3	0	1.00	1.00	1.00	1.00	(17)	DISP	121	25050
	Amb to T1{1}	220	0	3	0	1.00	1.00	1.00	1.00	(17)	DISP	121	25050
B67	+ Max P{1}									(3a)	HOOP	0	16700
	GR + Max P{1}	14	53	2	0	1.00	1.00	1.00	1.00	23a	SUST	388	16700
	TR:Amb to T1{1}	279	0	3	0	1.00	1.00	1.00	1.00	(17)	DISP	148	25050
	Amb to T1{1}	279	0	3	0	1.00	1.00	1.00	1.00	(17)	DISP	148	25050
B68	- Max P{1}									(3a)	HOOP	0	16700
	GR + Max P{1}	14	52	0	0	1.00	1.00	1.00	1.00	23a	SUST	384	16700
	TR:Amb to T1{1}	279	0	0	0	1.00	1.00	1.00	1.00	(17)	DISP	129	25050
	Amb to T1{1}	279	0	0	0	1.00	1.00	1.00	1.00	(17)	DISP	129	25050
B68	+ Max P{1}									(3a)	HOOP	0	16700
	GR + Max P{1}	14	52	0	0	1.00	1.00	1.00	1.00	23a	SUST	384	16700
	TR:Amb to T1{1}	334	0	0	0	1.00	1.00	1.00	1.00	(17)	DISP	153	25050
	Amb to T1{1}	334	0	0	0	1.00	1.00	1.00	1.00	(17)	DISP	153	25050
B69	- Max P{1}									(3a)	HOOP	0	16700
	GR + Max P{1}	15	53	0	0	1.00	1.00	1.00	1.00	23a	SUST	389	16700
	TR:Amb to T1{1}	334	0	0	0	1.00	1.00	1.00	1.00	(17)	DISP	150	25050
	Amb to T1{1}	334	0	0	0	1.00	1.00	1.00	1.00	(17)	DISP	150	25050
B69	+ Max P{1}									(3a)	HOOP	0	16700
	GR + Max P{1}	15	53	0	0	1.00	1.00	1.00	1.00	23a	SUST	389	16700
	TR:Amb to T1{1}	386	0	0	0	1.00	1.00	1.00	1.00	(17)	DISP	174	25050
	Amb to T1{1}	386	0	0	0	1.00	1.00	1.00	1.00	(17)	DISP	174	25050
B70	- Max P{1}									(3a)	HOOP	0	16700
	GR + Max P{1}	16	51	0	0	1.00	1.00	1.00	1.00	23a	SUST	375	16700
	TR:Amb to T1{1}	386	0	1	0	1.00	1.00	1.00	1.00	(17)	DISP	180	25050
	Amb to T1{1}	386	0	1	0	1.00	1.00	1.00	1.00	(17)	DISP	180	25050
B70	+ Max P{1}									(3a)	HOOP	0	16700
	GR + Max P{1}	14	51	0	0	1.00	1.00	1.00	1.00	23a	SUST	374	16700
	TR:Amb to T1{1}	321	0	1	0	1.00	1.00	1.00	1.00	(17)	DISP	151	25050
	Amb to T1{1}	321	0	1	0	1.00	1.00	1.00	1.00	(17)	DISP	151	25050
B71	- Max P{1}									(3a)	HOOP	0	16700
	GR + Max P{1}	14	58	0	0	1.00	1.00	1.00	1.00	23a	SUST	424	16700
	TR:Amb to T1{1}	321	0	6	0	1.00	1.00	1.00	1.00	(17)	DISP	183	25050
	Amb to T1{1}	321	0	6	0	1.00	1.00	1.00	1.00	(17)	DISP	183	25050
B71	+ Max P{1}									(3a)	HOOP	0	16700
	GR + Max P{1}	14	58	0	0	1.00	1.00	1.00	1.00	23a	SUST	424	16700
	TR:Amb to T1{1}	254	0	6	0	1.00	1.00	1.00	1.00	(17)	DISP	153	25050
	Amb to T1{1}	254	0	6	0	1.00	1.00	1.00	1.00	(17)	DISP	153	25050

ASME B31.3 (2016) CODE COMPLIANCE
(Moments in ft-lb , Force in lbf) (Stress in psi)

Point name	Load combination	Axial Force	In-Pl. Moment	Out-Pl. Moment	Torsion Moment	S.I.F In	S.I.F Out	Index/SIF Ax.	Index/SIF Tor.	Eq. no.	Load type	Code Stress	Code Allow.
B72 -	Max P{1}									(3a)	HOOP	0	16700
	GR + Max P{1}	14	33	6	0	1.00	1.00	1.00	1.00	23a	SUST	252	16700
	TR:Amb to T1{1}	254	0	78	0	1.00	1.00	1.00	1.00	(17)	DISP	659	25050
	Amb to T1{1}	254	0	78	0	1.00	1.00	1.00	1.00	(17)	DISP	659	25050
B72 +	Max P{1}									(3a)	HOOP	0	16700
	GR + Max P{1}	14	33	6	0	1.00	1.00	1.00	1.00	23a	SUST	252	16700
	TR:Amb to T1{1}	214	0	78	0	1.00	1.00	1.00	1.00	(17)	DISP	641	25050
	Amb to T1{1}	214	0	78	0	1.00	1.00	1.00	1.00	(17)	DISP	641	25050
B73 -	Max P{1}									(3a)	HOOP	0	16700
	GR + Max P{1}	15	40	20	0	1.00	1.00	1.00	1.00	23a	SUST	329	16700
	TR:Amb to T1{1}	214	2	54	0	1.00	1.00	1.00	1.00	(17)	DISP	474	25050
	Amb to T1{1}	214	2	54	0	1.00	1.00	1.00	1.00	(17)	DISP	474	25050
B73 +	Max P{1}									(3a)	HOOP	0	16700
	GR + Max P{1}	15	40	20	0	1.00	1.00	1.00	1.00	23a	SUST	329	16700
	TR:Amb to T1{1}	178	2	54	0	1.00	1.00	1.00	1.00	(17)	DISP	458	25050
	Amb to T1{1}	178	2	54	0	1.00	1.00	1.00	1.00	(17)	DISP	458	25050
B74 -	Max P{1}									(3a)	HOOP	0	16700
	GR + Max P{1}	15	41	47	0	1.00	1.00	1.00	1.00	23a	SUST	459	16700
	TR:Amb to T1{1}	178	8	205	0	1.00	1.00	1.00	1.00	(17)	DISP	1505	25050
	Amb to T1{1}	178	8	205	0	1.00	1.00	1.00	1.00	(17)	DISP	1505	25050
B74 +	Max P{1}									(3a)	HOOP	0	16700
	GR + Max P{1}	15	41	47	0	1.00	1.00	1.00	1.00	23a	SUST	459	16700
	TR:Amb to T1{1}	141	8	205	1	1.00	1.00	1.00	1.00	(17)	DISP	1488	25050
	Amb to T1{1}	141	8	205	1	1.00	1.00	1.00	1.00	(17)	DISP	1488	25050
B56 N-	Max P{1}									(3a)	HOOP	0	16700
	GR + Max P{1}	15	21	50	0	1.00	1.00	1.00	1.00	23a	SUST	401	16700
	TR:Amb to T1{1}	141	0	274	1	1.00	1.00	1.00	1.00	(17)	DISP	1968	25050
	Amb to T1{1}	141	0	274	1	1.00	1.00	1.00	1.00	(17)	DISP	1968	25050
B56 N+	Max P{1}									(3a)	HOOP	0	16700
	GR + Max P{1}	15	51	20	0	1.00	1.00	1.00	1.00	23a	SUST	401	16700
	TR:Amb to T1{1}	141	274	3	1	1.00	1.00	1.00	1.00	(17)	DISP	1968	25050
	Amb to T1{1}	141	274	3	1	1.00	1.00	1.00	1.00	(17)	DISP	1968	25050
B56 F-	Max P{1}									(3a)	HOOP	0	16700
	GR + Max P{1}	3	20	8	7	1.00	1.00	1.00	1.00	23a	SUST	165	16700
	TR:Amb to T1{1}	69	93	16	14	1.00	1.00	1.00	1.00	(17)	DISP	693	25050
	Amb to T1{1}	69	93	16	14	1.00	1.00	1.00	1.00	(17)	DISP	693	25050
B56 F+	Max P{1}									(3a)	HOOP	0	16700
	GR + Max P{1}	3	8	20	7	1.00	1.00	1.00	1.00	23a	SUST	165	16700
	TR:Amb to T1{1}	69	16	93	14	1.00	1.00	1.00	1.00	(17)	DISP	693	25050
	Amb to T1{1}	69	16	93	14	1.00	1.00	1.00	1.00	(17)	DISP	693	25050

ASME B31.3 (2016) CODE COMPLIANCE
(Moments in ft-lb , Force in lbf) (Stress in psi)

Point name	Load combination	Axial Force	In-Pl. Moment	Out-Pl. Moment	Torsion Moment	S.I.F In	S.I.F Out	Index/SIF Ax.	Index/SIF Tor.	Eq. no.	Load type	Code Stress	Code Allow.
B75 -	Max P{1}									(3a)	HOOP	0	16700
	GR + Max P{1}	3	15	13	7	1.00	1.00	1.00	1.00	23a	SUST	155	16700
	TR:Amb to T1{1}	69	19	29	14	1.00	1.00	1.00	1.00	(17)	DISP	290	25050
	Amb to T1{1}	69	19	29	14	1.00	1.00	1.00	1.00	(17)	DISP	290	25050
B75 +	Max P{1}									(3a)	HOOP	0	16700
	GR + Max P{1}	3	15	13	7	1.00	1.00	1.00	1.00	23a	SUST	155	16700
	TR:Amb to T1{1}	83	19	29	14	1.00	1.00	1.00	1.00	(17)	DISP	296	25050
	Amb to T1{1}	83	19	29	14	1.00	1.00	1.00	1.00	(17)	DISP	296	25050
B20 N-	Max P{1}									(3a)	HOOP	0	16700
	GR + Max P{1}	4	7	7	7	1.00	1.00	1.00	1.00	23a	SUST	89	16700
	TR:Amb to T1{1}	83	16	28	14	1.00	1.00	1.00	1.00	(17)	DISP	277	25050
	Amb to T1{1}	83	16	28	14	1.00	1.00	1.00	1.00	(17)	DISP	277	25050
B20 N+	Max P{1}									(3a)	HOOP	0	16700
	GR + Max P{1}	4	6	7	7	1.00	1.00	1.00	1.00	23a	SUST	89	16700
	TR:Amb to T1{1}	83	28	16	14	1.00	1.00	1.00	1.00	(17)	DISP	277	25050
	Amb to T1{1}	83	28	16	14	1.00	1.00	1.00	1.00	(17)	DISP	277	25050
B20 F-	Max P{1}									(3a)	HOOP	0	16700
	GR + Max P{1}	15	21	16	5	1.00	1.00	1.00	1.00	23a	SUST	203	16700
	TR:Amb to T1{1}	129	143	11	9	1.00	1.00	1.00	1.00	(17)	DISP	1060	25050
	Amb to T1{1}	129	143	11	9	1.00	1.00	1.00	1.00	(17)	DISP	1060	25050
B20 F+	Max P{1}									(3a)	HOOP	0	16700
	GR + Max P{1}	15	16	22	5	1.00	1.00	1.00	1.00	23a	SUST	203	16700
	TR:Amb to T1{1}	129	13	143	9	1.00	1.00	1.00	1.00	(17)	DISP	1060	25050
	Amb to T1{1}	129	13	143	9	1.00	1.00	1.00	1.00	(17)	DISP	1060	25050
B77 -	Max P{1}									(3a)	HOOP	0	16700
	GR + Max P{1}	15	27	19	5	1.00	1.00	1.00	1.00	23a	SUST	250	16700
	TR:Amb to T1{1}	129	19	88	9	1.00	1.00	1.00	1.00	(17)	DISP	683	25050
	Amb to T1{1}	129	19	88	9	1.00	1.00	1.00	1.00	(17)	DISP	683	25050
B77 +	Max P{1}									(3a)	HOOP	0	16700
	GR + Max P{1}	16	27	19	5	1.00	1.00	1.00	1.00	23a	SUST	250	16700
	TR:Amb to T1{1}	94	19	88	9	1.00	1.00	1.00	1.00	(17)	DISP	668	25050
	Amb to T1{1}	94	19	88	9	1.00	1.00	1.00	1.00	(17)	DISP	668	25050
B21 N-	Max P{1}									(3a)	HOOP	0	16700
	GR + Max P{1}	16	13	17	5	1.00	1.00	1.00	1.00	23a	SUST	162	16700
	TR:Amb to T1{1}	94	14	11	9	1.00	1.00	1.00	1.00	(17)	DISP	178	25050
	Amb to T1{1}	94	14	11	9	1.00	1.00	1.00	1.00	(17)	DISP	178	25050
B21 N+	Max P{1}									(3a)	HOOP	0	16700
	GR + Max P{1}	16	16	13	5	1.00	1.00	1.00	1.00	23a	SUST	162	16700
	TR:Amb to T1{1}	94	12	14	9	1.00	1.00	1.00	1.00	(17)	DISP	178	25050
	Amb to T1{1}	94	12	14	9	1.00	1.00	1.00	1.00	(17)	DISP	178	25050

Primary Piping Low Temp
04/23/2020 2018719 BENTLEY
03:23 PM AutoPIPE Nuclear 12.00.00.16 RESULT PAGE 128

ASME B31.3 (2016) CODE COMPLIANCE
(Moments in ft-lb , Force in lbf) (Stress in psi)

Point name	Load combination	Axial Force	In-Pl. Moment	Out-Pl. Moment	Torsion Moment	S.I.F In	S.I.F Out	Index/SIF Ax.	Index/SIF Tor.	Eq. no.	Load type	Code Stress	Code Allow.
B21 F-	Max P{1}									(3a)	HOOP	0	16700
	GR + Max P{1}	4	48	4	8	1.00	1.00	1.00	1.00	23a	SUST	352	16700
	TR:Amb to T1{1}	115	43	5	1	1.00	1.00	1.00	1.00	(17)	DISP	350	25050
	Amb to T1{1}	115	43	5	1	1.00	1.00	1.00	1.00	(17)	DISP	350	25050
B21 F+	Max P{1}									(3a)	HOOP	0	16700
	GR + Max P{1}	4	4	48	8	1.00	1.00	1.00	1.00	23a	SUST	352	16700
	TR:Amb to T1{1}	115	4	43	1	1.00	1.00	1.00	1.00	(17)	DISP	350	25050
	Amb to T1{1}	115	4	43	1	1.00	1.00	1.00	1.00	(17)	DISP	350	25050
B59 N-	Max P{1}									(3a)	HOOP	0	16700
	GR + Max P{1}	4	44	85	8	1.00	1.00	1.00	1.00	23a	SUST	698	16700
	TR:Amb to T1{1}	115	20	175	1	1.00	1.00	1.00	1.00	(17)	DISP	1280	25050
	Amb to T1{1}	115	20	175	1	1.00	1.00	1.00	1.00	(17)	DISP	1280	25050
B59 N+	Max P{1}									(3a)	HOOP	0	16700
	GR + Max P{1}	4	44	85	8	1.00	1.00	1.00	1.00	23a	SUST	698	16700
	TR:Amb to T1{1}	115	20	175	2	1.00	1.00	1.00	1.00	(17)	DISP	1280	25050
	Amb to T1{1}	115	20	175	2	1.00	1.00	1.00	1.00	(17)	DISP	1280	25050
B59 M	Max P{1}									(3a)	HOOP	0	16700
	GR + Max P{1}	4	45	85	9	1.00	1.00	1.00	1.00	23a	SUST	702	16700
	TR:Amb to T1{1}	115	20	177	3	1.00	1.00	1.00	1.00	(17)	DISP	1294	25050
	Amb to T1{1}	115	20	177	3	1.00	1.00	1.00	1.00	(17)	DISP	1294	25050
B59 F-	Max P{1}									(3a)	HOOP	0	16700
	GR + Max P{1}	4	45	86	9	1.00	1.00	1.00	1.00	23a	SUST	706	16700
	TR:Amb to T1{1}	115	21	179	4	1.00	1.00	1.00	1.00	(17)	DISP	1308	25050
	Amb to T1{1}	115	21	179	4	1.00	1.00	1.00	1.00	(17)	DISP	1308	25050
B59 F+	Max P{1}									(3a)	HOOP	0	16700
	GR + Max P{1}	4	45	86	9	1.00	1.00	1.00	1.00	23a	SUST	706	16700
	TR:Amb to T1{1}	134	21	179	3	1.00	1.00	1.00	1.00	(17)	DISP	1316	25050
	Amb to T1{1}	134	21	179	3	1.00	1.00	1.00	1.00	(17)	DISP	1316	25050
B60	Max P{1}									(3a)	HOOP	0	16700
	GR + Max P{1}	4	17	101	9	1.00	1.00	1.00	1.00	23a	SUST	748	16700
	TR:Amb to T1{1}	134	9	242	3	1.00	1.00	1.00	1.00	(17)	DISP	1747	25050
	Amb to T1{1}	134	9	242	3	1.00	1.00	1.00	1.00	(17)	DISP	1747	25050
B61	Max P{1}									(3a)	HOOP	0	16700
	GR + Max P{1}	4	5	117	9	1.00	1.00	1.00	1.00	23a	SUST	854	16700
	TR:Amb to T1{1}	134	3	306	3	1.00	1.00	1.00	1.00	(17)	DISP	2192	25050
	Amb to T1{1}	134	3	306	3	1.00	1.00	1.00	1.00	(17)	DISP	2192	25050
B62 -	Max P{1}									(3a)	HOOP	0	16700
	GR + Max P{1}	4	15	127	9	1.00	1.00	1.00	1.00	23a	SUST	930	16700
	TR:Amb to T1{1}	134	10	345	3	1.00	1.00	1.00	1.00	(17)	DISP	2466	25050
	Amb to T1{1}	134	10	345	3	1.00	1.00	1.00	1.00	(17)	DISP	2466	25050

ASME B31.3 (2016) CODE COMPLIANCE
(Moments in ft-lb , Force in lbf) (Stress in psi)

Point name	Load combination	Axial Force	In-Pl. Moment	Out-Pl. Moment	Torsion Moment	S.I.F In	S.I.F Out	Index/SIF Ax.	Index/SIF Tor.	Eq. no.	Load type	Code Stress	Code Allow.
B62	+ Max P{1}									(3a)	HOOP	0	16700
	GR + Max P{1}	0	0	0	0	1.00	1.00	1.00	1.00	23a	SUST	2	16700
	TR:Amb to T1{1}	0	0	0	0	1.00	1.00	1.00	1.00	(17)	DISP	0	25050
	Amb to T1{1}	0	0	0	0	1.00	1.00	1.00	1.00	(17)	DISP	0	25050
B63	Max P{1}									(3a)	HOOP	0	16700
	GR + Max P{1}	0	0	0	0	1.00	1.00	1.00	1.00	23a	SUST	0	16700
	TR:Amb to T1{1}	0	0	0	0	1.00	1.00	1.00	1.00	(17)	DISP	0	25050
	Amb to T1{1}	0	0	0	0	1.00	1.00	1.00	1.00	(17)	DISP	0	25050
*** Segment B end *** Line # RIGID													
*** Segment C begin ***													
C00	Max P{1}									(3a)	HOOP	0	16700
	GR + Max P{1}	0	0	0	0	1.00	1.00	1.00	1.00	23a	SUST	0	16700
	TR:Amb to T1{1}	0	0	0	0	1.00	1.00	1.00	1.00	(17)	DISP	0	25050
	Amb to T1{1}	0	0	0	0	1.00	1.00	1.00	1.00	(17)	DISP	0	25050
C01	- Max P{1}									(3a)	HOOP	0	16700
	GR + Max P{1}	1	0	0	0	1.00	1.00	1.00	1.00	23a	SUST	1	16700
	TR:Amb to T1{1}	0	0	0	0	1.00	1.00	1.00	1.00	(17)	DISP	0	25050
	Amb to T1{1}	0	0	0	0	1.00	1.00	1.00	1.00	(17)	DISP	0	25050
C01	+ Max P{1}									(3a)	HOOP	0	16700
	GR + Max P{1}	3	0	0	0	1.00	1.00	1.00	1.00	23a	SUST	3	16700
	TR:Amb to T1{1}	20	0	0	0	1.00	1.00	1.00	1.00	(17)	DISP	19	25050
	Amb to T1{1}	20	0	0	0	1.00	1.00	1.00	1.00	(17)	DISP	19	25050
C02	N- Max P{1}									(3a)	HOOP	0	16700
	GR + Max P{1}	3	0	0	0	1.00	1.00	1.00	1.00	23a	SUST	3	16700
	TR:Amb to T1{1}	20	0	0	0	1.00	1.00	1.00	1.00	(17)	DISP	19	25050
	Amb to T1{1}	20	0	0	0	1.00	1.00	1.00	1.00	(17)	DISP	19	25050
C02	N+ Max P{1}									(3a)	HOOP	0	16700
	GR + Max P{1}	3	0	0	0	1.30	1.08	1.00	1.00	23a	SUST	3	16700
	TR:Amb to T1{1}	20	0	0	0	1.73	1.44	1.00	1.00	(17)	DISP	19	25050
	Amb to T1{1}	20	0	0	0	1.73	1.44	1.00	1.00	(17)	DISP	19	25050
C02	F- Max P{1}									(3a)	HOOP	0	16700
	GR + Max P{1}	0	0	0	0	1.30	1.08	1.00	1.00	23a	SUST	12	16700
	TR:Amb to T1{1}	0	5	0	0	1.73	1.44	1.00	1.00	(17)	DISP	187	25050
	Amb to T1{1}	0	5	0	0	1.73	1.44	1.00	1.00	(17)	DISP	187	25050
C02	F+ Max P{1}									(3a)	HOOP	0	16700
	GR + Max P{1}	0	0	0	0	1.00	1.00	1.00	1.00	23a	SUST	9	16700
	TR:Amb to T1{1}	0	5	0	0	1.00	1.00	1.00	1.00	(17)	DISP	108	25050
	Amb to T1{1}	0	5	0	0	1.00	1.00	1.00	1.00	(17)	DISP	108	25050

ASME B31.3 (2016) CODE COMPLIANCE
(Moments in ft-lb , Force in lbf) (Stress in psi)

Point name	Load combination	Axial Force	In-Pl. Moment	Out-Pl. Moment	Torsion Moment	S.I.F In	S.I.F Out	Index/SIF Ax.	Index/SIF Tor.	Eq. no.	Load type	Code Stress	Code Allow.
C03 -	Max P{1}									(3a)	HOOP	0	16700
	GR + Max P{1}	0	1	0	0	1.00	1.00	1.00	1.00	23a	SUST	23	16700
	TR:Amb to T1{1}	0	29	0	0	1.00	1.00	1.00	1.00	(17)	DISP	630	25050
	Amb to T1{1}	0	29	0	0	1.00	1.00	1.00	1.00	(17)	DISP	630	25050
C03 +	Max P{1}									(3a)	HOOP	0	16700
	GR + Max P{1}	11	7	24	1	1.00	1.00	1.00	1.00	23a	SUST	574	16700
	TR:Amb to T1{1}	121	1	1	1	1.00	1.00	1.00	1.00	(17)	DISP	146	25050
	Amb to T1{1}	121	1	1	1	1.00	1.00	1.00	1.00	(17)	DISP	146	25050
C04	Max P{1}									(3a)	HOOP	0	16700
	GR + Max P{1}	11	2	13	1	1.00	1.00	1.00	1.00	23a	SUST	311	16700
	TR:Amb to T1{1}	121	0	5	1	1.00	1.00	1.00	1.00	(17)	DISP	218	25050
	Amb to T1{1}	121	0	5	1	1.00	1.00	1.00	1.00	(17)	DISP	218	25050
C21 -	Max P{1}									(3a)	HOOP	0	16700
	GR + Max P{1}	11	33	0	1	1.00	1.00	1.00	1.00	23a	SUST	762	16700
	TR:Amb to T1{1}	121	2	10	1	1.00	1.00	1.00	1.00	(17)	DISP	331	25050
	Amb to T1{1}	121	2	10	1	1.00	1.00	1.00	1.00	(17)	DISP	331	25050
C21 +	Max P{1}									(3a)	HOOP	0	16700
	GR + Max P{1}	11	33	0	1	1.00	1.00	1.00	1.00	23a	SUST	762	16700
	TR:Amb to T1{1}	84	2	10	1	1.00	1.00	1.00	1.00	(17)	DISP	297	25050
	Amb to T1{1}	84	2	10	1	1.00	1.00	1.00	1.00	(17)	DISP	297	25050
C06 N-	Max P{1}									(3a)	HOOP	0	16700
	GR + Max P{1}	11	25	2	1	1.00	1.00	1.00	1.00	23a	SUST	584	16700
	TR:Amb to T1{1}	84	0	8	1	1.00	1.00	1.00	1.00	(17)	DISP	258	25050
	Amb to T1{1}	84	0	8	1	1.00	1.00	1.00	1.00	(17)	DISP	258	25050
C06 N+	Max P{1}									(3a)	HOOP	0	16700
	GR + Max P{1}	11	25	2	1	1.00	1.00	1.00	1.00	23a	SUST	584	16700
	TR:Amb to T1{1}	84	0	8	1	1.00	1.00	1.00	1.00	(17)	DISP	258	25050
	Amb to T1{1}	84	0	8	1	1.00	1.00	1.00	1.00	(17)	DISP	258	25050
C06 F-	Max P{1}									(3a)	HOOP	0	16700
	GR + Max P{1}	13	21	3	1	1.00	1.00	1.00	1.00	23a	SUST	484	16700
	TR:Amb to T1{1}	84	1	7	1	1.00	1.00	1.00	1.00	(17)	DISP	239	25050
	Amb to T1{1}	84	1	7	1	1.00	1.00	1.00	1.00	(17)	DISP	239	25050
C06 F+	Max P{1}									(3a)	HOOP	0	16700
	GR + Max P{1}	13	21	3	1	1.00	1.00	1.00	1.00	23a	SUST	484	16700
	TR:Amb to T1{1}	84	1	7	1	1.00	1.00	1.00	1.00	(17)	DISP	239	25050
	Amb to T1{1}	84	1	7	1	1.00	1.00	1.00	1.00	(17)	DISP	239	25050
C22 -	Max P{1}									(3a)	HOOP	0	16700
	GR + Max P{1}	10	31	52	1	1.00	1.00	1.00	1.00	23a	SUST	1386	16700
	TR:Amb to T1{1}	84	1	35	1	1.00	1.00	1.00	1.00	(17)	DISP	835	25050
	Amb to T1{1}	84	1	35	1	1.00	1.00	1.00	1.00	(17)	DISP	835	25050

Primary Piping Low Temp
04/23/2020 2018719 BENTLEY
03:23 PM AutoPIPE Nuclear 12.00.00.16 RESULT PAGE 131

ASME B31.3 (2016) CODE COMPLIANCE
(Moments in ft-lb , Force in lbf) (Stress in psi)

Point name	Load combination	Axial Force	In-Pl. Moment	Out-Pl. Moment	Torsion Moment	S.I.F In	S.I.F Out	Index/SIF Ax.	Index/SIF Tor.	Eq. no.	Load type	Code Stress	Code Allow.
C22 +	Max P{1}									(3a)	HOOP	0	16700
	GR + Max P{1}	10	31	52	1	1.00	1.00	1.00	1.00	23a	SUST	1386	16700
	TR:Amb to T1{1}	33	1	35	1	1.00	1.00	1.00	1.00	(17)	DISP	788	25050
	Amb to T1{1}	33	1	35	1	1.00	1.00	1.00	1.00	(17)	DISP	788	25050
C23 -	Max P{1}									(3a)	HOOP	0	16700
	GR + Max P{1}	8	12	27	1	1.00	1.00	1.00	1.00	23a	SUST	683	16700
	TR:Amb to T1{1}	33	8	18	1	1.00	1.00	1.00	1.00	(17)	DISP	448	25050
	Amb to T1{1}	33	8	18	1	1.00	1.00	1.00	1.00	(17)	DISP	448	25050
C23 +	Max P{1}									(3a)	HOOP	0	16700
	GR + Max P{1}	7	12	27	1	1.00	1.00	1.00	1.00	23a	SUST	682	16700
	TR:Amb to T1{1}	19	8	18	1	1.00	1.00	1.00	1.00	(17)	DISP	434	25050
	Amb to T1{1}	19	8	18	1	1.00	1.00	1.00	1.00	(17)	DISP	434	25050
C09 N-	Max P{1}									(3a)	HOOP	0	16700
	GR + Max P{1}	7	7	32	1	1.00	1.00	1.00	1.00	23a	SUST	756	16700
	TR:Amb to T1{1}	19	7	29	1	1.00	1.00	1.00	1.00	(17)	DISP	661	25050
	Amb to T1{1}	19	7	29	1	1.00	1.00	1.00	1.00	(17)	DISP	661	25050
C09 N+	Max P{1}									(3a)	HOOP	0	16700
	GR + Max P{1}	7	32	8	1	1.00	1.00	1.00	1.00	23a	SUST	756	16700
	TR:Amb to T1{1}	19	29	7	1	1.00	1.00	1.00	1.00	(17)	DISP	661	25050
	Amb to T1{1}	19	29	7	1	1.00	1.00	1.00	1.00	(17)	DISP	661	25050
C09 F-	Max P{1}									(3a)	HOOP	0	16700
	GR + Max P{1}	10	44	7	0	1.00	1.00	1.00	1.00	23a	SUST	1028	16700
	TR:Amb to T1{1}	23	42	7	0	1.00	1.00	1.00	1.00	(17)	DISP	931	25050
	Amb to T1{1}	23	42	7	0	1.00	1.00	1.00	1.00	(17)	DISP	931	25050
C09 F+	Max P{1}									(3a)	HOOP	0	16700
	GR + Max P{1}	10	11	44	0	1.00	1.00	1.00	1.00	23a	SUST	1028	16700
	TR:Amb to T1{1}	23	4	42	0	1.00	1.00	1.00	1.00	(17)	DISP	931	25050
	Amb to T1{1}	23	4	42	0	1.00	1.00	1.00	1.00	(17)	DISP	931	25050
C24 -	Max P{1}									(3a)	HOOP	0	16700
	GR + Max P{1}	10	15	40	0	1.00	1.00	1.00	1.00	23a	SUST	988	16700
	TR:Amb to T1{1}	23	6	33	0	1.00	1.00	1.00	1.00	(17)	DISP	737	25050
	Amb to T1{1}	23	6	33	0	1.00	1.00	1.00	1.00	(17)	DISP	737	25050
C24 +	Max P{1}									(3a)	HOOP	0	16700
	GR + Max P{1}	9	15	40	0	1.00	1.00	1.00	1.00	23a	SUST	988	16700
	TR:Amb to T1{1}	35	6	33	0	1.00	1.00	1.00	1.00	(17)	DISP	748	25050
	Amb to T1{1}	35	6	33	0	1.00	1.00	1.00	1.00	(17)	DISP	748	25050
C25 -	Max P{1}									(3a)	HOOP	0	16700
	GR + Max P{1}	8	28	8	0	1.00	1.00	1.00	1.00	23a	SUST	661	16700
	TR:Amb to T1{1}	35	2	33	0	1.00	1.00	1.00	1.00	(17)	DISP	736	25050
	Amb to T1{1}	35	2	33	0	1.00	1.00	1.00	1.00	(17)	DISP	736	25050

ASME B31.3 (2016) CODE COMPLIANCE
(Moments in ft-lb , Force in lbf) (Stress in psi)

Point name	Load combination	Axial Force	In-Pl. Moment	Out-Pl. Moment	Torsion Moment	S.I.F In	S.I.F Out	Index/SIF Ax.	Index/SIF Tor.	Eq. no.	Load type	Code Stress	Code Allow.
C25	+ Max P{1}									(3a)	HOOP	0	16700
	GR + Max P{1}	9	28	8	0	1.00	1.00	1.00	1.00	23a	SUST	661	16700
	TR:Amb to T1{1}	79	2	33	0	1.00	1.00	1.00	1.00	(17)	DISP	776	25050
	Amb to T1{1}	79	2	33	0	1.00	1.00	1.00	1.00	(17)	DISP	776	25050
C26	- Max P{1}									(3a)	HOOP	0	16700
	GR + Max P{1}	8	25	3	0	1.00	1.00	1.00	1.00	23a	SUST	583	16700
	TR:Amb to T1{1}	79	0	6	0	1.00	1.00	1.00	1.00	(17)	DISP	197	25050
	Amb to T1{1}	79	0	6	0	1.00	1.00	1.00	1.00	(17)	DISP	197	25050
C26	+ Max P{1}									(3a)	HOOP	0	16700
	GR + Max P{1}	9	25	3	0	1.00	1.00	1.00	1.00	23a	SUST	584	16700
	TR:Amb to T1{1}	105	0	6	0	1.00	1.00	1.00	1.00	(17)	DISP	221	25050
	Amb to T1{1}	105	0	6	0	1.00	1.00	1.00	1.00	(17)	DISP	221	25050
C28	- Max P{1}									(3a)	HOOP	0	16700
	GR + Max P{1}	8	23	2	0	1.00	1.00	1.00	1.00	23a	SUST	529	16700
	TR:Amb to T1{1}	105	0	4	0	1.00	1.00	1.00	1.00	(17)	DISP	194	25050
	Amb to T1{1}	105	0	4	0	1.00	1.00	1.00	1.00	(17)	DISP	194	25050
C28	+ Max P{1}									(3a)	HOOP	0	16700
	GR + Max P{1}	8	23	2	0	1.00	1.00	1.00	1.00	23a	SUST	529	16700
	TR:Amb to T1{1}	80	0	4	0	1.00	1.00	1.00	1.00	(17)	DISP	171	25050
	Amb to T1{1}	80	0	4	0	1.00	1.00	1.00	1.00	(17)	DISP	171	25050
C29	- Max P{1}									(3a)	HOOP	0	16700
	GR + Max P{1}	7	34	8	0	1.00	1.00	1.00	1.00	23a	SUST	792	16700
	TR:Amb to T1{1}	80	1	20	0	1.00	1.00	1.00	1.00	(17)	DISP	493	25050
	Amb to T1{1}	80	1	20	0	1.00	1.00	1.00	1.00	(17)	DISP	493	25050
C29	+ Max P{1}									(3a)	HOOP	0	16700
	GR + Max P{1}	8	34	8	0	1.00	1.00	1.00	1.00	23a	SUST	793	16700
	TR:Amb to T1{1}	41	1	20	0	1.00	1.00	1.00	1.00	(17)	DISP	456	25050
	Amb to T1{1}	41	1	20	0	1.00	1.00	1.00	1.00	(17)	DISP	456	25050
C31	- Max P{1}									(3a)	HOOP	0	16700
	GR + Max P{1}	7	23	25	0	1.00	1.00	1.00	1.00	23a	SUST	769	16700
	TR:Amb to T1{1}	41	2	32	0	1.00	1.00	1.00	1.00	(17)	DISP	727	25050
	Amb to T1{1}	41	2	32	0	1.00	1.00	1.00	1.00	(17)	DISP	727	25050
C31	+ Max P{1}									(3a)	HOOP	0	16700
	GR + Max P{1}	6	23	25	0	1.00	1.00	1.00	1.00	23a	SUST	769	16700
	TR:Amb to T1{1}	19	2	32	0	1.00	1.00	1.00	1.00	(17)	DISP	706	25050
	Amb to T1{1}	19	2	32	0	1.00	1.00	1.00	1.00	(17)	DISP	706	25050
C16	N- Max P{1}									(3a)	HOOP	0	16700
	GR + Max P{1}	6	17	26	0	1.00	1.00	1.00	1.00	23a	SUST	703	16700
	TR:Amb to T1{1}	19	2	42	0	1.00	1.00	1.00	1.00	(17)	DISP	914	25050
	Amb to T1{1}	19	2	42	0	1.00	1.00	1.00	1.00	(17)	DISP	914	25050

ASME B31.3 (2016) CODE COMPLIANCE
(Moments in ft-lb , Force in lbf) (Stress in psi)

Point name	Load combination	Axial Force	In-Pl. Moment	Out-Pl. Moment	Torsion Moment	S.I.F In	S.I.F Out	Index/SIF Ax.	Index/SIF Tor.	Eq. no.	Load type	Code Stress	Code Allow.
C16 N+	Max P{1}									(3a)	HOOP	0	16700
	GR + Max P{1}	6	26	17	0	1.00	1.00	1.00	1.00	23a	SUST	703	16700
	TR:Amb to T1{1}	19	42	3	0	1.00	1.00	1.00	1.00	(17)	DISP	914	25050
	Amb to T1{1}	19	42	3	0	1.00	1.00	1.00	1.00	(17)	DISP	914	25050
C16 F-	Max P{1}									(3a)	HOOP	0	16700
	GR + Max P{1}	2	15	1	3	1.00	1.00	1.00	1.00	23a	SUST	346	16700
	TR:Amb to T1{1}	19	44	3	0	1.00	1.00	1.00	1.00	(17)	DISP	955	25050
	Amb to T1{1}	19	44	3	0	1.00	1.00	1.00	1.00	(17)	DISP	955	25050
C16 F+	Max P{1}									(3a)	HOOP	0	16700
	GR + Max P{1}	2	1	15	3	1.00	1.00	1.00	1.00	23a	SUST	346	16700
	TR:Amb to T1{1}	19	2	44	0	1.00	1.00	1.00	1.00	(17)	DISP	955	25050
	Amb to T1{1}	19	2	44	0	1.00	1.00	1.00	1.00	(17)	DISP	955	25050
C32 -	Max P{1}									(3a)	HOOP	0	16700
	GR + Max P{1}	2	5	12	3	1.00	1.00	1.00	1.00	23a	SUST	303	16700
	TR:Amb to T1{1}	19	3	34	0	1.00	1.00	1.00	1.00	(17)	DISP	754	25050
	Amb to T1{1}	19	3	34	0	1.00	1.00	1.00	1.00	(17)	DISP	754	25050
C32 +	Max P{1}									(3a)	HOOP	0	16700
	GR + Max P{1}	2	5	12	3	1.00	1.00	1.00	1.00	23a	SUST	303	16700
	TR:Amb to T1{1}	21	3	34	0	1.00	1.00	1.00	1.00	(17)	DISP	755	25050
	Amb to T1{1}	21	3	34	0	1.00	1.00	1.00	1.00	(17)	DISP	755	25050
C33 -	Max P{1}									(3a)	HOOP	0	16700
	GR + Max P{1}	1	14	4	3	1.00	1.00	1.00	1.00	23a	SUST	346	16700
	TR:Amb to T1{1}	21	4	4	0	1.00	1.00	1.00	1.00	(17)	DISP	135	25050
	Amb to T1{1}	21	4	4	0	1.00	1.00	1.00	1.00	(17)	DISP	135	25050
C33 +	Max P{1}									(3a)	HOOP	0	16700
	GR + Max P{1}	3	14	4	3	1.00	1.00	1.00	1.00	23a	SUST	348	16700
	TR:Amb to T1{1}	19	4	4	0	1.00	1.00	1.00	1.00	(17)	DISP	133	25050
	Amb to T1{1}	19	4	4	0	1.00	1.00	1.00	1.00	(17)	DISP	133	25050
C19 N-	Max P{1}									(3a)	HOOP	0	16700
	GR + Max P{1}	3	9	8	3	1.00	1.00	1.00	1.00	23a	SUST	280	16700
	TR:Amb to T1{1}	19	3	20	0	1.00	1.00	1.00	1.00	(17)	DISP	459	25050
	Amb to T1{1}	19	3	20	0	1.00	1.00	1.00	1.00	(17)	DISP	459	25050
C19 N+	Max P{1}									(3a)	HOOP	0	16700
	GR + Max P{1}	3	7	9	3	1.00	1.00	1.00	1.00	23a	SUST	280	16700
	TR:Amb to T1{1}	19	20	4	0	1.00	1.00	1.00	1.00	(17)	DISP	459	25050
	Amb to T1{1}	19	20	4	0	1.00	1.00	1.00	1.00	(17)	DISP	459	25050
C19 F-	Max P{1}									(3a)	HOOP	0	16700
	GR + Max P{1}	7	20	9	0	1.00	1.00	1.00	1.00	23a	SUST	495	16700
	TR:Amb to T1{1}	34	65	3	0	1.00	1.00	1.00	1.00	(17)	DISP	1419	25050
	Amb to T1{1}	34	65	3	0	1.00	1.00	1.00	1.00	(17)	DISP	1419	25050

ASME B31.3 (2016) CODE COMPLIANCE
(Moments in ft-lb , Force in lbf) (Stress in psi)

Point name	Load combination	Axial Force	In-Pl. Moment	Out-Pl. Moment	Torsion Moment	S.I.F In	S.I.F Out	Index/SIF Ax.	Index/SIF Tor.	Eq. no.	Load type	Code Stress	Code Allow.
C19 F+	Max P{1}									(3a)	HOOP	0	16700
	GR + Max P{1}	7	9	20	0	1.00	1.00	1.00	1.00	23a	SUST	495	16700
	TR:Amb to T1{1}	34	2	65	0	1.00	1.00	1.00	1.00	(17)	DISP	1419	25050
	Amb to T1{1}	34	2	65	0	1.00	1.00	1.00	1.00	(17)	DISP	1419	25050
C34 -	Max P{1}									(3a)	HOOP	0	16700
	GR + Max P{1}	7	14	18	0	1.00	1.00	1.00	1.00	23a	SUST	518	16700
	TR:Amb to T1{1}	34	3	55	0	1.00	1.00	1.00	1.00	(17)	DISP	1219	25050
	Amb to T1{1}	34	3	55	0	1.00	1.00	1.00	1.00	(17)	DISP	1219	25050
C34 +	Max P{1}									(3a)	HOOP	0	16700
	GR + Max P{1}	7	14	18	0	1.00	1.00	1.00	1.00	23a	SUST	518	16700
	TR:Amb to T1{1}	49	3	55	0	1.00	1.00	1.00	1.00	(17)	DISP	1233	25050
	Amb to T1{1}	49	3	55	0	1.00	1.00	1.00	1.00	(17)	DISP	1233	25050
C35 -	Max P{1}									(3a)	HOOP	0	16700
	GR + Max P{1}	6	29	1	0	1.00	1.00	1.00	1.00	23a	SUST	650	16700
	TR:Amb to T1{1}	49	1	29	0	1.00	1.00	1.00	1.00	(17)	DISP	662	25050
	Amb to T1{1}	49	1	29	0	1.00	1.00	1.00	1.00	(17)	DISP	662	25050
C35 +	Max P{1}									(3a)	HOOP	0	16700
	GR + Max P{1}	7	29	1	0	1.00	1.00	1.00	1.00	23a	SUST	652	16700
	TR:Amb to T1{1}	91	1	29	0	1.00	1.00	1.00	1.00	(17)	DISP	701	25050
	Amb to T1{1}	91	1	29	0	1.00	1.00	1.00	1.00	(17)	DISP	701	25050
C36 -	Max P{1}									(3a)	HOOP	0	16700
	GR + Max P{1}	6	24	2	0	1.00	1.00	1.00	1.00	23a	SUST	545	16700
	TR:Amb to T1{1}	91	0	4	0	1.00	1.00	1.00	1.00	(17)	DISP	171	25050
	Amb to T1{1}	91	0	4	0	1.00	1.00	1.00	1.00	(17)	DISP	171	25050
C36 +	Max P{1}									(3a)	HOOP	0	16700
	GR + Max P{1}	9	24	2	0	1.00	1.00	1.00	1.00	23a	SUST	547	16700
	TR:Amb to T1{1}	117	0	4	0	1.00	1.00	1.00	1.00	(17)	DISP	195	25050
	Amb to T1{1}	117	0	4	0	1.00	1.00	1.00	1.00	(17)	DISP	195	25050
C37 -	Max P{1}									(3a)	HOOP	0	16700
	GR + Max P{1}	8	28	0	0	1.00	1.00	1.00	1.00	23a	SUST	642	16700
	TR:Amb to T1{1}	117	0	3	0	1.00	1.00	1.00	1.00	(17)	DISP	167	25050
	Amb to T1{1}	117	0	3	0	1.00	1.00	1.00	1.00	(17)	DISP	167	25050
C37 +	Max P{1}									(3a)	HOOP	0	16700
	GR + Max P{1}	4	28	0	0	1.00	1.00	1.00	1.00	23a	SUST	639	16700
	TR:Amb to T1{1}	95	0	3	0	1.00	1.00	1.00	1.00	(17)	DISP	147	25050
	Amb to T1{1}	95	0	3	0	1.00	1.00	1.00	1.00	(17)	DISP	147	25050
C38 -	Max P{1}									(3a)	HOOP	0	16700
	GR + Max P{1}	3	16	4	0	1.00	1.00	1.00	1.00	23a	SUST	372	16700
	TR:Amb to T1{1}	95	0	3	0	1.00	1.00	1.00	1.00	(17)	DISP	150	25050
	Amb to T1{1}	95	0	3	0	1.00	1.00	1.00	1.00	(17)	DISP	150	25050

ASME B31.3 (2016) CODE COMPLIANCE
(Moments in ft-lb , Force in lbf) (Stress in psi)

Point name	Load combination	Axial Force	In-Pl. Moment	Out-Pl. Moment	Torsion Moment	S.I.F In	S.I.F Out	Index/SIF Ax.	Index/SIF Tor.	Eq. no.	Load type	Code Stress	Code Allow.
C38	+ Max P{1}									(3a)	HOOP	0	16700
	GR + Max P{1}	4	16	4	0	1.00	1.00	1.00	1.00	23a	SUST	373	16700
	TR:Amb to T1{1}	76	0	3	0	1.00	1.00	1.00	1.00	(17)	DISP	132	25050
	Amb to T1{1}	76	0	3	0	1.00	1.00	1.00	1.00	(17)	DISP	132	25050
C39	- Max P{1}									(3a)	HOOP	0	16700
	GR + Max P{1}	3	20	6	0	1.00	1.00	1.00	1.00	23a	SUST	480	16700
	TR:Amb to T1{1}	76	1	25	0	1.00	1.00	1.00	1.00	(17)	DISP	613	25050
	Amb to T1{1}	76	1	25	0	1.00	1.00	1.00	1.00	(17)	DISP	613	25050
C39	+ Max P{1}									(3a)	HOOP	0	16700
	GR + Max P{1}	3	20	6	0	1.00	1.00	1.00	1.00	23a	SUST	479	16700
	TR:Amb to T1{1}	44	1	25	0	1.00	1.00	1.00	1.00	(17)	DISP	583	25050
	Amb to T1{1}	44	1	25	0	1.00	1.00	1.00	1.00	(17)	DISP	583	25050
C40	- Max P{1}									(3a)	HOOP	0	16700
	GR + Max P{1}	2	16	10	0	1.00	1.00	1.00	1.00	23a	SUST	426	16700
	TR:Amb to T1{1}	44	3	44	0	1.00	1.00	1.00	1.00	(17)	DISP	975	25050
	Amb to T1{1}	44	3	44	0	1.00	1.00	1.00	1.00	(17)	DISP	975	25050
C40	+ Max P{1}									(3a)	HOOP	0	16700
	GR + Max P{1}	2	16	10	0	1.00	1.00	1.00	1.00	23a	SUST	425	16700
	TR:Amb to T1{1}	24	3	44	0	1.00	1.00	1.00	1.00	(17)	DISP	956	25050
	Amb to T1{1}	24	3	44	0	1.00	1.00	1.00	1.00	(17)	DISP	956	25050
C27	N- Max P{1}									(3a)	HOOP	0	16700
	GR + Max P{1}	2	11	11	0	1.00	1.00	1.00	1.00	23a	SUST	342	16700
	TR:Amb to T1{1}	24	2	53	0	1.00	1.00	1.00	1.00	(17)	DISP	1161	25050
	Amb to T1{1}	24	2	53	0	1.00	1.00	1.00	1.00	(17)	DISP	1161	25050
C27	N+ Max P{1}									(3a)	HOOP	0	16700
	GR + Max P{1}	2	10	11	0	1.00	1.00	1.00	1.00	23a	SUST	342	16700
	TR:Amb to T1{1}	24	53	3	0	1.00	1.00	1.00	1.00	(17)	DISP	1161	25050
	Amb to T1{1}	24	53	3	0	1.00	1.00	1.00	1.00	(17)	DISP	1161	25050
C27	F- Max P{1}									(3a)	HOOP	0	16700
	GR + Max P{1}	1	10	5	2	1.00	1.00	1.00	1.00	23a	SUST	269	16700
	TR:Amb to T1{1}	19	40	3	0	1.00	1.00	1.00	1.00	(17)	DISP	869	25050
	Amb to T1{1}	19	40	3	0	1.00	1.00	1.00	1.00	(17)	DISP	869	25050
C27	F+ Max P{1}									(3a)	HOOP	0	16700
	GR + Max P{1}	1	6	10	2	1.00	1.00	1.00	1.00	23a	SUST	269	16700
	TR:Amb to T1{1}	19	2	40	0	1.00	1.00	1.00	1.00	(17)	DISP	869	25050
	Amb to T1{1}	19	2	40	0	1.00	1.00	1.00	1.00	(17)	DISP	869	25050
C42	Max P{1}									(3a)	HOOP	0	16700
	GR + Max P{1}	1	10	9	2	1.00	1.00	1.00	1.00	23a	SUST	321	16700
	TR:Amb to T1{1}	19	3	28	0	1.00	1.00	1.00	1.00	(17)	DISP	618	25050
	Amb to T1{1}	19	3	28	0	1.00	1.00	1.00	1.00	(17)	DISP	618	25050

ASME B31.3 (2016) CODE COMPLIANCE
(Moments in ft-lb , Force in lbf) (Stress in psi)

Point name	Load combination	Axial Force	In-Pl. Moment	Out-Pl. Moment	Torsion Moment	S.I.F In	S.I.F Out	Index/SIF Ax.	Index/SIF Tor.	Eq. no.	Load type	Code Stress	Code Allow.
C43 -	Max P{1}									(3a)	HOOP	0	16700
	GR + Max P{1}	0	7	1	2	1.00	1.00	1.00	1.00	23a	SUST	176	16700
	TR:Amb to T1{1}	20	2	17	0	1.00	1.00	1.00	1.00	(17)	DISP	393	25050
	Amb to T1{1}	20	2	17	0	1.00	1.00	1.00	1.00	(17)	DISP	393	25050
C43 +	Max P{1}									(3a)	HOOP	0	16700
	GR + Max P{1}	0	7	1	2	1.00	1.00	1.00	1.00	23a	SUST	177	16700
	TR:Amb to T1{1}	17	2	17	0	1.00	1.00	1.00	1.00	(17)	DISP	391	25050
	Amb to T1{1}	17	2	17	0	1.00	1.00	1.00	1.00	(17)	DISP	391	25050
C30 N-	Max P{1}									(3a)	HOOP	0	16700
	GR + Max P{1}	0	3	0	2	1.00	1.00	1.00	1.00	23a	SUST	85	16700
	TR:Amb to T1{1}	17	2	30	0	1.00	1.00	1.00	1.00	(17)	DISP	664	25050
	Amb to T1{1}	17	2	30	0	1.00	1.00	1.00	1.00	(17)	DISP	664	25050
C30 N+	Max P{1}									(3a)	HOOP	0	16700
	GR + Max P{1}	0	0	3	2	1.00	1.00	1.00	1.00	23a	SUST	85	16700
	TR:Amb to T1{1}	17	30	2	0	1.00	1.00	1.00	1.00	(17)	DISP	664	25050
	Amb to T1{1}	17	30	2	0	1.00	1.00	1.00	1.00	(17)	DISP	664	25050
C30 F-	Max P{1}									(3a)	HOOP	0	16700
	GR + Max P{1}	2	7	13	0	1.00	1.00	1.00	1.00	23a	SUST	337	16700
	TR:Amb to T1{1}	26	56	2	0	1.00	1.00	1.00	1.00	(17)	DISP	1232	25050
	Amb to T1{1}	26	56	2	0	1.00	1.00	1.00	1.00	(17)	DISP	1232	25050
C30 F+	Max P{1}									(3a)	HOOP	0	16700
	GR + Max P{1}	2	13	7	0	1.00	1.00	1.00	1.00	23a	SUST	337	16700
	TR:Amb to T1{1}	26	1	56	0	1.00	1.00	1.00	1.00	(17)	DISP	1232	25050
	Amb to T1{1}	26	1	56	0	1.00	1.00	1.00	1.00	(17)	DISP	1232	25050
C45 -	Max P{1}									(3a)	HOOP	0	16700
	GR + Max P{1}	2	19	7	0	1.00	1.00	1.00	1.00	23a	SUST	451	16700
	TR:Amb to T1{1}	26	1	48	0	1.00	1.00	1.00	1.00	(17)	DISP	1052	25050
	Amb to T1{1}	26	1	48	0	1.00	1.00	1.00	1.00	(17)	DISP	1052	25050
C45 +	Max P{1}									(3a)	HOOP	0	16700
	GR + Max P{1}	2	19	7	0	1.00	1.00	1.00	1.00	23a	SUST	451	16700
	TR:Amb to T1{1}	44	1	48	0	1.00	1.00	1.00	1.00	(17)	DISP	1069	25050
	Amb to T1{1}	44	1	48	0	1.00	1.00	1.00	1.00	(17)	DISP	1069	25050
C46 -	Max P{1}									(3a)	HOOP	0	16700
	GR + Max P{1}	2	27	2	0	1.00	1.00	1.00	1.00	23a	SUST	614	16700
	TR:Amb to T1{1}	44	0	14	0	1.00	1.00	1.00	1.00	(17)	DISP	345	25050
	Amb to T1{1}	44	0	14	0	1.00	1.00	1.00	1.00	(17)	DISP	345	25050
C46 +	Max P{1}									(3a)	HOOP	0	16700
	GR + Max P{1}	2	27	2	0	1.00	1.00	1.00	1.00	23a	SUST	614	16700
	TR:Amb to T1{1}	72	0	14	0	1.00	1.00	1.00	1.00	(17)	DISP	370	25050
	Amb to T1{1}	72	0	14	0	1.00	1.00	1.00	1.00	(17)	DISP	370	25050

ASME B31.3 (2016) CODE COMPLIANCE
(Moments in ft-lb , Force in lbf) (Stress in psi)

Point name	Load combination	Axial Force	In-Pl. Moment	Out-Pl. Moment	Torsion Moment	S.I.F In	S.I.F Out	Index/SIF Ax.	Index/SIF Tor.	Eq. no.	Load type	Code Stress	Code Allow.
C47	- Max P{1}									(3a)	HOOP	0	16700
	GR + Max P{1}	2	25	1	0	1.00	1.00	1.00	1.00	23a	SUST	562	16700
	TR:Amb to T1{1}	72	0	5	0	1.00	1.00	1.00	1.00	(17)	DISP	163	25050
	Amb to T1{1}	72	0	5	0	1.00	1.00	1.00	1.00	(17)	DISP	163	25050
C47	+ Max P{1}									(3a)	HOOP	0	16700
	GR + Max P{1}	2	25	1	0	1.00	1.00	1.00	1.00	23a	SUST	562	16700
	TR:Amb to T1{1}	98	0	5	0	1.00	1.00	1.00	1.00	(17)	DISP	188	25050
	Amb to T1{1}	98	0	5	0	1.00	1.00	1.00	1.00	(17)	DISP	188	25050
C48	- Max P{1}									(3a)	HOOP	0	16700
	GR + Max P{1}	1	25	0	0	1.00	1.00	1.00	1.00	23a	SUST	575	16700
	TR:Amb to T1{1}	98	0	1	0	1.00	1.00	1.00	1.00	(17)	DISP	112	25050
	Amb to T1{1}	98	0	1	0	1.00	1.00	1.00	1.00	(17)	DISP	112	25050
C48	+ Max P{1}									(3a)	HOOP	0	16700
	GR + Max P{1}	1	25	0	0	1.00	1.00	1.00	1.00	23a	SUST	575	16700
	TR:Amb to T1{1}	125	0	1	0	1.00	1.00	1.00	1.00	(17)	DISP	137	25050
	Amb to T1{1}	125	0	1	0	1.00	1.00	1.00	1.00	(17)	DISP	137	25050
C49	- Max P{1}									(3a)	HOOP	0	16700
	GR + Max P{1}	1	25	1	0	1.00	1.00	1.00	1.00	23a	SUST	571	16700
	TR:Amb to T1{1}	125	0	0	0	1.00	1.00	1.00	1.00	(17)	DISP	118	25050
	Amb to T1{1}	125	0	0	0	1.00	1.00	1.00	1.00	(17)	DISP	118	25050
C49	+ Max P{1}									(3a)	HOOP	0	16700
	GR + Max P{1}	1	25	1	0	1.00	1.00	1.00	1.00	23a	SUST	571	16700
	TR:Amb to T1{1}	154	0	0	0	1.00	1.00	1.00	1.00	(17)	DISP	145	25050
	Amb to T1{1}	154	0	0	0	1.00	1.00	1.00	1.00	(17)	DISP	145	25050
C50	- Max P{1}									(3a)	HOOP	0	16700
	GR + Max P{1}	2	25	0	0	1.00	1.00	1.00	1.00	23a	SUST	573	16700
	TR:Amb to T1{1}	154	0	0	0	1.00	1.00	1.00	1.00	(17)	DISP	148	25050
	Amb to T1{1}	154	0	0	0	1.00	1.00	1.00	1.00	(17)	DISP	148	25050
C50	+ Max P{1}									(3a)	HOOP	0	16700
	GR + Max P{1}	2	25	0	0	1.00	1.00	1.00	1.00	23a	SUST	574	16700
	TR:Amb to T1{1}	128	0	0	0	1.00	1.00	1.00	1.00	(17)	DISP	123	25050
	Amb to T1{1}	128	0	0	0	1.00	1.00	1.00	1.00	(17)	DISP	123	25050
C51	- Max P{1}									(3a)	HOOP	0	16700
	GR + Max P{1}	2	26	1	0	1.00	1.00	1.00	1.00	23a	SUST	580	16700
	TR:Amb to T1{1}	128	0	1	0	1.00	1.00	1.00	1.00	(17)	DISP	137	25050
	Amb to T1{1}	128	0	1	0	1.00	1.00	1.00	1.00	(17)	DISP	137	25050
C51	+ Max P{1}									(3a)	HOOP	0	16700
	GR + Max P{1}	2	26	1	0	1.00	1.00	1.00	1.00	23a	SUST	580	16700
	TR:Amb to T1{1}	100	0	1	0	1.00	1.00	1.00	1.00	(17)	DISP	112	25050
	Amb to T1{1}	100	0	1	0	1.00	1.00	1.00	1.00	(17)	DISP	112	25050

ASME B31.3 (2016) CODE COMPLIANCE
(Moments in ft-lb , Force in lbf) (Stress in psi)

Point name	Load combination	Axial Force	In-Pl. Moment	Out-Pl. Moment	Torsion Moment	S.I.F In	S.I.F Out	Index/SIF Ax.	Index/SIF Tor.	Eq. no.	Load type	Code Stress	Code Allow.
C52 -	Max P{1}									(3a)	HOOP	0	16700
	GR + Max P{1}	3	23	2	0	1.00	1.00	1.00	1.00	23a	SUST	525	16700
	TR:Amb to T1{1}	100	0	4	0	1.00	1.00	1.00	1.00	(17)	DISP	171	25050
	Amb to T1{1}	100	0	4	0	1.00	1.00	1.00	1.00	(17)	DISP	171	25050
C52 +	Max P{1}									(3a)	HOOP	0	16700
	GR + Max P{1}	3	23	2	0	1.00	1.00	1.00	1.00	23a	SUST	525	16700
	TR:Amb to T1{1}	75	0	4	0	1.00	1.00	1.00	1.00	(17)	DISP	147	25050
	Amb to T1{1}	75	0	4	0	1.00	1.00	1.00	1.00	(17)	DISP	147	25050
C53 -	Max P{1}									(3a)	HOOP	0	16700
	GR + Max P{1}	3	35	0	0	1.00	1.00	1.00	1.00	23a	SUST	783	16700
	TR:Amb to T1{1}	75	0	15	0	1.00	1.00	1.00	1.00	(17)	DISP	383	25050
	Amb to T1{1}	75	0	15	0	1.00	1.00	1.00	1.00	(17)	DISP	383	25050
C53 +	Max P{1}									(3a)	HOOP	0	16700
	GR + Max P{1}	3	35	0	0	1.00	1.00	1.00	1.00	23a	SUST	783	16700
	TR:Amb to T1{1}	44	0	15	0	1.00	1.00	1.00	1.00	(17)	DISP	355	25050
	Amb to T1{1}	44	0	15	0	1.00	1.00	1.00	1.00	(17)	DISP	355	25050
C55 -	Max P{1}									(3a)	HOOP	0	16700
	GR + Max P{1}	3	20	18	0	1.00	1.00	1.00	1.00	23a	SUST	604	16700
	TR:Amb to T1{1}	44	1	43	0	1.00	1.00	1.00	1.00	(17)	DISP	952	25050
	Amb to T1{1}	44	1	43	0	1.00	1.00	1.00	1.00	(17)	DISP	952	25050
C55 +	Max P{1}									(3a)	HOOP	0	16700
	GR + Max P{1}	3	20	18	0	1.00	1.00	1.00	1.00	23a	SUST	604	16700
	TR:Amb to T1{1}	21	1	43	0	1.00	1.00	1.00	1.00	(17)	DISP	931	25050
	Amb to T1{1}	21	1	43	0	1.00	1.00	1.00	1.00	(17)	DISP	931	25050
C41 N-	Max P{1}									(3a)	HOOP	0	16700
	GR + Max P{1}	3	14	18	0	1.00	1.00	1.00	1.00	23a	SUST	529	16700
	TR:Amb to T1{1}	21	1	50	0	1.00	1.00	1.00	1.00	(17)	DISP	1093	25050
	Amb to T1{1}	21	1	50	0	1.00	1.00	1.00	1.00	(17)	DISP	1093	25050
C41 N+	Max P{1}									(3a)	HOOP	0	16700
	GR + Max P{1}	3	19	14	0	1.00	1.00	1.00	1.00	23a	SUST	529	16700
	TR:Amb to T1{1}	21	50	1	0	1.00	1.00	1.00	1.00	(17)	DISP	1093	25050
	Amb to T1{1}	21	50	1	0	1.00	1.00	1.00	1.00	(17)	DISP	1093	25050
C41 F-	Max P{1}									(3a)	HOOP	0	16700
	GR + Max P{1}	1	12	4	3	1.00	1.00	1.00	1.00	23a	SUST	298	16700
	TR:Amb to T1{1}	15	31	1	0	1.00	1.00	1.00	1.00	(17)	DISP	684	25050
	Amb to T1{1}	15	31	1	0	1.00	1.00	1.00	1.00	(17)	DISP	684	25050
C41 F+	Max P{1}									(3a)	HOOP	0	16700
	GR + Max P{1}	1	4	12	3	1.00	1.00	1.00	1.00	23a	SUST	298	16700
	TR:Amb to T1{1}	15	1	31	0	1.00	1.00	1.00	1.00	(17)	DISP	684	25050
	Amb to T1{1}	15	1	31	0	1.00	1.00	1.00	1.00	(17)	DISP	684	25050

ASME B31.3 (2016) CODE COMPLIANCE
(Moments in ft-lb , Force in lbf) (Stress in psi)

Point name	Load combination	Axial Force	In-Pl. Moment	Out-Pl. Moment	Torsion Moment	S.I.F In	S.I.F Out	Index/SIF Ax.	Index/SIF Tor.	Eq. no.	Load type	Code Stress	Code Allow.
C56 -	Max P{1}									(3a)	HOOP	0	16700
	GR + Max P{1}	1	8	11	3	1.00	1.00	1.00	1.00	23a	SUST	307	16700
	TR:Amb to T1{1}	15	1	21	0	1.00	1.00	1.00	1.00	(17)	DISP	455	25050
	Amb to T1{1}	15	1	21	0	1.00	1.00	1.00	1.00	(17)	DISP	455	25050
C56 +	Max P{1}									(3a)	HOOP	0	16700
	GR + Max P{1}	1	8	11	3	1.00	1.00	1.00	1.00	23a	SUST	307	16700
	TR:Amb to T1{1}	18	1	21	0	1.00	1.00	1.00	1.00	(17)	DISP	457	25050
	Amb to T1{1}	18	1	21	0	1.00	1.00	1.00	1.00	(17)	DISP	457	25050
C57 -	Max P{1}									(3a)	HOOP	0	16700
	GR + Max P{1}	1	12	12	3	1.00	1.00	1.00	1.00	23a	SUST	397	16700
	TR:Amb to T1{1}	18	1	15	0	1.00	1.00	1.00	1.00	(17)	DISP	344	25050
	Amb to T1{1}	18	1	15	0	1.00	1.00	1.00	1.00	(17)	DISP	344	25050
C57 +	Max P{1}									(3a)	HOOP	0	16700
	GR + Max P{1}	2	12	12	3	1.00	1.00	1.00	1.00	23a	SUST	397	16700
	TR:Amb to T1{1}	16	1	15	0	1.00	1.00	1.00	1.00	(17)	DISP	342	25050
	Amb to T1{1}	16	1	15	0	1.00	1.00	1.00	1.00	(17)	DISP	342	25050
C44 N-	Max P{1}									(3a)	HOOP	0	16700
	GR + Max P{1}	2	7	14	3	1.00	1.00	1.00	1.00	23a	SUST	363	16700
	TR:Amb to T1{1}	16	1	28	0	1.00	1.00	1.00	1.00	(17)	DISP	612	25050
	Amb to T1{1}	16	1	28	0	1.00	1.00	1.00	1.00	(17)	DISP	612	25050
C44 N+	Max P{1}									(3a)	HOOP	0	16700
	GR + Max P{1}	2	14	7	3	1.00	1.00	1.00	1.00	23a	SUST	363	16700
	TR:Amb to T1{1}	16	28	1	0	1.00	1.00	1.00	1.00	(17)	DISP	612	25050
	Amb to T1{1}	16	28	1	0	1.00	1.00	1.00	1.00	(17)	DISP	612	25050
C44 F-	Max P{1}									(3a)	HOOP	0	16700
	GR + Max P{1}	4	18	10	0	1.00	1.00	1.00	1.00	23a	SUST	465	16700
	TR:Amb to T1{1}	25	56	1	0	1.00	1.00	1.00	1.00	(17)	DISP	1227	25050
	Amb to T1{1}	25	56	1	0	1.00	1.00	1.00	1.00	(17)	DISP	1227	25050
C44 F+	Max P{1}									(3a)	HOOP	0	16700
	GR + Max P{1}	4	10	18	0	1.00	1.00	1.00	1.00	23a	SUST	465	16700
	TR:Amb to T1{1}	25	1	56	0	1.00	1.00	1.00	1.00	(17)	DISP	1227	25050
	Amb to T1{1}	25	1	56	0	1.00	1.00	1.00	1.00	(17)	DISP	1227	25050
C58 -	Max P{1}									(3a)	HOOP	0	16700
	GR + Max P{1}	4	14	17	0	1.00	1.00	1.00	1.00	23a	SUST	507	16700
	TR:Amb to T1{1}	25	1	48	0	1.00	1.00	1.00	1.00	(17)	DISP	1057	25050
	Amb to T1{1}	25	1	48	0	1.00	1.00	1.00	1.00	(17)	DISP	1057	25050
C58 +	Max P{1}									(3a)	HOOP	0	16700
	GR + Max P{1}	3	14	17	0	1.00	1.00	1.00	1.00	23a	SUST	507	16700
	TR:Amb to T1{1}	43	1	48	0	1.00	1.00	1.00	1.00	(17)	DISP	1074	25050
	Amb to T1{1}	43	1	48	0	1.00	1.00	1.00	1.00	(17)	DISP	1074	25050

ASME B31.3 (2016) CODE COMPLIANCE
(Moments in ft-lb , Force in lbf) (Stress in psi)

Point name	Load combination	Axial Force	In-Pl. Moment	Out-Pl. Moment	Torsion Moment	S.I.F In	S.I.F Out	Index/SIF Ax.	Index/SIF Tor.	Eq. no.	Load type	Code Stress	Code Allow.
C59	- Max P{1}									(3a)	HOOP	0	16700
	GR + Max P{1}	4	28	1	0	1.00	1.00	1.00	1.00	23a	SUST	640	16700
	TR:Amb to T1{1}	43	0	15	0	1.00	1.00	1.00	1.00	(17)	DISP	361	25050
	Amb to T1{1}	43	0	15	0	1.00	1.00	1.00	1.00	(17)	DISP	361	25050
C59	+ Max P{1}									(3a)	HOOP	0	16700
	GR + Max P{1}	4	28	1	0	1.00	1.00	1.00	1.00	23a	SUST	640	16700
	TR:Amb to T1{1}	71	0	15	0	1.00	1.00	1.00	1.00	(17)	DISP	387	25050
	Amb to T1{1}	71	0	15	0	1.00	1.00	1.00	1.00	(17)	DISP	387	25050
C60	- Max P{1}									(3a)	HOOP	0	16700
	GR + Max P{1}	4	24	1	0	1.00	1.00	1.00	1.00	23a	SUST	554	16700
	TR:Amb to T1{1}	71	0	4	0	1.00	1.00	1.00	1.00	(17)	DISP	142	25050
	Amb to T1{1}	71	0	4	0	1.00	1.00	1.00	1.00	(17)	DISP	142	25050
C60	+ Max P{1}									(3a)	HOOP	0	16700
	GR + Max P{1}	4	24	1	0	1.00	1.00	1.00	1.00	23a	SUST	554	16700
	TR:Amb to T1{1}	98	0	4	0	1.00	1.00	1.00	1.00	(17)	DISP	167	25050
	Amb to T1{1}	98	0	4	0	1.00	1.00	1.00	1.00	(17)	DISP	167	25050
C61	- Max P{1}									(3a)	HOOP	0	16700
	GR + Max P{1}	4	26	1	0	1.00	1.00	1.00	1.00	23a	SUST	586	16700
	TR:Amb to T1{1}	98	0	1	0	1.00	1.00	1.00	1.00	(17)	DISP	112	25050
	Amb to T1{1}	98	0	1	0	1.00	1.00	1.00	1.00	(17)	DISP	112	25050
C61	+ Max P{1}									(3a)	HOOP	0	16700
	GR + Max P{1}	4	26	1	0	1.00	1.00	1.00	1.00	23a	SUST	586	16700
	TR:Amb to T1{1}	125	0	1	0	1.00	1.00	1.00	1.00	(17)	DISP	138	25050
	Amb to T1{1}	125	0	1	0	1.00	1.00	1.00	1.00	(17)	DISP	138	25050
C63	- Max P{1}									(3a)	HOOP	0	16700
	GR + Max P{1}	4	25	0	0	1.00	1.00	1.00	1.00	23a	SUST	563	16700
	TR:Amb to T1{1}	125	0	0	0	1.00	1.00	1.00	1.00	(17)	DISP	117	25050
	Amb to T1{1}	125	0	0	0	1.00	1.00	1.00	1.00	(17)	DISP	117	25050
C63	+ Max P{1}									(3a)	HOOP	0	16700
	GR + Max P{1}	4	25	0	0	1.00	1.00	1.00	1.00	23a	SUST	562	16700
	TR:Amb to T1{1}	127	0	0	0	1.00	1.00	1.00	1.00	(17)	DISP	119	25050
	Amb to T1{1}	127	0	0	0	1.00	1.00	1.00	1.00	(17)	DISP	119	25050
C64	- Max P{1}									(3a)	HOOP	0	16700
	GR + Max P{1}	4	26	0	0	1.00	1.00	1.00	1.00	23a	SUST	599	16700
	TR:Amb to T1{1}	127	0	0	0	1.00	1.00	1.00	1.00	(17)	DISP	120	25050
	Amb to T1{1}	127	0	0	0	1.00	1.00	1.00	1.00	(17)	DISP	120	25050
C64	+ Max P{1}									(3a)	HOOP	0	16700
	GR + Max P{1}	4	26	0	0	1.00	1.00	1.00	1.00	23a	SUST	599	16700
	TR:Amb to T1{1}	99	0	0	0	1.00	1.00	1.00	1.00	(17)	DISP	95	25050
	Amb to T1{1}	99	0	0	0	1.00	1.00	1.00	1.00	(17)	DISP	95	25050

ASME B31.3 (2016) CODE COMPLIANCE
(Moments in ft-lb , Force in lbf) (Stress in psi)

Point name	Load combination	Axial Force	In-Pl. Moment	Out-Pl. Moment	Torsion Moment	S.I.F In	S.I.F Out	Index/SIF Ax.	Index/SIF Tor.	Eq. no.	Load type	Code Stress	Code Allow.
C65 -	Max P{1}									(3a)	HOOP	0	16700
	GR + Max P{1}	4	22	0	0	1.00	1.00	1.00	1.00	23a	SUST	503	16700
	TR:Amb to T1{1}	99	0	1	0	1.00	1.00	1.00	1.00	(17)	DISP	105	25050
	Amb to T1{1}	99	0	1	0	1.00	1.00	1.00	1.00	(17)	DISP	105	25050
C65 +	Max P{1}									(3a)	HOOP	0	16700
	GR + Max P{1}	4	22	0	0	1.00	1.00	1.00	1.00	23a	SUST	503	16700
	TR:Amb to T1{1}	71	0	1	0	1.00	1.00	1.00	1.00	(17)	DISP	79	25050
	Amb to T1{1}	71	0	1	0	1.00	1.00	1.00	1.00	(17)	DISP	79	25050
C72 -	Max P{1}									(3a)	HOOP	0	16700
	GR + Max P{1}	5	37	6	0	1.00	1.00	1.00	1.00	23a	SUST	841	16700
	TR:Amb to T1{1}	71	0	21	0	1.00	1.00	1.00	1.00	(17)	DISP	525	25050
	Amb to T1{1}	71	0	21	0	1.00	1.00	1.00	1.00	(17)	DISP	525	25050
C72 +	Max P{1}									(3a)	HOOP	0	16700
	GR + Max P{1}	5	37	6	0	1.00	1.00	1.00	1.00	23a	SUST	841	16700
	TR:Amb to T1{1}	40	0	21	0	1.00	1.00	1.00	1.00	(17)	DISP	495	25050
	Amb to T1{1}	40	0	21	0	1.00	1.00	1.00	1.00	(17)	DISP	495	25050
C73 -	Max P{1}									(3a)	HOOP	0	16700
	GR + Max P{1}	5	18	22	0	1.00	1.00	1.00	1.00	23a	SUST	647	16700
	TR:Amb to T1{1}	40	1	24	0	1.00	1.00	1.00	1.00	(17)	DISP	547	25050
	Amb to T1{1}	40	1	24	0	1.00	1.00	1.00	1.00	(17)	DISP	547	25050
C73 +	Max P{1}									(3a)	HOOP	0	16700
	GR + Max P{1}	5	18	22	0	1.00	1.00	1.00	1.00	23a	SUST	647	16700
	TR:Amb to T1{1}	21	1	24	0	1.00	1.00	1.00	1.00	(17)	DISP	529	25050
	Amb to T1{1}	21	1	24	0	1.00	1.00	1.00	1.00	(17)	DISP	529	25050
C54 N-	Max P{1}									(3a)	HOOP	0	16700
	GR + Max P{1}	5	12	23	0	1.00	1.00	1.00	1.00	23a	SUST	591	16700
	TR:Amb to T1{1}	21	1	34	0	1.00	1.00	1.00	1.00	(17)	DISP	743	25050
	Amb to T1{1}	21	1	34	0	1.00	1.00	1.00	1.00	(17)	DISP	743	25050
C54 N+	Max P{1}									(3a)	HOOP	0	16700
	GR + Max P{1}	5	23	12	0	1.00	1.00	1.00	1.00	23a	SUST	591	16700
	TR:Amb to T1{1}	21	34	1	0	1.00	1.00	1.00	1.00	(17)	DISP	743	25050
	Amb to T1{1}	21	34	1	0	1.00	1.00	1.00	1.00	(17)	DISP	743	25050
C54 F-	Max P{1}									(3a)	HOOP	0	16700
	GR + Max P{1}	2	13	3	1	1.00	1.00	1.00	1.00	23a	SUST	299	16700
	TR:Amb to T1{1}	20	31	1	0	1.00	1.00	1.00	1.00	(17)	DISP	689	25050
	Amb to T1{1}	20	31	1	0	1.00	1.00	1.00	1.00	(17)	DISP	689	25050
C54 F+	Max P{1}									(3a)	HOOP	0	16700
	GR + Max P{1}	2	3	13	1	1.00	1.00	1.00	1.00	23a	SUST	299	16700
	TR:Amb to T1{1}	20	1	31	0	1.00	1.00	1.00	1.00	(17)	DISP	689	25050
	Amb to T1{1}	20	1	31	0	1.00	1.00	1.00	1.00	(17)	DISP	689	25050

ASME B31.3 (2016) CODE COMPLIANCE
(Moments in ft-lb , Force in lbf) (Stress in psi)

Point name	Load combination	Axial Force	In-Pl. Moment	Out-Pl. Moment	Torsion Moment	S.I.F In	S.I.F Out	Index/SIF Ax.	Index/SIF Tor.	Eq. no.	Load type	Code Stress	Code Allow.
C74	- Max P{1}									(3a)	HOOP	0	16700
	GR + Max P{1}	2	7	10	1	1.00	1.00	1.00	1.00	23a	SUST	289	16700
	TR:Amb to T1{1}	20	1	21	0	1.00	1.00	1.00	1.00	(17)	DISP	467	25050
	Amb to T1{1}	20	1	21	0	1.00	1.00	1.00	1.00	(17)	DISP	467	25050
C74	+ Max P{1}									(3a)	HOOP	0	16700
	GR + Max P{1}	2	7	10	1	1.00	1.00	1.00	1.00	23a	SUST	289	16700
	TR:Amb to T1{1}	31	1	21	0	1.00	1.00	1.00	1.00	(17)	DISP	477	25050
	Amb to T1{1}	31	1	21	0	1.00	1.00	1.00	1.00	(17)	DISP	477	25050
C75	- Max P{1}									(3a)	HOOP	0	16700
	GR + Max P{1}	2	30	33	1	1.00	1.00	1.00	1.00	23a	SUST	1011	16700
	TR:Amb to T1{1}	31	0	36	0	1.00	1.00	1.00	1.00	(17)	DISP	793	25050
	Amb to T1{1}	31	0	36	0	1.00	1.00	1.00	1.00	(17)	DISP	793	25050
C75	+ Max P{1}									(3a)	HOOP	0	16700
	GR + Max P{1}	2	30	33	1	1.00	1.00	1.00	1.00	23a	SUST	1011	16700
	TR:Amb to T1{1}	61	0	36	0	1.00	1.00	1.00	1.00	(17)	DISP	821	25050
	Amb to T1{1}	61	0	36	0	1.00	1.00	1.00	1.00	(17)	DISP	821	25050
C76	- Max P{1}									(3a)	HOOP	0	16700
	GR + Max P{1}	2	24	4	1	1.00	1.00	1.00	1.00	23a	SUST	551	16700
	TR:Amb to T1{1}	61	0	6	0	1.00	1.00	1.00	1.00	(17)	DISP	178	25050
	Amb to T1{1}	61	0	6	0	1.00	1.00	1.00	1.00	(17)	DISP	178	25050
C76	+ Max P{1}									(3a)	HOOP	0	16700
	GR + Max P{1}	3	24	4	1	1.00	1.00	1.00	1.00	23a	SUST	551	16700
	TR:Amb to T1{1}	87	0	6	0	1.00	1.00	1.00	1.00	(17)	DISP	202	25050
	Amb to T1{1}	87	0	6	0	1.00	1.00	1.00	1.00	(17)	DISP	202	25050
C77	- Max P{1}									(3a)	HOOP	0	16700
	GR + Max P{1}	3	26	1	1	1.00	1.00	1.00	1.00	23a	SUST	588	16700
	TR:Amb to T1{1}	87	0	1	0	1.00	1.00	1.00	1.00	(17)	DISP	93	25050
	Amb to T1{1}	87	0	1	0	1.00	1.00	1.00	1.00	(17)	DISP	93	25050
C77	+ Max P{1}									(3a)	HOOP	0	16700
	GR + Max P{1}	2	26	1	1	1.00	1.00	1.00	1.00	23a	SUST	587	16700
	TR:Amb to T1{1}	98	0	1	0	1.00	1.00	1.00	1.00	(17)	DISP	104	25050
	Amb to T1{1}	98	0	1	0	1.00	1.00	1.00	1.00	(17)	DISP	104	25050
C78	- Max P{1}									(3a)	HOOP	0	16700
	GR + Max P{1}	2	24	0	1	1.00	1.00	1.00	1.00	23a	SUST	541	16700
	TR:Amb to T1{1}	98	0	0	0	1.00	1.00	1.00	1.00	(17)	DISP	92	25050
	Amb to T1{1}	98	0	0	0	1.00	1.00	1.00	1.00	(17)	DISP	92	25050
C78	+ Max P{1}									(3a)	HOOP	0	16700
	GR + Max P{1}	2	24	0	1	1.00	1.00	1.00	1.00	23a	SUST	542	16700
	TR:Amb to T1{1}	70	0	0	0	1.00	1.00	1.00	1.00	(17)	DISP	67	25050
	Amb to T1{1}	70	0	0	0	1.00	1.00	1.00	1.00	(17)	DISP	67	25050

ASME B31.3 (2016) CODE COMPLIANCE
(Moments in ft-lb , Force in lbf) (Stress in psi)

Point name	Load combination	Axial Force	In-Pl. Moment	Out-Pl. Moment	Torsion Moment	S.I.F In	S.I.F Out	Index/SIF Ax.	Index/SIF Tor.	Eq. no.	Load type	Code Stress	Code Allow.
C79 -	Max P{1}									(3a)	HOOP	0	16700
	GR + Max P{1}	2	27	1	1	1.00	1.00	1.00	1.00	23a	SUST	605	16700
	TR:Amb to T1{1}	70	0	15	0	1.00	1.00	1.00	1.00	(17)	DISP	392	25050
	Amb to T1{1}	70	0	15	0	1.00	1.00	1.00	1.00	(17)	DISP	392	25050
C79 +	Max P{1}									(3a)	HOOP	0	16700
	GR + Max P{1}	3	27	1	1	1.00	1.00	1.00	1.00	23a	SUST	605	16700
	TR:Amb to T1{1}	43	0	15	0	1.00	1.00	1.00	1.00	(17)	DISP	367	25050
	Amb to T1{1}	43	0	15	0	1.00	1.00	1.00	1.00	(17)	DISP	367	25050
C80 -	Max P{1}									(3a)	HOOP	0	16700
	GR + Max P{1}	3	18	11	1	1.00	1.00	1.00	1.00	23a	SUST	469	16700
	TR:Amb to T1{1}	43	1	28	0	1.00	1.00	1.00	1.00	(17)	DISP	634	25050
	Amb to T1{1}	43	1	28	0	1.00	1.00	1.00	1.00	(17)	DISP	634	25050
C80 +	Max P{1}									(3a)	HOOP	0	16700
	GR + Max P{1}	3	18	11	1	1.00	1.00	1.00	1.00	23a	SUST	469	16700
	TR:Amb to T1{1}	24	1	28	0	1.00	1.00	1.00	1.00	(17)	DISP	615	25050
	Amb to T1{1}	24	1	28	0	1.00	1.00	1.00	1.00	(17)	DISP	615	25050
C62 N-	Max P{1}									(3a)	HOOP	0	16700
	GR + Max P{1}	3	12	11	1	1.00	1.00	1.00	1.00	23a	SUST	375	16700
	TR:Amb to T1{1}	24	0	36	0	1.00	1.00	1.00	1.00	(17)	DISP	792	25050
	Amb to T1{1}	24	0	36	0	1.00	1.00	1.00	1.00	(17)	DISP	792	25050
C62 N+	Max P{1}									(3a)	HOOP	0	16700
	GR + Max P{1}	3	11	12	1	1.00	1.00	1.00	1.00	23a	SUST	375	16700
	TR:Amb to T1{1}	24	36	1	0	1.00	1.00	1.00	1.00	(17)	DISP	792	25050
	Amb to T1{1}	24	36	1	0	1.00	1.00	1.00	1.00	(17)	DISP	792	25050
C62 F-	Max P{1}									(3a)	HOOP	0	16700
	GR + Max P{1}	1	5	4	1	1.00	1.00	1.00	1.00	23a	SUST	144	16700
	TR:Amb to T1{1}	16	15	1	0	1.00	1.00	1.00	1.00	(17)	DISP	332	25050
	Amb to T1{1}	16	15	1	0	1.00	1.00	1.00	1.00	(17)	DISP	332	25050
C62 F+	Max P{1}									(3a)	HOOP	0	16700
	GR + Max P{1}	1	4	5	1	1.00	1.00	1.00	1.00	23a	SUST	144	16700
	TR:Amb to T1{1}	16	1	15	0	1.00	1.00	1.00	1.00	(17)	DISP	332	25050
	Amb to T1{1}	16	1	15	0	1.00	1.00	1.00	1.00	(17)	DISP	332	25050
C82 -	Max P{1}									(3a)	HOOP	0	16700
	GR + Max P{1}	1	8	4	1	1.00	1.00	1.00	1.00	23a	SUST	196	16700
	TR:Amb to T1{1}	16	1	3	0	1.00	1.00	1.00	1.00	(17)	DISP	84	25050
	Amb to T1{1}	16	1	3	0	1.00	1.00	1.00	1.00	(17)	DISP	84	25050
C82 +	Max P{1}									(3a)	HOOP	0	16700
	GR + Max P{1}	1	8	4	1	1.00	1.00	1.00	1.00	23a	SUST	196	16700
	TR:Amb to T1{1}	22	1	3	0	1.00	1.00	1.00	1.00	(17)	DISP	89	25050
	Amb to T1{1}	22	1	3	0	1.00	1.00	1.00	1.00	(17)	DISP	89	25050

ASME B31.3 (2016) CODE COMPLIANCE
(Moments in ft-lb , Force in lbf) (Stress in psi)

Point name	Load combination	Axial Force	In-Pl. Moment	Out-Pl. Moment	Torsion Moment	S.I.F In	S.I.F Out	Index/SIF Ax.	Index/SIF Tor.	Eq. no.	Load type	Code Stress	Code Allow.
C81 -	Max P{1}									(3a)	HOOP	0	16700
	GR + Max P{1}	1	11	15	1	1.00	1.00	1.00	1.00	23a	SUST	414	16700
	TR:Amb to T1{1}	22	0	52	0	1.00	1.00	1.00	1.00	(17)	DISP	1128	25050
	Amb to T1{1}	22	0	52	0	1.00	1.00	1.00	1.00	(17)	DISP	1128	25050
C81 +	Max P{1}									(3a)	HOOP	0	16700
	GR + Max P{1}	1	11	15	0	1.00	1.00	1.00	1.00	23a	SUST	414	16700
	TR:Amb to T1{1}	34	0	52	0	1.00	1.00	1.00	1.00	(17)	DISP	1140	25050
	Amb to T1{1}	34	0	52	0	1.00	1.00	1.00	1.00	(17)	DISP	1140	25050
C83 -	Max P{1}									(3a)	HOOP	0	16700
	GR + Max P{1}	1	12	3	0	1.00	1.00	1.00	1.00	23a	SUST	287	16700
	TR:Amb to T1{1}	34	1	2	0	1.00	1.00	1.00	1.00	(17)	DISP	75	25050
	Amb to T1{1}	34	1	2	0	1.00	1.00	1.00	1.00	(17)	DISP	75	25050
C83 +	Max P{1}									(3a)	HOOP	0	16700
	GR + Max P{1}	1	12	3	0	1.00	1.00	1.00	1.00	23a	SUST	287	16700
	TR:Amb to T1{1}	23	1	2	0	1.00	1.00	1.00	1.00	(17)	DISP	65	25050
	Amb to T1{1}	23	1	2	0	1.00	1.00	1.00	1.00	(17)	DISP	65	25050
C66 N-	Max P{1}									(3a)	HOOP	0	16700
	GR + Max P{1}	1	7	2	0	1.00	1.00	1.00	1.00	23a	SUST	173	16700
	TR:Amb to T1{1}	23	1	14	0	1.00	1.00	1.00	1.00	(17)	DISP	316	25050
	Amb to T1{1}	23	1	14	0	1.00	1.00	1.00	1.00	(17)	DISP	316	25050
C66 N+	Max P{1}									(3a)	HOOP	0	16700
	GR + Max P{1}	1	2	7	0	1.00	1.00	1.00	1.00	23a	SUST	173	16700
	TR:Amb to T1{1}	23	14	1	0	1.00	1.00	1.00	1.00	(17)	DISP	316	25050
	Amb to T1{1}	23	14	1	0	1.00	1.00	1.00	1.00	(17)	DISP	316	25050
C66 F-	Max P{1}									(3a)	HOOP	0	16700
	GR + Max P{1}	2	1	6	1	1.00	1.00	1.00	1.00	23a	SUST	141	16700
	TR:Amb to T1{1}	24	16	1	0	1.00	1.00	1.00	1.00	(17)	DISP	371	25050
	Amb to T1{1}	24	16	1	0	1.00	1.00	1.00	1.00	(17)	DISP	371	25050
C66 F+	Max P{1}									(3a)	HOOP	0	16700
	GR + Max P{1}	2	6	1	1	1.00	1.00	1.00	1.00	23a	SUST	141	16700
	TR:Amb to T1{1}	24	1	16	0	1.00	1.00	1.00	1.00	(17)	DISP	371	25050
	Amb to T1{1}	24	1	16	0	1.00	1.00	1.00	1.00	(17)	DISP	371	25050
C84 -	Max P{1}									(3a)	HOOP	0	16700
	GR + Max P{1}	2	11	1	1	1.00	1.00	1.00	1.00	23a	SUST	250	16700
	TR:Amb to T1{1}	24	1	5	0	1.00	1.00	1.00	1.00	(17)	DISP	124	25050
	Amb to T1{1}	24	1	5	0	1.00	1.00	1.00	1.00	(17)	DISP	124	25050
C84 +	Max P{1}									(3a)	HOOP	0	16700
	GR + Max P{1}	2	11	1	1	1.00	1.00	1.00	1.00	23a	SUST	250	16700
	TR:Amb to T1{1}	34	1	5	0	1.00	1.00	1.00	1.00	(17)	DISP	133	25050
	Amb to T1{1}	34	1	5	0	1.00	1.00	1.00	1.00	(17)	DISP	133	25050

ASME B31.3 (2016) CODE COMPLIANCE
(Moments in ft-lb , Force in lbf) (Stress in psi)

Point name	Load combination	Axial Force	In-Pl. Moment	Out-Pl. Moment	Torsion Moment	S.I.F In	S.I.F Out	Index/SIF Ax.	Index/SIF Tor.	Eq. no.	Load type	Code Stress	Code Allow.
C67 N-	Max P{1}									(3a)	HOOP	0	16700
	GR + Max P{1}	2	1	4	1	1.00	1.00	1.00	1.00	23a	SUST	98	16700
	TR:Amb to T1{1}	34	0	16	0	1.00	1.00	1.00	1.00	(17)	DISP	372	25050
	Amb to T1{1}	34	0	16	0	1.00	1.00	1.00	1.00	(17)	DISP	372	25050
C67 N+	Max P{1}									(3a)	HOOP	0	16700
	GR + Max P{1}	2	1	4	1	1.00	1.00	1.00	1.00	23a	SUST	98	16700
	TR:Amb to T1{1}	34	0	16	0	1.00	1.00	1.00	1.00	(17)	DISP	372	25050
	Amb to T1{1}	34	0	16	0	1.00	1.00	1.00	1.00	(17)	DISP	372	25050
C67 M	Max P{1}									(3a)	HOOP	0	16700
	GR + Max P{1}	2	1	4	1	1.00	1.00	1.00	1.00	23a	SUST	99	16700
	TR:Amb to T1{1}	34	0	16	0	1.00	1.00	1.00	1.00	(17)	DISP	378	25050
	Amb to T1{1}	34	0	16	0	1.00	1.00	1.00	1.00	(17)	DISP	378	25050
C67 F-	Max P{1}									(3a)	HOOP	0	16700
	GR + Max P{1}	2	1	4	1	1.00	1.00	1.00	1.00	23a	SUST	100	16700
	TR:Amb to T1{1}	34	0	16	0	1.00	1.00	1.00	1.00	(17)	DISP	384	25050
	Amb to T1{1}	34	0	16	0	1.00	1.00	1.00	1.00	(17)	DISP	384	25050
C67 F+	Max P{1}									(3a)	HOOP	0	16700
	GR + Max P{1}	2	1	4	1	1.00	1.00	1.00	1.00	23a	SUST	100	16700
	TR:Amb to T1{1}	34	0	16	0	1.00	1.00	1.00	1.00	(17)	DISP	384	25050
	Amb to T1{1}	34	0	16	0	1.00	1.00	1.00	1.00	(17)	DISP	384	25050
C68	Max P{1}									(3a)	HOOP	0	16700
	GR + Max P{1}	2	2	6	1	1.00	1.00	1.00	1.00	23a	SUST	139	16700
	TR:Amb to T1{1}	34	0	28	0	1.00	1.00	1.00	1.00	(17)	DISP	626	25050
	Amb to T1{1}	34	0	28	0	1.00	1.00	1.00	1.00	(17)	DISP	626	25050
C69	Max P{1}									(3a)	HOOP	0	16700
	GR + Max P{1}	2	0	7	1	1.00	1.00	1.00	1.00	23a	SUST	166	16700
	TR:Amb to T1{1}	34	0	39	0	1.00	1.00	1.00	1.00	(17)	DISP	873	25050
	Amb to T1{1}	34	0	39	0	1.00	1.00	1.00	1.00	(17)	DISP	873	25050
C70 -	Max P{1}									(3a)	HOOP	0	16700
	GR + Max P{1}	2	3	8	1	1.00	1.00	1.00	1.00	23a	SUST	200	16700
	TR:Amb to T1{1}	34	0	46	0	1.00	1.00	1.00	1.00	(17)	DISP	1009	25050
	Amb to T1{1}	34	0	46	0	1.00	1.00	1.00	1.00	(17)	DISP	1009	25050
C70 +	Max P{1}									(3a)	HOOP	0	16700
	GR + Max P{1}	0	0	0	0	1.00	1.00	1.00	1.00	23a	SUST	2	16700
	TR:Amb to T1{1}	0	0	0	0	1.00	1.00	1.00	1.00	(17)	DISP	0	25050
	Amb to T1{1}	0	0	0	0	1.00	1.00	1.00	1.00	(17)	DISP	0	25050
C71	Max P{1}									(3a)	HOOP	0	16700
	GR + Max P{1}	0	0	0	0	1.00	1.00	1.00	1.00	23a	SUST	0	16700
	TR:Amb to T1{1}	0	0	0	0	1.00	1.00	1.00	1.00	(17)	DISP	0	25050
	Amb to T1{1}	0	0	0	0	1.00	1.00	1.00	1.00	(17)	DISP	0	25050

*** Segment C end ***

ASME B31.3 (2016) CODE COMPLIANCE
(Moments in ft-lb , Force in lbf) (Stress in psi)

Point name	Load combination	Axial Force	In-Pl. Moment	Out-Pl. Moment	Torsion Moment	S.I.F In	S.I.F Out	Index/SIF Ax.	Index/SIF Tor.	Eq. no.	Load type	Code Stress	Code Allow.
*** Segment D begin ***													
D00	Max P{1}									(3a)	HOOP	0	16700
	GR + Max P{1}	0	0	0	0	1.00	1.00	1.00	1.00	23a	SUST	0	16700
	TR:Amb to T1{1}	0	0	0	0	1.00	1.00	1.00	1.00	(17)	DISP	0	25050
	Amb to T1{1}	0	0	0	0	1.00	1.00	1.00	1.00	(17)	DISP	0	25050
D01 -	Max P{1}									(3a)	HOOP	0	16700
	GR + Max P{1}	0	0	0	0	1.00	1.00	1.00	1.00	23a	SUST	2	16700
	TR:Amb to T1{1}	0	0	0	0	1.00	1.00	1.00	1.00	(17)	DISP	0	25050
	Amb to T1{1}	0	0	0	0	1.00	1.00	1.00	1.00	(17)	DISP	0	25050
D01 +	Max P{1}									(3a)	HOOP	0	16700
	GR + Max P{1}	1	51	5	0	1.00	1.00	1.00	1.00	23a	SUST	1157	16700
	TR:Amb to T1{1}	64	1	4	0	1.00	1.00	1.00	1.00	(17)	DISP	154	25050
	Amb to T1{1}	64	1	4	0	1.00	1.00	1.00	1.00	(17)	DISP	154	25050
D02	Max P{1}									(3a)	HOOP	0	16700
	GR + Max P{1}	1	38	5	0	1.00	1.00	1.00	1.00	23a	SUST	873	16700
	TR:Amb to T1{1}	64	1	3	0	1.00	1.00	1.00	1.00	(17)	DISP	135	25050
	Amb to T1{1}	64	1	3	0	1.00	1.00	1.00	1.00	(17)	DISP	135	25050
D03	Max P{1}									(3a)	HOOP	0	16700
	GR + Max P{1}	1	18	5	0	1.00	1.00	1.00	1.00	23a	SUST	426	16700
	TR:Amb to T1{1}	64	1	2	0	1.00	1.00	1.00	1.00	(17)	DISP	101	25050
	Amb to T1{1}	64	1	2	0	1.00	1.00	1.00	1.00	(17)	DISP	101	25050
D04 N-	Max P{1}									(3a)	HOOP	0	16700
	GR + Max P{1}	1	19	3	0	1.00	1.00	1.00	1.00	23a	SUST	440	16700
	TR:Amb to T1{1}	64	1	3	0	1.00	1.00	1.00	1.00	(17)	DISP	120	25050
	Amb to T1{1}	64	1	3	0	1.00	1.00	1.00	1.00	(17)	DISP	120	25050
D04 N+	Max P{1}									(3a)	HOOP	0	16700
	GR + Max P{1}	1	19	3	0	1.00	1.00	1.00	1.00	23a	SUST	440	16700
	TR:Amb to T1{1}	64	1	3	0	1.00	1.00	1.00	1.00	(17)	DISP	120	25050
	Amb to T1{1}	64	1	3	0	1.00	1.00	1.00	1.00	(17)	DISP	120	25050
D04 M	Max P{1}									(3a)	HOOP	0	16700
	GR + Max P{1}	1	19	3	0	1.00	1.00	1.00	1.00	23a	SUST	443	16700
	TR:Amb to T1{1}	64	1	3	0	1.00	1.00	1.00	1.00	(17)	DISP	121	25050
	Amb to T1{1}	64	1	3	0	1.00	1.00	1.00	1.00	(17)	DISP	121	25050
D04 F-	Max P{1}									(3a)	HOOP	0	16700
	GR + Max P{1}	1	19	3	0	1.00	1.00	1.00	1.00	23a	SUST	446	16700
	TR:Amb to T1{1}	64	1	3	0	1.00	1.00	1.00	1.00	(17)	DISP	121	25050
	Amb to T1{1}	64	1	3	0	1.00	1.00	1.00	1.00	(17)	DISP	121	25050

Primary Piping Low Temp
04/23/2020 2018719 BENTLEY
03:23 PM AutoPIPE Nuclear 12.00.00.16 RESULT PAGE 147

ASME B31.3 (2016) CODE COMPLIANCE
(Moments in ft-lb , Force in lbf) (Stress in psi)

Point name	Load combination	Axial Force	In-Pl. Moment	Out-Pl. Moment	Torsion Moment	S.I.F In	S.I.F Out	Index/SIF Ax.	Index/SIF Tor.	Eq. no.	Load type	Code Stress	Code Allow.
D04 F+	Max P{1}									(3a)	HOOP	0	16700
	GR + Max P{1}	1	19	3	0	1.00	1.00	1.00	1.00	23a	SUST	446	16700
	TR:Amb to T1{1}	64	1	3	0	1.00	1.00	1.00	1.00	(17)	DISP	121	25050
	Amb to T1{1}	64	1	3	0	1.00	1.00	1.00	1.00	(17)	DISP	121	25050
D13 -	Max P{1}									(3a)	HOOP	0	16700
	GR + Max P{1}	1	34	1	0	1.00	1.00	1.00	1.00	23a	SUST	771	16700
	TR:Amb to T1{1}	64	0	14	0	1.00	1.00	1.00	1.00	(17)	DISP	357	25050
	Amb to T1{1}	64	0	14	0	1.00	1.00	1.00	1.00	(17)	DISP	357	25050
D13 +	Max P{1}									(3a)	HOOP	0	16700
	GR + Max P{1}	1	34	1	0	1.00	1.00	1.00	1.00	23a	SUST	771	16700
	TR:Amb to T1{1}	34	0	14	0	1.00	1.00	1.00	1.00	(17)	DISP	329	25050
	Amb to T1{1}	34	0	14	0	1.00	1.00	1.00	1.00	(17)	DISP	329	25050
D14 -	Max P{1}									(3a)	HOOP	0	16700
	GR + Max P{1}	1	12	5	0	1.00	1.00	1.00	1.00	23a	SUST	288	16700
	TR:Amb to T1{1}	34	1	23	0	1.00	1.00	1.00	1.00	(17)	DISP	515	25050
	Amb to T1{1}	34	1	23	0	1.00	1.00	1.00	1.00	(17)	DISP	515	25050
D14 +	Max P{1}									(3a)	HOOP	0	16700
	GR + Max P{1}	1	12	5	0	1.00	1.00	1.00	1.00	23a	SUST	288	16700
	TR:Amb to T1{1}	20	1	23	0	1.00	1.00	1.00	1.00	(17)	DISP	501	25050
	Amb to T1{1}	20	1	23	0	1.00	1.00	1.00	1.00	(17)	DISP	501	25050
D08 N-	Max P{1}									(3a)	HOOP	0	16700
	GR + Max P{1}	1	7	5	0	1.00	1.00	1.00	1.00	23a	SUST	196	16700
	TR:Amb to T1{1}	20	1	29	0	1.00	1.00	1.00	1.00	(17)	DISP	648	25050
	Amb to T1{1}	20	1	29	0	1.00	1.00	1.00	1.00	(17)	DISP	648	25050
D08 N+	Max P{1}									(3a)	HOOP	0	16700
	GR + Max P{1}	1	5	7	0	1.00	1.00	1.00	1.00	23a	SUST	196	16700
	TR:Amb to T1{1}	20	29	1	0	1.00	1.00	1.00	1.00	(17)	DISP	648	25050
	Amb to T1{1}	20	29	1	0	1.00	1.00	1.00	1.00	(17)	DISP	648	25050
D08 F-	Max P{1}									(3a)	HOOP	0	16700
	GR + Max P{1}	0	5	7	0	1.00	1.00	1.00	1.00	23a	SUST	204	16700
	TR:Amb to T1{1}	14	12	1	0	1.00	1.00	1.00	1.00	(17)	DISP	275	25050
	Amb to T1{1}	14	12	1	0	1.00	1.00	1.00	1.00	(17)	DISP	275	25050
D08 F+	Max P{1}									(3a)	HOOP	0	16700
	GR + Max P{1}	0	7	5	0	1.00	1.00	1.00	1.00	23a	SUST	204	16700
	TR:Amb to T1{1}	14	1	12	0	1.00	1.00	1.00	1.00	(17)	DISP	275	25050
	Amb to T1{1}	14	1	12	0	1.00	1.00	1.00	1.00	(17)	DISP	275	25050
D15 -	Max P{1}									(3a)	HOOP	0	16700
	GR + Max P{1}	0	12	5	0	1.00	1.00	1.00	1.00	23a	SUST	299	16700
	TR:Amb to T1{1}	14	1	2	0	1.00	1.00	1.00	1.00	(17)	DISP	68	25050
	Amb to T1{1}	14	1	2	0	1.00	1.00	1.00	1.00	(17)	DISP	68	25050

Primary Piping Low Temp
04/23/2020 2018719 BENTLEY
03:23 PM AutoPIPE Nuclear 12.00.00.16 RESULT PAGE 148

ASME B31.3 (2016) CODE COMPLIANCE
(Moments in ft-lb , Force in lbf) (Stress in psi)

Point name	Load combination	Axial Force	In-Pl. Moment	Out-Pl. Moment	Torsion Moment	S.I.F In	S.I.F Out	Index/SIF Ax.	Index/SIF Tor.	Eq. no.	Load type	Code Stress	Code Allow.
D15	+ Max P{1}									(3a)	HOOP	0	16700
	GR + Max P{1}	0	12	5	0	1.00	1.00	1.00	1.00	23a	SUST	299	16700
	TR:Amb to T1{1}	20	1	2	0	1.00	1.00	1.00	1.00	(17)	DISP	74	25050
	Amb to T1{1}	20	1	2	0	1.00	1.00	1.00	1.00	(17)	DISP	74	25050
D18	- Max P{1}									(3a)	HOOP	0	16700
	GR + Max P{1}	0	10	2	0	1.00	1.00	1.00	1.00	23a	SUST	229	16700
	TR:Amb to T1{1}	20	0	13	0	1.00	1.00	1.00	1.00	(17)	DISP	287	25050
	Amb to T1{1}	20	0	13	0	1.00	1.00	1.00	1.00	(17)	DISP	287	25050
D18	+ Max P{1}									(3a)	HOOP	0	16700
	GR + Max P{1}	0	10	2	0	1.00	1.00	1.00	1.00	23a	SUST	229	16700
	TR:Amb to T1{1}	22	0	13	0	1.00	1.00	1.00	1.00	(17)	DISP	289	25050
	Amb to T1{1}	22	0	13	0	1.00	1.00	1.00	1.00	(17)	DISP	289	25050
D16	- Max P{1}									(3a)	HOOP	0	16700
	GR + Max P{1}	0	8	1	0	1.00	1.00	1.00	1.00	23a	SUST	180	16700
	TR:Amb to T1{1}	22	1	7	0	1.00	1.00	1.00	1.00	(17)	DISP	171	25050
	Amb to T1{1}	22	1	7	0	1.00	1.00	1.00	1.00	(17)	DISP	171	25050
D16	+ Max P{1}									(3a)	HOOP	0	16700
	GR + Max P{1}	0	8	1	0	1.00	1.00	1.00	1.00	23a	SUST	180	16700
	TR:Amb to T1{1}	14	1	7	0	1.00	1.00	1.00	1.00	(17)	DISP	164	25050
	Amb to T1{1}	14	1	7	0	1.00	1.00	1.00	1.00	(17)	DISP	164	25050
D12 N-	Max P{1}									(3a)	HOOP	0	16700
	GR + Max P{1}	0	4	1	0	1.00	1.00	1.00	1.00	23a	SUST	87	16700
	TR:Amb to T1{1}	14	0	13	0	1.00	1.00	1.00	1.00	(17)	DISP	296	25050
	Amb to T1{1}	14	0	13	0	1.00	1.00	1.00	1.00	(17)	DISP	296	25050
D12 N+	Max P{1}									(3a)	HOOP	0	16700
	GR + Max P{1}	0	1	4	0	1.00	1.00	1.00	1.00	23a	SUST	87	16700
	TR:Amb to T1{1}	14	13	1	0	1.00	1.00	1.00	1.00	(17)	DISP	296	25050
	Amb to T1{1}	14	13	1	0	1.00	1.00	1.00	1.00	(17)	DISP	296	25050
D12 F-	Max P{1}									(3a)	HOOP	0	16700
	GR + Max P{1}	0	3	11	1	1.00	1.00	1.00	1.00	23a	SUST	264	16700
	TR:Amb to T1{1}	12	7	1	0	1.00	1.00	1.00	1.00	(17)	DISP	163	25050
	Amb to T1{1}	12	7	1	0	1.00	1.00	1.00	1.00	(17)	DISP	163	25050
D12 F+	Max P{1}									(3a)	HOOP	0	16700
	GR + Max P{1}	0	11	3	1	1.00	1.00	1.00	1.00	23a	SUST	264	16700
	TR:Amb to T1{1}	12	1	7	0	1.00	1.00	1.00	1.00	(17)	DISP	163	25050
	Amb to T1{1}	12	1	7	0	1.00	1.00	1.00	1.00	(17)	DISP	163	25050
D19	- Max P{1}									(3a)	HOOP	0	16700
	GR + Max P{1}	0	17	3	1	1.00	1.00	1.00	1.00	23a	SUST	388	16700
	TR:Amb to T1{1}	12	1	0	0	1.00	1.00	1.00	1.00	(17)	DISP	27	25050
	Amb to T1{1}	12	1	0	0	1.00	1.00	1.00	1.00	(17)	DISP	27	25050

Primary Piping Low Temp
04/23/2020 2018719 BENTLEY
03:23 PM AutoPIPE Nuclear 12.00.00.16 RESULT PAGE 149

ASME B31.3 (2016) CODE COMPLIANCE
(Moments in ft-lb , Force in lbf) (Stress in psi)

Point name	Load combination	Axial Force	In-Pl. Moment	Out-Pl. Moment	Torsion Moment	S.I.F In	S.I.F Out	Index/SIF Ax.	Index/SIF Tor.	Eq. no.	Load type	Code Stress	Code Allow.
D19	+ Max P{1}									(3a)	HOOP	0	16700
	GR + Max P{1}	0	17	3	1	1.00	1.00	1.00	1.00	23a	SUST	388	16700
	TR:Amb to T1{1}	28	1	0	0	1.00	1.00	1.00	1.00	(17)	DISP	42	25050
	Amb to T1{1}	28	1	0	0	1.00	1.00	1.00	1.00	(17)	DISP	42	25050
D25	- Max P{1}									(3a)	HOOP	0	16700
	GR + Max P{1}	0	29	4	1	1.00	1.00	1.00	1.00	23a	SUST	651	16700
	TR:Amb to T1{1}	28	0	10	0	1.00	1.00	1.00	1.00	(17)	DISP	232	25050
	Amb to T1{1}	28	0	10	0	1.00	1.00	1.00	1.00	(17)	DISP	232	25050
D25	+ Max P{1}									(3a)	HOOP	0	16700
	GR + Max P{1}	0	29	4	1	1.00	1.00	1.00	1.00	23a	SUST	651	16700
	TR:Amb to T1{1}	25	0	10	0	1.00	1.00	1.00	1.00	(17)	DISP	229	25050
	Amb to T1{1}	25	0	10	0	1.00	1.00	1.00	1.00	(17)	DISP	229	25050
D20	- Max P{1}									(3a)	HOOP	0	16700
	GR + Max P{1}	1	16	5	1	1.00	1.00	1.00	1.00	23a	SUST	371	16700
	TR:Amb to T1{1}	25	1	3	0	1.00	1.00	1.00	1.00	(17)	DISP	96	25050
	Amb to T1{1}	25	1	3	0	1.00	1.00	1.00	1.00	(17)	DISP	96	25050
D20	+ Max P{1}									(3a)	HOOP	0	16700
	GR + Max P{1}	0	16	5	1	1.00	1.00	1.00	1.00	23a	SUST	371	16700
	TR:Amb to T1{1}	16	1	3	0	1.00	1.00	1.00	1.00	(17)	DISP	87	25050
	Amb to T1{1}	16	1	3	0	1.00	1.00	1.00	1.00	(17)	DISP	87	25050
D17 N-	Max P{1}									(3a)	HOOP	0	16700
	GR + Max P{1}	1	10	5	1	1.00	1.00	1.00	1.00	23a	SUST	258	16700
	TR:Amb to T1{1}	16	0	13	0	1.00	1.00	1.00	1.00	(17)	DISP	303	25050
	Amb to T1{1}	16	0	13	0	1.00	1.00	1.00	1.00	(17)	DISP	303	25050
D17 N+	Max P{1}									(3a)	HOOP	0	16700
	GR + Max P{1}	1	5	10	1	1.00	1.00	1.00	1.00	23a	SUST	258	16700
	TR:Amb to T1{1}	16	13	1	0	1.00	1.00	1.00	1.00	(17)	DISP	303	25050
	Amb to T1{1}	16	13	1	0	1.00	1.00	1.00	1.00	(17)	DISP	303	25050
D17 F-	Max P{1}									(3a)	HOOP	0	16700
	GR + Max P{1}	0	3	5	0	1.00	1.00	1.00	1.00	23a	SUST	137	16700
	TR:Amb to T1{1}	20	27	1	0	1.00	1.00	1.00	1.00	(17)	DISP	588	25050
	Amb to T1{1}	20	27	1	0	1.00	1.00	1.00	1.00	(17)	DISP	588	25050
D17 F+	Max P{1}									(3a)	HOOP	0	16700
	GR + Max P{1}	0	5	3	0	1.00	1.00	1.00	1.00	23a	SUST	137	16700
	TR:Amb to T1{1}	20	0	27	0	1.00	1.00	1.00	1.00	(17)	DISP	588	25050
	Amb to T1{1}	20	0	27	0	1.00	1.00	1.00	1.00	(17)	DISP	588	25050
D26	- Max P{1}									(3a)	HOOP	0	16700
	GR + Max P{1}	0	10	3	0	1.00	1.00	1.00	1.00	23a	SUST	226	16700
	TR:Amb to T1{1}	20	0	19	0	1.00	1.00	1.00	1.00	(17)	DISP	418	25050
	Amb to T1{1}	20	0	19	0	1.00	1.00	1.00	1.00	(17)	DISP	418	25050

Primary Piping Low Temp
04/23/2020 2018719 BENTLEY
03:23 PM AutoPIPE Nuclear 12.00.00.16 RESULT PAGE 150

ASME B31.3 (2016) CODE COMPLIANCE
(Moments in ft-lb , Force in lbf) (Stress in psi)

Point name	Load combination	Axial Force	In-Pl. Moment	Out-Pl. Moment	Torsion Moment	S.I.F In	S.I.F Out	Index/SIF Ax.	Index/SIF Tor.	Eq. no.	Load type	Code Stress	Code Allow.
D26	+ Max P{1}									(3a)	HOOP	0	16700
	GR + Max P{1}	0	10	3	0	1.00	1.00	1.00	1.00	23a	SUST	226	16700
	TR:Amb to T1{1}	35	0	19	0	1.00	1.00	1.00	1.00	(17)	DISP	432	25050
	Amb to T1{1}	35	0	19	0	1.00	1.00	1.00	1.00	(17)	DISP	432	25050
D28	- Max P{1}									(3a)	HOOP	0	16700
	GR + Max P{1}	0	17	1	0	1.00	1.00	1.00	1.00	23a	SUST	391	16700
	TR:Amb to T1{1}	35	0	23	0	1.00	1.00	1.00	1.00	(17)	DISP	534	25050
	Amb to T1{1}	35	0	23	0	1.00	1.00	1.00	1.00	(17)	DISP	534	25050
D28	+ Max P{1}									(3a)	HOOP	0	16700
	GR + Max P{1}	0	17	1	0	1.00	1.00	1.00	1.00	23a	SUST	391	16700
	TR:Amb to T1{1}	65	0	23	0	1.00	1.00	1.00	1.00	(17)	DISP	562	25050
	Amb to T1{1}	65	0	23	0	1.00	1.00	1.00	1.00	(17)	DISP	562	25050
D27	- Max P{1}									(3a)	HOOP	0	16700
	GR + Max P{1}	0	11	5	0	1.00	1.00	1.00	1.00	23a	SUST	277	16700
	TR:Amb to T1{1}	65	0	2	0	1.00	1.00	1.00	1.00	(17)	DISP	114	25050
	Amb to T1{1}	65	0	2	0	1.00	1.00	1.00	1.00	(17)	DISP	114	25050
D27	+ Max P{1}									(3a)	HOOP	0	16700
	GR + Max P{1}	0	11	5	0	1.00	1.00	1.00	1.00	23a	SUST	277	16700
	TR:Amb to T1{1}	82	0	2	0	1.00	1.00	1.00	1.00	(17)	DISP	130	25050
	Amb to T1{1}	82	0	2	0	1.00	1.00	1.00	1.00	(17)	DISP	130	25050
D21	Max P{1}									(3a)	HOOP	0	16700
	GR + Max P{1}	0	1	7	0	1.00	1.00	1.00	1.00	23a	SUST	156	16700
	TR:Amb to T1{1}	82	0	5	0	1.00	1.00	1.00	1.00	(17)	DISP	178	25050
	Amb to T1{1}	82	0	5	0	1.00	1.00	1.00	1.00	(17)	DISP	178	25050
D22	- Max P{1}									(3a)	HOOP	0	16700
	GR + Max P{1}	0	2	7	0	1.00	1.00	1.00	1.00	23a	SUST	171	16700
	TR:Amb to T1{1}	82	0	5	0	1.00	1.00	1.00	1.00	(17)	DISP	194	25050
	Amb to T1{1}	82	0	5	0	1.00	1.00	1.00	1.00	(17)	DISP	194	25050
D22	+ Max P{1}									(3a)	HOOP	0	16700
	GR + Max P{1}	0	2	0	0	1.00	1.00	1.00	1.00	23a	SUST	41	16700
	TR:Amb to T1{1}	0	0	0	0	1.00	1.00	1.00	1.00	(17)	DISP	0	25050
	Amb to T1{1}	0	0	0	0	1.00	1.00	1.00	1.00	(17)	DISP	0	25050
D23	N- Max P{1}									(3a)	HOOP	0	16700
	GR + Max P{1}	0	1	0	0	1.00	1.00	1.00	1.00	23a	SUST	12	16700
	TR:Amb to T1{1}	0	0	0	0	1.00	1.00	1.00	1.00	(17)	DISP	0	25050
	Amb to T1{1}	0	0	0	0	1.00	1.00	1.00	1.00	(17)	DISP	0	25050
D23	N+ Max P{1}									(3a)	HOOP	0	16700
	GR + Max P{1}	0	1	0	0	1.30	1.08	1.00	1.00	23a	SUST	16	16700
	TR:Amb to T1{1}	0	0	0	0	1.73	1.44	1.00	1.00	(17)	DISP	0	25050
	Amb to T1{1}	0	0	0	0	1.73	1.44	1.00	1.00	(17)	DISP	0	25050

```
-----------------------------------------------------------------------------------------------------------------------
Primary Piping Low Temp
04/23/2020 2018719                                                    BENTLEY
03:23 PM                                                              AutoPIPE Nuclear 12.00.00.16   RESULT PAGE 151
-----------------------------------------------------------------------------------------------------------------------

                              ASME B31.3 (2016)  CODE COMPLIANCE
              (Moments in ft-lb  , Force in lbf  )     (Stress in psi     )
 Point     Load                     Axial  In-Pl. Out-Pl. Torsion   S.I.F   Index/SIF  Eq. Load   Code   Code
 name   combination                 Force  Moment  Moment  Moment  In  Out   Ax. Tor.  no. type  Stress Allow.
 ------ ----------------------    ------- ------- ------- ------- ---- ---- ---- ---- ---- ----  ------ ------
 D23 F- Max P{1}                                                                        (3a) HOOP       0  16700
        GR + Max P{1}                    1       0       0       0 1.30 1.08 1.00 1.00  23a SUST       1  16700
        TR:Amb to T1{1}                  0       0       0       0 1.73 1.44 1.00 1.00 (17) DISP       0  25050
        Amb to T1{1}                     0       0       0       0 1.73 1.44 1.00 1.00 (17) DISP       0  25050

 D23 F+ Max P{1}                                                                        (3a) HOOP       0  16700
        GR + Max P{1}                    1       0       0       0 1.00 1.00 1.00 1.00  23a SUST       1  16700
        TR:Amb to T1{1}                  0       0       0       0 1.00 1.00 1.00 1.00 (17) DISP       0  25050
        Amb to T1{1}                     0       0       0       0 1.00 1.00 1.00 1.00 (17) DISP       0  25050

 D24    Max P{1}                                                                        (3a) HOOP       0  16700
        GR + Max P{1}                    0       0       0       0 1.00 1.00 1.00 1.00  23a SUST       0  16700
        TR:Amb to T1{1}                  0       0       0       0 1.00 1.00 1.00 1.00 (17) DISP       0  25050
        Amb to T1{1}                     0       0       0       0 1.00 1.00 1.00 1.00 (17) DISP       0  25050

 *** Segment D  end   ***
```

R E S U L T S U M M A R Y

Maximum restraint forces (lb)

Maximum X :	327	Point : B03	Load Comb.: GT1{1}
Maximum Y :	-134	Point : B01	Load Comb.: GT1{1}
Maximum Z :	-111	Point : B26	Load Comb.: GT1{1}
Max. total:	351	Point : B03	Load Comb.: GT1{1}

Maximum restraint moments (ft-lb)

Maximum X :	-51	Point : D01	Load Comb.: Gravity{1}
Maximum Y :	-218	Point : B62	Load Comb.: GT1P1{1}
Maximum Z :	-154	Point : B03	Load Comb.: GT1{1}
Max. total:	218	Point : B62	Load Comb.: GT1P1{1}

R E S U L T S U M M A R Y

Maximum sustained stress

Point : A24
Stress psi : 1431
Allowable psi : 16700
Ratio : 0.09
Load combination : GR + Max P{1}

Maximum displacement stress

Point : B62
Stress psi : 2466
Allowable psi : 25050
Ratio : 0.10
Load combination : Max Range

Maximum hoop stress

Point : A00
Stress psi : 0
Allowable psi : 16700
Ratio : 0.00
Load combination : Max P{1}

R E S U L T S U M M A R Y

Maximum sustained stress ratio

```
Point            : A24
Stress    psi    : 1431
Allowable psi    : 16700
Ratio            : 0.09
Load combination : GR + Max P{1}
```

Maximum displacement stress ratio

```
Point            : B62
Stress    psi    : 2466
Allowable psi    : 25050
Ratio            : 0.10
Load combination : Max Range
```

Maximum hoop stress ratio

```
Point            : A00
Stress    psi    : 0
Allowable psi    : 16700
Ratio            : 0.00
Load combination : Max P{1}
```

```
* * * The system satisfies ASME B31.3 (2016) code requirements * * *
* * * for the selected options                                   * * *
```

Warnings:
(1) Maximum hoop stress ratio is zero

APPENDIX D3

AUTOPIPE ANALYSIS – PRIMARY PIPING SUSTAINED AND OCCASIONAL SEISMIC

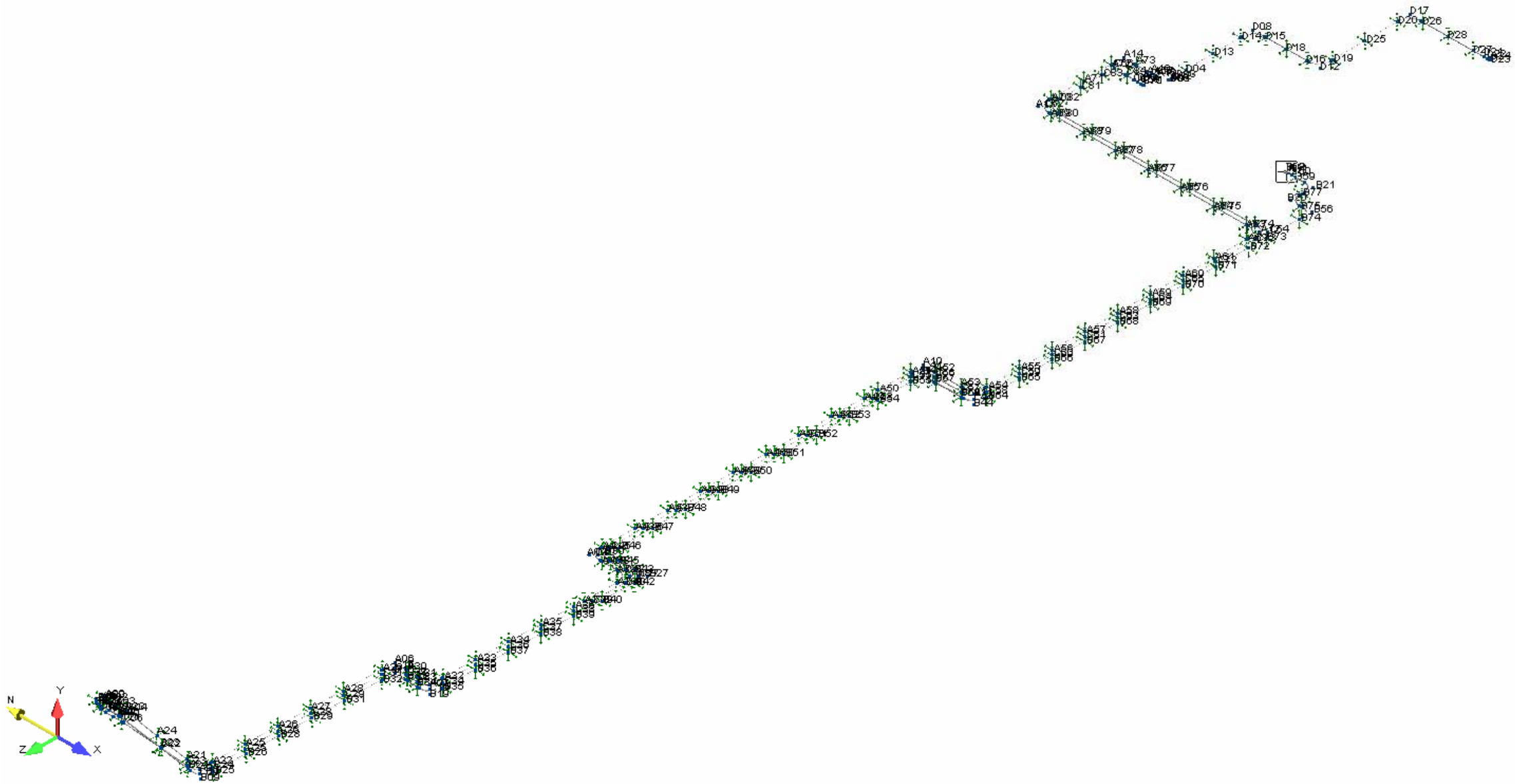
N
Y
Z
X

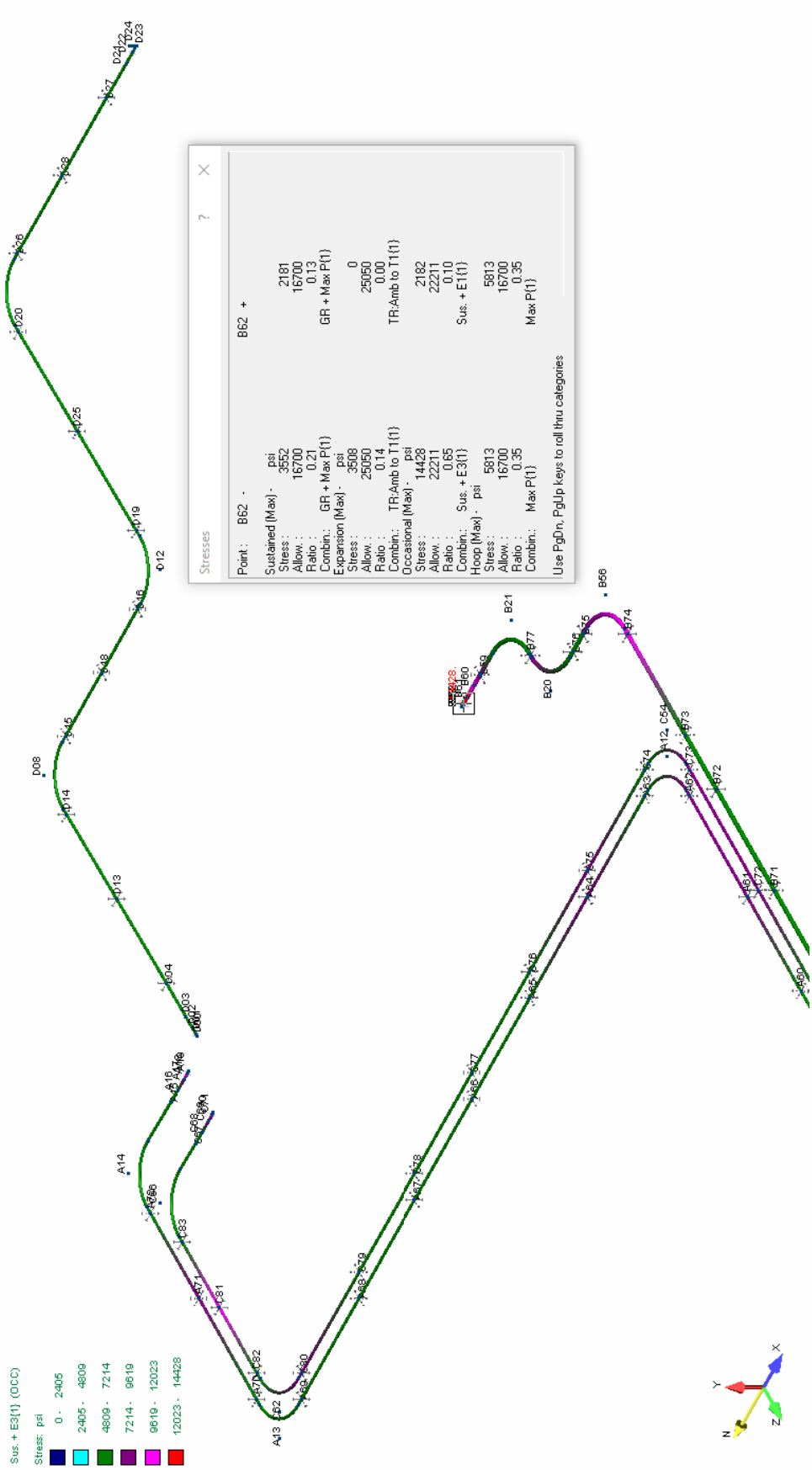
Sus. + E3(1) (OCC)
Stress: psi
0 - 2405
2405 - 4809
4809 - 7214
7214 - 9619
9619 - 12023
12023 - 14428
Stresses
Point : B62 -
B62 +
Sustained (Max) - psi
Stress : 3552
Allow. : 16700
Ratio : 0.21
Combin.: GR + Max P(1)
Expansion (Max) - psi
Stress : 3508
Allow. : 25050
Ratio : 0.14
Combin.: TR:Amb to T1(1)
Occasional (Max) - psi
Stress : 14428
Allow. : 22211
Ratio : 0.65
Combin.: Sus. + E3(1)
Hoop (Max) - psi
Stress : 5813
Allow. : 16700
Ratio : 0.35
Combin.: Max P(1)
Stress : 2181
Allow. : 16700
Ratio : 0.13
Combin.: GR + Max P(1)
Stress : 0
Allow. : 25050
Ratio : 0.00
Combin.: TR:Amb to T1(1)
Stress : 2182
Allow. : 22211
Ratio : 0.10
Combin.: Sus. + E1(1)
Stress : 5813
Allow. : 16700
Ratio : 0.35
Combin.: Max P(1)
Use PgDn, PgUp keys to roll thru categories

```
---------------------------------------------------------------------------------------------------------------
Primary Piping
04/24/2020 2018719                                                                                  BENTLEY
07:34 AM                                                                                            AutoPIPE Nuclear 12.00.00.16
---------------------------------------------------------------------------------------------------------------
```

```
        *                            *******   **  *******   *******
       ***               **          **    **  **  **    **  **
      ** **             ******       **    **  **  **    **  **
     **   **    **   **  **   *****  *******   **  *******   *****
    *********   **   **  **  **   **  **        **  **        **
   **       **  **   **  **  **   **  **        **  **        **
  **         **  *****   **   *****  **        **  **        *******
```

Pipe Stress Analysis and Design Program

Version: 12.00.00.16

Edition: Nuclear

Developed and Maintained by

BENTLEY SYSTEMS, INCORPORATED
1065 N. PACIFIC CENTER DRIVE, SUITE 450
ANAHEIM, CA 92806

```
************************************************************
**                                                        **
**              AUTOPIPE SYSTEM INFORMATION               **
**                                                        **
************************************************************
```

SYSTEM NAME : Primary Piping

PROJECT ID : 2018719

PREPARED BY : _____
JIM HARRINGTON

CHECKED BY : _____
RYAN LANG

1ST APPROVER : _____

2ND APPROVER : _____

PIPING CODE : ASME B31.3

YEAR : 2016

VERTICAL AXIS : Y

AMBIENT TEMPERATURE : 60.0 deg F

COMPONENT LIBRARY : AUTOPIPE

MATERIAL LIBRARY : B313-16

MODEL REVISION NUMBER : 24

T A B L E O F C O N T E N T S

Components..... 1
Coordinates..... 47
Segment Data..... 54
Pipe Properties..... 55
Material Properties..... 56
Material Allowables..... 57
Temperature and Pressure..... 58
Loads Summary..... 59
Support..... 60
Bend..... 74
Load Case Description..... 75
Analysis Summary..... 76
Support Forces..... 81
Restraint Reactions..... 226
Code Compliance..... 271
Result Summary..... 408

```
-----------------------------------------------------------------------------------------------------------
Primary Piping
04/24/2020 2018719                                                    BENTLEY
07:34 AM                                                              AutoPIPE Nuclear 12.00.00.16   MODEL  PAGE   1
-----------------------------------------------------------------------------------------------------------

                 C O M P O N E N T   D A T A   L I S T I N G

 ---------------------------------------------------------------------------
 *** SEGMENT A

 ---------------------------------------------------------------------------
 From A00 to A20, DY= -0.19 ft                                          Run

 PIPE DATA:
   Pipe Id= 2SCH40, Material= A312-TP316L, Composition= Austenitic Stainless, Poisson= 0.300, Nom Size= 2.000,
   OD= 2.375 inch, Sch= 40S, Wall Thk= 0.154 inch, Mill= 0.019 inch, Cor= 0.010 inch,
   Pipe Density= 501.00 lb/cu.ft, Pipe Unit Wgt= 3.74 lb/ft, Content Sp Gr= 1.600, Content Unit Wgt= 2.33 lb/ft,
   Insul Thk= 0 inch, Cladding Thickness = 0 inch, Lining Thk= 0 inch, Long Weld E factor= 1.00,
   Long Weld W factor= 1.00, Long Modulus= 28.34083 E6 psi, Hoop Modulus= 28.34083 E6 psi,
   Shear Modulus= 10.90032 E6 psi, Sc= 16700.0 psi, Syc= 25000.0 psi, Suc= 70000.0 psi

 OPERATING DATA:
   P1= 620.00 psi, T1= 200.00 deg F, Exp1= 1.50000 in/100ft, E1= 27.60000 E6 psi, Sh1= 16700.00 psi,
   Sy1= 21300.00 psi

 POINT DATA:
   A00, Coordinates, X= 0.00 ft, Y= 693.68 ft, Z= 0.00 ft

 ---------------------------------------------------------------------------
 From A20 to A01, DY= -0.42 ft                                          Run

 POINT DATA:
   A20, Coordinates, X= 0.00 ft, Y= 693.49 ft, Z= 0.00 ft

 SUPPORT DATA:
   A20, V-Stop, Support Id= A20  1, Connected to Ground, Comp.Wt = 0.000 lb, Gap-Below= 0.00 inch,
   Gap-Above= 100.00 inch, Friction= 0.00, Gaps setting= Weightless
   A20, Guide, Support Id= A20  2, Connected to Ground, Comp.Wt = 0.000 lb, Stiffness= RIGID, Gap -Z= 0.00 inch,
   Gap +Z= 0.00 inch, Gap -X= 1.00 inch, Gap +X= 1.00 inch, Friction= 0.80, Gaps setting= Weightless

 ---------------------------------------------------------------------------
 From A01 to A02, DX= 1.46 ft                                           Bend

 COMPONENT DATA (Bend, TIP= A01, Near= A01 N, Far= A01 F):
   Long Elbow, Radius= 3.00 inch, Bend angle= 90.00 deg, End flanges= 0, Flex= Auto, SIFI= 1.73, SIFO= 1.44

 POINT DATA:
   A01, Coordinates, X= 0.00 ft, Y= 693.07 ft, Z= 0.00 ft
   A01 N, Coordinates, X= 0.00 ft, Y= 693.32 ft, Z= 0.00 ft
   A01 F, Coordinates, X= 0.25 ft, Y= 693.07 ft, Z= 0.00 ft

 ---------------------------------------------------------------------------
 From A02 to A03, DX= 2.00 ft                                           Run

 POINT DATA:
   A02, Coordinates, X= 1.46 ft, Y= 693.07 ft, Z= 0.00 ft

 SUPPORT DATA:
   A02, Anchor, Connected to: Ground, KTX= Rigid, KTY= Rigid, KTZ= Rigid, KRX= Rigid, KRY= Rigid, KRZ= Rigid

 ---------------------------------------------------------------------------
 From A03 to A23, DX= 2.50 ft                                           Run
```

C O M P O N E N T D A T A L I S T I N G

POINT DATA:
A03, Coordinates, X= 3.46 ft, Y= 693.07 ft, Z= 0.00 ft

From A23 to A04, DX= 0.50 ft Run

POINT DATA:
A23, Coordinates, X= 5.96 ft, Y= 693.07 ft, Z= 0.00 ft

SUPPORT DATA:
A23, Guide, Support Id= A23 1, Connected to Ground, Comp.Wt = 0.000 lb, Stiffness= RIGID,
Gap-Down= 0.00 inch, Gap-Above= 0.83 inch, Gap-Left= 0.83 inch, Gap-Right= 0.83 inch, Friction= 0.80,
Gaps setting= Weightless

From A04 to A24, DX= 8.18 ft, DY= -1.51 ft, L= 8.32 ft Bend

COMPONENT DATA (Bend, TIP= A04, Near= A04 N, Far= A04 F):
Elbow, Radius= 36.00 inch, Bend angle= 10.46 deg, End flanges= 0, Flex= Auto, SIFI= 1.00, SIFO= 1.00

POINT DATA:
A04, Coordinates, X= 6.46 ft, Y= 693.07 ft, Z= 0.00 ft
A04 N, Coordinates, X= 6.19 ft, Y= 693.07 ft, Z= 0.00 ft
A04 F, Coordinates, X= 6.73 ft, Y= 693.02 ft, Z= 0.00 ft

From A24 to A21, DX= 8.18 ft, DY= -1.51 ft, L= 8.32 ft Run

POINT DATA:
A24, Coordinates, X= 14.64 ft, Y= 691.56 ft, Z= 0.00 ft

SUPPORT DATA:
A24, Guide, Support Id= A24 1, Connected to Ground, Comp.Wt = 0.000 lb, Stiffness= RIGID,
Gap-Down= 0.00 inch, Gap-Above= 0.06 inch, Gap-Left= 0.03 inch, Gap-Right= 0.03 inch, Friction= 0.80,
Gaps setting= Weightless

From A21 to A05, DX= 3.44 ft, DY= -0.64 ft, L= 3.50 ft Run

POINT DATA:
A21, Coordinates, X= 22.82 ft, Y= 690.05 ft, Z= 0.00 ft

SUPPORT DATA:
A21, Guide, Support Id= A21 1, Connected to Ground, Comp.Wt = 0.000 lb, Stiffness= RIGID,
Gap-Down= 0.00 inch, Gap-Above= 0.83 inch, Gap-Left= 0.83 inch, Gap-Right= 0.83 inch, Friction= 0.80,
Gaps setting= Weightless

From A05 to A22, DY= -0.10 ft, DZ= -3.50 ft, L= 3.50 ft Bend

COMPONENT DATA (Bend, TIP= A05, Near= A05 N, Far= A05 F):
Elbow, Radius= 36.00 inch, Bend angle= 89.70 deg, End flanges= 0, Flex= Auto, SIFI= 1.00, SIFO= 1.00

POINT DATA:
A05, Coordinates, X= 26.26 ft, Y= 689.41 ft, Z= 0.00 ft

C O M P O N E N T D A T A L I S T I N G

A05 N, Coordinates, X= 23.33 ft, Y= 689.96 ft, Z= 0.00 ft
A05 F, Coordinates, X= 26.26 ft, Y= 689.32 ft, Z= -2.98 ft

From A22 to A25, DY= -0.26 ft, DZ= -9.00 ft, L= 9.00 ft Run

POINT DATA:
A22, Coordinates, X= 26.26 ft, Y= 689.31 ft, Z= -3.50 ft

SUPPORT DATA:
A22, Guide, Support Id= A22 2, Connected to Ground, Comp.Wt = 0.000 lb, Stiffness= RIGID,
Gap-Down= 0.00 inch, Gap-Above= 0.83 inch, Gap-Left= 0.83 inch, Gap-Right= 0.83 inch, Friction= 0.80,
Gaps setting= Weightless

From A25 to A26, DY= -0.26 ft, DZ= -9.00 ft, L= 9.00 ft Run

POINT DATA:
A25, Coordinates, X= 26.26 ft, Y= 689.05 ft, Z= -12.50 ft

SUPPORT DATA:
A25, Guide, Support Id= A25 2, Connected to Ground, Comp.Wt = 0.000 lb, Stiffness= RIGID,
Gap-Down= 0.00 inch, Gap-Above= 0.06 inch, Gap-Left= 0.03 inch, Gap-Right= 0.03 inch, Friction= 0.80,
Gaps setting= Weightless

From A26 to A27, DY= -0.26 ft, DZ= -9.00 ft, L= 9.00 ft Run

POINT DATA:
A26, Coordinates, X= 26.26 ft, Y= 688.79 ft, Z= -21.50 ft

SUPPORT DATA:
A26, Guide, Support Id= A26 2, Connected to Ground, Comp.Wt = 0.000 lb, Stiffness= RIGID,
Gap-Down= 0.00 inch, Gap-Above= 0.06 inch, Gap-Left= 0.03 inch, Gap-Right= 0.03 inch, Friction= 0.80,
Gaps setting= Weightless

From A27 to A28, DY= -0.26 ft, DZ= -9.00 ft, L= 9.00 ft Run

POINT DATA:
A27, Coordinates, X= 26.26 ft, Y= 688.53 ft, Z= -30.50 ft

SUPPORT DATA:
A27, Guide, Support Id= A27 2, Connected to Ground, Comp.Wt = 0.000 lb, Stiffness= RIGID,
Gap-Down= 0.00 inch, Gap-Above= 0.06 inch, Gap-Left= 0.03 inch, Gap-Right= 0.03 inch, Friction= 0.80,
Gaps setting= Weightless

From A28 to A29, DY= -0.31 ft, DZ= -10.67 ft, L= 10.67 ft Run

POINT DATA:
A28, Coordinates, X= 26.26 ft, Y= 688.27 ft, Z= -39.50 ft

SUPPORT DATA:
A28, Guide, Support Id= A28 2, Connected to Ground, Comp.Wt = 0.000 lb, Stiffness= RIGID,

C O M P O N E N T D A T A L I S T I N G

Gap-Down= 0.00 inch, Gap-Above= 0.06 inch, Gap-Left= 0.03 inch, Gap-Right= 0.03 inch, Friction= 0.80,
Gaps setting= Weightless

From A29 to A06, DY= -0.10 ft, DZ= -3.50 ft, L= 3.50 ft Run

POINT DATA:
A29, Coordinates, X= 26.26 ft, Y= 687.96 ft, Z= -50.17 ft

SUPPORT DATA:
A29, Guide, Support Id= A29 1, Connected to Ground, Comp.Wt = 0.000 lb, Stiffness= RIGID,
Gap-Down= 0.00 inch, Gap-Above= 0.83 inch, Gap-Left= 0.83 inch, Gap-Right= 0.83 inch, Friction= 0.80,
Gaps setting= Weightless

From A06 to A30, DX= 3.50 ft, DY= -0.10 ft, L= 3.50 ft Bend

COMPONENT DATA (Bend, TIP= A06, Near= A06 N, Far= A06 F):
Elbow, Radius= 36.00 inch, Bend angle= 89.95 deg, End flanges= 0, Flex= Auto, SIFI= 1.00, SIFO= 1.00

POINT DATA:
A06, Coordinates, X= 26.26 ft, Y= 687.86 ft, Z= -53.67 ft
A06 N, Coordinates, X= 26.26 ft, Y= 687.95 ft, Z= -50.67 ft
A06 F, Coordinates, X= 29.26 ft, Y= 687.77 ft, Z= -53.67 ft

From A30 to A31, DX= 2.76 ft, DY= -0.08 ft, L= 2.76 ft Run

POINT DATA:
A30, Coordinates, X= 29.76 ft, Y= 687.76 ft, Z= -53.67 ft

SUPPORT DATA:
A30, Guide, Support Id= A30 1, Connected to Ground, Comp.Wt = 0.000 lb, Stiffness= RIGID,
Gap-Down= 0.00 inch, Gap-Above= 0.83 inch, Gap-Left= 0.83 inch, Gap-Right= 0.83 inch, Friction= 0.80,
Gaps setting= Weightless

From A31 to A07, DX= 3.50 ft, DY= -0.10 ft, L= 3.50 ft Run

POINT DATA:
A31, Coordinates, X= 32.52 ft, Y= 687.68 ft, Z= -53.67 ft

SUPPORT DATA:
A31, Guide, Support Id= A31 1, Connected to Ground, Comp.Wt = 0.000 lb, Stiffness= RIGID,
Gap-Down= 0.00 inch, Gap-Above= 0.83 inch, Gap-Left= 0.83 inch, Gap-Right= 0.83 inch, Friction= 0.80,
Gaps setting= Weightless

From A07 to A32, DY= -0.11 ft, DZ= -3.50 ft, L= 3.50 ft Bend

COMPONENT DATA (Bend, TIP= A07, Near= A07 N, Far= A07 F):
Elbow, Radius= 36.00 inch, Bend angle= 89.95 deg, End flanges= 0, Flex= Auto, SIFI= 1.00, SIFO= 1.00

POINT DATA:
A07, Coordinates, X= 36.02 ft, Y= 687.58 ft, Z= -53.67 ft

C O M P O N E N T D A T A L I S T I N G

A07 N, Coordinates, X= 33.02 ft, Y= 687.67 ft, Z= -53.67 ft
A07 F, Coordinates, X= 36.02 ft, Y= 687.49 ft, Z= -56.67 ft

From A32 to A33, DY= -0.27 ft, DZ= -9.00 ft, L= 9.00 ft Run

POINT DATA:
A32, Coordinates, X= 36.02 ft, Y= 687.47 ft, Z= -57.17 ft

SUPPORT DATA:
A32, Guide, Support Id= A32 1, Connected to Ground, Comp.Wt = 0.000 lb, Stiffness= RIGID,
Gap-Down= 0.00 inch, Gap-Above= 0.83 inch, Gap-Left= 0.83 inch, Gap-Right= 0.83 inch, Friction= 0.80,
Gaps setting= Weightless

From A33 to A34, DY= -0.27 ft, DZ= -9.00 ft, L= 9.00 ft Run

POINT DATA:
A33, Coordinates, X= 36.02 ft, Y= 687.20 ft, Z= -66.17 ft

SUPPORT DATA:
A33, Guide, Support Id= A33 2, Connected to Ground, Comp.Wt = 0.000 lb, Stiffness= RIGID,
Gap-Down= 0.00 inch, Gap-Above= 0.06 inch, Gap-Left= 0.03 inch, Gap-Right= 0.03 inch, Friction= 0.80,
Gaps setting= Weightless

From A34 to A35, DY= -0.27 ft, DZ= -9.00 ft, L= 9.00 ft Run

POINT DATA:
A34, Coordinates, X= 36.02 ft, Y= 686.93 ft, Z= -75.17 ft

SUPPORT DATA:
A34, Guide, Support Id= A34 2, Connected to Ground, Comp.Wt = 0.000 lb, Stiffness= RIGID,
Gap-Down= 0.00 inch, Gap-Above= 0.06 inch, Gap-Left= 0.03 inch, Gap-Right= 0.03 inch, Friction= 0.80,
Gaps setting= Weightless

From A35 to A36, DY= -0.28 ft, DZ= -9.00 ft, L= 9.00 ft Run

POINT DATA:
A35, Coordinates, X= 36.02 ft, Y= 686.66 ft, Z= -84.17 ft

SUPPORT DATA:
A35, Guide, Support Id= A35 2, Connected to Ground, Comp.Wt = 0.000 lb, Stiffness= RIGID,
Gap-Down= 0.00 inch, Gap-Above= 0.06 inch, Gap-Left= 0.03 inch, Gap-Right= 0.03 inch, Friction= 0.80,
Gaps setting= Weightless

From A36 to A37, DY= -0.08 ft, DZ= -2.68 ft, L= 2.68 ft Run

POINT DATA:
A36, Coordinates, X= 36.02 ft, Y= 686.38 ft, Z= -93.17 ft

SUPPORT DATA:
A36, Guide, Support Id= A36 2, Connected to Ground, Comp.Wt = 0.000 lb, Stiffness= RIGID,

C O M P O N E N T D A T A L I S T I N G

Gap-Down= 0.00 inch, Gap-Above= 0.06 inch, Gap-Left= 0.03 inch, Gap-Right= 0.03 inch, Friction= 0.80,
Gaps setting= Weightless

From A37 to A38, DY= -0.27 ft, DZ= -8.99 ft, L= 8.99 ft Run

POINT DATA:
A37, Coordinates, X= 36.02 ft, Y= 686.30 ft, Z= -95.85 ft

SUPPORT DATA:
A37, Guide, Support Id= A37 2, Connected to Ground, Comp.Wt = 0.000 lb, Stiffness= RIGID,
Gap-Down= 0.00 inch, Gap-Above= 0.06 inch, Gap-Left= 0.03 inch, Gap-Right= 0.03 inch, Friction= 0.80,
Gaps setting= Weightless

From A38 to A08, DY= -0.11 ft, DZ= -3.50 ft, L= 3.50 ft Run

POINT DATA:
A38, Coordinates, X= 36.02 ft, Y= 686.03 ft, Z= -104.84 ft

SUPPORT DATA:
A38, Guide, Support Id= A38 1, Connected to Ground, Comp.Wt = 0.000 lb, Stiffness= RIGID,
Gap-Down= 0.00 inch, Gap-Above= 0.83 inch, Gap-Left= 0.83 inch, Gap-Right= 0.83 inch, Friction= 0.80,
Gaps setting= Weightless

From A08 to A39, DX= -3.50 ft, DY= -0.09 ft, L= 3.50 ft Bend

COMPONENT DATA (Bend, TIP= A08, Near= A08 N, Far= A08 F):
Elbow, Radius= 36.00 inch, Bend angle= 89.95 deg, End flanges= 0, Flex= Auto, SIFI= 1.00, SIFO= 1.00

POINT DATA:
A08, Coordinates, X= 36.02 ft, Y= 685.92 ft, Z= -108.34 ft
A08 N, Coordinates, X= 36.02 ft, Y= 686.01 ft, Z= -105.34 ft
A08 F, Coordinates, X= 33.02 ft, Y= 685.84 ft, Z= -108.34 ft

From A39 to A40, DX= -4.00 ft, DY= -0.10 ft, L= 4.00 ft Run

POINT DATA:
A39, Coordinates, X= 32.52 ft, Y= 685.83 ft, Z= -108.34 ft

SUPPORT DATA:
A39, Guide, Support Id= A39 1, Connected to Ground, Comp.Wt = 0.000 lb, Stiffness= RIGID,
Gap-Down= 0.00 inch, Gap-Above= 0.83 inch, Gap-Left= 0.83 inch, Gap-Right= 0.83 inch, Friction= 0.80,
Gaps setting= Weightless

From A40 to A09, DX= -3.50 ft, DY= -0.09 ft, L= 3.50 ft Run

POINT DATA:
A40, Coordinates, X= 28.52 ft, Y= 685.73 ft, Z= -108.34 ft

SUPPORT DATA:
A40, Guide, Support Id= A40 1, Connected to Ground, Comp.Wt = 0.000 lb, Stiffness= RIGID,

C O M P O N E N T D A T A L I S T I N G

Gap-Down= 0.00 inch, Gap-Above= 0.83 inch, Gap-Left= 0.83 inch, Gap-Right= 0.83 inch, Friction= 0.80,
Gaps setting= Weightless

From A09 to A41, DY= -0.03 ft, DZ= -3.50 ft, L= 3.50 ft Bend

COMPONENT DATA (Bend, TIP= A09, Near= A09 N, Far= A09 F):
Elbow, Radius= 36.00 inch, Bend angle= 89.99 deg, End flanges= 0, Flex= Auto, SIFI= 1.00, SIFO= 1.00

POINT DATA:
A09, Coordinates, X= 25.02 ft, Y= 685.64 ft, Z= -108.34 ft
A09 N, Coordinates, X= 28.02 ft, Y= 685.72 ft, Z= -108.34 ft
A09 F, Coordinates, X= 25.02 ft, Y= 685.61 ft, Z= -111.34 ft

From A41 to A42, DY= -0.07 ft, DZ= -9.00 ft, L= 9.00 ft Run

POINT DATA:
A41, Coordinates, X= 25.02 ft, Y= 685.61 ft, Z= -111.84 ft

SUPPORT DATA:
A41, Guide, Support Id= A41 1, Connected to Ground, Comp.Wt = 0.000 lb, Stiffness= RIGID,
Gap-Down= 0.00 inch, Gap-Above= 0.83 inch, Gap-Left= 0.83 inch, Gap-Right= 0.83 inch, Friction= 0.80,
Gaps setting= Weightless

From A42 to A43, DY= -0.07 ft, DZ= -9.00 ft, L= 9.00 ft Run

POINT DATA:
A42, Coordinates, X= 25.02 ft, Y= 685.54 ft, Z= -120.84 ft

SUPPORT DATA:
A42, Guide, Support Id= A42 2, Connected to Ground, Comp.Wt = 0.000 lb, Stiffness= RIGID,
Gap-Down= 0.00 inch, Gap-Above= 0.06 inch, Gap-Left= 0.03 inch, Gap-Right= 0.03 inch, Friction= 0.80,
Gaps setting= Weightless

From A43 to A44, DY= -0.07 ft, DZ= -9.00 ft, L= 9.00 ft Run

POINT DATA:
A43, Coordinates, X= 25.02 ft, Y= 685.47 ft, Z= -129.84 ft

SUPPORT DATA:
A43, Guide, Support Id= A43 2, Connected to Ground, Comp.Wt = 0.000 lb, Stiffness= RIGID,
Gap-Down= 0.00 inch, Gap-Above= 0.06 inch, Gap-Left= 0.03 inch, Gap-Right= 0.03 inch, Friction= 0.80,
Gaps setting= Weightless

From A44 to A45, DY= -0.07 ft, DZ= -9.00 ft, L= 9.00 ft Run

POINT DATA:
A44, Coordinates, X= 25.02 ft, Y= 685.40 ft, Z= -138.84 ft

SUPPORT DATA:
A44, Guide, Support Id= A44 2, Connected to Ground, Comp.Wt = 0.000 lb, Stiffness= RIGID,

C O M P O N E N T D A T A L I S T I N G

Gap-Down= 0.00 inch, Gap-Above= 0.06 inch, Gap-Left= 0.03 inch, Gap-Right= 0.03 inch, Friction= 0.80,
Gaps setting= Weightless

From A45 to A46, DY= -0.07 ft, DZ= -9.00 ft, L= 9.00 ft Run

POINT DATA:
A45, Coordinates, X= 25.02 ft, Y= 685.33 ft, Z= -147.84 ft

SUPPORT DATA:
A45, Guide, Support Id= A45 2, Connected to Ground, Comp.Wt = 0.000 lb, Stiffness= RIGID,
Gap-Down= 0.00 inch, Gap-Above= 0.06 inch, Gap-Left= 0.03 inch, Gap-Right= 0.03 inch, Friction= 0.80,
Gaps setting= Weightless

From A46 to A47, DY= -0.07 ft, DZ= -9.00 ft, L= 9.00 ft Run

POINT DATA:
A46, Coordinates, X= 25.02 ft, Y= 685.26 ft, Z= -156.84 ft

SUPPORT DATA:
A46, Guide, Support Id= A46 2, Connected to Ground, Comp.Wt = 0.000 lb, Stiffness= RIGID,
Gap-Down= 0.00 inch, Gap-Above= 0.06 inch, Gap-Left= 0.03 inch, Gap-Right= 0.03 inch, Friction= 0.80,
Gaps setting= Weightless

From A47 to A48, DY= -0.07 ft, DZ= -9.00 ft, L= 9.00 ft Run

POINT DATA:
A47, Coordinates, X= 25.02 ft, Y= 685.19 ft, Z= -165.84 ft

SUPPORT DATA:
A47, Guide, Support Id= A47 2, Connected to Ground, Comp.Wt = 0.000 lb, Stiffness= RIGID,
Gap-Down= 0.00 inch, Gap-Above= 0.06 inch, Gap-Left= 0.03 inch, Gap-Right= 0.03 inch, Friction= 0.80,
Gaps setting= Weightless

From A48 to A49, DY= -0.07 ft, DZ= -9.00 ft, L= 9.00 ft Run

POINT DATA:
A48, Coordinates, X= 25.02 ft, Y= 685.12 ft, Z= -174.84 ft

SUPPORT DATA:
A48, Guide, Support Id= A48 2, Connected to Ground, Comp.Wt = 0.000 lb, Stiffness= RIGID,
Gap-Down= 0.00 inch, Gap-Above= 0.06 inch, Gap-Left= 0.03 inch, Gap-Right= 0.03 inch, Friction= 0.80,
Gaps setting= Weightless

From A49 to A50, DX= 0 ft, DY= -0.03 ft, DZ= -3.83 ft, L= 3.83 ft Run

POINT DATA:
A49, Coordinates, X= 25.02 ft, Y= 685.05 ft, Z= -183.84 ft

SUPPORT DATA:
A49, Guide, Support Id= A49 2, Connected to Ground, Comp.Wt = 0.000 lb, Stiffness= RIGID,

C O M P O N E N T D A T A L I S T I N G

Gap-Down= 0.00 inch, Gap-Above= 0.06 inch, Gap-Left= 0.03 inch, Gap-Right= 0.03 inch, Friction= 0.80,
Gaps setting= Weightless

From A50 to A51, DY= -0.07 ft, DZ= -9.00 ft, L= 9.00 ft Run

POINT DATA:
A50, Coordinates, X= 25.02 ft, Y= 685.02 ft, Z= -187.67 ft

SUPPORT DATA:
A50, Guide, Support Id= A50 2, Connected to Ground, Comp.Wt = 0.000 lb, Stiffness= RIGID,
Gap-Down= 0.00 inch, Gap-Above= 0.06 inch, Gap-Left= 0.03 inch, Gap-Right= 0.03 inch, Friction= 0.80,
Gaps setting= Weightless

From A51 to A10, DY= -0.03 ft, DZ= -3.50 ft, L= 3.50 ft Run

POINT DATA:
A51, Coordinates, X= 25.02 ft, Y= 684.95 ft, Z= -196.67 ft

SUPPORT DATA:
A51, Guide, Support Id= A51 1, Connected to Ground, Comp.Wt = 0.000 lb, Stiffness= RIGID,
Gap-Down= 0.00 inch, Gap-Above= 0.83 inch, Gap-Left= 0.83 inch, Gap-Right= 0.83 inch, Friction= 0.80,
Gaps setting= Weightless

From A10 to A52, DX= 3.50 ft, DY= -0.03 ft, L= 3.50 ft Bend

COMPONENT DATA (Bend, TIP= A10, Near= A10 N, Far= A10 F):
Elbow, Radius= 36.00 inch, Bend angle= 90.00 deg, End flanges= 0, Flex= Auto, SIFI= 1.00, SIFO= 1.00

POINT DATA:
A10, Coordinates, X= 25.02 ft, Y= 684.92 ft, Z= -200.17 ft
A10 N, Coordinates, X= 25.02 ft, Y= 684.95 ft, Z= -197.17 ft
A10 F, Coordinates, X= 28.02 ft, Y= 684.89 ft, Z= -200.17 ft

From A52 to A53, DX= 6.91 ft, DY= -0.05 ft, L= 6.91 ft Run

POINT DATA:
A52, Coordinates, X= 28.52 ft, Y= 684.89 ft, Z= -200.17 ft

SUPPORT DATA:
A52, Guide, Support Id= A52 1, Connected to Ground, Comp.Wt = 0.000 lb, Stiffness= RIGID,
Gap-Down= 0.00 inch, Gap-Above= 0.83 inch, Gap-Left= 0.83 inch, Gap-Right= 0.83 inch, Friction= 0.80,
Gaps setting= Weightless

From A53 to A11, DX= 3.50 ft, DY= -0.02 ft, L= 3.50 ft Run

POINT DATA:
A53, Coordinates, X= 35.43 ft, Y= 684.84 ft, Z= -200.17 ft

SUPPORT DATA:
A53, Guide, Support Id= A53 1, Connected to Ground, Comp.Wt = 0.000 lb, Stiffness= RIGID,

C O M P O N E N T D A T A L I S T I N G

```
  Gap-Down= 0.00 inch, Gap-Above= 0.83 inch, Gap-Left= 0.83 inch, Gap-Right= 0.83 inch, Friction= 0.80,
  Gaps setting= Weightless

 ---------------------------------------------------------------------------
 From A11 to A54, DY= -0.03 ft, DZ= -3.50 ft, L= 3.50 ft                    Bend

 COMPONENT DATA (Bend, TIP= A11, Near= A11 N, Far= A11 F):
   Elbow, Radius= 36.00 inch, Bend angle= 90.00 deg, End flanges= 0, Flex= Auto, SIFI= 1.00, SIFO= 1.00

 POINT DATA:
   A11, Coordinates, X= 38.93 ft, Y= 684.82 ft, Z= -200.17 ft
   A11 N, Coordinates, X= 35.93 ft, Y= 684.84 ft, Z= -200.17 ft
   A11 F, Coordinates, X= 38.93 ft, Y= 684.79 ft, Z= -203.17 ft

 ---------------------------------------------------------------------------
 From A54 to A55, DY= -0.07 ft, DZ= -9.00 ft, L= 9.00 ft                    Run

 POINT DATA:
   A54, Coordinates, X= 38.93 ft, Y= 684.79 ft, Z= -203.67 ft

 SUPPORT DATA:
   A54, Guide, Support Id= A54  1, Connected to Ground, Comp.Wt = 0.000 lb, Stiffness= RIGID,
   Gap-Down= 0.00 inch, Gap-Above= 0.83 inch, Gap-Left= 0.83 inch, Gap-Right= 0.83 inch, Friction= 0.80,
   Gaps setting= Weightless

 ---------------------------------------------------------------------------
 From A55 to A56, DY= -0.07 ft, DZ= -9.00 ft, L= 9.00 ft                    Run

 POINT DATA:
   A55, Coordinates, X= 38.93 ft, Y= 684.72 ft, Z= -212.67 ft

 SUPPORT DATA:
   A55, Guide, Support Id= A55  1, Connected to Ground, Comp.Wt = 0.000 lb, Stiffness= RIGID,
   Gap-Down= 0.00 inch, Gap-Above= 0.06 inch, Gap-Left= 0.03 inch, Gap-Right= 0.03 inch, Friction= 0.80,
   Gaps setting= Weightless

 ---------------------------------------------------------------------------
 From A56 to A57, DY= -0.07 ft, DZ= -9.00 ft, L= 9.00 ft                    Run

 POINT DATA:
   A56, Coordinates, X= 38.93 ft, Y= 684.65 ft, Z= -221.67 ft

 SUPPORT DATA:
   A56, Guide, Support Id= A56  1, Connected to Ground, Comp.Wt = 0.000 lb, Stiffness= RIGID,
   Gap-Down= 0.00 inch, Gap-Above= 0.06 inch, Gap-Left= 0.03 inch, Gap-Right= 0.03 inch, Friction= 0.80,
   Gaps setting= Weightless

 ---------------------------------------------------------------------------
 From A57 to A58, DY= -0.07 ft, DZ= -9.00 ft, L= 9.00 ft                    Run

 POINT DATA:
   A57, Coordinates, X= 38.93 ft, Y= 684.58 ft, Z= -230.67 ft

 SUPPORT DATA:
   A57, Guide, Support Id= A57  1, Connected to Ground, Comp.Wt = 0.000 lb, Stiffness= RIGID,
```

C O M P O N E N T D A T A L I S T I N G

Gap-Down= 0.00 inch, Gap-Above= 0.06 inch, Gap-Left= 0.03 inch, Gap-Right= 0.03 inch, Friction= 0.80,
Gaps setting= Weightless

From A58 to A59, DY= -0.07 ft, DZ= -9.00 ft, L= 9.00 ft Run

POINT DATA:
A58, Coordinates, X= 38.93 ft, Y= 684.51 ft, Z= -239.67 ft

SUPPORT DATA:
A58, Guide, Support Id= A58 1, Connected to Ground, Comp.Wt = 0.000 lb, Stiffness= RIGID,
Gap-Down= 0.00 inch, Gap-Above= 0.06 inch, Gap-Left= 0.03 inch, Gap-Right= 0.03 inch, Friction= 0.80,
Gaps setting= Weightless

From A59 to A60, DY= -0.07 ft, DZ= -9.00 ft, L= 9.00 ft Run

POINT DATA:
A59, Coordinates, X= 38.93 ft, Y= 684.44 ft, Z= -248.67 ft

SUPPORT DATA:
A59, Guide, Support Id= A59 1, Connected to Ground, Comp.Wt = 0.000 lb, Stiffness= RIGID,
Gap-Down= 0.00 inch, Gap-Above= 0.06 inch, Gap-Left= 0.03 inch, Gap-Right= 0.03 inch, Friction= 0.80,
Gaps setting= Weightless

From A60 to A61, DX= 0 ft, DY= -0.06 ft, DZ= -8.40 ft, L= 8.40 ft Run

POINT DATA:
A60, Coordinates, X= 38.93 ft, Y= 684.37 ft, Z= -257.67 ft

SUPPORT DATA:
A60, Guide, Support Id= A60 1, Connected to Ground, Comp.Wt = 0.000 lb, Stiffness= RIGID,
Gap-Down= 0.00 inch, Gap-Above= 0.06 inch, Gap-Left= 0.03 inch, Gap-Right= 0.03 inch, Friction= 0.80,
Gaps setting= Weightless

From A61 to A62, DY= -0.06 ft, DZ= -9.00 ft, L= 9.00 ft Run

POINT DATA:
A61, Coordinates, X= 38.93 ft, Y= 684.31 ft, Z= -266.07 ft

SUPPORT DATA:
A61, Guide, Support Id= A61 1, Connected to Ground, Comp.Wt = 0.000 lb, Stiffness= RIGID,
Gap-Down= 0.00 inch, Gap-Above= 0.06 inch, Gap-Left= 0.03 inch, Gap-Right= 0.03 inch, Friction= 0.80,
Gaps setting= Weightless

From A62 to A12, DY= -0.03 ft, DZ= -3.50 ft, L= 3.50 ft Run

POINT DATA:
A62, Coordinates, X= 38.93 ft, Y= 684.25 ft, Z= -275.07 ft

SUPPORT DATA:
A62, Guide, Support Id= A62 1, Connected to Ground, Comp.Wt = 0.000 lb, Stiffness= RIGID,

C O M P O N E N T D A T A L I S T I N G

Gap-Down= 0.00 inch, Gap-Above= 0.83 inch, Gap-Left= 0.83 inch, Gap-Right= 0.83 inch, Friction= 0.80,
Gaps setting= Weightless

From A12 to A63, DX= -3.50 ft, DY= -0.03 ft, L= 3.50 ft Bend

COMPONENT DATA (Bend, TIP= A12, Near= A12 N, Far= A12 F):
Elbow, Radius= 36.00 inch, Bend angle= 90.00 deg, End flanges= 0, Flex= Auto, SIFI= 1.00, SIFO= 1.00

POINT DATA:
A12, Coordinates, X= 38.93 ft, Y= 684.22 ft, Z= -278.57 ft
A12 N, Coordinates, X= 38.93 ft, Y= 684.25 ft, Z= -275.57 ft
A12 F, Coordinates, X= 35.93 ft, Y= 684.19 ft, Z= -278.57 ft

From A63 to A64, DX= -9.00 ft, DY= -0.07 ft, L= 9.00 ft Run

POINT DATA:
A63, Coordinates, X= 35.43 ft, Y= 684.19 ft, Z= -278.57 ft

SUPPORT DATA:
A63, Guide, Support Id= A63 1, Connected to Ground, Comp.Wt = 0.000 lb, Stiffness= RIGID,
Gap-Down= 0.00 inch, Gap-Above= 0.83 inch, Gap-Left= 0.83 inch, Gap-Right= 0.83 inch, Friction= 0.80,
Gaps setting= Weightless

From A64 to A65, DX= -9.00 ft, DY= -0.07 ft, L= 9.00 ft Run

POINT DATA:
A64, Coordinates, X= 26.43 ft, Y= 684.12 ft, Z= -278.57 ft

SUPPORT DATA:
A64, Guide, Support Id= A64 2, Connected to Ground, Comp.Wt = 0.000 lb, Stiffness= RIGID,
Gap-Down= 0.00 inch, Gap-Above= 0.06 inch, Gap-Left= 0.03 inch, Gap-Right= 0.03 inch, Friction= 0.80,
Gaps setting= Weightless

From A65 to A66, DX= -9.00 ft, DY= -0.06 ft, L= 9.00 ft Run

POINT DATA:
A65, Coordinates, X= 17.43 ft, Y= 684.05 ft, Z= -278.57 ft

SUPPORT DATA:
A65, Guide, Support Id= A65 2, Connected to Ground, Comp.Wt = 0.000 lb, Stiffness= RIGID,
Gap-Down= 0.00 inch, Gap-Above= 0.06 inch, Gap-Left= 0.03 inch, Gap-Right= 0.03 inch, Friction= 0.80,
Gaps setting= Weightless

From A66 to A67, DX= -9.00 ft, DY= -0.07 ft, L= 9.00 ft Run

POINT DATA:
A66, Coordinates, X= 8.43 ft, Y= 683.99 ft, Z= -278.57 ft

SUPPORT DATA:
A66, Guide, Support Id= A66 2, Connected to Ground, Comp.Wt = 0.000 lb, Stiffness= RIGID,

C O M P O N E N T D A T A L I S T I N G

Gap-Down= 0.00 inch, Gap-Above= 0.06 inch, Gap-Left= 0.03 inch, Gap-Right= 0.03 inch, Friction= 0.80,
Gaps setting= Weightless

From A67 to A68, DX= -8.78 ft, DY= -0.06 ft, L= 8.78 ft Run

POINT DATA:
A67, Coordinates, X= -0.57 ft, Y= 683.92 ft, Z= -278.57 ft

SUPPORT DATA:
A67, Guide, Support Id= A67 2, Connected to Ground, Comp.Wt = 0.000 lb, Stiffness= RIGID,
Gap-Down= 0.00 inch, Gap-Above= 0.06 inch, Gap-Left= 0.03 inch, Gap-Right= 0.03 inch, Friction= 0.80,
Gaps setting= Weightless

From A68 to A69, DX= -9.00 ft, DY= -0.06 ft, L= 9.00 ft Run

POINT DATA:
A68, Coordinates, X= -9.35 ft, Y= 683.86 ft, Z= -278.57 ft

SUPPORT DATA:
A68, Guide, Support Id= A68 2, Connected to Ground, Comp.Wt = 0.000 lb, Stiffness= RIGID,
Gap-Down= 0.00 inch, Gap-Above= 0.06 inch, Gap-Left= 0.03 inch, Gap-Right= 0.03 inch, Friction= 0.80,
Gaps setting= Weightless

From A69 to A13, DX= -3.50 ft, DY= -0.03 ft, L= 3.50 ft Run

POINT DATA:
A69, Coordinates, X= -18.35 ft, Y= 683.80 ft, Z= -278.57 ft

SUPPORT DATA:
A69, Guide, Support Id= A69 1, Connected to Ground, Comp.Wt = 0.000 lb, Stiffness= RIGID,
Gap-Down= 0.00 inch, Gap-Above= 0.83 inch, Gap-Left= 0.83 inch, Gap-Right= 0.83 inch, Friction= 0.80,
Gaps setting= Weightless

From A13 to A70, DY= -0.02 ft, DZ= -3.50 ft, L= 3.50 ft Bend

COMPONENT DATA (Bend, TIP= A13, Near= A13 N, Far= A13 F):
Elbow, Radius= 36.00 inch, Bend angle= 90.00 deg, End flanges= 0, Flex= Auto, SIFI= 1.00, SIFO= 1.00

POINT DATA:
A13, Coordinates, X= -21.85 ft, Y= 683.77 ft, Z= -278.57 ft
A13 N, Coordinates, X= -18.85 ft, Y= 683.80 ft, Z= -278.57 ft
A13 F, Coordinates, X= -21.85 ft, Y= 683.75 ft, Z= -281.57 ft

From A70 to A71, DY= -0.05 ft, DZ= -9.00 ft, L= 9.00 ft Run

POINT DATA:
A70, Coordinates, X= -21.85 ft, Y= 683.75 ft, Z= -282.07 ft

SUPPORT DATA:
A70, Guide, Support Id= A70 1, Connected to Ground, Comp.Wt = 0.000 lb, Stiffness= RIGID,

C O M P O N E N T D A T A L I S T I N G

Gap-Down= 0.00 inch, Gap-Above= 0.83 inch, Gap-Left= 0.83 inch, Gap-Right= 0.83 inch, Friction= 0.80,
Gaps setting= Weightless

From A71 to A72, DY= -0.05 ft, DZ= -7.59 ft, L= 7.59 ft Run

POINT DATA:
A71, Coordinates, X= -21.85 ft, Y= 683.70 ft, Z= -291.07 ft

SUPPORT DATA:
A71, Guide, Support Id= A71 2, Connected to Ground, Comp.Wt = 0.000 lb, Stiffness= RIGID,
Gap-Down= 0.00 inch, Gap-Above= 0.06 inch, Gap-Left= 0.03 inch, Gap-Right= 0.03 inch, Friction= 0.80,
Gaps setting= Weightless

From A72 to A14, DY= -0.02 ft, DZ= -3.50 ft, L= 3.50 ft Run

POINT DATA:
A72, Coordinates, X= -21.85 ft, Y= 683.65 ft, Z= -298.66 ft

SUPPORT DATA:
A72, Guide, Support Id= A72 1, Connected to Ground, Comp.Wt = 0.000 lb, Stiffness= RIGID,
Gap-Down= 0.00 inch, Gap-Above= 0.83 inch, Gap-Left= 0.83 inch, Gap-Right= 0.83 inch, Friction= 0.80,
Gaps setting= Weightless

From A14 to A73, DX= 3.50 ft, DY= -0.06 ft, L= 3.50 ft Bend

COMPONENT DATA (Bend, TIP= A14, Near= A14 N, Far= A14 F):
Elbow, Radius= 36.00 inch, Bend angle= 89.99 deg, End flanges= 0, Flex= Auto, SIFI= 1.00, SIFO= 1.00

POINT DATA:
A14, Coordinates, X= -21.85 ft, Y= 683.63 ft, Z= -302.16 ft
A14 N, Coordinates, X= -21.85 ft, Y= 683.65 ft, Z= -299.16 ft
A14 F, Coordinates, X= -18.85 ft, Y= 683.58 ft, Z= -302.16 ft

From A73 to A15, DX= 2.96 ft, DY= -0.05 ft, L= 2.96 ft Run

POINT DATA:
A73, Coordinates, X= -18.35 ft, Y= 683.57 ft, Z= -302.16 ft

SUPPORT DATA:
A73, Guide, Support Id= A73 1, Connected to Ground, Comp.Wt = 0.000 lb, Stiffness= RIGID,
Gap-Down= 0.00 inch, Gap-Above= 0.83 inch, Gap-Left= 0.83 inch, Gap-Right= 0.83 inch, Friction= 0.80,
Gaps setting= Weightless

From A15 to A16, DX= 1.00 ft Bend

COMPONENT DATA (Bend, TIP= A15, Near= A15 N, Far= A15 F):
Elbow, Radius= 36.00 inch, Bend angle= 0.97 deg, End flanges= 0, Flex= Auto, SIFI= 1.00, SIFO= 1.00

POINT DATA:
A15, Coordinates, X= -15.39 ft, Y= 683.52 ft, Z= -302.16 ft

C O M P O N E N T D A T A L I S T I N G

A15 N, Coordinates, X= -15.42 ft, Y= 683.52 ft, Z= -302.16 ft
A15 F, Coordinates, X= -15.36 ft, Y= 683.52 ft, Z= -302.16 ft

From A16 to A17, DX= 1.00 ft Run

POINT DATA:
A16, Coordinates, X= -14.39 ft, Y= 683.52 ft, Z= -302.16 ft

From A17 to A18, DX= 0.55 ft Run

POINT DATA:
A17, Coordinates, X= -13.39 ft, Y= 683.52 ft, Z= -302.16 ft

From A18 to A19, DX= 0.19 ft Run

POINT DATA:
A18, Coordinates, X= -12.84 ft, Y= 683.52 ft, Z= -302.16 ft
A19, Coordinates, X= -12.65 ft, Y= 683.52 ft, Z= -302.16 ft

SUPPORT DATA:
A18, Anchor, Connected to: Ground, KTX= Rigid, KTY= Rigid, KTZ= Rigid, KRX= Rigid, KRY= Rigid, KRZ= Rigid

*** SEGMENT B , LINE # RIGID

From B00 to B01, DY= -0.25 ft Run

PIPE DATA:
Pipe Id= 3SCH40, Composition= Austenitic Stainless, Nom Size= 3.000, OD= 3.500 inch, Wall Thk= 0.216 inch,
Mill= 0.027 inch, Pipe Density= 501.00 lb/cu.ft, Pipe Unit Wgt= 7.75 lb/ft, Content Sp Gr= 1.600,
Content Unit Wgt= 5.13 lb/ft

POINT DATA:
B00, Coordinates, X= 0.00 ft, Y= 693.93 ft, Z= 2.00 ft

From B01 to B02, DY= -0.61 ft Run

POINT DATA:
B01, Coordinates, X= 0.00 ft, Y= 693.68 ft, Z= 2.00 ft

SUPPORT DATA:
B01, V-Stop, Support Id= B01 1, Connected to Ground, Comp.Wt = 0.000 lb, Gap-Below= 0.00 inch,
Gap-Above= 100.00 inch, Friction= 0.00, Gaps setting= Weightless
B01, Guide, Support Id= B01 2, Connected to Ground, Comp.Wt = 0.000 lb, Stiffness= RIGID, Gap -Z= 0.00 inch,
Gap +Z= 0.00 inch, Gap -X= 1.00 inch, Gap +X= 1.00 inch, Friction= 0.80, Gaps setting= Weightless

From B02 to B03, DX= 1.46 ft Bend

C O M P O N E N T D A T A L I S T I N G

```
 COMPONENT DATA (Bend, TIP= B02, Near= B02 N, Far= B02 F):
   Long Elbow, Radius= 4.50 inch, Bend angle= 90.00 deg, End flanges= 0, Flex= Auto, SIFI= 1.78, SIFO= 1.48

 POINT DATA:
   B02, Coordinates, X= 0.00 ft, Y= 693.07 ft, Z= 2.00 ft
   B02 N, Coordinates, X= 0.00 ft, Y= 693.44 ft, Z= 2.00 ft
   B02 F, Coordinates, X= 0.38 ft, Y= 693.07 ft, Z= 2.00 ft

 ---------------------------------------------------------------------------
 From B03 to B04, DX= 2.00 ft                                          Run

 POINT DATA:
   B03, Coordinates, X= 1.46 ft, Y= 693.07 ft, Z= 2.00 ft

 SUPPORT DATA:
   B03, Anchor, Connected to: Ground, KTX= Rigid, KTY= Rigid, KTZ= Rigid, KRX= Rigid, KRY= Rigid, KRZ= Rigid

 ---------------------------------------------------------------------------
 From B04 to B22, DX= 2.50 ft                                          Run

 POINT DATA:
   B04, Coordinates, X= 3.46 ft, Y= 693.07 ft, Z= 2.00 ft

 ---------------------------------------------------------------------------
 From B22 to B06, DX= 0.50 ft                                          Run

 POINT DATA:
   B22, Coordinates, X= 5.96 ft, Y= 693.07 ft, Z= 2.00 ft

 SUPPORT DATA:
   B22, Guide, Support Id= B22  2, Connected to Ground, Comp.Wt = 0.000 lb, Stiffness= RIGID,
   Gap-Down= 0.00 inch, Gap-Above= 1.28 inch, Gap-Left= 1.28 inch, Gap-Right= 1.28 inch, Friction= 0.80,
   Gaps setting= Weightless

 ---------------------------------------------------------------------------
 From B06 to B23, DX= 11.15 ft, DY= -1.83 ft, L= 11.30 ft              Bend

 COMPONENT DATA (Bend, TIP= B06, Near= B06 N, Far= B06 F):
   Elbow, Radius= 36.00 inch, Bend angle= 9.32 deg, End flanges= 0, Flex= Auto, SIFI= 1.00, SIFO= 1.00

 POINT DATA:
   B06, Coordinates, X= 6.46 ft, Y= 693.07 ft, Z= 2.00 ft
   B06 N, Coordinates, X= 6.22 ft, Y= 693.07 ft, Z= 2.00 ft
   B06 F, Coordinates, X= 6.70 ft, Y= 693.03 ft, Z= 2.00 ft

 ---------------------------------------------------------------------------
 From B23 to B24, DX= 7.70 ft, DY= -1.26 ft, L= 7.80 ft                Run

 POINT DATA:
   B23, Coordinates, X= 17.61 ft, Y= 691.24 ft, Z= 2.00 ft

 SUPPORT DATA:
   B23, Guide, Support Id= B23  2, Connected to Ground, Comp.Wt = 0.000 lb, Stiffness= RIGID,
   Gap-Down= 0.00 inch, Gap-Above= 0.31 inch, Gap-Left= 0.16 inch, Gap-Right= 0.16 inch, Friction= 0.80,
   Gaps setting= Weightless
```

C O M P O N E N T D A T A L I S T I N G

From B24 to B09, DX= 3.45 ft, DY= -0.57 ft, L= 3.50 ft Run

POINT DATA:
B24, Coordinates, X= 25.31 ft, Y= 689.98 ft, Z= 2.00 ft

SUPPORT DATA:
B24, Guide, Support Id= B24 2, Connected to Ground, Comp.Wt = 0.000 lb, Stiffness= RIGID,
Gap-Down= 0.00 inch, Gap-Above= 1.28 inch, Gap-Left= 1.28 inch, Gap-Right= 1.28 inch, Friction= 0.80,
Gaps setting= Weightless

From B09 to B25, DY= -0.10 ft, DZ= -3.50 ft, L= 3.50 ft Bend

COMPONENT DATA (Bend, TIP= B09, Near= B09 N, Far= B09 F):
Elbow, Radius= 36.00 inch, Bend angle= 89.73 deg, End flanges= 0, Flex= Auto, SIFI= 1.00, SIFO= 1.00

POINT DATA:
B09, Coordinates, X= 28.76 ft, Y= 689.41 ft, Z= 2.00 ft
B09 N, Coordinates, X= 25.81 ft, Y= 689.90 ft, Z= 2.00 ft
B09 F, Coordinates, X= 28.76 ft, Y= 689.32 ft, Z= -0.98 ft

From B25 to B26, DY= -0.26 ft, DZ= -9.00 ft, L= 9.00 ft Run

POINT DATA:
B25, Coordinates, X= 28.76 ft, Y= 689.31 ft, Z= -1.50 ft

SUPPORT DATA:
B25, Guide, Support Id= B25 2, Connected to Ground, Comp.Wt = 0.000 lb, Stiffness= RIGID,
Gap-Down= 0.00 inch, Gap-Above= 1.28 inch, Gap-Left= 1.28 inch, Gap-Right= 1.28 inch, Friction= 0.80,
Gaps setting= Weightless

From B26 to B28, DY= -0.26 ft, DZ= -9.00 ft, L= 9.00 ft Run

POINT DATA:
B26, Coordinates, X= 28.76 ft, Y= 689.05 ft, Z= -10.50 ft

SUPPORT DATA:
B26, Guide, Support Id= B26 1, Connected to Ground, Comp.Wt = 0.000 lb, Stiffness= RIGID,
Gap-Down= 0.00 inch, Gap-Above= 0.31 inch, Gap-Left= 0.16 inch, Gap-Right= 0.16 inch, Friction= 0.80,
Gaps setting= Weightless

From B28 to B29, DY= -0.26 ft, DZ= -9.00 ft, L= 9.00 ft Run

POINT DATA:
B28, Coordinates, X= 28.76 ft, Y= 688.79 ft, Z= -19.50 ft

SUPPORT DATA:
B28, Guide, Support Id= B28 1, Connected to Ground, Comp.Wt = 0.000 lb, Stiffness= RIGID,
Gap-Down= 0.00 inch, Gap-Above= 0.31 inch, Gap-Left= 0.16 inch, Gap-Right= 0.16 inch, Friction= 0.80,
Gaps setting= Weightless

C O M P O N E N T D A T A L I S T I N G

From B29 to B31, DY= -0.27 ft, DZ= -9.00 ft, L= 9.00 ft Run

POINT DATA:
B29, Coordinates, X= 28.76 ft, Y= 688.53 ft, Z= -28.50 ft

SUPPORT DATA:
B29, Guide, Support Id= B29 1, Connected to Ground, Comp.Wt = 0.000 lb, Stiffness= RIGID,
Gap-Down= 0.00 inch, Gap-Above= 0.31 inch, Gap-Left= 0.16 inch, Gap-Right= 0.16 inch, Friction= 0.80,
Gaps setting= Weightless

From B31 to B32, DY= -0.30 ft, DZ= -10.17 ft, L= 10.17 ft Run

POINT DATA:
B31, Coordinates, X= 28.76 ft, Y= 688.26 ft, Z= -37.50 ft

SUPPORT DATA:
B31, Guide, Support Id= B31 1, Connected to Ground, Comp.Wt = 0.000 lb, Stiffness= RIGID,
Gap-Down= 0.00 inch, Gap-Above= 0.31 inch, Gap-Left= 0.16 inch, Gap-Right= 0.16 inch, Friction= 0.80,
Gaps setting= Weightless

From B32 to B16, DY= -0.10 ft, DZ= -3.50 ft, L= 3.50 ft Run

POINT DATA:
B32, Coordinates, X= 28.76 ft, Y= 687.96 ft, Z= -47.67 ft

SUPPORT DATA:
B32, Guide, Support Id= B32 2, Connected to Ground, Comp.Wt = 0.000 lb, Stiffness= RIGID,
Gap-Down= 0.00 inch, Gap-Above= 1.28 inch, Gap-Left= 1.28 inch, Gap-Right= 1.28 inch, Friction= 0.80,
Gaps setting= Weightless

From B16 to B33, DX= 3.50 ft, DY= -0.08 ft, L= 3.50 ft Bend

COMPONENT DATA (Bend, TIP= B16, Near= B16 N, Far= B16 F):
Elbow, Radius= 36.00 inch, Bend angle= 89.96 deg, End flanges= 0, Flex= Auto, SIFI= 1.00, SIFO= 1.00

POINT DATA:
B16, Coordinates, X= 28.76 ft, Y= 687.86 ft, Z= -51.17 ft
B16 N, Coordinates, X= 28.76 ft, Y= 687.95 ft, Z= -48.17 ft
B16 F, Coordinates, X= 31.76 ft, Y= 687.79 ft, Z= -51.17 ft

From B33 to B34, DX= 2.76 ft, DY= -0.06 ft, L= 2.76 ft Run

POINT DATA:
B33, Coordinates, X= 32.26 ft, Y= 687.78 ft, Z= -51.17 ft

SUPPORT DATA:
B33, Guide, Support Id= B33 2, Connected to Ground, Comp.Wt = 0.000 lb, Stiffness= RIGID,
Gap-Down= 0.00 inch, Gap-Above= 1.28 inch, Gap-Left= 1.28 inch, Gap-Right= 1.28 inch, Friction= 0.80,
Gaps setting= Weightless

C O M P O N E N T D A T A L I S T I N G

From B34 to B19, DX= 3.50 ft, DY= -0.08 ft, L= 3.50 ft Run

POINT DATA:
B34, Coordinates, X= 35.02 ft, Y= 687.72 ft, Z= -51.17 ft

SUPPORT DATA:
B34, Guide, Support Id= B34 2, Connected to Ground, Comp.Wt = 0.000 lb, Stiffness= RIGID,
Gap-Down= 0.00 inch, Gap-Above= 1.28 inch, Gap-Left= 1.28 inch, Gap-Right= 1.28 inch, Friction= 0.80,
Gaps setting= Weightless

From B19 to B35, DY= -0.10 ft, DZ= -3.50 ft, L= 3.50 ft Bend

COMPONENT DATA (Bend, TIP= B19, Near= B19 N, Far= B19 F):
Elbow, Radius= 36.00 inch, Bend angle= 89.96 deg, End flanges= 0, Flex= Auto, SIFI= 1.00, SIFO= 1.00

POINT DATA:
B19, Coordinates, X= 38.52 ft, Y= 687.64 ft, Z= -51.17 ft
B19 N, Coordinates, X= 35.52 ft, Y= 687.71 ft, Z= -51.17 ft
B19 F, Coordinates, X= 38.52 ft, Y= 687.55 ft, Z= -54.17 ft

From B35 to B36, DY= -0.25 ft, DZ= -9.00 ft, L= 9.00 ft Run

POINT DATA:
B35, Coordinates, X= 38.52 ft, Y= 687.54 ft, Z= -54.67 ft

SUPPORT DATA:
B35, Guide, Support Id= B35 2, Connected to Ground, Comp.Wt = 0.000 lb, Stiffness= RIGID,
Gap-Down= 0.00 inch, Gap-Above= 1.28 inch, Gap-Left= 1.28 inch, Gap-Right= 1.28 inch, Friction= 0.80,
Gaps setting= Weightless

From B36 to B37, DY= -0.25 ft, DZ= -9.00 ft, L= 9.00 ft Run

POINT DATA:
B36, Coordinates, X= 38.52 ft, Y= 687.29 ft, Z= -63.67 ft

SUPPORT DATA:
B36, Guide, Support Id= B36 2, Connected to Ground, Comp.Wt = 0.000 lb, Stiffness= RIGID,
Gap-Down= 0.00 inch, Gap-Above= 0.31 inch, Gap-Left= 0.16 inch, Gap-Right= 0.16 inch, Friction= 0.80,
Gaps setting= Weightless

From B37 to B38, DY= -0.25 ft, DZ= -9.00 ft, L= 9.00 ft Run

POINT DATA:
B37, Coordinates, X= 38.52 ft, Y= 687.04 ft, Z= -72.67 ft

SUPPORT DATA:
B37, Guide, Support Id= B37 2, Connected to Ground, Comp.Wt = 0.000 lb, Stiffness= RIGID,
Gap-Down= 0.00 inch, Gap-Above= 0.31 inch, Gap-Left= 0.16 inch, Gap-Right= 0.16 inch, Friction= 0.80,
Gaps setting= Weightless

C O M P O N E N T D A T A L I S T I N G

```
 ---------------------------------------------------------------------------
 From B38 to B39, DY= -0.25 ft, DZ= -9.00 ft, L= 9.00 ft                   Run

 POINT DATA:
   B38, Coordinates, X= 38.52 ft, Y= 686.79 ft, Z= -81.67 ft

 SUPPORT DATA:
   B38, Guide, Support Id= B38  2, Connected to Ground, Comp.Wt = 0.000 lb, Stiffness= RIGID,
   Gap-Down= 0.00 inch, Gap-Above= 0.31 inch, Gap-Left= 0.16 inch, Gap-Right= 0.16 inch, Friction= 0.80,
   Gaps setting= Weightless

 ---------------------------------------------------------------------------
 From B39 to B40, DY= -0.22 ft, DZ= -7.67 ft, L= 7.67 ft                   Run

 POINT DATA:
   B39, Coordinates, X= 38.52 ft, Y= 686.54 ft, Z= -90.67 ft

 SUPPORT DATA:
   B39, Guide, Support Id= B39  2, Connected to Ground, Comp.Wt = 0.000 lb, Stiffness= RIGID,
   Gap-Down= 0.00 inch, Gap-Above= 0.31 inch, Gap-Left= 0.16 inch, Gap-Right= 0.16 inch, Friction= 0.80,
   Gaps setting= Weightless

 ---------------------------------------------------------------------------
 From B40 to B42, DY= -0.25 ft, DZ= -9.00 ft, L= 9.00 ft                   Run

 POINT DATA:
   B40, Coordinates, X= 38.52 ft, Y= 686.32 ft, Z= -98.34 ft

 SUPPORT DATA:
   B40, Guide, Support Id= B40  1, Connected to Ground, Comp.Wt = 0.000 lb, Stiffness= RIGID,
   Gap-Down= 0.00 inch, Gap-Above= 0.31 inch, Gap-Left= 0.16 inch, Gap-Right= 0.16 inch, Friction= 0.80,
   Gaps setting= Weightless

 ---------------------------------------------------------------------------
 From B42 to B27, DY= -0.10 ft, DZ= -3.50 ft, L= 3.50 ft                   Run

 POINT DATA:
   B42, Coordinates, X= 38.52 ft, Y= 686.07 ft, Z= -107.34 ft

 SUPPORT DATA:
   B42, Guide, Support Id= B42  1, Connected to Ground, Comp.Wt = 0.000 lb, Stiffness= RIGID,
   Gap-Down= 0.00 inch, Gap-Above= 1.28 inch, Gap-Left= 1.28 inch, Gap-Right= 1.28 inch, Friction= 0.80,
   Gaps setting= Weightless

 ---------------------------------------------------------------------------
 From B27 to B43, DX= -3.50 ft, DY= -0.09 ft, L= 3.50 ft                   Bend

 COMPONENT DATA (Bend, TIP= B27, Near= B27 N, Far= B27 F):
   Elbow, Radius= 36.00 inch, Bend angle= 89.96 deg, End flanges= 0, Flex= Auto, SIFI= 1.00, SIFO= 1.00

 POINT DATA:
   B27, Coordinates, X= 38.52 ft, Y= 685.97 ft, Z= -110.84 ft
   B27 N, Coordinates, X= 38.52 ft, Y= 686.06 ft, Z= -107.84 ft
   B27 F, Coordinates, X= 35.52 ft, Y= 685.89 ft, Z= -110.84 ft
```

C O M P O N E N T D A T A L I S T I N G

From B43 to B45, DX= -4.00 ft, DY= -0.10 ft, L= 4.00 ft Run

POINT DATA:
B43, Coordinates, X= 35.02 ft, Y= 685.88 ft, Z= -110.84 ft

SUPPORT DATA:
B43, Guide, Support Id= B43 1, Connected to Ground, Comp.Wt = 0.000 lb, Stiffness= RIGID,
Gap-Down= 0.00 inch, Gap-Above= 1.28 inch, Gap-Left= 1.28 inch, Gap-Right= 1.28 inch, Friction= 0.80,
Gaps setting= Weightless

From B45 to B30, DX= -3.50 ft, DY= -0.08 ft, L= 3.50 ft Run

POINT DATA:
B45, Coordinates, X= 31.02 ft, Y= 685.78 ft, Z= -110.84 ft

SUPPORT DATA:
B45, Guide, Support Id= B45 1, Connected to Ground, Comp.Wt = 0.000 lb, Stiffness= RIGID,
Gap-Down= 0.00 inch, Gap-Above= 1.28 inch, Gap-Left= 1.28 inch, Gap-Right= 1.28 inch, Friction= 0.80,
Gaps setting= Weightless

From B30 to B46, DY= -0.03 ft, DZ= -3.50 ft, L= 3.50 ft Bend

COMPONENT DATA (Bend, TIP= B30, Near= B30 N, Far= B30 F):
Elbow, Radius= 36.00 inch, Bend angle= 89.99 deg, End flanges= 0, Flex= Auto, SIFI= 1.00, SIFO= 1.00

POINT DATA:
B30, Coordinates, X= 27.52 ft, Y= 685.70 ft, Z= -110.84 ft
B30 N, Coordinates, X= 30.52 ft, Y= 685.77 ft, Z= -110.84 ft
B30 F, Coordinates, X= 27.52 ft, Y= 685.67 ft, Z= -113.84 ft

From B46 to B47, DY= -0.08 ft, DZ= -9.00 ft, L= 9.00 ft Run

POINT DATA:
B46, Coordinates, X= 27.52 ft, Y= 685.67 ft, Z= -114.34 ft

SUPPORT DATA:
B46, Guide, Support Id= B46 2, Connected to Ground, Comp.Wt = 0.000 lb, Stiffness= RIGID,
Gap-Down= 0.00 inch, Gap-Above= 1.28 inch, Gap-Left= 1.28 inch, Gap-Right= 1.28 inch, Friction= 0.80,
Gaps setting= Weightless

From B47 to B48, DY= -0.08 ft, DZ= -9.00 ft, L= 9.00 ft Run

POINT DATA:
B47, Coordinates, X= 27.52 ft, Y= 685.59 ft, Z= -123.34 ft

SUPPORT DATA:
B47, Guide, Support Id= B47 2, Connected to Ground, Comp.Wt = 0.000 lb, Stiffness= RIGID,
Gap-Down= 0.00 inch, Gap-Above= 0.31 inch, Gap-Left= 0.16 inch, Gap-Right= 0.16 inch, Friction= 0.80,
Gaps setting= Weightless

C O M P O N E N T D A T A L I S T I N G

From B48 to B49, DY= -0.08 ft, DZ= -9.00 ft, L= 9.00 ft Run

POINT DATA:
B48, Coordinates, X= 27.52 ft, Y= 685.51 ft, Z= -132.34 ft

SUPPORT DATA:
B48, Guide, Support Id= B48 2, Connected to Ground, Comp.Wt = 0.000 lb, Stiffness= RIGID,
Gap-Down= 0.00 inch, Gap-Above= 0.31 inch, Gap-Left= 0.16 inch, Gap-Right= 0.16 inch, Friction= 0.80,
Gaps setting= Weightless

From B49 to B50, DY= -0.08 ft, DZ= -9.00 ft, L= 9.00 ft Run

POINT DATA:
B49, Coordinates, X= 27.52 ft, Y= 685.43 ft, Z= -141.34 ft

SUPPORT DATA:
B49, Guide, Support Id= B49 2, Connected to Ground, Comp.Wt = 0.000 lb, Stiffness= RIGID,
Gap-Down= 0.00 inch, Gap-Above= 0.31 inch, Gap-Left= 0.16 inch, Gap-Right= 0.16 inch, Friction= 0.80,
Gaps setting= Weightless

From B50 to B51, DY= -0.07 ft, DZ= -9.00 ft, L= 9.00 ft Run

POINT DATA:
B50, Coordinates, X= 27.52 ft, Y= 685.35 ft, Z= -150.34 ft

SUPPORT DATA:
B50, Guide, Support Id= B50 2, Connected to Ground, Comp.Wt = 0.000 lb, Stiffness= RIGID,
Gap-Down= 0.00 inch, Gap-Above= 0.31 inch, Gap-Left= 0.16 inch, Gap-Right= 0.16 inch, Friction= 0.80,
Gaps setting= Weightless

From B51 to B52, DY= -0.08 ft, DZ= -9.00 ft, L= 9.00 ft Run

POINT DATA:
B51, Coordinates, X= 27.52 ft, Y= 685.28 ft, Z= -159.34 ft

SUPPORT DATA:
B51, Guide, Support Id= B51 2, Connected to Ground, Comp.Wt = 0.000 lb, Stiffness= RIGID,
Gap-Down= 0.00 inch, Gap-Above= 0.31 inch, Gap-Left= 0.16 inch, Gap-Right= 0.16 inch, Friction= 0.80,
Gaps setting= Weightless

From B52 to B53, DY= -0.07 ft, DZ= -9.00 ft, L= 9.00 ft Run

POINT DATA:
B52, Coordinates, X= 27.52 ft, Y= 685.20 ft, Z= -168.34 ft

SUPPORT DATA:
B52, Guide, Support Id= B52 2, Connected to Ground, Comp.Wt = 0.000 lb, Stiffness= RIGID,
Gap-Down= 0.00 inch, Gap-Above= 0.31 inch, Gap-Left= 0.16 inch, Gap-Right= 0.16 inch, Friction= 0.80,
Gaps setting= Weightless

C O M P O N E N T D A T A L I S T I N G

From B53 to B54, DX= 0 ft, DY= -0.07 ft, DZ= -7.83 ft, L= 7.83 ft Run

POINT DATA:
B53, Coordinates, X= 27.52 ft, Y= 685.13 ft, Z= -177.34 ft

SUPPORT DATA:
B53, Guide, Support Id= B53 2, Connected to Ground, Comp.Wt = 0.000 lb, Stiffness= RIGID,
Gap-Down= 0.00 inch, Gap-Above= 0.31 inch, Gap-Left= 0.16 inch, Gap-Right= 0.16 inch, Friction= 0.80,
Gaps setting= Weightless

From B54 to B55, DY= -0.07 ft, DZ= -9.00 ft, L= 9.00 ft Run

POINT DATA:
B54, Coordinates, X= 27.52 ft, Y= 685.06 ft, Z= -185.17 ft

SUPPORT DATA:
B54, Guide, Support Id= B54 2, Connected to Ground, Comp.Wt = 0.000 lb, Stiffness= RIGID,
Gap-Down= 0.00 inch, Gap-Above= 0.31 inch, Gap-Left= 0.16 inch, Gap-Right= 0.16 inch, Friction= 0.80,
Gaps setting= Weightless

From B55 to B41, DY= -0.03 ft, DZ= -3.50 ft, L= 3.50 ft Run

POINT DATA:
B55, Coordinates, X= 27.52 ft, Y= 684.99 ft, Z= -194.17 ft

SUPPORT DATA:
B55, Guide, Support Id= B55 1, Connected to Ground, Comp.Wt = 0.000 lb, Stiffness= RIGID,
Gap-Down= 0.00 inch, Gap-Above= 1.28 inch, Gap-Left= 1.28 inch, Gap-Right= 1.28 inch, Friction= 0.80,
Gaps setting= Weightless

From B41 to B57, DX= 3.50 ft, DY= -0.02 ft, L= 3.50 ft Bend

COMPONENT DATA (Bend, TIP= B41, Near= B41 N, Far= B41 F):
Elbow, Radius= 36.00 inch, Bend angle= 90.00 deg, End flanges= 0, Flex= Auto, SIFI= 1.00, SIFO= 1.00

POINT DATA:
B41, Coordinates, X= 27.52 ft, Y= 684.96 ft, Z= -197.67 ft
B41 N, Coordinates, X= 27.52 ft, Y= 684.99 ft, Z= -194.67 ft
B41 F, Coordinates, X= 30.52 ft, Y= 684.94 ft, Z= -197.67 ft

From B57 to B58, DX= 6.91 ft, DY= -0.05 ft, L= 6.91 ft Run

POINT DATA:
B57, Coordinates, X= 31.02 ft, Y= 684.94 ft, Z= -197.67 ft

SUPPORT DATA:
B57, Guide, Support Id= B57 1, Connected to Ground, Comp.Wt = 0.000 lb, Stiffness= RIGID,
Gap-Down= 0.00 inch, Gap-Above= 1.28 inch, Gap-Left= 1.28 inch, Gap-Right= 1.28 inch, Friction= 0.80,
Gaps setting= Weightless

C O M P O N E N T D A T A L I S T I N G

From B58 to B44, DX= 3.50 ft, DY= -0.02 ft, L= 3.50 ft Run

POINT DATA:
B58, Coordinates, X= 37.93 ft, Y= 684.89 ft, Z= -197.67 ft

SUPPORT DATA:
B58, Guide, Support Id= B58 1, Connected to Ground, Comp.Wt = 0.000 lb, Stiffness= RIGID,
Gap-Down= 0.00 inch, Gap-Above= 1.28 inch, Gap-Left= 1.28 inch, Gap-Right= 1.28 inch, Friction= 0.80,
Gaps setting= Weightless

From B44 to B64, DY= -0.02 ft, DZ= -3.50 ft, L= 3.50 ft Bend

COMPONENT DATA (Bend, TIP= B44, Near= B44 N, Far= B44 F):
Elbow, Radius= 36.00 inch, Bend angle= 90.00 deg, End flanges= 0, Flex= Auto, SIFI= 1.00, SIFO= 1.00

POINT DATA:
B44, Coordinates, X= 41.43 ft, Y= 684.87 ft, Z= -197.67 ft
B44 N, Coordinates, X= 38.43 ft, Y= 684.89 ft, Z= -197.67 ft
B44 F, Coordinates, X= 41.43 ft, Y= 684.85 ft, Z= -200.67 ft

From B64 to B65, DY= -0.06 ft, DZ= -9.00 ft, L= 9.00 ft Run

POINT DATA:
B64, Coordinates, X= 41.43 ft, Y= 684.85 ft, Z= -201.17 ft

SUPPORT DATA:
B64, Guide, Support Id= B64 1, Connected to Ground, Comp.Wt = 0.000 lb, Stiffness= RIGID,
Gap-Down= 0.00 inch, Gap-Above= 1.28 inch, Gap-Left= 1.28 inch, Gap-Right= 1.28 inch, Friction= 0.80,
Gaps setting= Weightless

From B65 to B66, DY= -0.06 ft, DZ= -9.00 ft, L= 9.00 ft Run

POINT DATA:
B65, Coordinates, X= 41.43 ft, Y= 684.79 ft, Z= -210.17 ft

SUPPORT DATA:
B65, Guide, Support Id= B65 1, Connected to Ground, Comp.Wt = 0.000 lb, Stiffness= RIGID,
Gap-Down= 0.00 inch, Gap-Above= 0.31 inch, Gap-Left= 0.16 inch, Gap-Right= 0.16 inch, Friction= 0.80,
Gaps setting= Weightless

From B66 to B67, DY= -0.06 ft, DZ= -9.00 ft, L= 9.00 ft Run

POINT DATA:
B66, Coordinates, X= 41.43 ft, Y= 684.73 ft, Z= -219.17 ft

SUPPORT DATA:
B66, Guide, Support Id= B66 1, Connected to Ground, Comp.Wt = 0.000 lb, Stiffness= RIGID,
Gap-Down= 0.00 inch, Gap-Above= 0.31 inch, Gap-Left= 0.16 inch, Gap-Right= 0.16 inch, Friction= 0.80,
Gaps setting= Weightless

C O M P O N E N T D A T A L I S T I N G

From B67 to B68, DY= -0.06 ft, DZ= -9.00 ft, L= 9.00 ft Run

POINT DATA:
B67, Coordinates, X= 41.43 ft, Y= 684.67 ft, Z= -228.17 ft

SUPPORT DATA:
B67, Guide, Support Id= B67 1, Connected to Ground, Comp.Wt = 0.000 lb, Stiffness= RIGID,
Gap-Down= 0.00 inch, Gap-Above= 0.31 inch, Gap-Left= 0.16 inch, Gap-Right= 0.16 inch, Friction= 0.80,
Gaps setting= Weightless

From B68 to B69, DY= -0.06 ft, DZ= -9.00 ft, L= 9.00 ft Run

POINT DATA:
B68, Coordinates, X= 41.43 ft, Y= 684.61 ft, Z= -237.17 ft

SUPPORT DATA:
B68, Guide, Support Id= B68 1, Connected to Ground, Comp.Wt = 0.000 lb, Stiffness= RIGID,
Gap-Down= 0.00 inch, Gap-Above= 0.31 inch, Gap-Left= 0.16 inch, Gap-Right= 0.16 inch, Friction= 0.80,
Gaps setting= Weightless

From B69 to B70, DY= -0.06 ft, DZ= -9.00 ft, L= 9.00 ft Run

POINT DATA:
B69, Coordinates, X= 41.43 ft, Y= 684.55 ft, Z= -246.17 ft

SUPPORT DATA:
B69, Guide, Support Id= B69 1, Connected to Ground, Comp.Wt = 0.000 lb, Stiffness= RIGID,
Gap-Down= 0.00 inch, Gap-Above= 0.31 inch, Gap-Left= 0.16 inch, Gap-Right= 0.16 inch, Friction= 0.80,
Gaps setting= Weightless

From B70 to B71, DY= -0.06 ft, DZ= -9.00 ft, L= 9.00 ft Run

POINT DATA:
B70, Coordinates, X= 41.43 ft, Y= 684.49 ft, Z= -255.17 ft

SUPPORT DATA:
B70, Guide, Support Id= B70 1, Connected to Ground, Comp.Wt = 0.000 lb, Stiffness= RIGID,
Gap-Down= 0.00 inch, Gap-Above= 0.31 inch, Gap-Left= 0.16 inch, Gap-Right= 0.16 inch, Friction= 0.80,
Gaps setting= Weightless

From B71 to B72, DY= -0.05 ft, DZ= -9.00 ft, L= 9.00 ft Run

POINT DATA:
B71, Coordinates, X= 41.43 ft, Y= 684.43 ft, Z= -264.17 ft

SUPPORT DATA:
B71, Guide, Support Id= B71 1, Connected to Ground, Comp.Wt = 0.000 lb, Stiffness= RIGID,
Gap-Down= 0.00 inch, Gap-Above= 0.31 inch, Gap-Left= 0.16 inch, Gap-Right= 0.16 inch, Friction= 0.80,
Gaps setting= Weightless

C O M P O N E N T D A T A L I S T I N G

From B72 to B73, DX= 0 ft, DY= -0.03 ft, DZ= -4.83 ft, L= 4.83 ft Run

POINT DATA:
B72, Coordinates, X= 41.43 ft, Y= 684.38 ft, Z= -273.17 ft

SUPPORT DATA:
B72, Guide, Support Id= B72 1, Connected to Ground, Comp.Wt = 0.000 lb, Stiffness= RIGID,
Gap-Down= 0.00 inch, Gap-Above= 0.31 inch, Gap-Left= 0.16 inch, Gap-Right= 0.16 inch, Friction= 0.80,
Gaps setting= Weightless

From B73 to B74, DY= -0.06 ft, DZ= -9.00 ft, L= 9.00 ft Run

POINT DATA:
B73, Coordinates, X= 41.43 ft, Y= 684.35 ft, Z= -278.00 ft

SUPPORT DATA:
B73, Guide, Support Id= B73 1, Connected to Ground, Comp.Wt = 0.000 lb, Stiffness= RIGID,
Gap-Down= 0.00 inch, Gap-Above= 0.31 inch, Gap-Left= 0.16 inch, Gap-Right= 0.16 inch, Friction= 0.80,
Gaps setting= Weightless

From B74 to B56, DY= -0.02 ft, DZ= -3.50 ft, L= 3.50 ft Run

POINT DATA:
B74, Coordinates, X= 41.43 ft, Y= 684.29 ft, Z= -287.00 ft

SUPPORT DATA:
B74, Guide, Support Id= B74 1, Connected to Ground, Comp.Wt = 0.000 lb, Stiffness= RIGID,
Gap-Down= 0.00 inch, Gap-Above= 1.28 inch, Gap-Left= 1.28 inch, Gap-Right= 1.28 inch, Friction= 0.80,
Gaps setting= Weightless

From B56 to B75, DX= -2.95 ft, DY= -0.03 ft, L= 2.95 ft Bend

COMPONENT DATA (Bend, TIP= B56, Near= B56 N, Far= B56 F):
Elbow, Radius= 30.00 inch, Bend angle= 90.00 deg, End flanges= 0, Flex= Auto, SIFI= 1.00, SIFO= 1.00

POINT DATA:
B56, Coordinates, X= 41.43 ft, Y= 684.27 ft, Z= -290.50 ft
B56 N, Coordinates, X= 41.43 ft, Y= 684.28 ft, Z= -288.00 ft
B56 F, Coordinates, X= 38.93 ft, Y= 684.24 ft, Z= -290.50 ft

From B75 to B20, DX= -2.94 ft, DY= -0.05 ft, L= 2.94 ft Run

POINT DATA:
B75, Coordinates, X= 38.48 ft, Y= 684.24 ft, Z= -290.50 ft

SUPPORT DATA:
B75, Guide, Support Id= B75 1, Connected to Ground, Comp.Wt = 0.000 lb, Stiffness= RIGID,
Gap-Down= 0.00 inch, Gap-Above= 1.28 inch, Gap-Left= 1.28 inch, Gap-Right= 1.28 inch, Friction= 0.80,
Gaps setting= Weightless

C O M P O N E N T D A T A L I S T I N G

From B20 to B77, DY= -0.06 ft, DZ= -3.17 ft, L= 3.17 ft Bend

COMPONENT DATA (Bend, TIP= B20, Near= B20 N, Far= B20 F):
Elbow, Radius= 30.00 inch, Bend angle= 89.98 deg, End flanges= 0, Flex= Auto, SIFI= 1.00, SIFO= 1.00

POINT DATA:
B20, Coordinates, X= 35.54 ft, Y= 684.19 ft, Z= -290.50 ft
B20 N, Coordinates, X= 38.04 ft, Y= 684.23 ft, Z= -290.50 ft
B20 F, Coordinates, X= 35.54 ft, Y= 684.14 ft, Z= -293.00 ft

From B77 to B21, DY= -0.06 ft, DZ= -3.16 ft, L= 3.16 ft Run

POINT DATA:
B77, Coordinates, X= 35.54 ft, Y= 684.13 ft, Z= -293.67 ft

SUPPORT DATA:
B77, Guide, Support Id= B77 1, Connected to Ground, Comp.Wt = 0.000 lb, Stiffness= RIGID,
Gap-Down= 0.00 inch, Gap-Above= 0.31 inch, Gap-Left= 0.16 inch, Gap-Right= 0.16 inch, Friction= 0.80,
Gaps setting= Weightless

From B21 to B59, DX= -4.85 ft, DY= -0.07 ft, L= 4.85 ft Bend

COMPONENT DATA (Bend, TIP= B21, Near= B21 N, Far= B21 F):
Elbow, Radius= 30.00 inch, Bend angle= 89.98 deg, End flanges= 0, Flex= Auto, SIFI= 1.00, SIFO= 1.00

POINT DATA:
B21, Coordinates, X= 35.54 ft, Y= 684.07 ft, Z= -296.83 ft
B21 N, Coordinates, X= 35.54 ft, Y= 684.12 ft, Z= -294.33 ft
B21 F, Coordinates, X= 33.04 ft, Y= 684.03 ft, Z= -296.83 ft

From B59 to B60, DX= -1.00 ft Bend

COMPONENT DATA (Bend, TIP= B59, Near= B59 N, Mid= B59 M, Far= B59 F):
Elbow, Radius= 36.00 inch, Bend angle= 0.83 deg, Mid point at 50.00 percent, End flanges= 0, Flex= Auto,
SIFI= 1.00, SIFO= 1.00

POINT DATA:
B59, Coordinates, X= 30.69 ft, Y= 684.00 ft, Z= -296.83 ft
B59 N, Coordinates, X= 30.71 ft, Y= 684.00 ft, Z= -296.83 ft
B59 M, Coordinates, X= 30.69 ft, Y= 684.00 ft, Z= -296.83 ft
B59 F, Coordinates, X= 30.67 ft, Y= 684.00 ft, Z= -296.83 ft

SUPPORT DATA:
B59 F, Guide, Support Id= B59 F1, Connected to Ground, Comp.Wt = 0.000 lb, Stiffness= RIGID,
Gap-Down= 0.00 inch, Gap-Above= 1.28 inch, Gap-Left= 1.28 inch, Gap-Right= 1.28 inch, Friction= 0.80,
Gaps setting= Weightless

From B60 to B61, DX= -1.00 ft Run

POINT DATA:

C O M P O N E N T D A T A L I S T I N G

B60, Coordinates, X= 29.69 ft, Y= 684.00 ft, Z= -296.83 ft

From B61 to B62, DX= -0.61 ft Run

POINT DATA:
B61, Coordinates, X= 28.69 ft, Y= 684.00 ft, Z= -296.83 ft

From B62 to B63, DX= -0.25 ft Run

POINT DATA:
B62, Coordinates, X= 28.08 ft, Y= 684.00 ft, Z= -296.83 ft
B63, Coordinates, X= 27.83 ft, Y= 684.00 ft, Z= -296.83 ft

SUPPORT DATA:
B62, Anchor, Connected to: Ground, KTX= Rigid, KTY= Rigid, KTZ= Rigid, KRX= Rigid, KRY= Rigid, KRZ= Rigid

---

*** SEGMENT C

From C00 to C01, DY= -0.19 ft Run

PIPE DATA:
Pipe Id= 2SCH40, Composition= Austenitic Stainless, Nom Size= 2.000, OD= 2.375 inch, Wall Thk= 0.154 inch,
Mill= 0.019 inch, Pipe Density= 501.00 lb/cu.ft, Pipe Unit Wgt= 3.74 lb/ft, Content Sp Gr= 1.600,
Content Unit Wgt= 2.33 lb/ft

POINT DATA:
C00, Coordinates, X= 0.00 ft, Y= 691.68 ft, Z= 1.00 ft

From C01 to C02, DY= -0.42 ft Run

POINT DATA:
C01, Coordinates, X= 0.00 ft, Y= 691.49 ft, Z= 1.00 ft

SUPPORT DATA:
C01, V-Stop, Support Id= C01 1, Connected to Ground, Comp.Wt = 0.000 lb, Gap-Below= 0.00 inch,
Gap-Above= 100.00 inch, Friction= 0.00, Gaps setting= Weightless
C01, Guide, Support Id= C01 2, Connected to Ground, Comp.Wt = 0.000 lb, Stiffness= RIGID, Gap -Z= 0.00 inch,
Gap +Z= 0.00 inch, Gap -X= 1.00 inch, Gap +X= 1.00 inch, Friction= 0.80, Gaps setting= Weightless

---

From C02 to C03, DX= 1.46 ft Bend

COMPONENT DATA (Bend, TIP= C02, Near= C02 N, Far= C02 F):
Long Elbow, Radius= 3.00 inch, Bend angle= 90.00 deg, End flanges= 0, Flex= Auto, SIFI= 1.73, SIFO= 1.44

POINT DATA:
C02, Coordinates, X= 0.00 ft, Y= 691.07 ft, Z= 1.00 ft
C02 N, Coordinates, X= 0.00 ft, Y= 691.32 ft, Z= 1.00 ft
C02 F, Coordinates, X= 0.25 ft, Y= 691.07 ft, Z= 1.00 ft

C O M P O N E N T D A T A L I S T I N G

From C03 to C04, DX= 2.00 ft Run

POINT DATA:
C03, Coordinates, X= 1.46 ft, Y= 691.07 ft, Z= 1.00 ft

SUPPORT DATA:
C03, Anchor, Connected to: Ground, KTX= Rigid, KTY= Rigid, KTZ= Rigid, KRX= Rigid, KRY= Rigid, KRZ= Rigid

From C04 to C21, DX= 2.50 ft Run

POINT DATA:
C04, Coordinates, X= 3.46 ft, Y= 691.07 ft, Z= 1.00 ft

From C21 to C06, DX= 0.50 ft Run

POINT DATA:
C21, Coordinates, X= 5.96 ft, Y= 691.07 ft, Z= 1.00 ft

SUPPORT DATA:
C21, Guide, Support Id= C21 2, Connected to Ground, Comp.Wt = 0.000 lb, Stiffness= RIGID,
Gap-Down= 0.00 inch, Gap-Above= 0.83 inch, Gap-Left= 0.83 inch, Gap-Right= 0.83 inch, Friction= 0.80,
Gaps setting= Weightless

From C06 to C22, DX= 10.49 ft, DY= -0.85 ft, L= 10.52 ft Bend

COMPONENT DATA (Bend, TIP= C06, Near= C06 N, Far= C06 F):
Elbow, Radius= 36.00 inch, Bend angle= 4.63 deg, End flanges= 0, Flex= Auto, SIFI= 1.00, SIFO= 1.00

POINT DATA:
C06, Coordinates, X= 6.46 ft, Y= 691.07 ft, Z= 1.00 ft
C06 N, Coordinates, X= 6.34 ft, Y= 691.07 ft, Z= 1.00 ft
C06 F, Coordinates, X= 6.58 ft, Y= 691.06 ft, Z= 1.00 ft

From C22 to C23, DX= 6.99 ft, DY= -0.57 ft, L= 7.01 ft Run

POINT DATA:
C22, Coordinates, X= 16.95 ft, Y= 690.22 ft, Z= 1.00 ft

SUPPORT DATA:
C22, Guide, Support Id= C22 2, Connected to Ground, Comp.Wt = 0.000 lb, Stiffness= RIGID,
Gap-Down= 0.00 inch, Gap-Above= 0.06 inch, Gap-Left= 0.03 inch, Gap-Right= 0.03 inch, Friction= 0.80,
Gaps setting= Weightless

From C23 to C09, DX= 3.49 ft, DY= -0.28 ft, L= 3.50 ft Run

POINT DATA:
C23, Coordinates, X= 23.94 ft, Y= 689.65 ft, Z= 1.00 ft

SUPPORT DATA:

C O M P O N E N T D A T A L I S T I N G

C23, Guide, Support Id= C23 2, Connected to Ground, Comp.Wt = 0.000 lb, Stiffness= RIGID,
Gap-Down= 0.00 inch, Gap-Above= 0.83 inch, Gap-Left= 0.83 inch, Gap-Right= 0.83 inch, Friction= 0.80,
Gaps setting= Weightless

From C09 to C24, DY= -0.10 ft, DZ= -3.50 ft, L= 3.50 ft Bend

COMPONENT DATA (Bend, TIP= C09, Near= C09 N, Far= C09 F):
Elbow, Radius= 36.00 inch, Bend angle= 89.87 deg, End flanges= 0, Flex= Auto, SIFI= 1.00, SIFO= 1.00

POINT DATA:
C09, Coordinates, X= 27.43 ft, Y= 689.37 ft, Z= 1.00 ft
C09 N, Coordinates, X= 24.45 ft, Y= 689.61 ft, Z= 1.00 ft
C09 F, Coordinates, X= 27.43 ft, Y= 689.28 ft, Z= -1.99 ft

From C24 to C25, DY= -0.26 ft, DZ= -9.00 ft, L= 9.00 ft Run

POINT DATA:
C24, Coordinates, X= 27.43 ft, Y= 689.27 ft, Z= -2.50 ft

SUPPORT DATA:
C24, Guide, Support Id= C24 2, Connected to Ground, Comp.Wt = 0.000 lb, Stiffness= RIGID,
Gap-Down= 0.00 inch, Gap-Above= 0.83 inch, Gap-Left= 0.83 inch, Gap-Right= 0.83 inch, Friction= 0.80,
Gaps setting= Weightless

From C25 to C26, DY= -0.26 ft, DZ= -9.00 ft, L= 9.00 ft Run

POINT DATA:
C25, Coordinates, X= 27.43 ft, Y= 689.01 ft, Z= -11.50 ft

SUPPORT DATA:
C25, Guide, Support Id= C25 2, Connected to Ground, Comp.Wt = 0.000 lb, Stiffness= RIGID,
Gap-Down= 0.00 inch, Gap-Above= 0.06 inch, Gap-Left= 0.03 inch, Gap-Right= 0.03 inch, Friction= 0.80,
Gaps setting= Weightless

From C26 to C28, DY= -0.26 ft, DZ= -9.00 ft, L= 9.00 ft Run

POINT DATA:
C26, Coordinates, X= 27.43 ft, Y= 688.75 ft, Z= -20.50 ft

SUPPORT DATA:
C26, Guide, Support Id= C26 2, Connected to Ground, Comp.Wt = 0.000 lb, Stiffness= RIGID,
Gap-Down= 0.00 inch, Gap-Above= 0.06 inch, Gap-Left= 0.03 inch, Gap-Right= 0.03 inch, Friction= 0.80,
Gaps setting= Weightless

From C28 to C29, DY= -0.27 ft, DZ= -9.00 ft, L= 9.00 ft Run

POINT DATA:
C28, Coordinates, X= 27.43 ft, Y= 688.49 ft, Z= -29.50 ft

SUPPORT DATA:

C O M P O N E N T D A T A L I S T I N G

C28, Guide, Support Id= C28 2, Connected to Ground, Comp.Wt = 0.000 lb, Stiffness= RIGID,
Gap-Down= 0.00 inch, Gap-Above= 0.06 inch, Gap-Left= 0.03 inch, Gap-Right= 0.03 inch, Friction= 0.80,
Gaps setting= Weightless

From C29 to C31, DY= -0.31 ft, DZ= -10.50 ft, L= 10.50 ft Run

POINT DATA:
C29, Coordinates, X= 27.43 ft, Y= 688.22 ft, Z= -38.50 ft

SUPPORT DATA:
C29, Guide, Support Id= C29 2, Connected to Ground, Comp.Wt = 0.000 lb, Stiffness= RIGID,
Gap-Down= 0.00 inch, Gap-Above= 0.06 inch, Gap-Left= 0.03 inch, Gap-Right= 0.03 inch, Friction= 0.80,
Gaps setting= Weightless

From C31 to C16, DY= -0.10 ft, DZ= -3.50 ft, L= 3.50 ft Run

POINT DATA:
C31, Coordinates, X= 27.43 ft, Y= 687.91 ft, Z= -49.00 ft

SUPPORT DATA:
C31, Guide, Support Id= C31 2, Connected to Ground, Comp.Wt = 0.000 lb, Stiffness= RIGID,
Gap-Down= 0.00 inch, Gap-Above= 0.83 inch, Gap-Left= 0.83 inch, Gap-Right= 0.83 inch, Friction= 0.80,
Gaps setting= Weightless

From C16 to C32, DX= 3.50 ft, DY= -0.08 ft, L= 3.50 ft Bend

COMPONENT DATA (Bend, TIP= C16, Near= C16 N, Far= C16 F):
Elbow, Radius= 36.00 inch, Bend angle= 89.96 deg, End flanges= 0, Flex= Auto, SIFI= 1.00, SIFO= 1.00

POINT DATA:
C16, Coordinates, X= 27.43 ft, Y= 687.81 ft, Z= -52.50 ft
C16 N, Coordinates, X= 27.43 ft, Y= 687.90 ft, Z= -49.50 ft
C16 F, Coordinates, X= 30.43 ft, Y= 687.74 ft, Z= -52.50 ft

From C32 to C33, DX= 2.76 ft, DY= -0.07 ft, L= 2.76 ft Run

POINT DATA:
C32, Coordinates, X= 30.93 ft, Y= 687.73 ft, Z= -52.50 ft

SUPPORT DATA:
C32, Guide, Support Id= C32 2, Connected to Ground, Comp.Wt = 0.000 lb, Stiffness= RIGID,
Gap-Down= 0.00 inch, Gap-Above= 0.83 inch, Gap-Left= 0.83 inch, Gap-Right= 0.83 inch, Friction= 0.80,
Gaps setting= Weightless

From C33 to C19, DX= 3.50 ft, DY= -0.08 ft, L= 3.50 ft Run

POINT DATA:
C33, Coordinates, X= 33.69 ft, Y= 687.66 ft, Z= -52.50 ft

SUPPORT DATA:

C O M P O N E N T D A T A L I S T I N G

C33, Guide, Support Id= C33 2, Connected to Ground, Comp.Wt = 0.000 lb, Stiffness= RIGID,
Gap-Down= 0.00 inch, Gap-Above= 0.83 inch, Gap-Left= 0.83 inch, Gap-Right= 0.83 inch, Friction= 0.80,
Gaps setting= Weightless

From C19 to C34, DY= -0.10 ft, DZ= -3.50 ft, L= 3.50 ft Bend

COMPONENT DATA (Bend, TIP= C19, Near= C19 N, Far= C19 F):
Elbow, Radius= 36.00 inch, Bend angle= 89.96 deg, End flanges= 0, Flex= Auto, SIFI= 1.00, SIFO= 1.00

POINT DATA:
C19, Coordinates, X= 37.19 ft, Y= 687.58 ft, Z= -52.50 ft
C19 N, Coordinates, X= 34.19 ft, Y= 687.65 ft, Z= -52.50 ft
C19 F, Coordinates, X= 37.19 ft, Y= 687.49 ft, Z= -55.50 ft

From C34 to C35, DY= -0.26 ft, DZ= -9.00 ft, L= 9.00 ft Run

POINT DATA:
C34, Coordinates, X= 37.19 ft, Y= 687.48 ft, Z= -56.00 ft

SUPPORT DATA:
C34, Guide, Support Id= C34 2, Connected to Ground, Comp.Wt = 0.000 lb, Stiffness= RIGID,
Gap-Down= 0.00 inch, Gap-Above= 0.83 inch, Gap-Left= 0.83 inch, Gap-Right= 0.83 inch, Friction= 0.80,
Gaps setting= Weightless

From C35 to C36, DY= -0.26 ft, DZ= -9.00 ft, L= 9.00 ft Run

POINT DATA:
C35, Coordinates, X= 37.19 ft, Y= 687.22 ft, Z= -65.00 ft

SUPPORT DATA:
C35, Guide, Support Id= C35 2, Connected to Ground, Comp.Wt = 0.000 lb, Stiffness= RIGID,
Gap-Down= 0.00 inch, Gap-Above= 0.06 inch, Gap-Left= 0.03 inch, Gap-Right= 0.03 inch, Friction= 0.80,
Gaps setting= Weightless

From C36 to C37, DY= -0.26 ft, DZ= -9.00 ft, L= 9.00 ft Run

POINT DATA:
C36, Coordinates, X= 37.19 ft, Y= 686.96 ft, Z= -74.00 ft

SUPPORT DATA:
C36, Guide, Support Id= C36 2, Connected to Ground, Comp.Wt = 0.000 lb, Stiffness= RIGID,
Gap-Down= 0.00 inch, Gap-Above= 0.06 inch, Gap-Left= 0.03 inch, Gap-Right= 0.03 inch, Friction= 0.80,
Gaps setting= Weightless

From C37 to C38, DY= -0.26 ft, DZ= -9.00 ft, L= 9.00 ft Run

POINT DATA:
C37, Coordinates, X= 37.19 ft, Y= 686.70 ft, Z= -83.00 ft

SUPPORT DATA:

C O M P O N E N T D A T A L I S T I N G

C37, Guide, Support Id= C37 2, Connected to Ground, Comp.Wt = 0.000 lb, Stiffness= RIGID,
Gap-Down= 0.00 inch, Gap-Above= 0.06 inch, Gap-Left= 0.03 inch, Gap-Right= 0.03 inch, Friction= 0.80,
Gaps setting= Weightless

From C38 to C39, DY= -0.15 ft, DZ= -5.01 ft, L= 5.01 ft Run

POINT DATA:
C38, Coordinates, X= 37.19 ft, Y= 686.44 ft, Z= -92.00 ft

SUPPORT DATA:
C38, Guide, Support Id= C38 2, Connected to Ground, Comp.Wt = 0.000 lb, Stiffness= RIGID,
Gap-Down= 0.00 inch, Gap-Above= 0.06 inch, Gap-Left= 0.03 inch, Gap-Right= 0.03 inch, Friction= 0.80,
Gaps setting= Weightless

From C39 to C40, DY= -0.27 ft, DZ= -8.99 ft, L= 8.99 ft Run

POINT DATA:
C39, Coordinates, X= 37.19 ft, Y= 686.29 ft, Z= -97.01 ft

SUPPORT DATA:
C39, Guide, Support Id= C39 2, Connected to Ground, Comp.Wt = 0.000 lb, Stiffness= RIGID,
Gap-Down= 0.00 inch, Gap-Above= 0.06 inch, Gap-Left= 0.03 inch, Gap-Right= 0.03 inch, Friction= 0.80,
Gaps setting= Weightless

From C40 to C27, DY= -0.10 ft, DZ= -3.50 ft, L= 3.50 ft Run

POINT DATA:
C40, Coordinates, X= 37.19 ft, Y= 686.02 ft, Z= -106.00 ft

SUPPORT DATA:
C40, Guide, Support Id= C40 2, Connected to Ground, Comp.Wt = 0.000 lb, Stiffness= RIGID,
Gap-Down= 0.00 inch, Gap-Above= 0.83 inch, Gap-Left= 0.83 inch, Gap-Right= 0.83 inch, Friction= 0.80,
Gaps setting= Weightless

From C27 to C42, DX= -3.50 ft, DY= -0.09 ft, L= 3.50 ft Bend

COMPONENT DATA (Bend, TIP= C27, Near= C27 N, Far= C27 F):
Elbow, Radius= 36.00 inch, Bend angle= 89.96 deg, End flanges= 0, Flex= Auto, SIFI= 1.00, SIFO= 1.00

POINT DATA:
C27, Coordinates, X= 37.19 ft, Y= 685.92 ft, Z= -109.50 ft
C27 N, Coordinates, X= 37.19 ft, Y= 686.01 ft, Z= -106.50 ft
C27 F, Coordinates, X= 34.19 ft, Y= 685.84 ft, Z= -109.50 ft

From C42 to C43, DX= -4.00 ft, DY= -0.10 ft, L= 4.00 ft Run

POINT DATA:
C42, Coordinates, X= 33.69 ft, Y= 685.83 ft, Z= -109.50 ft

SUPPORT DATA:

C O M P O N E N T D A T A L I S T I N G

C42, Guide, Support Id= C42 2, Connected to Ground, Comp.Wt = 0.000 lb, Stiffness= RIGID,
Gap-Down= 0.00 inch, Gap-Above= 0.83 inch, Gap-Left= 0.83 inch, Gap-Right= 0.83 inch, Friction= 0.80,
Gaps setting= Weightless

From C43 to C30, DX= -3.50 ft, DY= -0.09 ft, L= 3.50 ft Run

POINT DATA:
C43, Coordinates, X= 29.69 ft, Y= 685.73 ft, Z= -109.50 ft

SUPPORT DATA:
C43, Guide, Support Id= C43 2, Connected to Ground, Comp.Wt = 0.000 lb, Stiffness= RIGID,
Gap-Down= 0.00 inch, Gap-Above= 0.83 inch, Gap-Left= 0.83 inch, Gap-Right= 0.83 inch, Friction= 0.80,
Gaps setting= Weightless

From C30 to C45, DY= -0.03 ft, DZ= -3.50 ft, L= 3.50 ft Bend

COMPONENT DATA (Bend, TIP= C30, Near= C30 N, Far= C30 F):
Elbow, Radius= 36.00 inch, Bend angle= 89.99 deg, End flanges= 0, Flex= Auto, SIFI= 1.00, SIFO= 1.00

POINT DATA:
C30, Coordinates, X= 26.19 ft, Y= 685.64 ft, Z= -109.50 ft
C30 N, Coordinates, X= 29.19 ft, Y= 685.72 ft, Z= -109.50 ft
C30 F, Coordinates, X= 26.19 ft, Y= 685.61 ft, Z= -112.50 ft

From C45 to C46, DY= -0.07 ft, DZ= -9.00 ft, L= 9.00 ft Run

POINT DATA:
C45, Coordinates, X= 26.19 ft, Y= 685.61 ft, Z= -113.00 ft

SUPPORT DATA:
C45, Guide, Support Id= C45 2, Connected to Ground, Comp.Wt = 0.000 lb, Stiffness= RIGID,
Gap-Down= 0.00 inch, Gap-Above= 0.83 inch, Gap-Left= 0.83 inch, Gap-Right= 0.83 inch, Friction= 0.80,
Gaps setting= Weightless

From C46 to C47, DY= -0.07 ft, DZ= -9.00 ft, L= 9.00 ft Run

POINT DATA:
C46, Coordinates, X= 26.19 ft, Y= 685.54 ft, Z= -122.00 ft

SUPPORT DATA:
C46, Guide, Support Id= C46 2, Connected to Ground, Comp.Wt = 0.000 lb, Stiffness= RIGID,
Gap-Down= 0.00 inch, Gap-Above= 0.06 inch, Gap-Left= 0.03 inch, Gap-Right= 0.03 inch, Friction= 0.80,
Gaps setting= Weightless

From C47 to C48, DY= -0.07 ft, DZ= -9.00 ft, L= 9.00 ft Run

POINT DATA:
C47, Coordinates, X= 26.19 ft, Y= 685.47 ft, Z= -131.00 ft

SUPPORT DATA:

C O M P O N E N T D A T A L I S T I N G

C47, Guide, Support Id= C47 2, Connected to Ground, Comp.Wt = 0.000 lb, Stiffness= RIGID,
Gap-Down= 0.00 inch, Gap-Above= 0.06 inch, Gap-Left= 0.03 inch, Gap-Right= 0.03 inch, Friction= 0.80,
Gaps setting= Weightless

From C48 to C49, DY= -0.07 ft, DZ= -9.00 ft, L= 9.00 ft Run

POINT DATA:
C48, Coordinates, X= 26.19 ft, Y= 685.40 ft, Z= -140.00 ft

SUPPORT DATA:
C48, Guide, Support Id= C48 2, Connected to Ground, Comp.Wt = 0.000 lb, Stiffness= RIGID,
Gap-Down= 0.00 inch, Gap-Above= 0.06 inch, Gap-Left= 0.03 inch, Gap-Right= 0.03 inch, Friction= 0.80,
Gaps setting= Weightless

From C49 to C50, DY= -0.07 ft, DZ= -9.00 ft, L= 9.00 ft Run

POINT DATA:
C49, Coordinates, X= 26.19 ft, Y= 685.33 ft, Z= -149.00 ft

SUPPORT DATA:
C49, Guide, Support Id= C49 2, Connected to Ground, Comp.Wt = 0.000 lb, Stiffness= RIGID,
Gap-Down= 0.00 inch, Gap-Above= 0.06 inch, Gap-Left= 0.03 inch, Gap-Right= 0.03 inch, Friction= 0.80,
Gaps setting= Weightless

From C50 to C51, DY= -0.07 ft, DZ= -9.00 ft, L= 9.00 ft Run

POINT DATA:
C50, Coordinates, X= 26.19 ft, Y= 685.26 ft, Z= -158.00 ft

SUPPORT DATA:
C50, Guide, Support Id= C50 2, Connected to Ground, Comp.Wt = 0.000 lb, Stiffness= RIGID,
Gap-Down= 0.00 inch, Gap-Above= 0.06 inch, Gap-Left= 0.03 inch, Gap-Right= 0.03 inch, Friction= 0.80,
Gaps setting= Weightless

From C51 to C52, DY= -0.08 ft, DZ= -9.00 ft, L= 9.00 ft Run

POINT DATA:
C51, Coordinates, X= 26.19 ft, Y= 685.19 ft, Z= -167.00 ft

SUPPORT DATA:
C51, Guide, Support Id= C51 2, Connected to Ground, Comp.Wt = 0.000 lb, Stiffness= RIGID,
Gap-Down= 0.00 inch, Gap-Above= 0.06 inch, Gap-Left= 0.03 inch, Gap-Right= 0.03 inch, Friction= 0.80,
Gaps setting= Weightless

From C52 to C53, DY= -0.07 ft, DZ= -9.00 ft, L= 9.00 ft Run

POINT DATA:
C52, Coordinates, X= 26.19 ft, Y= 685.11 ft, Z= -176.00 ft

SUPPORT DATA:

C O M P O N E N T D A T A L I S T I N G

C52, Guide, Support Id= C52 2, Connected to Ground, Comp.Wt = 0.000 lb, Stiffness= RIGID,
Gap-Down= 0.00 inch, Gap-Above= 0.06 inch, Gap-Left= 0.03 inch, Gap-Right= 0.03 inch, Friction= 0.80,
Gaps setting= Weightless

From C53 to C55, DX= 0 ft, DY= -0.09 ft, DZ= -10.50 ft, L= 10.50 ft Run

POINT DATA:
C53, Coordinates, X= 26.19 ft, Y= 685.04 ft, Z= -185.00 ft

SUPPORT DATA:
C53, Guide, Support Id= C53 2, Connected to Ground, Comp.Wt = 0.000 lb, Stiffness= RIGID,
Gap-Down= 0.00 inch, Gap-Above= 0.06 inch, Gap-Left= 0.03 inch, Gap-Right= 0.03 inch, Friction= 0.80,
Gaps setting= Weightless

From C55 to C41, DY= -0.03 ft, DZ= -3.50 ft, L= 3.50 ft Run

POINT DATA:
C55, Coordinates, X= 26.19 ft, Y= 684.95 ft, Z= -195.50 ft

SUPPORT DATA:
C55, Guide, Support Id= C55 2, Connected to Ground, Comp.Wt = 0.000 lb, Stiffness= RIGID,
Gap-Down= 0.00 inch, Gap-Above= 0.83 inch, Gap-Left= 0.83 inch, Gap-Right= 0.83 inch, Friction= 0.80,
Gaps setting= Weightless

From C41 to C56, DX= 3.50 ft, DY= -0.03 ft, L= 3.50 ft Bend

COMPONENT DATA (Bend, TIP= C41, Near= C41 N, Far= C41 F):
Elbow, Radius= 36.00 inch, Bend angle= 90.00 deg, End flanges= 0, Flex= Auto, SIFI= 1.00, SIFO= 1.00

POINT DATA:
C41, Coordinates, X= 26.19 ft, Y= 684.92 ft, Z= -199.00 ft
C41 N, Coordinates, X= 26.19 ft, Y= 684.95 ft, Z= -196.00 ft
C41 F, Coordinates, X= 29.19 ft, Y= 684.89 ft, Z= -199.00 ft

From C56 to C57, DX= 6.91 ft, DY= -0.05 ft, L= 6.91 ft Run

POINT DATA:
C56, Coordinates, X= 29.69 ft, Y= 684.89 ft, Z= -199.00 ft

SUPPORT DATA:
C56, Guide, Support Id= C56 2, Connected to Ground, Comp.Wt = 0.000 lb, Stiffness= RIGID,
Gap-Down= 0.00 inch, Gap-Above= 0.83 inch, Gap-Left= 0.83 inch, Gap-Right= 0.83 inch, Friction= 0.80,
Gaps setting= Weightless

From C57 to C44, DX= 3.50 ft, DY= -0.02 ft, L= 3.50 ft Run

POINT DATA:
C57, Coordinates, X= 36.60 ft, Y= 684.84 ft, Z= -199.00 ft

SUPPORT DATA:

C O M P O N E N T D A T A L I S T I N G

C57, Guide, Support Id= C57 2, Connected to Ground, Comp.Wt = 0.000 lb, Stiffness= RIGID,
Gap-Down= 0.00 inch, Gap-Above= 0.83 inch, Gap-Left= 0.83 inch, Gap-Right= 0.83 inch, Friction= 0.80,
Gaps setting= Weightless

From C44 to C58, DY= -0.03 ft, DZ= -3.50 ft, L= 3.50 ft Bend

COMPONENT DATA (Bend, TIP= C44, Near= C44 N, Far= C44 F):
Elbow, Radius= 36.00 inch, Bend angle= 90.00 deg, End flanges= 0, Flex= Auto, SIFI= 1.00, SIFO= 1.00

POINT DATA:
C44, Coordinates, X= 40.10 ft, Y= 684.82 ft, Z= -199.00 ft
C44 N, Coordinates, X= 37.10 ft, Y= 684.84 ft, Z= -199.00 ft
C44 F, Coordinates, X= 40.10 ft, Y= 684.79 ft, Z= -202.00 ft

From C58 to C59, DY= -0.07 ft, DZ= -9.00 ft, L= 9.00 ft Run

POINT DATA:
C58, Coordinates, X= 40.10 ft, Y= 684.79 ft, Z= -202.50 ft

SUPPORT DATA:
C58, Guide, Support Id= C58 2, Connected to Ground, Comp.Wt = 0.000 lb, Stiffness= RIGID,
Gap-Down= 0.00 inch, Gap-Above= 0.83 inch, Gap-Left= 0.83 inch, Gap-Right= 0.83 inch, Friction= 0.80,
Gaps setting= Weightless

From C59 to C60, DY= -0.07 ft, DZ= -9.00 ft, L= 9.00 ft Run

POINT DATA:
C59, Coordinates, X= 40.10 ft, Y= 684.72 ft, Z= -211.50 ft

SUPPORT DATA:
C59, Guide, Support Id= C59 2, Connected to Ground, Comp.Wt = 0.000 lb, Stiffness= RIGID,
Gap-Down= 0.00 inch, Gap-Above= 0.06 inch, Gap-Left= 0.03 inch, Gap-Right= 0.03 inch, Friction= 0.80,
Gaps setting= Weightless

From C60 to C61, DY= -0.07 ft, DZ= -9.00 ft, L= 9.00 ft Run

POINT DATA:
C60, Coordinates, X= 40.10 ft, Y= 684.65 ft, Z= -220.50 ft

SUPPORT DATA:
C60, Guide, Support Id= C60 2, Connected to Ground, Comp.Wt = 0.000 lb, Stiffness= RIGID,
Gap-Down= 0.00 inch, Gap-Above= 0.06 inch, Gap-Left= 0.03 inch, Gap-Right= 0.03 inch, Friction= 0.80,
Gaps setting= Weightless

From C61 to C63, DY= -0.06 ft, DZ= -9.00 ft, L= 9.00 ft Run

POINT DATA:
C61, Coordinates, X= 40.10 ft, Y= 684.58 ft, Z= -229.50 ft

SUPPORT DATA:

C O M P O N E N T D A T A L I S T I N G

C61, Guide, Support Id= C61 1, Connected to Ground, Comp.Wt = 0.000 lb, Stiffness= RIGID,
Gap-Down= 0.00 inch, Gap-Above= 0.06 inch, Gap-Left= 0.03 inch, Gap-Right= 0.03 inch, Friction= 0.80,
Gaps setting= Weightless

From C63 to C64, DY= -0.07 ft, DZ= -9.00 ft, L= 9.00 ft Run

POINT DATA:
C63, Coordinates, X= 40.10 ft, Y= 684.52 ft, Z= -238.50 ft

SUPPORT DATA:
C63, Guide, Support Id= C63 1, Connected to Ground, Comp.Wt = 0.000 lb, Stiffness= RIGID,
Gap-Down= 0.00 inch, Gap-Above= 0.06 inch, Gap-Left= 0.03 inch, Gap-Right= 0.03 inch, Friction= 0.80,
Gaps setting= Weightless

From C64 to C65, DY= -0.06 ft, DZ= -9.00 ft, L= 9.00 ft Run

POINT DATA:
C64, Coordinates, X= 40.10 ft, Y= 684.45 ft, Z= -247.50 ft

SUPPORT DATA:
C64, Guide, Support Id= C64 2, Connected to Ground, Comp.Wt = 0.000 lb, Stiffness= RIGID,
Gap-Down= 0.00 inch, Gap-Above= 0.06 inch, Gap-Left= 0.03 inch, Gap-Right= 0.03 inch, Friction= 0.80,
Gaps setting= Weightless

From C65 to C72, DY= -0.07 ft, DZ= -9.00 ft, L= 9.00 ft Run

POINT DATA:
C65, Coordinates, X= 40.10 ft, Y= 684.39 ft, Z= -256.50 ft

SUPPORT DATA:
C65, Guide, Support Id= C65 1, Connected to Ground, Comp.Wt = 0.000 lb, Stiffness= RIGID,
Gap-Down= 0.00 inch, Gap-Above= 0.06 inch, Gap-Left= 0.03 inch, Gap-Right= 0.03 inch, Friction= 0.80,
Gaps setting= Weightless

From C72 to C73, DX= 0 ft, DY= -0.08 ft, DZ= -10.74 ft, L= 10.74 ft Run

POINT DATA:
C72, Coordinates, X= 40.10 ft, Y= 684.32 ft, Z= -265.50 ft

SUPPORT DATA:
C72, Guide, Support Id= C72 1, Connected to Ground, Comp.Wt = 0.000 lb, Stiffness= RIGID,
Gap-Down= 0.00 inch, Gap-Above= 0.06 inch, Gap-Left= 0.03 inch, Gap-Right= 0.03 inch, Friction= 0.80,
Gaps setting= Weightless

From C73 to C54, DY= -0.02 ft, DZ= -3.50 ft, L= 3.50 ft Run

POINT DATA:
C73, Coordinates, X= 40.10 ft, Y= 684.24 ft, Z= -276.24 ft

SUPPORT DATA:

C O M P O N E N T D A T A L I S T I N G

C73, Guide, Support Id= C73 1, Connected to Ground, Comp.Wt = 0.000 lb, Stiffness= RIGID,
Gap-Down= 0.00 inch, Gap-Above= 0.83 inch, Gap-Left= 0.83 inch, Gap-Right= 0.83 inch, Friction= 0.80,
Gaps setting= Weightless

From C54 to C74, DX= -3.50 ft, DY= -0.03 ft, L= 3.50 ft Bend

COMPONENT DATA (Bend, TIP= C54, Near= C54 N, Far= C54 F):
Elbow, Radius= 36.00 inch, Bend angle= 90.00 deg, End flanges= 0, Flex= Auto, SIFI= 1.00, SIFO= 1.00

POINT DATA:
C54, Coordinates, X= 40.10 ft, Y= 684.22 ft, Z= -279.74 ft
C54 N, Coordinates, X= 40.10 ft, Y= 684.24 ft, Z= -276.74 ft
C54 F, Coordinates, X= 37.10 ft, Y= 684.19 ft, Z= -279.74 ft

From C74 to C75, DX= -9.00 ft, DY= -0.07 ft, L= 9.00 ft Run

POINT DATA:
C74, Coordinates, X= 36.60 ft, Y= 684.19 ft, Z= -279.74 ft

SUPPORT DATA:
C74, Guide, Support Id= C74 1, Connected to Ground, Comp.Wt = 0.000 lb, Stiffness= RIGID,
Gap-Down= 0.00 inch, Gap-Above= 0.83 inch, Gap-Left= 0.83 inch, Gap-Right= 0.83 inch, Friction= 0.80,
Gaps setting= Weightless

From C75 to C76, DX= -9.00 ft, DY= -0.07 ft, L= 9.00 ft Run

POINT DATA:
C75, Coordinates, X= 27.60 ft, Y= 684.12 ft, Z= -279.74 ft

SUPPORT DATA:
C75, Guide, Support Id= C75 1, Connected to Ground, Comp.Wt = 0.000 lb, Stiffness= RIGID,
Gap-Down= 0.00 inch, Gap-Above= 0.06 inch, Gap-Left= 0.03 inch, Gap-Right= 0.03 inch, Friction= 0.80,
Gaps setting= Weightless

From C76 to C77, DX= -9.00 ft, DY= -0.06 ft, L= 9.00 ft Run

POINT DATA:
C76, Coordinates, X= 18.60 ft, Y= 684.05 ft, Z= -279.74 ft

SUPPORT DATA:
C76, Guide, Support Id= C76 1, Connected to Ground, Comp.Wt = 0.000 lb, Stiffness= RIGID,
Gap-Down= 0.00 inch, Gap-Above= 0.06 inch, Gap-Left= 0.03 inch, Gap-Right= 0.03 inch, Friction= 0.80,
Gaps setting= Weightless

From C77 to C78, DX= -9.00 ft, DY= -0.07 ft, L= 9.00 ft Run

POINT DATA:
C77, Coordinates, X= 9.60 ft, Y= 683.99 ft, Z= -279.74 ft

SUPPORT DATA:

C O M P O N E N T D A T A L I S T I N G

C77, Guide, Support Id= C77 1, Connected to Ground, Comp.Wt = 0.000 lb, Stiffness= RIGID,
Gap-Down= 0.00 inch, Gap-Above= 0.06 inch, Gap-Left= 0.03 inch, Gap-Right= 0.03 inch, Friction= 0.80,
Gaps setting= Weightless

From C78 to C79, DX= -8.78 ft, DY= -0.06 ft, L= 8.78 ft Run

POINT DATA:
C78, Coordinates, X= 0.60 ft, Y= 683.92 ft, Z= -279.74 ft

SUPPORT DATA:
C78, Guide, Support Id= C78 1, Connected to Ground, Comp.Wt = 0.000 lb, Stiffness= RIGID,
Gap-Down= 0.00 inch, Gap-Above= 0.06 inch, Gap-Left= 0.03 inch, Gap-Right= 0.03 inch, Friction= 0.80,
Gaps setting= Weightless

From C79 to C80, DX= -9.00 ft, DY= -0.06 ft, L= 9.00 ft Run

POINT DATA:
C79, Coordinates, X= -8.18 ft, Y= 683.86 ft, Z= -279.74 ft

SUPPORT DATA:
C79, Guide, Support Id= C79 1, Connected to Ground, Comp.Wt = 0.000 lb, Stiffness= RIGID,
Gap-Down= 0.00 inch, Gap-Above= 0.06 inch, Gap-Left= 0.03 inch, Gap-Right= 0.03 inch, Friction= 0.80,
Gaps setting= Weightless

From C80 to C62, DX= -3.50 ft, DY= -0.03 ft, L= 3.50 ft Run

POINT DATA:
C80, Coordinates, X= -17.18 ft, Y= 683.80 ft, Z= -279.74 ft

SUPPORT DATA:
C80, Guide, Support Id= C80 1, Connected to Ground, Comp.Wt = 0.000 lb, Stiffness= RIGID,
Gap-Down= 0.00 inch, Gap-Above= 0.83 inch, Gap-Left= 0.83 inch, Gap-Right= 0.83 inch, Friction= 0.80,
Gaps setting= Weightless

From C62 to C82, DY= -0.03 ft, DZ= -3.50 ft, L= 3.50 ft Bend

COMPONENT DATA (Bend, TIP= C62, Near= C62 N, Far= C62 F):
Elbow, Radius= 36.00 inch, Bend angle= 90.00 deg, End flanges= 0, Flex= Auto, SIFI= 1.00, SIFO= 1.00

POINT DATA:
C62, Coordinates, X= -20.68 ft, Y= 683.77 ft, Z= -279.74 ft
C62 N, Coordinates, X= -17.68 ft, Y= 683.80 ft, Z= -279.74 ft
C62 F, Coordinates, X= -20.68 ft, Y= 683.74 ft, Z= -282.74 ft

---

From C82 to C81, DY= -0.05 ft, DZ= -5.84 ft, L= 5.84 ft Run

POINT DATA:
C82, Coordinates, X= -20.68 ft, Y= 683.74 ft, Z= -283.24 ft

SUPPORT DATA:

C O M P O N E N T D A T A L I S T I N G

C82, Guide, Support Id= C82 1, Connected to Ground, Comp.Wt = 0.000 lb, Stiffness= RIGID,
Gap-Down= 0.00 inch, Gap-Above= 0.83 inch, Gap-Left= 0.83 inch, Gap-Right= 0.83 inch, Friction= 0.80,
Gaps setting= Weightless

From C81 to C83, DY= -0.04 ft, DZ= -5.83 ft, L= 5.83 ft Run

POINT DATA:
C81, Coordinates, X= -20.68 ft, Y= 683.69 ft, Z= -289.08 ft

SUPPORT DATA:
C81, Guide, Support Id= C81 1, Connected to Ground, Comp.Wt = 0.000 lb, Stiffness= RIGID,
Gap-Down= 0.00 inch, Gap-Above= 0.06 inch, Gap-Left= 0.03 inch, Gap-Right= 0.03 inch, Friction= 0.80,
Gaps setting= Weightless

From C83 to C66, DY= -0.03 ft, DZ= -3.50 ft, L= 3.50 ft Run

POINT DATA:
C83, Coordinates, X= -20.68 ft, Y= 683.65 ft, Z= -294.91 ft

SUPPORT DATA:
C83, Guide, Support Id= C83 1, Connected to Ground, Comp.Wt = 0.000 lb, Stiffness= RIGID,
Gap-Down= 0.00 inch, Gap-Above= 0.83 inch, Gap-Left= 0.83 inch, Gap-Right= 0.83 inch, Friction= 0.80,
Gaps setting= Weightless

From C66 to C84, DX= 3.50 ft, DY= -0.07 ft, L= 3.50 ft Bend

COMPONENT DATA (Bend, TIP= C66, Near= C66 N, Far= C66 F):
Elbow, Radius= 36.00 inch, Bend angle= 89.99 deg, End flanges= 0, Flex= Auto, SIFI= 1.00, SIFO= 1.00

POINT DATA:
C66, Coordinates, X= -20.68 ft, Y= 683.62 ft, Z= -298.41 ft
C66 N, Coordinates, X= -20.68 ft, Y= 683.65 ft, Z= -295.41 ft
C66 F, Coordinates, X= -17.68 ft, Y= 683.56 ft, Z= -298.41 ft

---

From C84 to C67, DX= 1.80 ft, DY= -0.03 ft, L= 1.80 ft Run

POINT DATA:
C84, Coordinates, X= -17.18 ft, Y= 683.55 ft, Z= -298.41 ft

SUPPORT DATA:
C84, Guide, Support Id= C84 1, Connected to Ground, Comp.Wt = 0.000 lb, Stiffness= RIGID,
Gap-Down= 0.00 inch, Gap-Above= 0.83 inch, Gap-Left= 0.83 inch, Gap-Right= 0.83 inch, Friction= 0.80,
Gaps setting= Weightless

From C67 to C68, DX= 1.00 ft Bend

COMPONENT DATA (Bend, TIP= C67, Near= C67 N, Mid= C67 M, Far= C67 F):
Elbow, Radius= 36.00 inch, Bend angle= 0.96 deg, Mid point at 50.00 percent, End flanges= 0, Flex= Auto,
SIFI= 1.00, SIFO= 1.00

C O M P O N E N T D A T A L I S T I N G

```
POINT DATA:
  C67, Coordinates, X= -15.38 ft, Y= 683.52 ft, Z= -298.41 ft
  C67 N, Coordinates, X= -15.40 ft, Y= 683.52 ft, Z= -298.41 ft
  C67 M, Coordinates, X= -15.38 ft, Y= 683.52 ft, Z= -298.41 ft
  C67 F, Coordinates, X= -15.36 ft, Y= 683.52 ft, Z= -298.41 ft

-------------------------------------------------------------------------------
From C68 to C69, DX= 1.00 ft                                                Run

POINT DATA:
  C68, Coordinates, X= -14.38 ft, Y= 683.52 ft, Z= -298.41 ft

-------------------------------------------------------------------------------
From C69 to C70, DX= 0.55 ft                                                Run

POINT DATA:
  C69, Coordinates, X= -13.38 ft, Y= 683.52 ft, Z= -298.41 ft

-------------------------------------------------------------------------------
From C70 to C71, DX= 0.19 ft                                                Run

POINT DATA:
  C70, Coordinates, X= -12.83 ft, Y= 683.52 ft, Z= -298.41 ft
  C71, Coordinates, X= -12.64 ft, Y= 683.52 ft, Z= -298.41 ft

SUPPORT DATA:
  C70, Anchor, Connected to: Ground, KTX= Rigid, KTY= Rigid, KTZ= Rigid, KRX= Rigid, KRY= Rigid, KRZ= Rigid

-------------------------------------------------------------------------------
-------------------------------------------------------------------------------
*** SEGMENT D

-------------------------------------------------------------------------------
From D00 to D01, DZ= -0.19 ft                                               Run

PIPE DATA:
  Pipe Id= 2SCH40, Composition= Austenitic Stainless, Pipe Density= 501.00 lb/cu.ft, Pipe Unit Wgt= 3.74 lb/ft,
  Content Sp Gr= 1.600, Content Unit Wgt= 2.33 lb/ft

POINT DATA:
  D00, Coordinates, X= -10.49 ft, Y= 683.52 ft, Z= -303.06 ft

-------------------------------------------------------------------------------
From D01 to D02, DZ= -0.55 ft                                               Run

POINT DATA:
  D01, Coordinates, X= -10.49 ft, Y= 683.52 ft, Z= -303.25 ft

SUPPORT DATA:
  D01, Anchor, Connected to: Ground, KTX= Rigid, KTY= Rigid, KTZ= Rigid, KRX= Rigid, KRY= Rigid, KRZ= Rigid

-------------------------------------------------------------------------------
From D02 to D03, DZ= -1.00 ft                                               Run

POINT DATA:
```

C O M P O N E N T D A T A L I S T I N G

D02, Coordinates, X= -10.49 ft, Y= 683.52 ft, Z= -303.80 ft

From D03 to D04, DZ= -3.00 ft Run

POINT DATA:
D03, Coordinates, X= -10.49 ft, Y= 683.52 ft, Z= -304.80 ft

From D04 to D13, DY= 0.09 ft, DZ= -7.50 ft, L= 7.50 ft Bend

COMPONENT DATA (Bend, TIP= D04, Near= D04 N, Mid= D04 M, Far= D04 F):
Elbow, Radius= 36.00 inch, Bend angle= 0.69 deg, Mid point at 50.00 percent, End flanges= 0, Flex= Auto,
SIFI= 1.00, SIFO= 1.00

POINT DATA:
D04, Coordinates, X= -10.49 ft, Y= 683.52 ft, Z= -307.80 ft
D04 N, Coordinates, X= -10.49 ft, Y= 683.52 ft, Z= -307.78 ft
D04 M, Coordinates, X= -10.49 ft, Y= 683.52 ft, Z= -307.80 ft
D04 F, Coordinates, X= -10.49 ft, Y= 683.52 ft, Z= -307.82 ft

SUPPORT DATA:
D04 M, Guide, Support Id= D04 M1, Connected to Ground, Comp.Wt = 0.000 lb, Stiffness= RIGID,
Gap -Z= 0.00 inch, Gap +Z= 0.83 inch, Gap -X= 0.83 inch, Gap +X= 0.83 inch, Friction= 0.80,
Gaps setting= Weightless

From D13 to D14, DY= 0.10 ft, DZ= -7.53 ft, L= 7.53 ft Run

POINT DATA:
D13, Coordinates, X= -10.49 ft, Y= 683.61 ft, Z= -315.30 ft

SUPPORT DATA:
D13, Guide, Support Id= D13 1, Connected to Ground, Comp.Wt = 0.000 lb, Stiffness= RIGID,
Gap-Down= 0.00 inch, Gap-Above= 0.06 inch, Gap-Left= 0.03 inch, Gap-Right= 0.03 inch, Friction= 0.80,
Gaps setting= Weightless

From D14 to D08, DY= 0.04 ft, DZ= -3.50 ft, L= 3.50 ft Run

POINT DATA:
D14, Coordinates, X= -10.49 ft, Y= 683.71 ft, Z= -322.83 ft

SUPPORT DATA:
D14, Guide, Support Id= D14 2, Connected to Ground, Comp.Wt = 0.000 lb, Stiffness= RIGID,
Gap-Down= 0.00 inch, Gap-Above= 0.83 inch, Gap-Left= 0.83 inch, Gap-Right= 0.83 inch, Friction= 0.80,
Gaps setting= Weightless

From D08 to D15, DX= 3.50 ft, DY= 0.03 ft, L= 3.50 ft Bend

COMPONENT DATA (Bend, TIP= D08, Near= D08 N, Far= D08 F):
Elbow, Radius= 36.00 inch, Bend angle= 89.99 deg, End flanges= 0, Flex= Auto, SIFI= 1.00, SIFO= 1.00

POINT DATA:

C O M P O N E N T D A T A L I S T I N G

D08, Coordinates, X= -10.49 ft, Y= 683.75 ft, Z= -326.33 ft
D08 N, Coordinates, X= -10.49 ft, Y= 683.72 ft, Z= -323.33 ft
D08 F, Coordinates, X= -7.49 ft, Y= 683.78 ft, Z= -326.33 ft

From D15 to D18, DX= 5.65 ft, DY= 0.05 ft, L= 5.65 ft Run

POINT DATA:
D15, Coordinates, X= -6.99 ft, Y= 683.78 ft, Z= -326.33 ft

SUPPORT DATA:
D15, Guide, Support Id= D15 2, Connected to Ground, Comp.Wt = 0.000 lb, Stiffness= RIGID,
Gap-Down= 0.00 inch, Gap-Above= 0.83 inch, Gap-Left= 0.83 inch, Gap-Right= 0.83 inch, Friction= 0.80,
Gaps setting= Weightless

From D18 to D16, DX= 5.65 ft, DY= 0.06 ft, L= 5.65 ft Run

POINT DATA:
D18, Coordinates, X= -1.34 ft, Y= 683.83 ft, Z= -326.33 ft

SUPPORT DATA:
D18, Guide, Support Id= D18 1, Connected to Ground, Comp.Wt = 0.000 lb, Stiffness= RIGID,
Gap-Down= 0.00 inch, Gap-Above= 0.06 inch, Gap-Left= 0.03 inch, Gap-Right= 0.03 inch, Friction= 0.80,
Gaps setting= Weightless

From D16 to D12, DX= 3.50 ft, DY= 0.04 ft, L= 3.50 ft Run

POINT DATA:
D16, Coordinates, X= 4.31 ft, Y= 683.89 ft, Z= -326.33 ft

SUPPORT DATA:
D16, Guide, Support Id= D16 1, Connected to Ground, Comp.Wt = 0.000 lb, Stiffness= RIGID,
Gap-Down= 0.00 inch, Gap-Above= 0.83 inch, Gap-Left= 0.83 inch, Gap-Right= 0.83 inch, Friction= 0.80,
Gaps setting= Weightless

From D12 to D19, DY= 0.05 ft, DZ= -3.50 ft, L= 3.50 ft Bend

COMPONENT DATA (Bend, TIP= D12, Near= D12 N, Far= D12 F):
Elbow, Radius= 36.00 inch, Bend angle= 89.99 deg, End flanges= 0, Flex= Auto, SIFI= 1.00, SIFO= 1.00

POINT DATA:
D12, Coordinates, X= 7.81 ft, Y= 683.93 ft, Z= -326.33 ft
D12 N, Coordinates, X= 4.81 ft, Y= 683.90 ft, Z= -326.33 ft
D12 F, Coordinates, X= 7.81 ft, Y= 683.97 ft, Z= -329.33 ft

From D19 to D25, DY= 0.12 ft, DZ= -8.87 ft, L= 8.87 ft Run

POINT DATA:
D19, Coordinates, X= 7.81 ft, Y= 683.98 ft, Z= -329.83 ft

SUPPORT DATA:

C O M P O N E N T D A T A L I S T I N G

D19, Guide, Support Id= D19 2, Connected to Ground, Comp.Wt = 0.000 lb, Stiffness= RIGID,
Gap-Down= 0.00 inch, Gap-Above= 0.83 inch, Gap-Left= 0.83 inch, Gap-Right= 0.83 inch, Friction= 0.80,
Gaps setting= Weightless

From D25 to D20, DY= 0.11 ft, DZ= -8.86 ft, L= 8.86 ft Run

POINT DATA:
D25, Coordinates, X= 7.81 ft, Y= 684.10 ft, Z= -338.70 ft

SUPPORT DATA:
D25, Guide, Support Id= D25 1, Connected to Ground, Comp.Wt = 0.000 lb, Stiffness= RIGID,
Gap-Down= 0.00 inch, Gap-Above= 0.06 inch, Gap-Left= 0.03 inch, Gap-Right= 0.03 inch, Friction= 0.80,
Gaps setting= Weightless

From D20 to D17, DY= 0.04 ft, DZ= -3.50 ft, L= 3.50 ft Run

POINT DATA:
D20, Coordinates, X= 7.81 ft, Y= 684.21 ft, Z= -347.56 ft

SUPPORT DATA:
D20, Guide, Support Id= D20 1, Connected to Ground, Comp.Wt = 0.000 lb, Stiffness= RIGID,
Gap-Down= 0.00 inch, Gap-Above= 0.83 inch, Gap-Left= 0.83 inch, Gap-Right= 0.83 inch, Friction= 0.80,
Gaps setting= Weightless

From D17 to D26, DX= 3.50 ft, DY= 0.02 ft, L= 3.50 ft Bend

COMPONENT DATA (Bend, TIP= D17, Near= D17 N, Far= D17 F):
Elbow, Radius= 36.00 inch, Bend angle= 90.00 deg, End flanges= 0, Flex= Auto, SIFI= 1.00, SIFO= 1.00

POINT DATA:
D17, Coordinates, X= 7.81 ft, Y= 684.25 ft, Z= -351.06 ft
D17 N, Coordinates, X= 7.81 ft, Y= 684.22 ft, Z= -348.06 ft
D17 F, Coordinates, X= 10.81 ft, Y= 684.27 ft, Z= -351.06 ft

From D26 to D28, DX= 6.93 ft, DY= 0.03 ft, L= 6.93 ft Run

POINT DATA:
D26, Coordinates, X= 11.31 ft, Y= 684.27 ft, Z= -351.06 ft

SUPPORT DATA:
D26, Guide, Support Id= D26 1, Connected to Ground, Comp.Wt = 0.000 lb, Stiffness= RIGID,
Gap-Down= 0.00 inch, Gap-Above= 0.83 inch, Gap-Left= 0.83 inch, Gap-Right= 0.83 inch, Friction= 0.80,
Gaps setting= Weightless

From D28 to D27, DX= 6.92 ft, DY= 0.03 ft, L= 6.92 ft Run

POINT DATA:
D28, Coordinates, X= 18.24 ft, Y= 684.30 ft, Z= -351.06 ft

SUPPORT DATA:

C O M P O N E N T D A T A L I S T I N G

D28, Guide, Support Id= D28 1, Connected to Ground, Comp.Wt = 0.000 lb, Stiffness= RIGID,
Gap-Down= 0.00 inch, Gap-Above= 0.06 inch, Gap-Left= 0.03 inch, Gap-Right= 0.03 inch, Friction= 0.80,
Gaps setting= Weightless

From D27 to D21, DX= 3.00 ft, DY= 0.01 ft, L= 3.00 ft Run

POINT DATA:
D27, Coordinates, X= 25.16 ft, Y= 684.33 ft, Z= -351.06 ft

SUPPORT DATA:
D27, Guide, Support Id= D27 1, Connected to Ground, Comp.Wt = 0.000 lb, Stiffness= RIGID,
Gap-Down= 0.00 inch, Gap-Above= 0.83 inch, Gap-Left= 0.83 inch, Gap-Right= 0.83 inch, Friction= 0.80,
Gaps setting= Weightless

From D21 to D22, DX= 1.00 ft Run

POINT DATA:
D21, Coordinates, X= 28.16 ft, Y= 684.34 ft, Z= -351.06 ft

From D22 to D23, DX= 0.63 ft Run

POINT DATA:
D22, Coordinates, X= 29.16 ft, Y= 684.34 ft, Z= -351.06 ft

SUPPORT DATA:
D22, Anchor, Connected to: Ground, KTX= Rigid, KTY= Rigid, KTZ= Rigid, KRX= Rigid, KRY= Rigid, KRZ= Rigid

---

From D23 to D24, DY= 0.57 ft Bend

COMPONENT DATA (Bend, TIP= D23, Near= D23 N, Far= D23 F):
Long Elbow, Radius= 3.00 inch, Bend angle= 90.00 deg, End flanges= 0, Flex= Auto, SIFI= 1.73, SIFO= 1.44

POINT DATA:
D23, Coordinates, X= 29.79 ft, Y= 684.34 ft, Z= -351.06 ft
D23 N, Coordinates, X= 29.54 ft, Y= 684.34 ft, Z= -351.06 ft
D23 F, Coordinates, X= 29.79 ft, Y= 684.59 ft, Z= -351.06 ft
D24, Coordinates, X= 29.79 ft, Y= 684.91 ft, Z= -351.06 ft

Number of points in the system (Pipe + Frame + Soil): 371 + 0 + 0 = 371

Weight of Empty Pipes	+	Weight of Contents	=	Total Weight of System
6282.4 lb	+	4019.3 lb	=	10301.7 lb

C O O R D I N A T E S D A T A L I S T I N G

POINT NAME	COORDINATE (ft) X	Y	Z
*** SEGMENT A			
A00	0.00	693.68	0.00
A20	0.00	693.49	0.00
A01 N	0.00	693.32	0.00
A01	0.00	693.07	0.00
A01 F	0.25	693.07	0.00
A02	1.46	693.07	0.00
A03	3.46	693.07	0.00
A23	5.96	693.07	0.00
A04 N	6.19	693.07	0.00
A04	6.46	693.07	0.00
A04 F	6.73	693.02	0.00
A24	14.64	691.56	0.00
A21	22.82	690.05	0.00
A05 N	23.33	689.96	0.00
A05	26.26	689.41	0.00
A05 F	26.26	689.32	-2.98
A22	26.26	689.31	-3.50
A25	26.26	689.05	-12.50
A26	26.26	688.79	-21.50
A27	26.26	688.53	-30.50
A28	26.26	688.27	-39.50
A29	26.26	687.96	-50.17
A06 N	26.26	687.95	-50.67
A06	26.26	687.86	-53.67
A06 F	29.26	687.77	-53.67
A30	29.76	687.76	-53.67
A31	32.52	687.68	-53.67
A07 N	33.02	687.67	-53.67
A07	36.02	687.58	-53.67
A07 F	36.02	687.49	-56.67
A32	36.02	687.47	-57.17
A33	36.02	687.20	-66.17
A34	36.02	686.93	-75.17
A35	36.02	686.66	-84.17
A36	36.02	686.38	-93.17
A37	36.02	686.30	-95.85
A38	36.02	686.03	-104.84
A08 N	36.02	686.01	-105.34
A08	36.02	685.92	-108.34
A08 F	33.02	685.84	-108.34
A39	32.52	685.83	-108.34
A40	28.52	685.73	-108.34
A09 N	28.02	685.72	-108.34
A09	25.02	685.64	-108.34
A09 F	25.02	685.61	-111.34
A41	25.02	685.61	-111.84
A42	25.02	685.54	-120.84
A43	25.02	685.47	-129.84
A44	25.02	685.40	-138.84
A45	25.02	685.33	-147.84
A46	25.02	685.26	-156.84

C O O R D I N A T E S D A T A L I S T I N G

POINT NAME	COORDINATE (ft) X	Y	Z
A47	25.02	685.19	-165.84
A48	25.02	685.12	-174.84
A49	25.02	685.05	-183.84
A50	25.02	685.02	-187.67
A51	25.02	684.95	-196.67
A10 N	25.02	684.95	-197.17
A10	25.02	684.92	-200.17
A10 F	28.02	684.89	-200.17
A52	28.52	684.89	-200.17
A53	35.43	684.84	-200.17
A11 N	35.93	684.84	-200.17
A11	38.93	684.82	-200.17
A11 F	38.93	684.79	-203.17
A54	38.93	684.79	-203.67
A55	38.93	684.72	-212.67
A56	38.93	684.65	-221.67
A57	38.93	684.58	-230.67
A58	38.93	684.51	-239.67
A59	38.93	684.44	-248.67
A60	38.93	684.37	-257.67
A61	38.93	684.31	-266.07
A62	38.93	684.25	-275.07
A12 N	38.93	684.25	-275.57
A12	38.93	684.22	-278.57
A12 F	35.93	684.19	-278.57
A63	35.43	684.19	-278.57
A64	26.43	684.12	-278.57
A65	17.43	684.05	-278.57
A66	8.43	683.99	-278.57
A67	-0.57	683.92	-278.57
A68	-9.35	683.86	-278.57
A69	-18.35	683.80	-278.57
A13 N	-18.85	683.80	-278.57
A13	-21.85	683.77	-278.57
A13 F	-21.85	683.75	-281.57
A70	-21.85	683.75	-282.07
A71	-21.85	683.70	-291.07
A72	-21.85	683.65	-298.66
A14 N	-21.85	683.65	-299.16
A14	-21.85	683.63	-302.16
A14 F	-18.85	683.58	-302.16
A73	-18.35	683.57	-302.16
A15 N	-15.42	683.52	-302.16
A15	-15.39	683.52	-302.16
A15 F	-15.36	683.52	-302.16
A16	-14.39	683.52	-302.16
A17	-13.39	683.52	-302.16
A18	-12.84	683.52	-302.16
A19	-12.65	683.52	-302.16

*** SEGMENT B , LINE # RIGID

B00	0.00	693.93	2.00

C O O R D I N A T E S D A T A L I S T I N G

POINT NAME	COORDINATE (ft) X	Y	Z
B01	0.00	693.68	2.00
B02 N	0.00	693.44	2.00
B02	0.00	693.07	2.00
B02 F	0.38	693.07	2.00
B03	1.46	693.07	2.00
B04	3.46	693.07	2.00
B22	5.96	693.07	2.00
B06 N	6.22	693.07	2.00
B06	6.46	693.07	2.00
B06 F	6.70	693.03	2.00
B23	17.61	691.24	2.00
B24	25.31	689.98	2.00
B09 N	25.81	689.90	2.00
B09	28.76	689.41	2.00
B09 F	28.76	689.32	-0.98
B25	28.76	689.31	-1.50
B26	28.76	689.05	-10.50
B28	28.76	688.79	-19.50
B29	28.76	688.53	-28.50
B31	28.76	688.26	-37.50
B32	28.76	687.96	-47.67
B16 N	28.76	687.95	-48.17
B16	28.76	687.86	-51.17
B16 F	31.76	687.79	-51.17
B33	32.26	687.78	-51.17
B34	35.02	687.72	-51.17
B19 N	35.52	687.71	-51.17
B19	38.52	687.64	-51.17
B19 F	38.52	687.55	-54.17
B35	38.52	687.54	-54.67
B36	38.52	687.29	-63.67
B37	38.52	687.04	-72.67
B38	38.52	686.79	-81.67
B39	38.52	686.54	-90.67
B40	38.52	686.32	-98.34
B42	38.52	686.07	-107.34
B27 N	38.52	686.06	-107.84
B27	38.52	685.97	-110.84
B27 F	35.52	685.89	-110.84
B43	35.02	685.88	-110.84
B45	31.02	685.78	-110.84
B30 N	30.52	685.77	-110.84
B30	27.52	685.70	-110.84
B30 F	27.52	685.67	-113.84
B46	27.52	685.67	-114.34
B47	27.52	685.59	-123.34
B48	27.52	685.51	-132.34
B49	27.52	685.43	-141.34
B50	27.52	685.35	-150.34
B51	27.52	685.28	-159.34
B52	27.52	685.20	-168.34
B53	27.52	685.13	-177.34

C O O R D I N A T E S D A T A L I S T I N G

POINT NAME	COORDINATE (ft) X	Y	Z
B54	27.52	685.06	-185.17
B55	27.52	684.99	-194.17
B41 N	27.52	684.99	-194.67
B41	27.52	684.96	-197.67
B41 F	30.52	684.94	-197.67
B57	31.02	684.94	-197.67
B58	37.93	684.89	-197.67
B44 N	38.43	684.89	-197.67
B44	41.43	684.87	-197.67
B44 F	41.43	684.85	-200.67
B64	41.43	684.85	-201.17
B65	41.43	684.79	-210.17
B66	41.43	684.73	-219.17
B67	41.43	684.67	-228.17
B68	41.43	684.61	-237.17
B69	41.43	684.55	-246.17
B70	41.43	684.49	-255.17
B71	41.43	684.43	-264.17
B72	41.43	684.38	-273.17
B73	41.43	684.35	-278.00
B74	41.43	684.29	-287.00
B56 N	41.43	684.28	-288.00
B56	41.43	684.27	-290.50
B56 F	38.93	684.24	-290.50
B75	38.48	684.24	-290.50
B20 N	38.04	684.23	-290.50
B20	35.54	684.19	-290.50
B20 F	35.54	684.14	-293.00
B77	35.54	684.13	-293.67
B21 N	35.54	684.12	-294.33
B21	35.54	684.07	-296.83
B21 F	33.04	684.03	-296.83
B59 N	30.71	684.00	-296.83
B59	30.69	684.00	-296.83
B59 M	30.69	684.00	-296.83
B59 F	30.67	684.00	-296.83
B60	29.69	684.00	-296.83
B61	28.69	684.00	-296.83
B62	28.08	684.00	-296.83
B63	27.83	684.00	-296.83
*** SEGMENT C			
C00	0.00	691.68	1.00
C01	0.00	691.49	1.00
C02 N	0.00	691.32	1.00
C02	0.00	691.07	1.00
C02 F	0.25	691.07	1.00
C03	1.46	691.07	1.00
C04	3.46	691.07	1.00
C21	5.96	691.07	1.00
C06 N	6.34	691.07	1.00
C06	6.46	691.07	1.00

C O O R D I N A T E S D A T A L I S T I N G

POINT NAME	COORDINATE (ft) X	Y	Z
C06 F	6.58	691.06	1.00
C22	16.95	690.22	1.00
C23	23.94	689.65	1.00
C09 N	24.45	689.61	1.00
C09	27.43	689.37	1.00
C09 F	27.43	689.28	-1.99
C24	27.43	689.27	-2.50
C25	27.43	689.01	-11.50
C26	27.43	688.75	-20.50
C28	27.43	688.49	-29.50
C29	27.43	688.22	-38.50
C31	27.43	687.91	-49.00
C16 N	27.43	687.90	-49.50
C16	27.43	687.81	-52.50
C16 F	30.43	687.74	-52.50
C32	30.93	687.73	-52.50
C33	33.69	687.66	-52.50
C19 N	34.19	687.65	-52.50
C19	37.19	687.58	-52.50
C19 F	37.19	687.49	-55.50
C34	37.19	687.48	-56.00
C35	37.19	687.22	-65.00
C36	37.19	686.96	-74.00
C37	37.19	686.70	-83.00
C38	37.19	686.44	-92.00
C39	37.19	686.29	-97.01
C40	37.19	686.02	-106.00
C27 N	37.19	686.01	-106.50
C27	37.19	685.92	-109.50
C27 F	34.19	685.84	-109.50
C42	33.69	685.83	-109.50
C43	29.69	685.73	-109.50
C30 N	29.19	685.72	-109.50
C30	26.19	685.64	-109.50
C30 F	26.19	685.61	-112.50
C45	26.19	685.61	-113.00
C46	26.19	685.54	-122.00
C47	26.19	685.47	-131.00
C48	26.19	685.40	-140.00
C49	26.19	685.33	-149.00
C50	26.19	685.26	-158.00
C51	26.19	685.19	-167.00
C52	26.19	685.11	-176.00
C53	26.19	685.04	-185.00
C55	26.19	684.95	-195.50
C41 N	26.19	684.95	-196.00
C41	26.19	684.92	-199.00
C41 F	29.19	684.89	-199.00
C56	29.69	684.89	-199.00
C57	36.60	684.84	-199.00
C44 N	37.10	684.84	-199.00
C44	40.10	684.82	-199.00

C O O R D I N A T E S D A T A L I S T I N G

POINT NAME	COORDINATE (ft) X	Y	Z
C44 F	40.10	684.79	-202.00
C58	40.10	684.79	-202.50
C59	40.10	684.72	-211.50
C60	40.10	684.65	-220.50
C61	40.10	684.58	-229.50
C63	40.10	684.52	-238.50
C64	40.10	684.45	-247.50
C65	40.10	684.39	-256.50
C72	40.10	684.32	-265.50
C73	40.10	684.24	-276.24
C54 N	40.10	684.24	-276.74
C54	40.10	684.22	-279.74
C54 F	37.10	684.19	-279.74
C74	36.60	684.19	-279.74
C75	27.60	684.12	-279.74
C76	18.60	684.05	-279.74
C77	9.60	683.99	-279.74
C78	0.60	683.92	-279.74
C79	-8.18	683.86	-279.74
C80	-17.18	683.80	-279.74
C62 N	-17.68	683.80	-279.74
C62	-20.68	683.77	-279.74
C62 F	-20.68	683.74	-282.74
C82	-20.68	683.74	-283.24
C81	-20.68	683.69	-289.08
C83	-20.68	683.65	-294.91
C66 N	-20.68	683.65	-295.41
C66	-20.68	683.62	-298.41
C66 F	-17.68	683.56	-298.41
C84	-17.18	683.55	-298.41
C67 N	-15.40	683.52	-298.41
C67	-15.38	683.52	-298.41
C67 M	-15.38	683.52	-298.41
C67 F	-15.36	683.52	-298.41
C68	-14.38	683.52	-298.41
C69	-13.38	683.52	-298.41
C70	-12.83	683.52	-298.41
C71	-12.64	683.52	-298.41
*** SEGMENT D			
D00	-10.49	683.52	-303.06
D01	-10.49	683.52	-303.25
D02	-10.49	683.52	-303.80
D03	-10.49	683.52	-304.80
D04 N	-10.49	683.52	-307.78
D04	-10.49	683.52	-307.80
D04 M	-10.49	683.52	-307.80
D04 F	-10.49	683.52	-307.82
D13	-10.49	683.61	-315.30
D14	-10.49	683.71	-322.83
D08 N	-10.49	683.72	-323.33
D08	-10.49	683.75	-326.33

C O O R D I N A T E S D A T A L I S T I N G

POINT NAME	COORDINATE (ft) X	Y	Z
D08 F	-7.49	683.78	-326.33
D15	-6.99	683.78	-326.33
D18	-1.34	683.83	-326.33
D16	4.31	683.89	-326.33
D12 N	4.81	683.90	-326.33
D12	7.81	683.93	-326.33
D12 F	7.81	683.97	-329.33
D19	7.81	683.98	-329.83
D25	7.81	684.10	-338.70
D20	7.81	684.21	-347.56
D17 N	7.81	684.22	-348.06
D17	7.81	684.25	-351.06
D17 F	10.81	684.27	-351.06
D26	11.31	684.27	-351.06
D28	18.24	684.30	-351.06
D27	25.16	684.33	-351.06
D21	28.16	684.34	-351.06
D22	29.16	684.34	-351.06
D23 N	29.54	684.34	-351.06
D23	29.79	684.34	-351.06
D23 F	29.79	684.59	-351.06
D24	29.79	684.91	-351.06

S E G M E N T D A T A L I S T I N G

Segment Name	First Node	Last Node	Line Number	Apply Wind	Apply Bowing	Apply Buoyancy
A	A00	A19		No	No	No
B	B00	B63	RIGID	No	No	No
C	C00	C71		No	No	No
D	D00	D24		No	No	No

```
-----------------------------------------------------------------------------------------------------------------------
Primary Piping
04/24/2020 2018719                                                    BENTLEY
07:34 AM                                                              AutoPIPE Nuclear 12.00.00.16   MODEL  PAGE  55
-----------------------------------------------------------------------------------------------------------------------

                    P I P E   D A T A   L I S T I N G

 Pipe ID/     Nom/ O.D.  -----Thickness(inch)----- Spec  InsuDen/   Weight(lb/ft )    E/  Composition/
 Material     Sch  inch  W.Th. Corr Mill Insu Ling Grav/ LingDen/  Pipe/ Ling/ Total  W/  Steel Group/
 CladMaterial            Clad                        InsMt CladDen   Cont  Insu/        f   Tcr
 ---Line Class---                                          lb/cu.ft        Clad
 ------------ ---- ----- ----- ---- ---- ---- ---- ----- --------  ----- ----- ----- ---- --------------------

 Tag No. : <None>
 2SCH40      2.000 2.375 0.154 0.01 0.02    0    0  1.60    0.000   3.74     0  6.07 1.00 Austenitic Stainless
 A312-TP316L  40S                                          0.000   2.33     0       1.00 Austenitic
                            0                              0.000            0       1.00      0.000



 Tag No. : <None>
 3SCH40      3.000 3.500 0.216 0.01 0.03    0    0  1.60    0.000   7.75     0 12.88 1.00 Austenitic Stainless
 A312-TP316L  40S                                          0.000   5.13     0       1.00 Austenitic
                            0                              0.000            0       1.00      0.000
```

M A T E R I A L D A T A L I S T I N G

Material Name	Pipe ID	Density lb/cu.ft	Pois. Ratio	Temper. deg F	Modulus E6 psi Axial	Hoop	Shear	Expans. in/100ft	Composition
A312-TP316L	2SCH40	501.0	0.30	60.0	28.341	28.341	10.900		Austenitic Stainless
				200.0	27.600			1.5000	
A312-TP316L	3SCH40	501.0	0.30	60.0	28.341	28.341	10.900		Austenitic Stainless
				200.0	27.600			1.5000	

M A T E R I A L A L L O W A B L E D A T A L I S T I N G

Material Name	Pipe ID	Temper. deg F	Allow. psi	Yield psi	Ultimate	Weld Reduction Factor W
A312-TP316L	2SCH40	60.0	16700.0	25000.0	70000.0	1.000
		200.0	16700.0	21300.0		1.000
A312-TP316L	3SCH40	60.0	16700.0	25000.0	70000.0	1.000
		200.0	16700.0	21300.0		1.000

OPERATING TEMPERATURE AND PRESSURE DATA
STRESSES IN psi

POINT NAME	CASE	PRESS. psi	TEMPER deg F	EXPAN. in/100ft	MODULUS E6 psi	ALLOW STRESS	YIELD STRESS
*** SEGMENT A							
A00	T1	620	200	1.500	27.600	16700	21300
A19	Same as previous point.						
*** SEGMENT B , LINE # RIGID							
B00	T1	620	200	1.500	27.600	16700	21300
B63	Same as previous point.						
*** SEGMENT C							
C00	T1	620	200	1.500	27.600	16700	21300
C71	Same as previous point.						
*** SEGMENT D							
D00	T1	620	200	1.500	27.600	16700	21300
D24	Same as previous point.						

u User-defined value
* Non-code material for allowable stress;
Non-standard material for expansion and modulus

L O A D S S U M M A R Y D A T A L I S T I N G

EARTHQUAKE LOAD CASES :

Number of load cases : 8

Load case 1 - E1

Seismic Code : User-defined

X-Resultant = 0.186 Y-Resultant = 0.083 Z-Resultant = 0.186

Load case 2 - E2

Seismic Code : User-defined

X-Resultant = 0.186 Y-Resultant = 0.083 Z-Resultant = -0.186

Load case 3 - E3

Seismic Code : User-defined

X-Resultant = -0.186 Y-Resultant = 0.083 Z-Resultant = 0.186

Load case 4 - E4

Seismic Code : User-defined

X-Resultant = -0.186 Y-Resultant = 0.083 Z-Resultant = -0.186

Load case 5 - E5

Seismic Code : User-defined

X-Resultant = 0.186 Y-Resultant = -0.083 Z-Resultant = 0.186

Load case 6 - E6

Seismic Code : User-defined

X-Resultant = 0.186 Y-Resultant = -0.083 Z-Resultant = -0.186

Load case 7 - E7

Seismic Code : User-defined

X-Resultant = -0.186 Y-Resultant = -0.083 Z-Resultant = 0.186

Load case 8 - E8

Seismic Code : User-defined

X-Resultant = -0.186 Y-Resultant = -0.083 Z-Resultant = -0.186

S U P P O R T D A T A L I S T I N G

```
 Point Support  Support Conn.to Comp.Wt  Stiff.     Gap 1   Gap 2  Fric. GapSet Preload Ld.Var Size    Figure
 Name   Type      ID     /Dir    (lb)               (in)    (in)   Fact. /#hgr   (lbf)
 ----- -------- ------- ------- ------- ---------- ------- ------- ----- ------ ------- ------ ---- ------------

 Tag No.: <None>                                Attachment ID: <None>
 A20   V-stop   A20  1  Ground    0.000 Rigid        0.000 100.000  0.00  Weightless

 Tag No.: <None>                                Attachment ID: <None>
 A20   Guide-V  A20  2  Ground    0.000 Rigid        0.000   0.000  0.80  Weightless
       Guide-H  A20  2  Ground    0.000 Rigid        1.000   1.000  0.80  Weightless
            Gap Dir.: (Gap1_V=-Z, Gap2_V=+Z, Gap1_H=-X, Gap2_H=+X)

 Tag No.: <None>                                Attachment ID: <None>
 A23   Guide-V  A23  1  Ground    0.000 Rigid        0.000   0.830  0.80  Weightless
       Guide-H  A23  1  Ground    0.000 Rigid        0.830   0.830  0.80  Weightless

 Tag No.: <None>                                Attachment ID: <None>
 A24   Guide-V  A24  1  Ground    0.000 Rigid        0.000   0.063  0.80  Weightless
       Guide-H  A24  1  Ground    0.000 Rigid        0.031   0.031  0.80  Weightless

 Tag No.: <None>                                Attachment ID: <None>
 A21   Guide-V  A21  1  Ground    0.000 Rigid        0.000   0.830  0.80  Weightless
       Guide-H  A21  1  Ground    0.000 Rigid        0.830   0.830  0.80  Weightless

 Tag No.: <None>                                Attachment ID: <None>
 A22   Guide-V  A22  2  Ground    0.000 Rigid        0.000   0.830  0.80  Weightless
       Guide-H  A22  2  Ground    0.000 Rigid        0.830   0.830  0.80  Weightless

 Tag No.: <None>                                Attachment ID: <None>
 A25   Guide-V  A25  2  Ground    0.000 Rigid        0.000   0.063  0.80  Weightless
       Guide-H  A25  2  Ground    0.000 Rigid        0.031   0.031  0.80  Weightless

 Tag No.: <None>                                Attachment ID: <None>
 A26   Guide-V  A26  2  Ground    0.000 Rigid        0.000   0.063  0.80  Weightless
       Guide-H  A26  2  Ground    0.000 Rigid        0.031   0.031  0.80  Weightless

 Tag No.: <None>                                Attachment ID: <None>
 A27   Guide-V  A27  2  Ground    0.000 Rigid        0.000   0.063  0.80  Weightless
       Guide-H  A27  2  Ground    0.000 Rigid        0.031   0.031  0.80  Weightless

 Tag No.: <None>                                Attachment ID: <None>
 A28   Guide-V  A28  2  Ground    0.000 Rigid        0.000   0.063  0.80  Weightless
       Guide-H  A28  2  Ground    0.000 Rigid        0.031   0.031  0.80  Weightless

 Tag No.: <None>                                Attachment ID: <None>
 A29   Guide-V  A29  1  Ground    0.000 Rigid        0.000   0.830  0.80  Weightless
       Guide-H  A29  1  Ground    0.000 Rigid        0.830   0.830  0.80  Weightless

 Tag No.: <None>                                Attachment ID: <None>
 A30   Guide-V  A30  1  Ground    0.000 Rigid        0.000   0.830  0.80  Weightless
       Guide-H  A30  1  Ground    0.000 Rigid        0.830   0.830  0.80  Weightless

 Tag No.: <None>                                Attachment ID: <None>
 A31   Guide-V  A31  1  Ground    0.000 Rigid        0.000   0.830  0.80  Weightless
       Guide-H  A31  1  Ground    0.000 Rigid        0.830   0.830  0.80  Weightless
```

S U P P O R T D A T A L I S T I N G

Point Name	Support Type	Support ID	Conn.to /Dir	Comp.Wt (lb)	Stiff.	Gap 1 (in)	Gap 2 (in)	Fric. Fact.	GapSet /#hgr	Preload (lbf)	Ld.Var	Size	Figure
Tag No.: <None>						Attachment ID: <None>							
A32	Guide-V	A32 1	Ground	0.000	Rigid	0.000	0.830	0.80	Weightless				
	Guide-H	A32 1	Ground	0.000	Rigid	0.830	0.830	0.80	Weightless				
Tag No.: <None>						Attachment ID: <None>							
A33	Guide-V	A33 2	Ground	0.000	Rigid	0.000	0.063	0.80	Weightless				
	Guide-H	A33 2	Ground	0.000	Rigid	0.031	0.031	0.80	Weightless				
Tag No.: <None>						Attachment ID: <None>							
A34	Guide-V	A34 2	Ground	0.000	Rigid	0.000	0.063	0.80	Weightless				
	Guide-H	A34 2	Ground	0.000	Rigid	0.031	0.031	0.80	Weightless				
Tag No.: <None>						Attachment ID: <None>							
A35	Guide-V	A35 2	Ground	0.000	Rigid	0.000	0.063	0.80	Weightless				
	Guide-H	A35 2	Ground	0.000	Rigid	0.031	0.031	0.80	Weightless				
Tag No.: <None>						Attachment ID: <None>							
A36	Guide-V	A36 2	Ground	0.000	Rigid	0.000	0.063	0.80	Weightless				
	Guide-H	A36 2	Ground	0.000	Rigid	0.031	0.031	0.80	Weightless				
Tag No.: <None>						Attachment ID: <None>							
A37	Guide-V	A37 2	Ground	0.000	Rigid	0.000	0.063	0.80	Weightless				
	Guide-H	A37 2	Ground	0.000	Rigid	0.031	0.031	0.80	Weightless				
Tag No.: <None>						Attachment ID: <None>							
A38	Guide-V	A38 1	Ground	0.000	Rigid	0.000	0.830	0.80	Weightless				
	Guide-H	A38 1	Ground	0.000	Rigid	0.830	0.830	0.80	Weightless				
Tag No.: <None>						Attachment ID: <None>							
A39	Guide-V	A39 1	Ground	0.000	Rigid	0.000	0.830	0.80	Weightless				
	Guide-H	A39 1	Ground	0.000	Rigid	0.830	0.830	0.80	Weightless				
Tag No.: <None>						Attachment ID: <None>							
A40	Guide-V	A40 1	Ground	0.000	Rigid	0.000	0.830	0.80	Weightless				
	Guide-H	A40 1	Ground	0.000	Rigid	0.830	0.830	0.80	Weightless				
Tag No.: <None>						Attachment ID: <None>							
A41	Guide-V	A41 1	Ground	0.000	Rigid	0.000	0.830	0.80	Weightless				
	Guide-H	A41 1	Ground	0.000	Rigid	0.830	0.830	0.80	Weightless				
Tag No.: <None>						Attachment ID: <None>							
A42	Guide-V	A42 2	Ground	0.000	Rigid	0.000	0.063	0.80	Weightless				
	Guide-H	A42 2	Ground	0.000	Rigid	0.031	0.031	0.80	Weightless				
Tag No.: <None>						Attachment ID: <None>							
A43	Guide-V	A43 2	Ground	0.000	Rigid	0.000	0.063	0.80	Weightless				
	Guide-H	A43 2	Ground	0.000	Rigid	0.031	0.031	0.80	Weightless				
Tag No.: <None>						Attachment ID: <None>							
A44	Guide-V	A44 2	Ground	0.000	Rigid	0.000	0.063	0.80	Weightless				
	Guide-H	A44 2	Ground	0.000	Rigid	0.031	0.031	0.80	Weightless				

S U P P O R T D A T A L I S T I N G

Point Name	Support Type	Support ID	Conn.to /Dir	Comp.Wt (lb)	Stiff.	Gap 1 (in)	Gap 2 (in)	Fric. Fact.	GapSet /#hgr	Preload (lbf)	Ld.Var	Size	Figure
Tag No.: <None>						Attachment ID: <None>							
A45	Guide-V	A45 2	Ground	0.000	Rigid	0.000	0.063	0.80	Weightless				
	Guide-H	A45 2	Ground	0.000	Rigid	0.031	0.031	0.80	Weightless				
Tag No.: <None>						Attachment ID: <None>							
A46	Guide-V	A46 2	Ground	0.000	Rigid	0.000	0.063	0.80	Weightless				
	Guide-H	A46 2	Ground	0.000	Rigid	0.031	0.031	0.80	Weightless				
Tag No.: <None>						Attachment ID: <None>							
A47	Guide-V	A47 2	Ground	0.000	Rigid	0.000	0.063	0.80	Weightless				
	Guide-H	A47 2	Ground	0.000	Rigid	0.031	0.031	0.80	Weightless				
Tag No.: <None>						Attachment ID: <None>							
A48	Guide-V	A48 2	Ground	0.000	Rigid	0.000	0.063	0.80	Weightless				
	Guide-H	A48 2	Ground	0.000	Rigid	0.031	0.031	0.80	Weightless				
Tag No.: <None>						Attachment ID: <None>							
A49	Guide-V	A49 2	Ground	0.000	Rigid	0.000	0.063	0.80	Weightless				
	Guide-H	A49 2	Ground	0.000	Rigid	0.031	0.031	0.80	Weightless				
Tag No.: <None>						Attachment ID: <None>							
A50	Guide-V	A50 2	Ground	0.000	Rigid	0.000	0.063	0.80	Weightless				
	Guide-H	A50 2	Ground	0.000	Rigid	0.031	0.031	0.80	Weightless				
Tag No.: <None>						Attachment ID: <None>							
A51	Guide-V	A51 1	Ground	0.000	Rigid	0.000	0.830	0.80	Weightless				
	Guide-H	A51 1	Ground	0.000	Rigid	0.830	0.830	0.80	Weightless				
Tag No.: <None>						Attachment ID: <None>							
A52	Guide-V	A52 1	Ground	0.000	Rigid	0.000	0.830	0.80	Weightless				
	Guide-H	A52 1	Ground	0.000	Rigid	0.830	0.830	0.80	Weightless				
Tag No.: <None>						Attachment ID: <None>							
A53	Guide-V	A53 1	Ground	0.000	Rigid	0.000	0.830	0.80	Weightless				
	Guide-H	A53 1	Ground	0.000	Rigid	0.830	0.830	0.80	Weightless				
Tag No.: <None>						Attachment ID: <None>							
A54	Guide-V	A54 1	Ground	0.000	Rigid	0.000	0.830	0.80	Weightless				
	Guide-H	A54 1	Ground	0.000	Rigid	0.830	0.830	0.80	Weightless				
Tag No.: <None>						Attachment ID: <None>							
A55	Guide-V	A55 1	Ground	0.000	Rigid	0.000	0.063	0.80	Weightless				
	Guide-H	A55 1	Ground	0.000	Rigid	0.031	0.031	0.80	Weightless				
Tag No.: <None>						Attachment ID: <None>							
A56	Guide-V	A56 1	Ground	0.000	Rigid	0.000	0.063	0.80	Weightless				
	Guide-H	A56 1	Ground	0.000	Rigid	0.031	0.031	0.80	Weightless				
Tag No.: <None>						Attachment ID: <None>							
A57	Guide-V	A57 1	Ground	0.000	Rigid	0.000	0.063	0.80	Weightless				
	Guide-H	A57 1	Ground	0.000	Rigid	0.031	0.031	0.80	Weightless				

S U P P O R T D A T A L I S T I N G

Point Name	Support Type	Support ID	Conn.to /Dir	Comp.Wt (lb)	Stiff.	Gap 1 (in)	Gap 2 (in)	Fric. Fact.	GapSet /#hgr	Preload (lbf)	Ld.Var	Size	Figure
Tag No.: <None>						Attachment ID: <None>							
A58	Guide-V	A58 1	Ground	0.000	Rigid	0.000	0.063	0.80		Weightless			
	Guide-H	A58 1	Ground	0.000	Rigid	0.031	0.031	0.80		Weightless			
Tag No.: <None>						Attachment ID: <None>							
A59	Guide-V	A59 1	Ground	0.000	Rigid	0.000	0.063	0.80		Weightless			
	Guide-H	A59 1	Ground	0.000	Rigid	0.031	0.031	0.80		Weightless			
Tag No.: <None>						Attachment ID: <None>							
A60	Guide-V	A60 1	Ground	0.000	Rigid	0.000	0.063	0.80		Weightless			
	Guide-H	A60 1	Ground	0.000	Rigid	0.031	0.031	0.80		Weightless			
Tag No.: <None>						Attachment ID: <None>							
A61	Guide-V	A61 1	Ground	0.000	Rigid	0.000	0.063	0.80		Weightless			
	Guide-H	A61 1	Ground	0.000	Rigid	0.031	0.031	0.80		Weightless			
Tag No.: <None>						Attachment ID: <None>							
A62	Guide-V	A62 1	Ground	0.000	Rigid	0.000	0.830	0.80		Weightless			
	Guide-H	A62 1	Ground	0.000	Rigid	0.830	0.830	0.80		Weightless			
Tag No.: <None>						Attachment ID: <None>							
A63	Guide-V	A63 1	Ground	0.000	Rigid	0.000	0.830	0.80		Weightless			
	Guide-H	A63 1	Ground	0.000	Rigid	0.830	0.830	0.80		Weightless			
Tag No.: <None>						Attachment ID: <None>							
A64	Guide-V	A64 2	Ground	0.000	Rigid	0.000	0.063	0.80		Weightless			
	Guide-H	A64 2	Ground	0.000	Rigid	0.031	0.031	0.80		Weightless			
Tag No.: <None>						Attachment ID: <None>							
A65	Guide-V	A65 2	Ground	0.000	Rigid	0.000	0.063	0.80		Weightless			
	Guide-H	A65 2	Ground	0.000	Rigid	0.031	0.031	0.80		Weightless			
Tag No.: <None>						Attachment ID: <None>							
A66	Guide-V	A66 2	Ground	0.000	Rigid	0.000	0.063	0.80		Weightless			
	Guide-H	A66 2	Ground	0.000	Rigid	0.031	0.031	0.80		Weightless			
Tag No.: <None>						Attachment ID: <None>							
A67	Guide-V	A67 2	Ground	0.000	Rigid	0.000	0.063	0.80		Weightless			
	Guide-H	A67 2	Ground	0.000	Rigid	0.031	0.031	0.80		Weightless			
Tag No.: <None>						Attachment ID: <None>							
A68	Guide-V	A68 2	Ground	0.000	Rigid	0.000	0.063	0.80		Weightless			
	Guide-H	A68 2	Ground	0.000	Rigid	0.031	0.031	0.80		Weightless			
Tag No.: <None>						Attachment ID: <None>							
A69	Guide-V	A69 1	Ground	0.000	Rigid	0.000	0.830	0.80		Weightless			
	Guide-H	A69 1	Ground	0.000	Rigid	0.830	0.830	0.80		Weightless			
Tag No.: <None>						Attachment ID: <None>							
A70	Guide-V	A70 1	Ground	0.000	Rigid	0.000	0.830	0.80		Weightless			
	Guide-H	A70 1	Ground	0.000	Rigid	0.830	0.830	0.80		Weightless			

S U P P O R T D A T A L I S T I N G

```
 Point Support  Support Conn.to Comp.Wt  Stiff.     Gap 1   Gap 2  Fric. GapSet Preload Ld.Var Size    Figure
 Name   Type      ID     /Dir    (lb)               (in)    (in)   Fact. /#hgr   (lbf)
 ----- -------- ------- ------- ------- ---------- ------- ------- ----- ------ ------- ------ ---- ------------
 Tag No.: <None>                                 Attachment ID: <None>
 A71   Guide-V  A71  2  Ground    0.000 Rigid        0.000   0.063  0.80  Weightless
       Guide-H  A71  2  Ground    0.000 Rigid        0.031   0.031  0.80  Weightless

 Tag No.: <None>                                 Attachment ID: <None>
 A72   Guide-V  A72  1  Ground    0.000 Rigid        0.000   0.830  0.80  Weightless
       Guide-H  A72  1  Ground    0.000 Rigid        0.830   0.830  0.80  Weightless

 Tag No.: <None>                                 Attachment ID: <None>
 A73   Guide-V  A73  1  Ground    0.000 Rigid        0.000   0.830  0.80  Weightless
       Guide-H  A73  1  Ground    0.000 Rigid        0.830   0.830  0.80  Weightless

 Tag No.: <None>                                 Attachment ID: <None>
 B01   V-stop   B01  1  Ground    0.000 Rigid        0.000 100.000  0.00  Weightless

 Tag No.: <None>                                 Attachment ID: <None>
 B01   Guide-V  B01  2  Ground    0.000 Rigid        0.000   0.000  0.80  Weightless
       Guide-H  B01  2  Ground    0.000 Rigid        1.000   1.000  0.80  Weightless
            Gap Dir.: (Gap1_V=-Z, Gap2_V=+Z, Gap1_H=-X, Gap2_H=+X)

 Tag No.: <None>                                 Attachment ID: <None>
 B22   Guide-V  B22  2  Ground    0.000 Rigid        0.000   1.280  0.80  Weightless
       Guide-H  B22  2  Ground    0.000 Rigid        1.280   1.280  0.80  Weightless

 Tag No.: <None>                                 Attachment ID: <None>
 B23   Guide-V  B23  2  Ground    0.000 Rigid        0.000   0.313  0.80  Weightless
       Guide-H  B23  2  Ground    0.000 Rigid        0.156   0.156  0.80  Weightless

 Tag No.: <None>                                 Attachment ID: <None>
 B24   Guide-V  B24  2  Ground    0.000 Rigid        0.000   1.280  0.80  Weightless
       Guide-H  B24  2  Ground    0.000 Rigid        1.280   1.280  0.80  Weightless

 Tag No.: <None>                                 Attachment ID: <None>
 B25   Guide-V  B25  2  Ground    0.000 Rigid        0.000   1.280  0.80  Weightless
       Guide-H  B25  2  Ground    0.000 Rigid        1.280   1.280  0.80  Weightless

 Tag No.: <None>                                 Attachment ID: <None>
 B26   Guide-V  B26  1  Ground    0.000 Rigid        0.000   0.313  0.80  Weightless
       Guide-H  B26  1  Ground    0.000 Rigid        0.156   0.156  0.80  Weightless

 Tag No.: <None>                                 Attachment ID: <None>
 B28   Guide-V  B28  1  Ground    0.000 Rigid        0.000   0.313  0.80  Weightless
       Guide-H  B28  1  Ground    0.000 Rigid        0.156   0.156  0.80  Weightless

 Tag No.: <None>                                 Attachment ID: <None>
 B29   Guide-V  B29  1  Ground    0.000 Rigid        0.000   0.313  0.80  Weightless
       Guide-H  B29  1  Ground    0.000 Rigid        0.156   0.156  0.80  Weightless

 Tag No.: <None>                                 Attachment ID: <None>
 B31   Guide-V  B31  1  Ground    0.000 Rigid        0.000   0.313  0.80  Weightless
       Guide-H  B31  1  Ground    0.000 Rigid        0.156   0.156  0.80  Weightless
```

S U P P O R T D A T A L I S T I N G

Point Name	Support Type	Support ID	Conn.to /Dir	Comp.Wt (lb)	Stiff.	Gap 1 (in)	Gap 2 (in)	Fric. Fact.	GapSet /#hgr	Preload (lbf)	Ld.Var	Size	Figure
Tag No.: <None>						Attachment ID: <None>							
B32	Guide-V	B32 2	Ground	0.000	Rigid	0.000	1.280	0.80	Weightless				
	Guide-H	B32 2	Ground	0.000	Rigid	1.280	1.280	0.80	Weightless				
Tag No.: <None>						Attachment ID: <None>							
B33	Guide-V	B33 2	Ground	0.000	Rigid	0.000	1.280	0.80	Weightless				
	Guide-H	B33 2	Ground	0.000	Rigid	1.280	1.280	0.80	Weightless				
Tag No.: <None>						Attachment ID: <None>							
B34	Guide-V	B34 2	Ground	0.000	Rigid	0.000	1.280	0.80	Weightless				
	Guide-H	B34 2	Ground	0.000	Rigid	1.280	1.280	0.80	Weightless				
Tag No.: <None>						Attachment ID: <None>							
B35	Guide-V	B35 2	Ground	0.000	Rigid	0.000	1.280	0.80	Weightless				
	Guide-H	B35 2	Ground	0.000	Rigid	1.280	1.280	0.80	Weightless				
Tag No.: <None>						Attachment ID: <None>							
B36	Guide-V	B36 2	Ground	0.000	Rigid	0.000	0.313	0.80	Weightless				
	Guide-H	B36 2	Ground	0.000	Rigid	0.156	0.156	0.80	Weightless				
Tag No.: <None>						Attachment ID: <None>							
B37	Guide-V	B37 2	Ground	0.000	Rigid	0.000	0.313	0.80	Weightless				
	Guide-H	B37 2	Ground	0.000	Rigid	0.156	0.156	0.80	Weightless				
Tag No.: <None>						Attachment ID: <None>							
B38	Guide-V	B38 2	Ground	0.000	Rigid	0.000	0.313	0.80	Weightless				
	Guide-H	B38 2	Ground	0.000	Rigid	0.156	0.156	0.80	Weightless				
Tag No.: <None>						Attachment ID: <None>							
B39	Guide-V	B39 2	Ground	0.000	Rigid	0.000	0.313	0.80	Weightless				
	Guide-H	B39 2	Ground	0.000	Rigid	0.156	0.156	0.80	Weightless				
Tag No.: <None>						Attachment ID: <None>							
B40	Guide-V	B40 1	Ground	0.000	Rigid	0.000	0.313	0.80	Weightless				
	Guide-H	B40 1	Ground	0.000	Rigid	0.156	0.156	0.80	Weightless				
Tag No.: <None>						Attachment ID: <None>							
B42	Guide-V	B42 1	Ground	0.000	Rigid	0.000	1.280	0.80	Weightless				
	Guide-H	B42 1	Ground	0.000	Rigid	1.280	1.280	0.80	Weightless				
Tag No.: <None>						Attachment ID: <None>							
B43	Guide-V	B43 1	Ground	0.000	Rigid	0.000	1.280	0.80	Weightless				
	Guide-H	B43 1	Ground	0.000	Rigid	1.280	1.280	0.80	Weightless				
Tag No.: <None>						Attachment ID: <None>							
B45	Guide-V	B45 1	Ground	0.000	Rigid	0.000	1.280	0.80	Weightless				
	Guide-H	B45 1	Ground	0.000	Rigid	1.280	1.280	0.80	Weightless				
Tag No.: <None>						Attachment ID: <None>							
B46	Guide-V	B46 2	Ground	0.000	Rigid	0.000	1.280	0.80	Weightless				
	Guide-H	B46 2	Ground	0.000	Rigid	1.280	1.280	0.80	Weightless				

S U P P O R T D A T A L I S T I N G

Point Name	Support Type	Support ID	Conn.to /Dir	Comp.Wt (lb)	Stiff.	Gap 1 (in)	Gap 2 (in)	Fric. Fact.	GapSet /#hgr	Preload (lbf)	Ld.Var	Size	Figure
Tag No.: <None>						Attachment ID: <None>							
B47	Guide-V	B47 2	Ground	0.000	Rigid	0.000	0.313	0.80	Weightless				
	Guide-H	B47 2	Ground	0.000	Rigid	0.156	0.156	0.80	Weightless				
Tag No.: <None>						Attachment ID: <None>							
B48	Guide-V	B48 2	Ground	0.000	Rigid	0.000	0.313	0.80	Weightless				
	Guide-H	B48 2	Ground	0.000	Rigid	0.156	0.156	0.80	Weightless				
Tag No.: <None>						Attachment ID: <None>							
B49	Guide-V	B49 2	Ground	0.000	Rigid	0.000	0.313	0.80	Weightless				
	Guide-H	B49 2	Ground	0.000	Rigid	0.156	0.156	0.80	Weightless				
Tag No.: <None>						Attachment ID: <None>							
B50	Guide-V	B50 2	Ground	0.000	Rigid	0.000	0.313	0.80	Weightless				
	Guide-H	B50 2	Ground	0.000	Rigid	0.156	0.156	0.80	Weightless				
Tag No.: <None>						Attachment ID: <None>							
B51	Guide-V	B51 2	Ground	0.000	Rigid	0.000	0.313	0.80	Weightless				
	Guide-H	B51 2	Ground	0.000	Rigid	0.156	0.156	0.80	Weightless				
Tag No.: <None>						Attachment ID: <None>							
B52	Guide-V	B52 2	Ground	0.000	Rigid	0.000	0.313	0.80	Weightless				
	Guide-H	B52 2	Ground	0.000	Rigid	0.156	0.156	0.80	Weightless				
Tag No.: <None>						Attachment ID: <None>							
B53	Guide-V	B53 2	Ground	0.000	Rigid	0.000	0.313	0.80	Weightless				
	Guide-H	B53 2	Ground	0.000	Rigid	0.156	0.156	0.80	Weightless				
Tag No.: <None>						Attachment ID: <None>							
B54	Guide-V	B54 2	Ground	0.000	Rigid	0.000	0.313	0.80	Weightless				
	Guide-H	B54 2	Ground	0.000	Rigid	0.156	0.156	0.80	Weightless				
Tag No.: <None>						Attachment ID: <None>							
B55	Guide-V	B55 1	Ground	0.000	Rigid	0.000	1.280	0.80	Weightless				
	Guide-H	B55 1	Ground	0.000	Rigid	1.280	1.280	0.80	Weightless				
Tag No.: <None>						Attachment ID: <None>							
B57	Guide-V	B57 1	Ground	0.000	Rigid	0.000	1.280	0.80	Weightless				
	Guide-H	B57 1	Ground	0.000	Rigid	1.280	1.280	0.80	Weightless				
Tag No.: <None>						Attachment ID: <None>							
B58	Guide-V	B58 1	Ground	0.000	Rigid	0.000	1.280	0.80	Weightless				
	Guide-H	B58 1	Ground	0.000	Rigid	1.280	1.280	0.80	Weightless				
Tag No.: <None>						Attachment ID: <None>							
B64	Guide-V	B64 1	Ground	0.000	Rigid	0.000	1.280	0.80	Weightless				
	Guide-H	B64 1	Ground	0.000	Rigid	1.280	1.280	0.80	Weightless				
Tag No.: <None>						Attachment ID: <None>							
B65	Guide-V	B65 1	Ground	0.000	Rigid	0.000	0.313	0.80	Weightless				
	Guide-H	B65 1	Ground	0.000	Rigid	0.156	0.156	0.80	Weightless				

S U P P O R T D A T A L I S T I N G

Point Name	Support Type	Support ID	Conn.to /Dir	Comp.Wt (lb)	Stiff.	Gap 1 (in)	Gap 2 (in)	Fric. Fact.	GapSet /#hgr	Preload (lbf)	Ld.Var	Size	Figure
Tag No.: <None>						Attachment ID: <None>							
B66	Guide-V	B66 1	Ground	0.000	Rigid	0.000	0.313	0.80	Weightless				
	Guide-H	B66 1	Ground	0.000	Rigid	0.156	0.156	0.80	Weightless				
Tag No.: <None>						Attachment ID: <None>							
B67	Guide-V	B67 1	Ground	0.000	Rigid	0.000	0.313	0.80	Weightless				
	Guide-H	B67 1	Ground	0.000	Rigid	0.156	0.156	0.80	Weightless				
Tag No.: <None>						Attachment ID: <None>							
B68	Guide-V	B68 1	Ground	0.000	Rigid	0.000	0.313	0.80	Weightless				
	Guide-H	B68 1	Ground	0.000	Rigid	0.156	0.156	0.80	Weightless				
Tag No.: <None>						Attachment ID: <None>							
B69	Guide-V	B69 1	Ground	0.000	Rigid	0.000	0.313	0.80	Weightless				
	Guide-H	B69 1	Ground	0.000	Rigid	0.156	0.156	0.80	Weightless				
Tag No.: <None>						Attachment ID: <None>							
B70	Guide-V	B70 1	Ground	0.000	Rigid	0.000	0.313	0.80	Weightless				
	Guide-H	B70 1	Ground	0.000	Rigid	0.156	0.156	0.80	Weightless				
Tag No.: <None>						Attachment ID: <None>							
B71	Guide-V	B71 1	Ground	0.000	Rigid	0.000	0.313	0.80	Weightless				
	Guide-H	B71 1	Ground	0.000	Rigid	0.156	0.156	0.80	Weightless				
Tag No.: <None>						Attachment ID: <None>							
B72	Guide-V	B72 1	Ground	0.000	Rigid	0.000	0.313	0.80	Weightless				
	Guide-H	B72 1	Ground	0.000	Rigid	0.156	0.156	0.80	Weightless				
Tag No.: <None>						Attachment ID: <None>							
B73	Guide-V	B73 1	Ground	0.000	Rigid	0.000	0.313	0.80	Weightless				
	Guide-H	B73 1	Ground	0.000	Rigid	0.156	0.156	0.80	Weightless				
Tag No.: <None>						Attachment ID: <None>							
B74	Guide-V	B74 1	Ground	0.000	Rigid	0.000	1.280	0.80	Weightless				
	Guide-H	B74 1	Ground	0.000	Rigid	1.280	1.280	0.80	Weightless				
Tag No.: <None>						Attachment ID: <None>							
B75	Guide-V	B75 1	Ground	0.000	Rigid	0.000	1.280	0.80	Weightless				
	Guide-H	B75 1	Ground	0.000	Rigid	1.280	1.280	0.80	Weightless				
Tag No.: <None>						Attachment ID: <None>							
B77	Guide-V	B77 1	Ground	0.000	Rigid	0.000	0.313	0.80	Weightless				
	Guide-H	B77 1	Ground	0.000	Rigid	0.156	0.156	0.80	Weightless				
Tag No.: <None>						Attachment ID: <None>							
B59 F	Guide-V	B59 F1	Ground	0.000	Rigid	0.000	1.280	0.80	Weightless				
	Guide-H	B59 F1	Ground	0.000	Rigid	1.280	1.280	0.80	Weightless				
Tag No.: <None>						Attachment ID: <None>							
C01	V-stop	C01 1	Ground	0.000	Rigid	0.000	100.000	0.00	Weightless				
Tag No.: <None>						Attachment ID: <None>							

S U P P O R T D A T A L I S T I N G

```
 Point Support  Support Conn.to Comp.Wt  Stiff.     Gap 1   Gap 2  Fric. GapSet Preload Ld.Var Size    Figure
 Name   Type      ID     /Dir    (lb)               (in)    (in)   Fact. /#hgr   (lbf)
 ----- -------- ------- ------- ------- ---------- ------- ------- ----- ------ ------- ------ ---- ------------
 C01   Guide-V  C01  2  Ground    0.000 Rigid        0.000   0.000  0.80  Weightless
       Guide-H  C01  2  Ground    0.000 Rigid        1.000   1.000  0.80  Weightless
            Gap Dir.: (Gap1_V=-Z, Gap2_V=+Z, Gap1_H=-X, Gap2_H=+X)

 Tag No.: <None>                                Attachment ID: <None>
 C21   Guide-V  C21  2  Ground    0.000 Rigid        0.000   0.830  0.80  Weightless
       Guide-H  C21  2  Ground    0.000 Rigid        0.830   0.830  0.80  Weightless

 Tag No.: <None>                                Attachment ID: <None>
 C22   Guide-V  C22  2  Ground    0.000 Rigid        0.000   0.063  0.80  Weightless
       Guide-H  C22  2  Ground    0.000 Rigid        0.031   0.031  0.80  Weightless

 Tag No.: <None>                                Attachment ID: <None>
 C23   Guide-V  C23  2  Ground    0.000 Rigid        0.000   0.830  0.80  Weightless
       Guide-H  C23  2  Ground    0.000 Rigid        0.830   0.830  0.80  Weightless

 Tag No.: <None>                                Attachment ID: <None>
 C24   Guide-V  C24  2  Ground    0.000 Rigid        0.000   0.830  0.80  Weightless
       Guide-H  C24  2  Ground    0.000 Rigid        0.830   0.830  0.80  Weightless

 Tag No.: <None>                                Attachment ID: <None>
 C25   Guide-V  C25  2  Ground    0.000 Rigid        0.000   0.063  0.80  Weightless
       Guide-H  C25  2  Ground    0.000 Rigid        0.031   0.031  0.80  Weightless

 Tag No.: <None>                                Attachment ID: <None>
 C26   Guide-V  C26  2  Ground    0.000 Rigid        0.000   0.063  0.80  Weightless
       Guide-H  C26  2  Ground    0.000 Rigid        0.031   0.031  0.80  Weightless

 Tag No.: <None>                                Attachment ID: <None>
 C28   Guide-V  C28  2  Ground    0.000 Rigid        0.000   0.063  0.80  Weightless
       Guide-H  C28  2  Ground    0.000 Rigid        0.031   0.031  0.80  Weightless

 Tag No.: <None>                                Attachment ID: <None>
 C29   Guide-V  C29  2  Ground    0.000 Rigid        0.000   0.063  0.80  Weightless
       Guide-H  C29  2  Ground    0.000 Rigid        0.031   0.031  0.80  Weightless

 Tag No.: <None>                                Attachment ID: <None>
 C31   Guide-V  C31  2  Ground    0.000 Rigid        0.000   0.830  0.80  Weightless
       Guide-H  C31  2  Ground    0.000 Rigid        0.830   0.830  0.80  Weightless

 Tag No.: <None>                                Attachment ID: <None>
 C32   Guide-V  C32  2  Ground    0.000 Rigid        0.000   0.830  0.80  Weightless
       Guide-H  C32  2  Ground    0.000 Rigid        0.830   0.830  0.80  Weightless

 Tag No.: <None>                                Attachment ID: <None>
 C33   Guide-V  C33  2  Ground    0.000 Rigid        0.000   0.830  0.80  Weightless
       Guide-H  C33  2  Ground    0.000 Rigid        0.830   0.830  0.80  Weightless

 Tag No.: <None>                                Attachment ID: <None>
 C34   Guide-V  C34  2  Ground    0.000 Rigid        0.000   0.830  0.80  Weightless
       Guide-H  C34  2  Ground    0.000 Rigid        0.830   0.830  0.80  Weightless
```

S U P P O R T D A T A L I S T I N G

Point Name	Support Type	Support ID	Conn.to /Dir	Comp.Wt (lb)	Stiff.	Gap 1 (in)	Gap 2 (in)	Fric. Fact.	GapSet /#hgr	Preload (lbf)	Ld.Var	Size	Figure
Tag No.: <None>						Attachment ID: <None>							
C35	Guide-V	C35 2	Ground	0.000	Rigid	0.000	0.063	0.80	Weightless				
	Guide-H	C35 2	Ground	0.000	Rigid	0.031	0.031	0.80	Weightless				
Tag No.: <None>						Attachment ID: <None>							
C36	Guide-V	C36 2	Ground	0.000	Rigid	0.000	0.063	0.80	Weightless				
	Guide-H	C36 2	Ground	0.000	Rigid	0.031	0.031	0.80	Weightless				
Tag No.: <None>						Attachment ID: <None>							
C37	Guide-V	C37 2	Ground	0.000	Rigid	0.000	0.063	0.80	Weightless				
	Guide-H	C37 2	Ground	0.000	Rigid	0.031	0.031	0.80	Weightless				
Tag No.: <None>						Attachment ID: <None>							
C38	Guide-V	C38 2	Ground	0.000	Rigid	0.000	0.063	0.80	Weightless				
	Guide-H	C38 2	Ground	0.000	Rigid	0.031	0.031	0.80	Weightless				
Tag No.: <None>						Attachment ID: <None>							
C39	Guide-V	C39 2	Ground	0.000	Rigid	0.000	0.063	0.80	Weightless				
	Guide-H	C39 2	Ground	0.000	Rigid	0.031	0.031	0.80	Weightless				
Tag No.: <None>						Attachment ID: <None>							
C40	Guide-V	C40 2	Ground	0.000	Rigid	0.000	0.830	0.80	Weightless				
	Guide-H	C40 2	Ground	0.000	Rigid	0.830	0.830	0.80	Weightless				
Tag No.: <None>						Attachment ID: <None>							
C42	Guide-V	C42 2	Ground	0.000	Rigid	0.000	0.830	0.80	Weightless				
	Guide-H	C42 2	Ground	0.000	Rigid	0.830	0.830	0.80	Weightless				
Tag No.: <None>						Attachment ID: <None>							
C43	Guide-V	C43 2	Ground	0.000	Rigid	0.000	0.830	0.80	Weightless				
	Guide-H	C43 2	Ground	0.000	Rigid	0.830	0.830	0.80	Weightless				
Tag No.: <None>						Attachment ID: <None>							
C45	Guide-V	C45 2	Ground	0.000	Rigid	0.000	0.830	0.80	Weightless				
	Guide-H	C45 2	Ground	0.000	Rigid	0.830	0.830	0.80	Weightless				
Tag No.: <None>						Attachment ID: <None>							
C46	Guide-V	C46 2	Ground	0.000	Rigid	0.000	0.063	0.80	Weightless				
	Guide-H	C46 2	Ground	0.000	Rigid	0.031	0.031	0.80	Weightless				
Tag No.: <None>						Attachment ID: <None>							
C47	Guide-V	C47 2	Ground	0.000	Rigid	0.000	0.063	0.80	Weightless				
	Guide-H	C47 2	Ground	0.000	Rigid	0.031	0.031	0.80	Weightless				
Tag No.: <None>						Attachment ID: <None>							
C48	Guide-V	C48 2	Ground	0.000	Rigid	0.000	0.063	0.80	Weightless				
	Guide-H	C48 2	Ground	0.000	Rigid	0.031	0.031	0.80	Weightless				
Tag No.: <None>						Attachment ID: <None>							
C49	Guide-V	C49 2	Ground	0.000	Rigid	0.000	0.063	0.80	Weightless				
	Guide-H	C49 2	Ground	0.000	Rigid	0.031	0.031	0.80	Weightless				

S U P P O R T D A T A L I S T I N G

Point Name	Support Type	Support ID	Conn.to /Dir	Comp.Wt (lb)	Stiff.	Gap 1 (in)	Gap 2 (in)	Fric. Fact.	GapSet /#hgr	Preload (lbf)	Ld.Var	Size	Figure
Tag No.: <None>						Attachment ID: <None>							
C50	Guide-V	C50 2	Ground	0.000	Rigid	0.000	0.063	0.80	Weightless				
	Guide-H	C50 2	Ground	0.000	Rigid	0.031	0.031	0.80	Weightless				
Tag No.: <None>						Attachment ID: <None>							
C51	Guide-V	C51 2	Ground	0.000	Rigid	0.000	0.063	0.80	Weightless				
	Guide-H	C51 2	Ground	0.000	Rigid	0.031	0.031	0.80	Weightless				
Tag No.: <None>						Attachment ID: <None>							
C52	Guide-V	C52 2	Ground	0.000	Rigid	0.000	0.063	0.80	Weightless				
	Guide-H	C52 2	Ground	0.000	Rigid	0.031	0.031	0.80	Weightless				
Tag No.: <None>						Attachment ID: <None>							
C53	Guide-V	C53 2	Ground	0.000	Rigid	0.000	0.063	0.80	Weightless				
	Guide-H	C53 2	Ground	0.000	Rigid	0.031	0.031	0.80	Weightless				
Tag No.: <None>						Attachment ID: <None>							
C55	Guide-V	C55 2	Ground	0.000	Rigid	0.000	0.830	0.80	Weightless				
	Guide-H	C55 2	Ground	0.000	Rigid	0.830	0.830	0.80	Weightless				
Tag No.: <None>						Attachment ID: <None>							
C56	Guide-V	C56 2	Ground	0.000	Rigid	0.000	0.830	0.80	Weightless				
	Guide-H	C56 2	Ground	0.000	Rigid	0.830	0.830	0.80	Weightless				
Tag No.: <None>						Attachment ID: <None>							
C57	Guide-V	C57 2	Ground	0.000	Rigid	0.000	0.830	0.80	Weightless				
	Guide-H	C57 2	Ground	0.000	Rigid	0.830	0.830	0.80	Weightless				
Tag No.: <None>						Attachment ID: <None>							
C58	Guide-V	C58 2	Ground	0.000	Rigid	0.000	0.830	0.80	Weightless				
	Guide-H	C58 2	Ground	0.000	Rigid	0.830	0.830	0.80	Weightless				
Tag No.: <None>						Attachment ID: <None>							
C59	Guide-V	C59 2	Ground	0.000	Rigid	0.000	0.063	0.80	Weightless				
	Guide-H	C59 2	Ground	0.000	Rigid	0.031	0.031	0.80	Weightless				
Tag No.: <None>						Attachment ID: <None>							
C60	Guide-V	C60 2	Ground	0.000	Rigid	0.000	0.063	0.80	Weightless				
	Guide-H	C60 2	Ground	0.000	Rigid	0.031	0.031	0.80	Weightless				
Tag No.: <None>						Attachment ID: <None>							
C61	Guide-V	C61 1	Ground	0.000	Rigid	0.000	0.063	0.80	Weightless				
	Guide-H	C61 1	Ground	0.000	Rigid	0.031	0.031	0.80	Weightless				
Tag No.: <None>						Attachment ID: <None>							
C63	Guide-V	C63 1	Ground	0.000	Rigid	0.000	0.063	0.80	Weightless				
	Guide-H	C63 1	Ground	0.000	Rigid	0.031	0.031	0.80	Weightless				
Tag No.: <None>						Attachment ID: <None>							
C64	Guide-V	C64 2	Ground	0.000	Rigid	0.000	0.063	0.80	Weightless				
	Guide-H	C64 2	Ground	0.000	Rigid	0.031	0.031	0.80	Weightless				

S U P P O R T D A T A L I S T I N G

Point Name	Support Type	Support ID	Conn.to /Dir	Comp.Wt (lb)	Stiff.	Gap 1 (in)	Gap 2 (in)	Fric. Fact.	GapSet /#hgr	Preload (lbf)	Ld.Var	Size	Figure
Tag No.: <None>						Attachment ID: <None>							
C65	Guide-V	C65 1	Ground	0.000	Rigid	0.000	0.063	0.80	Weightless				
	Guide-H	C65 1	Ground	0.000	Rigid	0.031	0.031	0.80	Weightless				
Tag No.: <None>						Attachment ID: <None>							
C72	Guide-V	C72 1	Ground	0.000	Rigid	0.000	0.063	0.80	Weightless				
	Guide-H	C72 1	Ground	0.000	Rigid	0.031	0.031	0.80	Weightless				
Tag No.: <None>						Attachment ID: <None>							
C73	Guide-V	C73 1	Ground	0.000	Rigid	0.000	0.830	0.80	Weightless				
	Guide-H	C73 1	Ground	0.000	Rigid	0.830	0.830	0.80	Weightless				
Tag No.: <None>						Attachment ID: <None>							
C74	Guide-V	C74 1	Ground	0.000	Rigid	0.000	0.830	0.80	Weightless				
	Guide-H	C74 1	Ground	0.000	Rigid	0.830	0.830	0.80	Weightless				
Tag No.: <None>						Attachment ID: <None>							
C75	Guide-V	C75 1	Ground	0.000	Rigid	0.000	0.063	0.80	Weightless				
	Guide-H	C75 1	Ground	0.000	Rigid	0.031	0.031	0.80	Weightless				
Tag No.: <None>						Attachment ID: <None>							
C76	Guide-V	C76 1	Ground	0.000	Rigid	0.000	0.063	0.80	Weightless				
	Guide-H	C76 1	Ground	0.000	Rigid	0.031	0.031	0.80	Weightless				
Tag No.: <None>						Attachment ID: <None>							
C77	Guide-V	C77 1	Ground	0.000	Rigid	0.000	0.063	0.80	Weightless				
	Guide-H	C77 1	Ground	0.000	Rigid	0.031	0.031	0.80	Weightless				
Tag No.: <None>						Attachment ID: <None>							
C78	Guide-V	C78 1	Ground	0.000	Rigid	0.000	0.063	0.80	Weightless				
	Guide-H	C78 1	Ground	0.000	Rigid	0.031	0.031	0.80	Weightless				
Tag No.: <None>						Attachment ID: <None>							
C79	Guide-V	C79 1	Ground	0.000	Rigid	0.000	0.063	0.80	Weightless				
	Guide-H	C79 1	Ground	0.000	Rigid	0.031	0.031	0.80	Weightless				
Tag No.: <None>						Attachment ID: <None>							
C80	Guide-V	C80 1	Ground	0.000	Rigid	0.000	0.830	0.80	Weightless				
	Guide-H	C80 1	Ground	0.000	Rigid	0.830	0.830	0.80	Weightless				
Tag No.: <None>						Attachment ID: <None>							
C82	Guide-V	C82 1	Ground	0.000	Rigid	0.000	0.830	0.80	Weightless				
	Guide-H	C82 1	Ground	0.000	Rigid	0.830	0.830	0.80	Weightless				
Tag No.: <None>						Attachment ID: <None>							
C81	Guide-V	C81 1	Ground	0.000	Rigid	0.000	0.063	0.80	Weightless				
	Guide-H	C81 1	Ground	0.000	Rigid	0.031	0.031	0.80	Weightless				
Tag No.: <None>						Attachment ID: <None>							
C83	Guide-V	C83 1	Ground	0.000	Rigid	0.000	0.830	0.80	Weightless				
	Guide-H	C83 1	Ground	0.000	Rigid	0.830	0.830	0.80	Weightless				

S U P P O R T D A T A L I S T I N G

```
 Point Support  Support Conn.to Comp.Wt  Stiff.     Gap 1   Gap 2  Fric. GapSet Preload Ld.Var Size    Figure
 Name   Type      ID     /Dir    (lb)               (in)    (in)   Fact. /#hgr   (lbf)
 ----- -------- ------- ------- ------- ---------- ------- ------- ----- ------ ------- ------ ---- ------------
 Tag No.: <None>                                 Attachment ID: <None>
 C84   Guide-V  C84  1  Ground    0.000 Rigid        0.000   0.830  0.80  Weightless
       Guide-H  C84  1  Ground    0.000 Rigid        0.830   0.830  0.80  Weightless

 Tag No.: <None>                                 Attachment ID: <None>
 D04 M Guide-V  D04 M1  Ground    0.000 Rigid        0.000   0.830  0.80  Weightless
       Guide-H  D04 M1  Ground    0.000 Rigid        0.830   0.830  0.80  Weightless
            Gap Dir.: (Gap1_V=-Z, Gap2_V=+Z, Gap1_H=-X, Gap2_H=+X)

 Tag No.: <None>                                 Attachment ID: <None>
 D13   Guide-V  D13  1  Ground    0.000 Rigid        0.000   0.063  0.80  Weightless
       Guide-H  D13  1  Ground    0.000 Rigid        0.031   0.031  0.80  Weightless

 Tag No.: <None>                                 Attachment ID: <None>
 D14   Guide-V  D14  2  Ground    0.000 Rigid        0.000   0.830  0.80  Weightless
       Guide-H  D14  2  Ground    0.000 Rigid        0.830   0.830  0.80  Weightless

 Tag No.: <None>                                 Attachment ID: <None>
 D15   Guide-V  D15  2  Ground    0.000 Rigid        0.000   0.830  0.80  Weightless
       Guide-H  D15  2  Ground    0.000 Rigid        0.830   0.830  0.80  Weightless

 Tag No.: <None>                                 Attachment ID: <None>
 D18   Guide-V  D18  1  Ground    0.000 Rigid        0.000   0.063  0.80  Weightless
       Guide-H  D18  1  Ground    0.000 Rigid        0.031   0.031  0.80  Weightless

 Tag No.: <None>                                 Attachment ID: <None>
 D16   Guide-V  D16  1  Ground    0.000 Rigid        0.000   0.830  0.80  Weightless
       Guide-H  D16  1  Ground    0.000 Rigid        0.830   0.830  0.80  Weightless

 Tag No.: <None>                                 Attachment ID: <None>
 D19   Guide-V  D19  2  Ground    0.000 Rigid        0.000   0.830  0.80  Weightless
       Guide-H  D19  2  Ground    0.000 Rigid        0.830   0.830  0.80  Weightless

 Tag No.: <None>                                 Attachment ID: <None>
 D25   Guide-V  D25  1  Ground    0.000 Rigid        0.000   0.063  0.80  Weightless
       Guide-H  D25  1  Ground    0.000 Rigid        0.031   0.031  0.80  Weightless

 Tag No.: <None>                                 Attachment ID: <None>
 D20   Guide-V  D20  1  Ground    0.000 Rigid        0.000   0.830  0.80  Weightless
       Guide-H  D20  1  Ground    0.000 Rigid        0.830   0.830  0.80  Weightless

 Tag No.: <None>                                 Attachment ID: <None>
 D26   Guide-V  D26  1  Ground    0.000 Rigid        0.000   0.830  0.80  Weightless
       Guide-H  D26  1  Ground    0.000 Rigid        0.830   0.830  0.80  Weightless

 Tag No.: <None>                                 Attachment ID: <None>
 D28   Guide-V  D28  1  Ground    0.000 Rigid        0.000   0.063  0.80  Weightless
       Guide-H  D28  1  Ground    0.000 Rigid        0.031   0.031  0.80  Weightless

 Tag No.: <None>                                 Attachment ID: <None>
 D27   Guide-V  D27  1  Ground    0.000 Rigid        0.000   0.830  0.80  Weightless
       Guide-H  D27  1  Ground    0.000 Rigid        0.830   0.830  0.80  Weightless
```

S U P P O R T D A T A L I S T I N G

Point Name	Support Type	Support ID	Conn.to Comp.Wt /Dir	(lb)	Stiff.	Gap 1 (in)	Gap 2 (in)	Fric. Fact.	GapSet /#hgr	Preload (lbf)	Ld.Var	Size	Figure

Spring Manufacturer: Anvil/Grinnell
NOTE 1: No soil supports present in the system.
Gap 1 : V-stop,Guide-V=down, Linestop,Incline,Tie/link=backward, Guide-H=Left
Gap 2 : V-stop,Guide-V=Up , Linestop,Incline,Tie/link=forward , Guide-H=Right
Stiffness units for rotation support: ft-lb/deg, all others: lb/in

B E N D D A T A L I S T I N G

Point Name	Bend Type	Radius (in)	Angle (deg)	OD (in)	tnom (in)	Material	Flan^ /Cuts	SIF in	SIF out	Analysis Set	Flexibility (K)	Pressure Case
A01	Elbow	3.00L	90.0	2.375	0.154	A312-TP316L	0/0	1.73	1.44	1	4.40	None
A04	Elbow	36.00	10.5	2.375	0.154	A312-TP316L	0/0	1.00	1.00	1	1.00	None
A05	Elbow	36.00	89.7	2.375	0.154	A312-TP316L	0/0	1.00	1.00	1	1.00	None
A06	Elbow	36.00	90.0	2.375	0.154	A312-TP316L	0/0	1.00	1.00	1	1.00	None
A07	Elbow	36.00	89.9	2.375	0.154	A312-TP316L	0/0	1.00	1.00	1	1.00	None
A08	Elbow	36.00	90.0	2.375	0.154	A312-TP316L	0/0	1.00	1.00	1	1.00	None
A09	Elbow	36.00	90.0	2.375	0.154	A312-TP316L	0/0	1.00	1.00	1	1.00	None
A10	Elbow	36.00	90.0	2.375	0.154	A312-TP316L	0/0	1.00	1.00	1	1.00	None
A11	Elbow	36.00	90.0	2.375	0.154	A312-TP316L	0/0	1.00	1.00	1	1.00	None
A12	Elbow	36.00	90.0	2.375	0.154	A312-TP316L	0/0	1.00	1.00	1	1.00	None
A13	Elbow	36.00	90.0	2.375	0.154	A312-TP316L	0/0	1.00	1.00	1	1.00	None
A14	Elbow	36.00	90.0	2.375	0.154	A312-TP316L	0/0	1.00	1.00	1	1.00	None
A15	Elbow	36.00	1.0	2.375	0.154	A312-TP316L	0/0	1.00	1.00	1	1.00	None
B02	Elbow	4.50L	90.0	3.500	0.216	A312-TP316L	0/0	1.78	1.48	1	4.58	None
B06	Elbow	36.00	9.3	3.500	0.216	A312-TP316L	0/0	1.00	1.00	1	1.00	None
B09	Elbow	36.00	89.7	3.500	0.216	A312-TP316L	0/0	1.00	1.00	1	1.00	None
B16	Elbow	36.00	90.0	3.500	0.216	A312-TP316L	0/0	1.00	1.00	1	1.00	None
B19	Elbow	36.00	90.0	3.500	0.216	A312-TP316L	0/0	1.00	1.00	1	1.00	None
B27	Elbow	36.00	90.0	3.500	0.216	A312-TP316L	0/0	1.00	1.00	1	1.00	None
B30	Elbow	36.00	90.0	3.500	0.216	A312-TP316L	0/0	1.00	1.00	1	1.00	None
B41	Elbow	36.00	90.0	3.500	0.216	A312-TP316L	0/0	1.00	1.00	1	1.00	None
B44	Elbow	36.00	90.0	3.500	0.216	A312-TP316L	0/0	1.00	1.00	1	1.00	None
B56	Elbow	30.00	90.0	3.500	0.216	A312-TP316L	0/0	1.00	1.00	1	1.00	None
B20	Elbow	30.00	90.0	3.500	0.216	A312-TP316L	0/0	1.00	1.00	1	1.00	None
B21	Elbow	30.00	90.0	3.500	0.216	A312-TP316L	0/0	1.00	1.00	1	1.00	None
B59	*Elbow	36.00	0.8	3.500	0.216	A312-TP316L	0/0	1.00	1.00	1	1.00	None
C02	Elbow	3.00L	90.0	2.375	0.154	A312-TP316L	0/0	1.73	1.44	1	4.40	None
C06	Elbow	36.00	4.6	2.375	0.154	A312-TP316L	0/0	1.00	1.00	1	1.00	None
C09	Elbow	36.00	89.9	2.375	0.154	A312-TP316L	0/0	1.00	1.00	1	1.00	None
C16	Elbow	36.00	90.0	2.375	0.154	A312-TP316L	0/0	1.00	1.00	1	1.00	None
C19	Elbow	36.00	90.0	2.375	0.154	A312-TP316L	0/0	1.00	1.00	1	1.00	None
C27	Elbow	36.00	90.0	2.375	0.154	A312-TP316L	0/0	1.00	1.00	1	1.00	None
C30	Elbow	36.00	90.0	2.375	0.154	A312-TP316L	0/0	1.00	1.00	1	1.00	None
C41	Elbow	36.00	90.0	2.375	0.154	A312-TP316L	0/0	1.00	1.00	1	1.00	None
C44	Elbow	36.00	90.0	2.375	0.154	A312-TP316L	0/0	1.00	1.00	1	1.00	None
C54	Elbow	36.00	90.0	2.375	0.154	A312-TP316L	0/0	1.00	1.00	1	1.00	None
C62	Elbow	36.00	90.0	2.375	0.154	A312-TP316L	0/0	1.00	1.00	1	1.00	None
C66	Elbow	36.00	90.0	2.375	0.154	A312-TP316L	0/0	1.00	1.00	1	1.00	None
C67	*Elbow	36.00	1.0	2.375	0.154	A312-TP316L	0/0	1.00	1.00	1	1.00	None
D04	*Elbow	36.00	0.7	2.375	0.154	A312-TP316L	0/0	1.00	1.00	1	1.00	None
D08	Elbow	36.00	90.0	2.375	0.154	A312-TP316L	0/0	1.00	1.00	1	1.00	None
D12	Elbow	36.00	90.0	2.375	0.154	A312-TP316L	0/0	1.00	1.00	1	1.00	None
D17	Elbow	36.00	90.0	2.375	0.154	A312-TP316L	0/0	1.00	1.00	1	1.00	None
D23	Elbow	3.00L	90.0	2.375	0.154	A312-TP316L	0/0	1.73	1.44	1	4.40	None

^ = Number of bend ends where either a flange or valve is within distance
(L/D) x Nominal diameter, where L/D is defined under Tools > Model options > Edit
* = Mid-point present
L = Long radius

L O A D C A S E D E S C R I P T I O N

Load Case	Load Case Name	Description
GR	Gravity	
T1	Thermal 1	
E1	Earth 1	
E2	Earth 2	
E3	Earth 3	
E4	Earth 4	
E5	Earth 5	
E6	Earth 6	
E7	Earth 7	
E8	Earth 8	
P1	Press 1	

A N A L Y S I S S U M M A R Y

```
Current model revision number : 24

  Constant values used
           Acceleration due to gravity................  386.40000 in/s/s
           Density of water for specific gravity Cal..     62.400 lb/cu.ft
           Density of sea water.......................     62.400 lb/cu.ft
           Density of ground water ...................     62.400 lb/cu.ft

  Static - Analysis set number .................. 1
           Date and Time of analysis ............ Apr 23, 2020   12:56 PM
           Model Revision Number ................ 24
           Number of load cases ................. 11
           Load cases analyzed .................. GR T1 E1 E2 E3 E4 E5 E6 E7 E8 P1
           Description .......................... Analysis Set No.1
           Gaps/Friction/Soil considered ......... Yes
           Tolerance - Force, Displacement ....... 10.00 lbf  0.0010 in
           Friction - Scale Factor, Tolerance .... 1.00   0.10
           Ignore friction for cases E1,E2,E3 .... Yes
           Ignore friction for gravity case ...... Yes
           Hanger design run ..................... No
           Cut short included .................... No
           Thermal bowing included ............... No
           Include Bourdon rotational effect ..... No
           Pipe radius for Bourdon calculation ... Mean
           Occasional load analysis type ......... Nonlinear
           Non-linear analysis summary file ...... Primary Piping.LOG
           Use default load sequence ............. Yes
           Base load cases for nonlinear analysis
                                                     GR   = None
                                                     T1   = GR
                                                     E1   = GR
                                                     E2   = GR
                                                     E3   = GR
                                                     E4   = GR
                                                     E5   = GR
                                                     E6   = GR
                                                     E7   = GR
                                                     E8   = GR
                                                     P1   = T1
           Weight of contents included ........... Yes
           Fluid density factor for contents ..... 1.00
           Pressure stiffening case .............. None
           Hot modulus case ...................... None
           Pressure Extension..................... Yes
           Water elevation for buoyancy loads .... Not considered
           Use corroded thickness in analysis .... Yes
           Rigid stiffness factor ................ 1000.0
           Support rigid stiffness (translation) . 0.100000E+11 lb/in
           Support rigid stiffness (rotation) .... 0.100000E+11 ft-lb/deg
           Anchor rigid stiffness (translation) .. 0.100000E+11 lb/in
           Anchor rigid stiffness (rotation) ..... 0.100000E+11 ft-lb/deg
           Remove Lift-Off Supports .............. No
```

CODE COMPLIANCE COMBINATIONS

<Description> Combination	Category	Method	Case/Combination	Factor	M/S	K-Factor	Allowable (psi)	D/A/P/C
GR + Max P{1}	Sustain	Sum	GR[1]	1.00			Automatic	Y Y Y Y
			Max Long	1.00				
Max Range	Expansion	Sum	Temp. Range	1.00			Automatic	Y Y Y Y
Amb to T1{1}	Expansion	Sum	T1[1]	1.00			Automatic	Y Y Y Y
Sus. + E1{1}	Occasion	Abs sum	E1[1]	1.00		1.330	Automatic	Y Y Y Y
			Max Sus	1.00				
Sus. + E2{1}	Occasion	Abs sum	E2[1]	1.00		1.330	Automatic	Y Y Y Y
			Max Sus	1.00				
Sus. + E3{1}	Occasion	Abs sum	E3[1]	1.00		1.330	Automatic	Y Y Y Y
			Max Sus	1.00				
Sus. + E4{1}	Occasion	Abs sum	E4[1]	1.00		1.330	Automatic	Y Y Y Y
			Max Sus	1.00				
Sus. + E5{1}	Occasion	Abs sum	E5[1]	1.00		1.330	Automatic	Y Y Y Y
			Max Sus	1.00				
Sus. + E6{1}	Occasion	Abs sum	E6[1]	1.00		1.330	Automatic	Y Y Y Y
			Max Sus	1.00				
Sus. + E7{1}	Occasion	Abs sum	E7[1]	1.00		1.330	Automatic	Y Y Y Y
			Max Sus	1.00				
Sus. + E8{1}	Occasion	Abs sum	E8[1]	1.00		1.330	Automatic	Y Y Y Y
			Max Sus	1.00				
Max P{1}	Hoop	Sum	Max Hoop	1.00			Automatic	Y Y Y Y

Notes:

D/A/P/C: [D]efault/[A]uto-Update/[P]rint options/[C]Consistent (Y=Yes, N=No)

NON-CODE COMBINATIONS

<Description> Combination	Method	Case/Combination	Factor	D/A/P/C
Gravity{1}	Sum	GR[1]	1.00	Y Y Y Y
<200.00 deg F> Thermal 1{1}	Sum	T1[1]	1.00	Y Y N N
< 0.19, 0.08, 0.19> Static Seismic 1{1}	Sum	E1[1]	1.00	Y Y N N
< 0.19, 0.08, -0.19> Static Seismic 2{1}	Sum	E2[1]	1.00	Y Y N N
< -0.19, 0.08, 0.19> Static Seismic 3{1}	Sum	E3[1]	1.00	Y Y N N
< -0.19, 0.08, -0.19> Static Seismic 4{1}	Sum	E4[1]	1.00	Y Y N N
< 0.19, -0.08, 0.19> Static Seismic 5{1}	Sum	E5[1]	1.00	Y Y N N
< 0.19, -0.08, -0.19> Static Seismic 6{1}	Sum	E6[1]	1.00	Y Y N N
< -0.19, -0.08, 0.19> Static Seismic 7{1}	Sum	E7[1]	1.00	Y Y N N
< -0.19, -0.08, -0.19> Static Seismic 8{1}	Sum	E8[1]	1.00	Y Y N N
Pressure 1{1}	Sum	P1[1]	1.00	Y Y N N
GT1{1}	Sum	GR[1]	1.00	Y Y Y Y
		T1[1]	1.00	
GE1{1}	Sum	GR[1]	1.00	Y Y Y Y
		E1[1]	1.00	
GE2{1}	Sum	GR[1]	1.00	Y Y Y Y
		E2[1]	1.00	
GE3{1}	Sum	GR[1]	1.00	Y Y Y Y
		E3[1]	1.00	
GE4{1}	Sum	GR[1]	1.00	Y Y Y Y
		E4[1]	1.00	
GE5{1}	Sum	GR[1]	1.00	Y Y Y Y
		E5[1]	1.00	
GE6{1}	Sum	GR[1]	1.00	Y Y Y Y
		E6[1]	1.00	

NON-CODE COMBINATIONS

<Description> Combination	Method	Case/Combination	Factor	D/A/P/C
GE7{1}	Sum	GR[1]	1.00	Y Y Y Y
		E7[1]	1.00	
GE8{1}	Sum	GR[1]	1.00	Y Y Y Y
		E8[1]	1.00	
GT1P1{1}	Sum	GR[1]	1.00	Y Y Y Y
		T1[1]	1.00	
		P1[1]	1.00	

Notes:

D/A/P/C: [D]efault/[A]uto-Update/[P]rint options/[C]Consistent (Y=Yes, N=No)

CODE COMPLIANCE

```
Y - Factor ............................ 0.40
Design Pressure Factor ................ 1.00
Minimum stress ratio used in reports... 0.00
Number of stress points per span ...... 0
Include corrosion in stress calcs. .... Y
Include corrosion in Hoop stress calcs. Y
Include torsion in code stress ........ N
Include axial force in code stress .... Y
Include sustain load margin ........... Only if allowable stress is exceeded
Use minimum sustained margin........... Y
Set sustained SIF=1 no bends .......... N
Set occasional SIF = 1 ................ N
Set occasional SIF = 0.75i ............ Y
Apply cold/hot modulus ratio .......... N
Disable auto code combinations ........ N
Disable auto non-code combinations .... N
No. of thermal ranges to report ....... 0
Include Max Range combination ......... Y
Total stress .......................... Octahedral
Direct shear .......................... None
Longitudinal pressure calculation ..... AxF/area
Use code case 178 ..................... Y
Inc. Axial Str and Pcase in Sustained.. Y
Use alternate occasional allowable .... N
Apply circumferential weld WC factor .. N
ASME B31J Enabled ..................... N
```

```
-----------------------------------------------------------------------------------------------------------------
Primary Piping
04/24/2020 2018719                                                          BENTLEY
07:34 AM                                                                    AutoPIPE Nuclear 12.00.00.16   RESULT PAGE  81
-----------------------------------------------------------------------------------------------------------------

                                          S U P P O R T    F O R C E S
        ( Force - lbf   , Moment - ft-lb  , Tran. - in  , Rot. - deg   )
 Point/  Connect/    Load                          L O C A L              G L O B A L
 Supp. ID   Type   Combination                Dirn  Force    Deform    Dirn   Force   Deform
 -------- -------- ----------------------     ---- -------- --------   ---- -------- --------

 Tag No.: <None>
 A20                Gravity{1}                down        6   0.000      X             0.000
 A20  1   V - Stop                           -Z              0.000      Y        -6  -0.000
 Stiff   :RIGID                              +X              0.000      Z            -0.000

                    GT1{1}                    up              0.006      X            -0.022
 Comp.Wt :   0.000                           -Z              0.000      Y             0.006
                                             -X              0.022      Z             0.000

                    GE1{1}                    down        6   0.000      X             0.000
                                             -Z              0.000      Y        -6  -0.000
                                             +X              0.000      Z             0.000

                    GE2{1}                    down        6   0.000      X             0.000
                                             -Z              0.000      Y        -6  -0.000
                                             +X              0.000      Z            -0.000

                    GE3{1}                    down        6   0.000      X             0.000
                                             -Z              0.000      Y        -6  -0.000
                                             +X              0.000      Z             0.000

                    GE4{1}                    down        6   0.000      X             0.000
                                             -Z              0.000      Y        -6  -0.000
                                             +X              0.000      Z            -0.000

                    GE5{1}                    down        7   0.000      X             0.000
                                             -Z              0.000      Y        -7  -0.000
                                             +X              0.000      Z             0.000

                    GE6{1}                    down        7   0.000      X             0.000
                                             -Z              0.000      Y        -7  -0.000
                                             +X              0.000      Z            -0.000

                    GE7{1}                    down        7   0.000      X             0.000
                                             -Z              0.000      Y        -7  -0.000
                                             +X              0.000      Z             0.000

                    GE8{1}                    down        7   0.000      X             0.000
                                             -Z              0.000      Y        -7  -0.000
                                             +X              0.000      Z            -0.000

                    GT1P1{1}                  up              0.006      X            -0.023
                                             -Z              0.000      Y             0.006
                                             -X              0.023      Z             0.000

 Tag No.: <None>
 A20                Gravity{1}                down        0   0.000      X             0.000
 A20  2   Guide                              left            0.000      Y            -0.000
 Stiff   :RIGID                              back            0.000      Z         0  -0.000

                    GT1{1}                    down            0.000      X            -0.022
```

```
-----------------------------------------------------------------------------------------------------------------
Primary Piping
04/24/2020 2018719                                                          BENTLEY
07:34 AM                                                                    AutoPIPE Nuclear 12.00.00.16   RESULT PAGE  82
-----------------------------------------------------------------------------------------------------------------

                                        S U P P O R T    F O R C E S
        ( Force - lbf   , Moment - ft-lb  , Tran. - in  , Rot. - deg   )
 Point/  Connect/    Load                          L O C A L              G L O B A L
 Supp. ID   Type   Combination                Dirn  Force    Deform    Dirn   Force   Deform
 -------- -------- ----------------------     ---- -------- --------   ---- -------- --------
 Comp.Wt :   0.000                            rght            0.022      Y             0.006
                                              back            0.006      Z             0.000

                    GE1{1}                    up          1   0.000      X             0.000
                                              left            0.000      Y            -0.000
                                              back            0.000      Z         1   0.000

                    GE2{1}                    down        1   0.000      X             0.000
                                              left            0.000      Y            -0.000
                                              back            0.000      Z        -1  -0.000

                    GE3{1}                    up          1   0.000      X             0.000
                                              left            0.000      Y            -0.000
                                              back            0.000      Z         1   0.000

                    GE4{1}                    down        1   0.000      X             0.000
                                              left            0.000      Y            -0.000
                                              back            0.000      Z        -1  -0.000

                    GE5{1}                    up          1   0.000      X             0.000
                                              left            0.000      Y            -0.000
                                              back            0.000      Z         1   0.000

                    GE6{1}                    down        1   0.000      X             0.000
                                              left            0.000      Y            -0.000
                                              back            0.000      Z        -1  -0.000

                    GE7{1}                    up          1   0.000      X             0.000
                                              left            0.000      Y            -0.000
                                              back            0.000      Z         1   0.000

                    GE8{1}                    down        1   0.000      X             0.000
                                              left            0.000      Y            -0.000
                                              back            0.000      Z        -1  -0.000

                    GT1P1{1}                  down            0.000      X            -0.023
                                              rght            0.023      Y             0.006
                                              back            0.006      Z             0.000

 Tag No.: <None>
 A23                Gravity{1}                down       52   0.000      X             0.000
 A23  1   Guide                               rght            0.027      Y       -52  -0.000
 Stiff   :RIGID                                forw            0.000      Z             0.027

                    GT1{1}                    down       31   0.000      X        24   0.067
 Comp.Wt :   0.000                            left        7  -0.008      Y       -31  -0.000
                                              forw       24   0.067      Z        -7   0.008

                    GE1{1}                    down       44   0.000      X             0.000
                                              left            0.032      Y       -44  -0.000
                                              forw            0.000      Z            -0.032
```

S U P P O R T F O R C E S
(Force - lbf , Moment - ft-lb , Tran. - in , Rot. - deg)

Point/ Supp. ID	Connect/ Type	Load Combination	L O C A L Dirn	Force	Deform	G L O B A L Dirn	Force	Deform
		GE2{1}	down	54	0.000	X		0.000
			rght		0.041	Y	-54	-0.000
			forw		0.000	Z		0.041
		GE3{1}	down	35	0.000	X		-0.000
			left		0.039	Y	-35	-0.000
			back		0.000	Z		-0.039
		GE4{1}	down	45	0.000	X		0.000
			rght		0.034	Y	-45	-0.000
			forw		0.000	Z		0.034
		GE5{1}	down	52	0.000	X		0.000
			left		0.032	Y	-52	-0.000
			forw		0.000	Z		-0.032
		GE6{1}	down	62	0.000	X		0.000
			rght		0.041	Y	-62	-0.000
			forw		0.000	Z		0.041
		GE7{1}	down	43	0.000	X		-0.000
			left		0.038	Y	-43	-0.000
			back		0.000	Z		-0.038
		GE8{1}	down	53	0.000	X		0.000
			rght		0.035	Y	-53	-0.000
			forw		0.000	Z		0.035
		GT1P1{1}	down	31	0.000	X	24	0.069
			left	7	-0.007	Y	-31	-0.000
			forw	24	0.069	Z	-7	0.007
Tag No.: <None>								
A24		Gravity{1}	down	53	0.000	X	-10	0.000
A24 1	Guide		left	29	0.031	Y	-52	-0.000
Stiff	:RIGID		forw		0.000	Z	-29	-0.031
		GT1{1}	down	58	0.000	X	35	0.195
Comp.Wt :	0.000		rght	5	-0.011	Y	-66	-0.036
			forw	46	0.198	Z	5	-0.011
		GE1{1}	down	54	0.000	X	-10	0.000
			rght	54	0.031	Y	-53	-0.000
			forw		0.000	Z	54	0.031
		GE2{1}	down	45	0.000	X	-8	0.001
			left	63	0.031	Y	-44	-0.000
			forw		0.001	Z	-63	-0.031
		GE3{1}	down	57	0.000	X	-10	0.000
			rght	61	0.031	Y	-57	-0.000
			forw		0.000	Z	61	0.031

S U P P O R T F O R C E S
(Force - lbf , Moment - ft-lb , Tran. - in , Rot. - deg)

Point/ Supp. ID	Connect/ Type	Load Combination	L O C A L Dirn	Force	Deform	G L O B A L Dirn	Force	Deform
		GE4{1}	down	49	0.000	X	-9	0.000
			left	57	0.031	Y	-48	-0.000
			forw		0.000	Z	-57	-0.031
		GE5{1}	down	63	0.000	X	-11	0.000
			rght	54	0.031	Y	-62	-0.000
			forw		0.000	Z	54	0.031
		GE6{1}	down	54	0.000	X	-10	0.001
			left	64	0.031	Y	-53	-0.000
			forw		0.001	Z	-64	-0.031
		GE7{1}	down	67	0.000	X	-12	0.000
			rght	61	0.031	Y	-66	-0.000
			forw		0.000	Z	61	0.031
		GE8{1}	down	58	0.000	X	-10	0.000
			left	57	0.031	Y	-57	-0.000
			forw		0.000	Z	-57	-0.031
		GT1P1{1}	down	59	0.000	X	35	0.200
			rght	5	-0.008	Y	-66	-0.037
			forw	47	0.203	Z	5	-0.008
Tag No.: <None>								
A21		Gravity{1}	down	46	0.000	X	-8	0.001
A21 1	Guide		left		0.492	Y	-46	-0.000
Stiff	:RIGID		forw		0.001	Z		-0.492
		GT1{1}	down	27	0.000	X	8	0.317
Comp.Wt :	0.000		rght	17	-0.087	Y	-29	-0.059
			forw	13	0.323	Z	17	-0.087
		GE1{1}	down	21	0.000	X	-4	0.000
			rght		0.661	Y	-21	-0.000
			forw		0.000	Z		0.661
		GE2{1}	down	46	0.000	X	-8	0.001
			left		0.768	Y	-45	-0.000
			forw		0.001	Z		-0.768
		GE3{1}	down	24	0.000	X	-4	-0.000
			rght		0.737	Y	-23	0.000
			back		0.000	Z		0.737
		GE4{1}	down	48	0.000	X	-9	0.000
			left		0.696	Y	-48	-0.000
			forw		0.000	Z		-0.696
		GE5{1}	down	28	0.000	X	-5	0.000
			rght		0.658	Y	-27	-0.000
			forw		0.000	Z		0.658

S U P P O R T F O R C E S
(Force - lbf , Moment - ft-lb , Tran. - in , Rot. - deg)

Point/ Supp. ID	Connect/ Type	Load Combination	L O C A L Dirn	Force	Deform	G L O B A L Dirn	Force	Deform
		GE6{1}	down	52	0.000	X	-10	0.001
			left		0.770	Y	-51	-0.000
			forw		0.001	Z		-0.770
		GE7{1}	down	30	0.000	X	-6	0.000
			rght		0.734	Y	-30	-0.000
			forw		0.000	Z		0.734
		GE8{1}	down	55	0.000	X	-10	0.000
			left		0.699	Y	-54	-0.000
			forw		0.000	Z		-0.699
		GT1P1{1}	down	26	0.000	X	8	0.325
			rght	16	-0.076	Y	-28	-0.060
			forw	13	0.331	Z	16	-0.076
Tag No.: <None>								
A22		Gravity{1}	down	35	0.000	X		-0.098
A22	2 Guide		left		0.098	Y	-35	-0.018
Stiff	:RIGID		forw		0.639	Z	1	-0.638
		GT1{1}	down	61	0.000	X	32	0.257
Comp.Wt :	0.000		rght	32	0.257	Y	-60	-0.007
			back	37	-0.235	Z	39	-0.235
		GE1{1}	down	50	0.000	X		0.131
			rght		0.131	Y	-50	0.025
			back		0.856	Z	1	0.856
		GE2{1}	down	26	0.000	X		-0.134
			left		0.134	Y	-26	-0.028
			forw		0.981	Z	1	-0.980
		GE3{1}	down	53	0.000	X		0.130
			rght		0.130	Y	-53	0.027
			back		0.942	Z	2	0.941
		GE4{1}	down	29	0.000	X		-0.136
			left		0.136	Y	-29	-0.026
			forw		0.900	Z	1	-0.900
		GE5{1}	down	57	0.000	X		0.131
			rght		0.131	Y	-57	0.025
			back		0.852	Z	2	0.852
		GE6{1}	down	33	0.000	X		-0.134
			left		0.134	Y	-33	-0.028
			forw		0.984	Z	1	-0.984
		GE7{1}	down	60	0.000	X		0.130
			rght		0.130	Y	-60	0.027
			back		0.938	Z	2	0.938

```
-----------------------------------------------------------------------------------------------------------------
Primary Piping
04/24/2020 2018719                                                          BENTLEY
07:34 AM                                                                    AutoPIPE Nuclear 12.00.00.16   RESULT PAGE  86
-----------------------------------------------------------------------------------------------------------------

                                        S U P P O R T    F O R C E S
        ( Force - lbf   , Moment - ft-lb  , Tran. - in  , Rot. - deg   )
 Point/  Connect/    Load                          L O C A L              G L O B A L
 Supp. ID   Type   Combination                Dirn  Force    Deform    Dirn   Force   Deform
 -------- -------- ----------------------     ---- -------- --------   ---- -------- --------
                   GE8{1}                     down       36   0.000      X            -0.136
                                              left            0.136      Y       -36  -0.026
                                              forw            0.904      Z         1  -0.904

                   GT1P1{1}                   down       62   0.000      X        33   0.265
                                              rght       33   0.265      Y       -61  -0.007
                                              back       37  -0.226      Z        39  -0.226

 Tag No.: <None>
 A25               Gravity{1}                 down       58   0.000      X       -11  -0.031
 A25  2   Guide                               left       11   0.031      Y       -58  -0.018
 Stiff   :RIGID                                forw            0.639      Z         2  -0.638

                   GT1{1}                     down       52   0.000      X         8   0.020
 Comp.Wt :   0.000                             rght        8   0.020      Y       -51  -0.011
                                              back       41  -0.370      Z        43  -0.370

                   GE1{1}                     down       52   0.000      X        35   0.031
                                              rght       35   0.031      Y       -52   0.025
                                              back            0.856      Z         2   0.856

                   GE2{1}                     down       53   0.000      X        -7  -0.031
                                              left        7   0.031      Y       -53  -0.028
                                              forw            0.981      Z         2  -0.980

                   GE3{1}                     down       52   0.000      X         6   0.031
                                              rght        6   0.031      Y       -52   0.027
                                              back            0.942      Z         1   0.941

                   GE4{1}                     down       53   0.000      X       -36  -0.031
                                              left       36   0.031      Y       -53  -0.026
                                              forw            0.900      Z         2  -0.900

                   GE5{1}                     down       62   0.000      X        34   0.031
                                              rght       34   0.031      Y       -62   0.025
                                              back            0.853      Z         2   0.852

                   GE6{1}                     down       63   0.000      X        -7  -0.031
                                              left        7   0.031      Y       -63  -0.028
                                              forw            0.984      Z         2  -0.984

                   GE7{1}                     down       61   0.000      X         6   0.031
                                              rght        6   0.031      Y       -61   0.027
                                              back            0.938      Z         2   0.938

                   GE8{1}                     down       63   0.000      X       -36  -0.031
                                              left       36   0.031      Y       -63  -0.026
                                              forw            0.904      Z         2  -0.904

                   GT1P1{1}                   down       52   0.000      X         8   0.023
                                              rght        8   0.023      Y       -51  -0.011
                                              back       41  -0.364      Z        42  -0.364
```

```
-----------------------------------------------------------------------------------------------------------------
Primary Piping
04/24/2020 2018719                                                          BENTLEY
07:34 AM                                                                    AutoPIPE Nuclear 12.00.00.16   RESULT PAGE  87
-----------------------------------------------------------------------------------------------------------------

                                          S U P P O R T    F O R C E S
        ( Force - lbf   , Moment - ft-lb  , Tran. - in  , Rot. - deg   )
 Point/  Connect/    Load                          L O C A L              G L O B A L
 Supp. ID   Type   Combination                Dirn  Force    Deform    Dirn   Force   Deform
 -------- -------- ----------------------     ---- -------- --------   ---- -------- --------
 Tag No.: <None>
 A26                Gravity{1}                down       54   0.000      X             0.031
 A26  2   Guide                               rght            0.031      Y       -54  -0.018
 Stiff   :RIGID                               forw            0.639      Z         2  -0.638

                    GT1{1}                    down       56   0.000      X        -6   0.013
 Comp.Wt :   0.000                            left        6  -0.013      Y       -55  -0.015
                                              back       44  -0.505      Z        46  -0.505

                    GE1{1}                    down       50   0.000      X         5   0.031
                                              rght        5   0.031      Y       -50   0.025
                                              back            0.857      Z         1   0.856

                    GE2{1}                    down       49   0.000      X        13   0.031
                                              rght       13   0.031      Y       -49  -0.028
                                              forw            0.981      Z         1  -0.980

                    GE3{1}                    down       50   0.000      X       -12  -0.031
                                              left       12   0.031      Y       -50   0.027
                                              back            0.942      Z         1   0.941

                    GE4{1}                    down       50   0.000      X        -2  -0.031
                                              left        2   0.031      Y       -50  -0.026
                                              forw            0.900      Z         1  -0.900

                    GE5{1}                    down       59   0.000      X         5   0.031
                                              rght        5   0.031      Y       -59   0.025
                                              back            0.853      Z         2   0.852

                    GE6{1}                    down       58   0.000      X        13   0.031
                                              rght       13   0.031      Y       -58  -0.028
                                              forw            0.984      Z         2  -0.984

                    GE7{1}                    down       60   0.000      X       -13  -0.031
                                              left       13   0.031      Y       -60   0.027
                                              back            0.938      Z         2   0.938

                    GE8{1}                    down       59   0.000      X        -2  -0.031
                                              left        2   0.031      Y       -59  -0.026
                                              forw            0.904      Z         2  -0.904

                    GT1P1{1}                  down       56   0.000      X        -6   0.013
                                              left        6  -0.013      Y       -55  -0.014
                                              back       44  -0.502      Z        46  -0.501

 Tag No.: <None>
 A27                Gravity{1}                down       52   0.000      X             0.021
 A27  2   Guide                               rght            0.021      Y       -52  -0.018
 Stiff   :RIGID                               forw            0.639      Z         2  -0.639

                    GT1{1}                    down       51   0.000      X         6   0.021
 Comp.Wt :   0.000                            rght        6   0.021      Y       -52  -0.018
```

S U P P O R T F O R C E S
(Force - lbf , Moment - ft-lb , Tran. - in , Rot. - deg)

Point/ Supp. ID	Connect/ Type	Load Combination	L O C A L Dirn	L O C A L Force	L O C A L Deform	G L O B A L Dirn	G L O B A L Force	G L O B A L Deform
			forw	19	0.639	Z	-17	-0.639
		GE1{1}	down	49	0.000	X	2	0.031
			rght	2	0.031	Y	-49	0.025
			back		0.856	Z	1	0.856
		GE2{1}	down	48	0.000	X		-0.003
			left		0.003	Y	-48	-0.028
			forw		0.981	Z	1	-0.980
		GE3{1}	down	48	0.000	X		-0.009
			left		0.009	Y	-48	0.027
			back		0.942	Z	1	0.941
		GE4{1}	down	47	0.000	X	-5	-0.031
			left	5	0.031	Y	-47	-0.026
			forw		0.900	Z	1	-0.900
		GE5{1}	down	57	0.000	X	2	0.031
			rght	2	0.031	Y	-57	0.025
			back		0.853	Z	2	0.852
		GE6{1}	down	56	0.000	X		-0.004
			left		0.004	Y	-56	-0.028
			forw		0.984	Z	2	-0.984
		GE7{1}	down	57	0.000	X		-0.011
			left		0.011	Y	-57	0.027
			back		0.938	Z	2	0.938
		GE8{1}	down	56	0.000	X	-5	-0.031
			left	5	0.031	Y	-56	-0.026
			forw		0.904	Z	2	-0.904
		GT1P1{1}	down	51	0.000	X	6	0.021
			rght	6	0.021	Y	-52	-0.018
			forw	18	0.639	Z	-17	-0.639
Tag No.: <None>								
A28		Gravity{1}	down	64	0.000	X	6	0.031
A28 2	Guide		rght	6	0.031	Y	-64	-0.019
Stiff	:RIGID		forw		0.639	Z	2	-0.639
		GT1{1}	down	65	0.000	X	-17	-0.017
Comp.Wt :	0.000		left	17	0.017	Y	-66	-0.022
			forw	49	0.774	Z	-47	-0.774
		GE1{1}	down	56	0.000	X	30	0.031
			rght	30	0.031	Y	-56	0.025
			back		0.856	Z	2	0.856
		GE2{1}	down	57	0.000	X	32	0.031

S U P P O R T F O R C E S
(Force - lbf , Moment - ft-lb , Tran. - in , Rot. - deg)

Point/ Supp. ID	Connect/ Type	Load Combination	L O C A L Dirn	Force	Deform	G L O B A L Dirn	Force	Deform
			rght	32	0.031	Y	-57	-0.028
			forw		0.981	Z	2	-0.980
		GE3{1}	down	58	0.000	X	-31	-0.031
			left	31	0.031	Y	-58	0.027
			back		0.942	Z	2	0.941
		GE4{1}	down	59	0.000	X	-27	-0.031
			left	27	0.031	Y	-59	-0.026
			forw		0.900	Z	2	-0.900
		GE5{1}	down	66	0.000	X	30	0.031
			rght	30	0.031	Y	-66	0.025
			back		0.852	Z	2	0.852
		GE6{1}	down	68	0.000	X	32	0.031
			rght	32	0.031	Y	-67	-0.029
			forw		0.984	Z	2	-0.984
		GE7{1}	down	68	0.000	X	-31	-0.031
			left	31	0.031	Y	-68	0.027
			back		0.938	Z	2	0.938
		GE8{1}	down	69	0.000	X	-27	-0.031
			left	27	0.031	Y	-69	-0.026
			forw		0.904	Z	2	-0.904
		GT1P1{1}	down	65	0.000	X	-18	-0.019
			left	18	0.019	Y	-66	-0.023
			forw	49	0.777	Z	-47	-0.777
Tag No.: <None>								
A29		Gravity{1}	down	51	0.000	X		0.090
A29 1	Guide		rght		0.090	Y	-51	-0.018
Stiff	:RIGID		forw		0.639	Z	1	-0.639
		GT1{1}	down	47	0.000	X	-23	-0.140
Comp.Wt :	0.000		left	23	0.140	Y	-48	-0.027
			forw	30	0.934	Z	-28	-0.933
		GE1{1}	down	58	0.000	X		0.263
			rght		0.263	Y	-58	0.024
			back		0.856	Z	2	0.856
		GE2{1}	down	49	0.000	X		0.600
			rght		0.600	Y	-49	-0.028
			forw		0.980	Z	1	-0.980
		GE3{1}	down	52	0.000	X		-0.505
			left		0.505	Y	-52	0.027
			back		0.942	Z	1	0.941

S U P P O R T F O R C E S
(Force - lbf , Moment - ft-lb , Tran. - in , Rot. - deg)

Point/ Supp. ID	Connect/ Type	Load Combination	L O C A L Dirn	Force	Deform	G L O B A L Dirn	Force	Deform
		GE4{1}	down	43	0.000	X		-0.161
			left		0.161	Y	-43	-0.026
			forw		0.900	Z	1	-0.900
		GE5{1}	down	68	0.000	X		0.272
			rght		0.272	Y	-68	0.024
			back		0.852	Z	2	0.852
		GE6{1}	down	59	0.000	X		0.608
			rght		0.608	Y	-59	-0.028
			forw		0.984	Z	2	-0.983
		GE7{1}	down	61	0.000	X		-0.496
			left		0.496	Y	-61	0.027
			back		0.938	Z	2	0.938
		GE8{1}	down	53	0.000	X		-0.152
			left		0.152	Y	-53	-0.026
			forw		0.904	Z	2	-0.903
		GT1P1{1}	down	47	0.000	X	-23	-0.147
			left	23	0.147	Y	-48	-0.027
			forw	30	0.941	Z	-28	-0.940
Tag No.: <None>								
A30		Gravity{1}	down	16	0.000	X	0	0.053
A30 1	Guide		left		0.698	Y	-16	-0.002
Stiff	:RIGID		forw		0.053	Z		-0.698
		GT1{1}	down	28	0.000	X	-3	0.047
Comp.Wt :	0.000		left	22	0.773	Y	-28	-0.001
			back	2	-0.047	Z	-22	-0.773
		GE1{1}	down	8	0.000	X	0	0.255
			rght	26	0.830	Y	-8	-0.007
			forw		0.255	Z	26	0.830
		GE2{1}	down	16	0.000	X	0	0.790
			left	63	0.830	Y	-16	-0.023
			forw		0.790	Z	-63	-0.830
		GE3{1}	down	13	0.000	X	0	-0.650
			rght	40	0.830	Y	-13	0.019
			back		0.650	Z	40	0.830
		GE4{1}	down	20	0.000	X	-1	-0.103
			left	41	0.830	Y	-20	0.003
			back		0.103	Z	-41	-0.830
		GE5{1}	down	11	0.000	X	0	0.269
			rght	24	0.830	Y	-11	-0.008
			forw		0.269	Z	24	0.830

S U P P O R T F O R C E S
(Force - lbf , Moment - ft-lb , Tran. - in , Rot. - deg)

Point/ Supp. ID	Connect/ Type	Load Combination	L O C A L Dirn	Force	Deform	G L O B A L Dirn	Force	Deform
		GE6{1}	down	18	0.000	X	-1	0.801
			left	65	0.830	Y	-18	-0.023
			forw		0.802	Z	-65	-0.830
		GE7{1}	down	15	0.000	X	0	-0.637
			rght	38	0.830	Y	-15	0.018
			back		0.637	Z	38	0.830
		GE8{1}	down	23	0.000	X	-1	-0.089
			left	43	0.830	Y	-23	0.003
			back		0.089	Z	-43	-0.830
		GT1P1{1}	down	28	0.000	X	-3	0.047
			left	23	0.775	Y	-28	-0.001
			back	2	-0.047	Z	-23	-0.775
Tag No.: <None>								
A31		Gravity{1}	down	34	0.000	X	-1	0.053
A31 1	Guide		left		0.763	Y	-34	-0.002
Stiff	:RIGID		forw		0.053	Z		-0.763
		GT1{1}	down	20	0.000	X	2	0.088
Comp.Wt :	0.000		rght	16	-0.560	Y	-20	-0.003
			forw	3	0.088	Z	16	-0.560
		GE1{1}	down	15	0.000	X	0	0.255
			rght	64	0.830	Y	-15	-0.007
			forw		0.255	Z	64	0.830
		GE2{1}	down	25	0.000	X	-1	0.790
			left		0.828	Y	-25	-0.023
			forw		0.790	Z		-0.828
		GE3{1}	down	23	0.000	X	-1	-0.650
			rght		0.827	Y	-23	0.019
			back		0.650	Z		0.827
		GE4{1}	down	34	0.000	X	-1	-0.103
			left	79	0.830	Y	-34	0.003
			back		0.103	Z	-79	-0.830
		GE5{1}	down	19	0.000	X	-1	0.269
			rght	63	0.830	Y	-19	-0.008
			forw		0.269	Z	63	0.830
		GE6{1}	down	30	0.000	X	-1	0.801
			left		0.828	Y	-29	-0.023
			forw		0.802	Z		-0.828
		GE7{1}	down	27	0.000	X	-1	-0.637
			rght		0.827	Y	-27	0.018
			back		0.637	Z		0.827

```
-----------------------------------------------------------------------------------------------------------------
Primary Piping
04/24/2020 2018719                                                          BENTLEY
07:34 AM                                                                    AutoPIPE Nuclear 12.00.00.16   RESULT PAGE  92
-----------------------------------------------------------------------------------------------------------------

                                        S U P P O R T    F O R C E S
        ( Force - lbf   , Moment - ft-lb  , Tran. - in  , Rot. - deg   )
 Point/  Connect/    Load                          L O C A L              G L O B A L
 Supp. ID   Type   Combination                Dirn  Force    Deform    Dirn   Force   Deform
 -------- -------- ----------------------     ---- -------- --------   ---- -------- --------
                   GE8{1}                     down       38   0.000      X        -1  -0.089
                                              left       80   0.830      Y       -38   0.003
                                              back            0.089      Z       -80  -0.830

                   GT1P1{1}                   down       20   0.000      X         2   0.089
                                              rght       15  -0.555      Y       -20  -0.003
                                              forw        3   0.089      Z        15  -0.555

 Tag No.: <None>
 A32               Gravity{1}                 down       40   0.000      X            -0.004
 A32  1   Guide                               left            0.004      Y       -40  -0.025
 Stiff   :RIGID                                forw            0.835      Z         1  -0.835

                   GT1{1}                     down       47   0.000      X        19   0.232
 Comp.Wt :   0.000                             rght       19   0.232      Y       -46  -0.013
                                              back       32  -0.432      Z        34  -0.432

                   GE1{1}                     down       51   0.000      X             0.262
                                              rght            0.262      Y       -51   0.026
                                              back            0.863      Z         2   0.863

                   GE2{1}                     down       42   0.000      X             0.604
                                              rght            0.604      Y       -42  -0.029
                                              forw            0.960      Z         1  -0.960

                   GE3{1}                     down       44   0.000      X            -0.505
                                              left            0.505      Y       -44   0.028
                                              back            0.927      Z         1   0.926

                   GE4{1}                     down       35   0.000      X            -0.163
                                              left            0.163      Y       -34  -0.027
                                              forw            0.908      Z         1  -0.908

                   GE5{1}                     down       59   0.000      X             0.271
                                              rght            0.271      Y       -59   0.026
                                              back            0.859      Z         2   0.859

                   GE6{1}                     down       50   0.000      X             0.612
                                              rght            0.612      Y       -50  -0.029
                                              forw            0.964      Z         1  -0.963

                   GE7{1}                     down       52   0.000      X            -0.496
                                              left            0.496      Y       -52   0.028
                                              back            0.924      Z         2   0.923

                   GE8{1}                     down       42   0.000      X            -0.154
                                              left            0.154      Y       -42  -0.027
                                              forw            0.912      Z         1  -0.912

                   GT1P1{1}                   down       47   0.000      X        19   0.237
                                              rght       19   0.237      Y       -46  -0.013
                                              back       32  -0.422      Z        34  -0.422
```

```
-----------------------------------------------------------------------------------------------------------------
Primary Piping
04/24/2020 2018719                                                          BENTLEY
07:34 AM                                                                    AutoPIPE Nuclear 12.00.00.16   RESULT PAGE  93
-----------------------------------------------------------------------------------------------------------------

                                          S U P P O R T    F O R C E S
        ( Force - lbf   , Moment - ft-lb  , Tran. - in  , Rot. - deg   )
 Point/  Connect/    Load                          L O C A L              G L O B A L
 Supp. ID   Type   Combination                Dirn  Force    Deform    Dirn   Force   Deform
 -------- -------- ----------------------     ---- -------- --------   ---- -------- --------
 Tag No.: <None>
 A33                Gravity{1}                down       58   0.000      X        -3  -0.031
 A33  2   Guide                               left        3   0.031      Y       -58  -0.025
 Stiff   :RIGID                               forw           0.835      Z         2  -0.835

                    GT1{1}                    down       57   0.000      X        23   0.031
 Comp.Wt :   0.000                            rght       23   0.031      Y       -55  -0.017
                                              back       54  -0.567      Z        56  -0.566

                    GE1{1}                    down       50   0.000      X        36   0.031
                                              rght       36   0.031      Y       -50   0.026
                                              back           0.864      Z         2   0.863

                    GE2{1}                    down       52   0.000      X        41   0.031
                                              rght       41   0.031      Y       -52  -0.029
                                              forw           0.961      Z         2  -0.960

                    GE3{1}                    down       52   0.000      X       -37  -0.031
                                              left       37   0.031      Y       -52   0.028
                                              back           0.927      Z         2   0.926

                    GE4{1}                    down       53   0.000      X       -32  -0.031
                                              left       32   0.031      Y       -53  -0.027
                                              forw           0.908      Z         2  -0.908

                    GE5{1}                    down       59   0.000      X        36   0.031
                                              rght       36   0.031      Y       -59   0.026
                                              back           0.859      Z         2   0.859

                    GE6{1}                    down       61   0.000      X        41   0.031
                                              rght       41   0.031      Y       -61  -0.029
                                              forw           0.964      Z         2  -0.963

                    GE7{1}                    down       61   0.000      X       -37  -0.031
                                              left       37   0.031      Y       -61   0.028
                                              back           0.924      Z         2   0.923

                    GE8{1}                    down       63   0.000      X       -31  -0.031
                                              left       31   0.031      Y       -63  -0.027
                                              forw           0.912      Z         2  -0.912

                    GT1P1{1}                  down       56   0.000      X        24   0.031
                                              rght       24   0.031      Y       -55  -0.017
                                              back       55  -0.560      Z        57  -0.560

 Tag No.: <None>
 A34                Gravity{1}                down       53   0.000      X            -0.031
 A34  2   Guide                               left           0.031      Y       -53  -0.025
 Stiff   :RIGID                               forw           0.835      Z         2  -0.835

                    GT1{1}                    down       54   0.000      X        -4  -0.031
 Comp.Wt :   0.000                            left        4   0.031      Y       -52  -0.021
```

```
-----------------------------------------------------------------------------------------------------------------
Primary Piping
04/24/2020 2018719                                                          BENTLEY
07:34 AM                                                                    AutoPIPE Nuclear 12.00.00.16   RESULT PAGE  94
-----------------------------------------------------------------------------------------------------------------

                                          S U P P O R T    F O R C E S
        ( Force - lbf   , Moment - ft-lb  , Tran. - in  , Rot. - deg   )
 Point/  Connect/    Load                          L O C A L              G L O B A L
 Supp. ID   Type   Combination                Dirn  Force    Deform    Dirn   Force   Deform
 -------- -------- ----------------------     ---- -------- --------   ---- -------- --------
                                             back       46  -0.701      Z        48  -0.701

                    GE1{1}                   down       50   0.000      X         2   0.031
                                             rght        2   0.031      Y       -50   0.026
                                             back            0.864      Z         1   0.863

                    GE2{1}                   down       49   0.000      X        -1  -0.031
                                             left        1   0.031      Y       -49  -0.029
                                             forw            0.960      Z         1  -0.960

                    GE3{1}                   down       49   0.000      X             0.015
                                             rght            0.015      Y       -49   0.028
                                             back            0.927      Z         1   0.926

                    GE4{1}                   down       48   0.000      X        -5  -0.031
                                             left        5   0.031      Y       -48  -0.027
                                             forw            0.909      Z         1  -0.908

                    GE5{1}                   down       59   0.000      X         2   0.031
                                             rght        2   0.031      Y       -59   0.026
                                             back            0.860      Z         2   0.859

                    GE6{1}                   down       58   0.000      X        -1  -0.031
                                             left        1   0.031      Y       -58  -0.029
                                             forw            0.964      Z         2  -0.963

                    GE7{1}                   down       58   0.000      X             0.013
                                             rght            0.013      Y       -58   0.028
                                             back            0.924      Z         2   0.923

                    GE8{1}                   down       57   0.000      X        -5  -0.031
                                             left        5   0.031      Y       -57  -0.027
                                             forw            0.913      Z         2  -0.912

                    GT1P1{1}                 down       54   0.000      X        -4  -0.031
                                             left        4   0.031      Y       -52  -0.021
                                             back       46  -0.698      Z        48  -0.698

 Tag No.: <None>
 A35                Gravity{1}               down       57   0.000      X            -0.031
 A35  2   Guide                              left            0.031      Y       -57  -0.026
 Stiff   :RIGID                               forw            0.835      Z         2  -0.835

                    GT1{1}                   down       57   0.000      X        -9  -0.031
 Comp.Wt :   0.000                           left        9   0.031      Y       -57  -0.026
                                             forw       16   0.836      Z       -14  -0.835

                    GE1{1}                   down       53   0.000      X             0.027
                                             rght            0.027      Y       -53   0.027
                                             back            0.864      Z         2   0.863

                    GE2{1}                   down       52   0.000      X         7   0.031
```

```
-----------------------------------------------------------------------------------------------------------------
Primary Piping
04/24/2020 2018719                                                          BENTLEY
07:34 AM                                                                    AutoPIPE Nuclear 12.00.00.16   RESULT PAGE  95
-----------------------------------------------------------------------------------------------------------------

                                          S U P P O R T    F O R C E S
        ( Force - lbf   , Moment - ft-lb  , Tran. - in  , Rot. - deg   )
 Point/  Connect/    Load                          L O C A L              G L O B A L
 Supp. ID   Type   Combination                Dirn  Force    Deform    Dirn   Force   Deform
 -------- -------- ----------------------     ---- -------- --------   ---- -------- --------
                                              rght        7   0.031      Y       -52  -0.030
                                              forw            0.960      Z         2  -0.960

                    GE3{1}                    down       53   0.000      X        -8  -0.031
                                              left        8   0.031      Y       -53   0.029
                                              back            0.927      Z         2   0.926

                    GE4{1}                    down       52   0.000      X            -0.019
                                              left            0.019      Y       -52  -0.028
                                              forw            0.909      Z         2  -0.908

                    GE5{1}                    down       62   0.000      X             0.028
                                              rght            0.028      Y       -62   0.027
                                              back            0.860      Z         2   0.859

                    GE6{1}                    down       61   0.000      X         7   0.031
                                              rght        7   0.031      Y       -61  -0.030
                                              forw            0.963      Z         2  -0.963

                    GE7{1}                    down       62   0.000      X        -8  -0.031
                                              left        8   0.031      Y       -62   0.029
                                              back            0.923      Z         2   0.923

                    GE8{1}                    down       61   0.000      X            -0.017
                                              left            0.017      Y       -61  -0.028
                                              forw            0.913      Z         2  -0.912

                    GT1P1{1}                  down       57   0.000      X        -9  -0.031
                                              left        9   0.031      Y       -57  -0.026
                                              forw       16   0.835      Z       -14  -0.835

 Tag No.: <None>
 A36                Gravity{1}                down       30   0.000      X            -0.028
 A36  2   Guide                               left            0.028      Y       -30  -0.025
 Stiff   :RIGID                                forw            0.835      Z         1  -0.835

                    GT1{1}                    down       29   0.000      X         1  -0.024
 Comp.Wt :   0.000                            rght        1  -0.024      Y       -30  -0.029
                                              forw       23   0.970      Z       -23  -0.969

                    GE1{1}                    down       30   0.000      X            -0.020
                                              left            0.020      Y       -30   0.026
                                              back            0.864      Z         1   0.863

                    GE2{1}                    down       28   0.000      X         1   0.031
                                              rght        1   0.031      Y       -28  -0.029
                                              forw            0.960      Z         1  -0.960

                    GE3{1}                    down       31   0.000      X            -0.025
                                              left            0.025      Y       -31   0.028
                                              back            0.926      Z         1   0.926
```

S U P P O R T F O R C E S
(Force - lbf , Moment - ft-lb , Tran. - in , Rot. - deg)

Point/ Supp. ID	Connect/ Type	Load Combination	L O C A L Dirn	Force	Deform	G L O B A L Dirn	Force	Deform
		GE4{1}	down	29	0.000	X		0.028
			rght		0.028	Y	-29	-0.027
			forw		0.909	Z	1	-0.908
		GE5{1}	down	35	0.000	X		-0.019
			left		0.019	Y	-35	0.026
			back		0.860	Z	1	0.859
		GE6{1}	down	33	0.000	X	1	0.031
			rght	1	0.031	Y	-33	-0.029
			forw		0.963	Z	1	-0.963
		GE7{1}	down	36	0.000	X		-0.024
			left		0.024	Y	-36	0.028
			back		0.923	Z	1	0.923
		GE8{1}	down	34	0.000	X		0.029
			rght		0.029	Y	-34	-0.027
			forw		0.913	Z	1	-0.912
		GT1P1{1}	down	29	0.000	X	0	-0.025
			rght	0	-0.025	Y	-30	-0.029
			forw	23	0.973	Z	-23	-0.973
Tag No.: <None>								
A37		Gravity{1}	down	40	0.000	X	-1	-0.031
A37 2	Guide		left	1	0.031	Y	-40	-0.025
Stiff	:RIGID		forw		0.835	Z	1	-0.835
		GT1{1}	down	43	0.000	X	34	0.031
Comp.Wt :	0.000		rght	34	0.031	Y	-44	-0.030
			forw	50	1.010	Z	-49	-1.010
		GE1{1}	down	33	0.000	X	39	0.031
			rght	39	0.031	Y	-33	0.026
			back		0.864	Z	1	0.863
		GE2{1}	down	37	0.000	X	25	0.031
			rght	25	0.031	Y	-37	-0.029
			forw		0.960	Z	1	-0.960
		GE3{1}	down	31	0.000	X	-26	-0.031
			left	26	0.031	Y	-31	0.028
			back		0.926	Z	1	0.926
		GE4{1}	down	35	0.000	X	-41	-0.031
			left	41	0.031	Y	-35	-0.027
			forw		0.909	Z	1	-0.908
		GE5{1}	down	39	0.000	X	39	0.031
			rght	39	0.031	Y	-39	0.026
			back		0.860	Z	1	0.859

S U P P O R T F O R C E S
(Force - lbf , Moment - ft-lb , Tran. - in , Rot. - deg)

Point/ Supp. ID	Connect/ Type	Load Combination	L O C A L Dirn	Force	Deform	G L O B A L Dirn	Force	Deform
		GE6{1}	down	43	0.000	X	24	0.031
			rght	24	0.031	Y	-43	-0.029
			forw		0.963	Z	1	-0.963
		GE7{1}	down	37	0.000	X	-26	-0.031
			left	26	0.031	Y	-37	0.028
			back		0.923	Z	1	0.923
		GE8{1}	down	41	0.000	X	-41	-0.031
			left	41	0.031	Y	-41	-0.027
			forw		0.913	Z	1	-0.912
		GT1P1{1}	down	43	0.000	X	36	0.031
			rght	36	0.031	Y	-44	-0.030
			forw	52	1.014	Z	-50	-1.014
Tag No.: <None>								
A38		Gravity{1}	down	43	0.000	X		-0.061
A38	1 Guide		left		0.061	Y	-43	-0.026
Stiff	:RIGID		forw		0.835	Z	1	-0.835
		GT1{1}	down	37	0.000	X	19	0.212
Comp.Wt :	0.000		rght	19	0.212	Y	-37	-0.036
			forw	22	1.145	Z	-21	-1.144
		GE1{1}	down	46	0.000	X		0.496
			rght		0.496	Y	-46	0.027
			back		0.864	Z	1	0.863
		GE2{1}	down	38	0.000	X		0.004
			rght		0.004	Y	-38	-0.030
			forw		0.960	Z	1	-0.960
		GE3{1}	down	51	0.000	X		-0.069
			left		0.069	Y	-51	0.029
			back		0.926	Z	2	0.926
		GE4{1}	down	43	0.000	X		-0.562
			left		0.562	Y	-43	-0.029
			forw		0.909	Z	1	-0.908
		GE5{1}	down	54	0.000	X		0.490
			rght		0.490	Y	-54	0.027
			back		0.860	Z	2	0.859
		GE6{1}	down	46	0.000	X		-0.001
			left		0.001	Y	-46	-0.030
			forw		0.963	Z	1	-0.963
		GE7{1}	down	59	0.000	X		-0.075
			left		0.075	Y	-59	0.029
			back		0.923	Z	2	0.923

```
-----------------------------------------------------------------------------------------------------------------
Primary Piping
04/24/2020 2018719                                                    BENTLEY
07:34 AM                                                              AutoPIPE Nuclear 12.00.00.16   RESULT PAGE  98
-----------------------------------------------------------------------------------------------------------------

                                        S U P P O R T    F O R C E S
        ( Force - lbf   , Moment - ft-lb  , Tran. - in  , Rot. - deg   )
 Point/  Connect/    Load                          L O C A L              G L O B A L
 Supp. ID   Type   Combination                Dirn  Force    Deform    Dirn   Force   Deform
 -------- -------- ----------------------     ---- -------- --------   ---- -------- --------
                   GE8{1}                     down       51   0.000      X            -0.568
                                              left            0.568      Y       -51  -0.029
                                              forw            0.913      Z         2  -0.912

                   GT1P1{1}                   down       36   0.000      X        19   0.219
                                              rght       19   0.219      Y       -37  -0.036
                                              forw       22   1.152      Z       -21  -1.151

 Tag No.: <None>
 A39               Gravity{1}                 down       32   0.000      X         1  -0.076
 A39  1   Guide                               rght            0.822      Y       -32  -0.002
 Stiff   :RIGID                               forw            0.076      Z            -0.822

                   GT1{1}                     down       43   0.000      X         0  -0.076
 Comp.Wt :   0.000                            rght       28   0.825      Y       -43  -0.002
                                              forw        2   0.076      Z       -28  -0.825

                   GE1{1}                     down       19   0.000      X         0   0.628
                                              left            0.781      Y       -19   0.016
                                              back            0.628      Z             0.781

                   GE2{1}                     down       33   0.000      X         1  -0.115
                                              rght       45   0.830      Y       -33  -0.003
                                              forw            0.115      Z       -45  -0.830

                   GE3{1}                     down       14   0.000      X         0   0.012
                                              left       28   0.830      Y       -14   0.000
                                              back            0.012      Z        28   0.830

                   GE4{1}                     down       27   0.000      X         1  -0.726
                                              rght            0.795      Y       -27  -0.018
                                              forw            0.726      Z            -0.795

                   GE5{1}                     down       23   0.000      X         1   0.618
                                              left            0.780      Y       -23   0.015
                                              back            0.618      Z             0.780

                   GE6{1}                     down       37   0.000      X         1  -0.123
                                              rght       47   0.830      Y       -37  -0.003
                                              forw            0.123      Z       -47  -0.830

                   GE7{1}                     down       18   0.000      X         0   0.003
                                              left       27   0.830      Y       -18   0.000
                                              back            0.003      Z        27   0.830

                   GE8{1}                     down       31   0.000      X         1  -0.735
                                              rght            0.797      Y       -31  -0.018
                                              forw            0.735      Z            -0.797

                   GT1P1{1}                   down       43   0.000      X         0  -0.076
                                              rght       27   0.823      Y       -43  -0.002
                                              forw        1   0.076      Z       -27  -0.823
```

```
-----------------------------------------------------------------------------------------------------------------
Primary Piping
04/24/2020 2018719                                                          BENTLEY
07:34 AM                                                                    AutoPIPE Nuclear 12.00.00.16   RESULT PAGE  99
-----------------------------------------------------------------------------------------------------------------

                                          S U P P O R T    F O R C E S
        ( Force - lbf   , Moment - ft-lb  , Tran. - in  , Rot. - deg   )
 Point/  Connect/    Load                          L O C A L              G L O B A L
 Supp. ID   Type   Combination                Dirn  Force    Deform    Dirn   Force   Deform
 -------- -------- ----------------------     ---- -------- --------   ---- -------- --------
 Tag No.: <None>
 A40                Gravity{1}                down       25   0.000      X         1  -0.076
 A40  1   Guide                               rght            0.813      Y       -25  -0.002
 Stiff   :RIGID                               forw            0.076      Z            -0.813

                    GT1{1}                    down       17   0.000      X        -1  -0.136
 Comp.Wt :   0.000                            left       14  -0.268      Y       -17  -0.003
                                              forw        2   0.136      Z        14  -0.268

                    GE1{1}                    down       29   0.000      X         1   0.628
                                              left       45   0.830      Y       -29   0.016
                                              back            0.628      Z        45   0.830

                    GE2{1}                    down       24   0.000      X         1  -0.115
                                              rght      115   0.830      Y       -24  -0.003
                                              forw            0.115      Z      -115  -0.830

                    GE3{1}                    down       25   0.000      X         1   0.012
                                              left      119   0.830      Y       -25   0.000
                                              back            0.012      Z       119   0.830

                    GE4{1}                    down       20   0.000      X         1  -0.726
                                              rght       54   0.830      Y       -20  -0.019
                                              forw            0.726      Z       -54  -0.830

                    GE5{1}                    down       33   0.000      X         1   0.618
                                              left       44   0.830      Y       -33   0.016
                                              back            0.618      Z        44   0.830

                    GE6{1}                    down       28   0.000      X         1  -0.123
                                              rght      115   0.830      Y       -28  -0.003
                                              forw            0.123      Z      -115  -0.830

                    GE7{1}                    down       30   0.000      X         1   0.003
                                              left      119   0.830      Y       -30   0.000
                                              back            0.003      Z       119   0.830

                    GE8{1}                    down       25   0.000      X         1  -0.735
                                              rght       55   0.830      Y       -25  -0.019
                                              forw            0.735      Z       -55  -0.830

                    GT1P1{1}                  down       17   0.000      X        -1  -0.137
                                              left       13  -0.248      Y       -17  -0.004
                                              forw        1   0.137      Z        13  -0.248

 Tag No.: <None>
 A41                Gravity{1}                down       45   0.000      X            -0.070
 A41  1   Guide                               left            0.070      Y       -45  -0.006
 Stiff   :RIGID                               forw            0.814      Z         0  -0.814

                    GT1{1}                    down       50   0.000      X       -13  -0.358
 Comp.Wt :   0.000                            left       13   0.358      Y       -50  -0.000
```

```
-----------------------------------------------------------------------------------------------------------------
Primary Piping
04/24/2020 2018719                                                          BENTLEY
07:34 AM                                                                    AutoPIPE Nuclear 12.00.00.16   RESULT PAGE 100
-----------------------------------------------------------------------------------------------------------------

                                          S U P P O R T    F O R C E S
        ( Force - lbf   , Moment - ft-lb  , Tran. - in  , Rot. - deg   )
 Point/  Connect/    Load                          L O C A L              G L O B A L
 Supp. ID   Type   Combination                Dirn  Force    Deform    Dirn   Force   Deform
 -------- -------- ----------------------     ---- -------- --------   ---- -------- --------
                                              back       38  -0.002      Z        38  -0.002

                    GE1{1}                    down       40   0.000      X             0.439
                                              rght            0.439      Y       -40   0.008
                                              back            0.996      Z         0   0.996

                    GE2{1}                    down       41   0.000      X             0.036
                                              rght            0.036      Y       -41  -0.008
                                              forw            0.996      Z         0  -0.996

                    GE3{1}                    down       44   0.000      X            -0.108
                                              left            0.108      Y       -44   0.008
                                              back            0.972      Z         0   0.972

                    GE4{1}                    down       45   0.000      X            -0.512
                                              left            0.512      Y       -45  -0.008
                                              forw            1.014      Z         0  -1.014

                    GE5{1}                    down       48   0.000      X             0.432
                                              rght            0.432      Y       -48   0.008
                                              back            0.995      Z         0   0.995

                    GE6{1}                    down       49   0.000      X             0.030
                                              rght            0.030      Y       -49  -0.008
                                              forw            0.998      Z         0  -0.998

                    GE7{1}                    down       52   0.000      X            -0.115
                                              left            0.115      Y       -52   0.008
                                              back            0.970      Z         0   0.970

                    GE8{1}                    down       53   0.000      X            -0.519
                                              left            0.519      Y       -53  -0.008
                                              forw            1.016      Z         0  -1.016

                    GT1P1{1}                  down       50   0.000      X       -13  -0.367
                                              left       13   0.367      Y       -50   0.000
                                              back       38   0.027      Z        38   0.027

 Tag No.: <None>
 A42                Gravity{1}                down       56   0.000      X        -1  -0.031
 A42  2   Guide                               left        1   0.031      Y       -56  -0.006
 Stiff   :RIGID                                forw            0.814      Z         0  -0.814

                    GT1{1}                    down       55   0.000      X       -45  -0.031
 Comp.Wt :   0.000                            left       45   0.031      Y       -55  -0.001
                                              back       80  -0.137      Z        81  -0.137

                    GE1{1}                    down       53   0.000      X        29   0.031
                                              rght       29   0.031      Y       -53   0.008
                                              back            0.996      Z         0   0.996

                    GE2{1}                    down       51   0.000      X        30   0.031
```

```
-----------------------------------------------------------------------------------------------------------------
Primary Piping
04/24/2020 2018719                                                          BENTLEY
07:34 AM                                                                    AutoPIPE Nuclear 12.00.00.16   RESULT PAGE 101
-----------------------------------------------------------------------------------------------------------------

                                        S U P P O R T    F O R C E S
        ( Force - lbf   , Moment - ft-lb  , Tran. - in  , Rot. - deg   )
 Point/  Connect/    Load                          L O C A L              G L O B A L
 Supp. ID   Type   Combination                Dirn  Force    Deform    Dirn   Force   Deform
 -------- -------- ----------------------     ---- -------- --------   ---- -------- --------
                                              rght       30   0.031      Y       -51  -0.008
                                              forw            0.997      Z         0  -0.997

                    GE3{1}                    down       52   0.000      X       -34  -0.031
                                              left       34   0.031      Y       -52   0.008
                                              back            0.973      Z         0   0.973

                    GE4{1}                    down       50   0.000      X       -31  -0.031
                                              left       31   0.031      Y       -50  -0.008
                                              forw            1.014      Z         0  -1.014

                    GE5{1}                    down       62   0.000      X        28   0.031
                                              rght       28   0.031      Y       -62   0.008
                                              back            0.995      Z         0   0.995

                    GE6{1}                    down       61   0.000      X        29   0.031
                                              rght       29   0.031      Y       -61  -0.008
                                              forw            0.999      Z         0  -0.999

                    GE7{1}                    down       61   0.000      X       -34  -0.031
                                              left       34   0.031      Y       -61   0.008
                                              back            0.970      Z         0   0.970

                    GE8{1}                    down       60   0.000      X       -31  -0.031
                                              left       31   0.031      Y       -60  -0.008
                                              forw            1.016      Z         0  -1.016

                    GT1P1{1}                  down       55   0.000      X       -47  -0.031
                                              left       47   0.031      Y       -55  -0.001
                                              back       82  -0.111      Z        82  -0.111

 Tag No.: <None>
 A43                Gravity{1}                down       54   0.000      X             0.003
 A43  2   Guide                               rght            0.003      Y       -54  -0.006
 Stiff   :RIGID                                forw            0.814      Z         0  -0.814

                    GT1{1}                    down       54   0.000      X        13   0.031
 Comp.Wt :   0.000                            rght       13   0.031      Y       -54  -0.002
                                              back       52  -0.271      Z        53  -0.271

                    GE1{1}                    down       49   0.000      X             0.006
                                              rght            0.006      Y       -49   0.008
                                              back            0.996      Z         0   0.996

                    GE2{1}                    down       50   0.000      X         5   0.031
                                              rght        5   0.031      Y       -50  -0.008
                                              forw            0.997      Z         0  -0.997

                    GE3{1}                    down       50   0.000      X        -2  -0.031
                                              left        2   0.031      Y       -50   0.008
                                              back            0.973      Z         0   0.973
```

S U P P O R T F O R C E S
(Force - lbf , Moment - ft-lb , Tran. - in , Rot. - deg)

Point/ Supp. ID	Connect/ Type	Load Combination	L O C A L Dirn	Force	Deform	G L O B A L Dirn	Force	Deform
		GE4{1}	down	50	0.000	X		0.008
			rght		0.008	Y	-50	-0.008
			forw		1.014	Z	0	-1.014
		GE5{1}	down	58	0.000	X		0.007
			rght		0.007	Y	-58	0.008
			back		0.995	Z	0	0.995
		GE6{1}	down	59	0.000	X	5	0.031
			rght	5	0.031	Y	-59	-0.008
			forw		0.999	Z	0	-0.999
		GE7{1}	down	59	0.000	X	-2	-0.031
			left	2	0.031	Y	-59	0.008
			back		0.971	Z	0	0.971
		GE8{1}	down	59	0.000	X		0.009
			rght		0.009	Y	-59	-0.008
			forw		1.016	Z	0	-1.016
		GT1P1{1}	down	54	0.000	X	14	0.031
			rght	14	0.031	Y	-54	-0.002
			back	53	-0.248	Z	53	-0.248
Tag No.: <None>								
A44		Gravity{1}	down	55	0.000	X		0.022
A44 2	Guide		rght		0.022	Y	-55	-0.006
Stiff	:RIGID		forw		0.814	Z	0	-0.814
		GT1{1}	down	55	0.000	X	0	0.018
Comp.Wt :	0.000		left	0	-0.018	Y	-54	-0.003
			back	44	-0.405	Z	44	-0.405
		GE1{1}	down	50	0.000	X	10	0.031
			rght	10	0.031	Y	-50	0.008
			back		0.996	Z	0	0.996
		GE2{1}	down	50	0.000	X	12	0.031
			rght	12	0.031	Y	-50	-0.008
			forw		0.997	Z	0	-0.997
		GE3{1}	down	50	0.000	X	-12	-0.031
			left	12	0.031	Y	-50	0.008
			back		0.973	Z	0	0.973
		GE4{1}	down	50	0.000	X	-9	-0.031
			left	9	0.031	Y	-50	-0.008
			forw		1.014	Z	0	-1.014
		GE5{1}	down	59	0.000	X	11	0.031
			rght	11	0.031	Y	-59	0.008
			back		0.995	Z	0	0.995

```
-----------------------------------------------------------------------------------------------------------------
Primary Piping
04/24/2020 2018719                                                          BENTLEY
07:34 AM                                                                    AutoPIPE Nuclear 12.00.00.16   RESULT PAGE 103
-----------------------------------------------------------------------------------------------------------------

                                          S U P P O R T    F O R C E S
        ( Force - lbf   , Moment - ft-lb  , Tran. - in  , Rot. - deg   )
 Point/  Connect/    Load                          L O C A L              G L O B A L
 Supp. ID   Type   Combination                Dirn  Force    Deform    Dirn   Force   Deform
 -------- -------- ----------------------     ---- -------- --------   ---- -------- --------
                   GE6{1}                     down       59   0.000      X        11   0.031
                                              rght       11   0.031      Y       -59  -0.008
                                              forw            0.999      Z         0  -0.999

                   GE7{1}                     down       59   0.000      X       -12  -0.031
                                              left       12   0.031      Y       -59   0.008
                                              back            0.971      Z         0   0.971

                   GE8{1}                     down       59   0.000      X        -9  -0.031
                                              left        9   0.031      Y       -59  -0.008
                                              forw            1.016      Z         0  -1.016

                   GT1P1{1}                   down       55   0.000      X        -1   0.017
                                              left        1  -0.017      Y       -54  -0.003
                                              back       44  -0.385      Z        44  -0.385

 Tag No.: <None>
 A45               Gravity{1}                 down       54   0.000      X         0   0.031
 A45  2   Guide                               rght        0   0.031      Y       -54  -0.006
 Stiff   :RIGID                               forw            0.814      Z         0  -0.814

                   GT1{1}                     down       55   0.000      X         0   0.028
 Comp.Wt :   0.000                            left        0  -0.028      Y       -54  -0.004
                                              back       44  -0.539      Z        44  -0.539

                   GE1{1}                     down       50   0.000      X        11   0.031
                                              rght       11   0.031      Y       -50   0.008
                                              back            0.996      Z         0   0.996

                   GE2{1}                     down       50   0.000      X        10   0.031
                                              rght       10   0.031      Y       -50  -0.008
                                              forw            0.997      Z         0  -0.997

                   GE3{1}                     down       50   0.000      X       -10  -0.031
                                              left       10   0.031      Y       -50   0.008
                                              back            0.973      Z         0   0.973

                   GE4{1}                     down       50   0.000      X       -11  -0.031
                                              left       11   0.031      Y       -50  -0.008
                                              forw            1.014      Z         0  -1.014

                   GE5{1}                     down       59   0.000      X        11   0.031
                                              rght       11   0.031      Y       -59   0.008
                                              back            0.995      Z         0   0.995

                   GE6{1}                     down       59   0.000      X        10   0.031
                                              rght       10   0.031      Y       -59  -0.008
                                              forw            0.999      Z         0  -0.999

                   GE7{1}                     down       59   0.000      X       -10  -0.031
                                              left       10   0.031      Y       -59   0.008
                                              back            0.971      Z         0   0.971
```

```
-----------------------------------------------------------------------------------------------------------------
Primary Piping
04/24/2020 2018719                                                          BENTLEY
07:34 AM                                                                    AutoPIPE Nuclear 12.00.00.16   RESULT PAGE 104
-----------------------------------------------------------------------------------------------------------------

                                        S U P P O R T    F O R C E S
        ( Force - lbf   , Moment - ft-lb  , Tran. - in  , Rot. - deg   )
 Point/  Connect/    Load                          L O C A L              G L O B A L
 Supp. ID   Type   Combination                Dirn  Force    Deform    Dirn   Force   Deform
 -------- -------- ----------------------     ---- -------- --------   ---- -------- --------
                   GE8{1}                     down       59   0.000      X       -11  -0.031
                                              left       11   0.031      Y       -59  -0.008
                                              forw            1.016      Z         0  -1.016

                   GT1P1{1}                   down       55   0.000      X         0   0.028
                                              left        0  -0.028      Y       -54  -0.004
                                              back       44  -0.523      Z        44  -0.523

 Tag No.: <None>
 A46               Gravity{1}                 down       55   0.000      X             0.031
 A46  2   Guide                               rght            0.031      Y       -55  -0.006
 Stiff   :RIGID                               forw            0.814      Z         0  -0.814

                   GT1{1}                     down       55   0.000      X         0   0.031
 Comp.Wt :   0.000                            left        0  -0.031      Y       -54  -0.005
                                              back       44  -0.673      Z        44  -0.673

                   GE1{1}                     down       50   0.000      X        10   0.031
                                              rght       10   0.031      Y       -50   0.008
                                              back            0.996      Z         0   0.996

                   GE2{1}                     down       50   0.000      X         9   0.031
                                              rght        9   0.031      Y       -50  -0.008
                                              forw            0.997      Z         0  -0.997

                   GE3{1}                     down       50   0.000      X        -9  -0.031
                                              left        9   0.031      Y       -50   0.008
                                              back            0.973      Z         0   0.973

                   GE4{1}                     down       50   0.000      X       -10  -0.031
                                              left       10   0.031      Y       -50  -0.008
                                              forw            1.014      Z         0  -1.014

                   GE5{1}                     down       59   0.000      X        10   0.031
                                              rght       10   0.031      Y       -59   0.008
                                              back            0.995      Z         0   0.995

                   GE6{1}                     down       59   0.000      X         9   0.031
                                              rght        9   0.031      Y       -59  -0.008
                                              forw            0.999      Z         0  -0.999

                   GE7{1}                     down       59   0.000      X        -9  -0.031
                                              left        9   0.031      Y       -59   0.008
                                              back            0.971      Z         0   0.971

                   GE8{1}                     down       59   0.000      X       -10  -0.031
                                              left       10   0.031      Y       -59  -0.008
                                              forw            1.016      Z         0  -1.016

                   GT1P1{1}                   down       55   0.000      X         0   0.031
                                              left        0  -0.031      Y       -54  -0.005
                                              back       44  -0.660      Z        44  -0.660
```

```
-----------------------------------------------------------------------------------------------------------------
Primary Piping
04/24/2020 2018719                                                          BENTLEY
07:34 AM                                                                    AutoPIPE Nuclear 12.00.00.16   RESULT PAGE 105
-----------------------------------------------------------------------------------------------------------------

                                          S U P P O R T    F O R C E S
        ( Force - lbf   , Moment - ft-lb  , Tran. - in  , Rot. - deg   )
 Point/  Connect/    Load                          L O C A L              G L O B A L
 Supp. ID   Type   Combination                Dirn  Force    Deform    Dirn   Force   Deform
 -------- -------- ----------------------     ---- -------- --------   ---- -------- --------
 Tag No.: <None>
 A47                Gravity{1}                down       54   0.000      X             0.022
 A47  2   Guide                               rght            0.022      Y       -54  -0.006
 Stiff   :RIGID                               forw            0.814      Z         0  -0.814

                    GT1{1}                    down       54   0.000      X        -1   0.022
 Comp.Wt :   0.000                            left        1  -0.022      Y       -53  -0.006
                                              back       48  -0.807      Z        48  -0.807

                    GE1{1}                    down       49   0.000      X        10   0.031
                                              rght       10   0.031      Y       -49   0.008
                                              back            0.996      Z         0   0.996

                    GE2{1}                    down       49   0.000      X        14   0.031
                                              rght       14   0.031      Y       -49  -0.008
                                              forw            0.998      Z         0  -0.998

                    GE3{1}                    down       49   0.000      X       -14  -0.031
                                              left       14   0.031      Y       -49   0.008
                                              back            0.974      Z         0   0.974

                    GE4{1}                    down       49   0.000      X       -10  -0.031
                                              left       10   0.031      Y       -49  -0.008
                                              forw            1.014      Z         0  -1.014

                    GE5{1}                    down       58   0.000      X        10   0.031
                                              rght       10   0.031      Y       -58   0.008
                                              back            0.995      Z         0   0.995

                    GE6{1}                    down       58   0.000      X        14   0.031
                                              rght       14   0.031      Y       -58  -0.008
                                              forw            1.000      Z         0  -1.000

                    GE7{1}                    down       58   0.000      X       -14  -0.031
                                              left       14   0.031      Y       -58   0.008
                                              back            0.971      Z         0   0.971

                    GE8{1}                    down       58   0.000      X       -10  -0.031
                                              left       10   0.031      Y       -58  -0.008
                                              forw            1.016      Z         0  -1.016

                    GT1P1{1}                  down       54   0.000      X        -1   0.022
                                              left        1  -0.022      Y       -54  -0.006
                                              back       43  -0.796      Z        43  -0.796

 Tag No.: <None>
 A48                Gravity{1}                down       57   0.000      X             0.005
 A48  2   Guide                               rght            0.005      Y       -57  -0.006
 Stiff   :RIGID                               forw            0.814      Z         0  -0.814

                    GT1{1}                    down       57   0.000      X         5   0.018
 Comp.Wt :   0.000                            rght        5   0.018      Y       -58  -0.007
```

```
-----------------------------------------------------------------------------------------------------------------
Primary Piping
04/24/2020 2018719                                                          BENTLEY
07:34 AM                                                                    AutoPIPE Nuclear 12.00.00.16   RESULT PAGE 106
-----------------------------------------------------------------------------------------------------------------

                                          S U P P O R T    F O R C E S
        ( Force - lbf   , Moment - ft-lb  , Tran. - in  , Rot. - deg   )
 Point/  Connect/    Load                          L O C A L              G L O B A L
 Supp. ID   Type   Combination                Dirn  Force    Deform    Dirn   Force   Deform
 -------- -------- ----------------------     ---- -------- --------   ---- -------- --------
                                              forw       45   0.940      Z       -45  -0.940

                    GE1{1}                    down       53   0.000      X        10   0.031
                                              rght       10   0.031      Y       -53   0.008
                                              back            0.996      Z         0   0.996

                    GE2{1}                    down       52   0.000      X             0.026
                                              rght            0.026      Y       -52  -0.008
                                              forw            0.998      Z         0  -0.998

                    GE3{1}                    down       53   0.000      X            -0.025
                                              left            0.025      Y       -53   0.008
                                              back            0.974      Z         0   0.974

                    GE4{1}                    down       52   0.000      X       -11  -0.031
                                              left       11   0.031      Y       -52  -0.008
                                              forw            1.014      Z         0  -1.014

                    GE5{1}                    down       62   0.000      X        10   0.031
                                              rght       10   0.031      Y       -62   0.008
                                              back            0.995      Z         0   0.994

                    GE6{1}                    down       62   0.000      X             0.026
                                              rght            0.026      Y       -62  -0.008
                                              forw            1.000      Z         0  -1.000

                    GE7{1}                    down       62   0.000      X            -0.026
                                              left            0.026      Y       -62   0.008
                                              back            0.972      Z         0   0.971

                    GE8{1}                    down       62   0.000      X       -11  -0.031
                                              left       11   0.031      Y       -62  -0.008
                                              forw            1.016      Z         0  -1.016

                    GT1P1{1}                  down       57   0.000      X         5   0.018
                                              rght        5   0.018      Y       -58  -0.007
                                              forw       46   0.933      Z       -45  -0.933

 Tag No.: <None>
 A49                Gravity{1}                down       35   0.000      X            -0.019
 A49  2   Guide                               left            0.019      Y       -35  -0.006
 Stiff   :RIGID                                forw            0.814      Z         0  -0.814

                    GT1{1}                    down       34   0.000      X        30   0.031
 Comp.Wt :   0.000                            rght       30   0.031      Y       -35  -0.008
                                              forw       47   1.074      Z       -47  -1.074

                    GE1{1}                    down       32   0.000      X             0.024
                                              rght            0.024      Y       -32   0.008
                                              back            0.996      Z         0   0.996

                    GE2{1}                    down       32   0.000      X         -2  -0.031
```

```
-----------------------------------------------------------------------------------------------------------------
Primary Piping
04/24/2020 2018719                                                          BENTLEY
07:34 AM                                                                    AutoPIPE Nuclear 12.00.00.16   RESULT PAGE 107
-----------------------------------------------------------------------------------------------------------------

                                        S U P P O R T    F O R C E S
        ( Force - lbf   , Moment - ft-lb  , Tran. - in  , Rot. - deg   )
 Point/  Connect/    Load                          L O C A L              G L O B A L
 Supp. ID   Type   Combination                Dirn  Force    Deform    Dirn   Force   Deform
 -------- -------- ----------------------     ---- -------- --------   ---- -------- --------
                                             left        2   0.031      Y       -32  -0.008
                                             forw            0.998      Z         0  -0.998

                    GE3{1}                   down       32   0.000      X             0.030
                                             rght            0.030      Y       -32   0.008
                                             back            0.974      Z         0   0.974

                    GE4{1}                   down       32   0.000      X            -0.029
                                             left            0.029      Y       -32  -0.008
                                             forw            1.014      Z         0  -1.014

                    GE5{1}                   down       38   0.000      X             0.023
                                             rght            0.023      Y       -38   0.008
                                             back            0.994      Z         0   0.994

                    GE6{1}                   down       38   0.000      X        -2  -0.031
                                             left        2   0.031      Y       -38  -0.008
                                             forw            1.000      Z         0  -1.000

                    GE7{1}                   down       38   0.000      X             0.030
                                             rght            0.030      Y       -38   0.008
                                             back            0.972      Z         0   0.972

                    GE8{1}                   down       38   0.000      X            -0.029
                                             left            0.029      Y       -38  -0.008
                                             forw            1.016      Z         0  -1.016

                    GT1P1{1}                 down       34   0.000      X        30   0.031
                                             rght       30   0.031      Y       -35  -0.008
                                             forw       47   1.070      Z       -47  -1.070

 Tag No.: <None>
 A50                Gravity{1}               down       42   0.000      X        -3  -0.031
 A50  2   Guide                              left        3   0.031      Y       -42  -0.006
 Stiff   :RIGID                              forw            0.814      Z         0  -0.814

                    GT1{1}                   down       42   0.000      X       -84  -0.031
 Comp.Wt :   0.000                           left       84   0.031      Y       -43  -0.009
                                             forw      101   1.131      Z      -101  -1.131

                    GE1{1}                   down       37   0.000      X        29   0.031
                                             rght       29   0.031      Y       -37   0.008
                                             back            0.996      Z         0   0.996

                    GE2{1}                   down       38   0.000      X        39   0.031
                                             rght       39   0.031      Y       -38  -0.008
                                             forw            0.998      Z         0  -0.998

                    GE3{1}                   down       38   0.000      X       -37  -0.031
                                             left       37   0.031      Y       -38   0.008
                                             back            0.974      Z         0   0.974
```

S U P P O R T F O R C E S
(Force - lbf , Moment - ft-lb , Tran. - in , Rot. - deg)

Point/ Supp. ID	Connect/ Type	Load Combination	L O C A L Dirn	Force	Deform	G L O B A L Dirn	Force	Deform
		GE4{1}	down	38	0.000	X	-27	-0.031
			left	27	0.031	Y	-38	-0.008
			forw		1.014	Z	0	-1.014
		GE5{1}	down	44	0.000	X	29	0.031
			rght	29	0.031	Y	-44	0.008
			back		0.994	Z	0	0.994
		GE6{1}	down	45	0.000	X	40	0.031
			rght	40	0.031	Y	-45	-0.008
			forw		1.000	Z	0	-1.000
		GE7{1}	down	44	0.000	X	-37	-0.031
			left	37	0.031	Y	-44	0.008
			back		0.972	Z	0	0.972
		GE8{1}	down	45	0.000	X	-27	-0.031
			left	27	0.031	Y	-45	-0.008
			forw		1.015	Z	0	-1.015
		GT1P1{1}	down	42	0.000	X	-84	-0.031
			left	84	0.031	Y	-43	-0.009
			forw	101	1.128	Z	-101	-1.128
Tag No.: <None>								
A51		Gravity{1}	down	44	0.000	X		-0.031
A51 1	Guide		left		0.031	Y	-44	-0.007
Stiff	:RIGID		forw		0.814	Z	0	-0.814
		GT1{1}	down	42	0.000	X	-20	-0.363
Comp.Wt :	0.000		left	20	0.363	Y	-43	-0.011
			forw	27	1.265	Z	-27	-1.265
		GE1{1}	down	43	0.000	X		0.035
			rght		0.035	Y	-43	0.009
			back		0.996	Z	0	0.996
		GE2{1}	down	42	0.000	X		0.569
			rght		0.569	Y	-42	-0.009
			forw		0.998	Z	0	-0.998
		GE3{1}	down	42	0.000	X		-0.532
			left		0.532	Y	-42	0.008
			back		0.974	Z	0	0.974
		GE4{1}	down	40	0.000	X		0.006
			rght		0.006	Y	-40	-0.009
			forw		1.014	Z	0	-1.014
		GE5{1}	down	51	0.000	X		0.039
			rght		0.039	Y	-51	0.009
			back		0.994	Z	0	0.994

S U P P O R T F O R C E S
(Force - lbf , Moment - ft-lb , Tran. - in , Rot. - deg)

Point/ Supp. ID	Connect/ Type	Load Combination	L O C A L Dirn	L O C A L Force	L O C A L Deform	G L O B A L Dirn	G L O B A L Force	G L O B A L Deform
		GE6{1}	down	49	0.000	X		0.573
			rght		0.573	Y	-49	-0.009
			forw		1.000	Z	0	-1.000
		GE7{1}	down	50	0.000	X		-0.528
			left		0.528	Y	-50	0.008
			back		0.972	Z	0	0.972
		GE8{1}	down	48	0.000	X		0.010
			rght		0.010	Y	-48	-0.009
			forw		1.015	Z	0	-1.015
		GT1P1{1}	down	42	0.000	X	-20	-0.365
			left	20	0.365	Y	-42	-0.011
			forw	27	1.265	Z	-27	-1.265
Tag No.: <None>								
A52		Gravity{1}	down	38	0.000	X	0	0.010
A52 1	Guide		left		0.756	Y	-38	-0.000
Stiff	:RIGID		forw		0.010	Z		-0.756
		GT1{1}	down	42	0.000	X	38	0.010
Comp.Wt :	0.000		left	203	0.830	Y	-42	-0.000
			forw	38	0.010	Z	-203	-0.830
		GE1{1}	down	32	0.000	X	0	-0.105
			rght	67	0.830	Y	-32	0.001
			back		0.105	Z	67	0.830
		GE2{1}	down	34	0.000	X	0	0.775
			left	24	0.830	Y	-34	-0.006
			forw		0.775	Z	-24	-0.830
		GE3{1}	down	33	0.000	X	0	-0.712
			rght	16	0.830	Y	-33	0.005
			back		0.712	Z	16	0.830
		GE4{1}	down	35	0.000	X	0	0.166
			left	68	0.830	Y	-35	-0.001
			forw		0.166	Z	-68	-0.830
		GE5{1}	down	38	0.000	X	0	-0.099
			rght	67	0.830	Y	-38	0.001
			back		0.099	Z	67	0.830
		GE6{1}	down	40	0.000	X	0	0.780
			left	24	0.830	Y	-40	-0.006
			forw		0.780	Z	-24	-0.830
		GE7{1}	down	39	0.000	X	0	-0.706
			rght	15	0.830	Y	-39	0.005
			back		0.706	Z	15	0.830

```
-----------------------------------------------------------------------------------------------------------------
Primary Piping
04/24/2020 2018719                                                          BENTLEY
07:34 AM                                                                    AutoPIPE Nuclear 12.00.00.16   RESULT PAGE 110
-----------------------------------------------------------------------------------------------------------------

                                        S U P P O R T    F O R C E S
        ( Force - lbf   , Moment - ft-lb  , Tran. - in  , Rot. - deg   )
 Point/  Connect/    Load                          L O C A L              G L O B A L
 Supp. ID   Type   Combination                Dirn  Force    Deform    Dirn   Force   Deform
 -------- -------- ----------------------     ---- -------- --------   ---- -------- --------
                   GE8{1}                     down       41   0.000      X         0   0.172
                                              left       69   0.830      Y       -41  -0.001
                                              forw            0.172      Z       -69  -0.830

                   GT1P1{1}                   down       42   0.000      X        37   0.010
                                              left      200   0.830      Y       -42  -0.000
                                              forw       38   0.010      Z      -200  -0.830

 Tag No.: <None>
 A53               Gravity{1}                 down       38   0.000      X         0   0.010
 A53  1   Guide                               left            0.604      Y       -38  -0.000
 Stiff   :RIGID                               forw            0.010      Z            -0.604

                   GT1{1}                     down       36   0.000      X         5   0.114
 Comp.Wt :   0.000                            rght       28  -0.060      Y       -36  -0.001
                                              forw        5   0.114      Z        28  -0.060

                   GE1{1}                     down       33   0.000      X         0  -0.105
                                              rght       96   0.830      Y       -33   0.001
                                              back            0.105      Z        96   0.830

                   GE2{1}                     down       35   0.000      X         0   0.775
                                              left       12   0.830      Y       -35  -0.004
                                              forw            0.775      Z       -12  -0.830

                   GE3{1}                     down       34   0.000      X         0  -0.712
                                              rght       11   0.830      Y       -34   0.004
                                              back            0.712      Z        11   0.830

                   GE4{1}                     down       36   0.000      X         0   0.166
                                              left      103   0.830      Y       -36  -0.001
                                              forw            0.166      Z      -103  -0.830

                   GE5{1}                     down       40   0.000      X         0  -0.099
                                              rght       95   0.830      Y       -40   0.001
                                              back            0.099      Z        95   0.830

                   GE6{1}                     down       41   0.000      X         0   0.780
                                              left       12   0.830      Y       -41  -0.004
                                              forw            0.780      Z       -12  -0.830

                   GE7{1}                     down       41   0.000      X         0  -0.706
                                              rght       11   0.830      Y       -41   0.004
                                              back            0.706      Z        11   0.830

                   GE8{1}                     down       43   0.000      X         0   0.172
                                              left      104   0.830      Y       -43  -0.001
                                              forw            0.172      Z      -104  -0.830

                   GT1P1{1}                   down       35   0.000      X         5   0.116
                                              rght       28  -0.042      Y       -35  -0.001
                                              forw        5   0.116      Z        28  -0.042
```

```
-----------------------------------------------------------------------------------------------------------------
Primary Piping
04/24/2020 2018719                                                          BENTLEY
07:34 AM                                                                    AutoPIPE Nuclear 12.00.00.16   RESULT PAGE 111
-----------------------------------------------------------------------------------------------------------------

                                          S U P P O R T    F O R C E S
        ( Force - lbf   , Moment - ft-lb  , Tran. - in  , Rot. - deg   )
 Point/  Connect/    Load                          L O C A L              G L O B A L
 Supp. ID   Type   Combination                Dirn  Force    Deform    Dirn   Force   Deform
 -------- -------- ----------------------     ---- -------- --------   ---- -------- --------
 Tag No.: <None>
 A54                Gravity{1}                down       43   0.000      X             0.046
 A54  1   Guide                               rght            0.046      Y       -43  -0.004
 Stiff   :RIGID                               forw            0.551      Z         0  -0.551

                    GT1{1}                    down       44   0.000      X        11   0.239
 Comp.Wt :   0.000                            rght       11   0.239      Y       -44   0.000
                                              back       34   0.047      Z        34   0.047

                    GE1{1}                    down       41   0.000      X             0.054
                                              rght            0.054      Y       -41   0.008
                                              back            1.018      Z         0   1.018

                    GE2{1}                    down       39   0.000      X             0.579
                                              rght            0.579      Y       -39  -0.008
                                              forw            0.987      Z         0  -0.987

                    GE3{1}                    down       40   0.000      X            -0.537
                                              left            0.537      Y       -40   0.008
                                              back            0.969      Z         0   0.969

                    GE4{1}                    down       38   0.000      X            -0.017
                                              left            0.017      Y       -38  -0.008
                                              forw            1.041      Z         0  -1.041

                    GE5{1}                    down       48   0.000      X             0.057
                                              rght            0.057      Y       -48   0.008
                                              back            1.016      Z         0   1.016

                    GE6{1}                    down       46   0.000      X             0.583
                                              rght            0.583      Y       -46  -0.008
                                              forw            0.989      Z         0  -0.989

                    GE7{1}                    down       47   0.000      X            -0.532
                                              left            0.532      Y       -47   0.008
                                              back            0.967      Z         0   0.967

                    GE8{1}                    down       46   0.000      X            -0.013
                                              left            0.013      Y       -46  -0.008
                                              forw            1.043      Z         0  -1.043

                    GT1P1{1}                  down       44   0.000      X        11   0.246
                                              rght       11   0.246      Y       -44   0.001
                                              back       34   0.071      Z        34   0.071

 Tag No.: <None>
 A55                Gravity{1}                down       58   0.000      X         3   0.031
 A55  1   Guide                               rght        3   0.031      Y       -58  -0.004
 Stiff   :RIGID                               forw            0.551      Z         0  -0.551

                    GT1{1}                    down       57   0.000      X        22   0.031
 Comp.Wt :   0.000                            rght       22   0.031      Y       -56  -0.001
```

```
-----------------------------------------------------------------------------------------------------------------
Primary Piping
04/24/2020 2018719                                                    BENTLEY
07:34 AM                                                              AutoPIPE Nuclear 12.00.00.16   RESULT PAGE 112
-----------------------------------------------------------------------------------------------------------------

                                        S U P P O R T    F O R C E S
        ( Force - lbf   , Moment - ft-lb  , Tran. - in  , Rot. - deg   )
 Point/  Connect/    Load                          L O C A L              G L O B A L
 Supp. ID   Type   Combination                Dirn  Force    Deform    Dirn   Force   Deform
 -------- -------- ----------------------     ---- -------- --------   ---- -------- --------
                                              back       63  -0.088      Z        64  -0.088

                    GE1{1}                    down       53   0.000      X        32   0.031
                                              rght       32   0.031      Y       -53   0.008
                                              back            1.018      Z         0   1.018

                    GE2{1}                    down       53   0.000      X        37   0.031
                                              rght       37   0.031      Y       -53  -0.008
                                              forw            0.987      Z         0  -0.987

                    GE3{1}                    down       53   0.000      X       -37  -0.031
                                              left       37   0.031      Y       -53   0.008
                                              back            0.969      Z         0   0.969

                    GE4{1}                    down       53   0.000      X       -31  -0.031
                                              left       31   0.031      Y       -53  -0.008
                                              forw            1.041      Z         0  -1.041

                    GE5{1}                    down       62   0.000      X        32   0.031
                                              rght       32   0.031      Y       -62   0.008
                                              back            1.016      Z         0   1.016

                    GE6{1}                    down       62   0.000      X        38   0.031
                                              rght       38   0.031      Y       -62  -0.008
                                              forw            0.989      Z         0  -0.989

                    GE7{1}                    down       62   0.000      X       -36  -0.031
                                              left       36   0.031      Y       -62   0.008
                                              back            0.967      Z         0   0.967

                    GE8{1}                    down       62   0.000      X       -31  -0.031
                                              left       31   0.031      Y       -62  -0.008
                                              forw            1.044      Z         0  -1.043

                    GT1P1{1}                  down       57   0.000      X        23   0.031
                                              rght       23   0.031      Y       -56  -0.001
                                              back       64  -0.067      Z        64  -0.067

 Tag No.: <None>
 A56                Gravity{1}                down       54   0.000      X             0.010
 A56  1   Guide                               rght            0.010      Y       -54  -0.004
 Stiff   :RIGID                                forw            0.551      Z         0  -0.551

                    GT1{1}                    down       54   0.000      X        -5  -0.024
 Comp.Wt :   0.000                            left        5   0.024      Y       -54  -0.002
                                              back       43  -0.222      Z        43  -0.222

                    GE1{1}                    down       49   0.000      X         4   0.031
                                              rght        4   0.031      Y       -49   0.008
                                              back            1.019      Z         0   1.019

                    GE2{1}                    down       49   0.000      X             -0.028
```

S U P P O R T F O R C E S
(Force - lbf , Moment - ft-lb , Tran. - in , Rot. - deg)

Point/ Supp. ID	Connect/ Type	Load Combination	L O C A L Dirn	Force	Deform	G L O B A L Dirn	Force	Deform
			left		0.028	Y	-49	-0.008
			forw		0.987	Z	0	-0.987
		GE3{1}	down	49	0.000	X		0.020
			rght		0.020	Y	-49	0.008
			back		0.969	Z	0	0.969
		GE4{1}	down	49	0.000	X	-5	-0.031
			left	5	0.031	Y	-49	-0.008
			forw		1.042	Z	0	-1.042
		GE5{1}	down	58	0.000	X	4	0.031
			rght	4	0.031	Y	-58	0.008
			back		1.016	Z	0	1.016
		GE6{1}	down	58	0.000	X		-0.028
			left		0.028	Y	-58	-0.008
			forw		0.989	Z	0	-0.989
		GE7{1}	down	58	0.000	X		0.019
			rght		0.019	Y	-58	0.008
			back		0.967	Z	0	0.967
		GE8{1}	down	58	0.000	X	-5	-0.031
			left	5	0.031	Y	-58	-0.008
			forw		1.044	Z	0	-1.044
		GT1P1{1}	down	54	0.000	X	-5	-0.027
			left	5	0.027	Y	-54	-0.002
			back	43	-0.204	Z	43	-0.204
Tag No.: <None>								
A57		Gravity{1}	down	55	0.000	X		0.012
A57 1	Guide		rght		0.012	Y	-55	-0.004
Stiff	:RIGID		forw		0.551	Z	0	-0.551
		GT1{1}	down	55	0.000	X	-1	0.006
Comp.Wt :	0.000		left	1	-0.006	Y	-54	-0.003
			back	44	-0.357	Z	44	-0.357
		GE1{1}	down	50	0.000	X	11	0.031
			rght	11	0.031	Y	-50	0.008
			back		1.019	Z	0	1.019
		GE2{1}	down	50	0.000	X	7	0.031
			rght	7	0.031	Y	-50	-0.008
			forw		0.987	Z	0	-0.987
		GE3{1}	down	50	0.000	X	-8	-0.031
			left	8	0.031	Y	-50	0.008
			back		0.969	Z	0	0.969

S U P P O R T F O R C E S
(Force - lbf , Moment - ft-lb , Tran. - in , Rot. - deg)

Point/ Supp. ID	Connect/ Type	Load Combination	L O C A L Dirn	Force	Deform	G L O B A L Dirn	Force	Deform
		GE4{1}	down	50	0.000	X	-11	-0.031
			left	11	0.031	Y	-50	-0.008
			forw		1.042	Z	0	-1.042
		GE5{1}	down	59	0.000	X	11	0.031
			rght	11	0.031	Y	-59	0.008
			back		1.017	Z	0	1.017
		GE6{1}	down	59	0.000	X	7	0.031
			rght	7	0.031	Y	-59	-0.008
			forw		0.989	Z	0	-0.989
		GE7{1}	down	59	0.000	X	-8	-0.031
			left	8	0.031	Y	-59	0.008
			back		0.967	Z	0	0.967
		GE8{1}	down	59	0.000	X	-11	-0.031
			left	11	0.031	Y	-59	-0.008
			forw		1.044	Z	0	-1.044
		GT1P1{1}	down	55	0.000	X	-1	0.006
			left	1	-0.006	Y	-54	-0.003
			back	44	-0.342	Z	44	-0.342
Tag No.: <None>								
A58		Gravity{1}	down	54	0.000	X		0.023
A58 1	Guide		rght		0.023	Y	-54	-0.004
Stiff	:RIGID		forw		0.551	Z	0	-0.551
		GT1{1}	down	54	0.000	X	1	0.025
Comp.Wt :	0.000		rght	1	0.025	Y	-54	-0.004
			back	44	-0.491	Z	44	-0.491
		GE1{1}	down	50	0.000	X	12	0.031
			rght	12	0.031	Y	-50	0.008
			back		1.019	Z	0	1.019
		GE2{1}	down	50	0.000	X	13	0.031
			rght	13	0.031	Y	-50	-0.008
			forw		0.987	Z	0	-0.987
		GE3{1}	down	50	0.000	X	-13	-0.031
			left	13	0.031	Y	-50	0.008
			back		0.969	Z	0	0.969
		GE4{1}	down	50	0.000	X	-12	-0.031
			left	12	0.031	Y	-50	-0.008
			forw		1.042	Z	0	-1.042
		GE5{1}	down	59	0.000	X	12	0.031
			rght	12	0.031	Y	-59	0.008
			back		1.017	Z	0	1.017

```
-----------------------------------------------------------------------------------------------------------------
Primary Piping
04/24/2020 2018719                                                          BENTLEY
07:34 AM                                                                    AutoPIPE Nuclear 12.00.00.16   RESULT PAGE 115
-----------------------------------------------------------------------------------------------------------------

                                        S U P P O R T    F O R C E S
        ( Force - lbf   , Moment - ft-lb  , Tran. - in  , Rot. - deg   )
 Point/  Connect/    Load                          L O C A L              G L O B A L
 Supp. ID   Type   Combination                Dirn  Force    Deform    Dirn   Force   Deform
 -------- -------- ----------------------     ---- -------- --------   ---- -------- --------
                   GE6{1}                     down       59   0.000      X        13   0.031
                                              rght       13   0.031      Y       -59  -0.008
                                              forw            0.989      Z         0  -0.989

                   GE7{1}                     down       59   0.000      X       -13  -0.031
                                              left       13   0.031      Y       -59   0.008
                                              back            0.967      Z         0   0.967

                   GE8{1}                     down       59   0.000      X       -12  -0.031
                                              left       12   0.031      Y       -59  -0.008
                                              forw            1.044      Z         0  -1.044

                   GT1P1{1}                   down       54   0.000      X         1   0.025
                                              rght        1   0.025      Y       -54  -0.004
                                              back       43  -0.479      Z        44  -0.479

 Tag No.: <None>
 A59               Gravity{1}                 down       55   0.000      X             0.031
 A59  1   Guide                               rght            0.031      Y       -55  -0.004
 Stiff   :RIGID                               forw            0.551      Z         0  -0.551

                   GT1{1}                     down       55   0.000      X        -2   0.028
 Comp.Wt :   0.000                            left        2  -0.028      Y       -56  -0.005
                                              forw       44   0.625      Z       -44  -0.625

                   GE1{1}                     down       51   0.000      X         9   0.031
                                              rght        9   0.031      Y       -51   0.008
                                              back            1.019      Z         0   1.019

                   GE2{1}                     down       51   0.000      X        11   0.031
                                              rght       11   0.031      Y       -51  -0.008
                                              forw            0.987      Z         0  -0.987

                   GE3{1}                     down       51   0.000      X       -10  -0.031
                                              left       10   0.031      Y       -51   0.008
                                              back            0.969      Z         0   0.969

                   GE4{1}                     down       51   0.000      X        -8  -0.031
                                              left        8   0.031      Y       -51  -0.008
                                              forw            1.042      Z         0  -1.042

                   GE5{1}                     down       60   0.000      X         9   0.031
                                              rght        9   0.031      Y       -60   0.008
                                              back            1.017      Z         0   1.017

                   GE6{1}                     down       60   0.000      X        11   0.031
                                              rght       11   0.031      Y       -60  -0.008
                                              forw            0.989      Z         0  -0.989

                   GE7{1}                     down       60   0.000      X       -10  -0.031
                                              left       10   0.031      Y       -60   0.008
                                              back            0.967      Z         0   0.967
```

S U P P O R T F O R C E S
(Force - lbf , Moment - ft-lb , Tran. - in , Rot. - deg)

Point/ Supp. ID	Connect/ Type	Load Combination	L O C A L Dirn	Force	Deform	G L O B A L Dirn	Force	Deform
		GE8{1}	down	60	0.000	X	-8	-0.031
			left	8	0.031	Y	-60	-0.008
			forw		1.044	Z	0	-1.044
		GT1P1{1}	down	55	0.000	X	-2	0.029
			left	2	-0.029	Y	-56	-0.005
			forw	44	0.617	Z	-44	-0.617
Tag No.: <None>								
A60		Gravity{1}	down	51	0.000	X	3	0.031
A60 1	Guide		rght	3	0.031	Y	-51	-0.004
Stiff	:RIGID		forw		0.551	Z	0	-0.551
		GT1{1}	down	51	0.000	X	-9	-0.016
Comp.Wt :	0.000		left	9	0.016	Y	-51	-0.005
			forw	40	0.759	Z	-39	-0.759
		GE1{1}	down	47	0.000	X	-8	-0.031
			left	8	0.031	Y	-47	0.007
			back		1.019	Z	0	1.019
		GE2{1}	down	47	0.000	X	-20	-0.031
			left	20	0.031	Y	-47	-0.007
			forw		0.987	Z	0	-0.987
		GE3{1}	down	47	0.000	X	19	0.031
			rght	19	0.031	Y	-47	0.007
			back		0.968	Z	0	0.968
		GE4{1}	down	47	0.000	X	8	0.031
			rght	8	0.031	Y	-47	-0.007
			forw		1.042	Z	0	-1.042
		GE5{1}	down	56	0.000	X	-8	-0.031
			left	8	0.031	Y	-56	0.007
			back		1.017	Z	0	1.017
		GE6{1}	down	55	0.000	X	-20	-0.031
			left	20	0.031	Y	-55	-0.007
			forw		0.988	Z	0	-0.988
		GE7{1}	down	56	0.000	X	19	0.031
			rght	19	0.031	Y	-56	0.007
			back		0.967	Z	0	0.967
		GE8{1}	down	55	0.000	X	8	0.031
			rght	8	0.031	Y	-55	-0.007
			forw		1.044	Z	0	-1.044
		GT1P1{1}	down	51	0.000	X	-9	-0.015
			left	9	0.015	Y	-51	-0.005
			forw	40	0.754	Z	-39	-0.754

```
-----------------------------------------------------------------------------------------------------------------
Primary Piping
04/24/2020 2018719                                                          BENTLEY
07:34 AM                                                                    AutoPIPE Nuclear 12.00.00.16   RESULT PAGE 117
-----------------------------------------------------------------------------------------------------------------

                                          S U P P O R T    F O R C E S
        ( Force - lbf   , Moment - ft-lb  , Tran. - in  , Rot. - deg   )
 Point/  Connect/    Load                          L O C A L              G L O B A L
 Supp. ID   Type   Combination                Dirn  Force    Deform    Dirn   Force   Deform
 -------- -------- ----------------------     ---- -------- --------   ---- -------- --------
 Tag No.: <None>
 A61                Gravity{1}                down       56   0.000      X             0.018
 A61  1   Guide                               rght            0.018      Y       -56  -0.004
 Stiff   :RIGID                               forw            0.551      Z         0  -0.551

                    GT1{1}                    down       57   0.000      X        36   0.031
 Comp.Wt :   0.000                            rght       36   0.031      Y       -58  -0.006
                                              forw       73   0.884      Z       -73  -0.884

                    GE1{1}                    down       51   0.000      X        45   0.031
                                              rght       45   0.031      Y       -51   0.007
                                              back            1.019      Z         0   1.019

                    GE2{1}                    down       53   0.000      X        87   0.031
                                              rght       87   0.031      Y       -53  -0.007
                                              forw            0.987      Z         0  -0.986

                    GE3{1}                    down       50   0.000      X       -84  -0.031
                                              left       84   0.031      Y       -50   0.006
                                              back            0.968      Z         0   0.968

                    GE4{1}                    down       52   0.000      X       -45  -0.031
                                              left       45   0.031      Y       -52  -0.007
                                              forw            1.042      Z         0  -1.042

                    GE5{1}                    down       61   0.000      X        45   0.031
                                              rght       45   0.031      Y       -61   0.007
                                              back            1.017      Z         0   1.017

                    GE6{1}                    down       62   0.000      X        87   0.031
                                              rght       87   0.031      Y       -62  -0.007
                                              forw            0.988      Z         0  -0.988

                    GE7{1}                    down       60   0.000      X       -84  -0.031
                                              left       84   0.031      Y       -60   0.006
                                              back            0.966      Z         0   0.966

                    GE8{1}                    down       61   0.000      X       -45  -0.031
                                              left       45   0.031      Y       -61  -0.007
                                              forw            1.045      Z         0  -1.045

                    GT1P1{1}                  down       57   0.000      X        36   0.031
                                              rght       36   0.031      Y       -58  -0.006
                                              forw       74   0.883      Z       -73  -0.883

 Tag No.: <None>
 A62                Gravity{1}                down       41   0.000      X            -0.125
 A62  1   Guide                               left            0.125      Y       -41  -0.005
 Stiff   :RIGID                               forw            0.551      Z         0  -0.551

                    GT1{1}                    down       39   0.000      X        22   0.319
 Comp.Wt :   0.000                            rght       22   0.319      Y       -39  -0.009
```

```
-----------------------------------------------------------------------------------------------------------------
Primary Piping
04/24/2020 2018719                                                          BENTLEY
07:34 AM                                                                    AutoPIPE Nuclear 12.00.00.16   RESULT PAGE 118
-----------------------------------------------------------------------------------------------------------------

                                        S U P P O R T    F O R C E S
        ( Force - lbf   , Moment - ft-lb  , Tran. - in  , Rot. - deg   )
 Point/  Connect/    Load                          L O C A L              G L O B A L
 Supp. ID   Type   Combination                Dirn  Force    Deform    Dirn   Force   Deform
 -------- -------- ----------------------     ---- -------- --------   ---- -------- --------
                                              forw       23   1.019      Z       -22  -1.019

                    GE1{1}                    down       39   0.000      X             0.815
                                              rght            0.815      Y       -39   0.009
                                              back            1.019      Z         0   1.019

                    GE2{1}                    down       35   0.000      X         7   0.830
                                              rght        7   0.830      Y       -35  -0.009
                                              forw            0.986      Z         0  -0.986

                    GE3{1}                    down       42   0.000      X       -13  -0.830
                                              left       13   0.830      Y       -42   0.008
                                              back            0.968      Z         0   0.968

                    GE4{1}                    down       38   0.000      X            -0.822
                                              left            0.822      Y       -38  -0.009
                                              forw            1.042      Z         0  -1.042

                    GE5{1}                    down       46   0.000      X             0.815
                                              rght            0.815      Y       -46   0.009
                                              back            1.017      Z         0   1.017

                    GE6{1}                    down       42   0.000      X         6   0.830
                                              rght        6   0.830      Y       -42  -0.009
                                              forw            0.988      Z         0  -0.988

                    GE7{1}                    down       49   0.000      X       -14  -0.830
                                              left       14   0.830      Y       -49   0.008
                                              back            0.966      Z         0   0.966

                    GE8{1}                    down       45   0.000      X            -0.823
                                              left            0.823      Y       -45  -0.009
                                              forw            1.045      Z         0  -1.045

                    GT1P1{1}                  down       39   0.000      X        21   0.316
                                              rght       21   0.316      Y       -39  -0.009
                                              forw       23   1.020      Z       -22  -1.020

 Tag No.: <None>
 A63                Gravity{1}                down       42   0.000      X         0  -0.251
 A63  1   Guide                               rght            0.404      Y       -42  -0.002
 Stiff   :RIGID                               forw            0.251      Z            -0.404

                    GT1{1}                    down       45   0.000      X        44   0.144
 Comp.Wt :   0.000                            rght       50   0.830      Y       -44   0.001
                                              back       43   0.144      Z       -50  -0.830

                    GE1{1}                    down       38   0.000      X         0   1.180
                                              left            0.670      Y       -38   0.009
                                              back            1.180      Z             0.670

                    GE2{1}                    down       42   0.000      X         0   0.836
```

```
-----------------------------------------------------------------------------------------------------------------
Primary Piping
04/24/2020 2018719                                                          BENTLEY
07:34 AM                                                                    AutoPIPE Nuclear 12.00.00.16   RESULT PAGE 119
-----------------------------------------------------------------------------------------------------------------

                                          S U P P O R T    F O R C E S
        ( Force - lbf   , Moment - ft-lb  , Tran. - in  , Rot. - deg   )
 Point/  Connect/    Load                          L O C A L              G L O B A L
 Supp. ID   Type   Combination                Dirn  Force    Deform    Dirn   Force   Deform
 -------- -------- ----------------------     ---- -------- --------   ---- -------- --------
                                              rght       60   0.830      Y       -42   0.007
                                              back            0.836      Z       -60  -0.830

                    GE3{1}                    down       34   0.000      X         0  -0.854
                                              left       54   0.830      Y       -34  -0.007
                                              forw            0.854      Z        54   0.830

                    GE4{1}                    down       38   0.000      X         0  -1.192
                                              rght            0.686      Y       -38  -0.009
                                              forw            1.192      Z            -0.686

                    GE5{1}                    down       45   0.000      X         0   1.179
                                              left            0.668      Y       -45   0.009
                                              back            1.179      Z             0.668

                    GE6{1}                    down       49   0.000      X         0   0.834
                                              rght       60   0.830      Y       -49   0.006
                                              back            0.834      Z       -60  -0.830

                    GE7{1}                    down       41   0.000      X         0  -0.856
                                              left       53   0.830      Y       -41  -0.007
                                              forw            0.856      Z        53   0.830

                    GE8{1}                    down       45   0.000      X         0  -1.193
                                              rght            0.687      Y       -45  -0.009
                                              forw            1.193      Z            -0.687

                    GT1P1{1}                  down       45   0.000      X        44   0.137
                                              rght       51   0.830      Y       -44   0.001
                                              back       43   0.137      Z       -51  -0.830

 Tag No.: <None>
 A64                Gravity{1}                down       58   0.000      X         0  -0.251
 A64  2   Guide                               rght       16   0.031      Y       -58  -0.002
 Stiff   :RIGID                                forw            0.251      Z       -16  -0.031

                    GT1{1}                    down       57   0.000      X        83   0.009
 Comp.Wt :   0.000                            rght       46   0.031      Y       -57   0.000
                                              back       82   0.009      Z       -46  -0.031

                    GE1{1}                    down       54   0.000      X         0   1.180
                                              left       30   0.031      Y       -54   0.009
                                              back            1.180      Z        30   0.031

                    GE2{1}                    down       52   0.000      X         0   0.836
                                              rght       63   0.031      Y       -52   0.007
                                              back            0.836      Z       -63  -0.031

                    GE3{1}                    down       55   0.000      X         0  -0.854
                                              left       65   0.031      Y       -55  -0.007
                                              forw            0.854      Z        65   0.031
```

```
-----------------------------------------------------------------------------------------------------------------
Primary Piping
04/24/2020 2018719                                                          BENTLEY
07:34 AM                                                                    AutoPIPE Nuclear 12.00.00.16   RESULT PAGE 120
-----------------------------------------------------------------------------------------------------------------

                                        S U P P O R T    F O R C E S
        ( Force - lbf   , Moment - ft-lb  , Tran. - in  , Rot. - deg   )
 Point/  Connect/    Load                          L O C A L              G L O B A L
 Supp. ID   Type   Combination                Dirn  Force    Deform    Dirn   Force   Deform
 -------- -------- ----------------------     ---- -------- --------   ---- -------- --------
                   GE4{1}                     down       53   0.000      X         0  -1.192
                                              rght       31   0.031      Y       -53  -0.009
                                              forw            1.192      Z       -31  -0.031

                   GE5{1}                     down       64   0.000      X         0   1.179
                                              left       30   0.031      Y       -64   0.009
                                              back            1.179      Z        30   0.031

                   GE6{1}                     down       62   0.000      X         0   0.834
                                              rght       63   0.031      Y       -62   0.006
                                              back            0.834      Z       -63  -0.031

                   GE7{1}                     down       64   0.000      X         1  -0.856
                                              left       66   0.031      Y       -64  -0.007
                                              forw            0.856      Z        66   0.031

                   GE8{1}                     down       63   0.000      X         0  -1.193
                                              rght       31   0.031      Y       -63  -0.009
                                              forw            1.193      Z       -31  -0.031

                   GT1P1{1}                   down       57   0.000      X        83  -0.001
                                              rght       45   0.031      Y       -57  -0.000
                                              back       82  -0.001      Z       -45  -0.031

 Tag No.: <None>
 A65               Gravity{1}                 down       54   0.000      X         0  -0.251
 A65  2   Guide                               left        7   0.031      Y       -54  -0.002
 Stiff   :RIGID                               forw            0.251      Z         7   0.031

                   GT1{1}                     down       54   0.000      X        64  -0.125
 Comp.Wt :   0.000                            left       25   0.031      Y       -54  -0.001
                                              back       63  -0.125      Z        25   0.031

                   GE1{1}                     down       49   0.000      X         0   1.180
                                              rght        0   0.031      Y       -49   0.008
                                              back            1.180      Z         0  -0.031

                   GE2{1}                     down       49   0.000      X         0   0.836
                                              left       12   0.031      Y       -49   0.006
                                              back            0.836      Z        12   0.031

                   GE3{1}                     down       49   0.000      X         0  -0.855
                                              rght       13   0.031      Y       -49  -0.006
                                              forw            0.855      Z       -13  -0.031

                   GE4{1}                     down       49   0.000      X         0  -1.192
                                              left        1   0.031      Y       -49  -0.008
                                              forw            1.192      Z         1   0.031

                   GE5{1}                     down       58   0.000      X         0   1.178
                                              rght        0   0.031      Y       -58   0.008
                                              back            1.179      Z         0  -0.031
```

S U P P O R T F O R C E S
(Force - lbf , Moment - ft-lb , Tran. - in , Rot. - deg)

Point/ Supp. ID	Connect/ Type	Load Combination	L O C A L Dirn	L O C A L Force	L O C A L Deform	G L O B A L Dirn	G L O B A L Force	G L O B A L Deform
		GE6{1}	down	58	0.000	X	0	0.835
			left	12	0.031	Y	-58	0.006
			back		0.835	Z	12	0.031
		GE7{1}	down	58	0.000	X	0	-0.856
			rght	13	0.031	Y	-58	-0.006
			forw		0.856	Z	-13	-0.031
		GE8{1}	down	58	0.000	X	0	-1.193
			left	1	0.031	Y	-58	-0.008
			forw		1.193	Z	1	0.031
		GT1P1{1}	down	54	0.000	X	63	-0.139
			left	25	0.031	Y	-54	-0.001
			back	63	-0.139	Z	25	0.031
Tag No.: <None>								
A66		Gravity{1}	down	55	0.000	X	0	-0.251
A66 2	Guide		left		0.021	Y	-55	-0.002
Stiff	:RIGID		forw		0.251	Z		0.021
		GT1{1}	down	55	0.000	X	-47	-0.259
Comp.Wt :	0.000		rght	5	-0.020	Y	-55	-0.002
			forw	47	0.259	Z	-5	0.020
		GE1{1}	down	51	0.000	X	0	1.180
			left	9	0.031	Y	-51	0.009
			back		1.180	Z	9	0.031
		GE2{1}	down	51	0.000	X	0	0.836
			rght	11	0.031	Y	-51	0.007
			back		0.836	Z	-11	-0.031
		GE3{1}	down	51	0.000	X	0	-0.855
			left	12	0.031	Y	-51	-0.007
			forw		0.855	Z	12	0.031
		GE4{1}	down	50	0.000	X	0	-1.192
			rght	10	0.031	Y	-50	-0.009
			forw		1.192	Z	-10	-0.031
		GE5{1}	down	60	0.000	X	0	1.178
			left	9	0.031	Y	-60	0.009
			back		1.178	Z	9	0.031
		GE6{1}	down	60	0.000	X	0	0.835
			rght	11	0.031	Y	-60	0.006
			back		0.835	Z	-11	-0.031
		GE7{1}	down	60	0.000	X	0	-0.856
			left	12	0.031	Y	-60	-0.007
			forw		0.856	Z	12	0.031

```
-----------------------------------------------------------------------------------------------------------------
Primary Piping
04/24/2020 2018719                                                          BENTLEY
07:34 AM                                                                    AutoPIPE Nuclear 12.00.00.16   RESULT PAGE 122
-----------------------------------------------------------------------------------------------------------------

                                        S U P P O R T    F O R C E S
        ( Force - lbf   , Moment - ft-lb  , Tran. - in  , Rot. - deg   )
 Point/  Connect/    Load                          L O C A L              G L O B A L
 Supp. ID   Type   Combination                Dirn  Force    Deform    Dirn   Force   Deform
 -------- -------- ----------------------     ---- -------- --------   ---- -------- --------
                   GE8{1}                     down       60   0.000      X         0  -1.193
                                              rght       10   0.031      Y       -60  -0.009
                                              forw            1.193      Z       -10  -0.031

                   GT1P1{1}                   down       55   0.000      X       -44  -0.276
                                              rght        5  -0.018      Y       -55  -0.002
                                              forw       45   0.276      Z        -5   0.018

 Tag No.: <None>
 A67               Gravity{1}                 down       53   0.000      X         0  -0.251
 A67  2   Guide                               left            0.021      Y       -53  -0.002
 Stiff   :RIGID                               forw            0.251      Z             0.021

                   GT1{1}                     down       53   0.000      X       -41  -0.393
 Comp.Wt :   0.000                            rght        7   0.002      Y       -53  -0.003
                                              forw       42   0.393      Z        -7  -0.002

                   GE1{1}                     down       48   0.000      X         0   1.179
                                              left        8   0.031      Y       -48   0.008
                                              back            1.179      Z         8   0.031

                   GE2{1}                     down       49   0.000      X         0   0.836
                                              rght            0.015      Y       -49   0.006
                                              back            0.836      Z            -0.015

                   GE3{1}                     down       48   0.000      X         0  -0.855
                                              left            0.016      Y       -48  -0.006
                                              forw            0.855      Z             0.016

                   GE4{1}                     down       48   0.000      X         0  -1.192
                                              rght        8   0.031      Y       -48  -0.008
                                              forw            1.192      Z        -8  -0.031

                   GE5{1}                     down       57   0.000      X         0   1.178
                                              left        8   0.031      Y       -57   0.008
                                              back            1.178      Z         8   0.031

                   GE6{1}                     down       57   0.000      X         0   0.835
                                              rght            0.015      Y       -57   0.006
                                              back            0.835      Z            -0.015

                   GE7{1}                     down       57   0.000      X         0  -0.856
                                              left            0.016      Y       -57  -0.006
                                              forw            0.856      Z             0.016

                   GE8{1}                     down       57   0.000      X         0  -1.193
                                              rght        8   0.031      Y       -57  -0.008
                                              forw            1.193      Z        -8  -0.031

                   GT1P1{1}                   down       53   0.000      X       -41  -0.414
                                              rght        7   0.006      Y       -53  -0.003
                                              forw       42   0.414      Z        -7  -0.006
```

```
-----------------------------------------------------------------------------------------------------------------
Primary Piping
04/24/2020 2018719                                                          BENTLEY
07:34 AM                                                                    AutoPIPE Nuclear 12.00.00.16   RESULT PAGE 123
-----------------------------------------------------------------------------------------------------------------

                                          S U P P O R T    F O R C E S
        ( Force - lbf   , Moment - ft-lb  , Tran. - in  , Rot. - deg   )
 Point/  Connect/    Load                          L O C A L              G L O B A L
 Supp. ID   Type   Combination                Dirn  Force    Deform    Dirn   Force   Deform
 -------- -------- ----------------------     ---- -------- --------   ---- -------- --------
 Tag No.: <None>
 A68                Gravity{1}                down       58   0.000      X         0  -0.251
 A68  2   Guide                               left        2   0.031      Y       -58  -0.002
 Stiff   :RIGID                               forw           0.251      Z         2   0.031

                    GT1{1}                    down       58   0.000      X       -68  -0.525
 Comp.Wt :   0.000                            left       27   0.031      Y       -58  -0.003
                                              forw       68   0.525      Z        27   0.031

                    GE1{1}                    down       52   0.000      X         0   1.179
                                              rght        1   0.031      Y       -52   0.008
                                              back           1.179      Z        -1  -0.031

                    GE2{1}                    down       52   0.000      X         0   0.836
                                              rght       41   0.031      Y       -52   0.006
                                              back           0.836      Z       -41  -0.031

                    GE3{1}                    down       53   0.000      X         0  -0.855
                                              left       41   0.031      Y       -53  -0.006
                                              forw           0.855      Z        41   0.031

                    GE4{1}                    down       53   0.000      X         0  -1.192
                                              left        2   0.031      Y       -53  -0.008
                                              forw           1.192      Z         2   0.031

                    GE5{1}                    down       62   0.000      X         0   1.178
                                              rght        1   0.031      Y       -62   0.008
                                              back           1.178      Z        -1  -0.031

                    GE6{1}                    down       62   0.000      X         0   0.835
                                              rght       41   0.031      Y       -62   0.006
                                              back           0.835      Z       -41  -0.031

                    GE7{1}                    down       63   0.000      X         0  -0.856
                                              left       41   0.031      Y       -63  -0.006
                                              forw           0.856      Z        41   0.031

                    GE8{1}                    down       63   0.000      X         0  -1.193
                                              left        2   0.031      Y       -63  -0.008
                                              forw           1.193      Z         2   0.031

                    GT1P1{1}                  down       58   0.000      X       -68  -0.548
                                              left       28   0.031      Y       -59  -0.004
                                              forw       69   0.548      Z        28   0.031

 Tag No.: <None>
 A69                Gravity{1}                down       41   0.000      X         0  -0.251
 A69  1   Guide                               left           0.020      Y       -41  -0.002
 Stiff   :RIGID                               forw           0.251      Z             0.020

                    GT1{1}                    down       40   0.000      X       -27  -0.659
 Comp.Wt :   0.000                            left       16   0.250      Y       -40  -0.006
```

S U P P O R T F O R C E S
(Force - lbf , Moment - ft-lb , Tran. - in , Rot. - deg)

Point/ Supp. ID	Connect/ Type	Load Combination	L O C A L Dirn	Force	Deform	G L O B A L Dirn	Force	Deform
			forw	28	0.659	Z	16	0.250
		GE1{1}	down	40	0.000	X	0	1.179
			left		0.089	Y	-40	0.010
			back		1.179	Z		0.089
		GE2{1}	down	40	0.000	X	0	0.836
			rght		0.273	Y	-40	0.007
			back		0.836	Z		-0.273
		GE3{1}	down	36	0.000	X	0	-0.855
			left		0.266	Y	-36	-0.007
			forw		0.855	Z		0.266
		GE4{1}	down	36	0.000	X	0	-1.192
			rght		0.097	Y	-36	-0.010
			forw		1.192	Z		-0.097
		GE5{1}	down	47	0.000	X	0	1.178
			left		0.088	Y	-47	0.010
			back		1.178	Z		0.088
		GE6{1}	down	47	0.000	X	0	0.835
			rght		0.274	Y	-47	0.007
			back		0.835	Z		-0.274
		GE7{1}	down	43	0.000	X	0	-0.856
			left		0.266	Y	-43	-0.007
			forw		0.856	Z		0.266
		GE8{1}	down	43	0.000	X	0	-1.193
			rght		0.097	Y	-43	-0.010
			forw		1.193	Z		-0.097
		GT1P1{1}	down	40	0.000	X	-28	-0.686
			left	15	0.259	Y	-40	-0.006
			forw	28	0.686	Z	15	0.259
Tag No.: <None>								
A70		Gravity{1}	down	43	0.000	X		-0.196
A70 1	Guide		left		0.196	Y	-43	-0.000
Stiff	:RIGID		forw		0.021	Z	0	-0.021
		GT1{1}	down	44	0.000	X	-33	-0.543
Comp.Wt :	0.000		left	33	0.543	Y	-44	0.001
			back	13	0.114	Z	13	0.114
		GE1{1}	down	37	0.000	X	41	0.830
			rght	41	0.830	Y	-37	0.002
			back		0.361	Z	0	0.361
		GE2{1}	down	37	0.000	X		0.693

S U P P O R T F O R C E S
(Force - lbf , Moment - ft-lb , Tran. - in , Rot. - deg)

Point/ Supp. ID	Connect/ Type	Load Combination	L O C A L Dirn	Force	Deform	G L O B A L Dirn	Force	Deform
			rght		0.693	Y	-37	-0.001
			forw		0.208	Z	0	-0.208
		GE3{1}	down	41	0.000	X		-0.705
			left		0.705	Y	-41	0.001
			back		0.196	Z	0	0.196
		GE4{1}	down	41	0.000	X	-47	-0.830
			left	47	0.830	Y	-41	-0.002
			forw		0.380	Z	0	-0.380
		GE5{1}	down	44	0.000	X	41	0.830
			rght	41	0.830	Y	-44	0.002
			back		0.359	Z	0	0.359
		GE6{1}	down	44	0.000	X		0.692
			rght		0.692	Y	-44	-0.001
			forw		0.209	Z	0	-0.209
		GE7{1}	down	48	0.000	X		-0.706
			left		0.706	Y	-48	0.001
			back		0.195	Z	0	0.195
		GE8{1}	down	48	0.000	X	-48	-0.830
			left	48	0.830	Y	-48	-0.002
			forw		0.382	Z	0	-0.382
		GT1P1{1}	down	45	0.000	X	-33	-0.564
			left	33	0.564	Y	-44	0.001
			back	13	0.118	Z	13	0.118
Tag No.: <None>								
A71		Gravity{1}	down	55	0.000	X	-9	-0.031
A71 2	Guide		left	9	0.031	Y	-55	-0.000
Stiff	:RIGID		forw		0.021	Z	0	-0.021
		GT1{1}	down	55	0.000	X	-47	-0.031
Comp.Wt : 0.000			left	47	0.031	Y	-55	-0.000
			back	25	-0.020	Z	25	-0.020
		GE1{1}	down	52	0.000	X	71	0.031
			rght	71	0.031	Y	-52	0.002
			back		0.360	Z	0	0.360
		GE2{1}	down	52	0.000	X	45	0.031
			rght	45	0.031	Y	-52	-0.001
			forw		0.208	Z	0	-0.208
		GE3{1}	down	50	0.000	X	-46	-0.031
			left	46	0.031	Y	-50	0.001
			back		0.196	Z	0	0.196

S U P P O R T F O R C E S
(Force - lbf , Moment - ft-lb , Tran. - in , Rot. - deg)

Point/ Supp. ID	Connect/ Type	Load Combination	L O C A L Dirn	Force	Deform	G L O B A L Dirn	Force	Deform
		GE4{1}	down	50	0.000	X	-71	-0.031
			left	71	0.031	Y	-50	-0.003
			forw		0.380	Z	0	-0.380
		GE5{1}	down	61	0.000	X	71	0.031
			rght	71	0.031	Y	-61	0.002
			back		0.359	Z	0	0.359
		GE6{1}	down	61	0.000	X	45	0.031
			rght	45	0.031	Y	-61	-0.001
			forw		0.209	Z	0	-0.209
		GE7{1}	down	60	0.000	X	-46	-0.031
			left	46	0.031	Y	-60	0.001
			back		0.195	Z	0	0.195
		GE8{1}	down	59	0.000	X	-71	-0.031
			left	71	0.031	Y	-59	-0.003
			forw		0.382	Z	0	-0.382
		GT1P1{1}	down	55	0.000	X	-49	-0.031
			left	49	0.031	Y	-55	-0.000
			back	26	-0.020	Z	26	-0.020
Tag No.: <None>								
A72		Gravity{1}	down	38	0.000	X		-0.003
A72 1	Guide		left		0.003	Y	-38	-0.000
Stiff	:RIGID		forw		0.021	Z	0	-0.021
		GT1{1}	down	36	0.000	X	-21	-0.127
Comp.Wt :	0.000		left	21	0.127	Y	-36	-0.001
			forw	19	0.134	Z	-19	-0.134
		GE1{1}	down	36	0.000	X		0.060
			rght		0.060	Y	-36	0.002
			back		0.360	Z	0	0.360
		GE2{1}	down	34	0.000	X		-0.078
			left		0.078	Y	-34	-0.001
			forw		0.208	Z	0	-0.208
		GE3{1}	down	35	0.000	X		0.075
			rght		0.075	Y	-35	0.001
			back		0.196	Z	0	0.196
		GE4{1}	down	33	0.000	X		-0.066
			left		0.066	Y	-33	-0.002
			forw		0.380	Z	0	-0.380
		GE5{1}	down	42	0.000	X		0.060
			rght		0.060	Y	-42	0.002
			back		0.359	Z	0	0.359

S U P P O R T F O R C E S
(Force - lbf , Moment - ft-lb , Tran. - in , Rot. - deg)

Point/ Supp. ID	Connect/ Type	Load Combination	L O C A L Dirn	Force	Deform	G L O B A L Dirn	Force	Deform
		GE6{1}	down	40	0.000	X		-0.078
			left		0.078	Y	-40	-0.001
			forw		0.209	Z	0	-0.209
		GE7{1}	down	41	0.000	X		0.075
			rght		0.075	Y	-41	0.001
			back		0.195	Z	0	0.195
		GE8{1}	down	40	0.000	X		-0.066
			left		0.066	Y	-40	-0.002
			forw		0.381	Z	0	-0.381
		GT1P1{1}	down	36	0.000	X	-21	-0.129
			left	21	0.129	Y	-36	-0.001
			forw	19	0.137	Z	-19	-0.137
Tag No.: <None>								
A73		Gravity{1}	down	34	0.000	X	-1	0.000
A73	1 Guide		left		0.013	Y	-34	-0.000
Stiff	:RIGID		forw		0.000	Z		-0.013
		GT1{1}	down	37	0.000	X	-18	-0.082
Comp.Wt :	0.000		left	24	0.128	Y	-36	0.001
			back	17	0.082	Z	-24	-0.128
		GE1{1}	down	29	0.000	X	0	-0.000
			rght		0.225	Y	-29	0.000
			back		0.000	Z		0.225
		GE2{1}	down	32	0.000	X	-1	0.000
			left		0.110	Y	-32	-0.000
			forw		0.000	Z		-0.110
		GE3{1}	down	30	0.000	X	-1	0.000
			rght		0.103	Y	-30	-0.000
			forw		0.000	Z		0.103
		GE4{1}	down	33	0.000	X	-1	0.000
			left		0.235	Y	-33	-0.000
			forw		0.000	Z		-0.235
		GE5{1}	down	35	0.000	X	-1	-0.000
			rght		0.224	Y	-35	0.000
			back		0.000	Z		0.224
		GE6{1}	down	38	0.000	X	-1	0.000
			left		0.111	Y	-38	-0.000
			forw		0.000	Z		-0.111
		GE7{1}	down	36	0.000	X	-1	0.000
			rght		0.102	Y	-36	-0.000
			forw		0.000	Z		0.102

```
-----------------------------------------------------------------------------------------------------------------
Primary Piping
04/24/2020 2018719                                                          BENTLEY
07:34 AM                                                                    AutoPIPE Nuclear 12.00.00.16   RESULT PAGE 128
-----------------------------------------------------------------------------------------------------------------

                                        S U P P O R T    F O R C E S
        ( Force - lbf   , Moment - ft-lb  , Tran. - in  , Rot. - deg   )
 Point/  Connect/    Load                          L O C A L              G L O B A L
 Supp. ID   Type   Combination                Dirn  Force    Deform    Dirn   Force   Deform
 -------- -------- ----------------------     ---- -------- --------   ---- -------- --------
                   GE8{1}                     down       39   0.000      X        -1   0.000
                                              left            0.236      Y       -39  -0.000
                                              forw            0.000      Z            -0.236

                   GT1P1{1}                   down       37   0.000      X       -18  -0.084
                                              left       24   0.131      Y       -36   0.001
                                              back       17   0.084      Z       -24  -0.131

 Tag No.: <None>
 B01               Gravity{1}                 down       16   0.000      X             0.000
 B01  1   V - Stop                            -Z              0.000      Y       -16  -0.000
 Stiff   :RIGID                               +X              0.000      Z             0.000

                   GT1{1}                     up              0.009      X            -0.022
 Comp.Wt :   0.000                            -Z              0.000      Y             0.009
                                              -X              0.022      Z             0.000

                   GE1{1}                     down       13   0.000      X             0.000
                                              -Z              0.000      Y       -13  -0.000
                                              +X              0.000      Z             0.000

                   GE2{1}                     down       13   0.000      X             0.000
                                              -Z              0.000      Y       -13  -0.000
                                              +X              0.000      Z            -0.000

                   GE3{1}                     down       15   0.000      X             0.000
                                              -Z              0.000      Y       -15  -0.000
                                              +X              0.000      Z             0.000

                   GE4{1}                     down       15   0.000      X             0.000
                                              -Z              0.000      Y       -15  -0.000
                                              +X              0.000      Z            -0.000

                   GE5{1}                     down       16   0.000      X             0.000
                                              -Z              0.000      Y       -16  -0.000
                                              +X              0.000      Z             0.000

                   GE6{1}                     down       16   0.000      X             0.000
                                              -Z              0.000      Y       -16  -0.000
                                              +X              0.000      Z            -0.000

                   GE7{1}                     down       18   0.000      X             0.000
                                              -Z              0.000      Y       -18  -0.000
                                              +X              0.000      Z             0.000

                   GE8{1}                     down       18   0.000      X             0.000
                                              -Z              0.000      Y       -18  -0.000
                                              +X              0.000      Z            -0.000

                   GT1P1{1}                   up              0.009      X            -0.023
                                              -Z              0.000      Y             0.009
                                              -X              0.023      Z             0.000
```

S U P P O R T F O R C E S
(Force - lbf , Moment - ft-lb , Tran. - in , Rot. - deg)

Point/ Supp. ID	Connect/ Type	Load Combination	L O C A L Dirn	Force	Deform	G L O B A L Dirn	Force	Deform
Tag No.: <None>								
B01		Gravity{1}	up	0	0.000	X		0.000
B01	2 Guide		left		0.000	Y		-0.000
Stiff	:RIGID		back		0.000	Z	0	0.000
		GT1{1}	up	0	0.000	X	0	-0.022
Comp.Wt :	0.000		rght	0	0.022	Y	0	0.009
			back	0	0.009	Z	0	0.000
		GE1{1}	up	2	0.000	X		0.000
			left		0.000	Y		-0.000
			back		0.000	Z	2	0.000
		GE2{1}	down	2	0.000	X		0.000
			left		0.000	Y		-0.000
			back		0.000	Z	-2	-0.000
		GE3{1}	up	2	0.000	X		0.000
			left		0.000	Y		-0.000
			back		0.000	Z	2	0.000
		GE4{1}	down	2	0.000	X		0.000
			left		0.000	Y		-0.000
			back		0.000	Z	-2	-0.000
		GE5{1}	up	2	0.000	X		0.000
			left		0.000	Y		-0.000
			back		0.000	Z	2	0.000
		GE6{1}	down	2	0.000	X		0.000
			left		0.000	Y		-0.000
			back		0.000	Z	-2	-0.000
		GE7{1}	up	2	0.000	X		0.000
			left		0.000	Y		-0.000
			back		0.000	Z	2	0.000
		GE8{1}	down	2	0.000	X		0.000
			left		0.000	Y		-0.000
			back		0.000	Z	-2	-0.000
		GT1P1{1}	up	0	0.000	X	0	-0.023
			rght	0	0.023	Y	0	0.009
			back	0	0.009	Z	0	0.000
Tag No.: <None>								
B22		Gravity{1}	down	150	0.000	X		0.000
B22	2 Guide		left		0.004	Y	-150	-0.000
Stiff	:RIGID		forw		0.000	Z		-0.004
		GT1{1}	down	102	0.000	X	81	0.067
Comp.Wt :	0.000		left	5	0.008	Y	-102	-0.000

S U P P O R T F O R C E S
(Force - lbf , Moment - ft-lb , Tran. - in , Rot. - deg)

Point/ Supp. ID	Connect/ Type	Load Combination	L O C A L Dirn	Force	Deform	G L O B A L Dirn	Force	Deform
			forw	81	0.067	Z	-5	-0.008
		GE1{1}	down	121	0.000	X		0.000
			left		0.027	Y	-121	-0.000
			forw		0.000	Z		-0.027
		GE2{1}	down	163	0.000	X		0.000
			rght		0.034	Y	-163	-0.000
			forw		0.000	Z		0.034
		GE3{1}	down	106	0.000	X		-0.000
			left		0.031	Y	-106	-0.000
			back		0.000	Z		-0.031
		GE4{1}	down	148	0.000	X		0.000
			rght		0.030	Y	-148	-0.000
			forw		0.000	Z		0.030
		GE5{1}	down	144	0.000	X		0.000
			left		0.027	Y	-144	-0.000
			forw		0.000	Z		-0.027
		GE6{1}	down	187	0.000	X		0.000
			rght		0.035	Y	-187	-0.000
			forw		0.000	Z		0.035
		GE7{1}	down	130	0.000	X		-0.000
			left		0.031	Y	-130	-0.000
			back		0.000	Z		-0.031
		GE8{1}	down	172	0.000	X		0.000
			rght		0.030	Y	-172	-0.000
			forw		0.000	Z		0.030
		GT1P1{1}	down	101	0.000	X	81	0.069
			left	4	0.008	Y	-101	-0.000
			forw	81	0.069	Z	-4	-0.008
Tag No.: <None>								
B23		Gravity{1}	down	130	0.000	X	-21	0.000
B23 2	Guide		left	39	0.156	Y	-128	-0.000
Stiff	:RIGID		forw		0.000	Z	-39	-0.156
		GT1{1}	down	157	0.000	X	83	0.240
Comp.Wt :	0.000		rght	61	-0.022	Y	-173	-0.039
			forw	110	0.243	Z	61	-0.022
		GE1{1}	down	142	0.000	X	-23	0.000
			rght	220	0.156	Y	-140	-0.000
			forw		0.000	Z	220	0.156
		GE2{1}	down	98	0.000	X	-16	0.001

```
-----------------------------------------------------------------------------------------------------------------
Primary Piping
04/24/2020 2018719                                                          BENTLEY
07:34 AM                                                                    AutoPIPE Nuclear 12.00.00.16   RESULT PAGE 131
-----------------------------------------------------------------------------------------------------------------

                                        S U P P O R T    F O R C E S
        ( Force - lbf   , Moment - ft-lb  , Tran. - in  , Rot. - deg   )
 Point/  Connect/    Load                          L O C A L              G L O B A L
 Supp. ID   Type   Combination                Dirn  Force    Deform    Dirn   Force   Deform
 -------- -------- ----------------------     ---- -------- --------   ---- -------- --------
                                              left      246   0.156      Y       -97  -0.000
                                              forw            0.001      Z      -246  -0.156

                    GE3{1}                    down      152   0.000      X       -25  -0.000
                                              rght      234   0.156      Y      -150   0.000
                                              back            0.000      Z       234   0.156

                    GE4{1}                    down      108   0.000      X       -17   0.000
                                              left      230   0.156      Y      -106  -0.000
                                              forw            0.000      Z      -230  -0.156

                    GE5{1}                    down      168   0.000      X       -27   0.000
                                              rght      220   0.156      Y      -166  -0.000
                                              forw            0.000      Z       220   0.156

                    GE6{1}                    down      121   0.000      X       -20   0.001
                                              left      247   0.156      Y      -120  -0.000
                                              forw            0.001      Z      -247  -0.156

                    GE7{1}                    down      177   0.000      X       -29  -0.000
                                              rght      231   0.156      Y      -175   0.000
                                              back            0.000      Z       231   0.156

                    GE8{1}                    down      131   0.000      X       -21   0.001
                                              left      231   0.156      Y      -129  -0.000
                                              forw            0.001      Z      -231  -0.156

                    GT1P1{1}                  down      158   0.000      X        83   0.246
                                              rght       62  -0.016      Y      -173  -0.040
                                              forw      110   0.249      Z        62  -0.016

 Tag No.: <None>
 B24                Gravity{1}                down       90   0.000      X       -15   0.000
 B24  2   Guide                               left            0.422      Y       -89  -0.000
 Stiff   :RIGID                                forw            0.000      Z            -0.422

                    GT1{1}                    down        7   0.000      X         2   0.355
 Comp.Wt :   0.000                            rght        4   0.010      Y        -7  -0.059
                                              forw        4   0.360      Z         4   0.010

                    GE1{1}                    up              0.003      X             0.001
                                              rght            0.914      Y             0.003
                                              forw            0.000      Z             0.914

                    GE2{1}                    down      130   0.000      X       -21   0.001
                                              left            1.005      Y      -128  -0.000
                                              forw            0.001      Z            -1.005

                    GE3{1}                    up              0.002      X             0.000
                                              rght            0.964      Y             0.002
                                              back            0.000      Z             0.964
```

S U P P O R T F O R C E S
(Force - lbf , Moment - ft-lb , Tran. - in , Rot. - deg)

Point/ Supp. ID	Connect/ Type	Load Combination	L O C A L Dirn	Force	Deform	G L O B A L Dirn	Force	Deform
		GE4{1}	down	131	0.000	X	-21	0.001
			left		0.947	Y	-129	-0.000
			forw		0.001	Z		-0.947
		GE5{1}	down	6	0.000	X	-1	0.000
			rght		0.911	Y	-6	-0.000
			forw		0.000	Z		0.911
		GE6{1}	down	141	0.000	X	-23	0.001
			left		1.008	Y	-139	-0.000
			forw		0.001	Z		-1.008
		GE7{1}	down	9	0.000	X	-1	-0.000
			rght		0.957	Y	-9	0.000
			back		0.000	Z		0.957
		GE8{1}	down	142	0.000	X	-23	0.001
			left		0.950	Y	-140	-0.000
			forw		0.001	Z		-0.950
		GT1P1{1}	down	5	0.000	X	2	0.364
			rght	3	0.021	Y	-5	-0.060
			forw	3	0.369	Z	3	0.021
Tag No.: <None>								
B25		Gravity{1}	down	77	0.000	X		-0.087
B25 2	Guide		left		0.087	Y	-77	-0.015
Stiff	:RIGID		forw		0.524	Z	2	-0.524
		GT1{1}	down	176	0.000	X	98	0.302
Comp.Wt : 0.000			rght	98	0.302	Y	-173	-0.003
			back	102	-0.120	Z	107	-0.120
		GE1{1}	down	143	0.000	X		0.187
			rght		0.187	Y	-143	0.034
			back		1.175	Z	4	1.174
		GE2{1}	down	24	0.000	X		-0.211
			left		0.211	Y	-24	-0.038
			forw		1.299	Z	1	-1.298
		GE3{1}	down	148	0.000	X		0.204
			rght		0.204	Y	-148	0.036
			back		1.245	Z	4	1.244
		GE4{1}	down	28	0.000	X		-0.193
			left		0.193	Y	-28	-0.035
			forw		1.218	Z	1	-1.218
		GE5{1}	down	163	0.000	X		0.187
			rght		0.187	Y	-163	0.034
			back		1.171	Z	5	1.170

```
-----------------------------------------------------------------------------------------------------------------
Primary Piping
04/24/2020 2018719                                                          BENTLEY
07:34 AM                                                                    AutoPIPE Nuclear 12.00.00.16   RESULT PAGE 133
-----------------------------------------------------------------------------------------------------------------

                                          S U P P O R T    F O R C E S
        ( Force - lbf   , Moment - ft-lb  , Tran. - in  , Rot. - deg   )
 Point/  Connect/    Load                          L O C A L              G L O B A L
 Supp. ID   Type   Combination                Dirn  Force    Deform    Dirn   Force   Deform
 -------- -------- ----------------------     ---- -------- --------   ---- -------- --------
                   GE6{1}                     down       39   0.000      X            -0.212
                                              left            0.212      Y       -39  -0.038
                                              forw            1.303      Z         1  -1.302

                   GE7{1}                     down      166   0.000      X             0.202
                                              rght            0.202      Y      -166   0.036
                                              back            1.235      Z         5   1.234

                   GE8{1}                     down       44   0.000      X            -0.194
                                              left            0.194      Y       -44  -0.035
                                              forw            1.222      Z         1  -1.222

                   GT1P1{1}                   down      178   0.000      X        99   0.311
                                              rght       99   0.311      Y      -175  -0.003
                                              back      103  -0.110      Z       108  -0.110

 Tag No.: <None>
 B26               Gravity{1}                 down      124   0.000      X        -7  -0.156
 B26  1   Guide                               left        7   0.156      Y      -123  -0.015
 Stiff   :RIGID                               forw            0.524      Z         4  -0.524

                   GT1{1}                     down       97   0.000      X        35  -0.019
 Comp.Wt :   0.000                            rght       35  -0.019      Y       -95  -0.007
                                              back       69  -0.255      Z        72  -0.255

                   GE1{1}                     down      106   0.000      X       125   0.156
                                              rght      125   0.156      Y      -106   0.034
                                              back            1.175      Z         3   1.175

                   GE2{1}                     down      116   0.000      X       -27  -0.156
                                              left       27   0.156      Y      -116  -0.038
                                              forw            1.299      Z         3  -1.298

                   GE3{1}                     down      105   0.000      X        21   0.156
                                              rght       21   0.156      Y      -105   0.036
                                              back            1.245      Z         3   1.245

                   GE4{1}                     down      116   0.000      X      -129  -0.156
                                              left      129   0.156      Y      -116  -0.035
                                              forw            1.219      Z         3  -1.218

                   GE5{1}                     down      125   0.000      X       124   0.156
                                              rght      124   0.156      Y      -125   0.034
                                              back            1.171      Z         4   1.170

                   GE6{1}                     down      136   0.000      X       -28  -0.156
                                              left       28   0.156      Y      -136  -0.038
                                              forw            1.303      Z         4  -1.302

                   GE7{1}                     down      124   0.000      X        20   0.156
                                              rght       20   0.156      Y      -124   0.036
                                              back            1.235      Z         4   1.234
```

```
-----------------------------------------------------------------------------------------------------------------
Primary Piping
04/24/2020 2018719                                                          BENTLEY
07:34 AM                                                                    AutoPIPE Nuclear 12.00.00.16   RESULT PAGE 134
-----------------------------------------------------------------------------------------------------------------

                                        S U P P O R T    F O R C E S
        ( Force - lbf   , Moment - ft-lb  , Tran. - in  , Rot. - deg   )
 Point/  Connect/    Load                          L O C A L              G L O B A L
 Supp. ID   Type   Combination                Dirn  Force    Deform    Dirn   Force   Deform
 -------- -------- ----------------------     ---- -------- --------   ---- -------- --------
                   GE8{1}                     down      136   0.000      X      -129  -0.156
                                              left      129   0.156      Y      -136  -0.035
                                              forw            1.222      Z         4  -1.222

                   GT1P1{1}                   down       96   0.000      X        35  -0.014
                                              rght       35  -0.014      Y       -94  -0.007
                                              back       69  -0.248      Z        71  -0.248

 Tag No.: <None>
 B28               Gravity{1}                 down      115   0.000      X            -0.122
 B28  1   Guide                               left            0.122      Y      -115  -0.015
 Stiff   :RIGID                               forw            0.524      Z         3  -0.524

                   GT1{1}                     down      123   0.000      X        11  -0.106
 Comp.Wt :   0.000                            rght       11  -0.106      Y      -120  -0.011
                                              back       98  -0.390      Z       101  -0.390

                   GE1{1}                     down      106   0.000      X             0.148
                                              rght            0.148      Y      -106   0.034
                                              back            1.175      Z         3   1.175

                   GE2{1}                     down      105   0.000      X             0.057
                                              rght            0.057      Y      -105  -0.038
                                              forw            1.299      Z         3  -1.299

                   GE3{1}                     down      107   0.000      X            -0.055
                                              left            0.055      Y      -107   0.036
                                              back            1.245      Z         3   1.245

                   GE4{1}                     down      105   0.000      X            -0.144
                                              left            0.144      Y      -105  -0.035
                                              forw            1.219      Z         3  -1.218

                   GE5{1}                     down      126   0.000      X             0.149
                                              rght            0.149      Y      -126   0.034
                                              back            1.171      Z         4   1.171

                   GE6{1}                     down      124   0.000      X             0.057
                                              rght            0.057      Y      -124  -0.038
                                              forw            1.303      Z         4  -1.303

                   GE7{1}                     down      126   0.000      X            -0.053
                                              left            0.053      Y      -126   0.036
                                              back            1.235      Z         4   1.234

                   GE8{1}                     down      125   0.000      X            -0.144
                                              left            0.144      Y      -124  -0.035
                                              forw            1.222      Z         4  -1.222

                   GT1P1{1}                   down      123   0.000      X        12  -0.104
                                              rght       12  -0.104      Y      -120  -0.011
                                              back       98  -0.386      Z       101  -0.386
```

```
-----------------------------------------------------------------------------------------------------------------
Primary Piping
04/24/2020 2018719                                                          BENTLEY
07:34 AM                                                                    AutoPIPE Nuclear 12.00.00.16   RESULT PAGE 135
-----------------------------------------------------------------------------------------------------------------

                                          S U P P O R T    F O R C E S
        ( Force - lbf   , Moment - ft-lb  , Tran. - in  , Rot. - deg   )
 Point/  Connect/    Load                          L O C A L              G L O B A L
 Supp. ID   Type   Combination                Dirn  Force    Deform    Dirn   Force   Deform
 -------- -------- ----------------------     ---- -------- --------   ---- -------- --------
 Tag No.: <None>
 B29                Gravity{1}                down      111   0.000      X            -0.050
 B29  1   Guide                               left            0.050      Y      -111  -0.016
 Stiff   :RIGID                               forw            0.524      Z         3  -0.524

                    GT1{1}                    down      108   0.000      X       -14  -0.050
 Comp.Wt :   0.000                            left       14   0.050      Y      -107  -0.016
                                              back       11  -0.524      Z        15  -0.524

                    GE1{1}                    down      108   0.000      X        11   0.156
                                              rght       11   0.156      Y      -107   0.035
                                              back            1.175      Z         3   1.175

                    GE2{1}                    down      100   0.000      X             0.128
                                              rght            0.128      Y      -100  -0.039
                                              forw            1.299      Z         3  -1.299

                    GE3{1}                    down      106   0.000      X            -0.131
                                              left            0.131      Y      -106   0.037
                                              back            1.246      Z         3   1.245

                    GE4{1}                    down       99   0.000      X       -14  -0.156
                                              left       14   0.156      Y       -99  -0.037
                                              forw            1.219      Z         3  -1.218

                    GE5{1}                    down      126   0.000      X        11   0.156
                                              rght       11   0.156      Y      -126   0.035
                                              back            1.171      Z         4   1.171

                    GE6{1}                    down      118   0.000      X             0.127
                                              rght            0.127      Y      -118  -0.039
                                              forw            1.303      Z         4  -1.303

                    GE7{1}                    down      125   0.000      X            -0.129
                                              left            0.129      Y      -125   0.037
                                              back            1.235      Z         4   1.234

                    GE8{1}                    down      118   0.000      X       -14  -0.156
                                              left       14   0.156      Y      -117  -0.037
                                              forw            1.222      Z         4  -1.222

                    GT1P1{1}                  down      108   0.000      X       -15  -0.050
                                              left       15   0.050      Y      -107  -0.016
                                              back       14  -0.524      Z        18  -0.524

 Tag No.: <None>
 B31                Gravity{1}                down      133   0.000      X             0.014
 B31  1   Guide                               rght            0.014      Y      -133  -0.015
 Stiff   :RIGID                               forw            0.524      Z         4  -0.524

                    GT1{1}                    down      138   0.000      X       -75  -0.110
 Comp.Wt :   0.000                            left       75   0.110      Y      -140  -0.019
```

```
-----------------------------------------------------------------------------------------------------------------
Primary Piping
04/24/2020 2018719                                                    BENTLEY
07:34 AM                                                              AutoPIPE Nuclear 12.00.00.16   RESULT PAGE 136
-----------------------------------------------------------------------------------------------------------------

                                        S U P P O R T    F O R C E S
        ( Force - lbf   , Moment - ft-lb  , Tran. - in  , Rot. - deg   )
 Point/  Connect/    Load                          L O C A L              G L O B A L
 Supp. ID   Type   Combination                Dirn  Force    Deform    Dirn   Force   Deform
 -------- -------- ----------------------     ---- -------- --------   ---- -------- --------
                                              forw       81   0.659      Z       -77  -0.658

                    GE1{1}                    down      107   0.000      X        40   0.156
                                              rght       40   0.156      Y      -107   0.035
                                              back            1.175      Z         3   1.175

                    GE2{1}                    down      126   0.000      X        83   0.156
                                              rght       83   0.156      Y      -126  -0.038
                                              forw            1.299      Z         4  -1.299

                    GE3{1}                    down      111   0.000      X       -84  -0.156
                                              left       84   0.156      Y      -111   0.037
                                              back            1.246      Z         3   1.245

                    GE4{1}                    down      129   0.000      X       -38  -0.156
                                              left       38   0.156      Y      -129  -0.036
                                              forw            1.219      Z         4  -1.218

                    GE5{1}                    down      129   0.000      X        40   0.156
                                              rght       40   0.156      Y      -129   0.035
                                              back            1.171      Z         4   1.171

                    GE6{1}                    down      147   0.000      X        83   0.156
                                              rght       83   0.156      Y      -147  -0.038
                                              forw            1.303      Z         4  -1.303

                    GE7{1}                    down      132   0.000      X       -85  -0.156
                                              left       85   0.156      Y      -132   0.036
                                              back            1.235      Z         4   1.235

                    GE8{1}                    down      150   0.000      X       -38  -0.156
                                              left       38   0.156      Y      -150  -0.036
                                              forw            1.223      Z         4  -1.222

                    GT1P1{1}                  down      138   0.000      X       -76  -0.115
                                              left       76   0.115      Y      -140  -0.020
                                              forw       80   0.662      Z       -76  -0.662

 Tag No.: <None>
 B32                Gravity{1}                down       95   0.000      X             0.016
 B32  2   Guide                               rght            0.016      Y       -95  -0.015
 Stiff   :RIGID                                forw            0.524      Z         3  -0.524

                    GT1{1}                    down       80   0.000      X       -41  -0.225
 Comp.Wt :   0.000                            left       41   0.225      Y       -81  -0.023
                                              forw       49   0.811      Z       -47  -0.810

                    GE1{1}                    down      148   0.000      X             0.255
                                              rght            0.255      Y      -147   0.034
                                              back            1.175      Z         4   1.175

                    GE2{1}                    down       71   0.000      X             0.387
```

S U P P O R T F O R C E S
(Force - lbf , Moment - ft-lb , Tran. - in , Rot. - deg)

Point/ Supp. ID	Connect/ Type	Load Combination	L O C A L Dirn	Force	Deform	G L O B A L Dirn	Force	Deform
			rght		0.387	Y	-71	-0.037
			forw		1.299	Z	2	-1.299
		GE3{1}	down	133	0.000	X		-0.350
			left		0.350	Y	-133	0.036
			back		1.246	Z	4	1.245
		GE4{1}	down	58	0.000	X		-0.211
			left		0.211	Y	-58	-0.035
			forw		1.219	Z	2	-1.218
		GE5{1}	down	165	0.000	X		0.258
			rght		0.258	Y	-165	0.034
			back		1.171	Z	5	1.171
		GE6{1}	down	90	0.000	X		0.390
			rght		0.390	Y	-90	-0.037
			forw		1.303	Z	3	-1.303
		GE7{1}	down	151	0.000	X		-0.351
			left		0.351	Y	-151	0.035
			back		1.235	Z	4	1.235
		GE8{1}	down	77	0.000	X		-0.208
			left		0.208	Y	-77	-0.035
			forw		1.223	Z	2	-1.222
		GT1P1{1}	down	80	0.000	X	-41	-0.232
			left	41	0.232	Y	-81	-0.023
			forw	49	0.818	Z	-46	-0.817
Tag No.: <None>								
B33		Gravity{1}	down	46	0.000	X	-1	-0.012
B33 2	Guide		left		0.561	Y	-46	0.000
Stiff	:RIGID		back		0.012	Z		-0.561
		GT1{1}	down	93	0.000	X	-1	-0.011
Comp.Wt :	0.000		left	75	0.626	Y	-93	0.000
			forw	1	-0.011	Z	-75	-0.626
		GE1{1}	down	5	0.000	X	0	0.305
			rght		1.232	Y	-5	-0.007
			forw		0.305	Z		1.232
		GE2{1}	down	56	0.000	X	-1	0.438
			left		1.270	Y	-56	-0.010
			forw		0.438	Z		-1.270
		GE3{1}	down	15	0.000	X	0	-0.374
			rght		1.246	Y	-15	0.008
			back		0.374	Z		1.246

```
-----------------------------------------------------------------------------------------------------------------
Primary Piping
04/24/2020 2018719                                                          BENTLEY
07:34 AM                                                                    AutoPIPE Nuclear 12.00.00.16   RESULT PAGE 138
-----------------------------------------------------------------------------------------------------------------

                                        S U P P O R T    F O R C E S
        ( Force - lbf   , Moment - ft-lb  , Tran. - in  , Rot. - deg   )
 Point/  Connect/    Load                          L O C A L              G L O B A L
 Supp. ID   Type   Combination                Dirn  Force    Deform    Dirn   Force   Deform
 -------- -------- ----------------------     ---- -------- --------   ---- -------- --------
                   GE4{1}                     down       62   0.000      X        -1  -0.231
                                              left            1.245      Y       -61   0.005
                                              back            0.231      Z            -1.245

                   GE5{1}                     down       15   0.000      X         0   0.311
                                              rght            1.231      Y       -15  -0.007
                                              forw            0.311      Z             1.231

                   GE6{1}                     down       62   0.000      X        -1   0.445
                                              left            1.271      Y       -62  -0.010
                                              forw            0.445      Z            -1.271

                   GE7{1}                     down       22   0.000      X         0  -0.373
                                              rght            1.238      Y       -22   0.008
                                              back            0.373      Z             1.238

                   GE8{1}                     down       68   0.000      X        -1  -0.226
                                              left            1.246      Y       -68   0.005
                                              back            0.226      Z            -1.246

                   GT1P1{1}                   down       94   0.000      X        -1  -0.011
                                              left       76   0.627      Y       -94   0.000
                                              forw        1  -0.011      Z       -76  -0.627

 Tag No.: <None>
 B34               Gravity{1}                 down       74   0.000      X        -2  -0.012
 B34  2   Guide                               left            0.597      Y       -74   0.000
 Stiff   :RIGID                                back            0.012      Z            -0.597

                   GT1{1}                     down       22   0.000      X         3   0.030
 Comp.Wt :   0.000                            rght       17  -0.396      Y       -22  -0.001
                                              forw        4   0.030      Z        17  -0.396

                   GE1{1}                     up              0.001      X             0.305
                                              rght      105   1.280      Y            -0.006
                                              forw            0.305      Z       105   1.280

                   GE2{1}                     down       75   0.000      X        -2   0.438
                                              left       53   1.280      Y       -75  -0.010
                                              forw            0.438      Z       -53  -1.280

                   GE3{1}                     down       21   0.000      X         0  -0.374
                                              rght            1.272      Y       -21   0.009
                                              back            0.374      Z             1.272

                   GE4{1}                     down      100   0.000      X        -2  -0.231
                                              left      171   1.280      Y      -100   0.005
                                              back            0.231      Z      -171  -1.280

                   GE5{1}                     down        4   0.000      X         0   0.311
                                              rght       99   1.280      Y        -4  -0.007
                                              forw            0.311      Z        99   1.280
```

S U P P O R T F O R C E S
(Force - lbf , Moment - ft-lb , Tran. - in , Rot. - deg)

Point/ Supp. ID	Connect/ Type	Load Combination	L O C A L Dirn	Force	Deform	G L O B A L Dirn	Force	Deform
		GE6{1}	down	84	0.000	X	-2	0.445
			left	59	1.280	Y	-84	-0.010
			forw		0.445	Z	-59	-1.280
		GE7{1}	down	29	0.000	X	-1	-0.373
			rght		1.266	Y	-29	0.009
			back		0.373	Z		1.266
		GE8{1}	down	109	0.000	X	-2	-0.226
			left	177	1.280	Y	-109	0.005
			back		0.226	Z	-177	-1.280
		GT1P1{1}	down	21	0.000	X	3	0.031
			rght	16	-0.391	Y	-21	-0.001
			forw	3	0.031	Z	16	-0.391
Tag No.: <None>								
B35		Gravity{1}	down	78	0.000	X		-0.056
B35	2 Guide		left		0.056	Y	-78	-0.018
Stiff	:RIGID		forw		0.644	Z	2	-0.643
		GT1{1}	down	101	0.000	X	45	0.211
Comp.Wt :	0.000		rght	45	0.211	Y	-100	-0.007
			back	68	-0.240	Z	70	-0.240
		GE1{1}	down	141	0.000	X		0.317
			rght		0.317	Y	-141	0.037
			back		1.322	Z	4	1.321
		GE2{1}	down	61	0.000	X		0.364
			rght		0.364	Y	-61	-0.037
			forw		1.337	Z	2	-1.337
		GE3{1}	down	121	0.000	X		-0.313
			left		0.313	Y	-121	0.037
			back		1.324	Z	3	1.323
		GE4{1}	down	40	0.000	X		-0.262
			left		0.262	Y	-40	-0.037
			forw		1.333	Z	1	-1.332
		GE5{1}	down	160	0.000	X		0.322
			rght		0.322	Y	-160	0.037
			back		1.321	Z	4	1.320
		GE6{1}	down	78	0.000	X		0.368
			rght		0.368	Y	-78	-0.037
			forw		1.338	Z	2	-1.338
		GE7{1}	down	138	0.000	X		-0.311
			left		0.311	Y	-138	0.037
			back		1.321	Z	4	1.320

```
-----------------------------------------------------------------------------------------------------------------
Primary Piping
04/24/2020 2018719                                                          BENTLEY
07:34 AM                                                                    AutoPIPE Nuclear 12.00.00.16   RESULT PAGE 140
-----------------------------------------------------------------------------------------------------------------

                                        S U P P O R T    F O R C E S
        ( Force - lbf   , Moment - ft-lb  , Tran. - in  , Rot. - deg   )
 Point/  Connect/    Load                          L O C A L              G L O B A L
 Supp. ID   Type   Combination                Dirn  Force    Deform    Dirn   Force   Deform
 -------- -------- ----------------------     ---- -------- --------   ---- -------- --------
                   GE8{1}                     down       57   0.000      X            -0.258
                                              left            0.258      Y       -57  -0.037
                                              forw            1.334      Z         2  -1.333

                   GT1P1{1}                   down      102   0.000      X        45   0.218
                                              rght       45   0.218      Y      -100  -0.006
                                              back       68  -0.230      Z        71  -0.230

 Tag No.: <None>
 B36               Gravity{1}                 down      126   0.000      X            -0.131
 B36  2   Guide                               left            0.131      Y      -126  -0.018
 Stiff   :RIGID                                forw            0.644      Z         3  -0.644

                   GT1{1}                     down      119   0.000      X        55   0.059
 Comp.Wt :   0.000                             rght       55   0.059      Y      -117  -0.010
                                              back       78  -0.374      Z        81  -0.374

                   GE1{1}                     down       97   0.000      X        96   0.156
                                              rght       96   0.156      Y       -97   0.037
                                              back            1.322      Z         3   1.322

                   GE2{1}                     down      117   0.000      X        71   0.156
                                              rght       71   0.156      Y      -117  -0.037
                                              forw            1.337      Z         3  -1.337

                   GE3{1}                     down      102   0.000      X       -63  -0.156
                                              left       63   0.156      Y      -102   0.037
                                              back            1.324      Z         3   1.323

                   GE4{1}                     down      123   0.000      X       -90  -0.156
                                              left       90   0.156      Y      -123  -0.037
                                              forw            1.333      Z         3  -1.333

                   GE5{1}                     down      116   0.000      X        96   0.156
                                              rght       96   0.156      Y      -116   0.037
                                              back            1.321      Z         3   1.321

                   GE6{1}                     down      137   0.000      X        71   0.156
                                              rght       71   0.156      Y      -137  -0.037
                                              forw            1.338      Z         4  -1.338

                   GE7{1}                     down      122   0.000      X       -62  -0.156
                                              left       62   0.156      Y      -122   0.037
                                              back            1.321      Z         3   1.320

                   GE8{1}                     down      142   0.000      X       -89  -0.156
                                              left       89   0.156      Y      -142  -0.037
                                              forw            1.334      Z         4  -1.334

                   GT1P1{1}                   down      119   0.000      X        55   0.066
                                              rght       55   0.066      Y      -117  -0.010
                                              back       77  -0.368      Z        81  -0.367
```

```
-----------------------------------------------------------------------------------------------------------------
Primary Piping
04/24/2020 2018719                                                          BENTLEY
07:34 AM                                                                    AutoPIPE Nuclear 12.00.00.16   RESULT PAGE 141
-----------------------------------------------------------------------------------------------------------------

                                          S U P P O R T    F O R C E S
        ( Force - lbf   , Moment - ft-lb  , Tran. - in  , Rot. - deg   )
 Point/  Connect/    Load                          L O C A L              G L O B A L
 Supp. ID   Type   Combination                Dirn  Force    Deform    Dirn   Force   Deform
 -------- -------- ----------------------     ---- -------- --------   ---- -------- --------
 Tag No.: <None>
 B37                Gravity{1}                down      112   0.000      X            -0.156
 B37  2   Guide                               left            0.156      Y      -112  -0.018
 Stiff   :RIGID                               forw            0.644      Z         3  -0.644

                    GT1{1}                    down      114   0.000      X        19  -0.128
 Comp.Wt :   0.000                            rght       19  -0.128      Y      -111  -0.014
                                              back       89  -0.509      Z        92  -0.509

                    GE1{1}                    down      109   0.000      X             0.140
                                              rght            0.140      Y      -109   0.037
                                              back            1.322      Z         3   1.322

                    GE2{1}                    down      101   0.000      X             0.135
                                              rght            0.135      Y      -101  -0.037
                                              forw            1.337      Z         3  -1.337

                    GE3{1}                    down      108   0.000      X            -0.149
                                              left            0.149      Y      -108   0.037
                                              back            1.324      Z         3   1.323

                    GE4{1}                    down      100   0.000      X        -1  -0.156
                                              left        1   0.156      Y      -100  -0.037
                                              forw            1.333      Z         3  -1.333

                    GE5{1}                    down      129   0.000      X             0.139
                                              rght            0.139      Y      -128   0.037
                                              back            1.321      Z         4   1.321

                    GE6{1}                    down      120   0.000      X             0.134
                                              rght            0.134      Y      -120  -0.037
                                              forw            1.338      Z         3  -1.338

                    GE7{1}                    down      127   0.000      X            -0.149
                                              left            0.149      Y      -127   0.037
                                              back            1.321      Z         4   1.320

                    GE8{1}                    down      119   0.000      X        -2  -0.156
                                              left        2   0.156      Y      -119  -0.037
                                              forw            1.334      Z         3  -1.334

                    GT1P1{1}                  down      114   0.000      X        20  -0.125
                                              rght       20  -0.125      Y      -112  -0.014
                                              back       89  -0.505      Z        92  -0.505

 Tag No.: <None>
 B38                Gravity{1}                down      120   0.000      X            -0.141
 B38  2   Guide                               left            0.141      Y      -120  -0.018
 Stiff   :RIGID                               forw            0.644      Z         3  -0.644

                    GT1{1}                    down      120   0.000      X       -26  -0.141
 Comp.Wt :   0.000                            left       26   0.141      Y      -119  -0.018
```

S U P P O R T F O R C E S
(Force - lbf , Moment - ft-lb , Tran. - in , Rot. - deg)

Point/ Supp. ID	Connect/ Type	Load Combination	L O C A L Dirn	L O C A L Force	L O C A L Deform	G L O B A L Dirn	G L O B A L Force	G L O B A L Deform
			back	55	-0.643	Z	58	-0.643
		GE1{1}	down	107	0.000	X	12	0.156
			rght	12	0.156	Y	-107	0.037
			back		1.322	Z	3	1.322
		GE2{1}	down	111	0.000	X	20	0.156
			rght	20	0.156	Y	-111	-0.037
			forw		1.337	Z	3	-1.337
		GE3{1}	down	107	0.000	X	-28	-0.156
			left	28	0.156	Y	-107	0.037
			back		1.324	Z	3	1.323
		GE4{1}	down	111	0.000	X	-15	-0.156
			left	15	0.156	Y	-111	-0.037
			forw		1.333	Z	3	-1.333
		GE5{1}	down	127	0.000	X	12	0.156
			rght	12	0.156	Y	-127	0.037
			back		1.321	Z	4	1.321
		GE6{1}	down	131	0.000	X	20	0.156
			rght	20	0.156	Y	-131	-0.037
			forw		1.338	Z	4	-1.338
		GE7{1}	down	127	0.000	X	-29	-0.156
			left	29	0.156	Y	-127	0.037
			back		1.321	Z	4	1.320
		GE8{1}	down	131	0.000	X	-15	-0.156
			left	15	0.156	Y	-131	-0.037
			forw		1.334	Z	4	-1.334
		GT1P1{1}	down	120	0.000	X	-27	-0.141
			left	27	0.141	Y	-118	-0.018
			back	68	-0.643	Z	72	-0.643
Tag No.: <None>								
B39		Gravity{1}	down	102	0.000	X		-0.110
B39 2	Guide		left		0.110	Y	-101	-0.018
Stiff	:RIGID		forw		0.644	Z	3	-0.644
		GT1{1}	down	99	0.000	X	30	-0.055
Comp.Wt :	0.000		rght	30	-0.055	Y	-101	-0.022
			forw	73	0.777	Z	-71	-0.777
		GE1{1}	down	100	0.000	X		0.128
			rght		0.128	Y	-100	0.038
			back		1.322	Z	3	1.322
		GE2{1}	down	89	0.000	X	13	0.156

```
-----------------------------------------------------------------------------------------------------------------
Primary Piping
04/24/2020 2018719                                                          BENTLEY
07:34 AM                                                                    AutoPIPE Nuclear 12.00.00.16   RESULT PAGE 143
-----------------------------------------------------------------------------------------------------------------

                                        S U P P O R T    F O R C E S
        ( Force - lbf   , Moment - ft-lb  , Tran. - in  , Rot. - deg   )
 Point/  Connect/    Load                          L O C A L              G L O B A L
 Supp. ID   Type   Combination                Dirn  Force    Deform    Dirn   Force   Deform
 -------- -------- ----------------------     ---- -------- --------   ---- -------- --------
                                              rght       13   0.156      Y       -89  -0.038
                                              forw            1.337      Z         3  -1.337

                    GE3{1}                    down      102   0.000      X        -4  -0.156
                                              left        4   0.156      Y      -102   0.038
                                              back            1.323      Z         3   1.323

                    GE4{1}                    down       91   0.000      X            -0.120
                                              left            0.120      Y       -91  -0.038
                                              forw            1.333      Z         3  -1.333

                    GE5{1}                    down      118   0.000      X             0.129
                                              rght            0.129      Y      -118   0.038
                                              back            1.321      Z         3   1.321

                    GE6{1}                    down      106   0.000      X        14   0.156
                                              rght       14   0.156      Y      -106  -0.038
                                              forw            1.338      Z         3  -1.337

                    GE7{1}                    down      119   0.000      X        -3  -0.156
                                              left        3   0.156      Y      -119   0.038
                                              back            1.320      Z         3   1.320

                    GE8{1}                    down      108   0.000      X            -0.119
                                              left            0.119      Y      -108  -0.038
                                              forw            1.335      Z         3  -1.334

                    GT1P1{1}                  down       99   0.000      X        29  -0.056
                                              rght       29  -0.056      Y      -101  -0.022
                                              forw       74   0.781      Z       -71  -0.780

 Tag No.: <None>
 B40                Gravity{1}                down      116   0.000      X            -0.093
 B40  1   Guide                               left            0.093      Y      -116  -0.018
 Stiff   :RIGID                                forw            0.644      Z         3  -0.644

                    GT1{1}                    down      122   0.000      X        76   0.156
 Comp.Wt :   0.000                            rght       76   0.156      Y      -124  -0.025
                                              forw       74   0.892      Z       -71  -0.891

                    GE1{1}                    down       91   0.000      X        82   0.156
                                              rght       82   0.156      Y       -91   0.037
                                              back            1.322      Z         3   1.322

                    GE2{1}                    down      115   0.000      X        52   0.156
                                              rght       52   0.156      Y      -115  -0.037
                                              forw            1.337      Z         3  -1.336

                    GE3{1}                    down       86   0.000      X       -60  -0.156
                                              left       60   0.156      Y       -86   0.037
                                              back            1.323      Z         2   1.323
```

S U P P O R T F O R C E S
(Force - lbf , Moment - ft-lb , Tran. - in , Rot. - deg)

Point/ Supp. ID	Connect/ Type	Load Combination	L O C A L Dirn	Force	Deform	G L O B A L Dirn	Force	Deform
		GE4{1}	down	110	0.000	X	-84	-0.156
			left	84	0.156	Y	-110	-0.037
			forw		1.334	Z	3	-1.333
		GE5{1}	down	109	0.000	X	81	0.156
			rght	81	0.156	Y	-109	0.037
			back		1.321	Z	3	1.321
		GE6{1}	down	133	0.000	X	51	0.156
			rght	51	0.156	Y	-133	-0.037
			forw		1.338	Z	4	-1.337
		GE7{1}	down	104	0.000	X	-61	-0.156
			left	61	0.156	Y	-104	0.037
			back		1.320	Z	3	1.320
		GE8{1}	down	128	0.000	X	-84	-0.156
			left	84	0.156	Y	-128	-0.037
			forw		1.335	Z	4	-1.334
		GT1P1{1}	down	123	0.000	X	82	0.156
			rght	82	0.156	Y	-125	-0.025
			forw	81	0.898	Z	-78	-0.898
Tag No.: <None>								
B42		Gravity{1}	down	86	0.000	X		-0.110
B42 1	Guide		left		0.110	Y	-86	-0.018
Stiff	:RIGID		forw		0.644	Z	2	-0.643
		GT1{1}	down	61	0.000	X	32	0.223
Comp.Wt :	0.000		rght	32	0.223	Y	-62	-0.029
			forw	37	1.026	Z	-35	-1.026
		GE1{1}	down	117	0.000	X		0.394
			rght		0.394	Y	-116	0.038
			back		1.322	Z	3	1.322
		GE2{1}	down	51	0.000	X		0.159
			rght		0.159	Y	-51	-0.038
			forw		1.337	Z	1	-1.336
		GE3{1}	down	134	0.000	X		-0.189
			left		0.189	Y	-134	0.038
			back		1.323	Z	4	1.323
		GE4{1}	down	70	0.000	X		-0.421
			left		0.421	Y	-70	-0.038
			forw		1.334	Z	2	-1.333
		GE5{1}	down	133	0.000	X		0.391
			rght		0.391	Y	-133	0.038
			back		1.321	Z	4	1.321

S U P P O R T F O R C E S
(Force - lbf , Moment - ft-lb , Tran. - in , Rot. - deg)

Point/ Supp. ID	Connect/ Type	Load Combination	L O C A L Dirn	Force	Deform	G L O B A L Dirn	Force	Deform
		GE6{1}	down	68	0.000	X		0.156
			rght		0.156	Y	-68	-0.038
			forw		1.338	Z	2	-1.337
		GE7{1}	down	152	0.000	X		-0.193
			left		0.193	Y	-152	0.038
			back		1.320	Z	4	1.320
		GE8{1}	down	86	0.000	X		-0.423
			left		0.423	Y	-86	-0.038
			forw		1.335	Z	2	-1.334
		GT1P1{1}	down	60	0.000	X	32	0.230
			rght	32	0.230	Y	-61	-0.030
			forw	37	1.036	Z	-35	-1.035
Tag No.: <None>								
B43		Gravity{1}	down	74	0.000	X	2	-0.134
B43 1	Guide		rght		0.616	Y	-74	-0.003
Stiff	:RIGID		forw		0.134	Z		-0.616
		GT1{1}	down	119	0.000	X	32	-0.111
Comp.Wt :	0.000		rght	90	0.687	Y	-118	-0.003
			back	29	-0.111	Z	-90	-0.687
		GE1{1}	down	18	0.000	X	0	0.470
			left		1.268	Y	-18	0.012
			back		0.471	Z		1.268
		GE2{1}	down	101	0.000	X	3	0.107
			rght	117	1.280	Y	-101	0.003
			back		0.107	Z	-117	-1.280
		GE3{1}	up		0.001	X		-0.153
			left	104	1.280	Y		-0.003
			forw		0.153	Z	104	1.280
		GE4{1}	down	81	0.000	X	2	-0.508
			rght		1.270	Y	-81	-0.013
			forw		0.508	Z		-1.270
		GE5{1}	down	27	0.000	X	1	0.467
			left		1.268	Y	-27	0.012
			back		0.467	Z		1.268
		GE6{1}	down	110	0.000	X	3	0.103
			rght	117	1.280	Y	-110	0.003
			back		0.103	Z	-117	-1.280
		GE7{1}	down	7	0.000	X	0	-0.161
			left	97	1.280	Y	-7	-0.004
			forw		0.161	Z	97	1.280

S U P P O R T F O R C E S
(Force - lbf , Moment - ft-lb , Tran. - in , Rot. - deg)

Point/ Supp. ID	Connect/ Type	Load Combination	L O C A L Dirn	Force	Deform	G L O B A L Dirn	Force	Deform
		GE8{1}	down	90	0.000	X	2	-0.511
			rght		1.271	Y	-90	-0.013
			forw		0.511	Z		-1.271
		GT1P1{1}	down	120	0.000	X	32	-0.112
			rght	92	0.686	Y	-119	-0.003
			back	29	-0.112	Z	-92	-0.686
Tag No.: <None>								
B45		Gravity{1}	down	50	0.000	X	1	-0.134
B45 1	Guide		rght		0.581	Y	-50	-0.003
Stiff	:RIGID		forw		0.134	Z		-0.581
		GT1{1}	down	18	0.000	X	-1	-0.171
Comp.Wt :	0.000		left	15	-0.151	Y	-18	-0.004
			forw	1	0.171	Z	15	-0.151
		GE1{1}	down	64	0.000	X	1	0.470
			left	129	1.280	Y	-64	0.011
			back		0.471	Z	129	1.280
		GE2{1}	down	49	0.000	X	1	0.107
			rght	203	1.280	Y	-49	0.002
			back		0.107	Z	-203	-1.280
		GE3{1}	down	53	0.000	X	1	-0.153
			left	183	1.280	Y	-53	-0.004
			forw		0.153	Z	183	1.280
		GE4{1}	down	40	0.000	X	1	-0.508
			rght	139	1.280	Y	-40	-0.012
			forw		0.508	Z	-139	-1.280
		GE5{1}	down	73	0.000	X	2	0.467
			left	128	1.280	Y	-73	0.011
			back		0.467	Z	128	1.280
		GE6{1}	down	58	0.000	X	1	0.103
			rght	205	1.280	Y	-58	0.002
			back		0.103	Z	-205	-1.280
		GE7{1}	down	64	0.000	X	1	-0.161
			left	183	1.280	Y	-64	-0.004
			forw		0.161	Z	183	1.280
		GE8{1}	down	49	0.000	X	1	-0.511
			rght	140	1.280	Y	-49	-0.012
			forw		0.511	Z	-140	-1.280
		GT1P1{1}	down	17	0.000	X	-1	-0.173
			left	14	-0.134	Y	-17	-0.004
			forw	1	0.174	Z	14	-0.134

```
-----------------------------------------------------------------------------------------------------------------
Primary Piping
04/24/2020 2018719                                                          BENTLEY
07:34 AM                                                                    AutoPIPE Nuclear 12.00.00.16   RESULT PAGE 147
-----------------------------------------------------------------------------------------------------------------

                                          S U P P O R T    F O R C E S
        ( Force - lbf   , Moment - ft-lb  , Tran. - in  , Rot. - deg   )
 Point/  Connect/    Load                          L O C A L              G L O B A L
 Supp. ID   Type   Combination                Dirn  Force    Deform    Dirn   Force   Deform
 -------- -------- ----------------------     ---- -------- --------   ---- -------- --------
 Tag No.: <None>
 B46                Gravity{1}                down       97   0.000      X            -0.152
 B46  2   Guide                               left            0.152      Y       -97  -0.005
 Stiff   :RIGID                               forw            0.557      Z         1  -0.557

                    GT1{1}                    down      113   0.000      X       -32  -0.401
 Comp.Wt :   0.000                            left       32   0.401      Y      -113   0.001
                                              back       85   0.103      Z        86   0.103

                    GE1{1}                    down       91   0.000      X             0.372
                                              rght            0.372      Y       -91   0.012
                                              back            1.364      Z         1   1.364

                    GE2{1}                    down       76   0.000      X             0.166
                                              rght            0.166      Y       -76  -0.012
                                              forw            1.347      Z         1  -1.347

                    GE3{1}                    down      105   0.000      X            -0.196
                                              left            0.196      Y      -105   0.012
                                              back            1.332      Z         1   1.332

                    GE4{1}                    down       90   0.000      X            -0.400
                                              left            0.400      Y       -90  -0.012
                                              forw            1.371      Z         1  -1.371

                    GE5{1}                    down      107   0.000      X             0.370
                                              rght            0.370      Y      -107   0.012
                                              back            1.364      Z         1   1.363

                    GE6{1}                    down       93   0.000      X             0.164
                                              rght            0.164      Y       -93  -0.012
                                              forw            1.348      Z         1  -1.348

                    GE7{1}                    down      121   0.000      X            -0.201
                                              left            0.201      Y      -121   0.012
                                              back            1.330      Z         1   1.330

                    GE8{1}                    down      106   0.000      X            -0.402
                                              left            0.402      Y      -106  -0.012
                                              forw            1.372      Z         1  -1.372

                    GT1P1{1}                  down      114   0.000      X       -32  -0.411
                                              left       32   0.411      Y      -113   0.001
                                              back       85   0.129      Z        86   0.129

 Tag No.: <None>
 B47                Gravity{1}                down      120   0.000      X        -5  -0.156
 B47  2   Guide                               left        5   0.156      Y      -120  -0.005
 Stiff   :RIGID                               forw            0.557      Z         1  -0.557

                    GT1{1}                    down      115   0.000      X      -153  -0.156
 Comp.Wt :   0.000                            left      153   0.156      Y      -114  -0.000
```

S U P P O R T F O R C E S
(Force - lbf , Moment - ft-lb , Tran. - in , Rot. - deg)

Point/ Supp. ID	Connect/ Type	Load Combination	L O C A L Dirn	Force	Deform	G L O B A L Dirn	Force	Deform
			back	215	-0.032	Z	216	-0.032
		GE1{1}	down	112	0.000	X	64	0.156
			rght	64	0.156	Y	-112	0.012
			back		1.364	Z	1	1.364
		GE2{1}	down	111	0.000	X	61	0.156
			rght	61	0.156	Y	-111	-0.012
			forw		1.347	Z	1	-1.347
		GE3{1}	down	108	0.000	X	-67	-0.156
			left	67	0.156	Y	-108	0.012
			back		1.333	Z	1	1.332
		GE4{1}	down	108	0.000	X	-68	-0.156
			left	68	0.156	Y	-108	-0.012
			forw		1.372	Z	1	-1.371
		GE5{1}	down	132	0.000	X	64	0.156
			rght	64	0.156	Y	-132	0.012
			back		1.364	Z	1	1.364
		GE6{1}	down	131	0.000	X	61	0.156
			rght	61	0.156	Y	-131	-0.012
			forw		1.348	Z	1	-1.348
		GE7{1}	down	128	0.000	X	-68	-0.156
			left	68	0.156	Y	-128	0.012
			back		1.330	Z	1	1.330
		GE8{1}	down	128	0.000	X	-69	-0.156
			left	69	0.156	Y	-128	-0.012
			forw		1.372	Z	1	-1.372
		GT1P1{1}	down	115	0.000	X	-158	-0.156
			left	158	0.156	Y	-113	-0.000
			back	218	-0.009	Z	219	-0.009
Tag No.: <None>								
B48		Gravity{1}	down	115	0.000	X		-0.150
B48 2	Guide		left		0.150	Y	-115	-0.005
Stiff	:RIGID		forw		0.557	Z	1	-0.557
		GT1{1}	down	116	0.000	X	20	-0.064
Comp.Wt :	0.000		rght	20	-0.064	Y	-115	-0.001
			back	91	-0.166	Z	92	-0.166
		GE1{1}	down	105	0.000	X		0.139
			rght		0.139	Y	-105	0.012
			back		1.364	Z	1	1.364
		GE2{1}	down	105	0.000	X	10	0.156

S U P P O R T F O R C E S
(Force - lbf , Moment - ft-lb , Tran. - in , Rot. - deg)

Point/ Supp. ID	Connect/ Type	Load Combination	L O C A L Dirn	Force	Deform	G L O B A L Dirn	Force	Deform
			rght	10	0.156	Y	-105	-0.012
			forw		1.347	Z	1	-1.347
		GE3{1}	down	106	0.000	X	-5	-0.156
			left	5	0.156	Y	-106	0.012
			back		1.333	Z	1	1.333
		GE4{1}	down	106	0.000	X		-0.134
			left		0.134	Y	-106	-0.012
			forw		1.372	Z	1	-1.372
		GE5{1}	down	124	0.000	X		0.140
			rght		0.140	Y	-124	0.012
			back		1.364	Z	1	1.364
		GE6{1}	down	124	0.000	X	10	0.156
			rght	10	0.156	Y	-124	-0.012
			forw		1.348	Z	1	-1.348
		GE7{1}	down	125	0.000	X	-5	-0.156
			left	5	0.156	Y	-125	0.012
			back		1.331	Z	1	1.331
		GE8{1}	down	125	0.000	X		-0.133
			left		0.133	Y	-125	-0.012
			forw		1.372	Z	1	-1.372
		GT1P1{1}	down	116	0.000	X	20	-0.059
			rght	20	-0.059	Y	-115	-0.001
			back	91	-0.147	Z	92	-0.147
Tag No.: <None>								
B49		Gravity{1}	down	116	0.000	X		-0.146
B49 2	Guide		left		0.146	Y	-116	-0.005
Stiff	:RIGID		forw		0.557	Z	1	-0.557
		GT1{1}	down	115	0.000	X	11	-0.115
Comp.Wt :	0.000		rght	11	-0.115	Y	-115	-0.003
			back	92	-0.300	Z	93	-0.300
		GE1{1}	down	108	0.000	X	20	0.156
			rght	20	0.156	Y	-108	0.012
			back		1.364	Z	1	1.364
		GE2{1}	down	105	0.000	X	25	0.156
			rght	25	0.156	Y	-105	-0.012
			forw		1.347	Z	1	-1.347
		GE3{1}	down	108	0.000	X	-26	-0.156
			left	26	0.156	Y	-108	0.012
			back		1.333	Z	1	1.333

S U P P O R T F O R C E S
(Force - lbf , Moment - ft-lb , Tran. - in , Rot. - deg)

Point/ Supp. ID	Connect/ Type	Load Combination	L O C A L Dirn	L O C A L Force	L O C A L Deform	G L O B A L Dirn	G L O B A L Force	G L O B A L Deform
		GE4{1}	down	105	0.000	X	-18	-0.156
			left	18	0.156	Y	-105	-0.012
			forw		1.372	Z	1	-1.372
		GE5{1}	down	127	0.000	X	21	0.156
			rght	21	0.156	Y	-127	0.012
			back		1.364	Z	1	1.364
		GE6{1}	down	125	0.000	X	24	0.156
			rght	24	0.156	Y	-125	-0.012
			forw		1.349	Z	1	-1.348
		GE7{1}	down	127	0.000	X	-26	-0.156
			left	26	0.156	Y	-127	0.012
			back		1.331	Z	1	1.331
		GE8{1}	down	124	0.000	X	-18	-0.156
			left	18	0.156	Y	-124	-0.012
			forw		1.372	Z	1	-1.372
		GT1P1{1}	down	115	0.000	X	11	-0.112
			rght	11	-0.112	Y	-115	-0.003
			back	92	-0.284	Z	93	-0.284
Tag No.: <None>								
B50		Gravity{1}	down	117	0.000	X		-0.144
B50 2	Guide		left		0.144	Y	-117	-0.004
Stiff	:RIGID		forw		0.557	Z	1	-0.557
		GT1{1}	down	118	0.000	X	0	-0.144
Comp.Wt :	0.000		left	0	0.144	Y	-117	-0.003
			back	95	-0.433	Z	96	-0.433
		GE1{1}	down	105	0.000	X	21	0.156
			rght	21	0.156	Y	-105	0.011
			back		1.364	Z	1	1.364
		GE2{1}	down	108	0.000	X	21	0.156
			rght	21	0.156	Y	-108	-0.010
			forw		1.347	Z	1	-1.347
		GE3{1}	down	105	0.000	X	-21	-0.156
			left	21	0.156	Y	-105	0.010
			back		1.333	Z	1	1.333
		GE4{1}	down	108	0.000	X	-22	-0.156
			left	22	0.156	Y	-108	-0.011
			forw		1.372	Z	1	-1.372
		GE5{1}	down	124	0.000	X	21	0.156
			rght	21	0.156	Y	-124	0.011
			back		1.364	Z	1	1.364

S U P P O R T F O R C E S
(Force - lbf , Moment - ft-lb , Tran. - in , Rot. - deg)

Point/ Supp. ID	Connect/ Type	Load Combination	L O C A L Dirn	L O C A L Force	L O C A L Deform	G L O B A L Dirn	G L O B A L Force	G L O B A L Deform
		GE6{1}	down	127	0.000	X	21	0.156
			rght	21	0.156	Y	-127	-0.010
			forw		1.349	Z	1	-1.349
		GE7{1}	down	124	0.000	X	-21	-0.156
			left	21	0.156	Y	-124	0.010
			back		1.331	Z	1	1.331
		GE8{1}	down	127	0.000	X	-22	-0.156
			left	22	0.156	Y	-127	-0.011
			forw		1.372	Z	1	-1.372
		GT1P1{1}	down	118	0.000	X	0	-0.143
			rght	0	-0.143	Y	-117	-0.003
			back	94	-0.421	Z	95	-0.421
Tag No.: <None>								
B51		Gravity{1}	down	114	0.000	X		-0.145
B51 2	Guide		left		0.145	Y	-114	-0.005
Stiff	:RIGID		forw		0.557	Z	1	-0.557
		GT1{1}	down	113	0.000	X	-5	-0.145
Comp.Wt :	0.000		left	5	0.145	Y	-114	-0.005
			forw	82	0.567	Z	-81	-0.567
		GE1{1}	down	108	0.000	X	32	0.156
			rght	32	0.156	Y	-108	0.012
			back		1.364	Z	1	1.364
		GE2{1}	down	103	0.000	X	21	0.156
			rght	21	0.156	Y	-103	-0.012
			forw		1.348	Z	1	-1.348
		GE3{1}	down	108	0.000	X	-21	-0.156
			left	21	0.156	Y	-108	0.012
			back		1.333	Z	1	1.333
		GE4{1}	down	103	0.000	X	-31	-0.156
			left	31	0.156	Y	-103	-0.012
			forw		1.372	Z	1	-1.372
		GE5{1}	down	127	0.000	X	32	0.156
			rght	32	0.156	Y	-127	0.012
			back		1.364	Z	1	1.364
		GE6{1}	down	122	0.000	X	21	0.156
			rght	21	0.156	Y	-122	-0.012
			forw		1.349	Z	1	-1.349
		GE7{1}	down	127	0.000	X	-21	-0.156
			left	21	0.156	Y	-127	0.012
			back		1.331	Z	1	1.331

S U P P O R T F O R C E S
(Force - lbf , Moment - ft-lb , Tran. - in , Rot. - deg)

Point/ Supp. ID	Connect/ Type	Load Combination	L O C A L Dirn	L O C A L Force	L O C A L Deform	G L O B A L Dirn	G L O B A L Force	G L O B A L Deform
		GE8{1}	down	122	0.000	X	-31	-0.156
			left	31	0.156	Y	-122	-0.012
			forw		1.372	Z	1	-1.372
		GT1P1{1}	down	113	0.000	X	-6	-0.145
			left	6	0.145	Y	-114	-0.005
			forw	83	0.558	Z	-82	-0.558
Tag No.: <None>								
B52		Gravity{1}	down	120	0.000	X		-0.149
B52 2	Guide		left		0.149	Y	-120	-0.004
Stiff	:RIGID		forw		0.557	Z	1	-0.557
		GT1{1}	down	121	0.000	X	15	-0.127
Comp.Wt :	0.000		rght	15	-0.127	Y	-122	-0.005
			forw	95	0.701	Z	-94	-0.701
		GE1{1}	down	106	0.000	X	0	0.156
			rght	0	0.156	Y	-106	0.011
			back		1.364	Z	1	1.364
		GE2{1}	down	111	0.000	X	26	0.156
			rght	26	0.156	Y	-111	-0.010
			forw		1.348	Z	1	-1.348
		GE3{1}	down	106	0.000	X	-26	-0.156
			left	26	0.156	Y	-106	0.010
			back		1.333	Z	1	1.333
		GE4{1}	down	111	0.000	X	-2	-0.156
			left	2	0.156	Y	-111	-0.011
			forw		1.372	Z	1	-1.372
		GE5{1}	down	126	0.000	X	0	0.156
			rght	0	0.156	Y	-126	0.011
			back		1.364	Z	1	1.364
		GE6{1}	down	131	0.000	X	26	0.156
			rght	26	0.156	Y	-131	-0.010
			forw		1.349	Z	1	-1.349
		GE7{1}	down	126	0.000	X	-26	-0.156
			left	26	0.156	Y	-126	0.010
			back		1.331	Z	1	1.331
		GE8{1}	down	131	0.000	X	-2	-0.156
			left	2	0.156	Y	-131	-0.011
			forw		1.372	Z	1	-1.372
		GT1P1{1}	down	121	0.000	X	15	-0.127
			rght	15	-0.127	Y	-122	-0.005
			forw	96	0.695	Z	-95	-0.695

```
-----------------------------------------------------------------------------------------------------------------
Primary Piping
04/24/2020 2018719                                                          BENTLEY
07:34 AM                                                                    AutoPIPE Nuclear 12.00.00.16   RESULT PAGE 153
-----------------------------------------------------------------------------------------------------------------

                                          S U P P O R T    F O R C E S
        ( Force - lbf   , Moment - ft-lb  , Tran. - in  , Rot. - deg   )
 Point/  Connect/    Load                          L O C A L              G L O B A L
 Supp. ID   Type   Combination                Dirn  Force    Deform    Dirn   Force   Deform
 -------- -------- ----------------------     ---- -------- --------   ---- -------- --------
 Tag No.: <None>
 B53                Gravity{1}                down      103   0.000      X        -7  -0.156
 B53  2   Guide                               left        7   0.156      Y      -103  -0.005
 Stiff   :RIGID                               forw            0.557      Z         1  -0.557

                    GT1{1}                    down      101   0.000      X        21  -0.082
 Comp.Wt :   0.000                            rght       21  -0.082      Y      -102  -0.007
                                              forw       78   0.835      Z       -77  -0.835

                    GE1{1}                    down      100   0.000      X             0.104
                                              rght            0.104      Y      -100   0.012
                                              back            1.364      Z         1   1.364

                    GE2{1}                    down       93   0.000      X         2   0.156
                                              rght        2   0.156      Y       -93  -0.012
                                              forw            1.348      Z         1  -1.348

                    GE3{1}                    down       99   0.000      X        -4  -0.156
                                              left        4   0.156      Y       -99   0.012
                                              back            1.333      Z         1   1.333

                    GE4{1}                    down       92   0.000      X             -0.107
                                              left            0.107      Y       -92  -0.012
                                              forw            1.372      Z         1  -1.371

                    GE5{1}                    down      118   0.000      X             0.103
                                              rght            0.103      Y      -118   0.012
                                              back            1.364      Z         1   1.364

                    GE6{1}                    down      110   0.000      X         2   0.156
                                              rght        2   0.156      Y      -110  -0.012
                                              forw            1.349      Z         1  -1.349

                    GE7{1}                    down      117   0.000      X        -4  -0.156
                                              left        4   0.156      Y      -117   0.012
                                              back            1.331      Z         1   1.331

                    GE8{1}                    down      109   0.000      X             -0.107
                                              left            0.107      Y      -109  -0.012
                                              forw            1.372      Z         1  -1.372

                    GT1P1{1}                  down      101   0.000      X        21  -0.081
                                              rght       21  -0.081      Y      -102  -0.007
                                              forw       78   0.832      Z       -77  -0.832

 Tag No.: <None>
 B54                Gravity{1}                down      115   0.000      X             -0.154
 B54  2   Guide                               left            0.154      Y      -115  -0.004
 Stiff   :RIGID                               forw            0.557      Z         1  -0.557

                    GT1{1}                    down      119   0.000      X      -170  -0.156
 Comp.Wt :   0.000                            left      170   0.156      Y      -121  -0.007
```

S U P P O R T F O R C E S
(Force - lbf , Moment - ft-lb , Tran. - in , Rot. - deg)

Point/ Supp. ID	Connect/ Type	Load Combination	L O C A L Dirn	L O C A L Force	L O C A L Deform	G L O B A L Dirn	G L O B A L Force	G L O B A L Deform
			forw	231	0.951	Z	-230	-0.951
		GE1{1}	down	97	0.000	X	134	0.156
			rght	134	0.156	Y	-97	0.011
			back		1.364	Z	1	1.364
		GE2{1}	down	108	0.000	X	27	0.156
			rght	27	0.156	Y	-108	-0.010
			forw		1.348	Z	1	-1.348
		GE3{1}	down	99	0.000	X	-24	-0.156
			left	24	0.156	Y	-99	0.010
			back		1.333	Z	1	1.333
		GE4{1}	down	110	0.000	X	-132	-0.156
			left	132	0.156	Y	-110	-0.011
			forw		1.371	Z	1	-1.371
		GE5{1}	down	116	0.000	X	134	0.156
			rght	134	0.156	Y	-116	0.011
			back		1.364	Z	1	1.364
		GE6{1}	down	126	0.000	X	28	0.156
			rght	28	0.156	Y	-126	-0.010
			forw		1.349	Z	1	-1.349
		GE7{1}	down	118	0.000	X	-24	-0.156
			left	24	0.156	Y	-118	0.010
			back		1.331	Z	1	1.331
		GE8{1}	down	129	0.000	X	-132	-0.156
			left	132	0.156	Y	-129	-0.011
			forw		1.372	Z	1	-1.372
		GT1P1{1}	down	119	0.000	X	-174	-0.156
			left	174	0.156	Y	-121	-0.007
			forw	234	0.951	Z	-233	-0.951
Tag No.: <None>								
B55		Gravity{1}	down	90	0.000	X		-0.071
B55 1	Guide		left		0.071	Y	-90	-0.005
Stiff	:RIGID		forw		0.557	Z	1	-0.557
		GT1{1}	down	81	0.000	X	-28	-0.322
Comp.Wt :	0.000		left	28	0.322	Y	-81	-0.009
			forw	58	1.086	Z	-58	-1.086
		GE1{1}	down	101	0.000	X		0.433
			rght		0.433	Y	-101	0.012
			back		1.364	Z	1	1.364
		GE2{1}	down	78	0.000	X		0.294

S U P P O R T F O R C E S
(Force - lbf , Moment - ft-lb , Tran. - in , Rot. - deg)

Point/ Supp. ID	Connect/ Type	Load Combination	L O C A L Dirn	Force	Deform	G L O B A L Dirn	Force	Deform
			rght		0.294	Y	-78	-0.012
			forw		1.348	Z	1	-1.348
		GE3{1}	down	95	0.000	X		-0.287
			left		0.287	Y	-95	0.011
			back		1.333	Z	1	1.333
		GE4{1}	down	72	0.000	X		-0.416
			left		0.416	Y	-72	-0.012
			forw		1.371	Z	1	-1.371
		GE5{1}	down	117	0.000	X		0.435
			rght		0.435	Y	-117	0.012
			back		1.363	Z	1	1.363
		GE6{1}	down	94	0.000	X		0.295
			rght		0.295	Y	-94	-0.012
			forw		1.349	Z	1	-1.349
		GE7{1}	down	110	0.000	X		-0.286
			left		0.286	Y	-110	0.011
			back		1.331	Z	1	1.331
		GE8{1}	down	88	0.000	X		-0.414
			left		0.414	Y	-88	-0.012
			forw		1.372	Z	1	-1.372
		GT1P1{1}	down	81	0.000	X	-28	-0.326
			left	28	0.326	Y	-81	-0.009
			forw	58	1.089	Z	-58	-1.089
Tag No.: <None>								
B57		Gravity{1}	down	83	0.000	X	-1	0.006
B57 1	Guide		left		0.466	Y	-83	-0.000
Stiff	:RIGID		forw		0.006	Z		-0.466
		GT1{1}	down	95	0.000	X	-5	-0.008
Comp.Wt :	0.000		left	76	0.731	Y	-95	0.000
			back	4	0.008	Z	-76	-0.731
		GE1{1}	down	58	0.000	X	0	0.413
			rght	70	1.280	Y	-58	-0.003
			forw		0.413	Z	70	1.280
		GE2{1}	down	80	0.000	X	-1	0.421
			left		1.196	Y	-80	-0.003
			forw		0.421	Z		-1.196
		GE3{1}	down	64	0.000	X	0	-0.411
			rght		1.182	Y	-64	0.003
			back		0.411	Z		1.182

S U P P O R T F O R C E S
(Force - lbf , Moment - ft-lb , Tran. - in , Rot. - deg)

Point/ Supp. ID	Connect/ Type	Load Combination	L O C A L Dirn	Force	Deform	G L O B A L Dirn	Force	Deform
		GE4{1}	down	86	0.000	X	-1	-0.387
			left	85	1.280	Y	-86	0.003
			back		0.387	Z	-85	-1.280
		GE5{1}	down	71	0.000	X	-1	0.415
			rght	69	1.280	Y	-71	-0.003
			forw		0.415	Z	69	1.280
		GE6{1}	down	93	0.000	X	-1	0.422
			left		1.197	Y	-93	-0.003
			forw		0.422	Z		-1.197
		GE7{1}	down	77	0.000	X	-1	-0.411
			rght		1.180	Y	-77	0.003
			back		0.411	Z		1.180
		GE8{1}	down	99	0.000	X	-1	-0.384
			left	86	1.280	Y	-99	0.003
			back		0.384	Z	-86	-1.280
		GT1P1{1}	down	95	0.000	X	-5	-0.007
			left	76	0.730	Y	-95	0.000
			back	4	0.007	Z	-76	-0.730
Tag No.: <None>								
B58		Gravity{1}	down	79	0.000	X	0	0.006
B58 1	Guide		left		0.252	Y	-79	-0.000
Stiff	:RIGID		forw		0.006	Z		-0.252
		GT1{1}	down	66	0.000	X	7	0.095
Comp.Wt :	0.000		rght	53	0.412	Y	-66	-0.001
			forw	7	0.095	Z	53	0.412
		GE1{1}	down	73	0.000	X	0	0.413
			rght		0.928	Y	-73	-0.002
			forw		0.413	Z		0.928
		GE2{1}	down	71	0.000	X	0	0.421
			left		0.871	Y	-71	-0.002
			forw		0.421	Z		-0.871
		GE3{1}	down	75	0.000	X	0	-0.411
			rght		0.853	Y	-75	0.002
			back		0.411	Z		0.853
		GE4{1}	down	73	0.000	X	0	-0.387
			left		0.936	Y	-73	0.002
			back		0.387	Z		-0.936
		GE5{1}	down	87	0.000	X	0	0.415
			rght		0.928	Y	-87	-0.002
			forw		0.415	Z		0.928

S U P P O R T F O R C E S
(Force - lbf , Moment - ft-lb , Tran. - in , Rot. - deg)

Point/ Supp. ID	Connect/ Type	Load Combination	L O C A L Dirn	Force	Deform	G L O B A L Dirn	Force	Deform
		GE6{1}	down	85	0.000	X	0	0.422
			left		0.873	Y	-85	-0.002
			forw		0.422	Z		-0.873
		GE7{1}	down	88	0.000	X	-1	-0.411
			rght		0.851	Y	-88	0.002
			back		0.411	Z		0.851
		GE8{1}	down	86	0.000	X	0	-0.384
			left		0.936	Y	-86	0.002
			back		0.384	Z		-0.936
		GT1P1{1}	down	66	0.000	X	7	0.099
			rght	52	0.432	Y	-66	-0.001
			forw	7	0.099	Z	52	0.432
Tag No.: <None>								
B64		Gravity{1}	down	92	0.000	X		0.080
B64 1	Guide		rght		0.080	Y	-92	-0.001
Stiff	:RIGID		forw		0.163	Z	1	-0.163
		GT1{1}	down	101	0.000	X	26	0.384
Comp.Wt :	0.000		rght	26	0.384	Y	-101	0.005
			back	77	0.743	Z	77	0.743
		GE1{1}	down	88	0.000	X		0.280
			rght		0.280	Y	-88	0.005
			back		0.766	Z	1	0.766
		GE2{1}	down	84	0.000	X		0.428
			rght		0.428	Y	-84	-0.005
			forw		0.805	Z	1	-0.805
		GE3{1}	down	85	0.000	X		-0.421
			left		0.421	Y	-85	0.005
			back		0.784	Z	1	0.784
		GE4{1}	down	80	0.000	X		-0.264
			left		0.264	Y	-80	-0.005
			forw		0.783	Z	1	-0.783
		GE5{1}	down	103	0.000	X		0.282
			rght		0.282	Y	-103	0.005
			back		0.764	Z	1	0.764
		GE6{1}	down	99	0.000	X		0.428
			rght		0.428	Y	-99	-0.005
			forw		0.807	Z	1	-0.807
		GE7{1}	down	100	0.000	X		-0.421
			left		0.421	Y	-100	0.005
			back		0.782	Z	1	0.782

```
-----------------------------------------------------------------------------------------------------------------
Primary Piping
04/24/2020 2018719                                                    BENTLEY
07:34 AM                                                              AutoPIPE Nuclear 12.00.00.16   RESULT PAGE 158
-----------------------------------------------------------------------------------------------------------------

                                        S U P P O R T    F O R C E S
        ( Force - lbf   , Moment - ft-lb  , Tran. - in  , Rot. - deg   )
 Point/  Connect/    Load                          L O C A L              G L O B A L
 Supp. ID   Type   Combination                Dirn  Force    Deform    Dirn   Force   Deform
 -------- -------- ----------------------     ---- -------- --------   ---- -------- --------
                   GE8{1}                     down       96   0.000      X            -0.262
                                              left            0.262      Y       -96  -0.005
                                              forw            0.784      Z         1  -0.784

                   GT1P1{1}                   down      101   0.000      X        26   0.391
                                              rght       26   0.391      Y      -101   0.005
                                              back       77   0.767      Z        78   0.767

 Tag No.: <None>
 B65               Gravity{1}                 down      122   0.000      X         2   0.156
 B65  1   Guide                               rght        2   0.156      Y      -122  -0.001
 Stiff   :RIGID                               forw            0.163      Z         1  -0.163

                   GT1{1}                     down      119   0.000      X       165   0.156
 Comp.Wt :   0.000                            rght      165   0.156      Y      -117   0.004
                                              back      227   0.609      Z       227   0.609

                   GE1{1}                     down      111   0.000      X        15   0.156
                                              rght       15   0.156      Y      -111   0.005
                                              back            0.766      Z         1   0.766

                   GE2{1}                     down      112   0.000      X       125   0.156
                                              rght      125   0.156      Y      -112  -0.005
                                              forw            0.805      Z         1  -0.805

                   GE3{1}                     down      112   0.000      X      -125  -0.156
                                              left      125   0.156      Y      -112   0.005
                                              back            0.784      Z         1   0.784

                   GE4{1}                     down      112   0.000      X       -12  -0.156
                                              left       12   0.156      Y      -112  -0.005
                                              forw            0.782      Z         1  -0.782

                   GE5{1}                     down      131   0.000      X        16   0.156
                                              rght       16   0.156      Y      -131   0.005
                                              back            0.764      Z         1   0.764

                   GE6{1}                     down      132   0.000      X       125   0.156
                                              rght      125   0.156      Y      -132  -0.005
                                              forw            0.807      Z         1  -0.807

                   GE7{1}                     down      132   0.000      X      -125  -0.156
                                              left      125   0.156      Y      -132   0.005
                                              back            0.782      Z         1   0.782

                   GE8{1}                     down      133   0.000      X       -12  -0.156
                                              left       12   0.156      Y      -133  -0.005
                                              forw            0.784      Z         1  -0.784

                   GT1P1{1}                   down      119   0.000      X       168   0.156
                                              rght      168   0.156      Y      -117   0.004
                                              back      229   0.630      Z       230   0.630
```

```
-----------------------------------------------------------------------------------------------------------------
Primary Piping
04/24/2020 2018719                                                          BENTLEY
07:34 AM                                                                    AutoPIPE Nuclear 12.00.00.16   RESULT PAGE 159
-----------------------------------------------------------------------------------------------------------------

                                          S U P P O R T    F O R C E S
        ( Force - lbf   , Moment - ft-lb  , Tran. - in  , Rot. - deg   )
 Point/  Connect/    Load                          L O C A L              G L O B A L
 Supp. ID   Type   Combination                Dirn  Force    Deform    Dirn   Force   Deform
 -------- -------- ----------------------     ---- -------- --------   ---- -------- --------
 Tag No.: <None>
 B66                Gravity{1}                down      114   0.000      X         6   0.156
 B66  1   Guide                               rght        6   0.156      Y      -114  -0.001
 Stiff   :RIGID                               forw            0.163      Z         1  -0.163

                    GT1{1}                    down      115   0.000      X       -16   0.043
 Comp.Wt :   0.000                            left       16  -0.043      Y      -115   0.003
                                              back       90   0.475      Z        91   0.475

                    GE1{1}                    down      105   0.000      X        10   0.156
                                              rght       10   0.156      Y      -105   0.005
                                              back            0.766      Z         1   0.766

                    GE2{1}                    down      105   0.000      X             0.110
                                              rght            0.110      Y      -105  -0.005
                                              forw            0.805      Z         1  -0.805

                    GE3{1}                    down      105   0.000      X            -0.111
                                              left            0.111      Y      -105   0.005
                                              back            0.784      Z         1   0.784

                    GE4{1}                    down      104   0.000      X       -13  -0.156
                                              left       13   0.156      Y      -104  -0.005
                                              forw            0.782      Z         1  -0.782

                    GE5{1}                    down      124   0.000      X        10   0.156
                                              rght       10   0.156      Y      -124   0.005
                                              back            0.764      Z         1   0.764

                    GE6{1}                    down      124   0.000      X             0.110
                                              rght            0.110      Y      -124  -0.005
                                              forw            0.807      Z         1  -0.807

                    GE7{1}                    down      124   0.000      X            -0.111
                                              left            0.111      Y      -124   0.005
                                              back            0.781      Z         1   0.781

                    GE8{1}                    down      123   0.000      X       -13  -0.156
                                              left       13   0.156      Y      -123  -0.005
                                              forw            0.784      Z         1  -0.784

                    GT1P1{1}                  down      115   0.000      X       -16   0.039
                                              left       16  -0.039      Y      -115   0.003
                                              back       91   0.492      Z        91   0.492

 Tag No.: <None>
 B67                Gravity{1}                down      116   0.000      X             0.152
 B67  1   Guide                               rght            0.152      Y      -116  -0.001
 Stiff   :RIGID                               forw            0.163      Z         1  -0.163

                    GT1{1}                    down      116   0.000      X       -10   0.097
 Comp.Wt :   0.000                            left       10  -0.097      Y      -116   0.002
```

S U P P O R T F O R C E S
(Force - lbf , Moment - ft-lb , Tran. - in , Rot. - deg)

Point/ Supp. ID	Connect/ Type	Load Combination	L O C A L Dirn	L O C A L Force	L O C A L Deform	G L O B A L Dirn	G L O B A L Force	G L O B A L Deform
			back	92	0.341	Z	93	0.341
		GE1{1}	down	107	0.000	X	24	0.156
			rght	24	0.156	Y	-107	0.005
			back		0.765	Z	1	0.765
		GE2{1}	down	107	0.000	X	7	0.156
			rght	7	0.156	Y	-107	-0.005
			forw		0.805	Z	1	-0.805
		GE3{1}	down	107	0.000	X	-8	-0.156
			left	8	0.156	Y	-107	0.005
			back		0.783	Z	1	0.783
		GE4{1}	down	107	0.000	X	-24	-0.156
			left	24	0.156	Y	-107	-0.005
			forw		0.782	Z	1	-0.782
		GE5{1}	down	126	0.000	X	24	0.156
			rght	24	0.156	Y	-126	0.005
			back		0.764	Z	1	0.764
		GE6{1}	down	126	0.000	X	7	0.156
			rght	7	0.156	Y	-126	-0.005
			forw		0.807	Z	1	-0.807
		GE7{1}	down	126	0.000	X	-8	-0.156
			left	8	0.156	Y	-126	0.005
			back		0.781	Z	1	0.781
		GE8{1}	down	126	0.000	X	-24	-0.156
			left	24	0.156	Y	-126	-0.005
			forw		0.783	Z	1	-0.783
		GT1P1{1}	down	116	0.000	X	-10	0.095
			left	10	-0.095	Y	-116	0.002
			back	92	0.355	Z	93	0.355
Tag No.: <None>								
B68		Gravity{1}	down	116	0.000	X		0.154
B68 1	Guide		rght		0.154	Y	-116	-0.001
Stiff	:RIGID		forw		0.163	Z	1	-0.163
		GT1{1}	down	116	0.000	X	-2	0.144
Comp.Wt :	0.000		left	2	-0.144	Y	-115	0.001
			back	92	0.207	Z	93	0.207
		GE1{1}	down	106	0.000	X	22	0.156
			rght	22	0.156	Y	-106	0.005
			back		0.765	Z	1	0.765
		GE2{1}	down	106	0.000	X	28	0.156

```
-----------------------------------------------------------------------------------------------------------------
Primary Piping
04/24/2020 2018719                                                          BENTLEY
07:34 AM                                                                    AutoPIPE Nuclear 12.00.00.16   RESULT PAGE 161
-----------------------------------------------------------------------------------------------------------------

                                          S U P P O R T    F O R C E S
        ( Force - lbf   , Moment - ft-lb  , Tran. - in  , Rot. - deg   )
 Point/  Connect/    Load                          L O C A L              G L O B A L
 Supp. ID   Type   Combination                Dirn  Force    Deform    Dirn   Force   Deform
 -------- -------- ----------------------     ---- -------- --------   ---- -------- --------
                                              rght       28   0.156      Y      -106  -0.005
                                              forw            0.804      Z         1  -0.804

                    GE3{1}                    down      106   0.000      X       -28  -0.156
                                              left       28   0.156      Y      -106   0.005
                                              back            0.783      Z         1   0.783

                    GE4{1}                    down      106   0.000      X       -22  -0.156
                                              left       22   0.156      Y      -106  -0.005
                                              forw            0.782      Z         1  -0.782

                    GE5{1}                    down      126   0.000      X        22   0.156
                                              rght       22   0.156      Y      -126   0.005
                                              back            0.764      Z         1   0.764

                    GE6{1}                    down      125   0.000      X        29   0.156
                                              rght       29   0.156      Y      -125  -0.005
                                              forw            0.806      Z         1  -0.806

                    GE7{1}                    down      126   0.000      X       -28  -0.156
                                              left       28   0.156      Y      -126   0.005
                                              back            0.781      Z         1   0.781

                    GE8{1}                    down      125   0.000      X       -22  -0.156
                                              left       22   0.156      Y      -125  -0.005
                                              forw            0.783      Z         1  -0.783

                    GT1P1{1}                  down      116   0.000      X        -2   0.144
                                              left        2  -0.144      Y      -115   0.001
                                              back       93   0.218      Z        93   0.218

 Tag No.: <None>
 B69                Gravity{1}                down      116   0.000      X             0.156
 B69  1   Guide                               rght            0.156      Y      -116  -0.001
 Stiff   :RIGID                               forw            0.163      Z         1  -0.163

                    GT1{1}                    down      116   0.000      X         0   0.156
 Comp.Wt :   0.000                            left        0  -0.156      Y      -116   0.000
                                              back       92   0.074      Z        93   0.074

                    GE1{1}                    down      107   0.000      X        19   0.156
                                              rght       19   0.156      Y      -107   0.005
                                              back            0.765      Z         1   0.765

                    GE2{1}                    down      107   0.000      X        27   0.156
                                              rght       27   0.156      Y      -107  -0.005
                                              forw            0.804      Z         1  -0.804

                    GE3{1}                    down      107   0.000      X       -25  -0.156
                                              left       25   0.156      Y      -107   0.005
                                              back            0.783      Z         1   0.783
```

S U P P O R T F O R C E S
(Force - lbf , Moment - ft-lb , Tran. - in , Rot. - deg)

Point/ Supp. ID	Connect/ Type	Load Combination	L O C A L Dirn	Force	Deform	G L O B A L Dirn	Force	Deform
		GE4{1}	down	107	0.000	X	-17	-0.156
			left	17	0.156	Y	-107	-0.005
			forw		0.781	Z	1	-0.781
		GE5{1}	down	126	0.000	X	19	0.156
			rght	19	0.156	Y	-126	0.005
			back		0.763	Z	1	0.763
		GE6{1}	down	126	0.000	X	27	0.156
			rght	27	0.156	Y	-126	-0.005
			forw		0.806	Z	1	-0.806
		GE7{1}	down	126	0.000	X	-25	-0.156
			left	25	0.156	Y	-126	0.005
			back		0.781	Z	1	0.781
		GE8{1}	down	126	0.000	X	-17	-0.156
			left	17	0.156	Y	-126	-0.005
			forw		0.783	Z	1	-0.783
		GT1P1{1}	down	116	0.000	X	0	0.156
			left	0	-0.156	Y	-116	0.001
			back	93	0.081	Z	94	0.081
Tag No.: <None>								
B70		Gravity{1}	down	114	0.000	X	0	0.156
B70 1	Guide		rght	0	0.156	Y	-114	-0.001
Stiff	:RIGID		forw		0.163	Z	1	-0.163
		GT1{1}	down	114	0.000	X	16	0.156
Comp.Wt :	0.000		rght	16	0.156	Y	-114	-0.000
			back	103	-0.060	Z	103	-0.060
		GE1{1}	down	106	0.000	X	36	0.156
			rght	36	0.156	Y	-106	0.005
			back		0.764	Z	1	0.764
		GE2{1}	down	104	0.000	X	15	0.156
			rght	15	0.156	Y	-104	-0.005
			forw		0.804	Z	1	-0.804
		GE3{1}	down	106	0.000	X	-16	-0.156
			left	16	0.156	Y	-106	0.005
			back		0.782	Z	1	0.782
		GE4{1}	down	104	0.000	X	-35	-0.156
			left	35	0.156	Y	-104	-0.005
			forw		0.781	Z	1	-0.781
		GE5{1}	down	125	0.000	X	36	0.156
			rght	36	0.156	Y	-125	0.005
			back		0.763	Z	1	0.763

```
-----------------------------------------------------------------------------------------------------------------
Primary Piping
04/24/2020 2018719                                                          BENTLEY
07:34 AM                                                                    AutoPIPE Nuclear 12.00.00.16   RESULT PAGE 163
-----------------------------------------------------------------------------------------------------------------

                                          S U P P O R T    F O R C E S
        ( Force - lbf   , Moment - ft-lb  , Tran. - in  , Rot. - deg   )
 Point/  Connect/    Load                          L O C A L              G L O B A L
 Supp. ID   Type   Combination                Dirn  Force    Deform    Dirn   Force   Deform
 -------- -------- ----------------------     ---- -------- --------   ---- -------- --------
                   GE6{1}                     down      123   0.000      X        15   0.156
                                              rght       15   0.156      Y      -123  -0.005
                                              forw            0.806      Z         1  -0.806

                   GE7{1}                     down      125   0.000      X       -16  -0.156
                                              left       16   0.156      Y      -125   0.005
                                              back            0.780      Z         1   0.780

                   GE8{1}                     down      123   0.000      X       -35  -0.156
                                              left       35   0.156      Y      -123  -0.005
                                              forw            0.783      Z         1  -0.783

                   GT1P1{1}                   down      114   0.000      X        16   0.156
                                              rght       16   0.156      Y      -114  -0.000
                                              back      104  -0.055      Z       105  -0.055

 Tag No.: <None>
 B71               Gravity{1}                 down      122   0.000      X             0.156
 B71  1   Guide                               rght            0.156      Y      -122  -0.001
 Stiff   :RIGID                               forw            0.163      Z         1  -0.163

                   GT1{1}                     down      123   0.000      X       -48   0.141
 Comp.Wt :   0.000                            left       48  -0.141      Y      -123  -0.001
                                              forw       93   0.193      Z       -92  -0.193

                   GE1{1}                     down      111   0.000      X        21   0.156
                                              rght       21   0.156      Y      -111   0.004
                                              back            0.764      Z         1   0.764

                   GE2{1}                     down      112   0.000      X             0.106
                                              rght            0.106      Y      -112  -0.004
                                              forw            0.803      Z         1  -0.803

                   GE3{1}                     down      111   0.000      X            -0.108
                                              left            0.108      Y      -111   0.004
                                              back            0.782      Z         1   0.782

                   GE4{1}                     down      112   0.000      X       -22  -0.156
                                              left       22   0.156      Y      -112  -0.004
                                              forw            0.781      Z         1  -0.781

                   GE5{1}                     down      131   0.000      X        21   0.156
                                              rght       21   0.156      Y      -131   0.004
                                              back            0.763      Z         1   0.763

                   GE6{1}                     down      132   0.000      X             0.106
                                              rght            0.106      Y      -132  -0.004
                                              forw            0.805      Z         1  -0.805

                   GE7{1}                     down      131   0.000      X            -0.109
                                              left            0.109      Y      -131   0.004
                                              back            0.780      Z         1   0.780
```

```
-----------------------------------------------------------------------------------------------------------------
Primary Piping
04/24/2020 2018719                                                          BENTLEY
07:34 AM                                                                    AutoPIPE Nuclear 12.00.00.16   RESULT PAGE 164
-----------------------------------------------------------------------------------------------------------------

                                        S U P P O R T    F O R C E S
        ( Force - lbf   , Moment - ft-lb  , Tran. - in  , Rot. - deg   )
 Point/  Connect/    Load                          L O C A L              G L O B A L
 Supp. ID   Type   Combination                Dirn  Force    Deform    Dirn   Force   Deform
 -------- -------- ----------------------     ---- -------- --------   ---- -------- --------
                   GE8{1}                     down      132   0.000      X       -22  -0.156
                                              left       22   0.156      Y      -132  -0.004
                                              forw            0.782      Z         1  -0.782

                   GT1P1{1}                   down      123   0.000      X       -50   0.139
                                              left       50  -0.139      Y      -123  -0.001
                                              forw       86   0.192      Z       -85  -0.192

 Tag No.: <None>
 B72               Gravity{1}                 down       83   0.000      X         0   0.156
 B72  1   Guide                               rght        0   0.156      Y       -83  -0.001
 Stiff   :RIGID                               forw            0.163      Z         1  -0.163

                   GT1{1}                     down       81   0.000      X       -31   0.069
 Comp.Wt :   0.000                            left       31  -0.069      Y       -82  -0.002
                                              forw       58   0.326      Z       -57  -0.326

                   GE1{1}                     down       78   0.000      X         0   0.021
                                              rght            0.021      Y       -78   0.005
                                              back            0.764      Z         0   0.764

                   GE2{1}                     down       74   0.000      X             0.065
                                              rght            0.065      Y       -74  -0.005
                                              forw            0.803      Z         0  -0.803

                   GE3{1}                     down       78   0.000      X         0  -0.068
                                              left            0.068      Y       -78   0.005
                                              back            0.782      Z         0   0.782

                   GE4{1}                     down       74   0.000      X            -0.022
                                              left            0.022      Y       -74  -0.005
                                              forw            0.780      Z         0  -0.780

                   GE5{1}                     down       92   0.000      X         0   0.021
                                              rght            0.021      Y       -92   0.005
                                              back            0.762      Z         1   0.762

                   GE6{1}                     down       88   0.000      X         0   0.065
                                              rght            0.065      Y       -88  -0.005
                                              forw            0.805      Z         1  -0.805

                   GE7{1}                     down       92   0.000      X         0  -0.068
                                              left            0.068      Y       -92   0.005
                                              back            0.779      Z         1   0.779

                   GE8{1}                     down       88   0.000      X         0  -0.022
                                              left            0.023      Y       -88  -0.005
                                              forw            0.782      Z         1  -0.782

                   GT1P1{1}                   down       81   0.000      X       -31   0.066
                                              left       31  -0.066      Y       -81  -0.002
                                              forw       57   0.329      Z       -57  -0.329
```

```
-----------------------------------------------------------------------------------------------------------------
Primary Piping
04/24/2020 2018719                                                          BENTLEY
07:34 AM                                                                    AutoPIPE Nuclear 12.00.00.16   RESULT PAGE 165
-----------------------------------------------------------------------------------------------------------------

                                          S U P P O R T    F O R C E S
        ( Force - lbf   , Moment - ft-lb  , Tran. - in  , Rot. - deg   )
 Point/  Connect/    Load                          L O C A L              G L O B A L
 Supp. ID   Type   Combination                Dirn  Force    Deform    Dirn   Force   Deform
 -------- -------- ----------------------     ---- -------- --------   ---- -------- --------
 Tag No.: <None>
 B73                Gravity{1}                down       91   0.000      X         9   0.156
 B73  1   Guide                               rght        9   0.156      Y       -91  -0.001
 Stiff   :RIGID                               forw           0.163      Z         1  -0.163

                    GT1{1}                    down       92   0.000      X       227   0.156
 Comp.Wt :   0.000                            rght      227   0.156      Y       -94  -0.003
                                              forw      258   0.398      Z      -257  -0.398

                    GE1{1}                    down       78   0.000      X       -65  -0.156
                                              left       65   0.156      Y       -78   0.005
                                              back           0.763      Z         1   0.763

                    GE2{1}                    down       87   0.000      X       180   0.156
                                              rght      180   0.156      Y       -87  -0.005
                                              forw           0.803      Z         1  -0.803

                    GE3{1}                    down       78   0.000      X      -176  -0.156
                                              left      176   0.156      Y       -78   0.005
                                              back           0.781      Z         1   0.781

                    GE4{1}                    down       87   0.000      X        69   0.156
                                              rght       69   0.156      Y       -87  -0.005
                                              forw           0.780      Z         1  -0.780

                    GE5{1}                    down       92   0.000      X       -65  -0.156
                                              left       65   0.156      Y       -92   0.005
                                              back           0.762      Z         1   0.762

                    GE6{1}                    down      102   0.000      X       180   0.156
                                              rght      180   0.156      Y      -102  -0.005
                                              forw           0.805      Z         1  -0.805

                    GE7{1}                    down       92   0.000      X      -176  -0.156
                                              left      176   0.156      Y       -92   0.005
                                              back           0.779      Z         1   0.779

                    GE8{1}                    down      102   0.000      X        69   0.156
                                              rght       69   0.156      Y      -102  -0.005
                                              forw           0.782      Z         1  -0.782

                    GT1P1{1}                  down       92   0.000      X       233   0.156
                                              rght      233   0.156      Y       -94  -0.003
                                              forw      261   0.402      Z      -260  -0.402

 Tag No.: <None>
 B74                Gravity{1}                down       99   0.000      X             0.134
 B74  1   Guide                               rght           0.134      Y       -99  -0.001
 Stiff   :RIGID                               forw           0.163      Z         1  -0.163

                    GT1{1}                    down       84   0.000      X        51   0.552
 Comp.Wt :   0.000                            rght       51   0.552      Y       -84  -0.003
```

S U P P O R T F O R C E S
(Force - lbf , Moment - ft-lb , Tran. - in , Rot. - deg)

Point/ Supp. ID	Connect/ Type	Load Combination	L O C A L Dirn	L O C A L Force	L O C A L Deform	G L O B A L Dirn	G L O B A L Force	G L O B A L Deform
			forw	45	0.532	Z	-44	-0.532
		GE1{1}	down	119	0.000	X		-0.456
			left		0.456	Y	-119	0.004
			back		0.763	Z	1	0.763
		GE2{1}	down	70	0.000	X		0.473
			rght		0.473	Y	-70	-0.005
			forw		0.802	Z	0	-0.802
		GE3{1}	down	118	0.000	X		-0.465
			left		0.465	Y	-118	0.004
			back		0.781	Z	1	0.781
		GE4{1}	down	70	0.000	X		0.462
			rght		0.462	Y	-70	-0.004
			forw		0.780	Z	0	-0.780
		GE5{1}	down	139	0.000	X		-0.456
			left		0.456	Y	-139	0.004
			back		0.761	Z	1	0.761
		GE6{1}	down	87	0.000	X		0.474
			rght		0.474	Y	-87	-0.005
			forw		0.804	Z	0	-0.804
		GE7{1}	down	140	0.000	X		-0.465
			left		0.465	Y	-140	0.004
			back		0.779	Z	1	0.779
		GE8{1}	down	88	0.000	X		0.462
			rght		0.462	Y	-88	-0.004
			forw		0.781	Z	0	-0.781
		GT1P1{1}	down	84	0.000	X	51	0.562
			rght	51	0.562	Y	-84	-0.003
			forw	44	0.539	Z	-44	-0.539
Tag No.: <None>								
B75		Gravity{1}	down	58	0.000	X	1	0.095
B75 1	Guide		rght		0.122	Y	-58	0.002
Stiff	:RIGID		back		0.095	Z		-0.122
		GT1{1}	down	78	0.000	X	50	0.365
Comp.Wt :	0.000		rght	40	0.346	Y	-78	0.006
			back	48	0.365	Z	-40	-0.346
		GE1{1}	up		0.002	X		-0.347
			left		0.590	Y		-0.004
			forw		0.347	Z		0.590
		GE2{1}	down	94	0.000	X	2	0.360

S U P P O R T F O R C E S
(Force - lbf , Moment - ft-lb , Tran. - in , Rot. - deg)

Point/ Supp. ID	Connect/ Type	Load Combination	L O C A L Dirn	Force	Deform	G L O B A L Dirn	Force	Deform
			rght		0.618	Y	-94	0.006
			back		0.360	Z		-0.618
		GE3{1}	up		0.002	X		-0.357
			left		0.603	Y		-0.004
			forw		0.357	Z		0.603
		GE4{1}	down	92	0.000	X	2	0.349
			rght		0.602	Y	-92	0.006
			back		0.349	Z		-0.602
		GE5{1}	down	1	0.000	X	0	-0.346
			left		0.589	Y	-1	-0.006
			forw		0.346	Z		0.589
		GE6{1}	down	102	0.000	X	2	0.360
			rght		0.619	Y	-102	0.006
			back		0.360	Z		-0.619
		GE7{1}	up		0.000	X		-0.357
			left		0.601	Y		-0.006
			forw		0.357	Z		0.601
		GE8{1}	down	100	0.000	X	2	0.349
			rght		0.603	Y	-100	0.006
			back		0.349	Z		-0.603
		GT1P1{1}	down	78	0.000	X	50	0.369
			rght	40	0.347	Y	-78	0.006
			back	48	0.369	Z	-40	-0.347
Tag No.: <None>								
B77		Gravity{1}	down	76	0.000	X		0.046
B77 1	Guide		rght		0.046	Y	-76	-0.001
Stiff	:RIGID		forw		0.074	Z	1	-0.074
		GT1{1}	down	48	0.000	X	299	0.156
Comp.Wt : 0.000			rght	299	0.156	Y	-52	-0.003
			forw	234	0.150	Z	-233	-0.150
		GE1{1}	down	129	0.000	X	-242	-0.156
			left	242	0.156	Y	-129	0.007
			back		0.380	Z	2	0.380
		GE2{1}	down	23	0.000	X	354	0.156
			rght	354	0.156	Y	-23	-0.007
			forw		0.391	Z	0	-0.391
		GE3{1}	down	130	0.000	X	-330	-0.156
			left	330	0.156	Y	-130	0.007
			back		0.382	Z	2	0.382

S U P P O R T F O R C E S
(Force - lbf , Moment - ft-lb , Tran. - in , Rot. - deg)

Point/ Supp. ID	Connect/ Type	Load Combination	L O C A L Dirn	Force	Deform	G L O B A L Dirn	Force	Deform
		GE4{1}	down	25	0.000	X	261	0.156
			rght	261	0.156	Y	-25	-0.007
			forw		0.387	Z	0	-0.387
		GE5{1}	down	149	0.000	X	-240	-0.156
			left	240	0.156	Y	-149	0.007
			back		0.379	Z	3	0.379
		GE6{1}	down	37	0.000	X	356	0.156
			rght	356	0.156	Y	-37	-0.007
			forw		0.392	Z	1	-0.392
		GE7{1}	down	150	0.000	X	-327	-0.156
			left	327	0.156	Y	-150	0.007
			back		0.381	Z	3	0.381
		GE8{1}	down	39	0.000	X	263	0.156
			rght	263	0.156	Y	-39	-0.007
			forw		0.388	Z	1	-0.388
		GT1P1{1}	down	48	0.000	X	313	0.156
			rght	313	0.156	Y	-52	-0.003
			forw	246	0.146	Z	-245	-0.146
Tag No.: <None>								
B59 F		Gravity{1}	down	103	0.000	X		-0.000
B59 F1	Guide		rght		0.012	Y	-103	-0.000
Stiff	:RIGID		forw		0.000	Z		-0.012
		GT1{1}	down	143	0.000	X	80	0.038
Comp.Wt :	0.000		rght	81	0.051	Y	-143	-0.000
			back	80	0.038	Z	-81	-0.051
		GE1{1}	down	18	0.000	X		0.000
			left		0.082	Y	-18	-0.000
			back		0.000	Z		0.082
		GE2{1}	down	155	0.000	X		-0.000
			rght		0.086	Y	-155	-0.000
			forw		0.000	Z		-0.086
		GE3{1}	down	17	0.000	X		0.000
			left		0.083	Y	-17	-0.000
			back		0.000	Z		0.083
		GE4{1}	down	153	0.000	X		-0.000
			rght		0.084	Y	-153	-0.000
			forw		0.000	Z		-0.084
		GE5{1}	down	29	0.000	X		0.000
			left		0.081	Y	-29	-0.000
			back		0.000	Z		0.081

```
-----------------------------------------------------------------------------------------------------------------
Primary Piping
04/24/2020 2018719                                                          BENTLEY
07:34 AM                                                                    AutoPIPE Nuclear 12.00.00.16   RESULT PAGE 169
-----------------------------------------------------------------------------------------------------------------

                                          S U P P O R T    F O R C E S
        ( Force - lbf   , Moment - ft-lb  , Tran. - in  , Rot. - deg   )
 Point/  Connect/    Load                          L O C A L              G L O B A L
 Supp. ID   Type   Combination                Dirn  Force    Deform    Dirn   Force   Deform
 -------- -------- ----------------------     ---- -------- --------   ---- -------- --------
                   GE6{1}                     down      170   0.000      X            -0.000
                                              rght            0.086      Y      -170  -0.000
                                              forw            0.000      Z            -0.086

                   GE7{1}                     down       27   0.000      X             0.000
                                              left            0.082      Y       -27  -0.000
                                              back            0.000      Z             0.082

                   GE8{1}                     down      168   0.000      X            -0.000
                                              rght            0.084      Y      -168  -0.000
                                              forw            0.000      Z            -0.084

                   GT1P1{1}                   down      143   0.000      X        81   0.039
                                              rght       81   0.052      Y      -143  -0.000
                                              back       81   0.039      Z       -81  -0.052

 Tag No.: <None>
 C01               Gravity{1}                 down        6   0.000      X             0.000
 C01  1   V - Stop                            -Z              0.000      Y        -6  -0.000
 Stiff   :RIGID                               +X              0.000      Z            -0.000

                   GT1{1}                     up              0.006      X            -0.022
 Comp.Wt :   0.000                            -Z              0.000      Y             0.006
                                              -X              0.022      Z             0.000

                   GE1{1}                     down        6   0.000      X             0.000
                                              -Z              0.000      Y        -6  -0.000
                                              +X              0.000      Z             0.000

                   GE2{1}                     down        6   0.000      X             0.000
                                              -Z              0.000      Y        -6  -0.000
                                              +X              0.000      Z            -0.000

                   GE3{1}                     down        6   0.000      X             0.000
                                              -Z              0.000      Y        -6  -0.000
                                              +X              0.000      Z             0.000

                   GE4{1}                     down        6   0.000      X             0.000
                                              -Z              0.000      Y        -6  -0.000
                                              +X              0.000      Z            -0.000

                   GE5{1}                     down        7   0.000      X             0.000
                                              -Z              0.000      Y        -7  -0.000
                                              +X              0.000      Z             0.000

                   GE6{1}                     down        7   0.000      X             0.000
                                              -Z              0.000      Y        -7  -0.000
                                              +X              0.000      Z            -0.000

                   GE7{1}                     down        7   0.000      X             0.000
                                              -Z              0.000      Y        -7  -0.000
                                              +X              0.000      Z             0.000
```

```
-----------------------------------------------------------------------------------------------------------------
Primary Piping
04/24/2020 2018719                                                          BENTLEY
07:34 AM                                                                    AutoPIPE Nuclear 12.00.00.16   RESULT PAGE 170
-----------------------------------------------------------------------------------------------------------------

                                        S U P P O R T    F O R C E S
        ( Force - lbf   , Moment - ft-lb  , Tran. - in  , Rot. - deg   )
 Point/  Connect/    Load                          L O C A L              G L O B A L
 Supp. ID   Type   Combination                Dirn  Force    Deform    Dirn   Force   Deform
 -------- -------- ----------------------     ---- -------- --------   ---- -------- --------
                   GE8{1}                     down        7   0.000      X            0.000
                                              -Z              0.000      Y        -7  -0.000
                                              +X              0.000      Z            -0.000

                   GT1P1{1}                   up              0.006      X            -0.023
                                              -Z              0.000      Y             0.006
                                              -X              0.023      Z             0.000

 Tag No.: <None>
 C01               Gravity{1}                 down        0   0.000      X             0.000
 C01  2   Guide                               left            0.000      Y            -0.000
 Stiff   :RIGID                               back            0.000      Z         0  -0.000

                   GT1{1}                     down            0.000      X            -0.022
 Comp.Wt :   0.000                            rght            0.022      Y             0.006
                                              back            0.006      Z             0.000

                   GE1{1}                     up          1   0.000      X             0.000
                                              left            0.000      Y            -0.000
                                              back            0.000      Z         1   0.000

                   GE2{1}                     down        1   0.000      X             0.000
                                              left            0.000      Y            -0.000
                                              back            0.000      Z        -1  -0.000

                   GE3{1}                     up          1   0.000      X             0.000
                                              left            0.000      Y            -0.000
                                              back            0.000      Z         1   0.000

                   GE4{1}                     down        1   0.000      X             0.000
                                              left            0.000      Y            -0.000
                                              back            0.000      Z        -1  -0.000

                   GE5{1}                     up          1   0.000      X             0.000
                                              left            0.000      Y            -0.000
                                              back            0.000      Z         1   0.000

                   GE6{1}                     down        1   0.000      X             0.000
                                              left            0.000      Y            -0.000
                                              back            0.000      Z        -1  -0.000

                   GE7{1}                     up          1   0.000      X             0.000
                                              left            0.000      Y            -0.000
                                              back            0.000      Z         1   0.000

                   GE8{1}                     down        1   0.000      X             0.000
                                              left            0.000      Y            -0.000
                                              back            0.000      Z        -1  -0.000

                   GT1P1{1}                   down            0.000      X            -0.023
                                              rght            0.023      Y             0.006
                                              back            0.006      Z             0.000
```

```
-----------------------------------------------------------------------------------------------------------------
Primary Piping
04/24/2020 2018719                                                          BENTLEY
07:34 AM                                                                    AutoPIPE Nuclear 12.00.00.16   RESULT PAGE 171
-----------------------------------------------------------------------------------------------------------------

                                          S U P P O R T    F O R C E S
        ( Force - lbf   , Moment - ft-lb  , Tran. - in  , Rot. - deg   )
 Point/  Connect/    Load                          L O C A L              G L O B A L
 Supp. ID   Type   Combination                Dirn  Force    Deform    Dirn   Force   Deform
 -------- -------- ----------------------     ---- -------- --------   ---- -------- --------
 Tag No.: <None>
 C21                Gravity{1}                down       63   0.000      X             0.000
 C21  2   Guide                               rght            0.027      Y       -63  -0.000
 Stiff   :RIGID                               forw            0.000      Z             0.027

                    GT1{1}                    down       54   0.000      X        42   0.067
 Comp.Wt :   0.000                            left       10  -0.012      Y       -54  -0.000
                                              forw       42   0.067      Z       -10   0.012

                    GE1{1}                    down       56   0.000      X             0.000
                                              left            0.035      Y       -56  -0.000
                                              forw            0.000      Z            -0.035

                    GE2{1}                    down       61   0.000      X             0.000
                                              rght            0.044      Y       -61  -0.000
                                              forw            0.000      Z             0.044

                    GE3{1}                    down       52   0.000      X            -0.000
                                              left            0.042      Y       -52  -0.000
                                              back            0.000      Z            -0.042

                    GE4{1}                    down       58   0.000      X            -0.000
                                              rght            0.037      Y       -58  -0.000
                                              back            0.000      Z             0.037

                    GE5{1}                    down       66   0.000      X             0.000
                                              left            0.034      Y       -66  -0.000
                                              forw            0.000      Z            -0.034

                    GE6{1}                    down       72   0.000      X             0.000
                                              rght            0.044      Y       -72  -0.000
                                              forw            0.000      Z             0.044

                    GE7{1}                    down       62   0.000      X            -0.000
                                              left            0.041      Y       -62  -0.000
                                              back            0.000      Z            -0.041

                    GE8{1}                    down       68   0.000      X            -0.000
                                              rght            0.038      Y       -68  -0.000
                                              back            0.000      Z             0.038

                    GT1P1{1}                  down       54   0.000      X        42   0.069
                                              left       10  -0.012      Y       -54  -0.000
                                              forw       42   0.069      Z       -10   0.012

 Tag No.: <None>
 C22                Gravity{1}                down       59   0.000      X         -5   0.000
 C22  2   Guide                               left       27   0.031      Y       -58  -0.000
 Stiff   :RIGID                               forw            0.000      Z       -27  -0.031

                    GT1{1}                    down       62   0.000      X        44   0.231
 Comp.Wt :   0.000                            rght        9   0.010      Y       -66  -0.019
```

```
-----------------------------------------------------------------------------------------------------------------
Primary Piping
04/24/2020 2018719                                                          BENTLEY
07:34 AM                                                                    AutoPIPE Nuclear 12.00.00.16   RESULT PAGE 172
-----------------------------------------------------------------------------------------------------------------

                                          S U P P O R T    F O R C E S
        ( Force - lbf   , Moment - ft-lb  , Tran. - in  , Rot. - deg   )
 Point/  Connect/    Load                          L O C A L              G L O B A L
 Supp. ID   Type   Combination                Dirn  Force    Deform    Dirn   Force   Deform
 -------- -------- ----------------------     ---- -------- --------   ---- -------- --------
                                              forw       49   0.232      Z         9   0.010

                    GE1{1}                    down       58   0.000      X        -5   0.000
                                              rght       60   0.031      Y       -58  -0.000
                                              forw            0.000      Z        60   0.031

                    GE2{1}                    down       51   0.000      X        -4   0.001
                                              left       70   0.031      Y       -51  -0.000
                                              forw            0.001      Z       -70  -0.031

                    GE3{1}                    down       60   0.000      X        -5  -0.000
                                              rght       68   0.031      Y       -60   0.000
                                              back            0.000      Z        68   0.031

                    GE4{1}                    down       53   0.000      X        -4   0.000
                                              left       63   0.031      Y       -53  -0.000
                                              forw            0.000      Z       -63  -0.031

                    GE5{1}                    down       68   0.000      X        -6   0.000
                                              rght       60   0.031      Y       -68  -0.000
                                              forw            0.000      Z        60   0.031

                    GE6{1}                    down       61   0.000      X        -5   0.001
                                              left       70   0.031      Y       -61  -0.000
                                              forw            0.001      Z       -70  -0.031

                    GE7{1}                    down       70   0.000      X        -6  -0.000
                                              rght       67   0.031      Y       -70  -0.000
                                              back            0.000      Z        67   0.031

                    GE8{1}                    down       63   0.000      X        -5   0.000
                                              left       63   0.031      Y       -63  -0.000
                                              forw            0.000      Z       -63  -0.031

                    GT1P1{1}                  down       62   0.000      X        44   0.237
                                              rght        9   0.013      Y       -66  -0.019
                                              forw       49   0.238      Z         9   0.013

 Tag No.: <None>
 C23                Gravity{1}                down       35   0.000      X        -3   0.000
 C23  2   Guide                               left            0.395      Y       -35  -0.000
 Stiff   :RIGID                               forw            0.000      Z            -0.395

                    GT1{1}                    down       23   0.000      X        10   0.336
 Comp.Wt :   0.000                            rght       14  -0.006      Y       -24  -0.027
                                              forw       12   0.337      Z        14  -0.006

                    GE1{1}                    down       17   0.000      X        -1   0.000
                                              rght            0.620      Y       -17  -0.000
                                              forw            0.000      Z             0.620

                    GE2{1}                    down       37   0.000      X        -3   0.001
```

```
-----------------------------------------------------------------------------------------------------------------
Primary Piping
04/24/2020 2018719                                                    BENTLEY
07:34 AM                                                              AutoPIPE Nuclear 12.00.00.16   RESULT PAGE 173
-----------------------------------------------------------------------------------------------------------------

                                        S U P P O R T    F O R C E S
        ( Force - lbf   , Moment - ft-lb  , Tran. - in  , Rot. - deg   )
 Point/  Connect/    Load                          L O C A L              G L O B A L
 Supp. ID   Type   Combination                Dirn  Force    Deform    Dirn   Force   Deform
 -------- -------- ----------------------     ---- -------- --------   ---- -------- --------
                                             left            0.717      Y       -37  -0.000
                                             forw            0.001      Z            -0.717

                    GE3{1}                   down       17   0.000      X        -1  -0.000
                                             rght            0.689      Y       -17   0.000
                                             back            0.000      Z             0.689

                    GE4{1}                   down       37   0.000      X        -3   0.000
                                             left            0.651      Y       -37  -0.000
                                             forw            0.000      Z            -0.651

                    GE5{1}                   down       22   0.000      X        -2   0.000
                                             rght            0.617      Y       -22  -0.000
                                             forw            0.000      Z             0.617

                    GE6{1}                   down       42   0.000      X        -3   0.001
                                             left            0.720      Y       -42  -0.000
                                             forw            0.001      Z            -0.720

                    GE7{1}                   down       22   0.000      X        -2  -0.000
                                             rght            0.686      Y       -22   0.000
                                             back            0.000      Z             0.686

                    GE8{1}                   down       42   0.000      X        -3   0.000
                                             left            0.654      Y       -42  -0.000
                                             forw            0.000      Z            -0.654

                    GT1P1{1}                 down       23   0.000      X        10   0.344
                                             rght       14   0.004      Y       -24  -0.028
                                             forw       12   0.345      Z        14   0.004

 Tag No.: <None>
 C24                Gravity{1}               down       41   0.000      X            -0.093
 C24  2   Guide                              left            0.093      Y       -41  -0.015
 Stiff   :RIGID                              forw            0.536      Z         1  -0.536

                    GT1{1}                   down       55   0.000      X        30   0.283
 Comp.Wt :   0.000                           rght       30   0.283      Y       -54  -0.004
                                             back       32  -0.133      Z        34  -0.132

                    GE1{1}                   down       51   0.000      X             0.147
                                             rght            0.147      Y       -51   0.024
                                             back            0.846      Z         1   0.845

                    GE2{1}                   down       32   0.000      X            -0.155
                                             left            0.155      Y       -32  -0.028
                                             forw            0.967      Z         1  -0.966

                    GE3{1}                   down       52   0.000      X             0.148
                                             rght            0.148      Y       -52   0.027
                                             back            0.927      Z         2   0.927
```

S U P P O R T F O R C E S
(Force - lbf , Moment - ft-lb , Tran. - in , Rot. - deg)

Point/ Supp. ID	Connect/ Type	Load Combination	L O C A L Dirn	L O C A L Force	L O C A L Deform	G L O B A L Dirn	G L O B A L Force	G L O B A L Deform
		GE4{1}	down	34	0.000	X		-0.154
			left		0.154	Y	-34	-0.026
			forw		0.888	Z	1	-0.888
		GE5{1}	down	58	0.000	X		0.147
			rght		0.147	Y	-58	0.024
			back		0.842	Z	2	0.841
		GE6{1}	down	40	0.000	X		-0.155
			left		0.155	Y	-40	-0.028
			forw		0.970	Z	1	-0.970
		GE7{1}	down	60	0.000	X		0.148
			rght		0.148	Y	-60	0.027
			back		0.924	Z	2	0.924
		GE8{1}	down	41	0.000	X		-0.154
			left		0.154	Y	-41	-0.026
			forw		0.892	Z	1	-0.892
		GT1P1{1}	down	55	0.000	X	30	0.292
			rght	30	0.292	Y	-54	-0.004
			back	32	-0.123	Z	34	-0.123
Tag No.: <None>								
C25		Gravity{1}	down	57	0.000	X	-11	-0.031
C25 2	Guide		left	11	0.031	Y	-57	-0.015
Stiff	:RIGID		forw		0.536	Z	2	-0.536
		GT1{1}	down	54	0.000	X	9	0.029
Comp.Wt :	0.000		rght	9	0.029	Y	-53	-0.008
			back	42	-0.267	Z	44	-0.267
		GE1{1}	down	51	0.000	X	39	0.031
			rght	39	0.031	Y	-51	0.024
			back		0.846	Z	1	0.845
		GE2{1}	down	53	0.000	X	-11	-0.031
			left	11	0.031	Y	-53	-0.028
			forw		0.967	Z	2	-0.966
		GE3{1}	down	50	0.000	X	11	0.031
			rght	11	0.031	Y	-50	0.027
			back		0.928	Z	1	0.927
		GE4{1}	down	53	0.000	X	-40	-0.031
			left	40	0.031	Y	-53	-0.026
			forw		0.888	Z	2	-0.888
		GE5{1}	down	60	0.000	X	39	0.031
			rght	39	0.031	Y	-60	0.024
			back		0.842	Z	2	0.842

S U P P O R T F O R C E S
(Force - lbf , Moment - ft-lb , Tran. - in , Rot. - deg)

Point/ Supp. ID	Connect/ Type	Load Combination	LOCAL Dirn	LOCAL Force	LOCAL Deform	GLOBAL Dirn	GLOBAL Force	GLOBAL Deform
		GE6{1}	down	62	0.000	X	-11	-0.031
			left	11	0.031	Y	-62	-0.028
			forw		0.970	Z	2	-0.970
		GE7{1}	down	60	0.000	X	10	0.031
			rght	10	0.031	Y	-60	0.027
			back		0.924	Z	2	0.924
		GE8{1}	down	62	0.000	X	-40	-0.031
			left	40	0.031	Y	-62	-0.026
			forw		0.892	Z	2	-0.892
		GT1P1{1}	down	54	0.000	X	10	0.031
			rght	10	0.031	Y	-53	-0.008
			back	42	-0.261	Z	44	-0.261
Tag No.: <None>								
C26		Gravity{1}	down	55	0.000	X		0.021
C26	2 Guide		rght		0.021	Y	-55	-0.015
Stiff	:RIGID		forw		0.536	Z	2	-0.536
		GT1{1}	down	56	0.000	X	-6	0.002
Comp.Wt :	0.000		left	6	-0.002	Y	-54	-0.012
			back	44	-0.402	Z	46	-0.402
		GE1{1}	down	51	0.000	X	2	0.031
			rght	2	0.031	Y	-51	0.024
			back		0.846	Z	1	0.845
		GE2{1}	down	50	0.000	X	13	0.031
			rght	13	0.031	Y	-49	-0.028
			forw		0.967	Z	1	-0.966
		GE3{1}	down	51	0.000	X	-14	-0.031
			left	14	0.031	Y	-51	0.027
			back		0.928	Z	1	0.927
		GE4{1}	down	50	0.000	X	-1	-0.031
			left	1	0.031	Y	-50	-0.026
			forw		0.888	Z	1	-0.888
		GE5{1}	down	60	0.000	X	2	0.031
			rght	2	0.031	Y	-60	0.024
			back		0.842	Z	2	0.842
		GE6{1}	down	59	0.000	X	13	0.031
			rght	13	0.031	Y	-59	-0.028
			forw		0.970	Z	2	-0.970
		GE7{1}	down	60	0.000	X	-14	-0.031
			left	14	0.031	Y	-60	0.027
			back		0.924	Z	2	0.924

```
-----------------------------------------------------------------------------------------------------------------
Primary Piping
04/24/2020 2018719                                                                  BENTLEY
07:34 AM                                                                            AutoPIPE Nuclear 12.00.00.16   RESULT PAGE 176
-----------------------------------------------------------------------------------------------------------------

                                          S U P P O R T    F O R C E S
        ( Force - lbf   , Moment - ft-lb  , Tran. - in  , Rot. - deg   )
 Point/  Connect/    Load                          L O C A L              G L O B A L
 Supp. ID   Type   Combination                Dirn  Force    Deform    Dirn   Force   Deform
 -------- -------- ----------------------     ---- -------- --------   ---- -------- --------
                   GE8{1}                     down       59   0.000      X        -1  -0.031
                                              left        1   0.031      Y       -59  -0.026
                                              forw            0.892      Z         2  -0.892

                   GT1P1{1}                   down       56   0.000      X        -6   0.002
                                              left        6  -0.002      Y       -54  -0.012
                                              back       44  -0.399      Z        46  -0.399

 Tag No.: <None>
 C28               Gravity{1}                 down       52   0.000      X             0.013
 C28  2   Guide                               rght            0.013      Y       -52  -0.016
 Stiff   :RIGID                               forw            0.536      Z         2  -0.536

                   GT1{1}                     down       52   0.000      X         5   0.013
 Comp.Wt :   0.000                            rght        5   0.013      Y       -52  -0.016
                                              forw       16   0.537      Z       -15  -0.536

                   GE1{1}                     down       49   0.000      X         3   0.031
                                              rght        3   0.031      Y       -49   0.025
                                              back            0.846      Z         1   0.845

                   GE2{1}                     down       48   0.000      X             -0.007
                                              left            0.007      Y       -48  -0.029
                                              forw            0.967      Z         1  -0.966

                   GE3{1}                     down       48   0.000      X             -0.005
                                              left            0.005      Y       -48   0.028
                                              back            0.928      Z         1   0.927

                   GE4{1}                     down       47   0.000      X        -6  -0.031
                                              left        6   0.031      Y       -47  -0.027
                                              forw            0.888      Z         1  -0.888

                   GE5{1}                     down       58   0.000      X         3   0.031
                                              rght        3   0.031      Y       -58   0.025
                                              back            0.842      Z         2   0.842

                   GE6{1}                     down       57   0.000      X             -0.008
                                              left            0.008      Y       -56  -0.029
                                              forw            0.970      Z         2  -0.970

                   GE7{1}                     down       57   0.000      X             -0.006
                                              left            0.006      Y       -57   0.028
                                              back            0.924      Z         2   0.924

                   GE8{1}                     down       56   0.000      X        -6  -0.031
                                              left        6   0.031      Y       -56  -0.027
                                              forw            0.892      Z         2  -0.892

                   GT1P1{1}                   down       52   0.000      X         5   0.013
                                              rght        5   0.013      Y       -52  -0.016
                                              forw       16   0.537      Z       -14  -0.536
```

```
-----------------------------------------------------------------------------------------------------------------
Primary Piping
04/24/2020 2018719                                                          BENTLEY
07:34 AM                                                                    AutoPIPE Nuclear 12.00.00.16   RESULT PAGE 177
-----------------------------------------------------------------------------------------------------------------

                                        S U P P O R T    F O R C E S
        ( Force - lbf   , Moment - ft-lb  , Tran. - in  , Rot. - deg   )
 Point/  Connect/    Load                          L O C A L              G L O B A L
 Supp. ID   Type   Combination                Dirn  Force    Deform    Dirn   Force   Deform
 -------- -------- ----------------------     ---- -------- --------   ---- -------- --------
 Tag No.: <None>
 C29                Gravity{1}                down       63   0.000      X         6   0.031
 C29  2   Guide                               rght        6   0.031      Y       -63  -0.016
 Stiff   :RIGID                               forw           0.536      Z         2  -0.536

                    GT1{1}                    down       64   0.000      X       -17  -0.018
 Comp.Wt :   0.000                            left       17   0.018      Y       -65  -0.020
                                              forw       48   0.671      Z       -46  -0.671

                    GE1{1}                    down       55   0.000      X        29   0.031
                                              rght       29   0.031      Y       -55   0.025
                                              back           0.846      Z         2   0.845

                    GE2{1}                    down       57   0.000      X        33   0.031
                                              rght       33   0.031      Y       -57  -0.029
                                              forw           0.967      Z         2  -0.966

                    GE3{1}                    down       57   0.000      X       -32  -0.031
                                              left       32   0.031      Y       -57   0.027
                                              back           0.928      Z         2   0.927

                    GE4{1}                    down       58   0.000      X       -26  -0.031
                                              left       26   0.031      Y       -58  -0.026
                                              forw           0.888      Z         2  -0.888

                    GE5{1}                    down       66   0.000      X        29   0.031
                                              rght       29   0.031      Y       -66   0.025
                                              back           0.842      Z         2   0.842

                    GE6{1}                    down       67   0.000      X        33   0.031
                                              rght       33   0.031      Y       -67  -0.029
                                              forw           0.970      Z         2  -0.970

                    GE7{1}                    down       67   0.000      X       -32  -0.031
                                              left       32   0.031      Y       -67   0.027
                                              back           0.924      Z         2   0.924

                    GE8{1}                    down       68   0.000      X       -26  -0.031
                                              left       26   0.031      Y       -68  -0.026
                                              forw           0.892      Z         2  -0.892

                    GT1P1{1}                  down       64   0.000      X       -18  -0.020
                                              left       18   0.020      Y       -65  -0.020
                                              forw       48   0.674      Z       -46  -0.674

 Tag No.: <None>
 C31                Gravity{1}                down       51   0.000      X             0.087
 C31  2   Guide                               rght           0.087      Y       -51  -0.015
 Stiff   :RIGID                               forw           0.536      Z         1  -0.536

                    GT1{1}                    down       47   0.000      X       -23  -0.140
 Comp.Wt :   0.000                            left       23   0.140      Y       -48  -0.024
```

S U P P O R T F O R C E S
(Force - lbf , Moment - ft-lb , Tran. - in , Rot. - deg)

Point/ Supp. ID	Connect/ Type	Load Combination	L O C A L Dirn	Force	Deform	G L O B A L Dirn	Force	Deform
			forw	30	0.828	Z	-28	-0.828
		GE1{1}	down	57	0.000	X		0.258
			rght		0.258	Y	-57	0.024
			back		0.846	Z	2	0.845
		GE2{1}	down	48	0.000	X		0.587
			rght		0.587	Y	-48	-0.028
			forw		0.967	Z	1	-0.966
		GE3{1}	down	51	0.000	X		-0.498
			left		0.498	Y	-51	0.027
			back		0.928	Z	1	0.927
		GE4{1}	down	43	0.000	X		-0.164
			left		0.164	Y	-43	-0.025
			forw		0.888	Z	1	-0.888
		GE5{1}	down	66	0.000	X		0.267
			rght		0.267	Y	-66	0.024
			back		0.842	Z	2	0.841
		GE6{1}	down	58	0.000	X		0.595
			rght		0.595	Y	-58	-0.028
			forw		0.970	Z	2	-0.970
		GE7{1}	down	61	0.000	X		-0.490
			left		0.490	Y	-61	0.026
			back		0.924	Z	2	0.924
		GE8{1}	down	52	0.000	X		-0.155
			left		0.155	Y	-52	-0.026
			forw		0.892	Z	1	-0.892
		GT1P1{1}	down	47	0.000	X	-23	-0.147
			left	23	0.147	Y	-48	-0.024
			forw	30	0.835	Z	-28	-0.835
Tag No.: <None>								
C32		Gravity{1}	down	17	0.000	X	0	0.048
C32 2	Guide		left		0.599	Y	-17	-0.001
Stiff	:RIGID		forw		0.048	Z		-0.599
		GT1{1}	down	28	0.000	X	-2	0.042
Comp.Wt :	0.000		left	22	0.674	Y	-28	-0.001
			back	2	-0.042	Z	-22	-0.674
		GE1{1}	down	9	0.000	X	0	0.261
			rght	9	0.830	Y	-9	-0.007
			forw		0.262	Z	9	0.830
		GE2{1}	down	15	0.000	X	0	0.764

S U P P O R T F O R C E S
(Force - lbf , Moment - ft-lb , Tran. - in , Rot. - deg)

Point/ Supp. ID	Connect/ Type	Load Combination	L O C A L Dirn	Force	Deform	G L O B A L Dirn	Force	Deform
			left	47	0.830	Y	-15	-0.019
			forw		0.764	Z	-47	-0.830
		GE3{1}	down	14	0.000	X	0	-0.630
			rght	25	0.830	Y	-14	0.016
			back		0.630	Z	25	0.830
		GE4{1}	down	21	0.000	X	-1	-0.118
			left	25	0.830	Y	-21	0.003
			back		0.118	Z	-25	-0.830
		GE5{1}	down	11	0.000	X	0	0.274
			rght	8	0.830	Y	-11	-0.007
			forw		0.275	Z	8	0.830
		GE6{1}	down	18	0.000	X	0	0.775
			left	49	0.830	Y	-18	-0.020
			forw		0.775	Z	-49	-0.830
		GE7{1}	down	17	0.000	X	0	-0.618
			rght	23	0.830	Y	-17	0.016
			back		0.618	Z	23	0.830
		GE8{1}	down	23	0.000	X	-1	-0.105
			left	26	0.830	Y	-23	0.003
			back		0.105	Z	-26	-0.830
		GT1P1{1}	down	28	0.000	X	-3	0.041
			left	22	0.675	Y	-28	-0.001
			back	2	-0.041	Z	-22	-0.675
Tag No.: <None>								
C33		Gravity{1}	down	32	0.000	X	-1	0.048
C33 2	Guide		left		0.667	Y	-32	-0.001
Stiff	:RIGID		forw		0.048	Z		-0.667
		GT1{1}	down	20	0.000	X	2	0.083
Comp.Wt : 0.000			rght	16	-0.464	Y	-20	-0.002
			forw	3	0.083	Z	16	-0.464
		GE1{1}	down	15	0.000	X	0	0.261
			rght	76	0.830	Y	-15	-0.006
			forw		0.262	Z	76	0.830
		GE2{1}	down	27	0.000	X	-1	0.764
			left	11	0.830	Y	-27	-0.017
			forw		0.764	Z	-11	-0.830
		GE3{1}	down	20	0.000	X	0	-0.630
			rght	10	0.830	Y	-20	0.014
			back		0.630	Z	10	0.830

```
-----------------------------------------------------------------------------------------------------------------
Primary Piping
04/24/2020 2018719                                                          BENTLEY
07:34 AM                                                                    AutoPIPE Nuclear 12.00.00.16   RESULT PAGE 180
-----------------------------------------------------------------------------------------------------------------

                                        S U P P O R T    F O R C E S
        ( Force - lbf   , Moment - ft-lb  , Tran. - in  , Rot. - deg   )
 Point/  Connect/    Load                          L O C A L              G L O B A L
 Supp. ID   Type   Combination                Dirn  Force    Deform    Dirn   Force   Deform
 -------- -------- ----------------------     ---- -------- --------   ---- -------- --------
                   GE4{1}                     down       32   0.000      X        -1  -0.118
                                              left       91   0.830      Y       -32   0.003
                                              back            0.118      Z       -91  -0.830

                   GE5{1}                     down       20   0.000      X         0   0.274
                                              rght       75   0.830      Y       -20  -0.006
                                              forw            0.275      Z        75   0.830

                   GE6{1}                     down       31   0.000      X        -1   0.775
                                              left       11   0.830      Y       -31  -0.018
                                              forw            0.775      Z       -11  -0.830

                   GE7{1}                     down       25   0.000      X        -1  -0.618
                                              rght       10   0.830      Y       -24   0.014
                                              back            0.618      Z        10   0.830

                   GE8{1}                     down       37   0.000      X        -1  -0.105
                                              left       92   0.830      Y       -37   0.002
                                              back            0.105      Z       -92  -0.830

                   GT1P1{1}                   down       20   0.000      X         2   0.084
                                              rght       16  -0.458      Y       -20  -0.002
                                              forw        3   0.084      Z        16  -0.458

 Tag No.: <None>
 C34               Gravity{1}                 down       41   0.000      X             -0.009
 C34  2   Guide                               left            0.009      Y       -41  -0.021
 Stiff   :RIGID                               forw            0.741      Z         1  -0.741

                   GT1{1}                     down       47   0.000      X        19   0.227
 Comp.Wt :   0.000                            rght       19   0.227      Y       -46  -0.010
                                              back       32  -0.337      Z        34  -0.337

                   GE1{1}                     down       50   0.000      X             0.268
                                              rght            0.268      Y       -50   0.025
                                              back            0.864      Z         1   0.864

                   GE2{1}                     down       40   0.000      X             0.582
                                              rght            0.582      Y       -40  -0.028
                                              forw            0.962      Z         1  -0.962

                   GE3{1}                     down       45   0.000      X             -0.487
                                              left            0.487      Y       -45   0.027
                                              back            0.930      Z         1   0.929

                   GE4{1}                     down       35   0.000      X             -0.176
                                              left            0.176      Y       -35  -0.026
                                              forw            0.908      Z         1  -0.907

                   GE5{1}                     down       58   0.000      X             0.277
                                              rght            0.277      Y       -58   0.025
                                              back            0.860      Z         2   0.860
```

S U P P O R T F O R C E S
(Force - lbf , Moment - ft-lb , Tran. - in , Rot. - deg)

Point/ Supp. ID	Connect/ Type	Load Combination	L O C A L Dirn	L O C A L Force	L O C A L Deform	G L O B A L Dirn	G L O B A L Force	G L O B A L Deform
		GE6{1}	down	48	0.000	X		0.589
			rght		0.589	Y	-48	-0.028
			forw		0.965	Z	1	-0.965
		GE7{1}	down	53	0.000	X		-0.479
			left		0.479	Y	-53	0.027
			back		0.927	Z	2	0.926
		GE8{1}	down	43	0.000	X		-0.168
			left		0.168	Y	-43	-0.026
			forw		0.912	Z	1	-0.911
		GT1P1{1}	down	47	0.000	X	19	0.232
			rght	19	0.232	Y	-46	-0.009
			back	32	-0.328	Z	34	-0.327
Tag No.: <None>								
C35		Gravity{1}	down	58	0.000	X	-4	-0.031
C35	2 Guide		left	4	0.031	Y	-58	-0.021
Stiff	:RIGID		forw		0.741	Z	2	-0.741
		GT1{1}	down	57	0.000	X	23	0.031
Comp.Wt :	0.000		rght	23	0.031	Y	-55	-0.014
			back	54	-0.472	Z	56	-0.472
		GE1{1}	down	50	0.000	X	36	0.031
			rght	36	0.031	Y	-50	0.025
			back		0.864	Z	1	0.864
		GE2{1}	down	52	0.000	X	39	0.031
			rght	39	0.031	Y	-52	-0.028
			forw		0.962	Z	2	-0.962
		GE3{1}	down	51	0.000	X	-36	-0.031
			left	36	0.031	Y	-51	0.027
			back		0.930	Z	1	0.929
		GE4{1}	down	53	0.000	X	-33	-0.031
			left	33	0.031	Y	-53	-0.026
			forw		0.908	Z	2	-0.908
		GE5{1}	down	60	0.000	X	37	0.031
			rght	37	0.031	Y	-60	0.025
			back		0.861	Z	2	0.860
		GE6{1}	down	62	0.000	X	39	0.031
			rght	39	0.031	Y	-62	-0.028
			forw		0.965	Z	2	-0.965
		GE7{1}	down	61	0.000	X	-36	-0.031
			left	36	0.031	Y	-61	0.027
			back		0.927	Z	2	0.926

```
-----------------------------------------------------------------------------------------------------------------
Primary Piping
04/24/2020 2018719                                                          BENTLEY
07:34 AM                                                                    AutoPIPE Nuclear 12.00.00.16   RESULT PAGE 182
-----------------------------------------------------------------------------------------------------------------

                                        S U P P O R T    F O R C E S
        ( Force - lbf   , Moment - ft-lb  , Tran. - in  , Rot. - deg   )
 Point/  Connect/    Load                          L O C A L              G L O B A L
 Supp. ID   Type   Combination                Dirn  Force    Deform    Dirn   Force   Deform
 -------- -------- ----------------------     ---- -------- --------   ---- -------- --------
                   GE8{1}                     down       63   0.000      X       -32  -0.031
                                              left       32   0.031      Y       -63  -0.026
                                              forw            0.912      Z         2  -0.912

                   GT1P1{1}                   down       56   0.000      X        24   0.031
                                              rght       24   0.031      Y       -55  -0.013
                                              back       55  -0.466      Z        57  -0.465

 Tag No.: <None>
 C36               Gravity{1}                 down       53   0.000      X            -0.029
 C36  2   Guide                               left            0.029      Y       -53  -0.021
 Stiff   :RIGID                               forw            0.741      Z         2  -0.741

                   GT1{1}                     down       53   0.000      X        -5  -0.031
 Comp.Wt :   0.000                            left        5   0.031      Y       -52  -0.018
                                              back       46  -0.607      Z        48  -0.606

                   GE1{1}                     down       50   0.000      X         1   0.031
                                              rght        1   0.031      Y       -50   0.025
                                              back            0.865      Z         1   0.864

                   GE2{1}                     down       48   0.000      X         0  -0.031
                                              left        0   0.031      Y       -48  -0.028
                                              forw            0.962      Z         1  -0.962

                   GE3{1}                     down       50   0.000      X             0.015
                                              rght            0.015      Y       -50   0.027
                                              back            0.930      Z         1   0.929

                   GE4{1}                     down       48   0.000      X        -4  -0.031
                                              left        4   0.031      Y       -48  -0.026
                                              forw            0.908      Z         1  -0.908

                   GE5{1}                     down       59   0.000      X         1   0.031
                                              rght        1   0.031      Y       -59   0.025
                                              back            0.861      Z         2   0.860

                   GE6{1}                     down       57   0.000      X         0  -0.031
                                              left        0   0.031      Y       -57  -0.028
                                              forw            0.965      Z         2  -0.965

                   GE7{1}                     down       58   0.000      X             0.013
                                              rght            0.013      Y       -58   0.027
                                              back            0.927      Z         2   0.926

                   GE8{1}                     down       57   0.000      X        -4  -0.031
                                              left        4   0.031      Y       -57  -0.026
                                              forw            0.912      Z         2  -0.912

                   GT1P1{1}                   down       53   0.000      X        -6  -0.031
                                              left        6   0.031      Y       -52  -0.017
                                              back       47  -0.603      Z        48  -0.603
```

```
-----------------------------------------------------------------------------------------------------------------
Primary Piping
04/24/2020 2018719                                                          BENTLEY
07:34 AM                                                                    AutoPIPE Nuclear 12.00.00.16   RESULT PAGE 183
-----------------------------------------------------------------------------------------------------------------

                                          S U P P O R T    F O R C E S
        ( Force - lbf   , Moment - ft-lb  , Tran. - in  , Rot. - deg   )
 Point/  Connect/    Load                          L O C A L              G L O B A L
 Supp. ID   Type   Combination                Dirn  Force    Deform    Dirn   Force   Deform
 -------- -------- ----------------------     ---- -------- --------   ---- -------- --------
 Tag No.: <None>
 C37                Gravity{1}                down       58   0.000      X            -0.031
 C37  2   Guide                               left            0.031      Y       -58  -0.021
 Stiff   :RIGID                               forw            0.741      Z         2  -0.741

                    GT1{1}                    down       58   0.000      X        -3  -0.031
 Comp.Wt :   0.000                            left        3   0.031      Y       -57  -0.021
                                              back        6  -0.741      Z         8  -0.741

                    GE1{1}                    down       53   0.000      X         5   0.031
                                              rght        5   0.031      Y       -53   0.025
                                              back            0.865      Z         2   0.864

                    GE2{1}                    down       52   0.000      X         7   0.031
                                              rght        7   0.031      Y       -52  -0.028
                                              forw            0.962      Z         2  -0.962

                    GE3{1}                    down       53   0.000      X       -10  -0.031
                                              left       10   0.031      Y       -53   0.027
                                              back            0.930      Z         2   0.929

                    GE4{1}                    down       52   0.000      X        -6  -0.031
                                              left        6   0.031      Y       -52  -0.026
                                              forw            0.908      Z         2  -0.908

                    GE5{1}                    down       62   0.000      X         5   0.031
                                              rght        5   0.031      Y       -62   0.025
                                              back            0.861      Z         2   0.860

                    GE6{1}                    down       62   0.000      X         7   0.031
                                              rght        7   0.031      Y       -62  -0.028
                                              forw            0.965      Z         2  -0.965

                    GE7{1}                    down       62   0.000      X       -11  -0.031
                                              left       11   0.031      Y       -62   0.027
                                              back            0.927      Z         2   0.926

                    GE8{1}                    down       62   0.000      X        -6  -0.031
                                              left        6   0.031      Y       -62  -0.026
                                              forw            0.912      Z         2  -0.912

                    GT1P1{1}                  down       58   0.000      X        -3  -0.031
                                              left        3   0.031      Y       -57  -0.021
                                              back       10  -0.741      Z        12  -0.741

 Tag No.: <None>
 C38                Gravity{1}                down       39   0.000      X            -0.027
 C38  2   Guide                               left            0.027      Y       -39  -0.022
 Stiff   :RIGID                               forw            0.741      Z         1  -0.741

                    GT1{1}                    down       38   0.000      X        -8  -0.031
 Comp.Wt :   0.000                            left        8   0.031      Y       -39  -0.026
```

S U P P O R T F O R C E S
(Force - lbf , Moment - ft-lb , Tran. - in , Rot. - deg)

Point/ Supp. ID	Connect/ Type	Load Combination	L O C A L Dirn	Force	Deform	G L O B A L Dirn	Force	Deform
			forw	36	0.875	Z	-35	-0.875
		GE1{1}	down	37	0.000	X	-1	-0.031
			left	1	0.031	Y	-37	0.026
			back		0.865	Z	1	0.864
		GE2{1}	down	35	0.000	X	6	0.031
			rght	6	0.031	Y	-35	-0.029
			forw		0.962	Z	1	-0.962
		GE3{1}	down	37	0.000	X	-1	-0.031
			left	1	0.031	Y	-37	0.028
			back		0.930	Z	1	0.929
		GE4{1}	down	36	0.000	X	4	0.031
			rght	4	0.031	Y	-36	-0.027
			forw		0.908	Z	1	-0.908
		GE5{1}	down	43	0.000	X	-1	-0.031
			left	1	0.031	Y	-43	0.026
			back		0.861	Z	1	0.860
		GE6{1}	down	42	0.000	X	6	0.031
			rght	6	0.031	Y	-42	-0.029
			forw		0.965	Z	1	-0.964
		GE7{1}	down	44	0.000	X	-1	-0.031
			left	1	0.031	Y	-44	0.028
			back		0.927	Z	1	0.926
		GE8{1}	down	42	0.000	X	5	0.031
			rght	5	0.031	Y	-42	-0.027
			forw		0.912	Z	1	-0.912
		GT1P1{1}	down	38	0.000	X	-10	-0.031
			left	10	0.031	Y	-39	-0.026
			forw	37	0.878	Z	-36	-0.878
Tag No.: <None>								
C39		Gravity{1}	down	45	0.000	X	-1	-0.031
C39 2	Guide		left	1	0.031	Y	-45	-0.022
Stiff	:RIGID		forw		0.741	Z	1	-0.741
		GT1{1}	down	46	0.000	X	38	0.031
Comp.Wt :	0.000		rght	38	0.031	Y	-48	-0.029
			forw	57	0.950	Z	-56	-0.950
		GE1{1}	down	39	0.000	X	39	0.031
			rght	39	0.031	Y	-39	0.026
			back		0.865	Z	1	0.864
		GE2{1}	down	41	0.000	X	22	0.031

```
-----------------------------------------------------------------------------------------------------------------
Primary Piping
04/24/2020 2018719                                                          BENTLEY
07:34 AM                                                                    AutoPIPE Nuclear 12.00.00.16   RESULT PAGE 185
-----------------------------------------------------------------------------------------------------------------

                                        S U P P O R T    F O R C E S
        ( Force - lbf   , Moment - ft-lb  , Tran. - in  , Rot. - deg   )
 Point/  Connect/    Load                          L O C A L              G L O B A L
 Supp. ID   Type   Combination                Dirn  Force    Deform    Dirn   Force   Deform
 -------- -------- ----------------------     ---- -------- --------   ---- -------- --------
                                              rght       22   0.031      Y       -41  -0.029
                                              forw            0.962      Z         1  -0.961

                    GE3{1}                    down       38   0.000      X       -25  -0.031
                                              left       25   0.031      Y       -38   0.028
                                              back            0.930      Z         1   0.929

                    GE4{1}                    down       40   0.000      X       -43  -0.031
                                              left       43   0.031      Y       -40  -0.027
                                              forw            0.908      Z         1  -0.908

                    GE5{1}                    down       46   0.000      X        39   0.031
                                              rght       39   0.031      Y       -46   0.026
                                              back            0.861      Z         1   0.860

                    GE6{1}                    down       48   0.000      X        21   0.031
                                              rght       21   0.031      Y       -48  -0.029
                                              forw            0.965      Z         1  -0.964

                    GE7{1}                    down       45   0.000      X       -26  -0.031
                                              left       26   0.031      Y       -45   0.028
                                              back            0.927      Z         1   0.926

                    GE8{1}                    down       47   0.000      X       -44  -0.031
                                              left       44   0.031      Y       -47  -0.027
                                              forw            0.912      Z         1  -0.912

                    GT1P1{1}                  down       46   0.000      X        41   0.031
                                              rght       41   0.031      Y       -48  -0.029
                                              forw       60   0.955      Z       -59  -0.955

 Tag No.: <None>
 C40                Gravity{1}                down       45   0.000      X            -0.058
 C40  2   Guide                               left            0.058      Y       -45  -0.021
 Stiff   :RIGID                               forw            0.741      Z         1  -0.741

                    GT1{1}                    down       39   0.000      X        19   0.204
 Comp.Wt :   0.000                            rght       19   0.204      Y       -40  -0.031
                                              forw       25   1.085      Z       -24  -1.084

                    GE1{1}                    down       46   0.000      X             0.494
                                              rght            0.494      Y       -46   0.025
                                              back            0.865      Z         1   0.864

                    GE2{1}                    down       40   0.000      X             0.003
                                              rght            0.003      Y       -40  -0.028
                                              forw            0.962      Z         1  -0.961

                    GE3{1}                    down       50   0.000      X            -0.059
                                              left            0.059      Y       -50   0.027
                                              back            0.929      Z         1   0.929
```

S U P P O R T F O R C E S
(Force - lbf , Moment - ft-lb , Tran. - in , Rot. - deg)

Point/ Supp. ID	Connect/ Type	Load Combination	L O C A L Dirn	Force	Deform	G L O B A L Dirn	Force	Deform
		GE4{1}	down	44	0.000	X		-0.550
			left		0.550	Y	-44	-0.026
			forw		0.908	Z	1	-0.908
		GE5{1}	down	54	0.000	X		0.488
			rght		0.488	Y	-54	0.025
			back		0.861	Z	2	0.861
		GE6{1}	down	48	0.000	X		-0.003
			left		0.003	Y	-48	-0.028
			forw		0.965	Z	1	-0.964
		GE7{1}	down	59	0.000	X		-0.064
			left		0.064	Y	-59	0.026
			back		0.926	Z	2	0.926
		GE8{1}	down	52	0.000	X		-0.555
			left		0.555	Y	-52	-0.026
			forw		0.912	Z	1	-0.912
		GT1P1{1}	down	39	0.000	X	19	0.212
			rght	19	0.212	Y	-40	-0.031
			forw	25	1.093	Z	-24	-1.092
Tag No.: <None>								
C42		Gravity{1}	down	30	0.000	X	1	-0.069
C42 2	Guide		rght		0.732	Y	-30	-0.002
Stiff	:RIGID		forw		0.069	Z		-0.732
		GT1{1}	down	40	0.000	X	0	-0.071
Comp.Wt :	0.000		rght	31	0.784	Y	-40	-0.002
			forw	1	0.071	Z	-31	-0.784
		GE1{1}	down	20	0.000	X	0	0.623
			left		0.783	Y	-20	0.016
			back		0.623	Z		0.783
		GE2{1}	down	31	0.000	X	1	-0.118
			rght	42	0.830	Y	-31	-0.003
			forw		0.118	Z	-42	-0.830
		GE3{1}	down	15	0.000	X	0	0.026
			left	26	0.830	Y	-15	0.001
			back		0.026	Z	26	0.830
		GE4{1}	down	26	0.000	X	1	-0.711
			rght		0.797	Y	-26	-0.018
			forw		0.712	Z		-0.797
		GE5{1}	down	24	0.000	X	1	0.615
			left		0.782	Y	-24	0.015
			back		0.615	Z		0.782

S U P P O R T F O R C E S
(Force - lbf , Moment - ft-lb , Tran. - in , Rot. - deg)

Point/ Supp. ID	Connect/ Type	Load Combination	L O C A L Dirn	Force	Deform	G L O B A L Dirn	Force	Deform
		GE6{1}	down	35	0.000	X	1	-0.127
			rght	44	0.830	Y	-35	-0.003
			forw		0.127	Z	-44	-0.830
		GE7{1}	down	19	0.000	X	0	0.018
			left	25	0.830	Y	-19	0.000
			back		0.018	Z	25	0.830
		GE8{1}	down	30	0.000	X	1	-0.719
			rght		0.798	Y	-30	-0.018
			forw		0.720	Z		-0.798
		GT1P1{1}	down	41	0.000	X	-1	-0.071
			rght	32	0.780	Y	-41	-0.002
			forw	2	0.071	Z	-32	-0.780
Tag No.: <None>								
C43		Gravity{1}	down	26	0.000	X	1	-0.069
C43	2 Guide		rght		0.729	Y	-26	-0.002
Stiff	:RIGID		forw		0.069	Z		-0.729
		GT1{1}	down	18	0.000	X	-1	-0.131
Comp.Wt :	0.000		left	15	-0.259	Y	-19	-0.003
			forw	2	0.131	Z	15	-0.259
		GE1{1}	down	28	0.000	X	1	0.623
			left	43	0.830	Y	-28	0.016
			back		0.623	Z	43	0.830
		GE2{1}	down	25	0.000	X	1	-0.118
			rght	121	0.830	Y	-25	-0.003
			forw		0.118	Z	-121	-0.830
		GE3{1}	down	25	0.000	X	1	0.026
			left	124	0.830	Y	-25	0.001
			back		0.026	Z	124	0.830
		GE4{1}	down	21	0.000	X	1	-0.711
			rght	53	0.830	Y	-21	-0.018
			forw		0.712	Z	-53	-0.830
		GE5{1}	down	33	0.000	X	1	0.615
			left	42	0.830	Y	-33	0.016
			back		0.615	Z	42	0.830
		GE6{1}	down	29	0.000	X	1	-0.127
			rght	121	0.830	Y	-29	-0.003
			forw		0.127	Z	-121	-0.830
		GE7{1}	down	29	0.000	X	1	0.018
			left	124	0.830	Y	-29	0.000
			back		0.018	Z	124	0.830

```
-----------------------------------------------------------------------------------------------------------------
Primary Piping
04/24/2020 2018719                                                          BENTLEY
07:34 AM                                                                    AutoPIPE Nuclear 12.00.00.16   RESULT PAGE 188
-----------------------------------------------------------------------------------------------------------------

                                        S U P P O R T    F O R C E S
        ( Force - lbf   , Moment - ft-lb  , Tran. - in  , Rot. - deg   )
 Point/  Connect/    Load                          L O C A L              G L O B A L
 Supp. ID   Type   Combination                Dirn  Force    Deform    Dirn   Force   Deform
 -------- -------- ----------------------     ---- -------- --------   ---- -------- --------
                   GE8{1}                     down       25   0.000      X         1  -0.719
                                              rght       54   0.830      Y       -25  -0.019
                                              forw            0.720      Z       -54  -0.830

                   GT1P1{1}                   down       18   0.000      X        -1  -0.133
                                              left       14  -0.236      Y       -18  -0.003
                                              forw        2   0.133      Z        14  -0.236

 Tag No.: <None>
 C45               Gravity{1}                 down       45   0.000      X            -0.062
 C45  2   Guide                               left            0.062      Y       -45  -0.006
 Stiff   :RIGID                               forw            0.732      Z         0  -0.732

                   GT1{1}                     down       50   0.000      X       -14  -0.341
 Comp.Wt :   0.000                            left       14   0.341      Y       -49  -0.000
                                              back       37  -0.014      Z        38  -0.014

                   GE1{1}                     down       40   0.000      X             0.438
                                              rght            0.438      Y       -40   0.008
                                              back            0.992      Z         0   0.992

                   GE2{1}                     down       41   0.000      X             0.037
                                              rght            0.037      Y       -41  -0.008
                                              forw            1.002      Z         0  -1.001

                   GE3{1}                     down       44   0.000      X            -0.102
                                              left            0.102      Y       -44   0.008
                                              back            0.979      Z         0   0.979

                   GE4{1}                     down       45   0.000      X            -0.502
                                              left            0.502      Y       -45  -0.008
                                              forw            1.009      Z         0  -1.009

                   GE5{1}                     down       48   0.000      X             0.433
                                              rght            0.433      Y       -48   0.008
                                              back            0.990      Z         0   0.990

                   GE6{1}                     down       49   0.000      X             0.031
                                              rght            0.031      Y       -49  -0.008
                                              forw            1.004      Z         0  -1.004

                   GE7{1}                     down       52   0.000      X            -0.108
                                              left            0.108      Y       -52   0.008
                                              back            0.977      Z         0   0.977

                   GE8{1}                     down       52   0.000      X            -0.508
                                              left            0.508      Y       -52  -0.008
                                              forw            1.011      Z         0  -1.011

                   GT1P1{1}                   down       50   0.000      X       -14  -0.351
                                              left       14   0.351      Y       -50   0.000
                                              back       37   0.020      Z        38   0.020
```

```
-----------------------------------------------------------------------------------------------------------------
Primary Piping
04/24/2020 2018719                                                          BENTLEY
07:34 AM                                                                    AutoPIPE Nuclear 12.00.00.16   RESULT PAGE 189
-----------------------------------------------------------------------------------------------------------------

                                          S U P P O R T    F O R C E S
        ( Force - lbf   , Moment - ft-lb  , Tran. - in  , Rot. - deg   )
 Point/  Connect/    Load                          L O C A L              G L O B A L
 Supp. ID   Type   Combination                Dirn  Force    Deform    Dirn   Force   Deform
 -------- -------- ----------------------     ---- -------- --------   ---- -------- --------
 Tag No.: <None>
 C46                Gravity{1}                down       56   0.000      X        -1  -0.031
 C46  2   Guide                               left        1   0.031      Y       -56  -0.006
 Stiff   :RIGID                               forw           0.732      Z         0  -0.732

                    GT1{1}                    down       56   0.000      X       -41  -0.031
 Comp.Wt :   0.000                            left       41   0.031      Y       -55  -0.001
                                              back       77  -0.149      Z        78  -0.149

                    GE1{1}                    down       53   0.000      X        29   0.031
                                              rght       29   0.031      Y       -53   0.008
                                              back           0.992      Z         0   0.992

                    GE2{1}                    down       51   0.000      X        30   0.031
                                              rght       30   0.031      Y       -51  -0.008
                                              forw           1.002      Z         0  -1.002

                    GE3{1}                    down       52   0.000      X       -34  -0.031
                                              left       34   0.031      Y       -52   0.008
                                              back           0.980      Z         0   0.979

                    GE4{1}                    down       51   0.000      X       -31  -0.031
                                              left       31   0.031      Y       -51  -0.008
                                              forw           1.009      Z         0  -1.009

                    GE5{1}                    down       62   0.000      X        29   0.031
                                              rght       29   0.031      Y       -62   0.008
                                              back           0.991      Z         0   0.991

                    GE6{1}                    down       61   0.000      X        30   0.031
                                              rght       30   0.031      Y       -61  -0.008
                                              forw           1.004      Z         0  -1.004

                    GE7{1}                    down       61   0.000      X       -34  -0.031
                                              left       34   0.031      Y       -61   0.008
                                              back           0.978      Z         0   0.977

                    GE8{1}                    down       60   0.000      X       -31  -0.031
                                              left       31   0.031      Y       -60  -0.008
                                              forw           1.011      Z         0  -1.011

                    GT1P1{1}                  down       56   0.000      X       -42  -0.031
                                              left       42   0.031      Y       -55  -0.001
                                              back       78  -0.118      Z        79  -0.118

 Tag No.: <None>
 C47                Gravity{1}                down       54   0.000      X            -0.016
 C47  2   Guide                               left           0.016      Y       -54  -0.006
 Stiff   :RIGID                               forw           0.732      Z         0  -0.732

                    GT1{1}                    down       54   0.000      X        10   0.031
 Comp.Wt :   0.000                            rght       10   0.031      Y       -54  -0.002
```

S U P P O R T F O R C E S
(Force - lbf , Moment - ft-lb , Tran. - in , Rot. - deg)

Point/ Supp. ID	Connect/ Type	Load Combination	L O C A L Dirn	L O C A L Force	L O C A L Deform	G L O B A L Dirn	G L O B A L Force	G L O B A L Deform
			back	48	-0.283	Z	48	-0.283
		GE1{1}	down	49	0.000	X		0.006
			rght		0.006	Y	-49	0.008
			back		0.992	Z	0	0.992
		GE2{1}	down	50	0.000	X	5	0.031
			rght	5	0.031	Y	-50	-0.008
			forw		1.002	Z	0	-1.002
		GE3{1}	down	50	0.000	X	-2	-0.031
			left	2	0.031	Y	-50	0.008
			back		0.980	Z	0	0.980
		GE4{1}	down	50	0.000	X		0.007
			rght		0.007	Y	-50	-0.008
			forw		1.009	Z	0	-1.009
		GE5{1}	down	58	0.000	X		0.007
			rght		0.007	Y	-58	0.008
			back		0.991	Z	0	0.991
		GE6{1}	down	59	0.000	X	5	0.031
			rght	5	0.031	Y	-59	-0.008
			forw		1.004	Z	0	-1.004
		GE7{1}	down	59	0.000	X	-2	-0.031
			left	2	0.031	Y	-59	0.008
			back		0.978	Z	0	0.978
		GE8{1}	down	59	0.000	X		0.008
			rght		0.008	Y	-59	-0.008
			forw		1.011	Z	0	-1.011
		GT1P1{1}	down	54	0.000	X	11	0.031
			rght	11	0.031	Y	-54	-0.002
			back	48	-0.255	Z	49	-0.255
Tag No.: <None>								
C48		Gravity{1}	down	55	0.000	X		-0.018
C48 2	Guide		left		0.018	Y	-55	-0.006
Stiff	:RIGID		forw		0.732	Z	0	-0.732
		GT1{1}	down	55	0.000	X	1	-0.013
Comp.Wt :	0.000		rght	1	-0.013	Y	-54	-0.003
			back	44	-0.417	Z	45	-0.417
		GE1{1}	down	50	0.000	X	10	0.031
			rght	10	0.031	Y	-50	0.008
			back		0.992	Z	0	0.992
		GE2{1}	down	50	0.000	X	12	0.031

S U P P O R T F O R C E S
(Force - lbf , Moment - ft-lb , Tran. - in , Rot. - deg)

Point/ Supp. ID	Connect/ Type	Load Combination	L O C A L Dirn	Force	Deform	G L O B A L Dirn	Force	Deform
			rght	12	0.031	Y	-50	-0.008
			forw		1.002	Z	0	-1.002
		GE3{1}	down	50	0.000	X	-12	-0.031
			left	12	0.031	Y	-50	0.008
			back		0.980	Z	0	0.980
		GE4{1}	down	50	0.000	X	-9	-0.031
			left	9	0.031	Y	-50	-0.008
			forw		1.009	Z	0	-1.009
		GE5{1}	down	59	0.000	X	10	0.031
			rght	10	0.031	Y	-59	0.008
			back		0.991	Z	0	0.991
		GE6{1}	down	59	0.000	X	12	0.031
			rght	12	0.031	Y	-59	-0.008
			forw		1.004	Z	0	-1.004
		GE7{1}	down	59	0.000	X	-13	-0.031
			left	13	0.031	Y	-59	0.008
			back		0.978	Z	0	0.978
		GE8{1}	down	59	0.000	X	-9	-0.031
			left	9	0.031	Y	-59	-0.008
			forw		1.011	Z	0	-1.011
		GT1P1{1}	down	55	0.000	X	1	-0.013
			rght	1	-0.013	Y	-54	-0.003
			back	44	-0.393	Z	44	-0.393
Tag No.: <None>								
C49		Gravity{1}	down	55	0.000	X		-0.027
C49	2 Guide		left		0.027	Y	-55	-0.006
Stiff	:RIGID		forw		0.732	Z	0	-0.732
		GT1{1}	down	55	0.000	X	0	-0.028
Comp.Wt :	0.000		left	0	0.028	Y	-54	-0.004
			back	45	-0.551	Z	45	-0.551
		GE1{1}	down	50	0.000	X	11	0.031
			rght	11	0.031	Y	-50	0.008
			back		0.992	Z	0	0.992
		GE2{1}	down	50	0.000	X	9	0.031
			rght	9	0.031	Y	-50	-0.008
			forw		1.003	Z	0	-1.003
		GE3{1}	down	50	0.000	X	-9	-0.031
			left	9	0.031	Y	-50	0.008
			back		0.980	Z	0	0.980

```
-----------------------------------------------------------------------------------------------------------------
Primary Piping
04/24/2020 2018719                                                          BENTLEY
07:34 AM                                                                    AutoPIPE Nuclear 12.00.00.16   RESULT PAGE 192
-----------------------------------------------------------------------------------------------------------------

                                        S U P P O R T    F O R C E S
        ( Force - lbf   , Moment - ft-lb  , Tran. - in  , Rot. - deg   )
 Point/  Connect/    Load                          L O C A L              G L O B A L
 Supp. ID   Type   Combination                Dirn  Force    Deform    Dirn   Force   Deform
 -------- -------- ----------------------     ---- -------- --------   ---- -------- --------
                   GE4{1}                     down       50   0.000      X       -11  -0.031
                                              left       11   0.031      Y       -50  -0.008
                                              forw            1.009      Z         0  -1.009

                   GE5{1}                     down       59   0.000      X        11   0.031
                                              rght       11   0.031      Y       -59   0.008
                                              back            0.991      Z         0   0.991

                   GE6{1}                     down       59   0.000      X         9   0.031
                                              rght        9   0.031      Y       -59  -0.008
                                              forw            1.005      Z         0  -1.005

                   GE7{1}                     down       59   0.000      X        -9  -0.031
                                              left        9   0.031      Y       -59   0.008
                                              back            0.978      Z         0   0.978

                   GE8{1}                     down       59   0.000      X       -11  -0.031
                                              left       11   0.031      Y       -59  -0.008
                                              forw            1.011      Z         0  -1.011

                   GT1P1{1}                   down       55   0.000      X         0  -0.028
                                              left        0   0.028      Y       -54  -0.004
                                              back       44  -0.530      Z        44  -0.530

 Tag No.: <None>
 C50               Gravity{1}                 down       55   0.000      X             -0.031
 C50  2   Guide                               left            0.031      Y       -55  -0.006
 Stiff   :RIGID                               forw            0.732      Z         0  -0.732

                   GT1{1}                     down       55   0.000      X        -1  -0.031
 Comp.Wt :   0.000                            left        1   0.031      Y       -54  -0.005
                                              back       49  -0.685      Z        49  -0.685

                   GE1{1}                     down       50   0.000      X         9   0.031
                                              rght        9   0.031      Y       -50   0.008
                                              back            0.992      Z         0   0.992

                   GE2{1}                     down       50   0.000      X        12   0.031
                                              rght       12   0.031      Y       -50  -0.008
                                              forw            1.003      Z         0  -1.003

                   GE3{1}                     down       50   0.000      X       -13  -0.031
                                              left       13   0.031      Y       -50   0.008
                                              back            0.980      Z         0   0.980

                   GE4{1}                     down       50   0.000      X       -10  -0.031
                                              left       10   0.031      Y       -50  -0.008
                                              forw            1.009      Z         0  -1.009

                   GE5{1}                     down       59   0.000      X         9   0.031
                                              rght        9   0.031      Y       -59   0.008
                                              back            0.991      Z         0   0.991
```

S U P P O R T F O R C E S
(Force - lbf , Moment - ft-lb , Tran. - in , Rot. - deg)

Point/ Supp. ID	Connect/ Type	Load Combination	L O C A L Dirn	Force	Deform	G L O B A L Dirn	Force	Deform
		GE6{1}	down	59	0.000	X	12	0.031
			rght	12	0.031	Y	-59	-0.008
			forw		1.005	Z	0	-1.005
		GE7{1}	down	59	0.000	X	-13	-0.031
			left	13	0.031	Y	-59	0.008
			back		0.978	Z	0	0.978
		GE8{1}	down	59	0.000	X	-10	-0.031
			left	10	0.031	Y	-59	-0.008
			forw		1.011	Z	0	-1.011
		GT1P1{1}	down	55	0.000	X	-1	-0.031
			left	1	0.031	Y	-54	-0.005
			back	45	-0.667	Z	45	-0.667
Tag No.: <None>								
C51		Gravity{1}	down	55	0.000	X		-0.025
C51	2 Guide		left		0.025	Y	-55	-0.007
Stiff	:RIGID		forw		0.732	Z	0	-0.732
		GT1{1}	down	55	0.000	X	1	-0.022
Comp.Wt :	0.000		rght	1	-0.022	Y	-55	-0.007
			forw	42	0.818	Z	-41	-0.818
		GE1{1}	down	51	0.000	X	12	0.031
			rght	12	0.031	Y	-51	0.009
			back		0.992	Z	0	0.992
		GE2{1}	down	50	0.000	X	7	0.031
			rght	7	0.031	Y	-50	-0.009
			forw		1.003	Z	0	-1.003
		GE3{1}	down	51	0.000	X	-7	-0.031
			left	7	0.031	Y	-51	0.009
			back		0.981	Z	0	0.981
		GE4{1}	down	50	0.000	X	-12	-0.031
			left	12	0.031	Y	-50	-0.009
			forw		1.009	Z	0	-1.009
		GE5{1}	down	60	0.000	X	12	0.031
			rght	12	0.031	Y	-60	0.009
			back		0.990	Z	1	0.990
		GE6{1}	down	60	0.000	X	7	0.031
			rght	7	0.031	Y	-60	-0.009
			forw		1.005	Z	1	-1.005
		GE7{1}	down	60	0.000	X	-7	-0.031
			left	7	0.031	Y	-60	0.009
			back		0.979	Z	1	0.979

```
-----------------------------------------------------------------------------------------------------------------
Primary Piping
04/24/2020 2018719                                                          BENTLEY
07:34 AM                                                                    AutoPIPE Nuclear 12.00.00.16   RESULT PAGE 194
-----------------------------------------------------------------------------------------------------------------

                                        S U P P O R T    F O R C E S
        ( Force - lbf   , Moment - ft-lb  , Tran. - in  , Rot. - deg   )
 Point/  Connect/    Load                          L O C A L              G L O B A L
 Supp. ID   Type   Combination                Dirn  Force    Deform    Dirn   Force   Deform
 -------- -------- ----------------------     ---- -------- --------   ---- -------- --------
                   GE8{1}                     down       60   0.000      X       -12  -0.031
                                              left       12   0.031      Y       -60  -0.009
                                              forw            1.011      Z         1  -1.011

                   GT1P1{1}                   down       55   0.000      X         1  -0.023
                                              rght        1  -0.023      Y       -55  -0.007
                                              forw       44   0.804      Z       -43  -0.804

 Tag No.: <None>
 C52               Gravity{1}                 down       52   0.000      X            -0.020
 C52  2   Guide                               left            0.020      Y       -52  -0.006
 Stiff   :RIGID                               forw            0.732      Z         0  -0.732

                   GT1{1}                     down       52   0.000      X        12   0.031
 Comp.Wt :   0.000                            rght       12   0.031      Y       -53  -0.007
                                              forw       43   0.952      Z       -43  -0.952

                   GE1{1}                     down       48   0.000      X         3   0.031
                                              rght        3   0.031      Y       -48   0.008
                                              back            0.992      Z         0   0.992

                   GE2{1}                     down       48   0.000      X        -1  -0.031
                                              left        1   0.031      Y       -48  -0.008
                                              forw            1.003      Z         0  -1.003

                   GE3{1}                     down       48   0.000      X         0   0.031
                                              rght        0   0.031      Y       -48   0.008
                                              back            0.981      Z         0   0.981

                   GE4{1}                     down       48   0.000      X        -4  -0.031
                                              left        4   0.031      Y       -48  -0.008
                                              forw            1.009      Z         0  -1.009

                   GE5{1}                     down       56   0.000      X         3   0.031
                                              rght        3   0.031      Y       -56   0.008
                                              back            0.990      Z         0   0.990

                   GE6{1}                     down       56   0.000      X        -1  -0.031
                                              left        1   0.031      Y       -56  -0.008
                                              forw            1.005      Z         0  -1.005

                   GE7{1}                     down       56   0.000      X             0.031
                                              rght            0.031      Y       -56   0.008
                                              back            0.979      Z         0   0.979

                   GE8{1}                     down       56   0.000      X        -4  -0.031
                                              left        4   0.031      Y       -56  -0.008
                                              forw            1.011      Z         0  -1.011

                   GT1P1{1}                   down       52   0.000      X        12   0.031
                                              rght       12   0.031      Y       -53  -0.007
                                              forw       43   0.941      Z       -42  -0.941
```

```
-----------------------------------------------------------------------------------------------------------------
Primary Piping
04/24/2020 2018719                                                          BENTLEY
07:34 AM                                                                    AutoPIPE Nuclear 12.00.00.16   RESULT PAGE 195
-----------------------------------------------------------------------------------------------------------------

                                          S U P P O R T    F O R C E S
        ( Force - lbf   , Moment - ft-lb  , Tran. - in  , Rot. - deg   )
 Point/  Connect/    Load                          L O C A L              G L O B A L
 Supp. ID   Type   Combination                Dirn  Force    Deform    Dirn   Force   Deform
 -------- -------- ----------------------     ---- -------- --------   ---- -------- --------
 Tag No.: <None>
 C53                Gravity{1}                down       63   0.000      X        -3  -0.031
 C53  2   Guide                               left        3   0.031      Y       -63  -0.006
 Stiff   :RIGID                               forw           0.732      Z         1  -0.732

                    GT1{1}                    down       63   0.000      X       -48  -0.031
 Comp.Wt :   0.000                            left       48   0.031      Y       -64  -0.009
                                              forw       89   1.086      Z       -88  -1.086

                    GE1{1}                    down       58   0.000      X        31   0.031
                                              rght       31   0.031      Y       -58   0.009
                                              back           0.992      Z         0   0.992

                    GE2{1}                    down       58   0.000      X        38   0.031
                                              rght       38   0.031      Y       -58  -0.009
                                              forw           1.003      Z         0  -1.003

                    GE3{1}                    down       58   0.000      X       -38  -0.031
                                              left       38   0.031      Y       -58   0.008
                                              back           0.981      Z         0   0.981

                    GE4{1}                    down       58   0.000      X       -29  -0.031
                                              left       29   0.031      Y       -58  -0.009
                                              forw           1.009      Z         0  -1.009

                    GE5{1}                    down       69   0.000      X        31   0.031
                                              rght       31   0.031      Y       -69   0.008
                                              back           0.990      Z         1   0.990

                    GE6{1}                    down       68   0.000      X        38   0.031
                                              rght       38   0.031      Y       -68  -0.009
                                              forw           1.005      Z         1  -1.005

                    GE7{1}                    down       69   0.000      X       -37  -0.031
                                              left       37   0.031      Y       -69   0.008
                                              back           0.979      Z         1   0.979

                    GE8{1}                    down       68   0.000      X       -29  -0.031
                                              left       29   0.031      Y       -68  -0.009
                                              forw           1.011      Z         1  -1.010

                    GT1P1{1}                  down       63   0.000      X       -48  -0.031
                                              left       48   0.031      Y       -64  -0.009
                                              forw       89   1.078      Z       -88  -1.078

 Tag No.: <None>
 C55                Gravity{1}                down       49   0.000      X            -0.035
 C55  2   Guide                               left           0.035      Y       -49  -0.006
 Stiff   :RIGID                               forw           0.732      Z         0  -0.732

                    GT1{1}                    down       47   0.000      X       -21  -0.369
 Comp.Wt :   0.000                            left       21   0.369      Y       -48  -0.011
```

S U P P O R T F O R C E S
(Force - lbf , Moment - ft-lb , Tran. - in , Rot. - deg)

Point/ Supp. ID	Connect/ Type	Load Combination	L O C A L Dirn	Force	Deform	G L O B A L Dirn	Force	Deform
			forw	31	1.243	Z	-31	-1.243
		GE1{1}	down	47	0.000	X		0.094
			rght		0.094	Y	-47	0.009
			back		0.991	Z	0	0.991
		GE2{1}	down	46	0.000	X		0.741
			rght		0.741	Y	-46	-0.009
			forw		1.003	Z	0	-1.003
		GE3{1}	down	46	0.000	X		-0.702
			left		0.702	Y	-46	0.008
			back		0.981	Z	0	0.981
		GE4{1}	down	45	0.000	X		-0.047
			left		0.047	Y	-45	-0.009
			forw		1.009	Z	0	-1.009
		GE5{1}	down	56	0.000	X		0.098
			rght		0.098	Y	-56	0.009
			back		0.990	Z	0	0.990
		GE6{1}	down	54	0.000	X		0.745
			rght		0.745	Y	-54	-0.009
			forw		1.005	Z	0	-1.005
		GE7{1}	down	54	0.000	X		-0.699
			left		0.699	Y	-54	0.008
			back		0.979	Z	0	0.979
		GE8{1}	down	53	0.000	X		-0.043
			left		0.043	Y	-53	-0.009
			forw		1.010	Z	0	-1.010
		GT1P1{1}	down	47	0.000	X	-21	-0.366
			left	21	0.366	Y	-48	-0.011
			forw	32	1.238	Z	-31	-1.238
Tag No.: <None>								
C56		Gravity{1}	down	35	0.000	X	0	0.005
C56 2	Guide		left		0.678	Y	-35	-0.000
Stiff	:RIGID		forw		0.005	Z		-0.678
		GT1{1}	down	39	0.000	X	20	0.005
Comp.Wt :	0.000		left	161	0.830	Y	-39	-0.000
			forw	20	0.005	Z	-161	-0.830
		GE1{1}	down	29	0.000	X	0	-0.042
			rght	68	0.830	Y	-29	0.000
			back		0.042	Z	68	0.830
		GE2{1}	down	31	0.000	X	0	0.954

S U P P O R T F O R C E S
(Force - lbf , Moment - ft-lb , Tran. - in , Rot. - deg)

Point/ Supp. ID	Connect/ Type	Load Combination	L O C A L Dirn	Force	Deform	G L O B A L Dirn	Force	Deform
			left	8	0.830	Y	-31	-0.007
			forw		0.954	Z	-8	-0.830
		GE3{1}	down	31	0.000	X	0	-0.891
			rght	1	0.830	Y	-31	0.006
			back		0.891	Z	1	0.830
		GE4{1}	down	33	0.000	X	0	0.107
			left	68	0.830	Y	-33	-0.001
			forw		0.107	Z	-68	-0.830
		GE5{1}	down	35	0.000	X	0	-0.036
			rght	68	0.830	Y	-35	0.000
			back		0.036	Z	68	0.830
		GE6{1}	down	37	0.000	X	0	0.959
			left	8	0.830	Y	-37	-0.007
			forw		0.959	Z	-8	-0.830
		GE7{1}	down	37	0.000	X	0	-0.886
			rght		0.830	Y	-37	0.006
			back		0.886	Z		0.830
		GE8{1}	down	38	0.000	X	0	0.113
			left	68	0.830	Y	-38	-0.001
			forw		0.113	Z	-68	-0.830
		GT1P1{1}	down	39	0.000	X	19	0.005
			left	154	0.830	Y	-39	-0.000
			forw	19	0.005	Z	-154	-0.830
Tag No.: <None>								
C57		Gravity{1}	down	39	0.000	X	0	0.005
C57	2 Guide		left		0.535	Y	-39	-0.000
Stiff	:RIGID		forw		0.005	Z		-0.535
		GT1{1}	down	37	0.000	X	6	0.108
Comp.Wt :	0.000		rght	29	-0.047	Y	-37	-0.001
			forw	6	0.108	Z	29	-0.047
		GE1{1}	down	34	0.000	X	0	-0.042
			rght	94	0.830	Y	-34	0.000
			back		0.042	Z	94	0.830
		GE2{1}	down	37	0.000	X	0	0.954
			left	38	0.830	Y	-37	-0.005
			forw		0.954	Z	-38	-0.830
		GE3{1}	down	35	0.000	X	0	-0.891
			rght	36	0.830	Y	-35	0.005
			back		0.891	Z	36	0.830

S U P P O R T F O R C E S
(Force - lbf , Moment - ft-lb , Tran. - in , Rot. - deg)

Point/ Supp. ID	Connect/ Type	Load Combination	L O C A L Dirn	Force	Deform	G L O B A L Dirn	Force	Deform
		GE4{1}	down	38	0.000	X	0	0.107
			left	102	0.830	Y	-38	-0.001
			forw		0.107	Z	-102	-0.830
		GE5{1}	down	41	0.000	X	0	-0.036
			rght	93	0.830	Y	-41	0.000
			back		0.036	Z	93	0.830
		GE6{1}	down	43	0.000	X	0	0.959
			left	38	0.830	Y	-43	-0.005
			forw		0.959	Z	-38	-0.830
		GE7{1}	down	42	0.000	X	0	-0.886
			rght	36	0.830	Y	-42	0.005
			back		0.886	Z	36	0.830
		GE8{1}	down	44	0.000	X	0	0.113
			left	103	0.830	Y	-44	-0.001
			forw		0.113	Z	-103	-0.830
		GT1P1{1}	down	37	0.000	X	6	0.111
			rght	29	-0.027	Y	-37	-0.001
			forw	6	0.111	Z	29	-0.027
Tag No.: <None>								
C58		Gravity{1}	down	42	0.000	X		0.039
C58 2	Guide		rght		0.039	Y	-42	-0.004
Stiff	:RIGID		forw		0.484	Z	0	-0.484
		GT1{1}	down	44	0.000	X	12	0.246
Comp.Wt :	0.000		rght	12	0.246	Y	-44	0.001
			back	33	0.080	Z	33	0.080
		GE1{1}	down	40	0.000	X		0.099
			rght		0.099	Y	-40	0.008
			back		1.005	Z	0	1.005
		GE2{1}	down	39	0.000	X		0.694
			rght		0.694	Y	-39	-0.008
			forw		1.043	Z	0	-1.043
		GE3{1}	down	39	0.000	X		-0.652
			left		0.652	Y	-39	0.008
			back		1.025	Z	0	1.025
		GE4{1}	down	38	0.000	X		-0.060
			left		0.060	Y	-38	-0.008
			forw		1.029	Z	0	-1.029
		GE5{1}	down	47	0.000	X		0.103
			rght		0.103	Y	-47	0.008
			back		1.002	Z	0	1.002

S U P P O R T F O R C E S
(Force - lbf , Moment - ft-lb , Tran. - in , Rot. - deg)

Point/ Supp. ID	Connect/ Type	Load Combination	L O C A L Dirn	Force	Deform	G L O B A L Dirn	Force	Deform
		GE6{1}	down	46	0.000	X		0.698
			rght		0.698	Y	-46	-0.008
			forw		1.045	Z	0	-1.045
		GE7{1}	down	46	0.000	X		-0.649
			left		0.649	Y	-46	0.008
			back		1.023	Z	0	1.023
		GE8{1}	down	45	0.000	X		-0.056
			left		0.056	Y	-45	-0.008
			forw		1.032	Z	0	-1.031
		GT1P1{1}	down	44	0.000	X	12	0.256
			rght	12	0.256	Y	-44	0.001
			back	33	0.108	Z	33	0.108
Tag No.: <None>								
C59		Gravity{1}	down	58	0.000	X	3	0.031
C59	2 Guide		rght	3	0.031	Y	-58	-0.004
Stiff	:RIGID		forw		0.484	Z	0	-0.484
		GT1{1}	down	57	0.000	X	24	0.031
Comp.Wt :	0.000		rght	24	0.031	Y	-57	-0.000
			back	65	-0.055	Z	66	-0.055
		GE1{1}	down	53	0.000	X	35	0.031
			rght	35	0.031	Y	-53	0.008
			back		1.005	Z	0	1.005
		GE2{1}	down	53	0.000	X	42	0.031
			rght	42	0.031	Y	-53	-0.008
			forw		1.043	Z	0	-1.043
		GE3{1}	down	53	0.000	X	-40	-0.031
			left	40	0.031	Y	-53	0.008
			back		1.025	Z	0	1.025
		GE4{1}	down	53	0.000	X	-34	-0.031
			left	34	0.031	Y	-53	-0.008
			forw		1.030	Z	0	-1.030
		GE5{1}	down	62	0.000	X	35	0.031
			rght	35	0.031	Y	-62	0.008
			back		1.003	Z	0	1.003
		GE6{1}	down	62	0.000	X	42	0.031
			rght	42	0.031	Y	-62	-0.008
			forw		1.045	Z	0	-1.045
		GE7{1}	down	62	0.000	X	-39	-0.031
			left	39	0.031	Y	-62	0.008
			back		1.023	Z	0	1.023

```
-----------------------------------------------------------------------------------------------------------------
Primary Piping
04/24/2020 2018719                                                          BENTLEY
07:34 AM                                                                    AutoPIPE Nuclear 12.00.00.16   RESULT PAGE 200
-----------------------------------------------------------------------------------------------------------------

                                        S U P P O R T    F O R C E S
        ( Force - lbf   , Moment - ft-lb  , Tran. - in  , Rot. - deg   )
 Point/  Connect/    Load                          L O C A L              G L O B A L
 Supp. ID   Type   Combination                Dirn  Force    Deform    Dirn   Force   Deform
 -------- -------- ----------------------     ---- -------- --------   ---- -------- --------
                   GE8{1}                     down       63   0.000      X       -34  -0.031
                                              left       34   0.031      Y       -63  -0.008
                                              forw            1.032      Z         0  -1.032

                   GT1P1{1}                   down       57   0.000      X        26   0.031
                                              rght       26   0.031      Y       -57  -0.000
                                              back       66  -0.030      Z        67  -0.030

 Tag No.: <None>
 C60               Gravity{1}                 down       54   0.000      X             0.018
 C60  2   Guide                               rght            0.018      Y       -54  -0.004
 Stiff   :RIGID                               forw            0.484      Z         0  -0.484

                   GT1{1}                     down       54   0.000      X        -5  -0.018
 Comp.Wt :   0.000                            left        5   0.018      Y       -53  -0.001
                                              back       43  -0.189      Z        43  -0.189

                   GE1{1}                     down       50   0.000      X         2   0.031
                                              rght        2   0.031      Y       -50   0.008
                                              back            1.005      Z         0   1.005

                   GE2{1}                     down       49   0.000      X        -3  -0.031
                                              left        3   0.031      Y       -49  -0.008
                                              forw            1.043      Z         0  -1.043

                   GE3{1}                     down       50   0.000      X         2   0.031
                                              rght        2   0.031      Y       -50   0.008
                                              back            1.025      Z         0   1.025

                   GE4{1}                     down       49   0.000      X        -3  -0.031
                                              left        3   0.031      Y       -49  -0.008
                                              forw            1.030      Z         0  -1.030

                   GE5{1}                     down       59   0.000      X         2   0.031
                                              rght        2   0.031      Y       -59   0.008
                                              back            1.003      Z         0   1.003

                   GE6{1}                     down       58   0.000      X        -3  -0.031
                                              left        3   0.031      Y       -58  -0.008
                                              forw            1.045      Z         0  -1.045

                   GE7{1}                     down       59   0.000      X         2   0.031
                                              rght        2   0.031      Y       -59   0.008
                                              back            1.023      Z         0   1.023

                   GE8{1}                     down       58   0.000      X        -3  -0.031
                                              left        3   0.031      Y       -58  -0.008
                                              forw            1.032      Z         0  -1.032

                   GT1P1{1}                   down       54   0.000      X        -5  -0.021
                                              left        5   0.021      Y       -53  -0.001
                                              back       43  -0.168      Z        43  -0.168
```

```
-----------------------------------------------------------------------------------------------------------------------
Primary Piping
04/24/2020 2018719                                                                    BENTLEY
07:34 AM                                                                              AutoPIPE Nuclear 12.00.00.16   RESULT PAGE 201
-----------------------------------------------------------------------------------------------------------------------

                                                S U P P O R T    F O R C E S
          ( Force - lbf   , Moment - ft-lb  , Tran. - in  , Rot. - deg   )
  Point/  Connect/    Load                                L O C A L              G L O B A L
 Supp. ID   Type   Combination                     Dirn  Force    Deform    Dirn   Force   Deform
 -------- -------- ----------------------          ---- -------- --------   ---- -------- --------
 Tag No.: <None>
 C61                Gravity{1}                     down       55   0.000      X             0.023
 C61  1   Guide                                    rght            0.023      Y       -55  -0.003
 Stiff   :RIGID                                    forw            0.484      Z         0  -0.484

                    GT1{1}                         down       55   0.000      X        -1   0.018
 Comp.Wt :   0.000                                 left        1  -0.018      Y       -55  -0.002
                                                   back       44  -0.324      Z        45  -0.324

                    GE1{1}                         down       50   0.000      X        12   0.031
                                                   rght       12   0.031      Y       -50   0.007
                                                   back            1.005      Z         0   1.005

                    GE2{1}                         down       51   0.000      X         7   0.031
                                                   rght        7   0.031      Y       -51  -0.007
                                                   forw            1.043      Z         0  -1.043

                    GE3{1}                         down       50   0.000      X        -7  -0.031
                                                   left        7   0.031      Y       -50   0.007
                                                   back            1.025      Z         0   1.025

                    GE4{1}                         down       50   0.000      X       -11  -0.031
                                                   left       11   0.031      Y       -50  -0.007
                                                   forw            1.030      Z         0  -1.030

                    GE5{1}                         down       59   0.000      X        12   0.031
                                                   rght       12   0.031      Y       -59   0.007
                                                   back            1.003      Z         0   1.003

                    GE6{1}                         down       60   0.000      X         7   0.031
                                                   rght        7   0.031      Y       -60  -0.007
                                                   forw            1.045      Z         0  -1.045

                    GE7{1}                         down       59   0.000      X        -7  -0.031
                                                   left        7   0.031      Y       -59   0.007
                                                   back            1.023      Z         0   1.023

                    GE8{1}                         down       60   0.000      X       -11  -0.031
                                                   left       11   0.031      Y       -60  -0.007
                                                   forw            1.032      Z         0  -1.032

                    GT1P1{1}                       down       55   0.000      X        -2   0.016
                                                   left        2  -0.016      Y       -55  -0.002
                                                   back       44  -0.305      Z        44  -0.305

 Tag No.: <None>
 C63                Gravity{1}                     down       54   0.000      X             0.031
 C63  1   Guide                                    rght            0.031      Y       -54  -0.004
 Stiff   :RIGID                                    forw            0.484      Z         0  -0.484

                    GT1{1}                         down       54   0.000      X         2   0.031
 Comp.Wt :   0.000                                 rght        2   0.031      Y       -54  -0.004
```

S U P P O R T F O R C E S
(Force - lbf , Moment - ft-lb , Tran. - in , Rot. - deg)

Point/ Supp. ID	Connect/ Type	Load Combination	L O C A L Dirn	Force	Deform	G L O B A L Dirn	Force	Deform
			back	46	-0.458	Z	47	-0.458
		GE1{1}	down	50	0.000	X	12	0.031
			rght	12	0.031	Y	-50	0.008
			back		1.006	Z	0	1.006
		GE2{1}	down	49	0.000	X	14	0.031
			rght	14	0.031	Y	-49	-0.008
			forw		1.043	Z	0	-1.043
		GE3{1}	down	50	0.000	X	-13	-0.031
			left	13	0.031	Y	-50	0.008
			back		1.025	Z	0	1.025
		GE4{1}	down	49	0.000	X	-11	-0.031
			left	11	0.031	Y	-49	-0.008
			forw		1.030	Z	0	-1.030
		GE5{1}	down	59	0.000	X	12	0.031
			rght	12	0.031	Y	-59	0.008
			back		1.003	Z	0	1.003
		GE6{1}	down	58	0.000	X	14	0.031
			rght	14	0.031	Y	-58	-0.008
			forw		1.045	Z	0	-1.045
		GE7{1}	down	59	0.000	X	-13	-0.031
			left	13	0.031	Y	-59	0.008
			back		1.023	Z	0	1.023
		GE8{1}	down	58	0.000	X	-11	-0.031
			left	11	0.031	Y	-58	-0.008
			forw		1.033	Z	0	-1.032
		GT1P1{1}	down	54	0.000	X	2	0.031
			rght	2	0.031	Y	-54	-0.003
			back	45	-0.443	Z	45	-0.443
Tag No.: <None>								
C64		Gravity{1}	down	56	0.000	X		0.032
C64 2	Guide		rght		0.031	Y	-56	-0.003
Stiff	:RIGID		forw		0.484	Z	0	-0.484
		GT1{1}	down	56	0.000	X	-2	0.027
Comp.Wt :	0.000		left	2	-0.026	Y	-56	-0.004
			forw	44	0.592	Z	-44	-0.592
		GE1{1}	down	51	0.000	X	7	0.032
			rght	7	0.031	Y	-51	0.007
			back		1.006	Z	0	1.006
		GE2{1}	down	51	0.000	X	9	0.032

```
-----------------------------------------------------------------------------------------------------------------
Primary Piping
04/24/2020 2018719                                                          BENTLEY
07:34 AM                                                                    AutoPIPE Nuclear 12.00.00.16   RESULT PAGE 203
-----------------------------------------------------------------------------------------------------------------

                                        S U P P O R T    F O R C E S
        ( Force - lbf   , Moment - ft-lb  , Tran. - in  , Rot. - deg   )
 Point/  Connect/    Load                          L O C A L              G L O B A L
 Supp. ID   Type   Combination                Dirn  Force    Deform    Dirn   Force   Deform
 -------- -------- ----------------------     ---- -------- --------   ---- -------- --------
                                              rght        9   0.031      Y       -51  -0.007
                                              forw            1.043      Z         0  -1.043

                    GE3{1}                    down       51   0.000      X       -10  -0.030
                                              left       10   0.031      Y       -51   0.007
                                              back            1.025      Z         0   1.025

                    GE4{1}                    down       51   0.000      X        -7  -0.030
                                              left        7   0.031      Y       -51  -0.007
                                              forw            1.030      Z         0  -1.030

                    GE5{1}                    down       60   0.000      X         7   0.032
                                              rght        7   0.031      Y       -60   0.007
                                              back            1.003      Z         0   1.003

                    GE6{1}                    down       60   0.000      X         9   0.032
                                              rght        9   0.031      Y       -60  -0.007
                                              forw            1.045      Z         0  -1.045

                    GE7{1}                    down       60   0.000      X       -10  -0.030
                                              left       10   0.031      Y       -60   0.007
                                              back            1.023      Z         0   1.023

                    GE8{1}                    down       60   0.000      X        -7  -0.030
                                              left        7   0.031      Y       -60  -0.007
                                              forw            1.033      Z         0  -1.033

                    GT1P1{1}                  down       56   0.000      X        -2   0.028
                                              left        2  -0.027      Y       -56  -0.004
                                              forw       45   0.580      Z       -44  -0.580

 Tag No.: <None>
 C65                Gravity{1}                down       51   0.000      X         1   0.031
 C65  1   Guide                               rght        1   0.031      Y       -51  -0.004
 Stiff   :RIGID                                forw            0.484      Z         0  -0.484

                    GT1{1}                    down       51   0.000      X        -9  -0.023
 Comp.Wt :   0.000                            left        9   0.023      Y       -51  -0.006
                                              forw       40   0.726      Z       -39  -0.726

                    GE1{1}                    down       47   0.000      X         0  -0.031
                                              left        0   0.031      Y       -47   0.008
                                              back            1.006      Z         0   1.006

                    GE2{1}                    down       47   0.000      X       -11  -0.031
                                              left       11   0.031      Y       -47  -0.008
                                              forw            1.043      Z         0  -1.043

                    GE3{1}                    down       48   0.000      X        12   0.031
                                              rght       12   0.031      Y       -48   0.008
                                              back            1.025      Z         0   1.025
```

S U P P O R T F O R C E S
(Force - lbf , Moment - ft-lb , Tran. - in , Rot. - deg)

Point/ Supp. ID	Connect/ Type	Load Combination	L O C A L Dirn	L O C A L Force	L O C A L Deform	G L O B A L Dirn	G L O B A L Force	G L O B A L Deform
		GE4{1}	down	47	0.000	X	0	0.031
			rght	0	0.031	Y	-47	-0.008
			forw		1.031	Z	0	-1.031
		GE5{1}	down	56	0.000	X	0	-0.031
			left	0	0.031	Y	-56	0.008
			back		1.004	Z	0	1.004
		GE6{1}	down	55	0.000	X	-11	-0.031
			left	11	0.031	Y	-55	-0.008
			forw		1.045	Z	0	-1.045
		GE7{1}	down	56	0.000	X	12	0.031
			rght	12	0.031	Y	-56	0.008
			back		1.023	Z	0	1.023
		GE8{1}	down	55	0.000	X	0	0.031
			rght	0	0.031	Y	-55	-0.008
			forw		1.033	Z	0	-1.033
		GT1P1{1}	down	51	0.000	X	-9	-0.023
			left	9	0.023	Y	-51	-0.006
			forw	40	0.717	Z	-39	-0.717
Tag No.: <None>								
C72		Gravity{1}	down	65	0.000	X	2	0.031
C72 1	Guide		rght	2	0.031	Y	-65	-0.004
Stiff	:RIGID		forw		0.484	Z	0	-0.484
		GT1{1}	down	66	0.000	X	32	0.031
Comp.Wt :	0.000		rght	32	0.031	Y	-66	-0.006
			forw	78	0.861	Z	-78	-0.860
		GE1{1}	down	60	0.000	X	33	0.031
			rght	33	0.031	Y	-60	0.007
			back		1.006	Z	0	1.006
		GE2{1}	down	60	0.000	X	69	0.031
			rght	69	0.031	Y	-60	-0.008
			forw		1.043	Z	0	-1.043
		GE3{1}	down	59	0.000	X	-68	-0.031
			left	68	0.031	Y	-59	0.008
			back		1.024	Z	0	1.024
		GE4{1}	down	59	0.000	X	-32	-0.031
			left	32	0.031	Y	-59	-0.008
			forw		1.031	Z	0	-1.031
		GE5{1}	down	71	0.000	X	33	0.031
			rght	33	0.031	Y	-71	0.007
			back		1.004	Z	1	1.004

S U P P O R T F O R C E S
(Force - lbf , Moment - ft-lb , Tran. - in , Rot. - deg)

Point/ Supp. ID	Connect/ Type	Load Combination	L O C A L Dirn	Force	Deform	G L O B A L Dirn	Force	Deform
		GE6{1}	down	71	0.000	X	69	0.031
			rght	69	0.031	Y	-71	-0.008
			forw		1.045	Z	1	-1.045
		GE7{1}	down	70	0.000	X	-68	-0.031
			left	68	0.031	Y	-70	0.008
			back		1.023	Z	1	1.023
		GE8{1}	down	70	0.000	X	-32	-0.031
			left	32	0.031	Y	-70	-0.008
			forw		1.033	Z	1	-1.033
		GT1P1{1}	down	66	0.000	X	32	0.031
			rght	32	0.031	Y	-66	-0.006
			forw	79	0.855	Z	-78	-0.855
Tag No.: <None>								
C73		Gravity{1}	down	49	0.000	X		-0.061
C73	1 Guide		left		0.061	Y	-49	-0.003
Stiff	:RIGID		forw		0.484	Z	0	-0.484
		GT1{1}	down	48	0.000	X	26	0.420
Comp.Wt :	0.000		rght	26	0.420	Y	-48	-0.006
			forw	29	1.021	Z	-28	-1.021
		GE1{1}	down	45	0.000	X		0.826
			rght		0.826	Y	-45	0.006
			back		1.006	Z	0	1.006
		GE2{1}	down	43	0.000	X		0.810
			rght		0.810	Y	-43	-0.006
			forw		1.043	Z	0	-1.043
		GE3{1}	down	48	0.000	X	-3	-0.830
			left	3	0.830	Y	-48	0.006
			back		1.024	Z	0	1.024
		GE4{1}	down	46	0.000	X	-5	-0.830
			left	5	0.830	Y	-46	-0.006
			forw		1.031	Z	0	-1.031
		GE5{1}	down	53	0.000	X		0.822
			rght		0.822	Y	-53	0.006
			back		1.004	Z	0	1.004
		GE6{1}	down	51	0.000	X		0.806
			rght		0.806	Y	-51	-0.006
			forw		1.044	Z	0	-1.044
		GE7{1}	down	56	0.000	X	-4	-0.830
			left	4	0.830	Y	-56	0.006
			back		1.023	Z	0	1.023

```
-----------------------------------------------------------------------------------------------------------------
Primary Piping
04/24/2020 2018719                                                          BENTLEY
07:34 AM                                                                    AutoPIPE Nuclear 12.00.00.16   RESULT PAGE 206
-----------------------------------------------------------------------------------------------------------------

                                        S U P P O R T    F O R C E S
        ( Force - lbf   , Moment - ft-lb  , Tran. - in  , Rot. - deg   )
 Point/  Connect/    Load                          L O C A L              G L O B A L
 Supp. ID   Type   Combination                Dirn  Force    Deform    Dirn   Force   Deform
 -------- -------- ----------------------     ---- -------- --------   ---- -------- --------
                   GE8{1}                     down       54   0.000      X         -5  -0.830
                                              left        5   0.830      Y        -54  -0.006
                                              forw            1.033      Z          0  -1.033

                   GT1P1{1}                   down       48   0.000      X         26   0.429
                                              rght       26   0.429      Y        -48  -0.006
                                              forw       28   1.019      Z        -28  -1.019

 Tag No.: <None>
 C74               Gravity{1}                 down       38   0.000      X          0  -0.161
 C74  1   Guide                               rght            0.362      Y        -38  -0.001
 Stiff   :RIGID                               forw            0.161      Z             -0.362

                   GT1{1}                     down       40   0.000      X         42   0.242
 Comp.Wt :   0.000                            rght       50   0.830      Y        -40   0.002
                                              back       42   0.242      Z        -50  -0.830

                   GE1{1}                     down       35   0.000      X          0   1.148
                                              left            0.684      Y        -35   0.009
                                              back            1.148      Z              0.684

                   GE2{1}                     down       38   0.000      X          0   0.733
                                              rght       51   0.830      Y        -38   0.006
                                              back            0.733      Z        -51  -0.830

                   GE3{1}                     down       32   0.000      X          0  -0.772
                                              left       45   0.830      Y        -32  -0.006
                                              forw            0.772      Z         45   0.830

                   GE4{1}                     down       34   0.000      X          0  -1.164
                                              rght            0.697      Y        -34  -0.009
                                              forw            1.164      Z             -0.697

                   GE5{1}                     down       42   0.000      X          0   1.142
                                              left            0.683      Y        -42   0.009
                                              back            1.142      Z              0.683

                   GE6{1}                     down       44   0.000      X          0   0.727
                                              rght       52   0.830      Y        -44   0.006
                                              back            0.727      Z        -52  -0.830

                   GE7{1}                     down       38   0.000      X          0  -0.774
                                              left       44   0.830      Y        -38  -0.006
                                              forw            0.774      Z         44   0.830

                   GE8{1}                     down       40   0.000      X          0  -1.166
                                              rght            0.698      Y        -40  -0.009
                                              forw            1.166      Z             -0.698

                   GT1P1{1}                   down       40   0.000      X         43   0.251
                                              rght       50   0.830      Y        -40   0.002
                                              back       42   0.251      Z        -50  -0.830
```

```
-----------------------------------------------------------------------------------------------------------------------
Primary Piping
04/24/2020 2018719                                                                    BENTLEY
07:34 AM                                                                              AutoPIPE Nuclear 12.00.00.16   RESULT PAGE 207
-----------------------------------------------------------------------------------------------------------------------

                                                S U P P O R T    F O R C E S
          ( Force - lbf   , Moment - ft-lb  , Tran. - in  , Rot. - deg   )
  Point/  Connect/    Load                                L O C A L                G L O B A L
 Supp. ID   Type   Combination                   Dirn  Force    Deform    Dirn   Force   Deform
 -------- -------- ----------------------        ---- -------- --------   ---- -------- --------
 Tag No.: <None>
 C75                Gravity{1}                   down       60   0.000      X         0  -0.161
 C75  1   Guide                                  rght       14   0.031      Y       -60  -0.001
 Stiff   :RIGID                                  forw            0.161      Z       -14  -0.031

                    GT1{1}                       down       59   0.000      X        85   0.107
 Comp.Wt :   0.000                               rght       46   0.031      Y       -59   0.001
                                                 back       84   0.107      Z       -46  -0.031

                    GE1{1}                       down       55   0.000      X         0   1.148
                                                 left       34   0.031      Y       -55   0.009
                                                 back            1.148      Z        34   0.031

                    GE2{1}                       down       54   0.000      X         0   0.733
                                                 rght       57   0.031      Y       -54   0.006
                                                 back            0.733      Z       -57  -0.031

                    GE3{1}                       down       56   0.000      X         0  -0.772
                                                 left       60   0.031      Y       -56  -0.006
                                                 forw            0.772      Z        60   0.031

                    GE4{1}                       down       55   0.000      X         0  -1.164
                                                 rght       34   0.031      Y       -55  -0.009
                                                 forw            1.164      Z       -34  -0.031

                    GE5{1}                       down       65   0.000      X         1   1.142
                                                 left       35   0.031      Y       -65   0.009
                                                 back            1.142      Z        35   0.031

                    GE6{1}                       down       64   0.000      X         0   0.727
                                                 rght       57   0.031      Y       -64   0.006
                                                 back            0.727      Z       -57  -0.031

                    GE7{1}                       down       66   0.000      X         1  -0.774
                                                 left       60   0.031      Y       -66  -0.006
                                                 forw            0.774      Z        60   0.031

                    GE8{1}                       down       65   0.000      X         1  -1.165
                                                 rght       34   0.031      Y       -65  -0.009
                                                 forw            1.166      Z       -34  -0.031

                    GT1P1{1}                     down       59   0.000      X        85   0.114
                                                 rght       46   0.031      Y       -59   0.001
                                                 back       84   0.114      Z       -46  -0.031

 Tag No.: <None>
 C76                Gravity{1}                   down       53   0.000      X         0  -0.161
 C76  1   Guide                                  left        6   0.031      Y       -53  -0.001
 Stiff   :RIGID                                  forw            0.161      Z         6   0.031

                    GT1{1}                       down       53   0.000      X        64  -0.027
 Comp.Wt :   0.000                               left       26   0.031      Y       -53  -0.000
```

```
-----------------------------------------------------------------------------------------------------------------
Primary Piping
04/24/2020 2018719                                                    BENTLEY
07:34 AM                                                              AutoPIPE Nuclear 12.00.00.16   RESULT PAGE 208
-----------------------------------------------------------------------------------------------------------------

                                        S U P P O R T    F O R C E S
        ( Force - lbf   , Moment - ft-lb  , Tran. - in  , Rot. - deg   )
 Point/  Connect/    Load                          L O C A L              G L O B A L
 Supp. ID   Type   Combination                Dirn  Force    Deform    Dirn   Force   Deform
 -------- -------- ----------------------     ---- -------- --------   ---- -------- --------
                                             back       63  -0.027      Z        26   0.031

                    GE1{1}                   down       48   0.000      X         0   1.148
                                             rght        1   0.031      Y       -48   0.008
                                             back            1.148      Z        -1  -0.031

                    GE2{1}                   down       49   0.000      X         0   0.733
                                             left       10   0.031      Y       -49   0.005
                                             back            0.733      Z        10   0.031

                    GE3{1}                   down       49   0.000      X         0  -0.773
                                             rght       11   0.031      Y       -49  -0.005
                                             forw            0.773      Z       -11  -0.031

                    GE4{1}                   down       49   0.000      X         0  -1.164
                                             left        1   0.031      Y       -49  -0.008
                                             forw            1.164      Z         1   0.031

                    GE5{1}                   down       57   0.000      X         0   1.142
                                             rght        1   0.031      Y       -57   0.008
                                             back            1.142      Z        -1  -0.031

                    GE6{1}                   down       58   0.000      X         0   0.727
                                             left       10   0.031      Y       -58   0.005
                                             back            0.727      Z        10   0.031

                    GE7{1}                   down       57   0.000      X         0  -0.774
                                             rght       11   0.031      Y       -57  -0.005
                                             forw            0.774      Z       -11  -0.031

                    GE8{1}                   down       58   0.000      X         0  -1.165
                                             left        2   0.031      Y       -58  -0.008
                                             forw            1.165      Z         2   0.031

                    GT1P1{1}                 down       53   0.000      X        64  -0.024
                                             left       26   0.031      Y       -53  -0.000
                                             back       63  -0.024      Z        26   0.031

 Tag No.: <None>
 C77                Gravity{1}               down       55   0.000      X         0  -0.161
 C77  1   Guide                              left            0.025      Y       -55  -0.001
 Stiff   :RIGID                              forw            0.161      Z            0.025

                    GT1{1}                   down       55   0.000      X       -30  -0.161
 Comp.Wt :   0.000                           rght        5  -0.024      Y       -55  -0.001
                                             forw       31   0.161      Z        -5   0.024

                    GE1{1}                   down       51   0.000      X         0   1.148
                                             left        7   0.031      Y       -51   0.009
                                             back            1.148      Z         7   0.031

                    GE2{1}                   down       51   0.000      X         0   0.733
```

S U P P O R T F O R C E S
(Force - lbf , Moment - ft-lb , Tran. - in , Rot. - deg)

Point/ Supp. ID	Connect/ Type	Load Combination	L O C A L Dirn	Force	Deform	G L O B A L Dirn	Force	Deform
			rght	11	0.031	Y	-51	0.006
			back		0.733	Z	-11	-0.031
		GE3{1}	down	51	0.000	X	0	-0.773
			left	11	0.031	Y	-51	-0.006
			forw		0.773	Z	11	0.031
		GE4{1}	down	50	0.000	X	0	-1.164
			rght	7	0.031	Y	-50	-0.009
			forw		1.164	Z	-7	-0.031
		GE5{1}	down	60	0.000	X	0	1.142
			left	7	0.031	Y	-60	0.009
			back		1.142	Z	7	0.031
		GE6{1}	down	60	0.000	X	0	0.727
			rght	11	0.031	Y	-60	0.006
			back		0.727	Z	-11	-0.031
		GE7{1}	down	60	0.000	X	0	-0.774
			left	11	0.031	Y	-60	-0.006
			forw		0.774	Z	11	0.031
		GE8{1}	down	60	0.000	X	0	-1.165
			rght	7	0.031	Y	-60	-0.009
			forw		1.165	Z	-7	-0.031
		GT1P1{1}	down	55	0.000	X	-30	-0.161
			rght	5	-0.024	Y	-55	-0.001
			forw	31	0.161	Z	-5	0.024
Tag No.: <None>								
C78		Gravity{1}	down	53	0.000	X	0	-0.161
C78 1	Guide		left		0.024	Y	-53	-0.001
Stiff	:RIGID		forw		0.161	Z		0.024
		GT1{1}	down	53	0.000	X	-41	-0.295
Comp.Wt :	0.000		rght	7	-0.001	Y	-53	-0.002
			forw	42	0.295	Z	-7	0.001
		GE1{1}	down	49	0.000	X	0	1.148
			left	17	0.031	Y	-49	0.008
			back		1.148	Z	17	0.031
		GE2{1}	down	49	0.000	X	0	0.733
			rght		0.014	Y	-49	0.005
			back		0.733	Z		-0.014
		GE3{1}	down	48	0.000	X	0	-0.772
			left		0.012	Y	-48	-0.005
			forw		0.772	Z		0.012

S U P P O R T F O R C E S
(Force - lbf , Moment - ft-lb , Tran. - in , Rot. - deg)

Point/ Supp. ID	Connect/ Type	Load Combination	L O C A L Dirn	Force	Deform	G L O B A L Dirn	Force	Deform
		GE4{1}	down	49	0.000	X	0	-1.164
			rght	17	0.031	Y	-49	-0.008
			forw		1.164	Z	-17	-0.031
		GE5{1}	down	58	0.000	X	0	1.142
			left	17	0.031	Y	-58	0.008
			back		1.142	Z	17	0.031
		GE6{1}	down	58	0.000	X	0	0.727
			rght		0.014	Y	-58	0.005
			back		0.727	Z		-0.014
		GE7{1}	down	57	0.000	X	0	-0.774
			left		0.012	Y	-57	-0.005
			forw		0.774	Z		0.012
		GE8{1}	down	57	0.000	X	0	-1.165
			rght	17	0.031	Y	-57	-0.008
			forw		1.165	Z	-17	-0.031
		GT1P1{1}	down	53	0.000	X	-41	-0.299
			rght	8	0.000	Y	-53	-0.002
			forw	42	0.299	Z	-8	-0.000
Tag No.: <None>								
C79		Gravity{1}	down	56	0.000	X	0	-0.161
C79 1	Guide		left	2	0.031	Y	-56	-0.001
Stiff	:RIGID		forw		0.161	Z	2	0.031
		GT1{1}	down	56	0.000	X	-69	-0.427
Comp.Wt :	0.000		left	30	0.031	Y	-57	-0.003
			forw	69	0.427	Z	30	0.031
		GE1{1}	down	51	0.000	X	0	1.148
			rght	20	0.031	Y	-51	0.008
			back		1.148	Z	-20	-0.031
		GE2{1}	down	51	0.000	X	0	0.733
			rght	45	0.031	Y	-51	0.005
			back		0.733	Z	-45	-0.031
		GE3{1}	down	52	0.000	X	0	-0.772
			left	46	0.031	Y	-52	-0.005
			forw		0.772	Z	46	0.031
		GE4{1}	down	52	0.000	X	0	-1.164
			left	21	0.031	Y	-52	-0.008
			forw		1.164	Z	21	0.031
		GE5{1}	down	60	0.000	X	0	1.142
			rght	20	0.031	Y	-60	0.008
			back		1.142	Z	-20	-0.031

S U P P O R T F O R C E S
(Force - lbf , Moment - ft-lb , Tran. - in , Rot. - deg)

Point/ Supp. ID	Connect/ Type	Load Combination	L O C A L Dirn	Force	Deform	G L O B A L Dirn	Force	Deform
		GE6{1}	down	60	0.000	X	0	0.727
			rght	45	0.031	Y	-60	0.005
			back		0.727	Z	-45	-0.031
		GE7{1}	down	61	0.000	X	0	-0.774
			left	46	0.031	Y	-61	-0.005
			forw		0.774	Z	46	0.031
		GE8{1}	down	61	0.000	X	0	-1.165
			left	21	0.031	Y	-61	-0.008
			forw		1.165	Z	21	0.031
		GT1P1{1}	down	56	0.000	X	-69	-0.433
			left	30	0.031	Y	-57	-0.003
			forw	69	0.433	Z	30	0.031
Tag No.: <None>								
C80		Gravity{1}	down	45	0.000	X	0	-0.160
C80	1 Guide		left		0.020	Y	-45	-0.001
Stiff	:RIGID		forw		0.160	Z		0.020
		GT1{1}	down	44	0.000	X	-30	-0.561
Comp.Wt :	0.000		left	17	0.242	Y	-44	-0.005
			forw	30	0.561	Z	17	0.242
		GE1{1}	down	45	0.000	X	0	1.147
			rght		0.094	Y	-45	0.010
			back		1.147	Z		-0.094
		GE2{1}	down	44	0.000	X	0	0.733
			rght		0.239	Y	-44	0.006
			back		0.733	Z		-0.239
		GE3{1}	down	40	0.000	X	0	-0.772
			left		0.241	Y	-40	-0.007
			forw		0.772	Z		0.241
		GE4{1}	down	39	0.000	X	0	-1.164
			left		0.092	Y	-39	-0.010
			forw		1.164	Z		0.092
		GE5{1}	down	52	0.000	X	0	1.142
			rght		0.094	Y	-52	0.010
			back		1.142	Z		-0.094
		GE6{1}	down	52	0.000	X	0	0.727
			rght		0.238	Y	-52	0.006
			back		0.727	Z		-0.238
		GE7{1}	down	47	0.000	X	0	-0.774
			left		0.241	Y	-47	-0.007
			forw		0.774	Z		0.241

```
-----------------------------------------------------------------------------------------------------------------
Primary Piping
04/24/2020 2018719                                                          BENTLEY
07:34 AM                                                                    AutoPIPE Nuclear 12.00.00.16   RESULT PAGE 212
-----------------------------------------------------------------------------------------------------------------

                                        S U P P O R T    F O R C E S
        ( Force - lbf   , Moment - ft-lb  , Tran. - in  , Rot. - deg   )
 Point/  Connect/    Load                          L O C A L              G L O B A L
 Supp. ID   Type   Combination                Dirn  Force    Deform    Dirn   Force   Deform
 -------- -------- ----------------------     ---- -------- --------   ---- -------- --------
                   GE8{1}                     down       47   0.000      X         0  -1.165
                                              left            0.091      Y       -47  -0.010
                                              forw            1.165      Z             0.091

                   GT1P1{1}                   down       44   0.000      X       -30  -0.571
                                              left       17   0.247      Y       -44  -0.005
                                              forw       30   0.571      Z        17   0.247

 Tag No.: <None>
 C82               Gravity{1}                 down       32   0.000      X            -0.114
 C82  1   Guide                               left            0.114      Y       -32  -0.000
 Stiff   :RIGID                                forw            0.015      Z         0  -0.015

                   GT1{1}                     down       34   0.000      X       -26  -0.403
 Comp.Wt :   0.000                             left       26   0.403      Y       -34   0.001
                                               back        8   0.073      Z         8   0.073

                   GE1{1}                     down       25   0.000      X             0.752
                                              rght            0.752      Y       -25   0.002
                                              back            0.177      Z         0   0.177

                   GE2{1}                     down       26   0.000      X             0.510
                                              rght            0.510      Y       -26  -0.001
                                              forw            0.107      Z         0  -0.107

                   GE3{1}                     down       32   0.000      X            -0.534
                                              left            0.534      Y       -32   0.001
                                              back            0.099      Z         0   0.099

                   GE4{1}                     down       32   0.000      X            -0.762
                                              left            0.762      Y       -32  -0.002
                                              forw            0.185      Z         0  -0.185

                   GE5{1}                     down       31   0.000      X             0.748
                                              rght            0.748      Y       -31   0.002
                                              back            0.177      Z         0   0.177

                   GE6{1}                     down       31   0.000      X             0.506
                                              rght            0.506      Y       -31  -0.001
                                              forw            0.108      Z         0  -0.108

                   GE7{1}                     down       37   0.000      X            -0.535
                                              left            0.535      Y       -37   0.001
                                              back            0.098      Z         0   0.098

                   GE8{1}                     down       37   0.000      X            -0.762
                                              left            0.762      Y       -37  -0.002
                                              forw            0.186      Z         0  -0.186

                   GT1P1{1}                   down       34   0.000      X       -26  -0.410
                                              left       26   0.410      Y       -34   0.001
                                              back        8   0.075      Z         8   0.075
```

```
-----------------------------------------------------------------------------------------------------------------
Primary Piping
04/24/2020 2018719                                                          BENTLEY
07:34 AM                                                                    AutoPIPE Nuclear 12.00.00.16   RESULT PAGE 213
-----------------------------------------------------------------------------------------------------------------

                                          S U P P O R T    F O R C E S
        ( Force - lbf   , Moment - ft-lb  , Tran. - in  , Rot. - deg   )
 Point/  Connect/    Load                          L O C A L              G L O B A L
 Supp. ID   Type   Combination                Dirn  Force    Deform    Dirn   Force   Deform
 -------- -------- ----------------------     ---- -------- --------   ---- -------- --------
 Tag No.: <None>
 C81                Gravity{1}                down       36   0.000      X       -10  -0.031
 C81  1   Guide                               left       10   0.031      Y       -36  -0.000
 Stiff   :RIGID                               forw            0.015      Z         0  -0.015

                    GT1{1}                    down       36   0.000      X       -85  -0.031
 Comp.Wt :   0.000                            left       85   0.031      Y       -36  -0.000
                                              back       39  -0.015      Z        39  -0.015

                    GE1{1}                    down       34   0.000      X       140   0.031
                                              rght      140   0.031      Y       -34   0.001
                                              back            0.177      Z         0   0.177

                    GE2{1}                    down       34   0.000      X        72   0.031
                                              rght       72   0.031      Y       -34  -0.001
                                              forw            0.107      Z         0  -0.107

                    GE3{1}                    down       32   0.000      X       -77  -0.031
                                              left       77   0.031      Y       -32   0.001
                                              back            0.099      Z         0   0.099

                    GE4{1}                    down       32   0.000      X      -142  -0.031
                                              left      142   0.031      Y       -32  -0.001
                                              forw            0.185      Z         0  -0.185

                    GE5{1}                    down       40   0.000      X       139   0.031
                                              rght      139   0.031      Y       -40   0.001
                                              back            0.177      Z         0   0.177

                    GE6{1}                    down       40   0.000      X        72   0.031
                                              rght       72   0.031      Y       -40  -0.001
                                              forw            0.108      Z         0  -0.108

                    GE7{1}                    down       38   0.000      X       -77  -0.031
                                              left       77   0.031      Y       -38   0.001
                                              back            0.098      Z         0   0.098

                    GE8{1}                    down       38   0.000      X      -142  -0.031
                                              left      142   0.031      Y       -38  -0.001
                                              forw            0.186      Z         0  -0.186

                    GT1P1{1}                  down       36   0.000      X       -87  -0.031
                                              left       87   0.031      Y       -36  -0.000
                                              back       39  -0.015      Z        40  -0.015

 Tag No.: <None>
 C83                Gravity{1}                down       36   0.000      X            -0.005
 C83  1   Guide                               left            0.005      Y       -36  -0.000
 Stiff   :RIGID                               forw            0.015      Z         0  -0.015

                    GT1{1}                    down       33   0.000      X       -19  -0.097
 Comp.Wt :   0.000                            left       19   0.097      Y       -33  -0.001
```

```
-----------------------------------------------------------------------------------------------------------------
Primary Piping
04/24/2020 2018719                                                          BENTLEY
07:34 AM                                                                    AutoPIPE Nuclear 12.00.00.16   RESULT PAGE 214
-----------------------------------------------------------------------------------------------------------------

                                        S U P P O R T    F O R C E S
        ( Force - lbf   , Moment - ft-lb  , Tran. - in  , Rot. - deg   )
 Point/  Connect/    Load                          L O C A L              G L O B A L
 Supp. ID   Type   Combination                Dirn  Force    Deform    Dirn   Force   Deform
 -------- -------- ----------------------     ---- -------- --------   ---- -------- --------
                                              forw       18   0.102      Z       -18  -0.102

                    GE1{1}                    down       35   0.000      X            -0.009
                                              left            0.009      Y       -35   0.002
                                              back            0.177      Z         0   0.177

                    GE2{1}                    down       33   0.000      X            -0.059
                                              left            0.059      Y       -33  -0.001
                                              forw            0.107      Z         0  -0.107

                    GE3{1}                    down       33   0.000      X             0.059
                                              rght            0.059      Y       -33   0.001
                                              back            0.099      Z         0   0.099

                    GE4{1}                    down       31   0.000      X             0.008
                                              rght            0.008      Y       -31  -0.002
                                              forw            0.185      Z         0  -0.185

                    GE5{1}                    down       41   0.000      X            -0.009
                                              left            0.009      Y       -41   0.002
                                              back            0.176      Z         0   0.176

                    GE6{1}                    down       38   0.000      X            -0.059
                                              left            0.059      Y       -38  -0.001
                                              forw            0.108      Z         0  -0.108

                    GE7{1}                    down       39   0.000      X             0.059
                                              rght            0.059      Y       -39   0.001
                                              back            0.098      Z         0   0.098

                    GE8{1}                    down       37   0.000      X             0.008
                                              rght            0.008      Y       -37  -0.002
                                              forw            0.186      Z         0  -0.186

                    GT1P1{1}                  down       33   0.000      X       -19  -0.100
                                              left       19   0.100      Y       -33  -0.001
                                              forw       18   0.104      Z       -18  -0.104

 Tag No.: <None>
 C84                Gravity{1}                down       33   0.000      X        -1   0.000
 C84  1   Guide                               left            0.008      Y       -33  -0.000
 Stiff   :RIGID                               forw            0.000      Z            -0.008

                    GT1{1}                    down       37   0.000      X       -18  -0.065
 Comp.Wt :   0.000                            left       24   0.100      Y       -37   0.001
                                              back       17   0.065      Z       -24  -0.100

                    GE1{1}                    down       28   0.000      X         0  -0.000
                                              rght            0.116      Y       -28   0.000
                                              back            0.000      Z             0.116

                    GE2{1}                    down       31   0.000      X        -1  -0.000
```

```
-----------------------------------------------------------------------------------------------------------------
Primary Piping
04/24/2020 2018719                                                          BENTLEY
07:34 AM                                                                    AutoPIPE Nuclear 12.00.00.16   RESULT PAGE 215
-----------------------------------------------------------------------------------------------------------------

                                        S U P P O R T    F O R C E S
        ( Force - lbf   , Moment - ft-lb  , Tran. - in  , Rot. - deg   )
 Point/  Connect/    Load                          L O C A L              G L O B A L
 Supp. ID   Type   Combination                Dirn  Force    Deform    Dirn   Force   Deform
 -------- -------- ----------------------     ---- -------- --------   ---- -------- --------
                                             left            0.043      Y       -31   0.000
                                             back            0.000      Z            -0.043

                    GE3{1}                   down       29   0.000      X         0   0.000
                                             rght            0.037      Y       -29  -0.000
                                             forw            0.000      Z             0.037

                    GE4{1}                   down       32   0.000      X        -1   0.000
                                             left            0.120      Y       -32  -0.000
                                             forw            0.000      Z            -0.120

                    GE5{1}                   down       33   0.000      X        -1  -0.000
                                             rght            0.115      Y       -33   0.000
                                             back            0.000      Z             0.115

                    GE6{1}                   down       36   0.000      X        -1  -0.000
                                             left            0.043      Y       -36   0.000
                                             back            0.000      Z            -0.043

                    GE7{1}                   down       35   0.000      X        -1   0.000
                                             rght            0.037      Y       -35  -0.000
                                             forw            0.000      Z             0.037

                    GE8{1}                   down       38   0.000      X        -1   0.000
                                             left            0.120      Y       -38  -0.000
                                             forw            0.000      Z            -0.120

                    GT1P1{1}                 down       37   0.000      X       -18  -0.067
                                             left       24   0.102      Y       -37   0.001
                                             back       17   0.067      Z       -24  -0.102

 Tag No.: <None>
 D04 M              Gravity{1}               down            0.000      X            -0.006
 D04 M1   Guide                              left            0.000      Y            -0.034
 Stiff   :RIGID                              back            0.000      Z             0.000

                    GT1{1}                   down            0.000      X             0.012
 Comp.Wt :   0.000                           left            0.000      Y            -0.036
                                             forw            0.068      Z            -0.068

                    GE1{1}                   down            0.000      X            -0.005
                                             left            0.000      Y            -0.031
                                             back            0.000      Z             0.000

                    GE2{1}                   down            0.000      X            -0.031
                                             left            0.000      Y            -0.031
                                             forw            0.000      Z            -0.000

                    GE3{1}                   down            0.000      X             0.034
                                             left            0.000      Y            -0.032
                                             back            0.000      Z             0.000
```

S U P P O R T F O R C E S
(Force - lbf , Moment - ft-lb , Tran. - in , Rot. - deg)

Point/ Supp. ID	Connect/ Type	Load Combination	L O C A L Dirn	Force	Deform	G L O B A L Dirn	Force	Deform
		GE4{1}	down		0.000	X		0.008
			left		0.000	Y		-0.032
			forw		0.000	Z		-0.000
		GE5{1}	down		0.000	X		-0.004
			left		0.000	Y		-0.037
			back		0.000	Z		0.000
		GE6{1}	down		0.000	X		-0.030
			left		0.000	Y		-0.037
			forw		0.000	Z		-0.000
		GE7{1}	down		0.000	X		0.034
			left		0.000	Y		-0.038
			back		0.000	Z		0.000
		GE8{1}	down		0.000	X		0.008
			left		0.000	Y		-0.037
			forw		0.000	Z		-0.000
		GT1P1{1}	down		0.000	X		0.012
			left		0.000	Y		-0.036
			forw		0.070	Z		-0.070
Tag No.: <None>								
D13		Gravity{1}	down	62	0.000	X	0	-0.031
D13 1	Guide		left	0	0.031	Y	-62	-0.000
Stiff	:RIGID		back		0.000	Z	-1	0.000
		GT1{1}	down	62	0.000	X	-24	-0.031
Comp.Wt :	0.000		left	24	0.031	Y	-61	0.002
			forw	69	0.180	Z	-70	-0.180
		GE1{1}	down	57	0.000	X	31	0.031
			rght	31	0.031	Y	-57	-0.000
			back		0.000	Z	-1	0.000
		GE2{1}	down	57	0.000	X	57	0.031
			rght	57	0.031	Y	-57	-0.000
			back		0.000	Z	-1	0.000
		GE3{1}	down	56	0.000	X	-60	-0.031
			left	60	0.031	Y	-56	-0.000
			back		0.001	Z	-1	0.001
		GE4{1}	down	57	0.000	X	-34	-0.031
			left	34	0.031	Y	-57	-0.000
			back		0.000	Z	-1	0.000
		GE5{1}	down	67	0.000	X	31	0.031
			rght	31	0.031	Y	-67	-0.000
			back		0.000	Z	-1	0.000

S U P P O R T F O R C E S
(Force - lbf , Moment - ft-lb , Tran. - in , Rot. - deg)

Point/ Supp. ID	Connect/ Type	Load Combination	L O C A L Dirn	Force	Deform	G L O B A L Dirn	Force	Deform
		GE6{1}	down	68	0.000	X	56	0.031
			rght	56	0.031	Y	-68	-0.000
			back		0.000	Z	-1	0.000
		GE7{1}	down	66	0.000	X	-60	-0.031
			left	60	0.031	Y	-66	-0.000
			back		0.001	Z	-1	0.001
		GE8{1}	down	67	0.000	X	-35	-0.031
			left	35	0.031	Y	-67	-0.000
			back		0.000	Z	-1	0.000
		GT1P1{1}	down	62	0.000	X	-25	-0.031
			left	25	0.031	Y	-61	0.002
			forw	70	0.184	Z	-71	-0.184
Tag No.: <None>								
D14		Gravity{1}	down	35	0.000	X		-0.053
D14	2 Guide		left		0.053	Y	-35	-0.000
Stiff	:RIGID		back		0.000	Z	0	0.000
		GT1{1}	down	36	0.000	X	-14	-0.216
Comp.Wt :	0.000		left	14	0.216	Y	-36	0.003
			forw	25	0.292	Z	-26	-0.292
		GE1{1}	down	31	0.000	X		0.234
			rght		0.234	Y	-31	-0.000
			back		0.000	Z	0	0.000
		GE2{1}	down	30	0.000	X		0.544
			rght		0.544	Y	-30	-0.000
			back		0.000	Z	0	0.000
		GE3{1}	down	34	0.000	X		-0.584
			left		0.584	Y	-34	-0.000
			back		0.001	Z	0	0.001
		GE4{1}	down	33	0.000	X		-0.273
			left		0.273	Y	-33	-0.000
			back		0.000	Z	0	0.000
		GE5{1}	down	37	0.000	X		0.230
			rght		0.230	Y	-37	-0.000
			back		0.000	Z	0	0.000
		GE6{1}	down	36	0.000	X		0.540
			rght		0.540	Y	-36	-0.000
			back		0.000	Z	0	0.000
		GE7{1}	down	40	0.000	X		-0.587
			left		0.587	Y	-40	-0.000
			back		0.001	Z	0	0.001

```
-----------------------------------------------------------------------------------------------------------------
Primary Piping
04/24/2020 2018719                                                          BENTLEY
07:34 AM                                                                    AutoPIPE Nuclear 12.00.00.16   RESULT PAGE 218
-----------------------------------------------------------------------------------------------------------------

                                        S U P P O R T    F O R C E S
        ( Force - lbf   , Moment - ft-lb  , Tran. - in  , Rot. - deg   )
 Point/  Connect/    Load                          L O C A L              G L O B A L
 Supp. ID   Type   Combination                Dirn  Force    Deform    Dirn   Force   Deform
 -------- -------- ----------------------     ---- -------- --------   ---- -------- --------
                   GE8{1}                     down       39   0.000      X           -0.277
                                              left            0.277      Y       -39  -0.000
                                              back            0.000      Z         0   0.000

                   GT1P1{1}                   down       36   0.000      X       -14  -0.220
                                              left       14   0.220      Y       -36   0.003
                                              forw       25   0.299      Z       -26  -0.299

 Tag No.: <None>
 D15               Gravity{1}                 down       35   0.000      X         0  -0.052
 D15  2   Guide                               rght            0.005      Y       -35  -0.000
 Stiff   :RIGID                               back            0.052      Z             0.005

                   GT1{1}                     down       33   0.000      X        -8  -0.137
 Comp.Wt :   0.000                            left       25   0.247      Y       -33  -0.001
                                              back        8   0.137      Z       -25  -0.247

                   GE1{1}                     down       34   0.000      X         0   0.278
                                              rght            0.014      Y       -34   0.002
                                              forw            0.278      Z             0.014

                   GE2{1}                     down       34   0.000      X         0   0.710
                                              rght            0.094      Y       -34   0.006
                                              forw            0.710      Z             0.094

                   GE3{1}                     down       30   0.000      X         0  -0.765
                                              left            0.103      Y       -30  -0.007
                                              back            0.765      Z            -0.103

                   GE4{1}                     down       31   0.000      X         0  -0.333
                                              left            0.023      Y       -31  -0.003
                                              back            0.333      Z            -0.023

                   GE5{1}                     down       40   0.000      X         0   0.273
                                              rght            0.013      Y       -40   0.002
                                              forw            0.273      Z             0.013

                   GE6{1}                     down       40   0.000      X         0   0.705
                                              rght            0.093      Y       -40   0.006
                                              forw            0.705      Z             0.093

                   GE7{1}                     down       36   0.000      X         0  -0.770
                                              left            0.103      Y       -36  -0.007
                                              back            0.770      Z            -0.103

                   GE8{1}                     down       37   0.000      X         0  -0.338
                                              left            0.024      Y       -37  -0.003
                                              back            0.338      Z            -0.024

                   GT1P1{1}                   down       33   0.000      X        -8  -0.139
                                              left       25   0.253      Y       -33  -0.001
                                              back        8   0.139      Z       -25  -0.253
```

```
-----------------------------------------------------------------------------------------------------------------
Primary Piping
04/24/2020 2018719                                                          BENTLEY
07:34 AM                                                                    AutoPIPE Nuclear 12.00.00.16   RESULT PAGE 219
-----------------------------------------------------------------------------------------------------------------

                                          S U P P O R T    F O R C E S
        ( Force - lbf   , Moment - ft-lb  , Tran. - in  , Rot. - deg   )
 Point/  Connect/    Load                          L O C A L              G L O B A L
 Supp. ID   Type   Combination                Dirn  Force    Deform    Dirn   Force   Deform
 -------- -------- ----------------------     ---- -------- --------   ---- -------- --------
 Tag No.: <None>
 D18                Gravity{1}                down       34   0.000      X         0  -0.052
 D18  1   Guide                               rght            0.031      Y       -34  -0.001
 Stiff   :RIGID                               back            0.052      Z             0.031

                    GT1{1}                    down       34   0.000      X         4  -0.052
 Comp.Wt :   0.000                            left       19  -0.030      Y       -34  -0.001
                                              forw        4  -0.052      Z       -19   0.030

                    GE1{1}                    down       30   0.000      X         0   0.278
                                              rght       55   0.031      Y       -30   0.003
                                              forw            0.278      Z        55   0.031

                    GE2{1}                    down       31   0.000      X         0   0.710
                                              left       12   0.031      Y       -31   0.008
                                              forw            0.710      Z       -12  -0.031

                    GE3{1}                    down       32   0.000      X         0  -0.765
                                              rght       13   0.031      Y       -32  -0.008
                                              back            0.765      Z        13   0.031

                    GE4{1}                    down       33   0.000      X         0  -0.333
                                              left       54   0.031      Y       -33  -0.004
                                              back            0.333      Z       -54  -0.031

                    GE5{1}                    down       36   0.000      X         0   0.273
                                              rght       55   0.031      Y       -36   0.003
                                              forw            0.273      Z        55   0.031

                    GE6{1}                    down       37   0.000      X         0   0.705
                                              left       12   0.031      Y       -37   0.007
                                              forw            0.705      Z       -12  -0.031

                    GE7{1}                    down       38   0.000      X         0  -0.770
                                              rght       13   0.031      Y       -38  -0.008
                                              back            0.770      Z        13   0.031

                    GE8{1}                    down       39   0.000      X         0  -0.338
                                              left       54   0.031      Y       -39  -0.004
                                              back            0.338      Z       -54  -0.031

                    GT1P1{1}                  down       34   0.000      X         5  -0.052
                                              left       20  -0.030      Y       -34  -0.001
                                              forw        4  -0.052      Z       -20   0.030

 Tag No.: <None>
 D16                Gravity{1}                down       32   0.000      X         0  -0.052
 D16  1   Guide                               rght            0.067      Y       -31  -0.001
 Stiff   :RIGID                               back            0.052      Z             0.067

                    GT1{1}                    down       33   0.000      X        13   0.033
 Comp.Wt :   0.000                            rght       23   0.222      Y       -32   0.000
```

```
-----------------------------------------------------------------------------------------------------------------
Primary Piping
04/24/2020 2018719                                                          BENTLEY
07:34 AM                                                                    AutoPIPE Nuclear 12.00.00.16   RESULT PAGE 220
-----------------------------------------------------------------------------------------------------------------

                                        S U P P O R T    F O R C E S
        ( Force - lbf   , Moment - ft-lb  , Tran. - in  , Rot. - deg   )
 Point/  Connect/    Load                          L O C A L              G L O B A L
 Supp. ID   Type   Combination                Dirn  Force    Deform    Dirn   Force   Deform
 -------- -------- ----------------------     ---- -------- --------   ---- -------- --------
                                              forw       13   0.033      Z        23   0.222

                    GE1{1}                    down       32   0.000      X         0   0.277
                                              rght            0.221      Y       -32   0.003
                                              forw            0.278      Z             0.221

                    GE2{1}                    down       29   0.000      X         0   0.710
                                              left            0.360      Y       -29   0.008
                                              forw            0.710      Z            -0.360

                    GE3{1}                    down       29   0.000      X         0  -0.765
                                              rght            0.390      Y       -29  -0.009
                                              back            0.766      Z             0.390

                    GE4{1}                    down       26   0.000      X         0  -0.333
                                              left            0.191      Y       -26  -0.004
                                              back            0.333      Z            -0.191

                    GE5{1}                    down       37   0.000      X         0   0.272
                                              rght            0.224      Y       -37   0.003
                                              forw            0.273      Z             0.224

                    GE6{1}                    down       34   0.000      X         0   0.705
                                              left            0.357      Y       -34   0.008
                                              forw            0.705      Z            -0.357

                    GE7{1}                    down       34   0.000      X         0  -0.770
                                              rght            0.393      Y       -34  -0.009
                                              back            0.771      Z             0.393

                    GE8{1}                    down       31   0.000      X         0  -0.338
                                              left            0.188      Y       -31  -0.004
                                              back            0.338      Z            -0.188

                    GT1P1{1}                  down       33   0.000      X        13   0.035
                                              rght       23   0.225      Y       -32   0.000
                                              forw       13   0.035      Z        23   0.225

 Tag No.: <None>
 D19                Gravity{1}                down       44   0.000      X            -0.030
 D19  2   Guide                                left            0.030      Y       -44  -0.001
 Stiff   :RIGID                                 back            0.091      Z        -1   0.091

                    GT1{1}                    down       43   0.000      X        25   0.106
 Comp.Wt :   0.000                             rght       25   0.106      Y       -44  -0.003
                                              back       24   0.224      Z        24   0.224

                    GE1{1}                    down       39   0.000      X             0.286
                                              rght            0.286      Y       -39  -0.004
                                              back            0.288      Z        -1   0.288

                    GE2{1}                    down       41   0.000      X             0.493
```

```
-----------------------------------------------------------------------------------------------------------------
Primary Piping
04/24/2020 2018719                                                    BENTLEY
07:34 AM                                                              AutoPIPE Nuclear 12.00.00.16   RESULT PAGE 221
-----------------------------------------------------------------------------------------------------------------

                                        S U P P O R T    F O R C E S
        ( Force - lbf   , Moment - ft-lb  , Tran. - in  , Rot. - deg   )
 Point/  Connect/    Load                          L O C A L              G L O B A L
 Supp. ID   Type   Combination                Dirn  Force    Deform    Dirn   Force   Deform
 -------- -------- ----------------------     ---- -------- --------   ---- -------- --------
                                              rght            0.493      Y       -41   0.008
                                              forw            0.584      Z        -1  -0.584

                    GE3{1}                    down       41   0.000      X            -0.528
                                              left            0.528      Y       -41  -0.009
                                              back            0.635      Z        -1   0.635

                    GE4{1}                    down       43   0.000      X            -0.322
                                              left            0.322      Y       -43   0.003
                                              forw            0.237      Z        -1  -0.237

                    GE5{1}                    down       46   0.000      X             0.283
                                              rght            0.283      Y       -46  -0.004
                                              back            0.293      Z        -1   0.293

                    GE6{1}                    down       49   0.000      X             0.490
                                              rght            0.490      Y       -49   0.008
                                              forw            0.579      Z        -1  -0.579

                    GE7{1}                    down       48   0.000      X            -0.532
                                              left            0.532      Y       -48  -0.009
                                              back            0.640      Z        -1   0.640

                    GE8{1}                    down       51   0.000      X            -0.325
                                              left            0.325      Y       -51   0.003
                                              forw            0.232      Z        -1  -0.232

                    GT1P1{1}                  down       43   0.000      X        25   0.110
                                              rght       25   0.110      Y       -44  -0.003
                                              back       24   0.227      Z        24   0.227

 Tag No.: <None>
 D25                Gravity{1}                down       58   0.000      X             0.010
 D25  1   Guide                               rght            0.010      Y       -58  -0.001
 Stiff   :RIGID                                back            0.091      Z        -1   0.091

                    GT1{1}                    down       58   0.000      X        -6   0.010
 Comp.Wt :   0.000                            left        6  -0.010      Y       -58  -0.001
                                              back        0   0.091      Z         0   0.091

                    GE1{1}                    down       54   0.000      X        44   0.031
                                              rght       44   0.031      Y       -54  -0.004
                                              back            0.288      Z        -1   0.288

                    GE2{1}                    down       53   0.000      X        11   0.031
                                              rght       11   0.031      Y       -53   0.007
                                              forw            0.584      Z        -1  -0.584

                    GE3{1}                    down       54   0.000      X       -10  -0.031
                                              left       10   0.031      Y       -54  -0.008
                                              back            0.635      Z        -1   0.635
```

S U P P O R T F O R C E S
(Force - lbf , Moment - ft-lb , Tran. - in , Rot. - deg)

Point/ Supp. ID	Connect/ Type	Load Combination	L O C A L Dirn	Force	Deform	G L O B A L Dirn	Force	Deform
		GE4{1}	down	53	0.000	X	-43	-0.031
			left	43	0.031	Y	-53	0.003
			forw		0.237	Z	-1	-0.237
		GE5{1}	down	64	0.000	X	44	0.031
			rght	44	0.031	Y	-64	-0.004
			back		0.293	Z	-1	0.293
		GE6{1}	down	63	0.000	X	11	0.031
			rght	11	0.031	Y	-63	0.007
			forw		0.579	Z	-1	-0.579
		GE7{1}	down	63	0.000	X	-10	-0.031
			left	10	0.031	Y	-63	-0.008
			back		0.640	Z	-1	0.640
		GE8{1}	down	62	0.000	X	-43	-0.031
			left	43	0.031	Y	-62	0.003
			forw		0.232	Z	-1	-0.232
		GT1P1{1}	down	58	0.000	X	-7	0.010
			left	7	-0.010	Y	-58	-0.001
			back	1	0.091	Z	0	0.091
Tag No.: <None>								
D20		Gravity{1}	down	43	0.000	X		0.013
D20 1	Guide		rght		0.013	Y	-43	-0.001
Stiff	:RIGID		back		0.091	Z	0	0.091
		GT1{1}	down	44	0.000	X	-32	-0.248
Comp.Wt :	0.000		left	32	0.248	Y	-44	0.000
			forw	16	0.042	Z	-17	-0.042
		GE1{1}	down	39	0.000	X		0.032
			rght		0.032	Y	-39	-0.003
			back		0.288	Z	0	0.288
		GE2{1}	down	42	0.000	X		-0.103
			left		0.103	Y	-42	0.007
			forw		0.584	Z	0	-0.584
		GE3{1}	down	38	0.000	X		0.113
			rght		0.113	Y	-38	-0.007
			back		0.635	Z	0	0.635
		GE4{1}	down	41	0.000	X		-0.022
			left		0.022	Y	-41	0.003
			forw		0.237	Z	0	-0.237
		GE5{1}	down	46	0.000	X		0.033
			rght		0.033	Y	-46	-0.003
			back		0.293	Z	-1	0.293

```
-----------------------------------------------------------------------------------------------------------------
Primary Piping
04/24/2020 2018719                                                          BENTLEY
07:34 AM                                                                    AutoPIPE Nuclear 12.00.00.16   RESULT PAGE 223
-----------------------------------------------------------------------------------------------------------------

                                        S U P P O R T    F O R C E S
        ( Force - lbf   , Moment - ft-lb  , Tran. - in  , Rot. - deg   )
 Point/  Connect/    Load                          L O C A L              G L O B A L
 Supp. ID   Type   Combination                Dirn  Force    Deform    Dirn   Force   Deform
 -------- -------- ----------------------     ---- -------- --------   ---- -------- --------
                   GE6{1}                     down       49   0.000      X           -0.102
                                              left            0.102      Y       -49   0.007
                                              forw            0.579      Z        -1  -0.579

                   GE7{1}                     down       46   0.000      X            0.114
                                              rght            0.114      Y       -46  -0.007
                                              back            0.640      Z        -1   0.640

                   GE8{1}                     down       48   0.000      X           -0.021
                                              left            0.021      Y       -48   0.003
                                              forw            0.232      Z        -1  -0.232

                   GT1P1{1}                   down       44   0.000      X       -32  -0.255
                                              left       32   0.255      Y       -44   0.001
                                              forw       16   0.045      Z       -17  -0.045

 Tag No.: <None>
 D26               Gravity{1}                 down       35   0.000      X         0  -0.000
 D26  1   Guide                               rght            0.074      Y       -35  -0.000
 Stiff   :RIGID                               back            0.000      Z            0.074

                   GT1{1}                     down       34   0.000      X       -22  -0.267
 Comp.Wt :   0.000                            left       16   0.121      Y       -34  -0.001
                                              back       22   0.267      Z       -16  -0.121

                   GE1{1}                     down       33   0.000      X         0   0.000
                                              rght            0.225      Y       -33   0.000
                                              forw            0.000      Z            0.225

                   GE2{1}                     down       30   0.000      X         0   0.000
                                              left            0.426      Y       -30   0.000
                                              forw            0.000      Z           -0.426

                   GE3{1}                     down       34   0.000      X         0  -0.000
                                              rght            0.462      Y       -34  -0.000
                                              back            0.000      Z            0.462

                   GE4{1}                     down       31   0.000      X         0  -0.000
                                              left            0.190      Y       -31  -0.000
                                              back            0.000      Z           -0.190

                   GE5{1}                     down       39   0.000      X         0   0.000
                                              rght            0.229      Y       -39   0.000
                                              forw            0.000      Z            0.229

                   GE6{1}                     down       36   0.000      X         0   0.000
                                              left            0.423      Y       -36   0.000
                                              forw            0.000      Z           -0.423

                   GE7{1}                     down       40   0.000      X         0  -0.000
                                              rght            0.465      Y       -40  -0.000
                                              back            0.000      Z            0.465
```

```
-----------------------------------------------------------------------------------------------------------------
Primary Piping
04/24/2020 2018719                                                          BENTLEY
07:34 AM                                                                    AutoPIPE Nuclear 12.00.00.16   RESULT PAGE 224
-----------------------------------------------------------------------------------------------------------------

                                        S U P P O R T    F O R C E S
        ( Force - lbf   , Moment - ft-lb  , Tran. - in  , Rot. - deg   )
 Point/  Connect/    Load                          L O C A L              G L O B A L
 Supp. ID   Type   Combination                Dirn  Force    Deform    Dirn   Force   Deform
 -------- -------- ----------------------     ---- -------- --------   ---- -------- --------
                   GE8{1}                     down       37   0.000      X         0  -0.000
                                              left            0.187      Y       -37  -0.000
                                              back            0.000      Z            -0.187

                   GT1P1{1}                   down       34   0.000      X       -22  -0.273
                                              left       16   0.125      Y       -34  -0.001
                                              back       22   0.273      Z       -16  -0.125

 Tag No.: <None>
 D28               Gravity{1}                 down       45   0.000      X         0  -0.000
 D28  1   Guide                               rght        1   0.031      Y       -45  -0.000
 Stiff   :RIGID                               back            0.000      Z         1   0.031

                   GT1{1}                     down       46   0.000      X       -34  -0.163
 Comp.Wt :   0.000                            left       14   0.031      Y       -46  -0.001
                                              back       35   0.163      Z       -14  -0.031

                   GE1{1}                     down       41   0.000      X         0   0.000
                                              rght       31   0.031      Y       -41   0.000
                                              forw            0.000      Z        31   0.031

                   GE2{1}                     down       42   0.000      X         0   0.000
                                              left       51   0.031      Y       -42   0.000
                                              forw            0.000      Z       -51  -0.031

                   GE3{1}                     down       41   0.000      X         0  -0.000
                                              rght       55   0.031      Y       -41  -0.000
                                              back            0.000      Z        55   0.031

                   GE4{1}                     down       42   0.000      X         0  -0.000
                                              left       27   0.031      Y       -42  -0.000
                                              back            0.000      Z       -27  -0.031

                   GE5{1}                     down       49   0.000      X         0   0.000
                                              rght       31   0.031      Y       -49   0.000
                                              forw            0.000      Z        31   0.031

                   GE6{1}                     down       50   0.000      X         0   0.000
                                              left       51   0.031      Y       -50   0.000
                                              forw            0.000      Z       -51  -0.031

                   GE7{1}                     down       48   0.000      X         0  -0.000
                                              rght       55   0.031      Y       -48  -0.000
                                              back            0.000      Z        55   0.031

                   GE8{1}                     down       49   0.000      X         0  -0.000
                                              left       27   0.031      Y       -49  -0.000
                                              back            0.000      Z       -27  -0.031

                   GT1P1{1}                   down       46   0.000      X       -35  -0.167
                                              left       14   0.031      Y       -46  -0.001
                                              back       35   0.167      Z       -14  -0.031
```

```
-----------------------------------------------------------------------------------------------------------------------
Primary Piping
04/24/2020 2018719                                                                    BENTLEY
07:34 AM                                                                              AutoPIPE Nuclear 12.00.00.16   RESULT PAGE 225
-----------------------------------------------------------------------------------------------------------------------

                                          S U P P O R T    F O R C E S
        ( Force - lbf   , Moment - ft-lb  , Tran. - in  , Rot. - deg   )
 Point/  Connect/    Load                          L O C A L              G L O B A L
 Supp. ID   Type   Combination                Dirn  Force    Deform    Dirn   Force   Deform
 -------- -------- ----------------------     ---- -------- --------   ---- -------- --------
 Tag No.: <None>
 D27                Gravity{1}                down       35   0.000      X         0  -0.000
 D27  1   Guide                               rght            0.004      Y       -35  -0.000
 Stiff   :RIGID                               back            0.000      Z             0.004

                    GT1{1}                    down       35   0.000      X       -28  -0.060
 Comp.Wt :   0.000                            left        1  -0.002      Y       -35  -0.000
                                              back       28   0.060      Z        -1   0.002

                    GE1{1}                    down       33   0.000      X         0   0.000
                                              left            0.004      Y       -33   0.000
                                              forw            0.000      Z            -0.004

                    GE2{1}                    down       32   0.000      X         0   0.000
                                              rght            0.020      Y       -32   0.000
                                              forw            0.000      Z             0.020

                    GE3{1}                    down       33   0.000      X         0  -0.000
                                              left            0.023      Y       -33  -0.000
                                              back            0.000      Z            -0.023

                    GE4{1}                    down       32   0.000      X         0  -0.000
                                              rght            0.002      Y       -32  -0.000
                                              back            0.000      Z             0.002

                    GE5{1}                    down       38   0.000      X         0   0.000
                                              left            0.005      Y       -38   0.000
                                              forw            0.000      Z            -0.005

                    GE6{1}                    down       38   0.000      X         0   0.000
                                              rght            0.020      Y       -38   0.000
                                              forw            0.000      Z             0.020

                    GE7{1}                    down       39   0.000      X         0  -0.000
                                              left            0.023      Y       -39  -0.000
                                              back            0.000      Z            -0.023

                    GE8{1}                    down       38   0.000      X         0  -0.000
                                              rght            0.001      Y       -38  -0.000
                                              back            0.000      Z             0.001

                    GT1P1{1}                  down       35   0.000      X       -28  -0.061
                                              left        1  -0.002      Y       -35  -0.000
                                              back       28   0.061      Z        -1   0.002
```

R E S T R A I N T R E A C T I O N S

Point name	Load combination	FORCES (lbf) X	Y	Z	Result	MOMENTS (ft-lb) X	Y	Z	Result
A20	V - Stop Tag No.: <None> [ID: A20 1]								
	Gravity{1}	0	-6	0	6	0	0	0	0
	GT1{1}	0	0	0	0	0	0	0	0
	GE1{1}	0	-6	0	6	0	0	0	0
	GE2{1}	0	-6	0	6	0	0	0	0
	GE3{1}	0	-6	0	6	0	0	0	0
	GE4{1}	0	-6	0	6	0	0	0	0
	GE5{1}	0	-7	0	7	0	0	0	0
	GE6{1}	0	-7	0	7	0	0	0	0
	GE7{1}	0	-7	0	7	0	0	0	0
	GE8{1}	0	-7	0	7	0	0	0	0
	GT1P1{1}	0	0	0	0	0	0	0	0
A20	Guide Tag No.: <None> [ID: A20 2]								
	Gravity{1}	0	0	0	0	0	0	0	0
	GT1{1}	0	0	0	0	0	0	0	0
	GE1{1}	0	0	1	1	0	0	0	0
	GE2{1}	0	0	-1	1	0	0	0	0
	GE3{1}	0	0	1	1	0	0	0	0
	GE4{1}	0	0	-1	1	0	0	0	0
	GE5{1}	0	0	1	1	0	0	0	0
	GE6{1}	0	0	-1	1	0	0	0	0
	GE7{1}	0	0	1	1	0	0	0	0
	GE8{1}	0	0	-1	1	0	0	0	0
	GT1P1{1}	0	0	0	0	0	0	0	0
A02	Anchor Tag No.: <None>					Connected to: Ground			
	Gravity{1}	28	-12	11	33	-2	-44	2	44
	GT1{1}	-102	-20	6	104	2	-17	9	19
	GE1{1}	34	-13	-6	37	1	46	0	46
	GE2{1}	69	-10	9	71	-3	-60	3	60
	GE3{1}	-37	-13	-8	40	1	56	-1	56
	GE4{1}	-2	-10	7	13	-3	-50	2	50
	GE5{1}	37	-15	-6	40	1	46	0	46
	GE6{1}	72	-13	9	74	-3	-60	4	60
	GE7{1}	-34	-15	-8	38	1	56	-1	56
	GE8{1}	1	-13	7	14	-3	-50	3	51
	GT1P1{1}	-102	-20	6	104	2	-16	9	19
A23	Guide Tag No.: <None> [ID: A23 1]								
	Gravity{1}	0	-52	0	52	0	0	0	0
	GT1{1}	24	-31	-7	39	0	0	0	0
	GE1{1}	0	-44	0	44	0	0	0	0
	GE2{1}	0	-54	0	54	0	0	0	0
	GE3{1}	0	-35	0	35	0	0	0	0
	GE4{1}	0	-45	0	45	0	0	0	0
	GE5{1}	0	-52	0	52	0	0	0	0
	GE6{1}	0	-62	0	62	0	0	0	0
	GE7{1}	0	-43	0	43	0	0	0	0
	GE8{1}	0	-53	0	53	0	0	0	0
	GT1P1{1}	24	-31	-7	39	0	0	0	0

R E S T R A I N T R E A C T I O N S

Point name	Load combination	FORCES (lbf) X	Y	Z	Result	MOMENTS (ft-lb) X	Y	Z	Result
A24	Guide Tag No.: <None> [ID: A24 1]								
	Gravity{1}	-10	-52	-29	60	0	0	0	0
	GT1{1}	35	-66	5	75	0	0	0	0
	GE1{1}	-10	-53	54	76	0	0	0	0
	GE2{1}	-8	-44	-63	78	0	0	0	0
	GE3{1}	-10	-57	61	84	0	0	0	0
	GE4{1}	-9	-48	-57	75	0	0	0	0
	GE5{1}	-11	-62	54	83	0	0	0	0
	GE6{1}	-10	-53	-64	84	0	0	0	0
	GE7{1}	-12	-66	61	90	0	0	0	0
	GE8{1}	-10	-57	-57	81	0	0	0	0
	GT1P1{1}	35	-66	5	75	0	0	0	0
A21	Guide Tag No.: <None> [ID: A21 1]								
	Gravity{1}	-8	-46	0	46	0	0	0	0
	GT1{1}	8	-29	17	34	0	0	0	0
	GE1{1}	-4	-21	0	21	0	0	0	0
	GE2{1}	-8	-45	0	46	0	0	0	0
	GE3{1}	-4	-23	0	24	0	0	0	0
	GE4{1}	-9	-48	0	48	0	0	0	0
	GE5{1}	-5	-27	0	28	0	0	0	0
	GE6{1}	-10	-51	0	52	0	0	0	0
	GE7{1}	-6	-30	0	30	0	0	0	0
	GE8{1}	-10	-54	0	55	0	0	0	0
	GT1P1{1}	8	-28	16	34	0	0	0	0
A22	Guide Tag No.: <None> [ID: A22 2]								
	Gravity{1}	0	-35	1	35	0	0	0	0
	GT1{1}	32	-60	39	79	0	0	0	0
	GE1{1}	0	-50	1	50	0	0	0	0
	GE2{1}	0	-26	1	26	0	0	0	0
	GE3{1}	0	-53	2	53	0	0	0	0
	GE4{1}	0	-29	1	29	0	0	0	0
	GE5{1}	0	-57	2	57	0	0	0	0
	GE6{1}	0	-33	1	33	0	0	0	0
	GE7{1}	0	-60	2	60	0	0	0	0
	GE8{1}	0	-36	1	36	0	0	0	0
	GT1P1{1}	33	-61	39	79	0	0	0	0
A25	Guide Tag No.: <None> [ID: A25 2]								
	Gravity{1}	-11	-58	2	59	0	0	0	0
	GT1{1}	8	-51	43	67	0	0	0	0
	GE1{1}	35	-52	2	63	0	0	0	0
	GE2{1}	-7	-53	2	54	0	0	0	0
	GE3{1}	6	-52	1	52	0	0	0	0
	GE4{1}	-36	-53	2	64	0	0	0	0
	GE5{1}	34	-62	2	71	0	0	0	0
	GE6{1}	-7	-63	2	63	0	0	0	0
	GE7{1}	6	-61	2	62	0	0	0	0
	GE8{1}	-36	-63	2	72	0	0	0	0
	GT1P1{1}	8	-51	42	67	0	0	0	0

R E S T R A I N T R E A C T I O N S

Point name	Load combination	FORCES (lbf) X	Y	Z	Result	MOMENTS (ft-lb) X	Y	Z	Result
A26	Guide Tag No.: <None> [ID: A26 2]								
	Gravity{1}	0	-54	2	54	0	0	0	0
	GT1{1}	-6	-55	46	72	0	0	0	0
	GE1{1}	5	-50	1	50	0	0	0	0
	GE2{1}	13	-49	1	51	0	0	0	0
	GE3{1}	-12	-50	1	52	0	0	0	0
	GE4{1}	-2	-50	1	50	0	0	0	0
	GE5{1}	5	-59	2	59	0	0	0	0
	GE6{1}	13	-58	2	60	0	0	0	0
	GE7{1}	-13	-60	2	61	0	0	0	0
	GE8{1}	-2	-59	2	59	0	0	0	0
	GT1P1{1}	-6	-55	46	72	0	0	0	0
A27	Guide Tag No.: <None> [ID: A27 2]								
	Gravity{1}	0	-52	2	52	0	0	0	0
	GT1{1}	6	-52	-17	55	0	0	0	0
	GE1{1}	2	-49	1	49	0	0	0	0
	GE2{1}	0	-48	1	48	0	0	0	0
	GE3{1}	0	-48	1	48	0	0	0	0
	GE4{1}	-5	-47	1	48	0	0	0	0
	GE5{1}	2	-57	2	57	0	0	0	0
	GE6{1}	0	-56	2	56	0	0	0	0
	GE7{1}	0	-57	2	57	0	0	0	0
	GE8{1}	-5	-56	2	56	0	0	0	0
	GT1P1{1}	6	-52	-17	55	0	0	0	0
A28	Guide Tag No.: <None> [ID: A28 2]								
	Gravity{1}	6	-64	2	64	0	0	0	0
	GT1{1}	-17	-66	-47	83	0	0	0	0
	GE1{1}	30	-56	2	64	0	0	0	0
	GE2{1}	32	-57	2	65	0	0	0	0
	GE3{1}	-31	-58	2	65	0	0	0	0
	GE4{1}	-27	-59	2	65	0	0	0	0
	GE5{1}	30	-66	2	73	0	0	0	0
	GE6{1}	32	-67	2	75	0	0	0	0
	GE7{1}	-31	-68	2	75	0	0	0	0
	GE8{1}	-27	-69	2	74	0	0	0	0
	GT1P1{1}	-18	-66	-47	83	0	0	0	0
A29	Guide Tag No.: <None> [ID: A29 1]								
	Gravity{1}	0	-51	1	51	0	0	0	0
	GT1{1}	-23	-48	-28	60	0	0	0	0
	GE1{1}	0	-58	2	58	0	0	0	0
	GE2{1}	0	-49	1	49	0	0	0	0
	GE3{1}	0	-52	1	52	0	0	0	0
	GE4{1}	0	-43	1	43	0	0	0	0
	GE5{1}	0	-68	2	68	0	0	0	0
	GE6{1}	0	-59	2	59	0	0	0	0
	GE7{1}	0	-61	2	61	0	0	0	0
	GE8{1}	0	-53	2	53	0	0	0	0
	GT1P1{1}	-23	-48	-28	60	0	0	0	0

R E S T R A I N T R E A C T I O N S

Point name	Load combination	FORCES (lbf) X	Y	Z	Result	MOMENTS (ft-lb) X	Y	Z	Result
A30	Guide Tag No.: <None> [ID: A30 1]								
	Gravity{1}	0	-16	0	16	0	0	0	0
	GT1{1}	-3	-28	-22	36	0	0	0	0
	GE1{1}	0	-8	26	27	0	0	0	0
	GE2{1}	0	-16	-63	65	0	0	0	0
	GE3{1}	0	-13	40	42	0	0	0	0
	GE4{1}	-1	-20	-41	46	0	0	0	0
	GE5{1}	0	-11	24	27	0	0	0	0
	GE6{1}	-1	-18	-65	68	0	0	0	0
	GE7{1}	0	-15	38	41	0	0	0	0
	GE8{1}	-1	-23	-43	48	0	0	0	0
	GT1P1{1}	-3	-28	-23	36	0	0	0	0
A31	Guide Tag No.: <None> [ID: A31 1]								
	Gravity{1}	-1	-34	0	34	0	0	0	0
	GT1{1}	2	-20	16	25	0	0	0	0
	GE1{1}	0	-15	64	66	0	0	0	0
	GE2{1}	-1	-25	0	25	0	0	0	0
	GE3{1}	-1	-23	0	23	0	0	0	0
	GE4{1}	-1	-34	-79	86	0	0	0	0
	GE5{1}	-1	-19	63	65	0	0	0	0
	GE6{1}	-1	-29	0	30	0	0	0	0
	GE7{1}	-1	-27	0	27	0	0	0	0
	GE8{1}	-1	-38	-80	89	0	0	0	0
	GT1P1{1}	2	-20	15	25	0	0	0	0
A32	Guide Tag No.: <None> [ID: A32 1]								
	Gravity{1}	0	-40	1	40	0	0	0	0
	GT1{1}	19	-46	34	60	0	0	0	0
	GE1{1}	0	-51	2	51	0	0	0	0
	GE2{1}	0	-42	1	42	0	0	0	0
	GE3{1}	0	-44	1	44	0	0	0	0
	GE4{1}	0	-34	1	35	0	0	0	0
	GE5{1}	0	-59	2	59	0	0	0	0
	GE6{1}	0	-50	1	50	0	0	0	0
	GE7{1}	0	-52	2	52	0	0	0	0
	GE8{1}	0	-42	1	42	0	0	0	0
	GT1P1{1}	19	-46	34	60	0	0	0	0
A33	Guide Tag No.: <None> [ID: A33 2]								
	Gravity{1}	-3	-58	2	58	0	0	0	0
	GT1{1}	23	-55	56	82	0	0	0	0
	GE1{1}	36	-50	2	61	0	0	0	0
	GE2{1}	41	-52	2	66	0	0	0	0
	GE3{1}	-37	-52	2	64	0	0	0	0
	GE4{1}	-32	-53	2	62	0	0	0	0
	GE5{1}	36	-59	2	69	0	0	0	0
	GE6{1}	41	-61	2	74	0	0	0	0
	GE7{1}	-37	-61	2	72	0	0	0	0
	GE8{1}	-31	-63	2	70	0	0	0	0
	GT1P1{1}	24	-55	57	82	0	0	0	0

R E S T R A I N T R E A C T I O N S

Point name	Load combination	FORCES (lbf) X	Y	Z	Result	MOMENTS (ft-lb) X	Y	Z	Result
A34	Guide Tag No.: <None> [ID: A34 2]								
	Gravity{1}	0	-53	2	53	0	0	0	0
	GT1{1}	-4	-52	48	71	0	0	0	0
	GE1{1}	2	-50	1	50	0	0	0	0
	GE2{1}	-1	-49	1	49	0	0	0	0
	GE3{1}	0	-49	1	49	0	0	0	0
	GE4{1}	-5	-48	1	49	0	0	0	0
	GE5{1}	2	-59	2	59	0	0	0	0
	GE6{1}	-1	-58	2	58	0	0	0	0
	GE7{1}	0	-58	2	58	0	0	0	0
	GE8{1}	-5	-57	2	58	0	0	0	0
	GT1P1{1}	-4	-52	48	71	0	0	0	0
A35	Guide Tag No.: <None> [ID: A35 2]								
	Gravity{1}	0	-57	2	57	0	0	0	0
	GT1{1}	-9	-57	-14	60	0	0	0	0
	GE1{1}	0	-53	2	53	0	0	0	0
	GE2{1}	7	-52	2	52	0	0	0	0
	GE3{1}	-8	-53	2	53	0	0	0	0
	GE4{1}	0	-52	2	52	0	0	0	0
	GE5{1}	0	-62	2	62	0	0	0	0
	GE6{1}	7	-61	2	62	0	0	0	0
	GE7{1}	-8	-62	2	63	0	0	0	0
	GE8{1}	0	-61	2	61	0	0	0	0
	GT1P1{1}	-9	-57	-14	60	0	0	0	0
A36	Guide Tag No.: <None> [ID: A36 2]								
	Gravity{1}	0	-30	1	30	0	0	0	0
	GT1{1}	1	-30	-23	37	0	0	0	0
	GE1{1}	0	-30	1	30	0	0	0	0
	GE2{1}	1	-28	1	28	0	0	0	0
	GE3{1}	0	-31	1	31	0	0	0	0
	GE4{1}	0	-29	1	29	0	0	0	0
	GE5{1}	0	-35	1	35	0	0	0	0
	GE6{1}	1	-33	1	33	0	0	0	0
	GE7{1}	0	-36	1	36	0	0	0	0
	GE8{1}	0	-34	1	34	0	0	0	0
	GT1P1{1}	0	-30	-23	37	0	0	0	0
A37	Guide Tag No.: <None> [ID: A37 2]								
	Gravity{1}	-1	-40	1	40	0	0	0	0
	GT1{1}	34	-44	-49	74	0	0	0	0
	GE1{1}	39	-33	1	51	0	0	0	0
	GE2{1}	25	-37	1	44	0	0	0	0
	GE3{1}	-26	-31	1	41	0	0	0	0
	GE4{1}	-41	-35	1	54	0	0	0	0
	GE5{1}	39	-39	1	55	0	0	0	0
	GE6{1}	24	-43	1	49	0	0	0	0
	GE7{1}	-26	-37	1	46	0	0	0	0
	GE8{1}	-41	-41	1	58	0	0	0	0
	GT1P1{1}	36	-44	-50	76	0	0	0	0

R E S T R A I N T R E A C T I O N S

Point name	Load combination	FORCES (lbf) X	Y	Z	Result	MOMENTS (ft-lb) X	Y	Z	Result
A38	Guide Tag No.: <None> [ID: A38 1]								
	Gravity{1}	0	-43	1	43	0	0	0	0
	GT1{1}	19	-37	-21	47	0	0	0	0
	GE1{1}	0	-46	1	46	0	0	0	0
	GE2{1}	0	-38	1	38	0	0	0	0
	GE3{1}	0	-51	2	51	0	0	0	0
	GE4{1}	0	-43	1	43	0	0	0	0
	GE5{1}	0	-54	2	54	0	0	0	0
	GE6{1}	0	-46	1	46	0	0	0	0
	GE7{1}	0	-59	2	59	0	0	0	0
	GE8{1}	0	-51	2	51	0	0	0	0
	GT1P1{1}	19	-37	-21	47	0	0	0	0
A39	Guide Tag No.: <None> [ID: A39 1]								
	Gravity{1}	1	-32	0	32	0	0	0	0
	GT1{1}	0	-43	-28	51	0	0	0	0
	GE1{1}	0	-19	0	19	0	0	0	0
	GE2{1}	1	-33	-45	56	0	0	0	0
	GE3{1}	0	-14	28	31	0	0	0	0
	GE4{1}	1	-27	0	27	0	0	0	0
	GE5{1}	1	-23	0	23	0	0	0	0
	GE6{1}	1	-37	-47	60	0	0	0	0
	GE7{1}	0	-18	27	32	0	0	0	0
	GE8{1}	1	-31	0	31	0	0	0	0
	GT1P1{1}	0	-43	-27	51	0	0	0	0
A40	Guide Tag No.: <None> [ID: A40 1]								
	Gravity{1}	1	-25	0	25	0	0	0	0
	GT1{1}	-1	-17	14	22	0	0	0	0
	GE1{1}	1	-29	45	53	0	0	0	0
	GE2{1}	1	-24	-115	118	0	0	0	0
	GE3{1}	1	-25	119	121	0	0	0	0
	GE4{1}	1	-20	-54	58	0	0	0	0
	GE5{1}	1	-33	44	55	0	0	0	0
	GE6{1}	1	-28	-115	119	0	0	0	0
	GE7{1}	1	-30	119	123	0	0	0	0
	GE8{1}	1	-25	-55	61	0	0	0	0
	GT1P1{1}	-1	-17	13	22	0	0	0	0
A41	Guide Tag No.: <None> [ID: A41 1]								
	Gravity{1}	0	-45	0	45	0	0	0	0
	GT1{1}	-13	-50	38	64	0	0	0	0
	GE1{1}	0	-40	0	40	0	0	0	0
	GE2{1}	0	-41	0	41	0	0	0	0
	GE3{1}	0	-44	0	44	0	0	0	0
	GE4{1}	0	-45	0	45	0	0	0	0
	GE5{1}	0	-48	0	48	0	0	0	0
	GE6{1}	0	-49	0	49	0	0	0	0
	GE7{1}	0	-52	0	52	0	0	0	0
	GE8{1}	0	-53	0	53	0	0	0	0
	GT1P1{1}	-13	-50	38	64	0	0	0	0

R E S T R A I N T R E A C T I O N S

Point name	Load combination	FORCES (lbf) X	Y	Z	Result	MOMENTS (ft-lb) X	Y	Z	Result
A42	Guide Tag No.: <None> [ID: A42 2]								
	Gravity{1}	-1	-56	0	56	0	0	0	0
	GT1{1}	-45	-55	81	108	0	0	0	0
	GE1{1}	29	-53	0	60	0	0	0	0
	GE2{1}	30	-51	0	59	0	0	0	0
	GE3{1}	-34	-52	0	62	0	0	0	0
	GE4{1}	-31	-50	0	59	0	0	0	0
	GE5{1}	28	-62	0	68	0	0	0	0
	GE6{1}	29	-61	0	67	0	0	0	0
	GE7{1}	-34	-61	0	70	0	0	0	0
	GE8{1}	-31	-60	0	67	0	0	0	0
	GT1P1{1}	-47	-55	82	109	0	0	0	0
A43	Guide Tag No.: <None> [ID: A43 2]								
	Gravity{1}	0	-54	0	54	0	0	0	0
	GT1{1}	13	-54	53	77	0	0	0	0
	GE1{1}	0	-49	0	49	0	0	0	0
	GE2{1}	5	-50	0	50	0	0	0	0
	GE3{1}	-2	-50	0	50	0	0	0	0
	GE4{1}	0	-50	0	50	0	0	0	0
	GE5{1}	0	-58	0	58	0	0	0	0
	GE6{1}	5	-59	0	59	0	0	0	0
	GE7{1}	-2	-59	0	59	0	0	0	0
	GE8{1}	0	-59	0	59	0	0	0	0
	GT1P1{1}	14	-54	53	77	0	0	0	0
A44	Guide Tag No.: <None> [ID: A44 2]								
	Gravity{1}	0	-55	0	55	0	0	0	0
	GT1{1}	0	-54	44	70	0	0	0	0
	GE1{1}	10	-50	0	51	0	0	0	0
	GE2{1}	12	-50	0	51	0	0	0	0
	GE3{1}	-12	-50	0	52	0	0	0	0
	GE4{1}	-9	-50	0	51	0	0	0	0
	GE5{1}	11	-59	0	60	0	0	0	0
	GE6{1}	11	-59	0	60	0	0	0	0
	GE7{1}	-12	-59	0	61	0	0	0	0
	GE8{1}	-9	-59	0	60	0	0	0	0
	GT1P1{1}	-1	-54	44	70	0	0	0	0
A45	Guide Tag No.: <None> [ID: A45 2]								
	Gravity{1}	0	-54	0	54	0	0	0	0
	GT1{1}	0	-54	44	70	0	0	0	0
	GE1{1}	11	-50	0	51	0	0	0	0
	GE2{1}	10	-50	0	51	0	0	0	0
	GE3{1}	-10	-50	0	51	0	0	0	0
	GE4{1}	-11	-50	0	51	0	0	0	0
	GE5{1}	11	-59	0	60	0	0	0	0
	GE6{1}	10	-59	0	60	0	0	0	0
	GE7{1}	-10	-59	0	60	0	0	0	0
	GE8{1}	-11	-59	0	60	0	0	0	0
	GT1P1{1}	0	-54	44	70	0	0	0	0

R E S T R A I N T R E A C T I O N S

Point name	Load combination	FORCES (lbf) X	Y	Z	Result	MOMENTS (ft-lb) X	Y	Z	Result
A46	Guide Tag No.: <None> [ID: A46 2]								
	Gravity{1}	0	-55	0	55	0	0	0	0
	GT1{1}	0	-54	44	70	0	0	0	0
	GE1{1}	10	-50	0	51	0	0	0	0
	GE2{1}	9	-50	0	51	0	0	0	0
	GE3{1}	-9	-50	0	51	0	0	0	0
	GE4{1}	-10	-50	0	51	0	0	0	0
	GE5{1}	10	-59	0	60	0	0	0	0
	GE6{1}	9	-59	0	60	0	0	0	0
	GE7{1}	-9	-59	0	60	0	0	0	0
	GE8{1}	-10	-59	0	60	0	0	0	0
	GT1P1{1}	0	-54	44	70	0	0	0	0
A47	Guide Tag No.: <None> [ID: A47 2]								
	Gravity{1}	0	-54	0	54	0	0	0	0
	GT1{1}	-1	-53	48	72	0	0	0	0
	GE1{1}	10	-49	0	51	0	0	0	0
	GE2{1}	14	-49	0	51	0	0	0	0
	GE3{1}	-14	-49	0	51	0	0	0	0
	GE4{1}	-10	-49	0	50	0	0	0	0
	GE5{1}	10	-58	0	59	0	0	0	0
	GE6{1}	14	-58	0	60	0	0	0	0
	GE7{1}	-14	-58	0	60	0	0	0	0
	GE8{1}	-10	-58	0	59	0	0	0	0
	GT1P1{1}	-1	-54	43	69	0	0	0	0
A48	Guide Tag No.: <None> [ID: A48 2]								
	Gravity{1}	0	-57	0	57	0	0	0	0
	GT1{1}	5	-58	-45	73	0	0	0	0
	GE1{1}	10	-53	0	53	0	0	0	0
	GE2{1}	0	-52	0	52	0	0	0	0
	GE3{1}	0	-53	0	53	0	0	0	0
	GE4{1}	-11	-52	0	54	0	0	0	0
	GE5{1}	10	-62	0	63	0	0	0	0
	GE6{1}	0	-62	0	62	0	0	0	0
	GE7{1}	0	-62	0	62	0	0	0	0
	GE8{1}	-11	-62	0	63	0	0	0	0
	GT1P1{1}	5	-58	-45	73	0	0	0	0
A49	Guide Tag No.: <None> [ID: A49 2]								
	Gravity{1}	0	-35	0	35	0	0	0	0
	GT1{1}	30	-35	-47	65	0	0	0	0
	GE1{1}	0	-32	0	32	0	0	0	0
	GE2{1}	-2	-32	0	32	0	0	0	0
	GE3{1}	0	-32	0	32	0	0	0	0
	GE4{1}	0	-32	0	32	0	0	0	0
	GE5{1}	0	-38	0	38	0	0	0	0
	GE6{1}	-2	-38	0	38	0	0	0	0
	GE7{1}	0	-38	0	38	0	0	0	0
	GE8{1}	0	-38	0	38	0	0	0	0
	GT1P1{1}	30	-35	-47	65	0	0	0	0

R E S T R A I N T R E A C T I O N S

Point name	Load combination	FORCES (lbf) X	Y	Z	Result	MOMENTS (ft-lb) X	Y	Z	Result
A50	Guide Tag No.: <None> [ID: A50 2]								
	Gravity{1}	-3	-42	0	42	0	0	0	0
	GT1{1}	-84	-43	-101	138	0	0	0	0
	GE1{1}	29	-37	0	47	0	0	0	0
	GE2{1}	39	-38	0	55	0	0	0	0
	GE3{1}	-37	-38	0	53	0	0	0	0
	GE4{1}	-27	-38	0	47	0	0	0	0
	GE5{1}	29	-44	0	53	0	0	0	0
	GE6{1}	40	-45	0	60	0	0	0	0
	GE7{1}	-37	-44	0	58	0	0	0	0
	GE8{1}	-27	-45	0	53	0	0	0	0
	GT1P1{1}	-84	-43	-101	138	0	0	0	0
A51	Guide Tag No.: <None> [ID: A51 1]								
	Gravity{1}	0	-44	0	44	0	0	0	0
	GT1{1}	-20	-43	-27	54	0	0	0	0
	GE1{1}	0	-43	0	43	0	0	0	0
	GE2{1}	0	-42	0	42	0	0	0	0
	GE3{1}	0	-42	0	42	0	0	0	0
	GE4{1}	0	-40	0	40	0	0	0	0
	GE5{1}	0	-51	0	51	0	0	0	0
	GE6{1}	0	-49	0	49	0	0	0	0
	GE7{1}	0	-50	0	50	0	0	0	0
	GE8{1}	0	-48	0	48	0	0	0	0
	GT1P1{1}	-20	-42	-27	54	0	0	0	0
A52	Guide Tag No.: <None> [ID: A52 1]								
	Gravity{1}	0	-38	0	38	0	0	0	0
	GT1{1}	38	-42	-203	211	0	0	0	0
	GE1{1}	0	-32	67	74	0	0	0	0
	GE2{1}	0	-34	-24	41	0	0	0	0
	GE3{1}	0	-33	16	37	0	0	0	0
	GE4{1}	0	-35	-68	77	0	0	0	0
	GE5{1}	0	-38	67	77	0	0	0	0
	GE6{1}	0	-40	-24	46	0	0	0	0
	GE7{1}	0	-39	15	42	0	0	0	0
	GE8{1}	0	-41	-69	80	0	0	0	0
	GT1P1{1}	37	-42	-200	208	0	0	0	0
A53	Guide Tag No.: <None> [ID: A53 1]								
	Gravity{1}	0	-38	0	38	0	0	0	0
	GT1{1}	5	-36	28	45	0	0	0	0
	GE1{1}	0	-33	96	102	0	0	0	0
	GE2{1}	0	-35	-12	37	0	0	0	0
	GE3{1}	0	-34	11	36	0	0	0	0
	GE4{1}	0	-36	-103	109	0	0	0	0
	GE5{1}	0	-40	95	103	0	0	0	0
	GE6{1}	0	-41	-12	43	0	0	0	0
	GE7{1}	0	-41	11	42	0	0	0	0
	GE8{1}	0	-43	-104	112	0	0	0	0
	GT1P1{1}	5	-35	28	45	0	0	0	0

R E S T R A I N T R E A C T I O N S

Point name	Load combination	FORCES (lbf) X	Y	Z	Result	MOMENTS (ft-lb) X	Y	Z	Result
A54	Guide Tag No.: <None> [ID: A54 1]								
	Gravity{1}	0	-43	0	43	0	0	0	0
	GT1{1}	11	-44	34	57	0	0	0	0
	GE1{1}	0	-41	0	41	0	0	0	0
	GE2{1}	0	-39	0	39	0	0	0	0
	GE3{1}	0	-40	0	40	0	0	0	0
	GE4{1}	0	-38	0	38	0	0	0	0
	GE5{1}	0	-48	0	48	0	0	0	0
	GE6{1}	0	-46	0	46	0	0	0	0
	GE7{1}	0	-47	0	47	0	0	0	0
	GE8{1}	0	-46	0	46	0	0	0	0
	GT1P1{1}	11	-44	34	57	0	0	0	0
A55	Guide Tag No.: <None> [ID: A55 1]								
	Gravity{1}	3	-58	0	58	0	0	0	0
	GT1{1}	22	-56	64	88	0	0	0	0
	GE1{1}	32	-53	0	62	0	0	0	0
	GE2{1}	37	-53	0	65	0	0	0	0
	GE3{1}	-37	-53	0	64	0	0	0	0
	GE4{1}	-31	-53	0	61	0	0	0	0
	GE5{1}	32	-62	0	70	0	0	0	0
	GE6{1}	38	-62	0	73	0	0	0	0
	GE7{1}	-36	-62	0	72	0	0	0	0
	GE8{1}	-31	-62	0	70	0	0	0	0
	GT1P1{1}	23	-56	64	88	0	0	0	0
A56	Guide Tag No.: <None> [ID: A56 1]								
	Gravity{1}	0	-54	0	54	0	0	0	0
	GT1{1}	-5	-54	43	69	0	0	0	0
	GE1{1}	4	-49	0	50	0	0	0	0
	GE2{1}	0	-49	0	49	0	0	0	0
	GE3{1}	0	-49	0	49	0	0	0	0
	GE4{1}	-5	-49	0	49	0	0	0	0
	GE5{1}	4	-58	0	59	0	0	0	0
	GE6{1}	0	-58	0	58	0	0	0	0
	GE7{1}	0	-58	0	58	0	0	0	0
	GE8{1}	-5	-58	0	58	0	0	0	0
	GT1P1{1}	-5	-54	43	69	0	0	0	0
A57	Guide Tag No.: <None> [ID: A57 1]								
	Gravity{1}	0	-55	0	55	0	0	0	0
	GT1{1}	-1	-54	44	70	0	0	0	0
	GE1{1}	11	-50	0	52	0	0	0	0
	GE2{1}	7	-50	0	51	0	0	0	0
	GE3{1}	-8	-50	0	51	0	0	0	0
	GE4{1}	-11	-50	0	51	0	0	0	0
	GE5{1}	11	-59	0	61	0	0	0	0
	GE6{1}	7	-59	0	60	0	0	0	0
	GE7{1}	-8	-59	0	60	0	0	0	0
	GE8{1}	-11	-59	0	60	0	0	0	0
	GT1P1{1}	-1	-54	44	70	0	0	0	0

R E S T R A I N T R E A C T I O N S

Point name	Load combination	FORCES (lbf) X	Y	Z	Result	MOMENTS (ft-lb) X	Y	Z	Result
A58	Guide Tag No.: <None> [ID: A58 1]								
	Gravity{1}	0	-54	0	54	0	0	0	0
	GT1{1}	1	-54	44	70	0	0	0	0
	GE1{1}	12	-50	0	51	0	0	0	0
	GE2{1}	13	-50	0	51	0	0	0	0
	GE3{1}	-13	-50	0	52	0	0	0	0
	GE4{1}	-12	-50	0	51	0	0	0	0
	GE5{1}	12	-59	0	60	0	0	0	0
	GE6{1}	13	-59	0	60	0	0	0	0
	GE7{1}	-13	-59	0	60	0	0	0	0
	GE8{1}	-12	-59	0	60	0	0	0	0
	GT1P1{1}	1	-54	44	70	0	0	0	0
A59	Guide Tag No.: <None> [ID: A59 1]								
	Gravity{1}	0	-55	0	55	0	0	0	0
	GT1{1}	-2	-56	-44	71	0	0	0	0
	GE1{1}	9	-51	0	52	0	0	0	0
	GE2{1}	11	-51	0	52	0	0	0	0
	GE3{1}	-10	-51	0	52	0	0	0	0
	GE4{1}	-8	-51	0	51	0	0	0	0
	GE5{1}	9	-60	0	61	0	0	0	0
	GE6{1}	11	-60	0	61	0	0	0	0
	GE7{1}	-10	-60	0	61	0	0	0	0
	GE8{1}	-8	-60	0	60	0	0	0	0
	GT1P1{1}	-2	-56	-44	71	0	0	0	0
A60	Guide Tag No.: <None> [ID: A60 1]								
	Gravity{1}	3	-51	0	51	0	0	0	0
	GT1{1}	-9	-51	-39	65	0	0	0	0
	GE1{1}	-8	-47	0	48	0	0	0	0
	GE2{1}	-20	-47	0	51	0	0	0	0
	GE3{1}	19	-47	0	51	0	0	0	0
	GE4{1}	8	-47	0	48	0	0	0	0
	GE5{1}	-8	-56	0	56	0	0	0	0
	GE6{1}	-20	-55	0	59	0	0	0	0
	GE7{1}	19	-56	0	59	0	0	0	0
	GE8{1}	8	-55	0	56	0	0	0	0
	GT1P1{1}	-9	-51	-39	65	0	0	0	0
A61	Guide Tag No.: <None> [ID: A61 1]								
	Gravity{1}	0	-56	0	56	0	0	0	0
	GT1{1}	36	-58	-73	100	0	0	0	0
	GE1{1}	45	-51	0	68	0	0	0	0
	GE2{1}	87	-53	0	102	0	0	0	0
	GE3{1}	-84	-50	0	98	0	0	0	0
	GE4{1}	-45	-52	0	68	0	0	0	0
	GE5{1}	45	-61	0	75	0	0	0	0
	GE6{1}	87	-62	0	107	0	0	0	0
	GE7{1}	-84	-60	0	103	0	0	0	0
	GE8{1}	-45	-61	0	76	0	0	0	0
	GT1P1{1}	36	-58	-73	100	0	0	0	0

R E S T R A I N T R E A C T I O N S

Point name	Load combination	FORCES (lbf) X	Y	Z	Result	MOMENTS (ft-lb) X	Y	Z	Result
A62	Guide Tag No.: <None> [ID: A62 1]								
	Gravity{1}	0	-41	0	41	0	0	0	0
	GT1{1}	22	-39	-22	50	0	0	0	0
	GE1{1}	0	-39	0	39	0	0	0	0
	GE2{1}	7	-35	0	35	0	0	0	0
	GE3{1}	-13	-42	0	44	0	0	0	0
	GE4{1}	0	-38	0	38	0	0	0	0
	GE5{1}	0	-46	0	46	0	0	0	0
	GE6{1}	6	-42	0	42	0	0	0	0
	GE7{1}	-14	-49	0	51	0	0	0	0
	GE8{1}	0	-45	0	45	0	0	0	0
	GT1P1{1}	21	-39	-22	50	0	0	0	0
A63	Guide Tag No.: <None> [ID: A63 1]								
	Gravity{1}	0	-42	0	42	0	0	0	0
	GT1{1}	44	-44	-50	80	0	0	0	0
	GE1{1}	0	-38	0	38	0	0	0	0
	GE2{1}	0	-42	-60	73	0	0	0	0
	GE3{1}	0	-34	54	63	0	0	0	0
	GE4{1}	0	-38	0	38	0	0	0	0
	GE5{1}	0	-45	0	45	0	0	0	0
	GE6{1}	0	-49	-60	78	0	0	0	0
	GE7{1}	0	-41	53	67	0	0	0	0
	GE8{1}	0	-45	0	45	0	0	0	0
	GT1P1{1}	44	-44	-51	80	0	0	0	0
A64	Guide Tag No.: <None> [ID: A64 2]								
	Gravity{1}	0	-58	-16	60	0	0	0	0
	GT1{1}	83	-57	-46	110	0	0	0	0
	GE1{1}	0	-54	30	62	0	0	0	0
	GE2{1}	0	-52	-63	82	0	0	0	0
	GE3{1}	0	-55	65	85	0	0	0	0
	GE4{1}	0	-53	-31	61	0	0	0	0
	GE5{1}	0	-64	30	70	0	0	0	0
	GE6{1}	0	-62	-63	88	0	0	0	0
	GE7{1}	1	-64	66	92	0	0	0	0
	GE8{1}	0	-63	-31	70	0	0	0	0
	GT1P1{1}	83	-57	-45	110	0	0	0	0
A65	Guide Tag No.: <None> [ID: A65 2]								
	Gravity{1}	0	-54	7	54	0	0	0	0
	GT1{1}	64	-54	25	87	0	0	0	0
	GE1{1}	0	-49	0	49	0	0	0	0
	GE2{1}	0	-49	12	51	0	0	0	0
	GE3{1}	0	-49	-13	50	0	0	0	0
	GE4{1}	0	-49	1	49	0	0	0	0
	GE5{1}	0	-58	0	58	0	0	0	0
	GE6{1}	0	-58	12	59	0	0	0	0
	GE7{1}	0	-58	-13	59	0	0	0	0
	GE8{1}	0	-58	1	58	0	0	0	0
	GT1P1{1}	63	-54	25	87	0	0	0	0

R E S T R A I N T R E A C T I O N S

Point name	Load combination	FORCES (lbf) X	Y	Z	Result	MOMENTS (ft-lb) X	Y	Z	Result
A66	Guide Tag No.: <None> [ID: A66 2]								
	Gravity{1}	0	-55	0	55	0	0	0	0
	GT1{1}	-47	-55	-5	73	0	0	0	0
	GE1{1}	0	-51	9	52	0	0	0	0
	GE2{1}	0	-51	-11	52	0	0	0	0
	GE3{1}	0	-51	12	52	0	0	0	0
	GE4{1}	0	-50	-10	51	0	0	0	0
	GE5{1}	0	-60	9	61	0	0	0	0
	GE6{1}	0	-60	-11	61	0	0	0	0
	GE7{1}	0	-60	12	61	0	0	0	0
	GE8{1}	0	-60	-10	60	0	0	0	0
	GT1P1{1}	-44	-55	-5	71	0	0	0	0
A67	Guide Tag No.: <None> [ID: A67 2]								
	Gravity{1}	0	-53	0	53	0	0	0	0
	GT1{1}	-41	-53	-7	68	0	0	0	0
	GE1{1}	0	-48	8	49	0	0	0	0
	GE2{1}	0	-49	0	49	0	0	0	0
	GE3{1}	0	-48	0	48	0	0	0	0
	GE4{1}	0	-48	-8	49	0	0	0	0
	GE5{1}	0	-57	8	58	0	0	0	0
	GE6{1}	0	-57	0	57	0	0	0	0
	GE7{1}	0	-57	0	57	0	0	0	0
	GE8{1}	0	-57	-8	57	0	0	0	0
	GT1P1{1}	-41	-53	-7	68	0	0	0	0
A68	Guide Tag No.: <None> [ID: A68 2]								
	Gravity{1}	0	-58	2	58	0	0	0	0
	GT1{1}	-68	-58	27	93	0	0	0	0
	GE1{1}	0	-52	-1	52	0	0	0	0
	GE2{1}	0	-52	-41	66	0	0	0	0
	GE3{1}	0	-53	41	67	0	0	0	0
	GE4{1}	0	-53	2	53	0	0	0	0
	GE5{1}	0	-62	-1	62	0	0	0	0
	GE6{1}	0	-62	-41	74	0	0	0	0
	GE7{1}	0	-63	41	75	0	0	0	0
	GE8{1}	0	-63	2	63	0	0	0	0
	GT1P1{1}	-68	-59	28	94	0	0	0	0
A69	Guide Tag No.: <None> [ID: A69 1]								
	Gravity{1}	0	-41	0	41	0	0	0	0
	GT1{1}	-27	-40	16	51	0	0	0	0
	GE1{1}	0	-40	0	40	0	0	0	0
	GE2{1}	0	-40	0	40	0	0	0	0
	GE3{1}	0	-36	0	36	0	0	0	0
	GE4{1}	0	-36	0	36	0	0	0	0
	GE5{1}	0	-47	0	47	0	0	0	0
	GE6{1}	0	-47	0	47	0	0	0	0
	GE7{1}	0	-43	0	43	0	0	0	0
	GE8{1}	0	-43	0	43	0	0	0	0
	GT1P1{1}	-28	-40	15	51	0	0	0	0

R E S T R A I N T R E A C T I O N S

Point name	Load combination	FORCES (lbf) X	Y	Z	Result	MOMENTS (ft-lb) X	Y	Z	Result
A70	Guide Tag No.: <None> [ID: A70 1]								
	Gravity{1}	0	-43	0	43	0	0	0	0
	GT1{1}	-33	-44	13	57	0	0	0	0
	GE1{1}	41	-37	0	55	0	0	0	0
	GE2{1}	0	-37	0	37	0	0	0	0
	GE3{1}	0	-41	0	41	0	0	0	0
	GE4{1}	-47	-41	0	63	0	0	0	0
	GE5{1}	41	-44	0	60	0	0	0	0
	GE6{1}	0	-44	0	44	0	0	0	0
	GE7{1}	0	-48	0	48	0	0	0	0
	GE8{1}	-48	-48	0	68	0	0	0	0
	GT1P1{1}	-33	-44	13	57	0	0	0	0
A71	Guide Tag No.: <None> [ID: A71 2]								
	Gravity{1}	-9	-55	0	56	0	0	0	0
	GT1{1}	-47	-55	25	77	0	0	0	0
	GE1{1}	71	-52	0	88	0	0	0	0
	GE2{1}	45	-52	0	68	0	0	0	0
	GE3{1}	-46	-50	0	68	0	0	0	0
	GE4{1}	-71	-50	0	87	0	0	0	0
	GE5{1}	71	-61	0	94	0	0	0	0
	GE6{1}	45	-61	0	75	0	0	0	0
	GE7{1}	-46	-60	0	75	0	0	0	0
	GE8{1}	-71	-59	0	92	0	0	0	0
	GT1P1{1}	-49	-55	26	78	0	0	0	0
A72	Guide Tag No.: <None> [ID: A72 1]								
	Gravity{1}	0	-38	0	38	0	0	0	0
	GT1{1}	-21	-36	-19	46	0	0	0	0
	GE1{1}	0	-36	0	36	0	0	0	0
	GE2{1}	0	-34	0	34	0	0	0	0
	GE3{1}	0	-35	0	35	0	0	0	0
	GE4{1}	0	-33	0	33	0	0	0	0
	GE5{1}	0	-42	0	42	0	0	0	0
	GE6{1}	0	-40	0	40	0	0	0	0
	GE7{1}	0	-41	0	41	0	0	0	0
	GE8{1}	0	-40	0	40	0	0	0	0
	GT1P1{1}	-21	-36	-19	46	0	0	0	0
A73	Guide Tag No.: <None> [ID: A73 1]								
	Gravity{1}	-1	-34	0	34	0	0	0	0
	GT1{1}	-18	-36	-24	47	0	0	0	0
	GE1{1}	0	-29	0	29	0	0	0	0
	GE2{1}	-1	-32	0	32	0	0	0	0
	GE3{1}	-1	-30	0	30	0	0	0	0
	GE4{1}	-1	-33	0	33	0	0	0	0
	GE5{1}	-1	-35	0	35	0	0	0	0
	GE6{1}	-1	-38	0	38	0	0	0	0
	GE7{1}	-1	-36	0	36	0	0	0	0
	GE8{1}	-1	-39	0	39	0	0	0	0
	GT1P1{1}	-18	-36	-24	47	0	0	0	0

R E S T R A I N T R E A C T I O N S

Point name	Load combination	FORCES (lbf) X	Y	Z	Result	MOMENTS (ft-lb) X	Y	Z	Result
A18	Anchor Tag No.: <None>					Connected to: Ground			
	Gravity{1}	5	-18	-3	18	0	-15	15	21
	GT1{1}	65	-17	-30	74	-1	-142	14	143
	GE1{1}	-21	-16	56	62	1	251	14	252
	GE2{1}	8	-16	-23	29	-1	-113	13	114
	GE3{1}	-6	-16	21	27	0	106	14	106
	GE4{1}	23	-16	-58	64	-2	-263	13	263
	GE5{1}	-21	-19	55	62	1	250	16	251
	GE6{1}	8	-19	-23	30	-1	-114	15	115
	GE7{1}	-5	-19	21	29	0	105	17	106
	GE8{1}	23	-19	-58	65	-2	-264	15	264
	GT1P1{1}	66	-17	-31	75	-1	-146	14	147
B01	V - Stop Tag No.: <None> [ID: B01 1]								
	Gravity{1}	0	-16	0	16	0	0	0	0
	GT1{1}	0	0	0	0	0	0	0	0
	GE1{1}	0	-13	0	13	0	0	0	0
	GE2{1}	0	-13	0	13	0	0	0	0
	GE3{1}	0	-15	0	15	0	0	0	0
	GE4{1}	0	-15	0	15	0	0	0	0
	GE5{1}	0	-16	0	16	0	0	0	0
	GE6{1}	0	-16	0	16	0	0	0	0
	GE7{1}	0	-18	0	18	0	0	0	0
	GE8{1}	0	-18	0	18	0	0	0	0
	GT1P1{1}	0	0	0	0	0	0	0	0
B01	Guide Tag No.: <None> [ID: B01 2]								
	Gravity{1}	0	0	0	0	0	0	0	0
	GT1{1}	0	0	0	0	0	0	0	0
	GE1{1}	0	0	2	2	0	0	0	0
	GE2{1}	0	0	-2	2	0	0	0	0
	GE3{1}	0	0	2	2	0	0	0	0
	GE4{1}	0	0	-2	2	0	0	0	0
	GE5{1}	0	0	2	2	0	0	0	0
	GE6{1}	0	0	-2	2	0	0	0	0
	GE7{1}	0	0	2	2	0	0	0	0
	GE8{1}	0	0	-2	2	0	0	0	0
	GT1P1{1}	0	0	0	0	0	0	0	0
B03	Anchor Tag No.: <None>					Connected to: Ground			
	Gravity{1}	46	-4	9	47	-1	7	37	37
	GT1{1}	-290	-25	-6	291	11	48	52	72
	GE1{1}	28	-11	-32	44	14	186	26	189
	GE2{1}	188	-1	40	192	-18	-231	40	235
	GE3{1}	-121	-9	-37	127	16	211	24	213
	GE4{1}	37	1	35	51	-16	-203	39	207
	GE5{1}	34	-12	-32	48	15	185	30	188
	GE6{1}	194	-2	41	198	-19	-233	46	238
	GE7{1}	-115	-10	-36	121	16	207	29	210
	GE8{1}	43	0	35	56	-17	-204	44	210
	GT1P1{1}	-290	-25	-6	291	11	47	52	71

R E S T R A I N T R E A C T I O N S

Point name	Load combination	FORCES (lbf) X	Y	Z	Result	MOMENTS (ft-lb) X	Y	Z	Result
B22	Guide Tag No.: <None> [ID: B22 2]								
	Gravity{1}	0	-150	0	150	0	0	0	0
	GT1{1}	81	-102	-5	130	0	0	0	0
	GE1{1}	0	-121	0	121	0	0	0	0
	GE2{1}	0	-163	0	163	0	0	0	0
	GE3{1}	0	-106	0	106	0	0	0	0
	GE4{1}	0	-148	0	148	0	0	0	0
	GE5{1}	0	-144	0	144	0	0	0	0
	GE6{1}	0	-187	0	187	0	0	0	0
	GE7{1}	0	-130	0	130	0	0	0	0
	GE8{1}	0	-172	0	172	0	0	0	0
	GT1P1{1}	81	-101	-4	130	0	0	0	0
B23	Guide Tag No.: <None> [ID: B23 2]								
	Gravity{1}	-21	-128	-39	136	0	0	0	0
	GT1{1}	83	-173	61	201	0	0	0	0
	GE1{1}	-23	-140	220	262	0	0	0	0
	GE2{1}	-16	-97	-246	265	0	0	0	0
	GE3{1}	-25	-150	234	279	0	0	0	0
	GE4{1}	-17	-106	-230	254	0	0	0	0
	GE5{1}	-27	-166	220	276	0	0	0	0
	GE6{1}	-20	-120	-247	275	0	0	0	0
	GE7{1}	-29	-175	231	291	0	0	0	0
	GE8{1}	-21	-129	-231	265	0	0	0	0
	GT1P1{1}	83	-173	62	202	0	0	0	0
B24	Guide Tag No.: <None> [ID: B24 2]								
	Gravity{1}	-15	-89	0	90	0	0	0	0
	GT1{1}	2	-7	4	9	0	0	0	0
	GE1{1}	0	0	0	0	0	0	0	0
	GE2{1}	-21	-128	0	130	0	0	0	0
	GE3{1}	0	0	0	0	0	0	0	0
	GE4{1}	-21	-129	0	131	0	0	0	0
	GE5{1}	-1	-6	0	6	0	0	0	0
	GE6{1}	-23	-139	0	141	0	0	0	0
	GE7{1}	-1	-9	0	9	0	0	0	0
	GE8{1}	-23	-140	0	142	0	0	0	0
	GT1P1{1}	2	-5	3	6	0	0	0	0
B25	Guide Tag No.: <None> [ID: B25 2]								
	Gravity{1}	0	-77	2	77	0	0	0	0
	GT1{1}	98	-173	107	225	0	0	0	0
	GE1{1}	0	-143	4	143	0	0	0	0
	GE2{1}	0	-24	1	24	0	0	0	0
	GE3{1}	0	-148	4	148	0	0	0	0
	GE4{1}	0	-28	1	28	0	0	0	0
	GE5{1}	0	-163	5	163	0	0	0	0
	GE6{1}	0	-39	1	39	0	0	0	0
	GE7{1}	0	-166	5	166	0	0	0	0
	GE8{1}	0	-44	1	44	0	0	0	0
	GT1P1{1}	99	-175	108	228	0	0	0	0

R E S T R A I N T R E A C T I O N S

Point name	Load combination	FORCES (lbf) X	Y	Z	Result	MOMENTS (ft-lb) X	Y	Z	Result
B26	Guide Tag No.: <None> [ID: B26 1]								
	Gravity{1}	-7	-123	4	124	0	0	0	0
	GT1{1}	35	-95	72	124	0	0	0	0
	GE1{1}	125	-106	3	164	0	0	0	0
	GE2{1}	-27	-116	3	119	0	0	0	0
	GE3{1}	21	-105	3	107	0	0	0	0
	GE4{1}	-129	-116	3	173	0	0	0	0
	GE5{1}	124	-125	4	176	0	0	0	0
	GE6{1}	-28	-136	4	139	0	0	0	0
	GE7{1}	20	-124	4	126	0	0	0	0
	GE8{1}	-129	-136	4	187	0	0	0	0
	GT1P1{1}	35	-94	71	123	0	0	0	0
B28	Guide Tag No.: <None> [ID: B28 1]								
	Gravity{1}	0	-115	3	115	0	0	0	0
	GT1{1}	11	-120	101	157	0	0	0	0
	GE1{1}	0	-106	3	106	0	0	0	0
	GE2{1}	0	-105	3	105	0	0	0	0
	GE3{1}	0	-107	3	107	0	0	0	0
	GE4{1}	0	-105	3	105	0	0	0	0
	GE5{1}	0	-126	4	126	0	0	0	0
	GE6{1}	0	-124	4	124	0	0	0	0
	GE7{1}	0	-126	4	126	0	0	0	0
	GE8{1}	0	-124	4	125	0	0	0	0
	GT1P1{1}	12	-120	101	157	0	0	0	0
B29	Guide Tag No.: <None> [ID: B29 1]								
	Gravity{1}	0	-111	3	111	0	0	0	0
	GT1{1}	-14	-107	15	109	0	0	0	0
	GE1{1}	11	-107	3	108	0	0	0	0
	GE2{1}	0	-100	3	100	0	0	0	0
	GE3{1}	0	-106	3	106	0	0	0	0
	GE4{1}	-14	-99	3	100	0	0	0	0
	GE5{1}	11	-126	4	126	0	0	0	0
	GE6{1}	0	-118	4	118	0	0	0	0
	GE7{1}	0	-125	4	125	0	0	0	0
	GE8{1}	-14	-117	4	118	0	0	0	0
	GT1P1{1}	-15	-107	18	110	0	0	0	0
B31	Guide Tag No.: <None> [ID: B31 1]								
	Gravity{1}	0	-133	4	133	0	0	0	0
	GT1{1}	-75	-140	-77	176	0	0	0	0
	GE1{1}	40	-107	3	114	0	0	0	0
	GE2{1}	83	-126	4	151	0	0	0	0
	GE3{1}	-84	-111	3	139	0	0	0	0
	GE4{1}	-38	-129	4	134	0	0	0	0
	GE5{1}	40	-129	4	135	0	0	0	0
	GE6{1}	83	-147	4	169	0	0	0	0
	GE7{1}	-85	-132	4	157	0	0	0	0
	GE8{1}	-38	-150	4	155	0	0	0	0
	GT1P1{1}	-76	-140	-76	177	0	0	0	0

R E S T R A I N T R E A C T I O N S

Point name	Load combination	FORCES (lbf) X	Y	Z	Result	MOMENTS (ft-lb) X	Y	Z	Result
B32	Guide Tag No.: <None> [ID: B32 2]								
	Gravity{1}	0	-95	3	95	0	0	0	0
	GT1{1}	-41	-81	-47	103	0	0	0	0
	GE1{1}	0	-147	4	148	0	0	0	0
	GE2{1}	0	-71	2	71	0	0	0	0
	GE3{1}	0	-133	4	133	0	0	0	0
	GE4{1}	0	-58	2	58	0	0	0	0
	GE5{1}	0	-165	5	165	0	0	0	0
	GE6{1}	0	-90	3	90	0	0	0	0
	GE7{1}	0	-151	4	151	0	0	0	0
	GE8{1}	0	-77	2	77	0	0	0	0
	GT1P1{1}	-41	-81	-46	102	0	0	0	0
B33	Guide Tag No.: <None> [ID: B33 2]								
	Gravity{1}	-1	-46	0	46	0	0	0	0
	GT1{1}	-1	-93	-75	120	0	0	0	0
	GE1{1}	0	-5	0	5	0	0	0	0
	GE2{1}	-1	-56	0	56	0	0	0	0
	GE3{1}	0	-15	0	15	0	0	0	0
	GE4{1}	-1	-61	0	62	0	0	0	0
	GE5{1}	0	-15	0	15	0	0	0	0
	GE6{1}	-1	-62	0	62	0	0	0	0
	GE7{1}	0	-22	0	22	0	0	0	0
	GE8{1}	-1	-68	0	68	0	0	0	0
	GT1P1{1}	-1	-94	-76	121	0	0	0	0
B34	Guide Tag No.: <None> [ID: B34 2]								
	Gravity{1}	-2	-74	0	74	0	0	0	0
	GT1{1}	3	-22	17	28	0	0	0	0
	GE1{1}	0	0	105	105	0	0	0	0
	GE2{1}	-2	-75	-53	92	0	0	0	0
	GE3{1}	0	-21	0	21	0	0	0	0
	GE4{1}	-2	-100	-171	198	0	0	0	0
	GE5{1}	0	-4	99	99	0	0	0	0
	GE6{1}	-2	-84	-59	102	0	0	0	0
	GE7{1}	-1	-29	0	29	0	0	0	0
	GE8{1}	-2	-109	-177	208	0	0	0	0
	GT1P1{1}	3	-21	16	27	0	0	0	0
B35	Guide Tag No.: <None> [ID: B35 2]								
	Gravity{1}	0	-78	2	78	0	0	0	0
	GT1{1}	45	-100	70	130	0	0	0	0
	GE1{1}	0	-141	4	141	0	0	0	0
	GE2{1}	0	-61	2	61	0	0	0	0
	GE3{1}	0	-121	3	121	0	0	0	0
	GE4{1}	0	-40	1	40	0	0	0	0
	GE5{1}	0	-160	4	160	0	0	0	0
	GE6{1}	0	-78	2	78	0	0	0	0
	GE7{1}	0	-138	4	138	0	0	0	0
	GE8{1}	0	-57	2	57	0	0	0	0
	GT1P1{1}	45	-100	71	131	0	0	0	0

R E S T R A I N T R E A C T I O N S

Point name	Load combination	FORCES (lbf) X	Y	Z	Result	MOMENTS (ft-lb) X	Y	Z	Result
B36	Guide Tag No.: <None> [ID: B36 2]								
	Gravity{1}	0	-126	3	126	0	0	0	0
	GT1{1}	55	-117	81	152	0	0	0	0
	GE1{1}	96	-97	3	136	0	0	0	0
	GE2{1}	71	-117	3	137	0	0	0	0
	GE3{1}	-63	-102	3	120	0	0	0	0
	GE4{1}	-90	-123	3	152	0	0	0	0
	GE5{1}	96	-116	3	151	0	0	0	0
	GE6{1}	71	-137	4	154	0	0	0	0
	GE7{1}	-62	-122	3	137	0	0	0	0
	GE8{1}	-89	-142	4	168	0	0	0	0
	GT1P1{1}	55	-117	81	152	0	0	0	0
B37	Guide Tag No.: <None> [ID: B37 2]								
	Gravity{1}	0	-112	3	112	0	0	0	0
	GT1{1}	19	-111	92	146	0	0	0	0
	GE1{1}	0	-109	3	109	0	0	0	0
	GE2{1}	0	-101	3	101	0	0	0	0
	GE3{1}	0	-108	3	108	0	0	0	0
	GE4{1}	-1	-100	3	100	0	0	0	0
	GE5{1}	0	-128	4	129	0	0	0	0
	GE6{1}	0	-120	3	120	0	0	0	0
	GE7{1}	0	-127	4	127	0	0	0	0
	GE8{1}	-2	-119	3	119	0	0	0	0
	GT1P1{1}	20	-112	92	146	0	0	0	0
B38	Guide Tag No.: <None> [ID: B38 2]								
	Gravity{1}	0	-120	3	120	0	0	0	0
	GT1{1}	-26	-119	58	135	0	0	0	0
	GE1{1}	12	-107	3	108	0	0	0	0
	GE2{1}	20	-111	3	113	0	0	0	0
	GE3{1}	-28	-107	3	111	0	0	0	0
	GE4{1}	-15	-111	3	112	0	0	0	0
	GE5{1}	12	-127	4	128	0	0	0	0
	GE6{1}	20	-131	4	132	0	0	0	0
	GE7{1}	-29	-127	4	130	0	0	0	0
	GE8{1}	-15	-131	4	132	0	0	0	0
	GT1P1{1}	-27	-118	72	141	0	0	0	0
B39	Guide Tag No.: <None> [ID: B39 2]								
	Gravity{1}	0	-101	3	102	0	0	0	0
	GT1{1}	30	-101	-71	127	0	0	0	0
	GE1{1}	0	-100	3	100	0	0	0	0
	GE2{1}	13	-89	3	90	0	0	0	0
	GE3{1}	-4	-102	3	102	0	0	0	0
	GE4{1}	0	-91	3	91	0	0	0	0
	GE5{1}	0	-118	3	118	0	0	0	0
	GE6{1}	14	-106	3	107	0	0	0	0
	GE7{1}	-3	-119	3	119	0	0	0	0
	GE8{1}	0	-108	3	108	0	0	0	0
	GT1P1{1}	29	-101	-71	127	0	0	0	0

R E S T R A I N T R E A C T I O N S

Point name	Load combination	FORCES (lbf) X	Y	Z	Result	MOMENTS (ft-lb) X	Y	Z	Result
B40	Guide Tag No.: <None> [ID: B40 1]								
	Gravity{1}	0	-116	3	116	0	0	0	0
	GT1{1}	76	-124	-71	162	0	0	0	0
	GE1{1}	82	-91	3	122	0	0	0	0
	GE2{1}	52	-115	3	126	0	0	0	0
	GE3{1}	-60	-86	2	105	0	0	0	0
	GE4{1}	-84	-110	3	138	0	0	0	0
	GE5{1}	81	-109	3	136	0	0	0	0
	GE6{1}	51	-133	4	143	0	0	0	0
	GE7{1}	-61	-104	3	120	0	0	0	0
	GE8{1}	-84	-128	4	153	0	0	0	0
	GT1P1{1}	82	-125	-78	168	0	0	0	0
B42	Guide Tag No.: <None> [ID: B42 1]								
	Gravity{1}	0	-86	2	86	0	0	0	0
	GT1{1}	32	-62	-35	78	0	0	0	0
	GE1{1}	0	-116	3	117	0	0	0	0
	GE2{1}	0	-51	1	51	0	0	0	0
	GE3{1}	0	-134	4	134	0	0	0	0
	GE4{1}	0	-70	2	70	0	0	0	0
	GE5{1}	0	-133	4	133	0	0	0	0
	GE6{1}	0	-68	2	68	0	0	0	0
	GE7{1}	0	-152	4	152	0	0	0	0
	GE8{1}	0	-86	2	86	0	0	0	0
	GT1P1{1}	32	-61	-35	77	0	0	0	0
B43	Guide Tag No.: <None> [ID: B43 1]								
	Gravity{1}	2	-74	0	74	0	0	0	0
	GT1{1}	32	-118	-90	152	0	0	0	0
	GE1{1}	0	-18	0	18	0	0	0	0
	GE2{1}	3	-101	-117	154	0	0	0	0
	GE3{1}	0	0	104	104	0	0	0	0
	GE4{1}	2	-81	0	81	0	0	0	0
	GE5{1}	1	-27	0	27	0	0	0	0
	GE6{1}	3	-110	-117	160	0	0	0	0
	GE7{1}	0	-7	97	97	0	0	0	0
	GE8{1}	2	-90	0	90	0	0	0	0
	GT1P1{1}	32	-119	-92	154	0	0	0	0
B45	Guide Tag No.: <None> [ID: B45 1]								
	Gravity{1}	1	-50	0	50	0	0	0	0
	GT1{1}	-1	-18	15	23	0	0	0	0
	GE1{1}	1	-64	129	144	0	0	0	0
	GE2{1}	1	-49	-203	209	0	0	0	0
	GE3{1}	1	-53	183	191	0	0	0	0
	GE4{1}	1	-40	-139	145	0	0	0	0
	GE5{1}	2	-73	128	147	0	0	0	0
	GE6{1}	1	-58	-205	213	0	0	0	0
	GE7{1}	1	-64	183	194	0	0	0	0
	GE8{1}	1	-49	-140	148	0	0	0	0
	GT1P1{1}	-1	-17	14	22	0	0	0	0

R E S T R A I N T R E A C T I O N S

Point name	Load combination	FORCES (lbf) X	Y	Z	Result	MOMENTS (ft-lb) X	Y	Z	Result
B46	Guide Tag No.: <None> [ID: B46 2]								
	Gravity{1}	0	-97	1	97	0	0	0	0
	GT1{1}	-32	-113	86	145	0	0	0	0
	GE1{1}	0	-91	1	91	0	0	0	0
	GE2{1}	0	-76	1	76	0	0	0	0
	GE3{1}	0	-105	1	105	0	0	0	0
	GE4{1}	0	-90	1	90	0	0	0	0
	GE5{1}	0	-107	1	107	0	0	0	0
	GE6{1}	0	-93	1	93	0	0	0	0
	GE7{1}	0	-121	1	121	0	0	0	0
	GE8{1}	0	-106	1	106	0	0	0	0
	GT1P1{1}	-32	-113	86	146	0	0	0	0
B47	Guide Tag No.: <None> [ID: B47 2]								
	Gravity{1}	-5	-120	1	120	0	0	0	0
	GT1{1}	-153	-114	216	288	0	0	0	0
	GE1{1}	64	-112	1	129	0	0	0	0
	GE2{1}	61	-111	1	127	0	0	0	0
	GE3{1}	-67	-108	1	127	0	0	0	0
	GE4{1}	-68	-108	1	128	0	0	0	0
	GE5{1}	64	-132	1	146	0	0	0	0
	GE6{1}	61	-131	1	144	0	0	0	0
	GE7{1}	-68	-128	1	145	0	0	0	0
	GE8{1}	-69	-128	1	145	0	0	0	0
	GT1P1{1}	-158	-113	219	293	0	0	0	0
B48	Guide Tag No.: <None> [ID: B48 2]								
	Gravity{1}	0	-115	1	115	0	0	0	0
	GT1{1}	20	-115	92	149	0	0	0	0
	GE1{1}	0	-105	1	105	0	0	0	0
	GE2{1}	10	-105	1	106	0	0	0	0
	GE3{1}	-5	-106	1	106	0	0	0	0
	GE4{1}	0	-106	1	106	0	0	0	0
	GE5{1}	0	-124	1	124	0	0	0	0
	GE6{1}	10	-124	1	125	0	0	0	0
	GE7{1}	-5	-125	1	125	0	0	0	0
	GE8{1}	0	-125	1	125	0	0	0	0
	GT1P1{1}	20	-115	92	149	0	0	0	0
B49	Guide Tag No.: <None> [ID: B49 2]								
	Gravity{1}	0	-116	1	116	0	0	0	0
	GT1{1}	11	-115	93	148	0	0	0	0
	GE1{1}	20	-108	1	110	0	0	0	0
	GE2{1}	25	-105	1	108	0	0	0	0
	GE3{1}	-26	-108	1	111	0	0	0	0
	GE4{1}	-18	-105	1	107	0	0	0	0
	GE5{1}	21	-127	1	129	0	0	0	0
	GE6{1}	24	-125	1	127	0	0	0	0
	GE7{1}	-26	-127	1	130	0	0	0	0
	GE8{1}	-18	-124	1	126	0	0	0	0
	GT1P1{1}	11	-115	93	148	0	0	0	0

R E S T R A I N T R E A C T I O N S

Point name	Load combination	FORCES (lbf) X	Y	Z	Result	MOMENTS (ft-lb) X	Y	Z	Result
B50	Guide Tag No.: <None> [ID: B50 2]								
	Gravity{1}	0	-117	1	117	0	0	0	0
	GT1{1}	0	-117	96	151	0	0	0	0
	GE1{1}	21	-105	1	107	0	0	0	0
	GE2{1}	21	-108	1	110	0	0	0	0
	GE3{1}	-21	-105	1	107	0	0	0	0
	GE4{1}	-22	-108	1	110	0	0	0	0
	GE5{1}	21	-124	1	126	0	0	0	0
	GE6{1}	21	-127	1	129	0	0	0	0
	GE7{1}	-21	-124	1	126	0	0	0	0
	GE8{1}	-22	-127	1	129	0	0	0	0
	GT1P1{1}	0	-117	95	151	0	0	0	0
B51	Guide Tag No.: <None> [ID: B51 2]								
	Gravity{1}	0	-114	1	114	0	0	0	0
	GT1{1}	-5	-114	-81	140	0	0	0	0
	GE1{1}	32	-108	1	113	0	0	0	0
	GE2{1}	21	-103	1	105	0	0	0	0
	GE3{1}	-21	-108	1	110	0	0	0	0
	GE4{1}	-31	-103	1	108	0	0	0	0
	GE5{1}	32	-127	1	131	0	0	0	0
	GE6{1}	21	-122	1	124	0	0	0	0
	GE7{1}	-21	-127	1	129	0	0	0	0
	GE8{1}	-31	-122	1	126	0	0	0	0
	GT1P1{1}	-6	-114	-82	141	0	0	0	0
B52	Guide Tag No.: <None> [ID: B52 2]								
	Gravity{1}	0	-120	1	120	0	0	0	0
	GT1{1}	15	-122	-94	155	0	0	0	0
	GE1{1}	0	-106	1	106	0	0	0	0
	GE2{1}	26	-111	1	114	0	0	0	0
	GE3{1}	-26	-106	1	109	0	0	0	0
	GE4{1}	-2	-111	1	111	0	0	0	0
	GE5{1}	0	-126	1	126	0	0	0	0
	GE6{1}	26	-131	1	133	0	0	0	0
	GE7{1}	-26	-126	1	129	0	0	0	0
	GE8{1}	-2	-131	1	131	0	0	0	0
	GT1P1{1}	15	-122	-95	155	0	0	0	0
B53	Guide Tag No.: <None> [ID: B53 2]								
	Gravity{1}	-7	-103	1	103	0	0	0	0
	GT1{1}	21	-102	-77	129	0	0	0	0
	GE1{1}	0	-100	1	100	0	0	0	0
	GE2{1}	2	-93	1	93	0	0	0	0
	GE3{1}	-4	-99	1	99	0	0	0	0
	GE4{1}	0	-92	1	92	0	0	0	0
	GE5{1}	0	-118	1	118	0	0	0	0
	GE6{1}	2	-110	1	110	0	0	0	0
	GE7{1}	-4	-117	1	117	0	0	0	0
	GE8{1}	0	-109	1	109	0	0	0	0
	GT1P1{1}	21	-102	-77	130	0	0	0	0

R E S T R A I N T R E A C T I O N S

Point name	Load combination	FORCES (lbf) X	Y	Z	Result	MOMENTS (ft-lb) X	Y	Z	Result
B54	Guide Tag No.: <None> [ID: B54 2]								
	Gravity{1}	0	-115	1	115	0	0	0	0
	GT1{1}	-170	-121	-230	310	0	0	0	0
	GE1{1}	134	-97	1	166	0	0	0	0
	GE2{1}	27	-108	1	111	0	0	0	0
	GE3{1}	-24	-99	1	102	0	0	0	0
	GE4{1}	-132	-110	1	172	0	0	0	0
	GE5{1}	134	-116	1	177	0	0	0	0
	GE6{1}	28	-126	1	129	0	0	0	0
	GE7{1}	-24	-118	1	121	0	0	0	0
	GE8{1}	-132	-129	1	184	0	0	0	0
	GT1P1{1}	-174	-121	-233	315	0	0	0	0
B55	Guide Tag No.: <None> [ID: B55 1]								
	Gravity{1}	0	-90	1	90	0	0	0	0
	GT1{1}	-28	-81	-58	104	0	0	0	0
	GE1{1}	0	-101	1	101	0	0	0	0
	GE2{1}	0	-78	1	78	0	0	0	0
	GE3{1}	0	-95	1	95	0	0	0	0
	GE4{1}	0	-72	1	72	0	0	0	0
	GE5{1}	0	-117	1	117	0	0	0	0
	GE6{1}	0	-94	1	94	0	0	0	0
	GE7{1}	0	-110	1	110	0	0	0	0
	GE8{1}	0	-88	1	88	0	0	0	0
	GT1P1{1}	-28	-81	-58	103	0	0	0	0
B57	Guide Tag No.: <None> [ID: B57 1]								
	Gravity{1}	-1	-83	0	83	0	0	0	0
	GT1{1}	-5	-95	-76	122	0	0	0	0
	GE1{1}	0	-58	70	91	0	0	0	0
	GE2{1}	-1	-80	0	80	0	0	0	0
	GE3{1}	0	-64	0	64	0	0	0	0
	GE4{1}	-1	-86	-85	121	0	0	0	0
	GE5{1}	-1	-71	69	98	0	0	0	0
	GE6{1}	-1	-93	0	93	0	0	0	0
	GE7{1}	-1	-77	0	77	0	0	0	0
	GE8{1}	-1	-99	-86	131	0	0	0	0
	GT1P1{1}	-5	-95	-76	122	0	0	0	0
B58	Guide Tag No.: <None> [ID: B58 1]								
	Gravity{1}	0	-79	0	79	0	0	0	0
	GT1{1}	7	-66	53	85	0	0	0	0
	GE1{1}	0	-73	0	73	0	0	0	0
	GE2{1}	0	-71	0	71	0	0	0	0
	GE3{1}	0	-75	0	75	0	0	0	0
	GE4{1}	0	-73	0	73	0	0	0	0
	GE5{1}	0	-87	0	87	0	0	0	0
	GE6{1}	0	-85	0	85	0	0	0	0
	GE7{1}	-1	-88	0	88	0	0	0	0
	GE8{1}	0	-86	0	86	0	0	0	0
	GT1P1{1}	7	-66	52	85	0	0	0	0

R E S T R A I N T R E A C T I O N S

Point name	Load combination	FORCES (lbf) X	Y	Z	Result	MOMENTS (ft-lb) X	Y	Z	Result
B64	Guide Tag No.: <None> [ID: B64 1]								
	Gravity{1}	0	-92	1	92	0	0	0	0
	GT1{1}	26	-101	77	130	0	0	0	0
	GE1{1}	0	-88	1	88	0	0	0	0
	GE2{1}	0	-84	1	84	0	0	0	0
	GE3{1}	0	-85	1	85	0	0	0	0
	GE4{1}	0	-80	1	80	0	0	0	0
	GE5{1}	0	-103	1	103	0	0	0	0
	GE6{1}	0	-99	1	99	0	0	0	0
	GE7{1}	0	-100	1	100	0	0	0	0
	GE8{1}	0	-96	1	96	0	0	0	0
	GT1P1{1}	26	-101	78	130	0	0	0	0
B65	Guide Tag No.: <None> [ID: B65 1]								
	Gravity{1}	2	-122	1	122	0	0	0	0
	GT1{1}	165	-117	227	304	0	0	0	0
	GE1{1}	15	-111	1	112	0	0	0	0
	GE2{1}	125	-112	1	168	0	0	0	0
	GE3{1}	-125	-112	1	167	0	0	0	0
	GE4{1}	-12	-112	1	113	0	0	0	0
	GE5{1}	16	-131	1	132	0	0	0	0
	GE6{1}	125	-132	1	182	0	0	0	0
	GE7{1}	-125	-132	1	181	0	0	0	0
	GE8{1}	-12	-133	1	133	0	0	0	0
	GT1P1{1}	168	-117	230	308	0	0	0	0
B66	Guide Tag No.: <None> [ID: B66 1]								
	Gravity{1}	6	-114	1	114	0	0	0	0
	GT1{1}	-16	-115	91	147	0	0	0	0
	GE1{1}	10	-105	1	106	0	0	0	0
	GE2{1}	0	-105	1	105	0	0	0	0
	GE3{1}	0	-105	1	105	0	0	0	0
	GE4{1}	-13	-104	1	105	0	0	0	0
	GE5{1}	10	-124	1	125	0	0	0	0
	GE6{1}	0	-124	1	124	0	0	0	0
	GE7{1}	0	-124	1	124	0	0	0	0
	GE8{1}	-13	-123	1	124	0	0	0	0
	GT1P1{1}	-16	-115	91	147	0	0	0	0
B67	Guide Tag No.: <None> [ID: B67 1]								
	Gravity{1}	0	-116	1	116	0	0	0	0
	GT1{1}	-10	-116	93	149	0	0	0	0
	GE1{1}	24	-107	1	109	0	0	0	0
	GE2{1}	7	-107	1	107	0	0	0	0
	GE3{1}	-8	-107	1	107	0	0	0	0
	GE4{1}	-24	-107	1	109	0	0	0	0
	GE5{1}	24	-126	1	128	0	0	0	0
	GE6{1}	7	-126	1	126	0	0	0	0
	GE7{1}	-8	-126	1	126	0	0	0	0
	GE8{1}	-24	-126	1	128	0	0	0	0
	GT1P1{1}	-10	-116	93	149	0	0	0	0

R E S T R A I N T R E A C T I O N S

Point name	Load combination	FORCES (lbf) X	Y	Z	Result	MOMENTS (ft-lb) X	Y	Z	Result
B68	Guide Tag No.: <None> [ID: B68 1]								
	Gravity{1}	0	-116	1	116	0	0	0	0
	GT1{1}	-2	-115	93	148	0	0	0	0
	GE1{1}	22	-106	1	109	0	0	0	0
	GE2{1}	28	-106	1	110	0	0	0	0
	GE3{1}	-28	-106	1	110	0	0	0	0
	GE4{1}	-22	-106	1	108	0	0	0	0
	GE5{1}	22	-126	1	127	0	0	0	0
	GE6{1}	29	-125	1	128	0	0	0	0
	GE7{1}	-28	-126	1	129	0	0	0	0
	GE8{1}	-22	-125	1	127	0	0	0	0
	GT1P1{1}	-2	-115	93	148	0	0	0	0
B69	Guide Tag No.: <None> [ID: B69 1]								
	Gravity{1}	0	-116	1	116	0	0	0	0
	GT1{1}	0	-116	93	149	0	0	0	0
	GE1{1}	19	-107	1	108	0	0	0	0
	GE2{1}	27	-107	1	110	0	0	0	0
	GE3{1}	-25	-107	1	110	0	0	0	0
	GE4{1}	-17	-107	1	108	0	0	0	0
	GE5{1}	19	-126	1	127	0	0	0	0
	GE6{1}	27	-126	1	129	0	0	0	0
	GE7{1}	-25	-126	1	128	0	0	0	0
	GE8{1}	-17	-126	1	127	0	0	0	0
	GT1P1{1}	0	-116	94	149	0	0	0	0
B70	Guide Tag No.: <None> [ID: B70 1]								
	Gravity{1}	0	-114	1	114	0	0	0	0
	GT1{1}	16	-114	103	154	0	0	0	0
	GE1{1}	36	-106	1	112	0	0	0	0
	GE2{1}	15	-104	1	105	0	0	0	0
	GE3{1}	-16	-106	1	107	0	0	0	0
	GE4{1}	-35	-104	1	110	0	0	0	0
	GE5{1}	36	-125	1	130	0	0	0	0
	GE6{1}	15	-123	1	124	0	0	0	0
	GE7{1}	-16	-125	1	126	0	0	0	0
	GE8{1}	-35	-123	1	128	0	0	0	0
	GT1P1{1}	16	-114	105	155	0	0	0	0
B71	Guide Tag No.: <None> [ID: B71 1]								
	Gravity{1}	0	-122	1	122	0	0	0	0
	GT1{1}	-48	-123	-92	162	0	0	0	0
	GE1{1}	21	-111	1	113	0	0	0	0
	GE2{1}	0	-112	1	112	0	0	0	0
	GE3{1}	0	-111	1	111	0	0	0	0
	GE4{1}	-22	-112	1	114	0	0	0	0
	GE5{1}	21	-131	1	132	0	0	0	0
	GE6{1}	0	-132	1	132	0	0	0	0
	GE7{1}	0	-131	1	131	0	0	0	0
	GE8{1}	-22	-132	1	134	0	0	0	0
	GT1P1{1}	-50	-123	-85	158	0	0	0	0

R E S T R A I N T R E A C T I O N S

Point name	Load combination	FORCES (lbf) X	Y	Z	Result	MOMENTS (ft-lb) X	Y	Z	Result
B72	Guide Tag No.: <None> [ID: B72 1]								
	Gravity{1}	0	-83	1	83	0	0	0	0
	GT1{1}	-31	-82	-57	104	0	0	0	0
	GE1{1}	0	-78	0	78	0	0	0	0
	GE2{1}	0	-74	0	74	0	0	0	0
	GE3{1}	0	-78	0	78	0	0	0	0
	GE4{1}	0	-74	0	74	0	0	0	0
	GE5{1}	0	-92	1	92	0	0	0	0
	GE6{1}	0	-88	1	88	0	0	0	0
	GE7{1}	0	-92	1	92	0	0	0	0
	GE8{1}	0	-88	1	88	0	0	0	0
	GT1P1{1}	-31	-81	-57	104	0	0	0	0
B73	Guide Tag No.: <None> [ID: B73 1]								
	Gravity{1}	9	-91	1	91	0	0	0	0
	GT1{1}	227	-94	-257	356	0	0	0	0
	GE1{1}	-65	-78	1	102	0	0	0	0
	GE2{1}	180	-87	1	200	0	0	0	0
	GE3{1}	-176	-78	1	193	0	0	0	0
	GE4{1}	69	-87	1	111	0	0	0	0
	GE5{1}	-65	-92	1	113	0	0	0	0
	GE6{1}	180	-102	1	207	0	0	0	0
	GE7{1}	-176	-92	1	198	0	0	0	0
	GE8{1}	69	-102	1	123	0	0	0	0
	GT1P1{1}	233	-94	-260	361	0	0	0	0
B74	Guide Tag No.: <None> [ID: B74 1]								
	Gravity{1}	0	-99	1	99	0	0	0	0
	GT1{1}	51	-84	-44	108	0	0	0	0
	GE1{1}	0	-119	1	119	0	0	0	0
	GE2{1}	0	-70	0	70	0	0	0	0
	GE3{1}	0	-118	1	118	0	0	0	0
	GE4{1}	0	-70	0	70	0	0	0	0
	GE5{1}	0	-139	1	139	0	0	0	0
	GE6{1}	0	-87	0	87	0	0	0	0
	GE7{1}	0	-140	1	140	0	0	0	0
	GE8{1}	0	-88	0	88	0	0	0	0
	GT1P1{1}	51	-84	-44	108	0	0	0	0
B75	Guide Tag No.: <None> [ID: B75 1]								
	Gravity{1}	1	-58	0	58	0	0	0	0
	GT1{1}	50	-78	-40	100	0	0	0	0
	GE1{1}	0	0	0	0	0	0	0	0
	GE2{1}	2	-94	0	94	0	0	0	0
	GE3{1}	0	0	0	0	0	0	0	0
	GE4{1}	2	-92	0	92	0	0	0	0
	GE5{1}	0	-1	0	1	0	0	0	0
	GE6{1}	2	-102	0	102	0	0	0	0
	GE7{1}	0	0	0	0	0	0	0	0
	GE8{1}	2	-100	0	100	0	0	0	0
	GT1P1{1}	50	-78	-40	100	0	0	0	0

R E S T R A I N T R E A C T I O N S

Point name	Load combination	FORCES (lbf) X	Y	Z	Result	MOMENTS (ft-lb) X	Y	Z	Result
B77	Guide Tag No.: <None> [ID: B77 1]								
	Gravity{1}	0	-76	1	76	0	0	0	0
	GT1{1}	299	-52	-233	383	0	0	0	0
	GE1{1}	-242	-129	2	275	0	0	0	0
	GE2{1}	354	-23	0	355	0	0	0	0
	GE3{1}	-330	-130	2	355	0	0	0	0
	GE4{1}	261	-25	0	262	0	0	0	0
	GE5{1}	-240	-149	3	283	0	0	0	0
	GE6{1}	356	-37	1	358	0	0	0	0
	GE7{1}	-327	-150	3	360	0	0	0	0
	GE8{1}	263	-39	1	266	0	0	0	0
	GT1P1{1}	313	-52	-245	401	0	0	0	0
B59 F	Guide Tag No.: <None> [ID: B59 F1]								
	Gravity{1}	0	-103	0	103	0	0	0	0
	GT1{1}	80	-143	-81	183	0	0	0	0
	GE1{1}	0	-18	0	18	0	0	0	0
	GE2{1}	0	-155	0	155	0	0	0	0
	GE3{1}	0	-17	0	17	0	0	0	0
	GE4{1}	0	-153	0	153	0	0	0	0
	GE5{1}	0	-29	0	29	0	0	0	0
	GE6{1}	0	-170	0	170	0	0	0	0
	GE7{1}	0	-27	0	27	0	0	0	0
	GE8{1}	0	-168	0	168	0	0	0	0
	GT1P1{1}	81	-143	-81	183	0	0	0	0
B62	Anchor Tag No.: <None>					Connected to: Ground			
	Gravity{1}	-10	17	-28	34	-14	195	24	197
	GT1{1}	-640	36	-210	675	-19	903	39	904
	GE1{1}	389	-29	318	504	-2	-1421	-15	1421
	GE2{1}	-420	49	-343	545	-22	1499	49	1500
	GE3{1}	391	-29	327	510	-1	-1444	-15	1444
	GE4{1}	-412	48	-331	531	-22	1465	49	1466
	GE5{1}	387	-30	317	501	-2	-1416	-14	1416
	GE6{1}	-423	51	-344	548	-24	1504	52	1505
	GE7{1}	388	-30	325	507	-2	-1439	-15	1439
	GE8{1}	-414	50	-333	534	-24	1469	51	1470
	GT1P1{1}	-660	36	-214	695	-19	909	39	910
C01	V - Stop Tag No.: <None> [ID: C01 1]								
	Gravity{1}	0	-6	0	6	0	0	0	0
	GT1{1}	0	0	0	0	0	0	0	0
	GE1{1}	0	-6	0	6	0	0	0	0
	GE2{1}	0	-6	0	6	0	0	0	0
	GE3{1}	0	-6	0	6	0	0	0	0
	GE4{1}	0	-6	0	6	0	0	0	0
	GE5{1}	0	-7	0	7	0	0	0	0
	GE6{1}	0	-7	0	7	0	0	0	0
	GE7{1}	0	-7	0	7	0	0	0	0
	GE8{1}	0	-7	0	7	0	0	0	0
	GT1P1{1}	0	0	0	0	0	0	0	0

R E S T R A I N T R E A C T I O N S

Point name	Load combination	FORCES (lbf) X	Y	Z	Result	MOMENTS (ft-lb) X	Y	Z	Result
C01	Guide Tag No.: <None> [ID: C01 2]								
	Gravity{1}	0	0	0	0	0	0	0	0
	GT1{1}	0	0	0	0	0	0	0	0
	GE1{1}	0	0	1	1	0	0	0	0
	GE2{1}	0	0	-1	1	0	0	0	0
	GE3{1}	0	0	1	1	0	0	0	0
	GE4{1}	0	0	-1	1	0	0	0	0
	GE5{1}	0	0	1	1	0	0	0	0
	GE6{1}	0	0	-1	1	0	0	0	0
	GE7{1}	0	0	1	1	0	0	0	0
	GE8{1}	0	0	-1	1	0	0	0	0
	GT1P1{1}	0	0	0	0	0	0	0	0
C03	Anchor Tag No.: <None>					Connected to: Ground			
	Gravity{1}	18	-5	8	20	-2	-40	13	43
	GT1{1}	-130	-12	8	131	2	-24	21	32
	GE1{1}	24	-6	-4	25	3	45	11	46
	GE2{1}	64	-4	6	65	-3	-58	13	60
	GE3{1}	-50	-5	-5	51	3	55	10	56
	GE4{1}	-10	-4	4	11	-3	-49	12	51
	GE5{1}	26	-6	-3	27	3	45	13	46
	GE6{1}	66	-5	6	66	-3	-59	15	61
	GE7{1}	-49	-6	-5	49	3	54	12	56
	GE8{1}	-9	-5	4	11	-3	-49	14	51
	GT1P1{1}	-130	-12	8	131	2	-23	21	31
C21	Guide Tag No.: <None> [ID: C21 2]								
	Gravity{1}	0	-63	0	63	0	0	0	0
	GT1{1}	42	-54	-10	69	0	0	0	0
	GE1{1}	0	-56	0	56	0	0	0	0
	GE2{1}	0	-61	0	61	0	0	0	0
	GE3{1}	0	-52	0	52	0	0	0	0
	GE4{1}	0	-58	0	58	0	0	0	0
	GE5{1}	0	-66	0	66	0	0	0	0
	GE6{1}	0	-72	0	72	0	0	0	0
	GE7{1}	0	-62	0	62	0	0	0	0
	GE8{1}	0	-68	0	68	0	0	0	0
	GT1P1{1}	42	-54	-10	69	0	0	0	0
C22	Guide Tag No.: <None> [ID: C22 2]								
	Gravity{1}	-5	-58	-27	65	0	0	0	0
	GT1{1}	44	-66	9	80	0	0	0	0
	GE1{1}	-5	-58	60	84	0	0	0	0
	GE2{1}	-4	-51	-70	87	0	0	0	0
	GE3{1}	-5	-60	68	90	0	0	0	0
	GE4{1}	-4	-53	-63	82	0	0	0	0
	GE5{1}	-6	-68	60	91	0	0	0	0
	GE6{1}	-5	-61	-70	93	0	0	0	0
	GE7{1}	-6	-70	67	97	0	0	0	0
	GE8{1}	-5	-63	-63	89	0	0	0	0
	GT1P1{1}	44	-66	9	80	0	0	0	0

R E S T R A I N T R E A C T I O N S

Point name	Load combination	FORCES (lbf) X	Y	Z	Result	MOMENTS (ft-lb) X	Y	Z	Result
C23	Guide Tag No.: <None> [ID: C23 2]								
	Gravity{1}	-3	-35	0	35	0	0	0	0
	GT1{1}	10	-24	14	30	0	0	0	0
	GE1{1}	-1	-17	0	17	0	0	0	0
	GE2{1}	-3	-37	0	37	0	0	0	0
	GE3{1}	-1	-17	0	17	0	0	0	0
	GE4{1}	-3	-37	0	37	0	0	0	0
	GE5{1}	-2	-22	0	22	0	0	0	0
	GE6{1}	-3	-42	0	42	0	0	0	0
	GE7{1}	-2	-22	0	22	0	0	0	0
	GE8{1}	-3	-42	0	42	0	0	0	0
	GT1P1{1}	10	-24	14	29	0	0	0	0
C24	Guide Tag No.: <None> [ID: C24 2]								
	Gravity{1}	0	-41	1	41	0	0	0	0
	GT1{1}	30	-54	34	70	0	0	0	0
	GE1{1}	0	-51	1	51	0	0	0	0
	GE2{1}	0	-32	1	32	0	0	0	0
	GE3{1}	0	-52	2	52	0	0	0	0
	GE4{1}	0	-34	1	34	0	0	0	0
	GE5{1}	0	-58	2	58	0	0	0	0
	GE6{1}	0	-40	1	40	0	0	0	0
	GE7{1}	0	-60	2	60	0	0	0	0
	GE8{1}	0	-41	1	41	0	0	0	0
	GT1P1{1}	30	-54	34	70	0	0	0	0
C25	Guide Tag No.: <None> [ID: C25 2]								
	Gravity{1}	-11	-57	2	58	0	0	0	0
	GT1{1}	9	-53	44	69	0	0	0	0
	GE1{1}	39	-51	1	64	0	0	0	0
	GE2{1}	-11	-53	2	54	0	0	0	0
	GE3{1}	11	-50	1	51	0	0	0	0
	GE4{1}	-40	-53	2	66	0	0	0	0
	GE5{1}	39	-60	2	71	0	0	0	0
	GE6{1}	-11	-62	2	63	0	0	0	0
	GE7{1}	10	-60	2	61	0	0	0	0
	GE8{1}	-40	-62	2	74	0	0	0	0
	GT1P1{1}	10	-53	44	69	0	0	0	0
C26	Guide Tag No.: <None> [ID: C26 2]								
	Gravity{1}	0	-55	2	55	0	0	0	0
	GT1{1}	-6	-54	46	71	0	0	0	0
	GE1{1}	2	-51	1	51	0	0	0	0
	GE2{1}	13	-49	1	51	0	0	0	0
	GE3{1}	-14	-51	1	53	0	0	0	0
	GE4{1}	-1	-50	1	50	0	0	0	0
	GE5{1}	2	-60	2	60	0	0	0	0
	GE6{1}	13	-59	2	60	0	0	0	0
	GE7{1}	-14	-60	2	61	0	0	0	0
	GE8{1}	-1	-59	2	59	0	0	0	0
	GT1P1{1}	-6	-54	46	71	0	0	0	0

R E S T R A I N T R E A C T I O N S

Point name	Load combination	FORCES (lbf) X	Y	Z	Result	MOMENTS (ft-lb) X	Y	Z	Result
C28	Guide Tag No.: <None> [ID: C28 2]								
	Gravity{1}	0	-52	2	52	0	0	0	0
	GT1{1}	5	-52	-15	54	0	0	0	0
	GE1{1}	3	-49	1	49	0	0	0	0
	GE2{1}	0	-48	1	48	0	0	0	0
	GE3{1}	0	-48	1	48	0	0	0	0
	GE4{1}	-6	-47	1	48	0	0	0	0
	GE5{1}	3	-58	2	58	0	0	0	0
	GE6{1}	0	-56	2	57	0	0	0	0
	GE7{1}	0	-57	2	57	0	0	0	0
	GE8{1}	-6	-56	2	56	0	0	0	0
	GT1P1{1}	5	-52	-14	54	0	0	0	0
C29	Guide Tag No.: <None> [ID: C29 2]								
	Gravity{1}	6	-63	2	63	0	0	0	0
	GT1{1}	-17	-65	-46	82	0	0	0	0
	GE1{1}	29	-55	2	62	0	0	0	0
	GE2{1}	33	-57	2	65	0	0	0	0
	GE3{1}	-32	-57	2	65	0	0	0	0
	GE4{1}	-26	-58	2	64	0	0	0	0
	GE5{1}	29	-66	2	72	0	0	0	0
	GE6{1}	33	-67	2	74	0	0	0	0
	GE7{1}	-32	-67	2	74	0	0	0	0
	GE8{1}	-26	-68	2	73	0	0	0	0
	GT1P1{1}	-18	-65	-46	82	0	0	0	0
C31	Guide Tag No.: <None> [ID: C31 2]								
	Gravity{1}	0	-51	1	51	0	0	0	0
	GT1{1}	-23	-48	-28	60	0	0	0	0
	GE1{1}	0	-57	2	57	0	0	0	0
	GE2{1}	0	-48	1	48	0	0	0	0
	GE3{1}	0	-51	1	51	0	0	0	0
	GE4{1}	0	-43	1	43	0	0	0	0
	GE5{1}	0	-66	2	66	0	0	0	0
	GE6{1}	0	-58	2	58	0	0	0	0
	GE7{1}	0	-61	2	61	0	0	0	0
	GE8{1}	0	-52	1	52	0	0	0	0
	GT1P1{1}	-23	-48	-28	60	0	0	0	0
C32	Guide Tag No.: <None> [ID: C32 2]								
	Gravity{1}	0	-17	0	17	0	0	0	0
	GT1{1}	-2	-28	-22	35	0	0	0	0
	GE1{1}	0	-9	9	13	0	0	0	0
	GE2{1}	0	-15	-47	49	0	0	0	0
	GE3{1}	0	-14	25	28	0	0	0	0
	GE4{1}	-1	-21	-25	32	0	0	0	0
	GE5{1}	0	-11	8	14	0	0	0	0
	GE6{1}	0	-18	-49	52	0	0	0	0
	GE7{1}	0	-17	23	28	0	0	0	0
	GE8{1}	-1	-23	-26	35	0	0	0	0
	GT1P1{1}	-3	-28	-22	36	0	0	0	0

R E S T R A I N T R E A C T I O N S

Point name	Load combination	FORCES (lbf) X	Y	Z	Result	MOMENTS (ft-lb) X	Y	Z	Result
C33	Guide Tag No.: <None> [ID: C33 2]								
	Gravity{1}	-1	-32	0	32	0	0	0	0
	GT1{1}	2	-20	16	26	0	0	0	0
	GE1{1}	0	-15	76	78	0	0	0	0
	GE2{1}	-1	-27	-11	29	0	0	0	0
	GE3{1}	0	-20	10	23	0	0	0	0
	GE4{1}	-1	-32	-91	96	0	0	0	0
	GE5{1}	0	-20	75	77	0	0	0	0
	GE6{1}	-1	-31	-11	33	0	0	0	0
	GE7{1}	-1	-24	10	26	0	0	0	0
	GE8{1}	-1	-37	-92	99	0	0	0	0
	GT1P1{1}	2	-20	16	26	0	0	0	0
C34	Guide Tag No.: <None> [ID: C34 2]								
	Gravity{1}	0	-41	1	41	0	0	0	0
	GT1{1}	19	-46	34	60	0	0	0	0
	GE1{1}	0	-50	1	50	0	0	0	0
	GE2{1}	0	-40	1	40	0	0	0	0
	GE3{1}	0	-45	1	45	0	0	0	0
	GE4{1}	0	-35	1	35	0	0	0	0
	GE5{1}	0	-58	2	58	0	0	0	0
	GE6{1}	0	-48	1	48	0	0	0	0
	GE7{1}	0	-53	2	53	0	0	0	0
	GE8{1}	0	-43	1	43	0	0	0	0
	GT1P1{1}	19	-46	34	60	0	0	0	0
C35	Guide Tag No.: <None> [ID: C35 2]								
	Gravity{1}	-4	-58	2	58	0	0	0	0
	GT1{1}	23	-55	56	81	0	0	0	0
	GE1{1}	36	-50	1	62	0	0	0	0
	GE2{1}	39	-52	2	65	0	0	0	0
	GE3{1}	-36	-51	1	63	0	0	0	0
	GE4{1}	-33	-53	2	63	0	0	0	0
	GE5{1}	37	-60	2	70	0	0	0	0
	GE6{1}	39	-62	2	73	0	0	0	0
	GE7{1}	-36	-61	2	70	0	0	0	0
	GE8{1}	-32	-63	2	71	0	0	0	0
	GT1P1{1}	24	-55	57	82	0	0	0	0
C36	Guide Tag No.: <None> [ID: C36 2]								
	Gravity{1}	0	-53	2	53	0	0	0	0
	GT1{1}	-5	-52	48	71	0	0	0	0
	GE1{1}	1	-50	1	50	0	0	0	0
	GE2{1}	0	-48	1	48	0	0	0	0
	GE3{1}	0	-50	1	50	0	0	0	0
	GE4{1}	-4	-48	1	48	0	0	0	0
	GE5{1}	1	-59	2	59	0	0	0	0
	GE6{1}	0	-57	2	57	0	0	0	0
	GE7{1}	0	-58	2	58	0	0	0	0
	GE8{1}	-4	-57	2	57	0	0	0	0
	GT1P1{1}	-6	-52	48	71	0	0	0	0

R E S T R A I N T R E A C T I O N S

Point name	Load combination	FORCES (lbf) X	Y	Z	Result	MOMENTS (ft-lb) X	Y	Z	Result
C37	Guide Tag No.: <None> [ID: C37 2]								
	Gravity{1}	0	-58	2	58	0	0	0	0
	GT1{1}	-3	-57	8	58	0	0	0	0
	GE1{1}	5	-53	2	53	0	0	0	0
	GE2{1}	7	-52	2	53	0	0	0	0
	GE3{1}	-10	-53	2	54	0	0	0	0
	GE4{1}	-6	-52	2	53	0	0	0	0
	GE5{1}	5	-62	2	62	0	0	0	0
	GE6{1}	7	-62	2	62	0	0	0	0
	GE7{1}	-11	-62	2	63	0	0	0	0
	GE8{1}	-6	-62	2	62	0	0	0	0
	GT1P1{1}	-3	-57	12	59	0	0	0	0
C38	Guide Tag No.: <None> [ID: C38 2]								
	Gravity{1}	0	-39	1	39	0	0	0	0
	GT1{1}	-8	-39	-35	53	0	0	0	0
	GE1{1}	-1	-37	1	37	0	0	0	0
	GE2{1}	6	-35	1	36	0	0	0	0
	GE3{1}	-1	-37	1	37	0	0	0	0
	GE4{1}	4	-36	1	36	0	0	0	0
	GE5{1}	-1	-43	1	43	0	0	0	0
	GE6{1}	6	-42	1	42	0	0	0	0
	GE7{1}	-1	-44	1	44	0	0	0	0
	GE8{1}	5	-42	1	43	0	0	0	0
	GT1P1{1}	-10	-39	-36	54	0	0	0	0
C39	Guide Tag No.: <None> [ID: C39 2]								
	Gravity{1}	-1	-45	1	45	0	0	0	0
	GT1{1}	38	-48	-56	83	0	0	0	0
	GE1{1}	39	-39	1	55	0	0	0	0
	GE2{1}	22	-41	1	46	0	0	0	0
	GE3{1}	-25	-38	1	46	0	0	0	0
	GE4{1}	-43	-40	1	59	0	0	0	0
	GE5{1}	39	-46	1	60	0	0	0	0
	GE6{1}	21	-48	1	53	0	0	0	0
	GE7{1}	-26	-45	1	52	0	0	0	0
	GE8{1}	-44	-47	1	64	0	0	0	0
	GT1P1{1}	41	-48	-59	86	0	0	0	0
C40	Guide Tag No.: <None> [ID: C40 2]								
	Gravity{1}	0	-45	1	45	0	0	0	0
	GT1{1}	19	-40	-24	50	0	0	0	0
	GE1{1}	0	-46	1	46	0	0	0	0
	GE2{1}	0	-40	1	40	0	0	0	0
	GE3{1}	0	-50	1	50	0	0	0	0
	GE4{1}	0	-44	1	44	0	0	0	0
	GE5{1}	0	-54	2	54	0	0	0	0
	GE6{1}	0	-48	1	48	0	0	0	0
	GE7{1}	0	-59	2	59	0	0	0	0
	GE8{1}	0	-52	1	52	0	0	0	0
	GT1P1{1}	19	-40	-24	50	0	0	0	0

R E S T R A I N T R E A C T I O N S

Point name	Load combination	FORCES (lbf) X	Y	Z	Result	MOMENTS (ft-lb) X	Y	Z	Result
C42	Guide Tag No.: <None> [ID: C42 2]								
	Gravity{1}	1	-30	0	30	0	0	0	0
	GT1{1}	0	-40	-31	51	0	0	0	0
	GE1{1}	0	-20	0	20	0	0	0	0
	GE2{1}	1	-31	-42	53	0	0	0	0
	GE3{1}	0	-15	26	30	0	0	0	0
	GE4{1}	1	-26	0	26	0	0	0	0
	GE5{1}	1	-24	0	24	0	0	0	0
	GE6{1}	1	-35	-44	56	0	0	0	0
	GE7{1}	0	-19	25	31	0	0	0	0
	GE8{1}	1	-30	0	30	0	0	0	0
	GT1P1{1}	-1	-41	-32	52	0	0	0	0
C43	Guide Tag No.: <None> [ID: C43 2]								
	Gravity{1}	1	-26	0	26	0	0	0	0
	GT1{1}	-1	-19	15	24	0	0	0	0
	GE1{1}	1	-28	43	51	0	0	0	0
	GE2{1}	1	-25	-121	124	0	0	0	0
	GE3{1}	1	-25	124	127	0	0	0	0
	GE4{1}	1	-21	-53	57	0	0	0	0
	GE5{1}	1	-33	42	53	0	0	0	0
	GE6{1}	1	-29	-121	124	0	0	0	0
	GE7{1}	1	-29	124	128	0	0	0	0
	GE8{1}	1	-25	-54	59	0	0	0	0
	GT1P1{1}	-1	-18	14	23	0	0	0	0
C45	Guide Tag No.: <None> [ID: C45 2]								
	Gravity{1}	0	-45	0	45	0	0	0	0
	GT1{1}	-14	-49	38	64	0	0	0	0
	GE1{1}	0	-40	0	40	0	0	0	0
	GE2{1}	0	-41	0	41	0	0	0	0
	GE3{1}	0	-44	0	44	0	0	0	0
	GE4{1}	0	-45	0	45	0	0	0	0
	GE5{1}	0	-48	0	48	0	0	0	0
	GE6{1}	0	-49	0	49	0	0	0	0
	GE7{1}	0	-52	0	52	0	0	0	0
	GE8{1}	0	-52	0	52	0	0	0	0
	GT1P1{1}	-14	-50	38	64	0	0	0	0
C46	Guide Tag No.: <None> [ID: C46 2]								
	Gravity{1}	-1	-56	0	56	0	0	0	0
	GT1{1}	-41	-55	78	104	0	0	0	0
	GE1{1}	29	-53	0	60	0	0	0	0
	GE2{1}	30	-51	0	60	0	0	0	0
	GE3{1}	-34	-52	0	62	0	0	0	0
	GE4{1}	-31	-51	0	59	0	0	0	0
	GE5{1}	29	-62	0	68	0	0	0	0
	GE6{1}	30	-61	0	68	0	0	0	0
	GE7{1}	-34	-61	0	70	0	0	0	0
	GE8{1}	-31	-60	0	67	0	0	0	0
	GT1P1{1}	-42	-55	79	105	0	0	0	0

R E S T R A I N T R E A C T I O N S

Point name	Load combination	FORCES (lbf) X	Y	Z	Result	MOMENTS (ft-lb) X	Y	Z	Result
C47	Guide Tag No.: <None> [ID: C47 2]								
	Gravity{1}	0	-54	0	54	0	0	0	0
	GT1{1}	10	-54	48	73	0	0	0	0
	GE1{1}	0	-49	0	49	0	0	0	0
	GE2{1}	5	-50	0	50	0	0	0	0
	GE3{1}	-2	-50	0	50	0	0	0	0
	GE4{1}	0	-50	0	50	0	0	0	0
	GE5{1}	0	-58	0	58	0	0	0	0
	GE6{1}	5	-59	0	59	0	0	0	0
	GE7{1}	-2	-59	0	59	0	0	0	0
	GE8{1}	0	-59	0	59	0	0	0	0
	GT1P1{1}	11	-54	49	74	0	0	0	0
C48	Guide Tag No.: <None> [ID: C48 2]								
	Gravity{1}	0	-55	0	55	0	0	0	0
	GT1{1}	1	-54	45	70	0	0	0	0
	GE1{1}	10	-50	0	51	0	0	0	0
	GE2{1}	12	-50	0	51	0	0	0	0
	GE3{1}	-12	-50	0	52	0	0	0	0
	GE4{1}	-9	-50	0	51	0	0	0	0
	GE5{1}	10	-59	0	60	0	0	0	0
	GE6{1}	12	-59	0	60	0	0	0	0
	GE7{1}	-13	-59	0	61	0	0	0	0
	GE8{1}	-9	-59	0	60	0	0	0	0
	GT1P1{1}	1	-54	44	70	0	0	0	0
C49	Guide Tag No.: <None> [ID: C49 2]								
	Gravity{1}	0	-55	0	55	0	0	0	0
	GT1{1}	0	-54	45	70	0	0	0	0
	GE1{1}	11	-50	0	51	0	0	0	0
	GE2{1}	9	-50	0	51	0	0	0	0
	GE3{1}	-9	-50	0	51	0	0	0	0
	GE4{1}	-11	-50	0	51	0	0	0	0
	GE5{1}	11	-59	0	60	0	0	0	0
	GE6{1}	9	-59	0	60	0	0	0	0
	GE7{1}	-9	-59	0	60	0	0	0	0
	GE8{1}	-11	-59	0	60	0	0	0	0
	GT1P1{1}	0	-54	44	70	0	0	0	0
C50	Guide Tag No.: <None> [ID: C50 2]								
	Gravity{1}	0	-55	0	55	0	0	0	0
	GT1{1}	-1	-54	49	73	0	0	0	0
	GE1{1}	9	-50	0	51	0	0	0	0
	GE2{1}	12	-50	0	51	0	0	0	0
	GE3{1}	-13	-50	0	51	0	0	0	0
	GE4{1}	-10	-50	0	51	0	0	0	0
	GE5{1}	9	-59	0	60	0	0	0	0
	GE6{1}	12	-59	0	60	0	0	0	0
	GE7{1}	-13	-59	0	60	0	0	0	0
	GE8{1}	-10	-59	0	60	0	0	0	0
	GT1P1{1}	-1	-54	45	70	0	0	0	0

R E S T R A I N T R E A C T I O N S

Point name	Load combination	FORCES (lbf) X	Y	Z	Result	MOMENTS (ft-lb) X	Y	Z	Result
C51	Guide Tag No.: <None> [ID: C51 2]								
	Gravity{1}	0	-55	0	55	0	0	0	0
	GT1{1}	1	-55	-41	69	0	0	0	0
	GE1{1}	12	-51	0	52	0	0	0	0
	GE2{1}	7	-50	0	51	0	0	0	0
	GE3{1}	-7	-51	0	51	0	0	0	0
	GE4{1}	-12	-50	0	52	0	0	0	0
	GE5{1}	12	-60	1	61	0	0	0	0
	GE6{1}	7	-60	1	60	0	0	0	0
	GE7{1}	-7	-60	1	61	0	0	0	0
	GE8{1}	-12	-60	1	61	0	0	0	0
	GT1P1{1}	1	-55	-43	70	0	0	0	0
C52	Guide Tag No.: <None> [ID: C52 2]								
	Gravity{1}	0	-52	0	52	0	0	0	0
	GT1{1}	12	-53	-43	69	0	0	0	0
	GE1{1}	3	-48	0	48	0	0	0	0
	GE2{1}	-1	-48	0	48	0	0	0	0
	GE3{1}	0	-48	0	48	0	0	0	0
	GE4{1}	-4	-48	0	48	0	0	0	0
	GE5{1}	3	-56	0	56	0	0	0	0
	GE6{1}	-1	-56	0	56	0	0	0	0
	GE7{1}	0	-56	0	56	0	0	0	0
	GE8{1}	-4	-56	0	57	0	0	0	0
	GT1P1{1}	12	-53	-42	69	0	0	0	0
C53	Guide Tag No.: <None> [ID: C53 2]								
	Gravity{1}	-3	-63	1	64	0	0	0	0
	GT1{1}	-48	-64	-88	120	0	0	0	0
	GE1{1}	31	-58	0	66	0	0	0	0
	GE2{1}	38	-58	0	69	0	0	0	0
	GE3{1}	-38	-58	0	69	0	0	0	0
	GE4{1}	-29	-58	0	65	0	0	0	0
	GE5{1}	31	-69	1	75	0	0	0	0
	GE6{1}	38	-68	1	78	0	0	0	0
	GE7{1}	-37	-69	1	78	0	0	0	0
	GE8{1}	-29	-68	1	74	0	0	0	0
	GT1P1{1}	-48	-64	-88	119	0	0	0	0
C55	Guide Tag No.: <None> [ID: C55 2]								
	Gravity{1}	0	-49	0	49	0	0	0	0
	GT1{1}	-21	-48	-31	61	0	0	0	0
	GE1{1}	0	-47	0	47	0	0	0	0
	GE2{1}	0	-46	0	46	0	0	0	0
	GE3{1}	0	-46	0	46	0	0	0	0
	GE4{1}	0	-45	0	45	0	0	0	0
	GE5{1}	0	-56	0	56	0	0	0	0
	GE6{1}	0	-54	0	54	0	0	0	0
	GE7{1}	0	-54	0	54	0	0	0	0
	GE8{1}	0	-53	0	53	0	0	0	0
	GT1P1{1}	-21	-48	-31	61	0	0	0	0

R E S T R A I N T R E A C T I O N S

Point name	Load combination	FORCES (lbf) X	Y	Z	Result	MOMENTS (ft-lb) X	Y	Z	Result
C56	Guide Tag No.: <None> [ID: C56 2]								
	Gravity{1}	0	-35	0	35	0	0	0	0
	GT1{1}	20	-39	-161	167	0	0	0	0
	GE1{1}	0	-29	68	74	0	0	0	0
	GE2{1}	0	-31	-8	32	0	0	0	0
	GE3{1}	0	-31	1	31	0	0	0	0
	GE4{1}	0	-33	-68	76	0	0	0	0
	GE5{1}	0	-35	68	76	0	0	0	0
	GE6{1}	0	-37	-8	37	0	0	0	0
	GE7{1}	0	-37	0	37	0	0	0	0
	GE8{1}	0	-38	-68	78	0	0	0	0
	GT1P1{1}	19	-39	-154	160	0	0	0	0
C57	Guide Tag No.: <None> [ID: C57 2]								
	Gravity{1}	0	-39	0	39	0	0	0	0
	GT1{1}	6	-37	29	47	0	0	0	0
	GE1{1}	0	-34	94	100	0	0	0	0
	GE2{1}	0	-37	-38	52	0	0	0	0
	GE3{1}	0	-35	36	51	0	0	0	0
	GE4{1}	0	-38	-102	109	0	0	0	0
	GE5{1}	0	-41	93	102	0	0	0	0
	GE6{1}	0	-43	-38	57	0	0	0	0
	GE7{1}	0	-42	36	55	0	0	0	0
	GE8{1}	0	-44	-103	112	0	0	0	0
	GT1P1{1}	6	-37	29	47	0	0	0	0
C58	Guide Tag No.: <None> [ID: C58 2]								
	Gravity{1}	0	-42	0	42	0	0	0	0
	GT1{1}	12	-44	33	56	0	0	0	0
	GE1{1}	0	-40	0	40	0	0	0	0
	GE2{1}	0	-39	0	39	0	0	0	0
	GE3{1}	0	-39	0	39	0	0	0	0
	GE4{1}	0	-38	0	38	0	0	0	0
	GE5{1}	0	-47	0	47	0	0	0	0
	GE6{1}	0	-46	0	46	0	0	0	0
	GE7{1}	0	-46	0	46	0	0	0	0
	GE8{1}	0	-45	0	45	0	0	0	0
	GT1P1{1}	12	-44	33	56	0	0	0	0
C59	Guide Tag No.: <None> [ID: C59 2]								
	Gravity{1}	3	-58	0	58	0	0	0	0
	GT1{1}	24	-57	66	90	0	0	0	0
	GE1{1}	35	-53	0	63	0	0	0	0
	GE2{1}	42	-53	0	67	0	0	0	0
	GE3{1}	-40	-53	0	66	0	0	0	0
	GE4{1}	-34	-53	0	63	0	0	0	0
	GE5{1}	35	-62	0	71	0	0	0	0
	GE6{1}	42	-62	0	75	0	0	0	0
	GE7{1}	-39	-62	0	74	0	0	0	0
	GE8{1}	-34	-63	0	71	0	0	0	0
	GT1P1{1}	26	-57	67	91	0	0	0	0

R E S T R A I N T R E A C T I O N S

Point name	Load combination	FORCES (lbf) X	Y	Z	Result	MOMENTS (ft-lb) X	Y	Z	Result
C60	Guide Tag No.: <None> [ID: C60 2]								
	Gravity{1}	0	-54	0	54	0	0	0	0
	GT1{1}	-5	-53	43	69	0	0	0	0
	GE1{1}	2	-50	0	50	0	0	0	0
	GE2{1}	-3	-49	0	49	0	0	0	0
	GE3{1}	2	-50	0	50	0	0	0	0
	GE4{1}	-3	-49	0	49	0	0	0	0
	GE5{1}	2	-59	0	59	0	0	0	0
	GE6{1}	-3	-58	0	58	0	0	0	0
	GE7{1}	2	-59	0	59	0	0	0	0
	GE8{1}	-3	-58	0	58	0	0	0	0
	GT1P1{1}	-5	-53	43	69	0	0	0	0
C61	Guide Tag No.: <None> [ID: C61 1]								
	Gravity{1}	0	-55	0	55	0	0	0	0
	GT1{1}	-1	-55	45	71	0	0	0	0
	GE1{1}	12	-50	0	51	0	0	0	0
	GE2{1}	7	-51	0	51	0	0	0	0
	GE3{1}	-7	-50	0	51	0	0	0	0
	GE4{1}	-11	-50	0	52	0	0	0	0
	GE5{1}	12	-59	0	60	0	0	0	0
	GE6{1}	7	-60	0	60	0	0	0	0
	GE7{1}	-7	-59	0	60	0	0	0	0
	GE8{1}	-11	-60	0	61	0	0	0	0
	GT1P1{1}	-2	-55	44	71	0	0	0	0
C63	Guide Tag No.: <None> [ID: C63 1]								
	Gravity{1}	0	-54	0	54	0	0	0	0
	GT1{1}	2	-54	47	71	0	0	0	0
	GE1{1}	12	-50	0	52	0	0	0	0
	GE2{1}	14	-49	0	51	0	0	0	0
	GE3{1}	-13	-50	0	52	0	0	0	0
	GE4{1}	-11	-49	0	51	0	0	0	0
	GE5{1}	12	-59	0	60	0	0	0	0
	GE6{1}	14	-58	0	60	0	0	0	0
	GE7{1}	-13	-59	0	61	0	0	0	0
	GE8{1}	-11	-58	0	60	0	0	0	0
	GT1P1{1}	2	-54	45	70	0	0	0	0
C64	Guide Tag No.: <None> [ID: C64 2]								
	Gravity{1}	0	-56	0	56	0	0	0	0
	GT1{1}	-2	-56	-44	71	0	0	0	0
	GE1{1}	7	-51	0	51	0	0	0	0
	GE2{1}	9	-51	0	52	0	0	0	0
	GE3{1}	-10	-51	0	51	0	0	0	0
	GE4{1}	-7	-51	0	52	0	0	0	0
	GE5{1}	7	-60	0	60	0	0	0	0
	GE6{1}	9	-60	0	61	0	0	0	0
	GE7{1}	-10	-60	0	61	0	0	0	0
	GE8{1}	-7	-60	0	61	0	0	0	0
	GT1P1{1}	-2	-56	-44	72	0	0	0	0

R E S T R A I N T R E A C T I O N S

Point name	Load combination	FORCES (lbf) X	Y	Z	Result	MOMENTS (ft-lb) X	Y	Z	Result
C65	Guide Tag No.: <None> [ID: C65 1]								
	Gravity{1}	1	-51	0	51	0	0	0	0
	GT1{1}	-9	-51	-39	65	0	0	0	0
	GE1{1}	0	-47	0	47	0	0	0	0
	GE2{1}	-11	-47	0	48	0	0	0	0
	GE3{1}	12	-48	0	49	0	0	0	0
	GE4{1}	0	-47	0	47	0	0	0	0
	GE5{1}	0	-56	0	56	0	0	0	0
	GE6{1}	-11	-55	0	56	0	0	0	0
	GE7{1}	12	-56	0	57	0	0	0	0
	GE8{1}	0	-55	0	55	0	0	0	0
	GT1P1{1}	-9	-51	-39	65	0	0	0	0
C72	Guide Tag No.: <None> [ID: C72 1]								
	Gravity{1}	2	-65	0	65	0	0	0	0
	GT1{1}	32	-66	-78	107	0	0	0	0
	GE1{1}	33	-60	0	69	0	0	0	0
	GE2{1}	69	-60	0	92	0	0	0	0
	GE3{1}	-68	-59	0	90	0	0	0	0
	GE4{1}	-32	-59	0	68	0	0	0	0
	GE5{1}	33	-71	1	78	0	0	0	0
	GE6{1}	69	-71	1	99	0	0	0	0
	GE7{1}	-68	-70	1	98	0	0	0	0
	GE8{1}	-32	-70	1	77	0	0	0	0
	GT1P1{1}	32	-66	-78	107	0	0	0	0
C73	Guide Tag No.: <None> [ID: C73 1]								
	Gravity{1}	0	-49	0	49	0	0	0	0
	GT1{1}	26	-48	-28	61	0	0	0	0
	GE1{1}	0	-45	0	45	0	0	0	0
	GE2{1}	0	-43	0	43	0	0	0	0
	GE3{1}	-3	-48	0	48	0	0	0	0
	GE4{1}	-5	-46	0	46	0	0	0	0
	GE5{1}	0	-53	0	53	0	0	0	0
	GE6{1}	0	-51	0	51	0	0	0	0
	GE7{1}	-4	-56	0	56	0	0	0	0
	GE8{1}	-5	-54	0	55	0	0	0	0
	GT1P1{1}	26	-48	-28	61	0	0	0	0
C74	Guide Tag No.: <None> [ID: C74 1]								
	Gravity{1}	0	-38	0	38	0	0	0	0
	GT1{1}	42	-40	-50	76	0	0	0	0
	GE1{1}	0	-35	0	35	0	0	0	0
	GE2{1}	0	-38	-51	64	0	0	0	0
	GE3{1}	0	-32	45	55	0	0	0	0
	GE4{1}	0	-34	0	34	0	0	0	0
	GE5{1}	0	-42	0	42	0	0	0	0
	GE6{1}	0	-44	-52	68	0	0	0	0
	GE7{1}	0	-38	44	59	0	0	0	0
	GE8{1}	0	-40	0	40	0	0	0	0
	GT1P1{1}	43	-40	-50	77	0	0	0	0

R E S T R A I N T R E A C T I O N S

Point name	Load combination	FORCES (lbf) X	Y	Z	Result	MOMENTS (ft-lb) X	Y	Z	Result
C75	Guide Tag No.: <None> [ID: C75 1]								
	Gravity{1}	0	-60	-14	61	0	0	0	0
	GT1{1}	85	-59	-46	113	0	0	0	0
	GE1{1}	0	-55	34	65	0	0	0	0
	GE2{1}	0	-54	-57	79	0	0	0	0
	GE3{1}	0	-56	60	82	0	0	0	0
	GE4{1}	0	-55	-34	65	0	0	0	0
	GE5{1}	1	-65	35	74	0	0	0	0
	GE6{1}	0	-64	-57	86	0	0	0	0
	GE7{1}	1	-66	60	89	0	0	0	0
	GE8{1}	1	-65	-34	73	0	0	0	0
	GT1P1{1}	85	-59	-46	113	0	0	0	0
C76	Guide Tag No.: <None> [ID: C76 1]								
	Gravity{1}	0	-53	6	54	0	0	0	0
	GT1{1}	64	-53	26	87	0	0	0	0
	GE1{1}	0	-48	-1	49	0	0	0	0
	GE2{1}	0	-49	10	50	0	0	0	0
	GE3{1}	0	-49	-11	50	0	0	0	0
	GE4{1}	0	-49	1	49	0	0	0	0
	GE5{1}	0	-57	-1	57	0	0	0	0
	GE6{1}	0	-58	10	59	0	0	0	0
	GE7{1}	0	-57	-11	58	0	0	0	0
	GE8{1}	0	-58	2	58	0	0	0	0
	GT1P1{1}	64	-53	26	87	0	0	0	0
C77	Guide Tag No.: <None> [ID: C77 1]								
	Gravity{1}	0	-55	0	55	0	0	0	0
	GT1{1}	-30	-55	-5	63	0	0	0	0
	GE1{1}	0	-51	7	52	0	0	0	0
	GE2{1}	0	-51	-11	52	0	0	0	0
	GE3{1}	0	-51	11	52	0	0	0	0
	GE4{1}	0	-50	-7	51	0	0	0	0
	GE5{1}	0	-60	7	61	0	0	0	0
	GE6{1}	0	-60	-11	61	0	0	0	0
	GE7{1}	0	-60	11	61	0	0	0	0
	GE8{1}	0	-60	-7	60	0	0	0	0
	GT1P1{1}	-30	-55	-5	63	0	0	0	0
C78	Guide Tag No.: <None> [ID: C78 1]								
	Gravity{1}	0	-53	0	53	0	0	0	0
	GT1{1}	-41	-53	-7	68	0	0	0	0
	GE1{1}	0	-49	17	52	0	0	0	0
	GE2{1}	0	-49	0	49	0	0	0	0
	GE3{1}	0	-48	0	48	0	0	0	0
	GE4{1}	0	-49	-17	51	0	0	0	0
	GE5{1}	0	-58	17	60	0	0	0	0
	GE6{1}	0	-58	0	58	0	0	0	0
	GE7{1}	0	-57	0	57	0	0	0	0
	GE8{1}	0	-57	-17	60	0	0	0	0
	GT1P1{1}	-41	-53	-8	68	0	0	0	0

R E S T R A I N T R E A C T I O N S

Point name	Load combination	FORCES (lbf) X	Y	Z	Result	MOMENTS (ft-lb) X	Y	Z	Result
C79	Guide Tag No.: <None> [ID: C79 1]								
	Gravity{1}	0	-56	2	56	0	0	0	0
	GT1{1}	-69	-57	30	94	0	0	0	0
	GE1{1}	0	-51	-20	55	0	0	0	0
	GE2{1}	0	-51	-45	68	0	0	0	0
	GE3{1}	0	-52	46	69	0	0	0	0
	GE4{1}	0	-52	21	56	0	0	0	0
	GE5{1}	0	-60	-20	63	0	0	0	0
	GE6{1}	0	-60	-45	75	0	0	0	0
	GE7{1}	0	-61	46	76	0	0	0	0
	GE8{1}	0	-61	21	65	0	0	0	0
	GT1P1{1}	-69	-57	30	94	0	0	0	0
C80	Guide Tag No.: <None> [ID: C80 1]								
	Gravity{1}	0	-45	0	45	0	0	0	0
	GT1{1}	-30	-44	17	56	0	0	0	0
	GE1{1}	0	-45	0	45	0	0	0	0
	GE2{1}	0	-44	0	44	0	0	0	0
	GE3{1}	0	-40	0	40	0	0	0	0
	GE4{1}	0	-39	0	39	0	0	0	0
	GE5{1}	0	-52	0	52	0	0	0	0
	GE6{1}	0	-52	0	52	0	0	0	0
	GE7{1}	0	-47	0	47	0	0	0	0
	GE8{1}	0	-47	0	47	0	0	0	0
	GT1P1{1}	-30	-44	17	56	0	0	0	0
C82	Guide Tag No.: <None> [ID: C82 1]								
	Gravity{1}	0	-32	0	32	0	0	0	0
	GT1{1}	-26	-34	8	44	0	0	0	0
	GE1{1}	0	-25	0	25	0	0	0	0
	GE2{1}	0	-26	0	26	0	0	0	0
	GE3{1}	0	-32	0	32	0	0	0	0
	GE4{1}	0	-32	0	32	0	0	0	0
	GE5{1}	0	-31	0	31	0	0	0	0
	GE6{1}	0	-31	0	31	0	0	0	0
	GE7{1}	0	-37	0	37	0	0	0	0
	GE8{1}	0	-37	0	37	0	0	0	0
	GT1P1{1}	-26	-34	8	44	0	0	0	0
C81	Guide Tag No.: <None> [ID: C81 1]								
	Gravity{1}	-10	-36	0	37	0	0	0	0
	GT1{1}	-85	-36	39	100	0	0	0	0
	GE1{1}	140	-34	0	144	0	0	0	0
	GE2{1}	72	-34	0	80	0	0	0	0
	GE3{1}	-77	-32	0	84	0	0	0	0
	GE4{1}	-142	-32	0	146	0	0	0	0
	GE5{1}	139	-40	0	145	0	0	0	0
	GE6{1}	72	-40	0	82	0	0	0	0
	GE7{1}	-77	-38	0	86	0	0	0	0
	GE8{1}	-142	-38	0	147	0	0	0	0
	GT1P1{1}	-87	-36	40	102	0	0	0	0

R E S T R A I N T R E A C T I O N S

Point name	Load combination	FORCES (lbf) X	Y	Z	Result	MOMENTS (ft-lb) X	Y	Z	Result
C83	Guide Tag No.: <None> [ID: C83 1]								
	Gravity{1}	0	-36	0	36	0	0	0	0
	GT1{1}	-19	-33	-18	42	0	0	0	0
	GE1{1}	0	-35	0	35	0	0	0	0
	GE2{1}	0	-33	0	33	0	0	0	0
	GE3{1}	0	-33	0	33	0	0	0	0
	GE4{1}	0	-31	0	31	0	0	0	0
	GE5{1}	0	-41	0	41	0	0	0	0
	GE6{1}	0	-38	0	38	0	0	0	0
	GE7{1}	0	-39	0	39	0	0	0	0
	GE8{1}	0	-37	0	37	0	0	0	0
	GT1P1{1}	-19	-33	-18	42	0	0	0	0
C84	Guide Tag No.: <None> [ID: C84 1]								
	Gravity{1}	-1	-33	0	33	0	0	0	0
	GT1{1}	-18	-37	-24	47	0	0	0	0
	GE1{1}	0	-28	0	28	0	0	0	0
	GE2{1}	-1	-31	0	31	0	0	0	0
	GE3{1}	0	-29	0	29	0	0	0	0
	GE4{1}	-1	-32	0	32	0	0	0	0
	GE5{1}	-1	-33	0	33	0	0	0	0
	GE6{1}	-1	-36	0	36	0	0	0	0
	GE7{1}	-1	-35	0	35	0	0	0	0
	GE8{1}	-1	-38	0	38	0	0	0	0
	GT1P1{1}	-18	-37	-24	47	0	0	0	0
C70	Anchor Tag No.: <None>					Connected to: Ground			
	Gravity{1}	5	-12	-3	13	-1	-13	6	14
	GT1{1}	80	-11	-44	92	-1	-172	4	172
	GE1{1}	-47	-11	61	78	0	212	5	212
	GE2{1}	-7	-10	-12	17	-1	-62	4	62
	GE3{1}	10	-11	10	18	-1	53	6	53
	GE4{1}	50	-11	-62	80	-2	-219	5	219
	GE5{1}	-47	-13	60	77	0	211	6	211
	GE6{1}	-7	-12	-12	18	-2	-63	5	63
	GE7{1}	11	-13	9	19	-1	52	7	52
	GE8{1}	50	-13	-63	81	-2	-219	6	220
	GT1P1{1}	81	-11	-45	94	-1	-176	4	176
D01	Anchor Tag No.: <None>					Connected to: Ground			
	Gravity{1}	-1	-40	2	40	-82	7	0	83
	GT1{1}	6	-41	138	144	-85	-22	0	88
	GE1{1}	1	-37	12	38	-75	5	1	76
	GE2{1}	-9	-36	-37	53	-74	47	1	88
	GE3{1}	10	-37	40	56	-77	-52	0	93
	GE4{1}	0	-37	-9	38	-76	-10	0	76
	GE5{1}	1	-43	12	45	-89	4	1	89
	GE6{1}	-9	-43	-37	57	-88	46	1	100
	GE7{1}	11	-44	40	60	-90	-53	0	105
	GE8{1}	0	-43	-9	44	-89	-11	0	90
	GT1P1{1}	7	-41	139	145	-86	-22	0	88

R E S T R A I N T R E A C T I O N S

Point name	Load combination	FORCES (lbf) X	Y	Z	Result	MOMENTS (ft-lb) X	Y	Z	Result
D04 M	Guide Tag No.: <None> [ID: D04 M1]								
	Gravity{1}	0	0	0	0	0	0	0	0
	GT1{1}	0	0	0	0	0	0	0	0
	GE1{1}	0	0	0	0	0	0	0	0
	GE2{1}	0	0	0	0	0	0	0	0
	GE3{1}	0	0	0	0	0	0	0	0
	GE4{1}	0	0	0	0	0	0	0	0
	GE5{1}	0	0	0	0	0	0	0	0
	GE6{1}	0	0	0	0	0	0	0	0
	GE7{1}	0	0	0	0	0	0	0	0
	GE8{1}	0	0	0	0	0	0	0	0
	GT1P1{1}	0	0	0	0	0	0	0	0
D13	Guide Tag No.: <None> [ID: D13 1]								
	Gravity{1}	0	-62	-1	62	0	0	0	0
	GT1{1}	-24	-61	-70	96	0	0	0	0
	GE1{1}	31	-57	-1	65	0	0	0	0
	GE2{1}	57	-57	-1	81	0	0	0	0
	GE3{1}	-60	-56	-1	82	0	0	0	0
	GE4{1}	-34	-57	-1	66	0	0	0	0
	GE5{1}	31	-67	-1	74	0	0	0	0
	GE6{1}	56	-68	-1	88	0	0	0	0
	GE7{1}	-60	-66	-1	90	0	0	0	0
	GE8{1}	-35	-67	-1	75	0	0	0	0
	GT1P1{1}	-25	-61	-71	97	0	0	0	0
D14	Guide Tag No.: <None> [ID: D14 2]								
	Gravity{1}	0	-35	0	35	0	0	0	0
	GT1{1}	-14	-36	-26	47	0	0	0	0
	GE1{1}	0	-31	0	31	0	0	0	0
	GE2{1}	0	-30	0	30	0	0	0	0
	GE3{1}	0	-34	0	34	0	0	0	0
	GE4{1}	0	-33	0	33	0	0	0	0
	GE5{1}	0	-37	0	37	0	0	0	0
	GE6{1}	0	-36	0	36	0	0	0	0
	GE7{1}	0	-40	0	40	0	0	0	0
	GE8{1}	0	-39	0	39	0	0	0	0
	GT1P1{1}	-14	-36	-26	47	0	0	0	0
D15	Guide Tag No.: <None> [ID: D15 2]								
	Gravity{1}	0	-35	0	35	0	0	0	0
	GT1{1}	-8	-33	-25	43	0	0	0	0
	GE1{1}	0	-34	0	34	0	0	0	0
	GE2{1}	0	-34	0	34	0	0	0	0
	GE3{1}	0	-30	0	30	0	0	0	0
	GE4{1}	0	-31	0	31	0	0	0	0
	GE5{1}	0	-40	0	40	0	0	0	0
	GE6{1}	0	-40	0	40	0	0	0	0
	GE7{1}	0	-36	0	36	0	0	0	0
	GE8{1}	0	-37	0	37	0	0	0	0
	GT1P1{1}	-8	-33	-25	43	0	0	0	0

R E S T R A I N T R E A C T I O N S

Point name	Load combination	FORCES (lbf) X	Y	Z	Result	MOMENTS (ft-lb) X	Y	Z	Result
D18	Guide Tag No.: <None> [ID: D18 1]								
	Gravity{1}	0	-34	0	34	0	0	0	0
	GT1{1}	4	-34	-19	40	0	0	0	0
	GE1{1}	0	-30	55	63	0	0	0	0
	GE2{1}	0	-31	-12	33	0	0	0	0
	GE3{1}	0	-32	13	35	0	0	0	0
	GE4{1}	0	-33	-54	63	0	0	0	0
	GE5{1}	0	-36	55	66	0	0	0	0
	GE6{1}	0	-37	-12	39	0	0	0	0
	GE7{1}	0	-38	13	40	0	0	0	0
	GE8{1}	0	-39	-54	66	0	0	0	0
	GT1P1{1}	5	-34	-20	40	0	0	0	0
D16	Guide Tag No.: <None> [ID: D16 1]								
	Gravity{1}	0	-31	0	32	0	0	0	0
	GT1{1}	13	-32	23	42	0	0	0	0
	GE1{1}	0	-32	0	32	0	0	0	0
	GE2{1}	0	-29	0	29	0	0	0	0
	GE3{1}	0	-29	0	29	0	0	0	0
	GE4{1}	0	-26	0	26	0	0	0	0
	GE5{1}	0	-37	0	37	0	0	0	0
	GE6{1}	0	-34	0	34	0	0	0	0
	GE7{1}	0	-34	0	34	0	0	0	0
	GE8{1}	0	-31	0	31	0	0	0	0
	GT1P1{1}	13	-32	23	42	0	0	0	0
D19	Guide Tag No.: <None> [ID: D19 2]								
	Gravity{1}	0	-44	-1	44	0	0	0	0
	GT1{1}	25	-44	24	56	0	0	0	0
	GE1{1}	0	-39	-1	39	0	0	0	0
	GE2{1}	0	-41	-1	41	0	0	0	0
	GE3{1}	0	-41	-1	41	0	0	0	0
	GE4{1}	0	-43	-1	43	0	0	0	0
	GE5{1}	0	-46	-1	46	0	0	0	0
	GE6{1}	0	-49	-1	49	0	0	0	0
	GE7{1}	0	-48	-1	48	0	0	0	0
	GE8{1}	0	-51	-1	51	0	0	0	0
	GT1P1{1}	25	-44	24	56	0	0	0	0
D25	Guide Tag No.: <None> [ID: D25 1]								
	Gravity{1}	0	-58	-1	58	0	0	0	0
	GT1{1}	-6	-58	0	59	0	0	0	0
	GE1{1}	44	-54	-1	70	0	0	0	0
	GE2{1}	11	-53	-1	54	0	0	0	0
	GE3{1}	-10	-54	-1	55	0	0	0	0
	GE4{1}	-43	-53	-1	68	0	0	0	0
	GE5{1}	44	-64	-1	77	0	0	0	0
	GE6{1}	11	-63	-1	64	0	0	0	0
	GE7{1}	-10	-63	-1	64	0	0	0	0
	GE8{1}	-43	-62	-1	76	0	0	0	0
	GT1P1{1}	-7	-58	0	59	0	0	0	0

R E S T R A I N T R E A C T I O N S

Point name	Load combination	FORCES (lbf) X	Y	Z	Result	MOMENTS (ft-lb) X	Y	Z	Result
D20	Guide Tag No.: <None> [ID: D20 1]								
	Gravity{1}	0	-43	0	43	0	0	0	0
	GT1{1}	-32	-44	-17	57	0	0	0	0
	GE1{1}	0	-39	0	39	0	0	0	0
	GE2{1}	0	-42	0	42	0	0	0	0
	GE3{1}	0	-38	0	38	0	0	0	0
	GE4{1}	0	-41	0	41	0	0	0	0
	GE5{1}	0	-46	-1	46	0	0	0	0
	GE6{1}	0	-49	-1	49	0	0	0	0
	GE7{1}	0	-46	-1	46	0	0	0	0
	GE8{1}	0	-48	-1	48	0	0	0	0
	GT1P1{1}	-32	-44	-17	57	0	0	0	0
D26	Guide Tag No.: <None> [ID: D26 1]								
	Gravity{1}	0	-35	0	35	0	0	0	0
	GT1{1}	-22	-34	-16	43	0	0	0	0
	GE1{1}	0	-33	0	33	0	0	0	0
	GE2{1}	0	-30	0	30	0	0	0	0
	GE3{1}	0	-34	0	34	0	0	0	0
	GE4{1}	0	-31	0	31	0	0	0	0
	GE5{1}	0	-39	0	39	0	0	0	0
	GE6{1}	0	-36	0	36	0	0	0	0
	GE7{1}	0	-40	0	40	0	0	0	0
	GE8{1}	0	-37	0	37	0	0	0	0
	GT1P1{1}	-22	-34	-16	43	0	0	0	0
D28	Guide Tag No.: <None> [ID: D28 1]								
	Gravity{1}	0	-45	1	45	0	0	0	0
	GT1{1}	-34	-46	-14	59	0	0	0	0
	GE1{1}	0	-41	31	52	0	0	0	0
	GE2{1}	0	-42	-51	67	0	0	0	0
	GE3{1}	0	-41	55	68	0	0	0	0
	GE4{1}	0	-42	-27	50	0	0	0	0
	GE5{1}	0	-49	31	58	0	0	0	0
	GE6{1}	0	-50	-51	71	0	0	0	0
	GE7{1}	0	-48	55	73	0	0	0	0
	GE8{1}	0	-49	-27	56	0	0	0	0
	GT1P1{1}	-35	-46	-14	60	0	0	0	0
D27	Guide Tag No.: <None> [ID: D27 1]								
	Gravity{1}	0	-35	0	35	0	0	0	0
	GT1{1}	-28	-35	-1	45	0	0	0	0
	GE1{1}	0	-33	0	33	0	0	0	0
	GE2{1}	0	-32	0	32	0	0	0	0
	GE3{1}	0	-33	0	33	0	0	0	0
	GE4{1}	0	-32	0	32	0	0	0	0
	GE5{1}	0	-38	0	38	0	0	0	0
	GE6{1}	0	-38	0	38	0	0	0	0
	GE7{1}	0	-39	0	39	0	0	0	0
	GE8{1}	0	-38	0	38	0	0	0	0
	GT1P1{1}	-28	-35	-1	45	0	0	0	0

R E S T R A I N T R E A C T I O N S

Point name	Load combination	FORCES (lbf) X	Y	Z	Result	MOMENTS (ft-lb) X	Y	Z	Result
D22	Anchor Tag No.: <None>					Connected to: Ground			
	Gravity{1}	-1	-15	0	15	1	6	0	6
	GT1{1}	120	-15	4	121	0	8	0	8
	GE1{1}	18	-14	1	23	1	-8	0	8
	GE2{1}	36	-14	8	39	0	40	0	40
	GE3{1}	-37	-14	-10	41	1	-46	0	46
	GE4{1}	-19	-14	-2	24	0	3	1	3
	GE5{1}	18	-16	1	24	1	-9	0	9
	GE6{1}	36	-16	8	40	0	39	0	39
	GE7{1}	-37	-16	-10	42	1	-46	0	46
	GE8{1}	-20	-16	-2	26	0	2	1	2
	GT1P1{1}	122	-15	4	123	0	8	0	8

ASME B31.3 (2016) CODE COMPLIANCE
(Moments in ft-lb , Force in lbf) (Stress in psi)

Point name	Load combination	Axial Force	In-Pl. Moment	Out-Pl. Moment	Torsion Moment	S.I.F In	S.I.F Out	Index/SIF Ax.	Index/SIF Tor.	Eq. no.	Load type	Code Stress	Code Allow.
*** Segment A begin ***													
A00	Max P{1}									(3a)	HOOP	5642	16700
	GR + Max P{1}	2121	0	0	0	1.00	1.00	1.00	1.00	23a	SUST	2101	16700
	TR:Amb to T1{1}	0	0	0	0	1.00	1.00	1.00	1.00	(17)	DISP	0	25050
	Amb to T1{1}	0	0	0	0	1.00	1.00	1.00	1.00	(17)	DISP	0	25050
	Sus. + E1{1}	0	0	0	0	1.00	1.00			23a	OCC	2101	22211
	Sus. + E2{1}	0	0	0	0	1.00	1.00			23a	OCC	2101	22211
	Sus. + E3{1}	0	0	0	0	1.00	1.00			23a	OCC	2101	22211
	Sus. + E4{1}	0	0	0	0	1.00	1.00			23a	OCC	2101	22211
	Sus. + E5{1}	0	0	0	0	1.00	1.00			23a	OCC	2101	22211
	Sus. + E6{1}	0	0	0	0	1.00	1.00			23a	OCC	2101	22211
	Sus. + E7{1}	0	0	0	0	1.00	1.00			23a	OCC	2101	22211
	Sus. + E8{1}	0	0	0	0	1.00	1.00			23a	OCC	2101	22211
A20 -	Max P{1}									(3a)	HOOP	5642	16700
	GR + Max P{1}	2120	0	0	0	1.00	1.00	1.00	1.00	23a	SUST	2100	16700
	TR:Amb to T1{1}	0	0	0	0	1.00	1.00	1.00	1.00	(17)	DISP	0	25050
	Amb to T1{1}	0	0	0	0	1.00	1.00	1.00	1.00	(17)	DISP	0	25050
	Sus. + E1{1}	0	0	0	0	1.00	1.00			23a	OCC	2101	22211
	Sus. + E2{1}	0	0	0	0	1.00	1.00			23a	OCC	2101	22211
	Sus. + E3{1}	0	0	0	0	1.00	1.00			23a	OCC	2101	22211
	Sus. + E4{1}	0	0	0	0	1.00	1.00			23a	OCC	2101	22211
	Sus. + E5{1}	0	0	0	0	1.00	1.00			23a	OCC	2101	22211
	Sus. + E6{1}	0	0	0	0	1.00	1.00			23a	OCC	2101	22211
	Sus. + E7{1}	0	0	0	0	1.00	1.00			23a	OCC	2101	22211
	Sus. + E8{1}	0	0	0	0	1.00	1.00			23a	OCC	2101	22211
A20 +	Max P{1}									(3a)	HOOP	5642	16700
	GR + Max P{1}	2126	0	0	0	1.00	1.00	1.00	1.00	23a	SUST	2107	16700
	TR:Amb to T1{1}	6	0	0	0	1.00	1.00	1.00	1.00	(17)	DISP	6	25050
	Amb to T1{1}	6	0	0	0	1.00	1.00	1.00	1.00	(17)	DISP	6	25050
	Sus. + E1{1}	1	0	0	0	1.00	1.00			23a	OCC	2108	22211
	Sus. + E2{1}	1	0	0	0	1.00	1.00			23a	OCC	2108	22211
	Sus. + E3{1}	0	0	0	0	1.00	1.00			23a	OCC	2107	22211
	Sus. + E4{1}	0	0	0	0	1.00	1.00			23a	OCC	2107	22211
	Sus. + E5{1}	0	0	0	0	1.00	1.00			23a	OCC	2107	22211
	Sus. + E6{1}	0	0	0	0	1.00	1.00			23a	OCC	2107	22211
	Sus. + E7{1}	1	0	0	0	1.00	1.00			23a	OCC	2108	22211
	Sus. + E8{1}	1	0	0	0	1.00	1.00			23a	OCC	2108	22211

Primary Piping
04/24/2020 2018719 BENTLEY
07:34 AM AutoPIPE Nuclear 12.00.00.16 RESULT PAGE 272

ASME B31.3 (2016) CODE COMPLIANCE
(Moments in ft-lb , Force in lbf) (Stress in psi)

Point name	Load combination	Axial Force	In-Pl. Moment	Out-Pl. Moment	Torsion Moment	S.I.F In	S.I.F Out	Index/SIF Ax.	Index/SIF Tor.	Eq. no.	Load type	Code Stress	Code Allow.
A01 N-	Max P{1}									(3a)	HOOP	5642	16700
	GR + Max P{1}	2125	0	0	0	1.00	1.00	1.00	1.00	23a	SUST	2106	16700
	TR:Amb to T1{1}	6	0	0	0	1.00	1.00	1.00	1.00	(17)	DISP	6	25050
	Amb to T1{1}	6	0	0	0	1.00	1.00	1.00	1.00	(17)	DISP	6	25050
	Sus. + E1{1}	1	0	0	0	1.00	1.00			23a	OCC	2109	22211
	Sus. + E2{1}	1	0	0	0	1.00	1.00			23a	OCC	2109	22211
	Sus. + E3{1}	0	0	0	0	1.00	1.00			23a	OCC	2108	22211
	Sus. + E4{1}	0	0	0	0	1.00	1.00			23a	OCC	2108	22211
	Sus. + E5{1}	0	0	0	0	1.00	1.00			23a	OCC	2108	22211
	Sus. + E6{1}	0	0	0	0	1.00	1.00			23a	OCC	2108	22211
	Sus. + E7{1}	1	0	0	0	1.00	1.00			23a	OCC	2109	22211
	Sus. + E8{1}	1	0	0	0	1.00	1.00			23a	OCC	2109	22211
A01 N+	Max P{1}									(3a)	HOOP	5642	16700
	GR + Max P{1}	2125	0	0	0	1.30	1.08	1.00	1.00	23a	SUST	2106	16700
	TR:Amb to T1{1}	6	0	0	0	1.73	1.44	1.00	1.00	(17)	DISP	6	25050
	Amb to T1{1}	6	0	0	0	1.73	1.44	1.00	1.00	(17)	DISP	6	25050
	Sus. + E1{1}	1	0	0	0	1.30	1.08			23a	OCC	2109	22211
	Sus. + E2{1}	1	0	0	0	1.30	1.08			23a	OCC	2109	22211
	Sus. + E3{1}	0	0	0	0	1.30	1.08			23a	OCC	2109	22211
	Sus. + E4{1}	0	0	0	0	1.30	1.08			23a	OCC	2109	22211
	Sus. + E5{1}	0	0	0	0	1.30	1.08			23a	OCC	2109	22211
	Sus. + E6{1}	0	0	0	0	1.30	1.08			23a	OCC	2109	22211
	Sus. + E7{1}	1	0	0	0	1.30	1.08			23a	OCC	2109	22211
	Sus. + E8{1}	1	0	0	0	1.30	1.08			23a	OCC	2109	22211
A01 F-	Max P{1}									(3a)	HOOP	5642	16700
	GR + Max P{1}	2121	1	0	0	1.30	1.08	1.00	1.00	23a	SUST	2121	16700
	TR:Amb to T1{1}	0	2	0	0	1.73	1.44	1.00	1.00	(17)	DISP	59	25050
	Amb to T1{1}	0	2	0	0	1.73	1.44	1.00	1.00	(17)	DISP	59	25050
	Sus. + E1{1}	1	1	0	0	1.30	1.08			23a	OCC	2127	22211
	Sus. + E2{1}	1	1	0	0	1.30	1.08			23a	OCC	2127	22211
	Sus. + E3{1}	1	1	0	0	1.30	1.08			23a	OCC	2129	22211
	Sus. + E4{1}	1	1	0	0	1.30	1.08			23a	OCC	2129	22211
	Sus. + E5{1}	1	1	0	0	1.30	1.08			23a	OCC	2129	22211
	Sus. + E6{1}	1	1	0	0	1.30	1.08			23a	OCC	2129	22211
	Sus. + E7{1}	1	1	0	0	1.30	1.08			23a	OCC	2127	22211
	Sus. + E8{1}	1	1	0	0	1.30	1.08			23a	OCC	2127	22211
A01 F+	Max P{1}									(3a)	HOOP	5642	16700
	GR + Max P{1}	2121	1	0	0	1.00	1.00	1.00	1.00	23a	SUST	2116	16700
	TR:Amb to T1{1}	0	2	0	0	1.00	1.00	1.00	1.00	(17)	DISP	34	25050
	Amb to T1{1}	0	2	0	0	1.00	1.00	1.00	1.00	(17)	DISP	34	25050
	Sus. + E1{1}	1	1	0	0	1.00	1.00			23a	OCC	2122	22211
	Sus. + E2{1}	1	1	0	0	1.00	1.00			23a	OCC	2122	22211
	Sus. + E3{1}	1	1	0	0	1.00	1.00			23a	OCC	2124	22211
	Sus. + E4{1}	1	1	0	0	1.00	1.00			23a	OCC	2124	22211
	Sus. + E5{1}	1	1	0	0	1.00	1.00			23a	OCC	2124	22211
	Sus. + E6{1}	1	1	0	0	1.00	1.00			23a	OCC	2124	22211
	Sus. + E7{1}	1	1	0	0	1.00	1.00			23a	OCC	2122	22211
	Sus. + E8{1}	1	1	0	0	1.00	1.00			23a	OCC	2122	22211

ASME B31.3 (2016) CODE COMPLIANCE
(Moments in ft-lb , Force in lbf) (Stress in psi)

Point name	Load combination	Axial Force	In-Pl. Moment	Out-Pl. Moment	Torsion Moment	S.I.F In	S.I.F Out	Index/SIF Ax.	Index/SIF Tor.	Eq. no.	Load type	Code Stress	Code Allow.
A02 -	Max P{1}									(3a)	HOOP	5642	16700
	GR + Max P{1}	2121	2	0	0	1.00	1.00	1.00	1.00	23a	SUST	2139	16700
	TR:Amb to T1{1}	0	9	0	0	1.00	1.00	1.00	1.00	(17)	DISP	198	25050
	Amb to T1{1}	0	9	0	0	1.00	1.00	1.00	1.00	(17)	DISP	198	25050
	Sus. + E1{1}	2	2	1	0	1.00	1.00			23a	OCC	2155	22211
	Sus. + E2{1}	2	2	1	0	1.00	1.00			23a	OCC	2155	22211
	Sus. + E3{1}	2	2	1	0	1.00	1.00			23a	OCC	2156	22211
	Sus. + E4{1}	2	2	1	0	1.00	1.00			23a	OCC	2156	22211
	Sus. + E5{1}	2	2	1	0	1.00	1.00			23a	OCC	2156	22211
	Sus. + E6{1}	2	2	1	0	1.00	1.00			23a	OCC	2156	22211
	Sus. + E7{1}	2	2	1	0	1.00	1.00			23a	OCC	2155	22211
	Sus. + E8{1}	2	2	1	0	1.00	1.00			23a	OCC	2155	22211
A02 +	Max P{1}									(3a)	HOOP	5642	16700
	GR + Max P{1}	2149	1	44	2	1.00	1.00	1.00	1.00	23a	SUST	3117	16700
	TR:Amb to T1{1}	130	2	28	4	1.00	1.00	1.00	1.00	(17)	DISP	718	25050
	Amb to T1{1}	130	2	28	4	1.00	1.00	1.00	1.00	(17)	DISP	718	25050
	Sus. + E1{1}	3	3	134	6	1.00	1.00			23a	OCC	5155	22211
	Sus. + E2{1}	39	2	58	3	1.00	1.00			23a	OCC	3492	22211
	Sus. + E3{1}	63	4	144	6	1.00	1.00			23a	OCC	5439	22211
	Sus. + E4{1}	28	1	49	3	1.00	1.00			23a	OCC	3269	22211
	Sus. + E5{1}	6	3	133	5	1.00	1.00			23a	OCC	5150	22211
	Sus. + E6{1}	42	2	59	4	1.00	1.00			23a	OCC	3501	22211
	Sus. + E7{1}	60	4	143	5	1.00	1.00			23a	OCC	5429	22211
	Sus. + E8{1}	25	1	49	4	1.00	1.00			23a	OCC	3274	22211
A03	Max P{1}									(3a)	HOOP	5642	16700
	GR + Max P{1}	2149	1	22	2	1.00	1.00	1.00	1.00	23a	SUST	2637	16700
	TR:Amb to T1{1}	130	1	18	4	1.00	1.00	1.00	1.00	(17)	DISP	511	25050
	Amb to T1{1}	130	1	18	4	1.00	1.00	1.00	1.00	(17)	DISP	511	25050
	Sus. + E1{1}	1	2	74	6	1.00	1.00			23a	OCC	3798	22211
	Sus. + E2{1}	36	2	36	3	1.00	1.00			23a	OCC	2976	22211
	Sus. + E3{1}	61	2	79	6	1.00	1.00			23a	OCC	3980	22211
	Sus. + E4{1}	26	1	31	3	1.00	1.00			23a	OCC	2848	22211
	Sus. + E5{1}	4	2	73	5	1.00	1.00			23a	OCC	3797	22211
	Sus. + E6{1}	39	1	36	4	1.00	1.00			23a	OCC	2982	22211
	Sus. + E7{1}	58	2	79	5	1.00	1.00			23a	OCC	3974	22211
	Sus. + E8{1}	23	1	31	4	1.00	1.00			23a	OCC	2850	22211
A23 -	Max P{1}									(3a)	HOOP	5642	16700
	GR + Max P{1}	2149	32	4	2	1.00	1.00	1.00	1.00	23a	SUST	2870	16700
	TR:Amb to T1{1}	130	5	6	4	1.00	1.00	1.00	1.00	(17)	DISP	292	25050
	Amb to T1{1}	130	5	6	4	1.00	1.00	1.00	1.00	(17)	DISP	292	25050
	Sus. + E1{1}	2	40	8	6	1.00	1.00			23a	OCC	3072	22211
	Sus. + E2{1}	34	33	9	3	1.00	1.00			23a	OCC	3022	22211
	Sus. + E3{1}	58	41	8	6	1.00	1.00			23a	OCC	3154	22211
	Sus. + E4{1}	23	35	9	3	1.00	1.00			23a	OCC	3023	22211
	Sus. + E5{1}	1	35	8	5	1.00	1.00			23a	OCC	2994	22211
	Sus. + E6{1}	36	37	9	4	1.00	1.00			23a	OCC	3060	22211
	Sus. + E7{1}	55	36	8	5	1.00	1.00			23a	OCC	3060	22211
	Sus. + E8{1}	20	35	9	4	1.00	1.00			23a	OCC	3028	22211

Primary Piping
04/24/2020 2018719 BENTLEY
07:34 AM AutoPIPE Nuclear 12.00.00.16 RESULT PAGE 274

ASME B31.3 (2016) CODE COMPLIANCE
(Moments in ft-lb , Force in lbf) (Stress in psi)

Point name	Load combination	Axial Force	In-Pl. Moment	Out-Pl. Moment	Torsion Moment	S.I.F In	S.I.F Out	Index/SIF Ax.	Index/SIF Tor.	Eq. no.	Load type	Code Stress	Code Allow.
A23 +	Max P{1}									(3a)	HOOP	5642	16700
	GR + Max P{1}	2149	32	4	2	1.00	1.00	1.00	1.00	23a	SUST	2870	16700
	TR:Amb to T1{1}	107	5	6	4	1.00	1.00	1.00	1.00	(17)	DISP	271	25050
	Amb to T1{1}	107	5	6	4	1.00	1.00	1.00	1.00	(17)	DISP	271	25050
	Sus. + E1{1}	2	40	8	6	1.00	1.00			23a	OCC	3072	22211
	Sus. + E2{1}	34	33	9	3	1.00	1.00			23a	OCC	3022	22211
	Sus. + E3{1}	58	41	8	6	1.00	1.00			23a	OCC	3154	22211
	Sus. + E4{1}	23	35	9	3	1.00	1.00			23a	OCC	3022	22211
	Sus. + E5{1}	1	35	8	5	1.00	1.00			23a	OCC	2994	22211
	Sus. + E6{1}	36	37	9	4	1.00	1.00			23a	OCC	3060	22211
	Sus. + E7{1}	55	36	8	5	1.00	1.00			23a	OCC	3060	22211
	Sus. + E8{1}	20	35	9	4	1.00	1.00			23a	OCC	3028	22211
A04 N-	Max P{1}									(3a)	HOOP	5642	16700
	GR + Max P{1}	2149	26	7	2	1.00	1.00	1.00	1.00	23a	SUST	2728	16700
	TR:Amb to T1{1}	107	0	3	4	1.00	1.00	1.00	1.00	(17)	DISP	186	25050
	Amb to T1{1}	107	0	3	4	1.00	1.00	1.00	1.00	(17)	DISP	186	25050
	Sus. + E1{1}	2	32	15	6	1.00	1.00			23a	OCC	2989	22211
	Sus. + E2{1}	33	27	11	3	1.00	1.00			23a	OCC	2862	22211
	Sus. + E3{1}	58	31	16	6	1.00	1.00			23a	OCC	3048	22211
	Sus. + E4{1}	22	27	11	3	1.00	1.00			23a	OCC	2861	22211
	Sus. + E5{1}	1	28	15	5	1.00	1.00			23a	OCC	2950	22211
	Sus. + E6{1}	36	28	10	4	1.00	1.00			23a	OCC	2875	22211
	Sus. + E7{1}	55	27	16	5	1.00	1.00			23a	OCC	3012	22211
	Sus. + E8{1}	20	29	11	4	1.00	1.00			23a	OCC	2875	22211
A04 N+	Max P{1}									(3a)	HOOP	5642	16700
	GR + Max P{1}	2149	26	7	2	1.00	1.00	1.00	1.00	23a	SUST	2728	16700
	TR:Amb to T1{1}	107	0	3	4	1.00	1.00	1.00	1.00	(17)	DISP	186	25050
	Amb to T1{1}	107	0	3	4	1.00	1.00	1.00	1.00	(17)	DISP	186	25050
	Sus. + E1{1}	2	32	15	6	1.00	1.00			23a	OCC	2989	22211
	Sus. + E2{1}	33	27	11	3	1.00	1.00			23a	OCC	2862	22211
	Sus. + E3{1}	58	31	16	6	1.00	1.00			23a	OCC	3048	22211
	Sus. + E4{1}	22	27	11	3	1.00	1.00			23a	OCC	2861	22211
	Sus. + E5{1}	1	28	15	5	1.00	1.00			23a	OCC	2950	22211
	Sus. + E6{1}	36	28	10	4	1.00	1.00			23a	OCC	2875	22211
	Sus. + E7{1}	55	27	16	5	1.00	1.00			23a	OCC	3012	22211
	Sus. + E8{1}	20	29	11	4	1.00	1.00			23a	OCC	2875	22211
A04 F-	Max P{1}									(3a)	HOOP	5642	16700
	GR + Max P{1}	2153	12	12	4	1.00	1.00	1.00	1.00	23a	SUST	2516	16700
	TR:Amb to T1{1}	108	5	3	4	1.00	1.00	1.00	1.00	(17)	DISP	244	25050
	Amb to T1{1}	108	5	3	4	1.00	1.00	1.00	1.00	(17)	DISP	244	25050
	Sus. + E1{1}	3	16	33	10	1.00	1.00			23a	OCC	3025	22211
	Sus. + E2{1}	33	14	13	5	1.00	1.00			23a	OCC	2603	22211
	Sus. + E3{1}	59	13	35	10	1.00	1.00			23a	OCC	3113	22211
	Sus. + E4{1}	22	12	15	4	1.00	1.00			23a	OCC	2610	22211
	Sus. + E5{1}	0	14	33	10	1.00	1.00			23a	OCC	3014	22211
	Sus. + E6{1}	36	12	13	5	1.00	1.00			23a	OCC	2586	22211
	Sus. + E7{1}	55	12	35	10	1.00	1.00			23a	OCC	3106	22211
	Sus. + E8{1}	19	14	15	5	1.00	1.00			23a	OCC	2623	22211

ASME B31.3 (2016) CODE COMPLIANCE
(Moments in ft-lb , Force in lbf) (Stress in psi)

Point name	Load combination	Axial Force	In-Pl. Moment	Out-Pl. Moment	Torsion Moment	S.I.F In	S.I.F Out	Index/SIF Ax.	Index/SIF Tor.	Eq. no.	Load type	Code Stress	Code Allow.
A04 F+	Max P{1}									(3a)	HOOP	5642	16700
	GR + Max P{1}	2153	12	12	4	1.00	1.00	1.00	1.00	23a	SUST	2516	16700
	TR:Amb to T1{1}	108	5	3	4	1.00	1.00	1.00	1.00	(17)	DISP	244	25050
	Amb to T1{1}	108	5	3	4	1.00	1.00	1.00	1.00	(17)	DISP	244	25050
	Sus. + E1{1}	3	16	33	10	1.00	1.00			23a	OCC	3025	22211
	Sus. + E2{1}	33	14	13	5	1.00	1.00			23a	OCC	2603	22211
	Sus. + E3{1}	59	13	35	10	1.00	1.00			23a	OCC	3113	22211
	Sus. + E4{1}	22	12	15	4	1.00	1.00			23a	OCC	2610	22211
	Sus. + E5{1}	0	14	33	10	1.00	1.00			23a	OCC	3014	22211
	Sus. + E6{1}	36	12	13	5	1.00	1.00			23a	OCC	2586	22211
	Sus. + E7{1}	55	12	35	10	1.00	1.00			23a	OCC	3106	22211
	Sus. + E8{1}	19	14	15	5	1.00	1.00			23a	OCC	2623	22211
A24 -	Max P{1}									(3a)	HOOP	5642	16700
	GR + Max P{1}	2144	39	98	4	1.00	1.00	1.00	1.00	23a	SUST	4516	16700
	TR:Amb to T1{1}	108	6	98	4	1.00	1.00	1.00	1.00	(17)	DISP	2198	25050
	Amb to T1{1}	108	6	98	4	1.00	1.00	1.00	1.00	(17)	DISP	2198	25050
	Sus. + E1{1}	12	45	351	10	1.00	1.00			23a	OCC	10231	22211
	Sus. + E2{1}	25	46	178	5	1.00	1.00			23a	OCC	6353	22211
	Sus. + E3{1}	49	47	370	10	1.00	1.00			23a	OCC	10717	22211
	Sus. + E4{1}	13	43	159	4	1.00	1.00			23a	OCC	5912	22211
	Sus. + E5{1}	9	52	350	10	1.00	1.00			23a	OCC	10218	22211
	Sus. + E6{1}	27	39	179	5	1.00	1.00			23a	OCC	6363	22211
	Sus. + E7{1}	47	54	370	10	1.00	1.00			23a	OCC	10706	22211
	Sus. + E8{1}	11	42	160	5	1.00	1.00			23a	OCC	5925	22211
A24 +	Max P{1}									(3a)	HOOP	5642	16700
	GR + Max P{1}	2144	39	98	4	1.00	1.00	1.00	1.00	23a	SUST	4516	16700
	TR:Amb to T1{1}	62	6	98	4	1.00	1.00	1.00	1.00	(17)	DISP	2155	25050
	Amb to T1{1}	62	6	98	4	1.00	1.00	1.00	1.00	(17)	DISP	2155	25050
	Sus. + E1{1}	12	45	351	10	1.00	1.00			23a	OCC	10231	22211
	Sus. + E2{1}	25	46	178	5	1.00	1.00			23a	OCC	6353	22211
	Sus. + E3{1}	49	47	370	10	1.00	1.00			23a	OCC	10717	22211
	Sus. + E4{1}	13	43	159	4	1.00	1.00			23a	OCC	5912	22211
	Sus. + E5{1}	9	52	350	10	1.00	1.00			23a	OCC	10218	22211
	Sus. + E6{1}	27	39	179	5	1.00	1.00			23a	OCC	6363	22211
	Sus. + E7{1}	47	54	370	10	1.00	1.00			23a	OCC	10707	22211
	Sus. + E8{1}	11	42	160	5	1.00	1.00			23a	OCC	5925	22211
A21 -	Max P{1}									(3a)	HOOP	5642	16700
	GR + Max P{1}	2135	33	49	4	1.00	1.00	1.00	1.00	23a	SUST	3452	16700
	TR:Amb to T1{1}	62	40	84	4	1.00	1.00	1.00	1.00	(17)	DISP	2051	25050
	Amb to T1{1}	62	40	84	4	1.00	1.00	1.00	1.00	(17)	DISP	2051	25050
	Sus. + E1{1}	20	74	174	10	1.00	1.00			23a	OCC	6441	22211
	Sus. + E2{1}	16	39	95	5	1.00	1.00			23a	OCC	4505	22211
	Sus. + E3{1}	39	74	193	10	1.00	1.00			23a	OCC	6869	22211
	Sus. + E4{1}	3	39	76	4	1.00	1.00			23a	OCC	4082	22211
	Sus. + E5{1}	19	71	173	10	1.00	1.00			23a	OCC	6410	22211
	Sus. + E6{1}	17	42	95	5	1.00	1.00			23a	OCC	4524	22211
	Sus. + E7{1}	39	71	192	10	1.00	1.00			23a	OCC	6843	22211
	Sus. + E8{1}	2	42	76	5	1.00	1.00			23a	OCC	4110	22211

Primary Piping
04/24/2020 2018719 BENTLEY
07:34 AM AutoPIPE Nuclear 12.00.00.16 RESULT PAGE 276

ASME B31.3 (2016) CODE COMPLIANCE
(Moments in ft-lb , Force in lbf) (Stress in psi)

Point name	Load combination	Axial Force	In-Pl. Moment	Out-Pl. Moment	Torsion Moment	S.I.F In	S.I.F Out	Index/SIF Ax.	Index/SIF Tor.	Eq. no.	Load type	Code Stress	Code Allow.
A21 +	Max P{1}									(3a)	HOOP	5642	16700
	GR + Max P{1}	2135	33	49	4	1.00	1.00	1.00	1.00	23a	SUST	3452	16700
	TR:Amb to T1{1}	49	40	84	4	1.00	1.00	1.00	1.00	(17)	DISP	2039	25050
	Amb to T1{1}	49	40	84	4	1.00	1.00	1.00	1.00	(17)	DISP	2039	25050
	Sus. + E1{1}	20	74	174	10	1.00	1.00			23a	OCC	6441	22211
	Sus. + E2{1}	16	39	95	4	1.00	1.00			23a	OCC	4505	22211
	Sus. + E3{1}	39	74	193	10	1.00	1.00			23a	OCC	6869	22211
	Sus. + E4{1}	3	39	76	4	1.00	1.00			23a	OCC	4082	22211
	Sus. + E5{1}	19	71	173	10	1.00	1.00			23a	OCC	6410	22211
	Sus. + E6{1}	17	42	95	5	1.00	1.00			23a	OCC	4523	22211
	Sus. + E7{1}	39	71	192	10	1.00	1.00			23a	OCC	6843	22211
	Sus. + E8{1}	2	42	76	4	1.00	1.00			23a	OCC	4110	22211
A05 N-	Max P{1}									(3a)	HOOP	5642	16700
	GR + Max P{1}	2135	22	58	4	1.00	1.00	1.00	1.00	23a	SUST	3528	16700
	TR:Amb to T1{1}	49	33	104	4	1.00	1.00	1.00	1.00	(17)	DISP	2376	25050
	Amb to T1{1}	49	33	104	4	1.00	1.00	1.00	1.00	(17)	DISP	2376	25050
	Sus. + E1{1}	21	56	204	10	1.00	1.00			23a	OCC	6918	22211
	Sus. + E2{1}	16	28	109	4	1.00	1.00			23a	OCC	4696	22211
	Sus. + E3{1}	39	55	225	10	1.00	1.00			23a	OCC	7412	22211
	Sus. + E4{1}	2	28	88	4	1.00	1.00			23a	OCC	4217	22211
	Sus. + E5{1}	20	54	203	10	1.00	1.00			23a	OCC	6898	22211
	Sus. + E6{1}	16	29	109	5	1.00	1.00			23a	OCC	4710	22211
	Sus. + E7{1}	38	54	225	10	1.00	1.00			23a	OCC	7394	22211
	Sus. + E8{1}	2	30	89	4	1.00	1.00			23a	OCC	4236	22211
A05 N+	Max P{1}									(3a)	HOOP	5642	16700
	GR + Max P{1}	2135	58	24	4	1.00	1.00	1.00	1.00	23a	SUST	3528	16700
	TR:Amb to T1{1}	49	103	36	4	1.00	1.00	1.00	1.00	(17)	DISP	2376	25050
	Amb to T1{1}	49	103	36	4	1.00	1.00	1.00	1.00	(17)	DISP	2376	25050
	Sus. + E1{1}	21	202	61	10	1.00	1.00			23a	OCC	6918	22211
	Sus. + E2{1}	16	108	31	4	1.00	1.00			23a	OCC	4696	22211
	Sus. + E3{1}	39	224	62	10	1.00	1.00			23a	OCC	7412	22211
	Sus. + E4{1}	2	87	30	4	1.00	1.00			23a	OCC	4217	22211
	Sus. + E5{1}	20	201	60	10	1.00	1.00			23a	OCC	6898	22211
	Sus. + E6{1}	16	109	32	5	1.00	1.00			23a	OCC	4710	22211
	Sus. + E7{1}	38	223	60	10	1.00	1.00			23a	OCC	7394	22211
	Sus. + E8{1}	2	88	32	4	1.00	1.00			23a	OCC	4235	22211
A05 F-	Max P{1}									(3a)	HOOP	5642	16700
	GR + Max P{1}	2139	82	2	0	1.00	1.00	1.00	1.00	23a	SUST	3965	16700
	TR:Amb to T1{1}	39	75	35	3	1.00	1.00	1.00	1.00	(17)	DISP	1797	25050
	Amb to T1{1}	39	75	35	3	1.00	1.00	1.00	1.00	(17)	DISP	1797	25050
	Sus. + E1{1}	35	271	34	4	1.00	1.00			23a	OCC	8338	22211
	Sus. + E2{1}	5	118	11	0	1.00	1.00			23a	OCC	4819	22211
	Sus. + E3{1}	40	273	35	3	1.00	1.00			23a	OCC	8385	22211
	Sus. + E4{1}	0	117	10	1	1.00	1.00			23a	OCC	4786	22211
	Sus. + E5{1}	35	270	37	4	1.00	1.00			23a	OCC	8324	22211
	Sus. + E6{1}	5	119	8	0	1.00	1.00			23a	OCC	4830	22211
	Sus. + E7{1}	40	272	38	3	1.00	1.00			23a	OCC	8372	22211
	Sus. + E8{1}	0	118	7	1	1.00	1.00			23a	OCC	4800	22211

Primary Piping
04/24/2020 2018719 BENTLEY
07:34 AM AutoPIPE Nuclear 12.00.00.16 RESULT PAGE 277

ASME B31.3 (2016) CODE COMPLIANCE
(Moments in ft-lb , Force in lbf) (Stress in psi)

Point name	Load combination	Axial Force	In-Pl. Moment	Out-Pl. Moment	Torsion Moment	S.I.F In	S.I.F Out	Index/SIF Ax.	Index/SIF Tor.	Eq. no.	Load type	Code Stress	Code Allow.
A05 F+	Max P{1}									(3a)	HOOP	5642	16700
	GR + Max P{1}	2139	17	80	0	1.00	1.00	1.00	1.00	23a	SUST	3965	16700
	TR:Amb to T1{1}	39	21	80	3	1.00	1.00	1.00	1.00	(17)	DISP	1797	25050
	Amb to T1{1}	39	21	80	3	1.00	1.00	1.00	1.00	(17)	DISP	1797	25050
	Sus. + E1{1}	35	20	272	4	1.00	1.00			23a	OCC	8338	22211
	Sus. + E2{1}	5	19	117	0	1.00	1.00			23a	OCC	4819	22211
	Sus. + E3{1}	40	19	274	3	1.00	1.00			23a	OCC	8385	22211
	Sus. + E4{1}	0	18	116	1	1.00	1.00			23a	OCC	4786	22211
	Sus. + E5{1}	35	17	271	4	1.00	1.00			23a	OCC	8324	22211
	Sus. + E6{1}	5	18	118	0	1.00	1.00			23a	OCC	4830	22211
	Sus. + E7{1}	40	17	273	3	1.00	1.00			23a	OCC	8372	22211
	Sus. + E8{1}	0	19	117	1	1.00	1.00			23a	OCC	4800	22211
A22 -	Max P{1}									(3a)	HOOP	5642	16700
	GR + Max P{1}	2139	22	75	0	1.00	1.00	1.00	1.00	23a	SUST	3880	16700
	TR:Amb to T1{1}	39	32	56	3	1.00	1.00	1.00	1.00	(17)	DISP	1420	25050
	Amb to T1{1}	39	32	56	3	1.00	1.00	1.00	1.00	(17)	DISP	1420	25050
	Sus. + E1{1}	35	27	255	4	1.00	1.00			23a	OCC	7986	22211
	Sus. + E2{1}	4	27	107	0	1.00	1.00			23a	OCC	4629	22211
	Sus. + E3{1}	39	29	253	3	1.00	1.00			23a	OCC	7957	22211
	Sus. + E4{1}	0	25	109	1	1.00	1.00			23a	OCC	4667	22211
	Sus. + E5{1}	35	31	254	4	1.00	1.00			23a	OCC	7977	22211
	Sus. + E6{1}	4	23	108	0	1.00	1.00			23a	OCC	4631	22211
	Sus. + E7{1}	39	33	253	3	1.00	1.00			23a	OCC	7950	22211
	Sus. + E8{1}	0	23	110	1	1.00	1.00			23a	OCC	4677	22211
A22 +	Max P{1}									(3a)	HOOP	5642	16700
	GR + Max P{1}	2138	22	75	0	1.00	1.00	1.00	1.00	23a	SUST	3879	16700
	TR:Amb to T1{1}	76	32	56	3	1.00	1.00	1.00	1.00	(17)	DISP	1454	25050
	Amb to T1{1}	76	32	56	3	1.00	1.00	1.00	1.00	(17)	DISP	1454	25050
	Sus. + E1{1}	35	27	255	4	1.00	1.00			23a	OCC	7986	22211
	Sus. + E2{1}	4	27	107	0	1.00	1.00			23a	OCC	4628	22211
	Sus. + E3{1}	39	29	253	3	1.00	1.00			23a	OCC	7957	22211
	Sus. + E4{1}	0	25	109	1	1.00	1.00			23a	OCC	4667	22211
	Sus. + E5{1}	35	31	254	4	1.00	1.00			23a	OCC	7977	22211
	Sus. + E6{1}	4	23	108	0	1.00	1.00			23a	OCC	4631	22211
	Sus. + E7{1}	39	33	253	3	1.00	1.00			23a	OCC	7950	22211
	Sus. + E8{1}	0	23	110	1	1.00	1.00			23a	OCC	4676	22211
A25 -	Max P{1}									(3a)	HOOP	5642	16700
	GR + Max P{1}	2137	46	17	0	1.00	1.00	1.00	1.00	23a	SUST	3218	16700
	TR:Amb to T1{1}	76	9	58	3	1.00	1.00	1.00	1.00	(17)	DISP	1334	25050
	Amb to T1{1}	76	9	58	3	1.00	1.00	1.00	1.00	(17)	DISP	1334	25050
	Sus. + E1{1}	24	51	91	4	1.00	1.00			23a	OCC	4931	22211
	Sus. + E2{1}	6	49	22	0	1.00	1.00			23a	OCC	3371	22211
	Sus. + E3{1}	29	52	56	3	1.00	1.00			23a	OCC	4141	22211
	Sus. + E4{1}	10	49	59	1	1.00	1.00			23a	OCC	4191	22211
	Sus. + E5{1}	25	48	91	4	1.00	1.00			23a	OCC	4922	22211
	Sus. + E6{1}	6	50	23	0	1.00	1.00			23a	OCC	3387	22211
	Sus. + E7{1}	29	47	56	3	1.00	1.00			23a	OCC	4130	22211
	Sus. + E8{1}	11	50	59	1	1.00	1.00			23a	OCC	4197	22211

ASME B31.3 (2016) CODE COMPLIANCE
(Moments in ft-lb , Force in lbf) (Stress in psi)

Point name	Load combination	Axial Force	In-Pl. Moment	Out-Pl. Moment	Torsion Moment	S.I.F In	S.I.F Out	Index/SIF Ax.	Index/SIF Tor.	Eq. no.	Load type	Code Stress	Code Allow.
A25	+ Max P{1}									(3a)	HOOP	5642	16700
	GR + Max P{1}	2137	46	17	0	1.00	1.00	1.00	1.00	23a	SUST	3218	16700
	TR:Amb to T1{1}	117	9	58	3	1.00	1.00	1.00	1.00	(17)	DISP	1372	25050
	Amb to T1{1}	117	9	58	3	1.00	1.00	1.00	1.00	(17)	DISP	1372	25050
	Sus. + E1{1}	24	51	91	4	1.00	1.00			23a	OCC	4931	22211
	Sus. + E2{1}	6	49	22	0	1.00	1.00			23a	OCC	3371	22211
	Sus. + E3{1}	29	52	56	3	1.00	1.00			23a	OCC	4141	22211
	Sus. + E4{1}	10	49	59	1	1.00	1.00			23a	OCC	4191	22211
	Sus. + E5{1}	25	48	91	4	1.00	1.00			23a	OCC	4923	22211
	Sus. + E6{1}	6	50	23	0	1.00	1.00			23a	OCC	3387	22211
	Sus. + E7{1}	29	47	56	3	1.00	1.00			23a	OCC	4130	22211
	Sus. + E8{1}	11	50	59	1	1.00	1.00			23a	OCC	4197	22211
A26	- Max P{1}									(3a)	HOOP	5642	16700
	GR + Max P{1}	2135	41	10	0	1.00	1.00	1.00	1.00	23a	SUST	3061	16700
	TR:Amb to T1{1}	117	2	2	3	1.00	1.00	1.00	1.00	(17)	DISP	186	25050
	Amb to T1{1}	117	2	2	3	1.00	1.00	1.00	1.00	(17)	DISP	186	25050
	Sus. + E1{1}	14	44	18	4	1.00	1.00			23a	OCC	3290	22211
	Sus. + E2{1}	16	45	18	0	1.00	1.00			23a	OCC	3291	22211
	Sus. + E3{1}	19	43	18	3	1.00	1.00			23a	OCC	3296	22211
	Sus. + E4{1}	20	44	23	1	1.00	1.00			23a	OCC	3399	22211
	Sus. + E5{1}	15	44	18	4	1.00	1.00			23a	OCC	3301	22211
	Sus. + E6{1}	16	44	18	0	1.00	1.00			23a	OCC	3277	22211
	Sus. + E7{1}	19	45	18	3	1.00	1.00			23a	OCC	3303	22211
	Sus. + E8{1}	21	44	23	1	1.00	1.00			23a	OCC	3400	22211
A26	+ Max P{1}									(3a)	HOOP	5642	16700
	GR + Max P{1}	2135	41	10	0	1.00	1.00	1.00	1.00	23a	SUST	3061	16700
	TR:Amb to T1{1}	161	2	2	3	1.00	1.00	1.00	1.00	(17)	DISP	226	25050
	Amb to T1{1}	161	2	2	3	1.00	1.00	1.00	1.00	(17)	DISP	226	25050
	Sus. + E1{1}	14	44	18	4	1.00	1.00			23a	OCC	3290	22211
	Sus. + E2{1}	16	45	18	0	1.00	1.00			23a	OCC	3291	22211
	Sus. + E3{1}	19	43	18	3	1.00	1.00			23a	OCC	3296	22211
	Sus. + E4{1}	20	44	23	1	1.00	1.00			23a	OCC	3399	22211
	Sus. + E5{1}	15	44	18	4	1.00	1.00			23a	OCC	3301	22211
	Sus. + E6{1}	16	44	18	0	1.00	1.00			23a	OCC	3277	22211
	Sus. + E7{1}	19	45	18	3	1.00	1.00			23a	OCC	3303	22211
	Sus. + E8{1}	21	44	23	1	1.00	1.00			23a	OCC	3400	22211
A27	- Max P{1}									(3a)	HOOP	5642	16700
	GR + Max P{1}	2134	37	2	0	1.00	1.00	1.00	1.00	23a	SUST	2956	16700
	TR:Amb to T1{1}	161	1	0	3	1.00	1.00	1.00	1.00	(17)	DISP	182	25050
	Amb to T1{1}	161	1	0	3	1.00	1.00	1.00	1.00	(17)	DISP	182	25050
	Sus. + E1{1}	4	39	9	4	1.00	1.00			23a	OCC	3137	22211
	Sus. + E2{1}	26	40	4	0	1.00	1.00			23a	OCC	3053	22211
	Sus. + E3{1}	9	40	3	3	1.00	1.00			23a	OCC	3049	22211
	Sus. + E4{1}	31	41	5	1	1.00	1.00			23a	OCC	3085	22211
	Sus. + E5{1}	4	42	9	4	1.00	1.00			23a	OCC	3168	22211
	Sus. + E6{1}	27	41	3	0	1.00	1.00			23a	OCC	3065	22211
	Sus. + E7{1}	9	41	2	3	1.00	1.00			23a	OCC	3070	22211
	Sus. + E8{1}	31	40	5	1	1.00	1.00			23a	OCC	3075	22211

Primary Piping
04/24/2020 2018719 BENTLEY
07:34 AM AutoPIPE Nuclear 12.00.00.16 RESULT PAGE 279

ASME B31.3 (2016) CODE COMPLIANCE
(Moments in ft-lb , Force in lbf) (Stress in psi)

Point name	Load combination	Axial Force	In-Pl. Moment	Out-Pl. Moment	Torsion Moment	S.I.F In	S.I.F Out	Index/SIF Ax.	Index/SIF Tor.	Eq. no.	Load type	Code Stress	Code Allow.
A27	+ Max P{1}									(3a)	HOOP	5642	16700
	GR + Max P{1}	2133	37	2	0	1.00	1.00	1.00	1.00	23a	SUST	2955	16700
	TR:Amb to T1{1}	143	1	0	3	1.00	1.00	1.00	1.00	(17)	DISP	165	25050
	Amb to T1{1}	143	1	0	3	1.00	1.00	1.00	1.00	(17)	DISP	165	25050
	Sus. + E1{1}	4	39	9	4	1.00	1.00			23a	OCC	3137	22211
	Sus. + E2{1}	26	40	4	0	1.00	1.00			23a	OCC	3053	22211
	Sus. + E3{1}	9	40	3	3	1.00	1.00			23a	OCC	3048	22211
	Sus. + E4{1}	31	41	5	1	1.00	1.00			23a	OCC	3084	22211
	Sus. + E5{1}	4	42	9	4	1.00	1.00			23a	OCC	3167	22211
	Sus. + E6{1}	27	41	3	0	1.00	1.00			23a	OCC	3064	22211
	Sus. + E7{1}	9	41	2	3	1.00	1.00			23a	OCC	3069	22211
	Sus. + E8{1}	31	40	5	1	1.00	1.00			23a	OCC	3074	22211
A28	- Max P{1}									(3a)	HOOP	5642	16700
	GR + Max P{1}	2131	56	14	0	1.00	1.00	1.00	1.00	23a	SUST	3428	16700
	TR:Amb to T1{1}	143	2	54	3	1.00	1.00	1.00	1.00	(17)	DISP	1286	25050
	Amb to T1{1}	143	2	54	3	1.00	1.00	1.00	1.00	(17)	DISP	1286	25050
	Sus. + E1{1}	7	65	63	4	1.00	1.00			23a	OCC	4560	22211
	Sus. + E2{1}	36	63	94	0	1.00	1.00			23a	OCC	5274	22211
	Sus. + E3{1}	2	63	116	3	1.00	1.00			23a	OCC	5725	22211
	Sus. + E4{1}	41	60	80	1	1.00	1.00			23a	OCC	4951	22211
	Sus. + E5{1}	6	57	65	4	1.00	1.00			23a	OCC	4571	22211
	Sus. + E6{1}	37	59	95	0	1.00	1.00			23a	OCC	5287	22211
	Sus. + E7{1}	1	59	115	3	1.00	1.00			23a	OCC	5700	22211
	Sus. + E8{1}	42	62	79	1	1.00	1.00			23a	OCC	4924	22211
A28	+ Max P{1}									(3a)	HOOP	5642	16700
	GR + Max P{1}	2131	56	14	0	1.00	1.00	1.00	1.00	23a	SUST	3428	16700
	TR:Amb to T1{1}	94	2	54	3	1.00	1.00	1.00	1.00	(17)	DISP	1240	25050
	Amb to T1{1}	94	2	54	3	1.00	1.00	1.00	1.00	(17)	DISP	1240	25050
	Sus. + E1{1}	7	65	63	4	1.00	1.00			23a	OCC	4560	22211
	Sus. + E2{1}	36	63	94	0	1.00	1.00			23a	OCC	5274	22211
	Sus. + E3{1}	2	63	116	3	1.00	1.00			23a	OCC	5725	22211
	Sus. + E4{1}	41	60	80	1	1.00	1.00			23a	OCC	4951	22211
	Sus. + E5{1}	6	57	65	4	1.00	1.00			23a	OCC	4570	22211
	Sus. + E6{1}	37	59	95	0	1.00	1.00			23a	OCC	5286	22211
	Sus. + E7{1}	1	59	115	3	1.00	1.00			23a	OCC	5700	22211
	Sus. + E8{1}	42	62	79	1	1.00	1.00			23a	OCC	4924	22211
A29	- Max P{1}									(3a)	HOOP	5642	16700
	GR + Max P{1}	2129	37	30	0	1.00	1.00	1.00	1.00	23a	SUST	3184	16700
	TR:Amb to T1{1}	94	6	130	3	1.00	1.00	1.00	1.00	(17)	DISP	2867	25050
	Amb to T1{1}	94	6	130	3	1.00	1.00	1.00	1.00	(17)	DISP	2867	25050
	Sus. + E1{1}	19	50	52	4	1.00	1.00			23a	OCC	3797	22211
	Sus. + E2{1}	48	39	51	0	1.00	1.00			23a	OCC	3698	22211
	Sus. + E3{1}	14	41	84	3	1.00	1.00			23a	OCC	4412	22211
	Sus. + E4{1}	52	44	127	1	1.00	1.00			23a	OCC	5420	22211
	Sus. + E5{1}	17	58	52	4	1.00	1.00			23a	OCC	3885	22211
	Sus. + E6{1}	49	46	51	0	1.00	1.00			23a	OCC	3754	22211
	Sus. + E7{1}	13	48	84	3	1.00	1.00			23a	OCC	4447	22211
	Sus. + E8{1}	54	37	127	1	1.00	1.00			23a	OCC	5428	22211

ASME B31.3 (2016) CODE COMPLIANCE
(Moments in ft-lb , Force in lbf) (Stress in psi)

Point name	Load combination	Axial Force	In-Pl. Moment	Out-Pl. Moment	Torsion Moment	S.I.F In	S.I.F Out	Index/SIF Ax.	Index/SIF Tor.	Eq. no.	Load type	Code Stress	Code Allow.
A29 +	Max P{1}									(3a)	HOOP	5642	16700
	GR + Max P{1}	2129	37	30	0	1.00	1.00	1.00	1.00	23a	SUST	3184	16700
	TR:Amb to T1{1}	64	6	130	3	1.00	1.00	1.00	1.00	(17)	DISP	2839	25050
	Amb to T1{1}	64	6	130	3	1.00	1.00	1.00	1.00	(17)	DISP	2839	25050
	Sus. + E1{1}	19	50	52	4	1.00	1.00			23a	OCC	3796	22211
	Sus. + E2{1}	48	39	51	0	1.00	1.00			23a	OCC	3698	22211
	Sus. + E3{1}	14	41	84	3	1.00	1.00			23a	OCC	4412	22211
	Sus. + E4{1}	52	44	127	1	1.00	1.00			23a	OCC	5420	22211
	Sus. + E5{1}	17	58	52	4	1.00	1.00			23a	OCC	3885	22211
	Sus. + E6{1}	49	46	51	0	1.00	1.00			23a	OCC	3754	22211
	Sus. + E7{1}	13	48	84	3	1.00	1.00			23a	OCC	4447	22211
	Sus. + E8{1}	54	37	127	1	1.00	1.00			23a	OCC	5427	22211
A06 N-	Max P{1}									(3a)	HOOP	5642	16700
	GR + Max P{1}	2129	27	32	0	1.00	1.00	1.00	1.00	23a	SUST	3062	16700
	TR:Amb to T1{1}	64	4	150	3	1.00	1.00	1.00	1.00	(17)	DISP	3273	25050
	Amb to T1{1}	64	4	150	3	1.00	1.00	1.00	1.00	(17)	DISP	3273	25050
	Sus. + E1{1}	19	37	55	4	1.00	1.00			23a	OCC	3638	22211
	Sus. + E2{1}	48	29	53	0	1.00	1.00			23a	OCC	3584	22211
	Sus. + E3{1}	15	30	90	3	1.00	1.00			23a	OCC	4381	22211
	Sus. + E4{1}	53	32	133	1	1.00	1.00			23a	OCC	5395	22211
	Sus. + E5{1}	18	42	54	4	1.00	1.00			23a	OCC	3685	22211
	Sus. + E6{1}	50	34	54	0	1.00	1.00			23a	OCC	3623	22211
	Sus. + E7{1}	13	35	90	3	1.00	1.00			23a	OCC	4404	22211
	Sus. + E8{1}	54	27	134	1	1.00	1.00			23a	OCC	5406	22211
A06 N+	Max P{1}									(3a)	HOOP	5642	16700
	GR + Max P{1}	2129	32	28	0	1.00	1.00	1.00	1.00	23a	SUST	3062	16700
	TR:Amb to T1{1}	64	150	8	3	1.00	1.00	1.00	1.00	(17)	DISP	3273	25050
	Amb to T1{1}	64	150	8	3	1.00	1.00	1.00	1.00	(17)	DISP	3273	25050
	Sus. + E1{1}	19	54	38	4	1.00	1.00			23a	OCC	3638	22211
	Sus. + E2{1}	48	53	29	0	1.00	1.00			23a	OCC	3584	22211
	Sus. + E3{1}	15	89	29	3	1.00	1.00			23a	OCC	4381	22211
	Sus. + E4{1}	53	132	36	1	1.00	1.00			23a	OCC	5395	22211
	Sus. + E5{1}	18	53	44	4	1.00	1.00			23a	OCC	3685	22211
	Sus. + E6{1}	50	53	34	0	1.00	1.00			23a	OCC	3623	22211
	Sus. + E7{1}	13	90	34	3	1.00	1.00			23a	OCC	4404	22211
	Sus. + E8{1}	54	133	30	1	1.00	1.00			23a	OCC	5406	22211
A06 F-	Max P{1}									(3a)	HOOP	5642	16700
	GR + Max P{1}	2125	21	2	6	1.00	1.00	1.00	1.00	23a	SUST	2596	16700
	TR:Amb to T1{1}	41	79	10	1	1.00	1.00	1.00	1.00	(17)	DISP	1732	25050
	Amb to T1{1}	41	79	10	1	1.00	1.00	1.00	1.00	(17)	DISP	1732	25050
	Sus. + E1{1}	5	72	26	22	1.00	1.00			23a	OCC	3921	22211
	Sus. + E2{1}	6	147	8	10	1.00	1.00			23a	OCC	5441	22211
	Sus. + E3{1}	2	151	11	16	1.00	1.00			23a	OCC	5534	22211
	Sus. + E4{1}	3	69	9	9	1.00	1.00			23a	OCC	3698	22211
	Sus. + E5{1}	5	68	27	22	1.00	1.00			23a	OCC	3859	22211
	Sus. + E6{1}	6	151	9	10	1.00	1.00			23a	OCC	5526	22211
	Sus. + E7{1}	2	147	13	16	1.00	1.00			23a	OCC	5451	22211
	Sus. + E8{1}	3	73	8	9	1.00	1.00			23a	OCC	3781	22211

ASME B31.3 (2016) CODE COMPLIANCE
(Moments in ft-lb , Force in lbf) (Stress in psi)

Point name	Load combination	Axial Force	In-Pl. Moment	Out-Pl. Moment	Torsion Moment	S.I.F In	S.I.F Out	Index/SIF Ax.	Index/SIF Tor.	Eq. no.	Load type	Code Stress	Code Allow.
A06 F+	Max P{1}									(3a)	HOOP	5642	16700
	GR + Max P{1}	2125	2	21	6	1.00	1.00	1.00	1.00	23a	SUST	2596	16700
	TR:Amb to T1{1}	41	8	79	1	1.00	1.00	1.00	1.00	(17)	DISP	1732	25050
	Amb to T1{1}	41	8	79	1	1.00	1.00	1.00	1.00	(17)	DISP	1732	25050
	Sus. + E1{1}	5	28	72	22	1.00	1.00			23a	OCC	3921	22211
	Sus. + E2{1}	6	5	147	10	1.00	1.00			23a	OCC	5441	22211
	Sus. + E3{1}	2	16	150	16	1.00	1.00			23a	OCC	5534	22211
	Sus. + E4{1}	3	11	69	9	1.00	1.00			23a	OCC	3698	22211
	Sus. + E5{1}	5	29	68	22	1.00	1.00			23a	OCC	3859	22211
	Sus. + E6{1}	6	6	151	10	1.00	1.00			23a	OCC	5526	22211
	Sus. + E7{1}	2	17	146	16	1.00	1.00			23a	OCC	5451	22211
	Sus. + E8{1}	3	10	73	9	1.00	1.00			23a	OCC	3781	22211
A30 -	Max P{1}									(3a)	HOOP	5642	16700
	GR + Max P{1}	2125	8	18	6	1.00	1.00	1.00	1.00	23a	SUST	2549	16700
	TR:Amb to T1{1}	41	10	46	1	1.00	1.00	1.00	1.00	(17)	DISP	1054	25050
	Amb to T1{1}	41	10	46	1	1.00	1.00	1.00	1.00	(17)	DISP	1054	25050
	Sus. + E1{1}	5	40	80	22	1.00	1.00			23a	OCC	4173	22211
	Sus. + E2{1}	7	12	170	10	1.00	1.00			23a	OCC	6009	22211
	Sus. + E3{1}	2	25	156	16	1.00	1.00			23a	OCC	5720	22211
	Sus. + E4{1}	3	19	95	9	1.00	1.00			23a	OCC	4313	22211
	Sus. + E5{1}	5	40	75	22	1.00	1.00			23a	OCC	4086	22211
	Sus. + E6{1}	7	13	175	10	1.00	1.00			23a	OCC	6110	22211
	Sus. + E7{1}	2	25	152	16	1.00	1.00			23a	OCC	5618	22211
	Sus. + E8{1}	3	19	99	9	1.00	1.00			23a	OCC	4415	22211
A30 +	Max P{1}									(3a)	HOOP	5642	16700
	GR + Max P{1}	2125	8	18	6	1.00	1.00	1.00	1.00	23a	SUST	2549	16700
	TR:Amb to T1{1}	42	10	46	1	1.00	1.00	1.00	1.00	(17)	DISP	1056	25050
	Amb to T1{1}	42	10	46	1	1.00	1.00	1.00	1.00	(17)	DISP	1056	25050
	Sus. + E1{1}	5	40	80	22	1.00	1.00			23a	OCC	4172	22211
	Sus. + E2{1}	7	12	170	10	1.00	1.00			23a	OCC	6009	22211
	Sus. + E3{1}	2	25	156	16	1.00	1.00			23a	OCC	5720	22211
	Sus. + E4{1}	3	19	95	9	1.00	1.00			23a	OCC	4313	22211
	Sus. + E5{1}	5	40	75	22	1.00	1.00			23a	OCC	4086	22211
	Sus. + E6{1}	7	13	175	10	1.00	1.00			23a	OCC	6110	22211
	Sus. + E7{1}	2	25	152	16	1.00	1.00			23a	OCC	5618	22211
	Sus. + E8{1}	3	19	99	9	1.00	1.00			23a	OCC	4415	22211
A31 -	Max P{1}									(3a)	HOOP	5642	16700
	GR + Max P{1}	2124	25	4	6	1.00	1.00	1.00	1.00	23a	SUST	2674	16700
	TR:Amb to T1{1}	42	12	69	1	1.00	1.00	1.00	1.00	(17)	DISP	1533	25050
	Amb to T1{1}	42	12	69	1	1.00	1.00	1.00	1.00	(17)	DISP	1533	25050
	Sus. + E1{1}	9	66	69	22	1.00	1.00			23a	OCC	4450	22211
	Sus. + E2{1}	10	35	137	10	1.00	1.00			23a	OCC	5699	22211
	Sus. + E3{1}	1	49	92	16	1.00	1.00			23a	OCC	4743	22211
	Sus. + E4{1}	0	32	134	9	1.00	1.00			23a	OCC	5599	22211
	Sus. + E5{1}	9	65	64	22	1.00	1.00			23a	OCC	4348	22211
	Sus. + E6{1}	10	34	140	10	1.00	1.00			23a	OCC	5759	22211
	Sus. + E7{1}	1	48	89	16	1.00	1.00			23a	OCC	4673	22211
	Sus. + E8{1}	0	33	138	9	1.00	1.00			23a	OCC	5705	22211

Primary Piping
04/24/2020 2018719 BENTLEY
07:34 AM AutoPIPE Nuclear 12.00.00.16 RESULT PAGE 282

ASME B31.3 (2016) CODE COMPLIANCE
(Moments in ft-lb , Force in lbf) (Stress in psi)

Point name	Load combination	Axial Force	In-Pl. Moment	Out-Pl. Moment	Torsion Moment	S.I.F In	S.I.F Out	Index/SIF Ax.	Index/SIF Tor.	Eq. no.	Load type	Code Stress	Code Allow.
A31 +	Max P{1}									(3a)	HOOP	5642	16700
	GR + Max P{1}	2124	25	4	6	1.00	1.00	1.00	1.00	23a	SUST	2674	16700
	TR:Amb to T1{1}	40	12	69	1	1.00	1.00	1.00	1.00	(17)	DISP	1530	25050
	Amb to T1{1}	40	12	69	1	1.00	1.00	1.00	1.00	(17)	DISP	1530	25050
	Sus. + E1{1}	9	66	69	22	1.00	1.00			23a	OCC	4450	22211
	Sus. + E2{1}	10	35	137	10	1.00	1.00			23a	OCC	5699	22211
	Sus. + E3{1}	1	49	92	16	1.00	1.00			23a	OCC	4743	22211
	Sus. + E4{1}	0	32	134	9	1.00	1.00			23a	OCC	5599	22211
	Sus. + E5{1}	9	65	64	22	1.00	1.00			23a	OCC	4348	22211
	Sus. + E6{1}	10	34	140	10	1.00	1.00			23a	OCC	5759	22211
	Sus. + E7{1}	1	48	89	16	1.00	1.00			23a	OCC	4672	22211
	Sus. + E8{1}	0	33	138	9	1.00	1.00			23a	OCC	5705	22211
A07 N-	Max P{1}									(3a)	HOOP	5642	16700
	GR + Max P{1}	2124	16	9	6	1.00	1.00	1.00	1.00	23a	SUST	2514	16700
	TR:Amb to T1{1}	40	9	98	1	1.00	1.00	1.00	1.00	(17)	DISP	2136	25050
	Amb to T1{1}	40	9	98	1	1.00	1.00	1.00	1.00	(17)	DISP	2136	25050
	Sus. + E1{1}	9	50	42	22	1.00	1.00			23a	OCC	3662	22211
	Sus. + E2{1}	10	24	139	10	1.00	1.00			23a	OCC	5475	22211
	Sus. + E3{1}	2	37	88	16	1.00	1.00			23a	OCC	4380	22211
	Sus. + E4{1}	1	22	108	9	1.00	1.00			23a	OCC	4778	22211
	Sus. + E5{1}	9	50	38	22	1.00	1.00			23a	OCC	3600	22211
	Sus. + E6{1}	11	23	141	10	1.00	1.00			23a	OCC	5531	22211
	Sus. + E7{1}	2	36	85	16	1.00	1.00			23a	OCC	4322	22211
	Sus. + E8{1}	1	22	112	9	1.00	1.00			23a	OCC	4868	22211
A07 N+	Max P{1}									(3a)	HOOP	5642	16700
	GR + Max P{1}	2124	8	16	6	1.00	1.00	1.00	1.00	23a	SUST	2514	16700
	TR:Amb to T1{1}	40	97	12	1	1.00	1.00	1.00	1.00	(17)	DISP	2136	25050
	Amb to T1{1}	40	97	12	1	1.00	1.00	1.00	1.00	(17)	DISP	2136	25050
	Sus. + E1{1}	9	42	49	22	1.00	1.00			23a	OCC	3662	22211
	Sus. + E2{1}	10	138	28	10	1.00	1.00			23a	OCC	5475	22211
	Sus. + E3{1}	2	88	34	16	1.00	1.00			23a	OCC	4380	22211
	Sus. + E4{1}	1	108	19	9	1.00	1.00			23a	OCC	4778	22211
	Sus. + E5{1}	9	39	49	22	1.00	1.00			23a	OCC	3600	22211
	Sus. + E6{1}	11	141	28	10	1.00	1.00			23a	OCC	5531	22211
	Sus. + E7{1}	2	85	34	16	1.00	1.00			23a	OCC	4322	22211
	Sus. + E8{1}	1	112	19	9	1.00	1.00			23a	OCC	4868	22211
A07 F-	Max P{1}									(3a)	HOOP	5642	16700
	GR + Max P{1}	2129	26	14	0	1.00	1.00	1.00	1.00	23a	SUST	2764	16700
	TR:Amb to T1{1}	58	151	11	0	1.00	1.00	1.00	1.00	(17)	DISP	3298	25050
	Amb to T1{1}	58	151	11	0	1.00	1.00	1.00	1.00	(17)	DISP	3298	25050
	Sus. + E1{1}	56	133	30	1	1.00	1.00			23a	OCC	5275	22211
	Sus. + E2{1}	0	105	21	1	1.00	1.00			23a	OCC	4570	22211
	Sus. + E3{1}	11	45	20	1	1.00	1.00			23a	OCC	3247	22211
	Sus. + E4{1}	53	80	17	1	1.00	1.00			23a	OCC	4054	22211
	Sus. + E5{1}	55	132	34	1	1.00	1.00			23a	OCC	5276	22211
	Sus. + E6{1}	0	105	24	1	1.00	1.00			23a	OCC	4580	22211
	Sus. + E7{1}	11	45	24	1	1.00	1.00			23a	OCC	3275	22211
	Sus. + E8{1}	54	81	14	1	1.00	1.00			23a	OCC	4064	22211

ASME B31.3 (2016) CODE COMPLIANCE
(Moments in ft-lb , Force in lbf) (Stress in psi)

Point name	Load combination	Axial Force	In-Pl. Moment	Out-Pl. Moment	Torsion Moment	S.I.F In	S.I.F Out	Index/SIF Ax.	Index/SIF Tor.	Eq. no.	Load type	Code Stress	Code Allow.
A07 F+	Max P{1}									(3a)	HOOP	5642	16700
	GR + Max P{1}	2129	14	25	0	1.00	1.00	1.00	1.00	23a	SUST	2764	16700
	TR:Amb to T1{1}	58	7	151	0	1.00	1.00	1.00	1.00	(17)	DISP	3298	25050
	Amb to T1{1}	58	7	151	0	1.00	1.00	1.00	1.00	(17)	DISP	3298	25050
	Sus. + E1{1}	56	28	133	1	1.00	1.00			23a	OCC	5275	22211
	Sus. + E2{1}	0	19	105	1	1.00	1.00			23a	OCC	4570	22211
	Sus. + E3{1}	11	21	45	1	1.00	1.00			23a	OCC	3247	22211
	Sus. + E4{1}	53	16	80	1	1.00	1.00			23a	OCC	4054	22211
	Sus. + E5{1}	55	32	133	1	1.00	1.00			23a	OCC	5276	22211
	Sus. + E6{1}	0	23	105	1	1.00	1.00			23a	OCC	4580	22211
	Sus. + E7{1}	11	25	45	1	1.00	1.00			23a	OCC	3275	22211
	Sus. + E8{1}	54	16	80	1	1.00	1.00			23a	OCC	4064	22211
A32 -	Max P{1}									(3a)	HOOP	5642	16700
	GR + Max P{1}	2129	22	24	0	1.00	1.00	1.00	1.00	23a	SUST	2836	16700
	TR:Amb to T1{1}	58	9	132	0	1.00	1.00	1.00	1.00	(17)	DISP	2876	25050
	Amb to T1{1}	58	9	132	0	1.00	1.00	1.00	1.00	(17)	DISP	2876	25050
	Sus. + E1{1}	56	40	124	1	1.00	1.00			23a	OCC	5203	22211
	Sus. + E2{1}	1	28	96	1	1.00	1.00			23a	OCC	4464	22211
	Sus. + E3{1}	11	31	40	1	1.00	1.00			23a	OCC	3259	22211
	Sus. + E4{1}	52	25	75	1	1.00	1.00			23a	OCC	4054	22211
	Sus. + E5{1}	54	46	124	1	1.00	1.00			23a	OCC	5216	22211
	Sus. + E6{1}	0	33	96	1	1.00	1.00			23a	OCC	4479	22211
	Sus. + E7{1}	10	36	40	1	1.00	1.00			23a	OCC	3326	22211
	Sus. + E8{1}	53	24	76	1	1.00	1.00			23a	OCC	4064	22211
A32 +	Max P{1}									(3a)	HOOP	5642	16700
	GR + Max P{1}	2129	22	24	0	1.00	1.00	1.00	1.00	23a	SUST	2836	16700
	TR:Amb to T1{1}	90	9	132	0	1.00	1.00	1.00	1.00	(17)	DISP	2906	25050
	Amb to T1{1}	90	9	132	0	1.00	1.00	1.00	1.00	(17)	DISP	2906	25050
	Sus. + E1{1}	56	40	124	1	1.00	1.00			23a	OCC	5202	22211
	Sus. + E2{1}	1	28	96	1	1.00	1.00			23a	OCC	4464	22211
	Sus. + E3{1}	11	31	40	1	1.00	1.00			23a	OCC	3259	22211
	Sus. + E4{1}	52	25	75	1	1.00	1.00			23a	OCC	4053	22211
	Sus. + E5{1}	54	46	124	1	1.00	1.00			23a	OCC	5216	22211
	Sus. + E6{1}	0	33	96	1	1.00	1.00			23a	OCC	4478	22211
	Sus. + E7{1}	10	36	40	1	1.00	1.00			23a	OCC	3326	22211
	Sus. + E8{1}	53	24	76	1	1.00	1.00			23a	OCC	4064	22211
A33 -	Max P{1}									(3a)	HOOP	5642	16700
	GR + Max P{1}	2127	46	0	0	1.00	1.00	1.00	1.00	23a	SUST	3153	16700
	TR:Amb to T1{1}	90	2	54	0	1.00	1.00	1.00	1.00	(17)	DISP	1235	25050
	Amb to T1{1}	90	2	54	0	1.00	1.00	1.00	1.00	(17)	DISP	1235	25050
	Sus. + E1{1}	45	55	77	1	1.00	1.00			23a	OCC	4943	22211
	Sus. + E2{1}	11	53	121	1	1.00	1.00			23a	OCC	5884	22211
	Sus. + E3{1}	0	53	102	1	1.00	1.00			23a	OCC	5451	22211
	Sus. + E4{1}	42	50	55	1	1.00	1.00			23a	OCC	4443	22211
	Sus. + E5{1}	44	48	79	1	1.00	1.00			23a	OCC	4968	22211
	Sus. + E6{1}	11	47	122	1	1.00	1.00			23a	OCC	5918	22211
	Sus. + E7{1}	0	47	100	1	1.00	1.00			23a	OCC	5417	22211
	Sus. + E8{1}	43	50	54	1	1.00	1.00			23a	OCC	4407	22211

Primary Piping
04/24/2020 2018719 BENTLEY
07:34 AM AutoPIPE Nuclear 12.00.00.16 RESULT PAGE 284

ASME B31.3 (2016) CODE COMPLIANCE
(Moments in ft-lb , Force in lbf) (Stress in psi)

Point name	Load combination	Axial Force	In-Pl. Moment	Out-Pl. Moment	Torsion Moment	S.I.F In	S.I.F Out	Index/SIF Ax.	Index/SIF Tor.	Eq. no.	Load type	Code Stress	Code Allow.
A33	+ Max P{1}									(3a)	HOOP	5642	16700
	GR + Max P{1}	2126	46	0	0	1.00	1.00	1.00	1.00	23a	SUST	3152	16700
	TR:Amb to T1{1}	144	2	54	0	1.00	1.00	1.00	1.00	(17)	DISP	1285	25050
	Amb to T1{1}	144	2	54	0	1.00	1.00	1.00	1.00	(17)	DISP	1285	25050
	Sus. + E1{1}	45	55	77	1	1.00	1.00			23a	OCC	4942	22211
	Sus. + E2{1}	11	53	121	1	1.00	1.00			23a	OCC	5883	22211
	Sus. + E3{1}	0	53	102	1	1.00	1.00			23a	OCC	5450	22211
	Sus. + E4{1}	42	50	55	1	1.00	1.00			23a	OCC	4443	22211
	Sus. + E5{1}	44	48	79	1	1.00	1.00			23a	OCC	4967	22211
	Sus. + E6{1}	11	47	122	1	1.00	1.00			23a	OCC	5917	22211
	Sus. + E7{1}	0	47	100	1	1.00	1.00			23a	OCC	5416	22211
	Sus. + E8{1}	43	50	54	1	1.00	1.00			23a	OCC	4406	22211
A34	- Max P{1}									(3a)	HOOP	5642	16700
	GR + Max P{1}	2124	39	0	0	1.00	1.00	1.00	1.00	23a	SUST	2985	16700
	TR:Amb to T1{1}	144	1	2	0	1.00	1.00	1.00	1.00	(17)	DISP	173	25050
	Amb to T1{1}	144	1	2	0	1.00	1.00	1.00	1.00	(17)	DISP	173	25050
	Sus. + E1{1}	35	41	6	1	1.00	1.00			23a	OCC	3148	22211
	Sus. + E2{1}	21	42	7	1	1.00	1.00			23a	OCC	3167	22211
	Sus. + E3{1}	10	42	5	1	1.00	1.00			23a	OCC	3111	22211
	Sus. + E4{1}	32	42	2	1	1.00	1.00			23a	OCC	3106	22211
	Sus. + E5{1}	34	43	6	1	1.00	1.00			23a	OCC	3173	22211
	Sus. + E6{1}	21	43	6	1	1.00	1.00			23a	OCC	3168	22211
	Sus. + E7{1}	10	43	4	1	1.00	1.00			23a	OCC	3112	22211
	Sus. + E8{1}	33	42	2	1	1.00	1.00			23a	OCC	3099	22211
A34	+ Max P{1}									(3a)	HOOP	5642	16700
	GR + Max P{1}	2124	39	0	0	1.00	1.00	1.00	1.00	23a	SUST	2985	16700
	TR:Amb to T1{1}	190	1	2	0	1.00	1.00	1.00	1.00	(17)	DISP	216	25050
	Amb to T1{1}	190	1	2	0	1.00	1.00	1.00	1.00	(17)	DISP	216	25050
	Sus. + E1{1}	35	41	6	1	1.00	1.00			23a	OCC	3148	22211
	Sus. + E2{1}	21	42	7	1	1.00	1.00			23a	OCC	3167	22211
	Sus. + E3{1}	10	42	5	1	1.00	1.00			23a	OCC	3111	22211
	Sus. + E4{1}	32	42	2	1	1.00	1.00			23a	OCC	3106	22211
	Sus. + E5{1}	34	43	6	1	1.00	1.00			23a	OCC	3173	22211
	Sus. + E6{1}	21	43	6	1	1.00	1.00			23a	OCC	3168	22211
	Sus. + E7{1}	10	43	4	1	1.00	1.00			23a	OCC	3112	22211
	Sus. + E8{1}	33	42	2	1	1.00	1.00			23a	OCC	3098	22211
A35	- Max P{1}									(3a)	HOOP	5642	16700
	GR + Max P{1}	2123	44	1	0	1.00	1.00	1.00	1.00	23a	SUST	3106	16700
	TR:Amb to T1{1}	190	0	13	0	1.00	1.00	1.00	1.00	(17)	DISP	452	25050
	Amb to T1{1}	190	0	13	0	1.00	1.00	1.00	1.00	(17)	DISP	452	25050
	Sus. + E1{1}	25	47	14	1	1.00	1.00			23a	OCC	3440	22211
	Sus. + E2{1}	31	49	6	1	1.00	1.00			23a	OCC	3292	22211
	Sus. + E3{1}	20	47	3	1	1.00	1.00			23a	OCC	3196	22211
	Sus. + E4{1}	22	48	13	1	1.00	1.00			23a	OCC	3409	22211
	Sus. + E5{1}	24	49	15	1	1.00	1.00			23a	OCC	3458	22211
	Sus. + E6{1}	31	48	6	1	1.00	1.00			23a	OCC	3277	22211
	Sus. + E7{1}	20	49	2	1	1.00	1.00			23a	OCC	3240	22211
	Sus. + E8{1}	22	48	12	1	1.00	1.00			23a	OCC	3398	22211

ASME B31.3 (2016) CODE COMPLIANCE
(Moments in ft-lb , Force in lbf) (Stress in psi)

Point name	Load combination	Axial Force	In-Pl. Moment	Out-Pl. Moment	Torsion Moment	S.I.F In	S.I.F Out	Index/SIF Ax.	Index/SIF Tor.	Eq. no.	Load type	Code Stress	Code Allow.
A35	+ Max P{1}									(3a)	HOOP	5642	16700
	GR + Max P{1}	2122	44	1	0	1.00	1.00	1.00	1.00	23a	SUST	3105	16700
	TR:Amb to T1{1}	174	0	13	0	1.00	1.00	1.00	1.00	(17)	DISP	437	25050
	Amb to T1{1}	174	0	13	0	1.00	1.00	1.00	1.00	(17)	DISP	437	25050
	Sus. + E1{1}	25	47	14	1	1.00	1.00			23a	OCC	3440	22211
	Sus. + E2{1}	31	49	6	1	1.00	1.00			23a	OCC	3292	22211
	Sus. + E3{1}	20	47	3	1	1.00	1.00			23a	OCC	3195	22211
	Sus. + E4{1}	22	48	13	1	1.00	1.00			23a	OCC	3409	22211
	Sus. + E5{1}	24	49	15	1	1.00	1.00			23a	OCC	3458	22211
	Sus. + E6{1}	31	48	6	1	1.00	1.00			23a	OCC	3277	22211
	Sus. + E7{1}	20	49	2	1	1.00	1.00			23a	OCC	3239	22211
	Sus. + E8{1}	22	48	12	1	1.00	1.00			23a	OCC	3397	22211
A36	- Max P{1}									(3a)	HOOP	5642	16700
	GR + Max P{1}	2120	28	2	0	1.00	1.00	1.00	1.00	23a	SUST	2731	16700
	TR:Amb to T1{1}	174	0	53	0	1.00	1.00	1.00	1.00	(17)	DISP	1296	25050
	Amb to T1{1}	174	0	53	0	1.00	1.00	1.00	1.00	(17)	DISP	1296	25050
	Sus. + E1{1}	15	31	72	1	1.00	1.00			23a	OCC	4324	22211
	Sus. + E2{1}	41	30	13	1	1.00	1.00			23a	OCC	3030	22211
	Sus. + E3{1}	30	30	12	1	1.00	1.00			23a	OCC	3002	22211
	Sus. + E4{1}	12	30	72	1	1.00	1.00			23a	OCC	4318	22211
	Sus. + E5{1}	14	30	71	1	1.00	1.00			23a	OCC	4310	22211
	Sus. + E6{1}	42	30	13	1	1.00	1.00			23a	OCC	3033	22211
	Sus. + E7{1}	30	30	13	1	1.00	1.00			23a	OCC	3014	22211
	Sus. + E8{1}	12	30	72	1	1.00	1.00			23a	OCC	4332	22211
A36	+ Max P{1}									(3a)	HOOP	5642	16700
	GR + Max P{1}	2120	28	2	0	1.00	1.00	1.00	1.00	23a	SUST	2731	16700
	TR:Amb to T1{1}	151	0	53	0	1.00	1.00	1.00	1.00	(17)	DISP	1274	25050
	Amb to T1{1}	151	0	53	0	1.00	1.00	1.00	1.00	(17)	DISP	1274	25050
	Sus. + E1{1}	15	31	72	1	1.00	1.00			23a	OCC	4324	22211
	Sus. + E2{1}	41	30	13	1	1.00	1.00			23a	OCC	3030	22211
	Sus. + E3{1}	30	30	12	1	1.00	1.00			23a	OCC	3002	22211
	Sus. + E4{1}	12	30	72	1	1.00	1.00			23a	OCC	4318	22211
	Sus. + E5{1}	14	30	71	1	1.00	1.00			23a	OCC	4310	22211
	Sus. + E6{1}	42	30	13	1	1.00	1.00			23a	OCC	3033	22211
	Sus. + E7{1}	30	30	13	1	1.00	1.00			23a	OCC	3014	22211
	Sus. + E8{1}	12	30	72	1	1.00	1.00			23a	OCC	4332	22211
A37	- Max P{1}									(3a)	HOOP	5642	16700
	GR + Max P{1}	2120	37	2	0	1.00	1.00	1.00	1.00	23a	SUST	2934	16700
	TR:Amb to T1{1}	151	3	71	0	1.00	1.00	1.00	1.00	(17)	DISP	1654	25050
	Amb to T1{1}	151	3	71	0	1.00	1.00	1.00	1.00	(17)	DISP	1654	25050
	Sus. + E1{1}	11	45	115	1	1.00	1.00			23a	OCC	5489	22211
	Sus. + E2{1}	44	40	35	1	1.00	1.00			23a	OCC	3711	22211
	Sus. + E3{1}	34	48	34	1	1.00	1.00			23a	OCC	3722	22211
	Sus. + E4{1}	9	42	114	1	1.00	1.00			23a	OCC	5467	22211
	Sus. + E5{1}	11	40	114	1	1.00	1.00			23a	OCC	5467	22211
	Sus. + E6{1}	45	39	33	1	1.00	1.00			23a	OCC	3683	22211
	Sus. + E7{1}	33	42	35	1	1.00	1.00			23a	OCC	3709	22211
	Sus. + E8{1}	9	37	115	1	1.00	1.00			23a	OCC	5480	22211

ASME B31.3 (2016) CODE COMPLIANCE
(Moments in ft-lb , Force in lbf) (Stress in psi)

Point name	Load combination	Axial Force	In-Pl. Moment	Out-Pl. Moment	Torsion Moment	S.I.F In	S.I.F Out	Index/SIF Ax.	Index/SIF Tor.	Eq. no.	Load type	Code Stress	Code Allow.
A37	+ Max P{1}									(3a)	HOOP	5642	16700
	GR + Max P{1}	2121	37	2	0	1.00	1.00	1.00	1.00	23a	SUST	2935	16700
	TR:Amb to T1{1}	101	3	71	0	1.00	1.00	1.00	1.00	(17)	DISP	1607	25050
	Amb to T1{1}	101	3	71	0	1.00	1.00	1.00	1.00	(17)	DISP	1607	25050
	Sus. + E1{1}	11	45	115	1	1.00	1.00			23a	OCC	5491	22211
	Sus. + E2{1}	44	40	35	1	1.00	1.00			23a	OCC	3713	22211
	Sus. + E3{1}	34	48	34	1	1.00	1.00			23a	OCC	3724	22211
	Sus. + E4{1}	9	42	114	1	1.00	1.00			23a	OCC	5468	22211
	Sus. + E5{1}	11	40	114	1	1.00	1.00			23a	OCC	5468	22211
	Sus. + E6{1}	45	39	33	1	1.00	1.00			23a	OCC	3684	22211
	Sus. + E7{1}	33	42	35	1	1.00	1.00			23a	OCC	3711	22211
	Sus. + E8{1}	9	37	115	1	1.00	1.00			23a	OCC	5482	22211
A38	- Max P{1}									(3a)	HOOP	5642	16700
	GR + Max P{1}	2120	22	6	0	1.00	1.00	1.00	1.00	23a	SUST	2628	16700
	TR:Amb to T1{1}	101	8	187	0	1.00	1.00	1.00	1.00	(17)	DISP	4098	25050
	Amb to T1{1}	101	8	187	0	1.00	1.00	1.00	1.00	(17)	DISP	4098	25050
	Sus. + E1{1}	1	35	56	1	1.00	1.00			23a	OCC	3776	22211
	Sus. + E2{1}	54	25	76	1	1.00	1.00			23a	OCC	4249	22211
	Sus. + E3{1}	44	41	70	1	1.00	1.00			23a	OCC	4182	22211
	Sus. + E4{1}	1	26	54	1	1.00	1.00			23a	OCC	3717	22211
	Sus. + E5{1}	1	40	56	1	1.00	1.00			23a	OCC	3816	22211
	Sus. + E6{1}	55	26	76	1	1.00	1.00			23a	OCC	4266	22211
	Sus. + E7{1}	43	47	70	1	1.00	1.00			23a	OCC	4210	22211
	Sus. + E8{1}	1	32	54	1	1.00	1.00			23a	OCC	3730	22211
A38	+ Max P{1}									(3a)	HOOP	5642	16700
	GR + Max P{1}	2120	22	6	0	1.00	1.00	1.00	1.00	23a	SUST	2627	16700
	TR:Amb to T1{1}	79	8	187	0	1.00	1.00	1.00	1.00	(17)	DISP	4078	25050
	Amb to T1{1}	79	8	187	0	1.00	1.00	1.00	1.00	(17)	DISP	4078	25050
	Sus. + E1{1}	1	35	56	1	1.00	1.00			23a	OCC	3776	22211
	Sus. + E2{1}	54	25	76	1	1.00	1.00			23a	OCC	4249	22211
	Sus. + E3{1}	44	41	70	1	1.00	1.00			23a	OCC	4182	22211
	Sus. + E4{1}	1	26	54	1	1.00	1.00			23a	OCC	3717	22211
	Sus. + E5{1}	1	40	56	1	1.00	1.00			23a	OCC	3816	22211
	Sus. + E6{1}	55	26	76	1	1.00	1.00			23a	OCC	4266	22211
	Sus. + E7{1}	43	47	70	1	1.00	1.00			23a	OCC	4209	22211
	Sus. + E8{1}	1	32	54	1	1.00	1.00			23a	OCC	3730	22211
A08 N	- Max P{1}									(3a)	HOOP	5642	16700
	GR + Max P{1}	2120	15	6	0	1.00	1.00	1.00	1.00	23a	SUST	2461	16700
	TR:Amb to T1{1}	79	5	211	0	1.00	1.00	1.00	1.00	(17)	DISP	4594	25050
	Amb to T1{1}	79	5	211	0	1.00	1.00	1.00	1.00	(17)	DISP	4594	25050
	Sus. + E1{1}	1	25	62	1	1.00	1.00			23a	OCC	3741	22211
	Sus. + E2{1}	55	16	79	1	1.00	1.00			23a	OCC	4151	22211
	Sus. + E3{1}	44	30	73	1	1.00	1.00			23a	OCC	4054	22211
	Sus. + E4{1}	2	18	61	1	1.00	1.00			23a	OCC	3691	22211
	Sus. + E5{1}	1	29	62	1	1.00	1.00			23a	OCC	3763	22211
	Sus. + E6{1}	56	17	79	1	1.00	1.00			23a	OCC	4167	22211
	Sus. + E7{1}	43	34	73	1	1.00	1.00			23a	OCC	4064	22211
	Sus. + E8{1}	2	21	61	1	1.00	1.00			23a	OCC	3696	22211

ASME B31.3 (2016) CODE COMPLIANCE
(Moments in ft-lb , Force in lbf) (Stress in psi)

Point name	Load combination	Axial Force	In-Pl. Moment	Out-Pl. Moment	Torsion Moment	S.I.F In	S.I.F Out	Index/SIF Ax.	Index/SIF Tor.	Eq. no.	Load type	Code Stress	Code Allow.
A08 N+	Max P{1}									(3a)	HOOP	5642	16700
	GR + Max P{1}	2120	7	14	0	1.00	1.00	1.00	1.00	23a	SUST	2461	16700
	TR:Amb to T1{1}	79	211	10	0	1.00	1.00	1.00	1.00	(17)	DISP	4594	25050
	Amb to T1{1}	79	211	10	0	1.00	1.00	1.00	1.00	(17)	DISP	4594	25050
	Sus. + E1{1}	1	63	24	1	1.00	1.00			23a	OCC	3741	22211
	Sus. + E2{1}	55	79	17	1	1.00	1.00			23a	OCC	4151	22211
	Sus. + E3{1}	44	73	31	1	1.00	1.00			23a	OCC	4054	22211
	Sus. + E4{1}	2	61	19	1	1.00	1.00			23a	OCC	3691	22211
	Sus. + E5{1}	1	63	28	1	1.00	1.00			23a	OCC	3763	22211
	Sus. + E6{1}	56	80	15	1	1.00	1.00			23a	OCC	4167	22211
	Sus. + E7{1}	43	73	35	1	1.00	1.00			23a	OCC	4064	22211
	Sus. + E8{1}	2	61	23	1	1.00	1.00			23a	OCC	3696	22211
A08 F-	Max P{1}									(3a)	HOOP	5642	16700
	GR + Max P{1}	2120	2	13	3	1.00	1.00	1.00	1.00	23a	SUST	2388	16700
	TR:Amb to T1{1}	48	120	12	1	1.00	1.00	1.00	1.00	(17)	DISP	2624	25050
	Amb to T1{1}	48	120	12	1	1.00	1.00	1.00	1.00	(17)	DISP	2624	25050
	Sus. + E1{1}	7	97	29	8	1.00	1.00			23a	OCC	4577	22211
	Sus. + E2{1}	0	92	14	4	1.00	1.00			23a	OCC	4420	22211
	Sus. + E3{1}	0	69	38	11	1.00	1.00			23a	OCC	4017	22211
	Sus. + E4{1}	7	101	21	6	1.00	1.00			23a	OCC	4653	22211
	Sus. + E5{1}	7	96	29	8	1.00	1.00			23a	OCC	4552	22211
	Sus. + E6{1}	0	95	14	4	1.00	1.00			23a	OCC	4483	22211
	Sus. + E7{1}	0	66	38	11	1.00	1.00			23a	OCC	3960	22211
	Sus. + E8{1}	7	103	21	6	1.00	1.00			23a	OCC	4677	22211
A08 F+	Max P{1}									(3a)	HOOP	5642	16700
	GR + Max P{1}	2120	12	2	3	1.00	1.00	1.00	1.00	23a	SUST	2388	16700
	TR:Amb to T1{1}	48	8	120	1	1.00	1.00	1.00	1.00	(17)	DISP	2624	25050
	Amb to T1{1}	48	8	120	1	1.00	1.00	1.00	1.00	(17)	DISP	2624	25050
	Sus. + E1{1}	7	31	97	8	1.00	1.00			23a	OCC	4577	22211
	Sus. + E2{1}	0	16	92	4	1.00	1.00			23a	OCC	4420	22211
	Sus. + E3{1}	0	40	68	11	1.00	1.00			23a	OCC	4017	22211
	Sus. + E4{1}	7	17	102	6	1.00	1.00			23a	OCC	4653	22211
	Sus. + E5{1}	7	31	96	8	1.00	1.00			23a	OCC	4552	22211
	Sus. + E6{1}	0	16	95	4	1.00	1.00			23a	OCC	4483	22211
	Sus. + E7{1}	0	40	66	11	1.00	1.00			23a	OCC	3960	22211
	Sus. + E8{1}	7	17	103	6	1.00	1.00			23a	OCC	4677	22211
A39 -	Max P{1}									(3a)	HOOP	5642	16700
	GR + Max P{1}	2120	21	1	3	1.00	1.00	1.00	1.00	23a	SUST	2567	16700
	TR:Amb to T1{1}	48	11	81	1	1.00	1.00	1.00	1.00	(17)	DISP	1790	25050
	Amb to T1{1}	48	11	81	1	1.00	1.00	1.00	1.00	(17)	DISP	1790	25050
	Sus. + E1{1}	6	43	98	8	1.00	1.00			23a	OCC	4825	22211
	Sus. + E2{1}	0	25	121	4	1.00	1.00			23a	OCC	5282	22211
	Sus. + E3{1}	1	54	93	11	1.00	1.00			23a	OCC	4769	22211
	Sus. + E4{1}	6	27	105	6	1.00	1.00			23a	OCC	4916	22211
	Sus. + E5{1}	6	42	97	8	1.00	1.00			23a	OCC	4791	22211
	Sus. + E6{1}	0	26	125	4	1.00	1.00			23a	OCC	5358	22211
	Sus. + E7{1}	1	53	89	11	1.00	1.00			23a	OCC	4691	22211
	Sus. + E8{1}	6	26	106	6	1.00	1.00			23a	OCC	4943	22211

Primary Piping
04/24/2020 2018719 BENTLEY
07:34 AM AutoPIPE Nuclear 12.00.00.16 RESULT PAGE 288

ASME B31.3 (2016) CODE COMPLIANCE
(Moments in ft-lb , Force in lbf) (Stress in psi)

Point name	Load combination	Axial Force	In-Pl. Moment	Out-Pl. Moment	Torsion Moment	S.I.F In	S.I.F Out	Index/SIF Ax.	Index/SIF Tor.	Eq. no.	Load type	Code Stress	Code Allow.
A39	+ Max P{1}									(3a)	HOOP	5642	16700
	GR + Max P{1}	2120	21	1	3	1.00	1.00	1.00	1.00	23a	SUST	2567	16700
	TR:Amb to T1{1}	47	11	81	1	1.00	1.00	1.00	1.00	(17)	DISP	1789	25050
	Amb to T1{1}	47	11	81	1	1.00	1.00	1.00	1.00	(17)	DISP	1789	25050
	Sus. + E1{1}	6	43	98	8	1.00	1.00			23a	OCC	4824	22211
	Sus. + E2{1}	0	25	121	4	1.00	1.00			23a	OCC	5282	22211
	Sus. + E3{1}	1	54	93	11	1.00	1.00			23a	OCC	4769	22211
	Sus. + E4{1}	6	27	105	6	1.00	1.00			23a	OCC	4916	22211
	Sus. + E5{1}	6	42	97	8	1.00	1.00			23a	OCC	4791	22211
	Sus. + E6{1}	0	26	125	4	1.00	1.00			23a	OCC	5358	22211
	Sus. + E7{1}	1	53	89	11	1.00	1.00			23a	OCC	4691	22211
	Sus. + E8{1}	6	26	106	6	1.00	1.00			23a	OCC	4943	22211
A40	- Max P{1}									(3a)	HOOP	5642	16700
	GR + Max P{1}	2119	12	10	3	1.00	1.00	1.00	1.00	23a	SUST	2452	16700
	TR:Amb to T1{1}	47	8	120	1	1.00	1.00	1.00	1.00	(17)	DISP	2624	25050
	Amb to T1{1}	47	8	120	1	1.00	1.00	1.00	1.00	(17)	DISP	2624	25050
	Sus. + E1{1}	2	12	137	8	1.00	1.00			23a	OCC	5319	22211
	Sus. + E2{1}	5	14	200	4	1.00	1.00			23a	OCC	6740	22211
	Sus. + E3{1}	5	23	197	11	1.00	1.00			23a	OCC	6693	22211
	Sus. + E4{1}	2	20	153	6	1.00	1.00			23a	OCC	5678	22211
	Sus. + E5{1}	2	13	134	8	1.00	1.00			23a	OCC	5259	22211
	Sus. + E6{1}	5	15	201	4	1.00	1.00			23a	OCC	6772	22211
	Sus. + E7{1}	5	21	196	11	1.00	1.00			23a	OCC	6659	22211
	Sus. + E8{1}	2	18	155	6	1.00	1.00			23a	OCC	5737	22211
A40	+ Max P{1}									(3a)	HOOP	5642	16700
	GR + Max P{1}	2119	12	10	4	1.00	1.00	1.00	1.00	23a	SUST	2452	16700
	TR:Amb to T1{1}	45	8	120	1	1.00	1.00	1.00	1.00	(17)	DISP	2623	25050
	Amb to T1{1}	45	8	120	1	1.00	1.00	1.00	1.00	(17)	DISP	2623	25050
	Sus. + E1{1}	2	12	137	8	1.00	1.00			23a	OCC	5319	22211
	Sus. + E2{1}	5	14	200	4	1.00	1.00			23a	OCC	6740	22211
	Sus. + E3{1}	5	23	197	11	1.00	1.00			23a	OCC	6693	22211
	Sus. + E4{1}	2	20	153	6	1.00	1.00			23a	OCC	5678	22211
	Sus. + E5{1}	2	13	134	8	1.00	1.00			23a	OCC	5259	22211
	Sus. + E6{1}	5	15	201	4	1.00	1.00			23a	OCC	6772	22211
	Sus. + E7{1}	5	21	196	11	1.00	1.00			23a	OCC	6659	22211
	Sus. + E8{1}	2	18	155	6	1.00	1.00			23a	OCC	5736	22211
A09 N	- Max P{1}									(3a)	HOOP	5642	16700
	GR + Max P{1}	2119	5	12	4	1.00	1.00	1.00	1.00	23a	SUST	2388	16700
	TR:Amb to T1{1}	45	7	152	1	1.00	1.00	1.00	1.00	(17)	DISP	3306	25050
	Amb to T1{1}	45	7	152	1	1.00	1.00	1.00	1.00	(17)	DISP	3306	25050
	Sus. + E1{1}	1	5	121	8	1.00	1.00			23a	OCC	4859	22211
	Sus. + E2{1}	5	7	153	4	1.00	1.00			23a	OCC	5593	22211
	Sus. + E3{1}	6	14	152	11	1.00	1.00			23a	OCC	5583	22211
	Sus. + E4{1}	1	11	133	6	1.00	1.00			23a	OCC	5134	22211
	Sus. + E5{1}	1	5	119	8	1.00	1.00			23a	OCC	4805	22211
	Sus. + E6{1}	5	7	155	4	1.00	1.00			23a	OCC	5622	22211
	Sus. + E7{1}	6	13	151	11	1.00	1.00			23a	OCC	5552	22211
	Sus. + E8{1}	1	11	135	6	1.00	1.00			23a	OCC	5188	22211

ASME B31.3 (2016) CODE COMPLIANCE
(Moments in ft-lb , Force in lbf) (Stress in psi)

Point name	Load combination	Axial Force	In-Pl. Moment	Out-Pl. Moment	Torsion Moment	S.I.F In	S.I.F Out	Index/SIF Ax.	Index/SIF Tor.	Eq. no.	Load type	Code Stress	Code Allow.
A09 N+	Max P{1}									(3a)	HOOP	5642	16700
	GR + Max P{1}	2119	12	5	4	1.00	1.00	1.00	1.00	23a	SUST	2388	16700
	TR:Amb to T1{1}	45	152	8	1	1.00	1.00	1.00	1.00	(17)	DISP	3306	25050
	Amb to T1{1}	45	152	8	1	1.00	1.00	1.00	1.00	(17)	DISP	3306	25050
	Sus. + E1{1}	1	121	6	8	1.00	1.00			23a	OCC	4859	22211
	Sus. + E2{1}	5	153	6	4	1.00	1.00			23a	OCC	5593	22211
	Sus. + E3{1}	6	153	12	11	1.00	1.00			23a	OCC	5583	22211
	Sus. + E4{1}	1	133	12	6	1.00	1.00			23a	OCC	5134	22211
	Sus. + E5{1}	1	119	6	8	1.00	1.00			23a	OCC	4805	22211
	Sus. + E6{1}	5	155	6	4	1.00	1.00			23a	OCC	5622	22211
	Sus. + E7{1}	6	151	12	11	1.00	1.00			23a	OCC	5552	22211
	Sus. + E8{1}	1	135	12	6	1.00	1.00			23a	OCC	5188	22211
A09 F-	Max P{1}									(3a)	HOOP	5642	16700
	GR + Max P{1}	2118	13	22	0	1.00	1.00	1.00	1.00	23a	SUST	2682	16700
	TR:Amb to T1{1}	64	209	9	0	1.00	1.00	1.00	1.00	(17)	DISP	4529	25050
	Amb to T1{1}	64	209	9	0	1.00	1.00	1.00	1.00	(17)	DISP	4529	25050
	Sus. + E1{1}	29	18	30	0	1.00	1.00			23a	OCC	2908	22211
	Sus. + E2{1}	90	126	24	0	1.00	1.00			23a	OCC	5308	22211
	Sus. + E3{1}	87	116	24	0	1.00	1.00			23a	OCC	5092	22211
	Sus. + E4{1}	37	18	26	1	1.00	1.00			23a	OCC	2852	22211
	Sus. + E5{1}	29	17	26	0	1.00	1.00			23a	OCC	2838	22211
	Sus. + E6{1}	90	126	23	0	1.00	1.00			23a	OCC	5305	22211
	Sus. + E7{1}	87	116	24	0	1.00	1.00			23a	OCC	5098	22211
	Sus. + E8{1}	37	18	29	1	1.00	1.00			23a	OCC	2907	22211
A09 F+	Max P{1}									(3a)	HOOP	5642	16700
	GR + Max P{1}	2118	22	14	0	1.00	1.00	1.00	1.00	23a	SUST	2682	16700
	TR:Amb to T1{1}	64	3	209	0	1.00	1.00	1.00	1.00	(17)	DISP	4529	25050
	Amb to T1{1}	64	3	209	0	1.00	1.00	1.00	1.00	(17)	DISP	4529	25050
	Sus. + E1{1}	29	29	18	0	1.00	1.00			23a	OCC	2908	22211
	Sus. + E2{1}	90	22	126	0	1.00	1.00			23a	OCC	5308	22211
	Sus. + E3{1}	87	26	117	0	1.00	1.00			23a	OCC	5092	22211
	Sus. + E4{1}	37	25	19	1	1.00	1.00			23a	OCC	2852	22211
	Sus. + E5{1}	29	26	18	0	1.00	1.00			23a	OCC	2838	22211
	Sus. + E6{1}	90	26	126	0	1.00	1.00			23a	OCC	5305	22211
	Sus. + E7{1}	87	23	117	0	1.00	1.00			23a	OCC	5098	22211
	Sus. + E8{1}	37	29	18	1	1.00	1.00			23a	OCC	2907	22211
A41 -	Max P{1}									(3a)	HOOP	5642	16700
	GR + Max P{1}	2118	31	13	0	1.00	1.00	1.00	1.00	23a	SUST	2854	16700
	TR:Amb to T1{1}	64	5	186	0	1.00	1.00	1.00	1.00	(17)	DISP	4047	25050
	Amb to T1{1}	64	5	186	0	1.00	1.00	1.00	1.00	(17)	DISP	4047	25050
	Sus. + E1{1}	29	39	15	0	1.00	1.00			23a	OCC	3081	22211
	Sus. + E2{1}	89	31	120	0	1.00	1.00			23a	OCC	5356	22211
	Sus. + E3{1}	86	35	110	0	1.00	1.00			23a	OCC	5137	22211
	Sus. + E4{1}	36	35	20	1	1.00	1.00			23a	OCC	3069	22211
	Sus. + E5{1}	28	34	15	0	1.00	1.00			23a	OCC	2969	22211
	Sus. + E6{1}	90	35	120	0	1.00	1.00			23a	OCC	5355	22211
	Sus. + E7{1}	86	32	110	0	1.00	1.00			23a	OCC	5141	22211
	Sus. + E8{1}	36	40	19	1	1.00	1.00			23a	OCC	3144	22211

ASME B31.3 (2016) CODE COMPLIANCE
(Moments in ft-lb , Force in lbf) (Stress in psi)

Point name	Load combination	Axial Force	In-Pl. Moment	Out-Pl. Moment	Torsion Moment	S.I.F In	S.I.F Out	Index/SIF Ax.	Index/SIF Tor.	Eq. no.	Load type	Code Stress	Code Allow.
A41	+ Max P{1}									(3a)	HOOP	5642	16700
	GR + Max P{1}	2118	31	13	0	1.00	1.00	1.00	1.00	23a	SUST	2854	16700
	TR:Amb to T1{1}	102	5	186	0	1.00	1.00	1.00	1.00	(17)	DISP	4082	25050
	Amb to T1{1}	102	5	186	0	1.00	1.00	1.00	1.00	(17)	DISP	4082	25050
	Sus. + E1{1}	29	39	15	0	1.00	1.00			23a	OCC	3081	22211
	Sus. + E2{1}	89	31	120	0	1.00	1.00			23a	OCC	5356	22211
	Sus. + E3{1}	86	35	110	0	1.00	1.00			23a	OCC	5137	22211
	Sus. + E4{1}	36	35	20	1	1.00	1.00			23a	OCC	3069	22211
	Sus. + E5{1}	28	34	15	0	1.00	1.00			23a	OCC	2969	22211
	Sus. + E6{1}	90	35	120	0	1.00	1.00			23a	OCC	5355	22211
	Sus. + E7{1}	86	32	110	0	1.00	1.00			23a	OCC	5141	22211
	Sus. + E8{1}	36	40	19	0	1.00	1.00			23a	OCC	3144	22211
A42	- Max P{1}									(3a)	HOOP	5642	16700
	GR + Max P{1}	2118	44	6	0	1.00	1.00	1.00	1.00	23a	SUST	3093	16700
	TR:Amb to T1{1}	102	1	99	0	1.00	1.00	1.00	1.00	(17)	DISP	2215	25050
	Amb to T1{1}	102	1	99	0	1.00	1.00	1.00	1.00	(17)	DISP	2215	25050
	Sus. + E1{1}	19	46	92	0	1.00	1.00			23a	OCC	5061	22211
	Sus. + E2{1}	79	48	45	0	1.00	1.00			23a	OCC	4072	22211
	Sus. + E3{1}	76	47	57	0	1.00	1.00			23a	OCC	4322	22211
	Sus. + E4{1}	26	49	99	1	1.00	1.00			23a	OCC	5224	22211
	Sus. + E5{1}	18	49	91	0	1.00	1.00			23a	OCC	5039	22211
	Sus. + E6{1}	79	47	44	0	1.00	1.00			23a	OCC	4042	22211
	Sus. + E7{1}	76	48	58	0	1.00	1.00			23a	OCC	4356	22211
	Sus. + E8{1}	26	45	100	0	1.00	1.00			23a	OCC	5245	22211
A42	+ Max P{1}									(3a)	HOOP	5642	16700
	GR + Max P{1}	2116	44	6	0	1.00	1.00	1.00	1.00	23a	SUST	3092	16700
	TR:Amb to T1{1}	182	1	99	0	1.00	1.00	1.00	1.00	(17)	DISP	2290	25050
	Amb to T1{1}	182	1	99	0	1.00	1.00	1.00	1.00	(17)	DISP	2290	25050
	Sus. + E1{1}	19	46	92	0	1.00	1.00			23a	OCC	5060	22211
	Sus. + E2{1}	79	48	45	0	1.00	1.00			23a	OCC	4071	22211
	Sus. + E3{1}	76	47	57	0	1.00	1.00			23a	OCC	4321	22211
	Sus. + E4{1}	26	49	99	1	1.00	1.00			23a	OCC	5223	22211
	Sus. + E5{1}	18	49	91	0	1.00	1.00			23a	OCC	5038	22211
	Sus. + E6{1}	79	47	44	0	1.00	1.00			23a	OCC	4040	22211
	Sus. + E7{1}	76	48	58	0	1.00	1.00			23a	OCC	4355	22211
	Sus. + E8{1}	26	45	100	0	1.00	1.00			23a	OCC	5244	22211
A43	- Max P{1}									(3a)	HOOP	5642	16700
	GR + Max P{1}	2116	40	1	0	1.00	1.00	1.00	1.00	23a	SUST	3005	16700
	TR:Amb to T1{1}	182	0	12	0	1.00	1.00	1.00	1.00	(17)	DISP	428	25050
	Amb to T1{1}	182	0	12	0	1.00	1.00	1.00	1.00	(17)	DISP	428	25050
	Sus. + E1{1}	8	44	2	0	1.00	1.00			23a	OCC	3099	22211
	Sus. + E2{1}	69	43	2	0	1.00	1.00			23a	OCC	3154	22211
	Sus. + E3{1}	66	44	7	0	1.00	1.00			23a	OCC	3232	22211
	Sus. + E4{1}	16	43	2	1	1.00	1.00			23a	OCC	3089	22211
	Sus. + E5{1}	8	43	1	0	1.00	1.00			23a	OCC	3081	22211
	Sus. + E6{1}	69	44	3	0	1.00	1.00			23a	OCC	3161	22211
	Sus. + E7{1}	66	44	8	0	1.00	1.00			23a	OCC	3239	22211
	Sus. + E8{1}	16	44	2	0	1.00	1.00			23a	OCC	3109	22211

Primary Piping
04/24/2020 2018719 BENTLEY
07:34 AM AutoPIPE Nuclear 12.00.00.16 RESULT PAGE 291

ASME B31.3 (2016) CODE COMPLIANCE
(Moments in ft-lb , Force in lbf) (Stress in psi)

Point name	Load combination	Axial Force	In-Pl. Moment	Out-Pl. Moment	Torsion Moment	S.I.F In	S.I.F Out	Index/SIF Ax.	Index/SIF Tor.	Eq. no.	Load type	Code Stress	Code Allow.
A43	+ Max P{1}									(3a)	HOOP	5642	16700
	GR + Max P{1}	2115	40	1	0	1.00	1.00	1.00	1.00	23a	SUST	3005	16700
	TR:Amb to T1{1}	234	0	12	0	1.00	1.00	1.00	1.00	(17)	DISP	477	25050
	Amb to T1{1}	234	0	12	0	1.00	1.00	1.00	1.00	(17)	DISP	477	25050
	Sus. + E1{1}	8	44	2	0	1.00	1.00			23a	OCC	3098	22211
	Sus. + E2{1}	69	43	2	0	1.00	1.00			23a	OCC	3154	22211
	Sus. + E3{1}	66	44	7	0	1.00	1.00			23a	OCC	3231	22211
	Sus. + E4{1}	16	43	2	1	1.00	1.00			23a	OCC	3088	22211
	Sus. + E5{1}	8	43	1	0	1.00	1.00			23a	OCC	3080	22211
	Sus. + E6{1}	69	44	3	0	1.00	1.00			23a	OCC	3161	22211
	Sus. + E7{1}	66	44	8	0	1.00	1.00			23a	OCC	3238	22211
	Sus. + E8{1}	16	44	2	0	1.00	1.00			23a	OCC	3109	22211
A44	- Max P{1}									(3a)	HOOP	5642	16700
	GR + Max P{1}	2115	41	1	0	1.00	1.00	1.00	1.00	23a	SUST	3026	16700
	TR:Amb to T1{1}	234	0	4	0	1.00	1.00	1.00	1.00	(17)	DISP	297	25050
	Amb to T1{1}	234	0	4	0	1.00	1.00	1.00	1.00	(17)	DISP	297	25050
	Sus. + E1{1}	2	44	8	0	1.00	1.00			23a	OCC	3187	22211
	Sus. + E2{1}	59	45	12	0	1.00	1.00			23a	OCC	3347	22211
	Sus. + E3{1}	56	44	11	0	1.00	1.00			23a	OCC	3306	22211
	Sus. + E4{1}	6	45	2	1	1.00	1.00			23a	OCC	3114	22211
	Sus. + E5{1}	2	45	8	0	1.00	1.00			23a	OCC	3198	22211
	Sus. + E6{1}	59	44	12	0	1.00	1.00			23a	OCC	3344	22211
	Sus. + E7{1}	56	45	11	0	1.00	1.00			23a	OCC	3310	22211
	Sus. + E8{1}	6	44	2	0	1.00	1.00			23a	OCC	3107	22211
A44	+ Max P{1}									(3a)	HOOP	5642	16700
	GR + Max P{1}	2115	41	1	0	1.00	1.00	1.00	1.00	23a	SUST	3026	16700
	TR:Amb to T1{1}	278	0	4	0	1.00	1.00	1.00	1.00	(17)	DISP	338	25050
	Amb to T1{1}	278	0	4	0	1.00	1.00	1.00	1.00	(17)	DISP	338	25050
	Sus. + E1{1}	2	44	8	0	1.00	1.00			23a	OCC	3187	22211
	Sus. + E2{1}	59	45	12	0	1.00	1.00			23a	OCC	3347	22211
	Sus. + E3{1}	56	44	11	0	1.00	1.00			23a	OCC	3306	22211
	Sus. + E4{1}	6	45	2	1	1.00	1.00			23a	OCC	3114	22211
	Sus. + E5{1}	2	45	8	0	1.00	1.00			23a	OCC	3198	22211
	Sus. + E6{1}	59	44	12	0	1.00	1.00			23a	OCC	3344	22211
	Sus. + E7{1}	56	45	11	0	1.00	1.00			23a	OCC	3310	22211
	Sus. + E8{1}	6	44	2	0	1.00	1.00			23a	OCC	3107	22211
A45	- Max P{1}									(3a)	HOOP	5642	16700
	GR + Max P{1}	2115	41	1	0	1.00	1.00	1.00	1.00	23a	SUST	3018	16700
	TR:Amb to T1{1}	278	0	1	0	1.00	1.00	1.00	1.00	(17)	DISP	272	25050
	Amb to T1{1}	278	0	1	0	1.00	1.00	1.00	1.00	(17)	DISP	272	25050
	Sus. + E1{1}	12	44	11	0	1.00	1.00			23a	OCC	3256	22211
	Sus. + E2{1}	49	44	10	0	1.00	1.00			23a	OCC	3272	22211
	Sus. + E3{1}	45	44	7	0	1.00	1.00			23a	OCC	3219	22211
	Sus. + E4{1}	4	44	9	1	1.00	1.00			23a	OCC	3226	22211
	Sus. + E5{1}	12	44	10	0	1.00	1.00			23a	OCC	3254	22211
	Sus. + E6{1}	49	44	10	0	1.00	1.00			23a	OCC	3271	22211
	Sus. + E7{1}	46	44	7	0	1.00	1.00			23a	OCC	3220	22211
	Sus. + E8{1}	4	44	10	0	1.00	1.00			23a	OCC	3227	22211

Primary Piping
04/24/2020 2018719 BENTLEY
07:34 AM AutoPIPE Nuclear 12.00.00.16 RESULT PAGE 292

ASME B31.3 (2016) CODE COMPLIANCE
(Moments in ft-lb , Force in lbf) (Stress in psi)

Point name	Load combination	Axial Force	In-Pl. Moment	Out-Pl. Moment	Torsion Moment	S.I.F In	S.I.F Out	Index/SIF Ax.	Index/SIF Tor.	Eq. no.	Load type	Code Stress	Code Allow.
A45	+ Max P{1}									(3a)	HOOP	5642	16700
	GR + Max P{1}	2115	41	1	0	1.00	1.00	1.00	1.00	23a	SUST	3018	16700
	TR:Amb to T1{1}	322	0	1	0	1.00	1.00	1.00	1.00	(17)	DISP	312	25050
	Amb to T1{1}	322	0	1	0	1.00	1.00	1.00	1.00	(17)	DISP	312	25050
	Sus. + E1{1}	12	44	11	0	1.00	1.00			23a	OCC	3256	22211
	Sus. + E2{1}	49	44	10	0	1.00	1.00			23a	OCC	3272	22211
	Sus. + E3{1}	45	44	7	0	1.00	1.00			23a	OCC	3219	22211
	Sus. + E4{1}	4	44	9	1	1.00	1.00			23a	OCC	3226	22211
	Sus. + E5{1}	12	44	10	0	1.00	1.00			23a	OCC	3254	22211
	Sus. + E6{1}	49	44	10	0	1.00	1.00			23a	OCC	3271	22211
	Sus. + E7{1}	46	44	7	0	1.00	1.00			23a	OCC	3220	22211
	Sus. + E8{1}	4	44	10	0	1.00	1.00			23a	OCC	3227	22211
A46	- Max P{1}									(3a)	HOOP	5642	16700
	GR + Max P{1}	2114	41	1	0	1.00	1.00	1.00	1.00	23a	SUST	3027	16700
	TR:Amb to T1{1}	322	0	0	0	1.00	1.00	1.00	1.00	(17)	DISP	308	25050
	Amb to T1{1}	322	0	0	0	1.00	1.00	1.00	1.00	(17)	DISP	308	25050
	Sus. + E1{1}	22	45	10	0	1.00	1.00			23a	OCC	3255	22211
	Sus. + E2{1}	39	45	9	0	1.00	1.00			23a	OCC	3256	22211
	Sus. + E3{1}	35	45	7	0	1.00	1.00			23a	OCC	3208	22211
	Sus. + E4{1}	15	45	7	1	1.00	1.00			23a	OCC	3200	22211
	Sus. + E5{1}	22	45	10	0	1.00	1.00			23a	OCC	3257	22211
	Sus. + E6{1}	39	45	9	0	1.00	1.00			23a	OCC	3255	22211
	Sus. + E7{1}	35	45	7	0	1.00	1.00			23a	OCC	3208	22211
	Sus. + E8{1}	14	45	7	0	1.00	1.00			23a	OCC	3198	22211
A46	+ Max P{1}									(3a)	HOOP	5642	16700
	GR + Max P{1}	2115	41	1	0	1.00	1.00	1.00	1.00	23a	SUST	3028	16700
	TR:Amb to T1{1}	366	0	0	0	1.00	1.00	1.00	1.00	(17)	DISP	349	25050
	Amb to T1{1}	366	0	0	0	1.00	1.00	1.00	1.00	(17)	DISP	349	25050
	Sus. + E1{1}	22	45	10	0	1.00	1.00			23a	OCC	3256	22211
	Sus. + E2{1}	39	45	9	0	1.00	1.00			23a	OCC	3256	22211
	Sus. + E3{1}	35	45	7	0	1.00	1.00			23a	OCC	3208	22211
	Sus. + E4{1}	15	45	7	1	1.00	1.00			23a	OCC	3200	22211
	Sus. + E5{1}	22	45	10	0	1.00	1.00			23a	OCC	3257	22211
	Sus. + E6{1}	39	45	9	0	1.00	1.00			23a	OCC	3255	22211
	Sus. + E7{1}	35	45	7	0	1.00	1.00			23a	OCC	3209	22211
	Sus. + E8{1}	14	45	7	0	1.00	1.00			23a	OCC	3198	22211
A47	- Max P{1}									(3a)	HOOP	5642	16700
	GR + Max P{1}	2114	40	1	0	1.00	1.00	1.00	1.00	23a	SUST	2995	16700
	TR:Amb to T1{1}	366	0	0	0	1.00	1.00	1.00	1.00	(17)	DISP	344	25050
	Amb to T1{1}	366	0	0	0	1.00	1.00	1.00	1.00	(17)	DISP	344	25050
	Sus. + E1{1}	32	43	10	0	1.00	1.00			23a	OCC	3246	22211
	Sus. + E2{1}	29	43	14	0	1.00	1.00			23a	OCC	3334	22211
	Sus. + E3{1}	25	43	12	0	1.00	1.00			23a	OCC	3281	22211
	Sus. + E4{1}	25	43	8	1	1.00	1.00			23a	OCC	3186	22211
	Sus. + E5{1}	32	43	10	0	1.00	1.00			23a	OCC	3248	22211
	Sus. + E6{1}	28	43	14	0	1.00	1.00			23a	OCC	3334	22211
	Sus. + E7{1}	25	43	12	0	1.00	1.00			23a	OCC	3286	22211
	Sus. + E8{1}	25	43	8	0	1.00	1.00			23a	OCC	3183	22211

Primary Piping
04/24/2020 2018719 BENTLEY
07:34 AM AutoPIPE Nuclear 12.00.00.16 RESULT PAGE 293

ASME B31.3 (2016) CODE COMPLIANCE
(Moments in ft-lb , Force in lbf) (Stress in psi)

Point name	Load combination	Axial Force	In-Pl. Moment	Out-Pl. Moment	Torsion Moment	S.I.F In	S.I.F Out	Index/SIF Ax.	Index/SIF Tor.	Eq. no.	Load type	Code Stress	Code Allow.
A47	+ Max P{1}									(3a)	HOOP	5642	16700
	GR + Max P{1}	2119	40	1	0	1.00	1.00	1.00	1.00	23a	SUST	3000	16700
	TR:Amb to T1{1}	414	0	0	0	1.00	1.00	1.00	1.00	(17)	DISP	388	25050
	Amb to T1{1}	414	0	0	0	1.00	1.00	1.00	1.00	(17)	DISP	388	25050
	Sus. + E1{1}	32	43	10	0	1.00	1.00			23a	OCC	3250	22211
	Sus. + E2{1}	29	43	14	0	1.00	1.00			23a	OCC	3339	22211
	Sus. + E3{1}	25	43	12	0	1.00	1.00			23a	OCC	3285	22211
	Sus. + E4{1}	25	43	8	1	1.00	1.00			23a	OCC	3190	22211
	Sus. + E5{1}	32	43	10	0	1.00	1.00			23a	OCC	3253	22211
	Sus. + E6{1}	28	43	14	0	1.00	1.00			23a	OCC	3338	22211
	Sus. + E7{1}	25	43	12	0	1.00	1.00			23a	OCC	3291	22211
	Sus. + E8{1}	25	43	8	0	1.00	1.00			23a	OCC	3188	22211
A48	- Max P{1}									(3a)	HOOP	5642	16700
	GR + Max P{1}	2118	45	1	0	1.00	1.00	1.00	1.00	23a	SUST	3118	16700
	TR:Amb to T1{1}	414	0	10	0	1.00	1.00	1.00	1.00	(17)	DISP	600	25050
	Amb to T1{1}	414	0	10	0	1.00	1.00	1.00	1.00	(17)	DISP	600	25050
	Sus. + E1{1}	43	49	8	0	1.00	1.00			23a	OCC	3340	22211
	Sus. + E2{1}	19	49	14	0	1.00	1.00			23a	OCC	3447	22211
	Sus. + E3{1}	15	49	16	0	1.00	1.00			23a	OCC	3479	22211
	Sus. + E4{1}	35	49	8	1	1.00	1.00			23a	OCC	3339	22211
	Sus. + E5{1}	43	49	8	0	1.00	1.00			23a	OCC	3335	22211
	Sus. + E6{1}	18	49	14	0	1.00	1.00			23a	OCC	3446	22211
	Sus. + E7{1}	15	49	16	0	1.00	1.00			23a	OCC	3481	22211
	Sus. + E8{1}	35	49	8	0	1.00	1.00			23a	OCC	3342	22211
A48	+ Max P{1}									(3a)	HOOP	5642	16700
	GR + Max P{1}	2119	45	1	0	1.00	1.00	1.00	1.00	23a	SUST	3118	16700
	TR:Amb to T1{1}	368	0	10	0	1.00	1.00	1.00	1.00	(17)	DISP	557	25050
	Amb to T1{1}	368	0	10	0	1.00	1.00	1.00	1.00	(17)	DISP	557	25050
	Sus. + E1{1}	43	49	8	0	1.00	1.00			23a	OCC	3340	22211
	Sus. + E2{1}	19	49	14	0	1.00	1.00			23a	OCC	3447	22211
	Sus. + E3{1}	15	49	16	0	1.00	1.00			23a	OCC	3479	22211
	Sus. + E4{1}	35	49	8	1	1.00	1.00			23a	OCC	3339	22211
	Sus. + E5{1}	43	49	8	0	1.00	1.00			23a	OCC	3335	22211
	Sus. + E6{1}	18	49	14	0	1.00	1.00			23a	OCC	3446	22211
	Sus. + E7{1}	15	49	16	0	1.00	1.00			23a	OCC	3481	22211
	Sus. + E8{1}	35	49	8	0	1.00	1.00			23a	OCC	3342	22211
A49	- Max P{1}									(3a)	HOOP	5642	16700
	GR + Max P{1}	2118	26	1	0	1.00	1.00	1.00	1.00	23a	SUST	2676	16700
	TR:Amb to T1{1}	368	0	22	0	1.00	1.00	1.00	1.00	(17)	DISP	821	25050
	Amb to T1{1}	368	0	22	0	1.00	1.00	1.00	1.00	(17)	DISP	821	25050
	Sus. + E1{1}	53	27	9	0	1.00	1.00			23a	OCC	2924	22211
	Sus. + E2{1}	8	28	53	0	1.00	1.00			23a	OCC	3853	22211
	Sus. + E3{1}	5	27	52	0	1.00	1.00			23a	OCC	3823	22211
	Sus. + E4{1}	45	28	4	1	1.00	1.00			23a	OCC	2796	22211
	Sus. + E5{1}	53	28	10	0	1.00	1.00			23a	OCC	2937	22211
	Sus. + E6{1}	8	28	53	0	1.00	1.00			23a	OCC	3851	22211
	Sus. + E7{1}	5	28	51	0	1.00	1.00			23a	OCC	3817	22211
	Sus. + E8{1}	45	28	3	0	1.00	1.00			23a	OCC	2790	22211

Primary Piping
04/24/2020 2018719 BENTLEY
07:34 AM AutoPIPE Nuclear 12.00.00.16 RESULT PAGE 294

ASME B31.3 (2016) CODE COMPLIANCE
(Moments in ft-lb , Force in lbf) (Stress in psi)

Point name	Load combination	Axial Force	In-Pl. Moment	Out-Pl. Moment	Torsion Moment	S.I.F In	S.I.F Out	Index/SIF Ax.	Index/SIF Tor.	Eq. no.	Load type	Code Stress	Code Allow.
A49	+ Max P{1}									(3a)	HOOP	5642	16700
	GR + Max P{1}	2118	26	1	0	1.00	1.00	1.00	1.00	23a	SUST	2676	16700
	TR:Amb to T1{1}	321	0	22	0	1.00	1.00	1.00	1.00	(17)	DISP	777	25050
	Amb to T1{1}	321	0	22	0	1.00	1.00	1.00	1.00	(17)	DISP	777	25050
	Sus. + E1{1}	53	27	9	0	1.00	1.00			23a	OCC	2924	22211
	Sus. + E2{1}	8	28	53	0	1.00	1.00			23a	OCC	3853	22211
	Sus. + E3{1}	5	27	52	0	1.00	1.00			23a	OCC	3823	22211
	Sus. + E4{1}	45	28	4	1	1.00	1.00			23a	OCC	2796	22211
	Sus. + E5{1}	53	28	10	0	1.00	1.00			23a	OCC	2937	22211
	Sus. + E6{1}	8	28	53	0	1.00	1.00			23a	OCC	3851	22211
	Sus. + E7{1}	5	28	51	0	1.00	1.00			23a	OCC	3817	22211
	Sus. + E8{1}	45	28	3	0	1.00	1.00			23a	OCC	2789	22211
A50	- Max P{1}									(3a)	HOOP	5642	16700
	GR + Max P{1}	2118	34	1	0	1.00	1.00	1.00	1.00	23a	SUST	2863	16700
	TR:Amb to T1{1}	321	1	151	0	1.00	1.00	1.00	1.00	(17)	DISP	3538	25050
	Amb to T1{1}	321	1	151	0	1.00	1.00	1.00	1.00	(17)	DISP	3538	25050
	Sus. + E1{1}	57	38	38	0	1.00	1.00			23a	OCC	3759	22211
	Sus. + E2{1}	4	37	117	0	1.00	1.00			23a	OCC	5480	22211
	Sus. + E3{1}	0	38	107	0	1.00	1.00			23a	OCC	5263	22211
	Sus. + E4{1}	49	37	30	1	1.00	1.00			23a	OCC	3554	22211
	Sus. + E5{1}	57	35	39	0	1.00	1.00			23a	OCC	3767	22211
	Sus. + E6{1}	4	36	118	0	1.00	1.00			23a	OCC	5496	22211
	Sus. + E7{1}	1	35	107	0	1.00	1.00			23a	OCC	5251	22211
	Sus. + E8{1}	49	36	29	0	1.00	1.00			23a	OCC	3538	22211
A50	+ Max P{1}									(3a)	HOOP	5642	16700
	GR + Max P{1}	2118	34	1	0	1.00	1.00	1.00	1.00	23a	SUST	2863	16700
	TR:Amb to T1{1}	220	1	151	0	1.00	1.00	1.00	1.00	(17)	DISP	3444	25050
	Amb to T1{1}	220	1	151	0	1.00	1.00	1.00	1.00	(17)	DISP	3444	25050
	Sus. + E1{1}	57	38	38	0	1.00	1.00			23a	OCC	3759	22211
	Sus. + E2{1}	4	37	117	0	1.00	1.00			23a	OCC	5481	22211
	Sus. + E3{1}	0	38	107	0	1.00	1.00			23a	OCC	5263	22211
	Sus. + E4{1}	49	37	30	1	1.00	1.00			23a	OCC	3554	22211
	Sus. + E5{1}	57	35	39	0	1.00	1.00			23a	OCC	3767	22211
	Sus. + E6{1}	4	36	118	0	1.00	1.00			23a	OCC	5496	22211
	Sus. + E7{1}	1	35	107	0	1.00	1.00			23a	OCC	5252	22211
	Sus. + E8{1}	49	36	29	0	1.00	1.00			23a	OCC	3538	22211
A51	- Max P{1}									(3a)	HOOP	5642	16700
	GR + Max P{1}	2118	26	25	0	1.00	1.00	1.00	1.00	23a	SUST	2902	16700
	TR:Amb to T1{1}	220	1	278	0	1.00	1.00	1.00	1.00	(17)	DISP	6147	25050
	Amb to T1{1}	220	1	278	0	1.00	1.00	1.00	1.00	(17)	DISP	6147	25050
	Sus. + E1{1}	67	27	141	0	1.00	1.00			23a	OCC	5589	22211
	Sus. + E2{1}	6	26	73	0	1.00	1.00			23a	OCC	4002	22211
	Sus. + E3{1}	10	26	30	0	1.00	1.00			23a	OCC	3023	22211
	Sus. + E4{1}	59	27	93	1	1.00	1.00			23a	OCC	4502	22211
	Sus. + E5{1}	67	32	140	0	1.00	1.00			23a	OCC	5590	22211
	Sus. + E6{1}	6	30	73	0	1.00	1.00			23a	OCC	3998	22211
	Sus. + E7{1}	9	31	30	0	1.00	1.00			23a	OCC	3077	22211
	Sus. + E8{1}	60	29	93	0	1.00	1.00			23a	OCC	4505	22211

ASME B31.3 (2016) CODE COMPLIANCE
(Moments in ft-lb , Force in lbf) (Stress in psi)

Point name	Load combination	Axial Force	In-Pl. Moment	Out-Pl. Moment	Torsion Moment	S.I.F In	S.I.F Out	Index/SIF Ax.	Index/SIF Tor.	Eq. no.	Load type	Code Stress	Code Allow.
A51	+ Max P{1}									(3a)	HOOP	5642	16700
	GR + Max P{1}	2118	26	25	0	1.00	1.00	1.00	1.00	23a	SUST	2902	16700
	TR:Amb to T1{1}	193	1	278	0	1.00	1.00	1.00	1.00	(17)	DISP	6121	25050
	Amb to T1{1}	193	1	278	0	1.00	1.00	1.00	1.00	(17)	DISP	6121	25050
	Sus. + E1{1}	67	27	141	0	1.00	1.00			23a	OCC	5589	22211
	Sus. + E2{1}	6	26	73	0	1.00	1.00			23a	OCC	4002	22211
	Sus. + E3{1}	10	26	30	0	1.00	1.00			23a	OCC	3023	22211
	Sus. + E4{1}	59	27	93	0	1.00	1.00			23a	OCC	4502	22211
	Sus. + E5{1}	67	32	140	0	1.00	1.00			23a	OCC	5590	22211
	Sus. + E6{1}	6	30	73	0	1.00	1.00			23a	OCC	3998	22211
	Sus. + E7{1}	9	31	30	0	1.00	1.00			23a	OCC	3077	22211
	Sus. + E8{1}	60	29	93	0	1.00	1.00			23a	OCC	4505	22211
A10	N- Max P{1}									(3a)	HOOP	5642	16700
	GR + Max P{1}	2118	17	26	0	1.00	1.00	1.00	1.00	23a	SUST	2808	16700
	TR:Amb to T1{1}	193	1	311	0	1.00	1.00	1.00	1.00	(17)	DISP	6846	25050
	Amb to T1{1}	193	1	311	0	1.00	1.00	1.00	1.00	(17)	DISP	6846	25050
	Sus. + E1{1}	68	19	148	0	1.00	1.00			23a	OCC	5627	22211
	Sus. + E2{1}	7	18	81	0	1.00	1.00			23a	OCC	4054	22211
	Sus. + E3{1}	10	18	35	0	1.00	1.00			23a	OCC	3009	22211
	Sus. + E4{1}	60	18	97	0	1.00	1.00			23a	OCC	4469	22211
	Sus. + E5{1}	68	22	148	0	1.00	1.00			23a	OCC	5627	22211
	Sus. + E6{1}	7	21	81	0	1.00	1.00			23a	OCC	4048	22211
	Sus. + E7{1}	10	21	35	0	1.00	1.00			23a	OCC	3034	22211
	Sus. + E8{1}	60	20	97	0	1.00	1.00			23a	OCC	4471	22211
A10	N+ Max P{1}									(3a)	HOOP	5642	16700
	GR + Max P{1}	2118	26	17	0	1.00	1.00	1.00	1.00	23a	SUST	2808	16700
	TR:Amb to T1{1}	193	311	3	0	1.00	1.00	1.00	1.00	(17)	DISP	6846	25050
	Amb to T1{1}	193	311	3	0	1.00	1.00	1.00	1.00	(17)	DISP	6846	25050
	Sus. + E1{1}	68	148	20	0	1.00	1.00			23a	OCC	5627	22211
	Sus. + E2{1}	7	81	18	0	1.00	1.00			23a	OCC	4054	22211
	Sus. + E3{1}	10	35	18	0	1.00	1.00			23a	OCC	3009	22211
	Sus. + E4{1}	60	97	18	0	1.00	1.00			23a	OCC	4469	22211
	Sus. + E5{1}	68	148	23	0	1.00	1.00			23a	OCC	5627	22211
	Sus. + E6{1}	7	81	21	0	1.00	1.00			23a	OCC	4048	22211
	Sus. + E7{1}	10	35	21	0	1.00	1.00			23a	OCC	3034	22211
	Sus. + E8{1}	60	97	19	0	1.00	1.00			23a	OCC	4471	22211
A10	F- Max P{1}									(3a)	HOOP	5642	16700
	GR + Max P{1}	2118	25	10	4	1.00	1.00	1.00	1.00	23a	SUST	2703	16700
	TR:Amb to T1{1}	68	64	3	0	1.00	1.00	1.00	1.00	(17)	DISP	1443	25050
	Amb to T1{1}	68	64	3	0	1.00	1.00	1.00	1.00	(17)	DISP	1443	25050
	Sus. + E1{1}	6	88	17	6	1.00	1.00			23a	OCC	4159	22211
	Sus. + E2{1}	7	141	13	4	1.00	1.00			23a	OCC	5343	22211
	Sus. + E3{1}	1	89	15	6	1.00	1.00			23a	OCC	4158	22211
	Sus. + E4{1}	0	134	11	4	1.00	1.00			23a	OCC	5179	22211
	Sus. + E5{1}	6	88	16	6	1.00	1.00			23a	OCC	4139	22211
	Sus. + E6{1}	7	142	12	4	1.00	1.00			23a	OCC	5371	22211
	Sus. + E7{1}	1	87	13	5	1.00	1.00			23a	OCC	4126	22211
	Sus. + E8{1}	0	135	11	4	1.00	1.00			23a	OCC	5197	22211

ASME B31.3 (2016) CODE COMPLIANCE
(Moments in ft-lb , Force in lbf) (Stress in psi)

Point name	Load combination	Axial Force	In-Pl. Moment	Out-Pl. Moment	Torsion Moment	S.I.F In	S.I.F Out	Index/SIF Ax.	Index/SIF Tor.	Eq. no.	Load type	Code Stress	Code Allow.
A10 F+	Max P{1}									(3a)	HOOP	5642	16700
	GR + Max P{1}	2118	10	25	4	1.00	1.00	1.00	1.00	23a	SUST	2703	16700
	TR:Amb to T1{1}	68	4	64	0	1.00	1.00	1.00	1.00	(17)	DISP	1443	25050
	Amb to T1{1}	68	4	64	0	1.00	1.00	1.00	1.00	(17)	DISP	1443	25050
	Sus. + E1{1}	6	17	89	6	1.00	1.00			23a	OCC	4159	22211
	Sus. + E2{1}	7	12	141	4	1.00	1.00			23a	OCC	5343	22211
	Sus. + E3{1}	1	15	89	6	1.00	1.00			23a	OCC	4158	22211
	Sus. + E4{1}	0	10	134	4	1.00	1.00			23a	OCC	5179	22211
	Sus. + E5{1}	6	16	88	6	1.00	1.00			23a	OCC	4139	22211
	Sus. + E6{1}	7	11	142	4	1.00	1.00			23a	OCC	5371	22211
	Sus. + E7{1}	1	14	88	5	1.00	1.00			23a	OCC	4126	22211
	Sus. + E8{1}	0	11	135	4	1.00	1.00			23a	OCC	5197	22211
A52 -	Max P{1}									(3a)	HOOP	5642	16700
	GR + Max P{1}	2118	18	23	4	1.00	1.00	1.00	1.00	23a	SUST	2756	16700
	TR:Amb to T1{1}	68	5	161	0	1.00	1.00	1.00	1.00	(17)	DISP	3508	25050
	Amb to T1{1}	68	5	161	0	1.00	1.00	1.00	1.00	(17)	DISP	3508	25050
	Sus. + E1{1}	5	27	124	6	1.00	1.00			23a	OCC	5041	22211
	Sus. + E2{1}	7	20	146	4	1.00	1.00			23a	OCC	5532	22211
	Sus. + E3{1}	1	24	95	6	1.00	1.00			23a	OCC	4393	22211
	Sus. + E4{1}	1	18	165	4	1.00	1.00			23a	OCC	5972	22211
	Sus. + E5{1}	6	24	123	6	1.00	1.00			23a	OCC	5017	22211
	Sus. + E6{1}	7	18	147	4	1.00	1.00			23a	OCC	5566	22211
	Sus. + E7{1}	1	21	94	5	1.00	1.00			23a	OCC	4352	22211
	Sus. + E8{1}	1	20	166	4	1.00	1.00			23a	OCC	5993	22211
A52 +	Max P{1}									(3a)	HOOP	5642	16700
	GR + Max P{1}	2117	18	23	4	1.00	1.00	1.00	1.00	23a	SUST	2755	16700
	TR:Amb to T1{1}	30	5	161	0	1.00	1.00	1.00	1.00	(17)	DISP	3473	25050
	Amb to T1{1}	30	5	161	0	1.00	1.00	1.00	1.00	(17)	DISP	3473	25050
	Sus. + E1{1}	5	27	124	6	1.00	1.00			23a	OCC	5041	22211
	Sus. + E2{1}	7	20	146	4	1.00	1.00			23a	OCC	5531	22211
	Sus. + E3{1}	1	24	95	5	1.00	1.00			23a	OCC	4392	22211
	Sus. + E4{1}	1	18	165	4	1.00	1.00			23a	OCC	5972	22211
	Sus. + E5{1}	6	24	123	5	1.00	1.00			23a	OCC	5017	22211
	Sus. + E6{1}	7	18	147	4	1.00	1.00			23a	OCC	5565	22211
	Sus. + E7{1}	1	21	94	5	1.00	1.00			23a	OCC	4352	22211
	Sus. + E8{1}	1	20	166	4	1.00	1.00			23a	OCC	5992	22211
A53 -	Max P{1}									(3a)	HOOP	5642	16700
	GR + Max P{1}	2117	18	21	4	1.00	1.00	1.00	1.00	23a	SUST	2735	16700
	TR:Amb to T1{1}	30	3	93	0	1.00	1.00	1.00	1.00	(17)	DISP	2014	25050
	Amb to T1{1}	30	3	93	0	1.00	1.00	1.00	1.00	(17)	DISP	2014	25050
	Sus. + E1{1}	2	25	192	6	1.00	1.00			23a	OCC	6604	22211
	Sus. + E2{1}	1	20	94	4	1.00	1.00			23a	OCC	4369	22211
	Sus. + E3{1}	7	23	121	5	1.00	1.00			23a	OCC	5009	22211
	Sus. + E4{1}	9	19	172	4	1.00	1.00			23a	OCC	6151	22211
	Sus. + E5{1}	2	23	191	5	1.00	1.00			23a	OCC	6567	22211
	Sus. + E6{1}	1	20	94	4	1.00	1.00			23a	OCC	4389	22211
	Sus. + E7{1}	7	21	121	5	1.00	1.00			23a	OCC	4986	22211
	Sus. + E8{1}	9	22	174	4	1.00	1.00			23a	OCC	6187	22211

ASME B31.3 (2016) CODE COMPLIANCE
(Moments in ft-lb , Force in lbf) (Stress in psi)

Point name	Load combination	Axial Force	In-Pl. Moment	Out-Pl. Moment	Torsion Moment	S.I.F In	S.I.F Out	Index/SIF Ax.	Index/SIF Tor.	Eq. no.	Load type	Code Stress	Code Allow.
A53 +	Max P{1}									(3a)	HOOP	5642	16700
	GR + Max P{1}	2117	18	21	4	1.00	1.00	1.00	1.00	23a	SUST	2735	16700
	TR:Amb to T1{1}	24	3	93	1	1.00	1.00	1.00	1.00	(17)	DISP	2009	25050
	Amb to T1{1}	24	3	93	1	1.00	1.00	1.00	1.00	(17)	DISP	2009	25050
	Sus. + E1{1}	2	25	192	6	1.00	1.00			23a	OCC	6604	22211
	Sus. + E2{1}	1	20	94	4	1.00	1.00			23a	OCC	4369	22211
	Sus. + E3{1}	7	23	121	5	1.00	1.00			23a	OCC	5009	22211
	Sus. + E4{1}	9	19	172	4	1.00	1.00			23a	OCC	6151	22211
	Sus. + E5{1}	2	23	191	5	1.00	1.00			23a	OCC	6567	22211
	Sus. + E6{1}	1	20	94	4	1.00	1.00			23a	OCC	4389	22211
	Sus. + E7{1}	7	21	121	5	1.00	1.00			23a	OCC	4986	22211
	Sus. + E8{1}	9	22	174	4	1.00	1.00			23a	OCC	6188	22211
A11 N-	Max P{1}									(3a)	HOOP	5642	16700
	GR + Max P{1}	2117	11	24	4	1.00	1.00	1.00	1.00	23a	SUST	2702	16700
	TR:Amb to T1{1}	24	3	102	1	1.00	1.00	1.00	1.00	(17)	DISP	2201	25050
	Amb to T1{1}	24	3	102	1	1.00	1.00	1.00	1.00	(17)	DISP	2201	25050
	Sus. + E1{1}	3	16	155	6	1.00	1.00			23a	OCC	5650	22211
	Sus. + E2{1}	2	11	89	4	1.00	1.00			23a	OCC	4163	22211
	Sus. + E3{1}	8	15	123	5	1.00	1.00			23a	OCC	4945	22211
	Sus. + E4{1}	9	12	126	4	1.00	1.00			23a	OCC	5014	22211
	Sus. + E5{1}	3	14	153	5	1.00	1.00			23a	OCC	5620	22211
	Sus. + E6{1}	2	12	90	4	1.00	1.00			23a	OCC	4181	22211
	Sus. + E7{1}	8	13	122	5	1.00	1.00			23a	OCC	4925	22211
	Sus. + E8{1}	9	13	128	4	1.00	1.00			23a	OCC	5044	22211
A11 N+	Max P{1}									(3a)	HOOP	5642	16700
	GR + Max P{1}	2117	25	10	4	1.00	1.00	1.00	1.00	23a	SUST	2702	16700
	TR:Amb to T1{1}	24	102	4	1	1.00	1.00	1.00	1.00	(17)	DISP	2201	25050
	Amb to T1{1}	24	102	4	1	1.00	1.00	1.00	1.00	(17)	DISP	2201	25050
	Sus. + E1{1}	3	155	15	6	1.00	1.00			23a	OCC	5650	22211
	Sus. + E2{1}	2	89	11	4	1.00	1.00			23a	OCC	4163	22211
	Sus. + E3{1}	8	123	14	5	1.00	1.00			23a	OCC	4945	22211
	Sus. + E4{1}	9	126	11	4	1.00	1.00			23a	OCC	5014	22211
	Sus. + E5{1}	3	153	13	5	1.00	1.00			23a	OCC	5620	22211
	Sus. + E6{1}	2	90	11	4	1.00	1.00			23a	OCC	4181	22211
	Sus. + E7{1}	8	123	12	5	1.00	1.00			23a	OCC	4925	22211
	Sus. + E8{1}	9	128	12	4	1.00	1.00			23a	OCC	5044	22211
A11 F-	Max P{1}									(3a)	HOOP	5642	16700
	GR + Max P{1}	2114	32	16	0	1.00	1.00	1.00	1.00	23a	SUST	2898	16700
	TR:Amb to T1{1}	18	83	3	0	1.00	1.00	1.00	1.00	(17)	DISP	1803	25050
	Amb to T1{1}	18	83	3	0	1.00	1.00	1.00	1.00	(17)	DISP	1803	25050
	Sus. + E1{1}	76	121	17	1	1.00	1.00			23a	OCC	4987	22211
	Sus. + E2{1}	10	42	18	1	1.00	1.00			23a	OCC	3138	22211
	Sus. + E3{1}	3	96	17	0	1.00	1.00			23a	OCC	4350	22211
	Sus. + E4{1}	92	179	19	0	1.00	1.00			23a	OCC	6314	22211
	Sus. + E5{1}	75	120	20	1	1.00	1.00			23a	OCC	4978	22211
	Sus. + E6{1}	10	42	18	1	1.00	1.00			23a	OCC	3138	22211
	Sus. + E7{1}	3	96	19	0	1.00	1.00			23a	OCC	4351	22211
	Sus. + E8{1}	93	179	17	0	1.00	1.00			23a	OCC	6324	22211

Primary Piping
04/24/2020 2018719 BENTLEY
07:34 AM AutoPIPE Nuclear 12.00.00.16 RESULT PAGE 298

ASME B31.3 (2016) CODE COMPLIANCE
(Moments in ft-lb , Force in lbf) (Stress in psi)

Point name	Load combination	Axial Force	In-Pl. Moment	Out-Pl. Moment	Torsion Moment	S.I.F In	S.I.F Out	Index/SIF Ax.	Index/SIF Tor.	Eq. no.	Load type	Code Stress	Code Allow.
A11 F+	Max P{1}									(3a)	HOOP	5642	16700
	GR + Max P{1}	2114	16	32	0	1.00	1.00	1.00	1.00	23a	SUST	2898	16700
	TR:Amb to T1{1}	18	3	83	0	1.00	1.00	1.00	1.00	(17)	DISP	1803	25050
	Amb to T1{1}	18	3	83	0	1.00	1.00	1.00	1.00	(17)	DISP	1803	25050
	Sus. + E1{1}	76	16	121	1	1.00	1.00			23a	OCC	4987	22211
	Sus. + E2{1}	10	17	42	1	1.00	1.00			23a	OCC	3138	22211
	Sus. + E3{1}	3	16	96	0	1.00	1.00			23a	OCC	4350	22211
	Sus. + E4{1}	92	18	179	0	1.00	1.00			23a	OCC	6314	22211
	Sus. + E5{1}	75	19	120	1	1.00	1.00			23a	OCC	4978	22211
	Sus. + E6{1}	10	18	42	1	1.00	1.00			23a	OCC	3138	22211
	Sus. + E7{1}	3	19	96	0	1.00	1.00			23a	OCC	4351	22211
	Sus. + E8{1}	93	18	179	0	1.00	1.00			23a	OCC	6324	22211
A54 -	Max P{1}									(3a)	HOOP	5642	16700
	GR + Max P{1}	2114	24	30	0	1.00	1.00	1.00	1.00	23a	SUST	2961	16700
	TR:Amb to T1{1}	18	3	71	0	1.00	1.00	1.00	1.00	(17)	DISP	1545	25050
	Amb to T1{1}	18	3	71	0	1.00	1.00	1.00	1.00	(17)	DISP	1545	25050
	Sus. + E1{1}	75	24	115	1	1.00	1.00			23a	OCC	4954	22211
	Sus. + E2{1}	9	26	36	1	1.00	1.00			23a	OCC	3123	22211
	Sus. + E3{1}	3	25	87	0	1.00	1.00			23a	OCC	4264	22211
	Sus. + E4{1}	92	27	169	0	1.00	1.00			23a	OCC	6209	22211
	Sus. + E5{1}	75	29	114	1	1.00	1.00			23a	OCC	4946	22211
	Sus. + E6{1}	9	27	36	1	1.00	1.00			23a	OCC	3124	22211
	Sus. + E7{1}	4	28	87	0	1.00	1.00			23a	OCC	4267	22211
	Sus. + E8{1}	92	26	170	0	1.00	1.00			23a	OCC	6219	22211
A54 +	Max P{1}									(3a)	HOOP	5642	16700
	GR + Max P{1}	2114	24	30	0	1.00	1.00	1.00	1.00	23a	SUST	2961	16700
	TR:Amb to T1{1}	52	3	71	0	1.00	1.00	1.00	1.00	(17)	DISP	1577	25050
	Amb to T1{1}	52	3	71	0	1.00	1.00	1.00	1.00	(17)	DISP	1577	25050
	Sus. + E1{1}	75	24	115	1	1.00	1.00			23a	OCC	4954	22211
	Sus. + E2{1}	9	26	36	1	1.00	1.00			23a	OCC	3123	22211
	Sus. + E3{1}	3	25	87	0	1.00	1.00			23a	OCC	4264	22211
	Sus. + E4{1}	92	27	169	0	1.00	1.00			23a	OCC	6209	22211
	Sus. + E5{1}	75	29	114	1	1.00	1.00			23a	OCC	4946	22211
	Sus. + E6{1}	9	27	36	1	1.00	1.00			23a	OCC	3124	22211
	Sus. + E7{1}	4	28	87	0	1.00	1.00			23a	OCC	4267	22211
	Sus. + E8{1}	92	26	170	0	1.00	1.00			23a	OCC	6219	22211
A55 -	Max P{1}									(3a)	HOOP	5642	16700
	GR + Max P{1}	2114	45	6	0	1.00	1.00	1.00	1.00	23a	SUST	3130	16700
	TR:Amb to T1{1}	52	1	48	0	1.00	1.00	1.00	1.00	(17)	DISP	1072	25050
	Amb to T1{1}	52	1	48	0	1.00	1.00	1.00	1.00	(17)	DISP	1072	25050
	Sus. + E1{1}	65	50	46	1	1.00	1.00			23a	OCC	4087	22211
	Sus. + E2{1}	1	49	113	1	1.00	1.00			23a	OCC	5542	22211
	Sus. + E3{1}	14	50	116	0	1.00	1.00			23a	OCC	5620	22211
	Sus. + E4{1}	82	49	48	0	1.00	1.00			23a	OCC	4156	22211
	Sus. + E5{1}	65	49	46	1	1.00	1.00			23a	OCC	4097	22211
	Sus. + E6{1}	1	49	114	1	1.00	1.00			23a	OCC	5553	22211
	Sus. + E7{1}	14	49	115	0	1.00	1.00			23a	OCC	5605	22211
	Sus. + E8{1}	82	49	47	0	1.00	1.00			23a	OCC	4144	22211

Primary Piping
04/24/2020 2018719 BENTLEY
07:34 AM AutoPIPE Nuclear 12.00.00.16 RESULT PAGE 299

ASME B31.3 (2016) CODE COMPLIANCE
(Moments in ft-lb , Force in lbf) (Stress in psi)

Point name	Load combination	Axial Force	In-Pl. Moment	Out-Pl. Moment	Torsion Moment	S.I.F In	S.I.F Out	Index/SIF Ax.	Index/SIF Tor.	Eq. no.	Load type	Code Stress	Code Allow.
A55	+ Max P{1}									(3a)	HOOP	5642	16700
	GR + Max P{1}	2113	45	6	0	1.00	1.00	1.00	1.00	23a	SUST	3130	16700
	TR:Amb to T1{1}	115	1	48	0	1.00	1.00	1.00	1.00	(17)	DISP	1131	25050
	Amb to T1{1}	115	1	48	0	1.00	1.00	1.00	1.00	(17)	DISP	1131	25050
	Sus. + E1{1}	65	50	46	1	1.00	1.00			23a	OCC	4086	22211
	Sus. + E2{1}	1	49	113	1	1.00	1.00			23a	OCC	5542	22211
	Sus. + E3{1}	14	50	116	0	1.00	1.00			23a	OCC	5619	22211
	Sus. + E4{1}	82	49	48	0	1.00	1.00			23a	OCC	4156	22211
	Sus. + E5{1}	65	49	46	1	1.00	1.00			23a	OCC	4097	22211
	Sus. + E6{1}	1	49	114	1	1.00	1.00			23a	OCC	5553	22211
	Sus. + E7{1}	14	49	115	0	1.00	1.00			23a	OCC	5604	22211
	Sus. + E8{1}	82	49	47	0	1.00	1.00			23a	OCC	4143	22211
A56	- Max P{1}									(3a)	HOOP	5642	16700
	GR + Max P{1}	2113	40	3	0	1.00	1.00	1.00	1.00	23a	SUST	2994	16700
	TR:Amb to T1{1}	115	0	1	0	1.00	1.00	1.00	1.00	(17)	DISP	136	25050
	Amb to T1{1}	115	0	1	0	1.00	1.00	1.00	1.00	(17)	DISP	136	25050
	Sus. + E1{1}	55	43	8	1	1.00	1.00			23a	OCC	3175	22211
	Sus. + E2{1}	11	43	8	1	1.00	1.00			23a	OCC	3134	22211
	Sus. + E3{1}	24	43	12	0	1.00	1.00			23a	OCC	3218	22211
	Sus. + E4{1}	71	43	6	0	1.00	1.00			23a	OCC	3163	22211
	Sus. + E5{1}	55	43	8	1	1.00	1.00			23a	OCC	3183	22211
	Sus. + E6{1}	11	43	8	1	1.00	1.00			23a	OCC	3136	22211
	Sus. + E7{1}	24	43	11	0	1.00	1.00			23a	OCC	3217	22211
	Sus. + E8{1}	72	43	6	0	1.00	1.00			23a	OCC	3163	22211
A56	+ Max P{1}									(3a)	HOOP	5642	16700
	GR + Max P{1}	2113	40	3	0	1.00	1.00	1.00	1.00	23a	SUST	2994	16700
	TR:Amb to T1{1}	158	0	1	0	1.00	1.00	1.00	1.00	(17)	DISP	176	25050
	Amb to T1{1}	158	0	1	0	1.00	1.00	1.00	1.00	(17)	DISP	176	25050
	Sus. + E1{1}	55	43	8	1	1.00	1.00			23a	OCC	3175	22211
	Sus. + E2{1}	11	43	8	1	1.00	1.00			23a	OCC	3134	22211
	Sus. + E3{1}	24	43	12	0	1.00	1.00			23a	OCC	3218	22211
	Sus. + E4{1}	71	43	6	0	1.00	1.00			23a	OCC	3163	22211
	Sus. + E5{1}	55	43	8	1	1.00	1.00			23a	OCC	3183	22211
	Sus. + E6{1}	11	43	8	1	1.00	1.00			23a	OCC	3136	22211
	Sus. + E7{1}	24	43	11	0	1.00	1.00			23a	OCC	3217	22211
	Sus. + E8{1}	72	43	6	0	1.00	1.00			23a	OCC	3163	22211
A57	- Max P{1}									(3a)	HOOP	5642	16700
	GR + Max P{1}	2113	41	1	0	1.00	1.00	1.00	1.00	23a	SUST	3028	16700
	TR:Amb to T1{1}	158	0	5	0	1.00	1.00	1.00	1.00	(17)	DISP	245	25050
	Amb to T1{1}	158	0	5	0	1.00	1.00	1.00	1.00	(17)	DISP	245	25050
	Sus. + E1{1}	45	45	9	1	1.00	1.00			23a	OCC	3273	22211
	Sus. + E2{1}	21	45	7	1	1.00	1.00			23a	OCC	3206	22211
	Sus. + E3{1}	34	45	3	0	1.00	1.00			23a	OCC	3146	22211
	Sus. + E4{1}	61	45	11	0	1.00	1.00			23a	OCC	3332	22211
	Sus. + E5{1}	44	45	9	1	1.00	1.00			23a	OCC	3274	22211
	Sus. + E6{1}	21	45	7	1	1.00	1.00			23a	OCC	3208	22211
	Sus. + E7{1}	34	45	2	0	1.00	1.00			23a	OCC	3145	22211
	Sus. + E8{1}	62	45	11	0	1.00	1.00			23a	OCC	3331	22211

Primary Piping
04/24/2020 2018719 BENTLEY
07:34 AM AutoPIPE Nuclear 12.00.00.16 RESULT PAGE 300

ASME B31.3 (2016) CODE COMPLIANCE
(Moments in ft-lb , Force in lbf) (Stress in psi)

Point name	Load combination	Axial Force	In-Pl. Moment	Out-Pl. Moment	Torsion Moment	S.I.F In	S.I.F Out	Index/SIF Ax.	Index/SIF Tor.	Eq. no.	Load type	Code Stress	Code Allow.
A57	+ Max P{1}									(3a)	HOOP	5642	16700
	GR + Max P{1}	2113	41	1	0	1.00	1.00	1.00	1.00	23a	SUST	3028	16700
	TR:Amb to T1{1}	202	0	5	0	1.00	1.00	1.00	1.00	(17)	DISP	286	25050
	Amb to T1{1}	202	0	5	0	1.00	1.00	1.00	1.00	(17)	DISP	286	25050
	Sus. + E1{1}	45	45	9	1	1.00	1.00			23a	OCC	3273	22211
	Sus. + E2{1}	21	45	7	1	1.00	1.00			23a	OCC	3206	22211
	Sus. + E3{1}	34	45	3	0	1.00	1.00			23a	OCC	3146	22211
	Sus. + E4{1}	61	45	11	0	1.00	1.00			23a	OCC	3332	22211
	Sus. + E5{1}	44	45	9	1	1.00	1.00			23a	OCC	3274	22211
	Sus. + E6{1}	21	45	7	1	1.00	1.00			23a	OCC	3208	22211
	Sus. + E7{1}	34	45	2	0	1.00	1.00			23a	OCC	3145	22211
	Sus. + E8{1}	62	45	11	0	1.00	1.00			23a	OCC	3331	22211
A58	- Max P{1}									(3a)	HOOP	5642	16700
	GR + Max P{1}	2112	41	1	0	1.00	1.00	1.00	1.00	23a	SUST	3009	16700
	TR:Amb to T1{1}	202	0	1	0	1.00	1.00	1.00	1.00	(17)	DISP	202	25050
	Amb to T1{1}	202	0	1	0	1.00	1.00	1.00	1.00	(17)	DISP	202	25050
	Sus. + E1{1}	35	44	11	1	1.00	1.00			23a	OCC	3285	22211
	Sus. + E2{1}	31	44	13	1	1.00	1.00			23a	OCC	3340	22211
	Sus. + E3{1}	44	44	12	0	1.00	1.00			23a	OCC	3326	22211
	Sus. + E4{1}	51	44	10	0	1.00	1.00			23a	OCC	3288	22211
	Sus. + E5{1}	34	44	11	1	1.00	1.00			23a	OCC	3285	22211
	Sus. + E6{1}	31	44	13	1	1.00	1.00			23a	OCC	3340	22211
	Sus. + E7{1}	44	44	12	0	1.00	1.00			23a	OCC	3325	22211
	Sus. + E8{1}	51	44	10	0	1.00	1.00			23a	OCC	3288	22211
A58	+ Max P{1}									(3a)	HOOP	5642	16700
	GR + Max P{1}	2113	41	1	0	1.00	1.00	1.00	1.00	23a	SUST	3009	16700
	TR:Amb to T1{1}	246	0	1	0	1.00	1.00	1.00	1.00	(17)	DISP	243	25050
	Amb to T1{1}	246	0	1	0	1.00	1.00	1.00	1.00	(17)	DISP	243	25050
	Sus. + E1{1}	35	44	11	1	1.00	1.00			23a	OCC	3285	22211
	Sus. + E2{1}	31	44	13	1	1.00	1.00			23a	OCC	3340	22211
	Sus. + E3{1}	44	44	12	0	1.00	1.00			23a	OCC	3326	22211
	Sus. + E4{1}	51	44	10	0	1.00	1.00			23a	OCC	3289	22211
	Sus. + E5{1}	34	44	11	1	1.00	1.00			23a	OCC	3285	22211
	Sus. + E6{1}	31	44	13	1	1.00	1.00			23a	OCC	3341	22211
	Sus. + E7{1}	44	44	12	0	1.00	1.00			23a	OCC	3326	22211
	Sus. + E8{1}	51	44	10	0	1.00	1.00			23a	OCC	3289	22211
A59	- Max P{1}									(3a)	HOOP	5642	16700
	GR + Max P{1}	2112	42	2	0	1.00	1.00	1.00	1.00	23a	SUST	3047	16700
	TR:Amb to T1{1}	246	0	7	0	1.00	1.00	1.00	1.00	(17)	DISP	389	25050
	Amb to T1{1}	246	0	7	0	1.00	1.00	1.00	1.00	(17)	DISP	389	25050
	Sus. + E1{1}	24	45	3	1	1.00	1.00			23a	OCC	3150	22211
	Sus. + E2{1}	41	46	4	1	1.00	1.00			23a	OCC	3186	22211
	Sus. + E3{1}	54	46	3	0	1.00	1.00			23a	OCC	3186	22211
	Sus. + E4{1}	41	46	7	0	1.00	1.00			23a	OCC	3225	22211
	Sus. + E5{1}	24	46	3	1	1.00	1.00			23a	OCC	3158	22211
	Sus. + E6{1}	42	46	4	1	1.00	1.00			23a	OCC	3185	22211
	Sus. + E7{1}	54	46	3	0	1.00	1.00			23a	OCC	3189	22211
	Sus. + E8{1}	41	46	7	0	1.00	1.00			23a	OCC	3221	22211

ASME B31.3 (2016) CODE COMPLIANCE
(Moments in ft-lb , Force in lbf) (Stress in psi)

Point name	Load combination	Axial Force	In-Pl. Moment	Out-Pl. Moment	Torsion Moment	S.I.F In	S.I.F Out	Index/SIF Ax.	Index/SIF Tor.	Eq. no.	Load type	Code Stress	Code Allow.
A59	+ Max P{1}									(3a)	HOOP	5642	16700
	GR + Max P{1}	2112	42	2	0	1.00	1.00	1.00	1.00	23a	SUST	3047	16700
	TR:Amb to T1{1}	201	0	7	0	1.00	1.00	1.00	1.00	(17)	DISP	348	25050
	Amb to T1{1}	201	0	7	0	1.00	1.00	1.00	1.00	(17)	DISP	348	25050
	Sus. + E1{1}	24	45	3	1	1.00	1.00			23a	OCC	3150	22211
	Sus. + E2{1}	41	46	4	1	1.00	1.00			23a	OCC	3186	22211
	Sus. + E3{1}	54	46	3	0	1.00	1.00			23a	OCC	3186	22211
	Sus. + E4{1}	41	46	7	0	1.00	1.00			23a	OCC	3225	22211
	Sus. + E5{1}	24	46	3	1	1.00	1.00			23a	OCC	3159	22211
	Sus. + E6{1}	42	46	4	1	1.00	1.00			23a	OCC	3186	22211
	Sus. + E7{1}	54	46	3	0	1.00	1.00			23a	OCC	3190	22211
	Sus. + E8{1}	41	46	7	0	1.00	1.00			23a	OCC	3222	22211
A60	- Max P{1}									(3a)	HOOP	5642	16700
	GR + Max P{1}	2112	36	2	0	1.00	1.00	1.00	1.00	23a	SUST	2908	16700
	TR:Amb to T1{1}	201	0	1	0	1.00	1.00	1.00	1.00	(17)	DISP	215	25050
	Amb to T1{1}	201	0	1	0	1.00	1.00	1.00	1.00	(17)	DISP	215	25050
	Sus. + E1{1}	14	39	3	1	1.00	1.00			23a	OCC	2996	22211
	Sus. + E2{1}	51	39	20	1	1.00	1.00			23a	OCC	3381	22211
	Sus. + E3{1}	65	38	15	0	1.00	1.00			23a	OCC	3283	22211
	Sus. + E4{1}	31	39	3	0	1.00	1.00			23a	OCC	3019	22211
	Sus. + E5{1}	14	39	3	1	1.00	1.00			23a	OCC	3005	22211
	Sus. + E6{1}	52	39	20	1	1.00	1.00			23a	OCC	3380	22211
	Sus. + E7{1}	64	40	15	0	1.00	1.00			23a	OCC	3287	22211
	Sus. + E8{1}	31	39	3	0	1.00	1.00			23a	OCC	3018	22211
A60	+ Max P{1}									(3a)	HOOP	5642	16700
	GR + Max P{1}	2112	36	2	0	1.00	1.00	1.00	1.00	23a	SUST	2908	16700
	TR:Amb to T1{1}	162	0	1	0	1.00	1.00	1.00	1.00	(17)	DISP	178	25050
	Amb to T1{1}	162	0	1	0	1.00	1.00	1.00	1.00	(17)	DISP	178	25050
	Sus. + E1{1}	14	39	3	1	1.00	1.00			23a	OCC	2996	22211
	Sus. + E2{1}	51	39	20	1	1.00	1.00			23a	OCC	3381	22211
	Sus. + E3{1}	65	38	15	0	1.00	1.00			23a	OCC	3283	22211
	Sus. + E4{1}	31	39	3	0	1.00	1.00			23a	OCC	3019	22211
	Sus. + E5{1}	14	39	3	1	1.00	1.00			23a	OCC	3005	22211
	Sus. + E6{1}	52	39	20	1	1.00	1.00			23a	OCC	3380	22211
	Sus. + E7{1}	64	40	15	0	1.00	1.00			23a	OCC	3287	22211
	Sus. + E8{1}	31	39	3	0	1.00	1.00			23a	OCC	3018	22211
A61	- Max P{1}									(3a)	HOOP	5642	16700
	GR + Max P{1}	2112	44	17	0	1.00	1.00	1.00	1.00	23a	SUST	3160	16700
	TR:Amb to T1{1}	162	1	103	0	1.00	1.00	1.00	1.00	(17)	DISP	2345	25050
	Amb to T1{1}	162	1	103	0	1.00	1.00	1.00	1.00	(17)	DISP	2345	25050
	Sus. + E1{1}	5	49	186	1	1.00	1.00			23a	OCC	6989	22211
	Sus. + E2{1}	61	46	252	1	1.00	1.00			23a	OCC	8522	22211
	Sus. + E3{1}	74	50	214	0	1.00	1.00			23a	OCC	7686	22211
	Sus. + E4{1}	21	48	154	0	1.00	1.00			23a	OCC	6269	22211
	Sus. + E5{1}	5	47	186	1	1.00	1.00			23a	OCC	6986	22211
	Sus. + E6{1}	61	49	252	1	1.00	1.00			23a	OCC	8531	22211
	Sus. + E7{1}	74	45	214	0	1.00	1.00			23a	OCC	7675	22211
	Sus. + E8{1}	22	48	154	0	1.00	1.00			23a	OCC	6271	22211

Primary Piping
04/24/2020 2018719 BENTLEY
07:34 AM AutoPIPE Nuclear 12.00.00.16 RESULT PAGE 302

ASME B31.3 (2016) CODE COMPLIANCE
(Moments in ft-lb , Force in lbf) (Stress in psi)

Point name	Load combination	Axial Force	In-Pl. Moment	Out-Pl. Moment	Torsion Moment	S.I.F In	S.I.F Out	Index/SIF Ax.	Index/SIF Tor.	Eq. no.	Load type	Code Stress	Code Allow.
A61	+ Max P{1}									(3a)	HOOP	5642	16700
	GR + Max P{1}	2112	44	17	0	1.00	1.00	1.00	1.00	23a	SUST	3160	16700
	TR:Amb to T1{1}	88	1	103	0	1.00	1.00	1.00	1.00	(17)	DISP	2277	25050
	Amb to T1{1}	88	1	103	0	1.00	1.00	1.00	1.00	(17)	DISP	2277	25050
	Sus. + E1{1}	5	49	186	0	1.00	1.00			23a	OCC	6989	22211
	Sus. + E2{1}	61	46	252	1	1.00	1.00			23a	OCC	8522	22211
	Sus. + E3{1}	74	50	214	0	1.00	1.00			23a	OCC	7686	22211
	Sus. + E4{1}	21	48	154	0	1.00	1.00			23a	OCC	6269	22211
	Sus. + E5{1}	5	47	186	0	1.00	1.00			23a	OCC	6986	22211
	Sus. + E6{1}	61	49	252	0	1.00	1.00			23a	OCC	8532	22211
	Sus. + E7{1}	74	45	214	0	1.00	1.00			23a	OCC	7675	22211
	Sus. + E8{1}	22	48	154	0	1.00	1.00			23a	OCC	6271	22211
A62	- Max P{1}									(3a)	HOOP	5642	16700
	GR + Max P{1}	2112	20	38	0	1.00	1.00	1.00	1.00	23a	SUST	3049	16700
	TR:Amb to T1{1}	88	3	114	0	1.00	1.00	1.00	1.00	(17)	DISP	2525	25050
	Amb to T1{1}	88	3	114	0	1.00	1.00	1.00	1.00	(17)	DISP	2525	25050
	Sus. + E1{1}	5	20	76	0	1.00	1.00			23a	OCC	3914	22211
	Sus. + E2{1}	71	26	226	1	1.00	1.00			23a	OCC	7390	22211
	Sus. + E3{1}	84	25	285	0	1.00	1.00			23a	OCC	8720	22211
	Sus. + E4{1}	11	20	71	0	1.00	1.00			23a	OCC	3822	22211
	Sus. + E5{1}	5	23	75	0	1.00	1.00			23a	OCC	3912	22211
	Sus. + E6{1}	71	23	228	0	1.00	1.00			23a	OCC	7418	22211
	Sus. + E7{1}	84	28	283	0	1.00	1.00			23a	OCC	8690	22211
	Sus. + E8{1}	11	22	71	0	1.00	1.00			23a	OCC	3820	22211
A62	+ Max P{1}									(3a)	HOOP	5642	16700
	GR + Max P{1}	2112	20	38	0	1.00	1.00	1.00	1.00	23a	SUST	3049	16700
	TR:Amb to T1{1}	66	3	114	0	1.00	1.00	1.00	1.00	(17)	DISP	2504	25050
	Amb to T1{1}	66	3	114	0	1.00	1.00	1.00	1.00	(17)	DISP	2504	25050
	Sus. + E1{1}	5	20	76	1	1.00	1.00			23a	OCC	3914	22211
	Sus. + E2{1}	71	26	226	0	1.00	1.00			23a	OCC	7390	22211
	Sus. + E3{1}	84	25	285	1	1.00	1.00			23a	OCC	8720	22211
	Sus. + E4{1}	11	20	71	0	1.00	1.00			23a	OCC	3822	22211
	Sus. + E5{1}	5	23	75	1	1.00	1.00			23a	OCC	3913	22211
	Sus. + E6{1}	71	23	228	0	1.00	1.00			23a	OCC	7419	22211
	Sus. + E7{1}	84	28	283	1	1.00	1.00			23a	OCC	8690	22211
	Sus. + E8{1}	11	22	71	0	1.00	1.00			23a	OCC	3820	22211
A12 N-	Max P{1}									(3a)	HOOP	5642	16700
	GR + Max P{1}	2112	12	39	0	1.00	1.00	1.00	1.00	23a	SUST	3006	16700
	TR:Amb to T1{1}	66	2	137	0	1.00	1.00	1.00	1.00	(17)	DISP	2992	25050
	Amb to T1{1}	66	2	137	0	1.00	1.00	1.00	1.00	(17)	DISP	2992	25050
	Sus. + E1{1}	6	12	72	1	1.00	1.00			23a	OCC	3766	22211
	Sus. + E2{1}	72	17	252	0	1.00	1.00			23a	OCC	7894	22211
	Sus. + E3{1}	85	16	315	1	1.00	1.00			23a	OCC	9325	22211
	Sus. + E4{1}	11	12	79	0	1.00	1.00			23a	OCC	3931	22211
	Sus. + E5{1}	6	14	72	1	1.00	1.00			23a	OCC	3764	22211
	Sus. + E6{1}	72	14	253	0	1.00	1.00			23a	OCC	7919	22211
	Sus. + E7{1}	84	19	313	1	1.00	1.00			23a	OCC	9298	22211
	Sus. + E8{1}	11	14	79	0	1.00	1.00			23a	OCC	3928	22211

ASME B31.3 (2016) CODE COMPLIANCE
(Moments in ft-lb , Force in lbf) (Stress in psi)

Point name	Load combination	Axial Force	In-Pl. Moment	Out-Pl. Moment	Torsion Moment	S.I.F In	S.I.F Out	Index/SIF Ax.	Index/SIF Tor.	Eq. no.	Load type	Code Stress	Code Allow.
A12 N+	Max P{1}									(3a)	HOOP	5642	16700
	GR + Max P{1}	2112	39	12	0	1.00	1.00	1.00	1.00	23a	SUST	3006	16700
	TR:Amb to T1{1}	66	137	4	0	1.00	1.00	1.00	1.00	(17)	DISP	2992	25050
	Amb to T1{1}	66	137	4	0	1.00	1.00	1.00	1.00	(17)	DISP	2992	25050
	Sus. + E1{1}	6	72	12	1	1.00	1.00			23a	OCC	3766	22211
	Sus. + E2{1}	72	252	18	0	1.00	1.00			23a	OCC	7894	22211
	Sus. + E3{1}	85	315	18	1	1.00	1.00			23a	OCC	9325	22211
	Sus. + E4{1}	11	79	12	0	1.00	1.00			23a	OCC	3931	22211
	Sus. + E5{1}	6	72	14	1	1.00	1.00			23a	OCC	3764	22211
	Sus. + E6{1}	72	253	16	0	1.00	1.00			23a	OCC	7919	22211
	Sus. + E7{1}	84	313	21	1	1.00	1.00			23a	OCC	9298	22211
	Sus. + E8{1}	11	79	14	0	1.00	1.00			23a	OCC	3928	22211
A12 F-	Max P{1}									(3a)	HOOP	5642	16700
	GR + Max P{1}	2119	17	13	1	1.00	1.00	1.00	1.00	23a	SUST	2583	16700
	TR:Amb to T1{1}	46	77	4	0	1.00	1.00	1.00	1.00	(17)	DISP	1696	25050
	Amb to T1{1}	46	77	4	0	1.00	1.00	1.00	1.00	(17)	DISP	1696	25050
	Sus. + E1{1}	4	33	16	1	1.00	1.00			23a	OCC	2949	22211
	Sus. + E2{1}	43	144	18	2	1.00	1.00			23a	OCC	5497	22211
	Sus. + E3{1}	52	194	23	2	1.00	1.00			23a	OCC	6637	22211
	Sus. + E4{1}	8	69	16	1	1.00	1.00			23a	OCC	3772	22211
	Sus. + E5{1}	4	33	14	1	1.00	1.00			23a	OCC	2946	22211
	Sus. + E6{1}	43	143	20	2	1.00	1.00			23a	OCC	5472	22211
	Sus. + E7{1}	52	195	21	2	1.00	1.00			23a	OCC	6663	22211
	Sus. + E8{1}	8	69	14	1	1.00	1.00			23a	OCC	3770	22211
A12 F+	Max P{1}									(3a)	HOOP	5642	16700
	GR + Max P{1}	2119	13	17	1	1.00	1.00	1.00	1.00	23a	SUST	2583	16700
	TR:Amb to T1{1}	46	3	77	0	1.00	1.00	1.00	1.00	(17)	DISP	1696	25050
	Amb to T1{1}	46	3	77	0	1.00	1.00	1.00	1.00	(17)	DISP	1696	25050
	Sus. + E1{1}	4	16	33	1	1.00	1.00			23a	OCC	2949	22211
	Sus. + E2{1}	43	17	144	2	1.00	1.00			23a	OCC	5497	22211
	Sus. + E3{1}	52	21	194	2	1.00	1.00			23a	OCC	6637	22211
	Sus. + E4{1}	8	15	69	1	1.00	1.00			23a	OCC	3772	22211
	Sus. + E5{1}	4	14	33	1	1.00	1.00			23a	OCC	2946	22211
	Sus. + E6{1}	43	19	143	2	1.00	1.00			23a	OCC	5472	22211
	Sus. + E7{1}	52	19	195	2	1.00	1.00			23a	OCC	6663	22211
	Sus. + E8{1}	8	13	69	1	1.00	1.00			23a	OCC	3770	22211
A63 -	Max P{1}									(3a)	HOOP	5642	16700
	GR + Max P{1}	2119	21	12	1	1.00	1.00	1.00	1.00	23a	SUST	2655	16700
	TR:Amb to T1{1}	46	4	44	0	1.00	1.00	1.00	1.00	(17)	DISP	997	25050
	Amb to T1{1}	46	4	44	0	1.00	1.00	1.00	1.00	(17)	DISP	997	25050
	Sus. + E1{1}	3	25	34	1	1.00	1.00			23a	OCC	3153	22211
	Sus. + E2{1}	42	26	100	2	1.00	1.00			23a	OCC	4697	22211
	Sus. + E3{1}	51	32	144	2	1.00	1.00			23a	OCC	5693	22211
	Sus. + E4{1}	7	24	62	1	1.00	1.00			23a	OCC	3785	22211
	Sus. + E5{1}	3	22	34	1	1.00	1.00			23a	OCC	3148	22211
	Sus. + E6{1}	42	29	99	2	1.00	1.00			23a	OCC	4672	22211
	Sus. + E7{1}	52	29	145	2	1.00	1.00			23a	OCC	5720	22211
	Sus. + E8{1}	7	22	62	1	1.00	1.00			23a	OCC	3783	22211

Primary Piping
04/24/2020 2018719 BENTLEY
07:34 AM AutoPIPE Nuclear 12.00.00.16 RESULT PAGE 304

ASME B31.3 (2016) CODE COMPLIANCE
(Moments in ft-lb , Force in lbf) (Stress in psi)

Point name	Load combination	Axial Force	In-Pl. Moment	Out-Pl. Moment	Torsion Moment	S.I.F In	S.I.F Out	Index/SIF Ax.	Index/SIF Tor.	Eq. no.	Load type	Code Stress	Code Allow.
A63	+ Max P{1}									(3a)	HOOP	5642	16700
	GR + Max P{1}	2118	21	12	1	1.00	1.00	1.00	1.00	23a	SUST	2655	16700
	TR:Amb to T1{1}	89	4	44	0	1.00	1.00	1.00	1.00	(17)	DISP	1038	25050
	Amb to T1{1}	89	4	44	0	1.00	1.00	1.00	1.00	(17)	DISP	1038	25050
	Sus. + E1{1}	3	25	34	1	1.00	1.00			23a	OCC	3153	22211
	Sus. + E2{1}	42	26	100	2	1.00	1.00			23a	OCC	4697	22211
	Sus. + E3{1}	51	32	144	2	1.00	1.00			23a	OCC	5693	22211
	Sus. + E4{1}	7	24	62	2	1.00	1.00			23a	OCC	3785	22211
	Sus. + E5{1}	3	22	34	1	1.00	1.00			23a	OCC	3148	22211
	Sus. + E6{1}	42	29	99	2	1.00	1.00			23a	OCC	4672	22211
	Sus. + E7{1}	52	29	145	2	1.00	1.00			23a	OCC	5720	22211
	Sus. + E8{1}	7	22	62	1	1.00	1.00			23a	OCC	3782	22211
A64	- Max P{1}									(3a)	HOOP	5642	16700
	GR + Max P{1}	2118	46	63	1	1.00	1.00	1.00	1.00	23a	SUST	3860	16700
	TR:Amb to T1{1}	89	1	99	0	1.00	1.00	1.00	1.00	(17)	DISP	2209	25050
	Amb to T1{1}	89	1	99	0	1.00	1.00	1.00	1.00	(17)	DISP	2209	25050
	Sus. + E1{1}	7	49	237	1	1.00	1.00			23a	OCC	7806	22211
	Sus. + E2{1}	32	51	180	2	1.00	1.00			23a	OCC	6537	22211
	Sus. + E3{1}	41	48	311	2	1.00	1.00			23a	OCC	9503	22211
	Sus. + E4{1}	3	50	114	2	1.00	1.00			23a	OCC	5015	22211
	Sus. + E5{1}	7	51	237	1	1.00	1.00			23a	OCC	7800	22211
	Sus. + E6{1}	32	49	179	2	1.00	1.00			23a	OCC	6527	22211
	Sus. + E7{1}	41	52	311	2	1.00	1.00			23a	OCC	9514	22211
	Sus. + E8{1}	3	50	114	1	1.00	1.00			23a	OCC	5022	22211
A64	+ Max P{1}									(3a)	HOOP	5642	16700
	GR + Max P{1}	2118	46	63	1	1.00	1.00	1.00	1.00	23a	SUST	3860	16700
	TR:Amb to T1{1}	171	1	99	0	1.00	1.00	1.00	1.00	(17)	DISP	2286	25050
	Amb to T1{1}	171	1	99	0	1.00	1.00	1.00	1.00	(17)	DISP	2286	25050
	Sus. + E1{1}	7	49	237	1	1.00	1.00			23a	OCC	7807	22211
	Sus. + E2{1}	32	51	180	2	1.00	1.00			23a	OCC	6538	22211
	Sus. + E3{1}	41	48	311	2	1.00	1.00			23a	OCC	9504	22211
	Sus. + E4{1}	3	50	114	2	1.00	1.00			23a	OCC	5015	22211
	Sus. + E5{1}	7	51	237	1	1.00	1.00			23a	OCC	7800	22211
	Sus. + E6{1}	32	49	179	2	1.00	1.00			23a	OCC	6528	22211
	Sus. + E7{1}	41	52	311	2	1.00	1.00			23a	OCC	9514	22211
	Sus. + E8{1}	3	50	114	1	1.00	1.00			23a	OCC	5022	22211
A65	- Max P{1}									(3a)	HOOP	5642	16700
	GR + Max P{1}	2118	40	1	1	1.00	1.00	1.00	1.00	23a	SUST	2992	16700
	TR:Amb to T1{1}	171	0	27	0	1.00	1.00	1.00	1.00	(17)	DISP	739	25050
	Amb to T1{1}	171	0	27	0	1.00	1.00	1.00	1.00	(17)	DISP	739	25050
	Sus. + E1{1}	17	44	7	1	1.00	1.00			23a	OCC	3180	22211
	Sus. + E2{1}	22	43	9	2	1.00	1.00			23a	OCC	3215	22211
	Sus. + E3{1}	31	43	14	2	1.00	1.00			23a	OCC	3317	22211
	Sus. + E4{1}	13	42	10	2	1.00	1.00			23a	OCC	3207	22211
	Sus. + E5{1}	17	42	7	1	1.00	1.00			23a	OCC	3160	22211
	Sus. + E6{1}	22	43	9	2	1.00	1.00			23a	OCC	3209	22211
	Sus. + E7{1}	31	42	14	2	1.00	1.00			23a	OCC	3316	22211
	Sus. + E8{1}	13	43	10	1	1.00	1.00			23a	OCC	3214	22211

ASME B31.3 (2016) CODE COMPLIANCE
(Moments in ft-lb , Force in lbf) (Stress in psi)

Point name	Load combination	Axial Force	In-Pl. Moment	Out-Pl. Moment	Torsion Moment	S.I.F In	S.I.F Out	Index/SIF Ax.	Index/SIF Tor.	Eq. no.	Load type	Code Stress	Code Allow.
A65	+ Max P{1}									(3a)	HOOP	5642	16700
	GR + Max P{1}	2118	40	1	1	1.00	1.00	1.00	1.00	23a	SUST	2992	16700
	TR:Amb to T1{1}	234	0	27	0	1.00	1.00	1.00	1.00	(17)	DISP	798	25050
	Amb to T1{1}	234	0	27	0	1.00	1.00	1.00	1.00	(17)	DISP	798	25050
	Sus. + E1{1}	17	44	7	1	1.00	1.00			23a	OCC	3180	22211
	Sus. + E2{1}	22	43	9	2	1.00	1.00			23a	OCC	3215	22211
	Sus. + E3{1}	31	43	14	2	1.00	1.00			23a	OCC	3317	22211
	Sus. + E4{1}	13	42	10	2	1.00	1.00			23a	OCC	3208	22211
	Sus. + E5{1}	17	42	7	1	1.00	1.00			23a	OCC	3161	22211
	Sus. + E6{1}	22	43	9	2	1.00	1.00			23a	OCC	3209	22211
	Sus. + E7{1}	31	42	14	2	1.00	1.00			23a	OCC	3316	22211
	Sus. + E8{1}	13	43	10	1	1.00	1.00			23a	OCC	3214	22211
A66	- Max P{1}									(3a)	HOOP	5642	16700
	GR + Max P{1}	2118	42	1	1	1.00	1.00	1.00	1.00	23a	SUST	3046	16700
	TR:Amb to T1{1}	234	0	10	0	1.00	1.00	1.00	1.00	(17)	DISP	432	25050
	Amb to T1{1}	234	0	10	0	1.00	1.00	1.00	1.00	(17)	DISP	432	25050
	Sus. + E1{1}	28	44	4	1	1.00	1.00			23a	OCC	3158	22211
	Sus. + E2{1}	12	45	2	2	1.00	1.00			23a	OCC	3129	22211
	Sus. + E3{1}	21	46	3	2	1.00	1.00			23a	OCC	3156	22211
	Sus. + E4{1}	23	46	2	2	1.00	1.00			23a	OCC	3161	22211
	Sus. + E5{1}	27	46	4	1	1.00	1.00			23a	OCC	3190	22211
	Sus. + E6{1}	12	46	2	2	1.00	1.00			23a	OCC	3151	22211
	Sus. + E7{1}	21	45	3	2	1.00	1.00			23a	OCC	3147	22211
	Sus. + E8{1}	23	45	2	1	1.00	1.00			23a	OCC	3135	22211
A66	+ Max P{1}									(3a)	HOOP	5642	16700
	GR + Max P{1}	2115	42	1	1	1.00	1.00	1.00	1.00	23a	SUST	3043	16700
	TR:Amb to T1{1}	187	0	10	0	1.00	1.00	1.00	1.00	(17)	DISP	388	25050
	Amb to T1{1}	187	0	10	0	1.00	1.00	1.00	1.00	(17)	DISP	388	25050
	Sus. + E1{1}	28	44	4	1	1.00	1.00			23a	OCC	3156	22211
	Sus. + E2{1}	12	45	2	2	1.00	1.00			23a	OCC	3127	22211
	Sus. + E3{1}	21	46	3	2	1.00	1.00			23a	OCC	3154	22211
	Sus. + E4{1}	23	46	2	2	1.00	1.00			23a	OCC	3158	22211
	Sus. + E5{1}	27	46	4	1	1.00	1.00			23a	OCC	3188	22211
	Sus. + E6{1}	12	46	2	2	1.00	1.00			23a	OCC	3149	22211
	Sus. + E7{1}	21	45	3	2	1.00	1.00			23a	OCC	3144	22211
	Sus. + E8{1}	23	45	2	1	1.00	1.00			23a	OCC	3133	22211
A67	- Max P{1}									(3a)	HOOP	5642	16700
	GR + Max P{1}	2115	38	2	1	1.00	1.00	1.00	1.00	23a	SUST	2958	16700
	TR:Amb to T1{1}	187	0	4	0	1.00	1.00	1.00	1.00	(17)	DISP	257	25050
	Amb to T1{1}	187	0	4	0	1.00	1.00	1.00	1.00	(17)	DISP	257	25050
	Sus. + E1{1}	38	41	7	1	1.00	1.00			23a	OCC	3138	22211
	Sus. + E2{1}	2	41	3	2	1.00	1.00			23a	OCC	3037	22211
	Sus. + E3{1}	11	41	6	2	1.00	1.00			23a	OCC	3092	22211
	Sus. + E4{1}	33	41	5	2	1.00	1.00			23a	OCC	3093	22211
	Sus. + E5{1}	37	41	7	1	1.00	1.00			23a	OCC	3138	22211
	Sus. + E6{1}	1	41	3	2	1.00	1.00			23a	OCC	3045	22211
	Sus. + E7{1}	11	41	6	2	1.00	1.00			23a	OCC	3087	22211
	Sus. + E8{1}	33	41	5	1	1.00	1.00			23a	OCC	3092	22211

ASME B31.3 (2016) CODE COMPLIANCE
(Moments in ft-lb , Force in lbf) (Stress in psi)

Point name	Load combination	Axial Force	In-Pl. Moment	Out-Pl. Moment	Torsion Moment	S.I.F In	S.I.F Out	Index/SIF Ax.	Index/SIF Tor.	Eq. no.	Load type	Code Stress	Code Allow.
A67	+ Max P{1}									(3a)	HOOP	5642	16700
	GR + Max P{1}	2115	38	2	1	1.00	1.00	1.00	1.00	23a	SUST	2958	16700
	TR:Amb to T1{1}	145	0	4	0	1.00	1.00	1.00	1.00	(17)	DISP	218	25050
	Amb to T1{1}	145	0	4	0	1.00	1.00	1.00	1.00	(17)	DISP	218	25050
	Sus. + E1{1}	38	41	7	1	1.00	1.00			23a	OCC	3138	22211
	Sus. + E2{1}	2	41	3	2	1.00	1.00			23a	OCC	3037	22211
	Sus. + E3{1}	11	41	6	2	1.00	1.00			23a	OCC	3092	22211
	Sus. + E4{1}	33	41	5	2	1.00	1.00			23a	OCC	3093	22211
	Sus. + E5{1}	37	41	7	1	1.00	1.00			23a	OCC	3138	22211
	Sus. + E6{1}	1	41	3	2	1.00	1.00			23a	OCC	3045	22211
	Sus. + E7{1}	11	41	6	2	1.00	1.00			23a	OCC	3087	22211
	Sus. + E8{1}	33	41	5	1	1.00	1.00			23a	OCC	3092	22211
A68	- Max P{1}									(3a)	HOOP	5642	16700
	GR + Max P{1}	2115	46	3	1	1.00	1.00	1.00	1.00	23a	SUST	3129	16700
	TR:Amb to T1{1}	145	1	63	0	1.00	1.00	1.00	1.00	(17)	DISP	1483	25050
	Amb to T1{1}	145	1	63	0	1.00	1.00	1.00	1.00	(17)	DISP	1483	25050
	Sus. + E1{1}	48	51	16	1	1.00	1.00			23a	OCC	3493	22211
	Sus. + E2{1}	8	51	87	2	1.00	1.00			23a	OCC	5034	22211
	Sus. + E3{1}	1	48	84	2	1.00	1.00			23a	OCC	4960	22211
	Sus. + E4{1}	43	49	18	2	1.00	1.00			23a	OCC	3521	22211
	Sus. + E5{1}	47	48	16	1	1.00	1.00			23a	OCC	3473	22211
	Sus. + E6{1}	8	48	87	2	1.00	1.00			23a	OCC	5032	22211
	Sus. + E7{1}	1	50	84	2	1.00	1.00			23a	OCC	4961	22211
	Sus. + E8{1}	43	50	18	1	1.00	1.00			23a	OCC	3532	22211
A68	+ Max P{1}									(3a)	HOOP	5642	16700
	GR + Max P{1}	2115	46	3	1	1.00	1.00	1.00	1.00	23a	SUST	3130	16700
	TR:Amb to T1{1}	77	1	63	0	1.00	1.00	1.00	1.00	(17)	DISP	1420	25050
	Amb to T1{1}	77	1	63	0	1.00	1.00	1.00	1.00	(17)	DISP	1420	25050
	Sus. + E1{1}	48	51	16	1	1.00	1.00			23a	OCC	3494	22211
	Sus. + E2{1}	8	51	87	2	1.00	1.00			23a	OCC	5035	22211
	Sus. + E3{1}	1	48	84	2	1.00	1.00			23a	OCC	4961	22211
	Sus. + E4{1}	43	49	18	2	1.00	1.00			23a	OCC	3522	22211
	Sus. + E5{1}	47	48	16	1	1.00	1.00			23a	OCC	3474	22211
	Sus. + E6{1}	8	48	87	2	1.00	1.00			23a	OCC	5033	22211
	Sus. + E7{1}	1	50	84	2	1.00	1.00			23a	OCC	4962	22211
	Sus. + E8{1}	43	50	18	1	1.00	1.00			23a	OCC	3533	22211
A69	- Max P{1}									(3a)	HOOP	5642	16700
	GR + Max P{1}	2115	20	26	1	1.00	1.00	1.00	1.00	23a	SUST	2834	16700
	TR:Amb to T1{1}	77	2	87	0	1.00	1.00	1.00	1.00	(17)	DISP	1944	25050
	Amb to T1{1}	77	2	87	0	1.00	1.00	1.00	1.00	(17)	DISP	1944	25050
	Sus. + E1{1}	58	22	181	1	1.00	1.00			23a	OCC	6395	22211
	Sus. + E2{1}	19	23	155	2	1.00	1.00			23a	OCC	5768	22211
	Sus. + E3{1}	9	24	114	2	1.00	1.00			23a	OCC	4827	22211
	Sus. + E4{1}	53	24	144	2	1.00	1.00			23a	OCC	5546	22211
	Sus. + E5{1}	57	25	181	1	1.00	1.00			23a	OCC	6386	22211
	Sus. + E6{1}	19	26	155	2	1.00	1.00			23a	OCC	5768	22211
	Sus. + E7{1}	9	21	114	2	1.00	1.00			23a	OCC	4828	22211
	Sus. + E8{1}	53	20	144	1	1.00	1.00			23a	OCC	5556	22211

Primary Piping
04/24/2020 2018719 BENTLEY
07:34 AM AutoPIPE Nuclear 12.00.00.16 RESULT PAGE 307

ASME B31.3 (2016) CODE COMPLIANCE
(Moments in ft-lb , Force in lbf) (Stress in psi)

Point name	Load combination	Axial Force	In-Pl. Moment	Out-Pl. Moment	Torsion Moment	S.I.F In	S.I.F Out	Index/SIF Ax.	Index/SIF Tor.	Eq. no.	Load type	Code Stress	Code Allow.
A69	+ Max P{1}									(3a)	HOOP	5642	16700
	GR + Max P{1}	2115	20	26	1	1.00	1.00	1.00	1.00	23a	SUST	2834	16700
	TR:Amb to T1{1}	50	2	87	0	1.00	1.00	1.00	1.00	(17)	DISP	1918	25050
	Amb to T1{1}	50	2	87	0	1.00	1.00	1.00	1.00	(17)	DISP	1918	25050
	Sus. + E1{1}	58	22	181	2	1.00	1.00			23a	OCC	6395	22211
	Sus. + E2{1}	19	23	155	1	1.00	1.00			23a	OCC	5768	22211
	Sus. + E3{1}	9	24	114	2	1.00	1.00			23a	OCC	4827	22211
	Sus. + E4{1}	53	24	144	1	1.00	1.00			23a	OCC	5546	22211
	Sus. + E5{1}	57	25	181	1	1.00	1.00			23a	OCC	6386	22211
	Sus. + E6{1}	19	26	155	2	1.00	1.00			23a	OCC	5768	22211
	Sus. + E7{1}	9	21	114	2	1.00	1.00			23a	OCC	4828	22211
	Sus. + E8{1}	53	20	144	2	1.00	1.00			23a	OCC	5556	22211
A13 N-	Max P{1}									(3a)	HOOP	5642	16700
	GR + Max P{1}	2115	12	28	1	1.00	1.00	1.00	1.00	23a	SUST	2775	16700
	TR:Amb to T1{1}	50	1	104	0	1.00	1.00	1.00	1.00	(17)	DISP	2265	25050
	Amb to T1{1}	50	1	104	0	1.00	1.00	1.00	1.00	(17)	DISP	2265	25050
	Sus. + E1{1}	58	14	193	2	1.00	1.00			23a	OCC	6575	22211
	Sus. + E2{1}	19	15	166	1	1.00	1.00			23a	OCC	5916	22211
	Sus. + E3{1}	10	16	122	2	1.00	1.00			23a	OCC	4919	22211
	Sus. + E4{1}	54	15	154	1	1.00	1.00			23a	OCC	5676	22211
	Sus. + E5{1}	58	16	193	1	1.00	1.00			23a	OCC	6564	22211
	Sus. + E6{1}	19	17	166	2	1.00	1.00			23a	OCC	5914	22211
	Sus. + E7{1}	10	13	122	2	1.00	1.00			23a	OCC	4921	22211
	Sus. + E8{1}	54	13	154	2	1.00	1.00			23a	OCC	5687	22211
A13 N+	Max P{1}									(3a)	HOOP	5642	16700
	GR + Max P{1}	2115	28	12	1	1.00	1.00	1.00	1.00	23a	SUST	2775	16700
	TR:Amb to T1{1}	50	104	2	0	1.00	1.00	1.00	1.00	(17)	DISP	2265	25050
	Amb to T1{1}	50	104	2	0	1.00	1.00	1.00	1.00	(17)	DISP	2265	25050
	Sus. + E1{1}	58	193	15	2	1.00	1.00			23a	OCC	6575	22211
	Sus. + E2{1}	19	166	15	1	1.00	1.00			23a	OCC	5916	22211
	Sus. + E3{1}	10	122	16	2	1.00	1.00			23a	OCC	4919	22211
	Sus. + E4{1}	54	154	15	1	1.00	1.00			23a	OCC	5676	22211
	Sus. + E5{1}	58	193	17	1	1.00	1.00			23a	OCC	6564	22211
	Sus. + E6{1}	19	166	17	2	1.00	1.00			23a	OCC	5914	22211
	Sus. + E7{1}	10	122	14	2	1.00	1.00			23a	OCC	4921	22211
	Sus. + E8{1}	54	154	13	2	1.00	1.00			23a	OCC	5687	22211
A13 F-	Max P{1}									(3a)	HOOP	5642	16700
	GR + Max P{1}	2118	18	15	2	1.00	1.00	1.00	1.00	23a	SUST	2625	16700
	TR:Amb to T1{1}	32	52	3	0	1.00	1.00	1.00	1.00	(17)	DISP	1146	25050
	Amb to T1{1}	32	52	3	0	1.00	1.00	1.00	1.00	(17)	DISP	1146	25050
	Sus. + E1{1}	27	68	21	3	1.00	1.00			23a	OCC	3797	22211
	Sus. + E2{1}	13	137	21	2	1.00	1.00			23a	OCC	5325	22211
	Sus. + E3{1}	8	106	16	2	1.00	1.00			23a	OCC	4629	22211
	Sus. + E4{1}	22	30	17	2	1.00	1.00			23a	OCC	2919	22211
	Sus. + E5{1}	27	69	18	2	1.00	1.00			23a	OCC	3808	22211
	Sus. + E6{1}	13	137	18	2	1.00	1.00			23a	OCC	5323	22211
	Sus. + E7{1}	8	106	19	2	1.00	1.00			23a	OCC	4631	22211
	Sus. + E8{1}	22	29	19	2	1.00	1.00			23a	OCC	2917	22211

Primary Piping
04/24/2020 2018719 BENTLEY
07:34 AM AutoPIPE Nuclear 12.00.00.16 RESULT PAGE 308

ASME B31.3 (2016) CODE COMPLIANCE
(Moments in ft-lb , Force in lbf) (Stress in psi)

Point name	Load combination	Axial Force	In-Pl. Moment	Out-Pl. Moment	Torsion Moment	S.I.F In	S.I.F Out	Index/SIF Ax.	Index/SIF Tor.	Eq. no.	Load type	Code Stress	Code Allow.
A13 F+	Max P{1}									(3a)	HOOP	5642	16700
	GR + Max P{1}	2118	14	18	2	1.00	1.00	1.00	1.00	23a	SUST	2625	16700
	TR:Amb to T1{1}	32	2	52	0	1.00	1.00	1.00	1.00	(17)	DISP	1146	25050
	Amb to T1{1}	32	2	52	0	1.00	1.00	1.00	1.00	(17)	DISP	1146	25050
	Sus. + E1{1}	27	20	69	3	1.00	1.00			23a	OCC	3797	22211
	Sus. + E2{1}	13	19	137	2	1.00	1.00			23a	OCC	5325	22211
	Sus. + E3{1}	8	15	107	2	1.00	1.00			23a	OCC	4629	22211
	Sus. + E4{1}	22	16	30	2	1.00	1.00			23a	OCC	2919	22211
	Sus. + E5{1}	27	18	69	2	1.00	1.00			23a	OCC	3808	22211
	Sus. + E6{1}	13	17	137	2	1.00	1.00			23a	OCC	5323	22211
	Sus. + E7{1}	8	18	107	2	1.00	1.00			23a	OCC	4631	22211
	Sus. + E8{1}	22	19	29	2	1.00	1.00			23a	OCC	2917	22211
A70 -	Max P{1}									(3a)	HOOP	5642	16700
	GR + Max P{1}	2118	23	15	2	1.00	1.00	1.00	1.00	23a	SUST	2716	16700
	TR:Amb to T1{1}	32	3	27	0	1.00	1.00	1.00	1.00	(17)	DISP	617	25050
	Amb to T1{1}	32	3	27	0	1.00	1.00	1.00	1.00	(17)	DISP	617	25050
	Sus. + E1{1}	27	30	34	3	1.00	1.00			23a	OCC	3191	22211
	Sus. + E2{1}	12	29	122	2	1.00	1.00			23a	OCC	5139	22211
	Sus. + E3{1}	7	24	96	2	1.00	1.00			23a	OCC	4546	22211
	Sus. + E4{1}	23	25	33	2	1.00	1.00			23a	OCC	3140	22211
	Sus. + E5{1}	27	26	34	2	1.00	1.00			23a	OCC	3187	22211
	Sus. + E6{1}	12	26	122	2	1.00	1.00			23a	OCC	5135	22211
	Sus. + E7{1}	7	27	96	2	1.00	1.00			23a	OCC	4549	22211
	Sus. + E8{1}	23	28	34	2	1.00	1.00			23a	OCC	3176	22211
A70 +	Max P{1}									(3a)	HOOP	5642	16700
	GR + Max P{1}	2118	23	15	2	1.00	1.00	1.00	1.00	23a	SUST	2716	16700
	TR:Amb to T1{1}	45	3	27	0	1.00	1.00	1.00	1.00	(17)	DISP	629	25050
	Amb to T1{1}	45	3	27	0	1.00	1.00	1.00	1.00	(17)	DISP	629	25050
	Sus. + E1{1}	27	30	34	3	1.00	1.00			23a	OCC	3191	22211
	Sus. + E2{1}	12	29	122	2	1.00	1.00			23a	OCC	5139	22211
	Sus. + E3{1}	7	24	96	2	1.00	1.00			23a	OCC	4546	22211
	Sus. + E4{1}	23	25	33	2	1.00	1.00			23a	OCC	3141	22211
	Sus. + E5{1}	27	26	34	2	1.00	1.00			23a	OCC	3188	22211
	Sus. + E6{1}	12	26	122	2	1.00	1.00			23a	OCC	5135	22211
	Sus. + E7{1}	7	27	96	2	1.00	1.00			23a	OCC	4549	22211
	Sus. + E8{1}	23	28	34	2	1.00	1.00			23a	OCC	3177	22211
A71 -	Max P{1}									(3a)	HOOP	5642	16700
	GR + Max P{1}	2118	42	37	2	1.00	1.00	1.00	1.00	23a	SUST	3369	16700
	TR:Amb to T1{1}	45	0	120	0	1.00	1.00	1.00	1.00	(17)	DISP	2621	25050
	Amb to T1{1}	45	0	120	0	1.00	1.00	1.00	1.00	(17)	DISP	2621	25050
	Sus. + E1{1}	38	44	273	3	1.00	1.00			23a	OCC	8731	22211
	Sus. + E2{1}	2	45	201	2	1.00	1.00			23a	OCC	7079	22211
	Sus. + E3{1}	3	47	143	2	1.00	1.00			23a	OCC	5770	22211
	Sus. + E4{1}	33	47	210	2	1.00	1.00			23a	OCC	7324	22211
	Sus. + E5{1}	37	47	273	2	1.00	1.00			23a	OCC	8732	22211
	Sus. + E6{1}	2	47	201	2	1.00	1.00			23a	OCC	7072	22211
	Sus. + E7{1}	3	45	143	2	1.00	1.00			23a	OCC	5777	22211
	Sus. + E8{1}	33	45	210	2	1.00	1.00			23a	OCC	7322	22211

ASME B31.3 (2016) CODE COMPLIANCE
(Moments in ft-lb , Force in lbf) (Stress in psi)

Point name	Load combination	Axial Force	In-Pl. Moment	Out-Pl. Moment	Torsion Moment	S.I.F In	S.I.F Out	Index/SIF Ax.	Index/SIF Tor.	Eq. no.	Load type	Code Stress	Code Allow.
A71	+ Max P{1}									(3a)	HOOP	5642	16700
	GR + Max P{1}	2117	42	37	2	1.00	1.00	1.00	1.00	23a	SUST	3368	16700
	TR:Amb to T1{1}	70	0	120	1	1.00	1.00	1.00	1.00	(17)	DISP	2644	25050
	Amb to T1{1}	70	0	120	1	1.00	1.00	1.00	1.00	(17)	DISP	2644	25050
	Sus. + E1{1}	38	44	273	3	1.00	1.00			23a	OCC	8730	22211
	Sus. + E2{1}	2	45	201	3	1.00	1.00			23a	OCC	7078	22211
	Sus. + E3{1}	3	47	143	2	1.00	1.00			23a	OCC	5769	22211
	Sus. + E4{1}	33	47	210	2	1.00	1.00			23a	OCC	7323	22211
	Sus. + E5{1}	37	47	273	3	1.00	1.00			23a	OCC	8731	22211
	Sus. + E6{1}	2	47	201	2	1.00	1.00			23a	OCC	7071	22211
	Sus. + E7{1}	3	45	143	2	1.00	1.00			23a	OCC	5776	22211
	Sus. + E8{1}	33	45	210	3	1.00	1.00			23a	OCC	7321	22211
A72	- Max P{1}									(3a)	HOOP	5642	16700
	GR + Max P{1}	2117	21	2	2	1.00	1.00	1.00	1.00	23a	SUST	2563	16700
	TR:Amb to T1{1}	70	2	47	1	1.00	1.00	1.00	1.00	(17)	DISP	1067	25050
	Amb to T1{1}	70	2	47	1	1.00	1.00	1.00	1.00	(17)	DISP	1067	25050
	Sus. + E1{1}	46	21	91	3	1.00	1.00			23a	OCC	4622	22211
	Sus. + E2{1}	7	22	57	3	1.00	1.00			23a	OCC	3825	22211
	Sus. + E3{1}	12	22	55	2	1.00	1.00			23a	OCC	3770	22211
	Sus. + E4{1}	42	23	96	2	1.00	1.00			23a	OCC	4724	22211
	Sus. + E5{1}	46	23	90	3	1.00	1.00			23a	OCC	4612	22211
	Sus. + E6{1}	7	22	58	2	1.00	1.00			23a	OCC	3832	22211
	Sus. + E7{1}	11	22	54	2	1.00	1.00			23a	OCC	3764	22211
	Sus. + E8{1}	42	21	96	3	1.00	1.00			23a	OCC	4734	22211
A72	+ Max P{1}									(3a)	HOOP	5642	16700
	GR + Max P{1}	2117	21	2	2	1.00	1.00	1.00	1.00	23a	SUST	2563	16700
	TR:Amb to T1{1}	51	2	47	1	1.00	1.00	1.00	1.00	(17)	DISP	1049	25050
	Amb to T1{1}	51	2	47	1	1.00	1.00	1.00	1.00	(17)	DISP	1049	25050
	Sus. + E1{1}	46	21	91	3	1.00	1.00			23a	OCC	4622	22211
	Sus. + E2{1}	7	22	57	3	1.00	1.00			23a	OCC	3825	22211
	Sus. + E3{1}	12	22	55	2	1.00	1.00			23a	OCC	3770	22211
	Sus. + E4{1}	42	23	96	2	1.00	1.00			23a	OCC	4724	22211
	Sus. + E5{1}	46	23	90	3	1.00	1.00			23a	OCC	4612	22211
	Sus. + E6{1}	7	22	58	2	1.00	1.00			23a	OCC	3832	22211
	Sus. + E7{1}	11	22	54	2	1.00	1.00			23a	OCC	3764	22211
	Sus. + E8{1}	42	21	96	3	1.00	1.00			23a	OCC	4734	22211
A14 N	- Max P{1}									(3a)	HOOP	5642	16700
	GR + Max P{1}	2117	12	4	2	1.00	1.00	1.00	1.00	23a	SUST	2396	16700
	TR:Amb to T1{1}	51	1	68	1	1.00	1.00	1.00	1.00	(17)	DISP	1511	25050
	Amb to T1{1}	51	1	68	1	1.00	1.00	1.00	1.00	(17)	DISP	1511	25050
	Sus. + E1{1}	47	13	112	3	1.00	1.00			23a	OCC	4887	22211
	Sus. + E2{1}	7	13	55	3	1.00	1.00			23a	OCC	3548	22211
	Sus. + E3{1}	12	14	56	2	1.00	1.00			23a	OCC	3576	22211
	Sus. + E4{1}	42	14	113	2	1.00	1.00			23a	OCC	4903	22211
	Sus. + E5{1}	46	14	112	3	1.00	1.00			23a	OCC	4876	22211
	Sus. + E6{1}	7	14	55	2	1.00	1.00			23a	OCC	3556	22211
	Sus. + E7{1}	12	14	56	2	1.00	1.00			23a	OCC	3569	22211
	Sus. + E8{1}	42	13	114	3	1.00	1.00			23a	OCC	4915	22211

Primary Piping
04/24/2020 2018719 BENTLEY
07:34 AM AutoPIPE Nuclear 12.00.00.16 RESULT PAGE 310

ASME B31.3 (2016) CODE COMPLIANCE
(Moments in ft-lb , Force in lbf) (Stress in psi)

Point name	Load combination	Axial Force	In-Pl. Moment	Out-Pl. Moment	Torsion Moment	S.I.F In	S.I.F Out	Index/SIF Ax.	Index/SIF Tor.	Eq. no.	Load type	Code Stress	Code Allow.
A14 N+	Max P{1}									(3a)	HOOP	5642	16700
	GR + Max P{1}	2117	4	12	2	1.00	1.00	1.00	1.00	23a	SUST	2396	16700
	TR:Amb to T1{1}	51	68	2	1	1.00	1.00	1.00	1.00	(17)	DISP	1511	25050
	Amb to T1{1}	51	68	2	1	1.00	1.00	1.00	1.00	(17)	DISP	1511	25050
	Sus. + E1{1}	47	113	13	3	1.00	1.00			23a	OCC	4888	22211
	Sus. + E2{1}	7	55	14	3	1.00	1.00			23a	OCC	3548	22211
	Sus. + E3{1}	12	56	13	2	1.00	1.00			23a	OCC	3576	22211
	Sus. + E4{1}	42	114	15	2	1.00	1.00			23a	OCC	4903	22211
	Sus. + E5{1}	46	112	16	3	1.00	1.00			23a	OCC	4876	22211
	Sus. + E6{1}	7	55	13	2	1.00	1.00			23a	OCC	3556	22211
	Sus. + E7{1}	12	56	14	2	1.00	1.00			23a	OCC	3569	22211
	Sus. + E8{1}	42	114	13	3	1.00	1.00			23a	OCC	4915	22211
A14 F-	Max P{1}									(3a)	HOOP	5642	16700
	GR + Max P{1}	2116	6	9	0	1.00	1.00	1.00	1.00	23a	SUST	2347	16700
	TR:Amb to T1{1}	43	46	2	1	1.00	1.00	1.00	1.00	(17)	DISP	1027	25050
	Amb to T1{1}	43	46	2	1	1.00	1.00	1.00	1.00	(17)	DISP	1027	25050
	Sus. + E1{1}	33	73	12	1	1.00	1.00			23a	OCC	3875	22211
	Sus. + E2{1}	4	10	10	0	1.00	1.00			23a	OCC	2427	22211
	Sus. + E3{1}	3	11	11	1	1.00	1.00			23a	OCC	2464	22211
	Sus. + E4{1}	25	64	10	1	1.00	1.00			23a	OCC	3682	22211
	Sus. + E5{1}	33	72	10	1	1.00	1.00			23a	OCC	3871	22211
	Sus. + E6{1}	4	10	11	0	1.00	1.00			23a	OCC	2438	22211
	Sus. + E7{1}	3	11	10	1	1.00	1.00			23a	OCC	2450	22211
	Sus. + E8{1}	25	64	12	1	1.00	1.00			23a	OCC	3685	22211
A14 F+	Max P{1}									(3a)	HOOP	5642	16700
	GR + Max P{1}	2116	9	6	0	1.00	1.00	1.00	1.00	23a	SUST	2347	16700
	TR:Amb to T1{1}	43	2	46	1	1.00	1.00	1.00	1.00	(17)	DISP	1027	25050
	Amb to T1{1}	43	2	46	1	1.00	1.00	1.00	1.00	(17)	DISP	1027	25050
	Sus. + E1{1}	33	11	73	1	1.00	1.00			23a	OCC	3875	22211
	Sus. + E2{1}	4	10	10	0	1.00	1.00			23a	OCC	2427	22211
	Sus. + E3{1}	3	11	11	1	1.00	1.00			23a	OCC	2464	22211
	Sus. + E4{1}	25	10	64	1	1.00	1.00			23a	OCC	3682	22211
	Sus. + E5{1}	33	10	72	1	1.00	1.00			23a	OCC	3871	22211
	Sus. + E6{1}	4	11	10	0	1.00	1.00			23a	OCC	2438	22211
	Sus. + E7{1}	3	10	11	1	1.00	1.00			23a	OCC	2450	22211
	Sus. + E8{1}	25	11	65	1	1.00	1.00			23a	OCC	3685	22211
A73 -	Max P{1}									(3a)	HOOP	5642	16700
	GR + Max P{1}	2116	17	4	0	1.00	1.00	1.00	1.00	23a	SUST	2488	16700
	TR:Amb to T1{1}	43	3	21	1	1.00	1.00	1.00	1.00	(17)	DISP	488	25050
	Amb to T1{1}	43	3	21	1	1.00	1.00	1.00	1.00	(17)	DISP	488	25050
	Sus. + E1{1}	32	20	44	1	1.00	1.00			23a	OCC	3426	22211
	Sus. + E2{1}	4	17	14	0	1.00	1.00			23a	OCC	2709	22211
	Sus. + E3{1}	4	20	9	1	1.00	1.00			23a	OCC	2612	22211
	Sus. + E4{1}	24	18	38	1	1.00	1.00			23a	OCC	3282	22211
	Sus. + E5{1}	32	17	44	1	1.00	1.00			23a	OCC	3423	22211
	Sus. + E6{1}	3	20	14	0	1.00	1.00			23a	OCC	2718	22211
	Sus. + E7{1}	4	17	9	1	1.00	1.00			23a	OCC	2592	22211
	Sus. + E8{1}	25	20	38	1	1.00	1.00			23a	OCC	3287	22211

Primary Piping
04/24/2020 2018719 BENTLEY
07:34 AM AutoPIPE Nuclear 12.00.00.16 RESULT PAGE 311

ASME B31.3 (2016) CODE COMPLIANCE
(Moments in ft-lb , Force in lbf) (Stress in psi)

Point name	Load combination	Axial Force	In-Pl. Moment	Out-Pl. Moment	Torsion Moment	S.I.F In	S.I.F Out	Index/SIF Ax.	Index/SIF Tor.	Eq. no.	Load type	Code Stress	Code Allow.
A73	+ Max P{1}									(3a)	HOOP	5642	16700
	GR + Max P{1}	2116	17	4	0	1.00	1.00	1.00	1.00	23a	SUST	2488	16700
	TR:Amb to T1{1}	60	3	21	1	1.00	1.00	1.00	1.00	(17)	DISP	504	25050
	Amb to T1{1}	60	3	21	1	1.00	1.00	1.00	1.00	(17)	DISP	504	25050
	Sus. + E1{1}	32	20	44	1	1.00	1.00			23a	OCC	3426	22211
	Sus. + E2{1}	4	17	14	0	1.00	1.00			23a	OCC	2709	22211
	Sus. + E3{1}	4	20	9	1	1.00	1.00			23a	OCC	2612	22211
	Sus. + E4{1}	24	18	38	1	1.00	1.00			23a	OCC	3282	22211
	Sus. + E5{1}	32	17	44	1	1.00	1.00			23a	OCC	3423	22211
	Sus. + E6{1}	3	20	14	0	1.00	1.00			23a	OCC	2718	22211
	Sus. + E7{1}	4	17	9	1	1.00	1.00			23a	OCC	2592	22211
	Sus. + E8{1}	25	20	38	1	1.00	1.00			23a	OCC	3287	22211
A15 N-	Max P{1}									(3a)	HOOP	5642	16700
	GR + Max P{1}	2115	7	8	0	1.00	1.00	1.00	1.00	23a	SUST	2342	16700
	TR:Amb to T1{1}	60	1	58	1	1.00	1.00	1.00	1.00	(17)	DISP	1299	25050
	Amb to T1{1}	60	1	58	1	1.00	1.00	1.00	1.00	(17)	DISP	1299	25050
	Sus. + E1{1}	29	8	127	1	1.00	1.00			23a	OCC	5062	22211
	Sus. + E2{1}	0	8	61	0	1.00	1.00			23a	OCC	3530	22211
	Sus. + E3{1}	7	8	70	1	1.00	1.00			23a	OCC	3752	22211
	Sus. + E4{1}	21	8	120	1	1.00	1.00			23a	OCC	4887	22211
	Sus. + E5{1}	29	8	127	1	1.00	1.00			23a	OCC	5050	22211
	Sus. + E6{1}	0	8	61	0	1.00	1.00			23a	OCC	3538	22211
	Sus. + E7{1}	7	8	70	1	1.00	1.00			23a	OCC	3744	22211
	Sus. + E8{1}	21	8	120	1	1.00	1.00			23a	OCC	4899	22211
A15 N+	Max P{1}									(3a)	HOOP	5642	16700
	GR + Max P{1}	2115	7	8	0	1.00	1.00	1.00	1.00	23a	SUST	2342	16700
	TR:Amb to T1{1}	60	1	58	1	1.00	1.00	1.00	1.00	(17)	DISP	1299	25050
	Amb to T1{1}	60	1	58	1	1.00	1.00	1.00	1.00	(17)	DISP	1299	25050
	Sus. + E1{1}	29	8	127	1	1.00	1.00			23a	OCC	5062	22211
	Sus. + E2{1}	0	8	61	0	1.00	1.00			23a	OCC	3530	22211
	Sus. + E3{1}	7	8	70	0	1.00	1.00			23a	OCC	3752	22211
	Sus. + E4{1}	21	8	120	1	1.00	1.00			23a	OCC	4887	22211
	Sus. + E5{1}	29	8	127	1	1.00	1.00			23a	OCC	5050	22211
	Sus. + E6{1}	0	8	61	0	1.00	1.00			23a	OCC	3538	22211
	Sus. + E7{1}	7	8	70	1	1.00	1.00			23a	OCC	3744	22211
	Sus. + E8{1}	21	8	120	1	1.00	1.00			23a	OCC	4899	22211
A15 F-	Max P{1}									(3a)	HOOP	5642	16700
	GR + Max P{1}	2115	7	8	0	1.00	1.00	1.00	1.00	23a	SUST	2345	16700
	TR:Amb to T1{1}	60	1	59	0	1.00	1.00	1.00	1.00	(17)	DISP	1329	25050
	Amb to T1{1}	60	1	59	0	1.00	1.00	1.00	1.00	(17)	DISP	1329	25050
	Sus. + E1{1}	29	8	130	2	1.00	1.00			23a	OCC	5129	22211
	Sus. + E2{1}	0	8	62	1	1.00	1.00			23a	OCC	3552	22211
	Sus. + E3{1}	7	8	71	1	1.00	1.00			23a	OCC	3779	22211
	Sus. + E4{1}	21	8	123	2	1.00	1.00			23a	OCC	4949	22211
	Sus. + E5{1}	29	8	130	2	1.00	1.00			23a	OCC	5117	22211
	Sus. + E6{1}	0	8	62	1	1.00	1.00			23a	OCC	3559	22211
	Sus. + E7{1}	7	8	71	1	1.00	1.00			23a	OCC	3771	22211
	Sus. + E8{1}	21	8	123	2	1.00	1.00			23a	OCC	4961	22211

Primary Piping
04/24/2020 2018719
07:34 AM

BENTLEY
AutoPIPE Nuclear 12.00.00.16 RESULT PAGE 312

ASME B31.3 (2016) CODE COMPLIANCE
(Moments in ft-lb , Force in lbf) (Stress in psi)

Point name	Load combination	Axial Force	In-Pl. Moment	Out-Pl. Moment	Torsion Moment	S.I.F In	S.I.F Out	Index/SIF Ax.	Index/SIF Tor.	Eq. no.	Load type	Code Stress	Code Allow.
A15 F+	Max P{1}									(3a)	HOOP	5642	16700
	GR + Max P{1}	2115	7	8	0	1.00	1.00	1.00	1.00	23a	SUST	2345	16700
	TR:Amb to T1{1}	60	1	59	0	1.00	1.00	1.00	1.00	(17)	DISP	1329	25050
	Amb to T1{1}	60	1	59	0	1.00	1.00	1.00	1.00	(17)	DISP	1329	25050
	Sus. + E1{1}	29	8	130	2	1.00	1.00			23a	OCC	5129	22211
	Sus. + E2{1}	0	8	62	1	1.00	1.00			23a	OCC	3552	22211
	Sus. + E3{1}	7	8	71	1	1.00	1.00			23a	OCC	3779	22211
	Sus. + E4{1}	21	8	123	2	1.00	1.00			23a	OCC	4949	22211
	Sus. + E5{1}	29	8	130	2	1.00	1.00			23a	OCC	5117	22211
	Sus. + E6{1}	0	8	62	1	1.00	1.00			23a	OCC	3559	22211
	Sus. + E7{1}	7	8	71	1	1.00	1.00			23a	OCC	3771	22211
	Sus. + E8{1}	21	8	123	2	1.00	1.00			23a	OCC	4961	22211
A16	Max P{1}									(3a)	HOOP	5642	16700
	GR + Max P{1}	2115	3	12	0	1.00	1.00	1.00	1.00	23a	SUST	2386	16700
	TR:Amb to T1{1}	60	1	86	0	1.00	1.00	1.00	1.00	(17)	DISP	1889	25050
	Amb to T1{1}	60	1	86	0	1.00	1.00	1.00	1.00	(17)	DISP	1889	25050
	Sus. + E1{1}	28	4	189	2	1.00	1.00			23a	OCC	6412	22211
	Sus. + E2{1}	1	4	82	1	1.00	1.00			23a	OCC	3965	22211
	Sus. + E3{1}	8	4	97	1	1.00	1.00			23a	OCC	4304	22211
	Sus. + E4{1}	20	3	177	2	1.00	1.00			23a	OCC	6131	22211
	Sus. + E5{1}	28	3	189	2	1.00	1.00			23a	OCC	6395	22211
	Sus. + E6{1}	1	4	83	1	1.00	1.00			23a	OCC	3976	22211
	Sus. + E7{1}	8	4	96	1	1.00	1.00			23a	OCC	4292	22211
	Sus. + E8{1}	20	4	178	2	1.00	1.00			23a	OCC	6148	22211
A17	Max P{1}									(3a)	HOOP	5642	16700
	GR + Max P{1}	2115	7	17	0	1.00	1.00	1.00	1.00	23a	SUST	2499	16700
	TR:Amb to T1{1}	60	1	112	0	1.00	1.00	1.00	1.00	(17)	DISP	2463	25050
	Amb to T1{1}	60	1	112	0	1.00	1.00	1.00	1.00	(17)	DISP	2463	25050
	Sus. + E1{1}	27	7	251	2	1.00	1.00			23a	OCC	7825	22211
	Sus. + E2{1}	2	8	104	1	1.00	1.00			23a	OCC	4486	22211
	Sus. + E3{1}	9	7	124	1	1.00	1.00			23a	OCC	4939	22211
	Sus. + E4{1}	19	8	234	2	1.00	1.00			23a	OCC	7442	22211
	Sus. + E5{1}	26	8	250	2	1.00	1.00			23a	OCC	7805	22211
	Sus. + E6{1}	2	7	105	1	1.00	1.00			23a	OCC	4501	22211
	Sus. + E7{1}	9	8	123	1	1.00	1.00			23a	OCC	4925	22211
	Sus. + E8{1}	19	7	235	2	1.00	1.00			23a	OCC	7463	22211
A18 -	Max P{1}									(3a)	HOOP	5642	16700
	GR + Max P{1}	2115	15	19	0	1.00	1.00	1.00	1.00	23a	SUST	2637	16700
	TR:Amb to T1{1}	60	1	127	0	1.00	1.00	1.00	1.00	(17)	DISP	2779	25050
	Amb to T1{1}	60	1	127	0	1.00	1.00	1.00	1.00	(17)	DISP	2779	25050
	Sus. + E1{1}	26	15	286	2	1.00	1.00			23a	OCC	8689	22211
	Sus. + E2{1}	3	17	117	1	1.00	1.00			23a	OCC	4860	22211
	Sus. + E3{1}	10	15	140	1	1.00	1.00			23a	OCC	5375	22211
	Sus. + E4{1}	18	17	266	2	1.00	1.00			23a	OCC	8249	22211
	Sus. + E5{1}	26	16	285	2	1.00	1.00			23a	OCC	8666	22211
	Sus. + E6{1}	3	15	118	1	1.00	1.00			23a	OCC	4875	22211
	Sus. + E7{1}	10	17	139	1	1.00	1.00			23a	OCC	5359	22211
	Sus. + E8{1}	18	15	267	2	1.00	1.00			23a	OCC	8272	22211

```
-----------------------------------------------------------------------------------------------------------------------
Primary Piping
04/24/2020 2018719                                                    BENTLEY
07:34 AM                                                              AutoPIPE Nuclear 12.00.00.16   RESULT PAGE 313
-----------------------------------------------------------------------------------------------------------------------

                              ASME B31.3 (2016)  CODE COMPLIANCE
              (Moments in ft-lb  , Force in lbf  )     (Stress in psi     )
 Point     Load                     Axial  In-Pl. Out-Pl. Torsion   S.I.F   Index/SIF  Eq. Load   Code   Code
 name   combination                 Force  Moment  Moment  Moment  In  Out   Ax. Tor.  no. type  Stress Allow.
 ------ ----------------------    ------- ------- ------- ------- ---- ---- ---- ---- ---- ----  ------ ------
 A18  + Max P{1}                                                                        (3a) HOOP    5642  16700
        GR + Max P{1}                2121       0       0       0 1.00 1.00 1.00 1.00  23a SUST    2104  16700
        TR:Amb to T1{1}                 0       0       0       0 1.00 1.00 1.00 1.00 (17) DISP       0  25050
        Amb to T1{1}                    0       0       0       0 1.00 1.00 1.00 1.00 (17) DISP       0  25050
        Sus. + E1{1}                    0       0       0       0 1.00 1.00            23a  OCC    2105  22211
        Sus. + E2{1}                    0       0       0       0 1.00 1.00            23a  OCC    2105  22211
        Sus. + E3{1}                    0       0       0       0 1.00 1.00            23a  OCC    2105  22211
        Sus. + E4{1}                    0       0       0       0 1.00 1.00            23a  OCC    2105  22211
        Sus. + E5{1}                    0       0       0       0 1.00 1.00            23a  OCC    2105  22211
        Sus. + E6{1}                    0       0       0       0 1.00 1.00            23a  OCC    2105  22211
        Sus. + E7{1}                    0       0       0       0 1.00 1.00            23a  OCC    2105  22211
        Sus. + E8{1}                    0       0       0       0 1.00 1.00            23a  OCC    2105  22211

 A19    Max P{1}                                                                       (3a) HOOP    5642  16700
        GR + Max P{1}                2121       0       0       0 1.00 1.00 1.00 1.00  23a SUST    2101  16700
        TR:Amb to T1{1}                 0       0       0       0 1.00 1.00 1.00 1.00 (17) DISP       0  25050
        Amb to T1{1}                    0       0       0       0 1.00 1.00 1.00 1.00 (17) DISP       0  25050
        Sus. + E1{1}                    0       0       0       0 1.00 1.00            23a  OCC    2101  22211
        Sus. + E2{1}                    0       0       0       0 1.00 1.00            23a  OCC    2101  22211
        Sus. + E3{1}                    0       0       0       0 1.00 1.00            23a  OCC    2101  22211
        Sus. + E4{1}                    0       0       0       0 1.00 1.00            23a  OCC    2101  22211
        Sus. + E5{1}                    0       0       0       0 1.00 1.00            23a  OCC    2101  22211
        Sus. + E6{1}                    0       0       0       0 1.00 1.00            23a  OCC    2101  22211
        Sus. + E7{1}                    0       0       0       0 1.00 1.00            23a  OCC    2101  22211
        Sus. + E8{1}                    0       0       0       0 1.00 1.00            23a  OCC    2101  22211

 *** Segment A  end   ***

 *** Segment B  begin ***  Line # RIGID

 B00    Max P{1}                                                                       (3a) HOOP    5813  16700
        GR + Max P{1}                4643       0       0       0 1.00 1.00 1.00 1.00  23a SUST    2178  16700
        TR:Amb to T1{1}                 0       0       0       0 1.00 1.00 1.00 1.00 (17) DISP       0  25050
        Amb to T1{1}                    0       0       0       0 1.00 1.00 1.00 1.00 (17) DISP       0  25050
        Sus. + E1{1}                    0       0       0       0 1.00 1.00            23a  OCC    2178  22211
        Sus. + E2{1}                    0       0       0       0 1.00 1.00            23a  OCC    2178  22211
        Sus. + E3{1}                    0       0       0       0 1.00 1.00            23a  OCC    2178  22211
        Sus. + E4{1}                    0       0       0       0 1.00 1.00            23a  OCC    2178  22211
        Sus. + E5{1}                    0       0       0       0 1.00 1.00            23a  OCC    2178  22211
        Sus. + E6{1}                    0       0       0       0 1.00 1.00            23a  OCC    2178  22211
        Sus. + E7{1}                    0       0       0       0 1.00 1.00            23a  OCC    2178  22211
        Sus. + E8{1}                    0       0       0       0 1.00 1.00            23a  OCC    2178  22211
```

ASME B31.3 (2016) CODE COMPLIANCE
(Moments in ft-lb , Force in lbf) (Stress in psi)

Point name	Load combination	Axial Force	In-Pl. Moment	Out-Pl. Moment	Torsion Moment	S.I.F In	S.I.F Out	Index/SIF Ax.	Index/SIF Tor.	Eq. no.	Load type	Code Stress	Code Allow.
B01 -	Max P{1}									(3a)	HOOP	5813	16700
	GR + Max P{1}	4640	0	0	0	1.00	1.00	1.00	1.00	23a	SUST	2177	16700
	TR:Amb to T1{1}	0	0	0	0	1.00	1.00	1.00	1.00	(17)	DISP	0	25050
	Amb to T1{1}	0	0	0	0	1.00	1.00	1.00	1.00	(17)	DISP	0	25050
	Sus. + E1{1}	0	0	0	0	1.00	1.00			23a	OCC	2178	22211
	Sus. + E2{1}	0	0	0	0	1.00	1.00			23a	OCC	2178	22211
	Sus. + E3{1}	0	0	0	0	1.00	1.00			23a	OCC	2178	22211
	Sus. + E4{1}	0	0	0	0	1.00	1.00			23a	OCC	2178	22211
	Sus. + E5{1}	0	0	0	0	1.00	1.00			23a	OCC	2178	22211
	Sus. + E6{1}	0	0	0	0	1.00	1.00			23a	OCC	2178	22211
	Sus. + E7{1}	0	0	0	0	1.00	1.00			23a	OCC	2178	22211
	Sus. + E8{1}	0	0	0	0	1.00	1.00			23a	OCC	2178	22211
B01 +	Max P{1}									(3a)	HOOP	5813	16700
	GR + Max P{1}	4656	0	0	0	1.00	1.00	1.00	1.00	23a	SUST	2184	16700
	TR:Amb to T1{1}	16	0	0	0	1.00	1.00	1.00	1.00	(17)	DISP	7	25050
	Amb to T1{1}	16	0	0	0	1.00	1.00	1.00	1.00	(17)	DISP	7	25050
	Sus. + E1{1}	2	0	0	0	1.00	1.00			23a	OCC	2186	22211
	Sus. + E2{1}	2	0	0	0	1.00	1.00			23a	OCC	2186	22211
	Sus. + E3{1}	0	0	0	0	1.00	1.00			23a	OCC	2185	22211
	Sus. + E4{1}	0	0	0	0	1.00	1.00			23a	OCC	2185	22211
	Sus. + E5{1}	0	0	0	0	1.00	1.00			23a	OCC	2185	22211
	Sus. + E6{1}	0	0	0	0	1.00	1.00			23a	OCC	2185	22211
	Sus. + E7{1}	2	0	0	0	1.00	1.00			23a	OCC	2186	22211
	Sus. + E8{1}	2	0	0	0	1.00	1.00			23a	OCC	2186	22211
B02 N-	Max P{1}									(3a)	HOOP	5813	16700
	GR + Max P{1}	4653	0	0	0	1.00	1.00	1.00	1.00	23a	SUST	2183	16700
	TR:Amb to T1{1}	16	0	0	0	1.00	1.00	1.00	1.00	(17)	DISP	7	25050
	Amb to T1{1}	16	0	0	0	1.00	1.00	1.00	1.00	(17)	DISP	7	25050
	Sus. + E1{1}	2	0	0	0	1.00	1.00			23a	OCC	2186	22211
	Sus. + E2{1}	2	0	0	0	1.00	1.00			23a	OCC	2186	22211
	Sus. + E3{1}	0	0	0	0	1.00	1.00			23a	OCC	2185	22211
	Sus. + E4{1}	0	0	0	0	1.00	1.00			23a	OCC	2185	22211
	Sus. + E5{1}	0	0	0	0	1.00	1.00			23a	OCC	2185	22211
	Sus. + E6{1}	0	0	0	0	1.00	1.00			23a	OCC	2185	22211
	Sus. + E7{1}	2	0	0	0	1.00	1.00			23a	OCC	2186	22211
	Sus. + E8{1}	2	0	0	0	1.00	1.00			23a	OCC	2186	22211
B02 N+	Max P{1}									(3a)	HOOP	5813	16700
	GR + Max P{1}	4653	0	0	0	1.33	1.11	1.00	1.00	23a	SUST	2183	16700
	TR:Amb to T1{1}	16	0	0	0	1.78	1.48	1.00	1.00	(17)	DISP	7	25050
	Amb to T1{1}	16	0	0	0	1.78	1.48	1.00	1.00	(17)	DISP	7	25050
	Sus. + E1{1}	2	0	0	0	1.33	1.11			23a	OCC	2187	22211
	Sus. + E2{1}	2	0	0	0	1.33	1.11			23a	OCC	2187	22211
	Sus. + E3{1}	0	0	0	0	1.33	1.11			23a	OCC	2186	22211
	Sus. + E4{1}	0	0	0	0	1.33	1.11			23a	OCC	2186	22211
	Sus. + E5{1}	0	0	0	0	1.33	1.11			23a	OCC	2186	22211
	Sus. + E6{1}	0	0	0	0	1.33	1.11			23a	OCC	2186	22211
	Sus. + E7{1}	2	0	0	0	1.33	1.11			23a	OCC	2187	22211
	Sus. + E8{1}	2	0	0	0	1.33	1.11			23a	OCC	2187	22211

Primary Piping
04/24/2020 2018719 BENTLEY
07:34 AM AutoPIPE Nuclear 12.00.00.16 RESULT PAGE 315

ASME B31.3 (2016) CODE COMPLIANCE
(Moments in ft-lb , Force in lbf) (Stress in psi)

Point name	Load combination	Axial Force	In-Pl. Moment	Out-Pl. Moment	Torsion Moment	S.I.F In	S.I.F Out	Index/SIF Ax.	Index/SIF Tor.	Eq. no.	Load type	Code Stress	Code Allow.
B02 F-	Max P{1}									(3a)	HOOP	5813	16700
	GR + Max P{1}	4643	2	0	0	1.33	1.11	1.00	1.00	23a	SUST	2195	16700
	TR:Amb to T1{1}	0	6	0	0	1.78	1.48	1.00	1.00	(17)	DISP	73	25050
	Amb to T1{1}	0	6	0	0	1.78	1.48	1.00	1.00	(17)	DISP	73	25050
	Sus. + E1{1}	3	2	0	0	1.33	1.11			23a	OCC	2201	22211
	Sus. + E2{1}	3	2	0	0	1.33	1.11			23a	OCC	2201	22211
	Sus. + E3{1}	3	2	0	0	1.33	1.11			23a	OCC	2203	22211
	Sus. + E4{1}	3	2	0	0	1.33	1.11			23a	OCC	2203	22211
	Sus. + E5{1}	3	2	0	0	1.33	1.11			23a	OCC	2203	22211
	Sus. + E6{1}	3	2	0	0	1.33	1.11			23a	OCC	2203	22211
	Sus. + E7{1}	3	2	0	0	1.33	1.11			23a	OCC	2201	22211
	Sus. + E8{1}	3	2	0	0	1.33	1.11			23a	OCC	2201	22211
B02 F+	Max P{1}									(3a)	HOOP	5813	16700
	GR + Max P{1}	4643	2	0	0	1.00	1.00	1.00	1.00	23a	SUST	2191	16700
	TR:Amb to T1{1}	0	6	0	0	1.00	1.00	1.00	1.00	(17)	DISP	41	25050
	Amb to T1{1}	0	6	0	0	1.00	1.00	1.00	1.00	(17)	DISP	41	25050
	Sus. + E1{1}	3	2	0	0	1.00	1.00			23a	OCC	2196	22211
	Sus. + E2{1}	3	2	0	0	1.00	1.00			23a	OCC	2196	22211
	Sus. + E3{1}	3	2	0	0	1.00	1.00			23a	OCC	2198	22211
	Sus. + E4{1}	3	2	0	0	1.00	1.00			23a	OCC	2198	22211
	Sus. + E5{1}	3	2	0	0	1.00	1.00			23a	OCC	2198	22211
	Sus. + E6{1}	3	2	0	0	1.00	1.00			23a	OCC	2198	22211
	Sus. + E7{1}	3	2	0	0	1.00	1.00			23a	OCC	2196	22211
	Sus. + E8{1}	3	2	0	0	1.00	1.00			23a	OCC	2196	22211
B03 -	Max P{1}									(3a)	HOOP	5813	16700
	GR + Max P{1}	4643	4	0	0	1.00	1.00	1.00	1.00	23a	SUST	2206	16700
	TR:Amb to T1{1}	0	23	0	0	1.00	1.00	1.00	1.00	(17)	DISP	160	25050
	Amb to T1{1}	0	23	0	0	1.00	1.00	1.00	1.00	(17)	DISP	160	25050
	Sus. + E1{1}	5	4	2	0	1.00	1.00			23a	OCC	2221	22211
	Sus. + E2{1}	5	4	2	0	1.00	1.00			23a	OCC	2221	22211
	Sus. + E3{1}	5	5	2	0	1.00	1.00			23a	OCC	2222	22211
	Sus. + E4{1}	5	5	2	0	1.00	1.00			23a	OCC	2222	22211
	Sus. + E5{1}	5	5	2	0	1.00	1.00			23a	OCC	2222	22211
	Sus. + E6{1}	5	5	2	0	1.00	1.00			23a	OCC	2222	22211
	Sus. + E7{1}	5	4	2	0	1.00	1.00			23a	OCC	2221	22211
	Sus. + E8{1}	5	4	2	0	1.00	1.00			23a	OCC	2221	22211
B03 +	Max P{1}									(3a)	HOOP	5813	16700
	GR + Max P{1}	4689	33	6	1	1.00	1.00	1.00	1.00	23a	SUST	2440	16700
	TR:Amb to T1{1}	336	8	41	12	1.00	1.00	1.00	1.00	(17)	DISP	450	25050
	Amb to T1{1}	336	8	41	12	1.00	1.00	1.00	1.00	(17)	DISP	450	25050
	Sus. + E1{1}	23	44	184	16	1.00	1.00			23a	OCC	3746	22211
	Sus. + E2{1}	137	36	242	19	1.00	1.00			23a	OCC	4219	22211
	Sus. + E3{1}	162	44	208	18	1.00	1.00			23a	OCC	3989	22211
	Sus. + E4{1}	4	36	214	17	1.00	1.00			23a	OCC	3950	22211
	Sus. + E5{1}	17	40	182	17	1.00	1.00			23a	OCC	3731	22211
	Sus. + E6{1}	143	41	244	19	1.00	1.00			23a	OCC	4233	22211
	Sus. + E7{1}	156	40	204	18	1.00	1.00			23a	OCC	3956	22211
	Sus. + E8{1}	2	41	215	17	1.00	1.00			23a	OCC	3960	22211

Primary Piping
04/24/2020 2018719 BENTLEY
07:34 AM AutoPIPE Nuclear 12.00.00.16 RESULT PAGE 316

ASME B31.3 (2016) CODE COMPLIANCE
(Moments in ft-lb , Force in lbf) (Stress in psi)

Point name	Load combination	Axial Force	In-Pl. Moment	Out-Pl. Moment	Torsion Moment	S.I.F In	S.I.F Out	Index/SIF Ax.	Index/SIF Tor.	Eq. no.	Load type	Code Stress	Code Allow.
B04	Max P{1}									(3a)	HOOP	5813	16700
	GR + Max P{1}	4689	9	23	1	1.00	1.00	1.00	1.00	23a	SUST	2380	16700
	TR:Amb to T1{1}	336	3	11	12	1.00	1.00	1.00	1.00	(17)	DISP	246	25050
	Amb to T1{1}	336	3	11	12	1.00	1.00	1.00	1.00	(17)	DISP	246	25050
	Sus. + E1{1}	28	12	108	16	1.00	1.00			23a	OCC	3017	22211
	Sus. + E2{1}	132	10	186	19	1.00	1.00			23a	OCC	3629	22211
	Sus. + E3{1}	158	13	124	18	1.00	1.00			23a	OCC	3190	22211
	Sus. + E4{1}	1	10	169	17	1.00	1.00			23a	OCC	3437	22211
	Sus. + E5{1}	22	12	107	17	1.00	1.00			23a	OCC	3008	22211
	Sus. + E6{1}	138	11	187	19	1.00	1.00			23a	OCC	3639	22211
	Sus. + E7{1}	151	11	121	18	1.00	1.00			23a	OCC	3169	22211
	Sus. + E8{1}	7	11	169	17	1.00	1.00			23a	OCC	3447	22211
B22 -	Max P{1}									(3a)	HOOP	5813	16700
	GR + Max P{1}	4689	133	45	1	1.00	1.00	1.00	1.00	23a	SUST	3216	16700
	TR:Amb to T1{1}	336	15	26	12	1.00	1.00	1.00	1.00	(17)	DISP	372	25050
	Amb to T1{1}	336	15	26	12	1.00	1.00	1.00	1.00	(17)	DISP	372	25050
	Sus. + E1{1}	34	161	90	16	1.00	1.00			23a	OCC	3630	22211
	Sus. + E2{1}	126	134	104	19	1.00	1.00			23a	OCC	3715	22211
	Sus. + E3{1}	152	162	86	18	1.00	1.00			23a	OCC	3667	22211
	Sus. + E4{1}	7	134	99	17	1.00	1.00			23a	OCC	3625	22211
	Sus. + E5{1}	28	142	90	17	1.00	1.00			23a	OCC	3582	22211
	Sus. + E6{1}	132	155	104	19	1.00	1.00			23a	OCC	3748	22211
	Sus. + E7{1}	145	142	87	18	1.00	1.00			23a	OCC	3614	22211
	Sus. + E8{1}	13	155	99	17	1.00	1.00			23a	OCC	3660	22211
B22 +	Max P{1}									(3a)	HOOP	5813	16700
	GR + Max P{1}	4689	133	45	1	1.00	1.00	1.00	1.00	23a	SUST	3216	16700
	TR:Amb to T1{1}	255	15	26	12	1.00	1.00	1.00	1.00	(17)	DISP	337	25050
	Amb to T1{1}	255	15	26	12	1.00	1.00	1.00	1.00	(17)	DISP	337	25050
	Sus. + E1{1}	34	161	90	16	1.00	1.00			23a	OCC	3630	22211
	Sus. + E2{1}	126	134	104	19	1.00	1.00			23a	OCC	3715	22211
	Sus. + E3{1}	152	162	86	18	1.00	1.00			23a	OCC	3667	22211
	Sus. + E4{1}	7	134	99	17	1.00	1.00			23a	OCC	3625	22211
	Sus. + E5{1}	28	142	90	17	1.00	1.00			23a	OCC	3582	22211
	Sus. + E6{1}	132	155	104	19	1.00	1.00			23a	OCC	3748	22211
	Sus. + E7{1}	145	142	87	18	1.00	1.00			23a	OCC	3614	22211
	Sus. + E8{1}	13	155	99	17	1.00	1.00			23a	OCC	3660	22211
B06 N-	Max P{1}									(3a)	HOOP	5813	16700
	GR + Max P{1}	4689	112	48	1	1.00	1.00	1.00	1.00	23a	SUST	3080	16700
	TR:Amb to T1{1}	255	4	31	12	1.00	1.00	1.00	1.00	(17)	DISP	345	25050
	Amb to T1{1}	255	4	31	12	1.00	1.00	1.00	1.00	(17)	DISP	345	25050
	Sus. + E1{1}	34	136	107	16	1.00	1.00			23a	OCC	3568	22211
	Sus. + E2{1}	125	115	94	19	1.00	1.00			23a	OCC	3499	22211
	Sus. + E3{1}	151	133	104	18	1.00	1.00			23a	OCC	3598	22211
	Sus. + E4{1}	7	113	91	17	1.00	1.00			23a	OCC	3418	22211
	Sus. + E5{1}	29	120	107	17	1.00	1.00			23a	OCC	3541	22211
	Sus. + E6{1}	131	127	94	19	1.00	1.00			23a	OCC	3518	22211
	Sus. + E7{1}	145	116	104	18	1.00	1.00			23a	OCC	3576	22211
	Sus. + E8{1}	13	131	91	17	1.00	1.00			23a	OCC	3449	22211

ASME B31.3 (2016) CODE COMPLIANCE
(Moments in ft-lb , Force in lbf) (Stress in psi)

Point name	Load combination	Axial Force	In-Pl. Moment	Out-Pl. Moment	Torsion Moment	S.I.F In	S.I.F Out	Index/SIF Ax.	Index/SIF Tor.	Eq. no.	Load type	Code Stress	Code Allow.
B06 N+	Max P{1}									(3a)	HOOP	5813	16700
	GR + Max P{1}	4689	112	48	1	1.00	1.00	1.00	1.00	23a	SUST	3080	16700
	TR:Amb to T1{1}	255	4	31	12	1.00	1.00	1.00	1.00	(17)	DISP	345	25050
	Amb to T1{1}	255	4	31	12	1.00	1.00	1.00	1.00	(17)	DISP	345	25050
	Sus. + E1{1}	34	136	107	16	1.00	1.00			23a	OCC	3568	22211
	Sus. + E2{1}	125	115	94	19	1.00	1.00			23a	OCC	3499	22211
	Sus. + E3{1}	151	133	104	18	1.00	1.00			23a	OCC	3598	22211
	Sus. + E4{1}	7	113	91	17	1.00	1.00			23a	OCC	3418	22211
	Sus. + E5{1}	29	120	107	17	1.00	1.00			23a	OCC	3541	22211
	Sus. + E6{1}	131	127	94	19	1.00	1.00			23a	OCC	3518	22211
	Sus. + E7{1}	145	116	104	18	1.00	1.00			23a	OCC	3576	22211
	Sus. + E8{1}	13	131	91	17	1.00	1.00			23a	OCC	3449	22211
B06 F-	Max P{1}									(3a)	HOOP	5813	16700
	GR + Max P{1}	4700	76	51	9	1.00	1.00	1.00	1.00	23a	SUST	2869	16700
	TR:Amb to T1{1}	258	7	39	18	1.00	1.00	1.00	1.00	(17)	DISP	408	25050
	Amb to T1{1}	258	7	39	18	1.00	1.00	1.00	1.00	(17)	DISP	408	25050
	Sus. + E1{1}	38	93	134	35	1.00	1.00			23a	OCC	3528	22211
	Sus. + E2{1}	125	81	78	21	1.00	1.00			23a	OCC	3139	22211
	Sus. + E3{1}	153	87	133	37	1.00	1.00			23a	OCC	3571	22211
	Sus. + E4{1}	9	77	77	19	1.00	1.00			23a	OCC	3074	22211
	Sus. + E5{1}	31	82	134	36	1.00	1.00			23a	OCC	3518	22211
	Sus. + E6{1}	133	83	78	21	1.00	1.00			23a	OCC	3146	22211
	Sus. + E7{1}	145	76	134	38	1.00	1.00			23a	OCC	3565	22211
	Sus. + E8{1}	16	90	77	19	1.00	1.00			23a	OCC	3100	22211
B06 F+	Max P{1}									(3a)	HOOP	5813	16700
	GR + Max P{1}	4700	76	51	9	1.00	1.00	1.00	1.00	23a	SUST	2869	16700
	TR:Amb to T1{1}	258	7	39	18	1.00	1.00	1.00	1.00	(17)	DISP	408	25050
	Amb to T1{1}	258	7	39	18	1.00	1.00	1.00	1.00	(17)	DISP	408	25050
	Sus. + E1{1}	38	93	134	35	1.00	1.00			23a	OCC	3528	22211
	Sus. + E2{1}	125	81	78	21	1.00	1.00			23a	OCC	3139	22211
	Sus. + E3{1}	153	87	133	37	1.00	1.00			23a	OCC	3571	22211
	Sus. + E4{1}	9	77	77	19	1.00	1.00			23a	OCC	3074	22211
	Sus. + E5{1}	31	82	134	36	1.00	1.00			23a	OCC	3518	22211
	Sus. + E6{1}	133	83	78	21	1.00	1.00			23a	OCC	3146	22211
	Sus. + E7{1}	145	76	134	38	1.00	1.00			23a	OCC	3565	22211
	Sus. + E8{1}	16	90	77	19	1.00	1.00			23a	OCC	3100	22211
B23 -	Max P{1}									(3a)	HOOP	5813	16700
	GR + Max P{1}	4677	120	154	9	1.00	1.00	1.00	1.00	23a	SUST	3604	16700
	TR:Amb to T1{1}	258	25	258	18	1.00	1.00	1.00	1.00	(17)	DISP	1925	25050
	Amb to T1{1}	258	25	258	18	1.00	1.00	1.00	1.00	(17)	DISP	1925	25050
	Sus. + E1{1}	62	136	1010	35	1.00	1.00			23a	OCC	9833	22211
	Sus. + E2{1}	101	153	790	21	1.00	1.00			23a	OCC	8261	22211
	Sus. + E3{1}	125	147	1060	37	1.00	1.00			23a	OCC	10223	22211
	Sus. + E4{1}	37	145	732	19	1.00	1.00			23a	OCC	7812	22211
	Sus. + E5{1}	59	164	1007	36	1.00	1.00			23a	OCC	9817	22211
	Sus. + E6{1}	105	132	793	21	1.00	1.00			23a	OCC	8279	22211
	Sus. + E7{1}	121	172	1052	38	1.00	1.00			23a	OCC	10173	22211
	Sus. + E8{1}	41	124	735	19	1.00	1.00			23a	OCC	7830	22211

Primary Piping
04/24/2020 2018719
07:34 AM

BENTLEY
AutoPIPE Nuclear 12.00.00.16 RESULT PAGE 318

ASME B31.3 (2016) CODE COMPLIANCE
(Moments in ft-lb , Force in lbf) (Stress in psi)

Point name	Load combination	Axial Force	In-Pl. Moment	Out-Pl. Moment	Torsion Moment	S.I.F In	S.I.F Out	Index/SIF Ax.	Index/SIF Tor.	Eq. no.	Load type	Code Stress	Code Allow.
B23	+ Max P{1}									(3a)	HOOP	5813	16700
	GR + Max P{1}	4677	120	154	9	1.00	1.00	1.00	1.00	23a	SUST	3604	16700
	TR:Amb to T1{1}	148	25	258	18	1.00	1.00	1.00	1.00	(17)	DISP	1876	25050
	Amb to T1{1}	148	25	258	18	1.00	1.00	1.00	1.00	(17)	DISP	1876	25050
	Sus. + E1{1}	62	136	1010	35	1.00	1.00			23a	OCC	9833	22211
	Sus. + E2{1}	101	153	790	21	1.00	1.00			23a	OCC	8261	22211
	Sus. + E3{1}	125	147	1060	37	1.00	1.00			23a	OCC	10223	22211
	Sus. + E4{1}	37	145	732	19	1.00	1.00			23a	OCC	7812	22211
	Sus. + E5{1}	59	164	1007	36	1.00	1.00			23a	OCC	9818	22211
	Sus. + E6{1}	105	132	793	21	1.00	1.00			23a	OCC	8280	22211
	Sus. + E7{1}	121	172	1052	37	1.00	1.00			23a	OCC	10173	22211
	Sus. + E8{1}	41	124	735	19	1.00	1.00			23a	OCC	7830	22211
B24	- Max P{1}									(3a)	HOOP	5813	16700
	GR + Max P{1}	4661	65	72	9	1.00	1.00	1.00	1.00	23a	SUST	2890	16700
	TR:Amb to T1{1}	148	171	367	18	1.00	1.00	1.00	1.00	(17)	DISP	2890	25050
	Amb to T1{1}	148	171	367	18	1.00	1.00	1.00	1.00	(17)	DISP	2890	25050
	Sus. + E1{1}	79	226	520	35	1.00	1.00			23a	OCC	6374	22211
	Sus. + E2{1}	84	153	403	21	1.00	1.00			23a	OCC	5409	22211
	Sus. + E3{1}	105	234	539	37	1.00	1.00			23a	OCC	6536	22211
	Sus. + E4{1}	56	147	380	19	1.00	1.00			23a	OCC	5220	22211
	Sus. + E5{1}	78	231	519	36	1.00	1.00			23a	OCC	6381	22211
	Sus. + E6{1}	85	157	405	21	1.00	1.00			23a	OCC	5430	22211
	Sus. + E7{1}	104	235	535	37	1.00	1.00			23a	OCC	6512	22211
	Sus. + E8{1}	58	152	381	19	1.00	1.00			23a	OCC	5240	22211
B24	+ Max P{1}									(3a)	HOOP	5813	16700
	GR + Max P{1}	4660	65	72	9	1.00	1.00	1.00	1.00	23a	SUST	2890	16700
	TR:Amb to T1{1}	145	171	367	17	1.00	1.00	1.00	1.00	(17)	DISP	2889	25050
	Amb to T1{1}	145	171	367	17	1.00	1.00	1.00	1.00	(17)	DISP	2889	25050
	Sus. + E1{1}	79	226	520	34	1.00	1.00			23a	OCC	6374	22211
	Sus. + E2{1}	84	153	403	20	1.00	1.00			23a	OCC	5409	22211
	Sus. + E3{1}	105	234	539	36	1.00	1.00			23a	OCC	6535	22211
	Sus. + E4{1}	56	147	380	18	1.00	1.00			23a	OCC	5220	22211
	Sus. + E5{1}	78	231	519	35	1.00	1.00			23a	OCC	6380	22211
	Sus. + E6{1}	85	157	405	20	1.00	1.00			23a	OCC	5430	22211
	Sus. + E7{1}	104	235	535	36	1.00	1.00			23a	OCC	6511	22211
	Sus. + E8{1}	58	152	381	19	1.00	1.00			23a	OCC	5240	22211
B09 N	- Max P{1}									(3a)	HOOP	5813	16700
	GR + Max P{1}	4659	44	87	9	1.00	1.00	1.00	1.00	23a	SUST	2893	16700
	TR:Amb to T1{1}	145	142	410	17	1.00	1.00	1.00	1.00	(17)	DISP	3090	25050
	Amb to T1{1}	145	142	410	17	1.00	1.00	1.00	1.00	(17)	DISP	3090	25050
	Sus. + E1{1}	80	173	615	34	1.00	1.00			23a	OCC	6869	22211
	Sus. + E2{1}	82	116	477	20	1.00	1.00			23a	OCC	5799	22211
	Sus. + E3{1}	104	181	639	36	1.00	1.00			23a	OCC	7059	22211
	Sus. + E4{1}	58	110	448	18	1.00	1.00			23a	OCC	5573	22211
	Sus. + E5{1}	80	180	614	35	1.00	1.00			23a	OCC	6871	22211
	Sus. + E6{1}	84	118	479	20	1.00	1.00			23a	OCC	5816	22211
	Sus. + E7{1}	103	183	634	36	1.00	1.00			23a	OCC	7031	22211
	Sus. + E8{1}	59	113	450	19	1.00	1.00			23a	OCC	5589	22211

Primary Piping
04/24/2020 2018719 BENTLEY
07:34 AM AutoPIPE Nuclear 12.00.00.16 RESULT PAGE 319

ASME B31.3 (2016) CODE COMPLIANCE
(Moments in ft-lb , Force in lbf) (Stress in psi)

Point name	Load combination	Axial Force	In-Pl. Moment	Out-Pl. Moment	Torsion Moment	S.I.F In	S.I.F Out	Index/SIF Ax.	Index/SIF Tor.	Eq. no.	Load type	Code Stress	Code Allow.
B09 N+	Max P{1}									(3a)	HOOP	5813	16700
	GR + Max P{1}	4659	86	46	9	1.00	1.00	1.00	1.00	23a	SUST	2893	16700
	TR:Amb to T1{1}	145	406	153	17	1.00	1.00	1.00	1.00	(17)	DISP	3090	25050
	Amb to T1{1}	145	406	153	17	1.00	1.00	1.00	1.00	(17)	DISP	3090	25050
	Sus. + E1{1}	80	610	190	34	1.00	1.00			23a	OCC	6869	22211
	Sus. + E2{1}	82	473	129	20	1.00	1.00			23a	OCC	5799	22211
	Sus. + E3{1}	104	634	199	36	1.00	1.00			23a	OCC	7059	22211
	Sus. + E4{1}	58	445	123	18	1.00	1.00			23a	OCC	5573	22211
	Sus. + E5{1}	80	609	197	35	1.00	1.00			23a	OCC	6871	22211
	Sus. + E6{1}	84	475	131	20	1.00	1.00			23a	OCC	5816	22211
	Sus. + E7{1}	103	629	201	36	1.00	1.00			23a	OCC	7031	22211
	Sus. + E8{1}	59	446	125	19	1.00	1.00			23a	OCC	5589	22211
B09 F-	Max P{1}									(3a)	HOOP	5813	16700
	GR + Max P{1}	4673	150	9	3	1.00	1.00	1.00	1.00	23a	SUST	3279	16700
	TR:Amb to T1{1}	87	232	148	11	1.00	1.00	1.00	1.00	(17)	DISP	1952	25050
	Amb to T1{1}	87	232	148	11	1.00	1.00	1.00	1.00	(17)	DISP	1952	25050
	Sus. + E1{1}	147	878	139	19	1.00	1.00			23a	OCC	8698	22211
	Sus. + E2{1}	104	641	92	9	1.00	1.00			23a	OCC	6932	22211
	Sus. + E3{1}	156	899	146	17	1.00	1.00			23a	OCC	8863	22211
	Sus. + E4{1}	93	613	87	11	1.00	1.00			23a	OCC	6718	22211
	Sus. + E5{1}	147	873	153	20	1.00	1.00			23a	OCC	8685	22211
	Sus. + E6{1}	104	645	86	8	1.00	1.00			23a	OCC	6951	22211
	Sus. + E7{1}	155	891	157	18	1.00	1.00			23a	OCC	8817	22211
	Sus. + E8{1}	93	616	80	10	1.00	1.00			23a	OCC	6736	22211
B09 F+	Max P{1}									(3a)	HOOP	5813	16700
	GR + Max P{1}	4673	33	147	3	1.00	1.00	1.00	1.00	23a	SUST	3279	16700
	TR:Amb to T1{1}	87	108	253	11	1.00	1.00	1.00	1.00	(17)	DISP	1952	25050
	Amb to T1{1}	87	108	253	11	1.00	1.00	1.00	1.00	(17)	DISP	1952	25050
	Sus. + E1{1}	147	43	886	19	1.00	1.00			23a	OCC	8698	22211
	Sus. + E2{1}	104	35	645	9	1.00	1.00			23a	OCC	6932	22211
	Sus. + E3{1}	156	47	908	17	1.00	1.00			23a	OCC	8863	22211
	Sus. + E4{1}	93	34	616	11	1.00	1.00			23a	OCC	6718	22211
	Sus. + E5{1}	147	58	884	20	1.00	1.00			23a	OCC	8685	22211
	Sus. + E6{1}	104	38	647	8	1.00	1.00			23a	OCC	6951	22211
	Sus. + E7{1}	155	58	901	18	1.00	1.00			23a	OCC	8817	22211
	Sus. + E8{1}	93	38	618	10	1.00	1.00			23a	OCC	6736	22211
B25 -	Max P{1}									(3a)	HOOP	5813	16700
	GR + Max P{1}	4673	45	142	3	1.00	1.00	1.00	1.00	23a	SUST	3269	16700
	TR:Amb to T1{1}	87	148	184	11	1.00	1.00	1.00	1.00	(17)	DISP	1684	25050
	Amb to T1{1}	87	148	184	11	1.00	1.00	1.00	1.00	(17)	DISP	1684	25050
	Sus. + E1{1}	146	88	839	19	1.00	1.00			23a	OCC	8395	22211
	Sus. + E2{1}	102	71	607	9	1.00	1.00			23a	OCC	6687	22211
	Sus. + E3{1}	155	94	862	17	1.00	1.00			23a	OCC	8564	22211
	Sus. + E4{1}	92	68	578	11	1.00	1.00			23a	OCC	6474	22211
	Sus. + E5{1}	146	107	837	20	1.00	1.00			23a	OCC	8391	22211
	Sus. + E6{1}	103	61	609	8	1.00	1.00			23a	OCC	6701	22211
	Sus. + E7{1}	154	110	856	18	1.00	1.00			23a	OCC	8528	22211
	Sus. + E8{1}	92	58	580	10	1.00	1.00			23a	OCC	6488	22211

Primary Piping
04/24/2020 2018719 BENTLEY
07:34 AM AutoPIPE Nuclear 12.00.00.16 RESULT PAGE 320

ASME B31.3 (2016) CODE COMPLIANCE
(Moments in ft-lb , Force in lbf) (Stress in psi)

Point name	Load combination	Axial Force	In-Pl. Moment	Out-Pl. Moment	Torsion Moment	S.I.F In	S.I.F Out	Index/SIF Ax.	Index/SIF Tor.	Eq. no.	Load type	Code Stress	Code Allow.
B25	+ Max P{1}									(3a)	HOOP	5813	16700
	GR + Max P{1}	4672	45	142	3	1.00	1.00	1.00	1.00	23a	SUST	3269	16700
	TR:Amb to T1{1}	188	148	184	11	1.00	1.00	1.00	1.00	(17)	DISP	1729	25050
	Amb to T1{1}	188	148	184	11	1.00	1.00	1.00	1.00	(17)	DISP	1729	25050
	Sus. + E1{1}	146	88	839	19	1.00	1.00			23a	OCC	8394	22211
	Sus. + E2{1}	102	71	607	8	1.00	1.00			23a	OCC	6686	22211
	Sus. + E3{1}	155	94	862	17	1.00	1.00			23a	OCC	8564	22211
	Sus. + E4{1}	92	68	578	10	1.00	1.00			23a	OCC	6473	22211
	Sus. + E5{1}	146	107	837	20	1.00	1.00			23a	OCC	8391	22211
	Sus. + E6{1}	103	61	609	8	1.00	1.00			23a	OCC	6700	22211
	Sus. + E7{1}	154	110	856	17	1.00	1.00			23a	OCC	8528	22211
	Sus. + E8{1}	92	58	580	10	1.00	1.00			23a	OCC	6487	22211
B26	- Max P{1}									(3a)	HOOP	5813	16700
	GR + Max P{1}	4668	97	50	3	1.00	1.00	1.00	1.00	23a	SUST	2983	16700
	TR:Amb to T1{1}	188	40	140	11	1.00	1.00	1.00	1.00	(17)	DISP	1100	25050
	Amb to T1{1}	188	40	140	11	1.00	1.00	1.00	1.00	(17)	DISP	1100	25050
	Sus. + E1{1}	124	116	185	19	1.00	1.00			23a	OCC	4031	22211
	Sus. + E2{1}	81	101	64	8	1.00	1.00			23a	OCC	3129	22211
	Sus. + E3{1}	133	118	148	17	1.00	1.00			23a	OCC	3776	22211
	Sus. + E4{1}	70	101	292	10	1.00	1.00			23a	OCC	4764	22211
	Sus. + E5{1}	124	103	184	20	1.00	1.00			23a	OCC	4018	22211
	Sus. + E6{1}	81	110	65	8	1.00	1.00			23a	OCC	3164	22211
	Sus. + E7{1}	132	104	149	17	1.00	1.00			23a	OCC	3771	22211
	Sus. + E8{1}	70	109	292	10	1.00	1.00			23a	OCC	4771	22211
B26	+ Max P{1}									(3a)	HOOP	5813	16700
	GR + Max P{1}	4669	97	50	3	1.00	1.00	1.00	1.00	23a	SUST	2983	16700
	TR:Amb to T1{1}	257	40	140	11	1.00	1.00	1.00	1.00	(17)	DISP	1131	25050
	Amb to T1{1}	257	40	140	11	1.00	1.00	1.00	1.00	(17)	DISP	1131	25050
	Sus. + E1{1}	124	116	185	19	1.00	1.00			23a	OCC	4032	22211
	Sus. + E2{1}	81	101	64	8	1.00	1.00			23a	OCC	3129	22211
	Sus. + E3{1}	133	118	148	17	1.00	1.00			23a	OCC	3777	22211
	Sus. + E4{1}	70	101	292	10	1.00	1.00			23a	OCC	4765	22211
	Sus. + E5{1}	124	103	184	20	1.00	1.00			23a	OCC	4019	22211
	Sus. + E6{1}	81	110	65	8	1.00	1.00			23a	OCC	3164	22211
	Sus. + E7{1}	132	104	149	17	1.00	1.00			23a	OCC	3772	22211
	Sus. + E8{1}	70	109	292	10	1.00	1.00			23a	OCC	4771	22211
B28	- Max P{1}									(3a)	HOOP	5813	16700
	GR + Max P{1}	4665	87	25	3	1.00	1.00	1.00	1.00	23a	SUST	2842	16700
	TR:Amb to T1{1}	257	11	79	11	1.00	1.00	1.00	1.00	(17)	DISP	675	25050
	Amb to T1{1}	257	11	79	11	1.00	1.00	1.00	1.00	(17)	DISP	675	25050
	Sus. + E1{1}	102	95	54	19	1.00	1.00			23a	OCC	3134	22211
	Sus. + E2{1}	60	94	147	8	1.00	1.00			23a	OCC	3754	22211
	Sus. + E3{1}	111	94	98	17	1.00	1.00			23a	OCC	3438	22211
	Sus. + E4{1}	49	94	45	10	1.00	1.00			23a	OCC	3026	22211
	Sus. + E5{1}	103	94	54	20	1.00	1.00			23a	OCC	3137	22211
	Sus. + E6{1}	59	94	147	8	1.00	1.00			23a	OCC	3755	22211
	Sus. + E7{1}	111	95	97	17	1.00	1.00			23a	OCC	3431	22211
	Sus. + E8{1}	48	94	45	10	1.00	1.00			23a	OCC	3028	22211

Primary Piping
04/24/2020 2018719 BENTLEY
07:34 AM AutoPIPE Nuclear 12.00.00.16 RESULT PAGE 321

ASME B31.3 (2016) CODE COMPLIANCE
(Moments in ft-lb , Force in lbf) (Stress in psi)

Point name	Load combination	Axial Force	In-Pl. Moment	Out-Pl. Moment	Torsion Moment	S.I.F In	S.I.F Out	Index/SIF Ax.	Index/SIF Tor.	Eq. no.	Load type	Code Stress	Code Allow.
B28	+ Max P{1}									(3a)	HOOP	5813	16700
	GR + Max P{1}	4665	87	25	3	1.00	1.00	1.00	1.00	23a	SUST	2842	16700
	TR:Amb to T1{1}	355	11	79	11	1.00	1.00	1.00	1.00	(17)	DISP	719	25050
	Amb to T1{1}	355	11	79	11	1.00	1.00	1.00	1.00	(17)	DISP	719	25050
	Sus. + E1{1}	102	95	54	19	1.00	1.00			23a	OCC	3133	22211
	Sus. + E2{1}	60	94	147	8	1.00	1.00			23a	OCC	3754	22211
	Sus. + E3{1}	111	94	98	17	1.00	1.00			23a	OCC	3438	22211
	Sus. + E4{1}	49	94	45	10	1.00	1.00			23a	OCC	3026	22211
	Sus. + E5{1}	103	94	54	20	1.00	1.00			23a	OCC	3137	22211
	Sus. + E6{1}	59	94	147	8	1.00	1.00			23a	OCC	3755	22211
	Sus. + E7{1}	111	95	97	17	1.00	1.00			23a	OCC	3431	22211
	Sus. + E8{1}	48	94	45	10	1.00	1.00			23a	OCC	3028	22211
B29	- Max P{1}									(3a)	HOOP	5813	16700
	GR + Max P{1}	4662	79	9	3	1.00	1.00	1.00	1.00	23a	SUST	2763	16700
	TR:Amb to T1{1}	355	5	84	11	1.00	1.00	1.00	1.00	(17)	DISP	752	25050
	Amb to T1{1}	355	5	84	11	1.00	1.00	1.00	1.00	(17)	DISP	752	25050
	Sus. + E1{1}	80	82	10	19	1.00	1.00			23a	OCC	2896	22211
	Sus. + E2{1}	38	89	45	8	1.00	1.00			23a	OCC	3053	22211
	Sus. + E3{1}	89	81	60	17	1.00	1.00			23a	OCC	3185	22211
	Sus. + E4{1}	28	90	17	10	1.00	1.00			23a	OCC	2889	22211
	Sus. + E5{1}	82	95	10	20	1.00	1.00			23a	OCC	2962	22211
	Sus. + E6{1}	37	83	44	8	1.00	1.00			23a	OCC	3039	22211
	Sus. + E7{1}	90	94	59	17	1.00	1.00			23a	OCC	3195	22211
	Sus. + E8{1}	27	81	17	10	1.00	1.00			23a	OCC	2852	22211
B29	+ Max P{1}									(3a)	HOOP	5813	16700
	GR + Max P{1}	4659	79	9	3	1.00	1.00	1.00	1.00	23a	SUST	2761	16700
	TR:Amb to T1{1}	366	5	84	11	1.00	1.00	1.00	1.00	(17)	DISP	757	25050
	Amb to T1{1}	366	5	84	11	1.00	1.00	1.00	1.00	(17)	DISP	757	25050
	Sus. + E1{1}	80	82	10	19	1.00	1.00			23a	OCC	2895	22211
	Sus. + E2{1}	38	89	45	9	1.00	1.00			23a	OCC	3051	22211
	Sus. + E3{1}	89	81	60	17	1.00	1.00			23a	OCC	3184	22211
	Sus. + E4{1}	28	90	17	10	1.00	1.00			23a	OCC	2887	22211
	Sus. + E5{1}	82	95	10	20	1.00	1.00			23a	OCC	2961	22211
	Sus. + E6{1}	37	83	44	8	1.00	1.00			23a	OCC	3038	22211
	Sus. + E7{1}	90	94	59	18	1.00	1.00			23a	OCC	3193	22211
	Sus. + E8{1}	27	81	17	10	1.00	1.00			23a	OCC	2851	22211
B31	- Max P{1}									(3a)	HOOP	5813	16700
	GR + Max P{1}	4656	116	32	3	1.00	1.00	1.00	1.00	23a	SUST	3053	16700
	TR:Amb to T1{1}	366	7	121	11	1.00	1.00	1.00	1.00	(17)	DISP	1014	25050
	Amb to T1{1}	366	7	121	11	1.00	1.00	1.00	1.00	(17)	DISP	1014	25050
	Sus. + E1{1}	59	152	157	19	1.00	1.00			23a	OCC	4031	22211
	Sus. + E2{1}	17	119	276	9	1.00	1.00			23a	OCC	4831	22211
	Sus. + E3{1}	68	145	198	17	1.00	1.00			23a	OCC	4310	22211
	Sus. + E4{1}	7	118	69	10	1.00	1.00			23a	OCC	3328	22211
	Sus. + E5{1}	61	133	159	20	1.00	1.00			23a	OCC	4019	22211
	Sus. + E6{1}	15	131	278	8	1.00	1.00			23a	OCC	4843	22211
	Sus. + E7{1}	69	127	199	18	1.00	1.00			23a	OCC	4301	22211
	Sus. + E8{1}	5	136	67	10	1.00	1.00			23a	OCC	3353	22211

Primary Piping
04/24/2020 2018719 BENTLEY
07:34 AM AutoPIPE Nuclear 12.00.00.16 RESULT PAGE 322

ASME B31.3 (2016) CODE COMPLIANCE
(Moments in ft-lb , Force in lbf) (Stress in psi)

Point name	Load combination	Axial Force	In-Pl. Moment	Out-Pl. Moment	Torsion Moment	S.I.F In	S.I.F Out	Index/SIF Ax.	Index/SIF Tor.	Eq. no.	Load type	Code Stress	Code Allow.
B31	+ Max P{1}									(3a)	HOOP	5813	16700
	GR + Max P{1}	4655	116	32	3	1.00	1.00	1.00	1.00	23a	SUST	3053	16700
	TR:Amb to T1{1}	286	7	121	11	1.00	1.00	1.00	1.00	(17)	DISP	978	25050
	Amb to T1{1}	286	7	121	11	1.00	1.00	1.00	1.00	(17)	DISP	978	25050
	Sus. + E1{1}	59	152	157	19	1.00	1.00			23a	OCC	4031	22211
	Sus. + E2{1}	17	119	276	9	1.00	1.00			23a	OCC	4831	22211
	Sus. + E3{1}	68	145	198	17	1.00	1.00			23a	OCC	4310	22211
	Sus. + E4{1}	7	118	69	10	1.00	1.00			23a	OCC	3328	22211
	Sus. + E5{1}	61	133	159	20	1.00	1.00			23a	OCC	4018	22211
	Sus. + E6{1}	15	131	278	8	1.00	1.00			23a	OCC	4843	22211
	Sus. + E7{1}	69	127	199	18	1.00	1.00			23a	OCC	4301	22211
	Sus. + E8{1}	5	136	67	10	1.00	1.00			23a	OCC	3353	22211
B32	- Max P{1}									(3a)	HOOP	5813	16700
	GR + Max P{1}	4651	57	49	3	1.00	1.00	1.00	1.00	23a	SUST	2726	16700
	TR:Amb to T1{1}	286	24	597	11	1.00	1.00	1.00	1.00	(17)	DISP	4285	25050
	Amb to T1{1}	286	24	597	11	1.00	1.00	1.00	1.00	(17)	DISP	4285	25050
	Sus. + E1{1}	34	146	143	19	1.00	1.00			23a	OCC	3688	22211
	Sus. + E2{1}	7	87	97	9	1.00	1.00			23a	OCC	3142	22211
	Sus. + E3{1}	43	124	261	17	1.00	1.00			23a	OCC	4357	22211
	Sus. + E4{1}	17	106	115	10	1.00	1.00			23a	OCC	3330	22211
	Sus. + E5{1}	37	157	147	20	1.00	1.00			23a	OCC	3763	22211
	Sus. + E6{1}	9	73	94	8	1.00	1.00			23a	OCC	3078	22211
	Sus. + E7{1}	45	137	267	18	1.00	1.00			23a	OCC	4430	22211
	Sus. + E8{1}	20	92	118	10	1.00	1.00			23a	OCC	3298	22211
B32	+ Max P{1}									(3a)	HOOP	5813	16700
	GR + Max P{1}	4651	57	49	2	1.00	1.00	1.00	1.00	23a	SUST	2726	16700
	TR:Amb to T1{1}	237	24	597	11	1.00	1.00	1.00	1.00	(17)	DISP	4263	25050
	Amb to T1{1}	237	24	597	11	1.00	1.00	1.00	1.00	(17)	DISP	4263	25050
	Sus. + E1{1}	34	146	143	19	1.00	1.00			23a	OCC	3688	22211
	Sus. + E2{1}	7	87	97	9	1.00	1.00			23a	OCC	3142	22211
	Sus. + E3{1}	43	124	261	17	1.00	1.00			23a	OCC	4357	22211
	Sus. + E4{1}	17	106	115	10	1.00	1.00			23a	OCC	3330	22211
	Sus. + E5{1}	37	157	147	19	1.00	1.00			23a	OCC	3763	22211
	Sus. + E6{1}	9	73	94	8	1.00	1.00			23a	OCC	3078	22211
	Sus. + E7{1}	44	137	267	17	1.00	1.00			23a	OCC	4430	22211
	Sus. + E8{1}	20	92	118	10	1.00	1.00			23a	OCC	3298	22211
B16	N- Max P{1}									(3a)	HOOP	5813	16700
	GR + Max P{1}	4651	41	50	2	1.00	1.00	1.00	1.00	23a	SUST	2650	16700
	TR:Amb to T1{1}	237	18	653	11	1.00	1.00	1.00	1.00	(17)	DISP	4654	25050
	Amb to T1{1}	237	18	653	11	1.00	1.00	1.00	1.00	(17)	DISP	4654	25050
	Sus. + E1{1}	33	107	149	19	1.00	1.00			23a	OCC	3536	22211
	Sus. + E2{1}	8	64	106	9	1.00	1.00			23a	OCC	3094	22211
	Sus. + E3{1}	42	91	274	17	1.00	1.00			23a	OCC	4335	22211
	Sus. + E4{1}	19	77	115	10	1.00	1.00			23a	OCC	3196	22211
	Sus. + E5{1}	35	115	153	19	1.00	1.00			23a	OCC	3589	22211
	Sus. + E6{1}	11	54	103	8	1.00	1.00			23a	OCC	3051	22211
	Sus. + E7{1}	43	101	281	17	1.00	1.00			23a	OCC	4396	22211
	Sus. + E8{1}	21	67	118	10	1.00	1.00			23a	OCC	3188	22211

Primary Piping
04/24/2020 2018719 BENTLEY
07:34 AM AutoPIPE Nuclear 12.00.00.16 RESULT PAGE 323

ASME B31.3 (2016) CODE COMPLIANCE
(Moments in ft-lb , Force in lbf) (Stress in psi)

Point name	Load combination	Axial Force	In-Pl. Moment	Out-Pl. Moment	Torsion Moment	S.I.F In	S.I.F Out	Index/SIF Ax.	Index/SIF Tor.	Eq. no.	Load type	Code Stress	Code Allow.
B16 N+	Max P{1}									(3a)	HOOP	5813	16700
	GR + Max P{1}	4651	49	42	2	1.00	1.00	1.00	1.00	23a	SUST	2650	16700
	TR:Amb to T1{1}	237	652	33	11	1.00	1.00	1.00	1.00	(17)	DISP	4654	25050
	Amb to T1{1}	237	652	33	11	1.00	1.00	1.00	1.00	(17)	DISP	4654	25050
	Sus. + E1{1}	33	150	106	19	1.00	1.00			23a	OCC	3536	22211
	Sus. + E2{1}	8	106	64	9	1.00	1.00			23a	OCC	3094	22211
	Sus. + E3{1}	42	275	87	17	1.00	1.00			23a	OCC	4335	22211
	Sus. + E4{1}	19	113	79	10	1.00	1.00			23a	OCC	3196	22211
	Sus. + E5{1}	35	153	114	19	1.00	1.00			23a	OCC	3589	22211
	Sus. + E6{1}	11	102	54	8	1.00	1.00			23a	OCC	3051	22211
	Sus. + E7{1}	43	281	96	17	1.00	1.00			23a	OCC	4396	22211
	Sus. + E8{1}	21	116	70	10	1.00	1.00			23a	OCC	3188	22211
B16 F-	Max P{1}									(3a)	HOOP	5813	16700
	GR + Max P{1}	4644	36	28	23	1.00	1.00	1.00	1.00	23a	SUST	2516	16700
	TR:Amb to T1{1}	112	280	39	4	1.00	1.00	1.00	1.00	(17)	DISP	2015	25050
	Amb to T1{1}	112	280	39	4	1.00	1.00	1.00	1.00	(17)	DISP	2015	25050
	Sus. + E1{1}	20	100	160	102	1.00	1.00			23a	OCC	3729	22211
	Sus. + E2{1}	4	171	55	39	1.00	1.00			23a	OCC	3518	22211
	Sus. + E3{1}	12	215	125	86	1.00	1.00			23a	OCC	4061	22211
	Sus. + E4{1}	14	70	87	56	1.00	1.00			23a	OCC	3065	22211
	Sus. + E5{1}	21	95	159	103	1.00	1.00			23a	OCC	3714	22211
	Sus. + E6{1}	4	175	54	39	1.00	1.00			23a	OCC	3547	22211
	Sus. + E7{1}	12	218	126	85	1.00	1.00			23a	OCC	4078	22211
	Sus. + E8{1}	14	75	85	56	1.00	1.00			23a	OCC	3072	22211
B16 F+	Max P{1}									(3a)	HOOP	5813	16700
	GR + Max P{1}	4644	29	35	23	1.00	1.00	1.00	1.00	23a	SUST	2516	16700
	TR:Amb to T1{1}	112	31	281	4	1.00	1.00	1.00	1.00	(17)	DISP	2015	25050
	Amb to T1{1}	112	31	281	4	1.00	1.00	1.00	1.00	(17)	DISP	2015	25050
	Sus. + E1{1}	20	163	95	102	1.00	1.00			23a	OCC	3729	22211
	Sus. + E2{1}	4	60	169	39	1.00	1.00			23a	OCC	3518	22211
	Sus. + E3{1}	12	131	211	86	1.00	1.00			23a	OCC	4061	22211
	Sus. + E4{1}	14	89	68	56	1.00	1.00			23a	OCC	3065	22211
	Sus. + E5{1}	21	162	91	103	1.00	1.00			23a	OCC	3714	22211
	Sus. + E6{1}	4	59	174	39	1.00	1.00			23a	OCC	3547	22211
	Sus. + E7{1}	12	132	214	85	1.00	1.00			23a	OCC	4079	22211
	Sus. + E8{1}	14	87	72	56	1.00	1.00			23a	OCC	3072	22211
B33	Max P{1}									(3a)	HOOP	5813	16700
	GR + Max P{1}	4644	47	32	23	1.00	1.00	1.00	1.00	23a	SUST	2596	16700
	TR:Amb to T1{1}	112	39	162	4	1.00	1.00	1.00	1.00	(17)	DISP	1210	25050
	Amb to T1{1}	112	39	162	4	1.00	1.00	1.00	1.00	(17)	DISP	1210	25050
	Sus. + E1{1}	22	206	81	102	1.00	1.00			23a	OCC	3938	22211
	Sus. + E2{1}	3	83	175	39	1.00	1.00			23a	OCC	3673	22211
	Sus. + E3{1}	10	168	192	86	1.00	1.00			23a	OCC	4124	22211
	Sus. + E4{1}	15	117	79	56	1.00	1.00			23a	OCC	3256	22211
	Sus. + E5{1}	22	203	75	103	1.00	1.00			23a	OCC	3909	22211
	Sus. + E6{1}	2	83	181	39	1.00	1.00			23a	OCC	3715	22211
	Sus. + E7{1}	11	167	194	85	1.00	1.00			23a	OCC	4128	22211
	Sus. + E8{1}	15	117	85	56	1.00	1.00			23a	OCC	3282	22211

Primary Piping
04/24/2020 2018719 BENTLEY
07:34 AM AutoPIPE Nuclear 12.00.00.16 RESULT PAGE 324

ASME B31.3 (2016) CODE COMPLIANCE
(Moments in ft-lb , Force in lbf) (Stress in psi)

Point name	Load combination	Axial Force	In-Pl. Moment	Out-Pl. Moment	Torsion Moment	S.I.F In	S.I.F Out	Index/SIF Ax.	Index/SIF Tor.	Eq. no.	Load type	Code Stress	Code Allow.
B34 -	Max P{1}									(3a)	HOOP	5813	16700
	GR + Max P{1}	4644	72	11	23	1.00	1.00	1.00	1.00	23a	SUST	2714	16700
	TR:Amb to T1{1}	112	46	283	4	1.00	1.00	1.00	1.00	(17)	DISP	2048	25050
	Amb to T1{1}	112	46	283	4	1.00	1.00	1.00	1.00	(17)	DISP	2048	25050
	Sus. + E1{1}	28	263	13	102	1.00	1.00			23a	OCC	4222	22211
	Sus. + E2{1}	4	102	220	39	1.00	1.00			23a	OCC	4241	22211
	Sus. + E3{1}	4	218	98	85	1.00	1.00			23a	OCC	4021	22211
	Sus. + E4{1}	22	152	152	56	1.00	1.00			23a	OCC	3916	22211
	Sus. + E5{1}	29	266	27	103	1.00	1.00			23a	OCC	4245	22211
	Sus. + E6{1}	4	105	233	39	1.00	1.00			23a	OCC	4339	22211
	Sus. + E7{1}	5	215	95	85	1.00	1.00			23a	OCC	3991	22211
	Sus. + E8{1}	22	155	165	56	1.00	1.00			23a	OCC	4009	22211
B34 +	Max P{1}									(3a)	HOOP	5813	16700
	GR + Max P{1}	4643	72	11	23	1.00	1.00	1.00	1.00	23a	SUST	2714	16700
	TR:Amb to T1{1}	108	46	283	4	1.00	1.00	1.00	1.00	(17)	DISP	2046	25050
	Amb to T1{1}	108	46	283	4	1.00	1.00	1.00	1.00	(17)	DISP	2046	25050
	Sus. + E1{1}	28	263	13	102	1.00	1.00			23a	OCC	4221	22211
	Sus. + E2{1}	4	102	220	39	1.00	1.00			23a	OCC	4241	22211
	Sus. + E3{1}	4	218	98	85	1.00	1.00			23a	OCC	4020	22211
	Sus. + E4{1}	22	152	152	56	1.00	1.00			23a	OCC	3916	22211
	Sus. + E5{1}	29	266	27	103	1.00	1.00			23a	OCC	4245	22211
	Sus. + E6{1}	4	105	233	39	1.00	1.00			23a	OCC	4339	22211
	Sus. + E7{1}	5	215	94	85	1.00	1.00			23a	OCC	3991	22211
	Sus. + E8{1}	22	155	165	56	1.00	1.00			23a	OCC	4009	22211
B19 N-	Max P{1}									(3a)	HOOP	5813	16700
	GR + Max P{1}	4643	51	7	23	1.00	1.00	1.00	1.00	23a	SUST	2556	16700
	TR:Amb to T1{1}	108	36	373	4	1.00	1.00	1.00	1.00	(17)	DISP	2657	25050
	Amb to T1{1}	108	36	373	4	1.00	1.00	1.00	1.00	(17)	DISP	2657	25050
	Sus. + E1{1}	29	211	69	102	1.00	1.00			23a	OCC	3938	22211
	Sus. + E2{1}	5	78	202	39	1.00	1.00			23a	OCC	3988	22211
	Sus. + E3{1}	3	175	82	85	1.00	1.00			23a	OCC	3698	22211
	Sus. + E4{1}	23	119	81	56	1.00	1.00			23a	OCC	3327	22211
	Sus. + E5{1}	30	215	81	103	1.00	1.00			23a	OCC	3996	22211
	Sus. + E6{1}	5	79	214	39	1.00	1.00			23a	OCC	4073	22211
	Sus. + E7{1}	3	174	78	85	1.00	1.00			23a	OCC	3679	22211
	Sus. + E8{1}	23	119	92	56	1.00	1.00			23a	OCC	3391	22211
B19 N+	Max P{1}									(3a)	HOOP	5813	16700
	GR + Max P{1}	4643	9	51	23	1.00	1.00	1.00	1.00	23a	SUST	2556	16700
	TR:Amb to T1{1}	108	372	47	4	1.00	1.00	1.00	1.00	(17)	DISP	2657	25050
	Amb to T1{1}	108	372	47	4	1.00	1.00	1.00	1.00	(17)	DISP	2657	25050
	Sus. + E1{1}	29	66	213	102	1.00	1.00			23a	OCC	3938	22211
	Sus. + E2{1}	5	204	72	39	1.00	1.00			23a	OCC	3988	22211
	Sus. + E3{1}	3	87	173	85	1.00	1.00			23a	OCC	3698	22211
	Sus. + E4{1}	23	84	116	56	1.00	1.00			23a	OCC	3327	22211
	Sus. + E5{1}	30	78	217	103	1.00	1.00			23a	OCC	3996	22211
	Sus. + E6{1}	5	216	72	39	1.00	1.00			23a	OCC	4073	22211
	Sus. + E7{1}	3	83	172	85	1.00	1.00			23a	OCC	3679	22211
	Sus. + E8{1}	23	96	117	56	1.00	1.00			23a	OCC	3391	22211

ASME B31.3 (2016) CODE COMPLIANCE
(Moments in ft-lb , Force in lbf) (Stress in psi)

Point name	Load combination	Axial Force	In-Pl. Moment	Out-Pl. Moment	Torsion Moment	S.I.F In	S.I.F Out	Index/SIF Ax.	Index/SIF Tor.	Eq. no.	Load type	Code Stress	Code Allow.
B19 F-	Max P{1}									(3a)	HOOP	5813	16700
	GR + Max P{1}	4651	21	21	1	1.00	1.00	1.00	1.00	23a	SUST	2397	16700
	TR:Amb to T1{1}	179	586	43	0	1.00	1.00	1.00	1.00	(17)	DISP	4168	25050
	Amb to T1{1}	179	586	43	0	1.00	1.00	1.00	1.00	(17)	DISP	4168	25050
	Sus. + E1{1}	109	318	103	3	1.00	1.00			23a	OCC	4677	22211
	Sus. + E2{1}	14	116	29	2	1.00	1.00			23a	OCC	3093	22211
	Sus. + E3{1}	12	27	76	2	1.00	1.00			23a	OCC	2801	22211
	Sus. + E4{1}	122	241	60	3	1.00	1.00			23a	OCC	4073	22211
	Sus. + E5{1}	106	319	115	3	1.00	1.00			23a	OCC	4706	22211
	Sus. + E6{1}	17	117	22	2	1.00	1.00			23a	OCC	3100	22211
	Sus. + E7{1}	14	21	84	2	1.00	1.00			23a	OCC	2855	22211
	Sus. + E8{1}	125	241	52	3	1.00	1.00			23a	OCC	4062	22211
B19 F+	Max P{1}									(3a)	HOOP	5813	16700
	GR + Max P{1}	4651	22	20	1	1.00	1.00	1.00	1.00	23a	SUST	2397	16700
	TR:Amb to T1{1}	179	29	587	0	1.00	1.00	1.00	1.00	(17)	DISP	4168	25050
	Amb to T1{1}	179	29	587	0	1.00	1.00	1.00	1.00	(17)	DISP	4168	25050
	Sus. + E1{1}	109	97	319	3	1.00	1.00			23a	OCC	4677	22211
	Sus. + E2{1}	14	32	115	2	1.00	1.00			23a	OCC	3093	22211
	Sus. + E3{1}	12	77	25	2	1.00	1.00			23a	OCC	2801	22211
	Sus. + E4{1}	122	56	242	3	1.00	1.00			23a	OCC	4073	22211
	Sus. + E5{1}	106	109	320	3	1.00	1.00			23a	OCC	4706	22211
	Sus. + E6{1}	17	24	116	2	1.00	1.00			23a	OCC	3100	22211
	Sus. + E7{1}	14	84	22	2	1.00	1.00			23a	OCC	2855	22211
	Sus. + E8{1}	125	48	241	3	1.00	1.00			23a	OCC	4062	22211
B35 -	Max P{1}									(3a)	HOOP	5813	16700
	GR + Max P{1}	4651	34	21	1	1.00	1.00	1.00	1.00	23a	SUST	2471	16700
	TR:Amb to T1{1}	179	38	532	0	1.00	1.00	1.00	1.00	(17)	DISP	3796	25050
	Amb to T1{1}	179	38	532	0	1.00	1.00	1.00	1.00	(17)	DISP	3796	25050
	Sus. + E1{1}	108	136	299	3	1.00	1.00			23a	OCC	4668	22211
	Sus. + E2{1}	13	50	107	2	1.00	1.00			23a	OCC	3111	22211
	Sus. + E3{1}	11	108	21	2	1.00	1.00			23a	OCC	3008	22211
	Sus. + E4{1}	121	82	225	3	1.00	1.00			23a	OCC	4042	22211
	Sus. + E5{1}	105	152	300	3	1.00	1.00			23a	OCC	4715	22211
	Sus. + E6{1}	16	38	108	2	1.00	1.00			23a	OCC	3110	22211
	Sus. + E7{1}	13	119	27	2	1.00	1.00			23a	OCC	3089	22211
	Sus. + E8{1}	124	70	224	3	1.00	1.00			23a	OCC	4024	22211
B35 +	Max P{1}									(3a)	HOOP	5813	16700
	GR + Max P{1}	4651	34	21	1	1.00	1.00	1.00	1.00	23a	SUST	2471	16700
	TR:Amb to T1{1}	247	38	532	0	1.00	1.00	1.00	1.00	(17)	DISP	3827	25050
	Amb to T1{1}	247	38	532	0	1.00	1.00	1.00	1.00	(17)	DISP	3827	25050
	Sus. + E1{1}	108	136	299	4	1.00	1.00			23a	OCC	4667	22211
	Sus. + E2{1}	13	50	107	2	1.00	1.00			23a	OCC	3111	22211
	Sus. + E3{1}	11	108	21	2	1.00	1.00			23a	OCC	3007	22211
	Sus. + E4{1}	121	82	225	3	1.00	1.00			23a	OCC	4042	22211
	Sus. + E5{1}	105	152	300	4	1.00	1.00			23a	OCC	4715	22211
	Sus. + E6{1}	16	38	108	2	1.00	1.00			23a	OCC	3110	22211
	Sus. + E7{1}	13	119	27	2	1.00	1.00			23a	OCC	3089	22211
	Sus. + E8{1}	124	70	224	3	1.00	1.00			23a	OCC	4024	22211

Primary Piping
04/24/2020 2018719
07:34 AM

BENTLEY
AutoPIPE Nuclear 12.00.00.16 RESULT PAGE 326

ASME B31.3 (2016) CODE COMPLIANCE
(Moments in ft-lb , Force in lbf) (Stress in psi)

Point name	Load combination	Axial Force	In-Pl. Moment	Out-Pl. Moment	Torsion Moment	S.I.F In	S.I.F Out	Index/SIF Ax.	Index/SIF Tor.	Eq. no.	Load type	Code Stress	Code Allow.
B36	- Max P{1}									(3a)	HOOP	5813	16700
	GR + Max P{1}	4647	101	27	1	1.00	1.00	1.00	1.00	23a	SUST	2939	16700
	TR:Amb to T1{1}	247	10	33	0	1.00	1.00	1.00	1.00	(17)	DISP	348	25050
	Amb to T1{1}	247	10	33	0	1.00	1.00	1.00	1.00	(17)	DISP	348	25050
	Sus. + E1{1}	86	137	210	4	1.00	1.00			23a	OCC	4329	22211
	Sus. + E2{1}	8	107	197	2	1.00	1.00			23a	OCC	4175	22211
	Sus. + E3{1}	11	130	223	2	1.00	1.00			23a	OCC	4374	22211
	Sus. + E4{1}	99	104	237	3	1.00	1.00			23a	OCC	4506	22211
	Sus. + E5{1}	84	123	213	4	1.00	1.00			23a	OCC	4335	22211
	Sus. + E6{1}	6	111	201	2	1.00	1.00			23a	OCC	4200	22211
	Sus. + E7{1}	8	114	220	2	1.00	1.00			23a	OCC	4342	22211
	Sus. + E8{1}	102	120	233	3	1.00	1.00			23a	OCC	4484	22211
B36	+ Max P{1}									(3a)	HOOP	5813	16700
	GR + Max P{1}	4648	101	27	1	1.00	1.00	1.00	1.00	23a	SUST	2939	16700
	TR:Amb to T1{1}	325	10	33	0	1.00	1.00	1.00	1.00	(17)	DISP	383	25050
	Amb to T1{1}	325	10	33	0	1.00	1.00	1.00	1.00	(17)	DISP	383	25050
	Sus. + E1{1}	86	137	210	4	1.00	1.00			23a	OCC	4330	22211
	Sus. + E2{1}	8	107	197	2	1.00	1.00			23a	OCC	4175	22211
	Sus. + E3{1}	11	130	223	2	1.00	1.00			23a	OCC	4375	22211
	Sus. + E4{1}	99	104	237	3	1.00	1.00			23a	OCC	4506	22211
	Sus. + E5{1}	84	123	213	4	1.00	1.00			23a	OCC	4335	22211
	Sus. + E6{1}	6	111	201	2	1.00	1.00			23a	OCC	4200	22211
	Sus. + E7{1}	8	114	220	2	1.00	1.00			23a	OCC	4343	22211
	Sus. + E8{1}	102	120	233	3	1.00	1.00			23a	OCC	4484	22211
B37	- Max P{1}									(3a)	HOOP	5813	16700
	GR + Max P{1}	4645	82	29	1	1.00	1.00	1.00	1.00	23a	SUST	2806	16700
	TR:Amb to T1{1}	325	2	106	0	1.00	1.00	1.00	1.00	(17)	DISP	882	25050
	Amb to T1{1}	325	2	106	0	1.00	1.00	1.00	1.00	(17)	DISP	882	25050
	Sus. + E1{1}	64	84	51	4	1.00	1.00			23a	OCC	2995	22211
	Sus. + E2{1}	29	90	45	2	1.00	1.00			23a	OCC	2949	22211
	Sus. + E3{1}	33	82	45	2	1.00	1.00			23a	OCC	2939	22211
	Sus. + E4{1}	78	92	38	3	1.00	1.00			23a	OCC	2945	22211
	Sus. + E5{1}	62	98	49	4	1.00	1.00			23a	OCC	3026	22211
	Sus. + E6{1}	28	87	44	2	1.00	1.00			23a	OCC	2932	22211
	Sus. + E7{1}	30	96	45	2	1.00	1.00			23a	OCC	2973	22211
	Sus. + E8{1}	80	85	39	3	1.00	1.00			23a	OCC	2921	22211
B37	+ Max P{1}									(3a)	HOOP	5813	16700
	GR + Max P{1}	4645	82	29	1	1.00	1.00	1.00	1.00	23a	SUST	2806	16700
	TR:Amb to T1{1}	414	2	106	0	1.00	1.00	1.00	1.00	(17)	DISP	921	25050
	Amb to T1{1}	414	2	106	0	1.00	1.00	1.00	1.00	(17)	DISP	921	25050
	Sus. + E1{1}	64	84	51	4	1.00	1.00			23a	OCC	2995	22211
	Sus. + E2{1}	29	90	45	2	1.00	1.00			23a	OCC	2949	22211
	Sus. + E3{1}	33	82	45	2	1.00	1.00			23a	OCC	2939	22211
	Sus. + E4{1}	78	92	38	3	1.00	1.00			23a	OCC	2945	22211
	Sus. + E5{1}	62	98	49	4	1.00	1.00			23a	OCC	3026	22211
	Sus. + E6{1}	28	87	44	2	1.00	1.00			23a	OCC	2932	22211
	Sus. + E7{1}	30	96	45	2	1.00	1.00			23a	OCC	2973	22211
	Sus. + E8{1}	80	85	39	3	1.00	1.00			23a	OCC	2921	22211

ASME B31.3 (2016) CODE COMPLIANCE
(Moments in ft-lb , Force in lbf) (Stress in psi)

Point name	Load combination	Axial Force	In-Pl. Moment	Out-Pl. Moment	Torsion Moment	S.I.F In	S.I.F Out	Index/SIF Ax.	Index/SIF Tor.	Eq. no.	Load type	Code Stress	Code Allow.
B38	- Max P{1}									(3a)	HOOP	5813	16700
	GR + Max P{1}	4641	94	9	1	1.00	1.00	1.00	1.00	23a	SUST	2858	16700
	TR:Amb to T1{1}	414	0	10	0	1.00	1.00	1.00	1.00	(17)	DISP	257	25050
	Amb to T1{1}	414	0	10	0	1.00	1.00	1.00	1.00	(17)	DISP	257	25050
	Sus. + E1{1}	43	107	41	4	1.00	1.00			23a	OCC	3131	22211
	Sus. + E2{1}	51	100	16	2	1.00	1.00			23a	OCC	2950	22211
	Sus. + E3{1}	55	107	40	2	1.00	1.00			23a	OCC	3129	22211
	Sus. + E4{1}	57	100	14	3	1.00	1.00			23a	OCC	2944	22211
	Sus. + E5{1}	41	95	41	4	1.00	1.00			23a	OCC	3114	22211
	Sus. + E6{1}	50	103	17	2	1.00	1.00			23a	OCC	2973	22211
	Sus. + E7{1}	51	95	41	2	1.00	1.00			23a	OCC	3114	22211
	Sus. + E8{1}	58	103	15	3	1.00	1.00			23a	OCC	2967	22211
B38	+ Max P{1}									(3a)	HOOP	5813	16700
	GR + Max P{1}	4628	94	9	1	1.00	1.00	1.00	1.00	23a	SUST	2852	16700
	TR:Amb to T1{1}	468	0	10	0	1.00	1.00	1.00	1.00	(17)	DISP	281	25050
	Amb to T1{1}	468	0	10	0	1.00	1.00	1.00	1.00	(17)	DISP	281	25050
	Sus. + E1{1}	43	107	41	4	1.00	1.00			23a	OCC	3125	22211
	Sus. + E2{1}	51	100	16	2	1.00	1.00			23a	OCC	2944	22211
	Sus. + E3{1}	55	107	40	2	1.00	1.00			23a	OCC	3122	22211
	Sus. + E4{1}	57	100	14	3	1.00	1.00			23a	OCC	2937	22211
	Sus. + E5{1}	41	95	41	4	1.00	1.00			23a	OCC	3108	22211
	Sus. + E6{1}	50	103	17	2	1.00	1.00			23a	OCC	2966	22211
	Sus. + E7{1}	51	95	41	2	1.00	1.00			23a	OCC	3108	22211
	Sus. + E8{1}	58	103	15	3	1.00	1.00			23a	OCC	2961	22211
B39	- Max P{1}									(3a)	HOOP	5813	16700
	GR + Max P{1}	4625	67	7	1	1.00	1.00	1.00	1.00	23a	SUST	2657	16700
	TR:Amb to T1{1}	468	3	152	0	1.00	1.00	1.00	1.00	(17)	DISP	1265	25050
	Amb to T1{1}	468	3	152	0	1.00	1.00	1.00	1.00	(17)	DISP	1265	25050
	Sus. + E1{1}	21	73	47	4	1.00	1.00			23a	OCC	2959	22211
	Sus. + E2{1}	72	78	21	2	1.00	1.00			23a	OCC	2822	22211
	Sus. + E3{1}	76	75	21	2	1.00	1.00			23a	OCC	2809	22211
	Sus. + E4{1}	36	77	43	3	1.00	1.00			23a	OCC	2942	22211
	Sus. + E5{1}	20	85	46	4	1.00	1.00			23a	OCC	2976	22211
	Sus. + E6{1}	71	67	22	2	1.00	1.00			23a	OCC	2799	22211
	Sus. + E7{1}	72	87	22	2	1.00	1.00			23a	OCC	2870	22211
	Sus. + E8{1}	36	69	44	3	1.00	1.00			23a	OCC	2938	22211
B39	+ Max P{1}									(3a)	HOOP	5813	16700
	GR + Max P{1}	4625	67	7	1	1.00	1.00	1.00	1.00	23a	SUST	2657	16700
	TR:Amb to T1{1}	395	3	152	0	1.00	1.00	1.00	1.00	(17)	DISP	1232	25050
	Amb to T1{1}	395	3	152	0	1.00	1.00	1.00	1.00	(17)	DISP	1232	25050
	Sus. + E1{1}	21	73	47	4	1.00	1.00			23a	OCC	2959	22211
	Sus. + E2{1}	72	78	21	2	1.00	1.00			23a	OCC	2822	22211
	Sus. + E3{1}	76	75	21	2	1.00	1.00			23a	OCC	2810	22211
	Sus. + E4{1}	36	77	43	3	1.00	1.00			23a	OCC	2942	22211
	Sus. + E5{1}	20	85	46	4	1.00	1.00			23a	OCC	2976	22211
	Sus. + E6{1}	71	67	22	2	1.00	1.00			23a	OCC	2799	22211
	Sus. + E7{1}	72	87	22	2	1.00	1.00			23a	OCC	2870	22211
	Sus. + E8{1}	36	69	44	3	1.00	1.00			23a	OCC	2938	22211

Primary Piping
04/24/2020 2018719 BENTLEY
07:34 AM AutoPIPE Nuclear 12.00.00.16 RESULT PAGE 328

ASME B31.3 (2016) CODE COMPLIANCE
(Moments in ft-lb , Force in lbf) (Stress in psi)

Point name	Load combination	Axial Force	In-Pl. Moment	Out-Pl. Moment	Torsion Moment	S.I.F In	S.I.F Out	Index/SIF Ax.	Index/SIF Tor.	Eq. no.	Load type	Code Stress	Code Allow.
B40	- Max P{1}									(3a)	HOOP	5813	16700
	GR + Max P{1}	4622	89	9	1	1.00	1.00	1.00	1.00	23a	SUST	2817	16700
	TR:Amb to T1{1}	395	10	38	0	1.00	1.00	1.00	1.00	(17)	DISP	452	25050
	Amb to T1{1}	395	10	38	0	1.00	1.00	1.00	1.00	(17)	DISP	452	25050
	Sus. + E1{1}	2	121	264	4	1.00	1.00			23a	OCC	4673	22211
	Sus. + E2{1}	90	96	96	2	1.00	1.00			23a	OCC	3488	22211
	Sus. + E3{1}	95	129	82	2	1.00	1.00			23a	OCC	3459	22211
	Sus. + E4{1}	17	90	233	3	1.00	1.00			23a	OCC	4447	22211
	Sus. + E5{1}	2	108	262	4	1.00	1.00			23a	OCC	4654	22211
	Sus. + E6{1}	90	109	93	2	1.00	1.00			23a	OCC	3484	22211
	Sus. + E7{1}	90	117	85	2	1.00	1.00			23a	OCC	3441	22211
	Sus. + E8{1}	18	101	235	3	1.00	1.00			23a	OCC	4462	22211
B40	+ Max P{1}									(3a)	HOOP	5813	16700
	GR + Max P{1}	4629	89	9	1	1.00	1.00	1.00	1.00	23a	SUST	2821	16700
	TR:Amb to T1{1}	321	10	38	0	1.00	1.00	1.00	1.00	(17)	DISP	419	25050
	Amb to T1{1}	321	10	38	0	1.00	1.00	1.00	1.00	(17)	DISP	419	25050
	Sus. + E1{1}	2	121	264	4	1.00	1.00			23a	OCC	4676	22211
	Sus. + E2{1}	90	96	96	2	1.00	1.00			23a	OCC	3491	22211
	Sus. + E3{1}	95	129	82	1	1.00	1.00			23a	OCC	3462	22211
	Sus. + E4{1}	17	90	233	3	1.00	1.00			23a	OCC	4450	22211
	Sus. + E5{1}	2	108	262	3	1.00	1.00			23a	OCC	4657	22211
	Sus. + E6{1}	90	109	93	2	1.00	1.00			23a	OCC	3487	22211
	Sus. + E7{1}	90	117	85	2	1.00	1.00			23a	OCC	3445	22211
	Sus. + E8{1}	18	101	235	3	1.00	1.00			23a	OCC	4465	22211
B42	- Max P{1}									(3a)	HOOP	5813	16700
	GR + Max P{1}	4626	39	69	1	1.00	1.00	1.00	1.00	23a	SUST	2744	16700
	TR:Amb to T1{1}	321	32	780	0	1.00	1.00	1.00	1.00	(17)	DISP	5577	25050
	Amb to T1{1}	321	32	780	0	1.00	1.00	1.00	1.00	(17)	DISP	5577	25050
	Sus. + E1{1}	20	107	117	4	1.00	1.00			23a	OCC	3359	22211
	Sus. + E2{1}	111	88	186	2	1.00	1.00			23a	OCC	3714	22211
	Sus. + E3{1}	117	134	260	1	1.00	1.00			23a	OCC	4342	22211
	Sus. + E4{1}	4	60	199	3	1.00	1.00			23a	OCC	3700	22211
	Sus. + E5{1}	20	119	117	3	1.00	1.00			23a	OCC	3428	22211
	Sus. + E6{1}	112	77	186	2	1.00	1.00			23a	OCC	3684	22211
	Sus. + E7{1}	112	148	256	2	1.00	1.00			23a	OCC	4364	22211
	Sus. + E8{1}	4	49	200	3	1.00	1.00			23a	OCC	3692	22211
B42	+ Max P{1}									(3a)	HOOP	5813	16700
	GR + Max P{1}	4625	39	69	1	1.00	1.00	1.00	1.00	23a	SUST	2743	16700
	TR:Amb to T1{1}	284	32	780	0	1.00	1.00	1.00	1.00	(17)	DISP	5560	25050
	Amb to T1{1}	284	32	780	0	1.00	1.00	1.00	1.00	(17)	DISP	5560	25050
	Sus. + E1{1}	20	107	117	4	1.00	1.00			23a	OCC	3359	22211
	Sus. + E2{1}	111	88	186	2	1.00	1.00			23a	OCC	3714	22211
	Sus. + E3{1}	117	134	260	1	1.00	1.00			23a	OCC	4342	22211
	Sus. + E4{1}	4	60	199	3	1.00	1.00			23a	OCC	3700	22211
	Sus. + E5{1}	20	119	117	4	1.00	1.00			23a	OCC	3427	22211
	Sus. + E6{1}	112	77	186	2	1.00	1.00			23a	OCC	3684	22211
	Sus. + E7{1}	112	148	256	1	1.00	1.00			23a	OCC	4364	22211
	Sus. + E8{1}	4	49	200	3	1.00	1.00			23a	OCC	3691	22211

ASME B31.3 (2016) CODE COMPLIANCE
(Moments in ft-lb , Force in lbf) (Stress in psi)

Point name	Load combination	Axial Force	In-Pl. Moment	Out-Pl. Moment	Torsion Moment	S.I.F In	S.I.F Out	Index/SIF Ax.	Index/SIF Tor.	Eq. no.	Load type	Code Stress	Code Allow.
B27 N-	Max P{1}									(3a)	HOOP	5813	16700
	GR + Max P{1}	4625	24	72	1	1.00	1.00	1.00	1.00	23a	SUST	2721	16700
	TR:Amb to T1{1}	284	22	842	0	1.00	1.00	1.00	1.00	(17)	DISP	5989	25050
	Amb to T1{1}	284	22	842	0	1.00	1.00	1.00	1.00	(17)	DISP	5989	25050
	Sus. + E1{1}	21	80	132	4	1.00	1.00			23a	OCC	3322	22211
	Sus. + E2{1}	113	62	195	2	1.00	1.00			23a	OCC	3701	22211
	Sus. + E3{1}	118	100	272	1	1.00	1.00			23a	OCC	4323	22211
	Sus. + E4{1}	5	41	217	3	1.00	1.00			23a	OCC	3774	22211
	Sus. + E5{1}	21	88	131	4	1.00	1.00			23a	OCC	3361	22211
	Sus. + E6{1}	113	54	194	2	1.00	1.00			23a	OCC	3683	22211
	Sus. + E7{1}	113	110	268	1	1.00	1.00			23a	OCC	4323	22211
	Sus. + E8{1}	5	33	217	3	1.00	1.00			23a	OCC	3771	22211
B27 N+	Max P{1}									(3a)	HOOP	5813	16700
	GR + Max P{1}	4625	73	22	1	1.00	1.00	1.00	1.00	23a	SUST	2721	16700
	TR:Amb to T1{1}	284	841	44	0	1.00	1.00	1.00	1.00	(17)	DISP	5989	25050
	Amb to T1{1}	284	841	44	0	1.00	1.00	1.00	1.00	(17)	DISP	5989	25050
	Sus. + E1{1}	21	134	77	4	1.00	1.00			23a	OCC	3322	22211
	Sus. + E2{1}	113	194	63	2	1.00	1.00			23a	OCC	3701	22211
	Sus. + E3{1}	118	271	103	1	1.00	1.00			23a	OCC	4323	22211
	Sus. + E4{1}	5	218	35	3	1.00	1.00			23a	OCC	3774	22211
	Sus. + E5{1}	21	133	85	4	1.00	1.00			23a	OCC	3361	22211
	Sus. + E6{1}	113	194	55	2	1.00	1.00			23a	OCC	3683	22211
	Sus. + E7{1}	113	267	113	1	1.00	1.00			23a	OCC	4323	22211
	Sus. + E8{1}	5	218	27	3	1.00	1.00			23a	OCC	3771	22211
B27 F-	Max P{1}									(3a)	HOOP	5813	16700
	GR + Max P{1}	4636	33	37	9	1.00	1.00	1.00	1.00	23a	SUST	2537	16700
	TR:Amb to T1{1}	124	361	50	5	1.00	1.00	1.00	1.00	(17)	DISP	2589	25050
	Amb to T1{1}	124	361	50	5	1.00	1.00	1.00	1.00	(17)	DISP	2589	25050
	Sus. + E1{1}	10	229	124	34	1.00	1.00			23a	OCC	4100	22211
	Sus. + E2{1}	0	250	94	30	1.00	1.00			23a	OCC	4162	22211
	Sus. + E3{1}	7	169	161	48	1.00	1.00			23a	OCC	3895	22211
	Sus. + E4{1}	16	283	55	16	1.00	1.00			23a	OCC	4360	22211
	Sus. + E5{1}	9	227	124	34	1.00	1.00			23a	OCC	4087	22211
	Sus. + E6{1}	0	253	94	30	1.00	1.00			23a	OCC	4183	22211
	Sus. + E7{1}	7	156	163	48	1.00	1.00			23a	OCC	3844	22211
	Sus. + E8{1}	16	285	55	16	1.00	1.00			23a	OCC	4374	22211
B27 F+	Max P{1}									(3a)	HOOP	5813	16700
	GR + Max P{1}	4636	36	34	9	1.00	1.00	1.00	1.00	23a	SUST	2537	16700
	TR:Amb to T1{1}	124	39	362	5	1.00	1.00	1.00	1.00	(17)	DISP	2589	25050
	Amb to T1{1}	124	39	362	5	1.00	1.00	1.00	1.00	(17)	DISP	2589	25050
	Sus. + E1{1}	10	129	227	34	1.00	1.00			23a	OCC	4100	22211
	Sus. + E2{1}	0	99	249	30	1.00	1.00			23a	OCC	4162	22211
	Sus. + E3{1}	7	163	166	48	1.00	1.00			23a	OCC	3895	22211
	Sus. + E4{1}	16	61	284	16	1.00	1.00			23a	OCC	4360	22211
	Sus. + E5{1}	9	128	225	34	1.00	1.00			23a	OCC	4087	22211
	Sus. + E6{1}	0	99	252	30	1.00	1.00			23a	OCC	4183	22211
	Sus. + E7{1}	7	165	154	48	1.00	1.00			23a	OCC	3844	22211
	Sus. + E8{1}	16	62	286	16	1.00	1.00			23a	OCC	4374	22211

Primary Piping
04/24/2020 2018719 BENTLEY
07:34 AM AutoPIPE Nuclear 12.00.00.16 RESULT PAGE 330

ASME B31.3 (2016) CODE COMPLIANCE
(Moments in ft-lb , Force in lbf) (Stress in psi)

Point name	Load combination	Axial Force	In-Pl. Moment	Out-Pl. Moment	Torsion Moment	S.I.F In	S.I.F Out	Index/SIF Ax.	Index/SIF Tor.	Eq. no.	Load type	Code Stress	Code Allow.
B43 -	Max P{1}									(3a)	HOOP	5813	16700
	GR + Max P{1}	4636	56	25	9	1.00	1.00	1.00	1.00	23a	SUST	2615	16700
	TR:Amb to T1{1}	124	52	219	5	1.00	1.00	1.00	1.00	(17)	DISP	1624	25050
	Amb to T1{1}	124	52	219	5	1.00	1.00	1.00	1.00	(17)	DISP	1624	25050
	Sus. + E1{1}	8	163	234	34	1.00	1.00			23a	OCC	4332	22211
	Sus. + E2{1}	1	128	302	30	1.00	1.00			23a	OCC	4694	22211
	Sus. + E3{1}	6	206	221	48	1.00	1.00			23a	OCC	4433	22211
	Sus. + E4{1}	15	82	283	16	1.00	1.00			23a	OCC	4499	22211
	Sus. + E5{1}	8	161	232	34	1.00	1.00			23a	OCC	4310	22211
	Sus. + E6{1}	2	131	305	30	1.00	1.00			23a	OCC	4721	22211
	Sus. + E7{1}	6	206	206	48	1.00	1.00			23a	OCC	4350	22211
	Sus. + E8{1}	15	85	285	16	1.00	1.00			23a	OCC	4516	22211
B43 +	Max P{1}									(3a)	HOOP	5813	16700
	GR + Max P{1}	4636	56	25	9	1.00	1.00	1.00	1.00	23a	SUST	2615	16700
	TR:Amb to T1{1}	153	52	219	5	1.00	1.00	1.00	1.00	(17)	DISP	1637	25050
	Amb to T1{1}	153	52	219	5	1.00	1.00	1.00	1.00	(17)	DISP	1637	25050
	Sus. + E1{1}	8	163	234	34	1.00	1.00			23a	OCC	4332	22211
	Sus. + E2{1}	1	128	302	30	1.00	1.00			23a	OCC	4694	22211
	Sus. + E3{1}	6	206	221	48	1.00	1.00			23a	OCC	4433	22211
	Sus. + E4{1}	15	82	283	16	1.00	1.00			23a	OCC	4499	22211
	Sus. + E5{1}	8	161	232	34	1.00	1.00			23a	OCC	4310	22211
	Sus. + E6{1}	2	131	305	30	1.00	1.00			23a	OCC	4721	22211
	Sus. + E7{1}	6	206	206	48	1.00	1.00			23a	OCC	4350	22211
	Sus. + E8{1}	15	85	285	16	1.00	1.00			23a	OCC	4517	22211
B45	Max P{1}									(3a)	HOOP	5813	16700
	GR + Max P{1}	4635	24	44	9	1.00	1.00	1.00	1.00	23a	SUST	2539	16700
	TR:Amb to T1{1}	153	30	553	5	1.00	1.00	1.00	1.00	(17)	DISP	3923	25050
	Amb to T1{1}	153	30	553	5	1.00	1.00	1.00	1.00	(17)	DISP	3923	25050
	Sus. + E1{1}	1	43	404	34	1.00	1.00			23a	OCC	5149	22211
	Sus. + E2{1}	11	60	372	30	1.00	1.00			23a	OCC	4933	22211
	Sus. + E3{1}	4	79	361	48	1.00	1.00			23a	OCC	4886	22211
	Sus. + E4{1}	5	25	390	16	1.00	1.00			23a	OCC	5047	22211
	Sus. + E5{1}	1	40	400	34	1.00	1.00			23a	OCC	5123	22211
	Sus. + E6{1}	11	63	377	30	1.00	1.00			23a	OCC	4974	22211
	Sus. + E7{1}	4	75	355	48	1.00	1.00			23a	OCC	4833	22211
	Sus. + E8{1}	5	28	394	16	1.00	1.00			23a	OCC	5072	22211
B30 N-	Max P{1}									(3a)	HOOP	5813	16700
	GR + Max P{1}	4635	10	52	9	1.00	1.00	1.00	1.00	23a	SUST	2561	16700
	TR:Amb to T1{1}	151	24	657	4	1.00	1.00	1.00	1.00	(17)	DISP	4644	25050
	Amb to T1{1}	151	24	657	4	1.00	1.00	1.00	1.00	(17)	DISP	4644	25050
	Sus. + E1{1}	3	25	369	33	1.00	1.00			23a	OCC	4861	22211
	Sus. + E2{1}	12	41	287	29	1.00	1.00			23a	OCC	4287	22211
	Sus. + E3{1}	5	55	296	47	1.00	1.00			23a	OCC	4375	22211
	Sus. + E4{1}	4	12	343	15	1.00	1.00			23a	OCC	4663	22211
	Sus. + E5{1}	2	24	366	33	1.00	1.00			23a	OCC	4837	22211
	Sus. + E6{1}	12	42	292	29	1.00	1.00			23a	OCC	4321	22211
	Sus. + E7{1}	5	54	290	47	1.00	1.00			23a	OCC	4331	22211
	Sus. + E8{1}	4	13	346	15	1.00	1.00			23a	OCC	4686	22211

Primary Piping
04/24/2020 2018719
07:34 AM

BENTLEY
AutoPIPE Nuclear 12.00.00.16 RESULT PAGE 331

ASME B31.3 (2016) CODE COMPLIANCE
(Moments in ft-lb , Force in lbf) (Stress in psi)

Point name	Load combination	Axial Force	In-Pl. Moment	Out-Pl. Moment	Torsion Moment	S.I.F In	S.I.F Out	Index/SIF Ax.	Index/SIF Tor.	Eq. no.	Load type	Code Stress	Code Allow.
B30 N+	Max P{1}									(3a)	HOOP	5813	16700
	GR + Max P{1}	4635	53	9	9	1.00	1.00	1.00	1.00	23a	SUST	2561	16700
	TR:Amb to T1{1}	151	657	30	4	1.00	1.00	1.00	1.00	(17)	DISP	4644	25050
	Amb to T1{1}	151	657	30	4	1.00	1.00	1.00	1.00	(17)	DISP	4644	25050
	Sus. + E1{1}	3	369	22	33	1.00	1.00			23a	OCC	4861	22211
	Sus. + E2{1}	12	288	38	29	1.00	1.00			23a	OCC	4287	22211
	Sus. + E3{1}	5	296	53	47	1.00	1.00			23a	OCC	4375	22211
	Sus. + E4{1}	4	343	9	15	1.00	1.00			23a	OCC	4663	22211
	Sus. + E5{1}	2	366	21	33	1.00	1.00			23a	OCC	4837	22211
	Sus. + E6{1}	12	292	39	29	1.00	1.00			23a	OCC	4321	22211
	Sus. + E7{1}	5	290	51	47	1.00	1.00			23a	OCC	4331	22211
	Sus. + E8{1}	4	346	10	15	1.00	1.00			23a	OCC	4686	22211
B30 F-	Max P{1}									(3a)	HOOP	5813	16700
	GR + Max P{1}	4627	73	49	0	1.00	1.00	1.00	1.00	23a	SUST	2810	16700
	TR:Amb to T1{1}	208	826	35	1	1.00	1.00	1.00	1.00	(17)	DISP	5849	25050
	Amb to T1{1}	208	826	35	1	1.00	1.00	1.00	1.00	(17)	DISP	5849	25050
	Sus. + E1{1}	74	117	65	1	1.00	1.00			23a	OCC	3179	22211
	Sus. + E2{1}	173	321	64	1	1.00	1.00			23a	OCC	4682	22211
	Sus. + E3{1}	136	223	52	2	1.00	1.00			23a	OCC	3955	22211
	Sus. + E4{1}	100	113	52	1	1.00	1.00			23a	OCC	3145	22211
	Sus. + E5{1}	73	116	58	1	1.00	1.00			23a	OCC	3160	22211
	Sus. + E6{1}	175	322	56	2	1.00	1.00			23a	OCC	4687	22211
	Sus. + E7{1}	134	223	58	2	1.00	1.00			23a	OCC	3955	22211
	Sus. + E8{1}	100	113	60	1	1.00	1.00			23a	OCC	3152	22211
B30 F+	Max P{1}									(3a)	HOOP	5813	16700
	GR + Max P{1}	4627	48	75	0	1.00	1.00	1.00	1.00	23a	SUST	2810	16700
	TR:Amb to T1{1}	208	16	827	1	1.00	1.00	1.00	1.00	(17)	DISP	5849	25050
	Amb to T1{1}	208	16	827	1	1.00	1.00	1.00	1.00	(17)	DISP	5849	25050
	Sus. + E1{1}	74	63	118	1	1.00	1.00			23a	OCC	3179	22211
	Sus. + E2{1}	173	56	322	1	1.00	1.00			23a	OCC	4682	22211
	Sus. + E3{1}	136	48	224	2	1.00	1.00			23a	OCC	3955	22211
	Sus. + E4{1}	100	52	114	1	1.00	1.00			23a	OCC	3145	22211
	Sus. + E5{1}	73	55	117	1	1.00	1.00			23a	OCC	3160	22211
	Sus. + E6{1}	175	49	323	2	1.00	1.00			23a	OCC	4687	22211
	Sus. + E7{1}	134	53	224	2	1.00	1.00			23a	OCC	3955	22211
	Sus. + E8{1}	100	59	114	1	1.00	1.00			23a	OCC	3152	22211
B46 -	Max P{1}									(3a)	HOOP	5813	16700
	GR + Max P{1}	4627	67	70	0	1.00	1.00	1.00	1.00	23a	SUST	2872	16700
	TR:Amb to T1{1}	208	23	751	1	1.00	1.00	1.00	1.00	(17)	DISP	5325	25050
	Amb to T1{1}	208	23	751	1	1.00	1.00	1.00	1.00	(17)	DISP	5325	25050
	Sus. + E1{1}	73	82	106	1	1.00	1.00			23a	OCC	3190	22211
	Sus. + E2{1}	172	83	305	1	1.00	1.00			23a	OCC	4659	22211
	Sus. + E3{1}	134	72	211	2	1.00	1.00			23a	OCC	3958	22211
	Sus. + E4{1}	99	69	114	1	1.00	1.00			23a	OCC	3233	22211
	Sus. + E5{1}	72	71	106	1	1.00	1.00			23a	OCC	3166	22211
	Sus. + E6{1}	174	72	306	2	1.00	1.00			23a	OCC	4663	22211
	Sus. + E7{1}	133	82	211	2	1.00	1.00			23a	OCC	3960	22211
	Sus. + E8{1}	99	80	113	1	1.00	1.00			23a	OCC	3244	22211

Primary Piping
04/24/2020 2018719 BENTLEY
07:34 AM AutoPIPE Nuclear 12.00.00.16 RESULT PAGE 332

ASME B31.3 (2016) CODE COMPLIANCE
(Moments in ft-lb , Force in lbf) (Stress in psi)

Point name	Load combination	Axial Force	In-Pl. Moment	Out-Pl. Moment	Torsion Moment	S.I.F In	S.I.F Out	Index/SIF Ax.	Index/SIF Tor.	Eq. no.	Load type	Code Stress	Code Allow.
B46	+ Max P{1}									(3a)	HOOP	5813	16700
	GR + Max P{1}	4626	67	70	0	1.00	1.00	1.00	1.00	23a	SUST	2872	16700
	TR:Amb to T1{1}	293	23	751	0	1.00	1.00	1.00	1.00	(17)	DISP	5363	25050
	Amb to T1{1}	293	23	751	0	1.00	1.00	1.00	1.00	(17)	DISP	5363	25050
	Sus. + E1{1}	73	82	106	1	1.00	1.00			23a	OCC	3189	22211
	Sus. + E2{1}	172	83	305	1	1.00	1.00			23a	OCC	4659	22211
	Sus. + E3{1}	134	72	211	2	1.00	1.00			23a	OCC	3958	22211
	Sus. + E4{1}	99	69	114	1	1.00	1.00			23a	OCC	3233	22211
	Sus. + E5{1}	72	71	106	1	1.00	1.00			23a	OCC	3165	22211
	Sus. + E6{1}	174	72	306	1	1.00	1.00			23a	OCC	4663	22211
	Sus. + E7{1}	133	82	211	2	1.00	1.00			23a	OCC	3960	22211
	Sus. + E8{1}	99	80	113	1	1.00	1.00			23a	OCC	3244	22211
B47	- Max P{1}									(3a)	HOOP	5813	16700
	GR + Max P{1}	4625	92	10	0	1.00	1.00	1.00	1.00	23a	SUST	2841	16700
	TR:Amb to T1{1}	293	6	318	0	1.00	1.00	1.00	1.00	(17)	DISP	2343	25050
	Amb to T1{1}	293	6	318	0	1.00	1.00	1.00	1.00	(17)	DISP	2343	25050
	Sus. + E1{1}	51	97	209	1	1.00	1.00			23a	OCC	4298	22211
	Sus. + E2{1}	150	97	93	1	1.00	1.00			23a	OCC	3508	22211
	Sus. + E3{1}	113	102	117	2	1.00	1.00			23a	OCC	3667	22211
	Sus. + E4{1}	77	102	226	1	1.00	1.00			23a	OCC	4438	22211
	Sus. + E5{1}	51	103	207	1	1.00	1.00			23a	OCC	4287	22211
	Sus. + E6{1}	152	102	91	1	1.00	1.00			23a	OCC	3498	22211
	Sus. + E7{1}	111	98	121	2	1.00	1.00			23a	OCC	3697	22211
	Sus. + E8{1}	78	97	228	1	1.00	1.00			23a	OCC	4449	22211
B47	+ Max P{1}									(3a)	HOOP	5813	16700
	GR + Max P{1}	4622	92	10	0	1.00	1.00	1.00	1.00	23a	SUST	2839	16700
	TR:Amb to T1{1}	508	6	318	0	1.00	1.00	1.00	1.00	(17)	DISP	2439	25050
	Amb to T1{1}	508	6	318	0	1.00	1.00	1.00	1.00	(17)	DISP	2439	25050
	Sus. + E1{1}	51	97	209	1	1.00	1.00			23a	OCC	4297	22211
	Sus. + E2{1}	150	97	93	1	1.00	1.00			23a	OCC	3506	22211
	Sus. + E3{1}	113	102	117	2	1.00	1.00			23a	OCC	3665	22211
	Sus. + E4{1}	77	102	226	1	1.00	1.00			23a	OCC	4437	22211
	Sus. + E5{1}	51	103	207	1	1.00	1.00			23a	OCC	4286	22211
	Sus. + E6{1}	152	102	91	1	1.00	1.00			23a	OCC	3496	22211
	Sus. + E7{1}	111	98	121	2	1.00	1.00			23a	OCC	3696	22211
	Sus. + E8{1}	78	97	228	1	1.00	1.00			23a	OCC	4447	22211
B48	- Max P{1}									(3a)	HOOP	5813	16700
	GR + Max P{1}	4621	86	5	0	1.00	1.00	1.00	1.00	23a	SUST	2790	16700
	TR:Amb to T1{1}	508	2	53	0	1.00	1.00	1.00	1.00	(17)	DISP	599	25050
	Amb to T1{1}	508	2	53	0	1.00	1.00	1.00	1.00	(17)	DISP	599	25050
	Sus. + E1{1}	30	94	10	1	1.00	1.00			23a	OCC	2876	22211
	Sus. + E2{1}	129	93	5	1	1.00	1.00			23a	OCC	2905	22211
	Sus. + E3{1}	91	93	14	2	1.00	1.00			23a	OCC	2918	22211
	Sus. + E4{1}	56	92	14	1	1.00	1.00			23a	OCC	2895	22211
	Sus. + E5{1}	29	91	10	1	1.00	1.00			23a	OCC	2855	22211
	Sus. + E6{1}	130	92	6	1	1.00	1.00			23a	OCC	2899	22211
	Sus. + E7{1}	90	93	16	2	1.00	1.00			23a	OCC	2923	22211
	Sus. + E8{1}	56	94	15	1	1.00	1.00			23a	OCC	2906	22211

Primary Piping
04/24/2020 2018719 BENTLEY
07:34 AM AutoPIPE Nuclear 12.00.00.16 RESULT PAGE 333

ASME B31.3 (2016) CODE COMPLIANCE
(Moments in ft-lb , Force in lbf) (Stress in psi)

Point name	Load combination	Axial Force	In-Pl. Moment	Out-Pl. Moment	Torsion Moment	S.I.F In	S.I.F Out	Index/SIF Ax.	Index/SIF Tor.	Eq. no.	Load type	Code Stress	Code Allow.
B48	+ Max P{1}									(3a)	HOOP	5813	16700
	GR + Max P{1}	4621	86	5	0	1.00	1.00	1.00	1.00	23a	SUST	2790	16700
	TR:Amb to T1{1}	599	2	53	0	1.00	1.00	1.00	1.00	(17)	DISP	640	25050
	Amb to T1{1}	599	2	53	0	1.00	1.00	1.00	1.00	(17)	DISP	640	25050
	Sus. + E1{1}	30	94	10	1	1.00	1.00			23a	OCC	2876	22211
	Sus. + E2{1}	129	93	5	1	1.00	1.00			23a	OCC	2905	22211
	Sus. + E3{1}	91	93	14	2	1.00	1.00			23a	OCC	2918	22211
	Sus. + E4{1}	56	92	14	1	1.00	1.00			23a	OCC	2895	22211
	Sus. + E5{1}	29	91	10	1	1.00	1.00			23a	OCC	2855	22211
	Sus. + E6{1}	130	92	6	1	1.00	1.00			23a	OCC	2899	22211
	Sus. + E7{1}	90	93	16	2	1.00	1.00			23a	OCC	2923	22211
	Sus. + E8{1}	56	94	15	1	1.00	1.00			23a	OCC	2906	22211
B49	- Max P{1}									(3a)	HOOP	5813	16700
	GR + Max P{1}	4620	86	1	0	1.00	1.00	1.00	1.00	23a	SUST	2791	16700
	TR:Amb to T1{1}	599	0	31	0	1.00	1.00	1.00	1.00	(17)	DISP	484	25050
	Amb to T1{1}	599	0	31	0	1.00	1.00	1.00	1.00	(17)	DISP	484	25050
	Sus. + E1{1}	8	89	7	1	1.00	1.00			23a	OCC	2844	22211
	Sus. + E2{1}	108	95	23	1	1.00	1.00			23a	OCC	3013	22211
	Sus. + E3{1}	69	90	22	2	1.00	1.00			23a	OCC	2979	22211
	Sus. + E4{1}	34	95	5	1	1.00	1.00			23a	OCC	2878	22211
	Sus. + E5{1}	8	97	8	1	1.00	1.00			23a	OCC	2890	22211
	Sus. + E6{1}	109	92	23	1	1.00	1.00			23a	OCC	3006	22211
	Sus. + E7{1}	68	97	22	2	1.00	1.00			23a	OCC	2997	22211
	Sus. + E8{1}	34	92	5	1	1.00	1.00			23a	OCC	2856	22211
B49	+ Max P{1}									(3a)	HOOP	5813	16700
	GR + Max P{1}	4621	86	1	0	1.00	1.00	1.00	1.00	23a	SUST	2791	16700
	TR:Amb to T1{1}	691	0	31	0	1.00	1.00	1.00	1.00	(17)	DISP	525	25050
	Amb to T1{1}	691	0	31	0	1.00	1.00	1.00	1.00	(17)	DISP	525	25050
	Sus. + E1{1}	8	89	7	1	1.00	1.00			23a	OCC	2844	22211
	Sus. + E2{1}	108	95	23	1	1.00	1.00			23a	OCC	3013	22211
	Sus. + E3{1}	69	90	22	2	1.00	1.00			23a	OCC	2979	22211
	Sus. + E4{1}	34	95	5	1	1.00	1.00			23a	OCC	2878	22211
	Sus. + E5{1}	8	97	8	1	1.00	1.00			23a	OCC	2890	22211
	Sus. + E6{1}	109	92	23	1	1.00	1.00			23a	OCC	3006	22211
	Sus. + E7{1}	68	97	22	2	1.00	1.00			23a	OCC	2997	22211
	Sus. + E8{1}	34	92	5	1	1.00	1.00			23a	OCC	2856	22211
B50	- Max P{1}									(3a)	HOOP	5813	16700
	GR + Max P{1}	4620	89	0	0	1.00	1.00	1.00	1.00	23a	SUST	2811	16700
	TR:Amb to T1{1}	691	0	17	0	1.00	1.00	1.00	1.00	(17)	DISP	432	25050
	Amb to T1{1}	691	0	17	0	1.00	1.00	1.00	1.00	(17)	DISP	432	25050
	Sus. + E1{1}	14	103	17	1	1.00	1.00			23a	OCC	2973	22211
	Sus. + E2{1}	86	94	17	1	1.00	1.00			23a	OCC	2979	22211
	Sus. + E3{1}	48	102	14	2	1.00	1.00			23a	OCC	2971	22211
	Sus. + E4{1}	13	94	16	1	1.00	1.00			23a	OCC	2935	22211
	Sus. + E5{1}	14	90	17	1	1.00	1.00			23a	OCC	2937	22211
	Sus. + E6{1}	87	99	17	1	1.00	1.00			23a	OCC	2994	22211
	Sus. + E7{1}	47	90	14	2	1.00	1.00			23a	OCC	2930	22211
	Sus. + E8{1}	13	99	16	1	1.00	1.00			23a	OCC	2952	22211

Primary Piping
04/24/2020 2018719 BENTLEY
07:34 AM AutoPIPE Nuclear 12.00.00.16 RESULT PAGE 334

ASME B31.3 (2016) CODE COMPLIANCE
(Moments in ft-lb , Force in lbf) (Stress in psi)

Point name	Load combination	Axial Force	In-Pl. Moment	Out-Pl. Moment	Torsion Moment	S.I.F In	S.I.F Out	Index/SIF Ax.	Index/SIF Tor.	Eq. no.	Load type	Code Stress	Code Allow.
B50	+ Max P{1}									(3a)	HOOP	5813	16700
	GR + Max P{1}	4620	89	0	0	1.00	1.00	1.00	1.00	23a	SUST	2811	16700
	TR:Amb to T1{1}	786	0	17	0	1.00	1.00	1.00	1.00	(17)	DISP	474	25050
	Amb to T1{1}	786	0	17	0	1.00	1.00	1.00	1.00	(17)	DISP	474	25050
	Sus. + E1{1}	14	103	17	1	1.00	1.00			23a	OCC	2974	22211
	Sus. + E2{1}	86	94	17	1	1.00	1.00			23a	OCC	2980	22211
	Sus. + E3{1}	48	102	14	2	1.00	1.00			23a	OCC	2971	22211
	Sus. + E4{1}	13	94	16	1	1.00	1.00			23a	OCC	2935	22211
	Sus. + E5{1}	14	90	17	1	1.00	1.00			23a	OCC	2937	22211
	Sus. + E6{1}	87	99	17	1	1.00	1.00			23a	OCC	2994	22211
	Sus. + E7{1}	47	90	14	2	1.00	1.00			23a	OCC	2930	22211
	Sus. + E8{1}	13	99	16	1	1.00	1.00			23a	OCC	2952	22211
B51	- Max P{1}									(3a)	HOOP	5813	16700
	GR + Max P{1}	4620	84	3	0	1.00	1.00	1.00	1.00	23a	SUST	2774	16700
	TR:Amb to T1{1}	786	0	6	0	1.00	1.00	1.00	1.00	(17)	DISP	396	25050
	Amb to T1{1}	786	0	6	0	1.00	1.00	1.00	1.00	(17)	DISP	396	25050
	Sus. + E1{1}	35	84	37	1	1.00	1.00			23a	OCC	3034	22211
	Sus. + E2{1}	65	94	20	1	1.00	1.00			23a	OCC	2944	22211
	Sus. + E3{1}	26	84	16	2	1.00	1.00			23a	OCC	2881	22211
	Sus. + E4{1}	9	94	32	1	1.00	1.00			23a	OCC	2998	22211
	Sus. + E5{1}	35	98	37	1	1.00	1.00			23a	OCC	3057	22211
	Sus. + E6{1}	65	88	20	1	1.00	1.00			23a	OCC	2927	22211
	Sus. + E7{1}	26	98	16	2	1.00	1.00			23a	OCC	2928	22211
	Sus. + E8{1}	9	88	32	1	1.00	1.00			23a	OCC	2986	22211
B51	+ Max P{1}									(3a)	HOOP	5813	16700
	GR + Max P{1}	4621	84	3	0	1.00	1.00	1.00	1.00	23a	SUST	2774	16700
	TR:Amb to T1{1}	704	0	6	0	1.00	1.00	1.00	1.00	(17)	DISP	359	25050
	Amb to T1{1}	704	0	6	0	1.00	1.00	1.00	1.00	(17)	DISP	359	25050
	Sus. + E1{1}	35	84	37	1	1.00	1.00			23a	OCC	3035	22211
	Sus. + E2{1}	65	94	20	1	1.00	1.00			23a	OCC	2945	22211
	Sus. + E3{1}	26	84	16	2	1.00	1.00			23a	OCC	2882	22211
	Sus. + E4{1}	9	94	32	1	1.00	1.00			23a	OCC	2999	22211
	Sus. + E5{1}	35	98	37	1	1.00	1.00			23a	OCC	3058	22211
	Sus. + E6{1}	65	88	20	1	1.00	1.00			23a	OCC	2927	22211
	Sus. + E7{1}	26	98	16	2	1.00	1.00			23a	OCC	2928	22211
	Sus. + E8{1}	9	88	32	1	1.00	1.00			23a	OCC	2986	22211
B52	- Max P{1}									(3a)	HOOP	5813	16700
	GR + Max P{1}	4620	93	0	0	1.00	1.00	1.00	1.00	23a	SUST	2842	16700
	TR:Amb to T1{1}	704	1	39	0	1.00	1.00	1.00	1.00	(17)	DISP	589	25050
	Amb to T1{1}	704	1	39	0	1.00	1.00	1.00	1.00	(17)	DISP	589	25050
	Sus. + E1{1}	57	109	44	1	1.00	1.00			23a	OCC	3208	22211
	Sus. + E2{1}	43	98	25	1	1.00	1.00			23a	OCC	3045	22211
	Sus. + E3{1}	5	109	20	2	1.00	1.00			23a	OCC	3028	22211
	Sus. + E4{1}	30	97	44	1	1.00	1.00			23a	OCC	3176	22211
	Sus. + E5{1}	57	94	45	1	1.00	1.00			23a	OCC	3191	22211
	Sus. + E6{1}	44	104	25	1	1.00	1.00			23a	OCC	3058	22211
	Sus. + E7{1}	4	93	20	2	1.00	1.00			23a	OCC	2991	22211
	Sus. + E8{1}	31	104	44	1	1.00	1.00			23a	OCC	3182	22211

Primary Piping
04/24/2020 2018719 BENTLEY
07:34 AM AutoPIPE Nuclear 12.00.00.16 RESULT PAGE 335

ASME B31.3 (2016) CODE COMPLIANCE
(Moments in ft-lb , Force in lbf) (Stress in psi)

Point name	Load combination	Axial Force	In-Pl. Moment	Out-Pl. Moment	Torsion Moment	S.I.F In	S.I.F Out	Index/SIF Ax.	Index/SIF Tor.	Eq. no.	Load type	Code Stress	Code Allow.
B52	+ Max P{1}									(3a)	HOOP	5813	16700
	GR + Max P{1}	4620	93	0	0	1.00	1.00	1.00	1.00	23a	SUST	2842	16700
	TR:Amb to T1{1}	609	1	39	1	1.00	1.00	1.00	1.00	(17)	DISP	546	25050
	Amb to T1{1}	609	1	39	1	1.00	1.00	1.00	1.00	(17)	DISP	546	25050
	Sus. + E1{1}	57	109	44	1	1.00	1.00			23a	OCC	3208	22211
	Sus. + E2{1}	43	98	25	1	1.00	1.00			23a	OCC	3045	22211
	Sus. + E3{1}	5	109	20	2	1.00	1.00			23a	OCC	3029	22211
	Sus. + E4{1}	30	97	44	1	1.00	1.00			23a	OCC	3177	22211
	Sus. + E5{1}	57	94	45	1	1.00	1.00			23a	OCC	3191	22211
	Sus. + E6{1}	44	104	25	1	1.00	1.00			23a	OCC	3059	22211
	Sus. + E7{1}	4	93	20	2	1.00	1.00			23a	OCC	2991	22211
	Sus. + E8{1}	31	104	44	1	1.00	1.00			23a	OCC	3183	22211
B53	- Max P{1}									(3a)	HOOP	5813	16700
	GR + Max P{1}	4619	69	3	0	1.00	1.00	1.00	1.00	23a	SUST	2667	16700
	TR:Amb to T1{1}	609	2	59	1	1.00	1.00	1.00	1.00	(17)	DISP	684	25050
	Amb to T1{1}	609	2	59	1	1.00	1.00	1.00	1.00	(17)	DISP	684	25050
	Sus. + E1{1}	79	73	71	1	1.00	1.00			23a	OCC	3194	22211
	Sus. + E2{1}	22	79	10	1	1.00	1.00			23a	OCC	2764	22211
	Sus. + E3{1}	17	72	12	2	1.00	1.00			23a	OCC	2746	22211
	Sus. + E4{1}	52	80	62	1	1.00	1.00			23a	OCC	3126	22211
	Sus. + E5{1}	78	85	71	1	1.00	1.00			23a	OCC	3210	22211
	Sus. + E6{1}	22	71	10	1	1.00	1.00			23a	OCC	2733	22211
	Sus. + E7{1}	17	84	12	2	1.00	1.00			23a	OCC	2804	22211
	Sus. + E8{1}	52	70	62	1	1.00	1.00			23a	OCC	3116	22211
B53	+ Max P{1}									(3a)	HOOP	5813	16700
	GR + Max P{1}	4619	69	3	0	1.00	1.00	1.00	1.00	23a	SUST	2667	16700
	TR:Amb to T1{1}	531	2	59	1	1.00	1.00	1.00	1.00	(17)	DISP	649	25050
	Amb to T1{1}	531	2	59	1	1.00	1.00	1.00	1.00	(17)	DISP	649	25050
	Sus. + E1{1}	79	73	71	1	1.00	1.00			23a	OCC	3194	22211
	Sus. + E2{1}	22	79	10	1	1.00	1.00			23a	OCC	2764	22211
	Sus. + E3{1}	17	72	12	2	1.00	1.00			23a	OCC	2746	22211
	Sus. + E4{1}	52	80	62	1	1.00	1.00			23a	OCC	3126	22211
	Sus. + E5{1}	78	85	71	1	1.00	1.00			23a	OCC	3210	22211
	Sus. + E6{1}	22	71	10	1	1.00	1.00			23a	OCC	2733	22211
	Sus. + E7{1}	17	84	12	2	1.00	1.00			23a	OCC	2804	22211
	Sus. + E8{1}	52	70	62	1	1.00	1.00			23a	OCC	3116	22211
B54	- Max P{1}									(3a)	HOOP	5813	16700
	GR + Max P{1}	4618	88	42	0	1.00	1.00	1.00	1.00	23a	SUST	2870	16700
	TR:Amb to T1{1}	531	5	359	1	1.00	1.00	1.00	1.00	(17)	DISP	2735	25050
	Amb to T1{1}	531	5	359	1	1.00	1.00	1.00	1.00	(17)	DISP	2735	25050
	Sus. + E1{1}	98	110	313	1	1.00	1.00			23a	OCC	4889	22211
	Sus. + E2{1}	3	91	100	1	1.00	1.00			23a	OCC	3293	22211
	Sus. + E3{1}	36	107	188	2	1.00	1.00			23a	OCC	3954	22211
	Sus. + E4{1}	70	88	399	1	1.00	1.00			23a	OCC	5490	22211
	Sus. + E5{1}	97	96	314	1	1.00	1.00			23a	OCC	4891	22211
	Sus. + E6{1}	3	99	101	1	1.00	1.00			23a	OCC	3306	22211
	Sus. + E7{1}	36	93	187	2	1.00	1.00			23a	OCC	3940	22211
	Sus. + E8{1}	71	102	398	1	1.00	1.00			23a	OCC	5485	22211

ASME B31.3 (2016) CODE COMPLIANCE
(Moments in ft-lb , Force in lbf) (Stress in psi)

Point name	Load combination	Axial Force	In-Pl. Moment	Out-Pl. Moment	Torsion Moment	S.I.F In	S.I.F Out	Index/SIF Ax.	Index/SIF Tor.	Eq. no.	Load type	Code Stress	Code Allow.
B54	+ Max P{1}									(3a)	HOOP	5813	16700
	GR + Max P{1}	4622	88	42	0	1.00	1.00	1.00	1.00	23a	SUST	2871	16700
	TR:Amb to T1{1}	300	5	359	0	1.00	1.00	1.00	1.00	(17)	DISP	2632	25050
	Amb to T1{1}	300	5	359	0	1.00	1.00	1.00	1.00	(17)	DISP	2632	25050
	Sus. + E1{1}	97	110	313	1	1.00	1.00			23a	OCC	4891	22211
	Sus. + E2{1}	3	91	100	1	1.00	1.00			23a	OCC	3294	22211
	Sus. + E3{1}	36	107	188	1	1.00	1.00			23a	OCC	3955	22211
	Sus. + E4{1}	70	88	399	1	1.00	1.00			23a	OCC	5492	22211
	Sus. + E5{1}	97	96	314	1	1.00	1.00			23a	OCC	4892	22211
	Sus. + E6{1}	3	99	101	1	1.00	1.00			23a	OCC	3307	22211
	Sus. + E7{1}	36	93	187	1	1.00	1.00			23a	OCC	3942	22211
	Sus. + E8{1}	71	102	398	1	1.00	1.00			23a	OCC	5487	22211
B55	- Max P{1}									(3a)	HOOP	5813	16700
	GR + Max P{1}	4621	48	123	0	1.00	1.00	1.00	1.00	23a	SUST	3122	16700
	TR:Amb to T1{1}	300	14	829	0	1.00	1.00	1.00	1.00	(17)	DISP	5906	25050
	Amb to T1{1}	300	14	829	0	1.00	1.00	1.00	1.00	(17)	DISP	5906	25050
	Sus. + E1{1}	119	77	643	1	1.00	1.00			23a	OCC	6948	22211
	Sus. + E2{1}	19	58	193	1	1.00	1.00			23a	OCC	3641	22211
	Sus. + E3{1}	58	66	412	1	1.00	1.00			23a	OCC	5245	22211
	Sus. + E4{1}	92	69	432	1	1.00	1.00			23a	OCC	5409	22211
	Sus. + E5{1}	118	87	643	1	1.00	1.00			23a	OCC	6951	22211
	Sus. + E6{1}	18	49	192	1	1.00	1.00			23a	OCC	3631	22211
	Sus. + E7{1}	58	75	412	1	1.00	1.00			23a	OCC	5252	22211
	Sus. + E8{1}	93	60	433	1	1.00	1.00			23a	OCC	5408	22211
B55	+ Max P{1}									(3a)	HOOP	5813	16700
	GR + Max P{1}	4621	48	123	0	1.00	1.00	1.00	1.00	23a	SUST	3122	16700
	TR:Amb to T1{1}	242	14	829	1	1.00	1.00	1.00	1.00	(17)	DISP	5879	25050
	Amb to T1{1}	242	14	829	1	1.00	1.00	1.00	1.00	(17)	DISP	5879	25050
	Sus. + E1{1}	119	77	643	1	1.00	1.00			23a	OCC	6948	22211
	Sus. + E2{1}	19	58	193	1	1.00	1.00			23a	OCC	3640	22211
	Sus. + E3{1}	58	66	412	2	1.00	1.00			23a	OCC	5245	22211
	Sus. + E4{1}	92	69	432	1	1.00	1.00			23a	OCC	5409	22211
	Sus. + E5{1}	118	87	643	1	1.00	1.00			23a	OCC	6950	22211
	Sus. + E6{1}	18	49	192	1	1.00	1.00			23a	OCC	3631	22211
	Sus. + E7{1}	58	75	412	2	1.00	1.00			23a	OCC	5252	22211
	Sus. + E8{1}	93	60	433	1	1.00	1.00			23a	OCC	5408	22211
B41 N	- Max P{1}									(3a)	HOOP	5813	16700
	GR + Max P{1}	4621	32	128	0	1.00	1.00	1.00	1.00	23a	SUST	3118	16700
	TR:Amb to T1{1}	242	11	909	1	1.00	1.00	1.00	1.00	(17)	DISP	6435	25050
	Amb to T1{1}	242	11	909	1	1.00	1.00	1.00	1.00	(17)	DISP	6435	25050
	Sus. + E1{1}	120	56	686	1	1.00	1.00			23a	OCC	7220	22211
	Sus. + E2{1}	20	39	204	1	1.00	1.00			23a	OCC	3680	22211
	Sus. + E3{1}	59	46	430	2	1.00	1.00			23a	OCC	5339	22211
	Sus. + E4{1}	93	48	468	1	1.00	1.00			23a	OCC	5630	22211
	Sus. + E5{1}	119	62	686	1	1.00	1.00			23a	OCC	7220	22211
	Sus. + E6{1}	20	33	203	1	1.00	1.00			23a	OCC	3673	22211
	Sus. + E7{1}	59	53	431	2	1.00	1.00			23a	OCC	5344	22211
	Sus. + E8{1}	94	41	469	1	1.00	1.00			23a	OCC	5630	22211

ASME B31.3 (2016) CODE COMPLIANCE
(Moments in ft-lb , Force in lbf) (Stress in psi)

Point name	Load combination	Axial Force	In-Pl. Moment	Out-Pl. Moment	Torsion Moment	S.I.F In	S.I.F Out	Index/SIF Ax.	Index/SIF Tor.	Eq. no.	Load type	Code Stress	Code Allow.
B41 N+	Max P{1}									(3a)	HOOP	5813	16700
	GR + Max P{1}	4621	128	31	0	1.00	1.00	1.00	1.00	23a	SUST	3118	16700
	TR:Amb to T1{1}	242	909	16	0	1.00	1.00	1.00	1.00	(17)	DISP	6435	25050
	Amb to T1{1}	242	909	16	0	1.00	1.00	1.00	1.00	(17)	DISP	6435	25050
	Sus. + E1{1}	120	686	58	1	1.00	1.00			23a	OCC	7220	22211
	Sus. + E2{1}	20	204	39	1	1.00	1.00			23a	OCC	3680	22211
	Sus. + E3{1}	59	430	47	2	1.00	1.00			23a	OCC	5339	22211
	Sus. + E4{1}	93	468	49	1	1.00	1.00			23a	OCC	5630	22211
	Sus. + E5{1}	119	686	65	1	1.00	1.00			23a	OCC	7220	22211
	Sus. + E6{1}	20	203	32	1	1.00	1.00			23a	OCC	3673	22211
	Sus. + E7{1}	59	431	54	2	1.00	1.00			23a	OCC	5344	22211
	Sus. + E8{1}	94	469	43	1	1.00	1.00			23a	OCC	5630	22211
B41 F-	Max P{1}									(3a)	HOOP	5813	16700
	GR + Max P{1}	4634	86	27	8	1.00	1.00	1.00	1.00	23a	SUST	2828	16700
	TR:Amb to T1{1}	160	662	17	0	1.00	1.00	1.00	1.00	(17)	DISP	4683	25050
	Amb to T1{1}	160	662	17	0	1.00	1.00	1.00	1.00	(17)	DISP	4683	25050
	Sus. + E1{1}	65	478	68	18	1.00	1.00			23a	OCC	5711	22211
	Sus. + E2{1}	25	134	34	10	1.00	1.00			23a	OCC	3186	22211
	Sus. + E3{1}	39	287	56	14	1.00	1.00			23a	OCC	4315	22211
	Sus. + E4{1}	51	301	46	13	1.00	1.00			23a	OCC	4409	22211
	Sus. + E5{1}	65	481	65	17	1.00	1.00			23a	OCC	5730	22211
	Sus. + E6{1}	24	133	36	10	1.00	1.00			23a	OCC	3183	22211
	Sus. + E7{1}	39	288	53	13	1.00	1.00			23a	OCC	4316	22211
	Sus. + E8{1}	51	298	49	14	1.00	1.00			23a	OCC	4390	22211
B41 F+	Max P{1}									(3a)	HOOP	5813	16700
	GR + Max P{1}	4634	26	86	8	1.00	1.00	1.00	1.00	23a	SUST	2828	16700
	TR:Amb to T1{1}	160	11	662	0	1.00	1.00	1.00	1.00	(17)	DISP	4683	25050
	Amb to T1{1}	160	11	662	0	1.00	1.00	1.00	1.00	(17)	DISP	4683	25050
	Sus. + E1{1}	65	64	479	18	1.00	1.00			23a	OCC	5711	22211
	Sus. + E2{1}	25	32	134	10	1.00	1.00			23a	OCC	3186	22211
	Sus. + E3{1}	39	53	288	14	1.00	1.00			23a	OCC	4315	22211
	Sus. + E4{1}	51	43	301	13	1.00	1.00			23a	OCC	4409	22211
	Sus. + E5{1}	65	61	482	17	1.00	1.00			23a	OCC	5730	22211
	Sus. + E6{1}	24	35	133	11	1.00	1.00			23a	OCC	3183	22211
	Sus. + E7{1}	39	50	288	13	1.00	1.00			23a	OCC	4316	22211
	Sus. + E8{1}	51	46	298	14	1.00	1.00			23a	OCC	4390	22211
B57 -	Max P{1}									(3a)	HOOP	5813	16700
	GR + Max P{1}	4634	44	75	8	1.00	1.00	1.00	1.00	23a	SUST	2802	16700
	TR:Amb to T1{1}	160	15	541	0	1.00	1.00	1.00	1.00	(17)	DISP	3842	25050
	Amb to T1{1}	160	15	541	0	1.00	1.00	1.00	1.00	(17)	DISP	3842	25050
	Sus. + E1{1}	64	90	401	18	1.00	1.00			23a	OCC	5216	22211
	Sus. + E2{1}	26	50	106	10	1.00	1.00			23a	OCC	3047	22211
	Sus. + E3{1}	40	76	241	14	1.00	1.00			23a	OCC	4044	22211
	Sus. + E4{1}	50	63	237	13	1.00	1.00			23a	OCC	4006	22211
	Sus. + E5{1}	64	84	405	17	1.00	1.00			23a	OCC	5236	22211
	Sus. + E6{1}	26	55	106	11	1.00	1.00			23a	OCC	3052	22211
	Sus. + E7{1}	40	71	241	13	1.00	1.00			23a	OCC	4040	22211
	Sus. + E8{1}	50	68	234	14	1.00	1.00			23a	OCC	3987	22211

Primary Piping
04/24/2020 2018719 BENTLEY
07:34 AM AutoPIPE Nuclear 12.00.00.16 RESULT PAGE 338

ASME B31.3 (2016) CODE COMPLIANCE
(Moments in ft-lb , Force in lbf) (Stress in psi)

Point name	Load combination	Axial Force	In-Pl. Moment	Out-Pl. Moment	Torsion Moment	S.I.F In	S.I.F Out	Index/SIF Ax.	Index/SIF Tor.	Eq. no.	Load type	Code Stress	Code Allow.
B57	+ Max P{1}									(3a)	HOOP	5813	16700
	GR + Max P{1}	4634	44	75	8	1.00	1.00	1.00	1.00	23a	SUST	2802	16700
	TR:Amb to T1{1}	164	15	541	1	1.00	1.00	1.00	1.00	(17)	DISP	3844	25050
	Amb to T1{1}	164	15	541	1	1.00	1.00	1.00	1.00	(17)	DISP	3844	25050
	Sus. + E1{1}	64	90	401	17	1.00	1.00			23a	OCC	5216	22211
	Sus. + E2{1}	26	50	107	9	1.00	1.00			23a	OCC	3047	22211
	Sus. + E3{1}	40	76	241	14	1.00	1.00			23a	OCC	4044	22211
	Sus. + E4{1}	50	63	237	12	1.00	1.00			23a	OCC	4006	22211
	Sus. + E5{1}	64	84	405	16	1.00	1.00			23a	OCC	5236	22211
	Sus. + E6{1}	26	55	106	10	1.00	1.00			23a	OCC	3052	22211
	Sus. + E7{1}	40	71	241	13	1.00	1.00			23a	OCC	4041	22211
	Sus. + E8{1}	50	68	234	13	1.00	1.00			23a	OCC	3987	22211
B58	- Max P{1}									(3a)	HOOP	5813	16700
	GR + Max P{1}	4633	36	82	8	1.00	1.00	1.00	1.00	23a	SUST	2824	16700
	TR:Amb to T1{1}	164	17	606	1	1.00	1.00	1.00	1.00	(17)	DISP	4291	25050
	Amb to T1{1}	164	17	606	1	1.00	1.00	1.00	1.00	(17)	DISP	4291	25050
	Sus. + E1{1}	47	52	247	17	1.00	1.00			23a	OCC	4049	22211
	Sus. + E2{1}	42	37	330	9	1.00	1.00			23a	OCC	4639	22211
	Sus. + E3{1}	57	45	465	14	1.00	1.00			23a	OCC	5624	22211
	Sus. + E4{1}	33	44	121	12	1.00	1.00			23a	OCC	3131	22211
	Sus. + E5{1}	47	46	246	16	1.00	1.00			23a	OCC	4038	22211
	Sus. + E6{1}	42	43	331	10	1.00	1.00			23a	OCC	4641	22211
	Sus. + E7{1}	57	39	465	13	1.00	1.00			23a	OCC	5620	22211
	Sus. + E8{1}	33	50	122	13	1.00	1.00			23a	OCC	3149	22211
B58	+ Max P{1}									(3a)	HOOP	5813	16700
	GR + Max P{1}	4633	36	82	8	1.00	1.00	1.00	1.00	23a	SUST	2824	16700
	TR:Amb to T1{1}	157	17	606	2	1.00	1.00	1.00	1.00	(17)	DISP	4287	25050
	Amb to T1{1}	157	17	606	2	1.00	1.00	1.00	1.00	(17)	DISP	4287	25050
	Sus. + E1{1}	47	52	247	17	1.00	1.00			23a	OCC	4049	22211
	Sus. + E2{1}	42	37	330	9	1.00	1.00			23a	OCC	4640	22211
	Sus. + E3{1}	57	45	465	13	1.00	1.00			23a	OCC	5624	22211
	Sus. + E4{1}	33	44	121	12	1.00	1.00			23a	OCC	3131	22211
	Sus. + E5{1}	47	46	246	16	1.00	1.00			23a	OCC	4038	22211
	Sus. + E6{1}	42	43	331	10	1.00	1.00			23a	OCC	4641	22211
	Sus. + E7{1}	57	39	465	12	1.00	1.00			23a	OCC	5620	22211
	Sus. + E8{1}	33	50	122	13	1.00	1.00			23a	OCC	3149	22211
B44 N-	Max P{1}									(3a)	HOOP	5813	16700
	GR + Max P{1}	4633	20	94	8	1.00	1.00	1.00	1.00	23a	SUST	2867	16700
	TR:Amb to T1{1}	157	14	715	2	1.00	1.00	1.00	1.00	(17)	DISP	5047	25050
	Amb to T1{1}	157	14	715	2	1.00	1.00	1.00	1.00	(17)	DISP	5047	25050
	Sus. + E1{1}	46	34	299	17	1.00	1.00			23a	OCC	4377	22211
	Sus. + E2{1}	43	22	366	9	1.00	1.00			23a	OCC	4861	22211
	Sus. + E3{1}	58	28	521	13	1.00	1.00			23a	OCC	5987	22211
	Sus. + E4{1}	32	28	152	12	1.00	1.00			23a	OCC	3308	22211
	Sus. + E5{1}	46	30	298	16	1.00	1.00			23a	OCC	4370	22211
	Sus. + E6{1}	43	26	366	10	1.00	1.00			23a	OCC	4862	22211
	Sus. + E7{1}	58	25	520	12	1.00	1.00			23a	OCC	5983	22211
	Sus. + E8{1}	32	31	153	13	1.00	1.00			23a	OCC	3318	22211

ASME B31.3 (2016) CODE COMPLIANCE
(Moments in ft-lb , Force in lbf) (Stress in psi)

Point name	Load combination	Axial Force	In-Pl. Moment	Out-Pl. Moment	Torsion Moment	S.I.F In	S.I.F Out	Index/SIF Ax.	Index/SIF Tor.	Eq. no.	Load type	Code Stress	Code Allow.
B44 N+	Max P{1}									(3a)	HOOP	5813	16700
	GR + Max P{1}	4633	94	20	8	1.00	1.00	1.00	1.00	23a	SUST	2867	16700
	TR:Amb to T1{1}	157	715	18	2	1.00	1.00	1.00	1.00	(17)	DISP	5047	25050
	Amb to T1{1}	157	715	18	2	1.00	1.00	1.00	1.00	(17)	DISP	5047	25050
	Sus. + E1{1}	46	299	32	17	1.00	1.00			23a	OCC	4377	22211
	Sus. + E2{1}	43	367	20	9	1.00	1.00			23a	OCC	4861	22211
	Sus. + E3{1}	58	521	25	13	1.00	1.00			23a	OCC	5987	22211
	Sus. + E4{1}	32	152	27	12	1.00	1.00			23a	OCC	3308	22211
	Sus. + E5{1}	46	298	29	16	1.00	1.00			23a	OCC	4370	22211
	Sus. + E6{1}	43	367	24	10	1.00	1.00			23a	OCC	4862	22211
	Sus. + E7{1}	58	521	22	12	1.00	1.00			23a	OCC	5983	22211
	Sus. + E8{1}	32	153	31	13	1.00	1.00			23a	OCC	3318	22211
B44 F-	Max P{1}									(3a)	HOOP	5813	16700
	GR + Max P{1}	4621	131	38	0	1.00	1.00	1.00	1.00	23a	SUST	3152	16700
	TR:Amb to T1{1}	219	901	18	2	1.00	1.00	1.00	1.00	(17)	DISP	6370	25050
	Amb to T1{1}	219	901	18	2	1.00	1.00	1.00	1.00	(17)	DISP	6370	25050
	Sus. + E1{1}	92	473	39	1	1.00	1.00			23a	OCC	5675	22211
	Sus. + E2{1}	61	414	40	1	1.00	1.00			23a	OCC	5230	22211
	Sus. + E3{1}	100	641	44	1	1.00	1.00			23a	OCC	6890	22211
	Sus. + E4{1}	50	243	45	1	1.00	1.00			23a	OCC	3989	22211
	Sus. + E5{1}	92	474	42	1	1.00	1.00			23a	OCC	5679	22211
	Sus. + E6{1}	61	414	41	1	1.00	1.00			23a	OCC	5228	22211
	Sus. + E7{1}	100	641	38	1	1.00	1.00			23a	OCC	6888	22211
	Sus. + E8{1}	50	242	39	1	1.00	1.00			23a	OCC	3984	22211
B44 F+	Max P{1}									(3a)	HOOP	5813	16700
	GR + Max P{1}	4621	37	131	0	1.00	1.00	1.00	1.00	23a	SUST	3152	16700
	TR:Amb to T1{1}	219	13	901	2	1.00	1.00	1.00	1.00	(17)	DISP	6370	25050
	Amb to T1{1}	219	13	901	2	1.00	1.00	1.00	1.00	(17)	DISP	6370	25050
	Sus. + E1{1}	92	38	474	1	1.00	1.00			23a	OCC	5675	22211
	Sus. + E2{1}	61	41	414	1	1.00	1.00			23a	OCC	5230	22211
	Sus. + E3{1}	100	40	641	1	1.00	1.00			23a	OCC	6890	22211
	Sus. + E4{1}	50	45	243	1	1.00	1.00			23a	OCC	3989	22211
	Sus. + E5{1}	92	44	474	1	1.00	1.00			23a	OCC	5679	22211
	Sus. + E6{1}	61	39	414	1	1.00	1.00			23a	OCC	5228	22211
	Sus. + E7{1}	100	40	641	1	1.00	1.00			23a	OCC	6888	22211
	Sus. + E8{1}	50	39	243	1	1.00	1.00			23a	OCC	3984	22211
B64 -	Max P{1}									(3a)	HOOP	5813	16700
	GR + Max P{1}	4621	55	126	0	1.00	1.00	1.00	1.00	23a	SUST	3161	16700
	TR:Amb to T1{1}	219	16	823	2	1.00	1.00	1.00	1.00	(17)	DISP	5826	25050
	Amb to T1{1}	219	16	823	2	1.00	1.00	1.00	1.00	(17)	DISP	5826	25050
	Sus. + E1{1}	93	55	452	1	1.00	1.00			23a	OCC	5560	22211
	Sus. + E2{1}	62	61	381	1	1.00	1.00			23a	OCC	5039	22211
	Sus. + E3{1}	101	59	601	1	1.00	1.00			23a	OCC	6645	22211
	Sus. + E4{1}	51	65	228	1	1.00	1.00			23a	OCC	3927	22211
	Sus. + E5{1}	93	64	452	1	1.00	1.00			23a	OCC	5566	22211
	Sus. + E6{1}	62	58	381	1	1.00	1.00			23a	OCC	5037	22211
	Sus. + E7{1}	101	60	601	1	1.00	1.00			23a	OCC	6644	22211
	Sus. + E8{1}	51	56	228	1	1.00	1.00			23a	OCC	3920	22211

ASME B31.3 (2016) CODE COMPLIANCE
(Moments in ft-lb , Force in lbf) (Stress in psi)

Point name	Load combination	Axial Force	In-Pl. Moment	Out-Pl. Moment	Torsion Moment	S.I.F In	S.I.F Out	Index/SIF Ax.	Index/SIF Tor.	Eq. no.	Load type	Code Stress	Code Allow.
B64	+ Max P{1}									(3a)	HOOP	5813	16700
	GR + Max P{1}	4620	55	126	0	1.00	1.00	1.00	1.00	23a	SUST	3160	16700
	TR:Amb to T1{1}	295	16	823	1	1.00	1.00	1.00	1.00	(17)	DISP	5861	25050
	Amb to T1{1}	295	16	823	1	1.00	1.00	1.00	1.00	(17)	DISP	5861	25050
	Sus. + E1{1}	93	55	452	0	1.00	1.00			23a	OCC	5560	22211
	Sus. + E2{1}	62	61	381	1	1.00	1.00			23a	OCC	5039	22211
	Sus. + E3{1}	101	59	601	1	1.00	1.00			23a	OCC	6645	22211
	Sus. + E4{1}	51	65	228	0	1.00	1.00			23a	OCC	3927	22211
	Sus. + E5{1}	93	64	452	0	1.00	1.00			23a	OCC	5565	22211
	Sus. + E6{1}	62	58	381	1	1.00	1.00			23a	OCC	5037	22211
	Sus. + E7{1}	101	60	601	1	1.00	1.00			23a	OCC	6644	22211
	Sus. + E8{1}	51	56	228	0	1.00	1.00			23a	OCC	3920	22211
B65	- Max P{1}									(3a)	HOOP	5813	16700
	GR + Max P{1}	4619	95	35	0	1.00	1.00	1.00	1.00	23a	SUST	2902	16700
	TR:Amb to T1{1}	295	4	355	1	1.00	1.00	1.00	1.00	(17)	DISP	2602	25050
	Amb to T1{1}	295	4	355	1	1.00	1.00	1.00	1.00	(17)	DISP	2602	25050
	Sus. + E1{1}	115	105	155	0	1.00	1.00			23a	OCC	3833	22211
	Sus. + E2{1}	84	103	379	1	1.00	1.00			23a	OCC	5435	22211
	Sus. + E3{1}	123	103	293	1	1.00	1.00			23a	OCC	4831	22211
	Sus. + E4{1}	73	102	59	0	1.00	1.00			23a	OCC	3119	22211
	Sus. + E5{1}	115	102	157	0	1.00	1.00			23a	OCC	3841	22211
	Sus. + E6{1}	84	104	380	1	1.00	1.00			23a	OCC	5438	22211
	Sus. + E7{1}	123	103	293	1	1.00	1.00			23a	OCC	4827	22211
	Sus. + E8{1}	72	105	58	0	1.00	1.00			23a	OCC	3117	22211
B65	+ Max P{1}									(3a)	HOOP	5813	16700
	GR + Max P{1}	4617	95	35	0	1.00	1.00	1.00	1.00	23a	SUST	2900	16700
	TR:Amb to T1{1}	522	4	355	1	1.00	1.00	1.00	1.00	(17)	DISP	2704	25050
	Amb to T1{1}	522	4	355	1	1.00	1.00	1.00	1.00	(17)	DISP	2704	25050
	Sus. + E1{1}	115	105	155	0	1.00	1.00			23a	OCC	3831	22211
	Sus. + E2{1}	84	103	379	1	1.00	1.00			23a	OCC	5434	22211
	Sus. + E3{1}	123	103	293	1	1.00	1.00			23a	OCC	4829	22211
	Sus. + E4{1}	73	102	59	0	1.00	1.00			23a	OCC	3118	22211
	Sus. + E5{1}	115	102	157	0	1.00	1.00			23a	OCC	3839	22211
	Sus. + E6{1}	84	104	380	1	1.00	1.00			23a	OCC	5437	22211
	Sus. + E7{1}	123	103	293	1	1.00	1.00			23a	OCC	4826	22211
	Sus. + E8{1}	72	105	58	0	1.00	1.00			23a	OCC	3116	22211
B66	- Max P{1}									(3a)	HOOP	5813	16700
	GR + Max P{1}	4616	85	9	0	1.00	1.00	1.00	1.00	23a	SUST	2781	16700
	TR:Amb to T1{1}	522	1	69	1	1.00	1.00	1.00	1.00	(17)	DISP	713	25050
	Amb to T1{1}	522	1	69	1	1.00	1.00	1.00	1.00	(17)	DISP	713	25050
	Sus. + E1{1}	136	91	15	0	1.00	1.00			23a	OCC	2912	22211
	Sus. + E2{1}	105	92	41	1	1.00	1.00			23a	OCC	3071	22211
	Sus. + E3{1}	145	92	52	1	1.00	1.00			23a	OCC	3165	22211
	Sus. + E4{1}	94	92	18	0	1.00	1.00			23a	OCC	2910	22211
	Sus. + E5{1}	136	92	16	0	1.00	1.00			23a	OCC	2919	22211
	Sus. + E6{1}	106	91	41	1	1.00	1.00			23a	OCC	3071	22211
	Sus. + E7{1}	144	92	52	1	1.00	1.00			23a	OCC	3164	22211
	Sus. + E8{1}	94	91	18	0	1.00	1.00			23a	OCC	2908	22211

ASME B31.3 (2016) CODE COMPLIANCE
(Moments in ft-lb , Force in lbf) (Stress in psi)

Point name	Load combination	Axial Force	In-Pl. Moment	Out-Pl. Moment	Torsion Moment	S.I.F In	S.I.F Out	Index/SIF Ax.	Index/SIF Tor.	Eq. no.	Load type	Code Stress	Code Allow.
B66	+ Max P{1}									(3a)	HOOP	5813	16700
	GR + Max P{1}	4616	85	9	0	1.00	1.00	1.00	1.00	23a	SUST	2781	16700
	TR:Amb to T1{1}	612	1	69	1	1.00	1.00	1.00	1.00	(17)	DISP	754	25050
	Amb to T1{1}	612	1	69	1	1.00	1.00	1.00	1.00	(17)	DISP	754	25050
	Sus. + E1{1}	136	91	15	0	1.00	1.00			23a	OCC	2912	22211
	Sus. + E2{1}	105	92	41	1	1.00	1.00			23a	OCC	3070	22211
	Sus. + E3{1}	145	92	52	1	1.00	1.00			23a	OCC	3165	22211
	Sus. + E4{1}	94	92	18	0	1.00	1.00			23a	OCC	2910	22211
	Sus. + E5{1}	136	92	16	0	1.00	1.00			23a	OCC	2919	22211
	Sus. + E6{1}	106	91	41	1	1.00	1.00			23a	OCC	3071	22211
	Sus. + E7{1}	144	92	52	1	1.00	1.00			23a	OCC	3164	22211
	Sus. + E8{1}	94	91	18	0	1.00	1.00			23a	OCC	2908	22211
B67	- Max P{1}									(3a)	HOOP	5813	16700
	GR + Max P{1}	4615	88	3	0	1.00	1.00	1.00	1.00	23a	SUST	2799	16700
	TR:Amb to T1{1}	612	0	23	1	1.00	1.00	1.00	1.00	(17)	DISP	433	25050
	Amb to T1{1}	612	0	23	1	1.00	1.00	1.00	1.00	(17)	DISP	433	25050
	Sus. + E1{1}	158	95	20	0	1.00	1.00			23a	OCC	3007	22211
	Sus. + E2{1}	127	95	39	1	1.00	1.00			23a	OCC	3124	22211
	Sus. + E3{1}	166	95	31	1	1.00	1.00			23a	OCC	3087	22211
	Sus. + E4{1}	116	95	26	0	1.00	1.00			23a	OCC	3024	22211
	Sus. + E5{1}	158	95	20	0	1.00	1.00			23a	OCC	3008	22211
	Sus. + E6{1}	127	95	39	1	1.00	1.00			23a	OCC	3124	22211
	Sus. + E7{1}	166	95	31	1	1.00	1.00			23a	OCC	3086	22211
	Sus. + E8{1}	116	95	26	0	1.00	1.00			23a	OCC	3024	22211
B67	+ Max P{1}									(3a)	HOOP	5813	16700
	GR + Max P{1}	4615	88	3	0	1.00	1.00	1.00	1.00	23a	SUST	2799	16700
	TR:Amb to T1{1}	704	0	23	1	1.00	1.00	1.00	1.00	(17)	DISP	475	25050
	Amb to T1{1}	704	0	23	1	1.00	1.00	1.00	1.00	(17)	DISP	475	25050
	Sus. + E1{1}	158	95	20	0	1.00	1.00			23a	OCC	3007	22211
	Sus. + E2{1}	127	95	39	1	1.00	1.00			23a	OCC	3124	22211
	Sus. + E3{1}	166	95	31	1	1.00	1.00			23a	OCC	3087	22211
	Sus. + E4{1}	116	95	26	0	1.00	1.00			23a	OCC	3024	22211
	Sus. + E5{1}	158	95	20	0	1.00	1.00			23a	OCC	3008	22211
	Sus. + E6{1}	127	95	39	1	1.00	1.00			23a	OCC	3124	22211
	Sus. + E7{1}	166	95	31	1	1.00	1.00			23a	OCC	3086	22211
	Sus. + E8{1}	116	95	26	0	1.00	1.00			23a	OCC	3024	22211
B68	- Max P{1}									(3a)	HOOP	5813	16700
	GR + Max P{1}	4614	87	0	0	1.00	1.00	1.00	1.00	23a	SUST	2791	16700
	TR:Amb to T1{1}	704	0	25	1	1.00	1.00	1.00	1.00	(17)	DISP	487	25050
	Amb to T1{1}	704	0	25	1	1.00	1.00	1.00	1.00	(17)	DISP	487	25050
	Sus. + E1{1}	180	94	16	0	1.00	1.00			23a	OCC	3002	22211
	Sus. + E2{1}	148	94	26	1	1.00	1.00			23a	OCC	3057	22211
	Sus. + E3{1}	188	94	27	1	1.00	1.00			23a	OCC	3079	22211
	Sus. + E4{1}	137	94	17	0	1.00	1.00			23a	OCC	2990	22211
	Sus. + E5{1}	179	94	16	0	1.00	1.00			23a	OCC	3003	22211
	Sus. + E6{1}	149	94	26	1	1.00	1.00			23a	OCC	3056	22211
	Sus. + E7{1}	187	94	27	1	1.00	1.00			23a	OCC	3080	22211
	Sus. + E8{1}	137	94	17	0	1.00	1.00			23a	OCC	2989	22211

ASME B31.3 (2016) CODE COMPLIANCE
(Moments in ft-lb , Force in lbf) (Stress in psi)

Point name	Load combination	Axial Force	In-Pl. Moment	Out-Pl. Moment	Torsion Moment	S.I.F In	S.I.F Out	Index/SIF Ax.	Index/SIF Tor.	Eq. no.	Load type	Code Stress	Code Allow.
B68	+ Max P{1}									(3a)	HOOP	5813	16700
	GR + Max P{1}	4614	87	0	0	1.00	1.00	1.00	1.00	23a	SUST	2791	16700
	TR:Amb to T1{1}	796	0	25	1	1.00	1.00	1.00	1.00	(17)	DISP	529	25050
	Amb to T1{1}	796	0	25	1	1.00	1.00	1.00	1.00	(17)	DISP	529	25050
	Sus. + E1{1}	180	94	16	0	1.00	1.00			23a	OCC	3001	22211
	Sus. + E2{1}	148	94	26	1	1.00	1.00			23a	OCC	3056	22211
	Sus. + E3{1}	188	94	27	1	1.00	1.00			23a	OCC	3079	22211
	Sus. + E4{1}	137	94	17	0	1.00	1.00			23a	OCC	2990	22211
	Sus. + E5{1}	179	94	16	0	1.00	1.00			23a	OCC	3003	22211
	Sus. + E6{1}	149	94	26	1	1.00	1.00			23a	OCC	3056	22211
	Sus. + E7{1}	187	94	27	1	1.00	1.00			23a	OCC	3080	22211
	Sus. + E8{1}	137	94	17	0	1.00	1.00			23a	OCC	2989	22211
B69	- Max P{1}									(3a)	HOOP	5813	16700
	GR + Max P{1}	4613	88	3	0	1.00	1.00	1.00	1.00	23a	SUST	2798	16700
	TR:Amb to T1{1}	796	0	5	1	1.00	1.00	1.00	1.00	(17)	DISP	396	25050
	Amb to T1{1}	796	0	5	1	1.00	1.00	1.00	1.00	(17)	DISP	396	25050
	Sus. + E1{1}	201	95	16	0	1.00	1.00			23a	OCC	3002	22211
	Sus. + E2{1}	170	95	28	1	1.00	1.00			23a	OCC	3070	22211
	Sus. + E3{1}	210	95	23	1	1.00	1.00			23a	OCC	3054	22211
	Sus. + E4{1}	159	95	11	0	1.00	1.00			23a	OCC	2953	22211
	Sus. + E5{1}	201	95	16	0	1.00	1.00			23a	OCC	3000	22211
	Sus. + E6{1}	170	95	29	1	1.00	1.00			23a	OCC	3072	22211
	Sus. + E7{1}	209	95	23	1	1.00	1.00			23a	OCC	3052	22211
	Sus. + E8{1}	159	95	11	0	1.00	1.00			23a	OCC	2955	22211
B69	+ Max P{1}									(3a)	HOOP	5813	16700
	GR + Max P{1}	4612	88	3	0	1.00	1.00	1.00	1.00	23a	SUST	2798	16700
	TR:Amb to T1{1}	889	0	5	1	1.00	1.00	1.00	1.00	(17)	DISP	437	25050
	Amb to T1{1}	889	0	5	1	1.00	1.00	1.00	1.00	(17)	DISP	437	25050
	Sus. + E1{1}	201	95	16	0	1.00	1.00			23a	OCC	3002	22211
	Sus. + E2{1}	170	95	28	1	1.00	1.00			23a	OCC	3070	22211
	Sus. + E3{1}	210	95	23	1	1.00	1.00			23a	OCC	3054	22211
	Sus. + E4{1}	159	95	11	0	1.00	1.00			23a	OCC	2953	22211
	Sus. + E5{1}	201	95	16	0	1.00	1.00			23a	OCC	3000	22211
	Sus. + E6{1}	170	95	29	1	1.00	1.00			23a	OCC	3072	22211
	Sus. + E7{1}	209	95	23	1	1.00	1.00			23a	OCC	3052	22211
	Sus. + E8{1}	159	95	11	0	1.00	1.00			23a	OCC	2955	22211
B70	- Max P{1}									(3a)	HOOP	5813	16700
	GR + Max P{1}	4611	84	0	0	1.00	1.00	1.00	1.00	23a	SUST	2774	16700
	TR:Amb to T1{1}	889	0	14	1	1.00	1.00	1.00	1.00	(17)	DISP	496	25050
	Amb to T1{1}	889	0	14	1	1.00	1.00	1.00	1.00	(17)	DISP	496	25050
	Sus. + E1{1}	223	90	37	0	1.00	1.00			23a	OCC	3148	22211
	Sus. + E2{1}	191	93	24	1	1.00	1.00			23a	OCC	3045	22211
	Sus. + E3{1}	231	90	20	1	1.00	1.00			23a	OCC	3032	22211
	Sus. + E4{1}	180	93	38	0	1.00	1.00			23a	OCC	3136	22211
	Sus. + E5{1}	222	93	37	0	1.00	1.00			23a	OCC	3152	22211
	Sus. + E6{1}	192	90	24	1	1.00	1.00			23a	OCC	3042	22211
	Sus. + E7{1}	230	93	20	1	1.00	1.00			23a	OCC	3038	22211
	Sus. + E8{1}	180	90	38	0	1.00	1.00			23a	OCC	3132	22211

ASME B31.3 (2016) CODE COMPLIANCE
(Moments in ft-lb , Force in lbf) (Stress in psi)

Point name	Load combination	Axial Force	In-Pl. Moment	Out-Pl. Moment	Torsion Moment	S.I.F In	S.I.F Out	Index/SIF Ax.	Index/SIF Tor.	Eq. no.	Load type	Code Stress	Code Allow.
B70	+ Max P{1}									(3a)	HOOP	5813	16700
	GR + Max P{1}	4610	84	0	0	1.00	1.00	1.00	1.00	23a	SUST	2773	16700
	TR:Amb to T1{1}	991	0	14	1	1.00	1.00	1.00	1.00	(17)	DISP	542	25050
	Amb to T1{1}	991	0	14	1	1.00	1.00	1.00	1.00	(17)	DISP	542	25050
	Sus. + E1{1}	223	90	37	0	1.00	1.00			23a	OCC	3147	22211
	Sus. + E2{1}	191	93	24	1	1.00	1.00			23a	OCC	3044	22211
	Sus. + E3{1}	231	90	20	1	1.00	1.00			23a	OCC	3031	22211
	Sus. + E4{1}	180	93	38	0	1.00	1.00			23a	OCC	3135	22211
	Sus. + E5{1}	222	93	37	0	1.00	1.00			23a	OCC	3152	22211
	Sus. + E6{1}	192	90	24	1	1.00	1.00			23a	OCC	3041	22211
	Sus. + E7{1}	230	93	20	1	1.00	1.00			23a	OCC	3037	22211
	Sus. + E8{1}	180	90	38	0	1.00	1.00			23a	OCC	3131	22211
B71	- Max P{1}									(3a)	HOOP	5813	16700
	GR + Max P{1}	4609	96	2	0	1.00	1.00	1.00	1.00	23a	SUST	2854	16700
	TR:Amb to T1{1}	991	0	105	1	1.00	1.00	1.00	1.00	(17)	DISP	1178	25050
	Amb to T1{1}	991	0	105	1	1.00	1.00	1.00	1.00	(17)	DISP	1178	25050
	Sus. + E1{1}	244	106	66	0	1.00	1.00			23a	OCC	3436	22211
	Sus. + E2{1}	213	102	13	1	1.00	1.00			23a	OCC	3044	22211
	Sus. + E3{1}	253	106	14	1	1.00	1.00			23a	OCC	3085	22211
	Sus. + E4{1}	202	102	64	0	1.00	1.00			23a	OCC	3397	22211
	Sus. + E5{1}	244	101	66	0	1.00	1.00			23a	OCC	3433	22211
	Sus. + E6{1}	214	105	13	1	1.00	1.00			23a	OCC	3057	22211
	Sus. + E7{1}	252	101	14	1	1.00	1.00			23a	OCC	3067	22211
	Sus. + E8{1}	202	105	64	0	1.00	1.00			23a	OCC	3398	22211
B71	+ Max P{1}									(3a)	HOOP	5813	16700
	GR + Max P{1}	4602	96	2	0	1.00	1.00	1.00	1.00	23a	SUST	2851	16700
	TR:Amb to T1{1}	898	0	105	1	1.00	1.00	1.00	1.00	(17)	DISP	1136	25050
	Amb to T1{1}	898	0	105	1	1.00	1.00	1.00	1.00	(17)	DISP	1136	25050
	Sus. + E1{1}	244	106	66	0	1.00	1.00			23a	OCC	3433	22211
	Sus. + E2{1}	213	102	13	1	1.00	1.00			23a	OCC	3041	22211
	Sus. + E3{1}	253	106	14	1	1.00	1.00			23a	OCC	3081	22211
	Sus. + E4{1}	202	102	64	0	1.00	1.00			23a	OCC	3394	22211
	Sus. + E5{1}	244	101	66	0	1.00	1.00			23a	OCC	3430	22211
	Sus. + E6{1}	214	105	13	1	1.00	1.00			23a	OCC	3054	22211
	Sus. + E7{1}	252	101	14	1	1.00	1.00			23a	OCC	3064	22211
	Sus. + E8{1}	202	105	64	0	1.00	1.00			23a	OCC	3395	22211
B72	- Max P{1}									(3a)	HOOP	5813	16700
	GR + Max P{1}	4601	56	7	0	1.00	1.00	1.00	1.00	23a	SUST	2563	16700
	TR:Amb to T1{1}	898	0	210	1	1.00	1.00	1.00	1.00	(17)	DISP	1868	25050
	Amb to T1{1}	898	0	210	1	1.00	1.00	1.00	1.00	(17)	DISP	1868	25050
	Sus. + E1{1}	266	58	168	0	1.00	1.00			23a	OCC	3852	22211
	Sus. + E2{1}	234	62	203	1	1.00	1.00			23a	OCC	4093	22211
	Sus. + E3{1}	274	58	198	1	1.00	1.00			23a	OCC	4071	22211
	Sus. + E4{1}	223	61	172	0	1.00	1.00			23a	OCC	3862	22211
	Sus. + E5{1}	265	62	168	0	1.00	1.00			23a	OCC	3850	22211
	Sus. + E6{1}	235	59	204	1	1.00	1.00			23a	OCC	4097	22211
	Sus. + E7{1}	273	62	197	1	1.00	1.00			23a	OCC	4067	22211
	Sus. + E8{1}	224	59	172	0	1.00	1.00			23a	OCC	3865	22211

ASME B31.3 (2016) CODE COMPLIANCE
(Moments in ft-lb , Force in lbf) (Stress in psi)

Point name	Load combination	Axial Force	In-Pl. Moment	Out-Pl. Moment	Torsion Moment	S.I.F In	S.I.F Out	Index/SIF Ax.	Index/SIF Tor.	Eq. no.	Load type	Code Stress	Code Allow.
B72	+ Max P{1}									(3a)	HOOP	5813	16700
	GR + Max P{1}	4600	56	7	0	1.00	1.00	1.00	1.00	23a	SUST	2563	16700
	TR:Amb to T1{1}	840	0	210	1	1.00	1.00	1.00	1.00	(17)	DISP	1842	25050
	Amb to T1{1}	840	0	210	1	1.00	1.00	1.00	1.00	(17)	DISP	1842	25050
	Sus. + E1{1}	266	58	168	0	1.00	1.00			23a	OCC	3852	22211
	Sus. + E2{1}	234	62	203	1	1.00	1.00			23a	OCC	4093	22211
	Sus. + E3{1}	274	58	198	1	1.00	1.00			23a	OCC	4071	22211
	Sus. + E4{1}	223	61	172	0	1.00	1.00			23a	OCC	3862	22211
	Sus. + E5{1}	265	62	168	0	1.00	1.00			23a	OCC	3850	22211
	Sus. + E6{1}	235	59	204	1	1.00	1.00			23a	OCC	4097	22211
	Sus. + E7{1}	273	62	197	1	1.00	1.00			23a	OCC	4067	22211
	Sus. + E8{1}	224	59	172	0	1.00	1.00			23a	OCC	3865	22211
B73	- Max P{1}									(3a)	HOOP	5813	16700
	GR + Max P{1}	4600	65	13	0	1.00	1.00	1.00	1.00	23a	SUST	2640	16700
	TR:Amb to T1{1}	840	3	529	1	1.00	1.00	1.00	1.00	(17)	DISP	4062	25050
	Amb to T1{1}	840	3	529	1	1.00	1.00	1.00	1.00	(17)	DISP	4062	25050
	Sus. + E1{1}	278	77	145	0	1.00	1.00			23a	OCC	3735	22211
	Sus. + E2{1}	246	66	400	1	1.00	1.00			23a	OCC	5559	22211
	Sus. + E3{1}	286	77	392	1	1.00	1.00			23a	OCC	5517	22211
	Sus. + E4{1}	235	66	153	0	1.00	1.00			23a	OCC	3768	22211
	Sus. + E5{1}	277	68	145	0	1.00	1.00			23a	OCC	3726	22211
	Sus. + E6{1}	247	75	401	1	1.00	1.00			23a	OCC	5565	22211
	Sus. + E7{1}	285	68	391	1	1.00	1.00			23a	OCC	5510	22211
	Sus. + E8{1}	235	75	154	0	1.00	1.00			23a	OCC	3776	22211
B73	+ Max P{1}									(3a)	HOOP	5813	16700
	GR + Max P{1}	4603	65	13	0	1.00	1.00	1.00	1.00	23a	SUST	2641	16700
	TR:Amb to T1{1}	583	3	529	1	1.00	1.00	1.00	1.00	(17)	DISP	3946	25050
	Amb to T1{1}	583	3	529	1	1.00	1.00	1.00	1.00	(17)	DISP	3946	25050
	Sus. + E1{1}	278	77	145	0	1.00	1.00			23a	OCC	3736	22211
	Sus. + E2{1}	246	66	400	1	1.00	1.00			23a	OCC	5560	22211
	Sus. + E3{1}	286	77	392	1	1.00	1.00			23a	OCC	5519	22211
	Sus. + E4{1}	235	66	153	0	1.00	1.00			23a	OCC	3769	22211
	Sus. + E5{1}	277	68	145	0	1.00	1.00			23a	OCC	3727	22211
	Sus. + E6{1}	247	75	401	1	1.00	1.00			23a	OCC	5567	22211
	Sus. + E7{1}	285	68	391	1	1.00	1.00			23a	OCC	5511	22211
	Sus. + E8{1}	235	75	154	0	1.00	1.00			23a	OCC	3777	22211
B74	- Max P{1}									(3a)	HOOP	5813	16700
	GR + Max P{1}	4602	69	106	0	1.00	1.00	1.00	1.00	23a	SUST	3075	16700
	TR:Amb to T1{1}	583	10	844	1	1.00	1.00	1.00	1.00	(17)	DISP	6135	25050
	Amb to T1{1}	583	10	844	1	1.00	1.00	1.00	1.00	(17)	DISP	6135	25050
	Sus. + E1{1}	299	88	842	0	1.00	1.00			23a	OCC	8538	22211
	Sus. + E2{1}	267	93	754	1	1.00	1.00			23a	OCC	7891	22211
	Sus. + E3{1}	308	87	890	1	1.00	1.00			23a	OCC	8891	22211
	Sus. + E4{1}	256	93	700	0	1.00	1.00			23a	OCC	7495	22211
	Sus. + E5{1}	298	104	840	0	1.00	1.00			23a	OCC	8531	22211
	Sus. + E6{1}	269	81	756	1	1.00	1.00			23a	OCC	7904	22211
	Sus. + E7{1}	306	104	888	1	1.00	1.00			23a	OCC	8878	22211
	Sus. + E8{1}	257	81	701	0	1.00	1.00			23a	OCC	7504	22211

Primary Piping
04/24/2020 2018719 BENTLEY
07:34 AM AutoPIPE Nuclear 12.00.00.16 RESULT PAGE 345

ASME B31.3 (2016) CODE COMPLIANCE
(Moments in ft-lb , Force in lbf) (Stress in psi)

Point name	Load combination	Axial Force	In-Pl. Moment	Out-Pl. Moment	Torsion Moment	S.I.F In	S.I.F Out	Index/SIF Ax.	Index/SIF Tor.	Eq. no.	Load type	Code Stress	Code Allow.
B74	+ Max P{1}									(3a)	HOOP	5813	16700
	GR + Max P{1}	4602	69	106	0	1.00	1.00	1.00	1.00	23a	SUST	3075	16700
	TR:Amb to T1{1}	538	10	844	2	1.00	1.00	1.00	1.00	(17)	DISP	6115	25050
	Amb to T1{1}	538	10	844	2	1.00	1.00	1.00	1.00	(17)	DISP	6115	25050
	Sus. + E1{1}	299	88	842	1	1.00	1.00			23a	OCC	8538	22211
	Sus. + E2{1}	267	93	754	2	1.00	1.00			23a	OCC	7891	22211
	Sus. + E3{1}	308	87	890	2	1.00	1.00			23a	OCC	8891	22211
	Sus. + E4{1}	256	93	700	1	1.00	1.00			23a	OCC	7495	22211
	Sus. + E5{1}	298	104	840	1	1.00	1.00			23a	OCC	8531	22211
	Sus. + E6{1}	269	81	756	2	1.00	1.00			23a	OCC	7904	22211
	Sus. + E7{1}	306	104	888	2	1.00	1.00			23a	OCC	8878	22211
	Sus. + E8{1}	257	81	701	1	1.00	1.00			23a	OCC	7504	22211
B56	N- Max P{1}									(3a)	HOOP	5813	16700
	GR + Max P{1}	4602	35	119	0	1.00	1.00	1.00	1.00	23a	SUST	3057	16700
	TR:Amb to T1{1}	538	4	1047	2	1.00	1.00	1.00	1.00	(17)	DISP	7530	25050
	Amb to T1{1}	538	4	1047	2	1.00	1.00	1.00	1.00	(17)	DISP	7530	25050
	Sus. + E1{1}	302	38	963	1	1.00	1.00			23a	OCC	9304	22211
	Sus. + E2{1}	270	37	870	2	1.00	1.00			23a	OCC	8616	22211
	Sus. + E3{1}	310	38	1020	2	1.00	1.00			23a	OCC	9721	22211
	Sus. + E4{1}	258	38	807	1	1.00	1.00			23a	OCC	8151	22211
	Sus. + E5{1}	301	39	961	1	1.00	1.00			23a	OCC	9290	22211
	Sus. + E6{1}	271	38	872	2	1.00	1.00			23a	OCC	8634	22211
	Sus. + E7{1}	309	39	1017	2	1.00	1.00			23a	OCC	9701	22211
	Sus. + E8{1}	259	38	808	1	1.00	1.00			23a	OCC	8165	22211
B56	N+ Max P{1}									(3a)	HOOP	5813	16700
	GR + Max P{1}	4602	119	34	0	1.00	1.00	1.00	1.00	23a	SUST	3057	16700
	TR:Amb to T1{1}	538	1047	7	2	1.00	1.00	1.00	1.00	(17)	DISP	7530	25050
	Amb to T1{1}	538	1047	7	2	1.00	1.00	1.00	1.00	(17)	DISP	7530	25050
	Sus. + E1{1}	302	963	40	1	1.00	1.00			23a	OCC	9304	22211
	Sus. + E2{1}	270	870	44	2	1.00	1.00			23a	OCC	8616	22211
	Sus. + E3{1}	310	1020	40	2	1.00	1.00			23a	OCC	9721	22211
	Sus. + E4{1}	258	807	44	1	1.00	1.00			23a	OCC	8151	22211
	Sus. + E5{1}	301	962	47	1	1.00	1.00			23a	OCC	9290	22211
	Sus. + E6{1}	271	873	38	2	1.00	1.00			23a	OCC	8634	22211
	Sus. + E7{1}	309	1018	47	2	1.00	1.00			23a	OCC	9701	22211
	Sus. + E8{1}	259	809	38	1	1.00	1.00			23a	OCC	8165	22211
B56	F- Max P{1}									(3a)	HOOP	5813	16700
	GR + Max P{1}	4630	47	10	10	1.00	1.00	1.00	1.00	23a	SUST	2521	16700
	TR:Amb to T1{1}	204	211	28	23	1.00	1.00	1.00	1.00	(17)	DISP	1578	25050
	Amb to T1{1}	204	211	28	23	1.00	1.00	1.00	1.00	(17)	DISP	1578	25050
	Sus. + E1{1}	119	405	68	60	1.00	1.00			23a	OCC	5226	22211
	Sus. + E2{1}	93	355	53	46	1.00	1.00			23a	OCC	4830	22211
	Sus. + E3{1}	107	440	67	59	1.00	1.00			23a	OCC	5467	22211
	Sus. + E4{1}	104	319	52	45	1.00	1.00			23a	OCC	4579	22211
	Sus. + E5{1}	119	405	76	66	1.00	1.00			23a	OCC	5240	22211
	Sus. + E6{1}	93	355	52	46	1.00	1.00			23a	OCC	4831	22211
	Sus. + E7{1}	107	440	76	67	1.00	1.00			23a	OCC	5481	22211
	Sus. + E8{1}	105	320	51	45	1.00	1.00			23a	OCC	4580	22211

ASME B31.3 (2016) CODE COMPLIANCE
(Moments in ft-lb , Force in lbf) (Stress in psi)

Point name	Load combination	Axial Force	In-Pl. Moment	Out-Pl. Moment	Torsion Moment	S.I.F In	S.I.F Out	Index/SIF Ax.	Index/SIF Tor.	Eq. no.	Load type	Code Stress	Code Allow.
B56 F+	Max P{1}									(3a)	HOOP	5813	16700
	GR + Max P{1}	4630	10	47	10	1.00	1.00	1.00	1.00	23a	SUST	2521	16700
	TR:Amb to T1{1}	204	27	211	24	1.00	1.00	1.00	1.00	(17)	DISP	1578	25050
	Amb to T1{1}	204	27	211	24	1.00	1.00	1.00	1.00	(17)	DISP	1578	25050
	Sus. + E1{1}	119	66	406	60	1.00	1.00			23a	OCC	5226	22211
	Sus. + E2{1}	93	51	355	46	1.00	1.00			23a	OCC	4830	22211
	Sus. + E3{1}	107	65	440	59	1.00	1.00			23a	OCC	5467	22211
	Sus. + E4{1}	104	50	320	45	1.00	1.00			23a	OCC	4579	22211
	Sus. + E5{1}	119	73	405	66	1.00	1.00			23a	OCC	5240	22211
	Sus. + E6{1}	93	50	356	46	1.00	1.00			23a	OCC	4831	22211
	Sus. + E7{1}	107	73	440	67	1.00	1.00			23a	OCC	5481	22211
	Sus. + E8{1}	105	50	320	45	1.00	1.00			23a	OCC	4580	22211
B75 -	Max P{1}									(3a)	HOOP	5813	16700
	GR + Max P{1}	4630	21	28	10	1.00	1.00	1.00	1.00	23a	SUST	2430	16700
	TR:Amb to T1{1}	204	34	32	24	1.00	1.00	1.00	1.00	(17)	DISP	443	25050
	Amb to T1{1}	204	34	32	24	1.00	1.00	1.00	1.00	(17)	DISP	443	25050
	Sus. + E1{1}	120	89	246	60	1.00	1.00			23a	OCC	4177	22211
	Sus. + E2{1}	92	70	211	46	1.00	1.00			23a	OCC	3863	22211
	Sus. + E3{1}	106	88	278	59	1.00	1.00			23a	OCC	4381	22211
	Sus. + E4{1}	105	69	180	45	1.00	1.00			23a	OCC	3657	22211
	Sus. + E5{1}	120	97	247	66	1.00	1.00			23a	OCC	4205	22211
	Sus. + E6{1}	92	71	210	46	1.00	1.00			23a	OCC	3863	22211
	Sus. + E7{1}	105	97	278	67	1.00	1.00			23a	OCC	4410	22211
	Sus. + E8{1}	106	70	180	45	1.00	1.00			23a	OCC	3658	22211
B75 +	Max P{1}									(3a)	HOOP	5813	16700
	GR + Max P{1}	4630	21	28	10	1.00	1.00	1.00	1.00	23a	SUST	2430	16700
	TR:Amb to T1{1}	252	34	31	24	1.00	1.00	1.00	1.00	(17)	DISP	463	25050
	Amb to T1{1}	252	34	31	24	1.00	1.00	1.00	1.00	(17)	DISP	463	25050
	Sus. + E1{1}	121	89	247	58	1.00	1.00			23a	OCC	4178	22211
	Sus. + E2{1}	92	70	211	45	1.00	1.00			23a	OCC	3864	22211
	Sus. + E3{1}	106	88	278	57	1.00	1.00			23a	OCC	4381	22211
	Sus. + E4{1}	106	69	180	44	1.00	1.00			23a	OCC	3657	22211
	Sus. + E5{1}	120	97	247	64	1.00	1.00			23a	OCC	4206	22211
	Sus. + E6{1}	92	71	211	45	1.00	1.00			23a	OCC	3863	22211
	Sus. + E7{1}	106	97	278	65	1.00	1.00			23a	OCC	4410	22211
	Sus. + E8{1}	106	70	180	44	1.00	1.00			23a	OCC	3658	22211
B20 N-	Max P{1}									(3a)	HOOP	5813	16700
	GR + Max P{1}	4630	10	10	10	1.00	1.00	1.00	1.00	23a	SUST	2272	16700
	TR:Amb to T1{1}	252	31	251	24	1.00	1.00	1.00	1.00	(17)	DISP	1881	25050
	Amb to T1{1}	252	31	251	24	1.00	1.00	1.00	1.00	(17)	DISP	1881	25050
	Sus. + E1{1}	122	64	90	58	1.00	1.00			23a	OCC	3108	22211
	Sus. + E2{1}	91	50	69	45	1.00	1.00			23a	OCC	2886	22211
	Sus. + E3{1}	105	63	118	57	1.00	1.00			23a	OCC	3256	22211
	Sus. + E4{1}	107	49	43	44	1.00	1.00			23a	OCC	2762	22211
	Sus. + E5{1}	121	71	91	64	1.00	1.00			23a	OCC	3159	22211
	Sus. + E6{1}	91	50	68	45	1.00	1.00			23a	OCC	2880	22211
	Sus. + E7{1}	105	71	119	65	1.00	1.00			23a	OCC	3306	22211
	Sus. + E8{1}	107	49	42	44	1.00	1.00			23a	OCC	2758	22211

Primary Piping
04/24/2020 2018719 BENTLEY
07:34 AM AutoPIPE Nuclear 12.00.00.16 RESULT PAGE 347

ASME B31.3 (2016) CODE COMPLIANCE
(Moments in ft-lb , Force in lbf) (Stress in psi)

Point name	Load combination	Axial Force	In-Pl. Moment	Out-Pl. Moment	Torsion Moment	S.I.F In	S.I.F Out	Index/SIF Ax.	Index/SIF Tor.	Eq. no.	Load type	Code Stress	Code Allow.
B20 N+	Max P{1}									(3a)	HOOP	5813	16700
	GR + Max P{1}	4630	10	10	10	1.00	1.00	1.00	1.00	23a	SUST	2272	16700
	TR:Amb to T1{1}	252	252	26	24	1.00	1.00	1.00	1.00	(17)	DISP	1881	25050
	Amb to T1{1}	252	252	26	24	1.00	1.00	1.00	1.00	(17)	DISP	1881	25050
	Sus. + E1{1}	122	89	65	58	1.00	1.00			23a	OCC	3108	22211
	Sus. + E2{1}	91	68	51	45	1.00	1.00			23a	OCC	2886	22211
	Sus. + E3{1}	105	117	65	57	1.00	1.00			23a	OCC	3256	22211
	Sus. + E4{1}	107	42	50	44	1.00	1.00			23a	OCC	2762	22211
	Sus. + E5{1}	121	90	72	64	1.00	1.00			23a	OCC	3159	22211
	Sus. + E6{1}	91	67	51	45	1.00	1.00			23a	OCC	2880	22211
	Sus. + E7{1}	105	117	73	65	1.00	1.00			23a	OCC	3306	22211
	Sus. + E8{1}	107	41	50	44	1.00	1.00			23a	OCC	2758	22211
B20 F-	Max P{1}									(3a)	HOOP	5813	16700
	GR + Max P{1}	4601	60	28	6	1.00	1.00	1.00	1.00	23a	SUST	2638	16700
	TR:Amb to T1{1}	498	866	16	14	1.00	1.00	1.00	1.00	(17)	DISP	6253	25050
	Amb to T1{1}	498	866	16	14	1.00	1.00	1.00	1.00	(17)	DISP	6253	25050
	Sus. + E1{1}	322	451	67	41	1.00	1.00			23a	OCC	5642	22211
	Sus. + E2{1}	290	501	61	31	1.00	1.00			23a	OCC	5979	22211
	Sus. + E3{1}	330	516	67	41	1.00	1.00			23a	OCC	6113	22211
	Sus. + E4{1}	279	428	61	30	1.00	1.00			23a	OCC	5450	22211
	Sus. + E5{1}	321	449	76	43	1.00	1.00			23a	OCC	5635	22211
	Sus. + E6{1}	291	504	55	31	1.00	1.00			23a	OCC	5996	22211
	Sus. + E7{1}	329	513	76	44	1.00	1.00			23a	OCC	6098	22211
	Sus. + E8{1}	280	430	55	30	1.00	1.00			23a	OCC	5461	22211
B20 F+	Max P{1}									(3a)	HOOP	5813	16700
	GR + Max P{1}	4601	27	60	6	1.00	1.00	1.00	1.00	23a	SUST	2638	16700
	TR:Amb to T1{1}	498	30	866	14	1.00	1.00	1.00	1.00	(17)	DISP	6253	25050
	Amb to T1{1}	498	30	866	14	1.00	1.00	1.00	1.00	(17)	DISP	6253	25050
	Sus. + E1{1}	322	72	451	41	1.00	1.00			23a	OCC	5642	22211
	Sus. + E2{1}	290	68	501	31	1.00	1.00			23a	OCC	5979	22211
	Sus. + E3{1}	330	73	516	41	1.00	1.00			23a	OCC	6113	22211
	Sus. + E4{1}	279	66	428	30	1.00	1.00			23a	OCC	5450	22211
	Sus. + E5{1}	321	82	448	43	1.00	1.00			23a	OCC	5635	22211
	Sus. + E6{1}	291	62	504	31	1.00	1.00			23a	OCC	5996	22211
	Sus. + E7{1}	329	83	513	44	1.00	1.00			23a	OCC	6099	22211
	Sus. + E8{1}	280	60	430	30	1.00	1.00			23a	OCC	5461	22211
B77 -	Max P{1}									(3a)	HOOP	5813	16700
	GR + Max P{1}	4601	47	51	6	1.00	1.00	1.00	1.00	23a	SUST	2662	16700
	TR:Amb to T1{1}	498	38	697	14	1.00	1.00	1.00	1.00	(17)	DISP	5080	25050
	Amb to T1{1}	498	38	697	14	1.00	1.00	1.00	1.00	(17)	DISP	5080	25050
	Sus. + E1{1}	324	114	352	41	1.00	1.00			23a	OCC	5060	22211
	Sus. + E2{1}	292	107	437	31	1.00	1.00			23a	OCC	5633	22211
	Sus. + E3{1}	332	115	442	41	1.00	1.00			23a	OCC	5701	22211
	Sus. + E4{1}	280	104	340	30	1.00	1.00			23a	OCC	4933	22211
	Sus. + E5{1}	322	130	350	43	1.00	1.00			23a	OCC	5074	22211
	Sus. + E6{1}	293	97	440	31	1.00	1.00			23a	OCC	5640	22211
	Sus. + E7{1}	330	131	439	44	1.00	1.00			23a	OCC	5704	22211
	Sus. + E8{1}	281	94	342	30	1.00	1.00			23a	OCC	4934	22211

ASME B31.3 (2016) CODE COMPLIANCE
(Moments in ft-lb , Force in lbf) (Stress in psi)

Point name	Load combination	Axial Force	In-Pl. Moment	Out-Pl. Moment	Torsion Moment	S.I.F In	S.I.F Out	Index/SIF Ax.	Index/SIF Tor.	Eq. no.	Load type	Code Stress	Code Allow.
B77 +	Max P{1}									(3a)	HOOP	5813	16700
	GR + Max P{1}	4612	47	51	6	1.00	1.00	1.00	1.00	23a	SUST	2668	16700
	TR:Amb to T1{1}	263	38	697	14	1.00	1.00	1.00	1.00	(17)	DISP	4975	25050
	Amb to T1{1}	263	38	697	14	1.00	1.00	1.00	1.00	(17)	DISP	4975	25050
	Sus. + E1{1}	324	114	352	41	1.00	1.00			23a	OCC	5065	22211
	Sus. + E2{1}	292	107	437	31	1.00	1.00			23a	OCC	5638	22211
	Sus. + E3{1}	332	115	442	41	1.00	1.00			23a	OCC	5707	22211
	Sus. + E4{1}	280	104	340	30	1.00	1.00			23a	OCC	4938	22211
	Sus. + E5{1}	322	130	350	43	1.00	1.00			23a	OCC	5079	22211
	Sus. + E6{1}	293	97	440	31	1.00	1.00			23a	OCC	5646	22211
	Sus. + E7{1}	330	131	439	44	1.00	1.00			23a	OCC	5710	22211
	Sus. + E8{1}	281	94	342	30	1.00	1.00			23a	OCC	4939	22211
B21 N-	Max P{1}									(3a)	HOOP	5813	16700
	GR + Max P{1}	4612	23	32	6	1.00	1.00	1.00	1.00	23a	SUST	2450	16700
	TR:Amb to T1{1}	263	27	333	14	1.00	1.00	1.00	1.00	(17)	DISP	2442	25050
	Amb to T1{1}	263	27	333	14	1.00	1.00	1.00	1.00	(17)	DISP	2442	25050
	Sus. + E1{1}	325	74	85	41	1.00	1.00			23a	OCC	3178	22211
	Sus. + E2{1}	293	66	132	31	1.00	1.00			23a	OCC	3393	22211
	Sus. + E3{1}	334	75	143	41	1.00	1.00			23a	OCC	3524	22211
	Sus. + E4{1}	282	65	70	30	1.00	1.00			23a	OCC	3017	22211
	Sus. + E5{1}	324	85	84	43	1.00	1.00			23a	OCC	3233	22211
	Sus. + E6{1}	295	61	133	31	1.00	1.00			23a	OCC	3383	22211
	Sus. + E7{1}	332	86	142	44	1.00	1.00			23a	OCC	3559	22211
	Sus. + E8{1}	283	59	71	30	1.00	1.00			23a	OCC	2992	22211
B21 N+	Max P{1}									(3a)	HOOP	5813	16700
	GR + Max P{1}	4612	32	24	6	1.00	1.00	1.00	1.00	23a	SUST	2450	16700
	TR:Amb to T1{1}	263	333	23	14	1.00	1.00	1.00	1.00	(17)	DISP	2442	25050
	Amb to T1{1}	263	333	23	14	1.00	1.00	1.00	1.00	(17)	DISP	2442	25050
	Sus. + E1{1}	325	85	74	41	1.00	1.00			23a	OCC	3178	22211
	Sus. + E2{1}	293	132	65	31	1.00	1.00			23a	OCC	3393	22211
	Sus. + E3{1}	334	144	74	41	1.00	1.00			23a	OCC	3524	22211
	Sus. + E4{1}	282	71	64	30	1.00	1.00			23a	OCC	3017	22211
	Sus. + E5{1}	324	85	84	43	1.00	1.00			23a	OCC	3233	22211
	Sus. + E6{1}	295	133	60	31	1.00	1.00			23a	OCC	3383	22211
	Sus. + E7{1}	332	143	85	44	1.00	1.00			23a	OCC	3559	22211
	Sus. + E8{1}	283	71	59	30	1.00	1.00			23a	OCC	2992	22211
B21 F-	Max P{1}									(3a)	HOOP	5813	16700
	GR + Max P{1}	4615	41	8	13	1.00	1.00	1.00	1.00	23a	SUST	2469	16700
	TR:Amb to T1{1}	551	386	8	1	1.00	1.00	1.00	1.00	(17)	DISP	2932	25050
	Amb to T1{1}	551	386	8	1	1.00	1.00	1.00	1.00	(17)	DISP	2932	25050
	Sus. + E1{1}	387	112	24	15	1.00	1.00			23a	OCC	3176	22211
	Sus. + E2{1}	423	265	21	13	1.00	1.00			23a	OCC	4293	22211
	Sus. + E3{1}	414	130	24	15	1.00	1.00			23a	OCC	3314	22211
	Sus. + E4{1}	390	243	21	13	1.00	1.00			23a	OCC	4116	22211
	Sus. + E5{1}	385	110	27	14	1.00	1.00			23a	OCC	3166	22211
	Sus. + E6{1}	426	268	20	15	1.00	1.00			23a	OCC	4310	22211
	Sus. + E7{1}	411	127	27	14	1.00	1.00			23a	OCC	3299	22211
	Sus. + E8{1}	392	245	19	15	1.00	1.00			23a	OCC	4130	22211

ASME B31.3 (2016) CODE COMPLIANCE
(Moments in ft-lb , Force in lbf) (Stress in psi)

Point name	Load combination	Axial Force	In-Pl. Moment	Out-Pl. Moment	Torsion Moment	S.I.F In	S.I.F Out	Index/SIF Ax.	Index/SIF Tor.	Eq. no.	Load type	Code Stress	Code Allow.
B21 F+	Max P{1}									(3a)	HOOP	5813	16700
	GR + Max P{1}	4615	7	41	13	1.00	1.00	1.00	1.00	23a	SUST	2469	16700
	TR:Amb to T1{1}	551	0	386	1	1.00	1.00	1.00	1.00	(17)	DISP	2932	25050
	Amb to T1{1}	551	0	386	1	1.00	1.00	1.00	1.00	(17)	DISP	2932	25050
	Sus. + E1{1}	387	22	112	15	1.00	1.00			23a	OCC	3176	22211
	Sus. + E2{1}	423	16	266	13	1.00	1.00			23a	OCC	4293	22211
	Sus. + E3{1}	414	21	130	15	1.00	1.00			23a	OCC	3314	22211
	Sus. + E4{1}	390	16	243	13	1.00	1.00			23a	OCC	4116	22211
	Sus. + E5{1}	385	25	110	14	1.00	1.00			23a	OCC	3166	22211
	Sus. + E6{1}	426	14	268	15	1.00	1.00			23a	OCC	4310	22211
	Sus. + E7{1}	411	25	128	14	1.00	1.00			23a	OCC	3299	22211
	Sus. + E8{1}	392	14	245	15	1.00	1.00			23a	OCC	4130	22211
B59 N-	Max P{1}									(3a)	HOOP	5813	16700
	GR + Max P{1}	4614	71	116	13	1.00	1.00	1.00	1.00	23a	SUST	3148	16700
	TR:Amb to T1{1}	551	32	227	1	1.00	1.00	1.00	1.00	(17)	DISP	1840	25050
	Amb to T1{1}	551	32	227	1	1.00	1.00	1.00	1.00	(17)	DISP	1840	25050
	Sus. + E1{1}	393	153	829	15	1.00	1.00			23a	OCC	8529	22211
	Sus. + E2{1}	418	122	602	13	1.00	1.00			23a	OCC	6880	22211
	Sus. + E3{1}	408	154	831	15	1.00	1.00			23a	OCC	8549	22211
	Sus. + E4{1}	396	121	598	13	1.00	1.00			23a	OCC	6839	22211
	Sus. + E5{1}	390	149	828	14	1.00	1.00			23a	OCC	8516	22211
	Sus. + E6{1}	420	132	603	15	1.00	1.00			23a	OCC	6897	22211
	Sus. + E7{1}	405	150	830	14	1.00	1.00			23a	OCC	8535	22211
	Sus. + E8{1}	398	130	599	15	1.00	1.00			23a	OCC	6855	22211
B59 N+	Max P{1}									(3a)	HOOP	5813	16700
	GR + Max P{1}	4614	71	116	13	1.00	1.00	1.00	1.00	23a	SUST	3148	16700
	TR:Amb to T1{1}	551	32	227	3	1.00	1.00	1.00	1.00	(17)	DISP	1840	25050
	Amb to T1{1}	551	32	227	3	1.00	1.00	1.00	1.00	(17)	DISP	1840	25050
	Sus. + E1{1}	392	153	829	21	1.00	1.00			23a	OCC	8529	22211
	Sus. + E2{1}	417	122	602	18	1.00	1.00			23a	OCC	6879	22211
	Sus. + E3{1}	408	154	831	21	1.00	1.00			23a	OCC	8549	22211
	Sus. + E4{1}	396	121	598	17	1.00	1.00			23a	OCC	6839	22211
	Sus. + E5{1}	390	149	828	20	1.00	1.00			23a	OCC	8516	22211
	Sus. + E6{1}	420	132	603	20	1.00	1.00			23a	OCC	6897	22211
	Sus. + E7{1}	405	150	830	20	1.00	1.00			23a	OCC	8534	22211
	Sus. + E8{1}	398	130	599	19	1.00	1.00			23a	OCC	6855	22211
B59 M	Max P{1}									(3a)	HOOP	5813	16700
	GR + Max P{1}	4615	72	116	14	1.00	1.00	1.00	1.00	23a	SUST	3156	16700
	TR:Amb to T1{1}	551	32	232	5	1.00	1.00	1.00	1.00	(17)	DISP	1880	25050
	Amb to T1{1}	551	32	232	5	1.00	1.00	1.00	1.00	(17)	DISP	1880	25050
	Sus. + E1{1}	392	155	837	27	1.00	1.00			23a	OCC	8590	22211
	Sus. + E2{1}	417	124	609	22	1.00	1.00			23a	OCC	6936	22211
	Sus. + E3{1}	408	156	839	27	1.00	1.00			23a	OCC	8612	22211
	Sus. + E4{1}	395	122	605	22	1.00	1.00			23a	OCC	6893	22211
	Sus. + E5{1}	390	150	836	26	1.00	1.00			23a	OCC	8577	22211
	Sus. + E6{1}	420	134	610	24	1.00	1.00			23a	OCC	6953	22211
	Sus. + E7{1}	405	151	838	26	1.00	1.00			23a	OCC	8597	22211
	Sus. + E8{1}	398	132	606	24	1.00	1.00			23a	OCC	6909	22211

Primary Piping
04/24/2020 2018719 BENTLEY
07:34 AM AutoPIPE Nuclear 12.00.00.16 RESULT PAGE 350

ASME B31.3 (2016) CODE COMPLIANCE
(Moments in ft-lb , Force in lbf) (Stress in psi)

Point name	Load combination	Axial Force	In-Pl. Moment	Out-Pl. Moment	Torsion Moment	S.I.F In	S.I.F Out	Index/SIF Ax.	Index/SIF Tor.	Eq. no.	Load type	Code Stress	Code Allow.
B59 F-	Max P{1}									(3a)	HOOP	5813	16700
	GR + Max P{1}	4615	73	117	15	1.00	1.00	1.00	1.00	23a	SUST	3164	16700
	TR:Amb to T1{1}	550	32	238	6	1.00	1.00	1.00	1.00	(17)	DISP	1920	25050
	Amb to T1{1}	550	32	238	6	1.00	1.00	1.00	1.00	(17)	DISP	1920	25050
	Sus. + E1{1}	392	157	845	33	1.00	1.00			23a	OCC	8652	22211
	Sus. + E2{1}	417	126	616	27	1.00	1.00			23a	OCC	6992	22211
	Sus. + E3{1}	407	158	847	33	1.00	1.00			23a	OCC	8675	22211
	Sus. + E4{1}	395	124	612	26	1.00	1.00			23a	OCC	6948	22211
	Sus. + E5{1}	390	152	844	32	1.00	1.00			23a	OCC	8638	22211
	Sus. + E6{1}	420	135	617	29	1.00	1.00			23a	OCC	7010	22211
	Sus. + E7{1}	404	153	846	32	1.00	1.00			23a	OCC	8659	22211
	Sus. + E8{1}	397	133	613	28	1.00	1.00			23a	OCC	6964	22211
B59 F+	Max P{1}									(3a)	HOOP	5813	16700
	GR + Max P{1}	4614	73	117	14	1.00	1.00	1.00	1.00	23a	SUST	3164	16700
	TR:Amb to T1{1}	630	32	238	5	1.00	1.00	1.00	1.00	(17)	DISP	1956	25050
	Amb to T1{1}	630	32	238	5	1.00	1.00	1.00	1.00	(17)	DISP	1956	25050
	Sus. + E1{1}	392	157	845	27	1.00	1.00			23a	OCC	8652	22211
	Sus. + E2{1}	417	126	616	22	1.00	1.00			23a	OCC	6992	22211
	Sus. + E3{1}	408	158	847	27	1.00	1.00			23a	OCC	8675	22211
	Sus. + E4{1}	396	124	612	22	1.00	1.00			23a	OCC	6948	22211
	Sus. + E5{1}	390	152	844	26	1.00	1.00			23a	OCC	8638	22211
	Sus. + E6{1}	420	135	618	24	1.00	1.00			23a	OCC	7010	22211
	Sus. + E7{1}	405	153	846	26	1.00	1.00			23a	OCC	8659	22211
	Sus. + E8{1}	398	133	613	24	1.00	1.00			23a	OCC	6964	22211
B60	Max P{1}									(3a)	HOOP	5813	16700
	GR + Max P{1}	4614	26	149	14	1.00	1.00	1.00	1.00	23a	SUST	3261	16700
	TR:Amb to T1{1}	630	14	416	5	1.00	1.00	1.00	1.00	(17)	DISP	3178	25050
	Amb to T1{1}	630	14	416	5	1.00	1.00	1.00	1.00	(17)	DISP	3178	25050
	Sus. + E1{1}	394	63	1211	27	1.00	1.00			23a	OCC	11132	22211
	Sus. + E2{1}	415	50	951	22	1.00	1.00			23a	OCC	9258	22211
	Sus. + E3{1}	405	63	1221	27	1.00	1.00			23a	OCC	11212	22211
	Sus. + E4{1}	398	49	935	22	1.00	1.00			23a	OCC	9137	22211
	Sus. + E5{1}	392	62	1208	26	1.00	1.00			23a	OCC	11113	22211
	Sus. + E6{1}	417	54	953	24	1.00	1.00			23a	OCC	9279	22211
	Sus. + E7{1}	402	63	1218	26	1.00	1.00			23a	OCC	11188	22211
	Sus. + E8{1}	400	53	937	24	1.00	1.00			23a	OCC	9155	22211
B61	Max P{1}									(3a)	HOOP	5813	16700
	GR + Max P{1}	4614	9	182	14	1.00	1.00	1.00	1.00	23a	SUST	3481	16700
	TR:Amb to T1{1}	630	4	597	5	1.00	1.00	1.00	1.00	(17)	DISP	4439	25050
	Amb to T1{1}	630	4	597	5	1.00	1.00	1.00	1.00	(17)	DISP	4439	25050
	Sus. + E1{1}	397	19	1587	27	1.00	1.00			23a	OCC	13833	22211
	Sus. + E2{1}	412	15	1295	22	1.00	1.00			23a	OCC	11728	22211
	Sus. + E3{1}	403	19	1605	27	1.00	1.00			23a	OCC	13971	22211
	Sus. + E4{1}	400	15	1268	22	1.00	1.00			23a	OCC	11528	22211
	Sus. + E5{1}	395	18	1583	26	1.00	1.00			23a	OCC	13805	22211
	Sus. + E6{1}	415	16	1299	24	1.00	1.00			23a	OCC	11759	22211
	Sus. + E7{1}	400	18	1601	26	1.00	1.00			23a	OCC	13935	22211
	Sus. + E8{1}	402	16	1271	24	1.00	1.00			23a	OCC	11553	22211

Primary Piping
04/24/2020 2018719 BENTLEY
07:34 AM AutoPIPE Nuclear 12.00.00.16 RESULT PAGE 351

ASME B31.3 (2016) CODE COMPLIANCE
(Moments in ft-lb , Force in lbf) (Stress in psi)

Point name	Load combination	Axial Force	In-Pl. Moment	Out-Pl. Moment	Torsion Moment	S.I.F In	S.I.F Out	Index/SIF Ax.	Index/SIF Tor.	Eq. no.	Load type	Code Stress	Code Allow.
B62	- Max P{1}									(3a)	HOOP	5813	16700
	GR + Max P{1}	4614	23	202	14	1.00	1.00	1.00	1.00	23a	SUST	3634	16700
	TR:Amb to T1{1}	630	15	708	5	1.00	1.00	1.00	1.00	(17)	DISP	5211	25050
	Amb to T1{1}	630	15	708	5	1.00	1.00	1.00	1.00	(17)	DISP	5211	25050
	Sus. + E1{1}	398	62	1817	27	1.00	1.00			23a	OCC	15513	22211
	Sus. + E2{1}	411	49	1506	22	1.00	1.00			23a	OCC	13265	22211
	Sus. + E3{1}	402	62	1841	27	1.00	1.00			23a	OCC	15686	22211
	Sus. + E4{1}	402	48	1472	22	1.00	1.00			23a	OCC	13015	22211
	Sus. + E5{1}	396	61	1813	26	1.00	1.00			23a	OCC	15479	22211
	Sus. + E6{1}	414	52	1511	24	1.00	1.00			23a	OCC	13302	22211
	Sus. + E7{1}	398	62	1835	26	1.00	1.00			23a	OCC	15643	22211
	Sus. + E8{1}	404	51	1476	24	1.00	1.00			23a	OCC	13046	22211
B62	+ Max P{1}									(3a)	HOOP	5813	16700
	GR + Max P{1}	4643	0	0	0	1.00	1.00	1.00	1.00	23a	SUST	2181	16700
	TR:Amb to T1{1}	0	0	0	0	1.00	1.00	1.00	1.00	(17)	DISP	0	25050
	Amb to T1{1}	0	0	0	0	1.00	1.00	1.00	1.00	(17)	DISP	0	25050
	Sus. + E1{1}	1	0	0	0	1.00	1.00			23a	OCC	2182	22211
	Sus. + E2{1}	1	0	0	0	1.00	1.00			23a	OCC	2182	22211
	Sus. + E3{1}	1	0	0	0	1.00	1.00			23a	OCC	2182	22211
	Sus. + E4{1}	1	0	0	0	1.00	1.00			23a	OCC	2182	22211
	Sus. + E5{1}	1	0	0	0	1.00	1.00			23a	OCC	2182	22211
	Sus. + E6{1}	1	0	0	0	1.00	1.00			23a	OCC	2182	22211
	Sus. + E7{1}	1	0	0	0	1.00	1.00			23a	OCC	2182	22211
	Sus. + E8{1}	1	0	0	0	1.00	1.00			23a	OCC	2182	22211
B63	Max P{1}									(3a)	HOOP	5813	16700
	GR + Max P{1}	4643	0	0	0	1.00	1.00	1.00	1.00	23a	SUST	2178	16700
	TR:Amb to T1{1}	0	0	0	0	1.00	1.00	1.00	1.00	(17)	DISP	0	25050
	Amb to T1{1}	0	0	0	0	1.00	1.00	1.00	1.00	(17)	DISP	0	25050
	Sus. + E1{1}	0	0	0	0	1.00	1.00			23a	OCC	2178	22211
	Sus. + E2{1}	0	0	0	0	1.00	1.00			23a	OCC	2178	22211
	Sus. + E3{1}	0	0	0	0	1.00	1.00			23a	OCC	2178	22211
	Sus. + E4{1}	0	0	0	0	1.00	1.00			23a	OCC	2178	22211
	Sus. + E5{1}	0	0	0	0	1.00	1.00			23a	OCC	2178	22211
	Sus. + E6{1}	0	0	0	0	1.00	1.00			23a	OCC	2178	22211
	Sus. + E7{1}	0	0	0	0	1.00	1.00			23a	OCC	2178	22211
	Sus. + E8{1}	0	0	0	0	1.00	1.00			23a	OCC	2178	22211

*** Segment B end *** Line # RIGID

*** Segment C begin ***

Primary Piping
04/24/2020 2018719 BENTLEY
07:34 AM AutoPIPE Nuclear 12.00.00.16 RESULT PAGE 352

ASME B31.3 (2016) CODE COMPLIANCE
(Moments in ft-lb , Force in lbf) (Stress in psi)

Point name	Load combination	Axial Force	In-Pl. Moment	Out-Pl. Moment	Torsion Moment	S.I.F In	S.I.F Out	Index/SIF Ax.	Index/SIF Tor.	Eq. no.	Load type	Code Stress	Code Allow.
C00	Max P{1}									(3a)	HOOP	5642	16700
	GR + Max P{1}	2121	0	0	0	1.00	1.00	1.00	1.00	23a	SUST	2101	16700
	TR:Amb to T1{1}	0	0	0	0	1.00	1.00	1.00	1.00	(17)	DISP	0	25050
	Amb to T1{1}	0	0	0	0	1.00	1.00	1.00	1.00	(17)	DISP	0	25050
	Sus. + E1{1}	0	0	0	0	1.00	1.00			23a	OCC	2101	22211
	Sus. + E2{1}	0	0	0	0	1.00	1.00			23a	OCC	2101	22211
	Sus. + E3{1}	0	0	0	0	1.00	1.00			23a	OCC	2101	22211
	Sus. + E4{1}	0	0	0	0	1.00	1.00			23a	OCC	2101	22211
	Sus. + E5{1}	0	0	0	0	1.00	1.00			23a	OCC	2101	22211
	Sus. + E6{1}	0	0	0	0	1.00	1.00			23a	OCC	2101	22211
	Sus. + E7{1}	0	0	0	0	1.00	1.00			23a	OCC	2101	22211
	Sus. + E8{1}	0	0	0	0	1.00	1.00			23a	OCC	2101	22211
C01 -	Max P{1}									(3a)	HOOP	5642	16700
	GR + Max P{1}	2120	0	0	0	1.00	1.00	1.00	1.00	23a	SUST	2100	16700
	TR:Amb to T1{1}	0	0	0	0	1.00	1.00	1.00	1.00	(17)	DISP	0	25050
	Amb to T1{1}	0	0	0	0	1.00	1.00	1.00	1.00	(17)	DISP	0	25050
	Sus. + E1{1}	0	0	0	0	1.00	1.00			23a	OCC	2101	22211
	Sus. + E2{1}	0	0	0	0	1.00	1.00			23a	OCC	2101	22211
	Sus. + E3{1}	0	0	0	0	1.00	1.00			23a	OCC	2101	22211
	Sus. + E4{1}	0	0	0	0	1.00	1.00			23a	OCC	2101	22211
	Sus. + E5{1}	0	0	0	0	1.00	1.00			23a	OCC	2101	22211
	Sus. + E6{1}	0	0	0	0	1.00	1.00			23a	OCC	2101	22211
	Sus. + E7{1}	0	0	0	0	1.00	1.00			23a	OCC	2101	22211
	Sus. + E8{1}	0	0	0	0	1.00	1.00			23a	OCC	2101	22211
C01 +	Max P{1}									(3a)	HOOP	5642	16700
	GR + Max P{1}	2126	0	0	0	1.00	1.00	1.00	1.00	23a	SUST	2107	16700
	TR:Amb to T1{1}	6	0	0	0	1.00	1.00	1.00	1.00	(17)	DISP	6	25050
	Amb to T1{1}	6	0	0	0	1.00	1.00	1.00	1.00	(17)	DISP	6	25050
	Sus. + E1{1}	1	0	0	0	1.00	1.00			23a	OCC	2108	22211
	Sus. + E2{1}	1	0	0	0	1.00	1.00			23a	OCC	2108	22211
	Sus. + E3{1}	0	0	0	0	1.00	1.00			23a	OCC	2107	22211
	Sus. + E4{1}	0	0	0	0	1.00	1.00			23a	OCC	2107	22211
	Sus. + E5{1}	0	0	0	0	1.00	1.00			23a	OCC	2107	22211
	Sus. + E6{1}	0	0	0	0	1.00	1.00			23a	OCC	2107	22211
	Sus. + E7{1}	1	0	0	0	1.00	1.00			23a	OCC	2108	22211
	Sus. + E8{1}	1	0	0	0	1.00	1.00			23a	OCC	2108	22211
C02 N-	Max P{1}									(3a)	HOOP	5642	16700
	GR + Max P{1}	2125	0	0	0	1.00	1.00	1.00	1.00	23a	SUST	2106	16700
	TR:Amb to T1{1}	6	0	0	0	1.00	1.00	1.00	1.00	(17)	DISP	6	25050
	Amb to T1{1}	6	0	0	0	1.00	1.00	1.00	1.00	(17)	DISP	6	25050
	Sus. + E1{1}	1	0	0	0	1.00	1.00			23a	OCC	2109	22211
	Sus. + E2{1}	1	0	0	0	1.00	1.00			23a	OCC	2109	22211
	Sus. + E3{1}	0	0	0	0	1.00	1.00			23a	OCC	2108	22211
	Sus. + E4{1}	0	0	0	0	1.00	1.00			23a	OCC	2108	22211
	Sus. + E5{1}	0	0	0	0	1.00	1.00			23a	OCC	2108	22211
	Sus. + E6{1}	0	0	0	0	1.00	1.00			23a	OCC	2108	22211
	Sus. + E7{1}	1	0	0	0	1.00	1.00			23a	OCC	2109	22211
	Sus. + E8{1}	1	0	0	0	1.00	1.00			23a	OCC	2109	22211

Primary Piping
04/24/2020 2018719 BENTLEY
07:34 AM AutoPIPE Nuclear 12.00.00.16 RESULT PAGE 353

ASME B31.3 (2016) CODE COMPLIANCE
(Moments in ft-lb , Force in lbf) (Stress in psi)

Point name	Load combination	Axial Force	In-Pl. Moment	Out-Pl. Moment	Torsion Moment	S.I.F In	S.I.F Out	Index/SIF Ax.	Index/SIF Tor.	Eq. no.	Load type	Code Stress	Code Allow.
C02 N+	Max P{1}									(3a)	HOOP	5642	16700
	GR + Max P{1}	2125	0	0	0	1.30	1.08	1.00	1.00	23a	SUST	2106	16700
	TR:Amb to T1{1}	6	0	0	0	1.73	1.44	1.00	1.00	(17)	DISP	6	25050
	Amb to T1{1}	6	0	0	0	1.73	1.44	1.00	1.00	(17)	DISP	6	25050
	Sus. + E1{1}	1	0	0	0	1.30	1.08			23a	OCC	2109	22211
	Sus. + E2{1}	1	0	0	0	1.30	1.08			23a	OCC	2109	22211
	Sus. + E3{1}	0	0	0	0	1.30	1.08			23a	OCC	2109	22211
	Sus. + E4{1}	0	0	0	0	1.30	1.08			23a	OCC	2109	22211
	Sus. + E5{1}	0	0	0	0	1.30	1.08			23a	OCC	2109	22211
	Sus. + E6{1}	0	0	0	0	1.30	1.08			23a	OCC	2109	22211
	Sus. + E7{1}	1	0	0	0	1.30	1.08			23a	OCC	2109	22211
	Sus. + E8{1}	1	0	0	0	1.30	1.08			23a	OCC	2109	22211
C02 F-	Max P{1}									(3a)	HOOP	5642	16700
	GR + Max P{1}	2121	1	0	0	1.30	1.08	1.00	1.00	23a	SUST	2121	16700
	TR:Amb to T1{1}	0	2	0	0	1.73	1.44	1.00	1.00	(17)	DISP	59	25050
	Amb to T1{1}	0	2	0	0	1.73	1.44	1.00	1.00	(17)	DISP	59	25050
	Sus. + E1{1}	1	1	0	0	1.30	1.08			23a	OCC	2127	22211
	Sus. + E2{1}	1	1	0	0	1.30	1.08			23a	OCC	2127	22211
	Sus. + E3{1}	1	1	0	0	1.30	1.08			23a	OCC	2129	22211
	Sus. + E4{1}	1	1	0	0	1.30	1.08			23a	OCC	2129	22211
	Sus. + E5{1}	1	1	0	0	1.30	1.08			23a	OCC	2129	22211
	Sus. + E6{1}	1	1	0	0	1.30	1.08			23a	OCC	2129	22211
	Sus. + E7{1}	1	1	0	0	1.30	1.08			23a	OCC	2127	22211
	Sus. + E8{1}	1	1	0	0	1.30	1.08			23a	OCC	2127	22211
C02 F+	Max P{1}									(3a)	HOOP	5642	16700
	GR + Max P{1}	2121	1	0	0	1.00	1.00	1.00	1.00	23a	SUST	2116	16700
	TR:Amb to T1{1}	0	2	0	0	1.00	1.00	1.00	1.00	(17)	DISP	34	25050
	Amb to T1{1}	0	2	0	0	1.00	1.00	1.00	1.00	(17)	DISP	34	25050
	Sus. + E1{1}	1	1	0	0	1.00	1.00			23a	OCC	2122	22211
	Sus. + E2{1}	1	1	0	0	1.00	1.00			23a	OCC	2122	22211
	Sus. + E3{1}	1	1	0	0	1.00	1.00			23a	OCC	2124	22211
	Sus. + E4{1}	1	1	0	0	1.00	1.00			23a	OCC	2124	22211
	Sus. + E5{1}	1	1	0	0	1.00	1.00			23a	OCC	2124	22211
	Sus. + E6{1}	1	1	0	0	1.00	1.00			23a	OCC	2124	22211
	Sus. + E7{1}	1	1	0	0	1.00	1.00			23a	OCC	2122	22211
	Sus. + E8{1}	1	1	0	0	1.00	1.00			23a	OCC	2122	22211
C03 -	Max P{1}									(3a)	HOOP	5642	16700
	GR + Max P{1}	2121	2	0	0	1.00	1.00	1.00	1.00	23a	SUST	2139	16700
	TR:Amb to T1{1}	0	9	0	0	1.00	1.00	1.00	1.00	(17)	DISP	198	25050
	Amb to T1{1}	0	9	0	0	1.00	1.00	1.00	1.00	(17)	DISP	198	25050
	Sus. + E1{1}	2	2	1	0	1.00	1.00			23a	OCC	2155	22211
	Sus. + E2{1}	2	2	1	0	1.00	1.00			23a	OCC	2155	22211
	Sus. + E3{1}	2	2	1	0	1.00	1.00			23a	OCC	2156	22211
	Sus. + E4{1}	2	2	1	0	1.00	1.00			23a	OCC	2156	22211
	Sus. + E5{1}	2	2	1	0	1.00	1.00			23a	OCC	2156	22211
	Sus. + E6{1}	2	2	1	0	1.00	1.00			23a	OCC	2156	22211
	Sus. + E7{1}	2	2	1	0	1.00	1.00			23a	OCC	2155	22211
	Sus. + E8{1}	2	2	1	0	1.00	1.00			23a	OCC	2155	22211

Primary Piping
04/24/2020 2018719 BENTLEY
07:34 AM AutoPIPE Nuclear 12.00.00.16 RESULT PAGE 354

ASME B31.3 (2016) CODE COMPLIANCE
(Moments in ft-lb , Force in lbf) (Stress in psi)

Point name	Load combination	Axial Force	In-Pl. Moment	Out-Pl. Moment	Torsion Moment	S.I.F In	S.I.F Out	Index/SIF Ax.	Index/SIF Tor.	Eq. no.	Load type	Code Stress	Code Allow.
C03	+ Max P{1}									(3a)	HOOP	5642	16700
	GR + Max P{1}	2138	11	40	2	1.00	1.00	1.00	1.00	23a	SUST	3059	16700
	TR:Amb to T1{1}	147	1	17	3	1.00	1.00	1.00	1.00	(17)	DISP	498	25050
	Amb to T1{1}	147	1	17	3	1.00	1.00	1.00	1.00	(17)	DISP	498	25050
	Sus. + E1{1}	4	14	125	6	1.00	1.00			23a	OCC	4983	22211
	Sus. + E2{1}	44	12	57	3	1.00	1.00			23a	OCC	3498	22211
	Sus. + E3{1}	65	14	135	6	1.00	1.00			23a	OCC	5268	22211
	Sus. + E4{1}	25	12	48	3	1.00	1.00			23a	OCC	3265	22211
	Sus. + E5{1}	6	12	124	6	1.00	1.00			23a	OCC	4976	22211
	Sus. + E6{1}	46	13	58	3	1.00	1.00			23a	OCC	3508	22211
	Sus. + E7{1}	64	12	134	6	1.00	1.00			23a	OCC	5259	22211
	Sus. + E8{1}	24	13	48	3	1.00	1.00			23a	OCC	3274	22211
C04	Max P{1}									(3a)	HOOP	5642	16700
	GR + Max P{1}	2138	2	24	2	1.00	1.00	1.00	1.00	23a	SUST	2657	16700
	TR:Amb to T1{1}	147	0	16	3	1.00	1.00	1.00	1.00	(17)	DISP	478	25050
	Amb to T1{1}	147	0	16	3	1.00	1.00	1.00	1.00	(17)	DISP	478	25050
	Sus. + E1{1}	2	3	80	6	1.00	1.00			23a	OCC	3936	22211
	Sus. + E2{1}	42	2	41	3	1.00	1.00			23a	OCC	3087	22211
	Sus. + E3{1}	63	3	86	6	1.00	1.00			23a	OCC	4134	22211
	Sus. + E4{1}	23	3	35	3	1.00	1.00			23a	OCC	2937	22211
	Sus. + E5{1}	4	3	80	6	1.00	1.00			23a	OCC	3932	22211
	Sus. + E6{1}	43	3	41	3	1.00	1.00			23a	OCC	3093	22211
	Sus. + E7{1}	62	3	86	6	1.00	1.00			23a	OCC	4128	22211
	Sus. + E8{1}	22	3	35	3	1.00	1.00			23a	OCC	2941	22211
C21	- Max P{1}									(3a)	HOOP	5642	16700
	GR + Max P{1}	2138	54	3	2	1.00	1.00	1.00	1.00	23a	SUST	3338	16700
	TR:Amb to T1{1}	147	3	15	3	1.00	1.00	1.00	1.00	(17)	DISP	459	25050
	Amb to T1{1}	147	3	15	3	1.00	1.00	1.00	1.00	(17)	DISP	459	25050
	Sus. + E1{1}	1	61	18	6	1.00	1.00			23a	OCC	3718	22211
	Sus. + E2{1}	39	57	14	3	1.00	1.00			23a	OCC	3628	22211
	Sus. + E3{1}	60	61	19	6	1.00	1.00			23a	OCC	3804	22211
	Sus. + E4{1}	20	57	12	3	1.00	1.00			23a	OCC	3584	22211
	Sus. + E5{1}	1	55	18	6	1.00	1.00			23a	OCC	3680	22211
	Sus. + E6{1}	41	59	14	3	1.00	1.00			23a	OCC	3647	22211
	Sus. + E7{1}	59	55	19	6	1.00	1.00			23a	OCC	3764	22211
	Sus. + E8{1}	19	59	12	3	1.00	1.00			23a	OCC	3600	22211
C21	+ Max P{1}									(3a)	HOOP	5642	16700
	GR + Max P{1}	2138	54	3	2	1.00	1.00	1.00	1.00	23a	SUST	3338	16700
	TR:Amb to T1{1}	106	3	15	3	1.00	1.00	1.00	1.00	(17)	DISP	421	25050
	Amb to T1{1}	106	3	15	3	1.00	1.00	1.00	1.00	(17)	DISP	421	25050
	Sus. + E1{1}	1	61	18	6	1.00	1.00			23a	OCC	3718	22211
	Sus. + E2{1}	39	57	14	3	1.00	1.00			23a	OCC	3628	22211
	Sus. + E3{1}	60	61	19	6	1.00	1.00			23a	OCC	3804	22211
	Sus. + E4{1}	20	57	12	3	1.00	1.00			23a	OCC	3584	22211
	Sus. + E5{1}	1	55	18	6	1.00	1.00			23a	OCC	3680	22211
	Sus. + E6{1}	41	59	14	3	1.00	1.00			23a	OCC	3647	22211
	Sus. + E7{1}	59	55	19	6	1.00	1.00			23a	OCC	3764	22211
	Sus. + E8{1}	19	59	12	3	1.00	1.00			23a	OCC	3600	22211

ASME B31.3 (2016) CODE COMPLIANCE
(Moments in ft-lb , Force in lbf) (Stress in psi)

Point name	Load combination	Axial Force	In-Pl. Moment	Out-Pl. Moment	Torsion Moment	S.I.F In	S.I.F Out	Index/SIF Ax.	Index/SIF Tor.	Eq. no.	Load type	Code Stress	Code Allow.
C06 N-	Max P{1}									(3a)	HOOP	5642	16700
	GR + Max P{1}	2138	41	0	2	1.00	1.00	1.00	1.00	23a	SUST	3046	16700
	TR:Amb to T1{1}	106	0	11	3	1.00	1.00	1.00	1.00	(17)	DISP	334	25050
	Amb to T1{1}	106	0	11	3	1.00	1.00	1.00	1.00	(17)	DISP	334	25050
	Sus. + E1{1}	1	47	8	6	1.00	1.00			23a	OCC	3283	22211
	Sus. + E2{1}	39	44	9	3	1.00	1.00			23a	OCC	3301	22211
	Sus. + E3{1}	60	46	8	6	1.00	1.00			23a	OCC	3334	22211
	Sus. + E4{1}	20	43	8	3	1.00	1.00			23a	OCC	3262	22211
	Sus. + E5{1}	0	42	8	6	1.00	1.00			23a	OCC	3242	22211
	Sus. + E6{1}	40	44	9	3	1.00	1.00			23a	OCC	3301	22211
	Sus. + E7{1}	59	43	8	6	1.00	1.00			23a	OCC	3311	22211
	Sus. + E8{1}	19	46	8	3	1.00	1.00			23a	OCC	3280	22211
C06 N+	Max P{1}									(3a)	HOOP	5642	16700
	GR + Max P{1}	2138	41	0	2	1.00	1.00	1.00	1.00	23a	SUST	3046	16700
	TR:Amb to T1{1}	106	0	11	3	1.00	1.00	1.00	1.00	(17)	DISP	334	25050
	Amb to T1{1}	106	0	11	3	1.00	1.00	1.00	1.00	(17)	DISP	334	25050
	Sus. + E1{1}	1	47	8	6	1.00	1.00			23a	OCC	3283	22211
	Sus. + E2{1}	39	44	9	3	1.00	1.00			23a	OCC	3301	22211
	Sus. + E3{1}	60	46	8	6	1.00	1.00			23a	OCC	3334	22211
	Sus. + E4{1}	20	43	8	3	1.00	1.00			23a	OCC	3262	22211
	Sus. + E5{1}	0	42	8	6	1.00	1.00			23a	OCC	3242	22211
	Sus. + E6{1}	40	44	9	3	1.00	1.00			23a	OCC	3301	22211
	Sus. + E7{1}	59	43	8	6	1.00	1.00			23a	OCC	3311	22211
	Sus. + E8{1}	19	46	8	3	1.00	1.00			23a	OCC	3280	22211
C06 F-	Max P{1}									(3a)	HOOP	5642	16700
	GR + Max P{1}	2141	33	2	2	1.00	1.00	1.00	1.00	23a	SUST	2878	16700
	TR:Amb to T1{1}	106	1	8	2	1.00	1.00	1.00	1.00	(17)	DISP	286	25050
	Amb to T1{1}	106	1	8	2	1.00	1.00	1.00	1.00	(17)	DISP	286	25050
	Sus. + E1{1}	2	38	5	6	1.00	1.00			23a	OCC	3041	22211
	Sus. + E2{1}	38	37	10	3	1.00	1.00			23a	OCC	3107	22211
	Sus. + E3{1}	60	37	5	6	1.00	1.00			23a	OCC	3070	22211
	Sus. + E4{1}	20	35	9	2	1.00	1.00			23a	OCC	3076	22211
	Sus. + E5{1}	0	34	5	6	1.00	1.00			23a	OCC	2994	22211
	Sus. + E6{1}	40	36	10	3	1.00	1.00			23a	OCC	3103	22211
	Sus. + E7{1}	58	35	5	6	1.00	1.00			23a	OCC	3051	22211
	Sus. + E8{1}	18	37	9	2	1.00	1.00			23a	OCC	3092	22211
C06 F+	Max P{1}									(3a)	HOOP	5642	16700
	GR + Max P{1}	2141	33	2	2	1.00	1.00	1.00	1.00	23a	SUST	2878	16700
	TR:Amb to T1{1}	106	1	8	2	1.00	1.00	1.00	1.00	(17)	DISP	286	25050
	Amb to T1{1}	106	1	8	2	1.00	1.00	1.00	1.00	(17)	DISP	286	25050
	Sus. + E1{1}	2	38	5	6	1.00	1.00			23a	OCC	3041	22211
	Sus. + E2{1}	38	37	10	3	1.00	1.00			23a	OCC	3107	22211
	Sus. + E3{1}	60	37	5	6	1.00	1.00			23a	OCC	3070	22211
	Sus. + E4{1}	20	35	9	2	1.00	1.00			23a	OCC	3076	22211
	Sus. + E5{1}	0	34	5	6	1.00	1.00			23a	OCC	2994	22211
	Sus. + E6{1}	40	36	10	3	1.00	1.00			23a	OCC	3103	22211
	Sus. + E7{1}	58	35	5	6	1.00	1.00			23a	OCC	3051	22211
	Sus. + E8{1}	18	37	9	2	1.00	1.00			23a	OCC	3092	22211

Primary Piping
04/24/2020 2018719 BENTLEY
07:34 AM AutoPIPE Nuclear 12.00.00.16 RESULT PAGE 356

ASME B31.3 (2016) CODE COMPLIANCE
(Moments in ft-lb , Force in lbf) (Stress in psi)

Point name	Load combination	Axial Force	In-Pl. Moment	Out-Pl. Moment	Torsion Moment	S.I.F In	S.I.F Out	Index/SIF Ax.	Index/SIF Tor.	Eq. no.	Load type	Code Stress	Code Allow.
C22	- Max P{1}									(3a)	HOOP	5642	16700
	GR + Max P{1}	2136	50	88	2	1.00	1.00	1.00	1.00	23a	SUST	4408	16700
	TR:Amb to T1{1}	106	3	97	2	1.00	1.00	1.00	1.00	(17)	DISP	2178	25050
	Amb to T1{1}	106	3	97	2	1.00	1.00	1.00	1.00	(17)	DISP	2178	25050
	Sus. + E1{1}	13	51	342	6	1.00	1.00			23a	OCC	10168	22211
	Sus. + E2{1}	27	57	191	3	1.00	1.00			23a	OCC	6769	22211
	Sus. + E3{1}	48	53	362	6	1.00	1.00			23a	OCC	10652	22211
	Sus. + E4{1}	8	56	172	2	1.00	1.00			23a	OCC	6316	22211
	Sus. + E5{1}	12	60	341	6	1.00	1.00			23a	OCC	10154	22211
	Sus. + E6{1}	28	52	192	3	1.00	1.00			23a	OCC	6780	22211
	Sus. + E7{1}	47	62	361	6	1.00	1.00			23a	OCC	10641	22211
	Sus. + E8{1}	7	54	173	2	1.00	1.00			23a	OCC	6330	22211
C22	+ Max P{1}									(3a)	HOOP	5642	16700
	GR + Max P{1}	2136	50	88	2	1.00	1.00	1.00	1.00	23a	SUST	4408	16700
	TR:Amb to T1{1}	57	3	97	2	1.00	1.00	1.00	1.00	(17)	DISP	2132	25050
	Amb to T1{1}	57	3	97	2	1.00	1.00	1.00	1.00	(17)	DISP	2132	25050
	Sus. + E1{1}	13	51	342	6	1.00	1.00			23a	OCC	10168	22211
	Sus. + E2{1}	27	57	191	3	1.00	1.00			23a	OCC	6769	22211
	Sus. + E3{1}	48	53	362	6	1.00	1.00			23a	OCC	10652	22211
	Sus. + E4{1}	8	56	172	3	1.00	1.00			23a	OCC	6316	22211
	Sus. + E5{1}	12	60	341	6	1.00	1.00			23a	OCC	10154	22211
	Sus. + E6{1}	28	52	192	3	1.00	1.00			23a	OCC	6780	22211
	Sus. + E7{1}	47	62	361	6	1.00	1.00			23a	OCC	10641	22211
	Sus. + E8{1}	7	54	173	3	1.00	1.00			23a	OCC	6330	22211
C23	- Max P{1}									(3a)	HOOP	5642	16700
	GR + Max P{1}	2132	20	41	2	1.00	1.00	1.00	1.00	23a	SUST	3139	16700
	TR:Amb to T1{1}	57	22	83	2	1.00	1.00	1.00	1.00	(17)	DISP	1883	25050
	Amb to T1{1}	57	22	83	2	1.00	1.00	1.00	1.00	(17)	DISP	1883	25050
	Sus. + E1{1}	20	48	157	6	1.00	1.00			23a	OCC	5860	22211
	Sus. + E2{1}	20	27	94	3	1.00	1.00			23a	OCC	4369	22211
	Sus. + E3{1}	40	49	176	6	1.00	1.00			23a	OCC	6300	22211
	Sus. + E4{1}	0	26	76	3	1.00	1.00			23a	OCC	3937	22211
	Sus. + E5{1}	20	46	157	6	1.00	1.00			23a	OCC	5842	22211
	Sus. + E6{1}	20	29	94	3	1.00	1.00			23a	OCC	4382	22211
	Sus. + E7{1}	40	47	176	6	1.00	1.00			23a	OCC	6284	22211
	Sus. + E8{1}	1	28	76	3	1.00	1.00			23a	OCC	3954	22211
C23	+ Max P{1}									(3a)	HOOP	5642	16700
	GR + Max P{1}	2132	20	41	2	1.00	1.00	1.00	1.00	23a	SUST	3139	16700
	TR:Amb to T1{1}	45	22	82	2	1.00	1.00	1.00	1.00	(17)	DISP	1872	25050
	Amb to T1{1}	45	22	82	2	1.00	1.00	1.00	1.00	(17)	DISP	1872	25050
	Sus. + E1{1}	20	48	157	6	1.00	1.00			23a	OCC	5859	22211
	Sus. + E2{1}	20	27	94	3	1.00	1.00			23a	OCC	4368	22211
	Sus. + E3{1}	40	49	176	6	1.00	1.00			23a	OCC	6299	22211
	Sus. + E4{1}	0	26	76	3	1.00	1.00			23a	OCC	3937	22211
	Sus. + E5{1}	20	46	157	6	1.00	1.00			23a	OCC	5842	22211
	Sus. + E6{1}	20	29	94	3	1.00	1.00			23a	OCC	4381	22211
	Sus. + E7{1}	40	47	176	6	1.00	1.00			23a	OCC	6284	22211
	Sus. + E8{1}	1	28	76	3	1.00	1.00			23a	OCC	3953	22211

ASME B31.3 (2016) CODE COMPLIANCE
(Moments in ft-lb , Force in lbf) (Stress in psi)

Point name	Load combination	Axial Force	In-Pl. Moment	Out-Pl. Moment	Torsion Moment	S.I.F In	S.I.F Out	Index/SIF Ax.	Index/SIF Tor.	Eq. no.	Load type	Code Stress	Code Allow.
C09 N-	Max P{1}									(3a)	HOOP	5642	16700
	GR + Max P{1}	2132	11	50	2	1.00	1.00	1.00	1.00	23a	SUST	3277	16700
	TR:Amb to T1{1}	45	18	103	2	1.00	1.00	1.00	1.00	(17)	DISP	2273	25050
	Amb to T1{1}	45	18	103	2	1.00	1.00	1.00	1.00	(17)	DISP	2273	25050
	Sus. + E1{1}	21	33	191	6	1.00	1.00			23a	OCC	6518	22211
	Sus. + E2{1}	19	18	112	3	1.00	1.00			23a	OCC	4709	22211
	Sus. + E3{1}	39	34	213	6	1.00	1.00			23a	OCC	7024	22211
	Sus. + E4{1}	1	17	91	3	1.00	1.00			23a	OCC	4215	22211
	Sus. + E5{1}	21	33	191	6	1.00	1.00			23a	OCC	6505	22211
	Sus. + E6{1}	19	18	113	3	1.00	1.00			23a	OCC	4719	22211
	Sus. + E7{1}	39	33	212	6	1.00	1.00			23a	OCC	7014	22211
	Sus. + E8{1}	1	18	92	3	1.00	1.00			23a	OCC	4228	22211
C09 N+	Max P{1}									(3a)	HOOP	5642	16700
	GR + Max P{1}	2132	50	13	2	1.00	1.00	1.00	1.00	23a	SUST	3277	16700
	TR:Amb to T1{1}	45	102	21	2	1.00	1.00	1.00	1.00	(17)	DISP	2273	25050
	Amb to T1{1}	45	102	21	2	1.00	1.00	1.00	1.00	(17)	DISP	2273	25050
	Sus. + E1{1}	21	190	39	6	1.00	1.00			23a	OCC	6518	22211
	Sus. + E2{1}	19	112	21	3	1.00	1.00			23a	OCC	4709	22211
	Sus. + E3{1}	39	212	40	6	1.00	1.00			23a	OCC	7024	22211
	Sus. + E4{1}	1	91	20	3	1.00	1.00			23a	OCC	4215	22211
	Sus. + E5{1}	21	189	38	6	1.00	1.00			23a	OCC	6505	22211
	Sus. + E6{1}	19	112	21	3	1.00	1.00			23a	OCC	4719	22211
	Sus. + E7{1}	39	211	40	6	1.00	1.00			23a	OCC	7014	22211
	Sus. + E8{1}	1	91	20	3	1.00	1.00			23a	OCC	4228	22211
C09 F-	Max P{1}									(3a)	HOOP	5642	16700
	GR + Max P{1}	2139	77	12	0	1.00	1.00	1.00	1.00	23a	SUST	3891	16700
	TR:Amb to T1{1}	40	87	20	1	1.00	1.00	1.00	1.00	(17)	DISP	1957	25050
	Amb to T1{1}	40	87	20	1	1.00	1.00	1.00	1.00	(17)	DISP	1957	25050
	Sus. + E1{1}	43	285	34	3	1.00	1.00			23a	OCC	8643	22211
	Sus. + E2{1}	13	140	21	0	1.00	1.00			23a	OCC	5330	22211
	Sus. + E3{1}	49	289	36	2	1.00	1.00			23a	OCC	8744	22211
	Sus. + E4{1}	7	136	20	1	1.00	1.00			23a	OCC	5244	22211
	Sus. + E5{1}	43	284	38	3	1.00	1.00			23a	OCC	8632	22211
	Sus. + E6{1}	13	141	18	0	1.00	1.00			23a	OCC	5340	22211
	Sus. + E7{1}	49	288	39	2	1.00	1.00			23a	OCC	8734	22211
	Sus. + E8{1}	7	137	17	1	1.00	1.00			23a	OCC	5255	22211
C09 F+	Max P{1}									(3a)	HOOP	5642	16700
	GR + Max P{1}	2139	18	76	0	1.00	1.00	1.00	1.00	23a	SUST	3891	16700
	TR:Amb to T1{1}	40	13	89	1	1.00	1.00	1.00	1.00	(17)	DISP	1957	25050
	Amb to T1{1}	40	13	89	1	1.00	1.00	1.00	1.00	(17)	DISP	1957	25050
	Sus. + E1{1}	43	24	285	3	1.00	1.00			23a	OCC	8643	22211
	Sus. + E2{1}	13	23	139	0	1.00	1.00			23a	OCC	5330	22211
	Sus. + E3{1}	49	25	289	2	1.00	1.00			23a	OCC	8744	22211
	Sus. + E4{1}	7	22	136	1	1.00	1.00			23a	OCC	5244	22211
	Sus. + E5{1}	43	27	284	3	1.00	1.00			23a	OCC	8632	22211
	Sus. + E6{1}	13	19	140	0	1.00	1.00			23a	OCC	5340	22211
	Sus. + E7{1}	49	28	288	2	1.00	1.00			23a	OCC	8734	22211
	Sus. + E8{1}	7	18	136	1	1.00	1.00			23a	OCC	5255	22211

Primary Piping
04/24/2020 2018719 BENTLEY
07:34 AM AutoPIPE Nuclear 12.00.00.16 RESULT PAGE 358

ASME B31.3 (2016) CODE COMPLIANCE
(Moments in ft-lb , Force in lbf) (Stress in psi)

Point name	Load combination	Axial Force	In-Pl. Moment	Out-Pl. Moment	Torsion Moment	S.I.F In	S.I.F Out	Index/SIF Ax.	Index/SIF Tor.	Eq. no.	Load type	Code Stress	Code Allow.
C24	- Max P{1}									(3a)	HOOP	5642	16700
	GR + Max P{1}	2139	26	71	0	1.00	1.00	1.00	1.00	23a	SUST	3832	16700
	TR:Amb to T1{1}	40	18	66	1	1.00	1.00	1.00	1.00	(17)	DISP	1512	25050
	Amb to T1{1}	40	18	66	1	1.00	1.00	1.00	1.00	(17)	DISP	1512	25050
	Sus. + E1{1}	43	36	267	3	1.00	1.00			23a	OCC	8295	22211
	Sus. + E2{1}	12	33	128	0	1.00	1.00			23a	OCC	5127	22211
	Sus. + E3{1}	48	38	267	2	1.00	1.00			23a	OCC	8317	22211
	Sus. + E4{1}	7	32	127	1	1.00	1.00			23a	OCC	5115	22211
	Sus. + E5{1}	43	41	266	3	1.00	1.00			23a	OCC	8289	22211
	Sus. + E6{1}	12	28	128	0	1.00	1.00			23a	OCC	5129	22211
	Sus. + E7{1}	48	43	267	2	1.00	1.00			23a	OCC	8313	22211
	Sus. + E8{1}	7	26	128	1	1.00	1.00			23a	OCC	5121	22211
C24	+ Max P{1}									(3a)	HOOP	5642	16700
	GR + Max P{1}	2139	26	71	0	1.00	1.00	1.00	1.00	23a	SUST	3832	16700
	TR:Amb to T1{1}	72	18	66	1	1.00	1.00	1.00	1.00	(17)	DISP	1542	25050
	Amb to T1{1}	72	18	66	1	1.00	1.00	1.00	1.00	(17)	DISP	1542	25050
	Sus. + E1{1}	43	36	267	3	1.00	1.00			23a	OCC	8294	22211
	Sus. + E2{1}	12	33	128	0	1.00	1.00			23a	OCC	5126	22211
	Sus. + E3{1}	48	38	267	2	1.00	1.00			23a	OCC	8316	22211
	Sus. + E4{1}	7	32	127	1	1.00	1.00			23a	OCC	5115	22211
	Sus. + E5{1}	43	41	266	3	1.00	1.00			23a	OCC	8289	22211
	Sus. + E6{1}	12	28	128	0	1.00	1.00			23a	OCC	5128	22211
	Sus. + E7{1}	48	43	267	2	1.00	1.00			23a	OCC	8313	22211
	Sus. + E8{1}	7	26	128	1	1.00	1.00			23a	OCC	5121	22211
C25	- Max P{1}									(3a)	HOOP	5642	16700
	GR + Max P{1}	2137	45	17	0	1.00	1.00	1.00	1.00	23a	SUST	3202	16700
	TR:Amb to T1{1}	72	5	61	1	1.00	1.00	1.00	1.00	(17)	DISP	1386	25050
	Amb to T1{1}	72	5	61	1	1.00	1.00	1.00	1.00	(17)	DISP	1386	25050
	Sus. + E1{1}	32	51	101	3	1.00	1.00			23a	OCC	5130	22211
	Sus. + E2{1}	2	47	31	0	1.00	1.00			23a	OCC	3529	22211
	Sus. + E3{1}	38	52	66	2	1.00	1.00			23a	OCC	4356	22211
	Sus. + E4{1}	3	48	68	1	1.00	1.00			23a	OCC	4342	22211
	Sus. + E5{1}	33	45	101	3	1.00	1.00			23a	OCC	5118	22211
	Sus. + E6{1}	2	49	32	0	1.00	1.00			23a	OCC	3544	22211
	Sus. + E7{1}	38	45	66	2	1.00	1.00			23a	OCC	4340	22211
	Sus. + E8{1}	4	49	68	1	1.00	1.00			23a	OCC	4350	22211
C25	+ Max P{1}									(3a)	HOOP	5642	16700
	GR + Max P{1}	2137	45	17	0	1.00	1.00	1.00	1.00	23a	SUST	3202	16700
	TR:Amb to T1{1}	114	5	61	1	1.00	1.00	1.00	1.00	(17)	DISP	1425	25050
	Amb to T1{1}	114	5	61	1	1.00	1.00	1.00	1.00	(17)	DISP	1425	25050
	Sus. + E1{1}	32	51	101	3	1.00	1.00			23a	OCC	5130	22211
	Sus. + E2{1}	2	47	31	0	1.00	1.00			23a	OCC	3529	22211
	Sus. + E3{1}	38	52	66	2	1.00	1.00			23a	OCC	4356	22211
	Sus. + E4{1}	3	48	68	1	1.00	1.00			23a	OCC	4342	22211
	Sus. + E5{1}	33	45	101	3	1.00	1.00			23a	OCC	5118	22211
	Sus. + E6{1}	2	49	32	0	1.00	1.00			23a	OCC	3543	22211
	Sus. + E7{1}	38	45	66	2	1.00	1.00			23a	OCC	4340	22211
	Sus. + E8{1}	4	49	68	1	1.00	1.00			23a	OCC	4350	22211

ASME B31.3 (2016) CODE COMPLIANCE
(Moments in ft-lb , Force in lbf) (Stress in psi)

Point name	Load combination	Axial Force	In-Pl. Moment	Out-Pl. Moment	Torsion Moment	S.I.F In	S.I.F Out	Index/SIF Ax.	Index/SIF Tor.	Eq. no.	Load type	Code Stress	Code Allow.
C26	- Max P{1}									(3a)	HOOP	5642	16700
	GR + Max P{1}	2136	41	7	0	1.00	1.00	1.00	1.00	23a	SUST	3057	16700
	TR:Amb to T1{1}	114	1	3	1	1.00	1.00	1.00	1.00	(17)	DISP	185	25050
	Amb to T1{1}	114	1	3	1	1.00	1.00	1.00	1.00	(17)	DISP	185	25050
	Sus. + E1{1}	22	44	11	3	1.00	1.00			23a	OCC	3195	22211
	Sus. + E2{1}	8	45	14	0	1.00	1.00			23a	OCC	3253	22211
	Sus. + E3{1}	28	44	12	2	1.00	1.00			23a	OCC	3223	22211
	Sus. + E4{1}	13	45	20	1	1.00	1.00			23a	OCC	3384	22211
	Sus. + E5{1}	23	45	11	3	1.00	1.00			23a	OCC	3210	22211
	Sus. + E6{1}	9	44	14	0	1.00	1.00			23a	OCC	3240	22211
	Sus. + E7{1}	28	45	12	2	1.00	1.00			23a	OCC	3235	22211
	Sus. + E8{1}	14	44	21	1	1.00	1.00			23a	OCC	3386	22211
C26	+ Max P{1}									(3a)	HOOP	5642	16700
	GR + Max P{1}	2136	41	7	0	1.00	1.00	1.00	1.00	23a	SUST	3057	16700
	TR:Amb to T1{1}	158	1	3	1	1.00	1.00	1.00	1.00	(17)	DISP	225	25050
	Amb to T1{1}	158	1	3	1	1.00	1.00	1.00	1.00	(17)	DISP	225	25050
	Sus. + E1{1}	22	44	11	3	1.00	1.00			23a	OCC	3195	22211
	Sus. + E2{1}	8	45	14	0	1.00	1.00			23a	OCC	3253	22211
	Sus. + E3{1}	28	44	12	2	1.00	1.00			23a	OCC	3223	22211
	Sus. + E4{1}	13	45	20	1	1.00	1.00			23a	OCC	3384	22211
	Sus. + E5{1}	23	45	11	3	1.00	1.00			23a	OCC	3210	22211
	Sus. + E6{1}	9	44	14	0	1.00	1.00			23a	OCC	3240	22211
	Sus. + E7{1}	28	45	12	2	1.00	1.00			23a	OCC	3235	22211
	Sus. + E8{1}	14	44	21	1	1.00	1.00			23a	OCC	3386	22211
C28	- Max P{1}									(3a)	HOOP	5642	16700
	GR + Max P{1}	2134	37	3	0	1.00	1.00	1.00	1.00	23a	SUST	2959	16700
	TR:Amb to T1{1}	158	1	0	1	1.00	1.00	1.00	1.00	(17)	DISP	169	25050
	Amb to T1{1}	158	1	0	1	1.00	1.00	1.00	1.00	(17)	DISP	169	25050
	Sus. + E1{1}	12	39	9	3	1.00	1.00			23a	OCC	3126	22211
	Sus. + E2{1}	18	40	4	0	1.00	1.00			23a	OCC	3051	22211
	Sus. + E3{1}	17	39	5	2	1.00	1.00			23a	OCC	3058	22211
	Sus. + E4{1}	23	41	7	1	1.00	1.00			23a	OCC	3108	22211
	Sus. + E5{1}	13	42	9	3	1.00	1.00			23a	OCC	3166	22211
	Sus. + E6{1}	19	40	4	0	1.00	1.00			23a	OCC	3052	22211
	Sus. + E7{1}	18	41	5	2	1.00	1.00			23a	OCC	3091	22211
	Sus. + E8{1}	24	40	7	1	1.00	1.00			23a	OCC	3096	22211
C28	+ Max P{1}									(3a)	HOOP	5642	16700
	GR + Max P{1}	2133	37	3	0	1.00	1.00	1.00	1.00	23a	SUST	2959	16700
	TR:Amb to T1{1}	142	1	0	1	1.00	1.00	1.00	1.00	(17)	DISP	154	25050
	Amb to T1{1}	142	1	0	1	1.00	1.00	1.00	1.00	(17)	DISP	154	25050
	Sus. + E1{1}	12	39	9	3	1.00	1.00			23a	OCC	3126	22211
	Sus. + E2{1}	18	40	4	0	1.00	1.00			23a	OCC	3051	22211
	Sus. + E3{1}	17	39	5	2	1.00	1.00			23a	OCC	3058	22211
	Sus. + E4{1}	23	41	7	1	1.00	1.00			23a	OCC	3108	22211
	Sus. + E5{1}	13	42	9	3	1.00	1.00			23a	OCC	3166	22211
	Sus. + E6{1}	19	40	4	0	1.00	1.00			23a	OCC	3052	22211
	Sus. + E7{1}	18	41	5	2	1.00	1.00			23a	OCC	3090	22211
	Sus. + E8{1}	24	40	7	1	1.00	1.00			23a	OCC	3096	22211

ASME B31.3 (2016) CODE COMPLIANCE
(Moments in ft-lb , Force in lbf) (Stress in psi)

Point name	Load combination	Axial Force	In-Pl. Moment	Out-Pl. Moment	Torsion Moment	S.I.F In	S.I.F Out	Index/SIF Ax.	Index/SIF Tor.	Eq. no.	Load type	Code Stress	Code Allow.
C29	- Max P{1}									(3a)	HOOP	5642	16700
	GR + Max P{1}	2132	55	13	0	1.00	1.00	1.00	1.00	23a	SUST	3388	16700
	TR:Amb to T1{1}	142	2	53	1	1.00	1.00	1.00	1.00	(17)	DISP	1270	25050
	Amb to T1{1}	142	2	53	1	1.00	1.00	1.00	1.00	(17)	DISP	1270	25050
	Sus. + E1{1}	2	64	61	3	1.00	1.00			23a	OCC	4492	22211
	Sus. + E2{1}	28	61	95	0	1.00	1.00			23a	OCC	5275	22211
	Sus. + E3{1}	7	61	114	2	1.00	1.00			23a	OCC	5689	22211
	Sus. + E4{1}	33	58	76	1	1.00	1.00			23a	OCC	4841	22211
	Sus. + E5{1}	3	55	62	3	1.00	1.00			23a	OCC	4502	22211
	Sus. + E6{1}	29	58	96	0	1.00	1.00			23a	OCC	5287	22211
	Sus. + E7{1}	8	58	114	2	1.00	1.00			23a	OCC	5669	22211
	Sus. + E8{1}	34	60	75	1	1.00	1.00			23a	OCC	4819	22211
C29	+ Max P{1}									(3a)	HOOP	5642	16700
	GR + Max P{1}	2132	55	13	0	1.00	1.00	1.00	1.00	23a	SUST	3388	16700
	TR:Amb to T1{1}	94	2	53	1	1.00	1.00	1.00	1.00	(17)	DISP	1225	25050
	Amb to T1{1}	94	2	53	1	1.00	1.00	1.00	1.00	(17)	DISP	1225	25050
	Sus. + E1{1}	2	64	61	3	1.00	1.00			23a	OCC	4492	22211
	Sus. + E2{1}	28	61	95	0	1.00	1.00			23a	OCC	5275	22211
	Sus. + E3{1}	7	61	114	2	1.00	1.00			23a	OCC	5689	22211
	Sus. + E4{1}	33	58	76	1	1.00	1.00			23a	OCC	4841	22211
	Sus. + E5{1}	3	55	62	3	1.00	1.00			23a	OCC	4502	22211
	Sus. + E6{1}	29	58	96	0	1.00	1.00			23a	OCC	5287	22211
	Sus. + E7{1}	8	58	114	2	1.00	1.00			23a	OCC	5669	22211
	Sus. + E8{1}	34	60	75	1	1.00	1.00			23a	OCC	4819	22211
C31	- Max P{1}									(3a)	HOOP	5642	16700
	GR + Max P{1}	2130	36	32	0	1.00	1.00	1.00	1.00	23a	SUST	3200	16700
	TR:Amb to T1{1}	94	6	129	1	1.00	1.00	1.00	1.00	(17)	DISP	2858	25050
	Amb to T1{1}	94	6	129	1	1.00	1.00	1.00	1.00	(17)	DISP	2858	25050
	Sus. + E1{1}	10	49	46	3	1.00	1.00			23a	OCC	3647	22211
	Sus. + E2{1}	40	37	46	0	1.00	1.00			23a	OCC	3567	22211
	Sus. + E3{1}	5	40	94	2	1.00	1.00			23a	OCC	4625	22211
	Sus. + E4{1}	45	45	123	1	1.00	1.00			23a	OCC	5324	22211
	Sus. + E5{1}	9	56	45	3	1.00	1.00			23a	OCC	3755	22211
	Sus. + E6{1}	41	44	47	0	1.00	1.00			23a	OCC	3625	22211
	Sus. + E7{1}	4	47	95	2	1.00	1.00			23a	OCC	4655	22211
	Sus. + E8{1}	46	38	124	1	1.00	1.00			23a	OCC	5330	22211
C31	+ Max P{1}									(3a)	HOOP	5642	16700
	GR + Max P{1}	2130	36	32	0	1.00	1.00	1.00	1.00	23a	SUST	3199	16700
	TR:Amb to T1{1}	64	6	129	1	1.00	1.00	1.00	1.00	(17)	DISP	2831	25050
	Amb to T1{1}	64	6	129	1	1.00	1.00	1.00	1.00	(17)	DISP	2831	25050
	Sus. + E1{1}	10	49	46	3	1.00	1.00			23a	OCC	3647	22211
	Sus. + E2{1}	40	37	46	0	1.00	1.00			23a	OCC	3567	22211
	Sus. + E3{1}	5	40	94	2	1.00	1.00			23a	OCC	4625	22211
	Sus. + E4{1}	45	45	123	1	1.00	1.00			23a	OCC	5324	22211
	Sus. + E5{1}	9	56	45	3	1.00	1.00			23a	OCC	3755	22211
	Sus. + E6{1}	41	44	47	0	1.00	1.00			23a	OCC	3625	22211
	Sus. + E7{1}	4	47	95	2	1.00	1.00			23a	OCC	4655	22211
	Sus. + E8{1}	46	38	124	1	1.00	1.00			23a	OCC	5330	22211

ASME B31.3 (2016) CODE COMPLIANCE
(Moments in ft-lb , Force in lbf) (Stress in psi)

Point name	Load combination	Axial Force	In-Pl. Moment	Out-Pl. Moment	Torsion Moment	S.I.F In	S.I.F Out	Index/SIF Ax.	Index/SIF Tor.	Eq. no.	Load type	Code Stress	Code Allow.
C16 N-	Max P{1}									(3a)	HOOP	5642	16700
	GR + Max P{1}	2130	27	34	0	1.00	1.00	1.00	1.00	23a	SUST	3081	16700
	TR:Amb to T1{1}	64	4	150	1	1.00	1.00	1.00	1.00	(17)	DISP	3266	25050
	Amb to T1{1}	64	4	150	1	1.00	1.00	1.00	1.00	(17)	DISP	3266	25050
	Sus. + E1{1}	11	36	48	3	1.00	1.00			23a	OCC	3479	22211
	Sus. + E2{1}	40	28	48	0	1.00	1.00			23a	OCC	3446	22211
	Sus. + E3{1}	5	29	101	2	1.00	1.00			23a	OCC	4613	22211
	Sus. + E4{1}	46	33	130	1	1.00	1.00			23a	OCC	5297	22211
	Sus. + E5{1}	10	41	47	3	1.00	1.00			23a	OCC	3542	22211
	Sus. + E6{1}	42	33	49	0	1.00	1.00			23a	OCC	3489	22211
	Sus. + E7{1}	4	34	102	2	1.00	1.00			23a	OCC	4634	22211
	Sus. + E8{1}	47	28	130	1	1.00	1.00			23a	OCC	5308	22211
C16 N+	Max P{1}									(3a)	HOOP	5642	16700
	GR + Max P{1}	2130	33	27	0	1.00	1.00	1.00	1.00	23a	SUST	3081	16700
	TR:Amb to T1{1}	64	150	8	1	1.00	1.00	1.00	1.00	(17)	DISP	3266	25050
	Amb to T1{1}	64	150	8	1	1.00	1.00	1.00	1.00	(17)	DISP	3266	25050
	Sus. + E1{1}	11	47	37	3	1.00	1.00			23a	OCC	3479	22211
	Sus. + E2{1}	40	47	28	0	1.00	1.00			23a	OCC	3446	22211
	Sus. + E3{1}	5	101	28	2	1.00	1.00			23a	OCC	4613	22211
	Sus. + E4{1}	46	129	36	1	1.00	1.00			23a	OCC	5297	22211
	Sus. + E5{1}	10	46	42	3	1.00	1.00			23a	OCC	3542	22211
	Sus. + E6{1}	42	48	33	0	1.00	1.00			23a	OCC	3489	22211
	Sus. + E7{1}	4	101	33	2	1.00	1.00			23a	OCC	4634	22211
	Sus. + E8{1}	47	129	31	1	1.00	1.00			23a	OCC	5308	22211
C16 F-	Max P{1}									(3a)	HOOP	5642	16700
	GR + Max P{1}	2125	22	1	5	1.00	1.00	1.00	1.00	23a	SUST	2597	16700
	TR:Amb to T1{1}	41	80	8	1	1.00	1.00	1.00	1.00	(17)	DISP	1752	25050
	Amb to T1{1}	41	80	8	1	1.00	1.00	1.00	1.00	(17)	DISP	1752	25050
	Sus. + E1{1}	6	58	24	19	1.00	1.00			23a	OCC	3625	22211
	Sus. + E2{1}	5	132	6	7	1.00	1.00			23a	OCC	5103	22211
	Sus. + E3{1}	4	137	11	14	1.00	1.00			23a	OCC	5227	22211
	Sus. + E4{1}	3	54	10	9	1.00	1.00			23a	OCC	3358	22211
	Sus. + E5{1}	6	54	25	19	1.00	1.00			23a	OCC	3572	22211
	Sus. + E6{1}	5	136	7	7	1.00	1.00			23a	OCC	5184	22211
	Sus. + E7{1}	4	133	12	14	1.00	1.00			23a	OCC	5147	22211
	Sus. + E8{1}	3	58	9	8	1.00	1.00			23a	OCC	3435	22211
C16 F+	Max P{1}									(3a)	HOOP	5642	16700
	GR + Max P{1}	2125	2	22	5	1.00	1.00	1.00	1.00	23a	SUST	2597	16700
	TR:Amb to T1{1}	41	6	80	1	1.00	1.00	1.00	1.00	(17)	DISP	1752	25050
	Amb to T1{1}	41	6	80	1	1.00	1.00	1.00	1.00	(17)	DISP	1752	25050
	Sus. + E1{1}	6	26	57	19	1.00	1.00			23a	OCC	3625	22211
	Sus. + E2{1}	5	3	132	7	1.00	1.00			23a	OCC	5103	22211
	Sus. + E3{1}	4	15	137	14	1.00	1.00			23a	OCC	5227	22211
	Sus. + E4{1}	3	12	54	9	1.00	1.00			23a	OCC	3358	22211
	Sus. + E5{1}	6	27	53	19	1.00	1.00			23a	OCC	3572	22211
	Sus. + E6{1}	5	4	136	7	1.00	1.00			23a	OCC	5184	22211
	Sus. + E7{1}	4	16	133	14	1.00	1.00			23a	OCC	5147	22211
	Sus. + E8{1}	3	11	57	8	1.00	1.00			23a	OCC	3435	22211

Primary Piping
04/24/2020 2018719 BENTLEY
07:34 AM AutoPIPE Nuclear 12.00.00.16 RESULT PAGE 362

ASME B31.3 (2016) CODE COMPLIANCE
(Moments in ft-lb , Force in lbf) (Stress in psi)

Point name	Load combination	Axial Force	In-Pl. Moment	Out-Pl. Moment	Torsion Moment	S.I.F In	S.I.F Out	Index/SIF Ax.	Index/SIF Tor.	Eq. no.	Load type	Code Stress	Code Allow.
C32	- Max P{1}									(3a)	HOOP	5642	16700
	GR + Max P{1}	2125	8	17	5	1.00	1.00	1.00	1.00	23a	SUST	2540	16700
	TR:Amb to T1{1}	41	8	48	1	1.00	1.00	1.00	1.00	(17)	DISP	1076	25050
	Amb to T1{1}	41	8	48	1	1.00	1.00	1.00	1.00	(17)	DISP	1076	25050
	Sus. + E1{1}	6	37	61	19	1.00	1.00			23a	OCC	3778	22211
	Sus. + E2{1}	6	10	151	7	1.00	1.00			23a	OCC	5568	22211
	Sus. + E3{1}	3	23	138	14	1.00	1.00			23a	OCC	5301	22211
	Sus. + E4{1}	2	19	75	9	1.00	1.00			23a	OCC	3874	22211
	Sus. + E5{1}	6	37	57	19	1.00	1.00			23a	OCC	3700	22211
	Sus. + E6{1}	6	10	155	7	1.00	1.00			23a	OCC	5666	22211
	Sus. + E7{1}	3	23	134	14	1.00	1.00			23a	OCC	5202	22211
	Sus. + E8{1}	2	19	80	8	1.00	1.00			23a	OCC	3973	22211
C32	+ Max P{1}									(3a)	HOOP	5642	16700
	GR + Max P{1}	2125	8	17	5	1.00	1.00	1.00	1.00	23a	SUST	2540	16700
	TR:Amb to T1{1}	42	8	48	1	1.00	1.00	1.00	1.00	(17)	DISP	1077	25050
	Amb to T1{1}	42	8	48	1	1.00	1.00	1.00	1.00	(17)	DISP	1077	25050
	Sus. + E1{1}	6	37	61	20	1.00	1.00			23a	OCC	3778	22211
	Sus. + E2{1}	6	10	151	7	1.00	1.00			23a	OCC	5568	22211
	Sus. + E3{1}	3	23	138	15	1.00	1.00			23a	OCC	5300	22211
	Sus. + E4{1}	2	19	75	9	1.00	1.00			23a	OCC	3874	22211
	Sus. + E5{1}	6	37	57	20	1.00	1.00			23a	OCC	3700	22211
	Sus. + E6{1}	6	10	155	7	1.00	1.00			23a	OCC	5666	22211
	Sus. + E7{1}	3	23	134	15	1.00	1.00			23a	OCC	5201	22211
	Sus. + E8{1}	2	19	80	9	1.00	1.00			23a	OCC	3973	22211
C33	- Max P{1}									(3a)	HOOP	5642	16700
	GR + Max P{1}	2124	22	6	5	1.00	1.00	1.00	1.00	23a	SUST	2627	16700
	TR:Amb to T1{1}	42	11	68	1	1.00	1.00	1.00	1.00	(17)	DISP	1508	25050
	Amb to T1{1}	42	11	68	1	1.00	1.00	1.00	1.00	(17)	DISP	1508	25050
	Sus. + E1{1}	9	60	75	20	1.00	1.00			23a	OCC	4443	22211
	Sus. + E2{1}	9	27	143	7	1.00	1.00			23a	OCC	5730	22211
	Sus. + E3{1}	0	47	94	15	1.00	1.00			23a	OCC	4709	22211
	Sus. + E4{1}	1	30	142	9	1.00	1.00			23a	OCC	5701	22211
	Sus. + E5{1}	9	58	71	20	1.00	1.00			23a	OCC	4340	22211
	Sus. + E6{1}	9	26	146	7	1.00	1.00			23a	OCC	5795	22211
	Sus. + E7{1}	0	46	91	15	1.00	1.00			23a	OCC	4638	22211
	Sus. + E8{1}	1	32	146	9	1.00	1.00			23a	OCC	5806	22211
C33	+ Max P{1}									(3a)	HOOP	5642	16700
	GR + Max P{1}	2124	22	6	5	1.00	1.00	1.00	1.00	23a	SUST	2627	16700
	TR:Amb to T1{1}	40	11	68	1	1.00	1.00	1.00	1.00	(17)	DISP	1505	25050
	Amb to T1{1}	40	11	68	1	1.00	1.00	1.00	1.00	(17)	DISP	1505	25050
	Sus. + E1{1}	9	60	75	19	1.00	1.00			23a	OCC	4443	22211
	Sus. + E2{1}	9	27	143	7	1.00	1.00			23a	OCC	5730	22211
	Sus. + E3{1}	0	47	94	15	1.00	1.00			23a	OCC	4709	22211
	Sus. + E4{1}	1	30	142	8	1.00	1.00			23a	OCC	5701	22211
	Sus. + E5{1}	9	58	71	19	1.00	1.00			23a	OCC	4340	22211
	Sus. + E6{1}	9	26	146	7	1.00	1.00			23a	OCC	5795	22211
	Sus. + E7{1}	0	46	91	15	1.00	1.00			23a	OCC	4638	22211
	Sus. + E8{1}	1	32	146	8	1.00	1.00			23a	OCC	5805	22211

ASME B31.3 (2016) CODE COMPLIANCE
(Moments in ft-lb , Force in lbf) (Stress in psi)

Point name	Load combination	Axial Force	In-Pl. Moment	Out-Pl. Moment	Torsion Moment	S.I.F In	S.I.F Out	Index/SIF Ax.	Index/SIF Tor.	Eq. no.	Load type	Code Stress	Code Allow.
C19 N-	Max P{1}									(3a)	HOOP	5642	16700
	GR + Max P{1}	2124	14	10	5	1.00	1.00	1.00	1.00	23a	SUST	2494	16700
	TR:Amb to T1{1}	40	8	97	1	1.00	1.00	1.00	1.00	(17)	DISP	2116	25050
	Amb to T1{1}	40	8	97	1	1.00	1.00	1.00	1.00	(17)	DISP	2116	25050
	Sus. + E1{1}	10	45	47	19	1.00	1.00			23a	OCC	3630	22211
	Sus. + E2{1}	10	17	143	7	1.00	1.00			23a	OCC	5503	22211
	Sus. + E3{1}	1	35	88	15	1.00	1.00			23a	OCC	4337	22211
	Sus. + E4{1}	1	21	115	8	1.00	1.00			23a	OCC	4879	22211
	Sus. + E5{1}	10	44	43	19	1.00	1.00			23a	OCC	3563	22211
	Sus. + E6{1}	10	16	145	7	1.00	1.00			23a	OCC	5562	22211
	Sus. + E7{1}	0	35	86	15	1.00	1.00			23a	OCC	4279	22211
	Sus. + E8{1}	1	21	119	8	1.00	1.00			23a	OCC	4967	22211
C19 N+	Max P{1}									(3a)	HOOP	5642	16700
	GR + Max P{1}	2124	10	14	5	1.00	1.00	1.00	1.00	23a	SUST	2494	16700
	TR:Amb to T1{1}	40	97	11	1	1.00	1.00	1.00	1.00	(17)	DISP	2116	25050
	Amb to T1{1}	40	97	11	1	1.00	1.00	1.00	1.00	(17)	DISP	2116	25050
	Sus. + E1{1}	10	47	44	19	1.00	1.00			23a	OCC	3630	22211
	Sus. + E2{1}	10	142	21	7	1.00	1.00			23a	OCC	5503	22211
	Sus. + E3{1}	1	88	33	15	1.00	1.00			23a	OCC	4337	22211
	Sus. + E4{1}	1	115	18	8	1.00	1.00			23a	OCC	4879	22211
	Sus. + E5{1}	10	43	44	19	1.00	1.00			23a	OCC	3563	22211
	Sus. + E6{1}	10	145	21	7	1.00	1.00			23a	OCC	5562	22211
	Sus. + E7{1}	0	86	33	15	1.00	1.00			23a	OCC	4279	22211
	Sus. + E8{1}	1	119	18	8	1.00	1.00			23a	OCC	4967	22211
C19 F-	Max P{1}									(3a)	HOOP	5642	16700
	GR + Max P{1}	2129	28	15	0	1.00	1.00	1.00	1.00	23a	SUST	2813	16700
	TR:Amb to T1{1}	58	151	10	0	1.00	1.00	1.00	1.00	(17)	DISP	3304	25050
	Amb to T1{1}	58	151	10	0	1.00	1.00	1.00	1.00	(17)	DISP	3304	25050
	Sus. + E1{1}	60	140	29	1	1.00	1.00			23a	OCC	5427	22211
	Sus. + E2{1}	3	104	18	1	1.00	1.00			23a	OCC	4538	22211
	Sus. + E3{1}	14	41	22	1	1.00	1.00			23a	OCC	3171	22211
	Sus. + E4{1}	55	84	18	1	1.00	1.00			23a	OCC	4138	22211
	Sus. + E5{1}	58	139	33	1	1.00	1.00			23a	OCC	5425	22211
	Sus. + E6{1}	3	104	22	1	1.00	1.00			23a	OCC	4543	22211
	Sus. + E7{1}	14	41	26	1	1.00	1.00			23a	OCC	3217	22211
	Sus. + E8{1}	56	84	15	1	1.00	1.00			23a	OCC	4150	22211
C19 F+	Max P{1}									(3a)	HOOP	5642	16700
	GR + Max P{1}	2129	15	27	0	1.00	1.00	1.00	1.00	23a	SUST	2813	16700
	TR:Amb to T1{1}	58	6	152	0	1.00	1.00	1.00	1.00	(17)	DISP	3304	25050
	Amb to T1{1}	58	6	152	0	1.00	1.00	1.00	1.00	(17)	DISP	3304	25050
	Sus. + E1{1}	60	27	140	1	1.00	1.00			23a	OCC	5427	22211
	Sus. + E2{1}	3	17	103	1	1.00	1.00			23a	OCC	4538	22211
	Sus. + E3{1}	14	23	40	1	1.00	1.00			23a	OCC	3171	22211
	Sus. + E4{1}	55	18	83	1	1.00	1.00			23a	OCC	4138	22211
	Sus. + E5{1}	58	31	139	1	1.00	1.00			23a	OCC	5425	22211
	Sus. + E6{1}	3	20	103	1	1.00	1.00			23a	OCC	4543	22211
	Sus. + E7{1}	14	27	40	1	1.00	1.00			23a	OCC	3217	22211
	Sus. + E8{1}	56	17	84	1	1.00	1.00			23a	OCC	4150	22211

Primary Piping
04/24/2020 2018719 BENTLEY
07:34 AM AutoPIPE Nuclear 12.00.00.16 RESULT PAGE 364

ASME B31.3 (2016) CODE COMPLIANCE
(Moments in ft-lb , Force in lbf) (Stress in psi)

Point name	Load combination	Axial Force	In-Pl. Moment	Out-Pl. Moment	Torsion Moment	S.I.F In	S.I.F Out	Index/SIF Ax.	Index/SIF Tor.	Eq. no.	Load type	Code Stress	Code Allow.
C34	- Max P{1}									(3a)	HOOP	5642	16700
	GR + Max P{1}	2129	23	26	0	1.00	1.00	1.00	1.00	23a	SUST	2884	16700
	TR:Amb to T1{1}	58	9	132	0	1.00	1.00	1.00	1.00	(17)	DISP	2881	25050
	Amb to T1{1}	58	9	132	0	1.00	1.00	1.00	1.00	(17)	DISP	2881	25050
	Sus. + E1{1}	59	39	130	1	1.00	1.00			23a	OCC	5341	22211
	Sus. + E2{1}	2	25	94	1	1.00	1.00			23a	OCC	4438	22211
	Sus. + E3{1}	14	33	35	1	1.00	1.00			23a	OCC	3219	22211
	Sus. + E4{1}	55	27	78	1	1.00	1.00			23a	OCC	4133	22211
	Sus. + E5{1}	58	45	130	1	1.00	1.00			23a	OCC	5349	22211
	Sus. + E6{1}	3	30	94	1	1.00	1.00			23a	OCC	4445	22211
	Sus. + E7{1}	13	38	35	1	1.00	1.00			23a	OCC	3312	22211
	Sus. + E8{1}	56	24	79	1	1.00	1.00			23a	OCC	4144	22211
C34	+ Max P{1}									(3a)	HOOP	5642	16700
	GR + Max P{1}	2129	23	26	0	1.00	1.00	1.00	1.00	23a	SUST	2884	16700
	TR:Amb to T1{1}	90	9	132	0	1.00	1.00	1.00	1.00	(17)	DISP	2911	25050
	Amb to T1{1}	90	9	132	0	1.00	1.00	1.00	1.00	(17)	DISP	2911	25050
	Sus. + E1{1}	59	39	130	1	1.00	1.00			23a	OCC	5341	22211
	Sus. + E2{1}	2	25	94	1	1.00	1.00			23a	OCC	4438	22211
	Sus. + E3{1}	14	33	35	1	1.00	1.00			23a	OCC	3219	22211
	Sus. + E4{1}	55	27	78	1	1.00	1.00			23a	OCC	4133	22211
	Sus. + E5{1}	58	45	130	1	1.00	1.00			23a	OCC	5349	22211
	Sus. + E6{1}	3	30	94	1	1.00	1.00			23a	OCC	4445	22211
	Sus. + E7{1}	13	38	35	1	1.00	1.00			23a	OCC	3312	22211
	Sus. + E8{1}	56	24	79	1	1.00	1.00			23a	OCC	4144	22211
C35	- Max P{1}									(3a)	HOOP	5642	16700
	GR + Max P{1}	2127	46	1	0	1.00	1.00	1.00	1.00	23a	SUST	3150	16700
	TR:Amb to T1{1}	90	2	54	0	1.00	1.00	1.00	1.00	(17)	DISP	1237	25050
	Amb to T1{1}	90	2	54	0	1.00	1.00	1.00	1.00	(17)	DISP	1237	25050
	Sus. + E1{1}	49	55	81	1	1.00	1.00			23a	OCC	5013	22211
	Sus. + E2{1}	8	51	116	1	1.00	1.00			23a	OCC	5769	22211
	Sus. + E3{1}	4	53	97	1	1.00	1.00			23a	OCC	5326	22211
	Sus. + E4{1}	45	50	58	1	1.00	1.00			23a	OCC	4491	22211
	Sus. + E5{1}	48	47	82	1	1.00	1.00			23a	OCC	5037	22211
	Sus. + E6{1}	8	48	118	1	1.00	1.00			23a	OCC	5801	22211
	Sus. + E7{1}	3	47	95	1	1.00	1.00			23a	OCC	5291	22211
	Sus. + E8{1}	46	50	56	1	1.00	1.00			23a	OCC	4457	22211
C35	+ Max P{1}									(3a)	HOOP	5642	16700
	GR + Max P{1}	2126	46	1	0	1.00	1.00	1.00	1.00	23a	SUST	3149	16700
	TR:Amb to T1{1}	144	2	54	0	1.00	1.00	1.00	1.00	(17)	DISP	1287	25050
	Amb to T1{1}	144	2	54	0	1.00	1.00	1.00	1.00	(17)	DISP	1287	25050
	Sus. + E1{1}	49	55	81	1	1.00	1.00			23a	OCC	5012	22211
	Sus. + E2{1}	8	51	116	1	1.00	1.00			23a	OCC	5768	22211
	Sus. + E3{1}	4	53	97	1	1.00	1.00			23a	OCC	5325	22211
	Sus. + E4{1}	45	50	58	1	1.00	1.00			23a	OCC	4490	22211
	Sus. + E5{1}	48	47	82	1	1.00	1.00			23a	OCC	5036	22211
	Sus. + E6{1}	8	48	118	1	1.00	1.00			23a	OCC	5800	22211
	Sus. + E7{1}	3	47	95	1	1.00	1.00			23a	OCC	5290	22211
	Sus. + E8{1}	46	50	56	1	1.00	1.00			23a	OCC	4456	22211

Primary Piping
04/24/2020 2018719 BENTLEY
07:34 AM AutoPIPE Nuclear 12.00.00.16 RESULT PAGE 365

ASME B31.3 (2016) CODE COMPLIANCE
(Moments in ft-lb , Force in lbf) (Stress in psi)

Point name	Load combination	Axial Force	In-Pl. Moment	Out-Pl. Moment	Torsion Moment	S.I.F In	S.I.F Out	Index/SIF Ax.	Index/SIF Tor.	Eq. no.	Load type	Code Stress	Code Allow.
C36	- Max P{1}									(3a)	HOOP	5642	16700
	GR + Max P{1}	2125	39	1	0	1.00	1.00	1.00	1.00	23a	SUST	2976	16700
	TR:Amb to T1{1}	144	1	1	0	1.00	1.00	1.00	1.00	(17)	DISP	152	25050
	Amb to T1{1}	144	1	1	0	1.00	1.00	1.00	1.00	(17)	DISP	152	25050
	Sus. + E1{1}	38	40	6	1	1.00	1.00			23a	OCC	3144	22211
	Sus. + E2{1}	18	42	9	1	1.00	1.00			23a	OCC	3198	22211
	Sus. + E3{1}	7	40	5	1	1.00	1.00			23a	OCC	3077	22211
	Sus. + E4{1}	35	42	3	1	1.00	1.00			23a	OCC	3103	22211
	Sus. + E5{1}	38	44	7	1	1.00	1.00			23a	OCC	3188	22211
	Sus. + E6{1}	18	42	9	1	1.00	1.00			23a	OCC	3191	22211
	Sus. + E7{1}	7	43	4	1	1.00	1.00			23a	OCC	3111	22211
	Sus. + E8{1}	35	41	3	1	1.00	1.00			23a	OCC	3088	22211
C36	+ Max P{1}									(3a)	HOOP	5642	16700
	GR + Max P{1}	2125	39	1	0	1.00	1.00	1.00	1.00	23a	SUST	2976	16700
	TR:Amb to T1{1}	191	1	1	0	1.00	1.00	1.00	1.00	(17)	DISP	195	25050
	Amb to T1{1}	191	1	1	0	1.00	1.00	1.00	1.00	(17)	DISP	195	25050
	Sus. + E1{1}	38	40	6	1	1.00	1.00			23a	OCC	3143	22211
	Sus. + E2{1}	18	42	9	1	1.00	1.00			23a	OCC	3197	22211
	Sus. + E3{1}	7	40	5	1	1.00	1.00			23a	OCC	3077	22211
	Sus. + E4{1}	35	42	3	1	1.00	1.00			23a	OCC	3103	22211
	Sus. + E5{1}	38	44	7	1	1.00	1.00			23a	OCC	3188	22211
	Sus. + E6{1}	18	42	9	1	1.00	1.00			23a	OCC	3191	22211
	Sus. + E7{1}	7	43	4	1	1.00	1.00			23a	OCC	3110	22211
	Sus. + E8{1}	35	41	3	1	1.00	1.00			23a	OCC	3088	22211
C37	- Max P{1}									(3a)	HOOP	5642	16700
	GR + Max P{1}	2123	46	2	0	1.00	1.00	1.00	1.00	23a	SUST	3134	16700
	TR:Amb to T1{1}	191	0	6	0	1.00	1.00	1.00	1.00	(17)	DISP	303	25050
	Amb to T1{1}	191	0	6	0	1.00	1.00	1.00	1.00	(17)	DISP	303	25050
	Sus. + E1{1}	28	50	12	1	1.00	1.00			23a	OCC	3399	22211
	Sus. + E2{1}	28	50	8	1	1.00	1.00			23a	OCC	3318	22211
	Sus. + E3{1}	17	50	5	1	1.00	1.00			23a	OCC	3272	22211
	Sus. + E4{1}	25	50	9	1	1.00	1.00			23a	OCC	3331	22211
	Sus. + E5{1}	28	49	12	1	1.00	1.00			23a	OCC	3385	22211
	Sus. + E6{1}	28	49	8	1	1.00	1.00			23a	OCC	3311	22211
	Sus. + E7{1}	17	49	6	1	1.00	1.00			23a	OCC	3253	22211
	Sus. + E8{1}	25	49	9	1	1.00	1.00			23a	OCC	3327	22211
C37	+ Max P{1}									(3a)	HOOP	5642	16700
	GR + Max P{1}	2119	46	2	0	1.00	1.00	1.00	1.00	23a	SUST	3130	16700
	TR:Amb to T1{1}	197	0	6	0	1.00	1.00	1.00	1.00	(17)	DISP	309	25050
	Amb to T1{1}	197	0	6	0	1.00	1.00	1.00	1.00	(17)	DISP	309	25050
	Sus. + E1{1}	28	50	12	1	1.00	1.00			23a	OCC	3395	22211
	Sus. + E2{1}	28	50	8	1	1.00	1.00			23a	OCC	3314	22211
	Sus. + E3{1}	17	50	5	1	1.00	1.00			23a	OCC	3267	22211
	Sus. + E4{1}	25	50	9	1	1.00	1.00			23a	OCC	3327	22211
	Sus. + E5{1}	28	49	12	1	1.00	1.00			23a	OCC	3381	22211
	Sus. + E6{1}	28	49	8	1	1.00	1.00			23a	OCC	3306	22211
	Sus. + E7{1}	17	49	6	1	1.00	1.00			23a	OCC	3249	22211
	Sus. + E8{1}	25	49	9	1	1.00	1.00			23a	OCC	3322	22211

Primary Piping
04/24/2020 2018719 BENTLEY
07:34 AM AutoPIPE Nuclear 12.00.00.16 RESULT PAGE 366

ASME B31.3 (2016) CODE COMPLIANCE
(Moments in ft-lb , Force in lbf) (Stress in psi)

Point name	Load combination	Axial Force	In-Pl. Moment	Out-Pl. Moment	Torsion Moment	S.I.F In	S.I.F Out	Index/SIF Ax.	Index/SIF Tor.	Eq. no.	Load type	Code Stress	Code Allow.
C38	- Max P{1}									(3a)	HOOP	5642	16700
	GR + Max P{1}	2117	26	3	0	1.00	1.00	1.00	1.00	23a	SUST	2681	16700
	TR:Amb to T1{1}	197	0	19	0	1.00	1.00	1.00	1.00	(17)	DISP	583	25050
	Amb to T1{1}	197	0	19	0	1.00	1.00	1.00	1.00	(17)	DISP	583	25050
	Sus. + E1{1}	18	26	41	1	1.00	1.00			23a	OCC	3545	22211
	Sus. + E2{1}	38	28	12	1	1.00	1.00			23a	OCC	2912	22211
	Sus. + E3{1}	27	26	4	1	1.00	1.00			23a	OCC	2724	22211
	Sus. + E4{1}	15	28	34	1	1.00	1.00			23a	OCC	3387	22211
	Sus. + E5{1}	18	29	41	1	1.00	1.00			23a	OCC	3553	22211
	Sus. + E6{1}	39	28	12	1	1.00	1.00			23a	OCC	2914	22211
	Sus. + E7{1}	27	29	4	1	1.00	1.00			23a	OCC	2797	22211
	Sus. + E8{1}	15	28	34	1	1.00	1.00			23a	OCC	3383	22211
C38	+ Max P{1}									(3a)	HOOP	5642	16700
	GR + Max P{1}	2118	26	3	0	1.00	1.00	1.00	1.00	23a	SUST	2683	16700
	TR:Amb to T1{1}	160	0	19	0	1.00	1.00	1.00	1.00	(17)	DISP	550	25050
	Amb to T1{1}	160	0	19	0	1.00	1.00	1.00	1.00	(17)	DISP	550	25050
	Sus. + E1{1}	18	26	41	1	1.00	1.00			23a	OCC	3546	22211
	Sus. + E2{1}	38	28	12	1	1.00	1.00			23a	OCC	2913	22211
	Sus. + E3{1}	27	26	4	1	1.00	1.00			23a	OCC	2725	22211
	Sus. + E4{1}	15	28	34	1	1.00	1.00			23a	OCC	3388	22211
	Sus. + E5{1}	18	29	41	1	1.00	1.00			23a	OCC	3554	22211
	Sus. + E6{1}	39	28	12	1	1.00	1.00			23a	OCC	2915	22211
	Sus. + E7{1}	27	29	4	1	1.00	1.00			23a	OCC	2798	22211
	Sus. + E8{1}	15	28	34	1	1.00	1.00			23a	OCC	3384	22211
C39	- Max P{1}									(3a)	HOOP	5642	16700
	GR + Max P{1}	2117	33	0	0	1.00	1.00	1.00	1.00	23a	SUST	2844	16700
	TR:Amb to T1{1}	160	2	74	0	1.00	1.00	1.00	1.00	(17)	DISP	1738	25050
	Amb to T1{1}	160	2	74	0	1.00	1.00	1.00	1.00	(17)	DISP	1738	25050
	Sus. + E1{1}	12	38	110	1	1.00	1.00			23a	OCC	5330	22211
	Sus. + E2{1}	44	36	28	1	1.00	1.00			23a	OCC	3513	22211
	Sus. + E3{1}	33	40	31	1	1.00	1.00			23a	OCC	3587	22211
	Sus. + E4{1}	9	38	113	1	1.00	1.00			23a	OCC	5413	22211
	Sus. + E5{1}	12	33	108	1	1.00	1.00			23a	OCC	5300	22211
	Sus. + E6{1}	44	35	27	1	1.00	1.00			23a	OCC	3488	22211
	Sus. + E7{1}	32	35	32	1	1.00	1.00			23a	OCC	3594	22211
	Sus. + E8{1}	9	34	115	1	1.00	1.00			23a	OCC	5439	22211
C39	+ Max P{1}									(3a)	HOOP	5642	16700
	GR + Max P{1}	2120	33	0	0	1.00	1.00	1.00	1.00	23a	SUST	2847	16700
	TR:Amb to T1{1}	103	2	74	0	1.00	1.00	1.00	1.00	(17)	DISP	1685	25050
	Amb to T1{1}	103	2	74	0	1.00	1.00	1.00	1.00	(17)	DISP	1685	25050
	Sus. + E1{1}	12	38	110	1	1.00	1.00			23a	OCC	5333	22211
	Sus. + E2{1}	44	36	28	1	1.00	1.00			23a	OCC	3515	22211
	Sus. + E3{1}	33	40	31	1	1.00	1.00			23a	OCC	3589	22211
	Sus. + E4{1}	9	38	113	1	1.00	1.00			23a	OCC	5416	22211
	Sus. + E5{1}	12	33	108	1	1.00	1.00			23a	OCC	5303	22211
	Sus. + E6{1}	44	35	27	1	1.00	1.00			23a	OCC	3490	22211
	Sus. + E7{1}	32	35	32	1	1.00	1.00			23a	OCC	3597	22211
	Sus. + E8{1}	9	34	115	1	1.00	1.00			23a	OCC	5441	22211

Primary Piping
04/24/2020 2018719 BENTLEY
07:34 AM AutoPIPE Nuclear 12.00.00.16 RESULT PAGE 367

ASME B31.3 (2016) CODE COMPLIANCE
(Moments in ft-lb , Force in lbf) (Stress in psi)

Point name	Load combination	Axial Force	In-Pl. Moment	Out-Pl. Moment	Torsion Moment	S.I.F In	S.I.F Out	Index/SIF Ax.	Index/SIF Tor.	Eq. no.	Load type	Code Stress	Code Allow.
C40 -	Max P{1}									(3a)	HOOP	5642	16700
	GR + Max P{1}	2118	26	7	0	1.00	1.00	1.00	1.00	23a	SUST	2702	16700
	TR:Amb to T1{1}	103	7	180	0	1.00	1.00	1.00	1.00	(17)	DISP	3950	25050
	Amb to T1{1}	103	7	180	0	1.00	1.00	1.00	1.00	(17)	DISP	3950	25050
	Sus. + E1{1}	2	34	58	1	1.00	1.00			23a	OCC	3858	22211
	Sus. + E2{1}	54	29	78	1	1.00	1.00			23a	OCC	4348	22211
	Sus. + E3{1}	43	40	69	1	1.00	1.00			23a	OCC	4188	22211
	Sus. + E4{1}	1	28	53	1	1.00	1.00			23a	OCC	3739	22211
	Sus. + E5{1}	2	39	58	1	1.00	1.00			23a	OCC	3891	22211
	Sus. + E6{1}	55	28	78	1	1.00	1.00			23a	OCC	4361	22211
	Sus. + E7{1}	42	45	69	1	1.00	1.00			23a	OCC	4207	22211
	Sus. + E8{1}	1	34	53	1	1.00	1.00			23a	OCC	3747	22211
C40 +	Max P{1}									(3a)	HOOP	5642	16700
	GR + Max P{1}	2118	26	7	0	1.00	1.00	1.00	1.00	23a	SUST	2701	16700
	TR:Amb to T1{1}	78	7	180	0	1.00	1.00	1.00	1.00	(17)	DISP	3927	25050
	Amb to T1{1}	78	7	180	0	1.00	1.00	1.00	1.00	(17)	DISP	3927	25050
	Sus. + E1{1}	2	34	58	1	1.00	1.00			23a	OCC	3858	22211
	Sus. + E2{1}	54	29	78	1	1.00	1.00			23a	OCC	4348	22211
	Sus. + E3{1}	43	40	69	1	1.00	1.00			23a	OCC	4188	22211
	Sus. + E4{1}	1	28	53	1	1.00	1.00			23a	OCC	3739	22211
	Sus. + E5{1}	2	39	58	1	1.00	1.00			23a	OCC	3891	22211
	Sus. + E6{1}	55	28	78	1	1.00	1.00			23a	OCC	4361	22211
	Sus. + E7{1}	42	45	69	1	1.00	1.00			23a	OCC	4207	22211
	Sus. + E8{1}	1	34	53	1	1.00	1.00			23a	OCC	3747	22211
C27 N-	Max P{1}									(3a)	HOOP	5642	16700
	GR + Max P{1}	2118	17	8	0	1.00	1.00	1.00	1.00	23a	SUST	2526	16700
	TR:Amb to T1{1}	78	5	204	0	1.00	1.00	1.00	1.00	(17)	DISP	4434	25050
	Amb to T1{1}	78	5	204	0	1.00	1.00	1.00	1.00	(17)	DISP	4434	25050
	Sus. + E1{1}	1	24	64	1	1.00	1.00			23a	OCC	3819	22211
	Sus. + E2{1}	54	19	81	1	1.00	1.00			23a	OCC	4235	22211
	Sus. + E3{1}	44	28	72	1	1.00	1.00			23a	OCC	4056	22211
	Sus. + E4{1}	2	19	60	1	1.00	1.00			23a	OCC	3703	22211
	Sus. + E5{1}	2	28	64	1	1.00	1.00			23a	OCC	3838	22211
	Sus. + E6{1}	55	20	81	1	1.00	1.00			23a	OCC	4249	22211
	Sus. + E7{1}	43	32	72	1	1.00	1.00			23a	OCC	4061	22211
	Sus. + E8{1}	2	23	59	1	1.00	1.00			23a	OCC	3705	22211
C27 N+	Max P{1}									(3a)	HOOP	5642	16700
	GR + Max P{1}	2118	8	17	0	1.00	1.00	1.00	1.00	23a	SUST	2526	16700
	TR:Amb to T1{1}	78	203	10	0	1.00	1.00	1.00	1.00	(17)	DISP	4434	25050
	Amb to T1{1}	78	203	10	0	1.00	1.00	1.00	1.00	(17)	DISP	4434	25050
	Sus. + E1{1}	1	65	23	1	1.00	1.00			23a	OCC	3819	22211
	Sus. + E2{1}	54	81	21	1	1.00	1.00			23a	OCC	4235	22211
	Sus. + E3{1}	44	73	30	1	1.00	1.00			23a	OCC	4056	22211
	Sus. + E4{1}	2	60	20	1	1.00	1.00			23a	OCC	3703	22211
	Sus. + E5{1}	2	65	27	1	1.00	1.00			23a	OCC	3838	22211
	Sus. + E6{1}	55	82	17	1	1.00	1.00			23a	OCC	4248	22211
	Sus. + E7{1}	43	72	34	1	1.00	1.00			23a	OCC	4061	22211
	Sus. + E8{1}	2	60	24	1	1.00	1.00			23a	OCC	3705	22211

ASME B31.3 (2016) CODE COMPLIANCE
(Moments in ft-lb , Force in lbf) (Stress in psi)

Point name	Load combination	Axial Force	In-Pl. Moment	Out-Pl. Moment	Torsion Moment	S.I.F In	S.I.F Out	Index/SIF Ax.	Index/SIF Tor.	Eq. no.	Load type	Code Stress	Code Allow.
C27 F-	Max P{1}									(3a)	HOOP	5642	16700
	GR + Max P{1}	2120	0	9	3	1.00	1.00	1.00	1.00	23a	SUST	2314	16700
	TR:Amb to T1{1}	47	111	11	1	1.00	1.00	1.00	1.00	(17)	DISP	2434	25050
	Amb to T1{1}	47	111	11	1	1.00	1.00	1.00	1.00	(17)	DISP	2434	25050
	Sus. + E1{1}	7	94	21	7	1.00	1.00			23a	OCC	4452	22211
	Sus. + E2{1}	0	89	11	4	1.00	1.00			23a	OCC	4333	22211
	Sus. + E3{1}	0	68	30	10	1.00	1.00			23a	OCC	3938	22211
	Sus. + E4{1}	7	97	16	5	1.00	1.00			23a	OCC	4521	22211
	Sus. + E5{1}	7	92	21	7	1.00	1.00			23a	OCC	4428	22211
	Sus. + E6{1}	0	92	11	4	1.00	1.00			23a	OCC	4392	22211
	Sus. + E7{1}	0	66	30	10	1.00	1.00			23a	OCC	3882	22211
	Sus. + E8{1}	7	98	16	5	1.00	1.00			23a	OCC	4545	22211
C27 F+	Max P{1}									(3a)	HOOP	5642	16700
	GR + Max P{1}	2120	9	0	3	1.00	1.00	1.00	1.00	23a	SUST	2314	16700
	TR:Amb to T1{1}	47	7	111	1	1.00	1.00	1.00	1.00	(17)	DISP	2434	25050
	Amb to T1{1}	47	7	111	1	1.00	1.00	1.00	1.00	(17)	DISP	2434	25050
	Sus. + E1{1}	7	24	93	7	1.00	1.00			23a	OCC	4452	22211
	Sus. + E2{1}	0	14	89	4	1.00	1.00			23a	OCC	4333	22211
	Sus. + E3{1}	0	32	68	10	1.00	1.00			23a	OCC	3938	22211
	Sus. + E4{1}	7	13	98	5	1.00	1.00			23a	OCC	4521	22211
	Sus. + E5{1}	7	24	92	7	1.00	1.00			23a	OCC	4428	22211
	Sus. + E6{1}	0	14	92	4	1.00	1.00			23a	OCC	4392	22211
	Sus. + E7{1}	0	32	65	10	1.00	1.00			23a	OCC	3882	22211
	Sus. + E8{1}	7	13	99	5	1.00	1.00			23a	OCC	4545	22211
C42 -	Max P{1}									(3a)	HOOP	5642	16700
	GR + Max P{1}	2120	17	1	3	1.00	1.00	1.00	1.00	23a	SUST	2486	16700
	TR:Amb to T1{1}	47	10	72	1	1.00	1.00	1.00	1.00	(17)	DISP	1605	25050
	Amb to T1{1}	47	10	72	1	1.00	1.00	1.00	1.00	(17)	DISP	1605	25050
	Sus. + E1{1}	6	34	97	7	1.00	1.00			23a	OCC	4680	22211
	Sus. + E2{1}	1	22	121	4	1.00	1.00			23a	OCC	5186	22211
	Sus. + E3{1}	1	45	94	10	1.00	1.00			23a	OCC	4677	22211
	Sus. + E4{1}	6	22	102	5	1.00	1.00			23a	OCC	4777	22211
	Sus. + E5{1}	6	33	95	7	1.00	1.00			23a	OCC	4648	22211
	Sus. + E6{1}	1	23	124	4	1.00	1.00			23a	OCC	5257	22211
	Sus. + E7{1}	1	44	91	10	1.00	1.00			23a	OCC	4602	22211
	Sus. + E8{1}	6	21	104	5	1.00	1.00			23a	OCC	4804	22211
C42 +	Max P{1}									(3a)	HOOP	5642	16700
	GR + Max P{1}	2120	17	1	3	1.00	1.00	1.00	1.00	23a	SUST	2487	16700
	TR:Amb to T1{1}	46	10	72	1	1.00	1.00	1.00	1.00	(17)	DISP	1604	25050
	Amb to T1{1}	46	10	72	1	1.00	1.00	1.00	1.00	(17)	DISP	1604	25050
	Sus. + E1{1}	6	34	97	7	1.00	1.00			23a	OCC	4680	22211
	Sus. + E2{1}	1	22	121	4	1.00	1.00			23a	OCC	5186	22211
	Sus. + E3{1}	1	45	94	10	1.00	1.00			23a	OCC	4677	22211
	Sus. + E4{1}	6	22	102	5	1.00	1.00			23a	OCC	4777	22211
	Sus. + E5{1}	6	33	95	7	1.00	1.00			23a	OCC	4649	22211
	Sus. + E6{1}	1	23	124	4	1.00	1.00			23a	OCC	5258	22211
	Sus. + E7{1}	1	44	91	10	1.00	1.00			23a	OCC	4602	22211
	Sus. + E8{1}	6	21	104	5	1.00	1.00			23a	OCC	4804	22211

Primary Piping
04/24/2020 2018719 BENTLEY
07:34 AM AutoPIPE Nuclear 12.00.00.16 RESULT PAGE 369

ASME B31.3 (2016) CODE COMPLIANCE
(Moments in ft-lb , Force in lbf) (Stress in psi)

Point name	Load combination	Axial Force	In-Pl. Moment	Out-Pl. Moment	Torsion Moment	S.I.F In	S.I.F Out	Index/SIF Ax.	Index/SIF Tor.	Eq. no.	Load type	Code Stress	Code Allow.
C43 -	Max P{1}									(3a)	HOOP	5642	16700
	GR + Max P{1}	2120	11	10	3	1.00	1.00	1.00	1.00	23a	SUST	2446	16700
	TR:Amb to T1{1}	46	8	114	1	1.00	1.00	1.00	1.00	(17)	DISP	2496	25050
	Amb to T1{1}	46	8	114	1	1.00	1.00	1.00	1.00	(17)	DISP	2496	25050
	Sus. + E1{1}	2	11	132	7	1.00	1.00			23a	OCC	5209	22211
	Sus. + E2{1}	5	14	209	4	1.00	1.00			23a	OCC	6936	22211
	Sus. + E3{1}	5	22	204	10	1.00	1.00			23a	OCC	6849	22211
	Sus. + E4{1}	2	19	150	5	1.00	1.00			23a	OCC	5615	22211
	Sus. + E5{1}	2	13	130	7	1.00	1.00			23a	OCC	5151	22211
	Sus. + E6{1}	5	15	210	4	1.00	1.00			23a	OCC	6967	22211
	Sus. + E7{1}	6	21	203	10	1.00	1.00			23a	OCC	6817	22211
	Sus. + E8{1}	2	18	153	5	1.00	1.00			23a	OCC	5671	22211
C43 +	Max P{1}									(3a)	HOOP	5642	16700
	GR + Max P{1}	2120	11	10	3	1.00	1.00	1.00	1.00	23a	SUST	2445	16700
	TR:Amb to T1{1}	44	8	114	1	1.00	1.00	1.00	1.00	(17)	DISP	2494	25050
	Amb to T1{1}	44	8	114	1	1.00	1.00	1.00	1.00	(17)	DISP	2494	25050
	Sus. + E1{1}	2	11	132	7	1.00	1.00			23a	OCC	5209	22211
	Sus. + E2{1}	5	14	209	4	1.00	1.00			23a	OCC	6936	22211
	Sus. + E3{1}	5	22	204	10	1.00	1.00			23a	OCC	6849	22211
	Sus. + E4{1}	2	19	150	5	1.00	1.00			23a	OCC	5614	22211
	Sus. + E5{1}	2	13	130	7	1.00	1.00			23a	OCC	5151	22211
	Sus. + E6{1}	5	15	210	4	1.00	1.00			23a	OCC	6967	22211
	Sus. + E7{1}	6	21	203	10	1.00	1.00			23a	OCC	6817	22211
	Sus. + E8{1}	2	18	153	5	1.00	1.00			23a	OCC	5671	22211
C30 N-	Max P{1}									(3a)	HOOP	5642	16700
	GR + Max P{1}	2119	4	11	3	1.00	1.00	1.00	1.00	23a	SUST	2374	16700
	TR:Amb to T1{1}	44	6	145	1	1.00	1.00	1.00	1.00	(17)	DISP	3151	25050
	Amb to T1{1}	44	6	145	1	1.00	1.00	1.00	1.00	(17)	DISP	3151	25050
	Sus. + E1{1}	1	5	117	7	1.00	1.00			23a	OCC	4757	22211
	Sus. + E2{1}	6	7	160	4	1.00	1.00			23a	OCC	5745	22211
	Sus. + E3{1}	6	13	157	10	1.00	1.00			23a	OCC	5687	22211
	Sus. + E4{1}	1	11	131	5	1.00	1.00			23a	OCC	5082	22211
	Sus. + E5{1}	1	5	114	7	1.00	1.00			23a	OCC	4706	22211
	Sus. + E6{1}	6	7	161	4	1.00	1.00			23a	OCC	5773	22211
	Sus. + E7{1}	6	13	156	10	1.00	1.00			23a	OCC	5658	22211
	Sus. + E8{1}	1	10	133	5	1.00	1.00			23a	OCC	5133	22211
C30 N+	Max P{1}									(3a)	HOOP	5642	16700
	GR + Max P{1}	2119	11	4	3	1.00	1.00	1.00	1.00	23a	SUST	2374	16700
	TR:Amb to T1{1}	44	145	7	1	1.00	1.00	1.00	1.00	(17)	DISP	3151	25050
	Amb to T1{1}	44	145	7	1	1.00	1.00	1.00	1.00	(17)	DISP	3151	25050
	Sus. + E1{1}	1	117	6	7	1.00	1.00			23a	OCC	4757	22211
	Sus. + E2{1}	6	160	6	4	1.00	1.00			23a	OCC	5745	22211
	Sus. + E3{1}	6	157	12	10	1.00	1.00			23a	OCC	5687	22211
	Sus. + E4{1}	1	131	12	5	1.00	1.00			23a	OCC	5082	22211
	Sus. + E5{1}	1	114	6	7	1.00	1.00			23a	OCC	4706	22211
	Sus. + E6{1}	6	161	6	4	1.00	1.00			23a	OCC	5773	22211
	Sus. + E7{1}	6	156	11	10	1.00	1.00			23a	OCC	5658	22211
	Sus. + E8{1}	1	133	11	5	1.00	1.00			23a	OCC	5133	22211

Primary Piping
04/24/2020 2018719 BENTLEY
07:34 AM AutoPIPE Nuclear 12.00.00.16 RESULT PAGE 370

ASME B31.3 (2016) CODE COMPLIANCE
(Moments in ft-lb , Force in lbf) (Stress in psi)

Point name	Load combination	Axial Force	In-Pl. Moment	Out-Pl. Moment	Torsion Moment	S.I.F In	S.I.F Out	Index/SIF Ax.	Index/SIF Tor.	Eq. no.	Load type	Code Stress	Code Allow.
C30 F-	Max P{1}									(3a)	HOOP	5642	16700
	GR + Max P{1}	2119	11	22	0	1.00	1.00	1.00	1.00	23a	SUST	2648	16700
	TR:Amb to T1{1}	61	197	8	0	1.00	1.00	1.00	1.00	(17)	DISP	4286	25050
	Amb to T1{1}	61	197	8	0	1.00	1.00	1.00	1.00	(17)	DISP	4286	25050
	Sus. + E1{1}	28	15	29	1	1.00	1.00			23a	OCC	2859	22211
	Sus. + E2{1}	93	125	24	0	1.00	1.00			23a	OCC	5308	22211
	Sus. + E3{1}	91	119	23	1	1.00	1.00			23a	OCC	5183	22211
	Sus. + E4{1}	35	13	25	1	1.00	1.00			23a	OCC	2768	22211
	Sus. + E5{1}	27	15	25	1	1.00	1.00			23a	OCC	2794	22211
	Sus. + E6{1}	93	124	23	0	1.00	1.00			23a	OCC	5304	22211
	Sus. + E7{1}	90	119	24	1	1.00	1.00			23a	OCC	5187	22211
	Sus. + E8{1}	35	12	29	1	1.00	1.00			23a	OCC	2845	22211
C30 F+	Max P{1}									(3a)	HOOP	5642	16700
	GR + Max P{1}	2119	21	12	0	1.00	1.00	1.00	1.00	23a	SUST	2648	16700
	TR:Amb to T1{1}	61	3	198	0	1.00	1.00	1.00	1.00	(17)	DISP	4286	25050
	Amb to T1{1}	61	3	198	0	1.00	1.00	1.00	1.00	(17)	DISP	4286	25050
	Sus. + E1{1}	28	28	16	1	1.00	1.00			23a	OCC	2859	22211
	Sus. + E2{1}	93	22	125	0	1.00	1.00			23a	OCC	5308	22211
	Sus. + E3{1}	91	25	120	1	1.00	1.00			23a	OCC	5183	22211
	Sus. + E4{1}	35	25	13	1	1.00	1.00			23a	OCC	2768	22211
	Sus. + E5{1}	27	25	16	1	1.00	1.00			23a	OCC	2794	22211
	Sus. + E6{1}	93	26	125	0	1.00	1.00			23a	OCC	5304	22211
	Sus. + E7{1}	90	22	120	1	1.00	1.00			23a	OCC	5187	22211
	Sus. + E8{1}	35	28	13	1	1.00	1.00			23a	OCC	2845	22211
C45 -	Max P{1}									(3a)	HOOP	5642	16700
	GR + Max P{1}	2119	30	11	0	1.00	1.00	1.00	1.00	23a	SUST	2828	16700
	TR:Amb to T1{1}	61	5	176	0	1.00	1.00	1.00	1.00	(17)	DISP	3817	25050
	Amb to T1{1}	61	5	176	0	1.00	1.00	1.00	1.00	(17)	DISP	3817	25050
	Sus. + E1{1}	27	38	13	1	1.00	1.00			23a	OCC	3040	22211
	Sus. + E2{1}	93	31	119	0	1.00	1.00			23a	OCC	5359	22211
	Sus. + E3{1}	90	34	113	1	1.00	1.00			23a	OCC	5233	22211
	Sus. + E4{1}	34	34	14	1	1.00	1.00			23a	OCC	2983	22211
	Sus. + E5{1}	27	33	12	1	1.00	1.00			23a	OCC	2930	22211
	Sus. + E6{1}	93	35	118	0	1.00	1.00			23a	OCC	5358	22211
	Sus. + E7{1}	90	32	113	1	1.00	1.00			23a	OCC	5235	22211
	Sus. + E8{1}	35	39	14	1	1.00	1.00			23a	OCC	3081	22211
C45 +	Max P{1}									(3a)	HOOP	5642	16700
	GR + Max P{1}	2119	30	11	0	1.00	1.00	1.00	1.00	23a	SUST	2829	16700
	TR:Amb to T1{1}	99	5	176	0	1.00	1.00	1.00	1.00	(17)	DISP	3851	25050
	Amb to T1{1}	99	5	176	0	1.00	1.00	1.00	1.00	(17)	DISP	3851	25050
	Sus. + E1{1}	27	38	13	1	1.00	1.00			23a	OCC	3040	22211
	Sus. + E2{1}	93	31	119	1	1.00	1.00			23a	OCC	5359	22211
	Sus. + E3{1}	90	34	113	1	1.00	1.00			23a	OCC	5233	22211
	Sus. + E4{1}	34	34	14	1	1.00	1.00			23a	OCC	2983	22211
	Sus. + E5{1}	27	33	12	1	1.00	1.00			23a	OCC	2930	22211
	Sus. + E6{1}	93	35	118	1	1.00	1.00			23a	OCC	5358	22211
	Sus. + E7{1}	90	32	113	1	1.00	1.00			23a	OCC	5235	22211
	Sus. + E8{1}	35	39	14	1	1.00	1.00			23a	OCC	3081	22211

ASME B31.3 (2016) CODE COMPLIANCE
(Moments in ft-lb , Force in lbf) (Stress in psi)

Point name	Load combination	Axial Force	In-Pl. Moment	Out-Pl. Moment	Torsion Moment	S.I.F In	S.I.F Out	Index/SIF Ax.	Index/SIF Tor.	Eq. no.	Load type	Code Stress	Code Allow.
C46	- Max P{1}									(3a)	HOOP	5642	16700
	GR + Max P{1}	2118	44	7	0	1.00	1.00	1.00	1.00	23a	SUST	3101	16700
	TR:Amb to T1{1}	99	1	89	0	1.00	1.00	1.00	1.00	(17)	DISP	2001	25050
	Amb to T1{1}	99	1	89	0	1.00	1.00	1.00	1.00	(17)	DISP	2001	25050
	Sus. + E1{1}	17	46	95	1	1.00	1.00			23a	OCC	5104	22211
	Sus. + E2{1}	83	48	49	1	1.00	1.00			23a	OCC	4140	22211
	Sus. + E3{1}	80	47	56	1	1.00	1.00			23a	OCC	4291	22211
	Sus. + E4{1}	24	49	98	1	1.00	1.00			23a	OCC	5174	22211
	Sus. + E5{1}	17	49	94	1	1.00	1.00			23a	OCC	5087	22211
	Sus. + E6{1}	83	47	48	1	1.00	1.00			23a	OCC	4109	22211
	Sus. + E7{1}	80	48	58	1	1.00	1.00			23a	OCC	4320	22211
	Sus. + E8{1}	25	46	99	1	1.00	1.00			23a	OCC	5191	22211
C46	+ Max P{1}									(3a)	HOOP	5642	16700
	GR + Max P{1}	2118	44	7	0	1.00	1.00	1.00	1.00	23a	SUST	3100	16700
	TR:Amb to T1{1}	176	1	89	0	1.00	1.00	1.00	1.00	(17)	DISP	2073	25050
	Amb to T1{1}	176	1	89	0	1.00	1.00	1.00	1.00	(17)	DISP	2073	25050
	Sus. + E1{1}	17	46	95	1	1.00	1.00			23a	OCC	5103	22211
	Sus. + E2{1}	83	48	49	1	1.00	1.00			23a	OCC	4139	22211
	Sus. + E3{1}	80	47	56	1	1.00	1.00			23a	OCC	4290	22211
	Sus. + E4{1}	24	49	98	1	1.00	1.00			23a	OCC	5173	22211
	Sus. + E5{1}	17	49	94	1	1.00	1.00			23a	OCC	5086	22211
	Sus. + E6{1}	83	47	48	1	1.00	1.00			23a	OCC	4108	22211
	Sus. + E7{1}	80	48	58	1	1.00	1.00			23a	OCC	4319	22211
	Sus. + E8{1}	25	46	99	1	1.00	1.00			23a	OCC	5190	22211
C47	- Max P{1}									(3a)	HOOP	5642	16700
	GR + Max P{1}	2117	40	1	0	1.00	1.00	1.00	1.00	23a	SUST	3006	16700
	TR:Amb to T1{1}	176	0	4	0	1.00	1.00	1.00	1.00	(17)	DISP	245	25050
	Amb to T1{1}	176	0	4	0	1.00	1.00	1.00	1.00	(17)	DISP	245	25050
	Sus. + E1{1}	7	44	2	1	1.00	1.00			23a	OCC	3099	22211
	Sus. + E2{1}	72	43	3	1	1.00	1.00			23a	OCC	3158	22211
	Sus. + E3{1}	70	44	8	1	1.00	1.00			23a	OCC	3242	22211
	Sus. + E4{1}	14	43	1	1	1.00	1.00			23a	OCC	3087	22211
	Sus. + E5{1}	7	43	2	1	1.00	1.00			23a	OCC	3083	22211
	Sus. + E6{1}	72	44	3	1	1.00	1.00			23a	OCC	3165	22211
	Sus. + E7{1}	70	44	8	1	1.00	1.00			23a	OCC	3249	22211
	Sus. + E8{1}	14	44	1	1	1.00	1.00			23a	OCC	3106	22211
C47	+ Max P{1}									(3a)	HOOP	5642	16700
	GR + Max P{1}	2117	40	1	0	1.00	1.00	1.00	1.00	23a	SUST	3006	16700
	TR:Amb to T1{1}	224	0	4	0	1.00	1.00	1.00	1.00	(17)	DISP	289	25050
	Amb to T1{1}	224	0	4	0	1.00	1.00	1.00	1.00	(17)	DISP	289	25050
	Sus. + E1{1}	7	44	2	1	1.00	1.00			23a	OCC	3099	22211
	Sus. + E2{1}	72	43	3	1	1.00	1.00			23a	OCC	3158	22211
	Sus. + E3{1}	70	44	8	1	1.00	1.00			23a	OCC	3242	22211
	Sus. + E4{1}	14	43	1	1	1.00	1.00			23a	OCC	3087	22211
	Sus. + E5{1}	7	43	2	1	1.00	1.00			23a	OCC	3083	22211
	Sus. + E6{1}	72	44	3	1	1.00	1.00			23a	OCC	3165	22211
	Sus. + E7{1}	70	44	8	1	1.00	1.00			23a	OCC	3248	22211
	Sus. + E8{1}	14	44	1	1	1.00	1.00			23a	OCC	3105	22211

ASME B31.3 (2016) CODE COMPLIANCE
(Moments in ft-lb , Force in lbf) (Stress in psi)

Point name	Load combination	Axial Force	In-Pl. Moment	Out-Pl. Moment	Torsion Moment	S.I.F In	S.I.F Out	Index/SIF Ax.	Index/SIF Tor.	Eq. no.	Load type	Code Stress	Code Allow.
C48	- Max P{1}									(3a)	HOOP	5642	16700
	GR + Max P{1}	2116	41	1	0	1.00	1.00	1.00	1.00	23a	SUST	3027	16700
	TR:Amb to T1{1}	224	0	6	0	1.00	1.00	1.00	1.00	(17)	DISP	329	25050
	Amb to T1{1}	224	0	6	0	1.00	1.00	1.00	1.00	(17)	DISP	329	25050
	Sus. + E1{1}	3	44	6	1	1.00	1.00			23a	OCC	3175	22211
	Sus. + E2{1}	62	45	12	1	1.00	1.00			23a	OCC	3347	22211
	Sus. + E3{1}	60	45	11	1	1.00	1.00			23a	OCC	3330	22211
	Sus. + E4{1}	4	45	1	1	1.00	1.00			23a	OCC	3113	22211
	Sus. + E5{1}	4	45	7	1	1.00	1.00			23a	OCC	3184	22211
	Sus. + E6{1}	62	44	12	1	1.00	1.00			23a	OCC	3343	22211
	Sus. + E7{1}	60	45	11	1	1.00	1.00			23a	OCC	3332	22211
	Sus. + E8{1}	4	44	1	1	1.00	1.00			23a	OCC	3105	22211
C48	+ Max P{1}									(3a)	HOOP	5642	16700
	GR + Max P{1}	2117	41	1	0	1.00	1.00	1.00	1.00	23a	SUST	3027	16700
	TR:Amb to T1{1}	268	0	6	0	1.00	1.00	1.00	1.00	(17)	DISP	371	25050
	Amb to T1{1}	268	0	6	0	1.00	1.00	1.00	1.00	(17)	DISP	371	25050
	Sus. + E1{1}	3	44	6	1	1.00	1.00			23a	OCC	3176	22211
	Sus. + E2{1}	62	45	12	1	1.00	1.00			23a	OCC	3347	22211
	Sus. + E3{1}	60	45	11	1	1.00	1.00			23a	OCC	3331	22211
	Sus. + E4{1}	4	45	1	1	1.00	1.00			23a	OCC	3114	22211
	Sus. + E5{1}	4	45	7	1	1.00	1.00			23a	OCC	3185	22211
	Sus. + E6{1}	62	44	12	1	1.00	1.00			23a	OCC	3344	22211
	Sus. + E7{1}	60	45	11	1	1.00	1.00			23a	OCC	3333	22211
	Sus. + E8{1}	4	44	1	1	1.00	1.00			23a	OCC	3105	22211
C49	- Max P{1}									(3a)	HOOP	5642	16700
	GR + Max P{1}	2116	41	1	0	1.00	1.00	1.00	1.00	23a	SUST	3021	16700
	TR:Amb to T1{1}	268	0	1	0	1.00	1.00	1.00	1.00	(17)	DISP	262	25050
	Amb to T1{1}	268	0	1	0	1.00	1.00	1.00	1.00	(17)	DISP	262	25050
	Sus. + E1{1}	13	44	9	1	1.00	1.00			23a	OCC	3230	22211
	Sus. + E2{1}	52	44	6	1	1.00	1.00			23a	OCC	3222	22211
	Sus. + E3{1}	49	44	7	1	1.00	1.00			23a	OCC	3231	22211
	Sus. + E4{1}	6	44	11	1	1.00	1.00			23a	OCC	3266	22211
	Sus. + E5{1}	14	45	9	1	1.00	1.00			23a	OCC	3233	22211
	Sus. + E6{1}	52	44	6	1	1.00	1.00			23a	OCC	3220	22211
	Sus. + E7{1}	49	45	7	1	1.00	1.00			23a	OCC	3236	22211
	Sus. + E8{1}	6	44	11	1	1.00	1.00			23a	OCC	3266	22211
C49	+ Max P{1}									(3a)	HOOP	5642	16700
	GR + Max P{1}	2117	41	1	0	1.00	1.00	1.00	1.00	23a	SUST	3022	16700
	TR:Amb to T1{1}	313	0	1	0	1.00	1.00	1.00	1.00	(17)	DISP	303	25050
	Amb to T1{1}	313	0	1	0	1.00	1.00	1.00	1.00	(17)	DISP	303	25050
	Sus. + E1{1}	13	44	9	1	1.00	1.00			23a	OCC	3231	22211
	Sus. + E2{1}	52	44	6	1	1.00	1.00			23a	OCC	3223	22211
	Sus. + E3{1}	49	44	7	1	1.00	1.00			23a	OCC	3232	22211
	Sus. + E4{1}	6	44	11	1	1.00	1.00			23a	OCC	3267	22211
	Sus. + E5{1}	14	45	9	1	1.00	1.00			23a	OCC	3234	22211
	Sus. + E6{1}	52	44	6	1	1.00	1.00			23a	OCC	3221	22211
	Sus. + E7{1}	49	45	7	1	1.00	1.00			23a	OCC	3237	22211
	Sus. + E8{1}	6	44	11	1	1.00	1.00			23a	OCC	3267	22211

Primary Piping
04/24/2020 2018719 BENTLEY
07:34 AM AutoPIPE Nuclear 12.00.00.16 RESULT PAGE 373

ASME B31.3 (2016) CODE COMPLIANCE
(Moments in ft-lb , Force in lbf) (Stress in psi)

Point name	Load combination	Axial Force	In-Pl. Moment	Out-Pl. Moment	Torsion Moment	S.I.F In	S.I.F Out	Index/SIF Ax.	Index/SIF Tor.	Eq. no.	Load type	Code Stress	Code Allow.
C50	- Max P{1}									(3a)	HOOP	5642	16700
	GR + Max P{1}	2117	41	2	0	1.00	1.00	1.00	1.00	23a	SUST	3024	16700
	TR:Amb to T1{1}	313	0	2	0	1.00	1.00	1.00	1.00	(17)	DISP	330	25050
	Amb to T1{1}	313	0	2	0	1.00	1.00	1.00	1.00	(17)	DISP	330	25050
	Sus. + E1{1}	24	45	6	1	1.00	1.00			23a	OCC	3188	22211
	Sus. + E2{1}	42	44	11	1	1.00	1.00			23a	OCC	3288	22211
	Sus. + E3{1}	39	45	15	1	1.00	1.00			23a	OCC	3374	22211
	Sus. + E4{1}	16	44	10	1	1.00	1.00			23a	OCC	3244	22211
	Sus. + E5{1}	24	44	6	1	1.00	1.00			23a	OCC	3172	22211
	Sus. + E6{1}	42	44	11	1	1.00	1.00			23a	OCC	3288	22211
	Sus. + E7{1}	39	44	15	1	1.00	1.00			23a	OCC	3367	22211
	Sus. + E8{1}	16	44	10	1	1.00	1.00			23a	OCC	3245	22211
C50	+ Max P{1}									(3a)	HOOP	5642	16700
	GR + Max P{1}	2121	41	2	0	1.00	1.00	1.00	1.00	23a	SUST	3028	16700
	TR:Amb to T1{1}	362	0	2	0	1.00	1.00	1.00	1.00	(17)	DISP	375	25050
	Amb to T1{1}	362	0	2	0	1.00	1.00	1.00	1.00	(17)	DISP	375	25050
	Sus. + E1{1}	24	45	6	1	1.00	1.00			23a	OCC	3192	22211
	Sus. + E2{1}	42	44	11	1	1.00	1.00			23a	OCC	3292	22211
	Sus. + E3{1}	39	45	15	1	1.00	1.00			23a	OCC	3378	22211
	Sus. + E4{1}	16	44	10	1	1.00	1.00			23a	OCC	3249	22211
	Sus. + E5{1}	24	44	6	1	1.00	1.00			23a	OCC	3176	22211
	Sus. + E6{1}	42	44	11	1	1.00	1.00			23a	OCC	3292	22211
	Sus. + E7{1}	39	44	15	1	1.00	1.00			23a	OCC	3371	22211
	Sus. + E8{1}	16	44	10	1	1.00	1.00			23a	OCC	3249	22211
C51	- Max P{1}									(3a)	HOOP	5642	16700
	GR + Max P{1}	2121	42	0	0	1.00	1.00	1.00	1.00	23a	SUST	3040	16700
	TR:Amb to T1{1}	362	0	8	0	1.00	1.00	1.00	1.00	(17)	DISP	501	25050
	Amb to T1{1}	362	0	8	0	1.00	1.00	1.00	1.00	(17)	DISP	501	25050
	Sus. + E1{1}	34	44	11	1	1.00	1.00			23a	OCC	3323	22211
	Sus. + E2{1}	32	45	5	1	1.00	1.00			23a	OCC	3210	22211
	Sus. + E3{1}	29	44	6	1	1.00	1.00			23a	OCC	3202	22211
	Sus. + E4{1}	26	45	10	1	1.00	1.00			23a	OCC	3309	22211
	Sus. + E5{1}	34	46	11	1	1.00	1.00			23a	OCC	3340	22211
	Sus. + E6{1}	32	45	5	1	1.00	1.00			23a	OCC	3201	22211
	Sus. + E7{1}	29	46	6	1	1.00	1.00			23a	OCC	3231	22211
	Sus. + E8{1}	26	45	10	1	1.00	1.00			23a	OCC	3304	22211
C51	+ Max P{1}									(3a)	HOOP	5642	16700
	GR + Max P{1}	2123	42	0	0	1.00	1.00	1.00	1.00	23a	SUST	3042	16700
	TR:Amb to T1{1}	320	0	8	0	1.00	1.00	1.00	1.00	(17)	DISP	462	25050
	Amb to T1{1}	320	0	8	0	1.00	1.00	1.00	1.00	(17)	DISP	462	25050
	Sus. + E1{1}	34	44	11	1	1.00	1.00			23a	OCC	3325	22211
	Sus. + E2{1}	32	45	5	0	1.00	1.00			23a	OCC	3212	22211
	Sus. + E3{1}	29	44	6	1	1.00	1.00			23a	OCC	3204	22211
	Sus. + E4{1}	26	45	10	1	1.00	1.00			23a	OCC	3311	22211
	Sus. + E5{1}	34	46	11	1	1.00	1.00			23a	OCC	3342	22211
	Sus. + E6{1}	32	45	5	1	1.00	1.00			23a	OCC	3203	22211
	Sus. + E7{1}	29	46	6	1	1.00	1.00			23a	OCC	3233	22211
	Sus. + E8{1}	26	45	10	1	1.00	1.00			23a	OCC	3306	22211

ASME B31.3 (2016) CODE COMPLIANCE
(Moments in ft-lb , Force in lbf) (Stress in psi)

Point name	Load combination	Axial Force	In-Pl. Moment	Out-Pl. Moment	Torsion Moment	S.I.F In	S.I.F Out	Index/SIF Ax.	Index/SIF Tor.	Eq. no.	Load type	Code Stress	Code Allow.
C52	- Max P{1}									(3a)	HOOP	5642	16700
	GR + Max P{1}	2122	37	3	0	1.00	1.00	1.00	1.00	23a	SUST	2948	16700
	TR:Amb to T1{1}	320	0	6	0	1.00	1.00	1.00	1.00	(17)	DISP	426	25050
	Amb to T1{1}	320	0	6	0	1.00	1.00	1.00	1.00	(17)	DISP	426	25050
	Sus. + E1{1}	44	41	4	1	1.00	1.00			23a	OCC	3084	22211
	Sus. + E2{1}	22	40	11	0	1.00	1.00			23a	OCC	3180	22211
	Sus. + E3{1}	19	41	9	1	1.00	1.00			23a	OCC	3129	22211
	Sus. + E4{1}	37	40	6	1	1.00	1.00			23a	OCC	3090	22211
	Sus. + E5{1}	44	40	4	1	1.00	1.00			23a	OCC	3056	22211
	Sus. + E6{1}	22	41	11	1	1.00	1.00			23a	OCC	3181	22211
	Sus. + E7{1}	19	40	9	1	1.00	1.00			23a	OCC	3115	22211
	Sus. + E8{1}	36	41	6	1	1.00	1.00			23a	OCC	3092	22211
C52	+ Max P{1}									(3a)	HOOP	5642	16700
	GR + Max P{1}	2122	37	3	0	1.00	1.00	1.00	1.00	23a	SUST	2948	16700
	TR:Amb to T1{1}	277	0	6	0	1.00	1.00	1.00	1.00	(17)	DISP	386	25050
	Amb to T1{1}	277	0	6	0	1.00	1.00	1.00	1.00	(17)	DISP	386	25050
	Sus. + E1{1}	44	41	4	1	1.00	1.00			23a	OCC	3083	22211
	Sus. + E2{1}	22	40	11	0	1.00	1.00			23a	OCC	3180	22211
	Sus. + E3{1}	19	41	9	1	1.00	1.00			23a	OCC	3129	22211
	Sus. + E4{1}	37	40	6	1	1.00	1.00			23a	OCC	3090	22211
	Sus. + E5{1}	44	40	4	1	1.00	1.00			23a	OCC	3056	22211
	Sus. + E6{1}	22	41	11	1	1.00	1.00			23a	OCC	3181	22211
	Sus. + E7{1}	19	40	9	1	1.00	1.00			23a	OCC	3114	22211
	Sus. + E8{1}	36	41	6	1	1.00	1.00			23a	OCC	3091	22211
C53	- Max P{1}									(3a)	HOOP	5642	16700
	GR + Max P{1}	2122	56	3	0	1.00	1.00	1.00	1.00	23a	SUST	3368	16700
	TR:Amb to T1{1}	277	0	107	0	1.00	1.00	1.00	1.00	(17)	DISP	2558	25050
	Amb to T1{1}	277	0	107	0	1.00	1.00	1.00	1.00	(17)	DISP	2558	25050
	Sus. + E1{1}	54	61	56	1	1.00	1.00			23a	OCC	4634	22211
	Sus. + E2{1}	12	61	125	0	1.00	1.00			23a	OCC	6157	22211
	Sus. + E3{1}	9	60	112	1	1.00	1.00			23a	OCC	5854	22211
	Sus. + E4{1}	47	61	40	1	1.00	1.00			23a	OCC	4274	22211
	Sus. + E5{1}	54	60	57	1	1.00	1.00			23a	OCC	4647	22211
	Sus. + E6{1}	11	60	126	1	1.00	1.00			23a	OCC	6165	22211
	Sus. + E7{1}	9	61	112	1	1.00	1.00			23a	OCC	5845	22211
	Sus. + E8{1}	47	60	40	1	1.00	1.00			23a	OCC	4257	22211
C53	+ Max P{1}									(3a)	HOOP	5642	16700
	GR + Max P{1}	2122	56	3	0	1.00	1.00	1.00	1.00	23a	SUST	3368	16700
	TR:Amb to T1{1}	188	0	107	0	1.00	1.00	1.00	1.00	(17)	DISP	2476	25050
	Amb to T1{1}	188	0	107	0	1.00	1.00	1.00	1.00	(17)	DISP	2476	25050
	Sus. + E1{1}	54	61	56	1	1.00	1.00			23a	OCC	4634	22211
	Sus. + E2{1}	12	61	125	1	1.00	1.00			23a	OCC	6157	22211
	Sus. + E3{1}	9	60	112	1	1.00	1.00			23a	OCC	5854	22211
	Sus. + E4{1}	47	61	40	1	1.00	1.00			23a	OCC	4274	22211
	Sus. + E5{1}	54	60	57	1	1.00	1.00			23a	OCC	4647	22211
	Sus. + E6{1}	11	60	126	1	1.00	1.00			23a	OCC	6165	22211
	Sus. + E7{1}	9	61	112	1	1.00	1.00			23a	OCC	5845	22211
	Sus. + E8{1}	47	60	40	1	1.00	1.00			23a	OCC	4257	22211

Primary Piping
04/24/2020 2018719 BENTLEY
07:34 AM AutoPIPE Nuclear 12.00.00.16 RESULT PAGE 375

ASME B31.3 (2016) CODE COMPLIANCE
(Moments in ft-lb , Force in lbf) (Stress in psi)

Point name	Load combination	Axial Force	In-Pl. Moment	Out-Pl. Moment	Torsion Moment	S.I.F In	S.I.F Out	Index/SIF Ax.	Index/SIF Tor.	Eq. no.	Load type	Code Stress	Code Allow.
C55 -	Max P{1}									(3a)	HOOP	5642	16700
	GR + Max P{1}	2121	32	19	0	1.00	1.00	1.00	1.00	23a	SUST	2949	16700
	TR:Amb to T1{1}	188	2	240	0	1.00	1.00	1.00	1.00	(17)	DISP	5305	25050
	Amb to T1{1}	188	2	240	0	1.00	1.00	1.00	1.00	(17)	DISP	5305	25050
	Sus. + E1{1}	66	33	136	1	1.00	1.00			23a	OCC	5652	22211
	Sus. + E2{1}	0	33	79	1	1.00	1.00			23a	OCC	4297	22211
	Sus. + E3{1}	3	34	38	1	1.00	1.00			23a	OCC	3387	22211
	Sus. + E4{1}	58	35	91	1	1.00	1.00			23a	OCC	4631	22211
	Sus. + E5{1}	66	38	136	1	1.00	1.00			23a	OCC	5655	22211
	Sus. + E6{1}	1	37	78	1	1.00	1.00			23a	OCC	4293	22211
	Sus. + E7{1}	3	37	39	1	1.00	1.00			23a	OCC	3406	22211
	Sus. + E8{1}	59	36	91	1	1.00	1.00			23a	OCC	4632	22211
C55 +	Max P{1}									(3a)	HOOP	5642	16700
	GR + Max P{1}	2121	32	19	0	1.00	1.00	1.00	1.00	23a	SUST	2949	16700
	TR:Amb to T1{1}	157	2	240	0	1.00	1.00	1.00	1.00	(17)	DISP	5276	25050
	Amb to T1{1}	157	2	240	0	1.00	1.00	1.00	1.00	(17)	DISP	5276	25050
	Sus. + E1{1}	66	33	136	1	1.00	1.00			23a	OCC	5652	22211
	Sus. + E2{1}	0	33	79	1	1.00	1.00			23a	OCC	4297	22211
	Sus. + E3{1}	3	34	38	1	1.00	1.00			23a	OCC	3388	22211
	Sus. + E4{1}	58	35	91	1	1.00	1.00			23a	OCC	4631	22211
	Sus. + E5{1}	66	38	136	1	1.00	1.00			23a	OCC	5656	22211
	Sus. + E6{1}	1	37	78	1	1.00	1.00			23a	OCC	4294	22211
	Sus. + E7{1}	3	37	39	1	1.00	1.00			23a	OCC	3406	22211
	Sus. + E8{1}	59	36	91	1	1.00	1.00			23a	OCC	4633	22211
C41 N-	Max P{1}									(3a)	HOOP	5642	16700
	GR + Max P{1}	2121	23	20	0	1.00	1.00	1.00	1.00	23a	SUST	2798	16700
	TR:Amb to T1{1}	157	1	267	0	1.00	1.00	1.00	1.00	(17)	DISP	5850	25050
	Amb to T1{1}	157	1	267	0	1.00	1.00	1.00	1.00	(17)	DISP	5850	25050
	Sus. + E1{1}	67	24	142	1	1.00	1.00			23a	OCC	5615	22211
	Sus. + E2{1}	1	23	86	1	1.00	1.00			23a	OCC	4273	22211
	Sus. + E3{1}	4	24	43	1	1.00	1.00			23a	OCC	3305	22211
	Sus. + E4{1}	59	25	94	1	1.00	1.00			23a	OCC	4528	22211
	Sus. + E5{1}	66	28	142	1	1.00	1.00			23a	OCC	5617	22211
	Sus. + E6{1}	1	27	85	1	1.00	1.00			23a	OCC	4267	22211
	Sus. + E7{1}	3	26	43	1	1.00	1.00			23a	OCC	3319	22211
	Sus. + E8{1}	59	26	94	1	1.00	1.00			23a	OCC	4529	22211
C41 N+	Max P{1}									(3a)	HOOP	5642	16700
	GR + Max P{1}	2121	20	23	0	1.00	1.00	1.00	1.00	23a	SUST	2798	16700
	TR:Amb to T1{1}	157	266	3	0	1.00	1.00	1.00	1.00	(17)	DISP	5850	25050
	Amb to T1{1}	157	266	3	0	1.00	1.00	1.00	1.00	(17)	DISP	5850	25050
	Sus. + E1{1}	67	142	24	1	1.00	1.00			23a	OCC	5615	22211
	Sus. + E2{1}	1	86	23	1	1.00	1.00			23a	OCC	4273	22211
	Sus. + E3{1}	4	43	24	1	1.00	1.00			23a	OCC	3305	22211
	Sus. + E4{1}	59	94	25	1	1.00	1.00			23a	OCC	4528	22211
	Sus. + E5{1}	66	142	29	1	1.00	1.00			23a	OCC	5617	22211
	Sus. + E6{1}	1	85	28	1	1.00	1.00			23a	OCC	4267	22211
	Sus. + E7{1}	3	43	26	1	1.00	1.00			23a	OCC	3319	22211
	Sus. + E8{1}	59	94	25	1	1.00	1.00			23a	OCC	4529	22211

Primary Piping
04/24/2020 2018719 BENTLEY
07:34 AM AutoPIPE Nuclear 12.00.00.16 RESULT PAGE 376

ASME B31.3 (2016) CODE COMPLIANCE
(Moments in ft-lb , Force in lbf) (Stress in psi)

Point name	Load combination	Axial Force	In-Pl. Moment	Out-Pl. Moment	Torsion Moment	S.I.F In	S.I.F Out	Index/SIF Ax.	Index/SIF Tor.	Eq. no.	Load type	Code Stress	Code Allow.
C41 F-	Max P{1}									(3a)	HOOP	5642	16700
	GR + Max P{1}	2119	28	5	5	1.00	1.00	1.00	1.00	23a	SUST	2735	16700
	TR:Amb to T1{1}	54	42	3	0	1.00	1.00	1.00	1.00	(17)	DISP	959	25050
	Amb to T1{1}	54	42	3	0	1.00	1.00	1.00	1.00	(17)	DISP	959	25050
	Sus. + E1{1}	4	92	11	7	1.00	1.00			23a	OCC	4212	22211
	Sus. + E2{1}	6	132	8	5	1.00	1.00			23a	OCC	5092	22211
	Sus. + E3{1}	0	83	8	6	1.00	1.00			23a	OCC	3995	22211
	Sus. + E4{1}	1	135	5	5	1.00	1.00			23a	OCC	5156	22211
	Sus. + E5{1}	4	92	10	6	1.00	1.00			23a	OCC	4196	22211
	Sus. + E6{1}	6	133	8	5	1.00	1.00			23a	OCC	5119	22211
	Sus. + E7{1}	0	82	8	6	1.00	1.00			23a	OCC	3966	22211
	Sus. + E8{1}	1	135	6	5	1.00	1.00			23a	OCC	5171	22211
C41 F+	Max P{1}									(3a)	HOOP	5642	16700
	GR + Max P{1}	2119	5	28	5	1.00	1.00	1.00	1.00	23a	SUST	2735	16700
	TR:Amb to T1{1}	54	3	42	0	1.00	1.00	1.00	1.00	(17)	DISP	959	25050
	Amb to T1{1}	54	3	42	0	1.00	1.00	1.00	1.00	(17)	DISP	959	25050
	Sus. + E1{1}	4	11	92	7	1.00	1.00			23a	OCC	4212	22211
	Sus. + E2{1}	6	7	132	5	1.00	1.00			23a	OCC	5092	22211
	Sus. + E3{1}	0	8	83	6	1.00	1.00			23a	OCC	3995	22211
	Sus. + E4{1}	1	6	135	5	1.00	1.00			23a	OCC	5156	22211
	Sus. + E5{1}	4	11	92	6	1.00	1.00			23a	OCC	4196	22211
	Sus. + E6{1}	6	6	133	5	1.00	1.00			23a	OCC	5119	22211
	Sus. + E7{1}	0	8	82	6	1.00	1.00			23a	OCC	3966	22211
	Sus. + E8{1}	1	7	135	5	1.00	1.00			23a	OCC	5171	22211
C56 -	Max P{1}									(3a)	HOOP	5642	16700
	GR + Max P{1}	2119	12	28	5	1.00	1.00	1.00	1.00	23a	SUST	2782	16700
	TR:Amb to T1{1}	54	5	121	0	1.00	1.00	1.00	1.00	(17)	DISP	2635	25050
	Amb to T1{1}	54	5	121	0	1.00	1.00	1.00	1.00	(17)	DISP	2635	25050
	Sus. + E1{1}	4	20	129	7	1.00	1.00			23a	OCC	5074	22211
	Sus. + E2{1}	5	15	135	5	1.00	1.00			23a	OCC	5209	22211
	Sus. + E3{1}	0	16	88	6	1.00	1.00			23a	OCC	4149	22211
	Sus. + E4{1}	2	13	167	5	1.00	1.00			23a	OCC	5933	22211
	Sus. + E5{1}	4	18	128	6	1.00	1.00			23a	OCC	5055	22211
	Sus. + E6{1}	5	13	136	5	1.00	1.00			23a	OCC	5241	22211
	Sus. + E7{1}	0	15	87	6	1.00	1.00			23a	OCC	4113	22211
	Sus. + E8{1}	2	14	168	5	1.00	1.00			23a	OCC	5950	22211
C56 +	Max P{1}									(3a)	HOOP	5642	16700
	GR + Max P{1}	2117	12	28	5	1.00	1.00	1.00	1.00	23a	SUST	2780	16700
	TR:Amb to T1{1}	34	5	121	0	1.00	1.00	1.00	1.00	(17)	DISP	2617	25050
	Amb to T1{1}	34	5	121	0	1.00	1.00	1.00	1.00	(17)	DISP	2617	25050
	Sus. + E1{1}	4	20	129	7	1.00	1.00			23a	OCC	5073	22211
	Sus. + E2{1}	5	15	135	5	1.00	1.00			23a	OCC	5207	22211
	Sus. + E3{1}	0	16	88	6	1.00	1.00			23a	OCC	4148	22211
	Sus. + E4{1}	2	13	167	5	1.00	1.00			23a	OCC	5931	22211
	Sus. + E5{1}	4	18	128	6	1.00	1.00			23a	OCC	5054	22211
	Sus. + E6{1}	5	13	136	5	1.00	1.00			23a	OCC	5240	22211
	Sus. + E7{1}	0	15	87	6	1.00	1.00			23a	OCC	4112	22211
	Sus. + E8{1}	2	14	168	5	1.00	1.00			23a	OCC	5949	22211

ASME B31.3 (2016) CODE COMPLIANCE
(Moments in ft-lb , Force in lbf) (Stress in psi)

Point name	Load combination	Axial Force	In-Pl. Moment	Out-Pl. Moment	Torsion Moment	S.I.F In	S.I.F Out	Index/SIF Ax.	Index/SIF Tor.	Eq. no.	Load type	Code Stress	Code Allow.
C57 -	Max P{1}									(3a)	HOOP	5642	16700
	GR + Max P{1}	2117	19	19	5	1.00	1.00	1.00	1.00	23a	SUST	2719	16700
	TR:Amb to T1{1}	34	3	92	0	1.00	1.00	1.00	1.00	(17)	DISP	2011	25050
	Amb to T1{1}	34	3	92	0	1.00	1.00	1.00	1.00	(17)	DISP	2011	25050
	Sus. + E1{1}	4	27	179	7	1.00	1.00			23a	OCC	6335	22211
	Sus. + E2{1}	3	20	145	5	1.00	1.00			23a	OCC	5572	22211
	Sus. + E3{1}	8	24	170	6	1.00	1.00			23a	OCC	6128	22211
	Sus. + E4{1}	10	21	164	5	1.00	1.00			23a	OCC	5992	22211
	Sus. + E5{1}	4	23	177	6	1.00	1.00			23a	OCC	6293	22211
	Sus. + E6{1}	3	21	146	5	1.00	1.00			23a	OCC	5593	22211
	Sus. + E7{1}	8	21	169	6	1.00	1.00			23a	OCC	6107	22211
	Sus. + E8{1}	10	24	165	5	1.00	1.00			23a	OCC	6032	22211
C57 +	Max P{1}									(3a)	HOOP	5642	16700
	GR + Max P{1}	2117	19	19	5	1.00	1.00	1.00	1.00	23a	SUST	2719	16700
	TR:Amb to T1{1}	27	3	92	0	1.00	1.00	1.00	1.00	(17)	DISP	2005	25050
	Amb to T1{1}	27	3	92	0	1.00	1.00	1.00	1.00	(17)	DISP	2005	25050
	Sus. + E1{1}	4	27	179	7	1.00	1.00			23a	OCC	6335	22211
	Sus. + E2{1}	3	20	145	5	1.00	1.00			23a	OCC	5572	22211
	Sus. + E3{1}	8	24	170	6	1.00	1.00			23a	OCC	6129	22211
	Sus. + E4{1}	10	21	164	5	1.00	1.00			23a	OCC	5992	22211
	Sus. + E5{1}	4	23	177	6	1.00	1.00			23a	OCC	6293	22211
	Sus. + E6{1}	3	21	146	5	1.00	1.00			23a	OCC	5593	22211
	Sus. + E7{1}	8	21	169	5	1.00	1.00			23a	OCC	6107	22211
	Sus. + E8{1}	10	24	165	5	1.00	1.00			23a	OCC	6032	22211
C44 N-	Max P{1}									(3a)	HOOP	5642	16700
	GR + Max P{1}	2117	12	23	5	1.00	1.00	1.00	1.00	23a	SUST	2675	16700
	TR:Amb to T1{1}	27	2	105	0	1.00	1.00	1.00	1.00	(17)	DISP	2271	25050
	Amb to T1{1}	27	2	105	0	1.00	1.00	1.00	1.00	(17)	DISP	2271	25050
	Sus. + E1{1}	4	17	142	7	1.00	1.00			23a	OCC	5373	22211
	Sus. + E2{1}	3	12	134	5	1.00	1.00			23a	OCC	5183	22211
	Sus. + E3{1}	9	16	164	6	1.00	1.00			23a	OCC	5870	22211
	Sus. + E4{1}	10	13	118	5	1.00	1.00			23a	OCC	4849	22211
	Sus. + E5{1}	4	15	140	6	1.00	1.00			23a	OCC	5339	22211
	Sus. + E6{1}	3	13	134	5	1.00	1.00			23a	OCC	5201	22211
	Sus. + E7{1}	8	14	163	5	1.00	1.00			23a	OCC	5851	22211
	Sus. + E8{1}	10	14	120	5	1.00	1.00			23a	OCC	4882	22211
C44 N+	Max P{1}									(3a)	HOOP	5642	16700
	GR + Max P{1}	2117	23	11	5	1.00	1.00	1.00	1.00	23a	SUST	2675	16700
	TR:Amb to T1{1}	27	105	3	0	1.00	1.00	1.00	1.00	(17)	DISP	2271	25050
	Amb to T1{1}	27	105	3	0	1.00	1.00	1.00	1.00	(17)	DISP	2271	25050
	Sus. + E1{1}	4	142	16	7	1.00	1.00			23a	OCC	5373	22211
	Sus. + E2{1}	3	134	13	5	1.00	1.00			23a	OCC	5183	22211
	Sus. + E3{1}	9	164	14	6	1.00	1.00			23a	OCC	5870	22211
	Sus. + E4{1}	10	119	12	5	1.00	1.00			23a	OCC	4849	22211
	Sus. + E5{1}	4	140	14	6	1.00	1.00			23a	OCC	5339	22211
	Sus. + E6{1}	3	134	12	5	1.00	1.00			23a	OCC	5201	22211
	Sus. + E7{1}	8	163	12	5	1.00	1.00			23a	OCC	5851	22211
	Sus. + E8{1}	10	120	13	5	1.00	1.00			23a	OCC	4882	22211

Primary Piping
04/24/2020 2018719 BENTLEY
07:34 AM AutoPIPE Nuclear 12.00.00.16 RESULT PAGE 378

ASME B31.3 (2016) CODE COMPLIANCE
(Moments in ft-lb , Force in lbf) (Stress in psi)

Point name	Load combination	Axial Force	In-Pl. Moment	Out-Pl. Moment	Torsion Moment	S.I.F In	S.I.F Out	Index/SIF Ax.	Index/SIF Tor.	Eq. no.	Load type	Code Stress	Code Allow.
C44 F-	Max P{1}									(3a)	HOOP	5642	16700
	GR + Max P{1}	2114	31	16	1	1.00	1.00	1.00	1.00	23a	SUST	2886	16700
	TR:Amb to T1{1}	25	97	3	0	1.00	1.00	1.00	1.00	(17)	DISP	2109	25050
	Amb to T1{1}	25	97	3	0	1.00	1.00	1.00	1.00	(17)	DISP	2109	25050
	Sus. + E1{1}	76	126	17	1	1.00	1.00			23a	OCC	5095	22211
	Sus. + E2{1}	25	37	17	1	1.00	1.00			23a	OCC	3038	22211
	Sus. + E3{1}	13	86	17	1	1.00	1.00			23a	OCC	4139	22211
	Sus. + E4{1}	92	180	18	1	1.00	1.00			23a	OCC	6331	22211
	Sus. + E5{1}	75	125	20	1	1.00	1.00			23a	OCC	5084	22211
	Sus. + E6{1}	25	37	18	1	1.00	1.00			23a	OCC	3039	22211
	Sus. + E7{1}	13	86	18	1	1.00	1.00			23a	OCC	4141	22211
	Sus. + E8{1}	92	180	16	1	1.00	1.00			23a	OCC	6342	22211
C44 F+	Max P{1}									(3a)	HOOP	5642	16700
	GR + Max P{1}	2114	16	31	1	1.00	1.00	1.00	1.00	23a	SUST	2886	16700
	TR:Amb to T1{1}	25	3	97	0	1.00	1.00	1.00	1.00	(17)	DISP	2109	25050
	Amb to T1{1}	25	3	97	0	1.00	1.00	1.00	1.00	(17)	DISP	2109	25050
	Sus. + E1{1}	76	16	126	1	1.00	1.00			23a	OCC	5095	22211
	Sus. + E2{1}	25	17	37	1	1.00	1.00			23a	OCC	3038	22211
	Sus. + E3{1}	13	16	86	1	1.00	1.00			23a	OCC	4139	22211
	Sus. + E4{1}	92	17	180	1	1.00	1.00			23a	OCC	6331	22211
	Sus. + E5{1}	75	19	125	1	1.00	1.00			23a	OCC	5084	22211
	Sus. + E6{1}	25	17	37	1	1.00	1.00			23a	OCC	3039	22211
	Sus. + E7{1}	13	18	86	1	1.00	1.00			23a	OCC	4141	22211
	Sus. + E8{1}	92	17	180	1	1.00	1.00			23a	OCC	6342	22211
C58 -	Max P{1}									(3a)	HOOP	5642	16700
	GR + Max P{1}	2114	24	29	1	1.00	1.00	1.00	1.00	23a	SUST	2946	16700
	TR:Amb to T1{1}	25	3	84	0	1.00	1.00	1.00	1.00	(17)	DISP	1817	25050
	Amb to T1{1}	25	3	84	0	1.00	1.00	1.00	1.00	(17)	DISP	1817	25050
	Sus. + E1{1}	75	24	119	1	1.00	1.00			23a	OCC	5040	22211
	Sus. + E2{1}	24	25	30	1	1.00	1.00			23a	OCC	3015	22211
	Sus. + E3{1}	13	24	77	1	1.00	1.00			23a	OCC	4038	22211
	Sus. + E4{1}	91	26	170	1	1.00	1.00			23a	OCC	6210	22211
	Sus. + E5{1}	74	28	118	1	1.00	1.00			23a	OCC	5031	22211
	Sus. + E6{1}	25	26	30	1	1.00	1.00			23a	OCC	3028	22211
	Sus. + E7{1}	13	27	77	1	1.00	1.00			23a	OCC	4042	22211
	Sus. + E8{1}	92	25	170	1	1.00	1.00			23a	OCC	6221	22211
C58 +	Max P{1}									(3a)	HOOP	5642	16700
	GR + Max P{1}	2114	24	29	1	1.00	1.00	1.00	1.00	23a	SUST	2946	16700
	TR:Amb to T1{1}	58	3	84	0	1.00	1.00	1.00	1.00	(17)	DISP	1848	25050
	Amb to T1{1}	58	3	84	0	1.00	1.00	1.00	1.00	(17)	DISP	1848	25050
	Sus. + E1{1}	75	24	119	1	1.00	1.00			23a	OCC	5040	22211
	Sus. + E2{1}	24	25	30	1	1.00	1.00			23a	OCC	3016	22211
	Sus. + E3{1}	13	24	77	1	1.00	1.00			23a	OCC	4038	22211
	Sus. + E4{1}	91	26	170	1	1.00	1.00			23a	OCC	6210	22211
	Sus. + E5{1}	74	28	118	1	1.00	1.00			23a	OCC	5031	22211
	Sus. + E6{1}	25	26	30	1	1.00	1.00			23a	OCC	3028	22211
	Sus. + E7{1}	13	27	77	1	1.00	1.00			23a	OCC	4042	22211
	Sus. + E8{1}	92	25	170	1	1.00	1.00			23a	OCC	6221	22211

Primary Piping
04/24/2020 2018719 BENTLEY
07:34 AM AutoPIPE Nuclear 12.00.00.16 RESULT PAGE 379

ASME B31.3 (2016) CODE COMPLIANCE
(Moments in ft-lb , Force in lbf) (Stress in psi)

Point name	Load combination	Axial Force	In-Pl. Moment	Out-Pl. Moment	Torsion Moment	S.I.F In	S.I.F Out	Index/SIF Ax.	Index/SIF Tor.	Eq. no.	Load type	Code Stress	Code Allow.
C59	- Max P{1}									(3a)	HOOP	5642	16700
	GR + Max P{1}	2114	46	7	1	1.00	1.00	1.00	1.00	23a	SUST	3136	16700
	TR:Amb to T1{1}	58	1	53	0	1.00	1.00	1.00	1.00	(17)	DISP	1199	25050
	Amb to T1{1}	58	1	53	0	1.00	1.00	1.00	1.00	(17)	DISP	1199	25050
	Sus. + E1{1}	65	50	56	1	1.00	1.00			23a	OCC	4320	22211
	Sus. + E2{1}	14	49	134	1	1.00	1.00			23a	OCC	6030	22211
	Sus. + E3{1}	3	50	134	1	1.00	1.00			23a	OCC	6021	22211
	Sus. + E4{1}	81	49	58	1	1.00	1.00			23a	OCC	4373	22211
	Sus. + E5{1}	64	49	57	1	1.00	1.00			23a	OCC	4331	22211
	Sus. + E6{1}	14	49	135	1	1.00	1.00			23a	OCC	6047	22211
	Sus. + E7{1}	3	49	134	1	1.00	1.00			23a	OCC	6003	22211
	Sus. + E8{1}	82	49	57	1	1.00	1.00			23a	OCC	4360	22211
C59	+ Max P{1}									(3a)	HOOP	5642	16700
	GR + Max P{1}	2113	46	7	1	1.00	1.00	1.00	1.00	23a	SUST	3135	16700
	TR:Amb to T1{1}	123	1	53	0	1.00	1.00	1.00	1.00	(17)	DISP	1260	25050
	Amb to T1{1}	123	1	53	0	1.00	1.00	1.00	1.00	(17)	DISP	1260	25050
	Sus. + E1{1}	65	50	56	1	1.00	1.00			23a	OCC	4319	22211
	Sus. + E2{1}	14	49	134	1	1.00	1.00			23a	OCC	6029	22211
	Sus. + E3{1}	3	50	134	1	1.00	1.00			23a	OCC	6020	22211
	Sus. + E4{1}	81	49	58	1	1.00	1.00			23a	OCC	4372	22211
	Sus. + E5{1}	64	49	57	1	1.00	1.00			23a	OCC	4330	22211
	Sus. + E6{1}	14	49	135	1	1.00	1.00			23a	OCC	6046	22211
	Sus. + E7{1}	3	49	134	1	1.00	1.00			23a	OCC	6002	22211
	Sus. + E8{1}	82	49	57	1	1.00	1.00			23a	OCC	4359	22211
C60	- Max P{1}									(3a)	HOOP	5642	16700
	GR + Max P{1}	2112	39	3	1	1.00	1.00	1.00	1.00	23a	SUST	2988	16700
	TR:Amb to T1{1}	123	0	1	0	1.00	1.00	1.00	1.00	(17)	DISP	130	25050
	Amb to T1{1}	123	0	1	0	1.00	1.00	1.00	1.00	(17)	DISP	130	25050
	Sus. + E1{1}	55	42	10	1	1.00	1.00			23a	OCC	3204	22211
	Sus. + E2{1}	4	43	4	1	1.00	1.00			23a	OCC	3077	22211
	Sus. + E3{1}	8	42	11	1	1.00	1.00			23a	OCC	3184	22211
	Sus. + E4{1}	71	43	3	1	1.00	1.00			23a	OCC	3140	22211
	Sus. + E5{1}	54	44	10	1	1.00	1.00			23a	OCC	3223	22211
	Sus. + E6{1}	4	43	4	1	1.00	1.00			23a	OCC	3064	22211
	Sus. + E7{1}	8	44	11	1	1.00	1.00			23a	OCC	3202	22211
	Sus. + E8{1}	71	42	3	1	1.00	1.00			23a	OCC	3126	22211
C60	+ Max P{1}									(3a)	HOOP	5642	16700
	GR + Max P{1}	2112	39	3	1	1.00	1.00	1.00	1.00	23a	SUST	2988	16700
	TR:Amb to T1{1}	166	0	1	0	1.00	1.00	1.00	1.00	(17)	DISP	170	25050
	Amb to T1{1}	166	0	1	0	1.00	1.00	1.00	1.00	(17)	DISP	170	25050
	Sus. + E1{1}	55	42	10	1	1.00	1.00			23a	OCC	3204	22211
	Sus. + E2{1}	4	43	4	1	1.00	1.00			23a	OCC	3077	22211
	Sus. + E3{1}	8	42	11	1	1.00	1.00			23a	OCC	3184	22211
	Sus. + E4{1}	71	43	3	1	1.00	1.00			23a	OCC	3140	22211
	Sus. + E5{1}	54	44	10	1	1.00	1.00			23a	OCC	3223	22211
	Sus. + E6{1}	4	43	4	1	1.00	1.00			23a	OCC	3064	22211
	Sus. + E7{1}	8	44	11	1	1.00	1.00			23a	OCC	3202	22211
	Sus. + E8{1}	71	42	3	1	1.00	1.00			23a	OCC	3126	22211

Primary Piping
04/24/2020 2018719 BENTLEY
07:34 AM AutoPIPE Nuclear 12.00.00.16 RESULT PAGE 380

ASME B31.3 (2016) CODE COMPLIANCE
(Moments in ft-lb , Force in lbf) (Stress in psi)

Point name	Load combination	Axial Force	In-Pl. Moment	Out-Pl. Moment	Torsion Moment	S.I.F In	S.I.F Out	Index/SIF Ax.	Index/SIF Tor.	Eq. no.	Load type	Code Stress	Code Allow.
C61	- Max P{1}									(3a)	HOOP	5642	16700
	GR + Max P{1}	2112	42	0	1	1.00	1.00	1.00	1.00	23a	SUST	3035	16700
	TR:Amb to T1{1}	166	0	5	0	1.00	1.00	1.00	1.00	(17)	DISP	270	25050
	Amb to T1{1}	166	0	5	0	1.00	1.00	1.00	1.00	(17)	DISP	270	25050
	Sus. + E1{1}	44	46	10	1	1.00	1.00			23a	OCC	3317	22211
	Sus. + E2{1}	6	45	5	1	1.00	1.00			23a	OCC	3174	22211
	Sus. + E3{1}	18	46	5	1	1.00	1.00			23a	OCC	3199	22211
	Sus. + E4{1}	61	45	10	1	1.00	1.00			23a	OCC	3331	22211
	Sus. + E5{1}	44	44	10	1	1.00	1.00			23a	OCC	3302	22211
	Sus. + E6{1}	6	45	5	1	1.00	1.00			23a	OCC	3181	22211
	Sus. + E7{1}	18	44	5	1	1.00	1.00			23a	OCC	3172	22211
	Sus. + E8{1}	61	45	10	1	1.00	1.00			23a	OCC	3335	22211
C61	+ Max P{1}									(3a)	HOOP	5642	16700
	GR + Max P{1}	2112	42	0	1	1.00	1.00	1.00	1.00	23a	SUST	3035	16700
	TR:Amb to T1{1}	210	0	5	0	1.00	1.00	1.00	1.00	(17)	DISP	311	25050
	Amb to T1{1}	210	0	5	0	1.00	1.00	1.00	1.00	(17)	DISP	311	25050
	Sus. + E1{1}	44	46	10	1	1.00	1.00			23a	OCC	3318	22211
	Sus. + E2{1}	6	45	5	1	1.00	1.00			23a	OCC	3174	22211
	Sus. + E3{1}	18	46	5	1	1.00	1.00			23a	OCC	3199	22211
	Sus. + E4{1}	61	45	10	1	1.00	1.00			23a	OCC	3331	22211
	Sus. + E5{1}	44	44	10	1	1.00	1.00			23a	OCC	3302	22211
	Sus. + E6{1}	6	45	5	1	1.00	1.00			23a	OCC	3182	22211
	Sus. + E7{1}	18	44	5	1	1.00	1.00			23a	OCC	3172	22211
	Sus. + E8{1}	61	45	10	1	1.00	1.00			23a	OCC	3336	22211
C63	- Max P{1}									(3a)	HOOP	5642	16700
	GR + Max P{1}	2112	40	1	1	1.00	1.00	1.00	1.00	23a	SUST	3000	16700
	TR:Amb to T1{1}	210	0	2	0	1.00	1.00	1.00	1.00	(17)	DISP	229	25050
	Amb to T1{1}	210	0	2	0	1.00	1.00	1.00	1.00	(17)	DISP	229	25050
	Sus. + E1{1}	34	42	13	1	1.00	1.00			23a	OCC	3306	22211
	Sus. + E2{1}	16	44	16	1	1.00	1.00			23a	OCC	3358	22211
	Sus. + E3{1}	28	42	13	1	1.00	1.00			23a	OCC	3288	22211
	Sus. + E4{1}	51	44	10	1	1.00	1.00			23a	OCC	3262	22211
	Sus. + E5{1}	34	45	13	1	1.00	1.00			23a	OCC	3321	22211
	Sus. + E6{1}	16	43	16	1	1.00	1.00			23a	OCC	3352	22211
	Sus. + E7{1}	28	45	13	1	1.00	1.00			23a	OCC	3305	22211
	Sus. + E8{1}	51	43	10	1	1.00	1.00			23a	OCC	3255	22211
C63	+ Max P{1}									(3a)	HOOP	5642	16700
	GR + Max P{1}	2113	40	1	1	1.00	1.00	1.00	1.00	23a	SUST	3001	16700
	TR:Amb to T1{1}	256	0	2	0	1.00	1.00	1.00	1.00	(17)	DISP	272	25050
	Amb to T1{1}	256	0	2	0	1.00	1.00	1.00	1.00	(17)	DISP	272	25050
	Sus. + E1{1}	34	42	13	1	1.00	1.00			23a	OCC	3307	22211
	Sus. + E2{1}	16	44	16	1	1.00	1.00			23a	OCC	3359	22211
	Sus. + E3{1}	28	42	13	1	1.00	1.00			23a	OCC	3289	22211
	Sus. + E4{1}	51	44	10	1	1.00	1.00			23a	OCC	3264	22211
	Sus. + E5{1}	34	45	13	1	1.00	1.00			23a	OCC	3322	22211
	Sus. + E6{1}	16	43	16	1	1.00	1.00			23a	OCC	3354	22211
	Sus. + E7{1}	28	45	13	1	1.00	1.00			23a	OCC	3306	22211
	Sus. + E8{1}	51	43	10	1	1.00	1.00			23a	OCC	3257	22211

ASME B31.3 (2016) CODE COMPLIANCE
(Moments in ft-lb , Force in lbf) (Stress in psi)

Point name	Load combination	Axial Force	In-Pl. Moment	Out-Pl. Moment	Torsion Moment	S.I.F In	S.I.F Out	Index/SIF Ax.	Index/SIF Tor.	Eq. no.	Load type	Code Stress	Code Allow.
C64	- Max P{1}									(3a)	HOOP	5642	16700
	GR + Max P{1}	2113	43	0	1	1.00	1.00	1.00	1.00	23a	SUST	3056	16700
	TR:Amb to T1{1}	256	0	9	0	1.00	1.00	1.00	1.00	(17)	DISP	423	25050
	Amb to T1{1}	256	0	9	0	1.00	1.00	1.00	1.00	(17)	DISP	423	25050
	Sus. + E1{1}	24	47	5	1	1.00	1.00			23a	OCC	3234	22211
	Sus. + E2{1}	26	46	2	1	1.00	1.00			23a	OCC	3161	22211
	Sus. + E3{1}	38	47	1	1	1.00	1.00			23a	OCC	3203	22211
	Sus. + E4{1}	41	46	5	1	1.00	1.00			23a	OCC	3228	22211
	Sus. + E5{1}	24	45	5	1	1.00	1.00			23a	OCC	3209	22211
	Sus. + E6{1}	26	47	2	1	1.00	1.00			23a	OCC	3179	22211
	Sus. + E7{1}	38	45	1	1	1.00	1.00			23a	OCC	3155	22211
	Sus. + E8{1}	41	46	5	1	1.00	1.00			23a	OCC	3236	22211
C64	+ Max P{1}									(3a)	HOOP	5642	16700
	GR + Max P{1}	2113	43	0	1	1.00	1.00	1.00	1.00	23a	SUST	3057	16700
	TR:Amb to T1{1}	212	0	9	0	1.00	1.00	1.00	1.00	(17)	DISP	382	25050
	Amb to T1{1}	212	0	9	0	1.00	1.00	1.00	1.00	(17)	DISP	382	25050
	Sus. + E1{1}	24	47	5	1	1.00	1.00			23a	OCC	3234	22211
	Sus. + E2{1}	26	46	2	1	1.00	1.00			23a	OCC	3162	22211
	Sus. + E3{1}	38	47	1	1	1.00	1.00			23a	OCC	3203	22211
	Sus. + E4{1}	41	46	5	1	1.00	1.00			23a	OCC	3228	22211
	Sus. + E5{1}	24	45	5	1	1.00	1.00			23a	OCC	3209	22211
	Sus. + E6{1}	26	47	2	1	1.00	1.00			23a	OCC	3179	22211
	Sus. + E7{1}	38	45	1	1	1.00	1.00			23a	OCC	3155	22211
	Sus. + E8{1}	41	46	5	1	1.00	1.00			23a	OCC	3237	22211
C65	- Max P{1}									(3a)	HOOP	5642	16700
	GR + Max P{1}	2113	36	1	1	1.00	1.00	1.00	1.00	23a	SUST	2902	16700
	TR:Amb to T1{1}	212	0	1	0	1.00	1.00	1.00	1.00	(17)	DISP	221	25050
	Amb to T1{1}	212	0	1	0	1.00	1.00	1.00	1.00	(17)	DISP	221	25050
	Sus. + E1{1}	14	38	7	1	1.00	1.00			23a	OCC	3075	22211
	Sus. + E2{1}	36	39	11	1	1.00	1.00			23a	OCC	3177	22211
	Sus. + E3{1}	48	38	9	1	1.00	1.00			23a	OCC	3142	22211
	Sus. + E4{1}	30	39	10	1	1.00	1.00			23a	OCC	3147	22211
	Sus. + E5{1}	14	39	8	1	1.00	1.00			23a	OCC	3090	22211
	Sus. + E6{1}	36	38	10	1	1.00	1.00			23a	OCC	3166	22211
	Sus. + E7{1}	48	40	9	1	1.00	1.00			23a	OCC	3155	22211
	Sus. + E8{1}	31	39	10	1	1.00	1.00			23a	OCC	3147	22211
C65	+ Max P{1}									(3a)	HOOP	5642	16700
	GR + Max P{1}	2113	36	1	1	1.00	1.00	1.00	1.00	23a	SUST	2902	16700
	TR:Amb to T1{1}	172	0	1	0	1.00	1.00	1.00	1.00	(17)	DISP	185	25050
	Amb to T1{1}	172	0	1	0	1.00	1.00	1.00	1.00	(17)	DISP	185	25050
	Sus. + E1{1}	14	38	7	1	1.00	1.00			23a	OCC	3075	22211
	Sus. + E2{1}	36	39	11	1	1.00	1.00			23a	OCC	3177	22211
	Sus. + E3{1}	48	38	9	1	1.00	1.00			23a	OCC	3142	22211
	Sus. + E4{1}	30	39	10	1	1.00	1.00			23a	OCC	3147	22211
	Sus. + E5{1}	14	39	8	1	1.00	1.00			23a	OCC	3090	22211
	Sus. + E6{1}	36	38	10	1	1.00	1.00			23a	OCC	3166	22211
	Sus. + E7{1}	48	40	9	1	1.00	1.00			23a	OCC	3155	22211
	Sus. + E8{1}	31	39	10	1	1.00	1.00			23a	OCC	3147	22211

Primary Piping
04/24/2020 2018719 BENTLEY
07:34 AM AutoPIPE Nuclear 12.00.00.16 RESULT PAGE 382

ASME B31.3 (2016) CODE COMPLIANCE
(Moments in ft-lb , Force in lbf) (Stress in psi)

Point name	Load combination	Axial Force	In-Pl. Moment	Out-Pl. Moment	Torsion Moment	S.I.F In	S.I.F Out	Index/SIF Ax.	Index/SIF Tor.	Eq. no.	Load type	Code Stress	Code Allow.
C72	- Max P{1}									(3a)	HOOP	5642	16700
	GR + Max P{1}	2112	59	2	1	1.00	1.00	1.00	1.00	23a	SUST	3434	16700
	TR:Amb to T1{1}	172	1	92	0	1.00	1.00	1.00	1.00	(17)	DISP	2131	25050
	Amb to T1{1}	172	1	92	0	1.00	1.00	1.00	1.00	(17)	DISP	2131	25050
	Sus. + E1{1}	4	64	122	1	1.00	1.00			23a	OCC	6139	22211
	Sus. + E2{1}	46	63	185	1	1.00	1.00			23a	OCC	7603	22211
	Sus. + E3{1}	58	65	177	1	1.00	1.00			23a	OCC	7453	22211
	Sus. + E4{1}	20	65	112	1	1.00	1.00			23a	OCC	5940	22211
	Sus. + E5{1}	4	65	121	1	1.00	1.00			23a	OCC	6124	22211
	Sus. + E6{1}	47	65	184	1	1.00	1.00			23a	OCC	7589	22211
	Sus. + E7{1}	58	63	177	1	1.00	1.00			23a	OCC	7444	22211
	Sus. + E8{1}	20	64	112	1	1.00	1.00			23a	OCC	5933	22211
C72	+ Max P{1}									(3a)	HOOP	5642	16700
	GR + Max P{1}	2113	59	2	1	1.00	1.00	1.00	1.00	23a	SUST	3435	16700
	TR:Amb to T1{1}	94	1	92	0	1.00	1.00	1.00	1.00	(17)	DISP	2059	25050
	Amb to T1{1}	94	1	92	0	1.00	1.00	1.00	1.00	(17)	DISP	2059	25050
	Sus. + E1{1}	4	64	122	1	1.00	1.00			23a	OCC	6140	22211
	Sus. + E2{1}	46	63	185	1	1.00	1.00			23a	OCC	7603	22211
	Sus. + E3{1}	58	65	177	1	1.00	1.00			23a	OCC	7454	22211
	Sus. + E4{1}	20	65	112	1	1.00	1.00			23a	OCC	5940	22211
	Sus. + E5{1}	4	65	121	1	1.00	1.00			23a	OCC	6124	22211
	Sus. + E6{1}	47	65	184	1	1.00	1.00			23a	OCC	7590	22211
	Sus. + E7{1}	58	63	177	1	1.00	1.00			23a	OCC	7444	22211
	Sus. + E8{1}	20	64	112	1	1.00	1.00			23a	OCC	5933	22211
C73	- Max P{1}									(3a)	HOOP	5642	16700
	GR + Max P{1}	2112	29	37	1	1.00	1.00	1.00	1.00	23a	SUST	3157	16700
	TR:Amb to T1{1}	94	2	114	0	1.00	1.00	1.00	1.00	(17)	DISP	2527	25050
	Amb to T1{1}	94	2	114	0	1.00	1.00	1.00	1.00	(17)	DISP	2527	25050
	Sus. + E1{1}	8	33	81	1	1.00	1.00			23a	OCC	4164	22211
	Sus. + E2{1}	58	35	219	1	1.00	1.00			23a	OCC	7338	22211
	Sus. + E3{1}	71	31	282	1	1.00	1.00			23a	OCC	8773	22211
	Sus. + E4{1}	8	30	56	1	1.00	1.00			23a	OCC	3598	22211
	Sus. + E5{1}	8	31	81	1	1.00	1.00			23a	OCC	4166	22211
	Sus. + E6{1}	59	30	219	1	1.00	1.00			23a	OCC	7339	22211
	Sus. + E7{1}	70	36	281	1	1.00	1.00			23a	OCC	8747	22211
	Sus. + E8{1}	8	34	55	1	1.00	1.00			23a	OCC	3589	22211
C73	+ Max P{1}									(3a)	HOOP	5642	16700
	GR + Max P{1}	2112	29	37	1	1.00	1.00	1.00	1.00	23a	SUST	3157	16700
	TR:Amb to T1{1}	66	2	114	0	1.00	1.00	1.00	1.00	(17)	DISP	2500	25050
	Amb to T1{1}	66	2	114	0	1.00	1.00	1.00	1.00	(17)	DISP	2500	25050
	Sus. + E1{1}	8	33	81	1	1.00	1.00			23a	OCC	4163	22211
	Sus. + E2{1}	58	35	219	1	1.00	1.00			23a	OCC	7338	22211
	Sus. + E3{1}	71	31	282	1	1.00	1.00			23a	OCC	8773	22211
	Sus. + E4{1}	8	30	56	1	1.00	1.00			23a	OCC	3597	22211
	Sus. + E5{1}	8	31	81	1	1.00	1.00			23a	OCC	4165	22211
	Sus. + E6{1}	59	30	219	1	1.00	1.00			23a	OCC	7339	22211
	Sus. + E7{1}	70	36	281	1	1.00	1.00			23a	OCC	8747	22211
	Sus. + E8{1}	8	34	55	1	1.00	1.00			23a	OCC	3589	22211

Primary Piping
04/24/2020 2018719 BENTLEY
07:34 AM AutoPIPE Nuclear 12.00.00.16 RESULT PAGE 383

ASME B31.3 (2016) CODE COMPLIANCE
(Moments in ft-lb , Force in lbf) (Stress in psi)

Point name	Load combination	Axial Force	In-Pl. Moment	Out-Pl. Moment	Torsion Moment	S.I.F In	S.I.F Out	Index/SIF Ax.	Index/SIF Tor.	Eq. no.	Load type	Code Stress	Code Allow.
C54 N-	Max P{1}									(3a)	HOOP	5642	16700
	GR + Max P{1}	2112	20	39	1	1.00	1.00	1.00	1.00	23a	SUST	3079	16700
	TR:Amb to T1{1}	66	2	136	0	1.00	1.00	1.00	1.00	(17)	DISP	2978	25050
	Amb to T1{1}	66	2	136	0	1.00	1.00	1.00	1.00	(17)	DISP	2978	25050
	Sus. + E1{1}	9	23	82	1	1.00	1.00			23a	OCC	4077	22211
	Sus. + E2{1}	59	24	235	1	1.00	1.00			23a	OCC	7572	22211
	Sus. + E3{1}	71	22	302	1	1.00	1.00			23a	OCC	9103	22211
	Sus. + E4{1}	8	20	63	1	1.00	1.00			23a	OCC	3638	22211
	Sus. + E5{1}	9	21	83	1	1.00	1.00			23a	OCC	4081	22211
	Sus. + E6{1}	59	21	235	1	1.00	1.00			23a	OCC	7573	22211
	Sus. + E7{1}	71	25	301	1	1.00	1.00			23a	OCC	9080	22211
	Sus. + E8{1}	8	23	62	1	1.00	1.00			23a	OCC	3628	22211
C54 N+	Max P{1}									(3a)	HOOP	5642	16700
	GR + Max P{1}	2112	39	20	1	1.00	1.00	1.00	1.00	23a	SUST	3079	16700
	TR:Amb to T1{1}	66	136	3	0	1.00	1.00	1.00	1.00	(17)	DISP	2978	25050
	Amb to T1{1}	66	136	3	0	1.00	1.00	1.00	1.00	(17)	DISP	2978	25050
	Sus. + E1{1}	9	83	22	1	1.00	1.00			23a	OCC	4077	22211
	Sus. + E2{1}	59	235	26	1	1.00	1.00			23a	OCC	7572	22211
	Sus. + E3{1}	71	302	24	1	1.00	1.00			23a	OCC	9103	22211
	Sus. + E4{1}	8	63	20	1	1.00	1.00			23a	OCC	3638	22211
	Sus. + E5{1}	9	83	21	1	1.00	1.00			23a	OCC	4081	22211
	Sus. + E6{1}	59	235	22	1	1.00	1.00			23a	OCC	7573	22211
	Sus. + E7{1}	71	301	27	1	1.00	1.00			23a	OCC	9080	22211
	Sus. + E8{1}	8	63	23	1	1.00	1.00			23a	OCC	3628	22211
C54 F-	Max P{1}									(3a)	HOOP	5642	16700
	GR + Max P{1}	2117	22	5	1	1.00	1.00	1.00	1.00	23a	SUST	2613	16700
	TR:Amb to T1{1}	45	73	3	0	1.00	1.00	1.00	1.00	(17)	DISP	1601	25050
	Amb to T1{1}	45	73	3	0	1.00	1.00	1.00	1.00	(17)	DISP	1601	25050
	Sus. + E1{1}	5	33	5	1	1.00	1.00			23a	OCC	2870	22211
	Sus. + E2{1}	22	107	9	2	1.00	1.00			23a	OCC	4564	22211
	Sus. + E3{1}	30	163	11	2	1.00	1.00			23a	OCC	5839	22211
	Sus. + E4{1}	5	59	7	2	1.00	1.00			23a	OCC	3444	22211
	Sus. + E5{1}	5	34	6	1	1.00	1.00			23a	OCC	2880	22211
	Sus. + E6{1}	22	106	10	2	1.00	1.00			23a	OCC	4539	22211
	Sus. + E7{1}	31	165	10	2	1.00	1.00			23a	OCC	5865	22211
	Sus. + E8{1}	5	59	7	1	1.00	1.00			23a	OCC	3452	22211
C54 F+	Max P{1}									(3a)	HOOP	5642	16700
	GR + Max P{1}	2117	5	22	1	1.00	1.00	1.00	1.00	23a	SUST	2613	16700
	TR:Amb to T1{1}	45	2	73	0	1.00	1.00	1.00	1.00	(17)	DISP	1601	25050
	Amb to T1{1}	45	2	73	0	1.00	1.00	1.00	1.00	(17)	DISP	1601	25050
	Sus. + E1{1}	5	5	33	1	1.00	1.00			23a	OCC	2870	22211
	Sus. + E2{1}	22	8	107	2	1.00	1.00			23a	OCC	4564	22211
	Sus. + E3{1}	30	10	164	2	1.00	1.00			23a	OCC	5839	22211
	Sus. + E4{1}	5	7	59	2	1.00	1.00			23a	OCC	3444	22211
	Sus. + E5{1}	5	6	34	1	1.00	1.00			23a	OCC	2880	22211
	Sus. + E6{1}	22	9	106	2	1.00	1.00			23a	OCC	4539	22211
	Sus. + E7{1}	31	9	165	2	1.00	1.00			23a	OCC	5865	22211
	Sus. + E8{1}	5	6	59	1	1.00	1.00			23a	OCC	3452	22211

Primary Piping
04/24/2020 2018719 BENTLEY
07:34 AM AutoPIPE Nuclear 12.00.00.16 RESULT PAGE 384

ASME B31.3 (2016) CODE COMPLIANCE
(Moments in ft-lb , Force in lbf) (Stress in psi)

Point name	Load combination	Axial Force	In-Pl. Moment	Out-Pl. Moment	Torsion Moment	S.I.F In	S.I.F Out	Index/SIF Ax.	Index/SIF Tor.	Eq. no.	Load type	Code Stress	Code Allow.
C74	- Max P{1}									(3a)	HOOP	5642	16700
	GR + Max P{1}	2117	12	18	1	1.00	1.00	1.00	1.00	23a	SUST	2580	16700
	TR:Amb to T1{1}	45	3	40	0	1.00	1.00	1.00	1.00	(17)	DISP	897	25050
	Amb to T1{1}	45	3	40	0	1.00	1.00	1.00	1.00	(17)	DISP	897	25050
	Sus. + E1{1}	5	12	21	1	1.00	1.00			23a	OCC	2673	22211
	Sus. + E2{1}	21	16	71	2	1.00	1.00			23a	OCC	3802	22211
	Sus. + E3{1}	30	19	121	2	1.00	1.00			23a	OCC	4941	22211
	Sus. + E4{1}	4	15	53	2	1.00	1.00			23a	OCC	3388	22211
	Sus. + E5{1}	6	14	22	1	1.00	1.00			23a	OCC	2688	22211
	Sus. + E6{1}	21	17	69	2	1.00	1.00			23a	OCC	3776	22211
	Sus. + E7{1}	30	17	122	2	1.00	1.00			23a	OCC	4970	22211
	Sus. + E8{1}	5	13	53	1	1.00	1.00			23a	OCC	3395	22211
C74	+ Max P{1}									(3a)	HOOP	5642	16700
	GR + Max P{1}	2116	12	18	1	1.00	1.00	1.00	1.00	23a	SUST	2579	16700
	TR:Amb to T1{1}	86	3	40	0	1.00	1.00	1.00	1.00	(17)	DISP	936	25050
	Amb to T1{1}	86	3	40	0	1.00	1.00	1.00	1.00	(17)	DISP	936	25050
	Sus. + E1{1}	5	12	21	1	1.00	1.00			23a	OCC	2673	22211
	Sus. + E2{1}	21	16	71	2	1.00	1.00			23a	OCC	3801	22211
	Sus. + E3{1}	30	19	121	2	1.00	1.00			23a	OCC	4940	22211
	Sus. + E4{1}	4	15	53	2	1.00	1.00			23a	OCC	3388	22211
	Sus. + E5{1}	6	14	22	1	1.00	1.00			23a	OCC	2688	22211
	Sus. + E6{1}	21	17	69	2	1.00	1.00			23a	OCC	3775	22211
	Sus. + E7{1}	30	17	122	2	1.00	1.00			23a	OCC	4969	22211
	Sus. + E8{1}	5	13	53	1	1.00	1.00			23a	OCC	3394	22211
C75	- Max P{1}									(3a)	HOOP	5642	16700
	GR + Max P{1}	2116	49	56	1	1.00	1.00	1.00	1.00	23a	SUST	3775	16700
	TR:Amb to T1{1}	86	1	107	0	1.00	1.00	1.00	1.00	(17)	DISP	2364	25050
	Amb to T1{1}	86	1	107	0	1.00	1.00	1.00	1.00	(17)	DISP	2364	25050
	Sus. + E1{1}	16	52	232	1	1.00	1.00			23a	OCC	7762	22211
	Sus. + E2{1}	11	53	172	2	1.00	1.00			23a	OCC	6405	22211
	Sus. + E3{1}	20	51	288	2	1.00	1.00			23a	OCC	9036	22211
	Sus. + E4{1}	6	53	121	2	1.00	1.00			23a	OCC	5251	22211
	Sus. + E5{1}	16	53	232	1	1.00	1.00			23a	OCC	7759	22211
	Sus. + E6{1}	11	52	172	2	1.00	1.00			23a	OCC	6396	22211
	Sus. + E7{1}	20	54	288	2	1.00	1.00			23a	OCC	9046	22211
	Sus. + E8{1}	5	53	121	1	1.00	1.00			23a	OCC	5254	22211
C75	+ Max P{1}									(3a)	HOOP	5642	16700
	GR + Max P{1}	2116	49	56	1	1.00	1.00	1.00	1.00	23a	SUST	3775	16700
	TR:Amb to T1{1}	170	1	107	0	1.00	1.00	1.00	1.00	(17)	DISP	2442	25050
	Amb to T1{1}	170	1	107	0	1.00	1.00	1.00	1.00	(17)	DISP	2442	25050
	Sus. + E1{1}	16	52	232	1	1.00	1.00			23a	OCC	7762	22211
	Sus. + E2{1}	11	53	172	2	1.00	1.00			23a	OCC	6405	22211
	Sus. + E3{1}	20	51	288	2	1.00	1.00			23a	OCC	9036	22211
	Sus. + E4{1}	6	53	121	2	1.00	1.00			23a	OCC	5251	22211
	Sus. + E5{1}	16	53	232	1	1.00	1.00			23a	OCC	7759	22211
	Sus. + E6{1}	11	52	172	2	1.00	1.00			23a	OCC	6396	22211
	Sus. + E7{1}	20	54	288	2	1.00	1.00			23a	OCC	9046	22211
	Sus. + E8{1}	5	53	121	1	1.00	1.00			23a	OCC	5254	22211

ASME B31.3 (2016) CODE COMPLIANCE
(Moments in ft-lb , Force in lbf) (Stress in psi)

Point name	Load combination	Axial Force	In-Pl. Moment	Out-Pl. Moment	Torsion Moment	S.I.F In	S.I.F Out	Index/SIF Ax.	Index/SIF Tor.	Eq. no.	Load type	Code Stress	Code Allow.
C76	- Max P{1}									(3a)	HOOP	5642	16700
	GR + Max P{1}	2116	39	1	1	1.00	1.00	1.00	1.00	23a	SUST	2974	16700
	TR:Amb to T1{1}	170	0	29	0	1.00	1.00	1.00	1.00	(17)	DISP	785	25050
	Amb to T1{1}	170	0	29	0	1.00	1.00	1.00	1.00	(17)	DISP	785	25050
	Sus. + E1{1}	26	43	6	1	1.00	1.00			23a	OCC	3157	22211
	Sus. + E2{1}	1	42	7	2	1.00	1.00			23a	OCC	3145	22211
	Sus. + E3{1}	10	42	10	2	1.00	1.00			23a	OCC	3201	22211
	Sus. + E4{1}	16	42	7	2	1.00	1.00			23a	OCC	3154	22211
	Sus. + E5{1}	26	41	6	1	1.00	1.00			23a	OCC	3141	22211
	Sus. + E6{1}	1	42	7	2	1.00	1.00			23a	OCC	3140	22211
	Sus. + E7{1}	10	42	10	2	1.00	1.00			23a	OCC	3202	22211
	Sus. + E8{1}	16	43	7	1	1.00	1.00			23a	OCC	3162	22211
C76	+ Max P{1}									(3a)	HOOP	5642	16700
	GR + Max P{1}	2116	39	1	1	1.00	1.00	1.00	1.00	23a	SUST	2974	16700
	TR:Amb to T1{1}	234	0	29	0	1.00	1.00	1.00	1.00	(17)	DISP	844	25050
	Amb to T1{1}	234	0	29	0	1.00	1.00	1.00	1.00	(17)	DISP	844	25050
	Sus. + E1{1}	26	43	6	1	1.00	1.00			23a	OCC	3157	22211
	Sus. + E2{1}	1	42	7	2	1.00	1.00			23a	OCC	3145	22211
	Sus. + E3{1}	10	42	10	2	1.00	1.00			23a	OCC	3201	22211
	Sus. + E4{1}	16	42	7	2	1.00	1.00			23a	OCC	3154	22211
	Sus. + E5{1}	26	41	6	2	1.00	1.00			23a	OCC	3141	22211
	Sus. + E6{1}	1	42	7	2	1.00	1.00			23a	OCC	3140	22211
	Sus. + E7{1}	10	42	10	2	1.00	1.00			23a	OCC	3202	22211
	Sus. + E8{1}	16	43	7	1	1.00	1.00			23a	OCC	3162	22211
C77	- Max P{1}									(3a)	HOOP	5642	16700
	GR + Max P{1}	2115	42	1	1	1.00	1.00	1.00	1.00	23a	SUST	3044	16700
	TR:Amb to T1{1}	234	0	11	0	1.00	1.00	1.00	1.00	(17)	DISP	447	25050
	Amb to T1{1}	234	0	11	0	1.00	1.00	1.00	1.00	(17)	DISP	447	25050
	Sus. + E1{1}	36	45	6	1	1.00	1.00			23a	OCC	3212	22211
	Sus. + E2{1}	9	45	1	2	1.00	1.00			23a	OCC	3123	22211
	Sus. + E3{1}	0	46	3	2	1.00	1.00			23a	OCC	3146	22211
	Sus. + E4{1}	26	46	4	2	1.00	1.00			23a	OCC	3192	22211
	Sus. + E5{1}	36	46	6	2	1.00	1.00			23a	OCC	3231	22211
	Sus. + E6{1}	9	46	1	2	1.00	1.00			23a	OCC	3143	22211
	Sus. + E7{1}	0	45	3	2	1.00	1.00			23a	OCC	3135	22211
	Sus. + E8{1}	26	45	4	1	1.00	1.00			23a	OCC	3173	22211
C77	+ Max P{1}									(3a)	HOOP	5642	16700
	GR + Max P{1}	2115	42	1	1	1.00	1.00	1.00	1.00	23a	SUST	3044	16700
	TR:Amb to T1{1}	203	0	11	0	1.00	1.00	1.00	1.00	(17)	DISP	418	25050
	Amb to T1{1}	203	0	11	0	1.00	1.00	1.00	1.00	(17)	DISP	418	25050
	Sus. + E1{1}	36	45	6	1	1.00	1.00			23a	OCC	3212	22211
	Sus. + E2{1}	9	45	1	2	1.00	1.00			23a	OCC	3123	22211
	Sus. + E3{1}	0	46	3	2	1.00	1.00			23a	OCC	3146	22211
	Sus. + E4{1}	26	46	4	2	1.00	1.00			23a	OCC	3191	22211
	Sus. + E5{1}	36	46	6	2	1.00	1.00			23a	OCC	3231	22211
	Sus. + E6{1}	9	46	1	2	1.00	1.00			23a	OCC	3143	22211
	Sus. + E7{1}	0	45	3	2	1.00	1.00			23a	OCC	3135	22211
	Sus. + E8{1}	26	45	4	1	1.00	1.00			23a	OCC	3173	22211

ASME B31.3 (2016) CODE COMPLIANCE
(Moments in ft-lb , Force in lbf) (Stress in psi)

Point name	Load combination	Axial Force	In-Pl. Moment	Out-Pl. Moment	Torsion Moment	S.I.F In	S.I.F Out	Index/SIF Ax.	Index/SIF Tor.	Eq. no.	Load type	Code Stress	Code Allow.
C78	- Max P{1}									(3a)	HOOP	5642	16700
	GR + Max P{1}	2115	39	1	1	1.00	1.00	1.00	1.00	23a	SUST	2970	16700
	TR:Amb to T1{1}	203	0	4	0	1.00	1.00	1.00	1.00	(17)	DISP	283	25050
	Amb to T1{1}	203	0	4	0	1.00	1.00	1.00	1.00	(17)	DISP	283	25050
	Sus. + E1{1}	46	42	9	1	1.00	1.00			23a	OCC	3220	22211
	Sus. + E2{1}	19	42	3	2	1.00	1.00			23a	OCC	3068	22211
	Sus. + E3{1}	11	42	4	2	1.00	1.00			23a	OCC	3082	22211
	Sus. + E4{1}	36	42	11	2	1.00	1.00			23a	OCC	3250	22211
	Sus. + E5{1}	46	42	9	2	1.00	1.00			23a	OCC	3219	22211
	Sus. + E6{1}	19	42	3	2	1.00	1.00			23a	OCC	3076	22211
	Sus. + E7{1}	10	42	4	2	1.00	1.00			23a	OCC	3075	22211
	Sus. + E8{1}	36	42	11	1	1.00	1.00			23a	OCC	3249	22211
C78	+ Max P{1}									(3a)	HOOP	5642	16700
	GR + Max P{1}	2115	39	1	1	1.00	1.00	1.00	1.00	23a	SUST	2970	16700
	TR:Amb to T1{1}	161	0	4	0	1.00	1.00	1.00	1.00	(17)	DISP	244	25050
	Amb to T1{1}	161	0	4	0	1.00	1.00	1.00	1.00	(17)	DISP	244	25050
	Sus. + E1{1}	46	42	9	1	1.00	1.00			23a	OCC	3220	22211
	Sus. + E2{1}	19	42	3	2	1.00	1.00			23a	OCC	3068	22211
	Sus. + E3{1}	11	42	4	2	1.00	1.00			23a	OCC	3082	22211
	Sus. + E4{1}	36	42	11	2	1.00	1.00			23a	OCC	3250	22211
	Sus. + E5{1}	46	42	9	2	1.00	1.00			23a	OCC	3219	22211
	Sus. + E6{1}	19	42	3	2	1.00	1.00			23a	OCC	3076	22211
	Sus. + E7{1}	10	42	4	2	1.00	1.00			23a	OCC	3076	22211
	Sus. + E8{1}	36	42	11	1	1.00	1.00			23a	OCC	3249	22211
C79	- Max P{1}									(3a)	HOOP	5642	16700
	GR + Max P{1}	2114	43	3	1	1.00	1.00	1.00	1.00	23a	SUST	3072	16700
	TR:Amb to T1{1}	161	1	67	0	1.00	1.00	1.00	1.00	(17)	DISP	1577	25050
	Amb to T1{1}	161	1	67	0	1.00	1.00	1.00	1.00	(17)	DISP	1577	25050
	Sus. + E1{1}	56	48	42	1	1.00	1.00			23a	OCC	4024	22211
	Sus. + E2{1}	29	48	88	2	1.00	1.00			23a	OCC	5028	22211
	Sus. + E3{1}	20	46	87	2	1.00	1.00			23a	OCC	5006	22211
	Sus. + E4{1}	46	46	40	2	1.00	1.00			23a	OCC	3966	22211
	Sus. + E5{1}	56	45	41	2	1.00	1.00			23a	OCC	4009	22211
	Sus. + E6{1}	29	45	87	2	1.00	1.00			23a	OCC	5018	22211
	Sus. + E7{1}	20	48	87	2	1.00	1.00			23a	OCC	5009	22211
	Sus. + E8{1}	46	48	40	1	1.00	1.00			23a	OCC	3970	22211
C79	+ Max P{1}									(3a)	HOOP	5642	16700
	GR + Max P{1}	2115	43	3	1	1.00	1.00	1.00	1.00	23a	SUST	3073	16700
	TR:Amb to T1{1}	92	1	67	0	1.00	1.00	1.00	1.00	(17)	DISP	1513	25050
	Amb to T1{1}	92	1	67	0	1.00	1.00	1.00	1.00	(17)	DISP	1513	25050
	Sus. + E1{1}	56	48	42	1	1.00	1.00			23a	OCC	4024	22211
	Sus. + E2{1}	29	48	88	2	1.00	1.00			23a	OCC	5028	22211
	Sus. + E3{1}	20	46	87	2	1.00	1.00			23a	OCC	5007	22211
	Sus. + E4{1}	46	46	40	2	1.00	1.00			23a	OCC	3966	22211
	Sus. + E5{1}	56	45	41	2	1.00	1.00			23a	OCC	4009	22211
	Sus. + E6{1}	29	45	87	2	1.00	1.00			23a	OCC	5018	22211
	Sus. + E7{1}	20	48	87	2	1.00	1.00			23a	OCC	5009	22211
	Sus. + E8{1}	46	48	40	1	1.00	1.00			23a	OCC	3971	22211

Primary Piping
04/24/2020 2018719
07:34 AM

BENTLEY
AutoPIPE Nuclear 12.00.00.16 RESULT PAGE 387

ASME B31.3 (2016) CODE COMPLIANCE
(Moments in ft-lb , Force in lbf) (Stress in psi)

Point name	Load combination	Axial Force	In-Pl. Moment	Out-Pl. Moment	Torsion Moment	S.I.F In	S.I.F Out	Index/SIF Ax.	Index/SIF Tor.	Eq. no.	Load type	Code Stress	Code Allow.
C80 -	Max P{1}									(3a)	HOOP	5642	16700
	GR + Max P{1}	2115	29	21	1	1.00	1.00	1.00	1.00	23a	SUST	2903	16700
	TR:Amb to T1{1}	92	2	109	0	1.00	1.00	1.00	1.00	(17)	DISP	2413	25050
	Amb to T1{1}	92	2	109	0	1.00	1.00	1.00	1.00	(17)	DISP	2413	25050
	Sus. + E1{1}	66	30	227	1	1.00	1.00			23a	OCC	7611	22211
	Sus. + E2{1}	39	30	180	2	1.00	1.00			23a	OCC	6530	22211
	Sus. + E3{1}	31	34	150	2	1.00	1.00			23a	OCC	5850	22211
	Sus. + E4{1}	56	34	192	2	1.00	1.00			23a	OCC	6830	22211
	Sus. + E5{1}	66	35	226	2	1.00	1.00			23a	OCC	7590	22211
	Sus. + E6{1}	39	35	179	2	1.00	1.00			23a	OCC	6506	22211
	Sus. + E7{1}	31	29	150	2	1.00	1.00			23a	OCC	5854	22211
	Sus. + E8{1}	56	29	193	1	1.00	1.00			23a	OCC	6832	22211
C80 +	Max P{1}									(3a)	HOOP	5642	16700
	GR + Max P{1}	2114	29	21	1	1.00	1.00	1.00	1.00	23a	SUST	2903	16700
	TR:Amb to T1{1}	62	2	109	0	1.00	1.00	1.00	1.00	(17)	DISP	2385	25050
	Amb to T1{1}	62	2	109	0	1.00	1.00	1.00	1.00	(17)	DISP	2385	25050
	Sus. + E1{1}	66	30	227	2	1.00	1.00			23a	OCC	7611	22211
	Sus. + E2{1}	39	30	180	1	1.00	1.00			23a	OCC	6530	22211
	Sus. + E3{1}	31	34	150	2	1.00	1.00			23a	OCC	5850	22211
	Sus. + E4{1}	56	34	192	1	1.00	1.00			23a	OCC	6830	22211
	Sus. + E5{1}	66	35	226	1	1.00	1.00			23a	OCC	7590	22211
	Sus. + E6{1}	39	35	179	2	1.00	1.00			23a	OCC	6506	22211
	Sus. + E7{1}	31	29	150	1	1.00	1.00			23a	OCC	5853	22211
	Sus. + E8{1}	56	29	193	2	1.00	1.00			23a	OCC	6832	22211
C62 N-	Max P{1}									(3a)	HOOP	5642	16700
	GR + Max P{1}	2114	20	22	1	1.00	1.00	1.00	1.00	23a	SUST	2771	16700
	TR:Amb to T1{1}	62	1	127	0	1.00	1.00	1.00	1.00	(17)	DISP	2774	25050
	Amb to T1{1}	62	1	127	0	1.00	1.00	1.00	1.00	(17)	DISP	2774	25050
	Sus. + E1{1}	67	21	244	2	1.00	1.00			23a	OCC	7848	22211
	Sus. + E2{1}	40	21	192	1	1.00	1.00			23a	OCC	6644	22211
	Sus. + E3{1}	31	24	161	2	1.00	1.00			23a	OCC	5925	22211
	Sus. + E4{1}	57	24	208	1	1.00	1.00			23a	OCC	7020	22211
	Sus. + E5{1}	67	24	243	1	1.00	1.00			23a	OCC	7823	22211
	Sus. + E6{1}	40	24	191	2	1.00	1.00			23a	OCC	6617	22211
	Sus. + E7{1}	31	20	161	1	1.00	1.00			23a	OCC	5930	22211
	Sus. + E8{1}	57	20	208	2	1.00	1.00			23a	OCC	7023	22211
C62 N+	Max P{1}									(3a)	HOOP	5642	16700
	GR + Max P{1}	2114	23	20	1	1.00	1.00	1.00	1.00	23a	SUST	2771	16700
	TR:Amb to T1{1}	62	127	2	0	1.00	1.00	1.00	1.00	(17)	DISP	2774	25050
	Amb to T1{1}	62	127	2	0	1.00	1.00	1.00	1.00	(17)	DISP	2774	25050
	Sus. + E1{1}	67	244	23	2	1.00	1.00			23a	OCC	7848	22211
	Sus. + E2{1}	40	192	22	1	1.00	1.00			23a	OCC	6644	22211
	Sus. + E3{1}	31	161	25	2	1.00	1.00			23a	OCC	5925	22211
	Sus. + E4{1}	57	208	25	1	1.00	1.00			23a	OCC	7020	22211
	Sus. + E5{1}	67	243	26	1	1.00	1.00			23a	OCC	7823	22211
	Sus. + E6{1}	40	191	26	2	1.00	1.00			23a	OCC	6617	22211
	Sus. + E7{1}	31	161	21	1	1.00	1.00			23a	OCC	5930	22211
	Sus. + E8{1}	57	208	22	2	1.00	1.00			23a	OCC	7023	22211

ASME B31.3 (2016) CODE COMPLIANCE
(Moments in ft-lb , Force in lbf) (Stress in psi)

Point name	Load combination	Axial Force	In-Pl. Moment	Out-Pl. Moment	Torsion Moment	S.I.F In	S.I.F Out	Index/SIF Ax.	Index/SIF Tor.	Eq. no.	Load type	Code Stress	Code Allow.
C62 F-	Max P{1}									(3a)	HOOP	5642	16700
	GR + Max P{1}	2118	10	6	1	1.00	1.00	1.00	1.00	23a	SUST	2369	16700
	TR:Amb to T1{1}	36	51	3	1	1.00	1.00	1.00	1.00	(17)	DISP	1120	25050
	Amb to T1{1}	36	51	3	1	1.00	1.00	1.00	1.00	(17)	DISP	1120	25050
	Sus. + E1{1}	38	125	13	2	1.00	1.00			23a	OCC	5013	22211
	Sus. + E2{1}	16	108	12	2	1.00	1.00			23a	OCC	4607	22211
	Sus. + E3{1}	13	94	9	1	1.00	1.00			23a	OCC	4265	22211
	Sus. + E4{1}	34	108	10	2	1.00	1.00			23a	OCC	4615	22211
	Sus. + E5{1}	38	125	12	2	1.00	1.00			23a	OCC	5000	22211
	Sus. + E6{1}	16	108	11	2	1.00	1.00			23a	OCC	4593	22211
	Sus. + E7{1}	13	94	10	1	1.00	1.00			23a	OCC	4267	22211
	Sus. + E8{1}	34	108	11	2	1.00	1.00			23a	OCC	4617	22211
C62 F+	Max P{1}									(3a)	HOOP	5642	16700
	GR + Max P{1}	2118	6	10	1	1.00	1.00	1.00	1.00	23a	SUST	2369	16700
	TR:Amb to T1{1}	36	3	51	1	1.00	1.00	1.00	1.00	(17)	DISP	1120	25050
	Amb to T1{1}	36	3	51	1	1.00	1.00	1.00	1.00	(17)	DISP	1120	25050
	Sus. + E1{1}	38	12	126	2	1.00	1.00			23a	OCC	5013	22211
	Sus. + E2{1}	16	11	109	2	1.00	1.00			23a	OCC	4607	22211
	Sus. + E3{1}	13	9	94	1	1.00	1.00			23a	OCC	4265	22211
	Sus. + E4{1}	34	9	108	2	1.00	1.00			23a	OCC	4615	22211
	Sus. + E5{1}	38	11	125	2	1.00	1.00			23a	OCC	5000	22211
	Sus. + E6{1}	16	10	108	2	1.00	1.00			23a	OCC	4593	22211
	Sus. + E7{1}	13	9	94	1	1.00	1.00			23a	OCC	4267	22211
	Sus. + E8{1}	34	10	108	2	1.00	1.00			23a	OCC	4617	22211
C82 -	Max P{1}									(3a)	HOOP	5642	16700
	GR + Max P{1}	2118	13	7	1	1.00	1.00	1.00	1.00	23a	SUST	2427	16700
	TR:Amb to T1{1}	36	4	20	1	1.00	1.00	1.00	1.00	(17)	DISP	465	25050
	Amb to T1{1}	36	4	20	1	1.00	1.00	1.00	1.00	(17)	DISP	465	25050
	Sus. + E1{1}	39	20	86	2	1.00	1.00			23a	OCC	4257	22211
	Sus. + E2{1}	16	19	82	2	1.00	1.00			23a	OCC	4153	22211
	Sus. + E3{1}	12	16	72	1	1.00	1.00			23a	OCC	3908	22211
	Sus. + E4{1}	35	17	74	2	1.00	1.00			23a	OCC	3972	22211
	Sus. + E5{1}	39	18	86	2	1.00	1.00			23a	OCC	4245	22211
	Sus. + E6{1}	15	17	82	2	1.00	1.00			23a	OCC	4141	22211
	Sus. + E7{1}	12	18	72	1	1.00	1.00			23a	OCC	3911	22211
	Sus. + E8{1}	35	19	74	2	1.00	1.00			23a	OCC	3975	22211
C82 +	Max P{1}									(3a)	HOOP	5642	16700
	GR + Max P{1}	2118	13	7	1	1.00	1.00	1.00	1.00	23a	SUST	2427	16700
	TR:Amb to T1{1}	44	4	20	1	1.00	1.00	1.00	1.00	(17)	DISP	472	25050
	Amb to T1{1}	44	4	20	1	1.00	1.00	1.00	1.00	(17)	DISP	472	25050
	Sus. + E1{1}	39	20	86	2	1.00	1.00			23a	OCC	4257	22211
	Sus. + E2{1}	16	19	82	2	1.00	1.00			23a	OCC	4153	22211
	Sus. + E3{1}	12	16	72	1	1.00	1.00			23a	OCC	3908	22211
	Sus. + E4{1}	35	17	74	2	1.00	1.00			23a	OCC	3972	22211
	Sus. + E5{1}	39	18	86	2	1.00	1.00			23a	OCC	4245	22211
	Sus. + E6{1}	15	17	82	2	1.00	1.00			23a	OCC	4141	22211
	Sus. + E7{1}	12	18	72	1	1.00	1.00			23a	OCC	3911	22211
	Sus. + E8{1}	35	19	74	2	1.00	1.00			23a	OCC	3975	22211

ASME B31.3 (2016) CODE COMPLIANCE
(Moments in ft-lb , Force in lbf) (Stress in psi)

Point name	Load combination	Axial Force	In-Pl. Moment	Out-Pl. Moment	Torsion Moment	S.I.F In	S.I.F Out	Index/SIF Ax.	Index/SIF Tor.	Eq. no.	Load type	Code Stress	Code Allow.
C81	- Max P{1}									(3a)	HOOP	5642	16700
	GR + Max P{1}	2118	18	32	1	1.00	1.00	1.00	1.00	23a	SUST	2916	16700
	TR:Amb to T1{1}	44	0	189	1	1.00	1.00	1.00	1.00	(17)	DISP	4078	25050
	Amb to T1{1}	44	0	189	1	1.00	1.00	1.00	1.00	(17)	DISP	4078	25050
	Sus. + E1{1}	45	18	397	2	1.00	1.00			23a	OCC	11220	22211
	Sus. + E2{1}	9	18	243	2	1.00	1.00			23a	OCC	7706	22211
	Sus. + E3{1}	6	20	202	1	1.00	1.00			23a	OCC	6767	22211
	Sus. + E4{1}	41	20	349	2	1.00	1.00			23a	OCC	10131	22211
	Sus. + E5{1}	45	20	395	2	1.00	1.00			23a	OCC	11181	22211
	Sus. + E6{1}	9	21	241	2	1.00	1.00			23a	OCC	7663	22211
	Sus. + E7{1}	6	18	202	1	1.00	1.00			23a	OCC	6779	22211
	Sus. + E8{1}	41	19	349	2	1.00	1.00			23a	OCC	10140	22211
C81	+ Max P{1}									(3a)	HOOP	5642	16700
	GR + Max P{1}	2117	18	32	1	1.00	1.00	1.00	1.00	23a	SUST	2915	16700
	TR:Amb to T1{1}	83	0	189	0	1.00	1.00	1.00	1.00	(17)	DISP	4114	25050
	Amb to T1{1}	83	0	189	0	1.00	1.00	1.00	1.00	(17)	DISP	4114	25050
	Sus. + E1{1}	45	18	397	1	1.00	1.00			23a	OCC	11219	22211
	Sus. + E2{1}	9	18	243	1	1.00	1.00			23a	OCC	7705	22211
	Sus. + E3{1}	6	20	202	1	1.00	1.00			23a	OCC	6766	22211
	Sus. + E4{1}	41	20	349	1	1.00	1.00			23a	OCC	10131	22211
	Sus. + E5{1}	45	20	395	1	1.00	1.00			23a	OCC	11180	22211
	Sus. + E6{1}	9	21	241	1	1.00	1.00			23a	OCC	7662	22211
	Sus. + E7{1}	6	18	202	1	1.00	1.00			23a	OCC	6779	22211
	Sus. + E8{1}	41	19	349	1	1.00	1.00			23a	OCC	10140	22211
C83	- Max P{1}									(3a)	HOOP	5642	16700
	GR + Max P{1}	2117	20	2	1	1.00	1.00	1.00	1.00	23a	SUST	2546	16700
	TR:Amb to T1{1}	83	3	42	0	1.00	1.00	1.00	1.00	(17)	DISP	968	25050
	Amb to T1{1}	83	3	42	0	1.00	1.00	1.00	1.00	(17)	DISP	968	25050
	Sus. + E1{1}	52	20	25	1	1.00	1.00			23a	OCC	3120	22211
	Sus. + E2{1}	2	21	60	1	1.00	1.00			23a	OCC	3859	22211
	Sus. + E3{1}	1	21	52	1	1.00	1.00			23a	OCC	3666	22211
	Sus. + E4{1}	48	23	34	1	1.00	1.00			23a	OCC	3322	22211
	Sus. + E5{1}	52	23	25	1	1.00	1.00			23a	OCC	3123	22211
	Sus. + E6{1}	2	22	60	1	1.00	1.00			23a	OCC	3861	22211
	Sus. + E7{1}	1	21	51	1	1.00	1.00			23a	OCC	3661	22211
	Sus. + E8{1}	48	20	34	1	1.00	1.00			23a	OCC	3323	22211
C83	+ Max P{1}									(3a)	HOOP	5642	16700
	GR + Max P{1}	2117	20	2	1	1.00	1.00	1.00	1.00	23a	SUST	2546	16700
	TR:Amb to T1{1}	65	3	42	0	1.00	1.00	1.00	1.00	(17)	DISP	951	25050
	Amb to T1{1}	65	3	42	0	1.00	1.00	1.00	1.00	(17)	DISP	951	25050
	Sus. + E1{1}	52	20	25	1	1.00	1.00			23a	OCC	3120	22211
	Sus. + E2{1}	2	21	60	1	1.00	1.00			23a	OCC	3859	22211
	Sus. + E3{1}	1	21	52	1	1.00	1.00			23a	OCC	3666	22211
	Sus. + E4{1}	48	23	34	1	1.00	1.00			23a	OCC	3322	22211
	Sus. + E5{1}	52	23	25	1	1.00	1.00			23a	OCC	3123	22211
	Sus. + E6{1}	2	22	60	1	1.00	1.00			23a	OCC	3861	22211
	Sus. + E7{1}	1	21	51	1	1.00	1.00			23a	OCC	3661	22211
	Sus. + E8{1}	48	20	34	1	1.00	1.00			23a	OCC	3323	22211

Primary Piping
04/24/2020 2018719 BENTLEY
07:34 AM AutoPIPE Nuclear 12.00.00.16 RESULT PAGE 390

ASME B31.3 (2016) CODE COMPLIANCE
(Moments in ft-lb , Force in lbf) (Stress in psi)

Point name	Load combination	Axial Force	In-Pl. Moment	Out-Pl. Moment	Torsion Moment	S.I.F In	S.I.F Out	Index/SIF Ax.	Index/SIF Tor.	Eq. no.	Load type	Code Stress	Code Allow.
C66 N-	Max P{1}									(3a)	HOOP	5642	16700
	GR + Max P{1}	2117	12	0	1	1.00	1.00	1.00	1.00	23a	SUST	2362	16700
	TR:Amb to T1{1}	65	2	71	0	1.00	1.00	1.00	1.00	(17)	DISP	1576	25050
	Amb to T1{1}	65	2	71	0	1.00	1.00	1.00	1.00	(17)	DISP	1576	25050
	Sus. + E1{1}	53	12	55	1	1.00	1.00			23a	OCC	3650	22211
	Sus. + E2{1}	2	13	47	1	1.00	1.00			23a	OCC	3417	22211
	Sus. + E3{1}	2	13	41	1	1.00	1.00			23a	OCC	3288	22211
	Sus. + E4{1}	48	13	61	1	1.00	1.00			23a	OCC	3773	22211
	Sus. + E5{1}	52	14	55	1	1.00	1.00			23a	OCC	3644	22211
	Sus. + E6{1}	2	13	47	1	1.00	1.00			23a	OCC	3423	22211
	Sus. + E7{1}	1	13	41	1	1.00	1.00			23a	OCC	3282	22211
	Sus. + E8{1}	49	12	61	1	1.00	1.00			23a	OCC	3779	22211
C66 N+	Max P{1}									(3a)	HOOP	5642	16700
	GR + Max P{1}	2117	1	12	1	1.00	1.00	1.00	1.00	23a	SUST	2362	16700
	TR:Amb to T1{1}	65	71	3	0	1.00	1.00	1.00	1.00	(17)	DISP	1576	25050
	Amb to T1{1}	65	71	3	0	1.00	1.00	1.00	1.00	(17)	DISP	1576	25050
	Sus. + E1{1}	53	55	13	1	1.00	1.00			23a	OCC	3650	22211
	Sus. + E2{1}	2	47	13	1	1.00	1.00			23a	OCC	3417	22211
	Sus. + E3{1}	2	42	12	1	1.00	1.00			23a	OCC	3288	22211
	Sus. + E4{1}	48	61	15	1	1.00	1.00			23a	OCC	3773	22211
	Sus. + E5{1}	52	55	15	1	1.00	1.00			23a	OCC	3644	22211
	Sus. + E6{1}	2	48	12	1	1.00	1.00			23a	OCC	3423	22211
	Sus. + E7{1}	1	41	13	1	1.00	1.00			23a	OCC	3282	22211
	Sus. + E8{1}	49	61	13	1	1.00	1.00			23a	OCC	3779	22211
C66 F-	Max P{1}									(3a)	HOOP	5642	16700
	GR + Max P{1}	2116	3	10	1	1.00	1.00	1.00	1.00	23a	SUST	2331	16700
	TR:Amb to T1{1}	59	51	3	1	1.00	1.00	1.00	1.00	(17)	DISP	1152	25050
	Amb to T1{1}	59	51	3	1	1.00	1.00	1.00	1.00	(17)	DISP	1152	25050
	Sus. + E1{1}	58	73	12	1	1.00	1.00			23a	OCC	3961	22211
	Sus. + E2{1}	17	22	10	1	1.00	1.00			23a	OCC	2787	22211
	Sus. + E3{1}	11	22	12	1	1.00	1.00			23a	OCC	2767	22211
	Sus. + E4{1}	51	71	11	1	1.00	1.00			23a	OCC	3908	22211
	Sus. + E5{1}	57	72	11	1	1.00	1.00			23a	OCC	3952	22211
	Sus. + E6{1}	17	22	12	1	1.00	1.00			23a	OCC	2780	22211
	Sus. + E7{1}	12	22	10	1	1.00	1.00			23a	OCC	2767	22211
	Sus. + E8{1}	51	71	12	1	1.00	1.00			23a	OCC	3911	22211
C66 F+	Max P{1}									(3a)	HOOP	5642	16700
	GR + Max P{1}	2116	10	3	1	1.00	1.00	1.00	1.00	23a	SUST	2331	16700
	TR:Amb to T1{1}	59	3	51	1	1.00	1.00	1.00	1.00	(17)	DISP	1152	25050
	Amb to T1{1}	59	3	51	1	1.00	1.00	1.00	1.00	(17)	DISP	1152	25050
	Sus. + E1{1}	58	12	73	1	1.00	1.00			23a	OCC	3961	22211
	Sus. + E2{1}	17	11	23	1	1.00	1.00			23a	OCC	2787	22211
	Sus. + E3{1}	11	12	22	1	1.00	1.00			23a	OCC	2767	22211
	Sus. + E4{1}	51	10	71	1	1.00	1.00			23a	OCC	3908	22211
	Sus. + E5{1}	57	10	72	1	1.00	1.00			23a	OCC	3952	22211
	Sus. + E6{1}	17	12	22	1	1.00	1.00			23a	OCC	2780	22211
	Sus. + E7{1}	12	11	22	1	1.00	1.00			23a	OCC	2767	22211
	Sus. + E8{1}	51	12	71	1	1.00	1.00			23a	OCC	3911	22211

ASME B31.3 (2016) CODE COMPLIANCE
(Moments in ft-lb , Force in lbf) (Stress in psi)

Point name	Load combination	Axial Force	In-Pl. Moment	Out-Pl. Moment	Torsion Moment	S.I.F In	S.I.F Out	Index/SIF Ax.	Index/SIF Tor.	Eq. no.	Load type	Code Stress	Code Allow.
C84 -	Max P{1}									(3a)	HOOP	5642	16700
	GR + Max P{1}	2116	18	1	1	1.00	1.00	1.00	1.00	23a	SUST	2496	16700
	TR:Amb to T1{1}	59	4	19	1	1.00	1.00	1.00	1.00	(17)	DISP	461	25050
	Amb to T1{1}	59	4	19	1	1.00	1.00	1.00	1.00	(17)	DISP	461	25050
	Sus. + E1{1}	57	21	42	1	1.00	1.00			23a	OCC	3470	22211
	Sus. + E2{1}	17	18	22	1	1.00	1.00			23a	OCC	2993	22211
	Sus. + E3{1}	11	21	23	1	1.00	1.00			23a	OCC	3015	22211
	Sus. + E4{1}	50	18	42	1	1.00	1.00			23a	OCC	3461	22211
	Sus. + E5{1}	57	18	41	1	1.00	1.00			23a	OCC	3462	22211
	Sus. + E6{1}	16	21	22	1	1.00	1.00			23a	OCC	2992	22211
	Sus. + E7{1}	11	18	23	1	1.00	1.00			23a	OCC	3011	22211
	Sus. + E8{1}	50	21	42	1	1.00	1.00			23a	OCC	3465	22211
C84 +	Max P{1}									(3a)	HOOP	5642	16700
	GR + Max P{1}	2116	18	1	1	1.00	1.00	1.00	1.00	23a	SUST	2496	16700
	TR:Amb to T1{1}	76	4	19	1	1.00	1.00	1.00	1.00	(17)	DISP	477	25050
	Amb to T1{1}	76	4	19	1	1.00	1.00	1.00	1.00	(17)	DISP	477	25050
	Sus. + E1{1}	57	21	42	1	1.00	1.00			23a	OCC	3470	22211
	Sus. + E2{1}	17	18	22	1	1.00	1.00			23a	OCC	2993	22211
	Sus. + E3{1}	11	21	23	1	1.00	1.00			23a	OCC	3015	22211
	Sus. + E4{1}	50	18	42	1	1.00	1.00			23a	OCC	3461	22211
	Sus. + E5{1}	57	18	41	1	1.00	1.00			23a	OCC	3462	22211
	Sus. + E6{1}	16	21	22	1	1.00	1.00			23a	OCC	2992	22211
	Sus. + E7{1}	11	18	23	1	1.00	1.00			23a	OCC	3011	22211
	Sus. + E8{1}	50	21	42	1	1.00	1.00			23a	OCC	3465	22211
C67 N-	Max P{1}									(3a)	HOOP	5642	16700
	GR + Max P{1}	2115	1	6	1	1.00	1.00	1.00	1.00	23a	SUST	2239	16700
	TR:Amb to T1{1}	76	0	54	1	1.00	1.00	1.00	1.00	(17)	DISP	1226	25050
	Amb to T1{1}	76	0	54	1	1.00	1.00	1.00	1.00	(17)	DISP	1226	25050
	Sus. + E1{1}	55	1	71	1	1.00	1.00			23a	OCC	3762	22211
	Sus. + E2{1}	15	2	36	1	1.00	1.00			23a	OCC	2933	22211
	Sus. + E3{1}	9	2	43	1	1.00	1.00			23a	OCC	3090	22211
	Sus. + E4{1}	48	1	64	1	1.00	1.00			23a	OCC	3588	22211
	Sus. + E5{1}	55	1	71	1	1.00	1.00			23a	OCC	3755	22211
	Sus. + E6{1}	14	2	37	1	1.00	1.00			23a	OCC	2939	22211
	Sus. + E7{1}	9	2	43	1	1.00	1.00			23a	OCC	3085	22211
	Sus. + E8{1}	48	1	64	1	1.00	1.00			23a	OCC	3594	22211
C67 N+	Max P{1}									(3a)	HOOP	5642	16700
	GR + Max P{1}	2115	1	6	1	1.00	1.00	1.00	1.00	23a	SUST	2239	16700
	TR:Amb to T1{1}	76	0	54	1	1.00	1.00	1.00	1.00	(17)	DISP	1226	25050
	Amb to T1{1}	76	0	54	1	1.00	1.00	1.00	1.00	(17)	DISP	1226	25050
	Sus. + E1{1}	55	1	71	1	1.00	1.00			23a	OCC	3762	22211
	Sus. + E2{1}	15	2	36	1	1.00	1.00			23a	OCC	2933	22211
	Sus. + E3{1}	9	2	43	1	1.00	1.00			23a	OCC	3090	22211
	Sus. + E4{1}	48	1	64	1	1.00	1.00			23a	OCC	3588	22211
	Sus. + E5{1}	55	1	71	1	1.00	1.00			23a	OCC	3755	22211
	Sus. + E6{1}	14	2	37	1	1.00	1.00			23a	OCC	2939	22211
	Sus. + E7{1}	9	2	43	1	1.00	1.00			23a	OCC	3085	22211
	Sus. + E8{1}	48	1	64	1	1.00	1.00			23a	OCC	3594	22211

ASME B31.3 (2016) CODE COMPLIANCE
(Moments in ft-lb , Force in lbf) (Stress in psi)

Point name	Load combination	Axial Force	In-Pl. Moment	Out-Pl. Moment	Torsion Moment	S.I.F In	S.I.F Out	Index/SIF Ax.	Index/SIF Tor.	Eq. no.	Load type	Code Stress	Code Allow.
C67 M	Max P{1}									(3a)	HOOP	5642	16700
	GR + Max P{1}	2115	1	6	1	1.00	1.00	1.00	1.00	23a	SUST	2242	16700
	TR:Amb to T1{1}	76	0	55	0	1.00	1.00	1.00	1.00	(17)	DISP	1248	25050
	Amb to T1{1}	76	0	55	0	1.00	1.00	1.00	1.00	(17)	DISP	1248	25050
	Sus. + E1{1}	55	2	73	2	1.00	1.00			23a	OCC	3799	22211
	Sus. + E2{1}	15	2	36	1	1.00	1.00			23a	OCC	2939	22211
	Sus. + E3{1}	9	2	44	1	1.00	1.00			23a	OCC	3098	22211
	Sus. + E4{1}	48	1	65	1	1.00	1.00			23a	OCC	3623	22211
	Sus. + E5{1}	55	1	72	1	1.00	1.00			23a	OCC	3792	22211
	Sus. + E6{1}	14	2	37	1	1.00	1.00			23a	OCC	2945	22211
	Sus. + E7{1}	9	2	44	1	1.00	1.00			23a	OCC	3093	22211
	Sus. + E8{1}	48	1	66	2	1.00	1.00			23a	OCC	3628	22211
C67 F-	Max P{1}									(3a)	HOOP	5642	16700
	GR + Max P{1}	2115	1	6	1	1.00	1.00	1.00	1.00	23a	SUST	2244	16700
	TR:Amb to T1{1}	76	0	56	0	1.00	1.00	1.00	1.00	(17)	DISP	1270	25050
	Amb to T1{1}	76	0	56	0	1.00	1.00	1.00	1.00	(17)	DISP	1270	25050
	Sus. + E1{1}	55	2	74	2	1.00	1.00			23a	OCC	3835	22211
	Sus. + E2{1}	15	2	37	1	1.00	1.00			23a	OCC	2945	22211
	Sus. + E3{1}	9	2	44	2	1.00	1.00			23a	OCC	3106	22211
	Sus. + E4{1}	48	2	67	2	1.00	1.00			23a	OCC	3657	22211
	Sus. + E5{1}	55	1	74	2	1.00	1.00			23a	OCC	3828	22211
	Sus. + E6{1}	14	2	37	2	1.00	1.00			23a	OCC	2951	22211
	Sus. + E7{1}	9	2	44	1	1.00	1.00			23a	OCC	3100	22211
	Sus. + E8{1}	48	2	67	2	1.00	1.00			23a	OCC	3663	22211
C67 F+	Max P{1}									(3a)	HOOP	5642	16700
	GR + Max P{1}	2115	1	6	1	1.00	1.00	1.00	1.00	23a	SUST	2244	16700
	TR:Amb to T1{1}	76	0	56	0	1.00	1.00	1.00	1.00	(17)	DISP	1270	25050
	Amb to T1{1}	76	0	56	0	1.00	1.00	1.00	1.00	(17)	DISP	1270	25050
	Sus. + E1{1}	55	2	74	2	1.00	1.00			23a	OCC	3836	22211
	Sus. + E2{1}	15	2	37	1	1.00	1.00			23a	OCC	2945	22211
	Sus. + E3{1}	9	2	44	2	1.00	1.00			23a	OCC	3106	22211
	Sus. + E4{1}	48	2	67	2	1.00	1.00			23a	OCC	3657	22211
	Sus. + E5{1}	55	1	74	2	1.00	1.00			23a	OCC	3828	22211
	Sus. + E6{1}	14	2	37	2	1.00	1.00			23a	OCC	2951	22211
	Sus. + E7{1}	9	2	44	1	1.00	1.00			23a	OCC	3100	22211
	Sus. + E8{1}	48	2	67	2	1.00	1.00			23a	OCC	3663	22211
C68	Max P{1}									(3a)	HOOP	5642	16700
	GR + Max P{1}	2115	3	10	1	1.00	1.00	1.00	1.00	23a	SUST	2342	16700
	TR:Amb to T1{1}	76	1	96	0	1.00	1.00	1.00	1.00	(17)	DISP	2124	25050
	Amb to T1{1}	76	1	96	0	1.00	1.00	1.00	1.00	(17)	DISP	2124	25050
	Sus. + E1{1}	54	4	138	2	1.00	1.00			23a	OCC	5277	22211
	Sus. + E2{1}	13	4	47	1	1.00	1.00			23a	OCC	3186	22211
	Sus. + E3{1}	8	4	58	2	1.00	1.00			23a	OCC	3424	22211
	Sus. + E4{1}	47	4	126	2	1.00	1.00			23a	OCC	5007	22211
	Sus. + E5{1}	53	4	137	2	1.00	1.00			23a	OCC	5263	22211
	Sus. + E6{1}	13	3	48	2	1.00	1.00			23a	OCC	3199	22211
	Sus. + E7{1}	8	4	57	1	1.00	1.00			23a	OCC	3415	22211
	Sus. + E8{1}	47	4	127	2	1.00	1.00			23a	OCC	5016	22211

ASME B31.3 (2016) CODE COMPLIANCE
(Moments in ft-lb , Force in lbf) (Stress in psi)

Point name	Load combination	Axial Force	In-Pl. Moment	Out-Pl. Moment	Torsion Moment	S.I.F In	S.I.F Out	Index/SIF Ax.	Index/SIF Tor.	Eq. no.	Load type	Code Stress	Code Allow.
C69	Max P{1}									(3a)	HOOP	5642	16700
	GR + Max P{1}	2115	1	14	1	1.00	1.00	1.00	1.00	23a	SUST	2423	16700
	TR:Amb to T1{1}	76	1	137	0	1.00	1.00	1.00	1.00	(17)	DISP	3000	25050
	Amb to T1{1}	76	1	137	0	1.00	1.00	1.00	1.00	(17)	DISP	3000	25050
	Sus. + E1{1}	53	1	204	2	1.00	1.00			23a	OCC	6761	22211
	Sus. + E2{1}	12	1	59	1	1.00	1.00			23a	OCC	3439	22211
	Sus. + E3{1}	7	1	73	2	1.00	1.00			23a	OCC	3756	22211
	Sus. + E4{1}	46	1	188	2	1.00	1.00			23a	OCC	6397	22211
	Sus. + E5{1}	52	1	203	2	1.00	1.00			23a	OCC	6740	22211
	Sus. + E6{1}	12	1	60	2	1.00	1.00			23a	OCC	3459	22211
	Sus. + E7{1}	7	1	73	1	1.00	1.00			23a	OCC	3744	22211
	Sus. + E8{1}	46	1	189	2	1.00	1.00			23a	OCC	6409	22211
C70	- Max P{1}									(3a)	HOOP	5642	16700
	GR + Max P{1}	2115	6	17	1	1.00	1.00	1.00	1.00	23a	SUST	2494	16700
	TR:Amb to T1{1}	76	2	159	0	1.00	1.00	1.00	1.00	(17)	DISP	3481	25050
	Amb to T1{1}	76	2	159	0	1.00	1.00	1.00	1.00	(17)	DISP	3481	25050
	Sus. + E1{1}	52	6	241	2	1.00	1.00			23a	OCC	7614	22211
	Sus. + E2{1}	12	7	66	1	1.00	1.00			23a	OCC	3616	22211
	Sus. + E3{1}	6	6	82	2	1.00	1.00			23a	OCC	3977	22211
	Sus. + E4{1}	45	6	223	2	1.00	1.00			23a	OCC	7199	22211
	Sus. + E5{1}	52	6	240	2	1.00	1.00			23a	OCC	7590	22211
	Sus. + E6{1}	11	6	67	2	1.00	1.00			23a	OCC	3639	22211
	Sus. + E7{1}	6	7	81	1	1.00	1.00			23a	OCC	3962	22211
	Sus. + E8{1}	45	6	224	2	1.00	1.00			23a	OCC	7213	22211
C70	+ Max P{1}									(3a)	HOOP	5642	16700
	GR + Max P{1}	2121	0	0	0	1.00	1.00	1.00	1.00	23a	SUST	2104	16700
	TR:Amb to T1{1}	0	0	0	0	1.00	1.00	1.00	1.00	(17)	DISP	0	25050
	Amb to T1{1}	0	0	0	0	1.00	1.00	1.00	1.00	(17)	DISP	0	25050
	Sus. + E1{1}	0	0	0	0	1.00	1.00			23a	OCC	2105	22211
	Sus. + E2{1}	0	0	0	0	1.00	1.00			23a	OCC	2105	22211
	Sus. + E3{1}	0	0	0	0	1.00	1.00			23a	OCC	2105	22211
	Sus. + E4{1}	0	0	0	0	1.00	1.00			23a	OCC	2105	22211
	Sus. + E5{1}	0	0	0	0	1.00	1.00			23a	OCC	2105	22211
	Sus. + E6{1}	0	0	0	0	1.00	1.00			23a	OCC	2105	22211
	Sus. + E7{1}	0	0	0	0	1.00	1.00			23a	OCC	2105	22211
	Sus. + E8{1}	0	0	0	0	1.00	1.00			23a	OCC	2105	22211
C71	Max P{1}									(3a)	HOOP	5642	16700
	GR + Max P{1}	2121	0	0	0	1.00	1.00	1.00	1.00	23a	SUST	2101	16700
	TR:Amb to T1{1}	0	0	0	0	1.00	1.00	1.00	1.00	(17)	DISP	0	25050
	Amb to T1{1}	0	0	0	0	1.00	1.00	1.00	1.00	(17)	DISP	0	25050
	Sus. + E1{1}	0	0	0	0	1.00	1.00			23a	OCC	2101	22211
	Sus. + E2{1}	0	0	0	0	1.00	1.00			23a	OCC	2101	22211
	Sus. + E3{1}	0	0	0	0	1.00	1.00			23a	OCC	2101	22211
	Sus. + E4{1}	0	0	0	0	1.00	1.00			23a	OCC	2101	22211
	Sus. + E5{1}	0	0	0	0	1.00	1.00			23a	OCC	2101	22211
	Sus. + E6{1}	0	0	0	0	1.00	1.00			23a	OCC	2101	22211
	Sus. + E7{1}	0	0	0	0	1.00	1.00			23a	OCC	2101	22211
	Sus. + E8{1}	0	0	0	0	1.00	1.00			23a	OCC	2101	22211

```
-----------------------------------------------------------------------------------------------------------------------
Primary Piping
04/24/2020 2018719                                                                  BENTLEY
07:34 AM                                                                            AutoPIPE Nuclear 12.00.00.16   RESULT PAGE 394
-----------------------------------------------------------------------------------------------------------------------

                              ASME B31.3 (2016)  CODE COMPLIANCE
              (Moments in ft-lb  , Force in lbf  )     (Stress in psi     )
 Point     Load                    Axial  In-Pl. Out-Pl. Torsion   S.I.F   Index/SIF  Eq. Load   Code   Code
 name   combination                Force  Moment  Moment  Moment  In  Out   Ax. Tor.  no. type  Stress Allow.
 ------ ----------------------    ------- ------- ------- ------- ---- ---- ---- ---- ---- ----  ------ ------

 *** Segment C  end   ***

 *** Segment D  begin ***

 D00    Max P{1}                                                                      (3a) HOOP    5642  16700
        GR + Max P{1}              2121       0       0       0 1.00 1.00 1.00 1.00  23a SUST    2101  16700
        TR:Amb to T1{1}               0       0       0       0 1.00 1.00 1.00 1.00 (17) DISP       0  25050
        Amb to T1{1}                  0       0       0       0 1.00 1.00 1.00 1.00 (17) DISP       0  25050
        Sus. + E1{1}                  0       0       0       0 1.00 1.00            23a  OCC    2101  22211
        Sus. + E2{1}                  0       0       0       0 1.00 1.00            23a  OCC    2101  22211
        Sus. + E3{1}                  0       0       0       0 1.00 1.00            23a  OCC    2101  22211
        Sus. + E4{1}                  0       0       0       0 1.00 1.00            23a  OCC    2101  22211
        Sus. + E5{1}                  0       0       0       0 1.00 1.00            23a  OCC    2101  22211
        Sus. + E6{1}                  0       0       0       0 1.00 1.00            23a  OCC    2101  22211
        Sus. + E7{1}                  0       0       0       0 1.00 1.00            23a  OCC    2101  22211
        Sus. + E8{1}                  0       0       0       0 1.00 1.00            23a  OCC    2101  22211

 D01  - Max P{1}                                                                      (3a) HOOP    5642  16700
        GR + Max P{1}              2121       0       0       0 1.00 1.00 1.00 1.00  23a SUST    2104  16700
        TR:Amb to T1{1}               0       0       0       0 1.00 1.00 1.00 1.00 (17) DISP       0  25050
        Amb to T1{1}                  0       0       0       0 1.00 1.00 1.00 1.00 (17) DISP       0  25050
        Sus. + E1{1}                  0       0       0       0 1.00 1.00            23a  OCC    2105  22211
        Sus. + E2{1}                  0       0       0       0 1.00 1.00            23a  OCC    2105  22211
        Sus. + E3{1}                  0       0       0       0 1.00 1.00            23a  OCC    2105  22211
        Sus. + E4{1}                  0       0       0       0 1.00 1.00            23a  OCC    2105  22211
        Sus. + E5{1}                  0       0       0       0 1.00 1.00            23a  OCC    2105  22211
        Sus. + E6{1}                  0       0       0       0 1.00 1.00            23a  OCC    2105  22211
        Sus. + E7{1}                  0       0       0       0 1.00 1.00            23a  OCC    2105  22211
        Sus. + E8{1}                  0       0       0       0 1.00 1.00            23a  OCC    2105  22211

 D01  + Max P{1}                                                                      (3a) HOOP    5642  16700
        GR + Max P{1}              2118      83       6       0 1.00 1.00 1.00 1.00  23a SUST    3968  16700
        TR:Amb to T1{1}             136       3      28       0 1.00 1.00 1.00 1.00 (17) DISP     739  25050
        Amb to T1{1}                136       3      28       0 1.00 1.00 1.00 1.00 (17) DISP     739  25050
        Sus. + E1{1}                 10      89       8       1 1.00 1.00            23a  OCC    4142  22211
        Sus. + E2{1}                 39      90      46       1 1.00 1.00            23a  OCC    4926  22211
        Sus. + E3{1}                 38      88      65       1 1.00 1.00            23a  OCC    5345  22211
        Sus. + E4{1}                 11      89      23       1 1.00 1.00            23a  OCC    4395  22211
        Sus. + E5{1}                 10      89       9       1 1.00 1.00            23a  OCC    4140  22211
        Sus. + E6{1}                 39      88      46       1 1.00 1.00            23a  OCC    4906  22211
        Sus. + E7{1}                 38      90      66       1 1.00 1.00            23a  OCC    5362  22211
        Sus. + E8{1}                 11      89      24       1 1.00 1.00            23a  OCC    4407  22211
```

Primary Piping
04/24/2020 2018719 BENTLEY
07:34 AM AutoPIPE Nuclear 12.00.00.16 RESULT PAGE 395

ASME B31.3 (2016) CODE COMPLIANCE
(Moments in ft-lb , Force in lbf) (Stress in psi)

Point name	Load combination	Axial Force	In-Pl. Moment	Out-Pl. Moment	Torsion Moment	S.I.F In	S.I.F Out	Index/SIF Ax.	Index/SIF Tor.	Eq. no.	Load type	Code Stress	Code Allow.
D02	Max P{1}									(3a)	HOOP	5642	16700
	GR + Max P{1}	2118	62	6	0	1.00	1.00	1.00	1.00	23a	SUST	3508	16700
	TR:Amb to T1{1}	136	2	25	0	1.00	1.00	1.00	1.00	(17)	DISP	654	25050
	Amb to T1{1}	136	2	25	0	1.00	1.00	1.00	1.00	(17)	DISP	654	25050
	Sus. + E1{1}	9	67	7	1	1.00	1.00			23a	OCC	3639	22211
	Sus. + E2{1}	38	68	41	1	1.00	1.00			23a	OCC	4346	22211
	Sus. + E3{1}	37	66	58	1	1.00	1.00			23a	OCC	4737	22211
	Sus. + E4{1}	10	67	22	1	1.00	1.00			23a	OCC	3908	22211
	Sus. + E5{1}	9	67	8	1	1.00	1.00			23a	OCC	3636	22211
	Sus. + E6{1}	38	66	40	1	1.00	1.00			23a	OCC	4331	22211
	Sus. + E7{1}	38	68	59	1	1.00	1.00			23a	OCC	4751	22211
	Sus. + E8{1}	10	67	23	1	1.00	1.00			23a	OCC	3918	22211
D03	Max P{1}									(3a)	HOOP	5642	16700
	GR + Max P{1}	2118	30	5	0	1.00	1.00	1.00	1.00	23a	SUST	2779	16700
	TR:Amb to T1{1}	136	1	17	0	1.00	1.00	1.00	1.00	(17)	DISP	501	25050
	Amb to T1{1}	136	1	17	0	1.00	1.00	1.00	1.00	(17)	DISP	501	25050
	Sus. + E1{1}	8	32	6	1	1.00	1.00			23a	OCC	2847	22211
	Sus. + E2{1}	37	33	30	1	1.00	1.00			23a	OCC	3385	22211
	Sus. + E3{1}	36	32	46	1	1.00	1.00			23a	OCC	3723	22211
	Sus. + E4{1}	9	32	20	1	1.00	1.00			23a	OCC	3119	22211
	Sus. + E5{1}	8	32	6	1	1.00	1.00			23a	OCC	2846	22211
	Sus. + E6{1}	37	32	30	1	1.00	1.00			23a	OCC	3375	22211
	Sus. + E7{1}	36	33	46	1	1.00	1.00			23a	OCC	3731	22211
	Sus. + E8{1}	9	32	20	1	1.00	1.00			23a	OCC	3126	22211
D04 N-	Max P{1}									(3a)	HOOP	5642	16700
	GR + Max P{1}	2118	31	4	0	1.00	1.00	1.00	1.00	23a	SUST	2809	16700
	TR:Amb to T1{1}	136	2	4	0	1.00	1.00	1.00	1.00	(17)	DISP	220	25050
	Amb to T1{1}	136	2	4	0	1.00	1.00	1.00	1.00	(17)	DISP	220	25050
	Sus. + E1{1}	5	34	10	1	1.00	1.00			23a	OCC	2959	22211
	Sus. + E2{1}	34	34	16	1	1.00	1.00			23a	OCC	3108	22211
	Sus. + E3{1}	33	33	8	1	1.00	1.00			23a	OCC	2940	22211
	Sus. + E4{1}	6	34	6	1	1.00	1.00			23a	OCC	2884	22211
	Sus. + E5{1}	5	34	10	1	1.00	1.00			23a	OCC	2959	22211
	Sus. + E6{1}	34	33	15	1	1.00	1.00			23a	OCC	3101	22211
	Sus. + E7{1}	33	34	8	1	1.00	1.00			23a	OCC	2955	22211
	Sus. + E8{1}	5	34	6	1	1.00	1.00			23a	OCC	2882	22211
D04 N+	Max P{1}									(3a)	HOOP	5642	16700
	GR + Max P{1}	2118	31	4	0	1.00	1.00	1.00	1.00	23a	SUST	2809	16700
	TR:Amb to T1{1}	136	2	4	0	1.00	1.00	1.00	1.00	(17)	DISP	220	25050
	Amb to T1{1}	136	2	4	0	1.00	1.00	1.00	1.00	(17)	DISP	220	25050
	Sus. + E1{1}	5	34	10	1	1.00	1.00			23a	OCC	2960	22211
	Sus. + E2{1}	34	34	16	1	1.00	1.00			23a	OCC	3108	22211
	Sus. + E3{1}	33	33	8	1	1.00	1.00			23a	OCC	2940	22211
	Sus. + E4{1}	6	34	6	1	1.00	1.00			23a	OCC	2884	22211
	Sus. + E5{1}	5	34	10	1	1.00	1.00			23a	OCC	2959	22211
	Sus. + E6{1}	34	33	15	1	1.00	1.00			23a	OCC	3101	22211
	Sus. + E7{1}	33	34	8	1	1.00	1.00			23a	OCC	2955	22211
	Sus. + E8{1}	5	34	6	1	1.00	1.00			23a	OCC	2882	22211

ASME B31.3 (2016) CODE COMPLIANCE
(Moments in ft-lb , Force in lbf) (Stress in psi)

Point name	Load combination	Axial Force	In-Pl. Moment	Out-Pl. Moment	Torsion Moment	S.I.F In	S.I.F Out	Index/SIF Ax.	Index/SIF Tor.	Eq. no.	Load type	Code Stress	Code Allow.
D04 M	Max P{1}									(3a)	HOOP	5642	16700
	GR + Max P{1}	2118	31	4	0	1.00	1.00	1.00	1.00	23a	SUST	2814	16700
	TR:Amb to T1{1}	136	2	4	0	1.00	1.00	1.00	1.00	(17)	DISP	222	25050
	Amb to T1{1}	136	2	4	0	1.00	1.00	1.00	1.00	(17)	DISP	222	25050
	Sus. + E1{1}	5	34	10	1	1.00	1.00			23a	OCC	2965	22211
	Sus. + E2{1}	34	35	16	1	1.00	1.00			23a	OCC	3118	22211
	Sus. + E3{1}	33	33	8	1	1.00	1.00			23a	OCC	2951	22211
	Sus. + E4{1}	6	34	6	1	1.00	1.00			23a	OCC	2888	22211
	Sus. + E5{1}	5	34	10	1	1.00	1.00			23a	OCC	2965	22211
	Sus. + E6{1}	34	33	16	1	1.00	1.00			23a	OCC	3111	22211
	Sus. + E7{1}	33	35	8	1	1.00	1.00			23a	OCC	2965	22211
	Sus. + E8{1}	5	34	6	1	1.00	1.00			23a	OCC	2885	22211
D04 F-	Max P{1}									(3a)	HOOP	5642	16700
	GR + Max P{1}	2118	32	4	0	1.00	1.00	1.00	1.00	23a	SUST	2818	16700
	TR:Amb to T1{1}	136	2	4	0	1.00	1.00	1.00	1.00	(17)	DISP	225	25050
	Amb to T1{1}	136	2	4	0	1.00	1.00	1.00	1.00	(17)	DISP	225	25050
	Sus. + E1{1}	5	34	10	1	1.00	1.00			23a	OCC	2971	22211
	Sus. + E2{1}	34	35	16	1	1.00	1.00			23a	OCC	3128	22211
	Sus. + E3{1}	33	34	9	1	1.00	1.00			23a	OCC	2961	22211
	Sus. + E4{1}	6	34	6	1	1.00	1.00			23a	OCC	2891	22211
	Sus. + E5{1}	5	34	10	1	1.00	1.00			23a	OCC	2970	22211
	Sus. + E6{1}	34	34	16	1	1.00	1.00			23a	OCC	3121	22211
	Sus. + E7{1}	33	35	9	1	1.00	1.00			23a	OCC	2975	22211
	Sus. + E8{1}	5	34	5	1	1.00	1.00			23a	OCC	2889	22211
D04 F+	Max P{1}									(3a)	HOOP	5642	16700
	GR + Max P{1}	2118	32	4	0	1.00	1.00	1.00	1.00	23a	SUST	2818	16700
	TR:Amb to T1{1}	136	2	4	0	1.00	1.00	1.00	1.00	(17)	DISP	225	25050
	Amb to T1{1}	136	2	4	0	1.00	1.00	1.00	1.00	(17)	DISP	225	25050
	Sus. + E1{1}	5	34	10	1	1.00	1.00			23a	OCC	2971	22211
	Sus. + E2{1}	34	35	16	1	1.00	1.00			23a	OCC	3128	22211
	Sus. + E3{1}	33	34	9	1	1.00	1.00			23a	OCC	2961	22211
	Sus. + E4{1}	6	34	6	1	1.00	1.00			23a	OCC	2891	22211
	Sus. + E5{1}	5	34	10	1	1.00	1.00			23a	OCC	2970	22211
	Sus. + E6{1}	34	34	16	1	1.00	1.00			23a	OCC	3121	22211
	Sus. + E7{1}	33	35	9	1	1.00	1.00			23a	OCC	2975	22211
	Sus. + E8{1}	5	34	5	1	1.00	1.00			23a	OCC	2889	22211
D13 -	Max P{1}									(3a)	HOOP	5642	16700
	GR + Max P{1}	2118	55	1	0	1.00	1.00	1.00	1.00	23a	SUST	3348	16700
	TR:Amb to T1{1}	136	1	57	0	1.00	1.00	1.00	1.00	(17)	DISP	1345	25050
	Amb to T1{1}	136	1	57	0	1.00	1.00	1.00	1.00	(17)	DISP	1345	25050
	Sus. + E1{1}	4	60	65	1	1.00	1.00			23a	OCC	4793	22211
	Sus. + E2{1}	25	59	148	1	1.00	1.00			23a	OCC	6706	22211
	Sus. + E3{1}	24	61	160	1	1.00	1.00			23a	OCC	6970	22211
	Sus. + E4{1}	3	60	76	1	1.00	1.00			23a	OCC	5057	22211
	Sus. + E5{1}	4	60	64	1	1.00	1.00			23a	OCC	4772	22211
	Sus. + E6{1}	25	61	147	1	1.00	1.00			23a	OCC	6684	22211
	Sus. + E7{1}	25	59	161	1	1.00	1.00			23a	OCC	6992	22211
	Sus. + E8{1}	3	60	77	1	1.00	1.00			23a	OCC	5079	22211

Primary Piping
04/24/2020 2018719 BENTLEY
07:34 AM AutoPIPE Nuclear 12.00.00.16 RESULT PAGE 397

ASME B31.3 (2016) CODE COMPLIANCE
(Moments in ft-lb , Force in lbf) (Stress in psi)

Point name	Load combination	Axial Force	In-Pl. Moment	Out-Pl. Moment	Torsion Moment	S.I.F In	S.I.F Out	Index/SIF Ax.	Index/SIF Tor.	Eq. no.	Load type	Code Stress	Code Allow.
D13	+ Max P{1}									(3a)	HOOP	5642	16700
	GR + Max P{1}	2119	55	1	0	1.00	1.00	1.00	1.00	23a	SUST	3349	16700
	TR:Amb to T1{1}	66	1	57	0	1.00	1.00	1.00	1.00	(17)	DISP	1281	25050
	Amb to T1{1}	66	1	57	0	1.00	1.00	1.00	1.00	(17)	DISP	1281	25050
	Sus. + E1{1}	4	60	65	1	1.00	1.00			23a	OCC	4794	22211
	Sus. + E2{1}	25	59	148	1	1.00	1.00			23a	OCC	6706	22211
	Sus. + E3{1}	24	61	160	1	1.00	1.00			23a	OCC	6971	22211
	Sus. + E4{1}	3	60	76	1	1.00	1.00			23a	OCC	5058	22211
	Sus. + E5{1}	4	60	64	1	1.00	1.00			23a	OCC	4772	22211
	Sus. + E6{1}	25	61	147	1	1.00	1.00			23a	OCC	6685	22211
	Sus. + E7{1}	25	59	161	1	1.00	1.00			23a	OCC	6992	22211
	Sus. + E8{1}	3	60	77	1	1.00	1.00			23a	OCC	5079	22211
D14	- Max P{1}									(3a)	HOOP	5642	16700
	GR + Max P{1}	2120	19	8	0	1.00	1.00	1.00	1.00	23a	SUST	2567	16700
	TR:Amb to T1{1}	66	2	72	0	1.00	1.00	1.00	1.00	(17)	DISP	1601	25050
	Amb to T1{1}	66	2	72	0	1.00	1.00	1.00	1.00	(17)	DISP	1601	25050
	Sus. + E1{1}	12	22	58	1	1.00	1.00			23a	OCC	3710	22211
	Sus. + E2{1}	17	24	88	1	1.00	1.00			23a	OCC	4386	22211
	Sus. + E3{1}	16	21	79	1	1.00	1.00			23a	OCC	4191	22211
	Sus. + E4{1}	11	19	50	1	1.00	1.00			23a	OCC	3516	22211
	Sus. + E5{1}	12	19	58	1	1.00	1.00			23a	OCC	3699	22211
	Sus. + E6{1}	17	21	87	1	1.00	1.00			23a	OCC	4375	22211
	Sus. + E7{1}	16	24	80	1	1.00	1.00			23a	OCC	4203	22211
	Sus. + E8{1}	11	22	50	1	1.00	1.00			23a	OCC	3527	22211
D14	+ Max P{1}									(3a)	HOOP	5642	16700
	GR + Max P{1}	2120	19	8	0	1.00	1.00	1.00	1.00	23a	SUST	2567	16700
	TR:Amb to T1{1}	41	2	72	0	1.00	1.00	1.00	1.00	(17)	DISP	1578	25050
	Amb to T1{1}	41	2	72	0	1.00	1.00	1.00	1.00	(17)	DISP	1578	25050
	Sus. + E1{1}	12	22	58	1	1.00	1.00			23a	OCC	3710	22211
	Sus. + E2{1}	17	24	88	1	1.00	1.00			23a	OCC	4386	22211
	Sus. + E3{1}	16	21	79	1	1.00	1.00			23a	OCC	4191	22211
	Sus. + E4{1}	11	19	50	1	1.00	1.00			23a	OCC	3516	22211
	Sus. + E5{1}	12	19	58	1	1.00	1.00			23a	OCC	3699	22211
	Sus. + E6{1}	17	21	87	1	1.00	1.00			23a	OCC	4375	22211
	Sus. + E7{1}	16	24	80	1	1.00	1.00			23a	OCC	4203	22211
	Sus. + E8{1}	11	22	50	1	1.00	1.00			23a	OCC	3527	22211
D08	N- Max P{1}									(3a)	HOOP	5642	16700
	GR + Max P{1}	2120	11	9	0	1.00	1.00	1.00	1.00	23a	SUST	2420	16700
	TR:Amb to T1{1}	41	2	88	0	1.00	1.00	1.00	1.00	(17)	DISP	1913	25050
	Amb to T1{1}	41	2	88	0	1.00	1.00	1.00	1.00	(17)	DISP	1913	25050
	Sus. + E1{1}	13	13	64	1	1.00	1.00			23a	OCC	3682	22211
	Sus. + E2{1}	16	15	101	1	1.00	1.00			23a	OCC	4527	22211
	Sus. + E3{1}	15	13	93	1	1.00	1.00			23a	OCC	4338	22211
	Sus. + E4{1}	12	11	56	1	1.00	1.00			23a	OCC	3493	22211
	Sus. + E5{1}	13	11	64	1	1.00	1.00			23a	OCC	3670	22211
	Sus. + E6{1}	16	13	101	1	1.00	1.00			23a	OCC	4514	22211
	Sus. + E7{1}	15	15	93	1	1.00	1.00			23a	OCC	4350	22211
	Sus. + E8{1}	12	13	56	1	1.00	1.00			23a	OCC	3505	22211

ASME B31.3 (2016) CODE COMPLIANCE
(Moments in ft-lb , Force in lbf) (Stress in psi)

Point name	Load combination	Axial Force	In-Pl. Moment	Out-Pl. Moment	Torsion Moment	S.I.F In	S.I.F Out	Index/SIF Ax.	Index/SIF Tor.	Eq. no.	Load type	Code Stress	Code Allow.
D08 N+	Max P{1}									(3a)	HOOP	5642	16700
	GR + Max P{1}	2120	9	11	0	1.00	1.00	1.00	1.00	23a	SUST	2420	16700
	TR:Amb to T1{1}	41	88	3	0	1.00	1.00	1.00	1.00	(17)	DISP	1913	25050
	Amb to T1{1}	41	88	3	0	1.00	1.00	1.00	1.00	(17)	DISP	1913	25050
	Sus. + E1{1}	13	64	14	1	1.00	1.00			23a	OCC	3682	22211
	Sus. + E2{1}	16	101	16	1	1.00	1.00			23a	OCC	4527	22211
	Sus. + E3{1}	15	93	14	1	1.00	1.00			23a	OCC	4338	22211
	Sus. + E4{1}	12	56	12	1	1.00	1.00			23a	OCC	3493	22211
	Sus. + E5{1}	13	63	12	1	1.00	1.00			23a	OCC	3670	22211
	Sus. + E6{1}	16	101	14	1	1.00	1.00			23a	OCC	4514	22211
	Sus. + E7{1}	15	93	15	1	1.00	1.00			23a	OCC	4350	22211
	Sus. + E8{1}	12	56	13	1	1.00	1.00			23a	OCC	3505	22211
D08 F-	Max P{1}									(3a)	HOOP	5642	16700
	GR + Max P{1}	2120	9	12	0	1.00	1.00	1.00	1.00	23a	SUST	2436	16700
	TR:Amb to T1{1}	31	59	2	0	1.00	1.00	1.00	1.00	(17)	DISP	1294	25050
	Amb to T1{1}	31	59	2	0	1.00	1.00	1.00	1.00	(17)	DISP	1294	25050
	Sus. + E1{1}	5	41	12	1	1.00	1.00			23a	OCC	3157	22211
	Sus. + E2{1}	20	133	14	1	1.00	1.00			23a	OCC	5260	22211
	Sus. + E3{1}	20	129	16	1	1.00	1.00			23a	OCC	5158	22211
	Sus. + E4{1}	5	36	14	1	1.00	1.00			23a	OCC	3057	22211
	Sus. + E5{1}	5	40	14	1	1.00	1.00			23a	OCC	3138	22211
	Sus. + E6{1}	20	132	16	1	1.00	1.00			23a	OCC	5240	22211
	Sus. + E7{1}	21	130	14	1	1.00	1.00			23a	OCC	5178	22211
	Sus. + E8{1}	6	37	12	1	1.00	1.00			23a	OCC	3076	22211
D08 F+	Max P{1}									(3a)	HOOP	5642	16700
	GR + Max P{1}	2120	12	9	0	1.00	1.00	1.00	1.00	23a	SUST	2436	16700
	TR:Amb to T1{1}	31	2	59	0	1.00	1.00	1.00	1.00	(17)	DISP	1294	25050
	Amb to T1{1}	31	2	59	0	1.00	1.00	1.00	1.00	(17)	DISP	1294	25050
	Sus. + E1{1}	5	12	41	1	1.00	1.00			23a	OCC	3157	22211
	Sus. + E2{1}	20	12	133	1	1.00	1.00			23a	OCC	5260	22211
	Sus. + E3{1}	20	14	129	1	1.00	1.00			23a	OCC	5158	22211
	Sus. + E4{1}	5	14	36	1	1.00	1.00			23a	OCC	3057	22211
	Sus. + E5{1}	5	14	40	1	1.00	1.00			23a	OCC	3138	22211
	Sus. + E6{1}	20	14	132	1	1.00	1.00			23a	OCC	5240	22211
	Sus. + E7{1}	21	12	130	1	1.00	1.00			23a	OCC	5178	22211
	Sus. + E8{1}	6	12	37	1	1.00	1.00			23a	OCC	3076	22211
D15 -	Max P{1}									(3a)	HOOP	5642	16700
	GR + Max P{1}	2120	20	9	0	1.00	1.00	1.00	1.00	23a	SUST	2585	16700
	TR:Amb to T1{1}	31	2	39	0	1.00	1.00	1.00	1.00	(17)	DISP	857	25050
	Amb to T1{1}	31	2	39	0	1.00	1.00	1.00	1.00	(17)	DISP	857	25050
	Sus. + E1{1}	4	20	31	1	1.00	1.00			23a	OCC	3098	22211
	Sus. + E2{1}	19	21	127	1	1.00	1.00			23a	OCC	5288	22211
	Sus. + E3{1}	20	24	123	1	1.00	1.00			23a	OCC	5197	22211
	Sus. + E4{1}	5	23	27	1	1.00	1.00			23a	OCC	3012	22211
	Sus. + E5{1}	4	23	30	1	1.00	1.00			23a	OCC	3084	22211
	Sus. + E6{1}	19	24	126	1	1.00	1.00			23a	OCC	5269	22211
	Sus. + E7{1}	20	20	124	1	1.00	1.00			23a	OCC	5215	22211
	Sus. + E8{1}	5	20	28	1	1.00	1.00			23a	OCC	3025	22211

Primary Piping
04/24/2020 2018719 BENTLEY
07:34 AM AutoPIPE Nuclear 12.00.00.16 RESULT PAGE 399

ASME B31.3 (2016) CODE COMPLIANCE
(Moments in ft-lb , Force in lbf) (Stress in psi)

Point name	Load combination	Axial Force	In-Pl. Moment	Out-Pl. Moment	Torsion Moment	S.I.F In	S.I.F Out	Index/SIF Ax.	Index/SIF Tor.	Eq. no.	Load type	Code Stress	Code Allow.
D15	+ Max P{1}									(3a)	HOOP	5642	16700
	GR + Max P{1}	2120	20	9	0	1.00	1.00	1.00	1.00	23a	SUST	2585	16700
	TR:Amb to T1{1}	40	2	39	0	1.00	1.00	1.00	1.00	(17)	DISP	865	25050
	Amb to T1{1}	40	2	39	0	1.00	1.00	1.00	1.00	(17)	DISP	865	25050
	Sus. + E1{1}	4	20	31	1	1.00	1.00			23a	OCC	3098	22211
	Sus. + E2{1}	19	21	127	1	1.00	1.00			23a	OCC	5288	22211
	Sus. + E3{1}	20	24	123	1	1.00	1.00			23a	OCC	5197	22211
	Sus. + E4{1}	5	23	27	1	1.00	1.00			23a	OCC	3012	22211
	Sus. + E5{1}	4	23	30	1	1.00	1.00			23a	OCC	3084	22211
	Sus. + E6{1}	19	24	126	1	1.00	1.00			23a	OCC	5269	22211
	Sus. + E7{1}	20	20	124	1	1.00	1.00			23a	OCC	5215	22211
	Sus. + E8{1}	5	20	28	1	1.00	1.00			23a	OCC	3025	22211
D18	- Max P{1}									(3a)	HOOP	5642	16700
	GR + Max P{1}	2120	16	2	0	1.00	1.00	1.00	1.00	23a	SUST	2468	16700
	TR:Amb to T1{1}	40	0	49	0	1.00	1.00	1.00	1.00	(17)	DISP	1088	25050
	Amb to T1{1}	40	0	49	0	1.00	1.00	1.00	1.00	(17)	DISP	1088	25050
	Sus. + E1{1}	2	19	103	1	1.00	1.00			23a	OCC	4752	22211
	Sus. + E2{1}	13	18	81	1	1.00	1.00			23a	OCC	4252	22211
	Sus. + E3{1}	14	17	81	1	1.00	1.00			23a	OCC	4261	22211
	Sus. + E4{1}	2	16	103	1	1.00	1.00			23a	OCC	4742	22211
	Sus. + E5{1}	2	16	104	1	1.00	1.00			23a	OCC	4767	22211
	Sus. + E6{1}	13	17	80	1	1.00	1.00			23a	OCC	4236	22211
	Sus. + E7{1}	14	18	82	1	1.00	1.00			23a	OCC	4277	22211
	Sus. + E8{1}	1	19	102	1	1.00	1.00			23a	OCC	4727	22211
D18	+ Max P{1}									(3a)	HOOP	5642	16700
	GR + Max P{1}	2121	16	2	0	1.00	1.00	1.00	1.00	23a	SUST	2468	16700
	TR:Amb to T1{1}	36	0	49	0	1.00	1.00	1.00	1.00	(17)	DISP	1084	25050
	Amb to T1{1}	36	0	49	0	1.00	1.00	1.00	1.00	(17)	DISP	1084	25050
	Sus. + E1{1}	2	19	103	1	1.00	1.00			23a	OCC	4753	22211
	Sus. + E2{1}	13	18	81	0	1.00	1.00			23a	OCC	4252	22211
	Sus. + E3{1}	14	17	81	0	1.00	1.00			23a	OCC	4262	22211
	Sus. + E4{1}	2	16	103	1	1.00	1.00			23a	OCC	4742	22211
	Sus. + E5{1}	2	16	104	1	1.00	1.00			23a	OCC	4768	22211
	Sus. + E6{1}	13	17	80	0	1.00	1.00			23a	OCC	4237	22211
	Sus. + E7{1}	14	18	82	0	1.00	1.00			23a	OCC	4278	22211
	Sus. + E8{1}	1	19	102	1	1.00	1.00			23a	OCC	4728	22211
D16	- Max P{1}									(3a)	HOOP	5642	16700
	GR + Max P{1}	2121	13	1	0	1.00	1.00	1.00	1.00	23a	SUST	2389	16700
	TR:Amb to T1{1}	36	2	29	0	1.00	1.00	1.00	1.00	(17)	DISP	656	25050
	Amb to T1{1}	36	2	29	0	1.00	1.00	1.00	1.00	(17)	DISP	656	25050
	Sus. + E1{1}	8	16	50	1	1.00	1.00			23a	OCC	3521	22211
	Sus. + E2{1}	7	14	5	0	1.00	1.00			23a	OCC	2498	22211
	Sus. + E3{1}	7	14	5	0	1.00	1.00			23a	OCC	2506	22211
	Sus. + E4{1}	8	18	51	1	1.00	1.00			23a	OCC	3534	22211
	Sus. + E5{1}	8	18	50	1	1.00	1.00			23a	OCC	3523	22211
	Sus. + E6{1}	7	13	5	0	1.00	1.00			23a	OCC	2493	22211
	Sus. + E7{1}	7	13	5	0	1.00	1.00			23a	OCC	2505	22211
	Sus. + E8{1}	8	16	51	1	1.00	1.00			23a	OCC	3532	22211

Primary Piping
04/24/2020 2018719 BENTLEY
07:34 AM AutoPIPE Nuclear 12.00.00.16 RESULT PAGE 400

ASME B31.3 (2016) CODE COMPLIANCE
(Moments in ft-lb , Force in lbf) (Stress in psi)

Point name	Load combination	Axial Force	In-Pl. Moment	Out-Pl. Moment	Torsion Moment	S.I.F In	S.I.F Out	Index/SIF Ax.	Index/SIF Tor.	Eq. no.	Load type	Code Stress	Code Allow.
D16	+ Max P{1}									(3a)	HOOP	5642	16700
	GR + Max P{1}	2121	13	1	0	1.00	1.00	1.00	1.00	23a	SUST	2389	16700
	TR:Amb to T1{1}	24	2	29	0	1.00	1.00	1.00	1.00	(17)	DISP	644	25050
	Amb to T1{1}	24	2	29	0	1.00	1.00	1.00	1.00	(17)	DISP	644	25050
	Sus. + E1{1}	8	16	50	1	1.00	1.00			23a	OCC	3521	22211
	Sus. + E2{1}	7	14	5	0	1.00	1.00			23a	OCC	2498	22211
	Sus. + E3{1}	7	14	5	0	1.00	1.00			23a	OCC	2506	22211
	Sus. + E4{1}	8	18	51	1	1.00	1.00			23a	OCC	3534	22211
	Sus. + E5{1}	8	18	50	1	1.00	1.00			23a	OCC	3523	22211
	Sus. + E6{1}	7	13	5	0	1.00	1.00			23a	OCC	2493	22211
	Sus. + E7{1}	7	13	5	0	1.00	1.00			23a	OCC	2505	22211
	Sus. + E8{1}	8	16	51	1	1.00	1.00			23a	OCC	3532	22211
D12	N- Max P{1}									(3a)	HOOP	5642	16700
	GR + Max P{1}	2121	6	1	0	1.00	1.00	1.00	1.00	23a	SUST	2238	16700
	TR:Amb to T1{1}	24	1	39	0	1.00	1.00	1.00	1.00	(17)	DISP	851	25050
	Amb to T1{1}	24	1	39	0	1.00	1.00	1.00	1.00	(17)	DISP	851	25050
	Sus. + E1{1}	9	8	62	1	1.00	1.00			23a	OCC	3633	22211
	Sus. + E2{1}	6	7	1	0	1.00	1.00			23a	OCC	2264	22211
	Sus. + E3{1}	7	7	1	0	1.00	1.00			23a	OCC	2261	22211
	Sus. + E4{1}	8	10	63	1	1.00	1.00			23a	OCC	3642	22211
	Sus. + E5{1}	9	9	62	1	1.00	1.00			23a	OCC	3633	22211
	Sus. + E6{1}	6	6	1	0	1.00	1.00			23a	OCC	2256	22211
	Sus. + E7{1}	7	6	1	0	1.00	1.00			23a	OCC	2251	22211
	Sus. + E8{1}	8	9	63	1	1.00	1.00			23a	OCC	3641	22211
D12	N+ Max P{1}									(3a)	HOOP	5642	16700
	GR + Max P{1}	2121	1	6	0	1.00	1.00	1.00	1.00	23a	SUST	2238	16700
	TR:Amb to T1{1}	24	39	2	0	1.00	1.00	1.00	1.00	(17)	DISP	851	25050
	Amb to T1{1}	24	39	2	0	1.00	1.00	1.00	1.00	(17)	DISP	851	25050
	Sus. + E1{1}	9	62	9	1	1.00	1.00			23a	OCC	3633	22211
	Sus. + E2{1}	6	1	7	0	1.00	1.00			23a	OCC	2264	22211
	Sus. + E3{1}	7	1	7	0	1.00	1.00			23a	OCC	2261	22211
	Sus. + E4{1}	8	62	11	1	1.00	1.00			23a	OCC	3642	22211
	Sus. + E5{1}	9	62	10	1	1.00	1.00			23a	OCC	3633	22211
	Sus. + E6{1}	6	1	6	0	1.00	1.00			23a	OCC	2256	22211
	Sus. + E7{1}	7	1	6	0	1.00	1.00			23a	OCC	2251	22211
	Sus. + E8{1}	8	63	10	1	1.00	1.00			23a	OCC	3641	22211
D12	F- Max P{1}									(3a)	HOOP	5642	16700
	GR + Max P{1}	2121	3	18	1	1.00	1.00	1.00	1.00	23a	SUST	2526	16700
	TR:Amb to T1{1}	19	26	2	0	1.00	1.00	1.00	1.00	(17)	DISP	576	25050
	Amb to T1{1}	19	26	2	0	1.00	1.00	1.00	1.00	(17)	DISP	576	25050
	Sus. + E1{1}	18	91	24	2	1.00	1.00			23a	OCC	4515	22211
	Sus. + E2{1}	4	18	20	1	1.00	1.00			23a	OCC	2864	22211
	Sus. + E3{1}	4	16	20	1	1.00	1.00			23a	OCC	2816	22211
	Sus. + E4{1}	18	93	21	2	1.00	1.00			23a	OCC	4562	22211
	Sus. + E5{1}	18	91	20	2	1.00	1.00			23a	OCC	4519	22211
	Sus. + E6{1}	4	18	21	1	1.00	1.00			23a	OCC	2859	22211
	Sus. + E7{1}	4	16	20	1	1.00	1.00			23a	OCC	2823	22211
	Sus. + E8{1}	18	92	24	2	1.00	1.00			23a	OCC	4558	22211

Primary Piping
04/24/2020 2018719 BENTLEY
07:34 AM AutoPIPE Nuclear 12.00.00.16 RESULT PAGE 401

ASME B31.3 (2016) CODE COMPLIANCE
(Moments in ft-lb , Force in lbf) (Stress in psi)

Point name	Load combination	Axial Force	In-Pl. Moment	Out-Pl. Moment	Torsion Moment	S.I.F In	S.I.F Out	Index/SIF Ax.	Index/SIF Tor.	Eq. no.	Load type	Code Stress	Code Allow.
D12 F+	Max P{1}									(3a)	HOOP	5642	16700
	GR + Max P{1}	2121	19	3	1	1.00	1.00	1.00	1.00	23a	SUST	2526	16700
	TR:Amb to T1{1}	19	2	26	0	1.00	1.00	1.00	1.00	(17)	DISP	576	25050
	Amb to T1{1}	19	2	26	0	1.00	1.00	1.00	1.00	(17)	DISP	576	25050
	Sus. + E1{1}	18	23	90	2	1.00	1.00			23a	OCC	4515	22211
	Sus. + E2{1}	4	20	18	1	1.00	1.00			23a	OCC	2864	22211
	Sus. + E3{1}	4	20	16	1	1.00	1.00			23a	OCC	2816	22211
	Sus. + E4{1}	18	20	93	2	1.00	1.00			23a	OCC	4562	22211
	Sus. + E5{1}	18	19	91	2	1.00	1.00			23a	OCC	4519	22211
	Sus. + E6{1}	4	20	18	1	1.00	1.00			23a	OCC	2859	22211
	Sus. + E7{1}	4	20	16	1	1.00	1.00			23a	OCC	2823	22211
	Sus. + E8{1}	18	23	92	2	1.00	1.00			23a	OCC	4558	22211
D19 -	Max P{1}									(3a)	HOOP	5642	16700
	GR + Max P{1}	2121	28	3	1	1.00	1.00	1.00	1.00	23a	SUST	2730	16700
	TR:Amb to T1{1}	19	2	14	0	1.00	1.00	1.00	1.00	(17)	DISP	326	25050
	Amb to T1{1}	19	2	14	0	1.00	1.00	1.00	1.00	(17)	DISP	326	25050
	Sus. + E1{1}	17	33	83	2	1.00	1.00			23a	OCC	4555	22211
	Sus. + E2{1}	3	30	18	1	1.00	1.00			23a	OCC	3064	22211
	Sus. + E3{1}	4	30	15	1	1.00	1.00			23a	OCC	3010	22211
	Sus. + E4{1}	17	29	86	2	1.00	1.00			23a	OCC	4607	22211
	Sus. + E5{1}	17	29	83	2	1.00	1.00			23a	OCC	4557	22211
	Sus. + E6{1}	3	30	18	1	1.00	1.00			23a	OCC	3061	22211
	Sus. + E7{1}	4	30	16	1	1.00	1.00			23a	OCC	3017	22211
	Sus. + E8{1}	17	34	85	2	1.00	1.00			23a	OCC	4605	22211
D19 +	Max P{1}									(3a)	HOOP	5642	16700
	GR + Max P{1}	2121	28	3	1	1.00	1.00	1.00	1.00	23a	SUST	2730	16700
	TR:Amb to T1{1}	44	2	14	0	1.00	1.00	1.00	1.00	(17)	DISP	348	25050
	Amb to T1{1}	44	2	14	0	1.00	1.00	1.00	1.00	(17)	DISP	348	25050
	Sus. + E1{1}	17	33	83	2	1.00	1.00			23a	OCC	4555	22211
	Sus. + E2{1}	3	30	18	1	1.00	1.00			23a	OCC	3064	22211
	Sus. + E3{1}	4	30	15	1	1.00	1.00			23a	OCC	3010	22211
	Sus. + E4{1}	17	29	86	2	1.00	1.00			23a	OCC	4607	22211
	Sus. + E5{1}	17	29	83	2	1.00	1.00			23a	OCC	4557	22211
	Sus. + E6{1}	3	30	18	1	1.00	1.00			23a	OCC	3061	22211
	Sus. + E7{1}	4	30	16	1	1.00	1.00			23a	OCC	3017	22211
	Sus. + E8{1}	17	34	85	2	1.00	1.00			23a	OCC	4605	22211
D25	Max P{1}									(3a)	HOOP	5642	16700
	GR + Max P{1}	2121	46	6	1	1.00	1.00	1.00	1.00	23a	SUST	3155	16700
	TR:Amb to T1{1}	44	0	26	0	1.00	1.00	1.00	1.00	(17)	DISP	591	25050
	Amb to T1{1}	44	0	26	0	1.00	1.00	1.00	1.00	(17)	DISP	591	25050
	Sus. + E1{1}	7	49	102	2	1.00	1.00			23a	OCC	5342	22211
	Sus. + E2{1}	7	51	63	1	1.00	1.00			23a	OCC	4460	22211
	Sus. + E3{1}	6	50	55	1	1.00	1.00			23a	OCC	4282	22211
	Sus. + E4{1}	7	51	94	2	1.00	1.00			23a	OCC	5168	22211
	Sus. + E5{1}	7	51	102	2	1.00	1.00			23a	OCC	5340	22211
	Sus. + E6{1}	7	49	63	1	1.00	1.00			23a	OCC	4453	22211
	Sus. + E7{1}	7	51	55	1	1.00	1.00			23a	OCC	4288	22211
	Sus. + E8{1}	7	49	95	2	1.00	1.00			23a	OCC	5170	22211

Primary Piping
04/24/2020 2018719 BENTLEY
07:34 AM AutoPIPE Nuclear 12.00.00.16 RESULT PAGE 402

ASME B31.3 (2016) CODE COMPLIANCE
(Moments in ft-lb , Force in lbf) (Stress in psi)

Point name	Load combination	Axial Force	In-Pl. Moment	Out-Pl. Moment	Torsion Moment	S.I.F In	S.I.F Out	Index/SIF Ax.	Index/SIF Tor.	Eq. no.	Load type	Code Stress	Code Allow.
D20 -	Max P{1}									(3a)	HOOP	5642	16700
	GR + Max P{1}	2122	26	6	1	1.00	1.00	1.00	1.00	23a	SUST	2697	16700
	TR:Amb to T1{1}	44	2	19	0	1.00	1.00	1.00	1.00	(17)	DISP	448	25050
	Amb to T1{1}	44	2	19	0	1.00	1.00	1.00	1.00	(17)	DISP	448	25050
	Sus. + E1{1}	3	29	36	2	1.00	1.00			23a	OCC	3384	22211
	Sus. + E2{1}	17	27	95	1	1.00	1.00			23a	OCC	4731	22211
	Sus. + E3{1}	16	31	89	1	1.00	1.00			23a	OCC	4602	22211
	Sus. + E4{1}	3	26	41	2	1.00	1.00			23a	OCC	3510	22211
	Sus. + E5{1}	3	26	36	2	1.00	1.00			23a	OCC	3396	22211
	Sus. + E6{1}	17	31	94	1	1.00	1.00			23a	OCC	4717	22211
	Sus. + E7{1}	17	26	90	1	1.00	1.00			23a	OCC	4616	22211
	Sus. + E8{1}	3	30	41	2	1.00	1.00			23a	OCC	3499	22211
D20 +	Max P{1}									(3a)	HOOP	5642	16700
	GR + Max P{1}	2122	26	6	1	1.00	1.00	1.00	1.00	23a	SUST	2697	16700
	TR:Amb to T1{1}	28	2	19	0	1.00	1.00	1.00	1.00	(17)	DISP	433	25050
	Amb to T1{1}	28	2	19	0	1.00	1.00	1.00	1.00	(17)	DISP	433	25050
	Sus. + E1{1}	3	29	36	2	1.00	1.00			23a	OCC	3384	22211
	Sus. + E2{1}	17	27	95	1	1.00	1.00			23a	OCC	4731	22211
	Sus. + E3{1}	16	31	89	1	1.00	1.00			23a	OCC	4602	22211
	Sus. + E4{1}	3	26	41	2	1.00	1.00			23a	OCC	3510	22211
	Sus. + E5{1}	3	26	36	2	1.00	1.00			23a	OCC	3396	22211
	Sus. + E6{1}	17	31	94	2	1.00	1.00			23a	OCC	4717	22211
	Sus. + E7{1}	17	26	90	1	1.00	1.00			23a	OCC	4616	22211
	Sus. + E8{1}	3	30	41	2	1.00	1.00			23a	OCC	3499	22211
D17 N-	Max P{1}									(3a)	HOOP	5642	16700
	GR + Max P{1}	2122	17	6	1	1.00	1.00	1.00	1.00	23a	SUST	2507	16700
	TR:Amb to T1{1}	28	1	37	0	1.00	1.00	1.00	1.00	(17)	DISP	825	25050
	Amb to T1{1}	28	1	37	0	1.00	1.00	1.00	1.00	(17)	DISP	825	25050
	Sus. + E1{1}	3	20	40	2	1.00	1.00			23a	OCC	3293	22211
	Sus. + E2{1}	17	18	99	1	1.00	1.00			23a	OCC	4642	22211
	Sus. + E3{1}	17	21	94	1	1.00	1.00			23a	OCC	4514	22211
	Sus. + E4{1}	4	17	46	2	1.00	1.00			23a	OCC	3420	22211
	Sus. + E5{1}	4	17	41	2	1.00	1.00			23a	OCC	3309	22211
	Sus. + E6{1}	17	21	99	2	1.00	1.00			23a	OCC	4626	22211
	Sus. + E7{1}	17	18	94	1	1.00	1.00			23a	OCC	4531	22211
	Sus. + E8{1}	3	20	45	2	1.00	1.00			23a	OCC	3405	22211
D17 N+	Max P{1}									(3a)	HOOP	5642	16700
	GR + Max P{1}	2122	6	17	1	1.00	1.00	1.00	1.00	23a	SUST	2507	16700
	TR:Amb to T1{1}	28	37	2	0	1.00	1.00	1.00	1.00	(17)	DISP	825	25050
	Amb to T1{1}	28	37	2	0	1.00	1.00	1.00	1.00	(17)	DISP	825	25050
	Sus. + E1{1}	3	40	20	2	1.00	1.00			23a	OCC	3293	22211
	Sus. + E2{1}	17	99	19	1	1.00	1.00			23a	OCC	4642	22211
	Sus. + E3{1}	17	94	21	1	1.00	1.00			23a	OCC	4514	22211
	Sus. + E4{1}	4	46	17	2	1.00	1.00			23a	OCC	3420	22211
	Sus. + E5{1}	4	41	17	2	1.00	1.00			23a	OCC	3309	22211
	Sus. + E6{1}	17	99	22	2	1.00	1.00			23a	OCC	4626	22211
	Sus. + E7{1}	17	94	18	1	1.00	1.00			23a	OCC	4531	22211
	Sus. + E8{1}	3	45	20	2	1.00	1.00			23a	OCC	3405	22211

ASME B31.3 (2016) CODE COMPLIANCE
(Moments in ft-lb , Force in lbf) (Stress in psi)

Point name	Load combination	Axial Force	In-Pl. Moment	Out-Pl. Moment	Torsion Moment	S.I.F In	S.I.F Out	Index/SIF Ax.	Index/SIF Tor.	Eq. no.	Load type	Code Stress	Code Allow.
D17 F-	Max P{1}									(3a)	HOOP	5642	16700
	GR + Max P{1}	2121	3	8	1	1.00	1.00	1.00	1.00	23a	SUST	2298	16700
	TR:Amb to T1{1}	37	64	2	0	1.00	1.00	1.00	1.00	(17)	DISP	1402	25050
	Amb to T1{1}	37	64	2	0	1.00	1.00	1.00	1.00	(17)	DISP	1402	25050
	Sus. + E1{1}	3	37	9	1	1.00	1.00			23a	OCC	3085	22211
	Sus. + E2{1}	15	68	12	1	1.00	1.00			23a	OCC	3788	22211
	Sus. + E3{1}	15	64	11	1	1.00	1.00			23a	OCC	3694	22211
	Sus. + E4{1}	3	42	11	1	1.00	1.00			23a	OCC	3178	22211
	Sus. + E5{1}	3	38	10	1	1.00	1.00			23a	OCC	3094	22211
	Sus. + E6{1}	14	68	11	1	1.00	1.00			23a	OCC	3777	22211
	Sus. + E7{1}	15	64	12	1	1.00	1.00			23a	OCC	3704	22211
	Sus. + E8{1}	3	41	9	1	1.00	1.00			23a	OCC	3168	22211
D17 F+	Max P{1}									(3a)	HOOP	5642	16700
	GR + Max P{1}	2121	8	3	1	1.00	1.00	1.00	1.00	23a	SUST	2298	16700
	TR:Amb to T1{1}	37	1	64	0	1.00	1.00	1.00	1.00	(17)	DISP	1402	25050
	Amb to T1{1}	37	1	64	0	1.00	1.00	1.00	1.00	(17)	DISP	1402	25050
	Sus. + E1{1}	3	8	38	1	1.00	1.00			23a	OCC	3085	22211
	Sus. + E2{1}	15	12	68	1	1.00	1.00			23a	OCC	3788	22211
	Sus. + E3{1}	15	10	64	1	1.00	1.00			23a	OCC	3694	22211
	Sus. + E4{1}	3	10	42	1	1.00	1.00			23a	OCC	3178	22211
	Sus. + E5{1}	3	10	38	1	1.00	1.00			23a	OCC	3094	22211
	Sus. + E6{1}	14	10	68	1	1.00	1.00			23a	OCC	3777	22211
	Sus. + E7{1}	15	11	64	1	1.00	1.00			23a	OCC	3704	22211
	Sus. + E8{1}	3	9	41	1	1.00	1.00			23a	OCC	3168	22211
D26 -	Max P{1}									(3a)	HOOP	5642	16700
	GR + Max P{1}	2121	15	2	1	1.00	1.00	1.00	1.00	23a	SUST	2453	16700
	TR:Amb to T1{1}	37	1	50	0	1.00	1.00	1.00	1.00	(17)	DISP	1105	25050
	Amb to T1{1}	37	1	50	0	1.00	1.00	1.00	1.00	(17)	DISP	1105	25050
	Sus. + E1{1}	3	16	33	1	1.00	1.00			23a	OCC	3137	22211
	Sus. + E2{1}	15	20	56	1	1.00	1.00			23a	OCC	3687	22211
	Sus. + E3{1}	15	17	52	1	1.00	1.00			23a	OCC	3594	22211
	Sus. + E4{1}	3	18	37	1	1.00	1.00			23a	OCC	3229	22211
	Sus. + E5{1}	3	18	33	1	1.00	1.00			23a	OCC	3146	22211
	Sus. + E6{1}	15	18	56	1	1.00	1.00			23a	OCC	3677	22211
	Sus. + E7{1}	15	19	53	1	1.00	1.00			23a	OCC	3604	22211
	Sus. + E8{1}	3	16	36	1	1.00	1.00			23a	OCC	3219	22211
D26 +	Max P{1}									(3a)	HOOP	5642	16700
	GR + Max P{1}	2121	15	2	1	1.00	1.00	1.00	1.00	23a	SUST	2453	16700
	TR:Amb to T1{1}	59	1	50	0	1.00	1.00	1.00	1.00	(17)	DISP	1125	25050
	Amb to T1{1}	59	1	50	0	1.00	1.00	1.00	1.00	(17)	DISP	1125	25050
	Sus. + E1{1}	3	16	33	1	1.00	1.00			23a	OCC	3137	22211
	Sus. + E2{1}	15	20	56	1	1.00	1.00			23a	OCC	3687	22211
	Sus. + E3{1}	15	17	52	1	1.00	1.00			23a	OCC	3594	22211
	Sus. + E4{1}	3	18	37	1	1.00	1.00			23a	OCC	3229	22211
	Sus. + E5{1}	3	18	33	1	1.00	1.00			23a	OCC	3146	22211
	Sus. + E6{1}	15	18	56	1	1.00	1.00			23a	OCC	3677	22211
	Sus. + E7{1}	15	19	53	1	1.00	1.00			23a	OCC	3604	22211
	Sus. + E8{1}	3	16	36	1	1.00	1.00			23a	OCC	3219	22211

Primary Piping
04/24/2020 2018719 BENTLEY
07:34 AM AutoPIPE Nuclear 12.00.00.16 RESULT PAGE 404

ASME B31.3 (2016) CODE COMPLIANCE
(Moments in ft-lb , Force in lbf) (Stress in psi)

Point name	Load combination	Axial Force	In-Pl. Moment	Out-Pl. Moment	Torsion Moment	S.I.F In	S.I.F Out	Index/SIF Ax.	Index/SIF Tor.	Eq. no.	Load type	Code Stress	Code Allow.
D28	- Max P{1}									(3a)	HOOP	5642	16700
	GR + Max P{1}	2121	28	3	1	1.00	1.00	1.00	1.00	23a	SUST	2739	16700
	TR:Amb to T1{1}	59	0	33	0	1.00	1.00	1.00	1.00	(17)	DISP	751	25050
	Amb to T1{1}	59	0	33	0	1.00	1.00	1.00	1.00	(17)	DISP	751	25050
	Sus. + E1{1}	5	31	64	1	1.00	1.00			23a	OCC	4122	22211
	Sus. + E2{1}	23	29	137	1	1.00	1.00			23a	OCC	5778	22211
	Sus. + E3{1}	23	31	139	1	1.00	1.00			23a	OCC	5820	22211
	Sus. + E4{1}	5	30	62	1	1.00	1.00			23a	OCC	4080	22211
	Sus. + E5{1}	5	30	65	1	1.00	1.00			23a	OCC	4144	22211
	Sus. + E6{1}	23	31	136	1	1.00	1.00			23a	OCC	5755	22211
	Sus. + E7{1}	23	30	140	1	1.00	1.00			23a	OCC	5843	22211
	Sus. + E8{1}	5	31	61	1	1.00	1.00			23a	OCC	4057	22211
D28	+ Max P{1}									(3a)	HOOP	5642	16700
	GR + Max P{1}	2120	28	3	1	1.00	1.00	1.00	1.00	23a	SUST	2738	16700
	TR:Amb to T1{1}	93	0	33	0	1.00	1.00	1.00	1.00	(17)	DISP	784	25050
	Amb to T1{1}	93	0	33	0	1.00	1.00	1.00	1.00	(17)	DISP	784	25050
	Sus. + E1{1}	5	31	64	1	1.00	1.00			23a	OCC	4121	22211
	Sus. + E2{1}	23	29	137	1	1.00	1.00			23a	OCC	5777	22211
	Sus. + E3{1}	23	31	139	1	1.00	1.00			23a	OCC	5819	22211
	Sus. + E4{1}	5	30	62	1	1.00	1.00			23a	OCC	4079	22211
	Sus. + E5{1}	5	30	65	1	1.00	1.00			23a	OCC	4143	22211
	Sus. + E6{1}	23	31	136	1	1.00	1.00			23a	OCC	5754	22211
	Sus. + E7{1}	23	30	140	1	1.00	1.00			23a	OCC	5842	22211
	Sus. + E8{1}	5	31	61	1	1.00	1.00			23a	OCC	4056	22211
D27	- Max P{1}									(3a)	HOOP	5642	16700
	GR + Max P{1}	2120	18	5	1	1.00	1.00	1.00	1.00	23a	SUST	2525	16700
	TR:Amb to T1{1}	93	0	13	0	1.00	1.00	1.00	1.00	(17)	DISP	367	25050
	Amb to T1{1}	93	0	13	0	1.00	1.00	1.00	1.00	(17)	DISP	367	25050
	Sus. + E1{1}	13	19	7	1	1.00	1.00			23a	OCC	2592	22211
	Sus. + E2{1}	31	20	17	1	1.00	1.00			23a	OCC	2829	22211
	Sus. + E3{1}	31	19	7	1	1.00	1.00			23a	OCC	2606	22211
	Sus. + E4{1}	13	20	14	1	1.00	1.00			23a	OCC	2728	22211
	Sus. + E5{1}	13	20	7	1	1.00	1.00			23a	OCC	2594	22211
	Sus. + E6{1}	31	19	17	1	1.00	1.00			23a	OCC	2826	22211
	Sus. + E7{1}	31	20	7	1	1.00	1.00			23a	OCC	2615	22211
	Sus. + E8{1}	13	19	14	1	1.00	1.00			23a	OCC	2725	22211
D27	+ Max P{1}									(3a)	HOOP	5642	16700
	GR + Max P{1}	2120	18	5	1	1.00	1.00	1.00	1.00	23a	SUST	2525	16700
	TR:Amb to T1{1}	121	0	13	0	1.00	1.00	1.00	1.00	(17)	DISP	393	25050
	Amb to T1{1}	121	0	13	0	1.00	1.00	1.00	1.00	(17)	DISP	393	25050
	Sus. + E1{1}	13	19	7	1	1.00	1.00			23a	OCC	2592	22211
	Sus. + E2{1}	31	20	17	1	1.00	1.00			23a	OCC	2829	22211
	Sus. + E3{1}	31	19	7	1	1.00	1.00			23a	OCC	2606	22211
	Sus. + E4{1}	13	20	14	1	1.00	1.00			23a	OCC	2728	22211
	Sus. + E5{1}	13	20	7	1	1.00	1.00			23a	OCC	2594	22211
	Sus. + E6{1}	31	19	17	1	1.00	1.00			23a	OCC	2826	22211
	Sus. + E7{1}	31	20	7	1	1.00	1.00			23a	OCC	2615	22211
	Sus. + E8{1}	13	19	14	1	1.00	1.00			23a	OCC	2725	22211

ASME B31.3 (2016) CODE COMPLIANCE
(Moments in ft-lb , Force in lbf) (Stress in psi)

Point name	Load combination	Axial Force	In-Pl. Moment	Out-Pl. Moment	Torsion Moment	S.I.F In	S.I.F Out	Index/SIF Ax.	Index/SIF Tor.	Eq. no.	Load type	Code Stress	Code Allow.
D21	Max P{1}									(3a)	HOOP	5642	16700
	GR + Max P{1}	2121	2	6	1	1.00	1.00	1.00	1.00	23a	SUST	2245	16700
	TR:Amb to T1{1}	121	0	2	0	1.00	1.00	1.00	1.00	(17)	DISP	147	25050
	Amb to T1{1}	121	0	2	0	1.00	1.00	1.00	1.00	(17)	DISP	147	25050
	Sus. + E1{1}	16	2	18	1	1.00	1.00			23a	OCC	2541	22211
	Sus. + E2{1}	34	2	30	1	1.00	1.00			23a	OCC	2821	22211
	Sus. + E3{1}	34	2	45	1	1.00	1.00			23a	OCC	3167	22211
	Sus. + E4{1}	16	2	9	1	1.00	1.00			23a	OCC	2328	22211
	Sus. + E5{1}	16	2	19	1	1.00	1.00			23a	OCC	2549	22211
	Sus. + E6{1}	34	2	30	1	1.00	1.00			23a	OCC	2812	22211
	Sus. + E7{1}	34	2	46	1	1.00	1.00			23a	OCC	3175	22211
	Sus. + E8{1}	17	2	9	1	1.00	1.00			23a	OCC	2337	22211
D22 -	Max P{1}									(3a)	HOOP	5642	16700
	GR + Max P{1}	2121	3	6	1	1.00	1.00	1.00	1.00	23a	SUST	2258	16700
	TR:Amb to T1{1}	121	0	2	0	1.00	1.00	1.00	1.00	(17)	DISP	161	25050
	Amb to T1{1}	121	0	2	0	1.00	1.00	1.00	1.00	(17)	DISP	161	25050
	Sus. + E1{1}	17	4	20	1	1.00	1.00			23a	OCC	2583	22211
	Sus. + E2{1}	35	3	40	1	1.00	1.00			23a	OCC	3054	22211
	Sus. + E3{1}	35	4	57	1	1.00	1.00			23a	OCC	3440	22211
	Sus. + E4{1}	17	3	10	1	1.00	1.00			23a	OCC	2354	22211
	Sus. + E5{1}	17	3	20	1	1.00	1.00			23a	OCC	2594	22211
	Sus. + E6{1}	35	4	39	1	1.00	1.00			23a	OCC	3043	22211
	Sus. + E7{1}	36	3	57	1	1.00	1.00			23a	OCC	3451	22211
	Sus. + E8{1}	18	4	10	1	1.00	1.00			23a	OCC	2365	22211
D22 +	Max P{1}									(3a)	HOOP	5642	16700
	GR + Max P{1}	2121	3	0	0	1.00	1.00	1.00	1.00	23a	SUST	2168	16700
	TR:Amb to T1{1}	0	0	0	0	1.00	1.00	1.00	1.00	(17)	DISP	0	25050
	Amb to T1{1}	0	0	0	0	1.00	1.00	1.00	1.00	(17)	DISP	0	25050
	Sus. + E1{1}	1	3	1	0	1.00	1.00			23a	OCC	2182	22211
	Sus. + E2{1}	1	3	1	0	1.00	1.00			23a	OCC	2182	22211
	Sus. + E3{1}	1	3	1	0	1.00	1.00			23a	OCC	2185	22211
	Sus. + E4{1}	1	3	1	0	1.00	1.00			23a	OCC	2185	22211
	Sus. + E5{1}	1	3	1	0	1.00	1.00			23a	OCC	2185	22211
	Sus. + E6{1}	1	3	1	0	1.00	1.00			23a	OCC	2185	22211
	Sus. + E7{1}	1	3	1	0	1.00	1.00			23a	OCC	2182	22211
	Sus. + E8{1}	1	3	1	0	1.00	1.00			23a	OCC	2182	22211
D23 N-	Max P{1}									(3a)	HOOP	5642	16700
	GR + Max P{1}	2121	1	0	0	1.00	1.00	1.00	1.00	23a	SUST	2121	16700
	TR:Amb to T1{1}	0	0	0	0	1.00	1.00	1.00	1.00	(17)	DISP	0	25050
	Amb to T1{1}	0	0	0	0	1.00	1.00	1.00	1.00	(17)	DISP	0	25050
	Sus. + E1{1}	1	1	0	0	1.00	1.00			23a	OCC	2128	22211
	Sus. + E2{1}	1	1	0	0	1.00	1.00			23a	OCC	2128	22211
	Sus. + E3{1}	1	1	0	0	1.00	1.00			23a	OCC	2130	22211
	Sus. + E4{1}	1	1	0	0	1.00	1.00			23a	OCC	2130	22211
	Sus. + E5{1}	1	1	0	0	1.00	1.00			23a	OCC	2130	22211
	Sus. + E6{1}	1	1	0	0	1.00	1.00			23a	OCC	2130	22211
	Sus. + E7{1}	1	1	0	0	1.00	1.00			23a	OCC	2128	22211
	Sus. + E8{1}	1	1	0	0	1.00	1.00			23a	OCC	2128	22211

Primary Piping
04/24/2020 2018719 BENTLEY
07:34 AM AutoPIPE Nuclear 12.00.00.16 RESULT PAGE 406

ASME B31.3 (2016) CODE COMPLIANCE
(Moments in ft-lb , Force in lbf) (Stress in psi)

Point name	Load combination	Axial Force	In-Pl. Moment	Out-Pl. Moment	Torsion Moment	S.I.F In	S.I.F Out	Index/SIF Ax.	Index/SIF Tor.	Eq. no.	Load type	Code Stress	Code Allow.
D23 N+	Max P{1}									(3a)	HOOP	5642	16700
	GR + Max P{1}	2121	1	0	0	1.30	1.08	1.00	1.00	23a	SUST	2127	16700
	TR:Amb to T1{1}	0	0	0	0	1.73	1.44	1.00	1.00	(17)	DISP	0	25050
	Amb to T1{1}	0	0	0	0	1.73	1.44	1.00	1.00	(17)	DISP	0	25050
	Sus. + E1{1}	1	1	0	0	1.30	1.08			23a	OCC	2134	22211
	Sus. + E2{1}	1	1	0	0	1.30	1.08			23a	OCC	2134	22211
	Sus. + E3{1}	1	1	0	0	1.30	1.08			23a	OCC	2137	22211
	Sus. + E4{1}	1	1	0	0	1.30	1.08			23a	OCC	2137	22211
	Sus. + E5{1}	1	1	0	0	1.30	1.08			23a	OCC	2137	22211
	Sus. + E6{1}	1	1	0	0	1.30	1.08			23a	OCC	2137	22211
	Sus. + E7{1}	1	1	0	0	1.30	1.08			23a	OCC	2134	22211
	Sus. + E8{1}	1	1	0	0	1.30	1.08			23a	OCC	2134	22211
D23 F-	Max P{1}									(3a)	HOOP	5642	16700
	GR + Max P{1}	2119	0	0	0	1.30	1.08	1.00	1.00	23a	SUST	2100	16700
	TR:Amb to T1{1}	0	0	0	0	1.73	1.44	1.00	1.00	(17)	DISP	0	25050
	Amb to T1{1}	0	0	0	0	1.73	1.44	1.00	1.00	(17)	DISP	0	25050
	Sus. + E1{1}	0	0	0	0	1.30	1.08			23a	OCC	2102	22211
	Sus. + E2{1}	0	0	0	0	1.30	1.08			23a	OCC	2102	22211
	Sus. + E3{1}	0	0	0	0	1.30	1.08			23a	OCC	2102	22211
	Sus. + E4{1}	0	0	0	0	1.30	1.08			23a	OCC	2102	22211
	Sus. + E5{1}	0	0	0	0	1.30	1.08			23a	OCC	2102	22211
	Sus. + E6{1}	0	0	0	0	1.30	1.08			23a	OCC	2102	22211
	Sus. + E7{1}	0	0	0	0	1.30	1.08			23a	OCC	2102	22211
	Sus. + E8{1}	0	0	0	0	1.30	1.08			23a	OCC	2102	22211
D23 F+	Max P{1}									(3a)	HOOP	5642	16700
	GR + Max P{1}	2119	0	0	0	1.00	1.00	1.00	1.00	23a	SUST	2100	16700
	TR:Amb to T1{1}	0	0	0	0	1.00	1.00	1.00	1.00	(17)	DISP	0	25050
	Amb to T1{1}	0	0	0	0	1.00	1.00	1.00	1.00	(17)	DISP	0	25050
	Sus. + E1{1}	0	0	0	0	1.00	1.00			23a	OCC	2102	22211
	Sus. + E2{1}	0	0	0	0	1.00	1.00			23a	OCC	2102	22211
	Sus. + E3{1}	0	0	0	0	1.00	1.00			23a	OCC	2102	22211
	Sus. + E4{1}	0	0	0	0	1.00	1.00			23a	OCC	2102	22211
	Sus. + E5{1}	0	0	0	0	1.00	1.00			23a	OCC	2102	22211
	Sus. + E6{1}	0	0	0	0	1.00	1.00			23a	OCC	2102	22211
	Sus. + E7{1}	0	0	0	0	1.00	1.00			23a	OCC	2102	22211
	Sus. + E8{1}	0	0	0	0	1.00	1.00			23a	OCC	2102	22211
D24	Max P{1}									(3a)	HOOP	5642	16700
	GR + Max P{1}	2121	0	0	0	1.00	1.00	1.00	1.00	23a	SUST	2101	16700
	TR:Amb to T1{1}	0	0	0	0	1.00	1.00	1.00	1.00	(17)	DISP	0	25050
	Amb to T1{1}	0	0	0	0	1.00	1.00	1.00	1.00	(17)	DISP	0	25050
	Sus. + E1{1}	0	0	0	0	1.00	1.00			23a	OCC	2101	22211
	Sus. + E2{1}	0	0	0	0	1.00	1.00			23a	OCC	2101	22211
	Sus. + E3{1}	0	0	0	0	1.00	1.00			23a	OCC	2101	22211
	Sus. + E4{1}	0	0	0	0	1.00	1.00			23a	OCC	2101	22211
	Sus. + E5{1}	0	0	0	0	1.00	1.00			23a	OCC	2101	22211
	Sus. + E6{1}	0	0	0	0	1.00	1.00			23a	OCC	2101	22211
	Sus. + E7{1}	0	0	0	0	1.00	1.00			23a	OCC	2101	22211
	Sus. + E8{1}	0	0	0	0	1.00	1.00			23a	OCC	2101	22211

```
-----------------------------------------------------------------------------------------------------------------------
Primary Piping
04/24/2020 2018719                                                                    BENTLEY
07:34 AM                                                                              AutoPIPE Nuclear 12.00.00.16   RESULT PAGE 407
-----------------------------------------------------------------------------------------------------------------------

                              ASME B31.3 (2016)  CODE COMPLIANCE
               (Moments in ft-lb  , Force in lbf  )     (Stress in psi     )
 Point     Load                     Axial  In-Pl. Out-Pl. Torsion   S.I.F   Index/SIF  Eq. Load   Code   Code
 name   combination                 Force  Moment  Moment  Moment  In  Out   Ax. Tor.  no. type  Stress Allow.
 ------ ----------------------    ------- ------- ------- ------- ---- ---- ---- ---- ---- ----  ------ ------

 *** Segment D  end   ***
```

R E S U L T S U M M A R Y

Maximum restraint forces (lb)

Maximum X :	-660	Point : B62	Load Comb.: GT1P1{1}
Maximum Y :	-187	Point : B22	Load Comb.: GE6{1}
Maximum Z :	-344	Point : B62	Load Comb.: GE6{1}
Max. total:	695	Point : B62	Load Comb.: GT1P1{1}

Maximum restraint moments (ft-lb)

Maximum X :	-90	Point : D01	Load Comb.: GE7{1}
Maximum Y :	1504	Point : B62	Load Comb.: GE6{1}
Maximum Z :	52	Point : B62	Load Comb.: GE6{1}
Max. total:	1505	Point : B62	Load Comb.: GE6{1}

R E S U L T S U M M A R Y

Maximum sustained stress

```
Point            : A24
Stress    psi    : 4516
Allowable psi    : 16700
Ratio            : 0.27
Load combination : GR + Max P{1}
```

Maximum displacement stress

```
Point            : B56 N
Stress    psi    : 7530
Allowable psi    : 25050
Ratio            : 0.30
Load combination : Max Range
```

Maximum occasional stress

```
Point            : B62
Stress    psi    : 15686
Allowable psi    : 22211
Ratio            : 0.71
Load combination : Sus. + E3{1}
```

Maximum hoop stress

```
Point            : B00
Stress    psi    : 5813
Allowable psi    : 16700
Ratio            : 0.35
Load combination : Max P{1}
```

R E S U L T S U M M A R Y

Maximum sustained stress ratio

Point : A24
Stress psi : 4516
Allowable psi : 16700
Ratio : 0.27
Load combination : GR + Max P{1}

Maximum displacement stress ratio

Point : B56 N
Stress psi : 7530
Allowable psi : 25050
Ratio : 0.30
Load combination : Max Range

Maximum occasional stress ratio

Point : B62
Stress psi : 15686
Allowable psi : 22211
Ratio : 0.71
Load combination : Sus. + E3{1}

Maximum hoop stress ratio

Point : B00
Stress psi : 5813
Allowable psi : 16700
Ratio : 0.35
Load combination : Max P{1}

* * * The system satisfies ASME B31.3 (2016) code requirements * * *
* * * for the selected options * * *

APPENDIX D4

AUTOPIPE ANALYSIS – ENCASEMENT DRAIN AND TEST PORT STABILITY CHECK

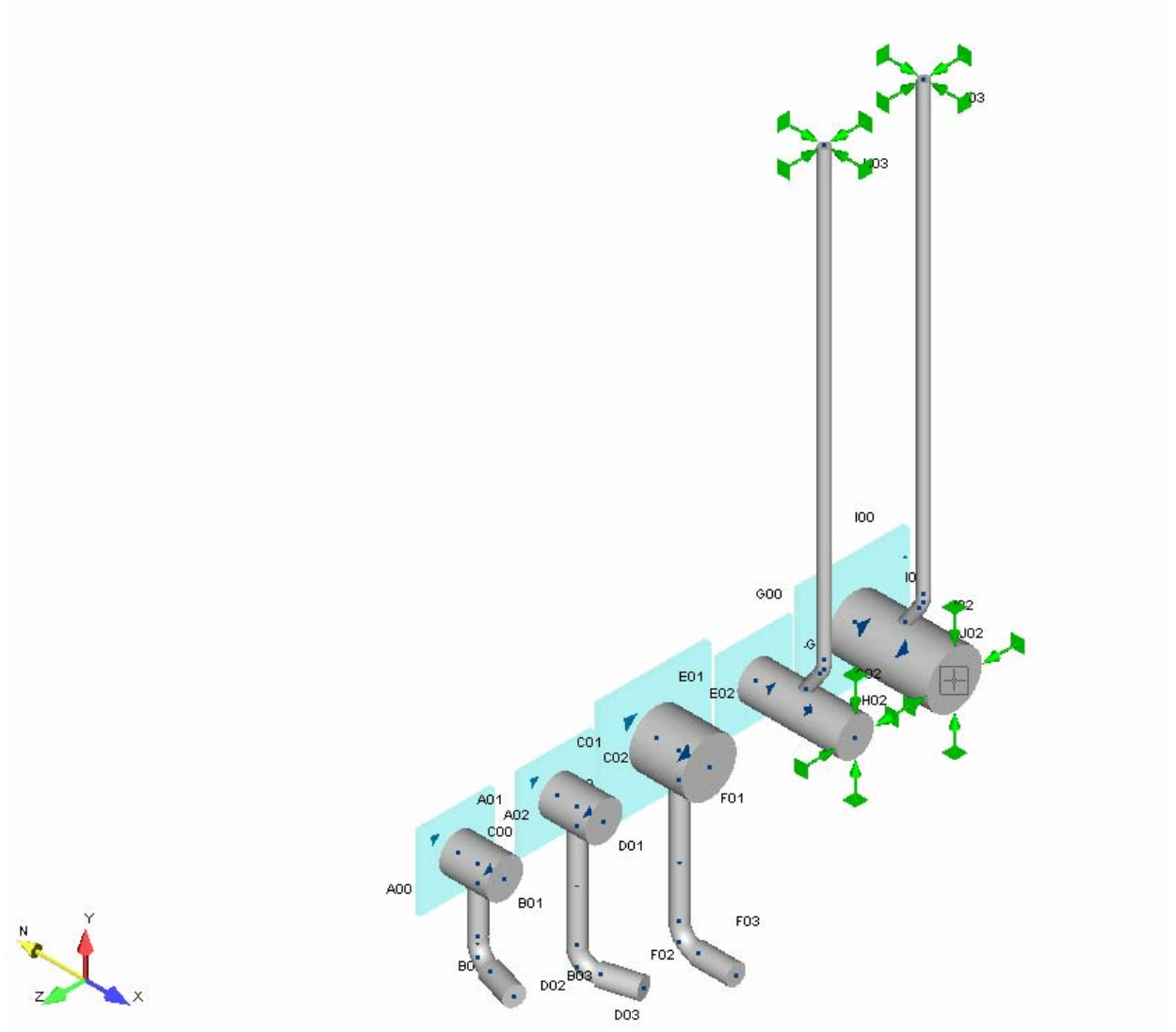
I00
G00
E01
E02
C01
C02
A01
A02
C00
A00
B01
D01
F01
F03
F02
D02
D03
N
Y
Z
X

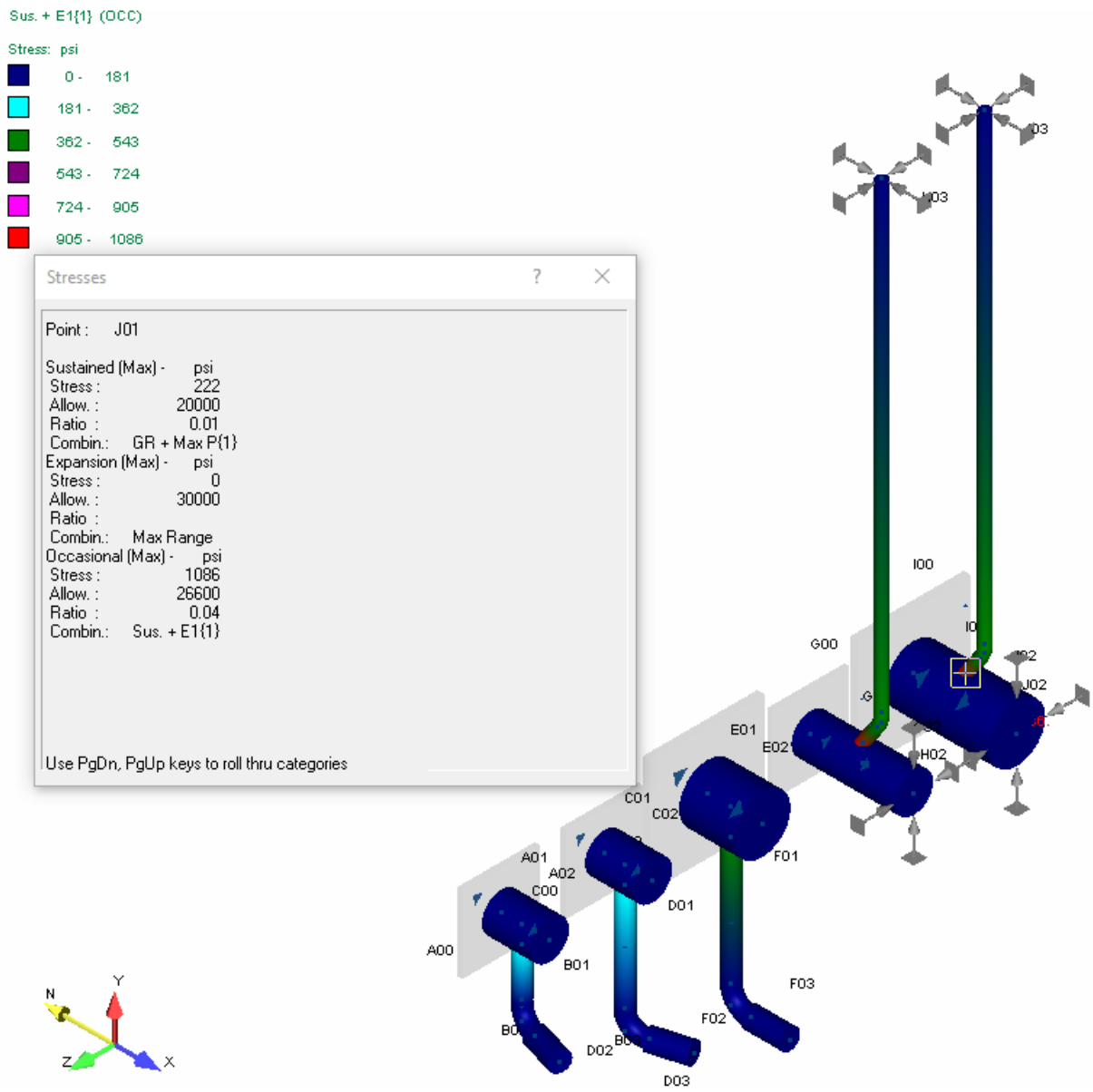
Sus. + E1{1} (OCC)
Stress: psi
0 - 181
181 - 362
362 - 543
543 - 724
724 - 905
905 - 1086
Stresses
Point : J01
Sustained (Max) - psi
Stress : 222
Allow. : 20000
Ratio : 0.01
Combin.: GR + Max P{1}
Expansion (Max) - psi
Stress : 0
Allow. : 30000
Ratio :
Combin.: Max Range
Occasional (Max) - psi
Stress : 1086
Allow. : 26600
Ratio : 0.04
Combin.: Sus. + E1{1}
Use PgDn, PgUp keys to roll thru categories
I00
G00
E01
E02
C01
C02
A01
A02
C00
A00
B01
D01
F01
F03
F02
D02
D03
H02
J02
N
Y
Z
X

```
---------------------------------------------------------------------------------------------------------------
Encasement Drain and Test Port Stability
02/04/2020 2018719                                                                                  BENTLEY
08:10 AM                                                                                            AutoPIPE Nuclear 12.00.00.16
---------------------------------------------------------------------------------------------------------------
```

```
        *                             *******   **  *******   *******
       ***               **           **    **  **  **    **  **
      ** **             ******        **    **  **  **    **  **
     **   **    **   **  **   *****   *******   **  *******   *****
    *********   **   **  **  **   **  **        **  **        **
   **       **  **   **  **  **   **  **        **  **        **
  **         **  *****   **   *****   **        **  **        *******
```

Pipe Stress Analysis and Design Program

Version: 12.00.00.16

Edition: Nuclear

Developed and Maintained by

BENTLEY SYSTEMS, INCORPORATED
1065 N. PACIFIC CENTER DRIVE, SUITE 450
ANAHEIM, CA 92806

```
************************************************************
**                                                        **
**              AUTOPIPE SYSTEM INFORMATION               **
**                                                        **
************************************************************
```

SYSTEM NAME : Encasement Drain and Test Port Stability

PROJECT ID : 2018719

PREPARED BY : _____
JIM HARRINGTON

CHECKED BY : _____
RYAN LANG

1ST APPROVER : _____

2ND APPROVER : _____

PIPING CODE : ASME B31.3

YEAR : 2016

VERTICAL AXIS : Y

AMBIENT TEMPERATURE : 60.0 deg F

COMPONENT LIBRARY : AUTOPIPE

MATERIAL LIBRARY : B313-16

MODEL REVISION NUMBER : 1

Encasement Drain and Test Port Stability
02/04/2020 2018719 BENTLEY
08:10 AM AutoPIPE Nuclear 12.00.00.16

T A B L E O F C O N T E N T S

Components..... 1
Coordinates..... 8
Segment Data..... 10
Pipe Properties..... 11
Material Properties..... 12
Material Allowables..... 13
Temperature and Pressure..... 14
Loads Summary..... 15
Support..... 16
Bend..... 17
Tee..... 18
User SIF..... 19
Rigid Pipe..... 20
Center of Gravity..... 21
Load Case Description..... 22
Tee Flexibility..... 23
Analysis Summary..... 24
Result Summary..... 27

```
-----------------------------------------------------------------------------------------------------------
Encasement Drain and Test Port Stability
02/04/2020 2018719                                                    BENTLEY
08:10 AM                                                              AutoPIPE Nuclear 12.00.00.16   MODEL  PAGE   1
-----------------------------------------------------------------------------------------------------------

                 C O M P O N E N T   D A T A   L I S T I N G

 ---------------------------------------------------------------------------
 *** SEGMENT A

 ---------------------------------------------------------------------------
 From A00 to A01, DX= 0.20 ft                                          Run

 PIPE DATA:
   Pipe Id= 4SCH40, Material= A53-B, Composition= Carbon Steel, Poisson= 0.300, Nom Size= 4 in, OD= 4.500 inch,
   Sch= 40S, Wall Thk= 0.237 inch, Mill= 0.030 inch, Cor= 0.010 inch, Pipe Density= 489.00 lb/cu.ft,
   Pipe Unit Wgt= 10.78 lb/ft, Insul Thk= 0 inch, Cladding Thickness = 0 inch, Lining Thk= 0 inch,
   Long Weld E factor= 1.00, Long Weld W factor= 1.00, Long Modulus= 29.54083 E6 psi,
   Hoop Modulus= 29.54083 E6 psi, Shear Modulus= 11.36186 E6 psi, Sc= 20000.0 psi, Syc= 35000.0 psi,
   Suc= 60000.0 psi

 OPERATING DATA:
   P1= 0 psi, T1= 60.00 deg F, Exp1= 0 in/100ft, E1= 29.54083 E6 psi, Sh1= 20000.00 psi, Sy1= 35000.00 psi

 POINT DATA:
   A00, Coordinates, X= 0.00 ft, Y= 0.00 ft, Z= 0.00 ft

 SUPPORT DATA:
   A00, Anchor, Connected to: Ground, KTX= Rigid, KTY= Rigid, KTZ= Rigid, KRX= Rigid, KRY= Rigid, KRZ= Rigid

 ---------------------------------------------------------------------------
 From A01 to A02, DX= 0.27 ft                                          Tee

 COMPONENT DATA (Tee Header, Center= A01):
   Other, SIFI= 1.00, SIFO= 1.00

 POINT DATA:
   A01, Coordinates, X= 0.20 ft, Y= 0.00 ft, Z= -0.00 ft
   A02, Coordinates, X= 0.47 ft, Y= 0.00 ft, Z= -0.00 ft

 ---------------------------------------------------------------------------
 ---------------------------------------------------------------------------
 *** SEGMENT B

 ---------------------------------------------------------------------------
 From A01 to B01, DY= -0.17 ft                                         Tee

 COMPONENT DATA (Tee Branch, Center= A01):
   Other, SIFI= 1.00, SIFO= 1.00
   Rigid, Include weight= No, Include expansion= Yes

 PIPE DATA:
   Pipe Id= 1.5SCH40, Composition= Carbon Steel, Nom Size= 1.500, OD= 1.900 inch, Wall Thk= 0.145 inch,
   Mill= 0.018 inch, Pipe Density= 489.00 lb/cu.ft, Pipe Unit Wgt= 2.71 lb/ft

 POINT DATA:
   A01, Coordinates, X= 0.20 ft, Y= 0.00 ft, Z= -0.00 ft

 ---------------------------------------------------------------------------
 From B01 to B02, DY= -0.65 ft                                         Run

 POINT DATA:
```

C O M P O N E N T D A T A L I S T I N G

B01, Coordinates, X= 0.20 ft, Y= -0.17 ft, Z= -0.00 ft
B01, Joint End Type= User-defined, SIFI= 1.83, SIFO= 1.83, Override all other values= No

---

From B02 to B03, DX= 0.52 ft, DZ= 0.15 ft, L= 0.54 ft Bend

COMPONENT DATA (Bend, TIP= B02, Near= B02 N, Far= B02 F):
Long Elbow, Radius= 2.25 inch, Bend angle= 90.00 deg, End flanges= 0, Flex= Auto, SIFI= 1.60, SIFO= 1.33

PIPE DATA (B02 F to B03):
Pipe Id= 2SCH40, Composition= Carbon Steel, Nom Size= 2.000, OD= 2.375 inch, Wall Thk= 0.154 inch,
Mill= 0.019 inch, Pipe Density= 489.00 lb/cu.ft, Pipe Unit Wgt= 3.65 lb/ft, Long Weld W factor= Auto

POINT DATA:
B02, Coordinates, X= 0.20 ft, Y= -0.82 ft, Z= -0.00 ft
B02 N, Coordinates, X= 0.20 ft, Y= -0.63 ft, Z= -0.00 ft
B02 F, Coordinates, X= 0.38 ft, Y= -0.82 ft, Z= 0.05 ft
B03, Coordinates, X= 0.72 ft, Y= -0.82 ft, Z= 0.15 ft

*** SEGMENT C

From C00 to C01, DX= 0.20 ft Run

PIPE DATA:
Pipe Id= 4SCH40, Composition= Carbon Steel, Nom Size= 4 in, OD= 4.500 inch, Wall Thk= 0.237 inch,
Mill= 0.030 inch, Pipe Density= 489.00 lb/cu.ft, Pipe Unit Wgt= 10.78 lb/ft, Long Weld W factor= 1.00

POINT DATA:
C00, Coordinates, X= 0.00 ft, Y= 0.00 ft, Z= -1.00 ft

SUPPORT DATA:
C00, Anchor, Connected to: Ground, KTX= Rigid, KTY= Rigid, KTZ= Rigid, KRX= Rigid, KRY= Rigid, KRZ= Rigid

---

From C01 to C02, DX= 0.27 ft Tee

COMPONENT DATA (Tee Header, Center= C01):
Other, SIFI= 1.00, SIFO= 1.00

POINT DATA:
C01, Coordinates, X= 0.20 ft, Y= 0.00 ft, Z= -1.00 ft
C02, Coordinates, X= 0.47 ft, Y= 0.00 ft, Z= -1.00 ft

*** SEGMENT D

From C01 to D01, DY= -0.17 ft Tee

COMPONENT DATA (Tee Branch, Center= C01):
Other, SIFI= 1.00, SIFO= 1.00

C O M P O N E N T D A T A L I S T I N G

Rigid, Include weight= No, Include expansion= Yes

PIPE DATA:
Pipe Id= 1.5SCH40, Composition= Carbon Steel, Nom Size= 1.500, OD= 1.900 inch, Wall Thk= 0.145 inch,
Mill= 0.018 inch, Pipe Density= 489.00 lb/cu.ft, Pipe Unit Wgt= 2.71 lb/ft

POINT DATA:
C01, Coordinates, X= 0.20 ft, Y= 0.00 ft, Z= -1.00 ft

From D01 to D02, DY= -1.23 ft Run

POINT DATA:
D01, Coordinates, X= 0.20 ft, Y= -0.17 ft, Z= -1.00 ft
D01, Joint End Type= User-defined, SIFI= 1.83, SIFO= 1.83, Override all other values= No

---
From D02 to D03, DX= 0.52 ft, DZ= -0.15 ft, L= 0.54 ft Bend

COMPONENT DATA (Bend, TIP= D02, Near= D02 N, Far= D02 F):
Long Elbow, Radius= 2.25 inch, Bend angle= 90.00 deg, End flanges= 0, Flex= Auto, SIFI= 1.60, SIFO= 1.33

PIPE DATA (D02 F to D03):
Pipe Id= 2SCH40, Composition= Carbon Steel, Nom Size= 2.000, OD= 2.375 inch, Wall Thk= 0.154 inch,
Mill= 0.019 inch, Pipe Density= 489.00 lb/cu.ft, Pipe Unit Wgt= 3.65 lb/ft, Long Weld W factor= Auto

POINT DATA:
D02, Coordinates, X= 0.20 ft, Y= -1.40 ft, Z= -1.00 ft
D02 N, Coordinates, X= 0.20 ft, Y= -1.21 ft, Z= -1.00 ft
D02 F, Coordinates, X= 0.38 ft, Y= -1.40 ft, Z= -1.05 ft
D03, Coordinates, X= 0.72 ft, Y= -1.40 ft, Z= -1.15 ft

*** SEGMENT E

From E00 to E01, DX= 0.23 ft Run

PIPE DATA:
Pipe Id= 6SCH40, Composition= Carbon Steel, Nom Size= 6 in, OD= 6.625 inch, Wall Thk= 0.280 inch,
Mill= 0.035 inch, Pipe Density= 489.00 lb/cu.ft, Pipe Unit Wgt= 18.95 lb/ft, Long Weld W factor= 1.00

POINT DATA:
E00, Coordinates, X= 0.00 ft, Y= 0.00 ft, Z= -2.00 ft

SUPPORT DATA:
E00, Anchor, Connected to: Ground, KTX= Rigid, KTY= Rigid, KTZ= Rigid, KRX= Rigid, KRY= Rigid, KRZ= Rigid

---
From E01 to E02, DX= 0.30 ft Tee

COMPONENT DATA (Tee Header, Center= E01):
Other, SIFI= 1.00, SIFO= 1.00

C O M P O N E N T D A T A L I S T I N G

POINT DATA:
E01, Coordinates, X= 0.23 ft, Y= 0.00 ft, Z= -2.00 ft
E02, Coordinates, X= 0.53 ft, Y= 0.00 ft, Z= -2.00 ft

*** SEGMENT F

From E01 to F01, DY= -0.25 ft Tee

COMPONENT DATA (Tee Branch, Center= E01):
Other, SIFI= 1.00, SIFO= 1.00
Rigid, Include weight= No, Include expansion= Yes

PIPE DATA:
Pipe Id= 1.5SCH40, Composition= Carbon Steel, Nom Size= 1.500, OD= 1.900 inch, Wall Thk= 0.145 inch,
Mill= 0.018 inch, Pipe Density= 489.00 lb/cu.ft, Pipe Unit Wgt= 2.71 lb/ft

POINT DATA:
E01, Coordinates, X= 0.23 ft, Y= 0.00 ft, Z= -2.00 ft

From F01 to F02, DY= -1.42 ft Run

POINT DATA:
F01, Coordinates, X= 0.23 ft, Y= -0.25 ft, Z= -2.00 ft
F01, Joint End Type= User-defined, SIFI= 2.14, SIFO= 2.14, Override all other values= No

---

From F02 to F03, DX= 0.57 ft Bend

COMPONENT DATA (Bend, TIP= F02, Near= F02 N, Far= F02 F):
Long Elbow, Radius= 2.25 inch, Bend angle= 90.00 deg, End flanges= 0, Flex= Auto, SIFI= 1.60, SIFO= 1.33

PIPE DATA (F02 F to F03):
Pipe Id= 2SCH40, Composition= Carbon Steel, Nom Size= 2.000, OD= 2.375 inch, Wall Thk= 0.154 inch,
Mill= 0.019 inch, Pipe Density= 489.00 lb/cu.ft, Pipe Unit Wgt= 3.65 lb/ft, Long Weld W factor= Auto

POINT DATA:
F02, Coordinates, X= 0.23 ft, Y= -1.67 ft, Z= -2.00 ft
F02 N, Coordinates, X= 0.23 ft, Y= -1.48 ft, Z= -2.00 ft
F02 F, Coordinates, X= 0.42 ft, Y= -1.67 ft, Z= -2.00 ft
F03, Coordinates, X= 0.80 ft, Y= -1.67 ft, Z= -2.00 ft

*** SEGMENT G

From G00 to G01, DX= 0.50 ft Run

PIPE DATA:
Pipe Id= 4SCH40, Composition= Carbon Steel, Nom Size= 4 in, OD= 4.500 inch, Wall Thk= 0.237 inch,
Mill= 0.030 inch, Pipe Density= 489.00 lb/cu.ft, Pipe Unit Wgt= 10.78 lb/ft, Long Weld W factor= 1.00

```
-----------------------------------------------------------------------------------------------------------
Encasement Drain and Test Port Stability
02/04/2020 2018719                                                    BENTLEY
08:10 AM                                                              AutoPIPE Nuclear 12.00.00.16   MODEL  PAGE   5
-----------------------------------------------------------------------------------------------------------

                 C O M P O N E N T   D A T A   L I S T I N G

 POINT DATA:
   G00, Coordinates, X= 0.00 ft, Y= 0.00 ft, Z= -3.00 ft

 SUPPORT DATA:
   G00, Anchor, Connected to: Ground, KTX= Rigid, KTY= Rigid, KTZ= Rigid, KRX= Rigid, KRY= Rigid, KRZ= Rigid

 ---------------------------------------------------------------------------
 From G01 to G02, DX= 0.50 ft                                          Tee

 COMPONENT DATA (Tee Header, Center= G01):
   Other, SIFI= 1.00, SIFO= 1.00

 POINT DATA:
   G01, Coordinates, X= 0.50 ft, Y= 0.00 ft, Z= -3.00 ft
   G02, Coordinates, X= 1.00 ft, Y= 0.00 ft, Z= -3.00 ft

 SUPPORT DATA:
   G02, Guide, Support Id= G02  1, Connected to Ground, Comp.Wt = 0.000 lb, Stiffness= RIGID,
   Gap-Down= 0.00 inch, Gap-Above= 0.00 inch, Gap-Left= 0.00 inch, Gap-Right= 0.00 inch, Friction= 0.80,
   Gaps setting= Weightless

 ---------------------------------------------------------------------------
 ---------------------------------------------------------------------------
 *** SEGMENT H

 ---------------------------------------------------------------------------
 From G01 to H01, DY= 0.17 ft                                          Tee

 COMPONENT DATA (Tee Branch, Center= G01):
   Other, SIFI= 1.00, SIFO= 1.00
   Rigid, Include weight= No, Include expansion= Yes

 PIPE DATA:
   Pipe Id= 1SCH40, Composition= Carbon Steel, Nom Size= 1.000, OD= 1.315 inch, Wall Thk= 0.133 inch,
   Mill= 0.017 inch, Pipe Density= 489.00 lb/cu.ft, Pipe Unit Wgt= 1.68 lb/ft

 POINT DATA:
   G01, Coordinates, X= 0.50 ft, Y= 0.00 ft, Z= -3.00 ft

 ---------------------------------------------------------------------------
 From H01 to H02, DX= 0.19 ft, DY= 0.27 ft, L= 0.33 ft                 Run

 POINT DATA:
   H01, Coordinates, X= 0.50 ft, Y= 0.17 ft, Z= -3.00 ft
   H01, Joint End Type= User-defined, SIFI= 1.83, SIFO= 1.83, Override all other values= No

 ---------------------------------------------------------------------------
 From H02 to H03, DY= 4.56 ft                                          Bend

 COMPONENT DATA (Bend, TIP= H02, Near= H02 N, Far= H02 F):
   Elbow, Radius= 3.00 inch, Bend angle= 35.13 deg, End flanges= 0, Flex= Auto, SIFI= 1.00, SIFO= 1.00

 POINT DATA:
   H02, Coordinates, X= 0.69 ft, Y= 0.44 ft, Z= -3.00 ft
   H02 N, Coordinates, X= 0.64 ft, Y= 0.38 ft, Z= -3.00 ft
```

C O M P O N E N T D A T A L I S T I N G

H02 F, Coordinates, X= 0.69 ft, Y= 0.52 ft, Z= -3.00 ft
H03, Coordinates, X= 0.69 ft, Y= 5.00 ft, Z= -3.00 ft

SUPPORT DATA:
H03, Guide, Support Id= H03 1, Connected to Ground, Comp.Wt = 0.000 lb, Stiffness= RIGID, Gap -Z= 0.00 inch, Gap +Z= 0.00 inch, Gap -X= 0.00 inch, Gap +X= 0.00 inch, Friction= 0.80, Gaps setting= Weightless

---

*** SEGMENT I

From I00 to I01, DX= 0.50 ft Run

PIPE DATA:
Pipe Id= 6SCH40, Composition= Carbon Steel, Nom Size= 6 in, OD= 6.625 inch, Wall Thk= 0.280 inch, Mill= 0.035 inch, Pipe Density= 489.00 lb/cu.ft, Pipe Unit Wgt= 18.95 lb/ft

POINT DATA:
I00, Coordinates, X= 0.00 ft, Y= 0.00 ft, Z= -4.00 ft

SUPPORT DATA:
I00, Anchor, Connected to: Ground, KTX= Rigid, KTY= Rigid, KTZ= Rigid, KRX= Rigid, KRY= Rigid, KRZ= Rigid

---
From I01 to I02, DX= 0.50 ft Tee

COMPONENT DATA (Tee Header, Center= I01):
Other, SIFI= 1.00, SIFO= 1.00

POINT DATA:
I01, Coordinates, X= 0.50 ft, Y= 0.00 ft, Z= -4.00 ft
I02, Coordinates, X= 1.00 ft, Y= 0.00 ft, Z= -4.00 ft

SUPPORT DATA:
I02, Guide, Support Id= I02 1, Connected to Ground, Comp.Wt = 0.000 lb, Stiffness= RIGID, Gap-Down= 0.00 inch, Gap-Above= 0.00 inch, Gap-Left= 0.00 inch, Gap-Right= 0.00 inch, Friction= 0.80, Gaps setting= Weightless

---

*** SEGMENT J

From I01 to J01, DY= 0.25 ft Tee

COMPONENT DATA (Tee Branch, Center= I01):
Other, SIFI= 1.00, SIFO= 1.00
Rigid, Include weight= No, Include expansion= Yes

PIPE DATA:
Pipe Id= 1SCH40, Composition= Carbon Steel, Nom Size= 1.000, OD= 1.315 inch, Wall Thk= 0.133 inch, Mill= 0.017 inch, Pipe Density= 489.00 lb/cu.ft, Pipe Unit Wgt= 1.68 lb/ft

POINT DATA:

```
-----------------------------------------------------------------------------------------------------------------
Encasement Drain and Test Port Stability
02/04/2020 2018719                                                    BENTLEY
08:10 AM                                                              AutoPIPE Nuclear 12.00.00.16   MODEL  PAGE   7
-----------------------------------------------------------------------------------------------------------------

                 C O M P O N E N T   D A T A   L I S T I N G

   I01, Coordinates, X= 0.50 ft, Y= 0.00 ft, Z= -4.00 ft

 ---------------------------------------------------------------------------
 From J01 to J02, DX= 0.19 ft, DY= 0.27 ft, L= 0.33 ft                      Run

 POINT DATA:
   J01, Coordinates, X= 0.50 ft, Y= 0.25 ft, Z= -4.00 ft
   J01, Joint End Type= User-defined, SIFI= 2.14, SIFO= 2.14, Override all other values= No

 ---------------------------------------------------------------------------
 From J02 to J03, DY= 4.56 ft                                               Bend

 COMPONENT DATA (Bend, TIP= J02, Near= J02 N, Far= J02 F):
   Elbow, Radius= 3.00 inch, Bend angle= 35.13 deg, End flanges= 0, Flex= Auto, SIFI= 1.00, SIFO= 1.00

 POINT DATA:
   J02, Coordinates, X= 0.69 ft, Y= 0.52 ft, Z= -4.00 ft
   J02 N, Coordinates, X= 0.64 ft, Y= 0.46 ft, Z= -4.00 ft
   J02 F, Coordinates, X= 0.69 ft, Y= 0.60 ft, Z= -4.00 ft
   J03, Coordinates, X= 0.69 ft, Y= 5.08 ft, Z= -4.00 ft

 SUPPORT DATA:
   J03, Guide, Support Id= J03  1, Connected to Ground, Comp.Wt = 0.000 lb, Stiffness= RIGID, Gap -Z= 0.00 inch,
   Gap +Z= 0.00 inch, Gap -X= 0.00 inch, Gap +X= 0.00 inch, Friction= 0.80, Gaps setting= Weightless

 ---------------------------------------------------------------------------


 Number of points in the system (Pipe + Frame + Soil): 50 + 0 + 0 = 50


 Weight of Empty Pipes + Weight of Contents = Total Weight of System
           80.1 lb     +         0.0 lb     =          80.1 lb
```

C O O R D I N A T E S D A T A L I S T I N G

POINT NAME	COORDINATE (ft) X	Y	Z
*** SEGMENT A			
A00	0.00	0.00	0.00
A01	0.20	0.00	-0.00
A02	0.47	0.00	-0.00
*** SEGMENT B			
A01	0.20	0.00	-0.00
B01	0.20	-0.17	-0.00
B02 N	0.20	-0.63	-0.00
B02	0.20	-0.82	-0.00
B02 F	0.38	-0.82	0.05
B03	0.72	-0.82	0.15
*** SEGMENT C			
C00	0.00	0.00	-1.00
C01	0.20	0.00	-1.00
C02	0.47	0.00	-1.00
*** SEGMENT D			
C01	0.20	0.00	-1.00
D01	0.20	-0.17	-1.00
D02 N	0.20	-1.21	-1.00
D02	0.20	-1.40	-1.00
D02 F	0.38	-1.40	-1.05
D03	0.72	-1.40	-1.15
*** SEGMENT E			
E00	0.00	0.00	-2.00
E01	0.23	0.00	-2.00
E02	0.53	0.00	-2.00
*** SEGMENT F			
E01	0.23	0.00	-2.00
F01	0.23	-0.25	-2.00
F02 N	0.23	-1.48	-2.00
F02	0.23	-1.67	-2.00
F02 F	0.42	-1.67	-2.00
F03	0.80	-1.67	-2.00
*** SEGMENT G			
G00	0.00	0.00	-3.00
G01	0.50	0.00	-3.00
G02	1.00	0.00	-3.00
*** SEGMENT H			
G01	0.50	0.00	-3.00
H01	0.50	0.17	-3.00
H02 N	0.64	0.38	-3.00
H02	0.69	0.44	-3.00
H02 F	0.69	0.52	-3.00
H03	0.69	5.00	-3.00

C O O R D I N A T E S D A T A L I S T I N G

POINT NAME	COORDINATE (ft) X	Y	Z
*** SEGMENT I			
I00	0.00	0.00	-4.00
I01	0.50	0.00	-4.00
I02	1.00	0.00	-4.00
*** SEGMENT J			
I01	0.50	0.00	-4.00
J01	0.50	0.25	-4.00
J02 N	0.64	0.46	-4.00
J02	0.69	0.52	-4.00
J02 F	0.69	0.60	-4.00
J03	0.69	5.08	-4.00

S E G M E N T D A T A L I S T I N G

Segment Name	First Node	Last Node	Line Number	Apply Wind	Apply Bowing	Apply Buoyancy
A	A00	A02		No	No	No
B	A01	B03		No	No	No
C	C00	C02		No	No	No
D	C01	D03		No	No	No
E	E00	E02		No	No	No
F	E01	F03		No	No	No
G	G00	G02		No	No	No
H	G01	H03		No	No	No
I	I00	I02		No	No	No
J	I01	J03		No	No	No

```
-----------------------------------------------------------------------------------------------------------------------
Encasement Drain and Test Port Stability
02/04/2020 2018719                                                    BENTLEY
08:10 AM                                                              AutoPIPE Nuclear 12.00.00.16   MODEL  PAGE  11
-----------------------------------------------------------------------------------------------------------------------

                    P I P E   D A T A   L I S T I N G

 Pipe ID/     Nom/ O.D.  -----Thickness(inch)----- Spec  InsuDen/   Weight(lb/ft )    E/  Composition/
 Material     Sch  inch  W.Th. Corr Mill Insu Ling Grav/ LingDen/  Pipe/ Ling/ Total  W/  Steel Group/
 CladMaterial            Clad                      InsMt CladDen   Cont  Insu/        f   Tcr
 ---Line Class---                                       lb/cu.ft        Clad
 ------------ ---- ----- ----- ---- ---- ---- ---- ----- --------  ----- ----- ----- ---- --------------------

 Tag No. : <None>
 2SCH40      2.000 2.375 0.154 0.01 0.02    0    0     0    0.000   3.65     0  3.65 1.00 Carbon Steel
 A53-B        40S                                         0.000      0     0       Auto Carbon
                            0                              0.000            0       1.00    650.000


 Tag No. : <None>
 6SCH40         6  6.625 0.280 0.01 0.04    0    0     0    0.000  18.95     0 18.95 1.00 Carbon Steel
 A53-B        40S                                         0.000      0     0       1.00 Carbon
                            0                              0.000            0       1.00    650.000


 Tag No. : <None>
 4SCH40         4  4.500 0.237 0.01 0.03    0    0     0    0.000  10.78     0 10.78 1.00 Carbon Steel
 A53-B        40S                                         0.000      0     0       1.00 Carbon
                            0                              0.000            0       1.00    650.000


 Tag No. : <None>
 1.5SCH40    1.500 1.900 0.145 0.01 0.02    0    0     0    0.000   2.71     0  2.71 1.00 Carbon Steel
 A53-B        40S                                         0.000      0     0       1.00 Carbon
                            0                              0.000            0       1.00    650.000


 Tag No. : <None>
 1SCH40      1.000 1.315 0.133 0.01 0.02    0    0     0    0.000   1.68     0  1.68 1.00 Carbon Steel
 A53-B        40S                                         0.000      0     0       1.00 Carbon
                            0                              0.000            0       1.00    650.000
```

M A T E R I A L D A T A L I S T I N G

Material Name	Pipe ID	Density lb/cu.ft	Pois. Ratio	Temper. deg F	Modulus E6 psi Axial	Hoop	Shear	Expans. in/100ft	Composition
A53-B	4SCH40	489.0	0.30	60.0	29.541	29.541	11.362		Carbon Steel
A53-B	1.5SCH40	489.0	0.30	60.0	29.541	29.541	11.362		Carbon Steel
A53-B	2SCH40	489.0	0.30	60.0	29.541	29.541	11.362		Carbon Steel
A53-B	6SCH40	489.0	0.30	60.0	29.541	29.541	11.362		Carbon Steel
A53-B	1SCH40	489.0	0.30	60.0	29.541	29.541	11.362		Carbon Steel

M A T E R I A L A L L O W A B L E D A T A L I S T I N G

Material Name	Pipe ID	Temper. deg F	Allow. psi	Yield psi	Ultimate	Weld Reduction Factor W
A53-B	4SCH40	60.0	20000.0	35000.0	60000.0	1.000
		60.0	20000.0	35000.0		1.000
A53-B	1.5SCH40	60.0	20000.0	35000.0	60000.0	1.000
		60.0	20000.0	35000.0		1.000
A53-B	2SCH40	60.0	20000.0	35000.0	60000.0	1.000
		60.0	20000.0	35000.0		1.000
A53-B	6SCH40	60.0	20000.0	35000.0	60000.0	1.000
		60.0	20000.0	35000.0		1.000
A53-B	1SCH40	60.0	20000.0	35000.0	60000.0	1.000
		60.0	20000.0	35000.0		1.000

OPERATING TEMPERATURE AND PRESSURE DATA
STRESSES IN psi

POINT NAME	CASE	PRESS. psi	TEMPER deg F	EXPAN. in/100ft	MODULUS E6 psi	ALLOW STRESS	YIELD STRESS
*** SEGMENT A							
A00	T1	0	60.00	0.000	29.541	20000	35000
A02	Same as previous point.						
*** SEGMENT B							
A01	T1	0	60.00	0.000	29.541	20000	35000
B03	Same as previous point.						
*** SEGMENT C							
C00	T1	0	60.00	0.000	29.541	20000	35000
C02	Same as previous point.						
*** SEGMENT D							
C01	T1	0	60.00	0.000	29.541	20000	35000
D03	Same as previous point.						
*** SEGMENT E							
E00	T1	0	60.00	0.000	29.541	20000	35000
E02	Same as previous point.						
*** SEGMENT F							
E01	T1	0	60.00	0.000	29.541	20000	35000
F03	Same as previous point.						
*** SEGMENT G							
G00	T1	0	60.00	0.000	29.541	20000	35000
G02	Same as previous point.						
*** SEGMENT H							
G01	T1	0	60.00	0.000	29.541	20000	35000
H03	Same as previous point.						
*** SEGMENT I							
I00	T1	0	60.00	0.000	29.541	20000	35000
I02	Same as previous point.						
*** SEGMENT J							
I01	T1	0	60.00	0.000	29.541	20000	35000
J03	Same as previous point.						

u User-defined value
* Non-code material for allowable stress;
Non-standard material for expansion and modulus

L O A D S S U M M A R Y D A T A L I S T I N G

EARTHQUAKE LOAD CASES :

Number of load cases : 1

Load case 1 - E1

Seismic Code : User-defined

X-Resultant = 1.000 Y-Resultant = 1.000 Z-Resultant = 1.000

S U P P O R T D A T A L I S T I N G

```
 Point Support  Support Conn.to Comp.Wt  Stiff.     Gap 1   Gap 2  Fric. GapSet Preload Ld.Var Size    Figure
 Name   Type      ID     /Dir    (lb)               (in)    (in)   Fact. /#hgr   (lbf)
 ----- -------- ------- ------- ------- ---------- ------- ------- ----- ------ ------- ------ ---- ------------

 Tag No.: <None>                                Attachment ID: <None>
 G02   Guide-V  G02  1  Ground    0.000 Rigid        0.000   0.000  0.80
       Guide-H  G02  1  Ground    0.000 Rigid        0.000   0.000  0.80

 Tag No.: <None>                                Attachment ID: <None>
 H03   Guide-V  H03  1  Ground    0.000 Rigid        0.000   0.000  0.80
       Guide-H  H03  1  Ground    0.000 Rigid        0.000   0.000  0.80
            Gap Dir.: (Gap1_V=-Z, Gap2_V=+Z, Gap1_H=-X, Gap2_H=+X)

 Tag No.: <None>                                Attachment ID: <None>
 I02   Guide-V  I02  1  Ground    0.000 Rigid        0.000   0.000  0.80
       Guide-H  I02  1  Ground    0.000 Rigid        0.000   0.000  0.80

 Tag No.: <None>                                Attachment ID: <None>
 J03   Guide-V  J03  1  Ground    0.000 Rigid        0.000   0.000  0.80
       Guide-H  J03  1  Ground    0.000 Rigid        0.000   0.000  0.80
            Gap Dir.: (Gap1_V=-Z, Gap2_V=+Z, Gap1_H=-X, Gap2_H=+X)


 Spring Manufacturer: Anvil/Grinnell
 NOTE 1: No soil supports present in the system.
 Gap 1 : V-stop,Guide-V=down, Linestop,Incline,Tie/link=backward, Guide-H=Left
 Gap 2 : V-stop,Guide-V=Up  , Linestop,Incline,Tie/link=forward , Guide-H=Right
 Stiffness units for rotation support: ft-lb/deg, all others: lb/in
```

B E N D D A T A L I S T I N G

Point Name	Bend Type	Radius (in)	Angle (deg)	OD (in)	tnom (in)	Material	Flan^ /Cuts	SIF in	SIF out	Analysis Set	Flexibility (K)	Pressure Case
B02	Elbow	2.25L	90.0	1.900	0.145	A53-B	0/0	1.60	1.33	1	3.89	None
D02	Elbow	2.25L	90.0	1.900	0.145	A53-B	0/0	1.60	1.33	1	3.89	None
F02	Elbow	2.25L	90.0	1.900	0.145	A53-B	0/0	1.60	1.33	1	3.89	None
H02	Elbow	3.00	35.1	1.315	0.133	A53-B	0/0	1.00	1.00	1	1.44	None
J02	Elbow	3.00	35.1	1.315	0.133	A53-B	0/0	1.00	1.00	1	1.44	None

^ = Number of bend ends where either a flange or valve is within distance
(L/D) x Nominal diameter, where L/D is defined under Tools > Model options > Edit
L = Long radius

T E E D A T A L I S T I N G

Point Name	Point Seg-Type	Pipe OD (in)	Pipe Thk. (in)	Material	Tee Type	**Crotch Radius (in)	*Crotch Thick (in)	SIF in	SIF out
A01	A-Header	4.500	0.237	A53-B	Other			1.00	1.00
	B-Branch	1.900	0.145	A53-B					
C01	C-Header	4.500	0.237	A53-B	Other			1.00	1.00
	D-Branch	1.900	0.145	A53-B					
E01	E-Header	6.625	0.280	A53-B	Other			1.00	1.00
	F-Branch	1.900	0.145	A53-B					
G01	G-Header	4.500	0.237	A53-B	Other			1.00	1.00
	H-Branch	1.315	0.133	A53-B					
I01	I-Header	6.625	0.280	A53-B	Other			1.00	1.00
	J-Branch	1.315	0.133	A53-B					

* = Pad thickness for reinforced tee.
**= Fillet radius for Raised tee or discontinuity dist. for Thickened tee.

J O I N T T Y P E / U S E R - S I F D A T A L I S T I N G

Point Name	Point Type	SIF in	SIF out	Axial Index	Tors. Index	Axial SIF	Tors. SIF	Joint Type	Size /Avg. (in)	Max. (in)	Over ride SIF	Over ride A&T
B01	Run	1.830	1.830	1.000	1.000	1.000	1.000	USER			No	No
D01	Run	1.830	1.830	1.000	1.000	1.000	1.000	USER			No	No
F01	Run	2.140	2.140	1.000	1.000	1.000	1.000	USER			No	No
H01	Run	1.830	1.830	1.000	1.000	1.000	1.000	USER			No	No
J01	Run	2.140	2.140	1.000	1.000	1.000	1.000	USER			No	No

R I G I D P I P E D A T A L I S T I N G

From Point	To Point	Include Weight	Include Expansion	Rigid Factor
A01	B01	No	Yes	1000.0
C01	D01	No	Yes	1000.0
E01	F01	No	Yes	1000.0
G01	H01	No	Yes	1000.0
I01	J01	No	Yes	1000.0

C E N T E R O F G R A V I T Y R E P O R T

Description		Weight (lb)	X CoG (ft)	Y CoG (ft)	Z CoG (ft)
Valve	:	0.00	0.00	0.00	0.00
Support	:	0.00	0.00	0.00	0.00
Flange	:	0.00	0.00	0.00	0.00
Flexible Joint	:	0.00	0.00	0.00	0.00
Additional Weight	:	0.00	0.00	0.00	0.00
Pipes (Run, Bend, Tee, Reducer)	:	80.10	0.44	0.36	-2.58
PipeTot (Valve+Support+Flange+Flex. Jt.+Add. Wt.+Pipes)	:	80.10	0.44	0.36	-2.58
Insulation	:	0.00	0.00	0.00	0.00
Cladding	:	0.00	0.00	0.00	0.00
Lining	:	0.00	0.00	0.00	0.00
Contents	:	0.00	0.00	0.00	0.00
Beam	:	0.00	0.00	0.00	0.00
PipeTot + Ins.	:	80.10	0.44	0.36	-2.58
PipeTot + Ins. + Clad.	:	80.10	0.44	0.36	-2.58
PipeTot + Ins. + Clad. + Lin.	:	80.10	0.44	0.36	-2.58
PipeTot + Ins. + Clad. + Lin. + Cont.	:	80.10	0.44	0.36	-2.58
PipeTot + Beam	:	80.10	0.44	0.36	-2.58
PipeTot + Ins. + Beam	:	80.10	0.44	0.36	-2.58
PipeTot + Ins. + Clad. + Beam	:	80.10	0.44	0.36	-2.58
PipeTot + Ins. + Clad. + Lin. + Beam	:	80.10	0.44	0.36	-2.58
PipeTot + Ins. + Clad. + Lin. + Cont. + Beam	:	80.10	0.44	0.36	-2.58

NOTE: COG report only includes the currently visible beams and segments.
All pipe segments are included.
No beams present in the model.

L O A D C A S E D E S C R I P T I O N

Load Case	Load Case Name	Description
GR	Gravity	
T1	Thermal 1	
E1	Earth 1	
P1	Press 1	

T E E F L E X I B I L I T I E S D A T A L I S T I N G

Point Name	Point Seg-Type	Flexibility fac. k In-pl (none)	Out-pl (none)	Torsn	Flange Factor (c) In-pl	Out-pl (none)	Torsn	Rotational Stiffness In-pl (ft-lb/deg)	Out-pl	Torsn
A01	*** Tee is not ASME B31J compliant ***									
C01	*** Tee is not ASME B31J compliant ***									
E01	*** Tee is not ASME B31J compliant ***									
G01	*** Tee is not ASME B31J compliant ***									
I01	*** Tee is not ASME B31J compliant ***									

Note: The rotational stiffness values displayed are calculated for branch and run independently. Program uses "simultaneous use" stiffness values in the analysis by combining branch and run stiffness values.

A N A L Y S I S S U M M A R Y

```
Current model revision number : 1

  Constant values used
           Acceleration due to gravity................  386.40000 in/s/s
           Density of water for specific gravity Cal..     62.400 lb/cu.ft
           Density of sea water......................     62.400 lb/cu.ft
           Density of ground water ..................     62.400 lb/cu.ft

  Static - Analysis set number .................. 1
           Date and Time of analysis ............ Feb 4, 2020   8:05 AM
           Model Revision Number ................ 1
           Number of load cases ................. 2
           Load cases analyzed .................. GR E1
           Description .......................... Analysis Set No.1
           Gaps/Friction/Soil considered ......... Yes
           Tolerance - Force, Displacement ....... 10.00 lbf  0.0010 in
           Friction - Scale Factor, Tolerance .... 1.00   0.10
           Ignore friction for cases E1,E2,E3 .... Yes
           Ignore friction for gravity case ...... Yes
           Hanger design run ..................... No
           Cut short included .................... No
           Thermal bowing included ............... No
           Include Bourdon rotational effect ..... No
           Pipe radius for Bourdon calculation ... Mean
           Occasional load analysis type ......... Nonlinear
           Non-linear analysis summary file ......
             Encasement Drain and Test Port Stability.LOG
           Use default load sequence ............ Yes
           Base load cases for nonlinear analysis
                                                     GR   = None
                                                     E1   = GR
           Weight of contents included ........... Yes
           Fluid density factor for contents ..... 1.00
           Pressure stiffening case .............. None
           Hot modulus case ...................... None
           Pressure Extension..................... No
           Water elevation for buoyancy loads .... Not considered
           Use corroded thickness in analysis .... Yes
           Rigid stiffness factor ................ 1000.0
           Support rigid stiffness (translation) . 0.100000E+11 lb/in
           Support rigid stiffness (rotation) .... 0.100000E+11 ft-lb/deg
           Anchor rigid stiffness (translation) .. 0.100000E+11 lb/in
           Anchor rigid stiffness (rotation) ..... 0.100000E+11 ft-lb/deg
           Remove Lift-Off Supports .............. No
```

Encasement Drain and Test Port Stability
02/04/2020 2018719 BENTLEY
08:10 AM AutoPIPE Nuclear 12.00.00.16 RESULT PAGE 25

CODE COMPLIANCE COMBINATIONS

<Description> Combination	Category	Method	Case/Combination	Factor	M/S	K-Factor	Allowable (psi)	D/A/P/C
GR + Max P{1}	Sustain	Sum	GR[1]	1.00			Automatic	Y Y Y Y
			Max Long	1.00				
Max Range	Expansion	Sum	Temp. Range	1.00			Automatic	Y Y Y Y
Sus. + E1{1}	Occasion	Abs sum	E1[1]	1.00		1.330	Automatic	Y Y Y Y
			Max Sus	1.00				

Notes:

D/A/P/C: [D]efault/[A]uto-Update/[P]rint options/[C]Consistent (Y=Yes, N=No)

NON-CODE COMBINATIONS

<Description> Combination	Method	Case/Combination	Factor	D/A/P/C
Gravity{1}	Sum	GR[1]	1.00	Y Y Y Y
< 1.00, 1.00, 1.00>				
Static Seismic 1{1}	Sum	E1[1]	1.00	Y Y Y N
GE1{1}	Sum	GR[1]	1.00	Y Y Y Y
		E1[1]	1.00	

Notes:

D/A/P/C: [D]efault/[A]uto-Update/[P]rint options/[C]Consistent (Y=Yes, N=No)

CODE COMPLIANCE

```
Y - Factor ............................ 0.40
Design Pressure Factor ................ 1.00
Minimum stress ratio used in reports... 0.00
Number of stress points per span ...... 0
Include corrosion in stress calcs. .... Y
Include corrosion in Hoop stress calcs. Y
Include torsion in code stress ........ N
Include axial force in code stress .... Y
Include sustain load margin ........... Only if allowable stress is exceeded
Use minimum sustained margin........... Y
Set sustained SIF=1 no bends .......... N
Set occasional SIF = 1 ................ N
Set occasional SIF = 0.75i ............ Y
Apply cold/hot modulus ratio .......... N
Disable auto code combinations ........ N
Disable auto non-code combinations .... N
No. of thermal ranges to report ....... 0
Include Max Range combination ......... Y
Total stress .......................... Octahedral
Direct shear .......................... None
Longitudinal pressure calculation ..... AxF/area
Use code case 178 ..................... Y
Inc. Axial Str and Pcase in Sustained.. Axial forces
Use alternate occasional allowable .... N
Apply circumferential weld WC factor .. N
ASME B31J Enabled ..................... N
```

*** NOTE ***

No operating loads analyzed. Maximum specified
pressure will be used for sustained stress

*** Summary not available ***

APPENDIX D5

AUTOPIPE ANALYSIS – ENCASEMENT DRAIN AND TEST PORT THERMAL CONTRACTION

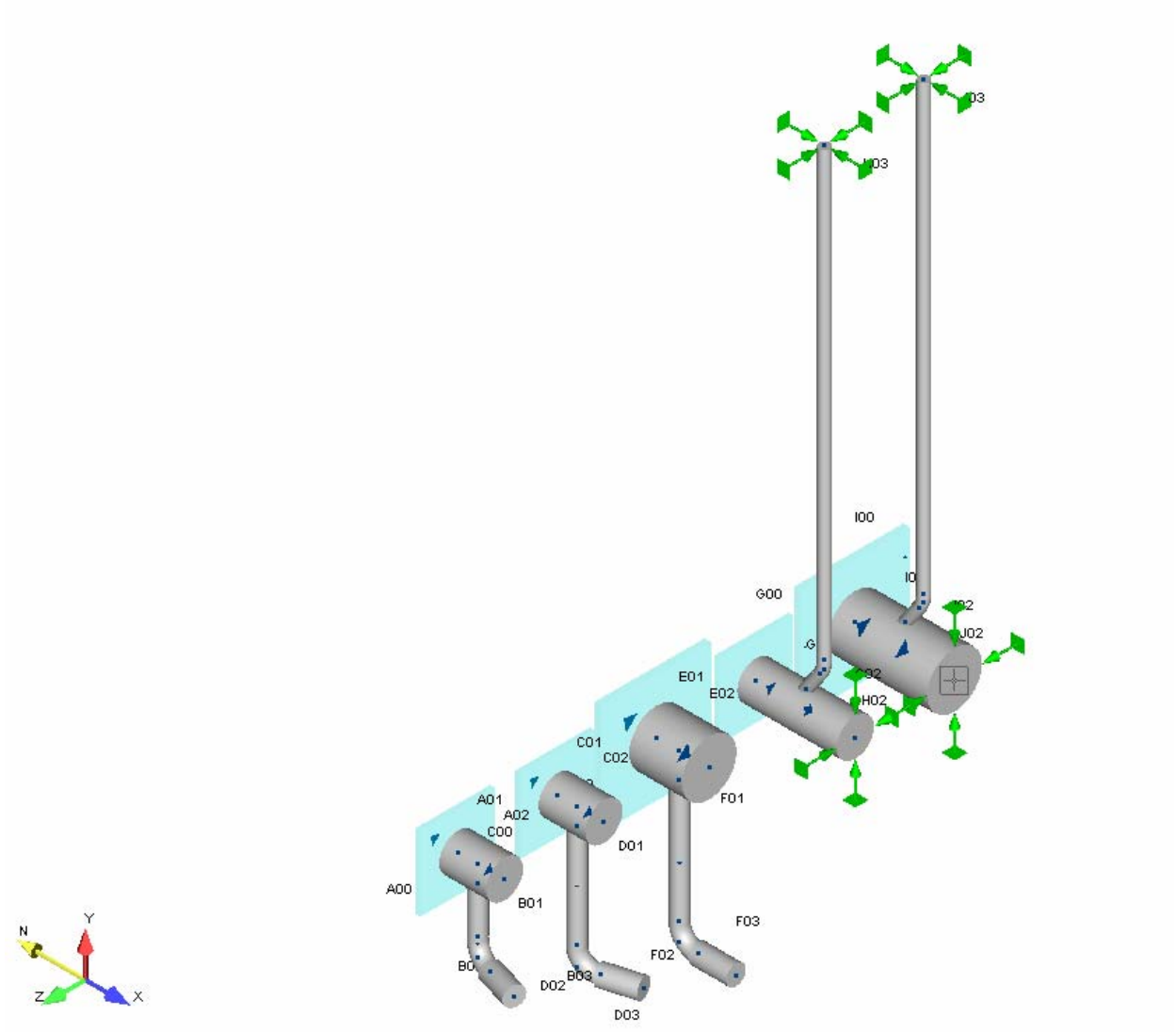
I00
G00
E01
E02
C01
C02
A01
A02
C00
A00
B01
D01
F01
F03
F02
D02
D03
N
Y
Z
X

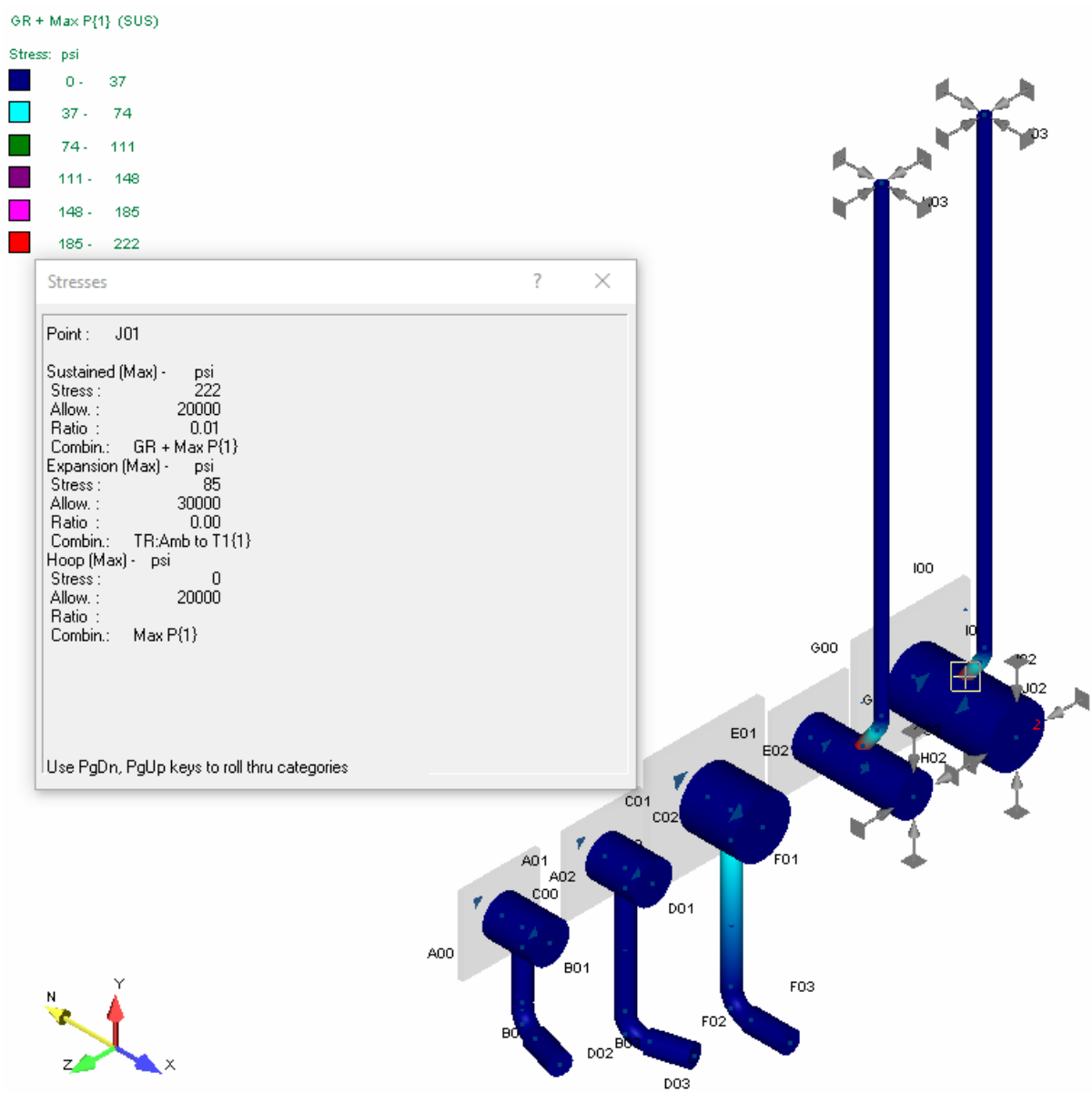
GR + Max P{1} (SUS)
Stress: psi
0 - 37
37 - 74
74 - 111
111 - 148
148 - 185
185 - 222
Stresses
Point : J01
Sustained (Max) - psi
Stress : 222
Allow. : 20000
Ratio : 0.01
Combin.: GR + Max P{1}
Expansion (Max) - psi
Stress : 85
Allow. : 30000
Ratio : 0.00
Combin.: TR:Amb to T1{1}
Hoop (Max) - psi
Stress : 0
Allow. : 20000
Ratio :
Combin.: Max P{1}
Use PgDn, PgUp keys to roll thru categories
I00
G00
E01
E02
C01
C02
A01
A02
C00
A00
B01
D01
F01
F03
F02
D02
D03
H02
J02
N
Y
Z
X

```
---------------------------------------------------------------------------------------------------------------
Encasement Drain and Test Port Low Temp
02/04/2020 2018719                                                                                  BENTLEY
08:15 AM                                                                                            AutoPIPE Nuclear 12.00.00.16
---------------------------------------------------------------------------------------------------------------
```

```
        *                             *******   **  *******   *******
       ***               **           **    **  **  **    **  **
      ** **             ******         **    **  **  **    **  **
     **   **    **   **  **   *****   *******   **  *******   *****
    *********   **   **  **  **   **  **        **  **        **
   **       **  **   **  **  **   **  **        **  **        **
  **         **  *****   **   *****   **        **  **        *******
```

Pipe Stress Analysis and Design Program

Version: 12.00.00.16

Edition: Nuclear

Developed and Maintained by

BENTLEY SYSTEMS, INCORPORATED
1065 N. PACIFIC CENTER DRIVE, SUITE 450
ANAHEIM, CA 92806

```
************************************************************
**                                                        **
**              AUTOPIPE SYSTEM INFORMATION               **
**                                                        **
************************************************************
```

SYSTEM NAME : Encasement Drain and Test Port Low Temp

PROJECT ID : 2018719

PREPARED BY : _____
JIM HARRINGTON

CHECKED BY : _____
RYAN LANG

1ST APPROVER : _____

2ND APPROVER : _____

PIPING CODE : ASME B31.3

YEAR : 2016

VERTICAL AXIS : Y

AMBIENT TEMPERATURE : 80.0 deg F

COMPONENT LIBRARY : AUTOPIPE

MATERIAL LIBRARY : B313-16

MODEL REVISION NUMBER : 2

Encasement Drain and Test Port Low Temp
02/04/2020 2018719 BENTLEY
08:15 AM AutoPIPE Nuclear 12.00.00.16

T A B L E O F C O N T E N T S

Components..... 1
Coordinates..... 8
Segment Data..... 10
Pipe Properties..... 11
Material Properties..... 12
Material Allowables..... 13
Temperature and Pressure..... 14
Support..... 15
Bend..... 16
Tee..... 17
User SIF..... 18
Rigid Pipe..... 19
Center of Gravity..... 20
Load Case Description..... 21
Tee Flexibility..... 22
Analysis Summary..... 23
Restraint Reactions..... 27
Code Compliance..... 28
Result Summary..... 34

```
-----------------------------------------------------------------------------------------------------------
Encasement Drain and Test Port Low Temp
02/04/2020 2018719                                                    BENTLEY
08:15 AM                                                              AutoPIPE Nuclear 12.00.00.16   MODEL  PAGE   1
-----------------------------------------------------------------------------------------------------------

                 C O M P O N E N T   D A T A   L I S T I N G

 ---------------------------------------------------------------------------
 *** SEGMENT A

 ---------------------------------------------------------------------------
 From A00 to A01, DX= 0.20 ft                                          Run

 PIPE DATA:
   Pipe Id= 4SCH40, Material= A53-B, Composition= Carbon Steel, Poisson= 0.300, Nom Size= 4 in, OD= 4.500 inch,
   Sch= 40S, Wall Thk= 0.237 inch, Mill= 0.030 inch, Cor= 0.010 inch, Pipe Density= 489.00 lb/cu.ft,
   Pipe Unit Wgt= 10.78 lb/ft, Insul Thk= 0 inch, Cladding Thickness = 0 inch, Lining Thk= 0 inch,
   Long Weld E factor= 1.00, Long Weld W factor= 1.00, Long Modulus= 29.44615 E6 psi,
   Hoop Modulus= 29.44615 E6 psi, Shear Modulus= 11.32544 E6 psi, Sc= 20000.0 psi, Syc= 35000.0 psi,
   Suc= 60000.0 psi

 OPERATING DATA:
   P1= 0 psi, T1= 30.00 deg F, Exp1= -0.37692 in/100ft, E1= 29.66333 E6 psi, Sh1= 20000.00 psi,
   Sy1= 35000.00 psi

 POINT DATA:
   A00, Coordinates, X= 0.00 ft, Y= 0.00 ft, Z= 0.00 ft

 SUPPORT DATA:
   A00, Anchor, Connected to: Ground, KTX= Rigid, KTY= Rigid, KTZ= Rigid, KRX= Rigid, KRY= Rigid, KRZ= Rigid

 ---------------------------------------------------------------------------
 From A01 to A02, DX= 0.27 ft                                          Tee

 COMPONENT DATA (Tee Header, Center= A01):
   Other, SIFI= 1.00, SIFO= 1.00

 POINT DATA:
   A01, Coordinates, X= 0.20 ft, Y= 0.00 ft, Z= -0.00 ft
   A02, Coordinates, X= 0.47 ft, Y= 0.00 ft, Z= -0.00 ft

 ---------------------------------------------------------------------------
 ---------------------------------------------------------------------------
 *** SEGMENT B

 ---------------------------------------------------------------------------
 From A01 to B01, DY= -0.17 ft                                         Tee

 COMPONENT DATA (Tee Branch, Center= A01):
   Other, SIFI= 1.00, SIFO= 1.00
   Rigid, Include weight= No, Include expansion= Yes

 PIPE DATA:
   Pipe Id= 1.5SCH40, Composition= Carbon Steel, Nom Size= 1.500, OD= 1.900 inch, Wall Thk= 0.145 inch,
   Mill= 0.018 inch, Pipe Density= 489.00 lb/cu.ft, Pipe Unit Wgt= 2.71 lb/ft

 POINT DATA:
   A01, Coordinates, X= 0.20 ft, Y= 0.00 ft, Z= -0.00 ft

 ---------------------------------------------------------------------------
 From B01 to B02, DY= -0.65 ft                                         Run
```

C O M P O N E N T D A T A L I S T I N G

POINT DATA:
B01, Coordinates, X= 0.20 ft, Y= -0.17 ft, Z= -0.00 ft
B01, Joint End Type= User-defined, SIFI= 1.83, SIFO= 1.83, Override all other values= No

---

From B02 to B03, DX= 0.52 ft, DZ= 0.15 ft, L= 0.54 ft Bend

COMPONENT DATA (Bend, TIP= B02, Near= B02 N, Far= B02 F):
Long Elbow, Radius= 2.25 inch, Bend angle= 90.00 deg, End flanges= 0, Flex= Auto, SIFI= 1.60, SIFO= 1.33

PIPE DATA (B02 F to B03):
Pipe Id= 2SCH40, Composition= Carbon Steel, Nom Size= 2.000, OD= 2.375 inch, Wall Thk= 0.154 inch,
Mill= 0.019 inch, Pipe Density= 489.00 lb/cu.ft, Pipe Unit Wgt= 3.65 lb/ft, Long Weld W factor= Auto

POINT DATA:
B02, Coordinates, X= 0.20 ft, Y= -0.82 ft, Z= -0.00 ft
B02 N, Coordinates, X= 0.20 ft, Y= -0.63 ft, Z= -0.00 ft
B02 F, Coordinates, X= 0.38 ft, Y= -0.82 ft, Z= 0.05 ft
B03, Coordinates, X= 0.72 ft, Y= -0.82 ft, Z= 0.15 ft

*** SEGMENT C

From C00 to C01, DX= 0.20 ft Run

PIPE DATA:
Pipe Id= 4SCH40, Composition= Carbon Steel, Nom Size= 4 in, OD= 4.500 inch, Wall Thk= 0.237 inch,
Mill= 0.030 inch, Pipe Density= 489.00 lb/cu.ft, Pipe Unit Wgt= 10.78 lb/ft, Long Weld W factor= 1.00

POINT DATA:
C00, Coordinates, X= 0.00 ft, Y= 0.00 ft, Z= -1.00 ft

SUPPORT DATA:
C00, Anchor, Connected to: Ground, KTX= Rigid, KTY= Rigid, KTZ= Rigid, KRX= Rigid, KRY= Rigid, KRZ= Rigid

---

From C01 to C02, DX= 0.27 ft Tee

COMPONENT DATA (Tee Header, Center= C01):
Other, SIFI= 1.00, SIFO= 1.00

POINT DATA:
C01, Coordinates, X= 0.20 ft, Y= 0.00 ft, Z= -1.00 ft
C02, Coordinates, X= 0.47 ft, Y= 0.00 ft, Z= -1.00 ft

*** SEGMENT D

From C01 to D01, DY= -0.17 ft Tee

COMPONENT DATA (Tee Branch, Center= C01):

C O M P O N E N T D A T A L I S T I N G

```
   Other, SIFI= 1.00, SIFO= 1.00
   Rigid, Include weight= No, Include expansion= Yes

 PIPE DATA:
   Pipe Id= 1.5SCH40, Composition= Carbon Steel, Nom Size= 1.500, OD= 1.900 inch, Wall Thk= 0.145 inch,
   Mill= 0.018 inch, Pipe Density= 489.00 lb/cu.ft, Pipe Unit Wgt= 2.71 lb/ft

 POINT DATA:
   C01, Coordinates, X= 0.20 ft, Y= 0.00 ft, Z= -1.00 ft

 ---------------------------------------------------------------------------
 From D01 to D02, DY= -1.23 ft                                        Run

 POINT DATA:
   D01, Coordinates, X= 0.20 ft, Y= -0.17 ft, Z= -1.00 ft
   D01, Joint End Type= User-defined, SIFI= 1.83, SIFO= 1.83, Override all other values= No

 ---------------------------------------------------------------------------
 From D02 to D03, DX= 0.52 ft, DZ= -0.15 ft, L= 0.54 ft               Bend

 COMPONENT DATA (Bend, TIP= D02, Near= D02 N, Far= D02 F):
   Long Elbow, Radius= 2.25 inch, Bend angle= 90.00 deg, End flanges= 0, Flex= Auto, SIFI= 1.60, SIFO= 1.33

 PIPE DATA (D02 F to D03):
   Pipe Id= 2SCH40, Composition= Carbon Steel, Nom Size= 2.000, OD= 2.375 inch, Wall Thk= 0.154 inch,
   Mill= 0.019 inch, Pipe Density= 489.00 lb/cu.ft, Pipe Unit Wgt= 3.65 lb/ft, Long Weld W factor= Auto

 POINT DATA:
   D02, Coordinates, X= 0.20 ft, Y= -1.40 ft, Z= -1.00 ft
   D02 N, Coordinates, X= 0.20 ft, Y= -1.21 ft, Z= -1.00 ft
   D02 F, Coordinates, X= 0.38 ft, Y= -1.40 ft, Z= -1.05 ft
   D03, Coordinates, X= 0.72 ft, Y= -1.40 ft, Z= -1.15 ft

 ---------------------------------------------------------------------------
 ---------------------------------------------------------------------------
 *** SEGMENT E

 ---------------------------------------------------------------------------
 From E00 to E01, DX= 0.23 ft                                         Run

 PIPE DATA:
   Pipe Id= 6SCH40, Composition= Carbon Steel, Nom Size= 6 in, OD= 6.625 inch, Wall Thk= 0.280 inch,
   Mill= 0.035 inch, Pipe Density= 489.00 lb/cu.ft, Pipe Unit Wgt= 18.95 lb/ft, Long Weld W factor= 1.00

 POINT DATA:
   E00, Coordinates, X= 0.00 ft, Y= 0.00 ft, Z= -2.00 ft

 SUPPORT DATA:
   E00, Anchor, Connected to: Ground, KTX= Rigid, KTY= Rigid, KTZ= Rigid, KRX= Rigid, KRY= Rigid, KRZ= Rigid

 ---------------------------------------------------------------------------
 From E01 to E02, DX= 0.30 ft                                         Tee

 COMPONENT DATA (Tee Header, Center= E01):
   Other, SIFI= 1.00, SIFO= 1.00
```

C O M P O N E N T D A T A L I S T I N G

POINT DATA:
E01, Coordinates, X= 0.23 ft, Y= 0.00 ft, Z= -2.00 ft
E02, Coordinates, X= 0.53 ft, Y= 0.00 ft, Z= -2.00 ft

*** SEGMENT F

From E01 to F01, DY= -0.25 ft Tee

COMPONENT DATA (Tee Branch, Center= E01):
Other, SIFI= 1.00, SIFO= 1.00
Rigid, Include weight= No, Include expansion= Yes

PIPE DATA:
Pipe Id= 1.5SCH40, Composition= Carbon Steel, Nom Size= 1.500, OD= 1.900 inch, Wall Thk= 0.145 inch,
Mill= 0.018 inch, Pipe Density= 489.00 lb/cu.ft, Pipe Unit Wgt= 2.71 lb/ft

POINT DATA:
E01, Coordinates, X= 0.23 ft, Y= 0.00 ft, Z= -2.00 ft

From F01 to F02, DY= -1.42 ft Run

POINT DATA:
F01, Coordinates, X= 0.23 ft, Y= -0.25 ft, Z= -2.00 ft
F01, Joint End Type= User-defined, SIFI= 2.14, SIFO= 2.14, Override all other values= No

---

From F02 to F03, DX= 0.57 ft Bend

COMPONENT DATA (Bend, TIP= F02, Near= F02 N, Far= F02 F):
Long Elbow, Radius= 2.25 inch, Bend angle= 90.00 deg, End flanges= 0, Flex= Auto, SIFI= 1.60, SIFO= 1.33

PIPE DATA (F02 F to F03):
Pipe Id= 2SCH40, Composition= Carbon Steel, Nom Size= 2.000, OD= 2.375 inch, Wall Thk= 0.154 inch,
Mill= 0.019 inch, Pipe Density= 489.00 lb/cu.ft, Pipe Unit Wgt= 3.65 lb/ft, Long Weld W factor= Auto

POINT DATA:
F02, Coordinates, X= 0.23 ft, Y= -1.67 ft, Z= -2.00 ft
F02 N, Coordinates, X= 0.23 ft, Y= -1.48 ft, Z= -2.00 ft
F02 F, Coordinates, X= 0.42 ft, Y= -1.67 ft, Z= -2.00 ft
F03, Coordinates, X= 0.80 ft, Y= -1.67 ft, Z= -2.00 ft

*** SEGMENT G

From G00 to G01, DX= 0.50 ft Run

PIPE DATA:
Pipe Id= 4SCH40, Composition= Carbon Steel, Nom Size= 4 in, OD= 4.500 inch, Wall Thk= 0.237 inch,
Mill= 0.030 inch, Pipe Density= 489.00 lb/cu.ft, Pipe Unit Wgt= 10.78 lb/ft, Long Weld W factor= 1.00

C O M P O N E N T D A T A L I S T I N G

POINT DATA:
G00, Coordinates, X= 0.00 ft, Y= 0.00 ft, Z= -3.00 ft

SUPPORT DATA:
G00, Anchor, Connected to: Ground, KTX= Rigid, KTY= Rigid, KTZ= Rigid, KRX= Rigid, KRY= Rigid, KRZ= Rigid

---
From G01 to G02, DX= 0.50 ft Tee

COMPONENT DATA (Tee Header, Center= G01):
Other, SIFI= 1.00, SIFO= 1.00

POINT DATA:
G01, Coordinates, X= 0.50 ft, Y= 0.00 ft, Z= -3.00 ft
G02, Coordinates, X= 1.00 ft, Y= 0.00 ft, Z= -3.00 ft

SUPPORT DATA:
G02, Guide, Support Id= G02 1, Connected to Ground, Comp.Wt = 0.000 lb, Stiffness= RIGID,
Gap-Down= 0.00 inch, Gap-Above= 0.00 inch, Gap-Left= 0.00 inch, Gap-Right= 0.00 inch, Friction= 0.80,
Gaps setting= Weightless

*** SEGMENT H

From G01 to H01, DY= 0.17 ft Tee

COMPONENT DATA (Tee Branch, Center= G01):
Other, SIFI= 1.00, SIFO= 1.00
Rigid, Include weight= No, Include expansion= Yes

PIPE DATA:
Pipe Id= 1SCH40, Composition= Carbon Steel, Nom Size= 1.000, OD= 1.315 inch, Wall Thk= 0.133 inch,
Mill= 0.017 inch, Pipe Density= 489.00 lb/cu.ft, Pipe Unit Wgt= 1.68 lb/ft

POINT DATA:
G01, Coordinates, X= 0.50 ft, Y= 0.00 ft, Z= -3.00 ft

From H01 to H02, DX= 0.19 ft, DY= 0.27 ft, L= 0.33 ft Run

POINT DATA:
H01, Coordinates, X= 0.50 ft, Y= 0.17 ft, Z= -3.00 ft
H01, Joint End Type= User-defined, SIFI= 1.83, SIFO= 1.83, Override all other values= No

---
From H02 to H03, DY= 4.56 ft Bend

COMPONENT DATA (Bend, TIP= H02, Near= H02 N, Far= H02 F):
Elbow, Radius= 3.00 inch, Bend angle= 35.13 deg, End flanges= 0, Flex= Auto, SIFI= 1.00, SIFO= 1.00

POINT DATA:
H02, Coordinates, X= 0.69 ft, Y= 0.44 ft, Z= -3.00 ft
H02 N, Coordinates, X= 0.64 ft, Y= 0.38 ft, Z= -3.00 ft

C O M P O N E N T D A T A L I S T I N G

H02 F, Coordinates, X= 0.69 ft, Y= 0.52 ft, Z= -3.00 ft
H03, Coordinates, X= 0.69 ft, Y= 5.00 ft, Z= -3.00 ft

SUPPORT DATA:
H03, Guide, Support Id= H03 1, Connected to Ground, Comp.Wt = 0.000 lb, Stiffness= RIGID, Gap -Z= 0.00 inch, Gap +Z= 0.00 inch, Gap -X= 0.00 inch, Gap +X= 0.00 inch, Friction= 0.80, Gaps setting= Weightless

---

*** SEGMENT I

From I00 to I01, DX= 0.50 ft Run

PIPE DATA:
Pipe Id= 6SCH40, Composition= Carbon Steel, Nom Size= 6 in, OD= 6.625 inch, Wall Thk= 0.280 inch, Mill= 0.035 inch, Pipe Density= 489.00 lb/cu.ft, Pipe Unit Wgt= 18.95 lb/ft

POINT DATA:
I00, Coordinates, X= 0.00 ft, Y= 0.00 ft, Z= -4.00 ft

SUPPORT DATA:
I00, Anchor, Connected to: Ground, KTX= Rigid, KTY= Rigid, KTZ= Rigid, KRX= Rigid, KRY= Rigid, KRZ= Rigid

---
From I01 to I02, DX= 0.50 ft Tee

COMPONENT DATA (Tee Header, Center= I01):
Other, SIFI= 1.00, SIFO= 1.00

POINT DATA:
I01, Coordinates, X= 0.50 ft, Y= 0.00 ft, Z= -4.00 ft
I02, Coordinates, X= 1.00 ft, Y= 0.00 ft, Z= -4.00 ft

SUPPORT DATA:
I02, Guide, Support Id= I02 1, Connected to Ground, Comp.Wt = 0.000 lb, Stiffness= RIGID, Gap-Down= 0.00 inch, Gap-Above= 0.00 inch, Gap-Left= 0.00 inch, Gap-Right= 0.00 inch, Friction= 0.80, Gaps setting= Weightless

---

*** SEGMENT J

From I01 to J01, DY= 0.25 ft Tee

COMPONENT DATA (Tee Branch, Center= I01):
Other, SIFI= 1.00, SIFO= 1.00
Rigid, Include weight= No, Include expansion= Yes

PIPE DATA:
Pipe Id= 1SCH40, Composition= Carbon Steel, Nom Size= 1.000, OD= 1.315 inch, Wall Thk= 0.133 inch, Mill= 0.017 inch, Pipe Density= 489.00 lb/cu.ft, Pipe Unit Wgt= 1.68 lb/ft

POINT DATA:

C O M P O N E N T D A T A L I S T I N G

I01, Coordinates, X= 0.50 ft, Y= 0.00 ft, Z= -4.00 ft

From J01 to J02, DX= 0.19 ft, DY= 0.27 ft, L= 0.33 ft Run

POINT DATA:
J01, Coordinates, X= 0.50 ft, Y= 0.25 ft, Z= -4.00 ft
J01, Joint End Type= User-defined, SIFI= 2.14, SIFO= 2.14, Override all other values= No

From J02 to J03, DY= 4.56 ft Bend

COMPONENT DATA (Bend, TIP= J02, Near= J02 N, Far= J02 F):
Elbow, Radius= 3.00 inch, Bend angle= 35.13 deg, End flanges= 0, Flex= Auto, SIFI= 1.00, SIFO= 1.00

POINT DATA:
J02, Coordinates, X= 0.69 ft, Y= 0.52 ft, Z= -4.00 ft
J02 N, Coordinates, X= 0.64 ft, Y= 0.46 ft, Z= -4.00 ft
J02 F, Coordinates, X= 0.69 ft, Y= 0.60 ft, Z= -4.00 ft
J03, Coordinates, X= 0.69 ft, Y= 5.08 ft, Z= -4.00 ft

SUPPORT DATA:
J03, Guide, Support Id= J03 1, Connected to Ground, Comp.Wt = 0.000 lb, Stiffness= RIGID, Gap -Z= 0.00 inch, Gap +Z= 0.00 inch, Gap -X= 0.00 inch, Gap +X= 0.00 inch, Friction= 0.80, Gaps setting= Weightless

Number of points in the system (Pipe + Frame + Soil): 50 + 0 + 0 = 50

Weight of Empty Pipes + Weight of Contents = Total Weight of System
80.1 lb + 0.0 lb = 80.1 lb

C O O R D I N A T E S D A T A L I S T I N G

POINT NAME	COORDINATE (ft) X	Y	Z
*** SEGMENT A			
A00	0.00	0.00	0.00
A01	0.20	0.00	-0.00
A02	0.47	0.00	-0.00
*** SEGMENT B			
A01	0.20	0.00	-0.00
B01	0.20	-0.17	-0.00
B02 N	0.20	-0.63	-0.00
B02	0.20	-0.82	-0.00
B02 F	0.38	-0.82	0.05
B03	0.72	-0.82	0.15
*** SEGMENT C			
C00	0.00	0.00	-1.00
C01	0.20	0.00	-1.00
C02	0.47	0.00	-1.00
*** SEGMENT D			
C01	0.20	0.00	-1.00
D01	0.20	-0.17	-1.00
D02 N	0.20	-1.21	-1.00
D02	0.20	-1.40	-1.00
D02 F	0.38	-1.40	-1.05
D03	0.72	-1.40	-1.15
*** SEGMENT E			
E00	0.00	0.00	-2.00
E01	0.23	0.00	-2.00
E02	0.53	0.00	-2.00
*** SEGMENT F			
E01	0.23	0.00	-2.00
F01	0.23	-0.25	-2.00
F02 N	0.23	-1.48	-2.00
F02	0.23	-1.67	-2.00
F02 F	0.42	-1.67	-2.00
F03	0.80	-1.67	-2.00
*** SEGMENT G			
G00	0.00	0.00	-3.00
G01	0.50	0.00	-3.00
G02	1.00	0.00	-3.00
*** SEGMENT H			
G01	0.50	0.00	-3.00
H01	0.50	0.17	-3.00
H02 N	0.64	0.38	-3.00
H02	0.69	0.44	-3.00
H02 F	0.69	0.52	-3.00
H03	0.69	5.00	-3.00

C O O R D I N A T E S D A T A L I S T I N G

POINT NAME	COORDINATE (ft) X	Y	Z
*** SEGMENT I			
I00	0.00	0.00	-4.00
I01	0.50	0.00	-4.00
I02	1.00	0.00	-4.00
*** SEGMENT J			
I01	0.50	0.00	-4.00
J01	0.50	0.25	-4.00
J02 N	0.64	0.46	-4.00
J02	0.69	0.52	-4.00
J02 F	0.69	0.60	-4.00
J03	0.69	5.08	-4.00

S E G M E N T D A T A L I S T I N G

Segment Name	First Node	Last Node	Line Number	Apply Wind	Apply Bowing	Apply Buoyancy
A	A00	A02		No	No	No
B	A01	B03		No	No	No
C	C00	C02		No	No	No
D	C01	D03		No	No	No
E	E00	E02		No	No	No
F	E01	F03		No	No	No
G	G00	G02		No	No	No
H	G01	H03		No	No	No
I	I00	I02		No	No	No
J	I01	J03		No	No	No

```
-----------------------------------------------------------------------------------------------------------------------
Encasement Drain and Test Port Low Temp
02/04/2020 2018719                                                    BENTLEY
08:15 AM                                                              AutoPIPE Nuclear 12.00.00.16   MODEL  PAGE  11
-----------------------------------------------------------------------------------------------------------------------

                    P I P E   D A T A   L I S T I N G

 Pipe ID/     Nom/ O.D.  -----Thickness(inch)----- Spec  InsuDen/   Weight(lb/ft )    E/  Composition/
 Material     Sch  inch  W.Th. Corr Mill Insu Ling Grav/ LingDen/  Pipe/ Ling/ Total  W/  Steel Group/
 CladMaterial            Clad                      InsMt CladDen   Cont  Insu/        f   Tcr
 ---Line Class---                                       lb/cu.ft        Clad
 ------------ ---- ----- ----- ---- ---- ---- ---- ----- --------  ----- ----- ----- ---- --------------------

 Tag No. : <None>
 2SCH40      2.000 2.375 0.154 0.01 0.02    0    0     0    0.000   3.65     0  3.65 1.00 Carbon Steel
 A53-B        40S                                         0.000      0     0       Auto Carbon
                            0                              0.000            0       1.00    650.000


 Tag No. : <None>
 6SCH40         6  6.625 0.280 0.01 0.04    0    0     0    0.000  18.95     0 18.95 1.00 Carbon Steel
 A53-B        40S                                         0.000      0     0       1.00 Carbon
                            0                              0.000            0       1.00    650.000


 Tag No. : <None>
 4SCH40         4  4.500 0.237 0.01 0.03    0    0     0    0.000  10.78     0 10.78 1.00 Carbon Steel
 A53-B        40S                                         0.000      0     0       1.00 Carbon
                            0                              0.000            0       1.00    650.000


 Tag No. : <None>
 1.5SCH40    1.500 1.900 0.145 0.01 0.02    0    0     0    0.000   2.71     0  2.71 1.00 Carbon Steel
 A53-B        40S                                         0.000      0     0       1.00 Carbon
                            0                              0.000            0       1.00    650.000


 Tag No. : <None>
 1SCH40      1.000 1.315 0.133 0.01 0.02    0    0     0    0.000   1.68     0  1.68 1.00 Carbon Steel
 A53-B        40S                                         0.000      0     0       1.00 Carbon
                            0                              0.000            0       1.00    650.000
```

M A T E R I A L D A T A L I S T I N G

Material Name	Pipe ID	Density lb/cu.ft	Pois. Ratio	Temper. deg F	Modulus E6 psi Axial	Hoop	Shear	Expans. in/100ft	Composition
A53-B	4SCH40	489.0	0.30	80.0	29.446	29.446	11.325		Carbon Steel
				30.0	29.663			-0.3769	
A53-B	1.5SCH40	489.0	0.30	80.0	29.446	29.446	11.325		Carbon Steel
				30.0	29.663			-0.3769	
A53-B	2SCH40	489.0	0.30	80.0	29.446	29.446	11.325		Carbon Steel
				30.0	29.663			-0.3769	
A53-B	6SCH40	489.0	0.30	80.0	29.446	29.446	11.325		Carbon Steel
				30.0	29.663			-0.3769	
A53-B	1SCH40	489.0	0.30	80.0	29.446	29.446	11.325		Carbon Steel
				30.0	29.663			-0.3769	

M A T E R I A L A L L O W A B L E D A T A L I S T I N G

Material Name	Pipe ID	Temper. deg F	Allow. psi	Yield psi	Ultimate	Weld Reduction Factor W
A53-B	4SCH40	80.0	20000.0	35000.0	60000.0	1.000
		30.0	20000.0	35000.0		1.000
A53-B	1.5SCH40	80.0	20000.0	35000.0	60000.0	1.000
		30.0	20000.0	35000.0		1.000
A53-B	2SCH40	80.0	20000.0	35000.0	60000.0	1.000
		30.0	20000.0	35000.0		1.000
A53-B	6SCH40	80.0	20000.0	35000.0	60000.0	1.000
		30.0	20000.0	35000.0		1.000
A53-B	1SCH40	80.0	20000.0	35000.0	60000.0	1.000
		30.0	20000.0	35000.0		1.000

OPERATING TEMPERATURE AND PRESSURE DATA
STRESSES IN psi

POINT NAME	CASE	PRESS. psi	TEMPER deg F	EXPAN. in/100ft	MODULUS E6 psi	ALLOW STRESS	YIELD STRESS
*** SEGMENT A							
A00	T1	0	30.00	-0.377	29.663	20000	35000
A02	Same as previous point.						
*** SEGMENT B							
A01	T1	0	30.00	-0.377	29.663	20000	35000
B03	Same as previous point.						
*** SEGMENT C							
C00	T1	0	30.00	-0.377	29.663	20000	35000
C02	Same as previous point.						
*** SEGMENT D							
C01	T1	0	30.00	-0.377	29.663	20000	35000
D03	Same as previous point.						
*** SEGMENT E							
E00	T1	0	30.00	-0.377	29.663	20000	35000
E02	Same as previous point.						
*** SEGMENT F							
E01	T1	0	30.00	-0.377	29.663	20000	35000
F03	Same as previous point.						
*** SEGMENT G							
G00	T1	0	30.00	-0.377	29.663	20000	35000
G02	Same as previous point.						
*** SEGMENT H							
G01	T1	0	30.00	-0.377	29.663	20000	35000
H03	Same as previous point.						
*** SEGMENT I							
I00	T1	0	30.00	-0.377	29.663	20000	35000
I02	Same as previous point.						
*** SEGMENT J							
I01	T1	0	30.00	-0.377	29.663	20000	35000
J03	Same as previous point.						

u User-defined value
* Non-code material for allowable stress;
Non-standard material for expansion and modulus

S U P P O R T D A T A L I S T I N G

```
 Point Support  Support Conn.to Comp.Wt  Stiff.     Gap 1   Gap 2  Fric. GapSet Preload Ld.Var Size    Figure
 Name   Type      ID     /Dir    (lb)               (in)    (in)   Fact. /#hgr   (lbf)
 ----- -------- ------- ------- ------- ---------- ------- ------- ----- ------ ------- ------ ---- ------------

 Tag No.: <None>                                Attachment ID: <None>
 G02   Guide-V  G02  1  Ground    0.000 Rigid        0.000   0.000  0.80
       Guide-H  G02  1  Ground    0.000 Rigid        0.000   0.000  0.80

 Tag No.: <None>                                Attachment ID: <None>
 H03   Guide-V  H03  1  Ground    0.000 Rigid        0.000   0.000  0.80
       Guide-H  H03  1  Ground    0.000 Rigid        0.000   0.000  0.80
            Gap Dir.: (Gap1_V=-Z, Gap2_V=+Z, Gap1_H=-X, Gap2_H=+X)

 Tag No.: <None>                                Attachment ID: <None>
 I02   Guide-V  I02  1  Ground    0.000 Rigid        0.000   0.000  0.80
       Guide-H  I02  1  Ground    0.000 Rigid        0.000   0.000  0.80

 Tag No.: <None>                                Attachment ID: <None>
 J03   Guide-V  J03  1  Ground    0.000 Rigid        0.000   0.000  0.80
       Guide-H  J03  1  Ground    0.000 Rigid        0.000   0.000  0.80
            Gap Dir.: (Gap1_V=-Z, Gap2_V=+Z, Gap1_H=-X, Gap2_H=+X)


 Spring Manufacturer: Anvil/Grinnell
 NOTE 1: No soil supports present in the system.
 Gap 1 : V-stop,Guide-V=down, Linestop,Incline,Tie/link=backward, Guide-H=Left
 Gap 2 : V-stop,Guide-V=Up  , Linestop,Incline,Tie/link=forward , Guide-H=Right
 Stiffness units for rotation support: ft-lb/deg, all others: lb/in
```

B E N D D A T A L I S T I N G

Point Name	Bend Type	Radius (in)	Angle (deg)	OD (in)	tnom (in)	Material	Flan^ /Cuts	SIF in	SIF out	Analysis Set	Flexibility (K)	Pressure Case
B02	Elbow	2.25L	90.0	1.900	0.145	A53-B	0/0	1.60	1.33	1	3.89	None
D02	Elbow	2.25L	90.0	1.900	0.145	A53-B	0/0	1.60	1.33	1	3.89	None
F02	Elbow	2.25L	90.0	1.900	0.145	A53-B	0/0	1.60	1.33	1	3.89	None
H02	Elbow	3.00	35.1	1.315	0.133	A53-B	0/0	1.00	1.00	1	1.44	None
J02	Elbow	3.00	35.1	1.315	0.133	A53-B	0/0	1.00	1.00	1	1.44	None

^ = Number of bend ends where either a flange or valve is within distance
(L/D) x Nominal diameter, where L/D is defined under Tools > Model options > Edit
L = Long radius

T E E D A T A L I S T I N G

Point Name	Point Seg-Type	Pipe OD (in)	Pipe Thk. (in)	Material	Tee Type	**Crotch Radius (in)	*Crotch Thick (in)	SIF in	SIF out
A01	A-Header	4.500	0.237	A53-B	Other			1.00	1.00
	B-Branch	1.900	0.145	A53-B					
C01	C-Header	4.500	0.237	A53-B	Other			1.00	1.00
	D-Branch	1.900	0.145	A53-B					
E01	E-Header	6.625	0.280	A53-B	Other			1.00	1.00
	F-Branch	1.900	0.145	A53-B					
G01	G-Header	4.500	0.237	A53-B	Other			1.00	1.00
	H-Branch	1.315	0.133	A53-B					
I01	I-Header	6.625	0.280	A53-B	Other			1.00	1.00
	J-Branch	1.315	0.133	A53-B					

* = Pad thickness for reinforced tee.
**= Fillet radius for Raised tee or discontinuity dist. for Thickened tee.

J O I N T T Y P E / U S E R - S I F D A T A L I S T I N G

Point Name	Point Type	SIF in	SIF out	Axial Index	Tors. Index	Axial SIF	Tors. SIF	Joint Type	Size /Avg. (in)	Max. (in)	Over ride SIF	Over ride A&T
B01	Run	1.830	1.830	1.000	1.000	1.000	1.000	USER			No	No
D01	Run	1.830	1.830	1.000	1.000	1.000	1.000	USER			No	No
F01	Run	2.140	2.140	1.000	1.000	1.000	1.000	USER			No	No
H01	Run	1.830	1.830	1.000	1.000	1.000	1.000	USER			No	No
J01	Run	2.140	2.140	1.000	1.000	1.000	1.000	USER			No	No

R I G I D P I P E D A T A L I S T I N G

From Point	To Point	Include Weight	Include Expansion	Rigid Factor
A01	B01	No	Yes	1000.0
C01	D01	No	Yes	1000.0
E01	F01	No	Yes	1000.0
G01	H01	No	Yes	1000.0
I01	J01	No	Yes	1000.0

C E N T E R O F G R A V I T Y R E P O R T

Description		Weight (lb)	X CoG (ft)	Y CoG (ft)	Z CoG (ft)
Valve	:	0.00	0.00	0.00	0.00
Support	:	0.00	0.00	0.00	0.00
Flange	:	0.00	0.00	0.00	0.00
Flexible Joint	:	0.00	0.00	0.00	0.00
Additional Weight	:	0.00	0.00	0.00	0.00
Pipes (Run, Bend, Tee, Reducer)	:	80.10	0.44	0.36	-2.58
PipeTot (Valve+Support+Flange+Flex. Jt.+Add. Wt.+Pipes)	:	80.10	0.44	0.36	-2.58
Insulation	:	0.00	0.00	0.00	0.00
Cladding	:	0.00	0.00	0.00	0.00
Lining	:	0.00	0.00	0.00	0.00
Contents	:	0.00	0.00	0.00	0.00
Beam	:	0.00	0.00	0.00	0.00
PipeTot + Ins.	:	80.10	0.44	0.36	-2.58
PipeTot + Ins. + Clad.	:	80.10	0.44	0.36	-2.58
PipeTot + Ins. + Clad. + Lin.	:	80.10	0.44	0.36	-2.58
PipeTot + Ins. + Clad. + Lin. + Cont.	:	80.10	0.44	0.36	-2.58
PipeTot + Beam	:	80.10	0.44	0.36	-2.58
PipeTot + Ins. + Beam	:	80.10	0.44	0.36	-2.58
PipeTot + Ins. + Clad. + Beam	:	80.10	0.44	0.36	-2.58
PipeTot + Ins. + Clad. + Lin. + Beam	:	80.10	0.44	0.36	-2.58
PipeTot + Ins. + Clad. + Lin. + Cont. + Beam	:	80.10	0.44	0.36	-2.58

NOTE: COG report only includes the currently visible beams and segments.
All pipe segments are included.
No beams present in the model.

L O A D C A S E D E S C R I P T I O N

Load Case	Load Case Name	Description
GR	Gravity	
T1	Thermal 1	
P1	Press 1	

T E E F L E X I B I L I T I E S D A T A L I S T I N G

Point Name	Point Seg-Type	Flexibility fac. k In-pl (none)	Out-pl (none)	Torsn	Flange Factor (c) In-pl	Out-pl (none)	Torsn	Rotational Stiffness In-pl (ft-lb/deg)	Out-pl	Torsn
A01	*** Tee is not ASME B31J compliant ***									
C01	*** Tee is not ASME B31J compliant ***									
E01	*** Tee is not ASME B31J compliant ***									
G01	*** Tee is not ASME B31J compliant ***									
I01	*** Tee is not ASME B31J compliant ***									

Note: The rotational stiffness values displayed are calculated for branch and run independently. Program uses "simultaneous use" stiffness values in the analysis by combining branch and run stiffness values.

A N A L Y S I S S U M M A R Y

```
Current model revision number : 2

  Constant values used
           Acceleration due to gravity................  386.40000 in/s/s
           Density of water for specific gravity Cal..     62.400 lb/cu.ft
           Density of sea water......................     62.400 lb/cu.ft
           Density of ground water ..................     62.400 lb/cu.ft

  Static - Analysis set number .................. 1
           Date and Time of analysis ............ Feb 4, 2020   8:13 AM
           Model Revision Number ................ 2
           Number of load cases ................. 2
           Load cases analyzed .................. GR T1
           Description .......................... Analysis Set No.1
           Gaps/Friction/Soil considered ......... Yes
           Tolerance - Force, Displacement ....... 10.00 lbf  0.0010 in
           Friction - Scale Factor, Tolerance .... 1.00   0.10
           Ignore friction for cases E1,E2,E3 .... Yes
           Ignore friction for gravity case ...... Yes
           Hanger design run ..................... No
           Cut short included .................... No
           Thermal bowing included ............... No
           Include Bourdon rotational effect ..... No
           Pipe radius for Bourdon calculation ... Mean
           Occasional load analysis type ......... Nonlinear
           Non-linear analysis summary file ......
             Encasement Drain and Test Port Low Temp.LOG
           Use default load sequence ............ Yes
           Base load cases for nonlinear analysis
                                                     GR   = None
                                                     T1   = GR
           Weight of contents included ........... Yes
           Fluid density factor for contents ..... 1.00
           Pressure stiffening case .............. None
           Hot modulus case ...................... None
           Pressure Extension..................... No
           Water elevation for buoyancy loads .... Not considered
           Use corroded thickness in analysis .... Yes
           Rigid stiffness factor ................ 1000.0
           Support rigid stiffness (translation) . 0.100000E+11 lb/in
           Support rigid stiffness (rotation) .... 0.100000E+11 ft-lb/deg
           Anchor rigid stiffness (translation) .. 0.100000E+11 lb/in
           Anchor rigid stiffness (rotation) ..... 0.100000E+11 ft-lb/deg
           Remove Lift-Off Supports .............. No
```

CODE COMPLIANCE COMBINATIONS

<Description> Combination	Category	Method	Case/Combination	Factor	M/S	K-Factor	Allowable (psi)	D/A/P/C
GR + Max P{1}	Sustain	Sum	GR[1]	1.00			Automatic	Y Y Y Y
			Max Long	1.00				
Max Range	Expansion	Sum	Temp. Range	1.00			Automatic	Y Y Y Y
Amb to T1{1}	Expansion	Sum	T1[1]	1.00			Automatic	Y Y Y Y
Max P{1}	Hoop	Sum	Max Hoop	1.00			Automatic	Y Y Y Y

Notes:

D/A/P/C: [D]efault/[A]uto-Update/[P]rint options/[C]Consistent (Y=Yes, N=No)

NON-CODE COMBINATIONS

<Description> Combination	Method	Case/Combination	Factor	D/A/P/C
Gravity{1}	Sum	GR[1]	1.00	Y Y Y Y
<30.00 deg F> Thermal 1{1}	Sum	T1[1]	1.00	Y Y Y N
GT1{1}	Sum	GR[1]	1.00	Y Y Y Y
		T1[1]	1.00	

Notes:

D/A/P/C: [D]efault/[A]uto-Update/[P]rint options/[C]Consistent (Y=Yes, N=No)

CODE COMPLIANCE

```
Y - Factor ............................ 0.40
Design Pressure Factor ................ 1.00
Minimum stress ratio used in reports... 0.00
Number of stress points per span ...... 0
Include corrosion in stress calcs. .... Y
Include corrosion in Hoop stress calcs. Y
Include torsion in code stress ........ N
Include axial force in code stress .... Y
Include sustain load margin ........... Only if allowable stress is exceeded
Use minimum sustained margin........... Y
Set sustained SIF=1 no bends .......... N
Set occasional SIF = 1 ................ N
Set occasional SIF = 0.75i ............ Y
Apply cold/hot modulus ratio .......... N
Disable auto code combinations ........ N
Disable auto non-code combinations .... N
No. of thermal ranges to report ....... 0
Include Max Range combination ......... Y
Total stress .......................... Octahedral
Direct shear .......................... None
Longitudinal pressure calculation ..... AxF/area
Use code case 178 ..................... Y
Inc. Axial Str and Pcase in Sustained.. Axial forces
Use alternate occasional allowable .... N
Apply circumferential weld WC factor .. N
ASME B31J Enabled ..................... N
```

R E S T R A I N T R E A C T I O N S

Point name	Load combination	FORCES (lbf) X	Y	Z	Result	MOMENTS (ft-lb) X	Y	Z	Result
A00	Anchor Tag No.: <None>					Connected to: Ground			
	Gravity{1}	0	-8	0	8	0	0	-2	2
	Thermal 1{1}	0	0	0	0	0	0	0	0
	GT1{1}	0	-8	0	8	0	0	-2	2
C00	Anchor Tag No.: <None>					Connected to: Ground			
	Gravity{1}	0	-10	0	10	0	0	-3	3
	Thermal 1{1}	0	0	0	0	0	0	0	0
	GT1{1}	0	-10	0	10	0	0	-3	3
E00	Anchor Tag No.: <None>					Connected to: Ground			
	Gravity{1}	0	-16	0	16	0	0	-5	5
	Thermal 1{1}	0	0	0	0	0	0	0	0
	GT1{1}	0	-16	0	16	0	0	-5	5
G00	Anchor Tag No.: <None>					Connected to: Ground			
	Gravity{1}	0	-11	0	11	0	0	-2	2
	Thermal 1{1}	0	0	0	0	0	0	0	0
	GT1{1}	0	-10	0	10	0	0	-2	2
G02	Guide Tag No.: <None> [ID: G02 1]								
	Gravity{1}	0	-8	0	8	0	0	0	0
	Thermal 1{1}	0	0	0	0	0	0	0	0
	GT1{1}	0	-9	0	9	0	0	0	0
H03	Guide Tag No.: <None> [ID: H03 1]								
	Gravity{1}	0	0	0	0	0	0	0	0
	Thermal 1{1}	0	0	0	0	0	0	0	0
	GT1{1}	0	0	0	0	0	0	0	0
I00	Anchor Tag No.: <None>					Connected to: Ground			
	Gravity{1}	0	-15	0	15	0	0	-3	3
	Thermal 1{1}	0	0	0	0	0	0	0	0
	GT1{1}	0	-15	0	15	0	0	-3	3
I02	Guide Tag No.: <None> [ID: I02 1]								
	Gravity{1}	0	-12	0	12	0	0	0	0
	Thermal 1{1}	0	0	0	0	0	0	0	0
	GT1{1}	0	-12	0	12	0	0	0	0
J03	Guide Tag No.: <None> [ID: J03 1]								
	Gravity{1}	0	0	0	0	0	0	0	0
	Thermal 1{1}	0	0	0	0	0	0	0	0
	GT1{1}	0	0	0	0	0	0	0	0

Encasement Drain and Test Port Low Temp
02/04/2020 2018719 BENTLEY
08:15 AM AutoPIPE Nuclear 12.00.00.16 RESULT PAGE 28

ASME B31.3 (2016) CODE COMPLIANCE
(Moments in ft-lb , Force in lbf) (Stress in psi)

Point name	Load combination	Axial Force	In-Pl. Moment	Out-Pl. Moment	Torsion Moment	S.I.F In	S.I.F Out	Index/SIF Ax.	Index/SIF Tor.	Eq. no.	Load type	Code Stress	Code Allow.
*** Segment A begin ***													
A00	Max P{1}									(3a)	HOOP	0	20000
	GR + Max P{1}	0	2	0	0	1.00	1.00	1.00	1.00	23a	SUST	9	20000
	TR:Amb to T1{1}	0	0	0	0	1.00	1.00	1.00	1.00	(17)	DISP	0	30000
	Amb to T1{1}	0	0	0	0	1.00	1.00	1.00	1.00	(17)	DISP	0	30000
A01 -	Max P{1}									(3a)	HOOP	0	20000
	GR + Max P{1}	0	1	0	0	1.00	1.00	1.00	1.00	23a	SUST	4	20000
	TR:Amb to T1{1}	0	0	0	0	1.00	1.00	1.00	1.00	(17)	DISP	0	30000
	Amb to T1{1}	0	0	0	0	1.00	1.00	1.00	1.00	(17)	DISP	0	30000
A01 +	Max P{1}									(3a)	HOOP	0	20000
	GR + Max P{1}	0	0	0	0	1.00	1.00	1.00	1.00	23a	SUST	2	20000
	TR:Amb to T1{1}	0	0	0	0	1.00	1.00	1.00	1.00	(17)	DISP	0	30000
	Amb to T1{1}	0	0	0	0	1.00	1.00	1.00	1.00	(17)	DISP	0	30000
A02	Max P{1}									(3a)	HOOP	0	20000
	GR + Max P{1}	0	0	0	0	1.00	1.00	1.00	1.00	23a	SUST	0	20000
	TR:Amb to T1{1}	0	0	0	0	1.00	1.00	1.00	1.00	(17)	DISP	0	30000
	Amb to T1{1}	0	0	0	0	1.00	1.00	1.00	1.00	(17)	DISP	0	30000
*** Segment A end ***													
*** Segment B begin ***													
B01	Max P{1}									(3a)	HOOP	0	20000
	GR + Max P{1}	3	0	1	0	1.37	1.37	1.00	1.00	23a	SUST	32	20000
	TR:Amb to T1{1}	0	0	0	0	1.83	1.83	1.83	1.00	(17)	DISP	0	30000
	Amb to T1{1}	0	0	0	0	1.83	1.83	1.83	1.00	(17)	DISP	0	30000
B02 N-	Max P{1}									(3a)	HOOP	0	20000
	GR + Max P{1}	2	0	1	0	1.00	1.00	1.00	1.00	23a	SUST	23	20000
	TR:Amb to T1{1}	0	0	0	0	1.00	1.00	1.00	1.00	(17)	DISP	0	30000
	Amb to T1{1}	0	0	0	0	1.00	1.00	1.00	1.00	(17)	DISP	0	30000
B02 N+	Max P{1}									(3a)	HOOP	0	20000
	GR + Max P{1}	2	1	0	0	1.20	1.00	1.00	1.00	23a	SUST	27	20000
	TR:Amb to T1{1}	0	0	0	0	1.60	1.33	1.00	1.00	(17)	DISP	0	30000
	Amb to T1{1}	0	0	0	0	1.60	1.33	1.00	1.00	(17)	DISP	0	30000
B02 F-	Max P{1}									(3a)	HOOP	0	20000
	GR + Max P{1}	0	0	0	0	1.20	1.00	1.00	1.00	23a	SUST	11	20000
	TR:Amb to T1{1}	0	0	0	0	1.60	1.33	1.00	1.00	(17)	DISP	0	30000
	Amb to T1{1}	0	0	0	0	1.60	1.33	1.00	1.00	(17)	DISP	0	30000
B02 F+	Max P{1}									(3a)	HOOP	0	20000
	GR + Max P{1}	0	0	0	0	1.00	1.00	1.00	1.00	23a	SUST	5	20000
	TR:Amb to T1{1}	0	0	0	0	1.00	1.00	1.00	1.00	(17)	DISP	0	30000
	Amb to T1{1}	0	0	0	0	1.00	1.00	1.00	1.00	(17)	DISP	0	30000

```
-----------------------------------------------------------------------------------------------------------------------
Encasement Drain and Test Port Low Temp
02/04/2020 2018719                                                                  BENTLEY
08:15 AM                                                                            AutoPIPE Nuclear 12.00.00.16   RESULT PAGE  29
-----------------------------------------------------------------------------------------------------------------------

                              ASME B31.3 (2016)  CODE COMPLIANCE
               (Moments in ft-lb  , Force in lbf  )     (Stress in psi     )
 Point     Load                      Axial  In-Pl. Out-Pl. Torsion   S.I.F   Index/SIF  Eq. Load   Code   Code
 name   combination                  Force  Moment  Moment  Moment  In  Out   Ax. Tor.  no. type  Stress Allow.
 ------ ----------------------     ------- ------- ------- ------- ---- ---- ---- ---- ---- ----  ------ ------
 B03    Max P{1}                                                                          (3a) HOOP       0  20000
        GR + Max P{1}                    0       0       0       0 1.00 1.00 1.00 1.00  23a SUST      0  20000
        TR:Amb to T1{1}                  0       0       0       0 1.00 1.00 1.00 1.00 (17) DISP       0  30000
        Amb to T1{1}                     0       0       0       0 1.00 1.00 1.00 1.00 (17) DISP       0  30000

 *** Segment B  end   ***

 *** Segment C  begin ***

 C00    Max P{1}                                                                          (3a) HOOP       0  20000
        GR + Max P{1}                    0       3       0       0 1.00 1.00 1.00 1.00  23a SUST      10  20000
        TR:Amb to T1{1}                  0       0       0       0 1.00 1.00 1.00 1.00 (17) DISP       0  30000
        Amb to T1{1}                     0       0       0       0 1.00 1.00 1.00 1.00 (17) DISP       0  30000

 C01  - Max P{1}                                                                          (3a) HOOP       0  20000
        GR + Max P{1}                    0       1       0       0 1.00 1.00 1.00 1.00  23a SUST       4  20000
        TR:Amb to T1{1}                  0       0       0       0 1.00 1.00 1.00 1.00 (17) DISP       0  30000
        Amb to T1{1}                     0       0       0       0 1.00 1.00 1.00 1.00 (17) DISP       0  30000

 C01  + Max P{1}                                                                          (3a) HOOP       0  20000
        GR + Max P{1}                    0       0       0       0 1.00 1.00 1.00 1.00  23a SUST       2  20000
        TR:Amb to T1{1}                  0       0       0       0 1.00 1.00 1.00 1.00 (17) DISP       0  30000
        Amb to T1{1}                     0       0       0       0 1.00 1.00 1.00 1.00 (17) DISP       0  30000

 C02    Max P{1}                                                                          (3a) HOOP       0  20000
        GR + Max P{1}                    0       0       0       0 1.00 1.00 1.00 1.00  23a SUST       0  20000
        TR:Amb to T1{1}                  0       0       0       0 1.00 1.00 1.00 1.00 (17) DISP       0  30000
        Amb to T1{1}                     0       0       0       0 1.00 1.00 1.00 1.00 (17) DISP       0  30000

 *** Segment C  end   ***

 *** Segment D  begin ***

 D01    Max P{1}                                                                          (3a) HOOP       0  20000
        GR + Max P{1}                    5       0       1       0 1.37 1.37 1.00 1.00  23a SUST      35  20000
        TR:Amb to T1{1}                  0       0       0       0 1.83 1.83 1.83 1.00 (17) DISP       0  30000
        Amb to T1{1}                     0       0       0       0 1.83 1.83 1.83 1.00 (17) DISP       0  30000

 D02 N- Max P{1}                                                                          (3a) HOOP       0  20000
        GR + Max P{1}                    2       0       1       0 1.00 1.00 1.00 1.00  23a SUST      23  20000
        TR:Amb to T1{1}                  0       0       0       0 1.00 1.00 1.00 1.00 (17) DISP       0  30000
        Amb to T1{1}                     0       0       0       0 1.00 1.00 1.00 1.00 (17) DISP       0  30000

 D02 N+ Max P{1}                                                                          (3a) HOOP       0  20000
        GR + Max P{1}                    2       1       0       0 1.20 1.00 1.00 1.00  23a SUST      27  20000
        TR:Amb to T1{1}                  0       0       0       0 1.60 1.33 1.00 1.00 (17) DISP       0  30000
        Amb to T1{1}                     0       0       0       0 1.60 1.33 1.00 1.00 (17) DISP       0  30000
```

ASME B31.3 (2016) CODE COMPLIANCE
(Moments in ft-lb , Force in lbf) (Stress in psi)

Point name	Load combination	Axial Force	In-Pl. Moment	Out-Pl. Moment	Torsion Moment	S.I.F In	S.I.F Out	Index/SIF Ax.	Index/SIF Tor.	Eq. no.	Load type	Code Stress	Code Allow.
D02 F-	Max P{1}									(3a)	HOOP	0	20000
	GR + Max P{1}	0	0	0	0	1.20	1.00	1.00	1.00	23a	SUST	11	20000
	TR:Amb to T1{1}	0	0	0	0	1.60	1.33	1.00	1.00	(17)	DISP	0	30000
	Amb to T1{1}	0	0	0	0	1.60	1.33	1.00	1.00	(17)	DISP	0	30000
D02 F+	Max P{1}									(3a)	HOOP	0	20000
	GR + Max P{1}	0	0	0	0	1.00	1.00	1.00	1.00	23a	SUST	5	20000
	TR:Amb to T1{1}	0	0	0	0	1.00	1.00	1.00	1.00	(17)	DISP	0	30000
	Amb to T1{1}	0	0	0	0	1.00	1.00	1.00	1.00	(17)	DISP	0	30000
D03	Max P{1}									(3a)	HOOP	0	20000
	GR + Max P{1}	0	0	0	0	1.00	1.00	1.00	1.00	23a	SUST	0	20000
	TR:Amb to T1{1}	0	0	0	0	1.00	1.00	1.00	1.00	(17)	DISP	0	30000
	Amb to T1{1}	0	0	0	0	1.00	1.00	1.00	1.00	(17)	DISP	0	30000
*** Segment D end ***													
*** Segment E begin ***													
E00	Max P{1}									(3a)	HOOP	0	20000
	GR + Max P{1}	0	5	0	0	1.00	1.00	1.00	1.00	23a	SUST	7	20000
	TR:Amb to T1{1}	0	0	0	0	1.00	1.00	1.00	1.00	(17)	DISP	0	30000
	Amb to T1{1}	0	0	0	0	1.00	1.00	1.00	1.00	(17)	DISP	0	30000
E01 -	Max P{1}									(3a)	HOOP	0	20000
	GR + Max P{1}	0	1	0	0	1.00	1.00	1.00	1.00	23a	SUST	2	20000
	TR:Amb to T1{1}	0	0	0	0	1.00	1.00	1.00	1.00	(17)	DISP	0	30000
	Amb to T1{1}	0	0	0	0	1.00	1.00	1.00	1.00	(17)	DISP	0	30000
E01 +	Max P{1}									(3a)	HOOP	0	20000
	GR + Max P{1}	0	1	0	0	1.00	1.00	1.00	1.00	23a	SUST	1	20000
	TR:Amb to T1{1}	0	0	0	0	1.00	1.00	1.00	1.00	(17)	DISP	0	30000
	Amb to T1{1}	0	0	0	0	1.00	1.00	1.00	1.00	(17)	DISP	0	30000
E02	Max P{1}									(3a)	HOOP	0	20000
	GR + Max P{1}	0	0	0	0	1.00	1.00	1.00	1.00	23a	SUST	0	20000
	TR:Amb to T1{1}	0	0	0	0	1.00	1.00	1.00	1.00	(17)	DISP	0	30000
	Amb to T1{1}	0	0	0	0	1.00	1.00	1.00	1.00	(17)	DISP	0	30000
*** Segment E end ***													
*** Segment F begin ***													
F01	Max P{1}									(3a)	HOOP	0	20000
	GR + Max P{1}	6	0	1	0	1.61	1.61	1.00	1.00	23a	SUST	44	20000
	TR:Amb to T1{1}	0	0	0	0	2.14	2.14	2.14	1.00	(17)	DISP	0	30000
	Amb to T1{1}	0	0	0	0	2.14	2.14	2.14	1.00	(17)	DISP	0	30000

ASME B31.3 (2016) CODE COMPLIANCE
(Moments in ft-lb , Force in lbf) (Stress in psi)

Point name	Load combination	Axial Force	In-Pl. Moment	Out-Pl. Moment	Torsion Moment	S.I.F In	S.I.F Out	Index/SIF Ax.	Index/SIF Tor.	Eq. no.	Load type	Code Stress	Code Allow.
F02 N-	Max P{1}									(3a)	HOOP	0	20000
	GR + Max P{1}	2	0	1	0	1.00	1.00	1.00	1.00	23a	SUST	26	20000
	TR:Amb to T1{1}	0	0	0	0	1.00	1.00	1.00	1.00	(17)	DISP	0	30000
	Amb to T1{1}	0	0	0	0	1.00	1.00	1.00	1.00	(17)	DISP	0	30000
F02 N+	Max P{1}									(3a)	HOOP	0	20000
	GR + Max P{1}	2	1	0	0	1.20	1.00	1.00	1.00	23a	SUST	30	20000
	TR:Amb to T1{1}	0	0	0	0	1.60	1.33	1.00	1.00	(17)	DISP	0	30000
	Amb to T1{1}	0	0	0	0	1.60	1.33	1.00	1.00	(17)	DISP	0	30000
F02 F-	Max P{1}									(3a)	HOOP	0	20000
	GR + Max P{1}	0	0	0	0	1.20	1.00	1.00	1.00	23a	SUST	12	20000
	TR:Amb to T1{1}	0	0	0	0	1.60	1.33	1.00	1.00	(17)	DISP	0	30000
	Amb to T1{1}	0	0	0	0	1.60	1.33	1.00	1.00	(17)	DISP	0	30000
F02 F+	Max P{1}									(3a)	HOOP	0	20000
	GR + Max P{1}	0	0	0	0	1.00	1.00	1.00	1.00	23a	SUST	6	20000
	TR:Amb to T1{1}	0	0	0	0	1.00	1.00	1.00	1.00	(17)	DISP	0	30000
	Amb to T1{1}	0	0	0	0	1.00	1.00	1.00	1.00	(17)	DISP	0	30000
F03	Max P{1}									(3a)	HOOP	0	20000
	GR + Max P{1}	0	0	0	0	1.00	1.00	1.00	1.00	23a	SUST	0	20000
	TR:Amb to T1{1}	0	0	0	0	1.00	1.00	1.00	1.00	(17)	DISP	0	30000
	Amb to T1{1}	0	0	0	0	1.00	1.00	1.00	1.00	(17)	DISP	0	30000

*** Segment F end ***

*** Segment G begin ***

G00	Max P{1}									(3a)	HOOP	0	20000
	GR + Max P{1}	0	2	0	0	1.00	1.00	1.00	1.00	23a	SUST	9	20000
	TR:Amb to T1{1}	0	0	0	0	1.00	1.00	1.00	1.00	(17)	DISP	0	30000
	Amb to T1{1}	0	0	0	0	1.00	1.00	1.00	1.00	(17)	DISP	0	30000
G01 -	Max P{1}									(3a)	HOOP	0	20000
	GR + Max P{1}	0	1	0	0	1.00	1.00	1.00	1.00	23a	SUST	6	20000
	TR:Amb to T1{1}	0	0	0	0	1.00	1.00	1.00	1.00	(17)	DISP	1	30000
	Amb to T1{1}	0	0	0	0	1.00	1.00	1.00	1.00	(17)	DISP	1	30000
G01 +	Max P{1}									(3a)	HOOP	0	20000
	GR + Max P{1}	0	3	0	0	1.00	1.00	1.00	1.00	23a	SUST	11	20000
	TR:Amb to T1{1}	0	0	0	0	1.00	1.00	1.00	1.00	(17)	DISP	1	30000
	Amb to T1{1}	0	0	0	0	1.00	1.00	1.00	1.00	(17)	DISP	1	30000
G02	Max P{1}									(3a)	HOOP	0	20000
	GR + Max P{1}	0	0	0	0	1.00	1.00	1.00	1.00	23a	SUST	0	20000
	TR:Amb to T1{1}	0	0	0	0	1.00	1.00	1.00	1.00	(17)	DISP	0	30000
	Amb to T1{1}	0	0	0	0	1.00	1.00	1.00	1.00	(17)	DISP	0	30000

*** Segment G end ***

*** Segment H begin ***

```
-----------------------------------------------------------------------------------------------------------------------
Encasement Drain and Test Port Low Temp
02/04/2020 2018719                                                    BENTLEY
08:15 AM                                                              AutoPIPE Nuclear 12.00.00.16   RESULT PAGE  32
-----------------------------------------------------------------------------------------------------------------------

                              ASME B31.3 (2016)  CODE COMPLIANCE
              (Moments in ft-lb  , Force in lbf  )     (Stress in psi     )
 Point     Load                     Axial  In-Pl. Out-Pl. Torsion   S.I.F   Index/SIF  Eq. Load   Code   Code
 name   combination                 Force  Moment  Moment  Moment  In  Out   Ax. Tor.  no. type  Stress Allow.
 ------ ----------------------    ------- ------- ------- ------- ---- ---- ---- ---- ---- ----  ------ ------
 H01    Max P{1}                                                                        (3a) HOOP       0  20000
        GR + Max P{1}                    7       1       0       0 1.37 1.37 1.00 1.00  23a SUST     192  20000
        TR:Amb to T1{1}                  0       0       0       0 1.83 1.83 1.83 1.00 (17) DISP      73  30000
        Amb to T1{1}                     0       0       0       0 1.83 1.83 1.83 1.00 (17) DISP      73  30000

 H02 N- Max P{1}                                                                        (3a) HOOP       0  20000
        GR + Max P{1}                    6       0       0       0 1.00 1.00 1.00 1.00  23a SUST      34  20000
        TR:Amb to T1{1}                  0       0       0       0 1.00 1.00 1.00 1.00 (17) DISP      38  30000
        Amb to T1{1}                     0       0       0       0 1.00 1.00 1.00 1.00 (17) DISP      38  30000

 H02 N+ Max P{1}                                                                        (3a) HOOP       0  20000
        GR + Max P{1}                    6       0       0       0 1.00 1.00 1.00 1.00  23a SUST      34  20000
        TR:Amb to T1{1}                  0       0       0       0 1.00 1.00 1.00 1.00 (17) DISP      38  30000
        Amb to T1{1}                     0       0       0       0 1.00 1.00 1.00 1.00 (17) DISP      38  30000

 H02 F- Max P{1}                                                                        (3a) HOOP       0  20000
        GR + Max P{1}                    8       0       0       0 1.00 1.00 1.00 1.00  23a SUST      29  20000
        TR:Amb to T1{1}                  0       0       0       0 1.00 1.00 1.00 1.00 (17) DISP      37  30000
        Amb to T1{1}                     0       0       0       0 1.00 1.00 1.00 1.00 (17) DISP      37  30000

 H02 F+ Max P{1}                                                                        (3a) HOOP       0  20000
        GR + Max P{1}                    8       0       0       0 1.00 1.00 1.00 1.00  23a SUST      29  20000
        TR:Amb to T1{1}                  0       0       0       0 1.00 1.00 1.00 1.00 (17) DISP      37  30000
        Amb to T1{1}                     0       0       0       0 1.00 1.00 1.00 1.00 (17) DISP      37  30000

 H03    Max P{1}                                                                        (3a) HOOP       0  20000
        GR + Max P{1}                    0       0       0       0 1.00 1.00 1.00 1.00  23a SUST       0  20000
        TR:Amb to T1{1}                  0       0       0       0 1.00 1.00 1.00 1.00 (17) DISP       0  30000
        Amb to T1{1}                     0       0       0       0 1.00 1.00 1.00 1.00 (17) DISP       0  30000

 *** Segment H  end   ***

 *** Segment I  begin ***

 I00    Max P{1}                                                                        (3a) HOOP       0  20000
        GR + Max P{1}                    0       3       0       0 1.00 1.00 1.00 1.00  23a SUST       4  20000
        TR:Amb to T1{1}                  0       0       0       0 1.00 1.00 1.00 1.00 (17) DISP       0  30000
        Amb to T1{1}                     0       0       0       0 1.00 1.00 1.00 1.00 (17) DISP       0  30000

 I01  - Max P{1}                                                                        (3a) HOOP       0  20000
        GR + Max P{1}                    0       2       0       0 1.00 1.00 1.00 1.00  23a SUST       3  20000
        TR:Amb to T1{1}                  0       0       0       0 1.00 1.00 1.00 1.00 (17) DISP       0  30000
        Amb to T1{1}                     0       0       0       0 1.00 1.00 1.00 1.00 (17) DISP       0  30000

 I01  + Max P{1}                                                                        (3a) HOOP       0  20000
        GR + Max P{1}                    0       4       0       0 1.00 1.00 1.00 1.00  23a SUST       5  20000
        TR:Amb to T1{1}                  0       0       0       0 1.00 1.00 1.00 1.00 (17) DISP       0  30000
        Amb to T1{1}                     0       0       0       0 1.00 1.00 1.00 1.00 (17) DISP       0  30000
```

```
-----------------------------------------------------------------------------------------------------------------------
Encasement Drain and Test Port Low Temp
02/04/2020 2018719                                                    BENTLEY
08:15 AM                                                              AutoPIPE Nuclear 12.00.00.16   RESULT PAGE  33
-----------------------------------------------------------------------------------------------------------------------

                              ASME B31.3 (2016)  CODE COMPLIANCE
              (Moments in ft-lb  , Force in lbf  )     (Stress in psi     )
 Point     Load                     Axial  In-Pl. Out-Pl. Torsion   S.I.F   Index/SIF  Eq. Load   Code   Code
 name   combination                 Force  Moment  Moment  Moment  In  Out   Ax. Tor.  no. type  Stress Allow.
 ------ ----------------------    ------- ------- ------- ------- ---- ---- ---- ---- ---- ----  ------ ------
 I02    Max P{1}                                                                        (3a) HOOP       0  20000
        GR + Max P{1}                    0       0       0       0 1.00 1.00 1.00 1.00  23a SUST       0  20000
        TR:Amb to T1{1}                  0       0       0       0 1.00 1.00 1.00 1.00 (17) DISP       0  30000
        Amb to T1{1}                     0       0       0       0 1.00 1.00 1.00 1.00 (17) DISP       0  30000

 *** Segment I  end   ***

 *** Segment J  begin ***

 J01    Max P{1}                                                                        (3a) HOOP       0  20000
        GR + Max P{1}                    7       1       0       0 1.61 1.61 1.00 1.00  23a SUST     222  20000
        TR:Amb to T1{1}                  0       0       0       0 2.14 2.14 2.14 1.00 (17) DISP      85  30000
        Amb to T1{1}                     0       0       0       0 2.14 2.14 2.14 1.00 (17) DISP      85  30000

 J02 N- Max P{1}                                                                        (3a) HOOP       0  20000
        GR + Max P{1}                    6       0       0       0 1.00 1.00 1.00 1.00  23a SUST      34  20000
        TR:Amb to T1{1}                  0       0       0       0 1.00 1.00 1.00 1.00 (17) DISP      38  30000
        Amb to T1{1}                     0       0       0       0 1.00 1.00 1.00 1.00 (17) DISP      38  30000

 J02 N+ Max P{1}                                                                        (3a) HOOP       0  20000
        GR + Max P{1}                    6       0       0       0 1.00 1.00 1.00 1.00  23a SUST      34  20000
        TR:Amb to T1{1}                  0       0       0       0 1.00 1.00 1.00 1.00 (17) DISP      38  30000
        Amb to T1{1}                     0       0       0       0 1.00 1.00 1.00 1.00 (17) DISP      38  30000

 J02 F- Max P{1}                                                                        (3a) HOOP       0  20000
        GR + Max P{1}                    8       0       0       0 1.00 1.00 1.00 1.00  23a SUST      29  20000
        TR:Amb to T1{1}                  0       0       0       0 1.00 1.00 1.00 1.00 (17) DISP      37  30000
        Amb to T1{1}                     0       0       0       0 1.00 1.00 1.00 1.00 (17) DISP      37  30000

 J02 F+ Max P{1}                                                                        (3a) HOOP       0  20000
        GR + Max P{1}                    8       0       0       0 1.00 1.00 1.00 1.00  23a SUST      29  20000
        TR:Amb to T1{1}                  0       0       0       0 1.00 1.00 1.00 1.00 (17) DISP      37  30000
        Amb to T1{1}                     0       0       0       0 1.00 1.00 1.00 1.00 (17) DISP      37  30000

 J03    Max P{1}                                                                        (3a) HOOP       0  20000
        GR + Max P{1}                    0       0       0       0 1.00 1.00 1.00 1.00  23a SUST       0  20000
        TR:Amb to T1{1}                  0       0       0       0 1.00 1.00 1.00 1.00 (17) DISP       0  30000
        Amb to T1{1}                     0       0       0       0 1.00 1.00 1.00 1.00 (17) DISP       0  30000

 *** Segment J  end   ***
```

R E S U L T S U M M A R Y

Maximum restraint forces (lb)

Maximum X :	0	Point : I00	Load Comb.: Thermal 1{1}
Maximum Y :	-16	Point : E00	Load Comb.: Gravity{1}
Maximum Z :	0	Point : C00	Load Comb.: GT1{1}
Max. total:	16	Point : E00	Load Comb.: Gravity{1}

Maximum restraint moments (ft-lb)

Maximum X :	0	Point : C00	Load Comb.: Gravity{1}
Maximum Y :	0	Point : C00	Load Comb.: GT1{1}
Maximum Z :	-5	Point : E00	Load Comb.: Gravity{1}
Max. total:	5	Point : E00	Load Comb.: Gravity{1}

R E S U L T S U M M A R Y

Maximum sustained stress

```
Point            : J01
Stress    psi    : 222
Allowable psi    : 20000
Ratio            : 0.01
Load combination : GR + Max P{1}
```

Maximum displacement stress

```
Point            : J01
Stress    psi    : 85
Allowable psi    : 30000
Ratio            : 0.00
Load combination : Max Range
```

Maximum hoop stress

```
Point            : A00
Stress    psi    : 0
Allowable psi    : 20000
Ratio            : 0.00
Load combination : Max P{1}
```

R E S U L T S U M M A R Y

Maximum sustained stress ratio

```
Point            : J01
Stress    psi    : 222
Allowable psi    : 20000
Ratio            : 0.01
Load combination : GR + Max P{1}
```

Maximum displacement stress ratio

```
Point            : J01
Stress    psi    : 85
Allowable psi    : 30000
Ratio            : 0.00
Load combination : Max Range
```

Maximum hoop stress ratio

```
Point            : A00
Stress    psi    : 0
Allowable psi    : 20000
Ratio            : 0.00
Load combination : Max P{1}
```

```
* * * The system satisfies ASME B31.3 (2016) code requirements * * *
* * * for the selected options                                  * * *
```

Warnings:
(1) Maximum hoop stress ratio is zero

APPENDIX D6

AUTOPIPE ANALYSIS – ENCASEMENT DRAIN AND TEST PORT SUSTAINED AND OCCASIONAL SEISMIC

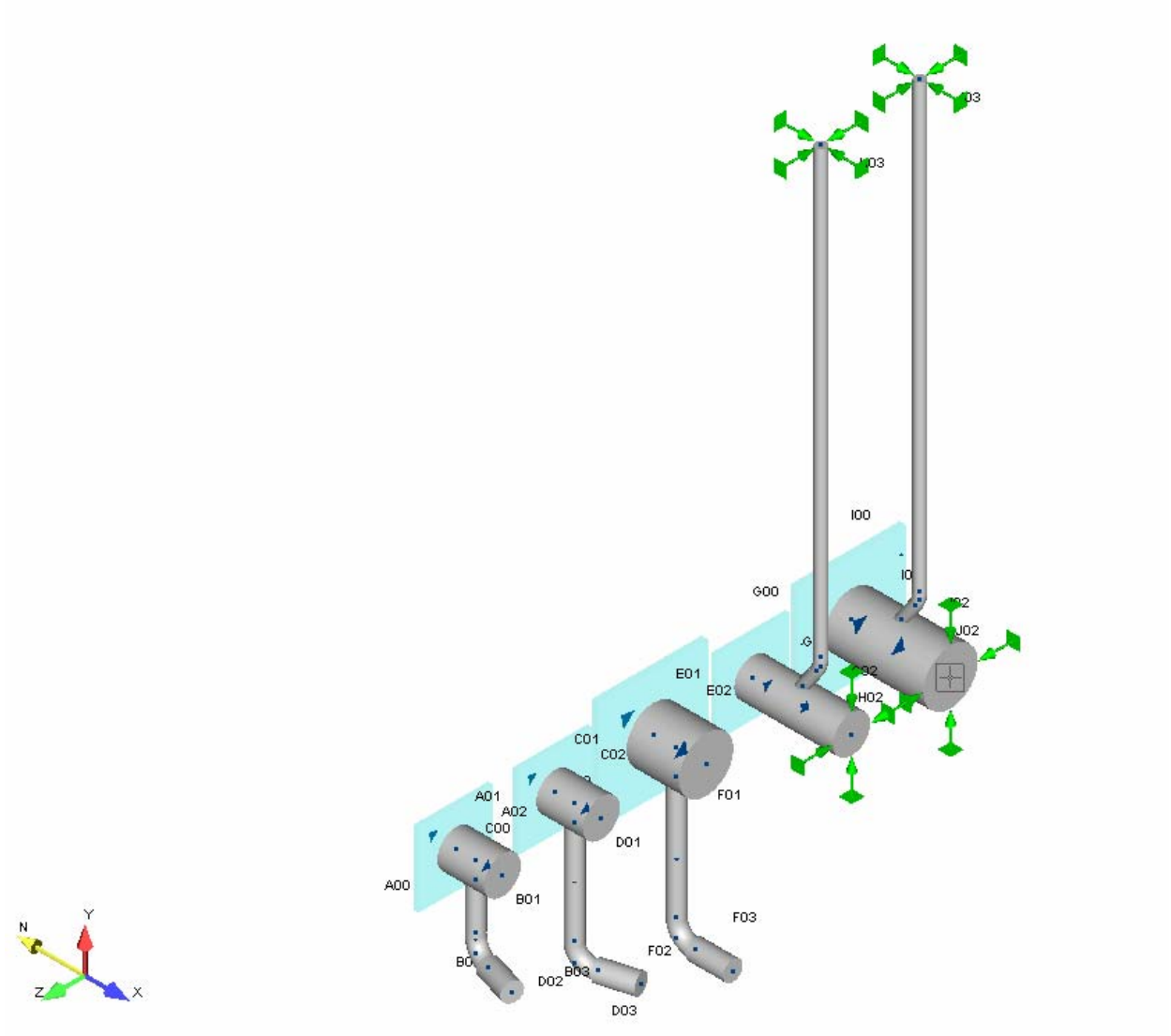
I00
G00
E01
E02
C01
C02
A01
A02
C00
A00
B01
D01
F01
F03
F02
D02
D03
N
Y
Z
X

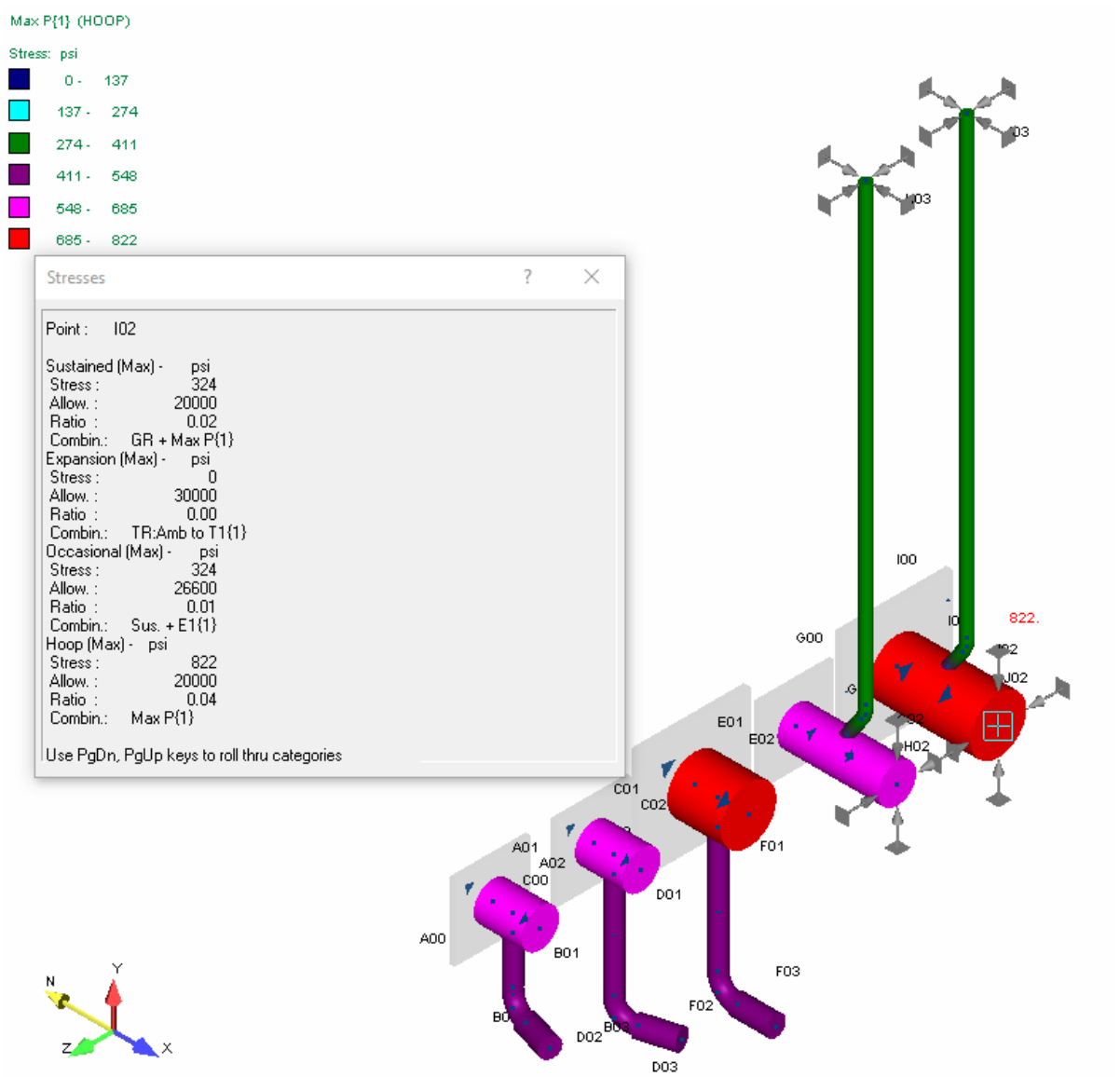
Max P{1} (HOOP)
Stress: psi
0 - 137
137 - 274
274 - 411
411 - 548
548 - 685
685 - 822
Stresses
Point : I02
Sustained (Max) - psi
Stress : 324
Allow. : 20000
Ratio : 0.02
Combin.: GR + Max P{1}
Expansion (Max) - psi
Stress : 0
Allow. : 30000
Ratio : 0.00
Combin.: TR:Amb to T1{1}
Occasional (Max) - psi
Stress : 324
Allow. : 26600
Ratio : 0.01
Combin.: Sus. + E1{1}
Hoop (Max) - psi
Stress : 822
Allow. : 20000
Ratio : 0.04
Combin.: Max P{1}
Use PgDn, PgUp keys to roll thru categories
822.
I00
G00
E01
E02
C01
C02
A01
A02
C00
A00
B01
D01
F01
F03
F02
D02
D03
J02
H02
N
Y
Z
X

```
---------------------------------------------------------------------------------------------------------------
Encasement Drain and Test Port
02/04/2020 2018719                                                                                  BENTLEY
07:55 AM                                                                                            AutoPIPE Nuclear 12.00.00.16
---------------------------------------------------------------------------------------------------------------
```

```
        *                              *******   **  *******   *******
       ***               **           **    **  **  **    **  **
      ** **             ******         **    **  **  **    **  **
     **   **    **   **  **   *****   *******   **  *******   *****
    *********   **   **  **  **   **  **        **  **        **
   **       **  **   **  **  **   **  **        **  **        **
  **         **  *****   **   *****   **        **  **        *******
```

Pipe Stress Analysis and Design Program

Version: 12.00.00.16

Edition: Nuclear

Developed and Maintained by

BENTLEY SYSTEMS, INCORPORATED
1065 N. PACIFIC CENTER DRIVE, SUITE 450
ANAHEIM, CA 92806

```
************************************************************
**                                                        **
**              AUTOPIPE SYSTEM INFORMATION               **
**                                                        **
************************************************************
```

SYSTEM NAME : Encasement Drain and Test Port

PROJECT ID : 2018719

PREPARED BY : _____
JIM HARRINGTON

CHECKED BY : _____
RYAN LANG

1ST APPROVER : _____

2ND APPROVER : _____

PIPING CODE : ASME B31.3

YEAR : 2016

VERTICAL AXIS : Y

AMBIENT TEMPERATURE : 60.0 deg F

COMPONENT LIBRARY : AUTOPIPE

MATERIAL LIBRARY : B313-16

MODEL REVISION NUMBER : 8

T A B L E O F C O N T E N T S

Components..... 1
Coordinates..... 8
Segment Data..... 10
Pipe Properties..... 11
Material Properties..... 12
Material Allowables..... 13
Temperature and Pressure..... 14
Loads Summary..... 15
Support..... 16
Bend..... 17
Tee..... 18
User SIF..... 19
Rigid Pipe..... 20
Center of Gravity..... 21
Load Case Description..... 22
Tee Flexibility..... 23
Analysis Summary..... 24
Restraint Reactions..... 29
Code Compliance..... 34
Result Summary..... 50

C O M P O N E N T D A T A L I S T I N G

*** SEGMENT A

From A00 to A01, DX= 0.20 ft Run

PIPE DATA:
Pipe Id= 4SCH40, Material= A53-B, Composition= Carbon Steel, Poisson= 0.300, Nom Size= 4 in, OD= 4.500 inch,
Sch= 40S, Wall Thk= 0.237 inch, Mill= 0.030 inch, Cor= 0.010 inch, Pipe Density= 489.00 lb/cu.ft,
Pipe Unit Wgt= 10.78 lb/ft, Insul Thk= 0 inch, Cladding Thickness = 0 inch, Lining Thk= 0 inch,
Long Weld E factor= 1.00, Long Weld W factor= 1.00, Long Modulus= 29.54083 E6 psi,
Hoop Modulus= 29.54083 E6 psi, Shear Modulus= 11.36186 E6 psi, Sc= 20000.0 psi, Syc= 35000.0 psi,
Suc= 60000.0 psi

OPERATING DATA:
P1= 60.00 psi, T1= 200.00 deg F, Exp1= 1.07500 in/100ft, E1= 28.80000 E6 psi, Sh1= 20000.00 psi,
Sy1= 32100.00 psi

POINT DATA:
A00, Coordinates, X= 0.00 ft, Y= 0.00 ft, Z= 0.00 ft

SUPPORT DATA:
A00, Anchor, Connected to: Ground, KTX= Rigid, KTY= Rigid, KTZ= Rigid, KRX= Rigid, KRY= Rigid, KRZ= Rigid

From A01 to A02, DX= 0.27 ft Tee

COMPONENT DATA (Tee Header, Center= A01):
Other, SIFI= 1.00, SIFO= 1.00

POINT DATA:
A01, Coordinates, X= 0.20 ft, Y= 0.00 ft, Z= -0.00 ft
A02, Coordinates, X= 0.47 ft, Y= 0.00 ft, Z= -0.00 ft

*** SEGMENT B

From A01 to B01, DY= -0.17 ft Tee

COMPONENT DATA (Tee Branch, Center= A01):
Other, SIFI= 1.00, SIFO= 1.00
Rigid, Include weight= No, Include expansion= Yes

PIPE DATA:
Pipe Id= 1.5SCH40, Composition= Carbon Steel, Nom Size= 1.500, OD= 1.900 inch, Wall Thk= 0.145 inch,
Mill= 0.018 inch, Pipe Density= 489.00 lb/cu.ft, Pipe Unit Wgt= 2.71 lb/ft

POINT DATA:
A01, Coordinates, X= 0.20 ft, Y= 0.00 ft, Z= -0.00 ft

From B01 to B02, DY= -0.65 ft Run

C O M P O N E N T D A T A L I S T I N G

POINT DATA:
B01, Coordinates, X= 0.20 ft, Y= -0.17 ft, Z= -0.00 ft
B01, Joint End Type= User-defined, SIFI= 1.83, SIFO= 1.83, Override all other values= No

---

From B02 to B03, DX= 0.52 ft, DZ= 0.15 ft, L= 0.54 ft Bend

COMPONENT DATA (Bend, TIP= B02, Near= B02 N, Far= B02 F):
Long Elbow, Radius= 2.25 inch, Bend angle= 90.00 deg, End flanges= 0, Flex= Auto, SIFI= 1.60, SIFO= 1.33

PIPE DATA (B02 F to B03):
Pipe Id= 2SCH40, Composition= Carbon Steel, Nom Size= 2.000, OD= 2.375 inch, Wall Thk= 0.154 inch,
Mill= 0.019 inch, Pipe Density= 489.00 lb/cu.ft, Pipe Unit Wgt= 3.65 lb/ft, Long Weld W factor= Auto

POINT DATA:
B02, Coordinates, X= 0.20 ft, Y= -0.82 ft, Z= -0.00 ft
B02 N, Coordinates, X= 0.20 ft, Y= -0.63 ft, Z= -0.00 ft
B02 F, Coordinates, X= 0.38 ft, Y= -0.82 ft, Z= 0.05 ft
B03, Coordinates, X= 0.72 ft, Y= -0.82 ft, Z= 0.15 ft

*** SEGMENT C

From C00 to C01, DX= 0.20 ft Run

PIPE DATA:
Pipe Id= 4SCH40, Composition= Carbon Steel, Nom Size= 4 in, OD= 4.500 inch, Wall Thk= 0.237 inch,
Mill= 0.030 inch, Pipe Density= 489.00 lb/cu.ft, Pipe Unit Wgt= 10.78 lb/ft, Long Weld W factor= 1.00

POINT DATA:
C00, Coordinates, X= 0.00 ft, Y= 0.00 ft, Z= -1.00 ft

SUPPORT DATA:
C00, Anchor, Connected to: Ground, KTX= Rigid, KTY= Rigid, KTZ= Rigid, KRX= Rigid, KRY= Rigid, KRZ= Rigid

---

From C01 to C02, DX= 0.27 ft Tee

COMPONENT DATA (Tee Header, Center= C01):
Other, SIFI= 1.00, SIFO= 1.00

POINT DATA:
C01, Coordinates, X= 0.20 ft, Y= 0.00 ft, Z= -1.00 ft
C02, Coordinates, X= 0.47 ft, Y= 0.00 ft, Z= -1.00 ft

*** SEGMENT D

From C01 to D01, DY= -0.17 ft Tee

COMPONENT DATA (Tee Branch, Center= C01):

C O M P O N E N T D A T A L I S T I N G

```
   Other, SIFI= 1.00, SIFO= 1.00
   Rigid, Include weight= No, Include expansion= Yes

 PIPE DATA:
   Pipe Id= 1.5SCH40, Composition= Carbon Steel, Nom Size= 1.500, OD= 1.900 inch, Wall Thk= 0.145 inch,
   Mill= 0.018 inch, Pipe Density= 489.00 lb/cu.ft, Pipe Unit Wgt= 2.71 lb/ft

 POINT DATA:
   C01, Coordinates, X= 0.20 ft, Y= 0.00 ft, Z= -1.00 ft

 ---------------------------------------------------------------------------
 From D01 to D02, DY= -1.23 ft                                        Run

 POINT DATA:
   D01, Coordinates, X= 0.20 ft, Y= -0.17 ft, Z= -1.00 ft
   D01, Joint End Type= User-defined, SIFI= 1.83, SIFO= 1.83, Override all other values= No

 ---------------------------------------------------------------------------
 From D02 to D03, DX= 0.52 ft, DZ= -0.15 ft, L= 0.54 ft                Bend

 COMPONENT DATA (Bend, TIP= D02, Near= D02 N, Far= D02 F):
   Long Elbow, Radius= 2.25 inch, Bend angle= 90.00 deg, End flanges= 0, Flex= Auto, SIFI= 1.60, SIFO= 1.33

 PIPE DATA (D02 F to D03):
   Pipe Id= 2SCH40, Composition= Carbon Steel, Nom Size= 2.000, OD= 2.375 inch, Wall Thk= 0.154 inch,
   Mill= 0.019 inch, Pipe Density= 489.00 lb/cu.ft, Pipe Unit Wgt= 3.65 lb/ft, Long Weld W factor= Auto

 POINT DATA:
   D02, Coordinates, X= 0.20 ft, Y= -1.40 ft, Z= -1.00 ft
   D02 N, Coordinates, X= 0.20 ft, Y= -1.21 ft, Z= -1.00 ft
   D02 F, Coordinates, X= 0.38 ft, Y= -1.40 ft, Z= -1.05 ft
   D03, Coordinates, X= 0.72 ft, Y= -1.40 ft, Z= -1.15 ft

 ---------------------------------------------------------------------------
 ---------------------------------------------------------------------------
 *** SEGMENT E

 ---------------------------------------------------------------------------
 From E00 to E01, DX= 0.23 ft                                         Run

 PIPE DATA:
   Pipe Id= 6SCH40, Composition= Carbon Steel, Nom Size= 6 in, OD= 6.625 inch, Wall Thk= 0.280 inch,
   Mill= 0.035 inch, Pipe Density= 489.00 lb/cu.ft, Pipe Unit Wgt= 18.95 lb/ft, Long Weld W factor= 1.00

 POINT DATA:
   E00, Coordinates, X= 0.00 ft, Y= 0.00 ft, Z= -2.00 ft

 SUPPORT DATA:
   E00, Anchor, Connected to: Ground, KTX= Rigid, KTY= Rigid, KTZ= Rigid, KRX= Rigid, KRY= Rigid, KRZ= Rigid

 ---------------------------------------------------------------------------
 From E01 to E02, DX= 0.30 ft                                         Tee

 COMPONENT DATA (Tee Header, Center= E01):
   Other, SIFI= 1.00, SIFO= 1.00
```

C O M P O N E N T D A T A L I S T I N G

POINT DATA:
E01, Coordinates, X= 0.23 ft, Y= 0.00 ft, Z= -2.00 ft
E02, Coordinates, X= 0.53 ft, Y= 0.00 ft, Z= -2.00 ft

*** SEGMENT F

From E01 to F01, DY= -0.25 ft Tee

COMPONENT DATA (Tee Branch, Center= E01):
Other, SIFI= 1.00, SIFO= 1.00
Rigid, Include weight= No, Include expansion= Yes

PIPE DATA:
Pipe Id= 1.5SCH40, Composition= Carbon Steel, Nom Size= 1.500, OD= 1.900 inch, Wall Thk= 0.145 inch,
Mill= 0.018 inch, Pipe Density= 489.00 lb/cu.ft, Pipe Unit Wgt= 2.71 lb/ft

POINT DATA:
E01, Coordinates, X= 0.23 ft, Y= 0.00 ft, Z= -2.00 ft

From F01 to F02, DY= -1.42 ft Run

POINT DATA:
F01, Coordinates, X= 0.23 ft, Y= -0.25 ft, Z= -2.00 ft
F01, Joint End Type= User-defined, SIFI= 2.14, SIFO= 2.14, Override all other values= No

---

From F02 to F03, DX= 0.57 ft Bend

COMPONENT DATA (Bend, TIP= F02, Near= F02 N, Far= F02 F):
Long Elbow, Radius= 2.25 inch, Bend angle= 90.00 deg, End flanges= 0, Flex= Auto, SIFI= 1.60, SIFO= 1.33

PIPE DATA (F02 F to F03):
Pipe Id= 2SCH40, Composition= Carbon Steel, Nom Size= 2.000, OD= 2.375 inch, Wall Thk= 0.154 inch,
Mill= 0.019 inch, Pipe Density= 489.00 lb/cu.ft, Pipe Unit Wgt= 3.65 lb/ft, Long Weld W factor= Auto

POINT DATA:
F02, Coordinates, X= 0.23 ft, Y= -1.67 ft, Z= -2.00 ft
F02 N, Coordinates, X= 0.23 ft, Y= -1.48 ft, Z= -2.00 ft
F02 F, Coordinates, X= 0.42 ft, Y= -1.67 ft, Z= -2.00 ft
F03, Coordinates, X= 0.80 ft, Y= -1.67 ft, Z= -2.00 ft

*** SEGMENT G

From G00 to G01, DX= 0.50 ft Run

PIPE DATA:
Pipe Id= 4SCH40, Composition= Carbon Steel, Nom Size= 4 in, OD= 4.500 inch, Wall Thk= 0.237 inch,
Mill= 0.030 inch, Pipe Density= 489.00 lb/cu.ft, Pipe Unit Wgt= 10.78 lb/ft, Long Weld W factor= 1.00

C O M P O N E N T D A T A L I S T I N G

POINT DATA:
G00, Coordinates, X= 0.00 ft, Y= 0.00 ft, Z= -3.00 ft

SUPPORT DATA:
G00, Anchor, Connected to: Ground, KTX= Rigid, KTY= Rigid, KTZ= Rigid, KRX= Rigid, KRY= Rigid, KRZ= Rigid

---
From G01 to G02, DX= 0.50 ft Tee

COMPONENT DATA (Tee Header, Center= G01):
Other, SIFI= 1.00, SIFO= 1.00

POINT DATA:
G01, Coordinates, X= 0.50 ft, Y= 0.00 ft, Z= -3.00 ft
G02, Coordinates, X= 1.00 ft, Y= 0.00 ft, Z= -3.00 ft

SUPPORT DATA:
G02, Guide, Support Id= G02 1, Connected to Ground, Comp.Wt = 0.000 lb, Stiffness= RIGID,
Gap-Down= 0.00 inch, Gap-Above= 0.00 inch, Gap-Left= 0.00 inch, Gap-Right= 0.00 inch, Friction= 0.80,
Gaps setting= Weightless

*** SEGMENT H

From G01 to H01, DY= 0.17 ft Tee

COMPONENT DATA (Tee Branch, Center= G01):
Other, SIFI= 1.00, SIFO= 1.00
Rigid, Include weight= No, Include expansion= Yes

PIPE DATA:
Pipe Id= 1SCH40, Composition= Carbon Steel, Nom Size= 1.000, OD= 1.315 inch, Wall Thk= 0.133 inch,
Mill= 0.017 inch, Pipe Density= 489.00 lb/cu.ft, Pipe Unit Wgt= 1.68 lb/ft

POINT DATA:
G01, Coordinates, X= 0.50 ft, Y= 0.00 ft, Z= -3.00 ft

From H01 to H02, DX= 0.19 ft, DY= 0.27 ft, L= 0.33 ft Run

POINT DATA:
H01, Coordinates, X= 0.50 ft, Y= 0.17 ft, Z= -3.00 ft
H01, Joint End Type= User-defined, SIFI= 1.83, SIFO= 1.83, Override all other values= No

---
From H02 to H03, DY= 4.56 ft Bend

COMPONENT DATA (Bend, TIP= H02, Near= H02 N, Far= H02 F):
Elbow, Radius= 3.00 inch, Bend angle= 35.13 deg, End flanges= 0, Flex= Auto, SIFI= 1.00, SIFO= 1.00

POINT DATA:
H02, Coordinates, X= 0.69 ft, Y= 0.44 ft, Z= -3.00 ft
H02 N, Coordinates, X= 0.64 ft, Y= 0.38 ft, Z= -3.00 ft

C O M P O N E N T D A T A L I S T I N G

H02 F, Coordinates, X= 0.69 ft, Y= 0.52 ft, Z= -3.00 ft
H03, Coordinates, X= 0.69 ft, Y= 5.00 ft, Z= -3.00 ft

SUPPORT DATA:
H03, Guide, Support Id= H03 1, Connected to Ground, Comp.Wt = 0.000 lb, Stiffness= RIGID, Gap -Z= 0.00 inch, Gap +Z= 0.00 inch, Gap -X= 0.00 inch, Gap +X= 0.00 inch, Friction= 0.80, Gaps setting= Weightless

---

*** SEGMENT I

From I00 to I01, DX= 0.50 ft Run

PIPE DATA:
Pipe Id= 6SCH40, Composition= Carbon Steel, Nom Size= 6 in, OD= 6.625 inch, Wall Thk= 0.280 inch, Mill= 0.035 inch, Pipe Density= 489.00 lb/cu.ft, Pipe Unit Wgt= 18.95 lb/ft

POINT DATA:
I00, Coordinates, X= 0.00 ft, Y= 0.00 ft, Z= -4.00 ft

SUPPORT DATA:
I00, Anchor, Connected to: Ground, KTX= Rigid, KTY= Rigid, KTZ= Rigid, KRX= Rigid, KRY= Rigid, KRZ= Rigid

---

From I01 to I02, DX= 0.50 ft Tee

COMPONENT DATA (Tee Header, Center= I01):
Other, SIFI= 1.00, SIFO= 1.00

POINT DATA:
I01, Coordinates, X= 0.50 ft, Y= 0.00 ft, Z= -4.00 ft
I02, Coordinates, X= 1.00 ft, Y= 0.00 ft, Z= -4.00 ft

SUPPORT DATA:
I02, Guide, Support Id= I02 1, Connected to Ground, Comp.Wt = 0.000 lb, Stiffness= RIGID, Gap-Down= 0.00 inch, Gap-Above= 0.00 inch, Gap-Left= 0.00 inch, Gap-Right= 0.00 inch, Friction= 0.80, Gaps setting= Weightless

---

*** SEGMENT J

From I01 to J01, DY= 0.25 ft Tee

COMPONENT DATA (Tee Branch, Center= I01):
Other, SIFI= 1.00, SIFO= 1.00
Rigid, Include weight= No, Include expansion= Yes

PIPE DATA:
Pipe Id= 1SCH40, Composition= Carbon Steel, Nom Size= 1.000, OD= 1.315 inch, Wall Thk= 0.133 inch, Mill= 0.017 inch, Pipe Density= 489.00 lb/cu.ft, Pipe Unit Wgt= 1.68 lb/ft

POINT DATA:

```
-----------------------------------------------------------------------------------------------------------------
Encasement Drain and Test Port
02/04/2020 2018719                                                    BENTLEY
07:55 AM                                                              AutoPIPE Nuclear 12.00.00.16   MODEL  PAGE   7
-----------------------------------------------------------------------------------------------------------------

                 C O M P O N E N T   D A T A   L I S T I N G

   I01, Coordinates, X= 0.50 ft, Y= 0.00 ft, Z= -4.00 ft

 ---------------------------------------------------------------------------
 From J01 to J02, DX= 0.19 ft, DY= 0.27 ft, L= 0.33 ft                      Run

 POINT DATA:
   J01, Coordinates, X= 0.50 ft, Y= 0.25 ft, Z= -4.00 ft
   J01, Joint End Type= User-defined, SIFI= 2.14, SIFO= 2.14, Override all other values= No

 ---------------------------------------------------------------------------
 From J02 to J03, DY= 4.56 ft                                               Bend

 COMPONENT DATA (Bend, TIP= J02, Near= J02 N, Far= J02 F):
   Elbow, Radius= 3.00 inch, Bend angle= 35.13 deg, End flanges= 0, Flex= Auto, SIFI= 1.00, SIFO= 1.00

 POINT DATA:
   J02, Coordinates, X= 0.69 ft, Y= 0.52 ft, Z= -4.00 ft
   J02 N, Coordinates, X= 0.64 ft, Y= 0.46 ft, Z= -4.00 ft
   J02 F, Coordinates, X= 0.69 ft, Y= 0.60 ft, Z= -4.00 ft
   J03, Coordinates, X= 0.69 ft, Y= 5.08 ft, Z= -4.00 ft

 SUPPORT DATA:
   J03, Guide, Support Id= J03  1, Connected to Ground, Comp.Wt = 0.000 lb, Stiffness= RIGID, Gap -Z= 0.00 inch,
   Gap +Z= 0.00 inch, Gap -X= 0.00 inch, Gap +X= 0.00 inch, Friction= 0.80, Gaps setting= Weightless

 ---------------------------------------------------------------------------


 Number of points in the system (Pipe + Frame + Soil): 50 + 0 + 0 = 50


 Weight of Empty Pipes + Weight of Contents = Total Weight of System
           80.1 lb     +         0.0 lb     =          80.1 lb
```

C O O R D I N A T E S D A T A L I S T I N G

POINT NAME	COORDINATE (ft) X	Y	Z
*** SEGMENT A			
A00	0.00	0.00	0.00
A01	0.20	0.00	-0.00
A02	0.47	0.00	-0.00
*** SEGMENT B			
A01	0.20	0.00	-0.00
B01	0.20	-0.17	-0.00
B02 N	0.20	-0.63	-0.00
B02	0.20	-0.82	-0.00
B02 F	0.38	-0.82	0.05
B03	0.72	-0.82	0.15
*** SEGMENT C			
C00	0.00	0.00	-1.00
C01	0.20	0.00	-1.00
C02	0.47	0.00	-1.00
*** SEGMENT D			
C01	0.20	0.00	-1.00
D01	0.20	-0.17	-1.00
D02 N	0.20	-1.21	-1.00
D02	0.20	-1.40	-1.00
D02 F	0.38	-1.40	-1.05
D03	0.72	-1.40	-1.15
*** SEGMENT E			
E00	0.00	0.00	-2.00
E01	0.23	0.00	-2.00
E02	0.53	0.00	-2.00
*** SEGMENT F			
E01	0.23	0.00	-2.00
F01	0.23	-0.25	-2.00
F02 N	0.23	-1.48	-2.00
F02	0.23	-1.67	-2.00
F02 F	0.42	-1.67	-2.00
F03	0.80	-1.67	-2.00
*** SEGMENT G			
G00	0.00	0.00	-3.00
G01	0.50	0.00	-3.00
G02	1.00	0.00	-3.00
*** SEGMENT H			
G01	0.50	0.00	-3.00
H01	0.50	0.17	-3.00
H02 N	0.64	0.38	-3.00
H02	0.69	0.44	-3.00
H02 F	0.69	0.52	-3.00
H03	0.69	5.00	-3.00

C O O R D I N A T E S D A T A L I S T I N G

POINT NAME	COORDINATE (ft) X	Y	Z
*** SEGMENT I			
I00	0.00	0.00	-4.00
I01	0.50	0.00	-4.00
I02	1.00	0.00	-4.00
*** SEGMENT J			
I01	0.50	0.00	-4.00
J01	0.50	0.25	-4.00
J02 N	0.64	0.46	-4.00
J02	0.69	0.52	-4.00
J02 F	0.69	0.60	-4.00
J03	0.69	5.08	-4.00

S E G M E N T D A T A L I S T I N G

Segment Name	First Node	Last Node	Line Number	Apply Wind	Apply Bowing	Apply Buoyancy
A	A00	A02		No	No	No
B	A01	B03		No	No	No
C	C00	C02		No	No	No
D	C01	D03		No	No	No
E	E00	E02		No	No	No
F	E01	F03		No	No	No
G	G00	G02		No	No	No
H	G01	H03		No	No	No
I	I00	I02		No	No	No
J	I01	J03		No	No	No

P I P E D A T A L I S T I N G

Pipe ID/ Material CladMaterial ---Line Class---	Nom/ Sch	O.D. inch	-----Thickness(inch)----- W.Th. Clad	Corr	Mill	Insu	Ling	Spec Grav/ InsMt	InsuDen/ LingDen/ CladDen lb/cu.ft	Weight(lb/ft) Pipe/ Cont	Ling/ Insu/ Clad	Total	E/ W/ f	Composition/ Steel Group/ Tcr
Tag No. : <None>														
2SCH40	2.000	2.375	0.154	0.01	0.02	0	0	0	0.000	3.65	0	3.65	1.00	Carbon Steel
A53-B	40S								0.000	0	0		Auto	Carbon
			0						0.000		0		1.00	650.000
Tag No. : <None>														
6SCH40	6	6.625	0.280	0.01	0.04	0	0	0	0.000	18.95	0	18.95	1.00	Carbon Steel
A53-B	40S								0.000	0	0		1.00	Carbon
			0						0.000		0		1.00	650.000
Tag No. : <None>														
4SCH40	4	4.500	0.237	0.01	0.03	0	0	0	0.000	10.78	0	10.78	1.00	Carbon Steel
A53-B	40S								0.000	0	0		1.00	Carbon
			0						0.000		0		1.00	650.000
Tag No. : <None>														
1.5SCH40	1.500	1.900	0.145	0.01	0.02	0	0	0	0.000	2.71	0	2.71	1.00	Carbon Steel
A53-B	40S								0.000	0	0		1.00	Carbon
			0						0.000		0		1.00	650.000
Tag No. : <None>														
1SCH40	1.000	1.315	0.133	0.01	0.02	0	0	0	0.000	1.68	0	1.68	1.00	Carbon Steel
A53-B	40S								0.000	0	0		1.00	Carbon
			0						0.000		0		1.00	650.000

M A T E R I A L D A T A L I S T I N G

Material Name	Pipe ID	Density lb/cu.ft	Pois. Ratio	Temper. deg F	Modulus E6 psi Axial	Hoop	Shear	Expans. in/100ft	Composition
A53-B	4SCH40	489.0	0.30	60.0	29.541	29.541	11.362		Carbon Steel
				200.0	28.800			1.0750	
A53-B	1.5SCH40	489.0	0.30	60.0	29.541	29.541	11.362		Carbon Steel
				200.0	28.800			1.0750	
A53-B	2SCH40	489.0	0.30	60.0	29.541	29.541	11.362		Carbon Steel
				200.0	28.800			1.0750	
A53-B	6SCH40	489.0	0.30	60.0	29.541	29.541	11.362		Carbon Steel
				200.0	28.800			1.0750	
A53-B	1SCH40	489.0	0.30	60.0	29.541	29.541	11.362		Carbon Steel
				200.0	28.800			1.0750	

M A T E R I A L A L L O W A B L E D A T A L I S T I N G

Material Name	Pipe ID	Temper. deg F	Allow. psi	Yield psi	Ultimate	Weld Reduction Factor W
A53-B	4SCH40	60.0	20000.0	35000.0	60000.0	1.000
		200.0	20000.0	32100.0		1.000
A53-B	1.5SCH40	60.0	20000.0	35000.0	60000.0	1.000
		200.0	20000.0	32100.0		1.000
A53-B	2SCH40	60.0	20000.0	35000.0	60000.0	1.000
		200.0	20000.0	32100.0		1.000
A53-B	6SCH40	60.0	20000.0	35000.0	60000.0	1.000
		200.0	20000.0	32100.0		1.000
A53-B	1SCH40	60.0	20000.0	35000.0	60000.0	1.000
		200.0	20000.0	32100.0		1.000

OPERATING TEMPERATURE AND PRESSURE DATA
STRESSES IN psi

POINT NAME	CASE	PRESS. psi	TEMPER deg F	EXPAN. in/100ft	MODULUS E6 psi	ALLOW STRESS	YIELD STRESS
*** SEGMENT A							
A00	T1	60.00	200	1.075	28.800	20000	32100
A02	Same as previous point.						
*** SEGMENT B							
A01	T1	60.00	200	1.075	28.800	20000	32100
B03	Same as previous point.						
*** SEGMENT C							
C00	T1	60.00	200	1.075	28.800	20000	32100
C02	Same as previous point.						
*** SEGMENT D							
C01	T1	60.00	200	1.075	28.800	20000	32100
D03	Same as previous point.						
*** SEGMENT E							
E00	T1	60.00	200	1.075	28.800	20000	32100
E02	Same as previous point.						
*** SEGMENT F							
E01	T1	60.00	200	1.075	28.800	20000	32100
F03	Same as previous point.						
*** SEGMENT G							
G00	T1	60.00	200	1.075	28.800	20000	32100
G02	Same as previous point.						
*** SEGMENT H							
G01	T1	60.00	200	1.075	28.800	20000	32100
H03	Same as previous point.						
*** SEGMENT I							
I00	T1	60.00	200	1.075	28.800	20000	32100
I02	Same as previous point.						
*** SEGMENT J							
I01	T1	60.00	200	1.075	28.800	20000	32100
J03	Same as previous point.						

u User-defined value
* Non-code material for allowable stress;
Non-standard material for expansion and modulus

L O A D S S U M M A R Y D A T A L I S T I N G

EARTHQUAKE LOAD CASES :

Number of load cases : 8

Load case 1 - E1

Seismic Code : User-defined

X-Resultant = 0.186 Y-Resultant = 0.083 Z-Resultant = 0.186

Load case 2 - E2

Seismic Code : User-defined

X-Resultant = 0.186 Y-Resultant = 0.083 Z-Resultant = -0.186

Load case 3 - E3

Seismic Code : User-defined

X-Resultant = -0.186 Y-Resultant = 0.083 Z-Resultant = 0.186

Load case 4 - E4

Seismic Code : User-defined

X-Resultant = -0.186 Y-Resultant = 0.083 Z-Resultant = -0.186

Load case 5 - E5

Seismic Code : User-defined

X-Resultant = 0.186 Y-Resultant = -0.083 Z-Resultant = 0.186

Load case 6 - E6

Seismic Code : User-defined

X-Resultant = 0.186 Y-Resultant = -0.083 Z-Resultant = -0.186

Load case 7 - E7

Seismic Code : User-defined

X-Resultant = -0.186 Y-Resultant = -0.083 Z-Resultant = 0.186

Load case 8 - E8

Seismic Code : User-defined

X-Resultant = -0.186 Y-Resultant = -0.083 Z-Resultant = -0.186

S U P P O R T D A T A L I S T I N G

```
 Point Support  Support Conn.to Comp.Wt  Stiff.     Gap 1   Gap 2  Fric. GapSet Preload Ld.Var Size    Figure
 Name   Type      ID     /Dir    (lb)               (in)    (in)   Fact. /#hgr   (lbf)
 ----- -------- ------- ------- ------- ---------- ------- ------- ----- ------ ------- ------ ---- ------------

 Tag No.: <None>                                Attachment ID: <None>
 G02   Guide-V  G02  1  Ground    0.000 Rigid        0.000   0.000  0.80
       Guide-H  G02  1  Ground    0.000 Rigid        0.000   0.000  0.80

 Tag No.: <None>                                Attachment ID: <None>
 H03   Guide-V  H03  1  Ground    0.000 Rigid        0.000   0.000  0.80
       Guide-H  H03  1  Ground    0.000 Rigid        0.000   0.000  0.80
            Gap Dir.: (Gap1_V=-Z, Gap2_V=+Z, Gap1_H=-X, Gap2_H=+X)

 Tag No.: <None>                                Attachment ID: <None>
 I02   Guide-V  I02  1  Ground    0.000 Rigid        0.000   0.000  0.80
       Guide-H  I02  1  Ground    0.000 Rigid        0.000   0.000  0.80

 Tag No.: <None>                                Attachment ID: <None>
 J03   Guide-V  J03  1  Ground    0.000 Rigid        0.000   0.000  0.80
       Guide-H  J03  1  Ground    0.000 Rigid        0.000   0.000  0.80
            Gap Dir.: (Gap1_V=-Z, Gap2_V=+Z, Gap1_H=-X, Gap2_H=+X)


 Spring Manufacturer: Anvil/Grinnell
 NOTE 1: No soil supports present in the system.
 Gap 1 : V-stop,Guide-V=down, Linestop,Incline,Tie/link=backward, Guide-H=Left
 Gap 2 : V-stop,Guide-V=Up  , Linestop,Incline,Tie/link=forward , Guide-H=Right
 Stiffness units for rotation support: ft-lb/deg, all others: lb/in
```

B E N D D A T A L I S T I N G

Point Name	Bend Type	Radius (in)	Angle (deg)	OD (in)	tnom (in)	Material	Flan^ /Cuts	SIF in	SIF out	Analysis Set	Flexibility (K)	Pressure Case
B02	Elbow	2.25L	90.0	1.900	0.145	A53-B	0/0	1.60	1.33	1	3.89	None
D02	Elbow	2.25L	90.0	1.900	0.145	A53-B	0/0	1.60	1.33	1	3.89	None
F02	Elbow	2.25L	90.0	1.900	0.145	A53-B	0/0	1.60	1.33	1	3.89	None
H02	Elbow	3.00	35.1	1.315	0.133	A53-B	0/0	1.00	1.00	1	1.44	None
J02	Elbow	3.00	35.1	1.315	0.133	A53-B	0/0	1.00	1.00	1	1.44	None

^ = Number of bend ends where either a flange or valve is within distance
(L/D) x Nominal diameter, where L/D is defined under Tools > Model options > Edit
L = Long radius

T E E D A T A L I S T I N G

Point Name	Point Seg-Type	Pipe OD (in)	Pipe Thk. (in)	Material	Tee Type	**Crotch Radius (in)	*Crotch Thick (in)	SIF in	SIF out
A01	A-Header	4.500	0.237	A53-B	Other			1.00	1.00
	B-Branch	1.900	0.145	A53-B					
C01	C-Header	4.500	0.237	A53-B	Other			1.00	1.00
	D-Branch	1.900	0.145	A53-B					
E01	E-Header	6.625	0.280	A53-B	Other			1.00	1.00
	F-Branch	1.900	0.145	A53-B					
G01	G-Header	4.500	0.237	A53-B	Other			1.00	1.00
	H-Branch	1.315	0.133	A53-B					
I01	I-Header	6.625	0.280	A53-B	Other			1.00	1.00
	J-Branch	1.315	0.133	A53-B					

* = Pad thickness for reinforced tee.
**= Fillet radius for Raised tee or discontinuity dist. for Thickened tee.

J O I N T T Y P E / U S E R - S I F D A T A L I S T I N G

Point Name	Point Type	SIF in	SIF out	Axial Index	Tors. Index	Axial SIF	Tors. SIF	Joint Type	Size /Avg. (in)	Max. (in)	Over ride SIF	Over ride A&T
B01	Run	1.830	1.830	1.000	1.000	1.000	1.000	USER			No	No
D01	Run	1.830	1.830	1.000	1.000	1.000	1.000	USER			No	No
F01	Run	2.140	2.140	1.000	1.000	1.000	1.000	USER			No	No
H01	Run	1.830	1.830	1.000	1.000	1.000	1.000	USER			No	No
J01	Run	2.140	2.140	1.000	1.000	1.000	1.000	USER			No	No

R I G I D P I P E D A T A L I S T I N G

From Point	To Point	Include Weight	Include Expansion	Rigid Factor
A01	B01	No	Yes	1000.0
C01	D01	No	Yes	1000.0
E01	F01	No	Yes	1000.0
G01	H01	No	Yes	1000.0
I01	J01	No	Yes	1000.0

C E N T E R O F G R A V I T Y R E P O R T

Description		Weight (lb)	X CoG (ft)	Y CoG (ft)	Z CoG (ft)
Valve	:	0.00	0.00	0.00	0.00
Support	:	0.00	0.00	0.00	0.00
Flange	:	0.00	0.00	0.00	0.00
Flexible Joint	:	0.00	0.00	0.00	0.00
Additional Weight	:	0.00	0.00	0.00	0.00
Pipes (Run, Bend, Tee, Reducer)	:	80.10	0.44	0.36	-2.58
PipeTot (Valve+Support+Flange+Flex. Jt.+Add. Wt.+Pipes)	:	80.10	0.44	0.36	-2.58
Insulation	:	0.00	0.00	0.00	0.00
Cladding	:	0.00	0.00	0.00	0.00
Lining	:	0.00	0.00	0.00	0.00
Contents	:	0.00	0.00	0.00	0.00
Beam	:	0.00	0.00	0.00	0.00
PipeTot + Ins.	:	80.10	0.44	0.36	-2.58
PipeTot + Ins. + Clad.	:	80.10	0.44	0.36	-2.58
PipeTot + Ins. + Clad. + Lin.	:	80.10	0.44	0.36	-2.58
PipeTot + Ins. + Clad. + Lin. + Cont.	:	80.10	0.44	0.36	-2.58
PipeTot + Beam	:	80.10	0.44	0.36	-2.58
PipeTot + Ins. + Beam	:	80.10	0.44	0.36	-2.58
PipeTot + Ins. + Clad. + Beam	:	80.10	0.44	0.36	-2.58
PipeTot + Ins. + Clad. + Lin. + Beam	:	80.10	0.44	0.36	-2.58
PipeTot + Ins. + Clad. + Lin. + Cont. + Beam	:	80.10	0.44	0.36	-2.58

NOTE: COG report only includes the currently visible beams and segments.
All pipe segments are included.
No beams present in the model.

L O A D C A S E D E S C R I P T I O N

Load Case	Load Case Name	Description
GR	Gravity	
T1	Thermal 1	
E1	Earth 1	
E2	Earth 2	
E3	Earth 3	
E4	Earth 4	
E5	Earth 5	
E6	Earth 6	
E7	Earth 7	
E8	Earth 8	
P1	Press 1	

T E E F L E X I B I L I T I E S D A T A L I S T I N G

Point Name	Point Seg-Type	Flexibility fac. k In-pl (none)	Flexibility fac. k Out-pl (none)	Flexibility fac. k Torsn (none)	Flange Factor (c) In-pl (none)	Flange Factor (c) Out-pl (none)	Flange Factor (c) Torsn (none)	Rotational Stiffness In-pl (ft-lb/deg)	Rotational Stiffness Out-pl (ft-lb/deg)	Rotational Stiffness Torsn (ft-lb/deg)
A01	*** Tee is not ASME B31J compliant ***									
C01	*** Tee is not ASME B31J compliant ***									
E01	*** Tee is not ASME B31J compliant ***									
G01	*** Tee is not ASME B31J compliant ***									
I01	*** Tee is not ASME B31J compliant ***									

Note: The rotational stiffness values displayed are calculated for branch and run independently. Program uses "simultaneous use" stiffness values in the analysis by combining branch and run stiffness values.

A N A L Y S I S S U M M A R Y

```
Current model revision number : 8

  Constant values used
           Acceleration due to gravity................  386.40000 in/s/s
           Density of water for specific gravity Cal..     62.400 lb/cu.ft
           Density of sea water......................     62.400 lb/cu.ft
           Density of ground water ..................     62.400 lb/cu.ft

  Static - Analysis set number .................. 1
           Date and Time of analysis ............ Feb 4, 2020   7:50 AM
           Model Revision Number ................ 8
           Number of load cases ................. 11
           Load cases analyzed .................. GR T1 E1 E2 E3 E4 E5 E6 E7 E8 P1
           Description .......................... Analysis Set No.1
           Gaps/Friction/Soil considered ......... Yes
           Tolerance - Force, Displacement ....... 10.00 lbf  0.0010 in
           Friction - Scale Factor, Tolerance .... 1.00   0.10
           Ignore friction for cases E1,E2,E3 .... Yes
           Ignore friction for gravity case ...... Yes
           Hanger design run ..................... No
           Cut short included .................... No
           Thermal bowing included ............... No
           Include Bourdon rotational effect ..... No
           Pipe radius for Bourdon calculation ... Mean
           Occasional load analysis type ......... Nonlinear
           Non-linear analysis summary file ......
             Encasement Drain and Test Port.LOG
           Use default load sequence ............ Yes
           Base load cases for nonlinear analysis
                                                     GR   = None
                                                     T1   = GR
                                                     E1   = GR
                                                     E2   = GR
                                                     E3   = GR
                                                     E4   = GR
                                                     E5   = GR
                                                     E6   = GR
                                                     E7   = GR
                                                     E8   = GR
                                                     P1   = T1
           Weight of contents included ........... Yes
           Fluid density factor for contents ..... 1.00
           Pressure stiffening case .............. None
           Hot modulus case ...................... None
           Pressure Extension..................... Yes
           Water elevation for buoyancy loads .... Not considered
           Use corroded thickness in analysis .... Yes
           Rigid stiffness factor ................ 1000.0
           Support rigid stiffness (translation) . 0.100000E+11 lb/in
           Support rigid stiffness (rotation) .... 0.100000E+11 ft-lb/deg
           Anchor rigid stiffness (translation) .. 0.100000E+11 lb/in
           Anchor rigid stiffness (rotation) ..... 0.100000E+11 ft-lb/deg
           Remove Lift-Off Supports .............. No
```

CODE COMPLIANCE COMBINATIONS

<Description> Combination	Category	Method	Case/Combination	Factor	M/S	K-Factor	Allowable (psi)	D/A/P/C
GR + Max P{1}	Sustain	Sum	GR[1]	1.00			Automatic	Y Y Y Y
			Max Long	1.00				
Max Range	Expansion	Sum	Temp. Range	1.00			Automatic	Y Y Y Y
Amb to T1{1}	Expansion	Sum	T1[1]	1.00			Automatic	Y Y Y Y
Sus. + E1{1}	Occasion	Abs sum	E1[1]	1.00		1.330	Automatic	Y Y Y Y
			Max Sus	1.00				
Sus. + E2{1}	Occasion	Abs sum	E2[1]	1.00		1.330	Automatic	Y Y Y Y
			Max Sus	1.00				
Sus. + E3{1}	Occasion	Abs sum	E3[1]	1.00		1.330	Automatic	Y Y Y Y
			Max Sus	1.00				
Sus. + E4{1}	Occasion	Abs sum	E4[1]	1.00		1.330	Automatic	Y Y Y Y
			Max Sus	1.00				
Sus. + E5{1}	Occasion	Abs sum	E5[1]	1.00		1.330	Automatic	Y Y Y Y
			Max Sus	1.00				
Sus. + E6{1}	Occasion	Abs sum	E6[1]	1.00		1.330	Automatic	Y Y Y Y
			Max Sus	1.00				
Sus. + E7{1}	Occasion	Abs sum	E7[1]	1.00		1.330	Automatic	Y Y Y Y
			Max Sus	1.00				
Sus. + E8{1}	Occasion	Abs sum	E8[1]	1.00		1.330	Automatic	Y Y Y Y
			Max Sus	1.00				
Max P{1}	Hoop	Sum	Max Hoop	1.00			Automatic	Y Y Y Y

Notes:

D/A/P/C: [D]efault/[A]uto-Update/[P]rint options/[C]Consistent (Y=Yes, N=No)

NON-CODE COMBINATIONS

<Description> Combination	Method	Case/Combination	Factor	D/A/P/C
Gravity{1}	Sum	GR[1]	1.00	Y Y Y Y
<200.00 deg F> Thermal 1{1}	Sum	T1[1]	1.00	Y Y Y N
< 0.19, 0.08, 0.19> Static Seismic 1{1}	Sum	E1[1]	1.00	Y Y Y N
< 0.19, 0.08, -0.19> Static Seismic 2{1}	Sum	E2[1]	1.00	Y Y Y N
< -0.19, 0.08, 0.19> Static Seismic 3{1}	Sum	E3[1]	1.00	Y Y Y N
< -0.19, 0.08, -0.19> Static Seismic 4{1}	Sum	E4[1]	1.00	Y Y Y N
< 0.19, -0.08, 0.19> Static Seismic 5{1}	Sum	E5[1]	1.00	Y Y Y N
< 0.19, -0.08, -0.19> Static Seismic 6{1}	Sum	E6[1]	1.00	Y Y Y N
< -0.19, -0.08, 0.19> Static Seismic 7{1}	Sum	E7[1]	1.00	Y Y Y N
< -0.19, -0.08, -0.19> Static Seismic 8{1}	Sum	E8[1]	1.00	Y Y Y N
Pressure 1{1}	Sum	P1[1]	1.00	Y Y Y N
GT1{1}	Sum	GR[1]	1.00	Y Y Y Y
		T1[1]	1.00	
GE1{1}	Sum	GR[1]	1.00	Y Y Y Y
		E1[1]	1.00	
GE2{1}	Sum	GR[1]	1.00	Y Y Y Y
		E2[1]	1.00	
GE3{1}	Sum	GR[1]	1.00	Y Y Y Y
		E3[1]	1.00	
GE4{1}	Sum	GR[1]	1.00	Y Y Y Y
		E4[1]	1.00	
GE5{1}	Sum	GR[1]	1.00	Y Y Y Y
		E5[1]	1.00	
GE6{1}	Sum	GR[1]	1.00	Y Y Y Y
		E6[1]	1.00	

NON-CODE COMBINATIONS

<Description> Combination	Method	Case/Combination	Factor	D/A/P/C
GE7{1}	Sum	GR[1]	1.00	Y Y Y Y
		E7[1]	1.00	
GE8{1}	Sum	GR[1]	1.00	Y Y Y Y
		E8[1]	1.00	
GT1P1{1}	Sum	GR[1]	1.00	Y Y Y Y
		T1[1]	1.00	
		P1[1]	1.00	

Notes:

D/A/P/C: [D]efault/[A]uto-Update/[P]rint options/[C]Consistent (Y=Yes, N=No)

CODE COMPLIANCE

```
Y - Factor ............................ 0.40
Design Pressure Factor ................ 1.00
Minimum stress ratio used in reports... 0.00
Number of stress points per span ...... 0
Include corrosion in stress calcs. .... Y
Include corrosion in Hoop stress calcs. Y
Include torsion in code stress ........ N
Include axial force in code stress .... Y
Include sustain load margin ........... Only if allowable stress is exceeded
Use minimum sustained margin........... Y
Set sustained SIF=1 no bends .......... N
Set occasional SIF = 1 ................ N
Set occasional SIF = 0.75i ............ Y
Apply cold/hot modulus ratio .......... N
Disable auto code combinations ........ N
Disable auto non-code combinations .... N
No. of thermal ranges to report ....... 0
Include Max Range combination ......... Y
Total stress .......................... Octahedral
Direct shear .......................... None
Longitudinal pressure calculation ..... AxF/area
Use code case 178 ..................... Y
Inc. Axial Str and Pcase in Sustained.. Y
Use alternate occasional allowable .... N
Apply circumferential weld WC factor .. N
ASME B31J Enabled ..................... N
```

R E S T R A I N T R E A C T I O N S

Point name	Load combination	FORCES (lbf) X	Y	Z	Result	MOMENTS (ft-lb) X	Y	Z	Result
A00	Anchor Tag No.: <None>					Connected to: Ground			
	Gravity{1}	0	-8	0	8	0	0	-2	2
	Thermal 1{1}	0	0	0	0	0	0	0	0
	Static Seismic 1{1}	2	1	2	2	0	0	1	1
	Static Seismic 2{1}	2	1	-2	2	0	0	1	1
	Static Seismic 3{1}	-2	1	2	2	0	0	0	1
	Static Seismic 4{1}	-2	1	-2	2	0	0	0	1
	Static Seismic 5{1}	2	-1	2	2	0	0	0	1
	Static Seismic 6{1}	2	-1	-2	2	0	0	0	1
	Static Seismic 7{1}	-2	-1	2	2	0	0	-1	1
	Static Seismic 8{1}	-2	-1	-2	2	0	0	-1	1
	Pressure 1{1}	0	0	0	0	0	0	0	0
	GT1{1}	0	-8	0	8	0	0	-2	2
	GE1{1}	2	-8	2	8	0	0	-2	2
	GE2{1}	2	-8	-2	8	1	0	-2	2
	GE3{1}	-2	-8	2	8	0	0	-3	3
	GE4{1}	-2	-8	-2	8	1	0	-3	3
	GE5{1}	2	-9	2	9	0	0	-2	2
	GE6{1}	2	-9	-2	9	1	0	-2	2
	GE7{1}	-2	-9	2	9	0	0	-3	3
	GE8{1}	-2	-9	-2	9	1	0	-3	3
	GT1P1{1}	0	-8	0	8	0	0	-2	2
C00	Anchor Tag No.: <None>					Connected to: Ground			
	Gravity{1}	0	-10	0	10	0	0	-3	3
	Thermal 1{1}	0	0	0	0	0	0	0	0
	Static Seismic 1{1}	2	1	2	3	-1	-1	1	2
	Static Seismic 2{1}	2	1	-2	3	1	0	1	2
	Static Seismic 3{1}	-2	1	2	3	-1	0	-1	1
	Static Seismic 4{1}	-2	1	-2	3	1	1	-1	1
	Static Seismic 5{1}	2	-1	2	3	-1	-1	1	1
	Static Seismic 6{1}	2	-1	-2	3	1	0	1	1
	Static Seismic 7{1}	-2	-1	2	3	-1	0	-1	2
	Static Seismic 8{1}	-2	-1	-2	3	1	1	-1	2
	Pressure 1{1}	0	0	0	0	0	0	0	0
	GT1{1}	0	-10	0	10	0	0	-3	3
	GE1{1}	2	-9	2	10	-1	-1	-2	2
	GE2{1}	2	-9	-2	10	1	0	-2	2
	GE3{1}	-2	-9	2	10	-1	0	-3	4
	GE4{1}	-2	-9	-2	10	1	1	-3	3
	GE5{1}	2	-11	2	11	-1	-1	-2	2
	GE6{1}	2	-11	-2	11	1	0	-2	2
	GE7{1}	-2	-11	2	11	-1	0	-4	4
	GE8{1}	-2	-11	-2	11	1	1	-4	4
	GT1P1{1}	0	-10	0	10	0	0	-3	3

R E S T R A I N T R E A C T I O N S

Point name	Load combination	FORCES (lbf) X	Y	Z	Result	MOMENTS (ft-lb) X	Y	Z	Result
E00	Anchor Tag No.: <None>					Connected to: Ground			
	Gravity{1}	0	-16	0	16	0	0	-5	5
	Thermal 1{1}	0	0	0	0	0	0	0	0
	Static Seismic 1{1}	3	1	3	4	-1	-1	2	2
	Static Seismic 2{1}	3	1	-3	4	1	1	2	2
	Static Seismic 3{1}	-3	1	3	4	-1	-1	-1	2
	Static Seismic 4{1}	-3	1	-3	4	1	1	-1	2
	Static Seismic 5{1}	3	-1	3	4	-1	-1	1	2
	Static Seismic 6{1}	3	-1	-3	4	1	1	1	2
	Static Seismic 7{1}	-3	-1	3	4	-1	-1	-2	2
	Static Seismic 8{1}	-3	-1	-3	4	1	1	-2	2
	Pressure 1{1}	0	0	0	0	0	0	0	0
	GT1{1}	0	-16	0	16	0	0	-5	5
	GE1{1}	3	-14	3	15	-1	-1	-3	3
	GE2{1}	3	-14	-3	15	1	1	-3	3
	GE3{1}	-3	-14	3	15	-1	-1	-5	6
	GE4{1}	-3	-14	-3	15	1	1	-5	6
	GE5{1}	3	-17	3	17	-1	-1	-4	4
	GE6{1}	3	-17	-3	17	1	1	-4	4
	GE7{1}	-3	-17	3	17	-1	-1	-6	6
	GE8{1}	-3	-17	-3	17	1	1	-6	6
	GT1P1{1}	0	-16	0	16	0	0	-5	5
G00	Anchor Tag No.: <None>					Connected to: Ground			
	Gravity{1}	0	-11	0	11	0	0	-2	2
	Thermal 1{1}	0	-1	0	1	0	0	0	0
	Static Seismic 1{1}	3	2	2	4	1	0	0	1
	Static Seismic 2{1}	3	2	-2	4	-1	0	0	1
	Static Seismic 3{1}	-3	0	2	3	1	0	0	1
	Static Seismic 4{1}	-3	0	-2	3	-1	0	0	1
	Static Seismic 5{1}	3	0	2	3	1	0	0	1
	Static Seismic 6{1}	3	0	-2	3	-1	0	0	1
	Static Seismic 7{1}	-3	-2	2	4	1	0	0	1
	Static Seismic 8{1}	-3	-2	-2	4	-1	0	0	1
	Pressure 1{1}	0	0	0	0	0	0	0	0
	GT1{1}	0	-12	0	12	0	0	-2	2
	GE1{1}	3	-9	2	9	1	0	-2	3
	GE2{1}	3	-9	-2	9	-1	0	-2	3
	GE3{1}	-3	-11	2	11	1	0	-2	2
	GE4{1}	-3	-11	-2	11	-1	0	-2	2
	GE5{1}	3	-11	2	11	1	0	-3	3
	GE6{1}	3	-11	-2	11	-1	0	-3	3
	GE7{1}	-3	-12	2	13	1	0	-3	3
	GE8{1}	-3	-12	-2	13	-1	0	-3	3
	GT1P1{1}	0	-12	0	12	0	0	-2	2

R E S T R A I N T R E A C T I O N S

Point name	Load combination	FORCES (lbf) X	Y	Z	Result	MOMENTS (ft-lb) X	Y	Z	Result
G02	Guide Tag No.: <None> [ID: G02 1]								
	Gravity{1}	0	-8	0	8	0	0	0	0
	Thermal 1{1}	0	1	0	1	0	0	0	0
	Static Seismic 1{1}	0	0	1	1	0	0	0	0
	Static Seismic 2{1}	0	0	-1	1	0	0	0	0
	Static Seismic 3{1}	0	2	1	2	0	0	0	0
	Static Seismic 4{1}	0	2	-1	2	0	0	0	0
	Static Seismic 5{1}	0	-2	1	2	0	0	0	0
	Static Seismic 6{1}	0	-2	-1	2	0	0	0	0
	Static Seismic 7{1}	0	0	1	1	0	0	0	0
	Static Seismic 8{1}	0	0	-1	1	0	0	0	0
	Pressure 1{1}	0	0	0	0	0	0	0	0
	GT1{1}	0	-7	0	7	0	0	0	0
	GE1{1}	0	-9	1	9	0	0	0	0
	GE2{1}	0	-9	-1	9	0	0	0	0
	GE3{1}	0	-7	1	7	0	0	0	0
	GE4{1}	0	-7	-1	7	0	0	0	0
	GE5{1}	0	-10	1	10	0	0	0	0
	GE6{1}	0	-10	-1	10	0	0	0	0
	GE7{1}	0	-8	1	8	0	0	0	0
	GE8{1}	0	-8	-1	8	0	0	0	0
	GT1P1{1}	0	-7	0	7	0	0	0	0
H03	Guide Tag No.: <None> [ID: H03 1]								
	Gravity{1}	0	0	0	0	0	0	0	0
	Thermal 1{1}	0	0	0	0	0	0	0	0
	Static Seismic 1{1}	1	0	1	1	0	0	0	0
	Static Seismic 2{1}	1	0	-1	1	0	0	0	0
	Static Seismic 3{1}	-1	0	1	1	0	0	0	0
	Static Seismic 4{1}	-1	0	-1	1	0	0	0	0
	Static Seismic 5{1}	1	0	1	1	0	0	0	0
	Static Seismic 6{1}	1	0	-1	1	0	0	0	0
	Static Seismic 7{1}	-1	0	1	1	0	0	0	0
	Static Seismic 8{1}	-1	0	-1	1	0	0	0	0
	Pressure 1{1}	0	0	0	0	0	0	0	0
	GT1{1}	0	0	0	0	0	0	0	0
	GE1{1}	1	0	1	1	0	0	0	0
	GE2{1}	1	0	-1	1	0	0	0	0
	GE3{1}	-1	0	1	1	0	0	0	0
	GE4{1}	-1	0	-1	1	0	0	0	0
	GE5{1}	1	0	1	1	0	0	0	0
	GE6{1}	1	0	-1	1	0	0	0	0
	GE7{1}	-1	0	1	1	0	0	0	0
	GE8{1}	-1	0	-1	1	0	0	0	0
	GT1P1{1}	0	0	0	0	0	0	0	0

R E S T R A I N T R E A C T I O N S

Point name	Load combination	FORCES (lbf) X	Y	Z	Result	MOMENTS (ft-lb) X	Y	Z	Result
I00	Anchor Tag No.: <None>					Connected to: Ground			
	Gravity{1}	0	-15	0	15	0	0	-3	3
	Thermal 1{1}	0	-1	0	1	0	0	0	0
	Static Seismic 1{1}	4	2	3	6	1	0	0	1
	Static Seismic 2{1}	4	2	-3	6	-1	0	0	1
	Static Seismic 3{1}	-4	0	3	5	1	0	1	1
	Static Seismic 4{1}	-4	0	-3	5	-1	0	1	1
	Static Seismic 5{1}	4	0	3	5	1	0	-1	1
	Static Seismic 6{1}	4	0	-3	5	-1	0	-1	1
	Static Seismic 7{1}	-4	-2	3	6	1	0	0	1
	Static Seismic 8{1}	-4	-2	-3	6	-1	0	0	1
	Pressure 1{1}	0	0	0	0	0	0	0	0
	GT1{1}	0	-16	0	16	0	0	-3	3
	GE1{1}	4	-13	3	14	1	0	-3	3
	GE2{1}	4	-13	-3	14	-1	0	-3	3
	GE3{1}	-5	-15	3	16	1	0	-2	3
	GE4{1}	-5	-15	-3	16	-1	0	-2	3
	GE5{1}	4	-16	3	16	1	0	-3	4
	GE6{1}	4	-16	-3	16	-1	0	-3	4
	GE7{1}	-5	-17	3	18	1	0	-3	3
	GE8{1}	-5	-17	-3	18	-1	0	-3	3
	GT1P1{1}	0	-16	0	16	0	0	-3	3
I02	Guide Tag No.: <None> [ID: I02 1]								
	Gravity{1}	0	-12	0	12	0	0	0	0
	Thermal 1{1}	0	1	0	1	0	0	0	0
	Static Seismic 1{1}	0	0	2	2	0	0	0	0
	Static Seismic 2{1}	0	0	-2	2	0	0	0	0
	Static Seismic 3{1}	0	2	2	3	0	0	0	0
	Static Seismic 4{1}	0	2	-2	3	0	0	0	0
	Static Seismic 5{1}	0	-2	2	3	0	0	0	0
	Static Seismic 6{1}	0	-2	-2	3	0	0	0	0
	Static Seismic 7{1}	0	0	2	2	0	0	0	0
	Static Seismic 8{1}	0	0	-2	2	0	0	0	0
	Pressure 1{1}	0	0	0	0	0	0	0	0
	GT1{1}	0	-11	0	11	0	0	0	0
	GE1{1}	0	-12	2	12	0	0	0	0
	GE2{1}	0	-12	-2	12	0	0	0	0
	GE3{1}	0	-10	2	10	0	0	0	0
	GE4{1}	0	-10	-2	10	0	0	0	0
	GE5{1}	0	-14	2	14	0	0	0	0
	GE6{1}	0	-14	-2	14	0	0	0	0
	GE7{1}	0	-12	2	12	0	0	0	0
	GE8{1}	0	-12	-2	12	0	0	0	0
	GT1P1{1}	0	-11	0	11	0	0	0	0

R E S T R A I N T R E A C T I O N S

Point name	Load combination	FORCES (lbf) X	Y	Z	Result	MOMENTS (ft-lb) X	Y	Z	Result
J03	Guide Tag No.: <None> [ID: J03 1]								
	Gravity{1}	0	0	0	0	0	0	0	0
	Thermal 1{1}	0	0	0	0	0	0	0	0
	Static Seismic 1{1}	1	0	1	1	0	0	0	0
	Static Seismic 2{1}	1	0	-1	1	0	0	0	0
	Static Seismic 3{1}	-1	0	1	1	0	0	0	0
	Static Seismic 4{1}	-1	0	-1	1	0	0	0	0
	Static Seismic 5{1}	1	0	1	1	0	0	0	0
	Static Seismic 6{1}	1	0	-1	1	0	0	0	0
	Static Seismic 7{1}	-1	0	1	1	0	0	0	0
	Static Seismic 8{1}	-1	0	-1	1	0	0	0	0
	Pressure 1{1}	0	0	0	0	0	0	0	0
	GT1{1}	0	0	0	0	0	0	0	0
	GE1{1}	1	0	1	1	0	0	0	0
	GE2{1}	1	0	-1	1	0	0	0	0
	GE3{1}	-1	0	1	1	0	0	0	0
	GE4{1}	-1	0	-1	1	0	0	0	0
	GE5{1}	1	0	1	1	0	0	0	0
	GE6{1}	1	0	-1	1	0	0	0	0
	GE7{1}	-1	0	1	1	0	0	0	0
	GE8{1}	-1	0	-1	1	0	0	0	0
	GT1P1{1}	0	0	0	0	0	0	0	0

ASME B31.3 (2016) CODE COMPLIANCE
(Moments in ft-lb , Force in lbf) (Stress in psi)

Point name	Load combination	Axial Force	In-Pl. Moment	Out-Pl. Moment	Torsion Moment	S.I.F In	S.I.F Out	Index/SIF Ax.	Index/SIF Tor.	Eq. no.	Load type	Code Stress	Code Allow.
*** Segment A begin ***													
A00	Max P{1}									(3a)	HOOP	661	20000
	GR + Max P{1}	771	2	0	0	1.00	1.00	1.00	1.00	23a	SUST	262	20000
	TR:Amb to T1{1}	0	0	0	0	1.00	1.00	1.00	1.00	(17)	DISP	0	30000
	Amb to T1{1}	0	0	0	0	1.00	1.00	1.00	1.00	(17)	DISP	0	30000
	Sus. + E1{1}	2	3	0	1	1.00	1.00			23a	OCC	266	26600
	Sus. + E2{1}	2	3	0	1	1.00	1.00			23a	OCC	266	26600
	Sus. + E3{1}	2	3	0	1	1.00	1.00			23a	OCC	265	26600
	Sus. + E4{1}	2	3	0	1	1.00	1.00			23a	OCC	265	26600
	Sus. + E5{1}	2	3	0	1	1.00	1.00			23a	OCC	265	26600
	Sus. + E6{1}	2	3	0	1	1.00	1.00			23a	OCC	265	26600
	Sus. + E7{1}	2	3	0	1	1.00	1.00			23a	OCC	266	26600
	Sus. + E8{1}	2	3	0	1	1.00	1.00			23a	OCC	266	26600
A01	- Max P{1}									(3a)	HOOP	661	20000
	GR + Max P{1}	771	1	0	0	1.00	1.00	1.00	1.00	23a	SUST	257	20000
	TR:Amb to T1{1}	0	0	0	0	1.00	1.00	1.00	1.00	(17)	DISP	0	30000
	Amb to T1{1}	0	0	0	0	1.00	1.00	1.00	1.00	(17)	DISP	0	30000
	Sus. + E1{1}	1	1	0	1	1.00	1.00			23a	OCC	259	26600
	Sus. + E2{1}	1	1	0	1	1.00	1.00			23a	OCC	259	26600
	Sus. + E3{1}	1	1	0	1	1.00	1.00			23a	OCC	259	26600
	Sus. + E4{1}	1	1	0	1	1.00	1.00			23a	OCC	259	26600
	Sus. + E5{1}	1	1	0	1	1.00	1.00			23a	OCC	259	26600
	Sus. + E6{1}	1	1	0	1	1.00	1.00			23a	OCC	259	26600
	Sus. + E7{1}	1	1	0	1	1.00	1.00			23a	OCC	259	26600
	Sus. + E8{1}	1	1	0	1	1.00	1.00			23a	OCC	259	26600
A01	+ Max P{1}									(3a)	HOOP	661	20000
	GR + Max P{1}	771	0	0	0	1.00	1.00	1.00	1.00	23a	SUST	255	20000
	TR:Amb to T1{1}	0	0	0	0	1.00	1.00	1.00	1.00	(17)	DISP	0	30000
	Amb to T1{1}	0	0	0	0	1.00	1.00	1.00	1.00	(17)	DISP	0	30000
	Sus. + E1{1}	1	0	0	0	1.00	1.00			23a	OCC	255	26600
	Sus. + E2{1}	1	0	0	0	1.00	1.00			23a	OCC	255	26600
	Sus. + E3{1}	1	0	0	0	1.00	1.00			23a	OCC	255	26600
	Sus. + E4{1}	1	0	0	0	1.00	1.00			23a	OCC	255	26600
	Sus. + E5{1}	1	0	0	0	1.00	1.00			23a	OCC	255	26600
	Sus. + E6{1}	1	0	0	0	1.00	1.00			23a	OCC	255	26600
	Sus. + E7{1}	1	0	0	0	1.00	1.00			23a	OCC	255	26600
	Sus. + E8{1}	1	0	0	0	1.00	1.00			23a	OCC	255	26600

```
-----------------------------------------------------------------------------------------------------------------------
Encasement Drain and Test Port
02/04/2020 2018719                                                    BENTLEY
07:55 AM                                                              AutoPIPE Nuclear 12.00.00.16   RESULT PAGE  35
-----------------------------------------------------------------------------------------------------------------------

                              ASME B31.3 (2016)  CODE COMPLIANCE
              (Moments in ft-lb  , Force in lbf  )     (Stress in psi     )
 Point     Load                      Axial  In-Pl. Out-Pl. Torsion   S.I.F   Index/SIF  Eq. Load   Code   Code
 name   combination                  Force  Moment  Moment  Moment  In  Out   Ax. Tor.  no. type  Stress Allow.
 ------ ----------------------     ------- ------- ------- ------- ---- ---- ---- ---- ---- ----  ------ ------
 A02    Max P{1}                                                                        (3a) HOOP     661  20000
        GR + Max P{1}                 771       0       0       0 1.00 1.00 1.00 1.00  23a SUST     253  20000
        TR:Amb to T1{1}                 0       0       0       0 1.00 1.00 1.00 1.00 (17) DISP       0  30000
        Amb to T1{1}                    0       0       0       0 1.00 1.00 1.00 1.00 (17) DISP       0  30000
        Sus. + E1{1}                    0       0       0       0 1.00 1.00            23a  OCC     253  26600
        Sus. + E2{1}                    0       0       0       0 1.00 1.00            23a  OCC     253  26600
        Sus. + E3{1}                    0       0       0       0 1.00 1.00            23a  OCC     253  26600
        Sus. + E4{1}                    0       0       0       0 1.00 1.00            23a  OCC     253  26600
        Sus. + E5{1}                    0       0       0       0 1.00 1.00            23a  OCC     253  26600
        Sus. + E6{1}                    0       0       0       0 1.00 1.00            23a  OCC     253  26600
        Sus. + E7{1}                    0       0       0       0 1.00 1.00            23a  OCC     253  26600
        Sus. + E8{1}                    0       0       0       0 1.00 1.00            23a  OCC     253  26600

 *** Segment A  end   ***

 *** Segment B  begin ***

 B01    Max P{1}                                                                        (3a) HOOP     463  20000
        GR + Max P{1}                 129       0       1       0 1.37 1.37 1.00 1.00  23a SUST     200  20000
        TR:Amb to T1{1}                 0       0       0       0 1.83 1.83 1.83 1.00 (17) DISP       0  30000
        Amb to T1{1}                    0       0       0       0 1.83 1.83 1.83 1.00 (17) DISP       0  30000
        Sus. + E1{1}                    0       0       1       0 1.37 1.37            23a  OCC     225  26600
        Sus. + E2{1}                    0       0       1       0 1.37 1.37            23a  OCC     224  26600
        Sus. + E3{1}                    0       0       1       0 1.37 1.37            23a  OCC     222  26600
        Sus. + E4{1}                    0       0       1       0 1.37 1.37            23a  OCC     221  26600
        Sus. + E5{1}                    0       0       1       0 1.37 1.37            23a  OCC     221  26600
        Sus. + E6{1}                    0       0       1       0 1.37 1.37            23a  OCC     222  26600
        Sus. + E7{1}                    0       0       1       0 1.37 1.37            23a  OCC     224  26600
        Sus. + E8{1}                    0       0       1       0 1.37 1.37            23a  OCC     225  26600

 B02 N- Max P{1}                                                                        (3a) HOOP     463  20000
        GR + Max P{1}                 127       0       1       0 1.00 1.00 1.00 1.00  23a SUST     190  20000
        TR:Amb to T1{1}                 0       0       0       0 1.00 1.00 1.00 1.00 (17) DISP       0  30000
        Amb to T1{1}                    0       0       0       0 1.00 1.00 1.00 1.00 (17) DISP       0  30000
        Sus. + E1{1}                    0       0       1       0 1.00 1.00            23a  OCC     196  26600
        Sus. + E2{1}                    0       0       1       0 1.00 1.00            23a  OCC     197  26600
        Sus. + E3{1}                    0       0       1       0 1.00 1.00            23a  OCC     196  26600
        Sus. + E4{1}                    0       0       1       0 1.00 1.00            23a  OCC     194  26600
        Sus. + E5{1}                    0       0       1       0 1.00 1.00            23a  OCC     194  26600
        Sus. + E6{1}                    0       0       1       0 1.00 1.00            23a  OCC     196  26600
        Sus. + E7{1}                    0       0       1       0 1.00 1.00            23a  OCC     197  26600
        Sus. + E8{1}                    0       0       1       0 1.00 1.00            23a  OCC     196  26600
```

ASME B31.3 (2016) CODE COMPLIANCE
(Moments in ft-lb , Force in lbf) (Stress in psi)

Point name	Load combination	Axial Force	In-Pl. Moment	Out-Pl. Moment	Torsion Moment	S.I.F In	S.I.F Out	Index/SIF Ax.	Index/SIF Tor.	Eq. no.	Load type	Code Stress	Code Allow.
B02 N+	Max P{1}									(3a)	HOOP	463	20000
	GR + Max P{1}	127	1	0	0	1.20	1.00	1.00	1.00	23a	SUST	194	20000
	TR:Amb to T1{1}	0	0	0	0	1.60	1.33	1.00	1.00	(17)	DISP	0	30000
	Amb to T1{1}	0	0	0	0	1.60	1.33	1.00	1.00	(17)	DISP	0	30000
	Sus. + E1{1}	0	1	0	0	1.20	1.00			23a	OCC	201	26600
	Sus. + E2{1}	0	1	0	0	1.20	1.00			23a	OCC	202	26600
	Sus. + E3{1}	0	1	0	0	1.20	1.00			23a	OCC	200	26600
	Sus. + E4{1}	0	1	0	0	1.20	1.00			23a	OCC	198	26600
	Sus. + E5{1}	0	1	0	0	1.20	1.00			23a	OCC	198	26600
	Sus. + E6{1}	0	1	0	0	1.20	1.00			23a	OCC	200	26600
	Sus. + E7{1}	0	1	0	0	1.20	1.00			23a	OCC	202	26600
	Sus. + E8{1}	0	1	0	0	1.20	1.00			23a	OCC	201	26600
B02 F-	Max P{1}									(3a)	HOOP	463	20000
	GR + Max P{1}	125	0	0	0	1.20	1.00	1.00	1.00	23a	SUST	178	20000
	TR:Amb to T1{1}	0	0	0	0	1.60	1.33	1.00	1.00	(17)	DISP	0	30000
	Amb to T1{1}	0	0	0	0	1.60	1.33	1.00	1.00	(17)	DISP	0	30000
	Sus. + E1{1}	0	0	0	0	1.20	1.00			23a	OCC	180	26600
	Sus. + E2{1}	0	0	0	0	1.20	1.00			23a	OCC	180	26600
	Sus. + E3{1}	0	0	0	0	1.20	1.00			23a	OCC	180	26600
	Sus. + E4{1}	0	0	0	0	1.20	1.00			23a	OCC	180	26600
	Sus. + E5{1}	0	0	0	0	1.20	1.00			23a	OCC	180	26600
	Sus. + E6{1}	0	0	0	0	1.20	1.00			23a	OCC	180	26600
	Sus. + E7{1}	0	0	0	0	1.20	1.00			23a	OCC	180	26600
	Sus. + E8{1}	0	0	0	0	1.20	1.00			23a	OCC	180	26600
B02 F+	Max P{1}									(3a)	HOOP	546	20000
	GR + Max P{1}	205	0	0	0	1.00	1.00	1.00	1.00	23a	SUST	209	20000
	TR:Amb to T1{1}	0	0	0	0	1.00	1.00	1.00	1.00	(17)	DISP	0	30000
	Amb to T1{1}	0	0	0	0	1.00	1.00	1.00	1.00	(17)	DISP	0	30000
	Sus. + E1{1}	0	0	0	0	1.00	1.00			23a	OCC	210	26600
	Sus. + E2{1}	0	0	0	0	1.00	1.00			23a	OCC	210	26600
	Sus. + E3{1}	0	0	0	0	1.00	1.00			23a	OCC	210	26600
	Sus. + E4{1}	0	0	0	0	1.00	1.00			23a	OCC	210	26600
	Sus. + E5{1}	0	0	0	0	1.00	1.00			23a	OCC	210	26600
	Sus. + E6{1}	0	0	0	0	1.00	1.00			23a	OCC	210	26600
	Sus. + E7{1}	0	0	0	0	1.00	1.00			23a	OCC	210	26600
	Sus. + E8{1}	0	0	0	0	1.00	1.00			23a	OCC	210	26600
B03	Max P{1}									(3a)	HOOP	546	20000
	GR + Max P{1}	205	0	0	0	1.00	1.00	1.00	1.00	23a	SUST	203	20000
	TR:Amb to T1{1}	0	0	0	0	1.00	1.00	1.00	1.00	(17)	DISP	0	30000
	Amb to T1{1}	0	0	0	0	1.00	1.00	1.00	1.00	(17)	DISP	0	30000
	Sus. + E1{1}	0	0	0	0	1.00	1.00			23a	OCC	203	26600
	Sus. + E2{1}	0	0	0	0	1.00	1.00			23a	OCC	203	26600
	Sus. + E3{1}	0	0	0	0	1.00	1.00			23a	OCC	203	26600
	Sus. + E4{1}	0	0	0	0	1.00	1.00			23a	OCC	203	26600
	Sus. + E5{1}	0	0	0	0	1.00	1.00			23a	OCC	203	26600
	Sus. + E6{1}	0	0	0	0	1.00	1.00			23a	OCC	203	26600
	Sus. + E7{1}	0	0	0	0	1.00	1.00			23a	OCC	203	26600
	Sus. + E8{1}	0	0	0	0	1.00	1.00			23a	OCC	203	26600

```
-----------------------------------------------------------------------------------------------------------------------
Encasement Drain and Test Port
02/04/2020 2018719                                                                  BENTLEY
07:55 AM                                                                            AutoPIPE Nuclear 12.00.00.16   RESULT PAGE  37
-----------------------------------------------------------------------------------------------------------------------

                              ASME B31.3 (2016)  CODE COMPLIANCE
              (Moments in ft-lb  , Force in lbf  )     (Stress in psi     )
 Point     Load                    Axial  In-Pl. Out-Pl. Torsion   S.I.F   Index/SIF  Eq. Load   Code   Code
 name   combination                Force  Moment  Moment  Moment  In  Out   Ax. Tor.  no. type  Stress Allow.
 ------ ----------------------    ------- ------- ------- ------- ---- ---- ---- ---- ---- ----  ------ ------

 *** Segment B  end   ***

 *** Segment C  begin ***

 C00    Max P{1}                                                                                (3a) HOOP     661  20000
        GR + Max P{1}                 771       3       0       0 1.00 1.00 1.00 1.00  23a SUST     264  20000
        TR:Amb to T1{1}                 0       0       0       0 1.00 1.00 1.00 1.00 (17) DISP       0  30000
        Amb to T1{1}                    0       0       0       0 1.00 1.00 1.00 1.00 (17) DISP       0  30000
        Sus. + E1{1}                    2       4       1       1 1.00 1.00            23a  OCC     270  26600
        Sus. + E2{1}                    2       4       0       1 1.00 1.00            23a  OCC     270  26600
        Sus. + E3{1}                    2       3       0       1 1.00 1.00            23a  OCC     269  26600
        Sus. + E4{1}                    2       3       1       1 1.00 1.00            23a  OCC     269  26600
        Sus. + E5{1}                    2       3       1       1 1.00 1.00            23a  OCC     269  26600
        Sus. + E6{1}                    2       3       0       1 1.00 1.00            23a  OCC     269  26600
        Sus. + E7{1}                    2       4       0       1 1.00 1.00            23a  OCC     270  26600
        Sus. + E8{1}                    2       4       1       1 1.00 1.00            23a  OCC     270  26600

 C01  - Max P{1}                                                                                (3a) HOOP     661  20000
        GR + Max P{1}                 771       1       0       0 1.00 1.00 1.00 1.00  23a SUST     257  20000
        TR:Amb to T1{1}                 0       0       0       0 1.00 1.00 1.00 1.00 (17) DISP       0  30000
        Amb to T1{1}                    0       0       0       0 1.00 1.00 1.00 1.00 (17) DISP       0  30000
        Sus. + E1{1}                    1       2       0       1 1.00 1.00            23a  OCC     262  26600
        Sus. + E2{1}                    1       2       0       1 1.00 1.00            23a  OCC     262  26600
        Sus. + E3{1}                    1       2       0       1 1.00 1.00            23a  OCC     262  26600
        Sus. + E4{1}                    1       2       0       1 1.00 1.00            23a  OCC     262  26600
        Sus. + E5{1}                    1       2       0       1 1.00 1.00            23a  OCC     262  26600
        Sus. + E6{1}                    1       2       0       1 1.00 1.00            23a  OCC     262  26600
        Sus. + E7{1}                    1       2       0       1 1.00 1.00            23a  OCC     262  26600
        Sus. + E8{1}                    1       2       0       1 1.00 1.00            23a  OCC     262  26600

 C01  + Max P{1}                                                                                (3a) HOOP     661  20000
        GR + Max P{1}                 771       0       0       0 1.00 1.00 1.00 1.00  23a SUST     255  20000
        TR:Amb to T1{1}                 0       0       0       0 1.00 1.00 1.00 1.00 (17) DISP       0  30000
        Amb to T1{1}                    0       0       0       0 1.00 1.00 1.00 1.00 (17) DISP       0  30000
        Sus. + E1{1}                    1       0       0       0 1.00 1.00            23a  OCC     255  26600
        Sus. + E2{1}                    1       0       0       0 1.00 1.00            23a  OCC     255  26600
        Sus. + E3{1}                    1       0       0       0 1.00 1.00            23a  OCC     255  26600
        Sus. + E4{1}                    1       0       0       0 1.00 1.00            23a  OCC     255  26600
        Sus. + E5{1}                    1       0       0       0 1.00 1.00            23a  OCC     255  26600
        Sus. + E6{1}                    1       0       0       0 1.00 1.00            23a  OCC     255  26600
        Sus. + E7{1}                    1       0       0       0 1.00 1.00            23a  OCC     255  26600
        Sus. + E8{1}                    1       0       0       0 1.00 1.00            23a  OCC     255  26600
```

```
-----------------------------------------------------------------------------------------------------------------------
Encasement Drain and Test Port
02/04/2020 2018719                                                    BENTLEY
07:55 AM                                                              AutoPIPE Nuclear 12.00.00.16   RESULT PAGE  38
-----------------------------------------------------------------------------------------------------------------------

                              ASME B31.3 (2016)  CODE COMPLIANCE
              (Moments in ft-lb  , Force in lbf  )     (Stress in psi     )
 Point     Load                      Axial  In-Pl. Out-Pl. Torsion   S.I.F   Index/SIF  Eq. Load   Code   Code
 name   combination                  Force  Moment  Moment  Moment  In  Out   Ax. Tor.  no. type  Stress Allow.
 ------ ----------------------     ------- ------- ------- ------- ---- ---- ---- ---- ---- ----  ------ ------
 C02    Max P{1}                                                                        (3a) HOOP     661  20000
        GR + Max P{1}                 771       0       0       0 1.00 1.00 1.00 1.00  23a SUST     253  20000
        TR:Amb to T1{1}                 0       0       0       0 1.00 1.00 1.00 1.00 (17) DISP       0  30000
        Amb to T1{1}                    0       0       0       0 1.00 1.00 1.00 1.00 (17) DISP       0  30000
        Sus. + E1{1}                    0       0       0       0 1.00 1.00            23a  OCC     253  26600
        Sus. + E2{1}                    0       0       0       0 1.00 1.00            23a  OCC     253  26600
        Sus. + E3{1}                    0       0       0       0 1.00 1.00            23a  OCC     253  26600
        Sus. + E4{1}                    0       0       0       0 1.00 1.00            23a  OCC     253  26600
        Sus. + E5{1}                    0       0       0       0 1.00 1.00            23a  OCC     253  26600
        Sus. + E6{1}                    0       0       0       0 1.00 1.00            23a  OCC     253  26600
        Sus. + E7{1}                    0       0       0       0 1.00 1.00            23a  OCC     253  26600
        Sus. + E8{1}                    0       0       0       0 1.00 1.00            23a  OCC     253  26600

 *** Segment C  end   ***

 *** Segment D  begin ***

 D01    Max P{1}                                                                        (3a) HOOP     463  20000
        GR + Max P{1}                 130       0       1       0 1.37 1.37 1.00 1.00  23a SUST     202  20000
        TR:Amb to T1{1}                 0       0       0       0 1.83 1.83 1.83 1.00 (17) DISP       0  30000
        Amb to T1{1}                    0       0       0       0 1.83 1.83 1.83 1.00 (17) DISP       0  30000
        Sus. + E1{1}                    0       1       1       0 1.37 1.37            23a  OCC     260  26600
        Sus. + E2{1}                    0       1       1       0 1.37 1.37            23a  OCC     261  26600
        Sus. + E3{1}                    0       1       1       0 1.37 1.37            23a  OCC     256  26600
        Sus. + E4{1}                    0       1       1       0 1.37 1.37            23a  OCC     258  26600
        Sus. + E5{1}                    0       1       1       0 1.37 1.37            23a  OCC     258  26600
        Sus. + E6{1}                    0       1       1       0 1.37 1.37            23a  OCC     256  26600
        Sus. + E7{1}                    0       1       1       0 1.37 1.37            23a  OCC     261  26600
        Sus. + E8{1}                    0       1       1       0 1.37 1.37            23a  OCC     260  26600

 D02 N- Max P{1}                                                                        (3a) HOOP     463  20000
        GR + Max P{1}                 127       0       1       0 1.00 1.00 1.00 1.00  23a SUST     190  20000
        TR:Amb to T1{1}                 0       0       0       0 1.00 1.00 1.00 1.00 (17) DISP       0  30000
        Amb to T1{1}                    0       0       0       0 1.00 1.00 1.00 1.00 (17) DISP       0  30000
        Sus. + E1{1}                    0       0       1       0 1.00 1.00            23a  OCC     197  26600
        Sus. + E2{1}                    0       0       1       0 1.00 1.00            23a  OCC     196  26600
        Sus. + E3{1}                    0       0       1       0 1.00 1.00            23a  OCC     194  26600
        Sus. + E4{1}                    0       0       1       0 1.00 1.00            23a  OCC     196  26600
        Sus. + E5{1}                    0       0       1       0 1.00 1.00            23a  OCC     196  26600
        Sus. + E6{1}                    0       0       1       0 1.00 1.00            23a  OCC     194  26600
        Sus. + E7{1}                    0       0       1       0 1.00 1.00            23a  OCC     196  26600
        Sus. + E8{1}                    0       0       1       0 1.00 1.00            23a  OCC     197  26600
```

Encasement Drain and Test Port
02/04/2020 2018719 BENTLEY
07:55 AM AutoPIPE Nuclear 12.00.00.16 RESULT PAGE 39

ASME B31.3 (2016) CODE COMPLIANCE
(Moments in ft-lb , Force in lbf) (Stress in psi)

Point name	Load combination	Axial Force	In-Pl. Moment	Out-Pl. Moment	Torsion Moment	S.I.F In	S.I.F Out	Index/SIF Ax.	Index/SIF Tor.	Eq. no.	Load type	Code Stress	Code Allow.
D02 N+	Max P{1}									(3a)	HOOP	463	20000
	GR + Max P{1}	127	1	0	0	1.20	1.00	1.00	1.00	23a	SUST	194	20000
	TR:Amb to T1{1}	0	0	0	0	1.60	1.33	1.00	1.00	(17)	DISP	0	30000
	Amb to T1{1}	0	0	0	0	1.60	1.33	1.00	1.00	(17)	DISP	0	30000
	Sus. + E1{1}	0	1	0	0	1.20	1.00			23a	OCC	202	26600
	Sus. + E2{1}	0	1	0	0	1.20	1.00			23a	OCC	201	26600
	Sus. + E3{1}	0	1	0	0	1.20	1.00			23a	OCC	198	26600
	Sus. + E4{1}	0	1	0	0	1.20	1.00			23a	OCC	200	26600
	Sus. + E5{1}	0	1	0	0	1.20	1.00			23a	OCC	200	26600
	Sus. + E6{1}	0	1	0	0	1.20	1.00			23a	OCC	198	26600
	Sus. + E7{1}	0	1	0	0	1.20	1.00			23a	OCC	201	26600
	Sus. + E8{1}	0	1	0	0	1.20	1.00			23a	OCC	202	26600
D02 F-	Max P{1}									(3a)	HOOP	463	20000
	GR + Max P{1}	125	0	0	0	1.20	1.00	1.00	1.00	23a	SUST	178	20000
	TR:Amb to T1{1}	0	0	0	0	1.60	1.33	1.00	1.00	(17)	DISP	0	30000
	Amb to T1{1}	0	0	0	0	1.60	1.33	1.00	1.00	(17)	DISP	0	30000
	Sus. + E1{1}	0	0	0	0	1.20	1.00			23a	OCC	180	26600
	Sus. + E2{1}	0	0	0	0	1.20	1.00			23a	OCC	180	26600
	Sus. + E3{1}	0	0	0	0	1.20	1.00			23a	OCC	180	26600
	Sus. + E4{1}	0	0	0	0	1.20	1.00			23a	OCC	180	26600
	Sus. + E5{1}	0	0	0	0	1.20	1.00			23a	OCC	180	26600
	Sus. + E6{1}	0	0	0	0	1.20	1.00			23a	OCC	180	26600
	Sus. + E7{1}	0	0	0	0	1.20	1.00			23a	OCC	180	26600
	Sus. + E8{1}	0	0	0	0	1.20	1.00			23a	OCC	180	26600
D02 F+	Max P{1}									(3a)	HOOP	546	20000
	GR + Max P{1}	205	0	0	0	1.00	1.00	1.00	1.00	23a	SUST	209	20000
	TR:Amb to T1{1}	0	0	0	0	1.00	1.00	1.00	1.00	(17)	DISP	0	30000
	Amb to T1{1}	0	0	0	0	1.00	1.00	1.00	1.00	(17)	DISP	0	30000
	Sus. + E1{1}	0	0	0	0	1.00	1.00			23a	OCC	210	26600
	Sus. + E2{1}	0	0	0	0	1.00	1.00			23a	OCC	210	26600
	Sus. + E3{1}	0	0	0	0	1.00	1.00			23a	OCC	210	26600
	Sus. + E4{1}	0	0	0	0	1.00	1.00			23a	OCC	210	26600
	Sus. + E5{1}	0	0	0	0	1.00	1.00			23a	OCC	210	26600
	Sus. + E6{1}	0	0	0	0	1.00	1.00			23a	OCC	210	26600
	Sus. + E7{1}	0	0	0	0	1.00	1.00			23a	OCC	210	26600
	Sus. + E8{1}	0	0	0	0	1.00	1.00			23a	OCC	210	26600
D03	Max P{1}									(3a)	HOOP	546	20000
	GR + Max P{1}	205	0	0	0	1.00	1.00	1.00	1.00	23a	SUST	203	20000
	TR:Amb to T1{1}	0	0	0	0	1.00	1.00	1.00	1.00	(17)	DISP	0	30000
	Amb to T1{1}	0	0	0	0	1.00	1.00	1.00	1.00	(17)	DISP	0	30000
	Sus. + E1{1}	0	0	0	0	1.00	1.00			23a	OCC	203	26600
	Sus. + E2{1}	0	0	0	0	1.00	1.00			23a	OCC	203	26600
	Sus. + E3{1}	0	0	0	0	1.00	1.00			23a	OCC	203	26600
	Sus. + E4{1}	0	0	0	0	1.00	1.00			23a	OCC	203	26600
	Sus. + E5{1}	0	0	0	0	1.00	1.00			23a	OCC	203	26600
	Sus. + E6{1}	0	0	0	0	1.00	1.00			23a	OCC	203	26600
	Sus. + E7{1}	0	0	0	0	1.00	1.00			23a	OCC	203	26600
	Sus. + E8{1}	0	0	0	0	1.00	1.00			23a	OCC	203	26600

```
-----------------------------------------------------------------------------------------------------------------------
Encasement Drain and Test Port
02/04/2020 2018719                                                                  BENTLEY
07:55 AM                                                                            AutoPIPE Nuclear 12.00.00.16   RESULT PAGE  40
-----------------------------------------------------------------------------------------------------------------------

                              ASME B31.3 (2016)  CODE COMPLIANCE
              (Moments in ft-lb  , Force in lbf  )     (Stress in psi     )
 Point     Load                    Axial  In-Pl. Out-Pl. Torsion   S.I.F   Index/SIF  Eq. Load   Code   Code
 name   combination                Force  Moment  Moment  Moment  In  Out   Ax. Tor.  no. type  Stress Allow.
 ------ ----------------------    ------- ------- ------- ------- ---- ---- ---- ---- ---- ----  ------ ------

 *** Segment D  end   ***

 *** Segment E  begin ***

 E00    Max P{1}                                                                          (3a) HOOP     822  20000
        GR + Max P{1}              1745       5       0       0 1.00 1.00 1.00 1.00  23a SUST     330  20000
        TR:Amb to T1{1}               0       0       0       0 1.00 1.00 1.00 1.00 (17) DISP       0  30000
        Amb to T1{1}                  0       0       0       0 1.00 1.00 1.00 1.00 (17) DISP       0  30000
        Sus. + E1{1}                  3       6       1       1 1.00 1.00            23a  OCC     334  26600
        Sus. + E2{1}                  3       6       1       1 1.00 1.00            23a  OCC     334  26600
        Sus. + E3{1}                  3       5       1       1 1.00 1.00            23a  OCC     333  26600
        Sus. + E4{1}                  3       5       1       1 1.00 1.00            23a  OCC     333  26600
        Sus. + E5{1}                  3       5       1       1 1.00 1.00            23a  OCC     333  26600
        Sus. + E6{1}                  3       5       1       1 1.00 1.00            23a  OCC     333  26600
        Sus. + E7{1}                  3       6       1       1 1.00 1.00            23a  OCC     334  26600
        Sus. + E8{1}                  3       6       1       1 1.00 1.00            23a  OCC     334  26600

 E01  - Max P{1}                                                                          (3a) HOOP     822  20000
        GR + Max P{1}              1745       1       0       0 1.00 1.00 1.00 1.00  23a SUST     326  20000
        TR:Amb to T1{1}               0       0       0       0 1.00 1.00 1.00 1.00 (17) DISP       0  30000
        Amb to T1{1}                  0       0       0       0 1.00 1.00 1.00 1.00 (17) DISP       0  30000
        Sus. + E1{1}                  2       3       0       1 1.00 1.00            23a  OCC     329  26600
        Sus. + E2{1}                  2       3       0       1 1.00 1.00            23a  OCC     329  26600
        Sus. + E3{1}                  2       3       0       1 1.00 1.00            23a  OCC     328  26600
        Sus. + E4{1}                  2       3       0       1 1.00 1.00            23a  OCC     328  26600
        Sus. + E5{1}                  2       3       0       1 1.00 1.00            23a  OCC     328  26600
        Sus. + E6{1}                  2       3       0       1 1.00 1.00            23a  OCC     328  26600
        Sus. + E7{1}                  2       3       0       1 1.00 1.00            23a  OCC     329  26600
        Sus. + E8{1}                  2       3       0       1 1.00 1.00            23a  OCC     329  26600

 E01  + Max P{1}                                                                          (3a) HOOP     822  20000
        GR + Max P{1}              1745       1       0       0 1.00 1.00 1.00 1.00  23a SUST     325  20000
        TR:Amb to T1{1}               0       0       0       0 1.00 1.00 1.00 1.00 (17) DISP       0  30000
        Amb to T1{1}                  0       0       0       0 1.00 1.00 1.00 1.00 (17) DISP       0  30000
        Sus. + E1{1}                  1       1       0       0 1.00 1.00            23a  OCC     325  26600
        Sus. + E2{1}                  1       1       0       0 1.00 1.00            23a  OCC     325  26600
        Sus. + E3{1}                  1       1       0       0 1.00 1.00            23a  OCC     325  26600
        Sus. + E4{1}                  1       1       0       0 1.00 1.00            23a  OCC     325  26600
        Sus. + E5{1}                  1       1       0       0 1.00 1.00            23a  OCC     325  26600
        Sus. + E6{1}                  1       1       0       0 1.00 1.00            23a  OCC     325  26600
        Sus. + E7{1}                  1       1       0       0 1.00 1.00            23a  OCC     325  26600
        Sus. + E8{1}                  1       1       0       0 1.00 1.00            23a  OCC     325  26600
```

ASME B31.3 (2016) CODE COMPLIANCE
(Moments in ft-lb , Force in lbf) (Stress in psi)

Point name	Load combination	Axial Force	In-Pl. Moment	Out-Pl. Moment	Torsion Moment	S.I.F In	S.I.F Out	Index/SIF Ax.	Index/SIF Tor.	Eq. no.	Load type	Code Stress	Code Allow.
E02	Max P{1}									(3a)	HOOP	822	20000
	GR + Max P{1}	1745	0	0	0	1.00	1.00	1.00	1.00	23a	SUST	324	20000
	TR:Amb to T1{1}	0	0	0	0	1.00	1.00	1.00	1.00	(17)	DISP	0	30000
	Amb to T1{1}	0	0	0	0	1.00	1.00	1.00	1.00	(17)	DISP	0	30000
	Sus. + E1{1}	0	0	0	0	1.00	1.00			23a	OCC	324	26600
	Sus. + E2{1}	0	0	0	0	1.00	1.00			23a	OCC	324	26600
	Sus. + E3{1}	0	0	0	0	1.00	1.00			23a	OCC	324	26600
	Sus. + E4{1}	0	0	0	0	1.00	1.00			23a	OCC	324	26600
	Sus. + E5{1}	0	0	0	0	1.00	1.00			23a	OCC	324	26600
	Sus. + E6{1}	0	0	0	0	1.00	1.00			23a	OCC	324	26600
	Sus. + E7{1}	0	0	0	0	1.00	1.00			23a	OCC	324	26600
	Sus. + E8{1}	0	0	0	0	1.00	1.00			23a	OCC	324	26600

*** Segment E end ***

*** Segment F begin ***

F01	Max P{1}									(3a)	HOOP	463	20000
	GR + Max P{1}	131	0	1	0	1.61	1.61	1.00	1.00	23a	SUST	211	20000
	TR:Amb to T1{1}	0	0	0	0	2.14	2.14	2.14	1.00	(17)	DISP	0	30000
	Amb to T1{1}	0	0	0	0	2.14	2.14	2.14	1.00	(17)	DISP	0	30000
	Sus. + E1{1}	0	1	2	0	1.61	1.61			23a	OCC	298	26600
	Sus. + E2{1}	0	1	2	0	1.61	1.61			23a	OCC	298	26600
	Sus. + E3{1}	0	1	1	0	1.61	1.61			23a	OCC	294	26600
	Sus. + E4{1}	0	1	1	0	1.61	1.61			23a	OCC	294	26600
	Sus. + E5{1}	0	1	1	0	1.61	1.61			23a	OCC	294	26600
	Sus. + E6{1}	0	1	1	0	1.61	1.61			23a	OCC	294	26600
	Sus. + E7{1}	0	1	2	0	1.61	1.61			23a	OCC	298	26600
	Sus. + E8{1}	0	1	2	0	1.61	1.61			23a	OCC	298	26600
F02 N-	Max P{1}									(3a)	HOOP	463	20000
	GR + Max P{1}	127	0	1	0	1.00	1.00	1.00	1.00	23a	SUST	193	20000
	TR:Amb to T1{1}	0	0	0	0	1.00	1.00	1.00	1.00	(17)	DISP	0	30000
	Amb to T1{1}	0	0	0	0	1.00	1.00	1.00	1.00	(17)	DISP	0	30000
	Sus. + E1{1}	0	0	1	0	1.00	1.00			23a	OCC	200	26600
	Sus. + E2{1}	0	0	1	0	1.00	1.00			23a	OCC	200	26600
	Sus. + E3{1}	0	0	1	0	1.00	1.00			23a	OCC	198	26600
	Sus. + E4{1}	0	0	1	0	1.00	1.00			23a	OCC	198	26600
	Sus. + E5{1}	0	0	1	0	1.00	1.00			23a	OCC	198	26600
	Sus. + E6{1}	0	0	1	0	1.00	1.00			23a	OCC	198	26600
	Sus. + E7{1}	0	0	1	0	1.00	1.00			23a	OCC	200	26600
	Sus. + E8{1}	0	0	1	0	1.00	1.00			23a	OCC	200	26600

Encasement Drain and Test Port
02/04/2020 2018719 BENTLEY
07:55 AM AutoPIPE Nuclear 12.00.00.16 RESULT PAGE 42

ASME B31.3 (2016) CODE COMPLIANCE
(Moments in ft-lb , Force in lbf) (Stress in psi)

Point name	Load combination	Axial Force	In-Pl. Moment	Out-Pl. Moment	Torsion Moment	S.I.F In	S.I.F Out	Index/SIF Ax.	Index/SIF Tor.	Eq. no.	Load type	Code Stress	Code Allow.
F02 N+	Max P{1}									(3a)	HOOP	463	20000
	GR + Max P{1}	127	1	0	0	1.20	1.00	1.00	1.00	23a	SUST	197	20000
	TR:Amb to T1{1}	0	0	0	0	1.60	1.33	1.00	1.00	(17)	DISP	0	30000
	Amb to T1{1}	0	0	0	0	1.60	1.33	1.00	1.00	(17)	DISP	0	30000
	Sus. + E1{1}	0	1	0	0	1.20	1.00			23a	OCC	205	26600
	Sus. + E2{1}	0	1	0	0	1.20	1.00			23a	OCC	205	26600
	Sus. + E3{1}	0	1	0	0	1.20	1.00			23a	OCC	202	26600
	Sus. + E4{1}	0	1	0	0	1.20	1.00			23a	OCC	202	26600
	Sus. + E5{1}	0	1	0	0	1.20	1.00			23a	OCC	202	26600
	Sus. + E6{1}	0	1	0	0	1.20	1.00			23a	OCC	202	26600
	Sus. + E7{1}	0	1	0	0	1.20	1.00			23a	OCC	205	26600
	Sus. + E8{1}	0	1	0	0	1.20	1.00			23a	OCC	205	26600
F02 F-	Max P{1}									(3a)	HOOP	463	20000
	GR + Max P{1}	125	0	0	0	1.20	1.00	1.00	1.00	23a	SUST	180	20000
	TR:Amb to T1{1}	0	0	0	0	1.60	1.33	1.00	1.00	(17)	DISP	0	30000
	Amb to T1{1}	0	0	0	0	1.60	1.33	1.00	1.00	(17)	DISP	0	30000
	Sus. + E1{1}	0	0	0	0	1.20	1.00			23a	OCC	182	26600
	Sus. + E2{1}	0	0	0	0	1.20	1.00			23a	OCC	182	26600
	Sus. + E3{1}	0	0	0	0	1.20	1.00			23a	OCC	182	26600
	Sus. + E4{1}	0	0	0	0	1.20	1.00			23a	OCC	182	26600
	Sus. + E5{1}	0	0	0	0	1.20	1.00			23a	OCC	182	26600
	Sus. + E6{1}	0	0	0	0	1.20	1.00			23a	OCC	182	26600
	Sus. + E7{1}	0	0	0	0	1.20	1.00			23a	OCC	182	26600
	Sus. + E8{1}	0	0	0	0	1.20	1.00			23a	OCC	182	26600
F02 F+	Max P{1}									(3a)	HOOP	546	20000
	GR + Max P{1}	205	0	0	0	1.00	1.00	1.00	1.00	23a	SUST	209	20000
	TR:Amb to T1{1}	0	0	0	0	1.00	1.00	1.00	1.00	(17)	DISP	0	30000
	Amb to T1{1}	0	0	0	0	1.00	1.00	1.00	1.00	(17)	DISP	0	30000
	Sus. + E1{1}	0	0	0	0	1.00	1.00			23a	OCC	211	26600
	Sus. + E2{1}	0	0	0	0	1.00	1.00			23a	OCC	211	26600
	Sus. + E3{1}	0	0	0	0	1.00	1.00			23a	OCC	211	26600
	Sus. + E4{1}	0	0	0	0	1.00	1.00			23a	OCC	211	26600
	Sus. + E5{1}	0	0	0	0	1.00	1.00			23a	OCC	211	26600
	Sus. + E6{1}	0	0	0	0	1.00	1.00			23a	OCC	211	26600
	Sus. + E7{1}	0	0	0	0	1.00	1.00			23a	OCC	211	26600
	Sus. + E8{1}	0	0	0	0	1.00	1.00			23a	OCC	211	26600
F03	Max P{1}									(3a)	HOOP	546	20000
	GR + Max P{1}	205	0	0	0	1.00	1.00	1.00	1.00	23a	SUST	203	20000
	TR:Amb to T1{1}	0	0	0	0	1.00	1.00	1.00	1.00	(17)	DISP	0	30000
	Amb to T1{1}	0	0	0	0	1.00	1.00	1.00	1.00	(17)	DISP	0	30000
	Sus. + E1{1}	0	0	0	0	1.00	1.00			23a	OCC	203	26600
	Sus. + E2{1}	0	0	0	0	1.00	1.00			23a	OCC	203	26600
	Sus. + E3{1}	0	0	0	0	1.00	1.00			23a	OCC	203	26600
	Sus. + E4{1}	0	0	0	0	1.00	1.00			23a	OCC	203	26600
	Sus. + E5{1}	0	0	0	0	1.00	1.00			23a	OCC	203	26600
	Sus. + E6{1}	0	0	0	0	1.00	1.00			23a	OCC	203	26600
	Sus. + E7{1}	0	0	0	0	1.00	1.00			23a	OCC	203	26600
	Sus. + E8{1}	0	0	0	0	1.00	1.00			23a	OCC	203	26600

ASME B31.3 (2016) CODE COMPLIANCE
(Moments in ft-lb , Force in lbf) (Stress in psi)

Point name	Load combination	Axial Force	In-Pl. Moment	Out-Pl. Moment	Torsion Moment	S.I.F In	S.I.F Out	Index/SIF Ax.	Index/SIF Tor.	Eq. no.	Load type	Code Stress	Code Allow.
*** Segment F end ***													
*** Segment G begin ***													
G00	Max P{1}									(3a)	HOOP	661	20000
	GR + Max P{1}	771	2	0	0	1.00	1.00	1.00	1.00	23a	SUST	263	20000
	TR:Amb to T1{1}	0	0	0	0	1.00	1.00	1.00	1.00	(17)	DISP	1	30000
	Amb to T1{1}	0	0	0	0	1.00	1.00	1.00	1.00	(17)	DISP	1	30000
	Sus. + E1{1}	3	3	0	1	1.00	1.00			23a	OCC	267	26600
	Sus. + E2{1}	3	3	0	1	1.00	1.00			23a	OCC	267	26600
	Sus. + E3{1}	3	3	0	1	1.00	1.00			23a	OCC	267	26600
	Sus. + E4{1}	3	3	0	1	1.00	1.00			23a	OCC	267	26600
	Sus. + E5{1}	3	3	0	1	1.00	1.00			23a	OCC	267	26600
	Sus. + E6{1}	3	3	0	1	1.00	1.00			23a	OCC	267	26600
	Sus. + E7{1}	3	3	0	1	1.00	1.00			23a	OCC	267	26600
	Sus. + E8{1}	3	3	0	1	1.00	1.00			23a	OCC	267	26600
G01	- Max P{1}									(3a)	HOOP	661	20000
	GR + Max P{1}	771	2	0	0	1.00	1.00	1.00	1.00	23a	SUST	259	20000
	TR:Amb to T1{1}	0	1	0	0	1.00	1.00	1.00	1.00	(17)	DISP	3	30000
	Amb to T1{1}	0	1	0	0	1.00	1.00	1.00	1.00	(17)	DISP	3	30000
	Sus. + E1{1}	2	2	0	1	1.00	1.00			23a	OCC	264	26600
	Sus. + E2{1}	2	2	0	1	1.00	1.00			23a	OCC	264	26600
	Sus. + E3{1}	2	2	0	1	1.00	1.00			23a	OCC	264	26600
	Sus. + E4{1}	2	2	0	1	1.00	1.00			23a	OCC	264	26600
	Sus. + E5{1}	2	2	0	1	1.00	1.00			23a	OCC	264	26600
	Sus. + E6{1}	2	2	0	1	1.00	1.00			23a	OCC	264	26600
	Sus. + E7{1}	2	2	0	1	1.00	1.00			23a	OCC	264	26600
	Sus. + E8{1}	2	2	0	1	1.00	1.00			23a	OCC	264	26600
G01	+ Max P{1}									(3a)	HOOP	661	20000
	GR + Max P{1}	771	3	0	0	1.00	1.00	1.00	1.00	23a	SUST	264	20000
	TR:Amb to T1{1}	0	1	0	0	1.00	1.00	1.00	1.00	(17)	DISP	2	30000
	Amb to T1{1}	0	1	0	0	1.00	1.00	1.00	1.00	(17)	DISP	2	30000
	Sus. + E1{1}	1	3	0	0	1.00	1.00			23a	OCC	266	26600
	Sus. + E2{1}	1	3	0	0	1.00	1.00			23a	OCC	266	26600
	Sus. + E3{1}	1	4	0	0	1.00	1.00			23a	OCC	268	26600
	Sus. + E4{1}	1	4	0	0	1.00	1.00			23a	OCC	268	26600
	Sus. + E5{1}	1	4	0	0	1.00	1.00			23a	OCC	268	26600
	Sus. + E6{1}	1	4	0	0	1.00	1.00			23a	OCC	268	26600
	Sus. + E7{1}	1	3	0	0	1.00	1.00			23a	OCC	266	26600
	Sus. + E8{1}	1	3	0	0	1.00	1.00			23a	OCC	266	26600

ASME B31.3 (2016) CODE COMPLIANCE
(Moments in ft-lb , Force in lbf) (Stress in psi)

Point name	Load combination	Axial Force	In-Pl. Moment	Out-Pl. Moment	Torsion Moment	S.I.F In	S.I.F Out	Index/SIF Ax.	Index/SIF Tor.	Eq. no.	Load type	Code Stress	Code Allow.
G02	Max P{1}									(3a)	HOOP	661	20000
	GR + Max P{1}	771	0	0	0	1.00	1.00	1.00	1.00	23a	SUST	253	20000
	TR:Amb to T1{1}	0	0	0	0	1.00	1.00	1.00	1.00	(17)	DISP	0	30000
	Amb to T1{1}	0	0	0	0	1.00	1.00	1.00	1.00	(17)	DISP	0	30000
	Sus. + E1{1}	0	0	0	0	1.00	1.00			23a	OCC	253	26600
	Sus. + E2{1}	0	0	0	0	1.00	1.00			23a	OCC	253	26600
	Sus. + E3{1}	0	0	0	0	1.00	1.00			23a	OCC	253	26600
	Sus. + E4{1}	0	0	0	0	1.00	1.00			23a	OCC	253	26600
	Sus. + E5{1}	0	0	0	0	1.00	1.00			23a	OCC	253	26600
	Sus. + E6{1}	0	0	0	0	1.00	1.00			23a	OCC	253	26600
	Sus. + E7{1}	0	0	0	0	1.00	1.00			23a	OCC	253	26600
	Sus. + E8{1}	0	0	0	0	1.00	1.00			23a	OCC	253	26600

*** Segment G end ***

*** Segment H begin ***

H01	Max P{1}									(3a)	HOOP	348	20000
	GR + Max P{1}	47	1	0	0	1.37	1.37	1.00	1.00	23a	SUST	279	20000
	TR:Amb to T1{1}	0	1	0	0	1.83	1.83	1.83	1.00	(17)	DISP	208	30000
	Amb to T1{1}	0	1	0	0	1.83	1.83	1.83	1.00	(17)	DISP	208	30000
	Sus. + E1{1}	1	2	1	0	1.37	1.37			23a	OCC	428	26600
	Sus. + E2{1}	1	2	1	0	1.37	1.37			23a	OCC	428	26600
	Sus. + E3{1}	0	2	1	0	1.37	1.37			23a	OCC	447	26600
	Sus. + E4{1}	0	2	1	0	1.37	1.37			23a	OCC	447	26600
	Sus. + E5{1}	0	2	1	0	1.37	1.37			23a	OCC	447	26600
	Sus. + E6{1}	0	2	1	0	1.37	1.37			23a	OCC	447	26600
	Sus. + E7{1}	1	2	1	0	1.37	1.37			23a	OCC	428	26600
	Sus. + E8{1}	1	2	1	0	1.37	1.37			23a	OCC	428	26600
H02 N-	Max P{1}									(3a)	HOOP	348	20000
	GR + Max P{1}	47	0	0	0	1.00	1.00	1.00	1.00	23a	SUST	123	20000
	TR:Amb to T1{1}	0	1	0	0	1.00	1.00	1.00	1.00	(17)	DISP	109	30000
	Amb to T1{1}	0	1	0	0	1.00	1.00	1.00	1.00	(17)	DISP	109	30000
	Sus. + E1{1}	1	1	1	0	1.00	1.00			23a	OCC	214	26600
	Sus. + E2{1}	1	1	1	0	1.00	1.00			23a	OCC	214	26600
	Sus. + E3{1}	0	1	1	0	1.00	1.00			23a	OCC	214	26600
	Sus. + E4{1}	0	1	1	0	1.00	1.00			23a	OCC	214	26600
	Sus. + E5{1}	0	1	1	0	1.00	1.00			23a	OCC	214	26600
	Sus. + E6{1}	0	1	1	0	1.00	1.00			23a	OCC	214	26600
	Sus. + E7{1}	1	1	1	0	1.00	1.00			23a	OCC	214	26600
	Sus. + E8{1}	1	1	1	0	1.00	1.00			23a	OCC	214	26600

Encasement Drain and Test Port
02/04/2020 2018719 BENTLEY
07:55 AM AutoPIPE Nuclear 12.00.00.16 RESULT PAGE 45

ASME B31.3 (2016) CODE COMPLIANCE
(Moments in ft-lb , Force in lbf) (Stress in psi)

Point name	Load combination	Axial Force	In-Pl. Moment	Out-Pl. Moment	Torsion Moment	S.I.F In	S.I.F Out	Index/SIF Ax.	Index/SIF Tor.	Eq. no.	Load type	Code Stress	Code Allow.
H02 N+	Max P{1}									(3a)	HOOP	348	20000
	GR + Max P{1}	47	0	0	0	1.00	1.00	1.00	1.00	23a	SUST	123	20000
	TR:Amb to T1{1}	0	1	0	0	1.00	1.00	1.00	1.00	(17)	DISP	109	30000
	Amb to T1{1}	0	1	0	0	1.00	1.00	1.00	1.00	(17)	DISP	109	30000
	Sus. + E1{1}	1	1	1	0	1.00	1.00			23a	OCC	214	26600
	Sus. + E2{1}	1	1	1	0	1.00	1.00			23a	OCC	214	26600
	Sus. + E3{1}	0	1	1	0	1.00	1.00			23a	OCC	214	26600
	Sus. + E4{1}	0	1	1	0	1.00	1.00			23a	OCC	214	26600
	Sus. + E5{1}	0	1	1	0	1.00	1.00			23a	OCC	214	26600
	Sus. + E6{1}	0	1	1	0	1.00	1.00			23a	OCC	214	26600
	Sus. + E7{1}	1	1	1	0	1.00	1.00			23a	OCC	214	26600
	Sus. + E8{1}	1	1	1	0	1.00	1.00			23a	OCC	214	26600
H02 F-	Max P{1}									(3a)	HOOP	348	20000
	GR + Max P{1}	46	0	0	0	1.00	1.00	1.00	1.00	23a	SUST	114	20000
	TR:Amb to T1{1}	0	1	0	0	1.00	1.00	1.00	1.00	(17)	DISP	105	30000
	Amb to T1{1}	0	1	0	0	1.00	1.00	1.00	1.00	(17)	DISP	105	30000
	Sus. + E1{1}	1	1	1	0	1.00	1.00			23a	OCC	190	26600
	Sus. + E2{1}	1	1	1	0	1.00	1.00			23a	OCC	190	26600
	Sus. + E3{1}	1	1	1	0	1.00	1.00			23a	OCC	188	26600
	Sus. + E4{1}	1	1	1	0	1.00	1.00			23a	OCC	188	26600
	Sus. + E5{1}	1	1	1	0	1.00	1.00			23a	OCC	188	26600
	Sus. + E6{1}	1	1	1	0	1.00	1.00			23a	OCC	188	26600
	Sus. + E7{1}	1	1	1	0	1.00	1.00			23a	OCC	190	26600
	Sus. + E8{1}	1	1	1	0	1.00	1.00			23a	OCC	190	26600
H02 F+	Max P{1}									(3a)	HOOP	348	20000
	GR + Max P{1}	46	0	0	0	1.00	1.00	1.00	1.00	23a	SUST	114	20000
	TR:Amb to T1{1}	0	0	1	0	1.00	1.00	1.00	1.00	(17)	DISP	105	30000
	Amb to T1{1}	0	0	1	0	1.00	1.00	1.00	1.00	(17)	DISP	105	30000
	Sus. + E1{1}	1	1	1	0	1.00	1.00			23a	OCC	190	26600
	Sus. + E2{1}	1	1	1	0	1.00	1.00			23a	OCC	190	26600
	Sus. + E3{1}	1	1	1	0	1.00	1.00			23a	OCC	188	26600
	Sus. + E4{1}	1	1	1	0	1.00	1.00			23a	OCC	188	26600
	Sus. + E5{1}	1	1	1	0	1.00	1.00			23a	OCC	188	26600
	Sus. + E6{1}	1	1	1	0	1.00	1.00			23a	OCC	188	26600
	Sus. + E7{1}	1	1	1	0	1.00	1.00			23a	OCC	190	26600
	Sus. + E8{1}	1	1	1	0	1.00	1.00			23a	OCC	190	26600
H03	Max P{1}									(3a)	HOOP	348	20000
	GR + Max P{1}	54	0	0	0	1.00	1.00	1.00	1.00	23a	SUST	117	20000
	TR:Amb to T1{1}	0	0	0	0	1.00	1.00	1.00	1.00	(17)	DISP	0	30000
	Amb to T1{1}	0	0	0	0	1.00	1.00	1.00	1.00	(17)	DISP	0	30000
	Sus. + E1{1}	0	0	0	0	1.00	1.00			23a	OCC	117	26600
	Sus. + E2{1}	0	0	0	0	1.00	1.00			23a	OCC	117	26600
	Sus. + E3{1}	0	0	0	0	1.00	1.00			23a	OCC	117	26600
	Sus. + E4{1}	0	0	0	0	1.00	1.00			23a	OCC	117	26600
	Sus. + E5{1}	0	0	0	0	1.00	1.00			23a	OCC	117	26600
	Sus. + E6{1}	0	0	0	0	1.00	1.00			23a	OCC	117	26600
	Sus. + E7{1}	0	0	0	0	1.00	1.00			23a	OCC	117	26600
	Sus. + E8{1}	0	0	0	0	1.00	1.00			23a	OCC	117	26600

ASME B31.3 (2016) CODE COMPLIANCE
(Moments in ft-lb , Force in lbf) (Stress in psi)

Point name	Load combination	Axial Force	In-Pl. Moment	Out-Pl. Moment	Torsion Moment	S.I.F In	S.I.F Out	Index/SIF Ax.	Index/SIF Tor.	Eq. no.	Load type	Code Stress	Code Allow.
*** Segment H end ***													
*** Segment I begin ***													
I00	Max P{1}									(3a)	HOOP	822	20000
	GR + Max P{1}	1745	3	0	0	1.00	1.00	1.00	1.00	23a	SUST	328	20000
	TR:Amb to T1{1}	0	0	0	0	1.00	1.00	1.00	1.00	(17)	DISP	1	30000
	Amb to T1{1}	0	0	0	0	1.00	1.00	1.00	1.00	(17)	DISP	1	30000
	Sus. + E1{1}	4	3	0	1	1.00	1.00			23a	OCC	330	26600
	Sus. + E2{1}	4	3	0	1	1.00	1.00			23a	OCC	330	26600
	Sus. + E3{1}	4	3	0	1	1.00	1.00			23a	OCC	330	26600
	Sus. + E4{1}	4	3	0	1	1.00	1.00			23a	OCC	330	26600
	Sus. + E5{1}	4	3	0	1	1.00	1.00			23a	OCC	330	26600
	Sus. + E6{1}	4	3	0	1	1.00	1.00			23a	OCC	330	26600
	Sus. + E7{1}	4	3	0	1	1.00	1.00			23a	OCC	330	26600
	Sus. + E8{1}	4	3	0	1	1.00	1.00			23a	OCC	330	26600
I01	- Max P{1}									(3a)	HOOP	822	20000
	GR + Max P{1}	1745	2	0	0	1.00	1.00	1.00	1.00	23a	SUST	327	20000
	TR:Amb to T1{1}	0	1	0	0	1.00	1.00	1.00	1.00	(17)	DISP	1	30000
	Amb to T1{1}	0	1	0	0	1.00	1.00	1.00	1.00	(17)	DISP	1	30000
	Sus. + E1{1}	3	3	0	1	1.00	1.00			23a	OCC	330	26600
	Sus. + E2{1}	3	3	0	1	1.00	1.00			23a	OCC	330	26600
	Sus. + E3{1}	3	3	0	1	1.00	1.00			23a	OCC	329	26600
	Sus. + E4{1}	3	3	0	1	1.00	1.00			23a	OCC	329	26600
	Sus. + E5{1}	3	3	0	1	1.00	1.00			23a	OCC	329	26600
	Sus. + E6{1}	3	3	0	1	1.00	1.00			23a	OCC	329	26600
	Sus. + E7{1}	3	3	0	1	1.00	1.00			23a	OCC	330	26600
	Sus. + E8{1}	3	3	0	1	1.00	1.00			23a	OCC	330	26600
I01	+ Max P{1}									(3a)	HOOP	822	20000
	GR + Max P{1}	1745	4	0	0	1.00	1.00	1.00	1.00	23a	SUST	329	20000
	TR:Amb to T1{1}	0	0	0	0	1.00	1.00	1.00	1.00	(17)	DISP	1	30000
	Amb to T1{1}	0	0	0	0	1.00	1.00	1.00	1.00	(17)	DISP	1	30000
	Sus. + E1{1}	2	4	1	0	1.00	1.00			23a	OCC	330	26600
	Sus. + E2{1}	2	4	1	0	1.00	1.00			23a	OCC	330	26600
	Sus. + E3{1}	2	4	1	0	1.00	1.00			23a	OCC	331	26600
	Sus. + E4{1}	2	4	1	0	1.00	1.00			23a	OCC	331	26600
	Sus. + E5{1}	2	4	1	0	1.00	1.00			23a	OCC	331	26600
	Sus. + E6{1}	2	4	1	0	1.00	1.00			23a	OCC	331	26600
	Sus. + E7{1}	2	4	1	0	1.00	1.00			23a	OCC	330	26600
	Sus. + E8{1}	2	4	1	0	1.00	1.00			23a	OCC	330	26600

```
-----------------------------------------------------------------------------------------------------------------------
Encasement Drain and Test Port
02/04/2020 2018719                                                                  BENTLEY
07:55 AM                                                                            AutoPIPE Nuclear 12.00.00.16   RESULT PAGE  47
-----------------------------------------------------------------------------------------------------------------------
```

ASME B31.3 (2016) CODE COMPLIANCE

(Moments in ft-lb , Force in lbf) (Stress in psi)

Point name	Load combination	Axial Force	In-Pl. Moment	Out-Pl. Moment	Torsion Moment	S.I.F In	S.I.F Out	Index/SIF Ax.	Index/SIF Tor.	Eq. no.	Load type	Code Stress	Code Allow.
I02	Max P{1}									(3a)	HOOP	822	20000
	GR + Max P{1}	1745	0	0	0	1.00	1.00	1.00	1.00	23a	SUST	324	20000
	TR:Amb to T1{1}	0	0	0	0	1.00	1.00	1.00	1.00	(17)	DISP	0	30000
	Amb to T1{1}	0	0	0	0	1.00	1.00	1.00	1.00	(17)	DISP	0	30000
	Sus. + E1{1}	0	0	0	0	1.00	1.00			23a	OCC	324	26600
	Sus. + E2{1}	0	0	0	0	1.00	1.00			23a	OCC	324	26600
	Sus. + E3{1}	0	0	0	0	1.00	1.00			23a	OCC	324	26600
	Sus. + E4{1}	0	0	0	0	1.00	1.00			23a	OCC	324	26600
	Sus. + E5{1}	0	0	0	0	1.00	1.00			23a	OCC	324	26600
	Sus. + E6{1}	0	0	0	0	1.00	1.00			23a	OCC	324	26600
	Sus. + E7{1}	0	0	0	0	1.00	1.00			23a	OCC	324	26600
	Sus. + E8{1}	0	0	0	0	1.00	1.00			23a	OCC	324	26600
*** Segment I end ***													
*** Segment J begin ***													
J01	Max P{1}									(3a)	HOOP	348	20000
	GR + Max P{1}	47	1	0	0	1.61	1.61	1.00	1.00	23a	SUST	309	20000
	TR:Amb to T1{1}	0	1	0	0	2.14	2.14	2.14	1.00	(17)	DISP	244	30000
	Amb to T1{1}	0	1	0	0	2.14	2.14	2.14	1.00	(17)	DISP	244	30000
	Sus. + E1{1}	1	2	1	0	1.61	1.61			23a	OCC	482	26600
	Sus. + E2{1}	1	2	1	0	1.61	1.61			23a	OCC	482	26600
	Sus. + E3{1}	0	2	1	0	1.61	1.61			23a	OCC	505	26600
	Sus. + E4{1}	0	2	1	0	1.61	1.61			23a	OCC	505	26600
	Sus. + E5{1}	0	2	1	0	1.61	1.61			23a	OCC	505	26600
	Sus. + E6{1}	0	2	1	0	1.61	1.61			23a	OCC	505	26600
	Sus. + E7{1}	1	2	1	0	1.61	1.61			23a	OCC	482	26600
	Sus. + E8{1}	1	2	1	0	1.61	1.61			23a	OCC	482	26600
J02 N-	Max P{1}									(3a)	HOOP	348	20000
	GR + Max P{1}	47	0	0	0	1.00	1.00	1.00	1.00	23a	SUST	123	20000
	TR:Amb to T1{1}	0	1	0	0	1.00	1.00	1.00	1.00	(17)	DISP	109	30000
	Amb to T1{1}	0	1	0	0	1.00	1.00	1.00	1.00	(17)	DISP	109	30000
	Sus. + E1{1}	1	1	1	0	1.00	1.00			23a	OCC	214	26600
	Sus. + E2{1}	1	1	1	0	1.00	1.00			23a	OCC	214	26600
	Sus. + E3{1}	0	1	1	0	1.00	1.00			23a	OCC	214	26600
	Sus. + E4{1}	0	1	1	0	1.00	1.00			23a	OCC	214	26600
	Sus. + E5{1}	0	1	1	0	1.00	1.00			23a	OCC	214	26600
	Sus. + E6{1}	0	1	1	0	1.00	1.00			23a	OCC	214	26600
	Sus. + E7{1}	1	1	1	0	1.00	1.00			23a	OCC	214	26600
	Sus. + E8{1}	1	1	1	0	1.00	1.00			23a	OCC	214	26600

Encasement Drain and Test Port
02/04/2020 2018719 BENTLEY
07:55 AM AutoPIPE Nuclear 12.00.00.16 RESULT PAGE 48

ASME B31.3 (2016) CODE COMPLIANCE
(Moments in ft-lb , Force in lbf) (Stress in psi)

Point name	Load combination	Axial Force	In-Pl. Moment	Out-Pl. Moment	Torsion Moment	S.I.F In	S.I.F Out	Index/SIF Ax.	Index/SIF Tor.	Eq. no.	Load type	Code Stress	Code Allow.
J02 N+	Max P{1}									(3a)	HOOP	348	20000
	GR + Max P{1}	47	0	0	0	1.00	1.00	1.00	1.00	23a	SUST	123	20000
	TR:Amb to T1{1}	0	1	0	0	1.00	1.00	1.00	1.00	(17)	DISP	109	30000
	Amb to T1{1}	0	1	0	0	1.00	1.00	1.00	1.00	(17)	DISP	109	30000
	Sus. + E1{1}	1	1	1	0	1.00	1.00			23a	OCC	214	26600
	Sus. + E2{1}	1	1	1	0	1.00	1.00			23a	OCC	214	26600
	Sus. + E3{1}	0	1	1	0	1.00	1.00			23a	OCC	214	26600
	Sus. + E4{1}	0	1	1	0	1.00	1.00			23a	OCC	214	26600
	Sus. + E5{1}	0	1	1	0	1.00	1.00			23a	OCC	214	26600
	Sus. + E6{1}	0	1	1	0	1.00	1.00			23a	OCC	214	26600
	Sus. + E7{1}	1	1	1	0	1.00	1.00			23a	OCC	214	26600
	Sus. + E8{1}	1	1	1	0	1.00	1.00			23a	OCC	214	26600
J02 F-	Max P{1}									(3a)	HOOP	348	20000
	GR + Max P{1}	46	0	0	0	1.00	1.00	1.00	1.00	23a	SUST	114	20000
	TR:Amb to T1{1}	0	1	0	0	1.00	1.00	1.00	1.00	(17)	DISP	105	30000
	Amb to T1{1}	0	1	0	0	1.00	1.00	1.00	1.00	(17)	DISP	105	30000
	Sus. + E1{1}	1	1	1	0	1.00	1.00			23a	OCC	190	26600
	Sus. + E2{1}	1	1	1	0	1.00	1.00			23a	OCC	190	26600
	Sus. + E3{1}	1	1	1	0	1.00	1.00			23a	OCC	189	26600
	Sus. + E4{1}	1	1	1	0	1.00	1.00			23a	OCC	189	26600
	Sus. + E5{1}	1	1	1	0	1.00	1.00			23a	OCC	189	26600
	Sus. + E6{1}	1	1	1	0	1.00	1.00			23a	OCC	189	26600
	Sus. + E7{1}	1	1	1	0	1.00	1.00			23a	OCC	190	26600
	Sus. + E8{1}	1	1	1	0	1.00	1.00			23a	OCC	190	26600
J02 F+	Max P{1}									(3a)	HOOP	348	20000
	GR + Max P{1}	46	0	0	0	1.00	1.00	1.00	1.00	23a	SUST	114	20000
	TR:Amb to T1{1}	0	0	1	0	1.00	1.00	1.00	1.00	(17)	DISP	105	30000
	Amb to T1{1}	0	0	1	0	1.00	1.00	1.00	1.00	(17)	DISP	105	30000
	Sus. + E1{1}	1	1	1	0	1.00	1.00			23a	OCC	190	26600
	Sus. + E2{1}	1	1	1	0	1.00	1.00			23a	OCC	190	26600
	Sus. + E3{1}	1	1	1	0	1.00	1.00			23a	OCC	189	26600
	Sus. + E4{1}	1	1	1	0	1.00	1.00			23a	OCC	189	26600
	Sus. + E5{1}	1	1	1	0	1.00	1.00			23a	OCC	189	26600
	Sus. + E6{1}	1	1	1	0	1.00	1.00			23a	OCC	189	26600
	Sus. + E7{1}	1	1	1	0	1.00	1.00			23a	OCC	190	26600
	Sus. + E8{1}	1	1	1	0	1.00	1.00			23a	OCC	190	26600
J03	Max P{1}									(3a)	HOOP	348	20000
	GR + Max P{1}	54	0	0	0	1.00	1.00	1.00	1.00	23a	SUST	117	20000
	TR:Amb to T1{1}	0	0	0	0	1.00	1.00	1.00	1.00	(17)	DISP	0	30000
	Amb to T1{1}	0	0	0	0	1.00	1.00	1.00	1.00	(17)	DISP	0	30000
	Sus. + E1{1}	0	0	0	0	1.00	1.00			23a	OCC	117	26600
	Sus. + E2{1}	0	0	0	0	1.00	1.00			23a	OCC	117	26600
	Sus. + E3{1}	0	0	0	0	1.00	1.00			23a	OCC	117	26600
	Sus. + E4{1}	0	0	0	0	1.00	1.00			23a	OCC	117	26600
	Sus. + E5{1}	0	0	0	0	1.00	1.00			23a	OCC	117	26600
	Sus. + E6{1}	0	0	0	0	1.00	1.00			23a	OCC	117	26600
	Sus. + E7{1}	0	0	0	0	1.00	1.00			23a	OCC	117	26600
	Sus. + E8{1}	0	0	0	0	1.00	1.00			23a	OCC	117	26600

```
-----------------------------------------------------------------------------------------------------------------------
Encasement Drain and Test Port
02/04/2020 2018719                                                                  BENTLEY
07:55 AM                                                                            AutoPIPE Nuclear 12.00.00.16   RESULT PAGE  49
-----------------------------------------------------------------------------------------------------------------------

                              ASME B31.3 (2016)  CODE COMPLIANCE
              (Moments in ft-lb  , Force in lbf  )     (Stress in psi     )
 Point     Load                    Axial  In-Pl. Out-Pl. Torsion   S.I.F   Index/SIF  Eq. Load   Code   Code
 name   combination                Force  Moment  Moment  Moment  In  Out   Ax. Tor.  no. type  Stress Allow.
 ------ ----------------------    ------- ------- ------- ------- ---- ---- ---- ---- ---- ----  ------ ------

 *** Segment J  end   ***
```

R E S U L T S U M M A R Y

Maximum restraint forces (lb)

Maximum X :	-5	Point : I00	Load Comb.: GE7{1}
Maximum Y :	-17	Point : I00	Load Comb.: GE7{1}
Maximum Z :	3	Point : E00	Load Comb.: Static Seismic 1{1}
Max. total:	18	Point : I00	Load Comb.: GE7{1}

Maximum restraint moments (ft-lb)

Maximum X :	-1	Point : E00	Load Comb.: GE5{1}
Maximum Y :	-1	Point : E00	Load Comb.: Static Seismic 1{1}
Maximum Z :	-6	Point : E00	Load Comb.: GE7{1}
Max. total:	6	Point : E00	Load Comb.: GE7{1}

R E S U L T S U M M A R Y

Maximum sustained stress

```
Point            : E00
Stress    psi    : 330
Allowable psi    : 20000
Ratio            : 0.02
Load combination : GR + Max P{1}
```

Maximum displacement stress

```
Point            : J01
Stress    psi    : 244
Allowable psi    : 30000
Ratio            : 0.01
Load combination : Max Range
```

Maximum occasional stress

```
Point            : J01
Stress    psi    : 505
Allowable psi    : 26600
Ratio            : 0.02
Load combination : Sus. + E3{1}
```

Maximum hoop stress

```
Point            : E00
Stress    psi    : 822
Allowable psi    : 20000
Ratio            : 0.04
Load combination : Max P{1}
```

R E S U L T S U M M A R Y

Maximum sustained stress ratio

```
Point            : E00
Stress    psi    : 330
Allowable psi    : 20000
Ratio            : 0.02
Load combination : GR + Max P{1}
```

Maximum displacement stress ratio

```
Point            : J01
Stress    psi    : 244
Allowable psi    : 30000
Ratio            : 0.01
Load combination : Max Range
```

Maximum occasional stress ratio

```
Point            : J01
Stress    psi    : 505
Allowable psi    : 26600
Ratio            : 0.02
Load combination : Sus. + E3{1}
```

Maximum hoop stress ratio

```
Point            : E00
Stress    psi    : 822
Allowable psi    : 20000
Ratio            : 0.04
Load combination : Max P{1}
```

* * * The system satisfies ASME B31.3 (2016) code requirements * * *
* * * for the selected options * * *

APPENDIX D7

AUTOPIPE ANALYSIS – ENCASEMENT STABILITY CHECK

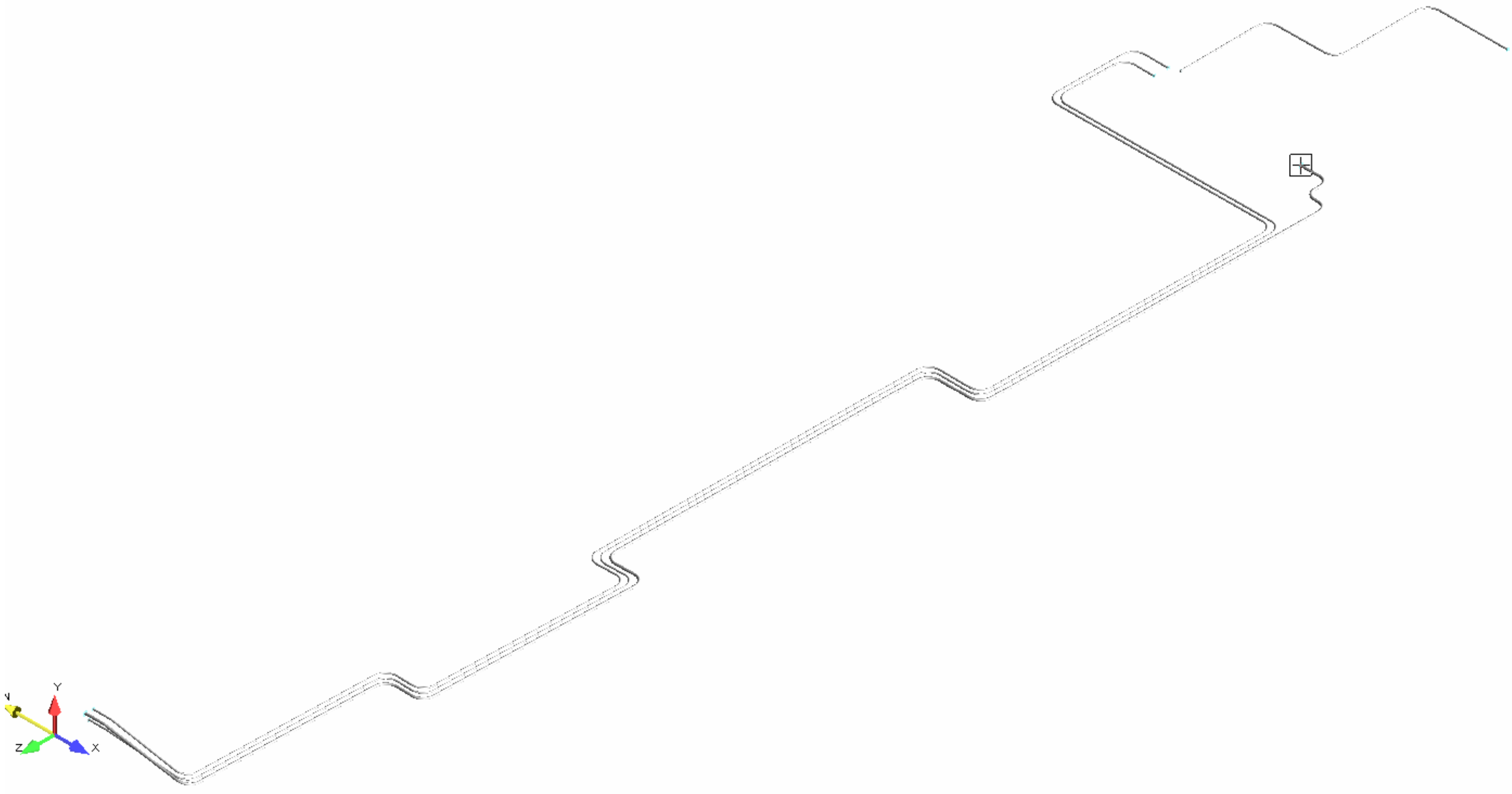
Y
Z
X

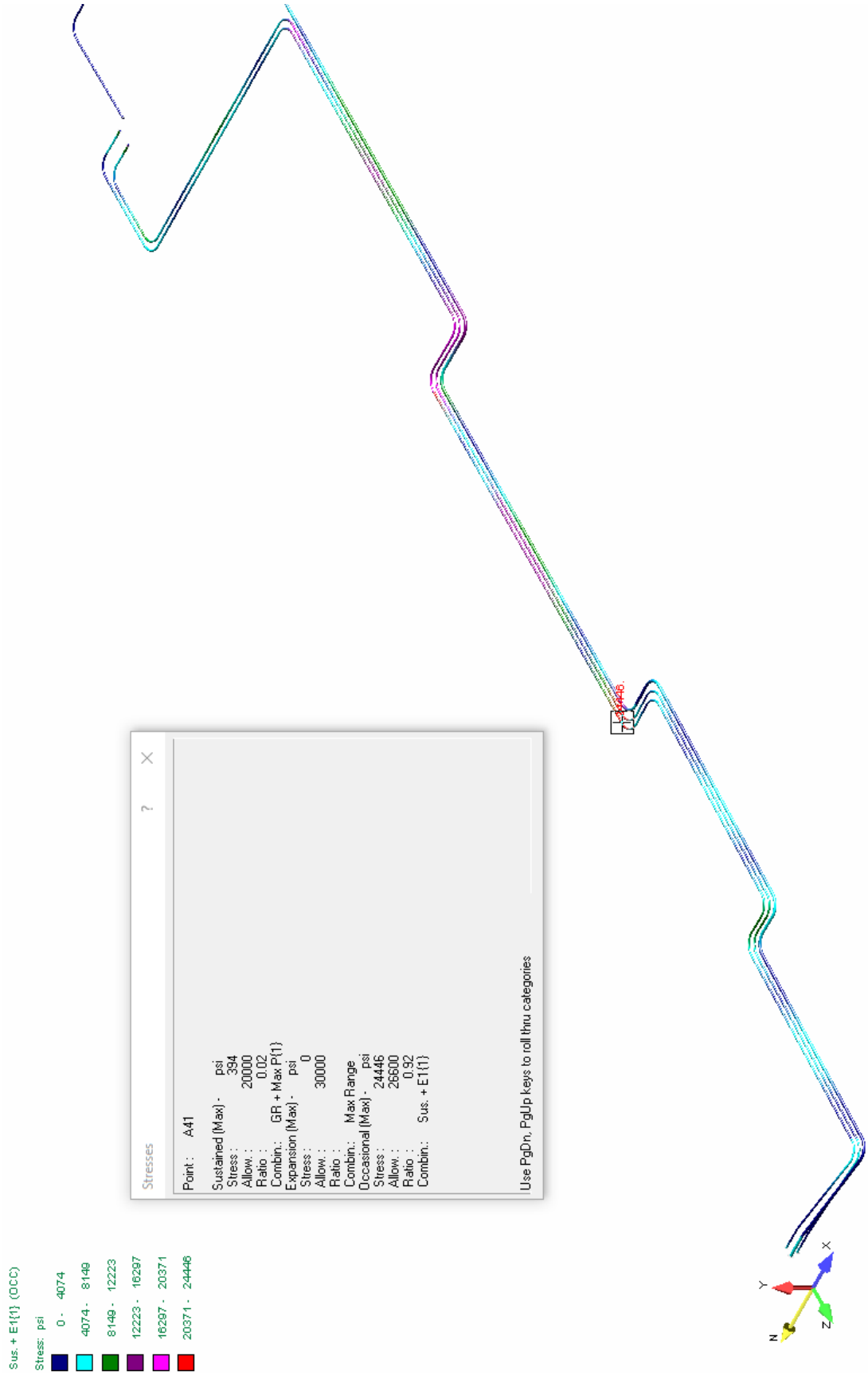
Sus. + E1{1} (OCC)
Stress: psi
0 - 4074
4074 - 8149
8149 - 12223
12223 - 16297
16297 - 20371
20371 - 24446
Stresses
Point : A41
Sustained (Max) - psi
Stress : 394
Allow. : 20000
Ratio : 0.02
Combin.: GR + Max P{1}
Expansion (Max) - psi
Stress : 0
Allow. : 30000
Ratio : 0
Combin.: Max Range
Occasional (Max) - psi
Stress : 24446
Allow. : 26600
Ratio : 0.92
Combin.: Sus. + E1{1}
Use PgDn, PgUp keys to roll thru categories
24446
Y
X
Z
N

```
---------------------------------------------------------------------------------------------------------------
Encasement Piping Stabiltiy
04/24/2020 2018719                                                                                BENTLEY
08:44 AM                                                                                          AutoPIPE Nuclear 12.00.00.16
---------------------------------------------------------------------------------------------------------------
```

```
        *                             *******   **  *******   *******
       ***               **           **    **  **  **    **  **
      ** **             ******         **    **  **  **    **  **
     **   **    **   **  **   *****   *******   **  *******   *****
    *********   **   **  **  **   **  **        **  **        **
   **       **  **   **  **  **   **  **        **  **        **
  **         **  *****   **   *****   **        **  **        *******
```

Pipe Stress Analysis and Design Program

Version: 12.00.00.16

Edition: Nuclear

Developed and Maintained by

BENTLEY SYSTEMS, INCORPORATED
1065 N. PACIFIC CENTER DRIVE, SUITE 450
ANAHEIM, CA 92806

```
************************************************************
**                                                        **
**              AUTOPIPE SYSTEM INFORMATION               **
**                                                        **
************************************************************
```

SYSTEM NAME : Encasement Piping Stabiltiy

PROJECT ID : 2018719

PREPARED BY : _____
JIM HARRINGTON

CHECKED BY : _____
RYAN LANG

1ST APPROVER : _____

2ND APPROVER : _____

PIPING CODE : ASME B31.3

YEAR : 2016

VERTICAL AXIS : Y

AMBIENT TEMPERATURE : 60.0 deg F

COMPONENT LIBRARY : AUTOPIPE

MATERIAL LIBRARY : B313-16

MODEL REVISION NUMBER : 1

Encasement Piping Stabiltiy
04/24/2020 2018719 BENTLEY
08:44 AM AutoPIPE Nuclear 12.00.00.16

T A B L E O F C O N T E N T S

Components..... 1
Coordinates..... 44
Segment Data..... 51
Pipe Properties..... 52
Material Properties..... 53
Material Allowables..... 54
Temperature and Pressure..... 55
Loads Summary..... 56
Support..... 57
Bend..... 68
Load Case Description..... 69
Analysis Summary..... 70
Result Summary..... 73

```
-----------------------------------------------------------------------------------------------------------
Encasement Piping Stabiltiy
04/24/2020 2018719                                                    BENTLEY
08:44 AM                                                              AutoPIPE Nuclear 12.00.00.16   MODEL  PAGE   1
-----------------------------------------------------------------------------------------------------------

                 C O M P O N E N T   D A T A   L I S T I N G

 ---------------------------------------------------------------------------
 *** SEGMENT A

 ---------------------------------------------------------------------------
 From A02 to A03, DX= 2.00 ft                                          Run

 PIPE DATA:
   Pipe Id= 4SCH40, Material= A53-B, Composition= Carbon Steel, Poisson= 0.300, Nom Size= 4 in, OD= 4.500 inch,
   Sch= 40S, Wall Thk= 0.237 inch, Mill= 0.030 inch, Cor= 0.010 inch, Pipe Density= 489.00 lb/cu.ft,
   Pipe Unit Wgt= 10.78 lb/ft, Insul Thk= 0 inch, Cladding Thickness = 0 inch, Lining Thk= 0 inch,
   Long Weld E factor= 1.00, Long Weld W factor= 1.00, Long Modulus= 29.54083 E6 psi,
   Hoop Modulus= 29.54083 E6 psi, Shear Modulus= 11.36186 E6 psi, Sc= 20000.0 psi, Syc= 35000.0 psi,
   Suc= 60000.0 psi

 OPERATING DATA:
   P1= 0 psi, T1= 60.00 deg F, Exp1= 0 in/100ft, E1= 29.54083 E6 psi, Sh1= 20000.00 psi, Sy1= 35000.00 psi

 POINT DATA:
   A02, Coordinates, X= 1.46 ft, Y= 693.07 ft, Z= 0.00 ft

 SUPPORT DATA:
   A02, Anchor, Connected to: Ground, KTX= Rigid, KTY= Rigid, KTZ= Rigid, KRX= Rigid, KRY= Rigid, KRZ= Rigid

 ---------------------------------------------------------------------------
 From A03 to A23, DX= 2.50 ft                                          Run

 POINT DATA:
   A03, Coordinates, X= 3.46 ft, Y= 693.07 ft, Z= 0.00 ft

 ---------------------------------------------------------------------------
 From A23 to A04, DX= 0.50 ft                                          Run

 POINT DATA:
   A23, Coordinates, X= 5.96 ft, Y= 693.07 ft, Z= 0.00 ft

 SUPPORT DATA:
   A23, V-Stop, Support Id= A23  1, Connected to Ground, Comp.Wt = 0.000 lb, Gap-Below= 0.00 inch,
   Gap-Above= 1.00 inch, Friction= 0.00, Gaps setting= Weightless

 ---------------------------------------------------------------------------
 From A04 to A24, DX= 8.18 ft, DY= -1.51 ft, L= 8.32 ft                Bend

 COMPONENT DATA (Bend, TIP= A04, Near= A04 N, Far= A04 F):
   Elbow, Radius= 36.00 inch, Bend angle= 10.46 deg, End flanges= 0, Flex= Auto, SIFI= 1.00, SIFO= 1.00

 POINT DATA:
   A04, Coordinates, X= 6.46 ft, Y= 693.07 ft, Z= 0.00 ft
   A04 N, Coordinates, X= 6.19 ft, Y= 693.07 ft, Z= 0.00 ft
   A04 F, Coordinates, X= 6.73 ft, Y= 693.02 ft, Z= 0.00 ft

 ---------------------------------------------------------------------------
 From A24 to A21, DX= 8.18 ft, DY= -1.51 ft, L= 8.32 ft                Run

 POINT DATA:
   A24, Coordinates, X= 14.64 ft, Y= 691.56 ft, Z= 0.00 ft
```

C O M P O N E N T D A T A L I S T I N G

SUPPORT DATA:
A24, V-Stop, Support Id= A24 1, Connected to Ground, Comp.Wt = 0.000 lb, Gap-Below= 0.00 inch,
Gap-Above= 1.00 inch, Friction= 0.80, Gaps setting= Weightless

---

From A21 to A05, DX= 3.44 ft, DY= -0.64 ft, L= 3.50 ft Run

POINT DATA:
A21, Coordinates, X= 22.82 ft, Y= 690.05 ft, Z= 0.00 ft

SUPPORT DATA:
A21, Guide, Support Id= A21 1, Connected to Ground, Comp.Wt = 0.000 lb, Stiffness= RIGID,
Gap-Down= 0.00 inch, Gap-Above= 1.00 inch, Gap-Left= 1.00 inch, Gap-Right= 1.00 inch, Friction= 0.00,
Gaps setting= Weightless

From A05 to A22, DY= -0.10 ft, DZ= -3.50 ft, L= 3.50 ft Bend

COMPONENT DATA (Bend, TIP= A05, Near= A05 N, Far= A05 F):
Elbow, Radius= 36.00 inch, Bend angle= 89.70 deg, End flanges= 0, Flex= Auto, SIFI= 1.00, SIFO= 1.00

POINT DATA:
A05, Coordinates, X= 26.26 ft, Y= 689.41 ft, Z= 0.00 ft
A05 N, Coordinates, X= 23.33 ft, Y= 689.96 ft, Z= 0.00 ft
A05 F, Coordinates, X= 26.26 ft, Y= 689.32 ft, Z= -2.98 ft

From A22 to A25, DY= -0.26 ft, DZ= -9.00 ft, L= 9.00 ft Run

POINT DATA:
A22, Coordinates, X= 26.26 ft, Y= 689.31 ft, Z= -3.50 ft

SUPPORT DATA:
A22, Guide, Support Id= A22 2, Connected to Ground, Comp.Wt = 0.000 lb, Stiffness= RIGID,
Gap-Down= 0.00 inch, Gap-Above= 1.00 inch, Gap-Left= 1.00 inch, Gap-Right= 1.00 inch, Friction= 0.00,
Gaps setting= Weightless

From A25 to A26, DY= -0.26 ft, DZ= -9.00 ft, L= 9.00 ft Run

POINT DATA:
A25, Coordinates, X= 26.26 ft, Y= 689.05 ft, Z= -12.50 ft

SUPPORT DATA:
A25, V-Stop, Support Id= A25 2, Connected to Ground, Comp.Wt = 0.000 lb, Gap-Below= 0.00 inch,
Gap-Above= 1.00 inch, Friction= 0.80, Gaps setting= Weightless

---

From A26 to A27, DY= -0.26 ft, DZ= -9.00 ft, L= 9.00 ft Run

POINT DATA:
A26, Coordinates, X= 26.26 ft, Y= 688.79 ft, Z= -21.50 ft

SUPPORT DATA:
A26, V-Stop, Support Id= A26 2, Connected to Ground, Comp.Wt = 0.000 lb, Gap-Below= 0.00 inch,

C O M P O N E N T D A T A L I S T I N G

Gap-Above= 1.00 inch, Friction= 0.80, Gaps setting= Weightless

---

From A27 to A28, DY= -0.26 ft, DZ= -9.00 ft, L= 9.00 ft Run

POINT DATA:
A27, Coordinates, X= 26.26 ft, Y= 688.53 ft, Z= -30.50 ft

SUPPORT DATA:
A27, V-Stop, Support Id= A27 2, Connected to Ground, Comp.Wt = 0.000 lb, Gap-Below= 0.00 inch,
Gap-Above= 1.00 inch, Friction= 0.80, Gaps setting= Weightless

---

From A28 to A29, DY= -0.31 ft, DZ= -10.67 ft, L= 10.67 ft Run

POINT DATA:
A28, Coordinates, X= 26.26 ft, Y= 688.27 ft, Z= -39.50 ft

SUPPORT DATA:
A28, V-Stop, Support Id= A28 2, Connected to Ground, Comp.Wt = 0.000 lb, Gap-Below= 0.00 inch,
Gap-Above= 1.00 inch, Friction= 0.80, Gaps setting= Weightless

---

From A29 to A06, DY= -0.10 ft, DZ= -3.50 ft, L= 3.50 ft Run

POINT DATA:
A29, Coordinates, X= 26.26 ft, Y= 687.96 ft, Z= -50.17 ft

SUPPORT DATA:
A29, Guide, Support Id= A29 1, Connected to Ground, Comp.Wt = 0.000 lb, Stiffness= RIGID,
Gap-Down= 0.00 inch, Gap-Above= 1.00 inch, Gap-Left= 1.00 inch, Gap-Right= 1.00 inch, Friction= 0.00,
Gaps setting= Weightless

From A06 to A30, DX= 3.50 ft, DY= -0.10 ft, L= 3.50 ft Bend

COMPONENT DATA (Bend, TIP= A06, Near= A06 N, Far= A06 F):
Elbow, Radius= 36.00 inch, Bend angle= 89.95 deg, End flanges= 0, Flex= Auto, SIFI= 1.00, SIFO= 1.00

POINT DATA:
A06, Coordinates, X= 26.26 ft, Y= 687.86 ft, Z= -53.67 ft
A06 N, Coordinates, X= 26.26 ft, Y= 687.95 ft, Z= -50.67 ft
A06 F, Coordinates, X= 29.26 ft, Y= 687.77 ft, Z= -53.67 ft

From A30 to A31, DX= 2.76 ft, DY= -0.08 ft, L= 2.76 ft Run

POINT DATA:
A30, Coordinates, X= 29.76 ft, Y= 687.76 ft, Z= -53.67 ft

SUPPORT DATA:
A30, Guide, Support Id= A30 1, Connected to Ground, Comp.Wt = 0.000 lb, Stiffness= RIGID,
Gap-Down= 0.00 inch, Gap-Above= 1.00 inch, Gap-Left= 1.00 inch, Gap-Right= 1.00 inch, Friction= 0.00,
Gaps setting= Weightless

C O M P O N E N T D A T A L I S T I N G

From A31 to A07, DX= 3.50 ft, DY= -0.10 ft, L= 3.50 ft Run

POINT DATA:
A31, Coordinates, X= 32.52 ft, Y= 687.68 ft, Z= -53.67 ft

SUPPORT DATA:
A31, Guide, Support Id= A31 1, Connected to Ground, Comp.Wt = 0.000 lb, Stiffness= RIGID,
Gap-Down= 0.00 inch, Gap-Above= 1.00 inch, Gap-Left= 1.00 inch, Gap-Right= 1.00 inch, Friction= 0.00,
Gaps setting= Weightless

From A07 to A32, DY= -0.11 ft, DZ= -3.50 ft, L= 3.50 ft Bend

COMPONENT DATA (Bend, TIP= A07, Near= A07 N, Far= A07 F):
Elbow, Radius= 36.00 inch, Bend angle= 89.95 deg, End flanges= 0, Flex= Auto, SIFI= 1.00, SIFO= 1.00

POINT DATA:
A07, Coordinates, X= 36.02 ft, Y= 687.58 ft, Z= -53.67 ft
A07 N, Coordinates, X= 33.02 ft, Y= 687.67 ft, Z= -53.67 ft
A07 F, Coordinates, X= 36.02 ft, Y= 687.49 ft, Z= -56.67 ft

From A32 to A33, DY= -0.27 ft, DZ= -9.00 ft, L= 9.00 ft Run

POINT DATA:
A32, Coordinates, X= 36.02 ft, Y= 687.47 ft, Z= -57.17 ft

SUPPORT DATA:
A32, Guide, Support Id= A32 1, Connected to Ground, Comp.Wt = 0.000 lb, Stiffness= RIGID,
Gap-Down= 0.00 inch, Gap-Above= 1.00 inch, Gap-Left= 1.00 inch, Gap-Right= 1.00 inch, Friction= 0.00,
Gaps setting= Weightless

From A33 to A34, DY= -0.27 ft, DZ= -9.00 ft, L= 9.00 ft Run

POINT DATA:
A33, Coordinates, X= 36.02 ft, Y= 687.20 ft, Z= -66.17 ft

SUPPORT DATA:
A33, V-Stop, Support Id= A33 2, Connected to Ground, Comp.Wt = 0.000 lb, Gap-Below= 0.00 inch,
Gap-Above= 1.00 inch, Friction= 0.80, Gaps setting= Weightless

From A34 to A35, DY= -0.27 ft, DZ= -9.00 ft, L= 9.00 ft Run

POINT DATA:
A34, Coordinates, X= 36.02 ft, Y= 686.93 ft, Z= -75.17 ft

SUPPORT DATA:
A34, V-Stop, Support Id= A34 2, Connected to Ground, Comp.Wt = 0.000 lb, Gap-Below= 0.00 inch,
Gap-Above= 1.00 inch, Friction= 0.80, Gaps setting= Weightless

From A35 to A36, DY= -0.28 ft, DZ= -9.00 ft, L= 9.00 ft Run

C O M P O N E N T D A T A L I S T I N G

POINT DATA:
A35, Coordinates, X= 36.02 ft, Y= 686.66 ft, Z= -84.17 ft

SUPPORT DATA:
A35, V-Stop, Support Id= A35 2, Connected to Ground, Comp.Wt = 0.000 lb, Gap-Below= 0.00 inch, Gap-Above= 1.00 inch, Friction= 0.80, Gaps setting= Weightless

---

From A36 to A37, DY= -0.08 ft, DZ= -2.68 ft, L= 2.68 ft Run

POINT DATA:
A36, Coordinates, X= 36.02 ft, Y= 686.38 ft, Z= -93.17 ft

SUPPORT DATA:
A36, V-Stop, Support Id= A36 2, Connected to Ground, Comp.Wt = 0.000 lb, Gap-Below= 0.00 inch, Gap-Above= 1.00 inch, Friction= 0.80, Gaps setting= Weightless

---

From A37 to A38, DY= -0.27 ft, DZ= -8.99 ft, L= 8.99 ft Run

POINT DATA:
A37, Coordinates, X= 36.02 ft, Y= 686.30 ft, Z= -95.85 ft

SUPPORT DATA:
A37, V-Stop, Support Id= A37 2, Connected to Ground, Comp.Wt = 0.000 lb, Gap-Below= 0.00 inch, Gap-Above= 1.00 inch, Friction= 0.80, Gaps setting= Weightless

---

From A38 to A08, DY= -0.11 ft, DZ= -3.50 ft, L= 3.50 ft Run

POINT DATA:
A38, Coordinates, X= 36.02 ft, Y= 686.03 ft, Z= -104.84 ft

SUPPORT DATA:
A38, Guide, Support Id= A38 1, Connected to Ground, Comp.Wt = 0.000 lb, Stiffness= RIGID, Gap-Down= 0.00 inch, Gap-Above= 1.00 inch, Gap-Left= 1.00 inch, Gap-Right= 1.00 inch, Friction= 0.00, Gaps setting= Weightless

---

From A08 to A39, DX= -3.50 ft, DY= -0.09 ft, L= 3.50 ft Bend

COMPONENT DATA (Bend, TIP= A08, Near= A08 N, Far= A08 F):
Elbow, Radius= 36.00 inch, Bend angle= 89.95 deg, End flanges= 0, Flex= Auto, SIFI= 1.00, SIFO= 1.00

POINT DATA:
A08, Coordinates, X= 36.02 ft, Y= 685.92 ft, Z= -108.34 ft
A08 N, Coordinates, X= 36.02 ft, Y= 686.01 ft, Z= -105.34 ft
A08 F, Coordinates, X= 33.02 ft, Y= 685.84 ft, Z= -108.34 ft

From A39 to A40, DX= -4.00 ft, DY= -0.10 ft, L= 4.00 ft Run

POINT DATA:
A39, Coordinates, X= 32.52 ft, Y= 685.83 ft, Z= -108.34 ft

C O M P O N E N T D A T A L I S T I N G

SUPPORT DATA:
A39, Guide, Support Id= A39 1, Connected to Ground, Comp.Wt = 0.000 lb, Stiffness= RIGID,
Gap-Down= 0.00 inch, Gap-Above= 1.00 inch, Gap-Left= 1.00 inch, Gap-Right= 1.00 inch, Friction= 0.00,
Gaps setting= Weightless

From A40 to A09, DX= -3.50 ft, DY= -0.09 ft, L= 3.50 ft Run

POINT DATA:
A40, Coordinates, X= 28.52 ft, Y= 685.73 ft, Z= -108.34 ft

SUPPORT DATA:
A40, Guide, Support Id= A40 1, Connected to Ground, Comp.Wt = 0.000 lb, Stiffness= RIGID,
Gap-Down= 0.00 inch, Gap-Above= 1.00 inch, Gap-Left= 1.00 inch, Gap-Right= 1.00 inch, Friction= 0.00,
Gaps setting= Weightless

From A09 to A41, DY= -0.03 ft, DZ= -3.50 ft, L= 3.50 ft Bend

COMPONENT DATA (Bend, TIP= A09, Near= A09 N, Far= A09 F):
Elbow, Radius= 36.00 inch, Bend angle= 89.99 deg, End flanges= 0, Flex= Auto, SIFI= 1.00, SIFO= 1.00

POINT DATA:
A09, Coordinates, X= 25.02 ft, Y= 685.64 ft, Z= -108.34 ft
A09 N, Coordinates, X= 28.02 ft, Y= 685.72 ft, Z= -108.34 ft
A09 F, Coordinates, X= 25.02 ft, Y= 685.61 ft, Z= -111.34 ft

From A41 to A42, DY= -0.07 ft, DZ= -9.00 ft, L= 9.00 ft Run

POINT DATA:
A41, Coordinates, X= 25.02 ft, Y= 685.61 ft, Z= -111.84 ft

SUPPORT DATA:
A41, Guide, Support Id= A41 1, Connected to Ground, Comp.Wt = 0.000 lb, Stiffness= RIGID,
Gap-Down= 0.00 inch, Gap-Above= 1.00 inch, Gap-Left= 1.00 inch, Gap-Right= 1.00 inch, Friction= 0.00,
Gaps setting= Weightless

From A42 to A43, DY= -0.07 ft, DZ= -9.00 ft, L= 9.00 ft Run

POINT DATA:
A42, Coordinates, X= 25.02 ft, Y= 685.54 ft, Z= -120.84 ft

SUPPORT DATA:
A42, V-Stop, Support Id= A42 2, Connected to Ground, Comp.Wt = 0.000 lb, Gap-Below= 0.00 inch,
Gap-Above= 1.00 inch, Friction= 0.80, Gaps setting= Weightless

---

From A43 to A44, DY= -0.07 ft, DZ= -9.00 ft, L= 9.00 ft Run

POINT DATA:
A43, Coordinates, X= 25.02 ft, Y= 685.47 ft, Z= -129.84 ft

SUPPORT DATA:

C O M P O N E N T D A T A L I S T I N G

A43, V-Stop, Support Id= A43 2, Connected to Ground, Comp.Wt = 0.000 lb, Gap-Below= 0.00 inch,
Gap-Above= 1.00 inch, Friction= 0.80, Gaps setting= Weightless

---

From A44 to A45, DY= -0.07 ft, DZ= -9.00 ft, L= 9.00 ft Run

POINT DATA:
A44, Coordinates, X= 25.02 ft, Y= 685.40 ft, Z= -138.84 ft

SUPPORT DATA:
A44, V-Stop, Support Id= A44 2, Connected to Ground, Comp.Wt = 0.000 lb, Gap-Below= 0.00 inch,
Gap-Above= 1.00 inch, Friction= 0.80, Gaps setting= Weightless

---

From A45 to A46, DY= -0.07 ft, DZ= -9.00 ft, L= 9.00 ft Run

POINT DATA:
A45, Coordinates, X= 25.02 ft, Y= 685.33 ft, Z= -147.84 ft

SUPPORT DATA:
A45, V-Stop, Support Id= A45 2, Connected to Ground, Comp.Wt = 0.000 lb, Gap-Below= 0.00 inch,
Gap-Above= 1.00 inch, Friction= 0.80, Gaps setting= Weightless

---

From A46 to A47, DY= -0.07 ft, DZ= -9.00 ft, L= 9.00 ft Run

POINT DATA:
A46, Coordinates, X= 25.02 ft, Y= 685.26 ft, Z= -156.84 ft

SUPPORT DATA:
A46, V-Stop, Support Id= A46 2, Connected to Ground, Comp.Wt = 0.000 lb, Gap-Below= 0.00 inch,
Gap-Above= 1.00 inch, Friction= 0.80, Gaps setting= Weightless

---

From A47 to A48, DY= -0.07 ft, DZ= -9.00 ft, L= 9.00 ft Run

POINT DATA:
A47, Coordinates, X= 25.02 ft, Y= 685.19 ft, Z= -165.84 ft

SUPPORT DATA:
A47, V-Stop, Support Id= A47 2, Connected to Ground, Comp.Wt = 0.000 lb, Gap-Below= 0.00 inch,
Gap-Above= 1.00 inch, Friction= 0.80, Gaps setting= Weightless

---

From A48 to A49, DY= -0.07 ft, DZ= -9.00 ft, L= 9.00 ft Run

POINT DATA:
A48, Coordinates, X= 25.02 ft, Y= 685.12 ft, Z= -174.84 ft

SUPPORT DATA:
A48, V-Stop, Support Id= A48 2, Connected to Ground, Comp.Wt = 0.000 lb, Gap-Below= 0.00 inch,
Gap-Above= 1.00 inch, Friction= 0.80, Gaps setting= Weightless

---

From A49 to A50, DX= 0 ft, DY= -0.03 ft, DZ= -3.83 ft, L= 3.83 ft Run

C O M P O N E N T D A T A L I S T I N G

POINT DATA:
A49, Coordinates, X= 25.02 ft, Y= 685.05 ft, Z= -183.84 ft

SUPPORT DATA:
A49, V-Stop, Support Id= A49 2, Connected to Ground, Comp.Wt = 0.000 lb, Gap-Below= 0.00 inch, Gap-Above= 1.00 inch, Friction= 0.80, Gaps setting= Weightless

---

From A50 to A51, DY= -0.07 ft, DZ= -9.00 ft, L= 9.00 ft Run

POINT DATA:
A50, Coordinates, X= 25.02 ft, Y= 685.02 ft, Z= -187.67 ft

SUPPORT DATA:
A50, V-Stop, Support Id= A50 2, Connected to Ground, Comp.Wt = 0.000 lb, Gap-Below= 0.00 inch, Gap-Above= 1.00 inch, Friction= 0.80, Gaps setting= Weightless

---

From A51 to A10, DY= -0.03 ft, DZ= -3.50 ft, L= 3.50 ft Run

POINT DATA:
A51, Coordinates, X= 25.02 ft, Y= 684.95 ft, Z= -196.67 ft

SUPPORT DATA:
A51, Guide, Support Id= A51 1, Connected to Ground, Comp.Wt = 0.000 lb, Stiffness= RIGID, Gap-Down= 0.00 inch, Gap-Above= 1.00 inch, Gap-Left= 1.00 inch, Gap-Right= 1.00 inch, Friction= 0.00, Gaps setting= Weightless

---

From A10 to A52, DX= 3.50 ft, DY= -0.03 ft, L= 3.50 ft Bend

COMPONENT DATA (Bend, TIP= A10, Near= A10 N, Far= A10 F):
Elbow, Radius= 36.00 inch, Bend angle= 90.00 deg, End flanges= 0, Flex= Auto, SIFI= 1.00, SIFO= 1.00

POINT DATA:
A10, Coordinates, X= 25.02 ft, Y= 684.92 ft, Z= -200.17 ft
A10 N, Coordinates, X= 25.02 ft, Y= 684.95 ft, Z= -197.17 ft
A10 F, Coordinates, X= 28.02 ft, Y= 684.89 ft, Z= -200.17 ft

From A52 to A53, DX= 6.91 ft, DY= -0.05 ft, L= 6.91 ft Run

POINT DATA:
A52, Coordinates, X= 28.52 ft, Y= 684.89 ft, Z= -200.17 ft

SUPPORT DATA:
A52, Guide, Support Id= A52 1, Connected to Ground, Comp.Wt = 0.000 lb, Stiffness= RIGID, Gap-Down= 0.00 inch, Gap-Above= 1.00 inch, Gap-Left= 1.00 inch, Gap-Right= 1.00 inch, Friction= 0.00, Gaps setting= Weightless

---

From A53 to A11, DX= 3.50 ft, DY= -0.02 ft, L= 3.50 ft Run

POINT DATA:
A53, Coordinates, X= 35.43 ft, Y= 684.84 ft, Z= -200.17 ft

C O M P O N E N T D A T A L I S T I N G

SUPPORT DATA:
A53, Guide, Support Id= A53 1, Connected to Ground, Comp.Wt = 0.000 lb, Stiffness= RIGID,
Gap-Down= 0.00 inch, Gap-Above= 1.00 inch, Gap-Left= 1.00 inch, Gap-Right= 1.00 inch, Friction= 0.00,
Gaps setting= Weightless

From A11 to A54, DY= -0.03 ft, DZ= -3.50 ft, L= 3.50 ft Bend

COMPONENT DATA (Bend, TIP= A11, Near= A11 N, Far= A11 F):
Elbow, Radius= 36.00 inch, Bend angle= 90.00 deg, End flanges= 0, Flex= Auto, SIFI= 1.00, SIFO= 1.00

POINT DATA:
A11, Coordinates, X= 38.93 ft, Y= 684.82 ft, Z= -200.17 ft
A11 N, Coordinates, X= 35.93 ft, Y= 684.84 ft, Z= -200.17 ft
A11 F, Coordinates, X= 38.93 ft, Y= 684.79 ft, Z= -203.17 ft

From A54 to A55, DY= -0.07 ft, DZ= -9.00 ft, L= 9.00 ft Run

POINT DATA:
A54, Coordinates, X= 38.93 ft, Y= 684.79 ft, Z= -203.67 ft

SUPPORT DATA:
A54, Guide, Support Id= A54 1, Connected to Ground, Comp.Wt = 0.000 lb, Stiffness= RIGID,
Gap-Down= 0.00 inch, Gap-Above= 1.00 inch, Gap-Left= 1.00 inch, Gap-Right= 1.00 inch, Friction= 0.00,
Gaps setting= Weightless

From A55 to A56, DY= -0.07 ft, DZ= -9.00 ft, L= 9.00 ft Run

POINT DATA:
A55, Coordinates, X= 38.93 ft, Y= 684.72 ft, Z= -212.67 ft

SUPPORT DATA:
A55, V-Stop, Support Id= A55 1, Connected to Ground, Comp.Wt = 0.000 lb, Gap-Below= 0.00 inch,
Gap-Above= 1.00 inch, Friction= 0.80, Gaps setting= Weightless

---

From A56 to A57, DY= -0.07 ft, DZ= -9.00 ft, L= 9.00 ft Run

POINT DATA:
A56, Coordinates, X= 38.93 ft, Y= 684.65 ft, Z= -221.67 ft

SUPPORT DATA:
A56, V-Stop, Support Id= A56 1, Connected to Ground, Comp.Wt = 0.000 lb, Gap-Below= 0.00 inch,
Gap-Above= 1.00 inch, Friction= 0.80, Gaps setting= Weightless

---

From A57 to A58, DY= -0.07 ft, DZ= -9.00 ft, L= 9.00 ft Run

POINT DATA:
A57, Coordinates, X= 38.93 ft, Y= 684.58 ft, Z= -230.67 ft

SUPPORT DATA:
A57, V-Stop, Support Id= A57 1, Connected to Ground, Comp.Wt = 0.000 lb, Gap-Below= 0.00 inch,

C O M P O N E N T D A T A L I S T I N G

Gap-Above= 1.00 inch, Friction= 0.80, Gaps setting= Weightless

From A58 to A59, DY= -0.07 ft, DZ= -9.00 ft, L= 9.00 ft Run

POINT DATA:
A58, Coordinates, X= 38.93 ft, Y= 684.51 ft, Z= -239.67 ft

SUPPORT DATA:
A58, V-Stop, Support Id= A58 1, Connected to Ground, Comp.Wt = 0.000 lb, Gap-Below= 0.00 inch,
Gap-Above= 1.00 inch, Friction= 0.80, Gaps setting= Weightless

From A59 to A60, DY= -0.07 ft, DZ= -9.00 ft, L= 9.00 ft Run

POINT DATA:
A59, Coordinates, X= 38.93 ft, Y= 684.44 ft, Z= -248.67 ft

SUPPORT DATA:
A59, V-Stop, Support Id= A59 1, Connected to Ground, Comp.Wt = 0.000 lb, Gap-Below= 0.00 inch,
Gap-Above= 1.00 inch, Friction= 0.80, Gaps setting= Weightless

From A60 to A61, DX= 0 ft, DY= -0.06 ft, DZ= -8.40 ft, L= 8.40 ft Run

POINT DATA:
A60, Coordinates, X= 38.93 ft, Y= 684.37 ft, Z= -257.67 ft

SUPPORT DATA:
A60, V-Stop, Support Id= A60 1, Connected to Ground, Comp.Wt = 0.000 lb, Gap-Below= 0.00 inch,
Gap-Above= 1.00 inch, Friction= 0.80, Gaps setting= Weightless

From A61 to A62, DY= -0.06 ft, DZ= -9.00 ft, L= 9.00 ft Run

POINT DATA:
A61, Coordinates, X= 38.93 ft, Y= 684.31 ft, Z= -266.07 ft

SUPPORT DATA:
A61, V-Stop, Support Id= A61 1, Connected to Ground, Comp.Wt = 0.000 lb, Gap-Below= 0.00 inch,
Gap-Above= 1.00 inch, Friction= 0.80, Gaps setting= Weightless

From A62 to A12, DY= -0.03 ft, DZ= -3.50 ft, L= 3.50 ft Run

POINT DATA:
A62, Coordinates, X= 38.93 ft, Y= 684.25 ft, Z= -275.07 ft

SUPPORT DATA:
A62, Guide, Support Id= A62 1, Connected to Ground, Comp.Wt = 0.000 lb, Stiffness= RIGID,
Gap-Down= 0.00 inch, Gap-Above= 1.00 inch, Gap-Left= 1.00 inch, Gap-Right= 1.00 inch, Friction= 0.00,
Gaps setting= Weightless

From A12 to A63, DX= -3.50 ft, DY= -0.03 ft, L= 3.50 ft Bend

C O M P O N E N T D A T A L I S T I N G

```
 COMPONENT DATA (Bend, TIP= A12, Near= A12 N, Far= A12 F):
   Elbow, Radius= 36.00 inch, Bend angle= 90.00 deg, End flanges= 0, Flex= Auto, SIFI= 1.00, SIFO= 1.00

 POINT DATA:
   A12, Coordinates, X= 38.93 ft, Y= 684.22 ft, Z= -278.57 ft
   A12 N, Coordinates, X= 38.93 ft, Y= 684.25 ft, Z= -275.57 ft
   A12 F, Coordinates, X= 35.93 ft, Y= 684.19 ft, Z= -278.57 ft

 ------------------------------------------------------------------------------
 From A63 to A64, DX= -9.00 ft, DY= -0.07 ft, L= 9.00 ft                    Run

 POINT DATA:
   A63, Coordinates, X= 35.43 ft, Y= 684.19 ft, Z= -278.57 ft

 SUPPORT DATA:
   A63, Guide, Support Id= A63  1, Connected to Ground, Comp.Wt = 0.000 lb, Stiffness= RIGID,
   Gap-Down= 0.00 inch, Gap-Above= 1.00 inch, Gap-Left= 1.00 inch, Gap-Right= 1.00 inch, Friction= 0.00,
   Gaps setting= Weightless

 ------------------------------------------------------------------------------
 From A64 to A65, DX= -9.00 ft, DY= -0.07 ft, L= 9.00 ft                    Run

 POINT DATA:
   A64, Coordinates, X= 26.43 ft, Y= 684.12 ft, Z= -278.57 ft

 SUPPORT DATA:
   A64, V-Stop, Support Id= A64  2, Connected to Ground, Comp.Wt = 0.000 lb, Gap-Below= 0.00 inch,
   Gap-Above= 1.00 inch, Friction= 0.80, Gaps setting= Weightless

 ------------------------------------------------------------------------------
 From A65 to A66, DX= -9.00 ft, DY= -0.06 ft, L= 9.00 ft                    Run

 POINT DATA:
   A65, Coordinates, X= 17.43 ft, Y= 684.05 ft, Z= -278.57 ft

 SUPPORT DATA:
   A65, V-Stop, Support Id= A65  2, Connected to Ground, Comp.Wt = 0.000 lb, Gap-Below= 0.00 inch,
   Gap-Above= 1.00 inch, Friction= 0.80, Gaps setting= Weightless

 ------------------------------------------------------------------------------
 From A66 to A67, DX= -9.00 ft, DY= -0.07 ft, L= 9.00 ft                    Run

 POINT DATA:
   A66, Coordinates, X= 8.43 ft, Y= 683.99 ft, Z= -278.57 ft

 SUPPORT DATA:
   A66, V-Stop, Support Id= A66  2, Connected to Ground, Comp.Wt = 0.000 lb, Gap-Below= 0.00 inch,
   Gap-Above= 1.00 inch, Friction= 0.80, Gaps setting= Weightless

 ------------------------------------------------------------------------------
 From A67 to A68, DX= -8.78 ft, DY= -0.06 ft, L= 8.78 ft                    Run

 POINT DATA:
   A67, Coordinates, X= -0.57 ft, Y= 683.92 ft, Z= -278.57 ft
```

C O M P O N E N T D A T A L I S T I N G

SUPPORT DATA:
A67, V-Stop, Support Id= A67 2, Connected to Ground, Comp.Wt = 0.000 lb, Gap-Below= 0.00 inch,
Gap-Above= 1.00 inch, Friction= 0.80, Gaps setting= Weightless

---

From A68 to A69, DX= -9.00 ft, DY= -0.06 ft, L= 9.00 ft Run

POINT DATA:
A68, Coordinates, X= -9.35 ft, Y= 683.86 ft, Z= -278.57 ft

SUPPORT DATA:
A68, V-Stop, Support Id= A68 2, Connected to Ground, Comp.Wt = 0.000 lb, Gap-Below= 0.00 inch,
Gap-Above= 1.00 inch, Friction= 0.80, Gaps setting= Weightless

---

From A69 to A13, DX= -3.50 ft, DY= -0.03 ft, L= 3.50 ft Run

POINT DATA:
A69, Coordinates, X= -18.35 ft, Y= 683.80 ft, Z= -278.57 ft

SUPPORT DATA:
A69, Guide, Support Id= A69 1, Connected to Ground, Comp.Wt = 0.000 lb, Stiffness= RIGID,
Gap-Down= 0.00 inch, Gap-Above= 1.00 inch, Gap-Left= 1.00 inch, Gap-Right= 1.00 inch, Friction= 0.00,
Gaps setting= Weightless

From A13 to A70, DY= -0.02 ft, DZ= -3.50 ft, L= 3.50 ft Bend

COMPONENT DATA (Bend, TIP= A13, Near= A13 N, Far= A13 F):
Elbow, Radius= 36.00 inch, Bend angle= 90.00 deg, End flanges= 0, Flex= Auto, SIFI= 1.00, SIFO= 1.00

POINT DATA:
A13, Coordinates, X= -21.85 ft, Y= 683.77 ft, Z= -278.57 ft
A13 N, Coordinates, X= -18.85 ft, Y= 683.80 ft, Z= -278.57 ft
A13 F, Coordinates, X= -21.85 ft, Y= 683.75 ft, Z= -281.57 ft

---

From A70 to A71, DY= -0.05 ft, DZ= -9.00 ft, L= 9.00 ft Run

POINT DATA:
A70, Coordinates, X= -21.85 ft, Y= 683.75 ft, Z= -282.07 ft

SUPPORT DATA:
A70, Guide, Support Id= A70 1, Connected to Ground, Comp.Wt = 0.000 lb, Stiffness= RIGID,
Gap-Down= 0.00 inch, Gap-Above= 1.00 inch, Gap-Left= 1.00 inch, Gap-Right= 1.00 inch, Friction= 0.00,
Gaps setting= Weightless

From A71 to A72, DY= -0.05 ft, DZ= -7.59 ft, L= 7.59 ft Run

POINT DATA:
A71, Coordinates, X= -21.85 ft, Y= 683.70 ft, Z= -291.07 ft

SUPPORT DATA:
A71, V-Stop, Support Id= A71 2, Connected to Ground, Comp.Wt = 0.000 lb, Gap-Below= 0.00 inch,

C O M P O N E N T D A T A L I S T I N G

Gap-Above= 1.00 inch, Friction= 0.80, Gaps setting= Weightless

From A72 to A14, DY= -0.02 ft, DZ= -3.50 ft, L= 3.50 ft Run

POINT DATA:
A72, Coordinates, X= -21.85 ft, Y= 683.65 ft, Z= -298.66 ft

SUPPORT DATA:
A72, Guide, Support Id= A72 1, Connected to Ground, Comp.Wt = 0.000 lb, Stiffness= RIGID,
Gap-Down= 0.00 inch, Gap-Above= 1.00 inch, Gap-Left= 1.00 inch, Gap-Right= 1.00 inch, Friction= 0.00,
Gaps setting= Weightless

From A14 to A73, DX= 3.50 ft, DY= -0.06 ft, L= 3.50 ft Bend

COMPONENT DATA (Bend, TIP= A14, Near= A14 N, Far= A14 F):
Elbow, Radius= 36.00 inch, Bend angle= 89.99 deg, End flanges= 0, Flex= Auto, SIFI= 1.00, SIFO= 1.00

POINT DATA:
A14, Coordinates, X= -21.85 ft, Y= 683.63 ft, Z= -302.16 ft
A14 N, Coordinates, X= -21.85 ft, Y= 683.65 ft, Z= -299.16 ft
A14 F, Coordinates, X= -18.85 ft, Y= 683.58 ft, Z= -302.16 ft

From A73 to A15, DX= 2.96 ft, DY= -0.05 ft, L= 2.96 ft Run

POINT DATA:
A73, Coordinates, X= -18.35 ft, Y= 683.57 ft, Z= -302.16 ft

SUPPORT DATA:
A73, Guide, Support Id= A73 1, Connected to Ground, Comp.Wt = 0.000 lb, Stiffness= RIGID,
Gap-Down= 0.00 inch, Gap-Above= 1.00 inch, Gap-Left= 1.00 inch, Gap-Right= 1.00 inch, Friction= 0.00,
Gaps setting= Weightless

From A15 to A16, DX= 1.00 ft Bend

COMPONENT DATA (Bend, TIP= A15, Near= A15 N, Far= A15 F):
Elbow, Radius= 36.00 inch, Bend angle= 0.97 deg, End flanges= 0, Flex= Auto, SIFI= 1.00, SIFO= 1.00

POINT DATA:
A15, Coordinates, X= -15.39 ft, Y= 683.52 ft, Z= -302.16 ft
A15 N, Coordinates, X= -15.42 ft, Y= 683.52 ft, Z= -302.16 ft
A15 F, Coordinates, X= -15.36 ft, Y= 683.52 ft, Z= -302.16 ft

From A16 to A17, DX= 1.00 ft Run

POINT DATA:
A16, Coordinates, X= -14.39 ft, Y= 683.52 ft, Z= -302.16 ft

From A17 to A18, DX= 0.55 ft Run

C O M P O N E N T D A T A L I S T I N G

POINT DATA:
A17, Coordinates, X= -13.39 ft, Y= 683.52 ft, Z= -302.16 ft

From A18 to A19, DX= 0.19 ft Run

POINT DATA:
A18, Coordinates, X= -12.84 ft, Y= 683.52 ft, Z= -302.16 ft
A19, Coordinates, X= -12.65 ft, Y= 683.52 ft, Z= -302.16 ft

SUPPORT DATA:
A18, Anchor, Connected to: Ground, KTX= Rigid, KTY= Rigid, KTZ= Rigid, KRX= Rigid, KRY= Rigid, KRZ= Rigid

---

*** SEGMENT B , LINE # RIGID

From B03 to B04, DX= 2.00 ft Run

PIPE DATA:
Pipe Id= 6SCH40, Composition= Carbon Steel, Nom Size= 6 in, OD= 6.625 inch, Wall Thk= 0.280 inch,
Mill= 0.035 inch, Pipe Density= 489.00 lb/cu.ft, Pipe Unit Wgt= 18.95 lb/ft

POINT DATA:
B03, Coordinates, X= 1.46 ft, Y= 693.07 ft, Z= 2.00 ft

SUPPORT DATA:
B03, Anchor, Connected to: Ground, KTX= Rigid, KTY= Rigid, KTZ= Rigid, KRX= Rigid, KRY= Rigid, KRZ= Rigid

---

From B04 to B22, DX= 2.50 ft Run

POINT DATA:
B04, Coordinates, X= 3.46 ft, Y= 693.07 ft, Z= 2.00 ft

From B22 to B06, DX= 0.50 ft Run

POINT DATA:
B22, Coordinates, X= 5.96 ft, Y= 693.07 ft, Z= 2.00 ft

SUPPORT DATA:
B22, V-Stop, Support Id= B22 2, Connected to Ground, Comp.Wt = 0.000 lb, Gap-Below= 0.00 inch,
Gap-Above= 1.00 inch, Friction= 0.80, Gaps setting= Weightless

---

From B06 to B23, DX= 11.15 ft, DY= -1.83 ft, L= 11.30 ft Bend

COMPONENT DATA (Bend, TIP= B06, Near= B06 N, Far= B06 F):
Elbow, Radius= 36.00 inch, Bend angle= 9.32 deg, End flanges= 0, Flex= Auto, SIFI= 1.00, SIFO= 1.00

POINT DATA:
B06, Coordinates, X= 6.46 ft, Y= 693.07 ft, Z= 2.00 ft
B06 N, Coordinates, X= 6.22 ft, Y= 693.07 ft, Z= 2.00 ft

C O M P O N E N T D A T A L I S T I N G

B06 F, Coordinates, X= 6.70 ft, Y= 693.03 ft, Z= 2.00 ft

From B23 to B24, DX= 7.70 ft, DY= -1.26 ft, L= 7.80 ft Run

POINT DATA:
B23, Coordinates, X= 17.61 ft, Y= 691.24 ft, Z= 2.00 ft

SUPPORT DATA:
B23, V-Stop, Support Id= B23 2, Connected to Ground, Comp.Wt = 0.000 lb, Gap-Below= 0.00 inch, Gap-Above= 1.00 inch, Friction= 0.80, Gaps setting= Weightless

From B24 to B09, DX= 3.45 ft, DY= -0.57 ft, L= 3.50 ft Run

POINT DATA:
B24, Coordinates, X= 25.31 ft, Y= 689.98 ft, Z= 2.00 ft

SUPPORT DATA:
B24, Guide, Support Id= B24 2, Connected to Ground, Comp.Wt = 0.000 lb, Stiffness= RIGID, Gap-Down= 0.00 inch, Gap-Above= 1.00 inch, Gap-Left= 1.00 inch, Gap-Right= 1.00 inch, Friction= 0.00, Gaps setting= Weightless

From B09 to B25, DY= -0.10 ft, DZ= -3.50 ft, L= 3.50 ft Bend

COMPONENT DATA (Bend, TIP= B09, Near= B09 N, Far= B09 F):
Elbow, Radius= 36.00 inch, Bend angle= 89.73 deg, End flanges= 0, Flex= Auto, SIFI= 1.00, SIFO= 1.00

POINT DATA:
B09, Coordinates, X= 28.76 ft, Y= 689.41 ft, Z= 2.00 ft
B09 N, Coordinates, X= 25.81 ft, Y= 689.90 ft, Z= 2.00 ft
B09 F, Coordinates, X= 28.76 ft, Y= 689.32 ft, Z= -0.98 ft

From B25 to B26, DY= -0.26 ft, DZ= -9.00 ft, L= 9.00 ft Run

POINT DATA:
B25, Coordinates, X= 28.76 ft, Y= 689.31 ft, Z= -1.50 ft

SUPPORT DATA:
B25, Guide, Support Id= B25 2, Connected to Ground, Comp.Wt = 0.000 lb, Stiffness= RIGID, Gap-Down= 0.00 inch, Gap-Above= 1.00 inch, Gap-Left= 1.00 inch, Gap-Right= 1.00 inch, Friction= 0.00, Gaps setting= Weightless

From B26 to B28, DY= -0.26 ft, DZ= -9.00 ft, L= 9.00 ft Run

POINT DATA:
B26, Coordinates, X= 28.76 ft, Y= 689.05 ft, Z= -10.50 ft

SUPPORT DATA:
B26, V-Stop, Support Id= B26 1, Connected to Ground, Comp.Wt = 0.000 lb, Gap-Below= 0.00 inch, Gap-Above= 1.00 inch, Friction= 0.80, Gaps setting= Weightless

C O M P O N E N T D A T A L I S T I N G

From B28 to B29, DY= -0.26 ft, DZ= -9.00 ft, L= 9.00 ft Run

POINT DATA:
B28, Coordinates, X= 28.76 ft, Y= 688.79 ft, Z= -19.50 ft

SUPPORT DATA:
B28, V-Stop, Support Id= B28 1, Connected to Ground, Comp.Wt = 0.000 lb, Gap-Below= 0.00 inch, Gap-Above= 1.00 inch, Friction= 0.80, Gaps setting= Weightless

From B29 to B31, DY= -0.27 ft, DZ= -9.00 ft, L= 9.00 ft Run

POINT DATA:
B29, Coordinates, X= 28.76 ft, Y= 688.53 ft, Z= -28.50 ft

SUPPORT DATA:
B29, V-Stop, Support Id= B29 1, Connected to Ground, Comp.Wt = 0.000 lb, Gap-Below= 0.00 inch, Gap-Above= 1.00 inch, Friction= 0.80, Gaps setting= Weightless

From B31 to B32, DY= -0.30 ft, DZ= -10.17 ft, L= 10.17 ft Run

POINT DATA:
B31, Coordinates, X= 28.76 ft, Y= 688.26 ft, Z= -37.50 ft

SUPPORT DATA:
B31, V-Stop, Support Id= B31 1, Connected to Ground, Comp.Wt = 0.000 lb, Gap-Below= 0.00 inch, Gap-Above= 1.00 inch, Friction= 0.80, Gaps setting= Weightless

From B32 to B16, DY= -0.10 ft, DZ= -3.50 ft, L= 3.50 ft Run

POINT DATA:
B32, Coordinates, X= 28.76 ft, Y= 687.96 ft, Z= -47.67 ft

SUPPORT DATA:
B32, Guide, Support Id= B32 2, Connected to Ground, Comp.Wt = 0.000 lb, Stiffness= RIGID, Gap-Down= 0.00 inch, Gap-Above= 1.00 inch, Gap-Left= 1.00 inch, Gap-Right= 1.00 inch, Friction= 0.00, Gaps setting= Weightless

From B16 to B33, DX= 3.50 ft, DY= -0.08 ft, L= 3.50 ft Bend

COMPONENT DATA (Bend, TIP= B16, Near= B16 N, Far= B16 F):
Elbow, Radius= 36.00 inch, Bend angle= 89.96 deg, End flanges= 0, Flex= Auto, SIFI= 1.00, SIFO= 1.00

POINT DATA:
B16, Coordinates, X= 28.76 ft, Y= 687.86 ft, Z= -51.17 ft
B16 N, Coordinates, X= 28.76 ft, Y= 687.95 ft, Z= -48.17 ft
B16 F, Coordinates, X= 31.76 ft, Y= 687.79 ft, Z= -51.17 ft

From B33 to B34, DX= 2.76 ft, DY= -0.06 ft, L= 2.76 ft Run

C O M P O N E N T D A T A L I S T I N G

POINT DATA:
B33, Coordinates, X= 32.26 ft, Y= 687.78 ft, Z= -51.17 ft

SUPPORT DATA:
B33, Guide, Support Id= B33 2, Connected to Ground, Comp.Wt = 0.000 lb, Stiffness= RIGID,
Gap-Down= 0.00 inch, Gap-Above= 1.00 inch, Gap-Left= 1.00 inch, Gap-Right= 1.00 inch, Friction= 0.00,
Gaps setting= Weightless

From B34 to B19, DX= 3.50 ft, DY= -0.08 ft, L= 3.50 ft Run

POINT DATA:
B34, Coordinates, X= 35.02 ft, Y= 687.72 ft, Z= -51.17 ft

SUPPORT DATA:
B34, Guide, Support Id= B34 2, Connected to Ground, Comp.Wt = 0.000 lb, Stiffness= RIGID,
Gap-Down= 0.00 inch, Gap-Above= 1.00 inch, Gap-Left= 1.00 inch, Gap-Right= 1.00 inch, Friction= 0.00,
Gaps setting= Weightless

From B19 to B35, DY= -0.10 ft, DZ= -3.50 ft, L= 3.50 ft Bend

COMPONENT DATA (Bend, TIP= B19, Near= B19 N, Far= B19 F):
Elbow, Radius= 36.00 inch, Bend angle= 89.96 deg, End flanges= 0, Flex= Auto, SIFI= 1.00, SIFO= 1.00

POINT DATA:
B19, Coordinates, X= 38.52 ft, Y= 687.64 ft, Z= -51.17 ft
B19 N, Coordinates, X= 35.52 ft, Y= 687.71 ft, Z= -51.17 ft
B19 F, Coordinates, X= 38.52 ft, Y= 687.55 ft, Z= -54.17 ft

From B35 to B36, DY= -0.25 ft, DZ= -9.00 ft, L= 9.00 ft Run

POINT DATA:
B35, Coordinates, X= 38.52 ft, Y= 687.54 ft, Z= -54.67 ft

SUPPORT DATA:
B35, Guide, Support Id= B35 2, Connected to Ground, Comp.Wt = 0.000 lb, Stiffness= RIGID,
Gap-Down= 0.00 inch, Gap-Above= 1.00 inch, Gap-Left= 1.00 inch, Gap-Right= 1.00 inch, Friction= 0.00,
Gaps setting= Weightless

From B36 to B37, DY= -0.25 ft, DZ= -9.00 ft, L= 9.00 ft Run

POINT DATA:
B36, Coordinates, X= 38.52 ft, Y= 687.29 ft, Z= -63.67 ft

SUPPORT DATA:
B36, V-Stop, Support Id= B36 2, Connected to Ground, Comp.Wt = 0.000 lb, Gap-Below= 0.00 inch,
Gap-Above= 1.00 inch, Friction= 0.80, Gaps setting= Weightless

---
From B37 to B38, DY= -0.25 ft, DZ= -9.00 ft, L= 9.00 ft Run

POINT DATA:

C O M P O N E N T D A T A L I S T I N G

B37, Coordinates, X= 38.52 ft, Y= 687.04 ft, Z= -72.67 ft

SUPPORT DATA:
B37, V-Stop, Support Id= B37 2, Connected to Ground, Comp.Wt = 0.000 lb, Gap-Below= 0.00 inch,
Gap-Above= 1.00 inch, Friction= 0.80, Gaps setting= Weightless

---

From B38 to B39, DY= -0.25 ft, DZ= -9.00 ft, L= 9.00 ft Run

POINT DATA:
B38, Coordinates, X= 38.52 ft, Y= 686.79 ft, Z= -81.67 ft

SUPPORT DATA:
B38, V-Stop, Support Id= B38 2, Connected to Ground, Comp.Wt = 0.000 lb, Gap-Below= 0.00 inch,
Gap-Above= 1.00 inch, Friction= 0.80, Gaps setting= Weightless

---

From B39 to B40, DY= -0.22 ft, DZ= -7.67 ft, L= 7.67 ft Run

POINT DATA:
B39, Coordinates, X= 38.52 ft, Y= 686.54 ft, Z= -90.67 ft

SUPPORT DATA:
B39, V-Stop, Support Id= B39 2, Connected to Ground, Comp.Wt = 0.000 lb, Gap-Below= 0.00 inch,
Gap-Above= 1.00 inch, Friction= 0.80, Gaps setting= Weightless

---

From B40 to B42, DY= -0.25 ft, DZ= -9.00 ft, L= 9.00 ft Run

POINT DATA:
B40, Coordinates, X= 38.52 ft, Y= 686.32 ft, Z= -98.34 ft

SUPPORT DATA:
B40, V-Stop, Support Id= B40 1, Connected to Ground, Comp.Wt = 0.000 lb, Gap-Below= 0.00 inch,
Gap-Above= 1.00 inch, Friction= 0.80, Gaps setting= Weightless

---

From B42 to B27, DY= -0.10 ft, DZ= -3.50 ft, L= 3.50 ft Run

POINT DATA:
B42, Coordinates, X= 38.52 ft, Y= 686.07 ft, Z= -107.34 ft

SUPPORT DATA:
B42, Guide, Support Id= B42 1, Connected to Ground, Comp.Wt = 0.000 lb, Stiffness= RIGID,
Gap-Down= 0.00 inch, Gap-Above= 1.00 inch, Gap-Left= 1.00 inch, Gap-Right= 1.00 inch, Friction= 0.00,
Gaps setting= Weightless

From B27 to B43, DX= -3.50 ft, DY= -0.09 ft, L= 3.50 ft Bend

COMPONENT DATA (Bend, TIP= B27, Near= B27 N, Far= B27 F):
Elbow, Radius= 36.00 inch, Bend angle= 89.96 deg, End flanges= 0, Flex= Auto, SIFI= 1.00, SIFO= 1.00

POINT DATA:
B27, Coordinates, X= 38.52 ft, Y= 685.97 ft, Z= -110.84 ft

C O M P O N E N T D A T A L I S T I N G

B27 N, Coordinates, X= 38.52 ft, Y= 686.06 ft, Z= -107.84 ft
B27 F, Coordinates, X= 35.52 ft, Y= 685.89 ft, Z= -110.84 ft

From B43 to B45, DX= -4.00 ft, DY= -0.10 ft, L= 4.00 ft Run

POINT DATA:
B43, Coordinates, X= 35.02 ft, Y= 685.88 ft, Z= -110.84 ft

SUPPORT DATA:
B43, Guide, Support Id= B43 1, Connected to Ground, Comp.Wt = 0.000 lb, Stiffness= RIGID,
Gap-Down= 0.00 inch, Gap-Above= 1.00 inch, Gap-Left= 1.00 inch, Gap-Right= 1.00 inch, Friction= 0.00,
Gaps setting= Weightless

From B45 to B30, DX= -3.50 ft, DY= -0.08 ft, L= 3.50 ft Run

POINT DATA:
B45, Coordinates, X= 31.02 ft, Y= 685.78 ft, Z= -110.84 ft

SUPPORT DATA:
B45, Guide, Support Id= B45 1, Connected to Ground, Comp.Wt = 0.000 lb, Stiffness= RIGID,
Gap-Down= 0.00 inch, Gap-Above= 1.00 inch, Gap-Left= 1.00 inch, Gap-Right= 1.00 inch, Friction= 0.00,
Gaps setting= Weightless

From B30 to B46, DY= -0.03 ft, DZ= -3.50 ft, L= 3.50 ft Bend

COMPONENT DATA (Bend, TIP= B30, Near= B30 N, Far= B30 F):
Elbow, Radius= 36.00 inch, Bend angle= 89.99 deg, End flanges= 0, Flex= Auto, SIFI= 1.00, SIFO= 1.00

POINT DATA:
B30, Coordinates, X= 27.52 ft, Y= 685.70 ft, Z= -110.84 ft
B30 N, Coordinates, X= 30.52 ft, Y= 685.77 ft, Z= -110.84 ft
B30 F, Coordinates, X= 27.52 ft, Y= 685.67 ft, Z= -113.84 ft

From B46 to B47, DY= -0.08 ft, DZ= -9.00 ft, L= 9.00 ft Run

POINT DATA:
B46, Coordinates, X= 27.52 ft, Y= 685.67 ft, Z= -114.34 ft

SUPPORT DATA:
B46, Guide, Support Id= B46 2, Connected to Ground, Comp.Wt = 0.000 lb, Stiffness= RIGID,
Gap-Down= 0.00 inch, Gap-Above= 1.00 inch, Gap-Left= 1.00 inch, Gap-Right= 1.00 inch, Friction= 0.00,
Gaps setting= Weightless

From B47 to B48, DY= -0.08 ft, DZ= -9.00 ft, L= 9.00 ft Run

POINT DATA:
B47, Coordinates, X= 27.52 ft, Y= 685.59 ft, Z= -123.34 ft

SUPPORT DATA:
B47, V-Stop, Support Id= B47 2, Connected to Ground, Comp.Wt = 0.000 lb, Gap-Below= 0.00 inch,

C O M P O N E N T D A T A L I S T I N G

Gap-Above= 1.00 inch, Friction= 0.80, Gaps setting= Weightless

From B48 to B49, DY= -0.08 ft, DZ= -9.00 ft, L= 9.00 ft Run

POINT DATA:
B48, Coordinates, X= 27.52 ft, Y= 685.51 ft, Z= -132.34 ft

SUPPORT DATA:
B48, V-Stop, Support Id= B48 2, Connected to Ground, Comp.Wt = 0.000 lb, Gap-Below= 0.00 inch,
Gap-Above= 1.00 inch, Friction= 0.80, Gaps setting= Weightless

From B49 to B50, DY= -0.08 ft, DZ= -9.00 ft, L= 9.00 ft Run

POINT DATA:
B49, Coordinates, X= 27.52 ft, Y= 685.43 ft, Z= -141.34 ft

SUPPORT DATA:
B49, V-Stop, Support Id= B49 2, Connected to Ground, Comp.Wt = 0.000 lb, Gap-Below= 0.00 inch,
Gap-Above= 1.00 inch, Friction= 0.80, Gaps setting= Weightless

From B50 to B51, DY= -0.07 ft, DZ= -9.00 ft, L= 9.00 ft Run

POINT DATA:
B50, Coordinates, X= 27.52 ft, Y= 685.35 ft, Z= -150.34 ft

SUPPORT DATA:
B50, V-Stop, Support Id= B50 2, Connected to Ground, Comp.Wt = 0.000 lb, Gap-Below= 0.00 inch,
Gap-Above= 1.00 inch, Friction= 0.80, Gaps setting= Weightless

From B51 to B52, DY= -0.08 ft, DZ= -9.00 ft, L= 9.00 ft Run

POINT DATA:
B51, Coordinates, X= 27.52 ft, Y= 685.28 ft, Z= -159.34 ft

SUPPORT DATA:
B51, V-Stop, Support Id= B51 2, Connected to Ground, Comp.Wt = 0.000 lb, Gap-Below= 0.00 inch,
Gap-Above= 1.00 inch, Friction= 0.80, Gaps setting= Weightless

From B52 to B53, DY= -0.07 ft, DZ= -9.00 ft, L= 9.00 ft Run

POINT DATA:
B52, Coordinates, X= 27.52 ft, Y= 685.20 ft, Z= -168.34 ft

SUPPORT DATA:
B52, V-Stop, Support Id= B52 2, Connected to Ground, Comp.Wt = 0.000 lb, Gap-Below= 0.00 inch,
Gap-Above= 1.00 inch, Friction= 0.80, Gaps setting= Weightless

From B53 to B54, DX= 0 ft, DY= -0.07 ft, DZ= -7.83 ft, L= 7.83 ft Run

C O M P O N E N T D A T A L I S T I N G

POINT DATA:
B53, Coordinates, X= 27.52 ft, Y= 685.13 ft, Z= -177.34 ft

SUPPORT DATA:
B53, V-Stop, Support Id= B53 2, Connected to Ground, Comp.Wt = 0.000 lb, Gap-Below= 0.00 inch, Gap-Above= 1.00 inch, Friction= 0.80, Gaps setting= Weightless

---

From B54 to B55, DY= -0.07 ft, DZ= -9.00 ft, L= 9.00 ft Run

POINT DATA:
B54, Coordinates, X= 27.52 ft, Y= 685.06 ft, Z= -185.17 ft

SUPPORT DATA:
B54, V-Stop, Support Id= B54 2, Connected to Ground, Comp.Wt = 0.000 lb, Gap-Below= 0.00 inch, Gap-Above= 1.00 inch, Friction= 0.80, Gaps setting= Weightless

---

From B55 to B41, DY= -0.03 ft, DZ= -3.50 ft, L= 3.50 ft Run

POINT DATA:
B55, Coordinates, X= 27.52 ft, Y= 684.99 ft, Z= -194.17 ft

SUPPORT DATA:
B55, Guide, Support Id= B55 1, Connected to Ground, Comp.Wt = 0.000 lb, Stiffness= RIGID, Gap-Down= 0.00 inch, Gap-Above= 1.00 inch, Gap-Left= 1.00 inch, Gap-Right= 1.00 inch, Friction= 0.00, Gaps setting= Weightless

---

From B41 to B57, DX= 3.50 ft, DY= -0.02 ft, L= 3.50 ft Bend

COMPONENT DATA (Bend, TIP= B41, Near= B41 N, Far= B41 F):
Elbow, Radius= 36.00 inch, Bend angle= 90.00 deg, End flanges= 0, Flex= Auto, SIFI= 1.00, SIFO= 1.00

POINT DATA:
B41, Coordinates, X= 27.52 ft, Y= 684.96 ft, Z= -197.67 ft
B41 N, Coordinates, X= 27.52 ft, Y= 684.99 ft, Z= -194.67 ft
B41 F, Coordinates, X= 30.52 ft, Y= 684.94 ft, Z= -197.67 ft

From B57 to B58, DX= 6.91 ft, DY= -0.05 ft, L= 6.91 ft Run

POINT DATA:
B57, Coordinates, X= 31.02 ft, Y= 684.94 ft, Z= -197.67 ft

SUPPORT DATA:
B57, Guide, Support Id= B57 1, Connected to Ground, Comp.Wt = 0.000 lb, Stiffness= RIGID, Gap-Down= 0.00 inch, Gap-Above= 1.00 inch, Gap-Left= 1.00 inch, Gap-Right= 1.00 inch, Friction= 0.00, Gaps setting= Weightless

---

From B58 to B44, DX= 3.50 ft, DY= -0.02 ft, L= 3.50 ft Run

POINT DATA:
B58, Coordinates, X= 37.93 ft, Y= 684.89 ft, Z= -197.67 ft

C O M P O N E N T D A T A L I S T I N G

SUPPORT DATA:
B58, Guide, Support Id= B58 1, Connected to Ground, Comp.Wt = 0.000 lb, Stiffness= RIGID,
Gap-Down= 0.00 inch, Gap-Above= 1.00 inch, Gap-Left= 1.00 inch, Gap-Right= 1.00 inch, Friction= 0.00,
Gaps setting= Weightless

From B44 to B64, DY= -0.02 ft, DZ= -3.50 ft, L= 3.50 ft Bend

COMPONENT DATA (Bend, TIP= B44, Near= B44 N, Far= B44 F):
Elbow, Radius= 36.00 inch, Bend angle= 90.00 deg, End flanges= 0, Flex= Auto, SIFI= 1.00, SIFO= 1.00

POINT DATA:
B44, Coordinates, X= 41.43 ft, Y= 684.87 ft, Z= -197.67 ft
B44 N, Coordinates, X= 38.43 ft, Y= 684.89 ft, Z= -197.67 ft
B44 F, Coordinates, X= 41.43 ft, Y= 684.85 ft, Z= -200.67 ft

From B64 to B65, DY= -0.06 ft, DZ= -9.00 ft, L= 9.00 ft Run

POINT DATA:
B64, Coordinates, X= 41.43 ft, Y= 684.85 ft, Z= -201.17 ft

SUPPORT DATA:
B64, Guide, Support Id= B64 1, Connected to Ground, Comp.Wt = 0.000 lb, Stiffness= RIGID,
Gap-Down= 0.00 inch, Gap-Above= 1.00 inch, Gap-Left= 1.00 inch, Gap-Right= 1.00 inch, Friction= 0.00,
Gaps setting= Weightless

From B65 to B66, DY= -0.06 ft, DZ= -9.00 ft, L= 9.00 ft Run

POINT DATA:
B65, Coordinates, X= 41.43 ft, Y= 684.79 ft, Z= -210.17 ft

SUPPORT DATA:
B65, V-Stop, Support Id= B65 1, Connected to Ground, Comp.Wt = 0.000 lb, Gap-Below= 0.00 inch,
Gap-Above= 1.00 inch, Friction= 0.80, Gaps setting= Weightless

---

From B66 to B67, DY= -0.06 ft, DZ= -9.00 ft, L= 9.00 ft Run

POINT DATA:
B66, Coordinates, X= 41.43 ft, Y= 684.73 ft, Z= -219.17 ft

SUPPORT DATA:
B66, V-Stop, Support Id= B66 1, Connected to Ground, Comp.Wt = 0.000 lb, Gap-Below= 0.00 inch,
Gap-Above= 1.00 inch, Friction= 0.80, Gaps setting= Weightless

---

From B67 to B68, DY= -0.06 ft, DZ= -9.00 ft, L= 9.00 ft Run

POINT DATA:
B67, Coordinates, X= 41.43 ft, Y= 684.67 ft, Z= -228.17 ft

SUPPORT DATA:
B67, V-Stop, Support Id= B67 1, Connected to Ground, Comp.Wt = 0.000 lb, Gap-Below= 0.00 inch,

C O M P O N E N T D A T A L I S T I N G

Gap-Above= 1.00 inch, Friction= 0.80, Gaps setting= Weightless

From B68 to B69, DY= -0.06 ft, DZ= -9.00 ft, L= 9.00 ft Run

POINT DATA:
B68, Coordinates, X= 41.43 ft, Y= 684.61 ft, Z= -237.17 ft

SUPPORT DATA:
B68, V-Stop, Support Id= B68 1, Connected to Ground, Comp.Wt = 0.000 lb, Gap-Below= 0.00 inch,
Gap-Above= 1.00 inch, Friction= 0.80, Gaps setting= Weightless

From B69 to B70, DY= -0.06 ft, DZ= -9.00 ft, L= 9.00 ft Run

POINT DATA:
B69, Coordinates, X= 41.43 ft, Y= 684.55 ft, Z= -246.17 ft

SUPPORT DATA:
B69, V-Stop, Support Id= B69 1, Connected to Ground, Comp.Wt = 0.000 lb, Gap-Below= 0.00 inch,
Gap-Above= 1.00 inch, Friction= 0.80, Gaps setting= Weightless

From B70 to B71, DY= -0.06 ft, DZ= -9.00 ft, L= 9.00 ft Run

POINT DATA:
B70, Coordinates, X= 41.43 ft, Y= 684.49 ft, Z= -255.17 ft

SUPPORT DATA:
B70, V-Stop, Support Id= B70 1, Connected to Ground, Comp.Wt = 0.000 lb, Gap-Below= 0.00 inch,
Gap-Above= 1.00 inch, Friction= 0.80, Gaps setting= Weightless

From B71 to B72, DY= -0.05 ft, DZ= -9.00 ft, L= 9.00 ft Run

POINT DATA:
B71, Coordinates, X= 41.43 ft, Y= 684.43 ft, Z= -264.17 ft

SUPPORT DATA:
B71, V-Stop, Support Id= B71 1, Connected to Ground, Comp.Wt = 0.000 lb, Gap-Below= 0.00 inch,
Gap-Above= 1.00 inch, Friction= 0.80, Gaps setting= Weightless

From B72 to B73, DX= 0 ft, DY= -0.03 ft, DZ= -4.83 ft, L= 4.83 ft Run

POINT DATA:
B72, Coordinates, X= 41.43 ft, Y= 684.38 ft, Z= -273.17 ft

SUPPORT DATA:
B72, V-Stop, Support Id= B72 1, Connected to Ground, Comp.Wt = 0.000 lb, Gap-Below= 0.00 inch,
Gap-Above= 1.00 inch, Friction= 0.80, Gaps setting= Weightless

From B73 to B74, DY= -0.06 ft, DZ= -9.00 ft, L= 9.00 ft Run

C O M P O N E N T D A T A L I S T I N G

POINT DATA:
B73, Coordinates, X= 41.43 ft, Y= 684.35 ft, Z= -278.00 ft

SUPPORT DATA:
B73, V-Stop, Support Id= B73 1, Connected to Ground, Comp.Wt = 0.000 lb, Gap-Below= 0.00 inch, Gap-Above= 1.00 inch, Friction= 0.80, Gaps setting= Weightless

---

From B74 to B56, DY= -0.02 ft, DZ= -3.50 ft, L= 3.50 ft Run

POINT DATA:
B74, Coordinates, X= 41.43 ft, Y= 684.29 ft, Z= -287.00 ft

SUPPORT DATA:
B74, Guide, Support Id= B74 1, Connected to Ground, Comp.Wt = 0.000 lb, Stiffness= RIGID, Gap-Down= 0.00 inch, Gap-Above= 1.00 inch, Gap-Left= 1.00 inch, Gap-Right= 1.00 inch, Friction= 0.00, Gaps setting= Weightless

---

From B56 to B75, DX= -2.95 ft, DY= -0.03 ft, L= 2.95 ft Bend

COMPONENT DATA (Bend, TIP= B56, Near= B56 N, Far= B56 F):
Elbow, Radius= 30.00 inch, Bend angle= 90.00 deg, End flanges= 0, Flex= Auto, SIFI= 1.02, SIFO= 1.00

POINT DATA:
B56, Coordinates, X= 41.43 ft, Y= 684.27 ft, Z= -290.50 ft
B56 N, Coordinates, X= 41.43 ft, Y= 684.28 ft, Z= -288.00 ft
B56 F, Coordinates, X= 38.93 ft, Y= 684.24 ft, Z= -290.50 ft

From B75 to B20, DX= -2.94 ft, DY= -0.05 ft, L= 2.94 ft Run

POINT DATA:
B75, Coordinates, X= 38.48 ft, Y= 684.24 ft, Z= -290.50 ft

SUPPORT DATA:
B75, Guide, Support Id= B75 1, Connected to Ground, Comp.Wt = 0.000 lb, Stiffness= RIGID, Gap-Down= 0.00 inch, Gap-Above= 1.00 inch, Gap-Left= 1.00 inch, Gap-Right= 1.00 inch, Friction= 0.00, Gaps setting= Weightless

---

From B20 to B77, DY= -0.06 ft, DZ= -3.17 ft, L= 3.17 ft Bend

COMPONENT DATA (Bend, TIP= B20, Near= B20 N, Far= B20 F):
Elbow, Radius= 30.00 inch, Bend angle= 89.98 deg, End flanges= 0, Flex= Auto, SIFI= 1.02, SIFO= 1.00

POINT DATA:
B20, Coordinates, X= 35.54 ft, Y= 684.19 ft, Z= -290.50 ft
B20 N, Coordinates, X= 38.04 ft, Y= 684.23 ft, Z= -290.50 ft
B20 F, Coordinates, X= 35.54 ft, Y= 684.14 ft, Z= -293.00 ft

From B77 to B21, DY= -0.06 ft, DZ= -3.16 ft, L= 3.16 ft Run

POINT DATA:

C O M P O N E N T D A T A L I S T I N G

B77, Coordinates, X= 35.54 ft, Y= 684.13 ft, Z= -293.67 ft

SUPPORT DATA:
B77, Guide, Support Id= B77 1, Connected to Ground, Comp.Wt = 0.000 lb, Stiffness= RIGID,
Gap-Down= 0.00 inch, Gap-Above= 1.00 inch, Gap-Left= 1.00 inch, Gap-Right= 1.00 inch, Friction= 0.00,
Gaps setting= Weightless

From B21 to B76, DX= -3.00 ft, DY= -0.04 ft, L= 3.00 ft Bend

COMPONENT DATA (Bend, TIP= B21, Near= B21 N, Far= B21 F):
Elbow, Radius= 30.00 inch, Bend angle= 89.99 deg, End flanges= 0, Flex= Auto, SIFI= 1.02, SIFO= 1.00

POINT DATA:
B21, Coordinates, X= 35.54 ft, Y= 684.07 ft, Z= -296.83 ft
B21 N, Coordinates, X= 35.54 ft, Y= 684.12 ft, Z= -294.33 ft
B21 F, Coordinates, X= 33.04 ft, Y= 684.04 ft, Z= -296.83 ft

From B76 to B59, DX= -1.85 ft, DY= -0.03 ft, L= 1.85 ft Run

POINT DATA:
B76, Coordinates, X= 32.54 ft, Y= 684.03 ft, Z= -296.83 ft

SUPPORT DATA:
B76, Guide, Support Id= B76 1, Connected to Ground, Comp.Wt = 0.000 lb, Stiffness= RIGID,
Gap-Down= 0.00 inch, Gap-Above= 1.00 inch, Gap-Left= 1.00 inch, Gap-Right= 1.00 inch, Friction= 0.00,
Gaps setting= Weightless

From B59 to B60, DX= -1.00 ft Bend

COMPONENT DATA (Bend, TIP= B59, Near= B59 N, Mid= B59 M, Far= B59 F):
Elbow, Radius= 36.00 inch, Bend angle= 0.93 deg, Mid point at 50.00 percent, End flanges= 0, Flex= Auto,
SIFI= 1.00, SIFO= 1.00

POINT DATA:
B59, Coordinates, X= 30.69 ft, Y= 684.00 ft, Z= -296.83 ft
B59 N, Coordinates, X= 30.71 ft, Y= 684.00 ft, Z= -296.83 ft
B59 M, Coordinates, X= 30.69 ft, Y= 684.00 ft, Z= -296.83 ft
B59 F, Coordinates, X= 30.67 ft, Y= 684.00 ft, Z= -296.83 ft

SUPPORT DATA:
B59 M, V-Stop, Support Id= B59 M1, Connected to Ground, Comp.Wt = 0.000 lb, Gap-Below= 0.00 inch,
Gap-Above= 1.00 inch, Friction= 0.80, Gaps setting= Weightless

---

From B60 to B61, DX= -1.00 ft Run

POINT DATA:
B60, Coordinates, X= 29.69 ft, Y= 684.00 ft, Z= -296.83 ft

From B61 to B62, DX= -0.61 ft Run

C O M P O N E N T D A T A L I S T I N G

POINT DATA:
B61, Coordinates, X= 28.69 ft, Y= 684.00 ft, Z= -296.83 ft

From B62 to B63, DX= -0.25 ft Run

POINT DATA:
B62, Coordinates, X= 28.08 ft, Y= 684.00 ft, Z= -296.83 ft
B63, Coordinates, X= 27.83 ft, Y= 684.00 ft, Z= -296.83 ft

SUPPORT DATA:
B62, Anchor, Connected to: Ground, KTX= Rigid, KTY= Rigid, KTZ= Rigid, KRX= Rigid, KRY= Rigid, KRZ= Rigid

---

*** SEGMENT C

From C03 to C04, DX= 2.00 ft Run

PIPE DATA:
Pipe Id= 4SCH40, Composition= Carbon Steel, Nom Size= 4 in, OD= 4.500 inch, Wall Thk= 0.237 inch,
Mill= 0.030 inch, Pipe Density= 489.00 lb/cu.ft, Pipe Unit Wgt= 10.78 lb/ft

POINT DATA:
C03, Coordinates, X= 1.46 ft, Y= 691.07 ft, Z= 1.00 ft

SUPPORT DATA:
C03, Anchor, Connected to: Ground, KTX= Rigid, KTY= Rigid, KTZ= Rigid, KRX= Rigid, KRY= Rigid, KRZ= Rigid

---

From C04 to C21, DX= 2.50 ft Run

POINT DATA:
C04, Coordinates, X= 3.46 ft, Y= 691.07 ft, Z= 1.00 ft

From C21 to C06, DX= 0.50 ft Run

POINT DATA:
C21, Coordinates, X= 5.96 ft, Y= 691.07 ft, Z= 1.00 ft

SUPPORT DATA:
C21, V-Stop, Support Id= C21 2, Connected to Ground, Comp.Wt = 0.000 lb, Gap-Below= 0.00 inch,
Gap-Above= 1.00 inch, Friction= 0.80, Gaps setting= Weightless

---

From C06 to C22, DX= 10.49 ft, DY= -0.85 ft, L= 10.52 ft Bend

COMPONENT DATA (Bend, TIP= C06, Near= C06 N, Far= C06 F):
Elbow, Radius= 36.00 inch, Bend angle= 4.63 deg, End flanges= 0, Flex= Auto, SIFI= 1.00, SIFO= 1.00

POINT DATA:
C06, Coordinates, X= 6.46 ft, Y= 691.07 ft, Z= 1.00 ft
C06 N, Coordinates, X= 6.34 ft, Y= 691.07 ft, Z= 1.00 ft

C O M P O N E N T D A T A L I S T I N G

C06 F, Coordinates, X= 6.58 ft, Y= 691.06 ft, Z= 1.00 ft

From C22 to C23, DX= 6.99 ft, DY= -0.57 ft, L= 7.01 ft Run

POINT DATA:
C22, Coordinates, X= 16.95 ft, Y= 690.22 ft, Z= 1.00 ft

SUPPORT DATA:
C22, V-Stop, Support Id= C22 2, Connected to Ground, Comp.Wt = 0.000 lb, Gap-Below= 0.00 inch,
Gap-Above= 1.00 inch, Friction= 0.80, Gaps setting= Weightless

---

From C23 to C09, DX= 3.49 ft, DY= -0.28 ft, L= 3.50 ft Run

POINT DATA:
C23, Coordinates, X= 23.94 ft, Y= 689.65 ft, Z= 1.00 ft

SUPPORT DATA:
C23, Guide, Support Id= C23 2, Connected to Ground, Comp.Wt = 0.000 lb, Stiffness= RIGID,
Gap-Down= 0.00 inch, Gap-Above= 1.00 inch, Gap-Left= 1.00 inch, Gap-Right= 1.00 inch, Friction= 0.00,
Gaps setting= Weightless

From C09 to C24, DY= -0.10 ft, DZ= -3.50 ft, L= 3.50 ft Bend

COMPONENT DATA (Bend, TIP= C09, Near= C09 N, Far= C09 F):
Elbow, Radius= 36.00 inch, Bend angle= 89.87 deg, End flanges= 0, Flex= Auto, SIFI= 1.00, SIFO= 1.00

POINT DATA:
C09, Coordinates, X= 27.43 ft, Y= 689.37 ft, Z= 1.00 ft
C09 N, Coordinates, X= 24.45 ft, Y= 689.61 ft, Z= 1.00 ft
C09 F, Coordinates, X= 27.43 ft, Y= 689.28 ft, Z= -1.99 ft

From C24 to C25, DY= -0.26 ft, DZ= -9.00 ft, L= 9.00 ft Run

POINT DATA:
C24, Coordinates, X= 27.43 ft, Y= 689.27 ft, Z= -2.50 ft

SUPPORT DATA:
C24, Guide, Support Id= C24 2, Connected to Ground, Comp.Wt = 0.000 lb, Stiffness= RIGID,
Gap-Down= 0.00 inch, Gap-Above= 1.00 inch, Gap-Left= 1.00 inch, Gap-Right= 1.00 inch, Friction= 0.00,
Gaps setting= Weightless

From C25 to C26, DY= -0.26 ft, DZ= -9.00 ft, L= 9.00 ft Run

POINT DATA:
C25, Coordinates, X= 27.43 ft, Y= 689.01 ft, Z= -11.50 ft

SUPPORT DATA:
C25, V-Stop, Support Id= C25 2, Connected to Ground, Comp.Wt = 0.000 lb, Gap-Below= 0.00 inch,
Gap-Above= 1.00 inch, Friction= 0.80, Gaps setting= Weightless

C O M P O N E N T D A T A L I S T I N G

From C26 to C28, DY= -0.26 ft, DZ= -9.00 ft, L= 9.00 ft Run

POINT DATA:
C26, Coordinates, X= 27.43 ft, Y= 688.75 ft, Z= -20.50 ft

SUPPORT DATA:
C26, V-Stop, Support Id= C26 2, Connected to Ground, Comp.Wt = 0.000 lb, Gap-Below= 0.00 inch,
Gap-Above= 1.00 inch, Friction= 0.80, Gaps setting= Weightless

From C28 to C29, DY= -0.27 ft, DZ= -9.00 ft, L= 9.00 ft Run

POINT DATA:
C28, Coordinates, X= 27.43 ft, Y= 688.49 ft, Z= -29.50 ft

SUPPORT DATA:
C28, V-Stop, Support Id= C28 2, Connected to Ground, Comp.Wt = 0.000 lb, Gap-Below= 0.00 inch,
Gap-Above= 1.00 inch, Friction= 0.80, Gaps setting= Weightless

From C29 to C31, DY= -0.31 ft, DZ= -10.50 ft, L= 10.50 ft Run

POINT DATA:
C29, Coordinates, X= 27.43 ft, Y= 688.22 ft, Z= -38.50 ft

SUPPORT DATA:
C29, V-Stop, Support Id= C29 2, Connected to Ground, Comp.Wt = 0.000 lb, Gap-Below= 0.00 inch,
Gap-Above= 1.00 inch, Friction= 0.80, Gaps setting= Weightless

From C31 to C16, DY= -0.10 ft, DZ= -3.50 ft, L= 3.50 ft Run

POINT DATA:
C31, Coordinates, X= 27.43 ft, Y= 687.91 ft, Z= -49.00 ft

SUPPORT DATA:
C31, Guide, Support Id= C31 2, Connected to Ground, Comp.Wt = 0.000 lb, Stiffness= RIGID,
Gap-Down= 0.00 inch, Gap-Above= 1.00 inch, Gap-Left= 1.00 inch, Gap-Right= 1.00 inch, Friction= 0.00,
Gaps setting= Weightless

From C16 to C32, DX= 3.50 ft, DY= -0.08 ft, L= 3.50 ft Bend

COMPONENT DATA (Bend, TIP= C16, Near= C16 N, Far= C16 F):
Elbow, Radius= 36.00 inch, Bend angle= 89.96 deg, End flanges= 0, Flex= Auto, SIFI= 1.00, SIFO= 1.00

POINT DATA:
C16, Coordinates, X= 27.43 ft, Y= 687.81 ft, Z= -52.50 ft
C16 N, Coordinates, X= 27.43 ft, Y= 687.90 ft, Z= -49.50 ft
C16 F, Coordinates, X= 30.43 ft, Y= 687.74 ft, Z= -52.50 ft

From C32 to C33, DX= 2.76 ft, DY= -0.07 ft, L= 2.76 ft Run

C O M P O N E N T D A T A L I S T I N G

```
 POINT DATA:
   C32, Coordinates, X= 30.93 ft, Y= 687.73 ft, Z= -52.50 ft

 SUPPORT DATA:
   C32, Guide, Support Id= C32  2, Connected to Ground, Comp.Wt = 0.000 lb, Stiffness= RIGID,
   Gap-Down= 0.00 inch, Gap-Above= 1.00 inch, Gap-Left= 1.00 inch, Gap-Right= 1.00 inch, Friction= 0.00,
   Gaps setting= Weightless

 ------------------------------------------------------------------------------
 From C33 to C19, DX= 3.50 ft, DY= -0.08 ft, L= 3.50 ft                    Run

 POINT DATA:
   C33, Coordinates, X= 33.69 ft, Y= 687.66 ft, Z= -52.50 ft

 SUPPORT DATA:
   C33, Guide, Support Id= C33  2, Connected to Ground, Comp.Wt = 0.000 lb, Stiffness= RIGID,
   Gap-Down= 0.00 inch, Gap-Above= 1.00 inch, Gap-Left= 1.00 inch, Gap-Right= 1.00 inch, Friction= 0.00,
   Gaps setting= Weightless

 ------------------------------------------------------------------------------
 From C19 to C34, DY= -0.10 ft, DZ= -3.50 ft, L= 3.50 ft                   Bend

 COMPONENT DATA (Bend, TIP= C19, Near= C19 N, Far= C19 F):
   Elbow, Radius= 36.00 inch, Bend angle= 89.96 deg, End flanges= 0, Flex= Auto, SIFI= 1.00, SIFO= 1.00

 POINT DATA:
   C19, Coordinates, X= 37.19 ft, Y= 687.58 ft, Z= -52.50 ft
   C19 N, Coordinates, X= 34.19 ft, Y= 687.65 ft, Z= -52.50 ft
   C19 F, Coordinates, X= 37.19 ft, Y= 687.49 ft, Z= -55.50 ft

 ------------------------------------------------------------------------------
 From C34 to C35, DY= -0.26 ft, DZ= -9.00 ft, L= 9.00 ft                   Run

 POINT DATA:
   C34, Coordinates, X= 37.19 ft, Y= 687.48 ft, Z= -56.00 ft

 SUPPORT DATA:
   C34, Guide, Support Id= C34  2, Connected to Ground, Comp.Wt = 0.000 lb, Stiffness= RIGID,
   Gap-Down= 0.00 inch, Gap-Above= 1.00 inch, Gap-Left= 1.00 inch, Gap-Right= 1.00 inch, Friction= 0.00,
   Gaps setting= Weightless

 ------------------------------------------------------------------------------
 From C35 to C36, DY= -0.26 ft, DZ= -9.00 ft, L= 9.00 ft                   Run

 POINT DATA:
   C35, Coordinates, X= 37.19 ft, Y= 687.22 ft, Z= -65.00 ft

 SUPPORT DATA:
   C35, V-Stop, Support Id= C35  2, Connected to Ground, Comp.Wt = 0.000 lb, Gap-Below= 0.00 inch,
   Gap-Above= 1.00 inch, Friction= 0.80, Gaps setting= Weightless

 ------------------------------------------------------------------------------
 From C36 to C37, DY= -0.26 ft, DZ= -9.00 ft, L= 9.00 ft                   Run

 POINT DATA:
```

C O M P O N E N T D A T A L I S T I N G

C36, Coordinates, X= 37.19 ft, Y= 686.96 ft, Z= -74.00 ft

SUPPORT DATA:
C36, V-Stop, Support Id= C36 2, Connected to Ground, Comp.Wt = 0.000 lb, Gap-Below= 0.00 inch,
Gap-Above= 1.00 inch, Friction= 0.80, Gaps setting= Weightless

---

From C37 to C38, DY= -0.26 ft, DZ= -9.00 ft, L= 9.00 ft Run

POINT DATA:
C37, Coordinates, X= 37.19 ft, Y= 686.70 ft, Z= -83.00 ft

SUPPORT DATA:
C37, V-Stop, Support Id= C37 2, Connected to Ground, Comp.Wt = 0.000 lb, Gap-Below= 0.00 inch,
Gap-Above= 1.00 inch, Friction= 0.80, Gaps setting= Weightless

---

From C38 to C39, DY= -0.15 ft, DZ= -5.01 ft, L= 5.01 ft Run

POINT DATA:
C38, Coordinates, X= 37.19 ft, Y= 686.44 ft, Z= -92.00 ft

SUPPORT DATA:
C38, V-Stop, Support Id= C38 2, Connected to Ground, Comp.Wt = 0.000 lb, Gap-Below= 0.00 inch,
Gap-Above= 1.00 inch, Friction= 0.80, Gaps setting= Weightless

---

From C39 to C40, DY= -0.27 ft, DZ= -8.99 ft, L= 8.99 ft Run

POINT DATA:
C39, Coordinates, X= 37.19 ft, Y= 686.29 ft, Z= -97.01 ft

SUPPORT DATA:
C39, V-Stop, Support Id= C39 2, Connected to Ground, Comp.Wt = 0.000 lb, Gap-Below= 0.00 inch,
Gap-Above= 1.00 inch, Friction= 0.80, Gaps setting= Weightless

---

From C40 to C27, DY= -0.10 ft, DZ= -3.50 ft, L= 3.50 ft Run

POINT DATA:
C40, Coordinates, X= 37.19 ft, Y= 686.02 ft, Z= -106.00 ft

SUPPORT DATA:
C40, Guide, Support Id= C40 2, Connected to Ground, Comp.Wt = 0.000 lb, Stiffness= RIGID,
Gap-Down= 0.00 inch, Gap-Above= 1.00 inch, Gap-Left= 1.00 inch, Gap-Right= 1.00 inch, Friction= 0.00,
Gaps setting= Weightless

From C27 to C42, DX= -3.50 ft, DY= -0.09 ft, L= 3.50 ft Bend

COMPONENT DATA (Bend, TIP= C27, Near= C27 N, Far= C27 F):
Elbow, Radius= 36.00 inch, Bend angle= 89.96 deg, End flanges= 0, Flex= Auto, SIFI= 1.00, SIFO= 1.00

POINT DATA:
C27, Coordinates, X= 37.19 ft, Y= 685.92 ft, Z= -109.50 ft

C O M P O N E N T D A T A L I S T I N G

C27 N, Coordinates, X= 37.19 ft, Y= 686.01 ft, Z= -106.50 ft
C27 F, Coordinates, X= 34.19 ft, Y= 685.84 ft, Z= -109.50 ft

From C42 to C43, DX= -4.00 ft, DY= -0.10 ft, L= 4.00 ft Run

POINT DATA:
C42, Coordinates, X= 33.69 ft, Y= 685.83 ft, Z= -109.50 ft

SUPPORT DATA:
C42, Guide, Support Id= C42 2, Connected to Ground, Comp.Wt = 0.000 lb, Stiffness= RIGID,
Gap-Down= 0.00 inch, Gap-Above= 1.00 inch, Gap-Left= 1.00 inch, Gap-Right= 1.00 inch, Friction= 0.00,
Gaps setting= Weightless

From C43 to C30, DX= -3.50 ft, DY= -0.09 ft, L= 3.50 ft Run

POINT DATA:
C43, Coordinates, X= 29.69 ft, Y= 685.73 ft, Z= -109.50 ft

SUPPORT DATA:
C43, Guide, Support Id= C43 2, Connected to Ground, Comp.Wt = 0.000 lb, Stiffness= RIGID,
Gap-Down= 0.00 inch, Gap-Above= 1.00 inch, Gap-Left= 1.00 inch, Gap-Right= 1.00 inch, Friction= 0.00,
Gaps setting= Weightless

From C30 to C45, DY= -0.03 ft, DZ= -3.50 ft, L= 3.50 ft Bend

COMPONENT DATA (Bend, TIP= C30, Near= C30 N, Far= C30 F):
Elbow, Radius= 36.00 inch, Bend angle= 89.99 deg, End flanges= 0, Flex= Auto, SIFI= 1.00, SIFO= 1.00

POINT DATA:
C30, Coordinates, X= 26.19 ft, Y= 685.64 ft, Z= -109.50 ft
C30 N, Coordinates, X= 29.19 ft, Y= 685.72 ft, Z= -109.50 ft
C30 F, Coordinates, X= 26.19 ft, Y= 685.61 ft, Z= -112.50 ft

From C45 to C46, DY= -0.07 ft, DZ= -9.00 ft, L= 9.00 ft Run

POINT DATA:
C45, Coordinates, X= 26.19 ft, Y= 685.61 ft, Z= -113.00 ft

SUPPORT DATA:
C45, Guide, Support Id= C45 2, Connected to Ground, Comp.Wt = 0.000 lb, Stiffness= RIGID,
Gap-Down= 0.00 inch, Gap-Above= 1.00 inch, Gap-Left= 1.00 inch, Gap-Right= 1.00 inch, Friction= 0.00,
Gaps setting= Weightless

From C46 to C47, DY= -0.07 ft, DZ= -9.00 ft, L= 9.00 ft Run

POINT DATA:
C46, Coordinates, X= 26.19 ft, Y= 685.54 ft, Z= -122.00 ft

SUPPORT DATA:
C46, V-Stop, Support Id= C46 2, Connected to Ground, Comp.Wt = 0.000 lb, Gap-Below= 0.00 inch,

C O M P O N E N T D A T A L I S T I N G

Gap-Above= 1.00 inch, Friction= 0.80, Gaps setting= Weightless

From C47 to C48, DY= -0.07 ft, DZ= -9.00 ft, L= 9.00 ft Run

POINT DATA:
C47, Coordinates, X= 26.19 ft, Y= 685.47 ft, Z= -131.00 ft

SUPPORT DATA:
C47, V-Stop, Support Id= C47 2, Connected to Ground, Comp.Wt = 0.000 lb, Gap-Below= 0.00 inch,
Gap-Above= 1.00 inch, Friction= 0.80, Gaps setting= Weightless

From C48 to C49, DY= -0.07 ft, DZ= -9.00 ft, L= 9.00 ft Run

POINT DATA:
C48, Coordinates, X= 26.19 ft, Y= 685.40 ft, Z= -140.00 ft

SUPPORT DATA:
C48, V-Stop, Support Id= C48 2, Connected to Ground, Comp.Wt = 0.000 lb, Gap-Below= 0.00 inch,
Gap-Above= 1.00 inch, Friction= 0.80, Gaps setting= Weightless

From C49 to C50, DY= -0.07 ft, DZ= -9.00 ft, L= 9.00 ft Run

POINT DATA:
C49, Coordinates, X= 26.19 ft, Y= 685.33 ft, Z= -149.00 ft

SUPPORT DATA:
C49, V-Stop, Support Id= C49 2, Connected to Ground, Comp.Wt = 0.000 lb, Gap-Below= 0.00 inch,
Gap-Above= 1.00 inch, Friction= 0.80, Gaps setting= Weightless

From C50 to C51, DY= -0.07 ft, DZ= -9.00 ft, L= 9.00 ft Run

POINT DATA:
C50, Coordinates, X= 26.19 ft, Y= 685.26 ft, Z= -158.00 ft

SUPPORT DATA:
C50, V-Stop, Support Id= C50 2, Connected to Ground, Comp.Wt = 0.000 lb, Gap-Below= 0.00 inch,
Gap-Above= 1.00 inch, Friction= 0.80, Gaps setting= Weightless

From C51 to C52, DY= -0.08 ft, DZ= -9.00 ft, L= 9.00 ft Run

POINT DATA:
C51, Coordinates, X= 26.19 ft, Y= 685.19 ft, Z= -167.00 ft

SUPPORT DATA:
C51, V-Stop, Support Id= C51 2, Connected to Ground, Comp.Wt = 0.000 lb, Gap-Below= 0.00 inch,
Gap-Above= 1.00 inch, Friction= 0.80, Gaps setting= Weightless

From C52 to C53, DY= -0.07 ft, DZ= -9.00 ft, L= 9.00 ft Run

C O M P O N E N T D A T A L I S T I N G

POINT DATA:
C52, Coordinates, X= 26.19 ft, Y= 685.11 ft, Z= -176.00 ft

SUPPORT DATA:
C52, V-Stop, Support Id= C52 2, Connected to Ground, Comp.Wt = 0.000 lb, Gap-Below= 0.00 inch, Gap-Above= 1.00 inch, Friction= 0.80, Gaps setting= Weightless

---

From C53 to C55, DX= 0 ft, DY= -0.09 ft, DZ= -10.50 ft, L= 10.50 ft Run

POINT DATA:
C53, Coordinates, X= 26.19 ft, Y= 685.04 ft, Z= -185.00 ft

SUPPORT DATA:
C53, V-Stop, Support Id= C53 2, Connected to Ground, Comp.Wt = 0.000 lb, Gap-Below= 0.00 inch, Gap-Above= 1.00 inch, Friction= 0.80, Gaps setting= Weightless

---

From C55 to C41, DY= -0.03 ft, DZ= -3.50 ft, L= 3.50 ft Run

POINT DATA:
C55, Coordinates, X= 26.19 ft, Y= 684.95 ft, Z= -195.50 ft

SUPPORT DATA:
C55, Guide, Support Id= C55 2, Connected to Ground, Comp.Wt = 0.000 lb, Stiffness= RIGID, Gap-Down= 0.00 inch, Gap-Above= 1.00 inch, Gap-Left= 1.00 inch, Gap-Right= 1.00 inch, Friction= 0.00, Gaps setting= Weightless

---

From C41 to C56, DX= 3.50 ft, DY= -0.03 ft, L= 3.50 ft Bend

COMPONENT DATA (Bend, TIP= C41, Near= C41 N, Far= C41 F):
Elbow, Radius= 36.00 inch, Bend angle= 90.00 deg, End flanges= 0, Flex= Auto, SIFI= 1.00, SIFO= 1.00

POINT DATA:
C41, Coordinates, X= 26.19 ft, Y= 684.92 ft, Z= -199.00 ft
C41 N, Coordinates, X= 26.19 ft, Y= 684.95 ft, Z= -196.00 ft
C41 F, Coordinates, X= 29.19 ft, Y= 684.89 ft, Z= -199.00 ft

From C56 to C57, DX= 6.91 ft, DY= -0.05 ft, L= 6.91 ft Run

POINT DATA:
C56, Coordinates, X= 29.69 ft, Y= 684.89 ft, Z= -199.00 ft

SUPPORT DATA:
C56, Guide, Support Id= C56 2, Connected to Ground, Comp.Wt = 0.000 lb, Stiffness= RIGID, Gap-Down= 0.00 inch, Gap-Above= 1.00 inch, Gap-Left= 1.00 inch, Gap-Right= 1.00 inch, Friction= 0.00, Gaps setting= Weightless

---

From C57 to C44, DX= 3.50 ft, DY= -0.02 ft, L= 3.50 ft Run

POINT DATA:
C57, Coordinates, X= 36.60 ft, Y= 684.84 ft, Z= -199.00 ft

C O M P O N E N T D A T A L I S T I N G

SUPPORT DATA:
C57, Guide, Support Id= C57 2, Connected to Ground, Comp.Wt = 0.000 lb, Stiffness= RIGID,
Gap-Down= 0.00 inch, Gap-Above= 1.00 inch, Gap-Left= 1.00 inch, Gap-Right= 1.00 inch, Friction= 0.00,
Gaps setting= Weightless

From C44 to C58, DY= -0.03 ft, DZ= -3.50 ft, L= 3.50 ft Bend

COMPONENT DATA (Bend, TIP= C44, Near= C44 N, Far= C44 F):
Elbow, Radius= 36.00 inch, Bend angle= 90.00 deg, End flanges= 0, Flex= Auto, SIFI= 1.00, SIFO= 1.00

POINT DATA:
C44, Coordinates, X= 40.10 ft, Y= 684.82 ft, Z= -199.00 ft
C44 N, Coordinates, X= 37.10 ft, Y= 684.84 ft, Z= -199.00 ft
C44 F, Coordinates, X= 40.10 ft, Y= 684.79 ft, Z= -202.00 ft

From C58 to C59, DY= -0.07 ft, DZ= -9.00 ft, L= 9.00 ft Run

POINT DATA:
C58, Coordinates, X= 40.10 ft, Y= 684.79 ft, Z= -202.50 ft

SUPPORT DATA:
C58, Guide, Support Id= C58 2, Connected to Ground, Comp.Wt = 0.000 lb, Stiffness= RIGID,
Gap-Down= 0.00 inch, Gap-Above= 1.00 inch, Gap-Left= 1.00 inch, Gap-Right= 1.00 inch, Friction= 0.00,
Gaps setting= Weightless

From C59 to C60, DY= -0.07 ft, DZ= -9.00 ft, L= 9.00 ft Run

POINT DATA:
C59, Coordinates, X= 40.10 ft, Y= 684.72 ft, Z= -211.50 ft

SUPPORT DATA:
C59, V-Stop, Support Id= C59 2, Connected to Ground, Comp.Wt = 0.000 lb, Gap-Below= 0.00 inch,
Gap-Above= 1.00 inch, Friction= 0.80, Gaps setting= Weightless

---

From C60 to C61, DY= -0.07 ft, DZ= -9.00 ft, L= 9.00 ft Run

POINT DATA:
C60, Coordinates, X= 40.10 ft, Y= 684.65 ft, Z= -220.50 ft

SUPPORT DATA:
C60, V-Stop, Support Id= C60 2, Connected to Ground, Comp.Wt = 0.000 lb, Gap-Below= 0.00 inch,
Gap-Above= 1.00 inch, Friction= 0.80, Gaps setting= Weightless

---

From C61 to C63, DY= -0.06 ft, DZ= -9.00 ft, L= 9.00 ft Run

POINT DATA:
C61, Coordinates, X= 40.10 ft, Y= 684.58 ft, Z= -229.50 ft

SUPPORT DATA:
C61, V-Stop, Support Id= C61 1, Connected to Ground, Comp.Wt = 0.000 lb, Gap-Below= 0.00 inch,

C O M P O N E N T D A T A L I S T I N G

Gap-Above= 1.00 inch, Friction= 0.80, Gaps setting= Weightless

From C63 to C64, DY= -0.07 ft, DZ= -9.00 ft, L= 9.00 ft Run

POINT DATA:
C63, Coordinates, X= 40.10 ft, Y= 684.52 ft, Z= -238.50 ft

SUPPORT DATA:
C63, V-Stop, Support Id= C63 1, Connected to Ground, Comp.Wt = 0.000 lb, Gap-Below= 0.00 inch,
Gap-Above= 1.00 inch, Friction= 0.80, Gaps setting= Weightless

From C64 to C65, DY= -0.06 ft, DZ= -9.00 ft, L= 9.00 ft Run

POINT DATA:
C64, Coordinates, X= 40.10 ft, Y= 684.45 ft, Z= -247.50 ft

SUPPORT DATA:
C64, V-Stop, Support Id= C64 2, Connected to Ground, Comp.Wt = 0.000 lb, Gap-Below= 0.00 inch,
Gap-Above= 1.00 inch, Friction= 0.80, Gaps setting= Weightless

From C65 to C72, DY= -0.07 ft, DZ= -9.00 ft, L= 9.00 ft Run

POINT DATA:
C65, Coordinates, X= 40.10 ft, Y= 684.39 ft, Z= -256.50 ft

SUPPORT DATA:
C65, V-Stop, Support Id= C65 1, Connected to Ground, Comp.Wt = 0.000 lb, Gap-Below= 0.00 inch,
Gap-Above= 1.00 inch, Friction= 0.80, Gaps setting= Weightless

From C72 to C73, DX= 0 ft, DY= -0.08 ft, DZ= -10.74 ft, L= 10.74 ft Run

POINT DATA:
C72, Coordinates, X= 40.10 ft, Y= 684.32 ft, Z= -265.50 ft

SUPPORT DATA:
C72, V-Stop, Support Id= C72 1, Connected to Ground, Comp.Wt = 0.000 lb, Gap-Below= 0.00 inch,
Gap-Above= 1.00 inch, Friction= 0.80, Gaps setting= Weightless

From C73 to C54, DY= -0.02 ft, DZ= -3.50 ft, L= 3.50 ft Run

POINT DATA:
C73, Coordinates, X= 40.10 ft, Y= 684.24 ft, Z= -276.24 ft

SUPPORT DATA:
C73, Guide, Support Id= C73 1, Connected to Ground, Comp.Wt = 0.000 lb, Stiffness= RIGID,
Gap-Down= 0.00 inch, Gap-Above= 1.00 inch, Gap-Left= 1.00 inch, Gap-Right= 1.00 inch, Friction= 0.00,
Gaps setting= Weightless

From C54 to C74, DX= -3.50 ft, DY= -0.03 ft, L= 3.50 ft Bend

C O M P O N E N T D A T A L I S T I N G

```
 COMPONENT DATA (Bend, TIP= C54, Near= C54 N, Far= C54 F):
   Elbow, Radius= 36.00 inch, Bend angle= 90.00 deg, End flanges= 0, Flex= Auto, SIFI= 1.00, SIFO= 1.00

 POINT DATA:
   C54, Coordinates, X= 40.10 ft, Y= 684.22 ft, Z= -279.74 ft
   C54 N, Coordinates, X= 40.10 ft, Y= 684.24 ft, Z= -276.74 ft
   C54 F, Coordinates, X= 37.10 ft, Y= 684.19 ft, Z= -279.74 ft

 ------------------------------------------------------------------------------
 From C74 to C75, DX= -9.00 ft, DY= -0.07 ft, L= 9.00 ft                    Run

 POINT DATA:
   C74, Coordinates, X= 36.60 ft, Y= 684.19 ft, Z= -279.74 ft

 SUPPORT DATA:
   C74, Guide, Support Id= C74  1, Connected to Ground, Comp.Wt = 0.000 lb, Stiffness= RIGID,
   Gap-Down= 0.00 inch, Gap-Above= 1.00 inch, Gap-Left= 1.00 inch, Gap-Right= 1.00 inch, Friction= 0.00,
   Gaps setting= Weightless

 ------------------------------------------------------------------------------
 From C75 to C76, DX= -9.00 ft, DY= -0.07 ft, L= 9.00 ft                    Run

 POINT DATA:
   C75, Coordinates, X= 27.60 ft, Y= 684.12 ft, Z= -279.74 ft

 SUPPORT DATA:
   C75, V-Stop, Support Id= C75  1, Connected to Ground, Comp.Wt = 0.000 lb, Gap-Below= 0.00 inch,
   Gap-Above= 1.00 inch, Friction= 0.80, Gaps setting= Weightless

 ------------------------------------------------------------------------------
 From C76 to C77, DX= -9.00 ft, DY= -0.06 ft, L= 9.00 ft                    Run

 POINT DATA:
   C76, Coordinates, X= 18.60 ft, Y= 684.05 ft, Z= -279.74 ft

 SUPPORT DATA:
   C76, V-Stop, Support Id= C76  1, Connected to Ground, Comp.Wt = 0.000 lb, Gap-Below= 0.00 inch,
   Gap-Above= 1.00 inch, Friction= 0.80, Gaps setting= Weightless

 ------------------------------------------------------------------------------
 From C77 to C78, DX= -9.00 ft, DY= -0.07 ft, L= 9.00 ft                    Run

 POINT DATA:
   C77, Coordinates, X= 9.60 ft, Y= 683.99 ft, Z= -279.74 ft

 SUPPORT DATA:
   C77, V-Stop, Support Id= C77  1, Connected to Ground, Comp.Wt = 0.000 lb, Gap-Below= 0.00 inch,
   Gap-Above= 1.00 inch, Friction= 0.80, Gaps setting= Weightless

 ------------------------------------------------------------------------------
 From C78 to C79, DX= -8.78 ft, DY= -0.06 ft, L= 8.78 ft                    Run

 POINT DATA:
   C78, Coordinates, X= 0.60 ft, Y= 683.92 ft, Z= -279.74 ft
```

C O M P O N E N T D A T A L I S T I N G

SUPPORT DATA:
C78, V-Stop, Support Id= C78 1, Connected to Ground, Comp.Wt = 0.000 lb, Gap-Below= 0.00 inch,
Gap-Above= 1.00 inch, Friction= 0.80, Gaps setting= Weightless

---

From C79 to C80, DX= -9.00 ft, DY= -0.06 ft, L= 9.00 ft Run

POINT DATA:
C79, Coordinates, X= -8.18 ft, Y= 683.86 ft, Z= -279.74 ft

SUPPORT DATA:
C79, V-Stop, Support Id= C79 1, Connected to Ground, Comp.Wt = 0.000 lb, Gap-Below= 0.00 inch,
Gap-Above= 1.00 inch, Friction= 0.80, Gaps setting= Weightless

---

From C80 to C62, DX= -3.50 ft, DY= -0.03 ft, L= 3.50 ft Run

POINT DATA:
C80, Coordinates, X= -17.18 ft, Y= 683.80 ft, Z= -279.74 ft

SUPPORT DATA:
C80, Guide, Support Id= C80 1, Connected to Ground, Comp.Wt = 0.000 lb, Stiffness= RIGID,
Gap-Down= 0.00 inch, Gap-Above= 1.00 inch, Gap-Left= 1.00 inch, Gap-Right= 1.00 inch, Friction= 0.00,
Gaps setting= Weightless

From C62 to C82, DY= -0.03 ft, DZ= -3.50 ft, L= 3.50 ft Bend

COMPONENT DATA (Bend, TIP= C62, Near= C62 N, Far= C62 F):
Elbow, Radius= 36.00 inch, Bend angle= 90.00 deg, End flanges= 0, Flex= Auto, SIFI= 1.00, SIFO= 1.00

POINT DATA:
C62, Coordinates, X= -20.68 ft, Y= 683.77 ft, Z= -279.74 ft
C62 N, Coordinates, X= -17.68 ft, Y= 683.80 ft, Z= -279.74 ft
C62 F, Coordinates, X= -20.68 ft, Y= 683.74 ft, Z= -282.74 ft

---

From C82 to C81, DY= -0.05 ft, DZ= -5.84 ft, L= 5.84 ft Run

POINT DATA:
C82, Coordinates, X= -20.68 ft, Y= 683.74 ft, Z= -283.24 ft

SUPPORT DATA:
C82, Guide, Support Id= C82 1, Connected to Ground, Comp.Wt = 0.000 lb, Stiffness= RIGID,
Gap-Down= 0.00 inch, Gap-Above= 1.00 inch, Gap-Left= 1.00 inch, Gap-Right= 1.00 inch, Friction= 0.00,
Gaps setting= Weightless

From C81 to C83, DY= -0.04 ft, DZ= -5.83 ft, L= 5.83 ft Run

POINT DATA:
C81, Coordinates, X= -20.68 ft, Y= 683.69 ft, Z= -289.08 ft

SUPPORT DATA:
C81, V-Stop, Support Id= C81 1, Connected to Ground, Comp.Wt = 0.000 lb, Gap-Below= 0.00 inch,

C O M P O N E N T D A T A L I S T I N G

Gap-Above= 1.00 inch, Friction= 0.80, Gaps setting= Weightless

From C83 to C66, DY= -0.03 ft, DZ= -3.50 ft, L= 3.50 ft Run

POINT DATA:
C83, Coordinates, X= -20.68 ft, Y= 683.65 ft, Z= -294.91 ft

SUPPORT DATA:
C83, Guide, Support Id= C83 1, Connected to Ground, Comp.Wt = 0.000 lb, Stiffness= RIGID,
Gap-Down= 0.00 inch, Gap-Above= 1.00 inch, Gap-Left= 1.00 inch, Gap-Right= 1.00 inch, Friction= 0.00,
Gaps setting= Weightless

From C66 to C84, DX= 3.50 ft, DY= -0.07 ft, L= 3.50 ft Bend

COMPONENT DATA (Bend, TIP= C66, Near= C66 N, Far= C66 F):
Elbow, Radius= 36.00 inch, Bend angle= 89.99 deg, End flanges= 0, Flex= Auto, SIFI= 1.00, SIFO= 1.00

POINT DATA:
C66, Coordinates, X= -20.68 ft, Y= 683.62 ft, Z= -298.41 ft
C66 N, Coordinates, X= -20.68 ft, Y= 683.65 ft, Z= -295.41 ft
C66 F, Coordinates, X= -17.68 ft, Y= 683.56 ft, Z= -298.41 ft

From C84 to C67, DX= 1.80 ft, DY= -0.03 ft, L= 1.80 ft Run

POINT DATA:
C84, Coordinates, X= -17.18 ft, Y= 683.55 ft, Z= -298.41 ft

SUPPORT DATA:
C84, Guide, Support Id= C84 1, Connected to Ground, Comp.Wt = 0.000 lb, Stiffness= RIGID,
Gap-Down= 0.00 inch, Gap-Above= 1.00 inch, Gap-Left= 1.00 inch, Gap-Right= 1.00 inch, Friction= 0.00,
Gaps setting= Weightless

From C67 to C68, DX= 1.00 ft Bend

COMPONENT DATA (Bend, TIP= C67, Near= C67 N, Mid= C67 M, Far= C67 F):
Elbow, Radius= 36.00 inch, Bend angle= 0.96 deg, Mid point at 50.00 percent, End flanges= 0, Flex= Auto,
SIFI= 1.00, SIFO= 1.00

POINT DATA:
C67, Coordinates, X= -15.38 ft, Y= 683.52 ft, Z= -298.41 ft
C67 N, Coordinates, X= -15.40 ft, Y= 683.52 ft, Z= -298.41 ft
C67 M, Coordinates, X= -15.38 ft, Y= 683.52 ft, Z= -298.41 ft
C67 F, Coordinates, X= -15.36 ft, Y= 683.52 ft, Z= -298.41 ft

From C68 to C69, DX= 1.00 ft Run

POINT DATA:
C68, Coordinates, X= -14.38 ft, Y= 683.52 ft, Z= -298.41 ft

C O M P O N E N T D A T A L I S T I N G

```
From C69 to C70, DX= 0.55 ft                                          Run

POINT DATA:
  C69, Coordinates, X= -13.38 ft, Y= 683.52 ft, Z= -298.41 ft

-----------------------------------------------------------------------
From C70 to C71, DX= 0.19 ft                                          Run

POINT DATA:
  C70, Coordinates, X= -12.83 ft, Y= 683.52 ft, Z= -298.41 ft
  C71, Coordinates, X= -12.64 ft, Y= 683.52 ft, Z= -298.41 ft

SUPPORT DATA:
  C70, Anchor, Connected to: Ground, KTX= Rigid, KTY= Rigid, KTZ= Rigid, KRX= Rigid, KRY= Rigid, KRZ= Rigid

-----------------------------------------------------------------------
-----------------------------------------------------------------------
*** SEGMENT D

-----------------------------------------------------------------------
From D00 to D01, DZ= -0.19 ft                                         Run

PIPE DATA:
  Pipe Id= 4SCH40, Composition= Carbon Steel, Pipe Density= 489.00 lb/cu.ft, Pipe Unit Wgt= 10.78 lb/ft

POINT DATA:
  D00, Coordinates, X= -10.49 ft, Y= 683.52 ft, Z= -303.06 ft

-----------------------------------------------------------------------
From D01 to D02, DZ= -0.55 ft                                         Run

POINT DATA:
  D01, Coordinates, X= -10.49 ft, Y= 683.52 ft, Z= -303.25 ft

SUPPORT DATA:
  D01, Anchor, Connected to: Ground, KTX= Rigid, KTY= Rigid, KTZ= Rigid, KRX= Rigid, KRY= Rigid, KRZ= Rigid

-----------------------------------------------------------------------
From D02 to D03, DZ= -1.00 ft                                         Run

POINT DATA:
  D02, Coordinates, X= -10.49 ft, Y= 683.52 ft, Z= -303.80 ft

-----------------------------------------------------------------------
From D03 to D04, DZ= -3.00 ft                                         Run

POINT DATA:
  D03, Coordinates, X= -10.49 ft, Y= 683.52 ft, Z= -304.80 ft

-----------------------------------------------------------------------
From D04 to D13, DY= 0.09 ft, DZ= -7.50 ft, L= 7.50 ft                Bend

COMPONENT DATA (Bend, TIP= D04, Near= D04 N, Mid= D04 M, Far= D04 F):
  Elbow, Radius= 36.00 inch, Bend angle= 0.69 deg, Mid point at 50.00 percent, End flanges= 0, Flex= Auto,
  SIFI= 1.00, SIFO= 1.00
```

C O M P O N E N T D A T A L I S T I N G

POINT DATA:
D04, Coordinates, X= -10.49 ft, Y= 683.52 ft, Z= -307.80 ft
D04 N, Coordinates, X= -10.49 ft, Y= 683.52 ft, Z= -307.78 ft
D04 M, Coordinates, X= -10.49 ft, Y= 683.52 ft, Z= -307.80 ft
D04 F, Coordinates, X= -10.49 ft, Y= 683.52 ft, Z= -307.82 ft

SUPPORT DATA:
D04 M, V-Stop, Support Id= D04 M1, Connected to Ground, Comp.Wt = 0.000 lb, Gap-Below= 0.00 inch,
Gap-Above= 1.00 inch, Friction= 0.80, Gaps setting= Weightless

---
From D13 to D14, DY= 0.10 ft, DZ= -7.53 ft, L= 7.53 ft Run

POINT DATA:
D13, Coordinates, X= -10.49 ft, Y= 683.61 ft, Z= -315.30 ft

SUPPORT DATA:
D13, V-Stop, Support Id= D13 1, Connected to Ground, Comp.Wt = 0.000 lb, Gap-Below= 0.00 inch,
Gap-Above= 1.00 inch, Friction= 0.80, Gaps setting= Weightless

---
From D14 to D08, DY= 0.04 ft, DZ= -3.50 ft, L= 3.50 ft Run

POINT DATA:
D14, Coordinates, X= -10.49 ft, Y= 683.71 ft, Z= -322.83 ft

SUPPORT DATA:
D14, Guide, Support Id= D14 2, Connected to Ground, Comp.Wt = 0.000 lb, Stiffness= RIGID,
Gap-Down= 0.00 inch, Gap-Above= 1.00 inch, Gap-Left= 1.00 inch, Gap-Right= 1.00 inch, Friction= 0.00,
Gaps setting= Weightless

From D08 to D15, DX= 3.50 ft, DY= 0.03 ft, L= 3.50 ft Bend

COMPONENT DATA (Bend, TIP= D08, Near= D08 N, Far= D08 F):
Elbow, Radius= 36.00 inch, Bend angle= 89.99 deg, End flanges= 0, Flex= Auto, SIFI= 1.00, SIFO= 1.00

POINT DATA:
D08, Coordinates, X= -10.49 ft, Y= 683.75 ft, Z= -326.33 ft
D08 N, Coordinates, X= -10.49 ft, Y= 683.72 ft, Z= -323.33 ft
D08 F, Coordinates, X= -7.49 ft, Y= 683.78 ft, Z= -326.33 ft

From D15 to D18, DX= 5.65 ft, DY= 0.05 ft, L= 5.65 ft Run

POINT DATA:
D15, Coordinates, X= -6.99 ft, Y= 683.78 ft, Z= -326.33 ft

SUPPORT DATA:
D15, Guide, Support Id= D15 2, Connected to Ground, Comp.Wt = 0.000 lb, Stiffness= RIGID,
Gap-Down= 0.00 inch, Gap-Above= 1.00 inch, Gap-Left= 1.00 inch, Gap-Right= 1.00 inch, Friction= 0.00,
Gaps setting= Weightless

From D18 to D16, DX= 5.65 ft, DY= 0.06 ft, L= 5.65 ft Run

C O M P O N E N T D A T A L I S T I N G

POINT DATA:
D18, Coordinates, X= -1.34 ft, Y= 683.83 ft, Z= -326.33 ft

SUPPORT DATA:
D18, V-Stop, Support Id= D18 1, Connected to Ground, Comp.Wt = 0.000 lb, Gap-Below= 0.00 inch, Gap-Above= 1.00 inch, Friction= 0.80, Gaps setting= Weightless

---

From D16 to D12, DX= 3.50 ft, DY= 0.04 ft, L= 3.50 ft Run

POINT DATA:
D16, Coordinates, X= 4.31 ft, Y= 683.89 ft, Z= -326.33 ft

SUPPORT DATA:
D16, Guide, Support Id= D16 1, Connected to Ground, Comp.Wt = 0.000 lb, Stiffness= RIGID, Gap-Down= 0.00 inch, Gap-Above= 1.00 inch, Gap-Left= 1.00 inch, Gap-Right= 1.00 inch, Friction= 0.00, Gaps setting= Weightless

---

From D12 to D19, DY= 0.05 ft, DZ= -3.50 ft, L= 3.50 ft Bend

COMPONENT DATA (Bend, TIP= D12, Near= D12 N, Far= D12 F):
Elbow, Radius= 36.00 inch, Bend angle= 89.99 deg, End flanges= 0, Flex= Auto, SIFI= 1.00, SIFO= 1.00

POINT DATA:
D12, Coordinates, X= 7.81 ft, Y= 683.93 ft, Z= -326.33 ft
D12 N, Coordinates, X= 4.81 ft, Y= 683.90 ft, Z= -326.33 ft
D12 F, Coordinates, X= 7.81 ft, Y= 683.97 ft, Z= -329.33 ft

From D19 to D25, DY= 0.12 ft, DZ= -8.87 ft, L= 8.87 ft Run

POINT DATA:
D19, Coordinates, X= 7.81 ft, Y= 683.98 ft, Z= -329.83 ft

SUPPORT DATA:
D19, Guide, Support Id= D19 2, Connected to Ground, Comp.Wt = 0.000 lb, Stiffness= RIGID, Gap-Down= 0.00 inch, Gap-Above= 1.00 inch, Gap-Left= 1.00 inch, Gap-Right= 1.00 inch, Friction= 0.00, Gaps setting= Weightless

---

From D25 to D20, DY= 0.11 ft, DZ= -8.86 ft, L= 8.86 ft Run

POINT DATA:
D25, Coordinates, X= 7.81 ft, Y= 684.10 ft, Z= -338.70 ft

SUPPORT DATA:
D25, V-Stop, Support Id= D25 1, Connected to Ground, Comp.Wt = 0.000 lb, Gap-Below= 0.00 inch, Gap-Above= 1.00 inch, Friction= 0.80, Gaps setting= Weightless

---

From D20 to D17, DY= 0.04 ft, DZ= -3.50 ft, L= 3.50 ft Run

POINT DATA:
D20, Coordinates, X= 7.81 ft, Y= 684.21 ft, Z= -347.56 ft

C O M P O N E N T D A T A L I S T I N G

```
 SUPPORT DATA:
   D20, Guide, Support Id= D20  1, Connected to Ground, Comp.Wt = 0.000 lb, Stiffness= RIGID,
   Gap-Down= 0.00 inch, Gap-Above= 1.00 inch, Gap-Left= 1.00 inch, Gap-Right= 1.00 inch, Friction= 0.00,
   Gaps setting= Weightless

 ---------------------------------------------------------------------------
 From D17 to D26, DX= 3.50 ft, DY= 0.02 ft, L= 3.50 ft                    Bend

 COMPONENT DATA (Bend, TIP= D17, Near= D17 N, Far= D17 F):
   Elbow, Radius= 36.00 inch, Bend angle= 90.00 deg, End flanges= 0, Flex= Auto, SIFI= 1.00, SIFO= 1.00

 POINT DATA:
   D17, Coordinates, X= 7.81 ft, Y= 684.25 ft, Z= -351.06 ft
   D17 N, Coordinates, X= 7.81 ft, Y= 684.22 ft, Z= -348.06 ft
   D17 F, Coordinates, X= 10.81 ft, Y= 684.27 ft, Z= -351.06 ft

 ---------------------------------------------------------------------------
 From D26 to D28, DX= 6.93 ft, DY= 0.03 ft, L= 6.93 ft                    Run

 POINT DATA:
   D26, Coordinates, X= 11.31 ft, Y= 684.27 ft, Z= -351.06 ft

 SUPPORT DATA:
   D26, Guide, Support Id= D26  1, Connected to Ground, Comp.Wt = 0.000 lb, Stiffness= RIGID,
   Gap-Down= 0.00 inch, Gap-Above= 1.00 inch, Gap-Left= 1.00 inch, Gap-Right= 1.00 inch, Friction= 0.00,
   Gaps setting= Weightless

 ---------------------------------------------------------------------------
 From D28 to D27, DX= 6.92 ft, DY= 0.03 ft, L= 6.92 ft                    Run

 POINT DATA:
   D28, Coordinates, X= 18.24 ft, Y= 684.30 ft, Z= -351.06 ft

 SUPPORT DATA:
   D28, V-Stop, Support Id= D28  1, Connected to Ground, Comp.Wt = 0.000 lb, Gap-Below= 0.00 inch,
   Gap-Above= 1.00 inch, Friction= 0.80, Gaps setting= Weightless

 ---------------------------------------------------------------------------
 From D27 to D21, DX= 3.00 ft, DY= 0.01 ft, L= 3.00 ft                    Run

 POINT DATA:
   D27, Coordinates, X= 25.16 ft, Y= 684.33 ft, Z= -351.06 ft

 SUPPORT DATA:
   D27, V-Stop, Support Id= D27  1, Connected to Ground, Comp.Wt = 0.000 lb, Gap-Below= 0.00 inch,
   Gap-Above= 1.00 inch, Friction= 0.80, Gaps setting= Weightless

 ---------------------------------------------------------------------------
 From D21 to D22, DX= 1.00 ft                                             Run

 POINT DATA:
   D21, Coordinates, X= 28.16 ft, Y= 684.34 ft, Z= -351.06 ft
   D22, Coordinates, X= 29.16 ft, Y= 684.34 ft, Z= -351.06 ft

 SUPPORT DATA:
```

C O M P O N E N T D A T A L I S T I N G

D22, Anchor, Connected to: Ground, KTX= Rigid, KTY= Rigid, KTZ= Rigid, KRX= Rigid, KRY= Rigid, KRZ= Rigid

Number of points in the system (Pipe + Frame + Soil): 349 + 0 + 0 = 349

Weight of Empty Pipes	+	Weight of Contents	=	Total Weight of System
16777.9 lb	+	0.0 lb	=	16777.9 lb

C O O R D I N A T E S D A T A L I S T I N G

POINT NAME	COORDINATE (ft) X	Y	Z
*** SEGMENT A			
A02	1.46	693.07	0.00
A03	3.46	693.07	0.00
A23	5.96	693.07	0.00
A04 N	6.19	693.07	0.00
A04	6.46	693.07	0.00
A04 F	6.73	693.02	0.00
A24	14.64	691.56	0.00
A21	22.82	690.05	0.00
A05 N	23.33	689.96	0.00
A05	26.26	689.41	0.00
A05 F	26.26	689.32	-2.98
A22	26.26	689.31	-3.50
A25	26.26	689.05	-12.50
A26	26.26	688.79	-21.50
A27	26.26	688.53	-30.50
A28	26.26	688.27	-39.50
A29	26.26	687.96	-50.17
A06 N	26.26	687.95	-50.67
A06	26.26	687.86	-53.67
A06 F	29.26	687.77	-53.67
A30	29.76	687.76	-53.67
A31	32.52	687.68	-53.67
A07 N	33.02	687.67	-53.67
A07	36.02	687.58	-53.67
A07 F	36.02	687.49	-56.67
A32	36.02	687.47	-57.17
A33	36.02	687.20	-66.17
A34	36.02	686.93	-75.17
A35	36.02	686.66	-84.17
A36	36.02	686.38	-93.17
A37	36.02	686.30	-95.85
A38	36.02	686.03	-104.84
A08 N	36.02	686.01	-105.34
A08	36.02	685.92	-108.34
A08 F	33.02	685.84	-108.34
A39	32.52	685.83	-108.34
A40	28.52	685.73	-108.34
A09 N	28.02	685.72	-108.34
A09	25.02	685.64	-108.34
A09 F	25.02	685.61	-111.34
A41	25.02	685.61	-111.84
A42	25.02	685.54	-120.84
A43	25.02	685.47	-129.84
A44	25.02	685.40	-138.84
A45	25.02	685.33	-147.84
A46	25.02	685.26	-156.84
A47	25.02	685.19	-165.84
A48	25.02	685.12	-174.84
A49	25.02	685.05	-183.84
A50	25.02	685.02	-187.67
A51	25.02	684.95	-196.67

C O O R D I N A T E S D A T A L I S T I N G

POINT NAME	COORDINATE (ft) X	Y	Z
A10 N	25.02	684.95	-197.17
A10	25.02	684.92	-200.17
A10 F	28.02	684.89	-200.17
A52	28.52	684.89	-200.17
A53	35.43	684.84	-200.17
A11 N	35.93	684.84	-200.17
A11	38.93	684.82	-200.17
A11 F	38.93	684.79	-203.17
A54	38.93	684.79	-203.67
A55	38.93	684.72	-212.67
A56	38.93	684.65	-221.67
A57	38.93	684.58	-230.67
A58	38.93	684.51	-239.67
A59	38.93	684.44	-248.67
A60	38.93	684.37	-257.67
A61	38.93	684.31	-266.07
A62	38.93	684.25	-275.07
A12 N	38.93	684.25	-275.57
A12	38.93	684.22	-278.57
A12 F	35.93	684.19	-278.57
A63	35.43	684.19	-278.57
A64	26.43	684.12	-278.57
A65	17.43	684.05	-278.57
A66	8.43	683.99	-278.57
A67	-0.57	683.92	-278.57
A68	-9.35	683.86	-278.57
A69	-18.35	683.80	-278.57
A13 N	-18.85	683.80	-278.57
A13	-21.85	683.77	-278.57
A13 F	-21.85	683.75	-281.57
A70	-21.85	683.75	-282.07
A71	-21.85	683.70	-291.07
A72	-21.85	683.65	-298.66
A14 N	-21.85	683.65	-299.16
A14	-21.85	683.63	-302.16
A14 F	-18.85	683.58	-302.16
A73	-18.35	683.57	-302.16
A15 N	-15.42	683.52	-302.16
A15	-15.39	683.52	-302.16
A15 F	-15.36	683.52	-302.16
A16	-14.39	683.52	-302.16
A17	-13.39	683.52	-302.16
A18	-12.84	683.52	-302.16
A19	-12.65	683.52	-302.16
*** SEGMENT B , LINE # RIGID			
B03	1.46	693.07	2.00
B04	3.46	693.07	2.00
B22	5.96	693.07	2.00
B06 N	6.22	693.07	2.00
B06	6.46	693.07	2.00
B06 F	6.70	693.03	2.00

C O O R D I N A T E S D A T A L I S T I N G

POINT NAME	COORDINATE (ft) X	Y	Z
B23	17.61	691.24	2.00
B24	25.31	689.98	2.00
B09 N	25.81	689.90	2.00
B09	28.76	689.41	2.00
B09 F	28.76	689.32	-0.98
B25	28.76	689.31	-1.50
B26	28.76	689.05	-10.50
B28	28.76	688.79	-19.50
B29	28.76	688.53	-28.50
B31	28.76	688.26	-37.50
B32	28.76	687.96	-47.67
B16 N	28.76	687.95	-48.17
B16	28.76	687.86	-51.17
B16 F	31.76	687.79	-51.17
B33	32.26	687.78	-51.17
B34	35.02	687.72	-51.17
B19 N	35.52	687.71	-51.17
B19	38.52	687.64	-51.17
B19 F	38.52	687.55	-54.17
B35	38.52	687.54	-54.67
B36	38.52	687.29	-63.67
B37	38.52	687.04	-72.67
B38	38.52	686.79	-81.67
B39	38.52	686.54	-90.67
B40	38.52	686.32	-98.34
B42	38.52	686.07	-107.34
B27 N	38.52	686.06	-107.84
B27	38.52	685.97	-110.84
B27 F	35.52	685.89	-110.84
B43	35.02	685.88	-110.84
B45	31.02	685.78	-110.84
B30 N	30.52	685.77	-110.84
B30	27.52	685.70	-110.84
B30 F	27.52	685.67	-113.84
B46	27.52	685.67	-114.34
B47	27.52	685.59	-123.34
B48	27.52	685.51	-132.34
B49	27.52	685.43	-141.34
B50	27.52	685.35	-150.34
B51	27.52	685.28	-159.34
B52	27.52	685.20	-168.34
B53	27.52	685.13	-177.34
B54	27.52	685.06	-185.17
B55	27.52	684.99	-194.17
B41 N	27.52	684.99	-194.67
B41	27.52	684.96	-197.67
B41 F	30.52	684.94	-197.67
B57	31.02	684.94	-197.67
B58	37.93	684.89	-197.67
B44 N	38.43	684.89	-197.67
B44	41.43	684.87	-197.67
B44 F	41.43	684.85	-200.67

C O O R D I N A T E S D A T A L I S T I N G

POINT NAME	COORDINATE (ft) X	Y	Z
B64	41.43	684.85	-201.17
B65	41.43	684.79	-210.17
B66	41.43	684.73	-219.17
B67	41.43	684.67	-228.17
B68	41.43	684.61	-237.17
B69	41.43	684.55	-246.17
B70	41.43	684.49	-255.17
B71	41.43	684.43	-264.17
B72	41.43	684.38	-273.17
B73	41.43	684.35	-278.00
B74	41.43	684.29	-287.00
B56 N	41.43	684.28	-288.00
B56	41.43	684.27	-290.50
B56 F	38.93	684.24	-290.50
B75	38.48	684.24	-290.50
B20 N	38.04	684.23	-290.50
B20	35.54	684.19	-290.50
B20 F	35.54	684.14	-293.00
B77	35.54	684.13	-293.67
B21 N	35.54	684.12	-294.33
B21	35.54	684.07	-296.83
B21 F	33.04	684.04	-296.83
B76	32.54	684.03	-296.83
B59 N	30.71	684.00	-296.83
B59	30.69	684.00	-296.83
B59 M	30.69	684.00	-296.83
B59 F	30.67	684.00	-296.83
B60	29.69	684.00	-296.83
B61	28.69	684.00	-296.83
B62	28.08	684.00	-296.83
B63	27.83	684.00	-296.83
*** SEGMENT C			
C03	1.46	691.07	1.00
C04	3.46	691.07	1.00
C21	5.96	691.07	1.00
C06 N	6.34	691.07	1.00
C06	6.46	691.07	1.00
C06 F	6.58	691.06	1.00
C22	16.95	690.22	1.00
C23	23.94	689.65	1.00
C09 N	24.45	689.61	1.00
C09	27.43	689.37	1.00
C09 F	27.43	689.28	-1.99
C24	27.43	689.27	-2.50
C25	27.43	689.01	-11.50
C26	27.43	688.75	-20.50
C28	27.43	688.49	-29.50
C29	27.43	688.22	-38.50
C31	27.43	687.91	-49.00
C16 N	27.43	687.90	-49.50
C16	27.43	687.81	-52.50

C O O R D I N A T E S D A T A L I S T I N G

POINT NAME	COORDINATE (ft) X	Y	Z
C16 F	30.43	687.74	-52.50
C32	30.93	687.73	-52.50
C33	33.69	687.66	-52.50
C19 N	34.19	687.65	-52.50
C19	37.19	687.58	-52.50
C19 F	37.19	687.49	-55.50
C34	37.19	687.48	-56.00
C35	37.19	687.22	-65.00
C36	37.19	686.96	-74.00
C37	37.19	686.70	-83.00
C38	37.19	686.44	-92.00
C39	37.19	686.29	-97.01
C40	37.19	686.02	-106.00
C27 N	37.19	686.01	-106.50
C27	37.19	685.92	-109.50
C27 F	34.19	685.84	-109.50
C42	33.69	685.83	-109.50
C43	29.69	685.73	-109.50
C30 N	29.19	685.72	-109.50
C30	26.19	685.64	-109.50
C30 F	26.19	685.61	-112.50
C45	26.19	685.61	-113.00
C46	26.19	685.54	-122.00
C47	26.19	685.47	-131.00
C48	26.19	685.40	-140.00
C49	26.19	685.33	-149.00
C50	26.19	685.26	-158.00
C51	26.19	685.19	-167.00
C52	26.19	685.11	-176.00
C53	26.19	685.04	-185.00
C55	26.19	684.95	-195.50
C41 N	26.19	684.95	-196.00
C41	26.19	684.92	-199.00
C41 F	29.19	684.89	-199.00
C56	29.69	684.89	-199.00
C57	36.60	684.84	-199.00
C44 N	37.10	684.84	-199.00
C44	40.10	684.82	-199.00
C44 F	40.10	684.79	-202.00
C58	40.10	684.79	-202.50
C59	40.10	684.72	-211.50
C60	40.10	684.65	-220.50
C61	40.10	684.58	-229.50
C63	40.10	684.52	-238.50
C64	40.10	684.45	-247.50
C65	40.10	684.39	-256.50
C72	40.10	684.32	-265.50
C73	40.10	684.24	-276.24
C54 N	40.10	684.24	-276.74
C54	40.10	684.22	-279.74
C54 F	37.10	684.19	-279.74
C74	36.60	684.19	-279.74

C O O R D I N A T E S D A T A L I S T I N G

POINT NAME	COORDINATE (ft) X	Y	Z
C75	27.60	684.12	-279.74
C76	18.60	684.05	-279.74
C77	9.60	683.99	-279.74
C78	0.60	683.92	-279.74
C79	-8.18	683.86	-279.74
C80	-17.18	683.80	-279.74
C62 N	-17.68	683.80	-279.74
C62	-20.68	683.77	-279.74
C62 F	-20.68	683.74	-282.74
C82	-20.68	683.74	-283.24
C81	-20.68	683.69	-289.08
C83	-20.68	683.65	-294.91
C66 N	-20.68	683.65	-295.41
C66	-20.68	683.62	-298.41
C66 F	-17.68	683.56	-298.41
C84	-17.18	683.55	-298.41
C67 N	-15.40	683.52	-298.41
C67	-15.38	683.52	-298.41
C67 M	-15.38	683.52	-298.41
C67 F	-15.36	683.52	-298.41
C68	-14.38	683.52	-298.41
C69	-13.38	683.52	-298.41
C70	-12.83	683.52	-298.41
C71	-12.64	683.52	-298.41
*** SEGMENT D			
D00	-10.49	683.52	-303.06
D01	-10.49	683.52	-303.25
D02	-10.49	683.52	-303.80
D03	-10.49	683.52	-304.80
D04 N	-10.49	683.52	-307.78
D04	-10.49	683.52	-307.80
D04 M	-10.49	683.52	-307.80
D04 F	-10.49	683.52	-307.82
D13	-10.49	683.61	-315.30
D14	-10.49	683.71	-322.83
D08 N	-10.49	683.72	-323.33
D08	-10.49	683.75	-326.33
D08 F	-7.49	683.78	-326.33
D15	-6.99	683.78	-326.33
D18	-1.34	683.83	-326.33
D16	4.31	683.89	-326.33
D12 N	4.81	683.90	-326.33
D12	7.81	683.93	-326.33
D12 F	7.81	683.97	-329.33
D19	7.81	683.98	-329.83
D25	7.81	684.10	-338.70
D20	7.81	684.21	-347.56
D17 N	7.81	684.22	-348.06
D17	7.81	684.25	-351.06
D17 F	10.81	684.27	-351.06
D26	11.31	684.27	-351.06

C O O R D I N A T E S D A T A L I S T I N G

POINT NAME	COORDINATE (ft) X	Y	Z
D28	18.24	684.30	-351.06
D27	25.16	684.33	-351.06
D21	28.16	684.34	-351.06
D22	29.16	684.34	-351.06

S E G M E N T D A T A L I S T I N G

Segment Name	First Node	Last Node	Line Number	Apply Wind	Apply Bowing	Apply Buoyancy
A	A02	A19		No	No	No
B	B03	B63	RIGID	No	No	No
C	C03	C71		No	No	No
D	D00	D22		No	No	No

```
-----------------------------------------------------------------------------------------------------------------------
Encasement Piping Stabiltiy
04/24/2020 2018719                                                    BENTLEY
08:44 AM                                                              AutoPIPE Nuclear 12.00.00.16   MODEL  PAGE  52
-----------------------------------------------------------------------------------------------------------------------

                    P I P E   D A T A   L I S T I N G

 Pipe ID/     Nom/ O.D.  -----Thickness(inch)----- Spec  InsuDen/   Weight(lb/ft )    E/  Composition/
 Material     Sch  inch  W.Th. Corr Mill Insu Ling Grav/ LingDen/  Pipe/ Ling/ Total  W/  Steel Group/
 CladMaterial            Clad                        InsMt CladDen   Cont  Insu/        f   Tcr
 ---Line Class---                                          lb/cu.ft        Clad
 ------------ ---- ----- ----- ---- ---- ---- ---- ----- --------  ----- ----- ----- ---- --------------------

 Tag No. : <None>
 4SCH40         4  4.500 0.237 0.01 0.03    0    0     0    0.000  10.78     0 10.78 1.00 Carbon Steel
 A53-B        40S                                          0.000      0     0       1.00 Carbon
                            0                              0.000            0       1.00    650.000



 Tag No. : <None>
 6SCH40         6  6.625 0.280 0.01 0.04    0    0     0    0.000  18.95     0 18.95 1.00 Carbon Steel
 A53-B        40S                                          0.000      0     0       1.00 Carbon
                            0                              0.000            0       1.00    650.000
```

M A T E R I A L D A T A L I S T I N G

Material Name	Pipe ID	Density lb/cu.ft	Pois. Ratio	Temper. deg F	Modulus E6 psi Axial	Hoop	Shear	Expans. in/100ft	Composition
A53-B	4SCH40	489.0	0.30	60.0	29.541	29.541	11.362		Carbon Steel
A53-B	6SCH40	489.0	0.30	60.0	29.541	29.541	11.362		Carbon Steel

M A T E R I A L A L L O W A B L E D A T A L I S T I N G

Material Name	Pipe ID	Temper. deg F	Allow. psi	Yield psi	Ultimate	Weld Reduction Factor W
A53-B	4SCH40	60.0	20000.0	35000.0	60000.0	1.000
		60.0	20000.0	35000.0		1.000
A53-B	6SCH40	60.0	20000.0	35000.0	60000.0	1.000
		60.0	20000.0	35000.0		1.000

OPERATING TEMPERATURE AND PRESSURE DATA
STRESSES IN psi

POINT NAME	CASE	PRESS. psi	TEMPER deg F	EXPAN. in/100ft	MODULUS E6 psi	ALLOW STRESS	YIELD STRESS
*** SEGMENT A							
A02	T1	0	60.00	0.000	29.541	20000	35000
A19	Same as previous point.						
*** SEGMENT B , LINE # RIGID							
B03	T1	0	60.00	0.000	29.541	20000	35000
B63	Same as previous point.						
*** SEGMENT C							
C03	T1	0	60.00	0.000	29.541	20000	35000
C71	Same as previous point.						
*** SEGMENT D							
D00	T1	0	60.00	0.000	29.541	20000	35000
D22	Same as previous point.						

u User-defined value
* Non-code material for allowable stress;
Non-standard material for expansion and modulus

L O A D S S U M M A R Y D A T A L I S T I N G

EARTHQUAKE LOAD CASES :

Number of load cases : 1

Load case 1 - E1

Seismic Code : User-defined

X-Resultant = 1.000 Y-Resultant = 1.000 Z-Resultant = 1.000

S U P P O R T D A T A L I S T I N G

Point Name	Support Type	Support ID	Conn.to /Dir	Comp.Wt (lb)	Stiff.	Gap 1 (in)	Gap 2 (in)	Fric. Fact.	GapSet /#hgr	Preload (lbf)	Ld.Var	Size	Figure
Tag No.: <None>						Attachment ID: <None>							
A23	V-stop	A23	1 Ground	0.000	Rigid	0.000	1.000	0.00		Weightless			
Tag No.: <None>						Attachment ID: <None>							
A24	V-stop	A24	1 Ground	0.000	Rigid	0.000	1.000	0.80		Weightless			
Tag No.: <None>						Attachment ID: <None>							
A21	Guide-V	A21	1 Ground	0.000	Rigid	0.000	1.000	0.00		Weightless			
	Guide-H	A21	1 Ground	0.000	Rigid	1.000	1.000	0.00		Weightless			
Tag No.: <None>						Attachment ID: <None>							
A22	Guide-V	A22	2 Ground	0.000	Rigid	0.000	1.000	0.00		Weightless			
	Guide-H	A22	2 Ground	0.000	Rigid	1.000	1.000	0.00		Weightless			
Tag No.: <None>						Attachment ID: <None>							
A25	V-stop	A25	2 Ground	0.000	Rigid	0.000	1.000	0.80		Weightless			
Tag No.: <None>						Attachment ID: <None>							
A26	V-stop	A26	2 Ground	0.000	Rigid	0.000	1.000	0.80		Weightless			
Tag No.: <None>						Attachment ID: <None>							
A27	V-stop	A27	2 Ground	0.000	Rigid	0.000	1.000	0.80		Weightless			
Tag No.: <None>						Attachment ID: <None>							
A28	V-stop	A28	2 Ground	0.000	Rigid	0.000	1.000	0.80		Weightless			
Tag No.: <None>						Attachment ID: <None>							
A29	Guide-V	A29	1 Ground	0.000	Rigid	0.000	1.000	0.00		Weightless			
	Guide-H	A29	1 Ground	0.000	Rigid	1.000	1.000	0.00		Weightless			
Tag No.: <None>						Attachment ID: <None>							
A30	Guide-V	A30	1 Ground	0.000	Rigid	0.000	1.000	0.00		Weightless			
	Guide-H	A30	1 Ground	0.000	Rigid	1.000	1.000	0.00		Weightless			
Tag No.: <None>						Attachment ID: <None>							
A31	Guide-V	A31	1 Ground	0.000	Rigid	0.000	1.000	0.00		Weightless			
	Guide-H	A31	1 Ground	0.000	Rigid	1.000	1.000	0.00		Weightless			
Tag No.: <None>						Attachment ID: <None>							
A32	Guide-V	A32	1 Ground	0.000	Rigid	0.000	1.000	0.00		Weightless			
	Guide-H	A32	1 Ground	0.000	Rigid	1.000	1.000	0.00		Weightless			
Tag No.: <None>						Attachment ID: <None>							
A33	V-stop	A33	2 Ground	0.000	Rigid	0.000	1.000	0.80		Weightless			
Tag No.: <None>						Attachment ID: <None>							
A34	V-stop	A34	2 Ground	0.000	Rigid	0.000	1.000	0.80		Weightless			
Tag No.: <None>						Attachment ID: <None>							
A35	V-stop	A35	2 Ground	0.000	Rigid	0.000	1.000	0.80		Weightless			

S U P P O R T D A T A L I S T I N G

Point Name	Support Type	Support ID	Conn.to /Dir	Comp.Wt (lb)	Stiff.	Gap 1 (in)	Gap 2 (in)	Fric. Fact.	GapSet /#hgr	Preload (lbf)	Ld.Var	Size	Figure
Tag No.: <None>						Attachment ID: <None>							
A36	V-stop	A36	2 Ground	0.000	Rigid	0.000	1.000	0.80		Weightless			
Tag No.: <None>						Attachment ID: <None>							
A37	V-stop	A37	2 Ground	0.000	Rigid	0.000	1.000	0.80		Weightless			
Tag No.: <None>						Attachment ID: <None>							
A38	Guide-V	A38	1 Ground	0.000	Rigid	0.000	1.000	0.00		Weightless			
	Guide-H	A38	1 Ground	0.000	Rigid	1.000	1.000	0.00		Weightless			
Tag No.: <None>						Attachment ID: <None>							
A39	Guide-V	A39	1 Ground	0.000	Rigid	0.000	1.000	0.00		Weightless			
	Guide-H	A39	1 Ground	0.000	Rigid	1.000	1.000	0.00		Weightless			
Tag No.: <None>						Attachment ID: <None>							
A40	Guide-V	A40	1 Ground	0.000	Rigid	0.000	1.000	0.00		Weightless			
	Guide-H	A40	1 Ground	0.000	Rigid	1.000	1.000	0.00		Weightless			
Tag No.: <None>						Attachment ID: <None>							
A41	Guide-V	A41	1 Ground	0.000	Rigid	0.000	1.000	0.00		Weightless			
	Guide-H	A41	1 Ground	0.000	Rigid	1.000	1.000	0.00		Weightless			
Tag No.: <None>						Attachment ID: <None>							
A42	V-stop	A42	2 Ground	0.000	Rigid	0.000	1.000	0.80		Weightless			
Tag No.: <None>						Attachment ID: <None>							
A43	V-stop	A43	2 Ground	0.000	Rigid	0.000	1.000	0.80		Weightless			
Tag No.: <None>						Attachment ID: <None>							
A44	V-stop	A44	2 Ground	0.000	Rigid	0.000	1.000	0.80		Weightless			
Tag No.: <None>						Attachment ID: <None>							
A45	V-stop	A45	2 Ground	0.000	Rigid	0.000	1.000	0.80		Weightless			
Tag No.: <None>						Attachment ID: <None>							
A46	V-stop	A46	2 Ground	0.000	Rigid	0.000	1.000	0.80		Weightless			
Tag No.: <None>						Attachment ID: <None>							
A47	V-stop	A47	2 Ground	0.000	Rigid	0.000	1.000	0.80		Weightless			
Tag No.: <None>						Attachment ID: <None>							
A48	V-stop	A48	2 Ground	0.000	Rigid	0.000	1.000	0.80		Weightless			
Tag No.: <None>						Attachment ID: <None>							
A49	V-stop	A49	2 Ground	0.000	Rigid	0.000	1.000	0.80		Weightless			
Tag No.: <None>						Attachment ID: <None>							
A50	V-stop	A50	2 Ground	0.000	Rigid	0.000	1.000	0.80		Weightless			
Tag No.: <None>						Attachment ID: <None>							
A51	Guide-V	A51	1 Ground	0.000	Rigid	0.000	1.000	0.00		Weightless			
	Guide-H	A51	1 Ground	0.000	Rigid	1.000	1.000	0.00		Weightless			

S U P P O R T D A T A L I S T I N G

Point Name	Support Type	Support ID	Conn.to /Dir	Comp.Wt (lb)	Stiff.	Gap 1 (in)	Gap 2 (in)	Fric. Fact.	GapSet /#hgr	Preload (lbf)	Ld.Var	Size	Figure
Tag No.: <None>						Attachment ID: <None>							
A52	Guide-V	A52 1	Ground	0.000	Rigid	0.000	1.000	0.00	Weightless				
	Guide-H	A52 1	Ground	0.000	Rigid	1.000	1.000	0.00	Weightless				
Tag No.: <None>						Attachment ID: <None>							
A53	Guide-V	A53 1	Ground	0.000	Rigid	0.000	1.000	0.00	Weightless				
	Guide-H	A53 1	Ground	0.000	Rigid	1.000	1.000	0.00	Weightless				
Tag No.: <None>						Attachment ID: <None>							
A54	Guide-V	A54 1	Ground	0.000	Rigid	0.000	1.000	0.00	Weightless				
	Guide-H	A54 1	Ground	0.000	Rigid	1.000	1.000	0.00	Weightless				
Tag No.: <None>						Attachment ID: <None>							
A55	V-stop	A55 1	Ground	0.000	Rigid	0.000	1.000	0.80	Weightless				
Tag No.: <None>						Attachment ID: <None>							
A56	V-stop	A56 1	Ground	0.000	Rigid	0.000	1.000	0.80	Weightless				
Tag No.: <None>						Attachment ID: <None>							
A57	V-stop	A57 1	Ground	0.000	Rigid	0.000	1.000	0.80	Weightless				
Tag No.: <None>						Attachment ID: <None>							
A58	V-stop	A58 1	Ground	0.000	Rigid	0.000	1.000	0.80	Weightless				
Tag No.: <None>						Attachment ID: <None>							
A59	V-stop	A59 1	Ground	0.000	Rigid	0.000	1.000	0.80	Weightless				
Tag No.: <None>						Attachment ID: <None>							
A60	V-stop	A60 1	Ground	0.000	Rigid	0.000	1.000	0.80	Weightless				
Tag No.: <None>						Attachment ID: <None>							
A61	V-stop	A61 1	Ground	0.000	Rigid	0.000	1.000	0.80	Weightless				
Tag No.: <None>						Attachment ID: <None>							
A62	Guide-V	A62 1	Ground	0.000	Rigid	0.000	1.000	0.00	Weightless				
	Guide-H	A62 1	Ground	0.000	Rigid	1.000	1.000	0.00	Weightless				
Tag No.: <None>						Attachment ID: <None>							
A63	Guide-V	A63 1	Ground	0.000	Rigid	0.000	1.000	0.00	Weightless				
	Guide-H	A63 1	Ground	0.000	Rigid	1.000	1.000	0.00	Weightless				
Tag No.: <None>						Attachment ID: <None>							
A64	V-stop	A64 2	Ground	0.000	Rigid	0.000	1.000	0.80	Weightless				
Tag No.: <None>						Attachment ID: <None>							
A65	V-stop	A65 2	Ground	0.000	Rigid	0.000	1.000	0.80	Weightless				
Tag No.: <None>						Attachment ID: <None>							
A66	V-stop	A66 2	Ground	0.000	Rigid	0.000	1.000	0.80	Weightless				
Tag No.: <None>						Attachment ID: <None>							
A67	V-stop	A67 2	Ground	0.000	Rigid	0.000	1.000	0.80	Weightless				

S U P P O R T D A T A L I S T I N G

Point Name	Support Type	Support ID	Conn.to /Dir	Comp.Wt (lb)	Stiff.	Gap 1 (in)	Gap 2 (in)	Fric. Fact.	GapSet /#hgr	Preload (lbf)	Ld.Var	Size	Figure
Tag No.: <None>						Attachment ID: <None>							
A68	V-stop	A68 2	Ground	0.000	Rigid	0.000	1.000	0.80	Weightless				
Tag No.: <None>						Attachment ID: <None>							
A69	Guide-V	A69 1	Ground	0.000	Rigid	0.000	1.000	0.00	Weightless				
	Guide-H	A69 1	Ground	0.000	Rigid	1.000	1.000	0.00	Weightless				
Tag No.: <None>						Attachment ID: <None>							
A70	Guide-V	A70 1	Ground	0.000	Rigid	0.000	1.000	0.00	Weightless				
	Guide-H	A70 1	Ground	0.000	Rigid	1.000	1.000	0.00	Weightless				
Tag No.: <None>						Attachment ID: <None>							
A71	V-stop	A71 2	Ground	0.000	Rigid	0.000	1.000	0.80	Weightless				
Tag No.: <None>						Attachment ID: <None>							
A72	Guide-V	A72 1	Ground	0.000	Rigid	0.000	1.000	0.00	Weightless				
	Guide-H	A72 1	Ground	0.000	Rigid	1.000	1.000	0.00	Weightless				
Tag No.: <None>						Attachment ID: <None>							
A73	Guide-V	A73 1	Ground	0.000	Rigid	0.000	1.000	0.00	Weightless				
	Guide-H	A73 1	Ground	0.000	Rigid	1.000	1.000	0.00	Weightless				
Tag No.: <None>						Attachment ID: <None>							
B22	V-stop	B22 2	Ground	0.000	Rigid	0.000	1.000	0.80	Weightless				
Tag No.: <None>						Attachment ID: <None>							
B23	V-stop	B23 2	Ground	0.000	Rigid	0.000	1.000	0.80	Weightless				
Tag No.: <None>						Attachment ID: <None>							
B24	Guide-V	B24 2	Ground	0.000	Rigid	0.000	1.000	0.00	Weightless				
	Guide-H	B24 2	Ground	0.000	Rigid	1.000	1.000	0.00	Weightless				
Tag No.: <None>						Attachment ID: <None>							
B25	Guide-V	B25 2	Ground	0.000	Rigid	0.000	1.000	0.00	Weightless				
	Guide-H	B25 2	Ground	0.000	Rigid	1.000	1.000	0.00	Weightless				
Tag No.: <None>						Attachment ID: <None>							
B26	V-stop	B26 1	Ground	0.000	Rigid	0.000	1.000	0.80	Weightless				
Tag No.: <None>						Attachment ID: <None>							
B28	V-stop	B28 1	Ground	0.000	Rigid	0.000	1.000	0.80	Weightless				
Tag No.: <None>						Attachment ID: <None>							
B29	V-stop	B29 1	Ground	0.000	Rigid	0.000	1.000	0.80	Weightless				
Tag No.: <None>						Attachment ID: <None>							
B31	V-stop	B31 1	Ground	0.000	Rigid	0.000	1.000	0.80	Weightless				
Tag No.: <None>						Attachment ID: <None>							
B32	Guide-V	B32 2	Ground	0.000	Rigid	0.000	1.000	0.00	Weightless				
	Guide-H	B32 2	Ground	0.000	Rigid	1.000	1.000	0.00	Weightless				

S U P P O R T D A T A L I S T I N G

Point Name	Support Type	Support ID	Conn.to /Dir	Comp.Wt (lb)	Stiff.	Gap 1 (in)	Gap 2 (in)	Fric. Fact.	GapSet /#hgr	Preload (lbf)	Ld.Var	Size	Figure
Tag No.: <None>						Attachment ID: <None>							
B33	Guide-V	B33 2	Ground	0.000	Rigid	0.000	1.000	0.00	Weightless				
	Guide-H	B33 2	Ground	0.000	Rigid	1.000	1.000	0.00	Weightless				
Tag No.: <None>						Attachment ID: <None>							
B34	Guide-V	B34 2	Ground	0.000	Rigid	0.000	1.000	0.00	Weightless				
	Guide-H	B34 2	Ground	0.000	Rigid	1.000	1.000	0.00	Weightless				
Tag No.: <None>						Attachment ID: <None>							
B35	Guide-V	B35 2	Ground	0.000	Rigid	0.000	1.000	0.00	Weightless				
	Guide-H	B35 2	Ground	0.000	Rigid	1.000	1.000	0.00	Weightless				
Tag No.: <None>						Attachment ID: <None>							
B36	V-stop	B36 2	Ground	0.000	Rigid	0.000	1.000	0.80	Weightless				
Tag No.: <None>						Attachment ID: <None>							
B37	V-stop	B37 2	Ground	0.000	Rigid	0.000	1.000	0.80	Weightless				
Tag No.: <None>						Attachment ID: <None>							
B38	V-stop	B38 2	Ground	0.000	Rigid	0.000	1.000	0.80	Weightless				
Tag No.: <None>						Attachment ID: <None>							
B39	V-stop	B39 2	Ground	0.000	Rigid	0.000	1.000	0.80	Weightless				
Tag No.: <None>						Attachment ID: <None>							
B40	V-stop	B40 1	Ground	0.000	Rigid	0.000	1.000	0.80	Weightless				
Tag No.: <None>						Attachment ID: <None>							
B42	Guide-V	B42 1	Ground	0.000	Rigid	0.000	1.000	0.00	Weightless				
	Guide-H	B42 1	Ground	0.000	Rigid	1.000	1.000	0.00	Weightless				
Tag No.: <None>						Attachment ID: <None>							
B43	Guide-V	B43 1	Ground	0.000	Rigid	0.000	1.000	0.00	Weightless				
	Guide-H	B43 1	Ground	0.000	Rigid	1.000	1.000	0.00	Weightless				
Tag No.: <None>						Attachment ID: <None>							
B45	Guide-V	B45 1	Ground	0.000	Rigid	0.000	1.000	0.00	Weightless				
	Guide-H	B45 1	Ground	0.000	Rigid	1.000	1.000	0.00	Weightless				
Tag No.: <None>						Attachment ID: <None>							
B46	Guide-V	B46 2	Ground	0.000	Rigid	0.000	1.000	0.00	Weightless				
	Guide-H	B46 2	Ground	0.000	Rigid	1.000	1.000	0.00	Weightless				
Tag No.: <None>						Attachment ID: <None>							
B47	V-stop	B47 2	Ground	0.000	Rigid	0.000	1.000	0.80	Weightless				
Tag No.: <None>						Attachment ID: <None>							
B48	V-stop	B48 2	Ground	0.000	Rigid	0.000	1.000	0.80	Weightless				
Tag No.: <None>						Attachment ID: <None>							
B49	V-stop	B49 2	Ground	0.000	Rigid	0.000	1.000	0.80	Weightless				

S U P P O R T D A T A L I S T I N G

Point Name	Support Type	Support ID	Conn.to /Dir	Comp.Wt (lb)	Stiff.	Gap 1 (in)	Gap 2 (in)	Fric. Fact.	GapSet /#hgr	Preload (lbf)	Ld.Var	Size	Figure
Tag No.: <None>						Attachment ID: <None>							
B50	V-stop	B50	2 Ground	0.000	Rigid	0.000	1.000	0.80	Weightless				
Tag No.: <None>						Attachment ID: <None>							
B51	V-stop	B51	2 Ground	0.000	Rigid	0.000	1.000	0.80	Weightless				
Tag No.: <None>						Attachment ID: <None>							
B52	V-stop	B52	2 Ground	0.000	Rigid	0.000	1.000	0.80	Weightless				
Tag No.: <None>						Attachment ID: <None>							
B53	V-stop	B53	2 Ground	0.000	Rigid	0.000	1.000	0.80	Weightless				
Tag No.: <None>						Attachment ID: <None>							
B54	V-stop	B54	2 Ground	0.000	Rigid	0.000	1.000	0.80	Weightless				
Tag No.: <None>						Attachment ID: <None>							
B55	Guide-V	B55	1 Ground	0.000	Rigid	0.000	1.000	0.00	Weightless				
	Guide-H	B55	1 Ground	0.000	Rigid	1.000	1.000	0.00	Weightless				
Tag No.: <None>						Attachment ID: <None>							
B57	Guide-V	B57	1 Ground	0.000	Rigid	0.000	1.000	0.00	Weightless				
	Guide-H	B57	1 Ground	0.000	Rigid	1.000	1.000	0.00	Weightless				
Tag No.: <None>						Attachment ID: <None>							
B58	Guide-V	B58	1 Ground	0.000	Rigid	0.000	1.000	0.00	Weightless				
	Guide-H	B58	1 Ground	0.000	Rigid	1.000	1.000	0.00	Weightless				
Tag No.: <None>						Attachment ID: <None>							
B64	Guide-V	B64	1 Ground	0.000	Rigid	0.000	1.000	0.00	Weightless				
	Guide-H	B64	1 Ground	0.000	Rigid	1.000	1.000	0.00	Weightless				
Tag No.: <None>						Attachment ID: <None>							
B65	V-stop	B65	1 Ground	0.000	Rigid	0.000	1.000	0.80	Weightless				
Tag No.: <None>						Attachment ID: <None>							
B66	V-stop	B66	1 Ground	0.000	Rigid	0.000	1.000	0.80	Weightless				
Tag No.: <None>						Attachment ID: <None>							
B67	V-stop	B67	1 Ground	0.000	Rigid	0.000	1.000	0.80	Weightless				
Tag No.: <None>						Attachment ID: <None>							
B68	V-stop	B68	1 Ground	0.000	Rigid	0.000	1.000	0.80	Weightless				
Tag No.: <None>						Attachment ID: <None>							
B69	V-stop	B69	1 Ground	0.000	Rigid	0.000	1.000	0.80	Weightless				
Tag No.: <None>						Attachment ID: <None>							
B70	V-stop	B70	1 Ground	0.000	Rigid	0.000	1.000	0.80	Weightless				
Tag No.: <None>						Attachment ID: <None>							
B71	V-stop	B71	1 Ground	0.000	Rigid	0.000	1.000	0.80	Weightless				

S U P P O R T D A T A L I S T I N G

```
 Point Support  Support Conn.to Comp.Wt  Stiff.     Gap 1   Gap 2  Fric. GapSet Preload Ld.Var Size    Figure
 Name   Type      ID     /Dir    (lb)              (in)    (in)   Fact. /#hgr   (lbf)
 ----- -------- ------- ------- ------- ---------- ------- ------- ----- ------ ------- ------ ---- ------------
 Tag No.: <None>                                 Attachment ID: <None>
 B72   V-stop   B72  1  Ground    0.000 Rigid        0.000   1.000  0.80  Weightless

 Tag No.: <None>                                 Attachment ID: <None>
 B73   V-stop   B73  1  Ground    0.000 Rigid        0.000   1.000  0.80  Weightless

 Tag No.: <None>                                 Attachment ID: <None>
 B74   Guide-V  B74  1  Ground    0.000 Rigid        0.000   1.000  0.00  Weightless
       Guide-H  B74  1  Ground    0.000 Rigid        1.000   1.000  0.00  Weightless

 Tag No.: <None>                                 Attachment ID: <None>
 B75   Guide-V  B75  1  Ground    0.000 Rigid        0.000   1.000  0.00  Weightless
       Guide-H  B75  1  Ground    0.000 Rigid        1.000   1.000  0.00  Weightless

 Tag No.: <None>                                 Attachment ID: <None>
 B77   Guide-V  B77  1  Ground    0.000 Rigid        0.000   1.000  0.00  Weightless
       Guide-H  B77  1  Ground    0.000 Rigid        1.000   1.000  0.00  Weightless

 Tag No.: <None>                                 Attachment ID: <None>
 B76   Guide-V  B76  1  Ground    0.000 Rigid        0.000   1.000  0.00  Weightless
       Guide-H  B76  1  Ground    0.000 Rigid        1.000   1.000  0.00  Weightless

 Tag No.: <None>                                 Attachment ID: <None>
 B59 M V-stop   B59 M1  Ground    0.000 Rigid        0.000   1.000  0.80  Weightless

 Tag No.: <None>                                 Attachment ID: <None>
 C21   V-stop   C21  2  Ground    0.000 Rigid        0.000   1.000  0.80  Weightless

 Tag No.: <None>                                 Attachment ID: <None>
 C22   V-stop   C22  2  Ground    0.000 Rigid        0.000   1.000  0.80  Weightless

 Tag No.: <None>                                 Attachment ID: <None>
 C23   Guide-V  C23  2  Ground    0.000 Rigid        0.000   1.000  0.00  Weightless
       Guide-H  C23  2  Ground    0.000 Rigid        1.000   1.000  0.00  Weightless

 Tag No.: <None>                                 Attachment ID: <None>
 C24   Guide-V  C24  2  Ground    0.000 Rigid        0.000   1.000  0.00  Weightless
       Guide-H  C24  2  Ground    0.000 Rigid        1.000   1.000  0.00  Weightless

 Tag No.: <None>                                 Attachment ID: <None>
 C25   V-stop   C25  2  Ground    0.000 Rigid        0.000   1.000  0.80  Weightless

 Tag No.: <None>                                 Attachment ID: <None>
 C26   V-stop   C26  2  Ground    0.000 Rigid        0.000   1.000  0.80  Weightless

 Tag No.: <None>                                 Attachment ID: <None>
 C28   V-stop   C28  2  Ground    0.000 Rigid        0.000   1.000  0.80  Weightless

 Tag No.: <None>                                 Attachment ID: <None>
 C29   V-stop   C29  2  Ground    0.000 Rigid        0.000   1.000  0.80  Weightless

 Tag No.: <None>                                 Attachment ID: <None>
```

S U P P O R T D A T A L I S T I N G

Point Name	Support Type	Support ID	Conn.to /Dir	Comp.Wt (lb)	Stiff.	Gap 1 (in)	Gap 2 (in)	Fric. Fact.	GapSet /#hgr	Preload (lbf)	Ld.Var	Size	Figure
C31	Guide-V	C31 2	Ground	0.000	Rigid	0.000	1.000	0.00	Weightless				
	Guide-H	C31 2	Ground	0.000	Rigid	1.000	1.000	0.00	Weightless				
Tag No.: <None>						Attachment ID: <None>							
C32	Guide-V	C32 2	Ground	0.000	Rigid	0.000	1.000	0.00	Weightless				
	Guide-H	C32 2	Ground	0.000	Rigid	1.000	1.000	0.00	Weightless				
Tag No.: <None>						Attachment ID: <None>							
C33	Guide-V	C33 2	Ground	0.000	Rigid	0.000	1.000	0.00	Weightless				
	Guide-H	C33 2	Ground	0.000	Rigid	1.000	1.000	0.00	Weightless				
Tag No.: <None>						Attachment ID: <None>							
C34	Guide-V	C34 2	Ground	0.000	Rigid	0.000	1.000	0.00	Weightless				
	Guide-H	C34 2	Ground	0.000	Rigid	1.000	1.000	0.00	Weightless				
Tag No.: <None>						Attachment ID: <None>							
C35	V-stop	C35 2	Ground	0.000	Rigid	0.000	1.000	0.80	Weightless				
Tag No.: <None>						Attachment ID: <None>							
C36	V-stop	C36 2	Ground	0.000	Rigid	0.000	1.000	0.80	Weightless				
Tag No.: <None>						Attachment ID: <None>							
C37	V-stop	C37 2	Ground	0.000	Rigid	0.000	1.000	0.80	Weightless				
Tag No.: <None>						Attachment ID: <None>							
C38	V-stop	C38 2	Ground	0.000	Rigid	0.000	1.000	0.80	Weightless				
Tag No.: <None>						Attachment ID: <None>							
C39	V-stop	C39 2	Ground	0.000	Rigid	0.000	1.000	0.80	Weightless				
Tag No.: <None>						Attachment ID: <None>							
C40	Guide-V	C40 2	Ground	0.000	Rigid	0.000	1.000	0.00	Weightless				
	Guide-H	C40 2	Ground	0.000	Rigid	1.000	1.000	0.00	Weightless				
Tag No.: <None>						Attachment ID: <None>							
C42	Guide-V	C42 2	Ground	0.000	Rigid	0.000	1.000	0.00	Weightless				
	Guide-H	C42 2	Ground	0.000	Rigid	1.000	1.000	0.00	Weightless				
Tag No.: <None>						Attachment ID: <None>							
C43	Guide-V	C43 2	Ground	0.000	Rigid	0.000	1.000	0.00	Weightless				
	Guide-H	C43 2	Ground	0.000	Rigid	1.000	1.000	0.00	Weightless				
Tag No.: <None>						Attachment ID: <None>							
C45	Guide-V	C45 2	Ground	0.000	Rigid	0.000	1.000	0.00	Weightless				
	Guide-H	C45 2	Ground	0.000	Rigid	1.000	1.000	0.00	Weightless				
Tag No.: <None>						Attachment ID: <None>							
C46	V-stop	C46 2	Ground	0.000	Rigid	0.000	1.000	0.80	Weightless				
Tag No.: <None>						Attachment ID: <None>							
C47	V-stop	C47 2	Ground	0.000	Rigid	0.000	1.000	0.80	Weightless				

S U P P O R T D A T A L I S T I N G

Point Name	Support Type	Support ID	Conn.to /Dir	Comp.Wt (lb)	Stiff.	Gap 1 (in)	Gap 2 (in)	Fric. Fact.	GapSet /#hgr	Preload (lbf)	Ld.Var	Size	Figure
Tag No.: <None>						Attachment ID: <None>							
C48	V-stop	C48	2 Ground	0.000	Rigid	0.000	1.000	0.80	Weightless				
Tag No.: <None>						Attachment ID: <None>							
C49	V-stop	C49	2 Ground	0.000	Rigid	0.000	1.000	0.80	Weightless				
Tag No.: <None>						Attachment ID: <None>							
C50	V-stop	C50	2 Ground	0.000	Rigid	0.000	1.000	0.80	Weightless				
Tag No.: <None>						Attachment ID: <None>							
C51	V-stop	C51	2 Ground	0.000	Rigid	0.000	1.000	0.80	Weightless				
Tag No.: <None>						Attachment ID: <None>							
C52	V-stop	C52	2 Ground	0.000	Rigid	0.000	1.000	0.80	Weightless				
Tag No.: <None>						Attachment ID: <None>							
C53	V-stop	C53	2 Ground	0.000	Rigid	0.000	1.000	0.80	Weightless				
Tag No.: <None>						Attachment ID: <None>							
C55	Guide-V	C55	2 Ground	0.000	Rigid	0.000	1.000	0.00	Weightless				
	Guide-H	C55	2 Ground	0.000	Rigid	1.000	1.000	0.00	Weightless				
Tag No.: <None>						Attachment ID: <None>							
C56	Guide-V	C56	2 Ground	0.000	Rigid	0.000	1.000	0.00	Weightless				
	Guide-H	C56	2 Ground	0.000	Rigid	1.000	1.000	0.00	Weightless				
Tag No.: <None>						Attachment ID: <None>							
C57	Guide-V	C57	2 Ground	0.000	Rigid	0.000	1.000	0.00	Weightless				
	Guide-H	C57	2 Ground	0.000	Rigid	1.000	1.000	0.00	Weightless				
Tag No.: <None>						Attachment ID: <None>							
C58	Guide-V	C58	2 Ground	0.000	Rigid	0.000	1.000	0.00	Weightless				
	Guide-H	C58	2 Ground	0.000	Rigid	1.000	1.000	0.00	Weightless				
Tag No.: <None>						Attachment ID: <None>							
C59	V-stop	C59	2 Ground	0.000	Rigid	0.000	1.000	0.80	Weightless				
Tag No.: <None>						Attachment ID: <None>							
C60	V-stop	C60	2 Ground	0.000	Rigid	0.000	1.000	0.80	Weightless				
Tag No.: <None>						Attachment ID: <None>							
C61	V-stop	C61	1 Ground	0.000	Rigid	0.000	1.000	0.80	Weightless				
Tag No.: <None>						Attachment ID: <None>							
C63	V-stop	C63	1 Ground	0.000	Rigid	0.000	1.000	0.80	Weightless				
Tag No.: <None>						Attachment ID: <None>							
C64	V-stop	C64	2 Ground	0.000	Rigid	0.000	1.000	0.80	Weightless				
Tag No.: <None>						Attachment ID: <None>							
C65	V-stop	C65	1 Ground	0.000	Rigid	0.000	1.000	0.80	Weightless				

S U P P O R T D A T A L I S T I N G

Point Name	Support Type	Support ID	Conn.to /Dir	Comp.Wt (lb)	Stiff.	Gap 1 (in)	Gap 2 (in)	Fric. Fact.	GapSet /#hgr	Preload (lbf)	Ld.Var	Size	Figure
Tag No.: <None>						Attachment ID: <None>							
C72	V-stop	C72 1	Ground	0.000	Rigid	0.000	1.000	0.80		Weightless			
Tag No.: <None>						Attachment ID: <None>							
C73	Guide-V	C73 1	Ground	0.000	Rigid	0.000	1.000	0.00		Weightless			
	Guide-H	C73 1	Ground	0.000	Rigid	1.000	1.000	0.00		Weightless			
Tag No.: <None>						Attachment ID: <None>							
C74	Guide-V	C74 1	Ground	0.000	Rigid	0.000	1.000	0.00		Weightless			
	Guide-H	C74 1	Ground	0.000	Rigid	1.000	1.000	0.00		Weightless			
Tag No.: <None>						Attachment ID: <None>							
C75	V-stop	C75 1	Ground	0.000	Rigid	0.000	1.000	0.80		Weightless			
Tag No.: <None>						Attachment ID: <None>							
C76	V-stop	C76 1	Ground	0.000	Rigid	0.000	1.000	0.80		Weightless			
Tag No.: <None>						Attachment ID: <None>							
C77	V-stop	C77 1	Ground	0.000	Rigid	0.000	1.000	0.80		Weightless			
Tag No.: <None>						Attachment ID: <None>							
C78	V-stop	C78 1	Ground	0.000	Rigid	0.000	1.000	0.80		Weightless			
Tag No.: <None>						Attachment ID: <None>							
C79	V-stop	C79 1	Ground	0.000	Rigid	0.000	1.000	0.80		Weightless			
Tag No.: <None>						Attachment ID: <None>							
C80	Guide-V	C80 1	Ground	0.000	Rigid	0.000	1.000	0.00		Weightless			
	Guide-H	C80 1	Ground	0.000	Rigid	1.000	1.000	0.00		Weightless			
Tag No.: <None>						Attachment ID: <None>							
C82	Guide-V	C82 1	Ground	0.000	Rigid	0.000	1.000	0.00		Weightless			
	Guide-H	C82 1	Ground	0.000	Rigid	1.000	1.000	0.00		Weightless			
Tag No.: <None>						Attachment ID: <None>							
C81	V-stop	C81 1	Ground	0.000	Rigid	0.000	1.000	0.80		Weightless			
Tag No.: <None>						Attachment ID: <None>							
C83	Guide-V	C83 1	Ground	0.000	Rigid	0.000	1.000	0.00		Weightless			
	Guide-H	C83 1	Ground	0.000	Rigid	1.000	1.000	0.00		Weightless			
Tag No.: <None>						Attachment ID: <None>							
C84	Guide-V	C84 1	Ground	0.000	Rigid	0.000	1.000	0.00		Weightless			
	Guide-H	C84 1	Ground	0.000	Rigid	1.000	1.000	0.00		Weightless			
Tag No.: <None>						Attachment ID: <None>							
D04 M	V-stop	D04 M1	Ground	0.000	Rigid	0.000	1.000	0.80		Weightless			
Tag No.: <None>						Attachment ID: <None>							
D13	V-stop	D13 1	Ground	0.000	Rigid	0.000	1.000	0.80		Weightless			
Tag No.: <None>						Attachment ID: <None>							

S U P P O R T D A T A L I S T I N G

Point Name	Support Type	Support ID	Conn.to /Dir	Comp.Wt (lb)	Stiff.	Gap 1 (in)	Gap 2 (in)	Fric. Fact.	GapSet /#hgr	Preload (lbf)	Ld.Var	Size	Figure
D14	Guide-V	D14 2	Ground	0.000	Rigid	0.000	1.000	0.00	Weightless				
	Guide-H	D14 2	Ground	0.000	Rigid	1.000	1.000	0.00	Weightless				
Tag No.: <None>						Attachment ID: <None>							
D15	Guide-V	D15 2	Ground	0.000	Rigid	0.000	1.000	0.00	Weightless				
	Guide-H	D15 2	Ground	0.000	Rigid	1.000	1.000	0.00	Weightless				
Tag No.: <None>						Attachment ID: <None>							
D18	V-stop	D18 1	Ground	0.000	Rigid	0.000	1.000	0.80	Weightless				
Tag No.: <None>						Attachment ID: <None>							
D16	Guide-V	D16 1	Ground	0.000	Rigid	0.000	1.000	0.00	Weightless				
	Guide-H	D16 1	Ground	0.000	Rigid	1.000	1.000	0.00	Weightless				
Tag No.: <None>						Attachment ID: <None>							
D19	Guide-V	D19 2	Ground	0.000	Rigid	0.000	1.000	0.00	Weightless				
	Guide-H	D19 2	Ground	0.000	Rigid	1.000	1.000	0.00	Weightless				
Tag No.: <None>						Attachment ID: <None>							
D25	V-stop	D25 1	Ground	0.000	Rigid	0.000	1.000	0.80	Weightless				
Tag No.: <None>						Attachment ID: <None>							
D20	Guide-V	D20 1	Ground	0.000	Rigid	0.000	1.000	0.00	Weightless				
	Guide-H	D20 1	Ground	0.000	Rigid	1.000	1.000	0.00	Weightless				
Tag No.: <None>						Attachment ID: <None>							
D26	Guide-V	D26 1	Ground	0.000	Rigid	0.000	1.000	0.00	Weightless				
	Guide-H	D26 1	Ground	0.000	Rigid	1.000	1.000	0.00	Weightless				
Tag No.: <None>						Attachment ID: <None>							
D28	V-stop	D28 1	Ground	0.000	Rigid	0.000	1.000	0.80	Weightless				
Tag No.: <None>						Attachment ID: <None>							
D27	V-stop	D27 1	Ground	0.000	Rigid	0.000	1.000	0.80	Weightless				

Spring Manufacturer: Anvil/Grinnell
NOTE 1: No soil supports present in the system.
Gap 1 : V-stop,Guide-V=down, Linestop,Incline,Tie/link=backward, Guide-H=Left
Gap 2 : V-stop,Guide-V=Up , Linestop,Incline,Tie/link=forward , Guide-H=Right
Stiffness units for rotation support: ft-lb/deg, all others: lb/in

B E N D D A T A L I S T I N G

Point Name	Bend Type	Radius (in)	Angle (deg)	OD (in)	tnom (in)	Material	Flan^ /Cuts	SIF in	SIF out	Analysis Set	Flexibility (K)	Pressure Case
A04	Elbow	36.00	10.5	4.500	0.237	A53-B	0/0	1.00	1.00	1	1.00	None
A05	Elbow	36.00	89.7	4.500	0.237	A53-B	0/0	1.00	1.00	1	1.00	None
A06	Elbow	36.00	90.0	4.500	0.237	A53-B	0/0	1.00	1.00	1	1.00	None
A07	Elbow	36.00	89.9	4.500	0.237	A53-B	0/0	1.00	1.00	1	1.00	None
A08	Elbow	36.00	90.0	4.500	0.237	A53-B	0/0	1.00	1.00	1	1.00	None
A09	Elbow	36.00	90.0	4.500	0.237	A53-B	0/0	1.00	1.00	1	1.00	None
A10	Elbow	36.00	90.0	4.500	0.237	A53-B	0/0	1.00	1.00	1	1.00	None
A11	Elbow	36.00	90.0	4.500	0.237	A53-B	0/0	1.00	1.00	1	1.00	None
A12	Elbow	36.00	90.0	4.500	0.237	A53-B	0/0	1.00	1.00	1	1.00	None
A13	Elbow	36.00	90.0	4.500	0.237	A53-B	0/0	1.00	1.00	1	1.00	None
A14	Elbow	36.00	90.0	4.500	0.237	A53-B	0/0	1.00	1.00	1	1.00	None
A15	Elbow	36.00	1.0	4.500	0.237	A53-B	0/0	1.00	1.00	1	1.00	None
B06	Elbow	36.00	9.3	6.625	0.280	A53-B	0/0	1.00	1.00	1	1.65	None
B09	Elbow	36.00	89.7	6.625	0.280	A53-B	0/0	1.00	1.00	1	1.65	None
B16	Elbow	36.00	90.0	6.625	0.280	A53-B	0/0	1.00	1.00	1	1.65	None
B19	Elbow	36.00	90.0	6.625	0.280	A53-B	0/0	1.00	1.00	1	1.65	None
B27	Elbow	36.00	90.0	6.625	0.280	A53-B	0/0	1.00	1.00	1	1.65	None
B30	Elbow	36.00	90.0	6.625	0.280	A53-B	0/0	1.00	1.00	1	1.65	None
B41	Elbow	36.00	90.0	6.625	0.280	A53-B	0/0	1.00	1.00	1	1.65	None
B44	Elbow	36.00	90.0	6.625	0.280	A53-B	0/0	1.00	1.00	1	1.65	None
B56	Elbow	30.00	90.0	6.625	0.280	A53-B	0/0	1.02	1.00	1	1.98	None
B20	Elbow	30.00	90.0	6.625	0.280	A53-B	0/0	1.02	1.00	1	1.98	None
B21	Elbow	30.00	90.0	6.625	0.280	A53-B	0/0	1.02	1.00	1	1.98	None
B59	*Elbow	36.00	0.9	6.625	0.280	A53-B	0/0	1.00	1.00	1	1.65	None
C06	Elbow	36.00	4.6	4.500	0.237	A53-B	0/0	1.00	1.00	1	1.00	None
C09	Elbow	36.00	89.9	4.500	0.237	A53-B	0/0	1.00	1.00	1	1.00	None
C16	Elbow	36.00	90.0	4.500	0.237	A53-B	0/0	1.00	1.00	1	1.00	None
C19	Elbow	36.00	90.0	4.500	0.237	A53-B	0/0	1.00	1.00	1	1.00	None
C27	Elbow	36.00	90.0	4.500	0.237	A53-B	0/0	1.00	1.00	1	1.00	None
C30	Elbow	36.00	90.0	4.500	0.237	A53-B	0/0	1.00	1.00	1	1.00	None
C41	Elbow	36.00	90.0	4.500	0.237	A53-B	0/0	1.00	1.00	1	1.00	None
C44	Elbow	36.00	90.0	4.500	0.237	A53-B	0/0	1.00	1.00	1	1.00	None
C54	Elbow	36.00	90.0	4.500	0.237	A53-B	0/0	1.00	1.00	1	1.00	None
C62	Elbow	36.00	90.0	4.500	0.237	A53-B	0/0	1.00	1.00	1	1.00	None
C66	Elbow	36.00	90.0	4.500	0.237	A53-B	0/0	1.00	1.00	1	1.00	None
C67	*Elbow	36.00	1.0	4.500	0.237	A53-B	0/0	1.00	1.00	1	1.00	None
D04	*Elbow	36.00	0.7	4.500	0.237	A53-B	0/0	1.00	1.00	1	1.00	None
D08	Elbow	36.00	90.0	4.500	0.237	A53-B	0/0	1.00	1.00	1	1.00	None
D12	Elbow	36.00	90.0	4.500	0.237	A53-B	0/0	1.00	1.00	1	1.00	None
D17	Elbow	36.00	90.0	4.500	0.237	A53-B	0/0	1.00	1.00	1	1.00	None

^ = Number of bend ends where either a flange or valve is within distance
(L/D) x Nominal diameter, where L/D is defined under Tools > Model options > Edit
* = Mid-point present

L O A D C A S E D E S C R I P T I O N

Load Case	Load Case Name	Description
GR	Gravity	
T1	Thermal 1	
E1	Earth 1	
P1	Press 1	

A N A L Y S I S S U M M A R Y

Current model revision number : 1

Constant values used
Acceleration due to gravity..... 386.40000 in/s/s
Density of water for specific gravity Cal.. 62.400 lb/cu.ft
Density of sea water..... 62.400 lb/cu.ft
Density of ground water ..... 62.400 lb/cu.ft

Static - Analysis set number 1
Date and Time of analysis ..... Apr 24, 2020 8:40 AM
Model Revision Number 1
Number of load cases 2
Load cases analyzed ..... GR E1
Description ..... Analysis Set No.1
Gaps/Friction/Soil considered ..... Yes
Tolerance - Force, Displacement ..... 10.00 lbf 0.0010 in
Friction - Scale Factor, Tolerance 1.00 0.10
Ignore friction for cases E1,E2,E3 .... Yes
Ignore friction for gravity case ..... Yes
Hanger design run ..... No
Cut short included ..... No
Thermal bowing included ..... No
Include Bourdon rotational effect ..... No
Pipe radius for Bourdon calculation ... Mean
Occasional load analysis type ..... Nonlinear
Non-linear analysis summary file .....
Encasement Piping Stabiltiy.LOG
Use default load sequence ..... Yes
Base load cases for nonlinear analysis
GR = None
E1 = GR
Weight of contents included ..... Yes
Fluid density factor for contents 1.00
Pressure stiffening case ..... None
Hot modulus case ..... None
Pressure Extension..... No
Water elevation for buoyancy loads .... Not considered
Use corroded thickness in analysis .... Yes
Rigid stiffness factor 1000.0
Support rigid stiffness (translation) . 0.100000E+11 lb/in
Support rigid stiffness (rotation) .... 0.100000E+11 ft-lb/deg
Anchor rigid stiffness (translation) .. 0.100000E+11 lb/in
Anchor rigid stiffness (rotation) ..... 0.100000E+11 ft-lb/deg
Remove Lift-Off Supports ..... No

```
-----------------------------------------------------------------------------------------------------------------------
Encasement Piping Stabiltiy
04/24/2020 2018719                                                    BENTLEY
08:44 AM                                                              AutoPIPE Nuclear 12.00.00.16   RESULT PAGE  71
-----------------------------------------------------------------------------------------------------------------------
```

CODE COMPLIANCE COMBINATIONS

<Description> Combination	Category	Method	Case/Combination	Factor	M/S	K-Factor	Allowable (psi)	D/A/P/C
GR + Max P{1}	Sustain	Sum	GR[1]	1.00			Automatic	Y Y Y Y
			Max Long	1.00				
Max Range	Expansion	Sum	Temp. Range	1.00			Automatic	Y Y Y Y
Sus. + E1{1}	Occasion	Abs sum	E1[1]	1.00		1.330	Automatic	Y Y Y Y
			Max Sus	1.00				

Notes:

D/A/P/C: [D]efault/[A]uto-Update/[P]rint options/[C]Consistent (Y=Yes, N=No)

NON-CODE COMBINATIONS

<Description> Combination	Method	Case/Combination	Factor	D/A/P/C
Gravity{1}	Sum	GR[1]	1.00	Y Y Y Y
< 1.00, 1.00, 1.00> Static Seismic 1{1}	Sum	E1[1]	1.00	Y Y Y N
GE1{1}	Sum	GR[1]	1.00	Y Y Y Y
		E1[1]	1.00	

Notes:

D/A/P/C: [D]efault/[A]uto-Update/[P]rint options/[C]Consistent (Y=Yes, N=No)

CODE COMPLIANCE

```
Y - Factor ............................ 0.40
Design Pressure Factor ................ 1.00
Minimum stress ratio used in reports... 0.00
Number of stress points per span ...... 0
Include corrosion in stress calcs. .... Y
Include corrosion in Hoop stress calcs. Y
Include torsion in code stress ........ N
Include axial force in code stress .... Y
Include sustain load margin ........... Only if allowable stress is exceeded
Use minimum sustained margin........... Y
Set sustained SIF=1 no bends .......... N
Set occasional SIF = 1 ................ N
Set occasional SIF = 0.75i ............ Y
Apply cold/hot modulus ratio .......... N
Disable auto code combinations ........ N
Disable auto non-code combinations .... N
No. of thermal ranges to report ....... 0
Include Max Range combination ......... Y
Total stress .......................... Octahedral
Direct shear .......................... None
Longitudinal pressure calculation ..... AxF/area
Use code case 178 ..................... Y
Inc. Axial Str and Pcase in Sustained.. Axial forces
Use alternate occasional allowable .... N
Apply circumferential weld WC factor .. N
ASME B31J Enabled ..................... N
```

*** NOTE ***

No operating loads analyzed. Maximum specified
pressure will be used for sustained stress

*** Summary not available ***

APPENDIX D8

AUTOPIPE ANALYSIS – ENCASEMENT THERMAL CONTRACTION

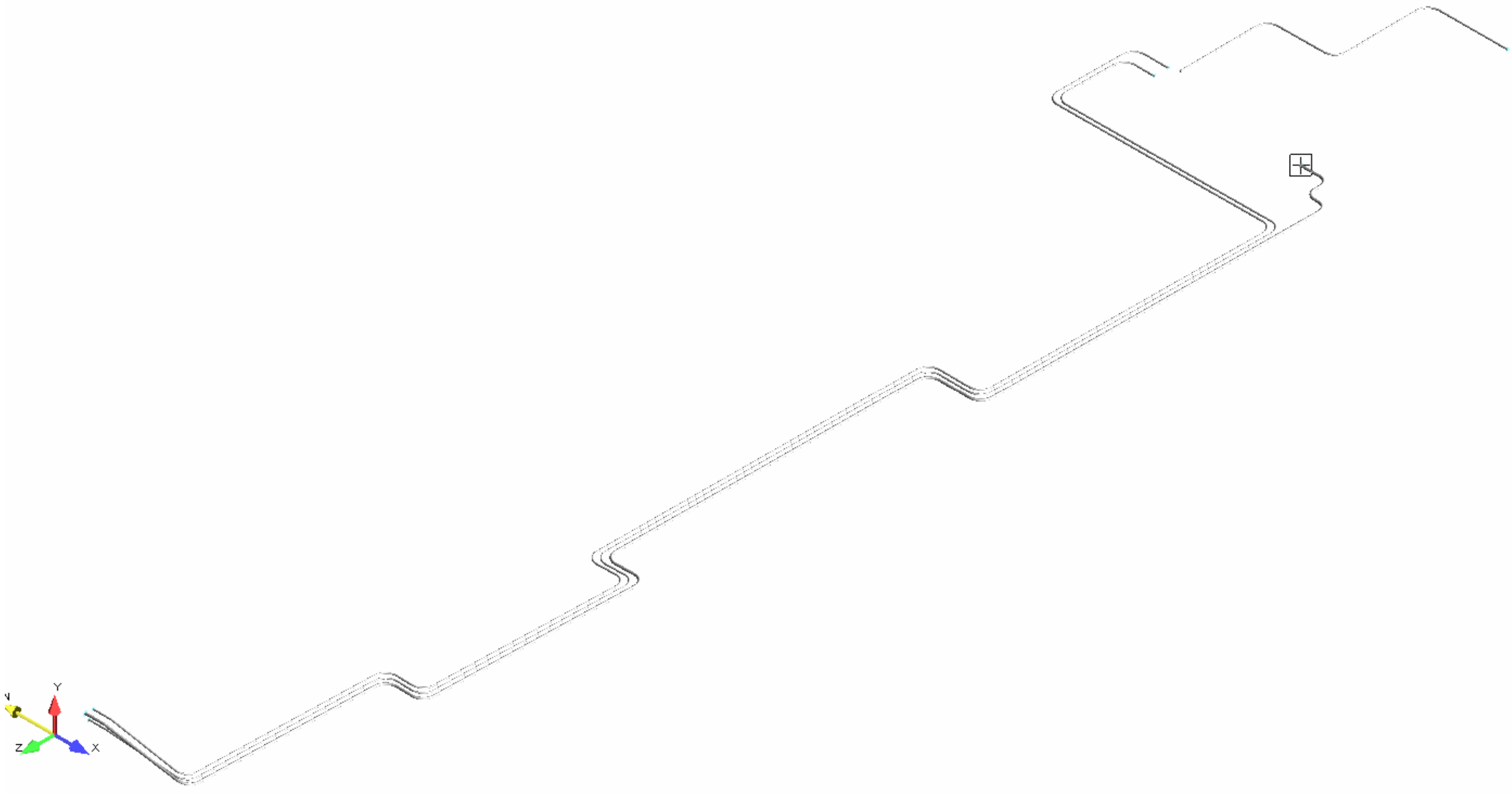
Y
Z
X

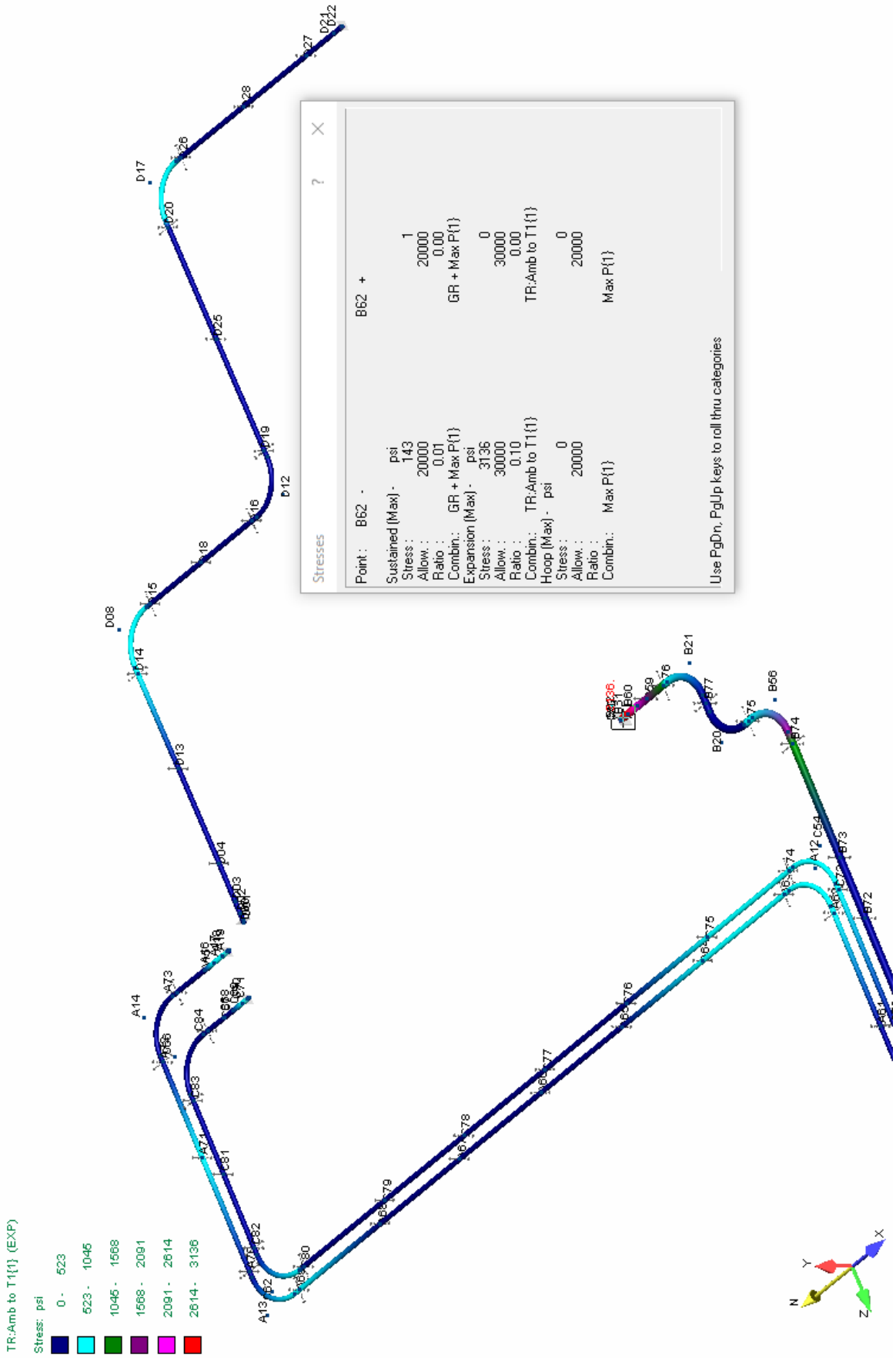
TR:Amb to T1(1) (EXP)
Stress: psi
0 - 523
523 - 1045
1045 - 1568
1568 - 2091
2091 - 2614
2614 - 3136
Stresses
Point : B62 -
B62 +
Sustained (Max) - psi
Stress : 143
Allow. : 20000
Ratio : 0.01
Combin.: GR + Max P(1)
Expansion (Max) - psi
Stress : 3136
Allow. : 30000
Ratio : 0.10
Combin.: TR:Amb to T1(1)
Hoop (Max) - psi
Stress : 0
Allow. : 20000
Ratio : 0
Combin.: Max P(1)
1
20000
0.00
GR + Max P(1)
0
30000
0.00
TR:Amb to T1(1)
0
20000
Max P(1)
Use PgDn, PgUp keys to roll thru categories

```
---------------------------------------------------------------------------------------------------------------
Encasement Piping Low Temp
04/24/2020 2018719                                                                                  BENTLEY
10:51 AM                                                                                            AutoPIPE Nuclear 12.00.00.16
---------------------------------------------------------------------------------------------------------------
```

```
        *                             *******   **  *******   *******
       ***               **           **    **  **  **    **  **
      ** **             ******        **    **  **  **    **  **
     **   **    **   **  **   *****   *******   **  *******   *****
    *********   **   **  **  **   **  **        **  **        **
   **       **  **   **  **  **   **  **        **  **        **
  **         **  *****   **   *****   **        **  **        *******
```

Pipe Stress Analysis and Design Program

Version: 12.00.00.16

Edition: Nuclear

Developed and Maintained by

BENTLEY SYSTEMS, INCORPORATED
1065 N. PACIFIC CENTER DRIVE, SUITE 450
ANAHEIM, CA 92806

```
************************************************************
**                                                        **
**              AUTOPIPE SYSTEM INFORMATION               **
**                                                        **
************************************************************
```

SYSTEM NAME : Encasement Piping Low Temp

PROJECT ID : 2018719

PREPARED BY : _____
JIM HARRINGTON

CHECKED BY : _____
RYAN LANG

1ST APPROVER : _____

2ND APPROVER : _____

PIPING CODE : ASME B31.3

YEAR : 2016

VERTICAL AXIS : Y

AMBIENT TEMPERATURE : 80.0 deg F

COMPONENT LIBRARY : AUTOPIPE

MATERIAL LIBRARY : B313-16

MODEL REVISION NUMBER : 1

T A B L E O F C O N T E N T S

Components..... 1
Coordinates..... 44
Segment Data..... 51
Pipe Properties..... 52
Material Properties..... 53
Material Allowables..... 54
Temperature and Pressure..... 55
Support..... 56
Bend..... 67
Load Case Description..... 68
Analysis Summary..... 69
Restraint Reactions..... 73
Code Compliance..... 91
Result Summary..... 137

```
-----------------------------------------------------------------------------------------------------------------
Encasement Piping Low Temp
04/24/2020 2018719                                                    BENTLEY
10:51 AM                                                              AutoPIPE Nuclear 12.00.00.16   MODEL  PAGE   1
-----------------------------------------------------------------------------------------------------------------

                 C O M P O N E N T   D A T A   L I S T I N G

 ---------------------------------------------------------------------------
 *** SEGMENT A

 ---------------------------------------------------------------------------
 From A02 to A03, DX= 2.00 ft                                          Run

 PIPE DATA:
   Pipe Id= 4SCH40, Material= A53-B, Composition= Carbon Steel, Poisson= 0.300, Nom Size= 4 in, OD= 4.500 inch,
   Sch= 40S, Wall Thk= 0.237 inch, Mill= 0.030 inch, Cor= 0.010 inch, Pipe Density= 489.00 lb/cu.ft,
   Pipe Unit Wgt= 10.78 lb/ft, Insul Thk= 0 inch, Cladding Thickness = 0 inch, Lining Thk= 0 inch,
   Long Weld E factor= 1.00, Long Weld W factor= 1.00, Long Modulus= 29.44615 E6 psi,
   Hoop Modulus= 29.44615 E6 psi, Shear Modulus= 11.32544 E6 psi, Sc= 20000.0 psi, Syc= 35000.0 psi,
   Suc= 60000.0 psi

 OPERATING DATA:
   P1= 0 psi, T1= 30.00 deg F, Exp1= -0.37692 in/100ft, E1= 29.66333 E6 psi, Sh1= 20000.00 psi,
   Sy1= 35000.00 psi

 POINT DATA:
   A02, Coordinates, X= 1.46 ft, Y= 693.07 ft, Z= 0.00 ft

 SUPPORT DATA:
   A02, Anchor, Connected to: Ground, KTX= Rigid, KTY= Rigid, KTZ= Rigid, KRX= Rigid, KRY= Rigid, KRZ= Rigid

 ---------------------------------------------------------------------------
 From A03 to A23, DX= 2.50 ft                                          Run

 POINT DATA:
   A03, Coordinates, X= 3.46 ft, Y= 693.07 ft, Z= 0.00 ft

 ---------------------------------------------------------------------------
 From A23 to A04, DX= 0.50 ft                                          Run

 POINT DATA:
   A23, Coordinates, X= 5.96 ft, Y= 693.07 ft, Z= 0.00 ft

 SUPPORT DATA:
   A23, V-Stop, Support Id= A23  1, Connected to Ground, Comp.Wt = 0.000 lb, Gap-Below= 0.00 inch,
   Gap-Above= 1.00 inch, Friction= 0.00, Gaps setting= Weightless

 ---------------------------------------------------------------------------
 From A04 to A24, DX= 8.18 ft, DY= -1.51 ft, L= 8.32 ft                Bend

 COMPONENT DATA (Bend, TIP= A04, Near= A04 N, Far= A04 F):
   Elbow, Radius= 36.00 inch, Bend angle= 10.46 deg, End flanges= 0, Flex= Auto, SIFI= 1.00, SIFO= 1.00

 POINT DATA:
   A04, Coordinates, X= 6.46 ft, Y= 693.07 ft, Z= 0.00 ft
   A04 N, Coordinates, X= 6.19 ft, Y= 693.07 ft, Z= 0.00 ft
   A04 F, Coordinates, X= 6.73 ft, Y= 693.02 ft, Z= 0.00 ft

 ---------------------------------------------------------------------------
 From A24 to A21, DX= 8.18 ft, DY= -1.51 ft, L= 8.32 ft                Run

 POINT DATA:
```

C O M P O N E N T D A T A L I S T I N G

A24, Coordinates, X= 14.64 ft, Y= 691.56 ft, Z= 0.00 ft

SUPPORT DATA:
A24, V-Stop, Support Id= A24 1, Connected to Ground, Comp.Wt = 0.000 lb, Gap-Below= 0.00 inch,
Gap-Above= 1.00 inch, Friction= 0.80, Gaps setting= Weightless

---

From A21 to A05, DX= 3.44 ft, DY= -0.64 ft, L= 3.50 ft Run

POINT DATA:
A21, Coordinates, X= 22.82 ft, Y= 690.05 ft, Z= 0.00 ft

SUPPORT DATA:
A21, Guide, Support Id= A21 1, Connected to Ground, Comp.Wt = 0.000 lb, Stiffness= RIGID,
Gap-Down= 0.00 inch, Gap-Above= 1.00 inch, Gap-Left= 1.00 inch, Gap-Right= 1.00 inch, Friction= 0.00,
Gaps setting= Weightless

From A05 to A22, DY= -0.10 ft, DZ= -3.50 ft, L= 3.50 ft Bend

COMPONENT DATA (Bend, TIP= A05, Near= A05 N, Far= A05 F):
Elbow, Radius= 36.00 inch, Bend angle= 89.70 deg, End flanges= 0, Flex= Auto, SIFI= 1.00, SIFO= 1.00

POINT DATA:
A05, Coordinates, X= 26.26 ft, Y= 689.41 ft, Z= 0.00 ft
A05 N, Coordinates, X= 23.33 ft, Y= 689.96 ft, Z= 0.00 ft
A05 F, Coordinates, X= 26.26 ft, Y= 689.32 ft, Z= -2.98 ft

From A22 to A25, DY= -0.26 ft, DZ= -9.00 ft, L= 9.00 ft Run

POINT DATA:
A22, Coordinates, X= 26.26 ft, Y= 689.31 ft, Z= -3.50 ft

SUPPORT DATA:
A22, Guide, Support Id= A22 2, Connected to Ground, Comp.Wt = 0.000 lb, Stiffness= RIGID,
Gap-Down= 0.00 inch, Gap-Above= 1.00 inch, Gap-Left= 1.00 inch, Gap-Right= 1.00 inch, Friction= 0.00,
Gaps setting= Weightless

From A25 to A26, DY= -0.26 ft, DZ= -9.00 ft, L= 9.00 ft Run

POINT DATA:
A25, Coordinates, X= 26.26 ft, Y= 689.05 ft, Z= -12.50 ft

SUPPORT DATA:
A25, V-Stop, Support Id= A25 2, Connected to Ground, Comp.Wt = 0.000 lb, Gap-Below= 0.00 inch,
Gap-Above= 1.00 inch, Friction= 0.80, Gaps setting= Weightless

---

From A26 to A27, DY= -0.26 ft, DZ= -9.00 ft, L= 9.00 ft Run

POINT DATA:
A26, Coordinates, X= 26.26 ft, Y= 688.79 ft, Z= -21.50 ft

C O M P O N E N T D A T A L I S T I N G

SUPPORT DATA:
A26, V-Stop, Support Id= A26 2, Connected to Ground, Comp.Wt = 0.000 lb, Gap-Below= 0.00 inch,
Gap-Above= 1.00 inch, Friction= 0.80, Gaps setting= Weightless

---

From A27 to A28, DY= -0.26 ft, DZ= -9.00 ft, L= 9.00 ft Run

POINT DATA:
A27, Coordinates, X= 26.26 ft, Y= 688.53 ft, Z= -30.50 ft

SUPPORT DATA:
A27, V-Stop, Support Id= A27 2, Connected to Ground, Comp.Wt = 0.000 lb, Gap-Below= 0.00 inch,
Gap-Above= 1.00 inch, Friction= 0.80, Gaps setting= Weightless

---

From A28 to A29, DY= -0.31 ft, DZ= -10.67 ft, L= 10.67 ft Run

POINT DATA:
A28, Coordinates, X= 26.26 ft, Y= 688.27 ft, Z= -39.50 ft

SUPPORT DATA:
A28, V-Stop, Support Id= A28 2, Connected to Ground, Comp.Wt = 0.000 lb, Gap-Below= 0.00 inch,
Gap-Above= 1.00 inch, Friction= 0.80, Gaps setting= Weightless

---

From A29 to A06, DY= -0.10 ft, DZ= -3.50 ft, L= 3.50 ft Run

POINT DATA:
A29, Coordinates, X= 26.26 ft, Y= 687.96 ft, Z= -50.17 ft

SUPPORT DATA:
A29, Guide, Support Id= A29 1, Connected to Ground, Comp.Wt = 0.000 lb, Stiffness= RIGID,
Gap-Down= 0.00 inch, Gap-Above= 1.00 inch, Gap-Left= 1.00 inch, Gap-Right= 1.00 inch, Friction= 0.00,
Gaps setting= Weightless

From A06 to A30, DX= 3.50 ft, DY= -0.10 ft, L= 3.50 ft Bend

COMPONENT DATA (Bend, TIP= A06, Near= A06 N, Far= A06 F):
Elbow, Radius= 36.00 inch, Bend angle= 89.95 deg, End flanges= 0, Flex= Auto, SIFI= 1.00, SIFO= 1.00

POINT DATA:
A06, Coordinates, X= 26.26 ft, Y= 687.86 ft, Z= -53.67 ft
A06 N, Coordinates, X= 26.26 ft, Y= 687.95 ft, Z= -50.67 ft
A06 F, Coordinates, X= 29.26 ft, Y= 687.77 ft, Z= -53.67 ft

From A30 to A31, DX= 2.76 ft, DY= -0.08 ft, L= 2.76 ft Run

POINT DATA:
A30, Coordinates, X= 29.76 ft, Y= 687.76 ft, Z= -53.67 ft

SUPPORT DATA:
A30, Guide, Support Id= A30 1, Connected to Ground, Comp.Wt = 0.000 lb, Stiffness= RIGID,
Gap-Down= 0.00 inch, Gap-Above= 1.00 inch, Gap-Left= 1.00 inch, Gap-Right= 1.00 inch, Friction= 0.00,

C O M P O N E N T D A T A L I S T I N G

Gaps setting= Weightless

From A31 to A07, DX= 3.50 ft, DY= -0.10 ft, L= 3.50 ft Run

POINT DATA:
A31, Coordinates, X= 32.52 ft, Y= 687.68 ft, Z= -53.67 ft

SUPPORT DATA:
A31, Guide, Support Id= A31 1, Connected to Ground, Comp.Wt = 0.000 lb, Stiffness= RIGID,
Gap-Down= 0.00 inch, Gap-Above= 1.00 inch, Gap-Left= 1.00 inch, Gap-Right= 1.00 inch, Friction= 0.00,
Gaps setting= Weightless

From A07 to A32, DY= -0.11 ft, DZ= -3.50 ft, L= 3.50 ft Bend

COMPONENT DATA (Bend, TIP= A07, Near= A07 N, Far= A07 F):
Elbow, Radius= 36.00 inch, Bend angle= 89.95 deg, End flanges= 0, Flex= Auto, SIFI= 1.00, SIFO= 1.00

POINT DATA:
A07, Coordinates, X= 36.02 ft, Y= 687.58 ft, Z= -53.67 ft
A07 N, Coordinates, X= 33.02 ft, Y= 687.67 ft, Z= -53.67 ft
A07 F, Coordinates, X= 36.02 ft, Y= 687.49 ft, Z= -56.67 ft

From A32 to A33, DY= -0.27 ft, DZ= -9.00 ft, L= 9.00 ft Run

POINT DATA:
A32, Coordinates, X= 36.02 ft, Y= 687.47 ft, Z= -57.17 ft

SUPPORT DATA:
A32, Guide, Support Id= A32 1, Connected to Ground, Comp.Wt = 0.000 lb, Stiffness= RIGID,
Gap-Down= 0.00 inch, Gap-Above= 1.00 inch, Gap-Left= 1.00 inch, Gap-Right= 1.00 inch, Friction= 0.00,
Gaps setting= Weightless

From A33 to A34, DY= -0.27 ft, DZ= -9.00 ft, L= 9.00 ft Run

POINT DATA:
A33, Coordinates, X= 36.02 ft, Y= 687.20 ft, Z= -66.17 ft

SUPPORT DATA:
A33, V-Stop, Support Id= A33 2, Connected to Ground, Comp.Wt = 0.000 lb, Gap-Below= 0.00 inch,
Gap-Above= 1.00 inch, Friction= 0.80, Gaps setting= Weightless

From A34 to A35, DY= -0.27 ft, DZ= -9.00 ft, L= 9.00 ft Run

POINT DATA:
A34, Coordinates, X= 36.02 ft, Y= 686.93 ft, Z= -75.17 ft

SUPPORT DATA:
A34, V-Stop, Support Id= A34 2, Connected to Ground, Comp.Wt = 0.000 lb, Gap-Below= 0.00 inch,
Gap-Above= 1.00 inch, Friction= 0.80, Gaps setting= Weightless

C O M P O N E N T D A T A L I S T I N G

From A35 to A36, DY= -0.28 ft, DZ= -9.00 ft, L= 9.00 ft Run

POINT DATA:
A35, Coordinates, X= 36.02 ft, Y= 686.66 ft, Z= -84.17 ft

SUPPORT DATA:
A35, V-Stop, Support Id= A35 2, Connected to Ground, Comp.Wt = 0.000 lb, Gap-Below= 0.00 inch, Gap-Above= 1.00 inch, Friction= 0.80, Gaps setting= Weightless

From A36 to A37, DY= -0.08 ft, DZ= -2.68 ft, L= 2.68 ft Run

POINT DATA:
A36, Coordinates, X= 36.02 ft, Y= 686.38 ft, Z= -93.17 ft

SUPPORT DATA:
A36, V-Stop, Support Id= A36 2, Connected to Ground, Comp.Wt = 0.000 lb, Gap-Below= 0.00 inch, Gap-Above= 1.00 inch, Friction= 0.80, Gaps setting= Weightless

From A37 to A38, DY= -0.27 ft, DZ= -8.99 ft, L= 8.99 ft Run

POINT DATA:
A37, Coordinates, X= 36.02 ft, Y= 686.30 ft, Z= -95.85 ft

SUPPORT DATA:
A37, V-Stop, Support Id= A37 2, Connected to Ground, Comp.Wt = 0.000 lb, Gap-Below= 0.00 inch, Gap-Above= 1.00 inch, Friction= 0.80, Gaps setting= Weightless

From A38 to A08, DY= -0.11 ft, DZ= -3.50 ft, L= 3.50 ft Run

POINT DATA:
A38, Coordinates, X= 36.02 ft, Y= 686.03 ft, Z= -104.84 ft

SUPPORT DATA:
A38, Guide, Support Id= A38 1, Connected to Ground, Comp.Wt = 0.000 lb, Stiffness= RIGID, Gap-Down= 0.00 inch, Gap-Above= 1.00 inch, Gap-Left= 1.00 inch, Gap-Right= 1.00 inch, Friction= 0.00, Gaps setting= Weightless

From A08 to A39, DX= -3.50 ft, DY= -0.09 ft, L= 3.50 ft Bend

COMPONENT DATA (Bend, TIP= A08, Near= A08 N, Far= A08 F):
Elbow, Radius= 36.00 inch, Bend angle= 89.95 deg, End flanges= 0, Flex= Auto, SIFI= 1.00, SIFO= 1.00

POINT DATA:
A08, Coordinates, X= 36.02 ft, Y= 685.92 ft, Z= -108.34 ft
A08 N, Coordinates, X= 36.02 ft, Y= 686.01 ft, Z= -105.34 ft
A08 F, Coordinates, X= 33.02 ft, Y= 685.84 ft, Z= -108.34 ft

From A39 to A40, DX= -4.00 ft, DY= -0.10 ft, L= 4.00 ft Run

C O M P O N E N T D A T A L I S T I N G

POINT DATA:
A39, Coordinates, X= 32.52 ft, Y= 685.83 ft, Z= -108.34 ft

SUPPORT DATA:
A39, Guide, Support Id= A39 1, Connected to Ground, Comp.Wt = 0.000 lb, Stiffness= RIGID,
Gap-Down= 0.00 inch, Gap-Above= 1.00 inch, Gap-Left= 1.00 inch, Gap-Right= 1.00 inch, Friction= 0.00,
Gaps setting= Weightless

From A40 to A09, DX= -3.50 ft, DY= -0.09 ft, L= 3.50 ft Run

POINT DATA:
A40, Coordinates, X= 28.52 ft, Y= 685.73 ft, Z= -108.34 ft

SUPPORT DATA:
A40, Guide, Support Id= A40 1, Connected to Ground, Comp.Wt = 0.000 lb, Stiffness= RIGID,
Gap-Down= 0.00 inch, Gap-Above= 1.00 inch, Gap-Left= 1.00 inch, Gap-Right= 1.00 inch, Friction= 0.00,
Gaps setting= Weightless

From A09 to A41, DY= -0.03 ft, DZ= -3.50 ft, L= 3.50 ft Bend

COMPONENT DATA (Bend, TIP= A09, Near= A09 N, Far= A09 F):
Elbow, Radius= 36.00 inch, Bend angle= 89.99 deg, End flanges= 0, Flex= Auto, SIFI= 1.00, SIFO= 1.00

POINT DATA:
A09, Coordinates, X= 25.02 ft, Y= 685.64 ft, Z= -108.34 ft
A09 N, Coordinates, X= 28.02 ft, Y= 685.72 ft, Z= -108.34 ft
A09 F, Coordinates, X= 25.02 ft, Y= 685.61 ft, Z= -111.34 ft

From A41 to A42, DY= -0.07 ft, DZ= -9.00 ft, L= 9.00 ft Run

POINT DATA:
A41, Coordinates, X= 25.02 ft, Y= 685.61 ft, Z= -111.84 ft

SUPPORT DATA:
A41, Guide, Support Id= A41 1, Connected to Ground, Comp.Wt = 0.000 lb, Stiffness= RIGID,
Gap-Down= 0.00 inch, Gap-Above= 1.00 inch, Gap-Left= 1.00 inch, Gap-Right= 1.00 inch, Friction= 0.00,
Gaps setting= Weightless

From A42 to A43, DY= -0.07 ft, DZ= -9.00 ft, L= 9.00 ft Run

POINT DATA:
A42, Coordinates, X= 25.02 ft, Y= 685.54 ft, Z= -120.84 ft

SUPPORT DATA:
A42, V-Stop, Support Id= A42 2, Connected to Ground, Comp.Wt = 0.000 lb, Gap-Below= 0.00 inch,
Gap-Above= 1.00 inch, Friction= 0.80, Gaps setting= Weightless

---
From A43 to A44, DY= -0.07 ft, DZ= -9.00 ft, L= 9.00 ft Run

POINT DATA:

C O M P O N E N T D A T A L I S T I N G

A43, Coordinates, X= 25.02 ft, Y= 685.47 ft, Z= -129.84 ft

SUPPORT DATA:
A43, V-Stop, Support Id= A43 2, Connected to Ground, Comp.Wt = 0.000 lb, Gap-Below= 0.00 inch,
Gap-Above= 1.00 inch, Friction= 0.80, Gaps setting= Weightless

---

From A44 to A45, DY= -0.07 ft, DZ= -9.00 ft, L= 9.00 ft Run

POINT DATA:
A44, Coordinates, X= 25.02 ft, Y= 685.40 ft, Z= -138.84 ft

SUPPORT DATA:
A44, V-Stop, Support Id= A44 2, Connected to Ground, Comp.Wt = 0.000 lb, Gap-Below= 0.00 inch,
Gap-Above= 1.00 inch, Friction= 0.80, Gaps setting= Weightless

---

From A45 to A46, DY= -0.07 ft, DZ= -9.00 ft, L= 9.00 ft Run

POINT DATA:
A45, Coordinates, X= 25.02 ft, Y= 685.33 ft, Z= -147.84 ft

SUPPORT DATA:
A45, V-Stop, Support Id= A45 2, Connected to Ground, Comp.Wt = 0.000 lb, Gap-Below= 0.00 inch,
Gap-Above= 1.00 inch, Friction= 0.80, Gaps setting= Weightless

---

From A46 to A47, DY= -0.07 ft, DZ= -9.00 ft, L= 9.00 ft Run

POINT DATA:
A46, Coordinates, X= 25.02 ft, Y= 685.26 ft, Z= -156.84 ft

SUPPORT DATA:
A46, V-Stop, Support Id= A46 2, Connected to Ground, Comp.Wt = 0.000 lb, Gap-Below= 0.00 inch,
Gap-Above= 1.00 inch, Friction= 0.80, Gaps setting= Weightless

---

From A47 to A48, DY= -0.07 ft, DZ= -9.00 ft, L= 9.00 ft Run

POINT DATA:
A47, Coordinates, X= 25.02 ft, Y= 685.19 ft, Z= -165.84 ft

SUPPORT DATA:
A47, V-Stop, Support Id= A47 2, Connected to Ground, Comp.Wt = 0.000 lb, Gap-Below= 0.00 inch,
Gap-Above= 1.00 inch, Friction= 0.80, Gaps setting= Weightless

---

From A48 to A49, DY= -0.07 ft, DZ= -9.00 ft, L= 9.00 ft Run

POINT DATA:
A48, Coordinates, X= 25.02 ft, Y= 685.12 ft, Z= -174.84 ft

SUPPORT DATA:
A48, V-Stop, Support Id= A48 2, Connected to Ground, Comp.Wt = 0.000 lb, Gap-Below= 0.00 inch,
Gap-Above= 1.00 inch, Friction= 0.80, Gaps setting= Weightless

C O M P O N E N T D A T A L I S T I N G

From A49 to A50, DX= 0 ft, DY= -0.03 ft, DZ= -3.83 ft, L= 3.83 ft Run

POINT DATA:
A49, Coordinates, X= 25.02 ft, Y= 685.05 ft, Z= -183.84 ft

SUPPORT DATA:
A49, V-Stop, Support Id= A49 2, Connected to Ground, Comp.Wt = 0.000 lb, Gap-Below= 0.00 inch, Gap-Above= 1.00 inch, Friction= 0.80, Gaps setting= Weightless

From A50 to A51, DY= -0.07 ft, DZ= -9.00 ft, L= 9.00 ft Run

POINT DATA:
A50, Coordinates, X= 25.02 ft, Y= 685.02 ft, Z= -187.67 ft

SUPPORT DATA:
A50, V-Stop, Support Id= A50 2, Connected to Ground, Comp.Wt = 0.000 lb, Gap-Below= 0.00 inch, Gap-Above= 1.00 inch, Friction= 0.80, Gaps setting= Weightless

From A51 to A10, DY= -0.03 ft, DZ= -3.50 ft, L= 3.50 ft Run

POINT DATA:
A51, Coordinates, X= 25.02 ft, Y= 684.95 ft, Z= -196.67 ft

SUPPORT DATA:
A51, Guide, Support Id= A51 1, Connected to Ground, Comp.Wt = 0.000 lb, Stiffness= RIGID, Gap-Down= 0.00 inch, Gap-Above= 1.00 inch, Gap-Left= 1.00 inch, Gap-Right= 1.00 inch, Friction= 0.00, Gaps setting= Weightless

From A10 to A52, DX= 3.50 ft, DY= -0.03 ft, L= 3.50 ft Bend

COMPONENT DATA (Bend, TIP= A10, Near= A10 N, Far= A10 F):
Elbow, Radius= 36.00 inch, Bend angle= 90.00 deg, End flanges= 0, Flex= Auto, SIFI= 1.00, SIFO= 1.00

POINT DATA:
A10, Coordinates, X= 25.02 ft, Y= 684.92 ft, Z= -200.17 ft
A10 N, Coordinates, X= 25.02 ft, Y= 684.95 ft, Z= -197.17 ft
A10 F, Coordinates, X= 28.02 ft, Y= 684.89 ft, Z= -200.17 ft

From A52 to A53, DX= 6.91 ft, DY= -0.05 ft, L= 6.91 ft Run

POINT DATA:
A52, Coordinates, X= 28.52 ft, Y= 684.89 ft, Z= -200.17 ft

SUPPORT DATA:
A52, Guide, Support Id= A52 1, Connected to Ground, Comp.Wt = 0.000 lb, Stiffness= RIGID, Gap-Down= 0.00 inch, Gap-Above= 1.00 inch, Gap-Left= 1.00 inch, Gap-Right= 1.00 inch, Friction= 0.00, Gaps setting= Weightless

From A53 to A11, DX= 3.50 ft, DY= -0.02 ft, L= 3.50 ft Run

C O M P O N E N T D A T A L I S T I N G

POINT DATA:
A53, Coordinates, X= 35.43 ft, Y= 684.84 ft, Z= -200.17 ft

SUPPORT DATA:
A53, Guide, Support Id= A53 1, Connected to Ground, Comp.Wt = 0.000 lb, Stiffness= RIGID,
Gap-Down= 0.00 inch, Gap-Above= 1.00 inch, Gap-Left= 1.00 inch, Gap-Right= 1.00 inch, Friction= 0.00,
Gaps setting= Weightless

From A11 to A54, DY= -0.03 ft, DZ= -3.50 ft, L= 3.50 ft Bend

COMPONENT DATA (Bend, TIP= A11, Near= A11 N, Far= A11 F):
Elbow, Radius= 36.00 inch, Bend angle= 90.00 deg, End flanges= 0, Flex= Auto, SIFI= 1.00, SIFO= 1.00

POINT DATA:
A11, Coordinates, X= 38.93 ft, Y= 684.82 ft, Z= -200.17 ft
A11 N, Coordinates, X= 35.93 ft, Y= 684.84 ft, Z= -200.17 ft
A11 F, Coordinates, X= 38.93 ft, Y= 684.79 ft, Z= -203.17 ft

From A54 to A55, DY= -0.07 ft, DZ= -9.00 ft, L= 9.00 ft Run

POINT DATA:
A54, Coordinates, X= 38.93 ft, Y= 684.79 ft, Z= -203.67 ft

SUPPORT DATA:
A54, Guide, Support Id= A54 1, Connected to Ground, Comp.Wt = 0.000 lb, Stiffness= RIGID,
Gap-Down= 0.00 inch, Gap-Above= 1.00 inch, Gap-Left= 1.00 inch, Gap-Right= 1.00 inch, Friction= 0.00,
Gaps setting= Weightless

From A55 to A56, DY= -0.07 ft, DZ= -9.00 ft, L= 9.00 ft Run

POINT DATA:
A55, Coordinates, X= 38.93 ft, Y= 684.72 ft, Z= -212.67 ft

SUPPORT DATA:
A55, V-Stop, Support Id= A55 1, Connected to Ground, Comp.Wt = 0.000 lb, Gap-Below= 0.00 inch,
Gap-Above= 1.00 inch, Friction= 0.80, Gaps setting= Weightless

---

From A56 to A57, DY= -0.07 ft, DZ= -9.00 ft, L= 9.00 ft Run

POINT DATA:
A56, Coordinates, X= 38.93 ft, Y= 684.65 ft, Z= -221.67 ft

SUPPORT DATA:
A56, V-Stop, Support Id= A56 1, Connected to Ground, Comp.Wt = 0.000 lb, Gap-Below= 0.00 inch,
Gap-Above= 1.00 inch, Friction= 0.80, Gaps setting= Weightless

---

From A57 to A58, DY= -0.07 ft, DZ= -9.00 ft, L= 9.00 ft Run

POINT DATA:
A57, Coordinates, X= 38.93 ft, Y= 684.58 ft, Z= -230.67 ft

C O M P O N E N T D A T A L I S T I N G

SUPPORT DATA:
A57, V-Stop, Support Id= A57 1, Connected to Ground, Comp.Wt = 0.000 lb, Gap-Below= 0.00 inch,
Gap-Above= 1.00 inch, Friction= 0.80, Gaps setting= Weightless

---

From A58 to A59, DY= -0.07 ft, DZ= -9.00 ft, L= 9.00 ft Run

POINT DATA:
A58, Coordinates, X= 38.93 ft, Y= 684.51 ft, Z= -239.67 ft

SUPPORT DATA:
A58, V-Stop, Support Id= A58 1, Connected to Ground, Comp.Wt = 0.000 lb, Gap-Below= 0.00 inch,
Gap-Above= 1.00 inch, Friction= 0.80, Gaps setting= Weightless

---

From A59 to A60, DY= -0.07 ft, DZ= -9.00 ft, L= 9.00 ft Run

POINT DATA:
A59, Coordinates, X= 38.93 ft, Y= 684.44 ft, Z= -248.67 ft

SUPPORT DATA:
A59, V-Stop, Support Id= A59 1, Connected to Ground, Comp.Wt = 0.000 lb, Gap-Below= 0.00 inch,
Gap-Above= 1.00 inch, Friction= 0.80, Gaps setting= Weightless

---

From A60 to A61, DX= 0 ft, DY= -0.06 ft, DZ= -8.40 ft, L= 8.40 ft Run

POINT DATA:
A60, Coordinates, X= 38.93 ft, Y= 684.37 ft, Z= -257.67 ft

SUPPORT DATA:
A60, V-Stop, Support Id= A60 1, Connected to Ground, Comp.Wt = 0.000 lb, Gap-Below= 0.00 inch,
Gap-Above= 1.00 inch, Friction= 0.80, Gaps setting= Weightless

---

From A61 to A62, DY= -0.06 ft, DZ= -9.00 ft, L= 9.00 ft Run

POINT DATA:
A61, Coordinates, X= 38.93 ft, Y= 684.31 ft, Z= -266.07 ft

SUPPORT DATA:
A61, V-Stop, Support Id= A61 1, Connected to Ground, Comp.Wt = 0.000 lb, Gap-Below= 0.00 inch,
Gap-Above= 1.00 inch, Friction= 0.80, Gaps setting= Weightless

---

From A62 to A12, DY= -0.03 ft, DZ= -3.50 ft, L= 3.50 ft Run

POINT DATA:
A62, Coordinates, X= 38.93 ft, Y= 684.25 ft, Z= -275.07 ft

SUPPORT DATA:
A62, Guide, Support Id= A62 1, Connected to Ground, Comp.Wt = 0.000 lb, Stiffness= RIGID,
Gap-Down= 0.00 inch, Gap-Above= 1.00 inch, Gap-Left= 1.00 inch, Gap-Right= 1.00 inch, Friction= 0.00,
Gaps setting= Weightless

C O M P O N E N T D A T A L I S T I N G

```
 ---------------------------------------------------------------------------
 From A12 to A63, DX= -3.50 ft, DY= -0.03 ft, L= 3.50 ft                    Bend

 COMPONENT DATA (Bend, TIP= A12, Near= A12 N, Far= A12 F):
   Elbow, Radius= 36.00 inch, Bend angle= 90.00 deg, End flanges= 0, Flex= Auto, SIFI= 1.00, SIFO= 1.00

 POINT DATA:
   A12, Coordinates, X= 38.93 ft, Y= 684.22 ft, Z= -278.57 ft
   A12 N, Coordinates, X= 38.93 ft, Y= 684.25 ft, Z= -275.57 ft
   A12 F, Coordinates, X= 35.93 ft, Y= 684.19 ft, Z= -278.57 ft

 ---------------------------------------------------------------------------
 From A63 to A64, DX= -9.00 ft, DY= -0.07 ft, L= 9.00 ft                    Run

 POINT DATA:
   A63, Coordinates, X= 35.43 ft, Y= 684.19 ft, Z= -278.57 ft

 SUPPORT DATA:
   A63, Guide, Support Id= A63  1, Connected to Ground, Comp.Wt = 0.000 lb, Stiffness= RIGID,
   Gap-Down= 0.00 inch, Gap-Above= 1.00 inch, Gap-Left= 1.00 inch, Gap-Right= 1.00 inch, Friction= 0.00,
   Gaps setting= Weightless

 ---------------------------------------------------------------------------
 From A64 to A65, DX= -9.00 ft, DY= -0.07 ft, L= 9.00 ft                    Run

 POINT DATA:
   A64, Coordinates, X= 26.43 ft, Y= 684.12 ft, Z= -278.57 ft

 SUPPORT DATA:
   A64, V-Stop, Support Id= A64  2, Connected to Ground, Comp.Wt = 0.000 lb, Gap-Below= 0.00 inch,
   Gap-Above= 1.00 inch, Friction= 0.80, Gaps setting= Weightless

 ---------------------------------------------------------------------------
 From A65 to A66, DX= -9.00 ft, DY= -0.06 ft, L= 9.00 ft                    Run

 POINT DATA:
   A65, Coordinates, X= 17.43 ft, Y= 684.05 ft, Z= -278.57 ft

 SUPPORT DATA:
   A65, V-Stop, Support Id= A65  2, Connected to Ground, Comp.Wt = 0.000 lb, Gap-Below= 0.00 inch,
   Gap-Above= 1.00 inch, Friction= 0.80, Gaps setting= Weightless

 ---------------------------------------------------------------------------
 From A66 to A67, DX= -9.00 ft, DY= -0.07 ft, L= 9.00 ft                    Run

 POINT DATA:
   A66, Coordinates, X= 8.43 ft, Y= 683.99 ft, Z= -278.57 ft

 SUPPORT DATA:
   A66, V-Stop, Support Id= A66  2, Connected to Ground, Comp.Wt = 0.000 lb, Gap-Below= 0.00 inch,
   Gap-Above= 1.00 inch, Friction= 0.80, Gaps setting= Weightless

 ---------------------------------------------------------------------------
 From A67 to A68, DX= -8.78 ft, DY= -0.06 ft, L= 8.78 ft                    Run
```

C O M P O N E N T D A T A L I S T I N G

POINT DATA:
A67, Coordinates, X= -0.57 ft, Y= 683.92 ft, Z= -278.57 ft

SUPPORT DATA:
A67, V-Stop, Support Id= A67 2, Connected to Ground, Comp.Wt = 0.000 lb, Gap-Below= 0.00 inch,
Gap-Above= 1.00 inch, Friction= 0.80, Gaps setting= Weightless

---

From A68 to A69, DX= -9.00 ft, DY= -0.06 ft, L= 9.00 ft Run

POINT DATA:
A68, Coordinates, X= -9.35 ft, Y= 683.86 ft, Z= -278.57 ft

SUPPORT DATA:
A68, V-Stop, Support Id= A68 2, Connected to Ground, Comp.Wt = 0.000 lb, Gap-Below= 0.00 inch,
Gap-Above= 1.00 inch, Friction= 0.80, Gaps setting= Weightless

---

From A69 to A13, DX= -3.50 ft, DY= -0.03 ft, L= 3.50 ft Run

POINT DATA:
A69, Coordinates, X= -18.35 ft, Y= 683.80 ft, Z= -278.57 ft

SUPPORT DATA:
A69, Guide, Support Id= A69 1, Connected to Ground, Comp.Wt = 0.000 lb, Stiffness= RIGID,
Gap-Down= 0.00 inch, Gap-Above= 1.00 inch, Gap-Left= 1.00 inch, Gap-Right= 1.00 inch, Friction= 0.00,
Gaps setting= Weightless

From A13 to A70, DY= -0.02 ft, DZ= -3.50 ft, L= 3.50 ft Bend

COMPONENT DATA (Bend, TIP= A13, Near= A13 N, Far= A13 F):
Elbow, Radius= 36.00 inch, Bend angle= 90.00 deg, End flanges= 0, Flex= Auto, SIFI= 1.00, SIFO= 1.00

POINT DATA:
A13, Coordinates, X= -21.85 ft, Y= 683.77 ft, Z= -278.57 ft
A13 N, Coordinates, X= -18.85 ft, Y= 683.80 ft, Z= -278.57 ft
A13 F, Coordinates, X= -21.85 ft, Y= 683.75 ft, Z= -281.57 ft

---

From A70 to A71, DY= -0.05 ft, DZ= -9.00 ft, L= 9.00 ft Run

POINT DATA:
A70, Coordinates, X= -21.85 ft, Y= 683.75 ft, Z= -282.07 ft

SUPPORT DATA:
A70, Guide, Support Id= A70 1, Connected to Ground, Comp.Wt = 0.000 lb, Stiffness= RIGID,
Gap-Down= 0.00 inch, Gap-Above= 1.00 inch, Gap-Left= 1.00 inch, Gap-Right= 1.00 inch, Friction= 0.00,
Gaps setting= Weightless

From A71 to A72, DY= -0.05 ft, DZ= -7.59 ft, L= 7.59 ft Run

POINT DATA:
A71, Coordinates, X= -21.85 ft, Y= 683.70 ft, Z= -291.07 ft

C O M P O N E N T D A T A L I S T I N G

SUPPORT DATA:
A71, V-Stop, Support Id= A71 2, Connected to Ground, Comp.Wt = 0.000 lb, Gap-Below= 0.00 inch, Gap-Above= 1.00 inch, Friction= 0.80, Gaps setting= Weightless

---

From A72 to A14, DY= -0.02 ft, DZ= -3.50 ft, L= 3.50 ft Run

POINT DATA:
A72, Coordinates, X= -21.85 ft, Y= 683.65 ft, Z= -298.66 ft

SUPPORT DATA:
A72, Guide, Support Id= A72 1, Connected to Ground, Comp.Wt = 0.000 lb, Stiffness= RIGID, Gap-Down= 0.00 inch, Gap-Above= 1.00 inch, Gap-Left= 1.00 inch, Gap-Right= 1.00 inch, Friction= 0.00, Gaps setting= Weightless

---

From A14 to A73, DX= 3.50 ft, DY= -0.06 ft, L= 3.50 ft Bend

COMPONENT DATA (Bend, TIP= A14, Near= A14 N, Far= A14 F):
Elbow, Radius= 36.00 inch, Bend angle= 89.99 deg, End flanges= 0, Flex= Auto, SIFI= 1.00, SIFO= 1.00

POINT DATA:
A14, Coordinates, X= -21.85 ft, Y= 683.63 ft, Z= -302.16 ft
A14 N, Coordinates, X= -21.85 ft, Y= 683.65 ft, Z= -299.16 ft
A14 F, Coordinates, X= -18.85 ft, Y= 683.58 ft, Z= -302.16 ft

---

From A73 to A15, DX= 2.96 ft, DY= -0.05 ft, L= 2.96 ft Run

POINT DATA:
A73, Coordinates, X= -18.35 ft, Y= 683.57 ft, Z= -302.16 ft

SUPPORT DATA:
A73, Guide, Support Id= A73 1, Connected to Ground, Comp.Wt = 0.000 lb, Stiffness= RIGID, Gap-Down= 0.00 inch, Gap-Above= 1.00 inch, Gap-Left= 1.00 inch, Gap-Right= 1.00 inch, Friction= 0.00, Gaps setting= Weightless

---

From A15 to A16, DX= 1.00 ft Bend

COMPONENT DATA (Bend, TIP= A15, Near= A15 N, Far= A15 F):
Elbow, Radius= 36.00 inch, Bend angle= 0.97 deg, End flanges= 0, Flex= Auto, SIFI= 1.00, SIFO= 1.00

POINT DATA:
A15, Coordinates, X= -15.39 ft, Y= 683.52 ft, Z= -302.16 ft
A15 N, Coordinates, X= -15.42 ft, Y= 683.52 ft, Z= -302.16 ft
A15 F, Coordinates, X= -15.36 ft, Y= 683.52 ft, Z= -302.16 ft

---

From A16 to A17, DX= 1.00 ft Run

POINT DATA:
A16, Coordinates, X= -14.39 ft, Y= 683.52 ft, Z= -302.16 ft

C O M P O N E N T D A T A L I S T I N G

From A17 to A18, DX= 0.55 ft Run

POINT DATA:
A17, Coordinates, X= -13.39 ft, Y= 683.52 ft, Z= -302.16 ft

From A18 to A19, DX= 0.19 ft Run

POINT DATA:
A18, Coordinates, X= -12.84 ft, Y= 683.52 ft, Z= -302.16 ft
A19, Coordinates, X= -12.65 ft, Y= 683.52 ft, Z= -302.16 ft

SUPPORT DATA:
A18, Anchor, Connected to: Ground, KTX= Rigid, KTY= Rigid, KTZ= Rigid, KRX= Rigid, KRY= Rigid, KRZ= Rigid

---

*** SEGMENT B , LINE # RIGID

From B03 to B04, DX= 2.00 ft Run

PIPE DATA:
Pipe Id= 6SCH40, Composition= Carbon Steel, Nom Size= 6 in, OD= 6.625 inch, Wall Thk= 0.280 inch,
Mill= 0.035 inch, Pipe Density= 489.00 lb/cu.ft, Pipe Unit Wgt= 18.95 lb/ft

POINT DATA:
B03, Coordinates, X= 1.46 ft, Y= 693.07 ft, Z= 2.00 ft

SUPPORT DATA:
B03, Anchor, Connected to: Ground, KTX= Rigid, KTY= Rigid, KTZ= Rigid, KRX= Rigid, KRY= Rigid, KRZ= Rigid

---

From B04 to B22, DX= 2.50 ft Run

POINT DATA:
B04, Coordinates, X= 3.46 ft, Y= 693.07 ft, Z= 2.00 ft

From B22 to B06, DX= 0.50 ft Run

POINT DATA:
B22, Coordinates, X= 5.96 ft, Y= 693.07 ft, Z= 2.00 ft

SUPPORT DATA:
B22, V-Stop, Support Id= B22 2, Connected to Ground, Comp.Wt = 0.000 lb, Gap-Below= 0.00 inch,
Gap-Above= 1.00 inch, Friction= 0.80, Gaps setting= Weightless

---

From B06 to B23, DX= 11.15 ft, DY= -1.83 ft, L= 11.30 ft Bend

COMPONENT DATA (Bend, TIP= B06, Near= B06 N, Far= B06 F):
Elbow, Radius= 36.00 inch, Bend angle= 9.32 deg, End flanges= 0, Flex= Auto, SIFI= 1.00, SIFO= 1.00

POINT DATA:

C O M P O N E N T D A T A L I S T I N G

B06, Coordinates, X= 6.46 ft, Y= 693.07 ft, Z= 2.00 ft
B06 N, Coordinates, X= 6.22 ft, Y= 693.07 ft, Z= 2.00 ft
B06 F, Coordinates, X= 6.70 ft, Y= 693.03 ft, Z= 2.00 ft

From B23 to B24, DX= 7.70 ft, DY= -1.26 ft, L= 7.80 ft Run

POINT DATA:
B23, Coordinates, X= 17.61 ft, Y= 691.24 ft, Z= 2.00 ft

SUPPORT DATA:
B23, V-Stop, Support Id= B23 2, Connected to Ground, Comp.Wt = 0.000 lb, Gap-Below= 0.00 inch,
Gap-Above= 1.00 inch, Friction= 0.80, Gaps setting= Weightless

---

From B24 to B09, DX= 3.45 ft, DY= -0.57 ft, L= 3.50 ft Run

POINT DATA:
B24, Coordinates, X= 25.31 ft, Y= 689.98 ft, Z= 2.00 ft

SUPPORT DATA:
B24, Guide, Support Id= B24 2, Connected to Ground, Comp.Wt = 0.000 lb, Stiffness= RIGID,
Gap-Down= 0.00 inch, Gap-Above= 1.00 inch, Gap-Left= 1.00 inch, Gap-Right= 1.00 inch, Friction= 0.00,
Gaps setting= Weightless

From B09 to B25, DY= -0.10 ft, DZ= -3.50 ft, L= 3.50 ft Bend

COMPONENT DATA (Bend, TIP= B09, Near= B09 N, Far= B09 F):
Elbow, Radius= 36.00 inch, Bend angle= 89.73 deg, End flanges= 0, Flex= Auto, SIFI= 1.00, SIFO= 1.00

POINT DATA:
B09, Coordinates, X= 28.76 ft, Y= 689.41 ft, Z= 2.00 ft
B09 N, Coordinates, X= 25.81 ft, Y= 689.90 ft, Z= 2.00 ft
B09 F, Coordinates, X= 28.76 ft, Y= 689.32 ft, Z= -0.98 ft

From B25 to B26, DY= -0.26 ft, DZ= -9.00 ft, L= 9.00 ft Run

POINT DATA:
B25, Coordinates, X= 28.76 ft, Y= 689.31 ft, Z= -1.50 ft

SUPPORT DATA:
B25, Guide, Support Id= B25 2, Connected to Ground, Comp.Wt = 0.000 lb, Stiffness= RIGID,
Gap-Down= 0.00 inch, Gap-Above= 1.00 inch, Gap-Left= 1.00 inch, Gap-Right= 1.00 inch, Friction= 0.00,
Gaps setting= Weightless

From B26 to B28, DY= -0.26 ft, DZ= -9.00 ft, L= 9.00 ft Run

POINT DATA:
B26, Coordinates, X= 28.76 ft, Y= 689.05 ft, Z= -10.50 ft

SUPPORT DATA:
B26, V-Stop, Support Id= B26 1, Connected to Ground, Comp.Wt = 0.000 lb, Gap-Below= 0.00 inch,

C O M P O N E N T D A T A L I S T I N G

Gap-Above= 1.00 inch, Friction= 0.80, Gaps setting= Weightless

---

From B28 to B29, DY= -0.26 ft, DZ= -9.00 ft, L= 9.00 ft Run

POINT DATA:
B28, Coordinates, X= 28.76 ft, Y= 688.79 ft, Z= -19.50 ft

SUPPORT DATA:
B28, V-Stop, Support Id= B28 1, Connected to Ground, Comp.Wt = 0.000 lb, Gap-Below= 0.00 inch,
Gap-Above= 1.00 inch, Friction= 0.80, Gaps setting= Weightless

---

From B29 to B31, DY= -0.27 ft, DZ= -9.00 ft, L= 9.00 ft Run

POINT DATA:
B29, Coordinates, X= 28.76 ft, Y= 688.53 ft, Z= -28.50 ft

SUPPORT DATA:
B29, V-Stop, Support Id= B29 1, Connected to Ground, Comp.Wt = 0.000 lb, Gap-Below= 0.00 inch,
Gap-Above= 1.00 inch, Friction= 0.80, Gaps setting= Weightless

---

From B31 to B32, DY= -0.30 ft, DZ= -10.17 ft, L= 10.17 ft Run

POINT DATA:
B31, Coordinates, X= 28.76 ft, Y= 688.26 ft, Z= -37.50 ft

SUPPORT DATA:
B31, V-Stop, Support Id= B31 1, Connected to Ground, Comp.Wt = 0.000 lb, Gap-Below= 0.00 inch,
Gap-Above= 1.00 inch, Friction= 0.80, Gaps setting= Weightless

---

From B32 to B16, DY= -0.10 ft, DZ= -3.50 ft, L= 3.50 ft Run

POINT DATA:
B32, Coordinates, X= 28.76 ft, Y= 687.96 ft, Z= -47.67 ft

SUPPORT DATA:
B32, Guide, Support Id= B32 2, Connected to Ground, Comp.Wt = 0.000 lb, Stiffness= RIGID,
Gap-Down= 0.00 inch, Gap-Above= 1.00 inch, Gap-Left= 1.00 inch, Gap-Right= 1.00 inch, Friction= 0.00,
Gaps setting= Weightless

From B16 to B33, DX= 3.50 ft, DY= -0.08 ft, L= 3.50 ft Bend

COMPONENT DATA (Bend, TIP= B16, Near= B16 N, Far= B16 F):
Elbow, Radius= 36.00 inch, Bend angle= 89.96 deg, End flanges= 0, Flex= Auto, SIFI= 1.00, SIFO= 1.00

POINT DATA:
B16, Coordinates, X= 28.76 ft, Y= 687.86 ft, Z= -51.17 ft
B16 N, Coordinates, X= 28.76 ft, Y= 687.95 ft, Z= -48.17 ft
B16 F, Coordinates, X= 31.76 ft, Y= 687.79 ft, Z= -51.17 ft

C O M P O N E N T D A T A L I S T I N G

```
 From B33 to B34, DX= 2.76 ft, DY= -0.06 ft, L= 2.76 ft                    Run

 POINT DATA:
   B33, Coordinates, X= 32.26 ft, Y= 687.78 ft, Z= -51.17 ft

 SUPPORT DATA:
   B33, Guide, Support Id= B33  2, Connected to Ground, Comp.Wt = 0.000 lb, Stiffness= RIGID,
   Gap-Down= 0.00 inch, Gap-Above= 1.00 inch, Gap-Left= 1.00 inch, Gap-Right= 1.00 inch, Friction= 0.00,
   Gaps setting= Weightless

 ------------------------------------------------------------------------------
 From B34 to B19, DX= 3.50 ft, DY= -0.08 ft, L= 3.50 ft                    Run

 POINT DATA:
   B34, Coordinates, X= 35.02 ft, Y= 687.72 ft, Z= -51.17 ft

 SUPPORT DATA:
   B34, Guide, Support Id= B34  2, Connected to Ground, Comp.Wt = 0.000 lb, Stiffness= RIGID,
   Gap-Down= 0.00 inch, Gap-Above= 1.00 inch, Gap-Left= 1.00 inch, Gap-Right= 1.00 inch, Friction= 0.00,
   Gaps setting= Weightless

 ------------------------------------------------------------------------------
 From B19 to B35, DY= -0.10 ft, DZ= -3.50 ft, L= 3.50 ft                   Bend

 COMPONENT DATA (Bend, TIP= B19, Near= B19 N, Far= B19 F):
   Elbow, Radius= 36.00 inch, Bend angle= 89.96 deg, End flanges= 0, Flex= Auto, SIFI= 1.00, SIFO= 1.00

 POINT DATA:
   B19, Coordinates, X= 38.52 ft, Y= 687.64 ft, Z= -51.17 ft
   B19 N, Coordinates, X= 35.52 ft, Y= 687.71 ft, Z= -51.17 ft
   B19 F, Coordinates, X= 38.52 ft, Y= 687.55 ft, Z= -54.17 ft

 ------------------------------------------------------------------------------
 From B35 to B36, DY= -0.25 ft, DZ= -9.00 ft, L= 9.00 ft                   Run

 POINT DATA:
   B35, Coordinates, X= 38.52 ft, Y= 687.54 ft, Z= -54.67 ft

 SUPPORT DATA:
   B35, Guide, Support Id= B35  2, Connected to Ground, Comp.Wt = 0.000 lb, Stiffness= RIGID,
   Gap-Down= 0.00 inch, Gap-Above= 1.00 inch, Gap-Left= 1.00 inch, Gap-Right= 1.00 inch, Friction= 0.00,
   Gaps setting= Weightless

 ------------------------------------------------------------------------------
 From B36 to B37, DY= -0.25 ft, DZ= -9.00 ft, L= 9.00 ft                   Run

 POINT DATA:
   B36, Coordinates, X= 38.52 ft, Y= 687.29 ft, Z= -63.67 ft

 SUPPORT DATA:
   B36, V-Stop, Support Id= B36  2, Connected to Ground, Comp.Wt = 0.000 lb, Gap-Below= 0.00 inch,
   Gap-Above= 1.00 inch, Friction= 0.80, Gaps setting= Weightless

 ------------------------------------------------------------------------------
 From B37 to B38, DY= -0.25 ft, DZ= -9.00 ft, L= 9.00 ft                   Run
```

C O M P O N E N T D A T A L I S T I N G

POINT DATA:
B37, Coordinates, X= 38.52 ft, Y= 687.04 ft, Z= -72.67 ft

SUPPORT DATA:
B37, V-Stop, Support Id= B37 2, Connected to Ground, Comp.Wt = 0.000 lb, Gap-Below= 0.00 inch, Gap-Above= 1.00 inch, Friction= 0.80, Gaps setting= Weightless

---

From B38 to B39, DY= -0.25 ft, DZ= -9.00 ft, L= 9.00 ft Run

POINT DATA:
B38, Coordinates, X= 38.52 ft, Y= 686.79 ft, Z= -81.67 ft

SUPPORT DATA:
B38, V-Stop, Support Id= B38 2, Connected to Ground, Comp.Wt = 0.000 lb, Gap-Below= 0.00 inch, Gap-Above= 1.00 inch, Friction= 0.80, Gaps setting= Weightless

---

From B39 to B40, DY= -0.22 ft, DZ= -7.67 ft, L= 7.67 ft Run

POINT DATA:
B39, Coordinates, X= 38.52 ft, Y= 686.54 ft, Z= -90.67 ft

SUPPORT DATA:
B39, V-Stop, Support Id= B39 2, Connected to Ground, Comp.Wt = 0.000 lb, Gap-Below= 0.00 inch, Gap-Above= 1.00 inch, Friction= 0.80, Gaps setting= Weightless

---

From B40 to B42, DY= -0.25 ft, DZ= -9.00 ft, L= 9.00 ft Run

POINT DATA:
B40, Coordinates, X= 38.52 ft, Y= 686.32 ft, Z= -98.34 ft

SUPPORT DATA:
B40, V-Stop, Support Id= B40 1, Connected to Ground, Comp.Wt = 0.000 lb, Gap-Below= 0.00 inch, Gap-Above= 1.00 inch, Friction= 0.80, Gaps setting= Weightless

---

From B42 to B27, DY= -0.10 ft, DZ= -3.50 ft, L= 3.50 ft Run

POINT DATA:
B42, Coordinates, X= 38.52 ft, Y= 686.07 ft, Z= -107.34 ft

SUPPORT DATA:
B42, Guide, Support Id= B42 1, Connected to Ground, Comp.Wt = 0.000 lb, Stiffness= RIGID, Gap-Down= 0.00 inch, Gap-Above= 1.00 inch, Gap-Left= 1.00 inch, Gap-Right= 1.00 inch, Friction= 0.00, Gaps setting= Weightless

---

From B27 to B43, DX= -3.50 ft, DY= -0.09 ft, L= 3.50 ft Bend

COMPONENT DATA (Bend, TIP= B27, Near= B27 N, Far= B27 F):
Elbow, Radius= 36.00 inch, Bend angle= 89.96 deg, End flanges= 0, Flex= Auto, SIFI= 1.00, SIFO= 1.00

POINT DATA:

C O M P O N E N T D A T A L I S T I N G

B27, Coordinates, X= 38.52 ft, Y= 685.97 ft, Z= -110.84 ft
B27 N, Coordinates, X= 38.52 ft, Y= 686.06 ft, Z= -107.84 ft
B27 F, Coordinates, X= 35.52 ft, Y= 685.89 ft, Z= -110.84 ft

From B43 to B45, DX= -4.00 ft, DY= -0.10 ft, L= 4.00 ft Run

POINT DATA:
B43, Coordinates, X= 35.02 ft, Y= 685.88 ft, Z= -110.84 ft

SUPPORT DATA:
B43, Guide, Support Id= B43 1, Connected to Ground, Comp.Wt = 0.000 lb, Stiffness= RIGID,
Gap-Down= 0.00 inch, Gap-Above= 1.00 inch, Gap-Left= 1.00 inch, Gap-Right= 1.00 inch, Friction= 0.00,
Gaps setting= Weightless

From B45 to B30, DX= -3.50 ft, DY= -0.08 ft, L= 3.50 ft Run

POINT DATA:
B45, Coordinates, X= 31.02 ft, Y= 685.78 ft, Z= -110.84 ft

SUPPORT DATA:
B45, Guide, Support Id= B45 1, Connected to Ground, Comp.Wt = 0.000 lb, Stiffness= RIGID,
Gap-Down= 0.00 inch, Gap-Above= 1.00 inch, Gap-Left= 1.00 inch, Gap-Right= 1.00 inch, Friction= 0.00,
Gaps setting= Weightless

From B30 to B46, DY= -0.03 ft, DZ= -3.50 ft, L= 3.50 ft Bend

COMPONENT DATA (Bend, TIP= B30, Near= B30 N, Far= B30 F):
Elbow, Radius= 36.00 inch, Bend angle= 89.99 deg, End flanges= 0, Flex= Auto, SIFI= 1.00, SIFO= 1.00

POINT DATA:
B30, Coordinates, X= 27.52 ft, Y= 685.70 ft, Z= -110.84 ft
B30 N, Coordinates, X= 30.52 ft, Y= 685.77 ft, Z= -110.84 ft
B30 F, Coordinates, X= 27.52 ft, Y= 685.67 ft, Z= -113.84 ft

From B46 to B47, DY= -0.08 ft, DZ= -9.00 ft, L= 9.00 ft Run

POINT DATA:
B46, Coordinates, X= 27.52 ft, Y= 685.67 ft, Z= -114.34 ft

SUPPORT DATA:
B46, Guide, Support Id= B46 2, Connected to Ground, Comp.Wt = 0.000 lb, Stiffness= RIGID,
Gap-Down= 0.00 inch, Gap-Above= 1.00 inch, Gap-Left= 1.00 inch, Gap-Right= 1.00 inch, Friction= 0.00,
Gaps setting= Weightless

From B47 to B48, DY= -0.08 ft, DZ= -9.00 ft, L= 9.00 ft Run

POINT DATA:
B47, Coordinates, X= 27.52 ft, Y= 685.59 ft, Z= -123.34 ft

SUPPORT DATA:

C O M P O N E N T D A T A L I S T I N G

B47, V-Stop, Support Id= B47 2, Connected to Ground, Comp.Wt = 0.000 lb, Gap-Below= 0.00 inch,
Gap-Above= 1.00 inch, Friction= 0.80, Gaps setting= Weightless

---

From B48 to B49, DY= -0.08 ft, DZ= -9.00 ft, L= 9.00 ft Run

POINT DATA:
B48, Coordinates, X= 27.52 ft, Y= 685.51 ft, Z= -132.34 ft

SUPPORT DATA:
B48, V-Stop, Support Id= B48 2, Connected to Ground, Comp.Wt = 0.000 lb, Gap-Below= 0.00 inch,
Gap-Above= 1.00 inch, Friction= 0.80, Gaps setting= Weightless

---

From B49 to B50, DY= -0.08 ft, DZ= -9.00 ft, L= 9.00 ft Run

POINT DATA:
B49, Coordinates, X= 27.52 ft, Y= 685.43 ft, Z= -141.34 ft

SUPPORT DATA:
B49, V-Stop, Support Id= B49 2, Connected to Ground, Comp.Wt = 0.000 lb, Gap-Below= 0.00 inch,
Gap-Above= 1.00 inch, Friction= 0.80, Gaps setting= Weightless

---

From B50 to B51, DY= -0.07 ft, DZ= -9.00 ft, L= 9.00 ft Run

POINT DATA:
B50, Coordinates, X= 27.52 ft, Y= 685.35 ft, Z= -150.34 ft

SUPPORT DATA:
B50, V-Stop, Support Id= B50 2, Connected to Ground, Comp.Wt = 0.000 lb, Gap-Below= 0.00 inch,
Gap-Above= 1.00 inch, Friction= 0.80, Gaps setting= Weightless

---

From B51 to B52, DY= -0.08 ft, DZ= -9.00 ft, L= 9.00 ft Run

POINT DATA:
B51, Coordinates, X= 27.52 ft, Y= 685.28 ft, Z= -159.34 ft

SUPPORT DATA:
B51, V-Stop, Support Id= B51 2, Connected to Ground, Comp.Wt = 0.000 lb, Gap-Below= 0.00 inch,
Gap-Above= 1.00 inch, Friction= 0.80, Gaps setting= Weightless

---

From B52 to B53, DY= -0.07 ft, DZ= -9.00 ft, L= 9.00 ft Run

POINT DATA:
B52, Coordinates, X= 27.52 ft, Y= 685.20 ft, Z= -168.34 ft

SUPPORT DATA:
B52, V-Stop, Support Id= B52 2, Connected to Ground, Comp.Wt = 0.000 lb, Gap-Below= 0.00 inch,
Gap-Above= 1.00 inch, Friction= 0.80, Gaps setting= Weightless

---

From B53 to B54, DX= 0 ft, DY= -0.07 ft, DZ= -7.83 ft, L= 7.83 ft Run

C O M P O N E N T D A T A L I S T I N G

POINT DATA:
B53, Coordinates, X= 27.52 ft, Y= 685.13 ft, Z= -177.34 ft

SUPPORT DATA:
B53, V-Stop, Support Id= B53 2, Connected to Ground, Comp.Wt = 0.000 lb, Gap-Below= 0.00 inch, Gap-Above= 1.00 inch, Friction= 0.80, Gaps setting= Weightless

---

From B54 to B55, DY= -0.07 ft, DZ= -9.00 ft, L= 9.00 ft Run

POINT DATA:
B54, Coordinates, X= 27.52 ft, Y= 685.06 ft, Z= -185.17 ft

SUPPORT DATA:
B54, V-Stop, Support Id= B54 2, Connected to Ground, Comp.Wt = 0.000 lb, Gap-Below= 0.00 inch, Gap-Above= 1.00 inch, Friction= 0.80, Gaps setting= Weightless

---

From B55 to B41, DY= -0.03 ft, DZ= -3.50 ft, L= 3.50 ft Run

POINT DATA:
B55, Coordinates, X= 27.52 ft, Y= 684.99 ft, Z= -194.17 ft

SUPPORT DATA:
B55, Guide, Support Id= B55 1, Connected to Ground, Comp.Wt = 0.000 lb, Stiffness= RIGID, Gap-Down= 0.00 inch, Gap-Above= 1.00 inch, Gap-Left= 1.00 inch, Gap-Right= 1.00 inch, Friction= 0.00, Gaps setting= Weightless

---

From B41 to B57, DX= 3.50 ft, DY= -0.02 ft, L= 3.50 ft Bend

COMPONENT DATA (Bend, TIP= B41, Near= B41 N, Far= B41 F):
Elbow, Radius= 36.00 inch, Bend angle= 90.00 deg, End flanges= 0, Flex= Auto, SIFI= 1.00, SIFO= 1.00

POINT DATA:
B41, Coordinates, X= 27.52 ft, Y= 684.96 ft, Z= -197.67 ft
B41 N, Coordinates, X= 27.52 ft, Y= 684.99 ft, Z= -194.67 ft
B41 F, Coordinates, X= 30.52 ft, Y= 684.94 ft, Z= -197.67 ft

From B57 to B58, DX= 6.91 ft, DY= -0.05 ft, L= 6.91 ft Run

POINT DATA:
B57, Coordinates, X= 31.02 ft, Y= 684.94 ft, Z= -197.67 ft

SUPPORT DATA:
B57, Guide, Support Id= B57 1, Connected to Ground, Comp.Wt = 0.000 lb, Stiffness= RIGID, Gap-Down= 0.00 inch, Gap-Above= 1.00 inch, Gap-Left= 1.00 inch, Gap-Right= 1.00 inch, Friction= 0.00, Gaps setting= Weightless

---

From B58 to B44, DX= 3.50 ft, DY= -0.02 ft, L= 3.50 ft Run

POINT DATA:
B58, Coordinates, X= 37.93 ft, Y= 684.89 ft, Z= -197.67 ft

C O M P O N E N T D A T A L I S T I N G

SUPPORT DATA:
B58, Guide, Support Id= B58 1, Connected to Ground, Comp.Wt = 0.000 lb, Stiffness= RIGID,
Gap-Down= 0.00 inch, Gap-Above= 1.00 inch, Gap-Left= 1.00 inch, Gap-Right= 1.00 inch, Friction= 0.00,
Gaps setting= Weightless

From B44 to B64, DY= -0.02 ft, DZ= -3.50 ft, L= 3.50 ft Bend

COMPONENT DATA (Bend, TIP= B44, Near= B44 N, Far= B44 F):
Elbow, Radius= 36.00 inch, Bend angle= 90.00 deg, End flanges= 0, Flex= Auto, SIFI= 1.00, SIFO= 1.00

POINT DATA:
B44, Coordinates, X= 41.43 ft, Y= 684.87 ft, Z= -197.67 ft
B44 N, Coordinates, X= 38.43 ft, Y= 684.89 ft, Z= -197.67 ft
B44 F, Coordinates, X= 41.43 ft, Y= 684.85 ft, Z= -200.67 ft

From B64 to B65, DY= -0.06 ft, DZ= -9.00 ft, L= 9.00 ft Run

POINT DATA:
B64, Coordinates, X= 41.43 ft, Y= 684.85 ft, Z= -201.17 ft

SUPPORT DATA:
B64, Guide, Support Id= B64 1, Connected to Ground, Comp.Wt = 0.000 lb, Stiffness= RIGID,
Gap-Down= 0.00 inch, Gap-Above= 1.00 inch, Gap-Left= 1.00 inch, Gap-Right= 1.00 inch, Friction= 0.00,
Gaps setting= Weightless

From B65 to B66, DY= -0.06 ft, DZ= -9.00 ft, L= 9.00 ft Run

POINT DATA:
B65, Coordinates, X= 41.43 ft, Y= 684.79 ft, Z= -210.17 ft

SUPPORT DATA:
B65, V-Stop, Support Id= B65 1, Connected to Ground, Comp.Wt = 0.000 lb, Gap-Below= 0.00 inch,
Gap-Above= 1.00 inch, Friction= 0.80, Gaps setting= Weightless

---

From B66 to B67, DY= -0.06 ft, DZ= -9.00 ft, L= 9.00 ft Run

POINT DATA:
B66, Coordinates, X= 41.43 ft, Y= 684.73 ft, Z= -219.17 ft

SUPPORT DATA:
B66, V-Stop, Support Id= B66 1, Connected to Ground, Comp.Wt = 0.000 lb, Gap-Below= 0.00 inch,
Gap-Above= 1.00 inch, Friction= 0.80, Gaps setting= Weightless

---

From B67 to B68, DY= -0.06 ft, DZ= -9.00 ft, L= 9.00 ft Run

POINT DATA:
B67, Coordinates, X= 41.43 ft, Y= 684.67 ft, Z= -228.17 ft

SUPPORT DATA:
B67, V-Stop, Support Id= B67 1, Connected to Ground, Comp.Wt = 0.000 lb, Gap-Below= 0.00 inch,

C O M P O N E N T D A T A L I S T I N G

Gap-Above= 1.00 inch, Friction= 0.80, Gaps setting= Weightless

From B68 to B69, DY= -0.06 ft, DZ= -9.00 ft, L= 9.00 ft Run

POINT DATA:
B68, Coordinates, X= 41.43 ft, Y= 684.61 ft, Z= -237.17 ft

SUPPORT DATA:
B68, V-Stop, Support Id= B68 1, Connected to Ground, Comp.Wt = 0.000 lb, Gap-Below= 0.00 inch,
Gap-Above= 1.00 inch, Friction= 0.80, Gaps setting= Weightless

From B69 to B70, DY= -0.06 ft, DZ= -9.00 ft, L= 9.00 ft Run

POINT DATA:
B69, Coordinates, X= 41.43 ft, Y= 684.55 ft, Z= -246.17 ft

SUPPORT DATA:
B69, V-Stop, Support Id= B69 1, Connected to Ground, Comp.Wt = 0.000 lb, Gap-Below= 0.00 inch,
Gap-Above= 1.00 inch, Friction= 0.80, Gaps setting= Weightless

From B70 to B71, DY= -0.06 ft, DZ= -9.00 ft, L= 9.00 ft Run

POINT DATA:
B70, Coordinates, X= 41.43 ft, Y= 684.49 ft, Z= -255.17 ft

SUPPORT DATA:
B70, V-Stop, Support Id= B70 1, Connected to Ground, Comp.Wt = 0.000 lb, Gap-Below= 0.00 inch,
Gap-Above= 1.00 inch, Friction= 0.80, Gaps setting= Weightless

From B71 to B72, DY= -0.05 ft, DZ= -9.00 ft, L= 9.00 ft Run

POINT DATA:
B71, Coordinates, X= 41.43 ft, Y= 684.43 ft, Z= -264.17 ft

SUPPORT DATA:
B71, V-Stop, Support Id= B71 1, Connected to Ground, Comp.Wt = 0.000 lb, Gap-Below= 0.00 inch,
Gap-Above= 1.00 inch, Friction= 0.80, Gaps setting= Weightless

From B72 to B73, DX= 0 ft, DY= -0.03 ft, DZ= -4.83 ft, L= 4.83 ft Run

POINT DATA:
B72, Coordinates, X= 41.43 ft, Y= 684.38 ft, Z= -273.17 ft

SUPPORT DATA:
B72, V-Stop, Support Id= B72 1, Connected to Ground, Comp.Wt = 0.000 lb, Gap-Below= 0.00 inch,
Gap-Above= 1.00 inch, Friction= 0.80, Gaps setting= Weightless

From B73 to B74, DY= -0.06 ft, DZ= -9.00 ft, L= 9.00 ft Run

C O M P O N E N T D A T A L I S T I N G

POINT DATA:
B73, Coordinates, X= 41.43 ft, Y= 684.35 ft, Z= -278.00 ft

SUPPORT DATA:
B73, V-Stop, Support Id= B73 1, Connected to Ground, Comp.Wt = 0.000 lb, Gap-Below= 0.00 inch, Gap-Above= 1.00 inch, Friction= 0.80, Gaps setting= Weightless

---

From B74 to B56, DY= -0.02 ft, DZ= -3.50 ft, L= 3.50 ft Run

POINT DATA:
B74, Coordinates, X= 41.43 ft, Y= 684.29 ft, Z= -287.00 ft

SUPPORT DATA:
B74, Guide, Support Id= B74 1, Connected to Ground, Comp.Wt = 0.000 lb, Stiffness= RIGID, Gap-Down= 0.00 inch, Gap-Above= 1.00 inch, Gap-Left= 1.00 inch, Gap-Right= 1.00 inch, Friction= 0.00, Gaps setting= Weightless

---

From B56 to B75, DX= -2.95 ft, DY= -0.03 ft, L= 2.95 ft Bend

COMPONENT DATA (Bend, TIP= B56, Near= B56 N, Far= B56 F):
Elbow, Radius= 30.00 inch, Bend angle= 90.00 deg, End flanges= 0, Flex= Auto, SIFI= 1.02, SIFO= 1.00

POINT DATA:
B56, Coordinates, X= 41.43 ft, Y= 684.27 ft, Z= -290.50 ft
B56 N, Coordinates, X= 41.43 ft, Y= 684.28 ft, Z= -288.00 ft
B56 F, Coordinates, X= 38.93 ft, Y= 684.24 ft, Z= -290.50 ft

From B75 to B20, DX= -2.94 ft, DY= -0.05 ft, L= 2.94 ft Run

POINT DATA:
B75, Coordinates, X= 38.48 ft, Y= 684.24 ft, Z= -290.50 ft

SUPPORT DATA:
B75, Guide, Support Id= B75 1, Connected to Ground, Comp.Wt = 0.000 lb, Stiffness= RIGID, Gap-Down= 0.00 inch, Gap-Above= 1.00 inch, Gap-Left= 1.00 inch, Gap-Right= 1.00 inch, Friction= 0.00, Gaps setting= Weightless

---

From B20 to B77, DY= -0.06 ft, DZ= -3.17 ft, L= 3.17 ft Bend

COMPONENT DATA (Bend, TIP= B20, Near= B20 N, Far= B20 F):
Elbow, Radius= 30.00 inch, Bend angle= 89.98 deg, End flanges= 0, Flex= Auto, SIFI= 1.02, SIFO= 1.00

POINT DATA:
B20, Coordinates, X= 35.54 ft, Y= 684.19 ft, Z= -290.50 ft
B20 N, Coordinates, X= 38.04 ft, Y= 684.23 ft, Z= -290.50 ft
B20 F, Coordinates, X= 35.54 ft, Y= 684.14 ft, Z= -293.00 ft

From B77 to B21, DY= -0.06 ft, DZ= -3.16 ft, L= 3.16 ft Run

POINT DATA:

C O M P O N E N T D A T A L I S T I N G

B77, Coordinates, X= 35.54 ft, Y= 684.13 ft, Z= -293.67 ft

SUPPORT DATA:
B77, Guide, Support Id= B77 1, Connected to Ground, Comp.Wt = 0.000 lb, Stiffness= RIGID,
Gap-Down= 0.00 inch, Gap-Above= 1.00 inch, Gap-Left= 1.00 inch, Gap-Right= 1.00 inch, Friction= 0.00,
Gaps setting= Weightless

From B21 to B76, DX= -3.00 ft, DY= -0.04 ft, L= 3.00 ft Bend

COMPONENT DATA (Bend, TIP= B21, Near= B21 N, Far= B21 F):
Elbow, Radius= 30.00 inch, Bend angle= 89.99 deg, End flanges= 0, Flex= Auto, SIFI= 1.02, SIFO= 1.00

POINT DATA:
B21, Coordinates, X= 35.54 ft, Y= 684.07 ft, Z= -296.83 ft
B21 N, Coordinates, X= 35.54 ft, Y= 684.12 ft, Z= -294.33 ft
B21 F, Coordinates, X= 33.04 ft, Y= 684.04 ft, Z= -296.83 ft

From B76 to B59, DX= -1.85 ft, DY= -0.03 ft, L= 1.85 ft Run

POINT DATA:
B76, Coordinates, X= 32.54 ft, Y= 684.03 ft, Z= -296.83 ft

SUPPORT DATA:
B76, Guide, Support Id= B76 1, Connected to Ground, Comp.Wt = 0.000 lb, Stiffness= RIGID,
Gap-Down= 0.00 inch, Gap-Above= 1.00 inch, Gap-Left= 1.00 inch, Gap-Right= 1.00 inch, Friction= 0.00,
Gaps setting= Weightless

From B59 to B60, DX= -1.00 ft Bend

COMPONENT DATA (Bend, TIP= B59, Near= B59 N, Mid= B59 M, Far= B59 F):
Elbow, Radius= 36.00 inch, Bend angle= 0.93 deg, Mid point at 50.00 percent, End flanges= 0, Flex= Auto,
SIFI= 1.00, SIFO= 1.00

POINT DATA:
B59, Coordinates, X= 30.69 ft, Y= 684.00 ft, Z= -296.83 ft
B59 N, Coordinates, X= 30.71 ft, Y= 684.00 ft, Z= -296.83 ft
B59 M, Coordinates, X= 30.69 ft, Y= 684.00 ft, Z= -296.83 ft
B59 F, Coordinates, X= 30.67 ft, Y= 684.00 ft, Z= -296.83 ft

SUPPORT DATA:
B59 M, V-Stop, Support Id= B59 M1, Connected to Ground, Comp.Wt = 0.000 lb, Gap-Below= 0.00 inch,
Gap-Above= 1.00 inch, Friction= 0.80, Gaps setting= Weightless

---

From B60 to B61, DX= -1.00 ft Run

POINT DATA:
B60, Coordinates, X= 29.69 ft, Y= 684.00 ft, Z= -296.83 ft

From B61 to B62, DX= -0.61 ft Run

C O M P O N E N T D A T A L I S T I N G

POINT DATA:
B61, Coordinates, X= 28.69 ft, Y= 684.00 ft, Z= -296.83 ft

From B62 to B63, DX= -0.25 ft Run

POINT DATA:
B62, Coordinates, X= 28.08 ft, Y= 684.00 ft, Z= -296.83 ft
B63, Coordinates, X= 27.83 ft, Y= 684.00 ft, Z= -296.83 ft

SUPPORT DATA:
B62, Anchor, Connected to: Ground, KTX= Rigid, KTY= Rigid, KTZ= Rigid, KRX= Rigid, KRY= Rigid, KRZ= Rigid

---

*** SEGMENT C

From C03 to C04, DX= 2.00 ft Run

PIPE DATA:
Pipe Id= 4SCH40, Composition= Carbon Steel, Nom Size= 4 in, OD= 4.500 inch, Wall Thk= 0.237 inch,
Mill= 0.030 inch, Pipe Density= 489.00 lb/cu.ft, Pipe Unit Wgt= 10.78 lb/ft

POINT DATA:
C03, Coordinates, X= 1.46 ft, Y= 691.07 ft, Z= 1.00 ft

SUPPORT DATA:
C03, Anchor, Connected to: Ground, KTX= Rigid, KTY= Rigid, KTZ= Rigid, KRX= Rigid, KRY= Rigid, KRZ= Rigid

---

From C04 to C21, DX= 2.50 ft Run

POINT DATA:
C04, Coordinates, X= 3.46 ft, Y= 691.07 ft, Z= 1.00 ft

From C21 to C06, DX= 0.50 ft Run

POINT DATA:
C21, Coordinates, X= 5.96 ft, Y= 691.07 ft, Z= 1.00 ft

SUPPORT DATA:
C21, V-Stop, Support Id= C21 2, Connected to Ground, Comp.Wt = 0.000 lb, Gap-Below= 0.00 inch,
Gap-Above= 1.00 inch, Friction= 0.80, Gaps setting= Weightless

---

From C06 to C22, DX= 10.49 ft, DY= -0.85 ft, L= 10.52 ft Bend

COMPONENT DATA (Bend, TIP= C06, Near= C06 N, Far= C06 F):
Elbow, Radius= 36.00 inch, Bend angle= 4.63 deg, End flanges= 0, Flex= Auto, SIFI= 1.00, SIFO= 1.00

POINT DATA:
C06, Coordinates, X= 6.46 ft, Y= 691.07 ft, Z= 1.00 ft
C06 N, Coordinates, X= 6.34 ft, Y= 691.07 ft, Z= 1.00 ft

C O M P O N E N T D A T A L I S T I N G

C06 F, Coordinates, X= 6.58 ft, Y= 691.06 ft, Z= 1.00 ft

From C22 to C23, DX= 6.99 ft, DY= -0.57 ft, L= 7.01 ft Run

POINT DATA:
C22, Coordinates, X= 16.95 ft, Y= 690.22 ft, Z= 1.00 ft

SUPPORT DATA:
C22, V-Stop, Support Id= C22 2, Connected to Ground, Comp.Wt = 0.000 lb, Gap-Below= 0.00 inch,
Gap-Above= 1.00 inch, Friction= 0.80, Gaps setting= Weightless

---

From C23 to C09, DX= 3.49 ft, DY= -0.28 ft, L= 3.50 ft Run

POINT DATA:
C23, Coordinates, X= 23.94 ft, Y= 689.65 ft, Z= 1.00 ft

SUPPORT DATA:
C23, Guide, Support Id= C23 2, Connected to Ground, Comp.Wt = 0.000 lb, Stiffness= RIGID,
Gap-Down= 0.00 inch, Gap-Above= 1.00 inch, Gap-Left= 1.00 inch, Gap-Right= 1.00 inch, Friction= 0.00,
Gaps setting= Weightless

From C09 to C24, DY= -0.10 ft, DZ= -3.50 ft, L= 3.50 ft Bend

COMPONENT DATA (Bend, TIP= C09, Near= C09 N, Far= C09 F):
Elbow, Radius= 36.00 inch, Bend angle= 89.87 deg, End flanges= 0, Flex= Auto, SIFI= 1.00, SIFO= 1.00

POINT DATA:
C09, Coordinates, X= 27.43 ft, Y= 689.37 ft, Z= 1.00 ft
C09 N, Coordinates, X= 24.45 ft, Y= 689.61 ft, Z= 1.00 ft
C09 F, Coordinates, X= 27.43 ft, Y= 689.28 ft, Z= -1.99 ft

From C24 to C25, DY= -0.26 ft, DZ= -9.00 ft, L= 9.00 ft Run

POINT DATA:
C24, Coordinates, X= 27.43 ft, Y= 689.27 ft, Z= -2.50 ft

SUPPORT DATA:
C24, Guide, Support Id= C24 2, Connected to Ground, Comp.Wt = 0.000 lb, Stiffness= RIGID,
Gap-Down= 0.00 inch, Gap-Above= 1.00 inch, Gap-Left= 1.00 inch, Gap-Right= 1.00 inch, Friction= 0.00,
Gaps setting= Weightless

From C25 to C26, DY= -0.26 ft, DZ= -9.00 ft, L= 9.00 ft Run

POINT DATA:
C25, Coordinates, X= 27.43 ft, Y= 689.01 ft, Z= -11.50 ft

SUPPORT DATA:
C25, V-Stop, Support Id= C25 2, Connected to Ground, Comp.Wt = 0.000 lb, Gap-Below= 0.00 inch,
Gap-Above= 1.00 inch, Friction= 0.80, Gaps setting= Weightless

C O M P O N E N T D A T A L I S T I N G

From C26 to C28, DY= -0.26 ft, DZ= -9.00 ft, L= 9.00 ft Run

POINT DATA:
C26, Coordinates, X= 27.43 ft, Y= 688.75 ft, Z= -20.50 ft

SUPPORT DATA:
C26, V-Stop, Support Id= C26 2, Connected to Ground, Comp.Wt = 0.000 lb, Gap-Below= 0.00 inch,
Gap-Above= 1.00 inch, Friction= 0.80, Gaps setting= Weightless

From C28 to C29, DY= -0.27 ft, DZ= -9.00 ft, L= 9.00 ft Run

POINT DATA:
C28, Coordinates, X= 27.43 ft, Y= 688.49 ft, Z= -29.50 ft

SUPPORT DATA:
C28, V-Stop, Support Id= C28 2, Connected to Ground, Comp.Wt = 0.000 lb, Gap-Below= 0.00 inch,
Gap-Above= 1.00 inch, Friction= 0.80, Gaps setting= Weightless

From C29 to C31, DY= -0.31 ft, DZ= -10.50 ft, L= 10.50 ft Run

POINT DATA:
C29, Coordinates, X= 27.43 ft, Y= 688.22 ft, Z= -38.50 ft

SUPPORT DATA:
C29, V-Stop, Support Id= C29 2, Connected to Ground, Comp.Wt = 0.000 lb, Gap-Below= 0.00 inch,
Gap-Above= 1.00 inch, Friction= 0.80, Gaps setting= Weightless

From C31 to C16, DY= -0.10 ft, DZ= -3.50 ft, L= 3.50 ft Run

POINT DATA:
C31, Coordinates, X= 27.43 ft, Y= 687.91 ft, Z= -49.00 ft

SUPPORT DATA:
C31, Guide, Support Id= C31 2, Connected to Ground, Comp.Wt = 0.000 lb, Stiffness= RIGID,
Gap-Down= 0.00 inch, Gap-Above= 1.00 inch, Gap-Left= 1.00 inch, Gap-Right= 1.00 inch, Friction= 0.00,
Gaps setting= Weightless

From C16 to C32, DX= 3.50 ft, DY= -0.08 ft, L= 3.50 ft Bend

COMPONENT DATA (Bend, TIP= C16, Near= C16 N, Far= C16 F):
Elbow, Radius= 36.00 inch, Bend angle= 89.96 deg, End flanges= 0, Flex= Auto, SIFI= 1.00, SIFO= 1.00

POINT DATA:
C16, Coordinates, X= 27.43 ft, Y= 687.81 ft, Z= -52.50 ft
C16 N, Coordinates, X= 27.43 ft, Y= 687.90 ft, Z= -49.50 ft
C16 F, Coordinates, X= 30.43 ft, Y= 687.74 ft, Z= -52.50 ft

From C32 to C33, DX= 2.76 ft, DY= -0.07 ft, L= 2.76 ft Run

C O M P O N E N T D A T A L I S T I N G

POINT DATA:
C32, Coordinates, X= 30.93 ft, Y= 687.73 ft, Z= -52.50 ft

SUPPORT DATA:
C32, Guide, Support Id= C32 2, Connected to Ground, Comp.Wt = 0.000 lb, Stiffness= RIGID,
Gap-Down= 0.00 inch, Gap-Above= 1.00 inch, Gap-Left= 1.00 inch, Gap-Right= 1.00 inch, Friction= 0.00,
Gaps setting= Weightless

From C33 to C19, DX= 3.50 ft, DY= -0.08 ft, L= 3.50 ft Run

POINT DATA:
C33, Coordinates, X= 33.69 ft, Y= 687.66 ft, Z= -52.50 ft

SUPPORT DATA:
C33, Guide, Support Id= C33 2, Connected to Ground, Comp.Wt = 0.000 lb, Stiffness= RIGID,
Gap-Down= 0.00 inch, Gap-Above= 1.00 inch, Gap-Left= 1.00 inch, Gap-Right= 1.00 inch, Friction= 0.00,
Gaps setting= Weightless

From C19 to C34, DY= -0.10 ft, DZ= -3.50 ft, L= 3.50 ft Bend

COMPONENT DATA (Bend, TIP= C19, Near= C19 N, Far= C19 F):
Elbow, Radius= 36.00 inch, Bend angle= 89.96 deg, End flanges= 0, Flex= Auto, SIFI= 1.00, SIFO= 1.00

POINT DATA:
C19, Coordinates, X= 37.19 ft, Y= 687.58 ft, Z= -52.50 ft
C19 N, Coordinates, X= 34.19 ft, Y= 687.65 ft, Z= -52.50 ft
C19 F, Coordinates, X= 37.19 ft, Y= 687.49 ft, Z= -55.50 ft

From C34 to C35, DY= -0.26 ft, DZ= -9.00 ft, L= 9.00 ft Run

POINT DATA:
C34, Coordinates, X= 37.19 ft, Y= 687.48 ft, Z= -56.00 ft

SUPPORT DATA:
C34, Guide, Support Id= C34 2, Connected to Ground, Comp.Wt = 0.000 lb, Stiffness= RIGID,
Gap-Down= 0.00 inch, Gap-Above= 1.00 inch, Gap-Left= 1.00 inch, Gap-Right= 1.00 inch, Friction= 0.00,
Gaps setting= Weightless

From C35 to C36, DY= -0.26 ft, DZ= -9.00 ft, L= 9.00 ft Run

POINT DATA:
C35, Coordinates, X= 37.19 ft, Y= 687.22 ft, Z= -65.00 ft

SUPPORT DATA:
C35, V-Stop, Support Id= C35 2, Connected to Ground, Comp.Wt = 0.000 lb, Gap-Below= 0.00 inch,
Gap-Above= 1.00 inch, Friction= 0.80, Gaps setting= Weightless

---
From C36 to C37, DY= -0.26 ft, DZ= -9.00 ft, L= 9.00 ft Run

POINT DATA:

C O M P O N E N T D A T A L I S T I N G

C36, Coordinates, X= 37.19 ft, Y= 686.96 ft, Z= -74.00 ft

SUPPORT DATA:
C36, V-Stop, Support Id= C36 2, Connected to Ground, Comp.Wt = 0.000 lb, Gap-Below= 0.00 inch,
Gap-Above= 1.00 inch, Friction= 0.80, Gaps setting= Weightless

---

From C37 to C38, DY= -0.26 ft, DZ= -9.00 ft, L= 9.00 ft Run

POINT DATA:
C37, Coordinates, X= 37.19 ft, Y= 686.70 ft, Z= -83.00 ft

SUPPORT DATA:
C37, V-Stop, Support Id= C37 2, Connected to Ground, Comp.Wt = 0.000 lb, Gap-Below= 0.00 inch,
Gap-Above= 1.00 inch, Friction= 0.80, Gaps setting= Weightless

---

From C38 to C39, DY= -0.15 ft, DZ= -5.01 ft, L= 5.01 ft Run

POINT DATA:
C38, Coordinates, X= 37.19 ft, Y= 686.44 ft, Z= -92.00 ft

SUPPORT DATA:
C38, V-Stop, Support Id= C38 2, Connected to Ground, Comp.Wt = 0.000 lb, Gap-Below= 0.00 inch,
Gap-Above= 1.00 inch, Friction= 0.80, Gaps setting= Weightless

---

From C39 to C40, DY= -0.27 ft, DZ= -8.99 ft, L= 8.99 ft Run

POINT DATA:
C39, Coordinates, X= 37.19 ft, Y= 686.29 ft, Z= -97.01 ft

SUPPORT DATA:
C39, V-Stop, Support Id= C39 2, Connected to Ground, Comp.Wt = 0.000 lb, Gap-Below= 0.00 inch,
Gap-Above= 1.00 inch, Friction= 0.80, Gaps setting= Weightless

---

From C40 to C27, DY= -0.10 ft, DZ= -3.50 ft, L= 3.50 ft Run

POINT DATA:
C40, Coordinates, X= 37.19 ft, Y= 686.02 ft, Z= -106.00 ft

SUPPORT DATA:
C40, Guide, Support Id= C40 2, Connected to Ground, Comp.Wt = 0.000 lb, Stiffness= RIGID,
Gap-Down= 0.00 inch, Gap-Above= 1.00 inch, Gap-Left= 1.00 inch, Gap-Right= 1.00 inch, Friction= 0.00,
Gaps setting= Weightless

From C27 to C42, DX= -3.50 ft, DY= -0.09 ft, L= 3.50 ft Bend

COMPONENT DATA (Bend, TIP= C27, Near= C27 N, Far= C27 F):
Elbow, Radius= 36.00 inch, Bend angle= 89.96 deg, End flanges= 0, Flex= Auto, SIFI= 1.00, SIFO= 1.00

POINT DATA:
C27, Coordinates, X= 37.19 ft, Y= 685.92 ft, Z= -109.50 ft

C O M P O N E N T D A T A L I S T I N G

C27 N, Coordinates, X= 37.19 ft, Y= 686.01 ft, Z= -106.50 ft
C27 F, Coordinates, X= 34.19 ft, Y= 685.84 ft, Z= -109.50 ft

From C42 to C43, DX= -4.00 ft, DY= -0.10 ft, L= 4.00 ft Run

POINT DATA:
C42, Coordinates, X= 33.69 ft, Y= 685.83 ft, Z= -109.50 ft

SUPPORT DATA:
C42, Guide, Support Id= C42 2, Connected to Ground, Comp.Wt = 0.000 lb, Stiffness= RIGID,
Gap-Down= 0.00 inch, Gap-Above= 1.00 inch, Gap-Left= 1.00 inch, Gap-Right= 1.00 inch, Friction= 0.00,
Gaps setting= Weightless

From C43 to C30, DX= -3.50 ft, DY= -0.09 ft, L= 3.50 ft Run

POINT DATA:
C43, Coordinates, X= 29.69 ft, Y= 685.73 ft, Z= -109.50 ft

SUPPORT DATA:
C43, Guide, Support Id= C43 2, Connected to Ground, Comp.Wt = 0.000 lb, Stiffness= RIGID,
Gap-Down= 0.00 inch, Gap-Above= 1.00 inch, Gap-Left= 1.00 inch, Gap-Right= 1.00 inch, Friction= 0.00,
Gaps setting= Weightless

From C30 to C45, DY= -0.03 ft, DZ= -3.50 ft, L= 3.50 ft Bend

COMPONENT DATA (Bend, TIP= C30, Near= C30 N, Far= C30 F):
Elbow, Radius= 36.00 inch, Bend angle= 89.99 deg, End flanges= 0, Flex= Auto, SIFI= 1.00, SIFO= 1.00

POINT DATA:
C30, Coordinates, X= 26.19 ft, Y= 685.64 ft, Z= -109.50 ft
C30 N, Coordinates, X= 29.19 ft, Y= 685.72 ft, Z= -109.50 ft
C30 F, Coordinates, X= 26.19 ft, Y= 685.61 ft, Z= -112.50 ft

From C45 to C46, DY= -0.07 ft, DZ= -9.00 ft, L= 9.00 ft Run

POINT DATA:
C45, Coordinates, X= 26.19 ft, Y= 685.61 ft, Z= -113.00 ft

SUPPORT DATA:
C45, Guide, Support Id= C45 2, Connected to Ground, Comp.Wt = 0.000 lb, Stiffness= RIGID,
Gap-Down= 0.00 inch, Gap-Above= 1.00 inch, Gap-Left= 1.00 inch, Gap-Right= 1.00 inch, Friction= 0.00,
Gaps setting= Weightless

From C46 to C47, DY= -0.07 ft, DZ= -9.00 ft, L= 9.00 ft Run

POINT DATA:
C46, Coordinates, X= 26.19 ft, Y= 685.54 ft, Z= -122.00 ft

SUPPORT DATA:
C46, V-Stop, Support Id= C46 2, Connected to Ground, Comp.Wt = 0.000 lb, Gap-Below= 0.00 inch,

C O M P O N E N T D A T A L I S T I N G

Gap-Above= 1.00 inch, Friction= 0.80, Gaps setting= Weightless

From C47 to C48, DY= -0.07 ft, DZ= -9.00 ft, L= 9.00 ft Run

POINT DATA:
C47, Coordinates, X= 26.19 ft, Y= 685.47 ft, Z= -131.00 ft

SUPPORT DATA:
C47, V-Stop, Support Id= C47 2, Connected to Ground, Comp.Wt = 0.000 lb, Gap-Below= 0.00 inch,
Gap-Above= 1.00 inch, Friction= 0.80, Gaps setting= Weightless

From C48 to C49, DY= -0.07 ft, DZ= -9.00 ft, L= 9.00 ft Run

POINT DATA:
C48, Coordinates, X= 26.19 ft, Y= 685.40 ft, Z= -140.00 ft

SUPPORT DATA:
C48, V-Stop, Support Id= C48 2, Connected to Ground, Comp.Wt = 0.000 lb, Gap-Below= 0.00 inch,
Gap-Above= 1.00 inch, Friction= 0.80, Gaps setting= Weightless

From C49 to C50, DY= -0.07 ft, DZ= -9.00 ft, L= 9.00 ft Run

POINT DATA:
C49, Coordinates, X= 26.19 ft, Y= 685.33 ft, Z= -149.00 ft

SUPPORT DATA:
C49, V-Stop, Support Id= C49 2, Connected to Ground, Comp.Wt = 0.000 lb, Gap-Below= 0.00 inch,
Gap-Above= 1.00 inch, Friction= 0.80, Gaps setting= Weightless

From C50 to C51, DY= -0.07 ft, DZ= -9.00 ft, L= 9.00 ft Run

POINT DATA:
C50, Coordinates, X= 26.19 ft, Y= 685.26 ft, Z= -158.00 ft

SUPPORT DATA:
C50, V-Stop, Support Id= C50 2, Connected to Ground, Comp.Wt = 0.000 lb, Gap-Below= 0.00 inch,
Gap-Above= 1.00 inch, Friction= 0.80, Gaps setting= Weightless

From C51 to C52, DY= -0.08 ft, DZ= -9.00 ft, L= 9.00 ft Run

POINT DATA:
C51, Coordinates, X= 26.19 ft, Y= 685.19 ft, Z= -167.00 ft

SUPPORT DATA:
C51, V-Stop, Support Id= C51 2, Connected to Ground, Comp.Wt = 0.000 lb, Gap-Below= 0.00 inch,
Gap-Above= 1.00 inch, Friction= 0.80, Gaps setting= Weightless

From C52 to C53, DY= -0.07 ft, DZ= -9.00 ft, L= 9.00 ft Run

C O M P O N E N T D A T A L I S T I N G

POINT DATA:
C52, Coordinates, X= 26.19 ft, Y= 685.11 ft, Z= -176.00 ft

SUPPORT DATA:
C52, V-Stop, Support Id= C52 2, Connected to Ground, Comp.Wt = 0.000 lb, Gap-Below= 0.00 inch, Gap-Above= 1.00 inch, Friction= 0.80, Gaps setting= Weightless

---

From C53 to C55, DX= 0 ft, DY= -0.09 ft, DZ= -10.50 ft, L= 10.50 ft Run

POINT DATA:
C53, Coordinates, X= 26.19 ft, Y= 685.04 ft, Z= -185.00 ft

SUPPORT DATA:
C53, V-Stop, Support Id= C53 2, Connected to Ground, Comp.Wt = 0.000 lb, Gap-Below= 0.00 inch, Gap-Above= 1.00 inch, Friction= 0.80, Gaps setting= Weightless

---

From C55 to C41, DY= -0.03 ft, DZ= -3.50 ft, L= 3.50 ft Run

POINT DATA:
C55, Coordinates, X= 26.19 ft, Y= 684.95 ft, Z= -195.50 ft

SUPPORT DATA:
C55, Guide, Support Id= C55 2, Connected to Ground, Comp.Wt = 0.000 lb, Stiffness= RIGID, Gap-Down= 0.00 inch, Gap-Above= 1.00 inch, Gap-Left= 1.00 inch, Gap-Right= 1.00 inch, Friction= 0.00, Gaps setting= Weightless

---

From C41 to C56, DX= 3.50 ft, DY= -0.03 ft, L= 3.50 ft Bend

COMPONENT DATA (Bend, TIP= C41, Near= C41 N, Far= C41 F):
Elbow, Radius= 36.00 inch, Bend angle= 90.00 deg, End flanges= 0, Flex= Auto, SIFI= 1.00, SIFO= 1.00

POINT DATA:
C41, Coordinates, X= 26.19 ft, Y= 684.92 ft, Z= -199.00 ft
C41 N, Coordinates, X= 26.19 ft, Y= 684.95 ft, Z= -196.00 ft
C41 F, Coordinates, X= 29.19 ft, Y= 684.89 ft, Z= -199.00 ft

From C56 to C57, DX= 6.91 ft, DY= -0.05 ft, L= 6.91 ft Run

POINT DATA:
C56, Coordinates, X= 29.69 ft, Y= 684.89 ft, Z= -199.00 ft

SUPPORT DATA:
C56, Guide, Support Id= C56 2, Connected to Ground, Comp.Wt = 0.000 lb, Stiffness= RIGID, Gap-Down= 0.00 inch, Gap-Above= 1.00 inch, Gap-Left= 1.00 inch, Gap-Right= 1.00 inch, Friction= 0.00, Gaps setting= Weightless

---

From C57 to C44, DX= 3.50 ft, DY= -0.02 ft, L= 3.50 ft Run

POINT DATA:
C57, Coordinates, X= 36.60 ft, Y= 684.84 ft, Z= -199.00 ft

C O M P O N E N T D A T A L I S T I N G

SUPPORT DATA:
C57, Guide, Support Id= C57 2, Connected to Ground, Comp.Wt = 0.000 lb, Stiffness= RIGID,
Gap-Down= 0.00 inch, Gap-Above= 1.00 inch, Gap-Left= 1.00 inch, Gap-Right= 1.00 inch, Friction= 0.00,
Gaps setting= Weightless

From C44 to C58, DY= -0.03 ft, DZ= -3.50 ft, L= 3.50 ft Bend

COMPONENT DATA (Bend, TIP= C44, Near= C44 N, Far= C44 F):
Elbow, Radius= 36.00 inch, Bend angle= 90.00 deg, End flanges= 0, Flex= Auto, SIFI= 1.00, SIFO= 1.00

POINT DATA:
C44, Coordinates, X= 40.10 ft, Y= 684.82 ft, Z= -199.00 ft
C44 N, Coordinates, X= 37.10 ft, Y= 684.84 ft, Z= -199.00 ft
C44 F, Coordinates, X= 40.10 ft, Y= 684.79 ft, Z= -202.00 ft

From C58 to C59, DY= -0.07 ft, DZ= -9.00 ft, L= 9.00 ft Run

POINT DATA:
C58, Coordinates, X= 40.10 ft, Y= 684.79 ft, Z= -202.50 ft

SUPPORT DATA:
C58, Guide, Support Id= C58 2, Connected to Ground, Comp.Wt = 0.000 lb, Stiffness= RIGID,
Gap-Down= 0.00 inch, Gap-Above= 1.00 inch, Gap-Left= 1.00 inch, Gap-Right= 1.00 inch, Friction= 0.00,
Gaps setting= Weightless

From C59 to C60, DY= -0.07 ft, DZ= -9.00 ft, L= 9.00 ft Run

POINT DATA:
C59, Coordinates, X= 40.10 ft, Y= 684.72 ft, Z= -211.50 ft

SUPPORT DATA:
C59, V-Stop, Support Id= C59 2, Connected to Ground, Comp.Wt = 0.000 lb, Gap-Below= 0.00 inch,
Gap-Above= 1.00 inch, Friction= 0.80, Gaps setting= Weightless

---

From C60 to C61, DY= -0.07 ft, DZ= -9.00 ft, L= 9.00 ft Run

POINT DATA:
C60, Coordinates, X= 40.10 ft, Y= 684.65 ft, Z= -220.50 ft

SUPPORT DATA:
C60, V-Stop, Support Id= C60 2, Connected to Ground, Comp.Wt = 0.000 lb, Gap-Below= 0.00 inch,
Gap-Above= 1.00 inch, Friction= 0.80, Gaps setting= Weightless

---

From C61 to C63, DY= -0.06 ft, DZ= -9.00 ft, L= 9.00 ft Run

POINT DATA:
C61, Coordinates, X= 40.10 ft, Y= 684.58 ft, Z= -229.50 ft

SUPPORT DATA:
C61, V-Stop, Support Id= C61 1, Connected to Ground, Comp.Wt = 0.000 lb, Gap-Below= 0.00 inch,

C O M P O N E N T D A T A L I S T I N G

Gap-Above= 1.00 inch, Friction= 0.80, Gaps setting= Weightless

From C63 to C64, DY= -0.07 ft, DZ= -9.00 ft, L= 9.00 ft Run

POINT DATA:
C63, Coordinates, X= 40.10 ft, Y= 684.52 ft, Z= -238.50 ft

SUPPORT DATA:
C63, V-Stop, Support Id= C63 1, Connected to Ground, Comp.Wt = 0.000 lb, Gap-Below= 0.00 inch,
Gap-Above= 1.00 inch, Friction= 0.80, Gaps setting= Weightless

From C64 to C65, DY= -0.06 ft, DZ= -9.00 ft, L= 9.00 ft Run

POINT DATA:
C64, Coordinates, X= 40.10 ft, Y= 684.45 ft, Z= -247.50 ft

SUPPORT DATA:
C64, V-Stop, Support Id= C64 2, Connected to Ground, Comp.Wt = 0.000 lb, Gap-Below= 0.00 inch,
Gap-Above= 1.00 inch, Friction= 0.80, Gaps setting= Weightless

From C65 to C72, DY= -0.07 ft, DZ= -9.00 ft, L= 9.00 ft Run

POINT DATA:
C65, Coordinates, X= 40.10 ft, Y= 684.39 ft, Z= -256.50 ft

SUPPORT DATA:
C65, V-Stop, Support Id= C65 1, Connected to Ground, Comp.Wt = 0.000 lb, Gap-Below= 0.00 inch,
Gap-Above= 1.00 inch, Friction= 0.80, Gaps setting= Weightless

From C72 to C73, DX= 0 ft, DY= -0.08 ft, DZ= -10.74 ft, L= 10.74 ft Run

POINT DATA:
C72, Coordinates, X= 40.10 ft, Y= 684.32 ft, Z= -265.50 ft

SUPPORT DATA:
C72, V-Stop, Support Id= C72 1, Connected to Ground, Comp.Wt = 0.000 lb, Gap-Below= 0.00 inch,
Gap-Above= 1.00 inch, Friction= 0.80, Gaps setting= Weightless

From C73 to C54, DY= -0.02 ft, DZ= -3.50 ft, L= 3.50 ft Run

POINT DATA:
C73, Coordinates, X= 40.10 ft, Y= 684.24 ft, Z= -276.24 ft

SUPPORT DATA:
C73, Guide, Support Id= C73 1, Connected to Ground, Comp.Wt = 0.000 lb, Stiffness= RIGID,
Gap-Down= 0.00 inch, Gap-Above= 1.00 inch, Gap-Left= 1.00 inch, Gap-Right= 1.00 inch, Friction= 0.00,
Gaps setting= Weightless

From C54 to C74, DX= -3.50 ft, DY= -0.03 ft, L= 3.50 ft Bend

C O M P O N E N T D A T A L I S T I N G

COMPONENT DATA (Bend, TIP= C54, Near= C54 N, Far= C54 F):
Elbow, Radius= 36.00 inch, Bend angle= 90.00 deg, End flanges= 0, Flex= Auto, SIFI= 1.00, SIFO= 1.00

POINT DATA:
C54, Coordinates, X= 40.10 ft, Y= 684.22 ft, Z= -279.74 ft
C54 N, Coordinates, X= 40.10 ft, Y= 684.24 ft, Z= -276.74 ft
C54 F, Coordinates, X= 37.10 ft, Y= 684.19 ft, Z= -279.74 ft

From C74 to C75, DX= -9.00 ft, DY= -0.07 ft, L= 9.00 ft Run

POINT DATA:
C74, Coordinates, X= 36.60 ft, Y= 684.19 ft, Z= -279.74 ft

SUPPORT DATA:
C74, Guide, Support Id= C74 1, Connected to Ground, Comp.Wt = 0.000 lb, Stiffness= RIGID,
Gap-Down= 0.00 inch, Gap-Above= 1.00 inch, Gap-Left= 1.00 inch, Gap-Right= 1.00 inch, Friction= 0.00,
Gaps setting= Weightless

From C75 to C76, DX= -9.00 ft, DY= -0.07 ft, L= 9.00 ft Run

POINT DATA:
C75, Coordinates, X= 27.60 ft, Y= 684.12 ft, Z= -279.74 ft

SUPPORT DATA:
C75, V-Stop, Support Id= C75 1, Connected to Ground, Comp.Wt = 0.000 lb, Gap-Below= 0.00 inch,
Gap-Above= 1.00 inch, Friction= 0.80, Gaps setting= Weightless

---
From C76 to C77, DX= -9.00 ft, DY= -0.06 ft, L= 9.00 ft Run

POINT DATA:
C76, Coordinates, X= 18.60 ft, Y= 684.05 ft, Z= -279.74 ft

SUPPORT DATA:
C76, V-Stop, Support Id= C76 1, Connected to Ground, Comp.Wt = 0.000 lb, Gap-Below= 0.00 inch,
Gap-Above= 1.00 inch, Friction= 0.80, Gaps setting= Weightless

---
From C77 to C78, DX= -9.00 ft, DY= -0.07 ft, L= 9.00 ft Run

POINT DATA:
C77, Coordinates, X= 9.60 ft, Y= 683.99 ft, Z= -279.74 ft

SUPPORT DATA:
C77, V-Stop, Support Id= C77 1, Connected to Ground, Comp.Wt = 0.000 lb, Gap-Below= 0.00 inch,
Gap-Above= 1.00 inch, Friction= 0.80, Gaps setting= Weightless

---
From C78 to C79, DX= -8.78 ft, DY= -0.06 ft, L= 8.78 ft Run

POINT DATA:
C78, Coordinates, X= 0.60 ft, Y= 683.92 ft, Z= -279.74 ft

C O M P O N E N T D A T A L I S T I N G

SUPPORT DATA:
C78, V-Stop, Support Id= C78 1, Connected to Ground, Comp.Wt = 0.000 lb, Gap-Below= 0.00 inch,
Gap-Above= 1.00 inch, Friction= 0.80, Gaps setting= Weightless

---
From C79 to C80, DX= -9.00 ft, DY= -0.06 ft, L= 9.00 ft Run

POINT DATA:
C79, Coordinates, X= -8.18 ft, Y= 683.86 ft, Z= -279.74 ft

SUPPORT DATA:
C79, V-Stop, Support Id= C79 1, Connected to Ground, Comp.Wt = 0.000 lb, Gap-Below= 0.00 inch,
Gap-Above= 1.00 inch, Friction= 0.80, Gaps setting= Weightless

---
From C80 to C62, DX= -3.50 ft, DY= -0.03 ft, L= 3.50 ft Run

POINT DATA:
C80, Coordinates, X= -17.18 ft, Y= 683.80 ft, Z= -279.74 ft

SUPPORT DATA:
C80, Guide, Support Id= C80 1, Connected to Ground, Comp.Wt = 0.000 lb, Stiffness= RIGID,
Gap-Down= 0.00 inch, Gap-Above= 1.00 inch, Gap-Left= 1.00 inch, Gap-Right= 1.00 inch, Friction= 0.00,
Gaps setting= Weightless

From C62 to C82, DY= -0.03 ft, DZ= -3.50 ft, L= 3.50 ft Bend

COMPONENT DATA (Bend, TIP= C62, Near= C62 N, Far= C62 F):
Elbow, Radius= 36.00 inch, Bend angle= 90.00 deg, End flanges= 0, Flex= Auto, SIFI= 1.00, SIFO= 1.00

POINT DATA:
C62, Coordinates, X= -20.68 ft, Y= 683.77 ft, Z= -279.74 ft
C62 N, Coordinates, X= -17.68 ft, Y= 683.80 ft, Z= -279.74 ft
C62 F, Coordinates, X= -20.68 ft, Y= 683.74 ft, Z= -282.74 ft

---
From C82 to C81, DY= -0.05 ft, DZ= -5.84 ft, L= 5.84 ft Run

POINT DATA:
C82, Coordinates, X= -20.68 ft, Y= 683.74 ft, Z= -283.24 ft

SUPPORT DATA:
C82, Guide, Support Id= C82 1, Connected to Ground, Comp.Wt = 0.000 lb, Stiffness= RIGID,
Gap-Down= 0.00 inch, Gap-Above= 1.00 inch, Gap-Left= 1.00 inch, Gap-Right= 1.00 inch, Friction= 0.00,
Gaps setting= Weightless

From C81 to C83, DY= -0.04 ft, DZ= -5.83 ft, L= 5.83 ft Run

POINT DATA:
C81, Coordinates, X= -20.68 ft, Y= 683.69 ft, Z= -289.08 ft

SUPPORT DATA:
C81, V-Stop, Support Id= C81 1, Connected to Ground, Comp.Wt = 0.000 lb, Gap-Below= 0.00 inch,

C O M P O N E N T D A T A L I S T I N G

Gap-Above= 1.00 inch, Friction= 0.80, Gaps setting= Weightless

---

From C83 to C66, DY= -0.03 ft, DZ= -3.50 ft, L= 3.50 ft Run

POINT DATA:
C83, Coordinates, X= -20.68 ft, Y= 683.65 ft, Z= -294.91 ft

SUPPORT DATA:
C83, Guide, Support Id= C83 1, Connected to Ground, Comp.Wt = 0.000 lb, Stiffness= RIGID,
Gap-Down= 0.00 inch, Gap-Above= 1.00 inch, Gap-Left= 1.00 inch, Gap-Right= 1.00 inch, Friction= 0.00,
Gaps setting= Weightless

From C66 to C84, DX= 3.50 ft, DY= -0.07 ft, L= 3.50 ft Bend

COMPONENT DATA (Bend, TIP= C66, Near= C66 N, Far= C66 F):
Elbow, Radius= 36.00 inch, Bend angle= 89.99 deg, End flanges= 0, Flex= Auto, SIFI= 1.00, SIFO= 1.00

POINT DATA:
C66, Coordinates, X= -20.68 ft, Y= 683.62 ft, Z= -298.41 ft
C66 N, Coordinates, X= -20.68 ft, Y= 683.65 ft, Z= -295.41 ft
C66 F, Coordinates, X= -17.68 ft, Y= 683.56 ft, Z= -298.41 ft

---

From C84 to C67, DX= 1.80 ft, DY= -0.03 ft, L= 1.80 ft Run

POINT DATA:
C84, Coordinates, X= -17.18 ft, Y= 683.55 ft, Z= -298.41 ft

SUPPORT DATA:
C84, Guide, Support Id= C84 1, Connected to Ground, Comp.Wt = 0.000 lb, Stiffness= RIGID,
Gap-Down= 0.00 inch, Gap-Above= 1.00 inch, Gap-Left= 1.00 inch, Gap-Right= 1.00 inch, Friction= 0.00,
Gaps setting= Weightless

From C67 to C68, DX= 1.00 ft Bend

COMPONENT DATA (Bend, TIP= C67, Near= C67 N, Mid= C67 M, Far= C67 F):
Elbow, Radius= 36.00 inch, Bend angle= 0.96 deg, Mid point at 50.00 percent, End flanges= 0, Flex= Auto,
SIFI= 1.00, SIFO= 1.00

POINT DATA:
C67, Coordinates, X= -15.38 ft, Y= 683.52 ft, Z= -298.41 ft
C67 N, Coordinates, X= -15.40 ft, Y= 683.52 ft, Z= -298.41 ft
C67 M, Coordinates, X= -15.38 ft, Y= 683.52 ft, Z= -298.41 ft
C67 F, Coordinates, X= -15.36 ft, Y= 683.52 ft, Z= -298.41 ft

---

From C68 to C69, DX= 1.00 ft Run

POINT DATA:
C68, Coordinates, X= -14.38 ft, Y= 683.52 ft, Z= -298.41 ft

C O M P O N E N T D A T A L I S T I N G

```
 From C69 to C70, DX= 0.55 ft                                          Run

 POINT DATA:
   C69, Coordinates, X= -13.38 ft, Y= 683.52 ft, Z= -298.41 ft

 ---------------------------------------------------------------------------
 From C70 to C71, DX= 0.19 ft                                          Run

 POINT DATA:
   C70, Coordinates, X= -12.83 ft, Y= 683.52 ft, Z= -298.41 ft
   C71, Coordinates, X= -12.64 ft, Y= 683.52 ft, Z= -298.41 ft

 SUPPORT DATA:
   C70, Anchor, Connected to: Ground, KTX= Rigid, KTY= Rigid, KTZ= Rigid, KRX= Rigid, KRY= Rigid, KRZ= Rigid

 ---------------------------------------------------------------------------
 ---------------------------------------------------------------------------
 *** SEGMENT D

 ---------------------------------------------------------------------------
 From D00 to D01, DZ= -0.19 ft                                         Run

 PIPE DATA:
   Pipe Id= 4SCH40, Composition= Carbon Steel, Pipe Density= 489.00 lb/cu.ft, Pipe Unit Wgt= 10.78 lb/ft

 POINT DATA:
   D00, Coordinates, X= -10.49 ft, Y= 683.52 ft, Z= -303.06 ft

 ---------------------------------------------------------------------------
 From D01 to D02, DZ= -0.55 ft                                         Run

 POINT DATA:
   D01, Coordinates, X= -10.49 ft, Y= 683.52 ft, Z= -303.25 ft

 SUPPORT DATA:
   D01, Anchor, Connected to: Ground, KTX= Rigid, KTY= Rigid, KTZ= Rigid, KRX= Rigid, KRY= Rigid, KRZ= Rigid

 ---------------------------------------------------------------------------
 From D02 to D03, DZ= -1.00 ft                                         Run

 POINT DATA:
   D02, Coordinates, X= -10.49 ft, Y= 683.52 ft, Z= -303.80 ft

 ---------------------------------------------------------------------------
 From D03 to D04, DZ= -3.00 ft                                         Run

 POINT DATA:
   D03, Coordinates, X= -10.49 ft, Y= 683.52 ft, Z= -304.80 ft

 ---------------------------------------------------------------------------
 From D04 to D13, DY= 0.09 ft, DZ= -7.50 ft, L= 7.50 ft                Bend

 COMPONENT DATA (Bend, TIP= D04, Near= D04 N, Mid= D04 M, Far= D04 F):
   Elbow, Radius= 36.00 inch, Bend angle= 0.69 deg, Mid point at 50.00 percent, End flanges= 0, Flex= Auto,
   SIFI= 1.00, SIFO= 1.00
```

C O M P O N E N T D A T A L I S T I N G

POINT DATA:
D04, Coordinates, X= -10.49 ft, Y= 683.52 ft, Z= -307.80 ft
D04 N, Coordinates, X= -10.49 ft, Y= 683.52 ft, Z= -307.78 ft
D04 M, Coordinates, X= -10.49 ft, Y= 683.52 ft, Z= -307.80 ft
D04 F, Coordinates, X= -10.49 ft, Y= 683.52 ft, Z= -307.82 ft

SUPPORT DATA:
D04 M, V-Stop, Support Id= D04 M1, Connected to Ground, Comp.Wt = 0.000 lb, Gap-Below= 0.00 inch,
Gap-Above= 1.00 inch, Friction= 0.80, Gaps setting= Weightless

---
From D13 to D14, DY= 0.10 ft, DZ= -7.53 ft, L= 7.53 ft Run

POINT DATA:
D13, Coordinates, X= -10.49 ft, Y= 683.61 ft, Z= -315.30 ft

SUPPORT DATA:
D13, V-Stop, Support Id= D13 1, Connected to Ground, Comp.Wt = 0.000 lb, Gap-Below= 0.00 inch,
Gap-Above= 1.00 inch, Friction= 0.80, Gaps setting= Weightless

---
From D14 to D08, DY= 0.04 ft, DZ= -3.50 ft, L= 3.50 ft Run

POINT DATA:
D14, Coordinates, X= -10.49 ft, Y= 683.71 ft, Z= -322.83 ft

SUPPORT DATA:
D14, Guide, Support Id= D14 2, Connected to Ground, Comp.Wt = 0.000 lb, Stiffness= RIGID,
Gap-Down= 0.00 inch, Gap-Above= 1.00 inch, Gap-Left= 1.00 inch, Gap-Right= 1.00 inch, Friction= 0.00,
Gaps setting= Weightless

From D08 to D15, DX= 3.50 ft, DY= 0.03 ft, L= 3.50 ft Bend

COMPONENT DATA (Bend, TIP= D08, Near= D08 N, Far= D08 F):
Elbow, Radius= 36.00 inch, Bend angle= 89.99 deg, End flanges= 0, Flex= Auto, SIFI= 1.00, SIFO= 1.00

POINT DATA:
D08, Coordinates, X= -10.49 ft, Y= 683.75 ft, Z= -326.33 ft
D08 N, Coordinates, X= -10.49 ft, Y= 683.72 ft, Z= -323.33 ft
D08 F, Coordinates, X= -7.49 ft, Y= 683.78 ft, Z= -326.33 ft

From D15 to D18, DX= 5.65 ft, DY= 0.05 ft, L= 5.65 ft Run

POINT DATA:
D15, Coordinates, X= -6.99 ft, Y= 683.78 ft, Z= -326.33 ft

SUPPORT DATA:
D15, Guide, Support Id= D15 2, Connected to Ground, Comp.Wt = 0.000 lb, Stiffness= RIGID,
Gap-Down= 0.00 inch, Gap-Above= 1.00 inch, Gap-Left= 1.00 inch, Gap-Right= 1.00 inch, Friction= 0.00,
Gaps setting= Weightless

From D18 to D16, DX= 5.65 ft, DY= 0.06 ft, L= 5.65 ft Run

C O M P O N E N T D A T A L I S T I N G

POINT DATA:
D18, Coordinates, X= -1.34 ft, Y= 683.83 ft, Z= -326.33 ft

SUPPORT DATA:
D18, V-Stop, Support Id= D18 1, Connected to Ground, Comp.Wt = 0.000 lb, Gap-Below= 0.00 inch, Gap-Above= 1.00 inch, Friction= 0.80, Gaps setting= Weightless

---

From D16 to D12, DX= 3.50 ft, DY= 0.04 ft, L= 3.50 ft Run

POINT DATA:
D16, Coordinates, X= 4.31 ft, Y= 683.89 ft, Z= -326.33 ft

SUPPORT DATA:
D16, Guide, Support Id= D16 1, Connected to Ground, Comp.Wt = 0.000 lb, Stiffness= RIGID, Gap-Down= 0.00 inch, Gap-Above= 1.00 inch, Gap-Left= 1.00 inch, Gap-Right= 1.00 inch, Friction= 0.00, Gaps setting= Weightless

---

From D12 to D19, DY= 0.05 ft, DZ= -3.50 ft, L= 3.50 ft Bend

COMPONENT DATA (Bend, TIP= D12, Near= D12 N, Far= D12 F):
Elbow, Radius= 36.00 inch, Bend angle= 89.99 deg, End flanges= 0, Flex= Auto, SIFI= 1.00, SIFO= 1.00

POINT DATA:
D12, Coordinates, X= 7.81 ft, Y= 683.93 ft, Z= -326.33 ft
D12 N, Coordinates, X= 4.81 ft, Y= 683.90 ft, Z= -326.33 ft
D12 F, Coordinates, X= 7.81 ft, Y= 683.97 ft, Z= -329.33 ft

From D19 to D25, DY= 0.12 ft, DZ= -8.87 ft, L= 8.87 ft Run

POINT DATA:
D19, Coordinates, X= 7.81 ft, Y= 683.98 ft, Z= -329.83 ft

SUPPORT DATA:
D19, Guide, Support Id= D19 2, Connected to Ground, Comp.Wt = 0.000 lb, Stiffness= RIGID, Gap-Down= 0.00 inch, Gap-Above= 1.00 inch, Gap-Left= 1.00 inch, Gap-Right= 1.00 inch, Friction= 0.00, Gaps setting= Weightless

---

From D25 to D20, DY= 0.11 ft, DZ= -8.86 ft, L= 8.86 ft Run

POINT DATA:
D25, Coordinates, X= 7.81 ft, Y= 684.10 ft, Z= -338.70 ft

SUPPORT DATA:
D25, V-Stop, Support Id= D25 1, Connected to Ground, Comp.Wt = 0.000 lb, Gap-Below= 0.00 inch, Gap-Above= 1.00 inch, Friction= 0.80, Gaps setting= Weightless

---

From D20 to D17, DY= 0.04 ft, DZ= -3.50 ft, L= 3.50 ft Run

POINT DATA:
D20, Coordinates, X= 7.81 ft, Y= 684.21 ft, Z= -347.56 ft

C O M P O N E N T D A T A L I S T I N G

SUPPORT DATA:
D20, Guide, Support Id= D20 1, Connected to Ground, Comp.Wt = 0.000 lb, Stiffness= RIGID,
Gap-Down= 0.00 inch, Gap-Above= 1.00 inch, Gap-Left= 1.00 inch, Gap-Right= 1.00 inch, Friction= 0.00,
Gaps setting= Weightless

From D17 to D26, DX= 3.50 ft, DY= 0.02 ft, L= 3.50 ft Bend

COMPONENT DATA (Bend, TIP= D17, Near= D17 N, Far= D17 F):
Elbow, Radius= 36.00 inch, Bend angle= 90.00 deg, End flanges= 0, Flex= Auto, SIFI= 1.00, SIFO= 1.00

POINT DATA:
D17, Coordinates, X= 7.81 ft, Y= 684.25 ft, Z= -351.06 ft
D17 N, Coordinates, X= 7.81 ft, Y= 684.22 ft, Z= -348.06 ft
D17 F, Coordinates, X= 10.81 ft, Y= 684.27 ft, Z= -351.06 ft

From D26 to D28, DX= 6.93 ft, DY= 0.03 ft, L= 6.93 ft Run

POINT DATA:
D26, Coordinates, X= 11.31 ft, Y= 684.27 ft, Z= -351.06 ft

SUPPORT DATA:
D26, Guide, Support Id= D26 1, Connected to Ground, Comp.Wt = 0.000 lb, Stiffness= RIGID,
Gap-Down= 0.00 inch, Gap-Above= 1.00 inch, Gap-Left= 1.00 inch, Gap-Right= 1.00 inch, Friction= 0.00,
Gaps setting= Weightless

From D28 to D27, DX= 6.92 ft, DY= 0.03 ft, L= 6.92 ft Run

POINT DATA:
D28, Coordinates, X= 18.24 ft, Y= 684.30 ft, Z= -351.06 ft

SUPPORT DATA:
D28, V-Stop, Support Id= D28 1, Connected to Ground, Comp.Wt = 0.000 lb, Gap-Below= 0.00 inch,
Gap-Above= 1.00 inch, Friction= 0.80, Gaps setting= Weightless

---

From D27 to D21, DX= 3.00 ft, DY= 0.01 ft, L= 3.00 ft Run

POINT DATA:
D27, Coordinates, X= 25.16 ft, Y= 684.33 ft, Z= -351.06 ft

SUPPORT DATA:
D27, V-Stop, Support Id= D27 1, Connected to Ground, Comp.Wt = 0.000 lb, Gap-Below= 0.00 inch,
Gap-Above= 1.00 inch, Friction= 0.80, Gaps setting= Weightless

---

From D21 to D22, DX= 1.00 ft Run

POINT DATA:
D21, Coordinates, X= 28.16 ft, Y= 684.34 ft, Z= -351.06 ft
D22, Coordinates, X= 29.16 ft, Y= 684.34 ft, Z= -351.06 ft

SUPPORT DATA:

C O M P O N E N T D A T A L I S T I N G

D22, Anchor, Connected to: Ground, KTX= Rigid, KTY= Rigid, KTZ= Rigid, KRX= Rigid, KRY= Rigid, KRZ= Rigid

Number of points in the system (Pipe + Frame + Soil): 349 + 0 + 0 = 349

Weight of Empty Pipes	+	Weight of Contents	=	Total Weight of System
16777.9 lb	+	0.0 lb	=	16777.9 lb

C O O R D I N A T E S D A T A L I S T I N G

POINT NAME	COORDINATE (ft) X	Y	Z
*** SEGMENT A			
A02	1.46	693.07	0.00
A03	3.46	693.07	0.00
A23	5.96	693.07	0.00
A04 N	6.19	693.07	0.00
A04	6.46	693.07	0.00
A04 F	6.73	693.02	0.00
A24	14.64	691.56	0.00
A21	22.82	690.05	0.00
A05 N	23.33	689.96	0.00
A05	26.26	689.41	0.00
A05 F	26.26	689.32	-2.98
A22	26.26	689.31	-3.50
A25	26.26	689.05	-12.50
A26	26.26	688.79	-21.50
A27	26.26	688.53	-30.50
A28	26.26	688.27	-39.50
A29	26.26	687.96	-50.17
A06 N	26.26	687.95	-50.67
A06	26.26	687.86	-53.67
A06 F	29.26	687.77	-53.67
A30	29.76	687.76	-53.67
A31	32.52	687.68	-53.67
A07 N	33.02	687.67	-53.67
A07	36.02	687.58	-53.67
A07 F	36.02	687.49	-56.67
A32	36.02	687.47	-57.17
A33	36.02	687.20	-66.17
A34	36.02	686.93	-75.17
A35	36.02	686.66	-84.17
A36	36.02	686.38	-93.17
A37	36.02	686.30	-95.85
A38	36.02	686.03	-104.84
A08 N	36.02	686.01	-105.34
A08	36.02	685.92	-108.34
A08 F	33.02	685.84	-108.34
A39	32.52	685.83	-108.34
A40	28.52	685.73	-108.34
A09 N	28.02	685.72	-108.34
A09	25.02	685.64	-108.34
A09 F	25.02	685.61	-111.34
A41	25.02	685.61	-111.84
A42	25.02	685.54	-120.84
A43	25.02	685.47	-129.84
A44	25.02	685.40	-138.84
A45	25.02	685.33	-147.84
A46	25.02	685.26	-156.84
A47	25.02	685.19	-165.84
A48	25.02	685.12	-174.84
A49	25.02	685.05	-183.84
A50	25.02	685.02	-187.67
A51	25.02	684.95	-196.67

C O O R D I N A T E S D A T A L I S T I N G

POINT NAME	COORDINATE (ft) X	Y	Z
A10 N	25.02	684.95	-197.17
A10	25.02	684.92	-200.17
A10 F	28.02	684.89	-200.17
A52	28.52	684.89	-200.17
A53	35.43	684.84	-200.17
A11 N	35.93	684.84	-200.17
A11	38.93	684.82	-200.17
A11 F	38.93	684.79	-203.17
A54	38.93	684.79	-203.67
A55	38.93	684.72	-212.67
A56	38.93	684.65	-221.67
A57	38.93	684.58	-230.67
A58	38.93	684.51	-239.67
A59	38.93	684.44	-248.67
A60	38.93	684.37	-257.67
A61	38.93	684.31	-266.07
A62	38.93	684.25	-275.07
A12 N	38.93	684.25	-275.57
A12	38.93	684.22	-278.57
A12 F	35.93	684.19	-278.57
A63	35.43	684.19	-278.57
A64	26.43	684.12	-278.57
A65	17.43	684.05	-278.57
A66	8.43	683.99	-278.57
A67	-0.57	683.92	-278.57
A68	-9.35	683.86	-278.57
A69	-18.35	683.80	-278.57
A13 N	-18.85	683.80	-278.57
A13	-21.85	683.77	-278.57
A13 F	-21.85	683.75	-281.57
A70	-21.85	683.75	-282.07
A71	-21.85	683.70	-291.07
A72	-21.85	683.65	-298.66
A14 N	-21.85	683.65	-299.16
A14	-21.85	683.63	-302.16
A14 F	-18.85	683.58	-302.16
A73	-18.35	683.57	-302.16
A15 N	-15.42	683.52	-302.16
A15	-15.39	683.52	-302.16
A15 F	-15.36	683.52	-302.16
A16	-14.39	683.52	-302.16
A17	-13.39	683.52	-302.16
A18	-12.84	683.52	-302.16
A19	-12.65	683.52	-302.16
*** SEGMENT B , LINE # RIGID			
B03	1.46	693.07	2.00
B04	3.46	693.07	2.00
B22	5.96	693.07	2.00
B06 N	6.22	693.07	2.00
B06	6.46	693.07	2.00
B06 F	6.70	693.03	2.00

C O O R D I N A T E S D A T A L I S T I N G

POINT NAME	COORDINATE (ft) X	Y	Z
B23	17.61	691.24	2.00
B24	25.31	689.98	2.00
B09 N	25.81	689.90	2.00
B09	28.76	689.41	2.00
B09 F	28.76	689.32	-0.98
B25	28.76	689.31	-1.50
B26	28.76	689.05	-10.50
B28	28.76	688.79	-19.50
B29	28.76	688.53	-28.50
B31	28.76	688.26	-37.50
B32	28.76	687.96	-47.67
B16 N	28.76	687.95	-48.17
B16	28.76	687.86	-51.17
B16 F	31.76	687.79	-51.17
B33	32.26	687.78	-51.17
B34	35.02	687.72	-51.17
B19 N	35.52	687.71	-51.17
B19	38.52	687.64	-51.17
B19 F	38.52	687.55	-54.17
B35	38.52	687.54	-54.67
B36	38.52	687.29	-63.67
B37	38.52	687.04	-72.67
B38	38.52	686.79	-81.67
B39	38.52	686.54	-90.67
B40	38.52	686.32	-98.34
B42	38.52	686.07	-107.34
B27 N	38.52	686.06	-107.84
B27	38.52	685.97	-110.84
B27 F	35.52	685.89	-110.84
B43	35.02	685.88	-110.84
B45	31.02	685.78	-110.84
B30 N	30.52	685.77	-110.84
B30	27.52	685.70	-110.84
B30 F	27.52	685.67	-113.84
B46	27.52	685.67	-114.34
B47	27.52	685.59	-123.34
B48	27.52	685.51	-132.34
B49	27.52	685.43	-141.34
B50	27.52	685.35	-150.34
B51	27.52	685.28	-159.34
B52	27.52	685.20	-168.34
B53	27.52	685.13	-177.34
B54	27.52	685.06	-185.17
B55	27.52	684.99	-194.17
B41 N	27.52	684.99	-194.67
B41	27.52	684.96	-197.67
B41 F	30.52	684.94	-197.67
B57	31.02	684.94	-197.67
B58	37.93	684.89	-197.67
B44 N	38.43	684.89	-197.67
B44	41.43	684.87	-197.67
B44 F	41.43	684.85	-200.67

C O O R D I N A T E S D A T A L I S T I N G

POINT NAME	COORDINATE (ft) X	Y	Z
B64	41.43	684.85	-201.17
B65	41.43	684.79	-210.17
B66	41.43	684.73	-219.17
B67	41.43	684.67	-228.17
B68	41.43	684.61	-237.17
B69	41.43	684.55	-246.17
B70	41.43	684.49	-255.17
B71	41.43	684.43	-264.17
B72	41.43	684.38	-273.17
B73	41.43	684.35	-278.00
B74	41.43	684.29	-287.00
B56 N	41.43	684.28	-288.00
B56	41.43	684.27	-290.50
B56 F	38.93	684.24	-290.50
B75	38.48	684.24	-290.50
B20 N	38.04	684.23	-290.50
B20	35.54	684.19	-290.50
B20 F	35.54	684.14	-293.00
B77	35.54	684.13	-293.67
B21 N	35.54	684.12	-294.33
B21	35.54	684.07	-296.83
B21 F	33.04	684.04	-296.83
B76	32.54	684.03	-296.83
B59 N	30.71	684.00	-296.83
B59	30.69	684.00	-296.83
B59 M	30.69	684.00	-296.83
B59 F	30.67	684.00	-296.83
B60	29.69	684.00	-296.83
B61	28.69	684.00	-296.83
B62	28.08	684.00	-296.83
B63	27.83	684.00	-296.83
*** SEGMENT C			
C03	1.46	691.07	1.00
C04	3.46	691.07	1.00
C21	5.96	691.07	1.00
C06 N	6.34	691.07	1.00
C06	6.46	691.07	1.00
C06 F	6.58	691.06	1.00
C22	16.95	690.22	1.00
C23	23.94	689.65	1.00
C09 N	24.45	689.61	1.00
C09	27.43	689.37	1.00
C09 F	27.43	689.28	-1.99
C24	27.43	689.27	-2.50
C25	27.43	689.01	-11.50
C26	27.43	688.75	-20.50
C28	27.43	688.49	-29.50
C29	27.43	688.22	-38.50
C31	27.43	687.91	-49.00
C16 N	27.43	687.90	-49.50
C16	27.43	687.81	-52.50

C O O R D I N A T E S D A T A L I S T I N G

POINT NAME	COORDINATE (ft) X	Y	Z
C16 F	30.43	687.74	-52.50
C32	30.93	687.73	-52.50
C33	33.69	687.66	-52.50
C19 N	34.19	687.65	-52.50
C19	37.19	687.58	-52.50
C19 F	37.19	687.49	-55.50
C34	37.19	687.48	-56.00
C35	37.19	687.22	-65.00
C36	37.19	686.96	-74.00
C37	37.19	686.70	-83.00
C38	37.19	686.44	-92.00
C39	37.19	686.29	-97.01
C40	37.19	686.02	-106.00
C27 N	37.19	686.01	-106.50
C27	37.19	685.92	-109.50
C27 F	34.19	685.84	-109.50
C42	33.69	685.83	-109.50
C43	29.69	685.73	-109.50
C30 N	29.19	685.72	-109.50
C30	26.19	685.64	-109.50
C30 F	26.19	685.61	-112.50
C45	26.19	685.61	-113.00
C46	26.19	685.54	-122.00
C47	26.19	685.47	-131.00
C48	26.19	685.40	-140.00
C49	26.19	685.33	-149.00
C50	26.19	685.26	-158.00
C51	26.19	685.19	-167.00
C52	26.19	685.11	-176.00
C53	26.19	685.04	-185.00
C55	26.19	684.95	-195.50
C41 N	26.19	684.95	-196.00
C41	26.19	684.92	-199.00
C41 F	29.19	684.89	-199.00
C56	29.69	684.89	-199.00
C57	36.60	684.84	-199.00
C44 N	37.10	684.84	-199.00
C44	40.10	684.82	-199.00
C44 F	40.10	684.79	-202.00
C58	40.10	684.79	-202.50
C59	40.10	684.72	-211.50
C60	40.10	684.65	-220.50
C61	40.10	684.58	-229.50
C63	40.10	684.52	-238.50
C64	40.10	684.45	-247.50
C65	40.10	684.39	-256.50
C72	40.10	684.32	-265.50
C73	40.10	684.24	-276.24
C54 N	40.10	684.24	-276.74
C54	40.10	684.22	-279.74
C54 F	37.10	684.19	-279.74
C74	36.60	684.19	-279.74

C O O R D I N A T E S D A T A L I S T I N G

POINT NAME	COORDINATE (ft) X	Y	Z
C75	27.60	684.12	-279.74
C76	18.60	684.05	-279.74
C77	9.60	683.99	-279.74
C78	0.60	683.92	-279.74
C79	-8.18	683.86	-279.74
C80	-17.18	683.80	-279.74
C62 N	-17.68	683.80	-279.74
C62	-20.68	683.77	-279.74
C62 F	-20.68	683.74	-282.74
C82	-20.68	683.74	-283.24
C81	-20.68	683.69	-289.08
C83	-20.68	683.65	-294.91
C66 N	-20.68	683.65	-295.41
C66	-20.68	683.62	-298.41
C66 F	-17.68	683.56	-298.41
C84	-17.18	683.55	-298.41
C67 N	-15.40	683.52	-298.41
C67	-15.38	683.52	-298.41
C67 M	-15.38	683.52	-298.41
C67 F	-15.36	683.52	-298.41
C68	-14.38	683.52	-298.41
C69	-13.38	683.52	-298.41
C70	-12.83	683.52	-298.41
C71	-12.64	683.52	-298.41
*** SEGMENT D			
D00	-10.49	683.52	-303.06
D01	-10.49	683.52	-303.25
D02	-10.49	683.52	-303.80
D03	-10.49	683.52	-304.80
D04 N	-10.49	683.52	-307.78
D04	-10.49	683.52	-307.80
D04 M	-10.49	683.52	-307.80
D04 F	-10.49	683.52	-307.82
D13	-10.49	683.61	-315.30
D14	-10.49	683.71	-322.83
D08 N	-10.49	683.72	-323.33
D08	-10.49	683.75	-326.33
D08 F	-7.49	683.78	-326.33
D15	-6.99	683.78	-326.33
D18	-1.34	683.83	-326.33
D16	4.31	683.89	-326.33
D12 N	4.81	683.90	-326.33
D12	7.81	683.93	-326.33
D12 F	7.81	683.97	-329.33
D19	7.81	683.98	-329.83
D25	7.81	684.10	-338.70
D20	7.81	684.21	-347.56
D17 N	7.81	684.22	-348.06
D17	7.81	684.25	-351.06
D17 F	10.81	684.27	-351.06
D26	11.31	684.27	-351.06

C O O R D I N A T E S D A T A L I S T I N G

POINT NAME	COORDINATE (ft) X	Y	Z
D28	18.24	684.30	-351.06
D27	25.16	684.33	-351.06
D21	28.16	684.34	-351.06
D22	29.16	684.34	-351.06

S E G M E N T D A T A L I S T I N G

Segment Name	First Node	Last Node	Line Number	Apply Wind	Apply Bowing	Apply Buoyancy
A	A02	A19		No	No	No
B	B03	B63	RIGID	No	No	No
C	C03	C71		No	No	No
D	D00	D22		No	No	No

```
-----------------------------------------------------------------------------------------------------------------------
Encasement Piping Low Temp
04/24/2020 2018719                                                    BENTLEY
10:51 AM                                                              AutoPIPE Nuclear 12.00.00.16   MODEL  PAGE  52
-----------------------------------------------------------------------------------------------------------------------

                    P I P E   D A T A   L I S T I N G

 Pipe ID/     Nom/ O.D.  -----Thickness(inch)----- Spec  InsuDen/   Weight(lb/ft )    E/  Composition/
 Material     Sch  inch  W.Th. Corr Mill Insu Ling Grav/ LingDen/  Pipe/ Ling/ Total  W/  Steel Group/
 CladMaterial            Clad                        InsMt CladDen   Cont  Insu/        f   Tcr
 ---Line Class---                                          lb/cu.ft        Clad
 ------------ ---- ----- ----- ---- ---- ---- ---- ----- --------  ----- ----- ----- ---- --------------------

 Tag No. : <None>
 4SCH40         4  4.500 0.237 0.01 0.03    0    0     0    0.000  10.78     0 10.78 1.00 Carbon Steel
 A53-B        40S                                          0.000      0     0       1.00 Carbon
                            0                              0.000            0       1.00    650.000



 Tag No. : <None>
 6SCH40         6  6.625 0.280 0.01 0.04    0    0     0    0.000  18.95     0 18.95 1.00 Carbon Steel
 A53-B        40S                                          0.000      0     0       1.00 Carbon
                            0                              0.000            0       1.00    650.000
```

M A T E R I A L D A T A L I S T I N G

Material Name	Pipe ID	Density lb/cu.ft	Pois. Ratio	Temper. deg F	Modulus E6 psi Axial	Hoop	Shear	Expans. in/100ft	Composition
A53-B	4SCH40	489.0	0.30	80.0	29.446	29.446	11.325		Carbon Steel
				30.0	29.663			-0.3769	
A53-B	6SCH40	489.0	0.30	80.0	29.446	29.446	11.325		Carbon Steel
				30.0	29.663			-0.3769	

M A T E R I A L A L L O W A B L E D A T A L I S T I N G

Material Name	Pipe ID	Temper. deg F	Allow. psi	Yield psi	Ultimate	Weld Reduction Factor W
A53-B	4SCH40	80.0	20000.0	35000.0	60000.0	1.000
		30.0	20000.0	35000.0		1.000
A53-B	6SCH40	80.0	20000.0	35000.0	60000.0	1.000
		30.0	20000.0	35000.0		1.000

OPERATING TEMPERATURE AND PRESSURE DATA
STRESSES IN psi

POINT NAME	CASE	PRESS. psi	TEMPER deg F	EXPAN. in/100ft	MODULUS E6 psi	ALLOW STRESS	YIELD STRESS
*** SEGMENT A							
A02	T1	0	30.00	-0.377	29.663	20000	35000
A19	Same as previous point.						
*** SEGMENT B , LINE # RIGID							
B03	T1	0	30.00	-0.377	29.663	20000	35000
B63	Same as previous point.						
*** SEGMENT C							
C03	T1	0	30.00	-0.377	29.663	20000	35000
C71	Same as previous point.						
*** SEGMENT D							
D00	T1	0	30.00	-0.377	29.663	20000	35000
D22	Same as previous point.						

u User-defined value
* Non-code material for allowable stress;
Non-standard material for expansion and modulus

S U P P O R T D A T A L I S T I N G

Point Name	Support Type	Support ID	Conn.to /Dir	Comp.Wt (lb)	Stiff.	Gap 1 (in)	Gap 2 (in)	Fric. Fact.	GapSet /#hgr	Preload (lbf)	Ld.Var	Size	Figure
Tag No.: <None>						Attachment ID: <None>							
A23	V-stop	A23	1 Ground	0.000	Rigid	0.000	1.000	0.00	Weightless				
Tag No.: <None>						Attachment ID: <None>							
A24	V-stop	A24	1 Ground	0.000	Rigid	0.000	1.000	0.80	Weightless				
Tag No.: <None>						Attachment ID: <None>							
A21	Guide-V	A21	1 Ground	0.000	Rigid	0.000	1.000	0.00	Weightless				
	Guide-H	A21	1 Ground	0.000	Rigid	1.000	1.000	0.00	Weightless				
Tag No.: <None>						Attachment ID: <None>							
A22	Guide-V	A22	2 Ground	0.000	Rigid	0.000	1.000	0.00	Weightless				
	Guide-H	A22	2 Ground	0.000	Rigid	1.000	1.000	0.00	Weightless				
Tag No.: <None>						Attachment ID: <None>							
A25	V-stop	A25	2 Ground	0.000	Rigid	0.000	1.000	0.80	Weightless				
Tag No.: <None>						Attachment ID: <None>							
A26	V-stop	A26	2 Ground	0.000	Rigid	0.000	1.000	0.80	Weightless				
Tag No.: <None>						Attachment ID: <None>							
A27	V-stop	A27	2 Ground	0.000	Rigid	0.000	1.000	0.80	Weightless				
Tag No.: <None>						Attachment ID: <None>							
A28	V-stop	A28	2 Ground	0.000	Rigid	0.000	1.000	0.80	Weightless				
Tag No.: <None>						Attachment ID: <None>							
A29	Guide-V	A29	1 Ground	0.000	Rigid	0.000	1.000	0.00	Weightless				
	Guide-H	A29	1 Ground	0.000	Rigid	1.000	1.000	0.00	Weightless				
Tag No.: <None>						Attachment ID: <None>							
A30	Guide-V	A30	1 Ground	0.000	Rigid	0.000	1.000	0.00	Weightless				
	Guide-H	A30	1 Ground	0.000	Rigid	1.000	1.000	0.00	Weightless				
Tag No.: <None>						Attachment ID: <None>							
A31	Guide-V	A31	1 Ground	0.000	Rigid	0.000	1.000	0.00	Weightless				
	Guide-H	A31	1 Ground	0.000	Rigid	1.000	1.000	0.00	Weightless				
Tag No.: <None>						Attachment ID: <None>							
A32	Guide-V	A32	1 Ground	0.000	Rigid	0.000	1.000	0.00	Weightless				
	Guide-H	A32	1 Ground	0.000	Rigid	1.000	1.000	0.00	Weightless				
Tag No.: <None>						Attachment ID: <None>							
A33	V-stop	A33	2 Ground	0.000	Rigid	0.000	1.000	0.80	Weightless				
Tag No.: <None>						Attachment ID: <None>							
A34	V-stop	A34	2 Ground	0.000	Rigid	0.000	1.000	0.80	Weightless				
Tag No.: <None>						Attachment ID: <None>							
A35	V-stop	A35	2 Ground	0.000	Rigid	0.000	1.000	0.80	Weightless				

S U P P O R T D A T A L I S T I N G

Point Name	Support Type	Support ID	Conn.to /Dir	Comp.Wt (lb)	Stiff.	Gap 1 (in)	Gap 2 (in)	Fric. Fact.	GapSet /#hgr	Preload (lbf)	Ld.Var	Size	Figure
Tag No.: <None>						Attachment ID: <None>							
A36	V-stop	A36	2 Ground	0.000	Rigid	0.000	1.000	0.80	Weightless				
Tag No.: <None>						Attachment ID: <None>							
A37	V-stop	A37	2 Ground	0.000	Rigid	0.000	1.000	0.80	Weightless				
Tag No.: <None>						Attachment ID: <None>							
A38	Guide-V	A38	1 Ground	0.000	Rigid	0.000	1.000	0.00	Weightless				
	Guide-H	A38	1 Ground	0.000	Rigid	1.000	1.000	0.00	Weightless				
Tag No.: <None>						Attachment ID: <None>							
A39	Guide-V	A39	1 Ground	0.000	Rigid	0.000	1.000	0.00	Weightless				
	Guide-H	A39	1 Ground	0.000	Rigid	1.000	1.000	0.00	Weightless				
Tag No.: <None>						Attachment ID: <None>							
A40	Guide-V	A40	1 Ground	0.000	Rigid	0.000	1.000	0.00	Weightless				
	Guide-H	A40	1 Ground	0.000	Rigid	1.000	1.000	0.00	Weightless				
Tag No.: <None>						Attachment ID: <None>							
A41	Guide-V	A41	1 Ground	0.000	Rigid	0.000	1.000	0.00	Weightless				
	Guide-H	A41	1 Ground	0.000	Rigid	1.000	1.000	0.00	Weightless				
Tag No.: <None>						Attachment ID: <None>							
A42	V-stop	A42	2 Ground	0.000	Rigid	0.000	1.000	0.80	Weightless				
Tag No.: <None>						Attachment ID: <None>							
A43	V-stop	A43	2 Ground	0.000	Rigid	0.000	1.000	0.80	Weightless				
Tag No.: <None>						Attachment ID: <None>							
A44	V-stop	A44	2 Ground	0.000	Rigid	0.000	1.000	0.80	Weightless				
Tag No.: <None>						Attachment ID: <None>							
A45	V-stop	A45	2 Ground	0.000	Rigid	0.000	1.000	0.80	Weightless				
Tag No.: <None>						Attachment ID: <None>							
A46	V-stop	A46	2 Ground	0.000	Rigid	0.000	1.000	0.80	Weightless				
Tag No.: <None>						Attachment ID: <None>							
A47	V-stop	A47	2 Ground	0.000	Rigid	0.000	1.000	0.80	Weightless				
Tag No.: <None>						Attachment ID: <None>							
A48	V-stop	A48	2 Ground	0.000	Rigid	0.000	1.000	0.80	Weightless				
Tag No.: <None>						Attachment ID: <None>							
A49	V-stop	A49	2 Ground	0.000	Rigid	0.000	1.000	0.80	Weightless				
Tag No.: <None>						Attachment ID: <None>							
A50	V-stop	A50	2 Ground	0.000	Rigid	0.000	1.000	0.80	Weightless				
Tag No.: <None>						Attachment ID: <None>							
A51	Guide-V	A51	1 Ground	0.000	Rigid	0.000	1.000	0.00	Weightless				
	Guide-H	A51	1 Ground	0.000	Rigid	1.000	1.000	0.00	Weightless				

S U P P O R T D A T A L I S T I N G

Point Name	Support Type	Support ID	Conn.to /Dir	Comp.Wt (lb)	Stiff.	Gap 1 (in)	Gap 2 (in)	Fric. Fact.	GapSet /#hgr	Preload (lbf)	Ld.Var	Size	Figure
Tag No.: <None>						Attachment ID: <None>							
A52	Guide-V	A52 1	Ground	0.000	Rigid	0.000	1.000	0.00	Weightless				
	Guide-H	A52 1	Ground	0.000	Rigid	1.000	1.000	0.00	Weightless				
Tag No.: <None>						Attachment ID: <None>							
A53	Guide-V	A53 1	Ground	0.000	Rigid	0.000	1.000	0.00	Weightless				
	Guide-H	A53 1	Ground	0.000	Rigid	1.000	1.000	0.00	Weightless				
Tag No.: <None>						Attachment ID: <None>							
A54	Guide-V	A54 1	Ground	0.000	Rigid	0.000	1.000	0.00	Weightless				
	Guide-H	A54 1	Ground	0.000	Rigid	1.000	1.000	0.00	Weightless				
Tag No.: <None>						Attachment ID: <None>							
A55	V-stop	A55 1	Ground	0.000	Rigid	0.000	1.000	0.80	Weightless				
Tag No.: <None>						Attachment ID: <None>							
A56	V-stop	A56 1	Ground	0.000	Rigid	0.000	1.000	0.80	Weightless				
Tag No.: <None>						Attachment ID: <None>							
A57	V-stop	A57 1	Ground	0.000	Rigid	0.000	1.000	0.80	Weightless				
Tag No.: <None>						Attachment ID: <None>							
A58	V-stop	A58 1	Ground	0.000	Rigid	0.000	1.000	0.80	Weightless				
Tag No.: <None>						Attachment ID: <None>							
A59	V-stop	A59 1	Ground	0.000	Rigid	0.000	1.000	0.80	Weightless				
Tag No.: <None>						Attachment ID: <None>							
A60	V-stop	A60 1	Ground	0.000	Rigid	0.000	1.000	0.80	Weightless				
Tag No.: <None>						Attachment ID: <None>							
A61	V-stop	A61 1	Ground	0.000	Rigid	0.000	1.000	0.80	Weightless				
Tag No.: <None>						Attachment ID: <None>							
A62	Guide-V	A62 1	Ground	0.000	Rigid	0.000	1.000	0.00	Weightless				
	Guide-H	A62 1	Ground	0.000	Rigid	1.000	1.000	0.00	Weightless				
Tag No.: <None>						Attachment ID: <None>							
A63	Guide-V	A63 1	Ground	0.000	Rigid	0.000	1.000	0.00	Weightless				
	Guide-H	A63 1	Ground	0.000	Rigid	1.000	1.000	0.00	Weightless				
Tag No.: <None>						Attachment ID: <None>							
A64	V-stop	A64 2	Ground	0.000	Rigid	0.000	1.000	0.80	Weightless				
Tag No.: <None>						Attachment ID: <None>							
A65	V-stop	A65 2	Ground	0.000	Rigid	0.000	1.000	0.80	Weightless				
Tag No.: <None>						Attachment ID: <None>							
A66	V-stop	A66 2	Ground	0.000	Rigid	0.000	1.000	0.80	Weightless				
Tag No.: <None>						Attachment ID: <None>							
A67	V-stop	A67 2	Ground	0.000	Rigid	0.000	1.000	0.80	Weightless				

S U P P O R T D A T A L I S T I N G

Point Name	Support Type	Support ID	Conn.to /Dir	Comp.Wt (lb)	Stiff.	Gap 1 (in)	Gap 2 (in)	Fric. Fact.	GapSet /#hgr	Preload (lbf)	Ld.Var	Size	Figure
Tag No.: <None>						Attachment ID: <None>							
A68	V-stop	A68 2	Ground	0.000	Rigid	0.000	1.000	0.80	Weightless				
Tag No.: <None>						Attachment ID: <None>							
A69	Guide-V	A69 1	Ground	0.000	Rigid	0.000	1.000	0.00	Weightless				
	Guide-H	A69 1	Ground	0.000	Rigid	1.000	1.000	0.00	Weightless				
Tag No.: <None>						Attachment ID: <None>							
A70	Guide-V	A70 1	Ground	0.000	Rigid	0.000	1.000	0.00	Weightless				
	Guide-H	A70 1	Ground	0.000	Rigid	1.000	1.000	0.00	Weightless				
Tag No.: <None>						Attachment ID: <None>							
A71	V-stop	A71 2	Ground	0.000	Rigid	0.000	1.000	0.80	Weightless				
Tag No.: <None>						Attachment ID: <None>							
A72	Guide-V	A72 1	Ground	0.000	Rigid	0.000	1.000	0.00	Weightless				
	Guide-H	A72 1	Ground	0.000	Rigid	1.000	1.000	0.00	Weightless				
Tag No.: <None>						Attachment ID: <None>							
A73	Guide-V	A73 1	Ground	0.000	Rigid	0.000	1.000	0.00	Weightless				
	Guide-H	A73 1	Ground	0.000	Rigid	1.000	1.000	0.00	Weightless				
Tag No.: <None>						Attachment ID: <None>							
B22	V-stop	B22 2	Ground	0.000	Rigid	0.000	1.000	0.80	Weightless				
Tag No.: <None>						Attachment ID: <None>							
B23	V-stop	B23 2	Ground	0.000	Rigid	0.000	1.000	0.80	Weightless				
Tag No.: <None>						Attachment ID: <None>							
B24	Guide-V	B24 2	Ground	0.000	Rigid	0.000	1.000	0.00	Weightless				
	Guide-H	B24 2	Ground	0.000	Rigid	1.000	1.000	0.00	Weightless				
Tag No.: <None>						Attachment ID: <None>							
B25	Guide-V	B25 2	Ground	0.000	Rigid	0.000	1.000	0.00	Weightless				
	Guide-H	B25 2	Ground	0.000	Rigid	1.000	1.000	0.00	Weightless				
Tag No.: <None>						Attachment ID: <None>							
B26	V-stop	B26 1	Ground	0.000	Rigid	0.000	1.000	0.80	Weightless				
Tag No.: <None>						Attachment ID: <None>							
B28	V-stop	B28 1	Ground	0.000	Rigid	0.000	1.000	0.80	Weightless				
Tag No.: <None>						Attachment ID: <None>							
B29	V-stop	B29 1	Ground	0.000	Rigid	0.000	1.000	0.80	Weightless				
Tag No.: <None>						Attachment ID: <None>							
B31	V-stop	B31 1	Ground	0.000	Rigid	0.000	1.000	0.80	Weightless				
Tag No.: <None>						Attachment ID: <None>							
B32	Guide-V	B32 2	Ground	0.000	Rigid	0.000	1.000	0.00	Weightless				
	Guide-H	B32 2	Ground	0.000	Rigid	1.000	1.000	0.00	Weightless				

S U P P O R T D A T A L I S T I N G

Point Name	Support Type	Support ID	Conn.to /Dir	Comp.Wt (lb)	Stiff.	Gap 1 (in)	Gap 2 (in)	Fric. Fact.	GapSet /#hgr	Preload (lbf)	Ld.Var	Size	Figure
Tag No.: <None>						Attachment ID: <None>							
B33	Guide-V	B33 2	Ground	0.000	Rigid	0.000	1.000	0.00	Weightless				
	Guide-H	B33 2	Ground	0.000	Rigid	1.000	1.000	0.00	Weightless				
Tag No.: <None>						Attachment ID: <None>							
B34	Guide-V	B34 2	Ground	0.000	Rigid	0.000	1.000	0.00	Weightless				
	Guide-H	B34 2	Ground	0.000	Rigid	1.000	1.000	0.00	Weightless				
Tag No.: <None>						Attachment ID: <None>							
B35	Guide-V	B35 2	Ground	0.000	Rigid	0.000	1.000	0.00	Weightless				
	Guide-H	B35 2	Ground	0.000	Rigid	1.000	1.000	0.00	Weightless				
Tag No.: <None>						Attachment ID: <None>							
B36	V-stop	B36 2	Ground	0.000	Rigid	0.000	1.000	0.80	Weightless				
Tag No.: <None>						Attachment ID: <None>							
B37	V-stop	B37 2	Ground	0.000	Rigid	0.000	1.000	0.80	Weightless				
Tag No.: <None>						Attachment ID: <None>							
B38	V-stop	B38 2	Ground	0.000	Rigid	0.000	1.000	0.80	Weightless				
Tag No.: <None>						Attachment ID: <None>							
B39	V-stop	B39 2	Ground	0.000	Rigid	0.000	1.000	0.80	Weightless				
Tag No.: <None>						Attachment ID: <None>							
B40	V-stop	B40 1	Ground	0.000	Rigid	0.000	1.000	0.80	Weightless				
Tag No.: <None>						Attachment ID: <None>							
B42	Guide-V	B42 1	Ground	0.000	Rigid	0.000	1.000	0.00	Weightless				
	Guide-H	B42 1	Ground	0.000	Rigid	1.000	1.000	0.00	Weightless				
Tag No.: <None>						Attachment ID: <None>							
B43	Guide-V	B43 1	Ground	0.000	Rigid	0.000	1.000	0.00	Weightless				
	Guide-H	B43 1	Ground	0.000	Rigid	1.000	1.000	0.00	Weightless				
Tag No.: <None>						Attachment ID: <None>							
B45	Guide-V	B45 1	Ground	0.000	Rigid	0.000	1.000	0.00	Weightless				
	Guide-H	B45 1	Ground	0.000	Rigid	1.000	1.000	0.00	Weightless				
Tag No.: <None>						Attachment ID: <None>							
B46	Guide-V	B46 2	Ground	0.000	Rigid	0.000	1.000	0.00	Weightless				
	Guide-H	B46 2	Ground	0.000	Rigid	1.000	1.000	0.00	Weightless				
Tag No.: <None>						Attachment ID: <None>							
B47	V-stop	B47 2	Ground	0.000	Rigid	0.000	1.000	0.80	Weightless				
Tag No.: <None>						Attachment ID: <None>							
B48	V-stop	B48 2	Ground	0.000	Rigid	0.000	1.000	0.80	Weightless				
Tag No.: <None>						Attachment ID: <None>							
B49	V-stop	B49 2	Ground	0.000	Rigid	0.000	1.000	0.80	Weightless				

S U P P O R T D A T A L I S T I N G

Point Name	Support Type	Support ID	Conn.to /Dir	Comp.Wt (lb)	Stiff.	Gap 1 (in)	Gap 2 (in)	Fric. Fact.	GapSet /#hgr	Preload (lbf)	Ld.Var	Size	Figure
Tag No.: <None>						Attachment ID: <None>							
B50	V-stop	B50	2 Ground	0.000	Rigid	0.000	1.000	0.80	Weightless				
Tag No.: <None>						Attachment ID: <None>							
B51	V-stop	B51	2 Ground	0.000	Rigid	0.000	1.000	0.80	Weightless				
Tag No.: <None>						Attachment ID: <None>							
B52	V-stop	B52	2 Ground	0.000	Rigid	0.000	1.000	0.80	Weightless				
Tag No.: <None>						Attachment ID: <None>							
B53	V-stop	B53	2 Ground	0.000	Rigid	0.000	1.000	0.80	Weightless				
Tag No.: <None>						Attachment ID: <None>							
B54	V-stop	B54	2 Ground	0.000	Rigid	0.000	1.000	0.80	Weightless				
Tag No.: <None>						Attachment ID: <None>							
B55	Guide-V	B55	1 Ground	0.000	Rigid	0.000	1.000	0.00	Weightless				
	Guide-H	B55	1 Ground	0.000	Rigid	1.000	1.000	0.00	Weightless				
Tag No.: <None>						Attachment ID: <None>							
B57	Guide-V	B57	1 Ground	0.000	Rigid	0.000	1.000	0.00	Weightless				
	Guide-H	B57	1 Ground	0.000	Rigid	1.000	1.000	0.00	Weightless				
Tag No.: <None>						Attachment ID: <None>							
B58	Guide-V	B58	1 Ground	0.000	Rigid	0.000	1.000	0.00	Weightless				
	Guide-H	B58	1 Ground	0.000	Rigid	1.000	1.000	0.00	Weightless				
Tag No.: <None>						Attachment ID: <None>							
B64	Guide-V	B64	1 Ground	0.000	Rigid	0.000	1.000	0.00	Weightless				
	Guide-H	B64	1 Ground	0.000	Rigid	1.000	1.000	0.00	Weightless				
Tag No.: <None>						Attachment ID: <None>							
B65	V-stop	B65	1 Ground	0.000	Rigid	0.000	1.000	0.80	Weightless				
Tag No.: <None>						Attachment ID: <None>							
B66	V-stop	B66	1 Ground	0.000	Rigid	0.000	1.000	0.80	Weightless				
Tag No.: <None>						Attachment ID: <None>							
B67	V-stop	B67	1 Ground	0.000	Rigid	0.000	1.000	0.80	Weightless				
Tag No.: <None>						Attachment ID: <None>							
B68	V-stop	B68	1 Ground	0.000	Rigid	0.000	1.000	0.80	Weightless				
Tag No.: <None>						Attachment ID: <None>							
B69	V-stop	B69	1 Ground	0.000	Rigid	0.000	1.000	0.80	Weightless				
Tag No.: <None>						Attachment ID: <None>							
B70	V-stop	B70	1 Ground	0.000	Rigid	0.000	1.000	0.80	Weightless				
Tag No.: <None>						Attachment ID: <None>							
B71	V-stop	B71	1 Ground	0.000	Rigid	0.000	1.000	0.80	Weightless				

S U P P O R T D A T A L I S T I N G

Point Name	Support Type	Support ID	Conn.to /Dir	Comp.Wt (lb)	Stiff.	Gap 1 (in)	Gap 2 (in)	Fric. Fact.	GapSet /#hgr	Preload (lbf)	Ld.Var	Size	Figure
Tag No.: <None>						Attachment ID: <None>							
B72	V-stop	B72	1 Ground	0.000	Rigid	0.000	1.000	0.80	Weightless				
Tag No.: <None>						Attachment ID: <None>							
B73	V-stop	B73	1 Ground	0.000	Rigid	0.000	1.000	0.80	Weightless				
Tag No.: <None>						Attachment ID: <None>							
B74	Guide-V	B74	1 Ground	0.000	Rigid	0.000	1.000	0.00	Weightless				
	Guide-H	B74	1 Ground	0.000	Rigid	1.000	1.000	0.00	Weightless				
Tag No.: <None>						Attachment ID: <None>							
B75	Guide-V	B75	1 Ground	0.000	Rigid	0.000	1.000	0.00	Weightless				
	Guide-H	B75	1 Ground	0.000	Rigid	1.000	1.000	0.00	Weightless				
Tag No.: <None>						Attachment ID: <None>							
B77	Guide-V	B77	1 Ground	0.000	Rigid	0.000	1.000	0.00	Weightless				
	Guide-H	B77	1 Ground	0.000	Rigid	1.000	1.000	0.00	Weightless				
Tag No.: <None>						Attachment ID: <None>							
B76	Guide-V	B76	1 Ground	0.000	Rigid	0.000	1.000	0.00	Weightless				
	Guide-H	B76	1 Ground	0.000	Rigid	1.000	1.000	0.00	Weightless				
Tag No.: <None>						Attachment ID: <None>							
B59 M	V-stop	B59	M1 Ground	0.000	Rigid	0.000	1.000	0.80	Weightless				
Tag No.: <None>						Attachment ID: <None>							
C21	V-stop	C21	2 Ground	0.000	Rigid	0.000	1.000	0.80	Weightless				
Tag No.: <None>						Attachment ID: <None>							
C22	V-stop	C22	2 Ground	0.000	Rigid	0.000	1.000	0.80	Weightless				
Tag No.: <None>						Attachment ID: <None>							
C23	Guide-V	C23	2 Ground	0.000	Rigid	0.000	1.000	0.00	Weightless				
	Guide-H	C23	2 Ground	0.000	Rigid	1.000	1.000	0.00	Weightless				
Tag No.: <None>						Attachment ID: <None>							
C24	Guide-V	C24	2 Ground	0.000	Rigid	0.000	1.000	0.00	Weightless				
	Guide-H	C24	2 Ground	0.000	Rigid	1.000	1.000	0.00	Weightless				
Tag No.: <None>						Attachment ID: <None>							
C25	V-stop	C25	2 Ground	0.000	Rigid	0.000	1.000	0.80	Weightless				
Tag No.: <None>						Attachment ID: <None>							
C26	V-stop	C26	2 Ground	0.000	Rigid	0.000	1.000	0.80	Weightless				
Tag No.: <None>						Attachment ID: <None>							
C28	V-stop	C28	2 Ground	0.000	Rigid	0.000	1.000	0.80	Weightless				
Tag No.: <None>						Attachment ID: <None>							
C29	V-stop	C29	2 Ground	0.000	Rigid	0.000	1.000	0.80	Weightless				
Tag No.: <None>						Attachment ID: <None>							

S U P P O R T D A T A L I S T I N G

Point Name	Support Type	Support ID	Conn.to /Dir	Comp.Wt (lb)	Stiff.	Gap 1 (in)	Gap 2 (in)	Fric. Fact.	GapSet /#hgr	Preload (lbf)	Ld.Var	Size	Figure
C31	Guide-V	C31 2	Ground	0.000	Rigid	0.000	1.000	0.00	Weightless				
	Guide-H	C31 2	Ground	0.000	Rigid	1.000	1.000	0.00	Weightless				
Tag No.: <None>						Attachment ID: <None>							
C32	Guide-V	C32 2	Ground	0.000	Rigid	0.000	1.000	0.00	Weightless				
	Guide-H	C32 2	Ground	0.000	Rigid	1.000	1.000	0.00	Weightless				
Tag No.: <None>						Attachment ID: <None>							
C33	Guide-V	C33 2	Ground	0.000	Rigid	0.000	1.000	0.00	Weightless				
	Guide-H	C33 2	Ground	0.000	Rigid	1.000	1.000	0.00	Weightless				
Tag No.: <None>						Attachment ID: <None>							
C34	Guide-V	C34 2	Ground	0.000	Rigid	0.000	1.000	0.00	Weightless				
	Guide-H	C34 2	Ground	0.000	Rigid	1.000	1.000	0.00	Weightless				
Tag No.: <None>						Attachment ID: <None>							
C35	V-stop	C35 2	Ground	0.000	Rigid	0.000	1.000	0.80	Weightless				
Tag No.: <None>						Attachment ID: <None>							
C36	V-stop	C36 2	Ground	0.000	Rigid	0.000	1.000	0.80	Weightless				
Tag No.: <None>						Attachment ID: <None>							
C37	V-stop	C37 2	Ground	0.000	Rigid	0.000	1.000	0.80	Weightless				
Tag No.: <None>						Attachment ID: <None>							
C38	V-stop	C38 2	Ground	0.000	Rigid	0.000	1.000	0.80	Weightless				
Tag No.: <None>						Attachment ID: <None>							
C39	V-stop	C39 2	Ground	0.000	Rigid	0.000	1.000	0.80	Weightless				
Tag No.: <None>						Attachment ID: <None>							
C40	Guide-V	C40 2	Ground	0.000	Rigid	0.000	1.000	0.00	Weightless				
	Guide-H	C40 2	Ground	0.000	Rigid	1.000	1.000	0.00	Weightless				
Tag No.: <None>						Attachment ID: <None>							
C42	Guide-V	C42 2	Ground	0.000	Rigid	0.000	1.000	0.00	Weightless				
	Guide-H	C42 2	Ground	0.000	Rigid	1.000	1.000	0.00	Weightless				
Tag No.: <None>						Attachment ID: <None>							
C43	Guide-V	C43 2	Ground	0.000	Rigid	0.000	1.000	0.00	Weightless				
	Guide-H	C43 2	Ground	0.000	Rigid	1.000	1.000	0.00	Weightless				
Tag No.: <None>						Attachment ID: <None>							
C45	Guide-V	C45 2	Ground	0.000	Rigid	0.000	1.000	0.00	Weightless				
	Guide-H	C45 2	Ground	0.000	Rigid	1.000	1.000	0.00	Weightless				
Tag No.: <None>						Attachment ID: <None>							
C46	V-stop	C46 2	Ground	0.000	Rigid	0.000	1.000	0.80	Weightless				
Tag No.: <None>						Attachment ID: <None>							
C47	V-stop	C47 2	Ground	0.000	Rigid	0.000	1.000	0.80	Weightless				

S U P P O R T D A T A L I S T I N G

Point Name	Support Type	Support ID	Conn.to /Dir	Comp.Wt (lb)	Stiff.	Gap 1 (in)	Gap 2 (in)	Fric. Fact.	GapSet /#hgr	Preload (lbf)	Ld.Var	Size	Figure
Tag No.: <None>						Attachment ID: <None>							
C48	V-stop	C48	2 Ground	0.000	Rigid	0.000	1.000	0.80	Weightless				
Tag No.: <None>						Attachment ID: <None>							
C49	V-stop	C49	2 Ground	0.000	Rigid	0.000	1.000	0.80	Weightless				
Tag No.: <None>						Attachment ID: <None>							
C50	V-stop	C50	2 Ground	0.000	Rigid	0.000	1.000	0.80	Weightless				
Tag No.: <None>						Attachment ID: <None>							
C51	V-stop	C51	2 Ground	0.000	Rigid	0.000	1.000	0.80	Weightless				
Tag No.: <None>						Attachment ID: <None>							
C52	V-stop	C52	2 Ground	0.000	Rigid	0.000	1.000	0.80	Weightless				
Tag No.: <None>						Attachment ID: <None>							
C53	V-stop	C53	2 Ground	0.000	Rigid	0.000	1.000	0.80	Weightless				
Tag No.: <None>						Attachment ID: <None>							
C55	Guide-V	C55	2 Ground	0.000	Rigid	0.000	1.000	0.00	Weightless				
	Guide-H	C55	2 Ground	0.000	Rigid	1.000	1.000	0.00	Weightless				
Tag No.: <None>						Attachment ID: <None>							
C56	Guide-V	C56	2 Ground	0.000	Rigid	0.000	1.000	0.00	Weightless				
	Guide-H	C56	2 Ground	0.000	Rigid	1.000	1.000	0.00	Weightless				
Tag No.: <None>						Attachment ID: <None>							
C57	Guide-V	C57	2 Ground	0.000	Rigid	0.000	1.000	0.00	Weightless				
	Guide-H	C57	2 Ground	0.000	Rigid	1.000	1.000	0.00	Weightless				
Tag No.: <None>						Attachment ID: <None>							
C58	Guide-V	C58	2 Ground	0.000	Rigid	0.000	1.000	0.00	Weightless				
	Guide-H	C58	2 Ground	0.000	Rigid	1.000	1.000	0.00	Weightless				
Tag No.: <None>						Attachment ID: <None>							
C59	V-stop	C59	2 Ground	0.000	Rigid	0.000	1.000	0.80	Weightless				
Tag No.: <None>						Attachment ID: <None>							
C60	V-stop	C60	2 Ground	0.000	Rigid	0.000	1.000	0.80	Weightless				
Tag No.: <None>						Attachment ID: <None>							
C61	V-stop	C61	1 Ground	0.000	Rigid	0.000	1.000	0.80	Weightless				
Tag No.: <None>						Attachment ID: <None>							
C63	V-stop	C63	1 Ground	0.000	Rigid	0.000	1.000	0.80	Weightless				
Tag No.: <None>						Attachment ID: <None>							
C64	V-stop	C64	2 Ground	0.000	Rigid	0.000	1.000	0.80	Weightless				
Tag No.: <None>						Attachment ID: <None>							
C65	V-stop	C65	1 Ground	0.000	Rigid	0.000	1.000	0.80	Weightless				

S U P P O R T D A T A L I S T I N G

Point Name	Support Type	Support ID	Conn.to /Dir	Comp.Wt (lb)	Stiff.	Gap 1 (in)	Gap 2 (in)	Fric. Fact.	GapSet /#hgr	Preload (lbf)	Ld.Var	Size	Figure
Tag No.: <None>						Attachment ID: <None>							
C72	V-stop	C72 1	Ground	0.000	Rigid	0.000	1.000	0.80		Weightless			
Tag No.: <None>						Attachment ID: <None>							
C73	Guide-V	C73 1	Ground	0.000	Rigid	0.000	1.000	0.00		Weightless			
	Guide-H	C73 1	Ground	0.000	Rigid	1.000	1.000	0.00		Weightless			
Tag No.: <None>						Attachment ID: <None>							
C74	Guide-V	C74 1	Ground	0.000	Rigid	0.000	1.000	0.00		Weightless			
	Guide-H	C74 1	Ground	0.000	Rigid	1.000	1.000	0.00		Weightless			
Tag No.: <None>						Attachment ID: <None>							
C75	V-stop	C75 1	Ground	0.000	Rigid	0.000	1.000	0.80		Weightless			
Tag No.: <None>						Attachment ID: <None>							
C76	V-stop	C76 1	Ground	0.000	Rigid	0.000	1.000	0.80		Weightless			
Tag No.: <None>						Attachment ID: <None>							
C77	V-stop	C77 1	Ground	0.000	Rigid	0.000	1.000	0.80		Weightless			
Tag No.: <None>						Attachment ID: <None>							
C78	V-stop	C78 1	Ground	0.000	Rigid	0.000	1.000	0.80		Weightless			
Tag No.: <None>						Attachment ID: <None>							
C79	V-stop	C79 1	Ground	0.000	Rigid	0.000	1.000	0.80		Weightless			
Tag No.: <None>						Attachment ID: <None>							
C80	Guide-V	C80 1	Ground	0.000	Rigid	0.000	1.000	0.00		Weightless			
	Guide-H	C80 1	Ground	0.000	Rigid	1.000	1.000	0.00		Weightless			
Tag No.: <None>						Attachment ID: <None>							
C82	Guide-V	C82 1	Ground	0.000	Rigid	0.000	1.000	0.00		Weightless			
	Guide-H	C82 1	Ground	0.000	Rigid	1.000	1.000	0.00		Weightless			
Tag No.: <None>						Attachment ID: <None>							
C81	V-stop	C81 1	Ground	0.000	Rigid	0.000	1.000	0.80		Weightless			
Tag No.: <None>						Attachment ID: <None>							
C83	Guide-V	C83 1	Ground	0.000	Rigid	0.000	1.000	0.00		Weightless			
	Guide-H	C83 1	Ground	0.000	Rigid	1.000	1.000	0.00		Weightless			
Tag No.: <None>						Attachment ID: <None>							
C84	Guide-V	C84 1	Ground	0.000	Rigid	0.000	1.000	0.00		Weightless			
	Guide-H	C84 1	Ground	0.000	Rigid	1.000	1.000	0.00		Weightless			
Tag No.: <None>						Attachment ID: <None>							
D04 M	V-stop	D04 M1	Ground	0.000	Rigid	0.000	1.000	0.80		Weightless			
Tag No.: <None>						Attachment ID: <None>							
D13	V-stop	D13 1	Ground	0.000	Rigid	0.000	1.000	0.80		Weightless			
Tag No.: <None>						Attachment ID: <None>							

S U P P O R T D A T A L I S T I N G

Point Name	Support Type	Support ID	Conn.to /Dir	Comp.Wt (lb)	Stiff.	Gap 1 (in)	Gap 2 (in)	Fric. Fact.	GapSet /#hgr	Preload (lbf)	Ld.Var	Size	Figure
D14	Guide-V	D14 2	Ground	0.000	Rigid	0.000	1.000	0.00	Weightless				
	Guide-H	D14 2	Ground	0.000	Rigid	1.000	1.000	0.00	Weightless				
Tag No.: <None>						Attachment ID: <None>							
D15	Guide-V	D15 2	Ground	0.000	Rigid	0.000	1.000	0.00	Weightless				
	Guide-H	D15 2	Ground	0.000	Rigid	1.000	1.000	0.00	Weightless				
Tag No.: <None>						Attachment ID: <None>							
D18	V-stop	D18 1	Ground	0.000	Rigid	0.000	1.000	0.80	Weightless				
Tag No.: <None>						Attachment ID: <None>							
D16	Guide-V	D16 1	Ground	0.000	Rigid	0.000	1.000	0.00	Weightless				
	Guide-H	D16 1	Ground	0.000	Rigid	1.000	1.000	0.00	Weightless				
Tag No.: <None>						Attachment ID: <None>							
D19	Guide-V	D19 2	Ground	0.000	Rigid	0.000	1.000	0.00	Weightless				
	Guide-H	D19 2	Ground	0.000	Rigid	1.000	1.000	0.00	Weightless				
Tag No.: <None>						Attachment ID: <None>							
D25	V-stop	D25 1	Ground	0.000	Rigid	0.000	1.000	0.80	Weightless				
Tag No.: <None>						Attachment ID: <None>							
D20	Guide-V	D20 1	Ground	0.000	Rigid	0.000	1.000	0.00	Weightless				
	Guide-H	D20 1	Ground	0.000	Rigid	1.000	1.000	0.00	Weightless				
Tag No.: <None>						Attachment ID: <None>							
D26	Guide-V	D26 1	Ground	0.000	Rigid	0.000	1.000	0.00	Weightless				
	Guide-H	D26 1	Ground	0.000	Rigid	1.000	1.000	0.00	Weightless				
Tag No.: <None>						Attachment ID: <None>							
D28	V-stop	D28 1	Ground	0.000	Rigid	0.000	1.000	0.80	Weightless				
Tag No.: <None>						Attachment ID: <None>							
D27	V-stop	D27 1	Ground	0.000	Rigid	0.000	1.000	0.80	Weightless				

Spring Manufacturer: Anvil/Grinnell
NOTE 1: No soil supports present in the system.
Gap 1 : V-stop,Guide-V=down, Linestop,Incline,Tie/link=backward, Guide-H=Left
Gap 2 : V-stop,Guide-V=Up , Linestop,Incline,Tie/link=forward , Guide-H=Right
Stiffness units for rotation support: ft-lb/deg, all others: lb/in

B E N D D A T A L I S T I N G

Point Name	Bend Type	Radius (in)	Angle (deg)	OD (in)	tnom (in)	Material	Flan^ /Cuts	SIF in	SIF out	Analysis Set	Flexibility (K)	Pressure Case
A04	Elbow	36.00	10.5	4.500	0.237	A53-B	0/0	1.00	1.00	1	1.00	None
A05	Elbow	36.00	89.7	4.500	0.237	A53-B	0/0	1.00	1.00	1	1.00	None
A06	Elbow	36.00	90.0	4.500	0.237	A53-B	0/0	1.00	1.00	1	1.00	None
A07	Elbow	36.00	89.9	4.500	0.237	A53-B	0/0	1.00	1.00	1	1.00	None
A08	Elbow	36.00	90.0	4.500	0.237	A53-B	0/0	1.00	1.00	1	1.00	None
A09	Elbow	36.00	90.0	4.500	0.237	A53-B	0/0	1.00	1.00	1	1.00	None
A10	Elbow	36.00	90.0	4.500	0.237	A53-B	0/0	1.00	1.00	1	1.00	None
A11	Elbow	36.00	90.0	4.500	0.237	A53-B	0/0	1.00	1.00	1	1.00	None
A12	Elbow	36.00	90.0	4.500	0.237	A53-B	0/0	1.00	1.00	1	1.00	None
A13	Elbow	36.00	90.0	4.500	0.237	A53-B	0/0	1.00	1.00	1	1.00	None
A14	Elbow	36.00	90.0	4.500	0.237	A53-B	0/0	1.00	1.00	1	1.00	None
A15	Elbow	36.00	1.0	4.500	0.237	A53-B	0/0	1.00	1.00	1	1.00	None
B06	Elbow	36.00	9.3	6.625	0.280	A53-B	0/0	1.00	1.00	1	1.65	None
B09	Elbow	36.00	89.7	6.625	0.280	A53-B	0/0	1.00	1.00	1	1.65	None
B16	Elbow	36.00	90.0	6.625	0.280	A53-B	0/0	1.00	1.00	1	1.65	None
B19	Elbow	36.00	90.0	6.625	0.280	A53-B	0/0	1.00	1.00	1	1.65	None
B27	Elbow	36.00	90.0	6.625	0.280	A53-B	0/0	1.00	1.00	1	1.65	None
B30	Elbow	36.00	90.0	6.625	0.280	A53-B	0/0	1.00	1.00	1	1.65	None
B41	Elbow	36.00	90.0	6.625	0.280	A53-B	0/0	1.00	1.00	1	1.65	None
B44	Elbow	36.00	90.0	6.625	0.280	A53-B	0/0	1.00	1.00	1	1.65	None
B56	Elbow	30.00	90.0	6.625	0.280	A53-B	0/0	1.02	1.00	1	1.98	None
B20	Elbow	30.00	90.0	6.625	0.280	A53-B	0/0	1.02	1.00	1	1.98	None
B21	Elbow	30.00	90.0	6.625	0.280	A53-B	0/0	1.02	1.00	1	1.98	None
B59	*Elbow	36.00	0.9	6.625	0.280	A53-B	0/0	1.00	1.00	1	1.65	None
C06	Elbow	36.00	4.6	4.500	0.237	A53-B	0/0	1.00	1.00	1	1.00	None
C09	Elbow	36.00	89.9	4.500	0.237	A53-B	0/0	1.00	1.00	1	1.00	None
C16	Elbow	36.00	90.0	4.500	0.237	A53-B	0/0	1.00	1.00	1	1.00	None
C19	Elbow	36.00	90.0	4.500	0.237	A53-B	0/0	1.00	1.00	1	1.00	None
C27	Elbow	36.00	90.0	4.500	0.237	A53-B	0/0	1.00	1.00	1	1.00	None
C30	Elbow	36.00	90.0	4.500	0.237	A53-B	0/0	1.00	1.00	1	1.00	None
C41	Elbow	36.00	90.0	4.500	0.237	A53-B	0/0	1.00	1.00	1	1.00	None
C44	Elbow	36.00	90.0	4.500	0.237	A53-B	0/0	1.00	1.00	1	1.00	None
C54	Elbow	36.00	90.0	4.500	0.237	A53-B	0/0	1.00	1.00	1	1.00	None
C62	Elbow	36.00	90.0	4.500	0.237	A53-B	0/0	1.00	1.00	1	1.00	None
C66	Elbow	36.00	90.0	4.500	0.237	A53-B	0/0	1.00	1.00	1	1.00	None
C67	*Elbow	36.00	1.0	4.500	0.237	A53-B	0/0	1.00	1.00	1	1.00	None
D04	*Elbow	36.00	0.7	4.500	0.237	A53-B	0/0	1.00	1.00	1	1.00	None
D08	Elbow	36.00	90.0	4.500	0.237	A53-B	0/0	1.00	1.00	1	1.00	None
D12	Elbow	36.00	90.0	4.500	0.237	A53-B	0/0	1.00	1.00	1	1.00	None
D17	Elbow	36.00	90.0	4.500	0.237	A53-B	0/0	1.00	1.00	1	1.00	None

^ = Number of bend ends where either a flange or valve is within distance
(L/D) x Nominal diameter, where L/D is defined under Tools > Model options > Edit
* = Mid-point present

L O A D C A S E D E S C R I P T I O N

Load Case	Load Case Name	Description
GR	Gravity	
T1	Thermal 1	
P1	Press 1	

A N A L Y S I S S U M M A R Y

Current model revision number : 1

Constant values used
Acceleration due to gravity..... 386.40000 in/s/s
Density of water for specific gravity Cal.. 62.400 lb/cu.ft
Density of sea water..... 62.400 lb/cu.ft
Density of ground water ..... 62.400 lb/cu.ft

Static - Analysis set number 1
Date and Time of analysis ..... Apr 24, 2020 10:03 AM
Model Revision Number 1
Number of load cases 3
Load cases analyzed ..... GR T1 P1
Description ..... Analysis Set No.1
Gaps/Friction/Soil considered ..... Yes
Tolerance - Force, Displacement ..... 10.00 lbf 0.0010 in
Friction - Scale Factor, Tolerance 1.00 0.10
Ignore friction for cases E1,E2,E3 .... Yes
Ignore friction for gravity case ..... Yes
Hanger design run ..... No
Cut short included ..... No
Thermal bowing included ..... No
Include Bourdon rotational effect ..... No
Pipe radius for Bourdon calculation ... Mean
Occasional load analysis type ..... Nonlinear
Non-linear analysis summary file .....
Encasement Piping Low Temp.LOG
Use default load sequence ..... Yes
Base load cases for nonlinear analysis
GR = None
T1 = GR
P1 = T1
Weight of contents included ..... Yes
Fluid density factor for contents 1.00
Pressure stiffening case ..... None
Hot modulus case ..... None
Pressure Extension..... Yes
Water elevation for buoyancy loads .... Not considered
Use corroded thickness in analysis .... Yes
Rigid stiffness factor 1000.0
Support rigid stiffness (translation) . 0.100000E+11 lb/in
Support rigid stiffness (rotation) .... 0.100000E+11 ft-lb/deg
Anchor rigid stiffness (translation) .. 0.100000E+11 lb/in
Anchor rigid stiffness (rotation) ..... 0.100000E+11 ft-lb/deg
Remove Lift-Off Supports ..... No

CODE COMPLIANCE COMBINATIONS

<Description> Combination	Category	Method	Case/Combination	Factor	M/S	K-Factor	Allowable (psi)	D/A/P/C
GR + Max P{1}	Sustain	Sum	GR[1]	1.00			Automatic	Y Y Y Y
			Max Long	1.00				
Max Range	Expansion	Sum	Temp. Range	1.00			Automatic	Y Y Y Y
Amb to T1{1}	Expansion	Sum	T1[1]	1.00			Automatic	Y Y Y Y
Max P{1}	Hoop	Sum	Max Hoop	1.00			Automatic	Y Y Y Y

Notes:

D/A/P/C: [D]efault/[A]uto-Update/[P]rint options/[C]Consistent (Y=Yes, N=No)

NON-CODE COMBINATIONS

<Description> Combination	Method	Case/Combination	Factor	D/A/P/C
Gravity{1}	Sum	GR[1]	1.00	Y Y Y Y
<30.00 deg F> Thermal 1{1}	Sum	T1[1]	1.00	Y Y N N
Pressure 1{1}	Sum	P1[1]	1.00	Y Y N N
GT1{1}	Sum	GR[1]	1.00	Y Y Y Y
		T1[1]	1.00	
GT1P1{1}	Sum	GR[1]	1.00	Y Y Y Y
		T1[1]	1.00	
		P1[1]	1.00	

Notes:

D/A/P/C: [D]efault/[A]uto-Update/[P]rint options/[C]Consistent (Y=Yes, N=No)

CODE COMPLIANCE

```
Y - Factor ............................ 0.40
Design Pressure Factor ................ 1.00
Minimum stress ratio used in reports... 0.00
Number of stress points per span ...... 0
Include corrosion in stress calcs. .... Y
Include corrosion in Hoop stress calcs. Y
Include torsion in code stress ........ N
Include axial force in code stress .... Y
Include sustain load margin ........... Only if allowable stress is exceeded
Use minimum sustained margin........... Y
Set sustained SIF=1 no bends .......... N
Set occasional SIF = 1 ................ N
Set occasional SIF = 0.75i ............ Y
Apply cold/hot modulus ratio .......... N
Disable auto code combinations ........ N
Disable auto non-code combinations .... N
No. of thermal ranges to report ....... 0
Include Max Range combination ......... Y
Total stress .......................... Octahedral
Direct shear .......................... None
Longitudinal pressure calculation ..... AxF/area
Use code case 178 ..................... Y
Inc. Axial Str and Pcase in Sustained.. Y
Use alternate occasional allowable .... N
Apply circumferential weld WC factor .. N
ASME B31J Enabled ..................... N
```

R E S T R A I N T R E A C T I O N S

Point name	Load combination	FORCES (lbf) X	Y	Z	Result	MOMENTS (ft-lb) X	Y	Z	Result
A02	Anchor Tag No.: <None>					Connected to: Ground			
	Gravity{1}	19	-11	-9	24	10	154	1	154
	GT1{1}	87	5	-9	88	10	223	25	225
	GT1P1{1}	87	5	-9	88	10	223	25	225
A23	V - Stop Tag No.: <None> [ID: A23 1]								
	Gravity{1}	0	-87	0	87	0	0	0	0
	GT1{1}	0	-130	0	130	0	0	0	0
	GT1P1{1}	0	-130	0	130	0	0	0	0
A24	V - Stop Tag No.: <None> [ID: A24 1]								
	Gravity{1}	0	-92	0	92	0	0	0	0
	GT1{1}	-28	-49	-28	63	0	0	0	0
	GT1P1{1}	-28	-49	-28	63	0	0	0	0
A21	Guide Tag No.: <None> [ID: A21 1]								
	Gravity{1}	-17	-89	0	91	0	0	0	0
	GT1{1}	-28	-148	0	150	0	0	0	0
	GT1P1{1}	-28	-148	0	150	0	0	0	0
A22	Guide Tag No.: <None> [ID: A22 2]								
	Gravity{1}	0	-54	2	54	0	0	0	0
	GT1{1}	0	0	0	0	0	0	0	0
	GT1P1{1}	0	0	0	0	0	0	0	0
A25	V - Stop Tag No.: <None> [ID: A25 2]								
	Gravity{1}	0	-112	0	112	0	0	0	0
	GT1{1}	-37	-129	-96	165	0	0	0	0
	GT1P1{1}	-37	-129	-96	165	0	0	0	0
A26	V - Stop Tag No.: <None> [ID: A26 2]								
	Gravity{1}	0	-94	0	94	0	0	0	0
	GT1{1}	0	-92	-74	118	0	0	0	0
	GT1P1{1}	0	-92	-74	118	0	0	0	0
A27	V - Stop Tag No.: <None> [ID: A27 2]								
	Gravity{1}	0	-90	0	90	0	0	0	0
	GT1{1}	-1	-92	19	94	0	0	0	0
	GT1P1{1}	-1	-92	19	94	0	0	0	0
A28	V - Stop Tag No.: <None> [ID: A28 2]								
	Gravity{1}	0	-122	0	122	0	0	0	0
	GT1{1}	55	-116	74	148	0	0	0	0
	GT1P1{1}	55	-116	74	148	0	0	0	0
A29	Guide Tag No.: <None> [ID: A29 1]								
	Gravity{1}	0	-66	2	66	0	0	0	0
	GT1{1}	0	-79	2	79	0	0	0	0
	GT1P1{1}	0	-79	2	79	0	0	0	0

R E S T R A I N T R E A C T I O N S

Point name	Load combination	FORCES (lbf) X	Y	Z	Result	MOMENTS (ft-lb) X	Y	Z	Result
A30	Guide Tag No.: <None> [ID: A30 1]								
	Gravity{1}	-1	-41	0	41	0	0	0	0
	GT1{1}	0	-7	0	7	0	0	0	0
	GT1P1{1}	0	-7	0	7	0	0	0	0
A31	Guide Tag No.: <None> [ID: A31 1]								
	Gravity{1}	-3	-91	0	91	0	0	0	0
	GT1{1}	-4	-127	0	127	0	0	0	0
	GT1P1{1}	-4	-127	0	127	0	0	0	0
A32	Guide Tag No.: <None> [ID: A32 1]								
	Gravity{1}	0	-35	1	35	0	0	0	0
	GT1{1}	0	-20	1	20	0	0	0	0
	GT1P1{1}	0	-20	1	20	0	0	0	0
A33	V - Stop Tag No.: <None> [ID: A33 2]								
	Gravity{1}	0	-120	0	120	0	0	0	0
	GT1{1}	-49	-128	-90	164	0	0	0	0
	GT1P1{1}	-49	-128	-90	164	0	0	0	0
A34	V - Stop Tag No.: <None> [ID: A34 2]								
	Gravity{1}	0	-88	0	88	0	0	0	0
	GT1{1}	4	-88	-70	112	0	0	0	0
	GT1P1{1}	4	-88	-70	112	0	0	0	0
A35	V - Stop Tag No.: <None> [ID: A35 2]								
	Gravity{1}	0	-104	0	104	0	0	0	0
	GT1{1}	2	-102	82	131	0	0	0	0
	GT1P1{1}	2	-102	82	131	0	0	0	0
A36	V - Stop Tag No.: <None> [ID: A36 2]								
	Gravity{1}	0	-39	0	39	0	0	0	0
	GT1{1}	-17	-47	33	60	0	0	0	0
	GT1P1{1}	-17	-47	33	60	0	0	0	0
A37	V - Stop Tag No.: <None> [ID: A37 2]								
	Gravity{1}	0	-88	0	88	0	0	0	0
	GT1{1}	-33	-72	48	93	0	0	0	0
	GT1P1{1}	-33	-72	48	93	0	0	0	0
A38	Guide Tag No.: <None> [ID: A38 1]								
	Gravity{1}	0	-81	3	81	0	0	0	0
	GT1{1}	0	-100	3	100	0	0	0	0
	GT1P1{1}	0	-100	3	100	0	0	0	0
A39	Guide Tag No.: <None> [ID: A39 1]								
	Gravity{1}	1	-60	0	60	0	0	0	0
	GT1{1}	1	-30	0	30	0	0	0	0
	GT1P1{1}	1	-30	0	30	0	0	0	0

R E S T R A I N T R E A C T I O N S

Point name	Load combination	FORCES (lbf) X	Y	Z	Result	MOMENTS (ft-lb) X	Y	Z	Result
A40	Guide Tag No.: <None> [ID: A40 1]								
	Gravity{1}	0	-12	0	12	0	0	0	0
	GT1{1}	1	-34	0	34	0	0	0	0
	GT1P1{1}	1	-34	0	34	0	0	0	0
A41	Guide Tag No.: <None> [ID: A41 1]								
	Gravity{1}	0	-107	1	107	0	0	0	0
	GT1{1}	0	-96	1	96	0	0	0	0
	GT1P1{1}	0	-96	1	96	0	0	0	0
A42	V - Stop Tag No.: <None> [ID: A42 2]								
	Gravity{1}	0	-94	0	94	0	0	0	0
	GT1{1}	41	-98	-67	125	0	0	0	0
	GT1P1{1}	41	-98	-67	125	0	0	0	0
A43	V - Stop Tag No.: <None> [ID: A43 2]								
	Gravity{1}	0	-97	0	97	0	0	0	0
	GT1{1}	13	-97	-76	124	0	0	0	0
	GT1P1{1}	13	-97	-76	124	0	0	0	0
A44	V - Stop Tag No.: <None> [ID: A44 2]								
	Gravity{1}	0	-97	0	97	0	0	0	0
	GT1{1}	-4	-98	-78	126	0	0	0	0
	GT1P1{1}	-4	-98	-78	126	0	0	0	0
A45	V - Stop Tag No.: <None> [ID: A45 2]								
	Gravity{1}	0	-97	0	97	0	0	0	0
	GT1{1}	-3	-97	-82	128	0	0	0	0
	GT1P1{1}	-3	-97	-82	128	0	0	0	0
A46	V - Stop Tag No.: <None> [ID: A46 2]								
	Gravity{1}	0	-97	0	97	0	0	0	0
	GT1{1}	-1	-97	77	124	0	0	0	0
	GT1P1{1}	-1	-97	77	124	0	0	0	0
A47	V - Stop Tag No.: <None> [ID: A47 2]								
	Gravity{1}	0	-96	0	96	0	0	0	0
	GT1{1}	-3	-95	76	122	0	0	0	0
	GT1P1{1}	-3	-95	76	122	0	0	0	0
A48	V - Stop Tag No.: <None> [ID: A48 2]								
	Gravity{1}	0	-102	0	102	0	0	0	0
	GT1{1}	5	-101	81	130	0	0	0	0
	GT1P1{1}	5	-101	81	130	0	0	0	0
A49	V - Stop Tag No.: <None> [ID: A49 2]								
	Gravity{1}	0	-58	0	58	0	0	0	0
	GT1{1}	16	-61	46	78	0	0	0	0
	GT1P1{1}	16	-61	46	78	0	0	0	0

R E S T R A I N T R E A C T I O N S

Point name	Load combination	FORCES (lbf) X	Y	Z	Result	MOMENTS (ft-lb) X	Y	Z	Result
A50	V - Stop Tag No.: <None> [ID: A50 2]								
	Gravity{1}	0	-79	0	79	0	0	0	0
	GT1{1}	26	-73	52	94	0	0	0	0
	GT1P1{1}	26	-73	52	94	0	0	0	0
A51	Guide Tag No.: <None> [ID: A51 1]								
	Gravity{1}	0	-76	1	76	0	0	0	0
	GT1{1}	0	-84	1	84	0	0	0	0
	GT1P1{1}	0	-84	1	84	0	0	0	0
A52	Guide Tag No.: <None> [ID: A52 1]								
	Gravity{1}	0	-67	0	67	0	0	0	0
	GT1{1}	0	-58	0	58	0	0	0	0
	GT1P1{1}	0	-58	0	58	0	0	0	0
A53	Guide Tag No.: <None> [ID: A53 1]								
	Gravity{1}	0	-70	0	70	0	0	0	0
	GT1{1}	0	-77	0	77	0	0	0	0
	GT1P1{1}	0	-77	0	77	0	0	0	0
A54	Guide Tag No.: <None> [ID: A54 1]								
	Gravity{1}	0	-73	1	73	0	0	0	0
	GT1{1}	0	-67	1	67	0	0	0	0
	GT1P1{1}	0	-67	1	67	0	0	0	0
A55	V - Stop Tag No.: <None> [ID: A55 1]								
	Gravity{1}	0	-105	0	105	0	0	0	0
	GT1{1}	-37	-108	-78	138	0	0	0	0
	GT1P1{1}	-37	-108	-78	138	0	0	0	0
A56	V - Stop Tag No.: <None> [ID: A56 1]								
	Gravity{1}	0	-94	0	94	0	0	0	0
	GT1{1}	-10	-94	-75	121	0	0	0	0
	GT1P1{1}	-10	-94	-75	121	0	0	0	0
A57	V - Stop Tag No.: <None> [ID: A57 1]								
	Gravity{1}	0	-98	0	98	0	0	0	0
	GT1{1}	2	-99	-80	127	0	0	0	0
	GT1P1{1}	2	-99	-80	127	0	0	0	0
A58	V - Stop Tag No.: <None> [ID: A58 1]								
	Gravity{1}	0	-96	0	96	0	0	0	0
	GT1{1}	4	-96	51	109	0	0	0	0
	GT1P1{1}	4	-96	51	109	0	0	0	0
A59	V - Stop Tag No.: <None> [ID: A59 1]								
	Gravity{1}	0	-99	0	99	0	0	0	0
	GT1{1}	5	-98	78	125	0	0	0	0
	GT1P1{1}	5	-98	78	125	0	0	0	0

R E S T R A I N T R E A C T I O N S

Point name	Load combination	FORCES (lbf) X	Y	Z	Result	MOMENTS (ft-lb) X	Y	Z	Result
A60	V - Stop Tag No.: <None> [ID: A60 1]								
	Gravity{1}	0	-89	0	89	0	0	0	0
	GT1{1}	-4	-90	71	115	0	0	0	0
	GT1P1{1}	-4	-90	71	115	0	0	0	0
A61	V - Stop Tag No.: <None> [ID: A61 1]								
	Gravity{1}	0	-104	0	104	0	0	0	0
	GT1{1}	-34	-100	73	128	0	0	0	0
	GT1P1{1}	-34	-100	73	128	0	0	0	0
A62	Guide Tag No.: <None> [ID: A62 1]								
	Gravity{1}	0	-67	1	67	0	0	0	0
	GT1{1}	0	-74	1	74	0	0	0	0
	GT1P1{1}	0	-74	1	74	0	0	0	0
A63	Guide Tag No.: <None> [ID: A63 1]								
	Gravity{1}	1	-81	0	81	0	0	0	0
	GT1{1}	1	-74	0	74	0	0	0	0
	GT1P1{1}	1	-74	0	74	0	0	0	0
A64	V - Stop Tag No.: <None> [ID: A64 2]								
	Gravity{1}	0	-101	0	101	0	0	0	0
	GT1{1}	-71	-104	44	134	0	0	0	0
	GT1P1{1}	-71	-104	44	134	0	0	0	0
A65	V - Stop Tag No.: <None> [ID: A65 2]								
	Gravity{1}	0	-96	0	96	0	0	0	0
	GT1{1}	-76	-95	-1	122	0	0	0	0
	GT1P1{1}	-76	-95	-1	122	0	0	0	0
A66	V - Stop Tag No.: <None> [ID: A66 2]								
	Gravity{1}	0	-98	0	98	0	0	0	0
	GT1{1}	-8	-99	-4	99	0	0	0	0
	GT1P1{1}	-8	-99	-4	99	0	0	0	0
A67	V - Stop Tag No.: <None> [ID: A67 2]								
	Gravity{1}	0	-94	0	94	0	0	0	0
	GT1{1}	75	-94	0	120	0	0	0	0
	GT1P1{1}	75	-94	0	120	0	0	0	0
A68	V - Stop Tag No.: <None> [ID: A68 2]								
	Gravity{1}	0	-102	0	102	0	0	0	0
	GT1{1}	75	-100	-28	128	0	0	0	0
	GT1P1{1}	75	-100	-28	128	0	0	0	0
A69	Guide Tag No.: <None> [ID: A69 1]								
	Gravity{1}	1	-74	0	74	0	0	0	0
	GT1{1}	1	-78	0	78	0	0	0	0
	GT1P1{1}	1	-78	0	78	0	0	0	0

R E S T R A I N T R E A C T I O N S

Point name	Load combination	FORCES (lbf) X	Y	Z	Result	MOMENTS (ft-lb) X	Y	Z	Result
A70	Guide Tag No.: <None>	[ID: A70 1]							
	Gravity{1}	0	-75	0	75	0	0	0	0
	GT1{1}	0	-72	0	72	0	0	0	0
	GT1P1{1}	0	-72	0	72	0	0	0	0
A71	V - Stop Tag No.: <None>	[ID: A71 2]							
	Gravity{1}	0	-99	0	99	0	0	0	0
	GT1{1}	75	-100	-27	128	0	0	0	0
	GT1P1{1}	75	-100	-27	128	0	0	0	0
A72	Guide Tag No.: <None>	[ID: A72 1]							
	Gravity{1}	0	-67	0	67	0	0	0	0
	GT1{1}	0	-70	0	70	0	0	0	0
	GT1P1{1}	0	-70	0	70	0	0	0	0
A73	Guide Tag No.: <None>	[ID: A73 1]							
	Gravity{1}	-1	-61	0	61	0	0	0	0
	GT1{1}	-1	-56	0	56	0	0	0	0
	GT1P1{1}	-1	-56	0	56	0	0	0	0
A18	Anchor Tag No.: <None>					Connected to: Ground			
	Gravity{1}	0	-31	-1	31	0	-14	26	29
	GT1{1}	-39	-33	50	71	-1	226	30	228
	GT1P1{1}	-39	-33	50	71	-1	226	30	228
B03	Anchor Tag No.: <None>					Connected to: Ground			
	Gravity{1}	25	6	-11	29	14	211	38	215
	GT1{1}	416	51	26	420	22	325	101	341
	GT1P1{1}	416	51	26	420	22	325	101	341
B22	V - Stop Tag No.: <None>	[ID: B22 2]							
	Gravity{1}	0	-208	0	208	0	0	0	0
	GT1{1}	-240	-307	-52	393	0	0	0	0
	GT1P1{1}	-240	-307	-52	393	0	0	0	0
B23	V - Stop Tag No.: <None>	[ID: B23 2]							
	Gravity{1}	0	-194	0	194	0	0	0	0
	GT1{1}	-54	-95	-54	122	0	0	0	0
	GT1P1{1}	-54	-95	-54	122	0	0	0	0
B24	Guide Tag No.: <None>	[ID: B24 2]							
	Gravity{1}	-22	-134	0	135	0	0	0	0
	GT1{1}	-45	-269	0	273	0	0	0	0
	GT1P1{1}	-45	-269	0	273	0	0	0	0
B25	Guide Tag No.: <None>	[ID: B25 2]							
	Gravity{1}	0	-105	3	105	0	0	0	0
	GT1{1}	0	0	0	0	0	0	0	0
	GT1P1{1}	0	0	0	0	0	0	0	0

R E S T R A I N T R E A C T I O N S

Point name	Load combination	FORCES (lbf) X	Y	Z	Result	MOMENTS (ft-lb) X	Y	Z	Result
B26	V - Stop Tag No.: <None>	[ID: B26 1]							
	Gravity{1}	0	-194	0	194	0	0	0	0
	GT1{1}	-85	-211	-146	270	0	0	0	0
	GT1P1{1}	-85	-211	-146	270	0	0	0	0
B28	V - Stop Tag No.: <None>	[ID: B28 1]							
	Gravity{1}	0	-165	0	165	0	0	0	0
	GT1{1}	-34	-172	-134	220	0	0	0	0
	GT1P1{1}	-34	-172	-134	220	0	0	0	0
B29	V - Stop Tag No.: <None>	[ID: B29 1]							
	Gravity{1}	0	-160	0	160	0	0	0	0
	GT1{1}	53	-166	-61	184	0	0	0	0
	GT1P1{1}	53	-166	-61	184	0	0	0	0
B31	V - Stop Tag No.: <None>	[ID: B31 1]							
	Gravity{1}	0	-208	0	208	0	0	0	0
	GT1{1}	112	-194	107	248	0	0	0	0
	GT1P1{1}	112	-194	107	248	0	0	0	0
B32	Guide Tag No.: <None>	[ID: B32 2]							
	Gravity{1}	0	-115	3	115	0	0	0	0
	GT1{1}	0	-142	4	142	0	0	0	0
	GT1P1{1}	0	-142	4	142	0	0	0	0
B33	Guide Tag No.: <None>	[ID: B33 2]							
	Gravity{1}	-2	-79	0	79	0	0	0	0
	GT1{1}	0	0	0	0	0	0	0	0
	GT1P1{1}	0	0	0	0	0	0	0	0
B34	Guide Tag No.: <None>	[ID: B34 2]							
	Gravity{1}	-3	-137	0	137	0	0	0	0
	GT1{1}	-5	-230	0	230	0	0	0	0
	GT1P1{1}	-5	-230	0	230	0	0	0	0
B35	Guide Tag No.: <None>	[ID: B35 2]							
	Gravity{1}	0	-79	2	79	0	0	0	0
	GT1{1}	0	-32	1	32	0	0	0	0
	GT1P1{1}	0	-32	1	32	0	0	0	0
B36	V - Stop Tag No.: <None>	[ID: B36 2]							
	Gravity{1}	0	-205	0	205	0	0	0	0
	GT1{1}	-101	-229	-153	293	0	0	0	0
	GT1P1{1}	-101	-229	-153	293	0	0	0	0
B37	V - Stop Tag No.: <None>	[ID: B37 2]							
	Gravity{1}	0	-157	0	157	0	0	0	0
	GT1{1}	-29	-153	-119	196	0	0	0	0
	GT1P1{1}	-29	-153	-119	196	0	0	0	0

R E S T R A I N T R E A C T I O N S

Point name	Load combination	FORCES (lbf) X	Y	Z	Result	MOMENTS (ft-lb) X	Y	Z	Result
B38	V - Stop Tag No.: <None> [ID: B38 2]								
	Gravity{1}	0	-179	0	179	0	0	0	0
	GT1{1}	23	-176	103	206	0	0	0	0
	GT1P1{1}	23	-176	103	206	0	0	0	0
B39	V - Stop Tag No.: <None> [ID: B39 2]								
	Gravity{1}	0	-148	0	148	0	0	0	0
	GT1{1}	-53	-153	110	196	0	0	0	0
	GT1P1{1}	-53	-153	110	196	0	0	0	0
B40	V - Stop Tag No.: <None> [ID: B40 1]								
	Gravity{1}	0	-163	0	163	0	0	0	0
	GT1{1}	-73	-143	88	183	0	0	0	0
	GT1P1{1}	-73	-143	88	183	0	0	0	0
B42	Guide Tag No.: <None> [ID: B42 1]								
	Gravity{1}	0	-180	5	180	0	0	0	0
	GT1{1}	0	-218	6	218	0	0	0	0
	GT1P1{1}	0	-218	6	218	0	0	0	0
B43	Guide Tag No.: <None> [ID: B43 1]								
	Gravity{1}	2	-62	0	62	0	0	0	0
	GT1{1}	0	0	0	0	0	0	0	0
	GT1P1{1}	0	0	0	0	0	0	0	0
B45	Guide Tag No.: <None> [ID: B45 1]								
	Gravity{1}	1	-33	0	33	0	0	0	0
	GT1{1}	2	-82	0	82	0	0	0	0
	GT1P1{1}	2	-82	0	82	0	0	0	0
B46	Guide Tag No.: <None> [ID: B46 2]								
	Gravity{1}	0	-194	2	194	0	0	0	0
	GT1{1}	0	-169	2	169	0	0	0	0
	GT1P1{1}	0	-169	2	169	0	0	0	0
B47	V - Stop Tag No.: <None> [ID: B47 2]								
	Gravity{1}	0	-164	0	164	0	0	0	0
	GT1{1}	80	-174	-114	223	0	0	0	0
	GT1P1{1}	80	-174	-114	223	0	0	0	0
B48	V - Stop Tag No.: <None> [ID: B48 2]								
	Gravity{1}	0	-171	0	171	0	0	0	0
	GT1{1}	44	-169	-128	216	0	0	0	0
	GT1P1{1}	44	-169	-128	216	0	0	0	0
B49	V - Stop Tag No.: <None> [ID: B49 2]								
	Gravity{1}	0	-170	0	170	0	0	0	0
	GT1{1}	7	-173	-138	221	0	0	0	0
	GT1P1{1}	7	-173	-138	221	0	0	0	0

R E S T R A I N T R E A C T I O N S

Point name	Load combination	FORCES (lbf) X	Y	Z	Result	MOMENTS (ft-lb) X	Y	Z	Result
B50	V - Stop Tag No.: <None> [ID: B50 2]								
	Gravity{1}	0	-171	0	171	0	0	0	0
	GT1{1}	-25	-170	-55	181	0	0	0	0
	GT1P1{1}	-25	-170	-55	181	0	0	0	0
B51	V - Stop Tag No.: <None> [ID: B51 2]								
	Gravity{1}	0	-169	0	169	0	0	0	0
	GT1{1}	-5	-170	136	217	0	0	0	0
	GT1P1{1}	-5	-170	136	217	0	0	0	0
B52	V - Stop Tag No.: <None> [ID: B52 2]								
	Gravity{1}	0	-175	0	175	0	0	0	0
	GT1{1}	11	-172	137	220	0	0	0	0
	GT1P1{1}	11	-172	137	220	0	0	0	0
B53	V - Stop Tag No.: <None> [ID: B53 2]								
	Gravity{1}	0	-151	0	151	0	0	0	0
	GT1{1}	41	-156	118	200	0	0	0	0
	GT1P1{1}	41	-156	118	200	0	0	0	0
B54	V - Stop Tag No.: <None> [ID: B54 2]								
	Gravity{1}	0	-173	0	173	0	0	0	0
	GT1{1}	65	-160	110	205	0	0	0	0
	GT1P1{1}	65	-160	110	205	0	0	0	0
B55	Guide Tag No.: <None> [ID: B55 1]								
	Gravity{1}	0	-126	1	126	0	0	0	0
	GT1{1}	0	-149	1	149	0	0	0	0
	GT1P1{1}	0	-149	1	149	0	0	0	0
B57	Guide Tag No.: <None> [ID: B57 1]								
	Gravity{1}	-1	-127	0	127	0	0	0	0
	GT1{1}	-1	-98	0	98	0	0	0	0
	GT1P1{1}	-1	-98	0	98	0	0	0	0
B58	Guide Tag No.: <None> [ID: B58 1]								
	Gravity{1}	-1	-116	0	116	0	0	0	0
	GT1{1}	-1	-141	0	141	0	0	0	0
	GT1P1{1}	-1	-141	0	141	0	0	0	0
B64	Guide Tag No.: <None> [ID: B64 1]								
	Gravity{1}	0	-134	1	134	0	0	0	0
	GT1{1}	0	-114	1	114	0	0	0	0
	GT1P1{1}	0	-114	1	114	0	0	0	0
B65	V - Stop Tag No.: <None> [ID: B65 1]								
	Gravity{1}	0	-180	0	180	0	0	0	0
	GT1{1}	-72	-190	-134	243	0	0	0	0
	GT1P1{1}	-72	-190	-134	243	0	0	0	0

R E S T R A I N T R E A C T I O N S

Point name	Load combination	FORCES (lbf) X	Y	Z	Result	MOMENTS (ft-lb) X	Y	Z	Result
B66	V - Stop Tag No.: <None>	[ID: B66 1]							
	Gravity{1}	0	-168	0	168	0	0	0	0
	GT1{1}	-36	-165	-127	212	0	0	0	0
	GT1P1{1}	-36	-165	-127	212	0	0	0	0
B67	V - Stop Tag No.: <None>	[ID: B67 1]							
	Gravity{1}	0	-171	0	171	0	0	0	0
	GT1{1}	-8	-173	-138	222	0	0	0	0
	GT1P1{1}	-8	-173	-138	222	0	0	0	0
B68	V - Stop Tag No.: <None>	[ID: B68 1]							
	Gravity{1}	0	-170	0	170	0	0	0	0
	GT1{1}	3	-171	-137	219	0	0	0	0
	GT1P1{1}	3	-171	-137	219	0	0	0	0
B69	V - Stop Tag No.: <None>	[ID: B69 1]							
	Gravity{1}	0	-171	0	171	0	0	0	0
	GT1{1}	22	-171	-22	174	0	0	0	0
	GT1P1{1}	22	-171	-22	174	0	0	0	0
B70	V - Stop Tag No.: <None>	[ID: B70 1]							
	Gravity{1}	0	-168	0	168	0	0	0	0
	GT1{1}	10	-168	134	215	0	0	0	0
	GT1P1{1}	10	-168	134	215	0	0	0	0
B71	V - Stop Tag No.: <None>	[ID: B71 1]							
	Gravity{1}	0	-179	0	179	0	0	0	0
	GT1{1}	-21	-176	140	226	0	0	0	0
	GT1P1{1}	-21	-176	140	226	0	0	0	0
B72	V - Stop Tag No.: <None>	[ID: B72 1]							
	Gravity{1}	0	-120	0	120	0	0	0	0
	GT1{1}	-56	-127	85	163	0	0	0	0
	GT1P1{1}	-56	-127	85	163	0	0	0	0
B73	V - Stop Tag No.: <None>	[ID: B73 1]							
	Gravity{1}	0	-138	0	138	0	0	0	0
	GT1{1}	-68	-122	69	156	0	0	0	0
	GT1P1{1}	-68	-122	69	156	0	0	0	0
B74	Guide Tag No.: <None>	[ID: B74 1]							
	Gravity{1}	0	-140	1	140	0	0	0	0
	GT1{1}	0	-189	1	189	0	0	0	0
	GT1P1{1}	0	-189	1	189	0	0	0	0
B75	Guide Tag No.: <None>	[ID: B75 1]							
	Gravity{1}	2	-93	0	93	0	0	0	0
	GT1{1}	0	0	0	0	0	0	0	0
	GT1P1{1}	0	0	0	0	0	0	0	0

R E S T R A I N T R E A C T I O N S

Point name	Load combination	FORCES (lbf) X	Y	Z	Result	MOMENTS (ft-lb) X	Y	Z	Result
B77	Guide Tag No.: <None>	[ID: B77 1]							
	Gravity{1}	0	-96	2	96	0	0	0	0
	GT1{1}	0	-202	4	202	0	0	0	0
	GT1P1{1}	0	-202	4	202	0	0	0	0
B76	Guide Tag No.: <None>	[ID: B76 1]							
	Gravity{1}	1	-85	0	85	0	0	0	0
	GT1{1}	0	0	0	0	0	0	0	0
	GT1P1{1}	0	0	0	0	0	0	0	0
B59 M	V - Stop Tag No.: <None>	[ID: B59 M1]							
	Gravity{1}	0	-19	0	19	0	0	0	0
	GT1{1}	-13	-28	19	36	0	0	0	0
	GT1P1{1}	-13	-28	19	36	0	0	0	0
B62	Anchor Tag No.: <None>					Connected to: Ground			
	Gravity{1}	-2	-33	-9	35	1	97	-13	98
	GT1{1}	135	-54	309	342	-4	-2106	-28	2106
	GT1P1{1}	135	-54	309	342	-4	-2106	-28	2106
C03	Anchor Tag No.: <None>					Connected to: Ground			
	Gravity{1}	9	2	-9	12	3	157	20	159
	GT1{1}	192	10	5	193	-1	160	32	163
	GT1P1{1}	192	10	5	193	-1	160	32	163
C21	V - Stop Tag No.: <None>	[ID: C21 2]							
	Gravity{1}	0	-112	0	112	0	0	0	0
	GT1{1}	-105	-132	-12	169	0	0	0	0
	GT1P1{1}	-105	-132	-12	169	0	0	0	0
C22	V - Stop Tag No.: <None>	[ID: C22 2]							
	Gravity{1}	0	-98	0	98	0	0	0	0
	GT1{1}	-43	-71	-37	91	0	0	0	0
	GT1P1{1}	-43	-71	-37	91	0	0	0	0
C23	Guide Tag No.: <None>	[ID: C23 2]							
	Gravity{1}	-6	-78	0	78	0	0	0	0
	GT1{1}	-10	-122	0	123	0	0	0	0
	GT1P1{1}	-10	-122	0	123	0	0	0	0
C24	Guide Tag No.: <None>	[ID: C24 2]							
	Gravity{1}	0	-57	2	57	0	0	0	0
	GT1{1}	0	-18	1	18	0	0	0	0
	GT1P1{1}	0	-18	1	18	0	0	0	0
C25	V - Stop Tag No.: <None>	[ID: C25 2]							
	Gravity{1}	0	-112	0	112	0	0	0	0
	GT1{1}	-40	-129	-95	165	0	0	0	0
	GT1P1{1}	-40	-129	-95	165	0	0	0	0

R E S T R A I N T R E A C T I O N S

Point name	Load combination	FORCES (lbf) X	Y	Z	Result	MOMENTS (ft-lb) X	Y	Z	Result
C26	V - Stop Tag No.: <None> [ID: C26 2]								
	Gravity{1}	0	-94	0	94	0	0	0	0
	GT1{1}	-1	-91	-73	116	0	0	0	0
	GT1P1{1}	-1	-91	-73	116	0	0	0	0
C28	V - Stop Tag No.: <None> [ID: C28 2]								
	Gravity{1}	0	-89	0	89	0	0	0	0
	GT1{1}	0	-92	17	93	0	0	0	0
	GT1P1{1}	0	-92	17	93	0	0	0	0
C29	V - Stop Tag No.: <None> [ID: C29 2]								
	Gravity{1}	0	-124	0	124	0	0	0	0
	GT1{1}	57	-117	74	150	0	0	0	0
	GT1P1{1}	57	-117	74	150	0	0	0	0
C31	Guide Tag No.: <None> [ID: C31 2]								
	Gravity{1}	0	-55	2	55	0	0	0	0
	GT1{1}	0	-68	2	68	0	0	0	0
	GT1P1{1}	0	-68	2	68	0	0	0	0
C32	Guide Tag No.: <None> [ID: C32 2]								
	Gravity{1}	-1	-53	0	53	0	0	0	0
	GT1{1}	-1	-20	0	20	0	0	0	0
	GT1P1{1}	-1	-20	0	20	0	0	0	0
C33	Guide Tag No.: <None> [ID: C33 2]								
	Gravity{1}	-2	-90	0	90	0	0	0	0
	GT1{1}	-3	-125	0	125	0	0	0	0
	GT1P1{1}	-3	-125	0	125	0	0	0	0
C34	Guide Tag No.: <None> [ID: C34 2]								
	Gravity{1}	0	-31	1	31	0	0	0	0
	GT1{1}	0	-15	0	15	0	0	0	0
	GT1P1{1}	0	-15	0	15	0	0	0	0
C35	V - Stop Tag No.: <None> [ID: C35 2]								
	Gravity{1}	0	-121	0	121	0	0	0	0
	GT1{1}	-49	-130	-93	167	0	0	0	0
	GT1P1{1}	-49	-130	-93	167	0	0	0	0
C36	V - Stop Tag No.: <None> [ID: C36 2]								
	Gravity{1}	0	-87	0	87	0	0	0	0
	GT1{1}	-3	-87	-70	111	0	0	0	0
	GT1P1{1}	-3	-87	-70	111	0	0	0	0
C37	V - Stop Tag No.: <None> [ID: C37 2]								
	Gravity{1}	0	-105	0	105	0	0	0	0
	GT1{1}	12	-103	75	128	0	0	0	0
	GT1P1{1}	12	-103	75	128	0	0	0	0

R E S T R A I N T R E A C T I O N S

Point name	Load combination	FORCES (lbf) X	Y	Z	Result	MOMENTS (ft-lb) X	Y	Z	Result
C38	V - Stop Tag No.: <None> [ID: C38 2]								
	Gravity{1}	0	-62	0	62	0	0	0	0
	GT1{1}	-18	-64	48	82	0	0	0	0
	GT1P1{1}	-18	-64	48	82	0	0	0	0
C39	V - Stop Tag No.: <None> [ID: C39 2]								
	Gravity{1}	0	-88	0	88	0	0	0	0
	GT1{1}	-36	-79	51	100	0	0	0	0
	GT1P1{1}	-36	-79	51	100	0	0	0	0
C40	Guide Tag No.: <None> [ID: C40 2]								
	Gravity{1}	0	-87	2	87	0	0	0	0
	GT1{1}	0	-103	3	103	0	0	0	0
	GT1P1{1}	0	-103	3	103	0	0	0	0
C42	Guide Tag No.: <None> [ID: C42 2]								
	Gravity{1}	1	-56	0	56	0	0	0	0
	GT1{1}	1	-29	0	29	0	0	0	0
	GT1P1{1}	1	-29	0	29	0	0	0	0
C43	Guide Tag No.: <None> [ID: C43 2]								
	Gravity{1}	0	-11	0	11	0	0	0	0
	GT1{1}	1	-31	0	31	0	0	0	0
	GT1P1{1}	1	-31	0	31	0	0	0	0
C45	Guide Tag No.: <None> [ID: C45 2]								
	Gravity{1}	0	-110	1	110	0	0	0	0
	GT1{1}	0	-99	1	99	0	0	0	0
	GT1P1{1}	0	-99	1	99	0	0	0	0
C46	V - Stop Tag No.: <None> [ID: C46 2]								
	Gravity{1}	0	-93	0	93	0	0	0	0
	GT1{1}	40	-97	-66	124	0	0	0	0
	GT1P1{1}	40	-97	-66	124	0	0	0	0
C47	V - Stop Tag No.: <None> [ID: C47 2]								
	Gravity{1}	0	-97	0	97	0	0	0	0
	GT1{1}	13	-97	-76	124	0	0	0	0
	GT1P1{1}	13	-97	-76	124	0	0	0	0
C48	V - Stop Tag No.: <None> [ID: C48 2]								
	Gravity{1}	0	-97	0	97	0	0	0	0
	GT1{1}	-4	-98	-78	125	0	0	0	0
	GT1P1{1}	-4	-98	-78	125	0	0	0	0
C49	V - Stop Tag No.: <None> [ID: C49 2]								
	Gravity{1}	0	-97	0	97	0	0	0	0
	GT1{1}	-3	-98	-60	114	0	0	0	0
	GT1P1{1}	-3	-98	-60	114	0	0	0	0

R E S T R A I N T R E A C T I O N S

Point name	Load combination	FORCES (lbf) X	Y	Z	Result	MOMENTS (ft-lb) X	Y	Z	Result
C50	V - Stop Tag No.: <None> [ID: C50 2]								
	Gravity{1}	0	-97	0	97	0	0	0	0
	GT1{1}	-2	-96	77	123	0	0	0	0
	GT1P1{1}	-2	-96	77	123	0	0	0	0
C51	V - Stop Tag No.: <None> [ID: C51 2]								
	Gravity{1}	0	-99	0	99	0	0	0	0
	GT1{1}	-3	-98	78	126	0	0	0	0
	GT1P1{1}	-3	-98	78	126	0	0	0	0
C52	V - Stop Tag No.: <None> [ID: C52 2]								
	Gravity{1}	0	-91	0	91	0	0	0	0
	GT1{1}	8	-91	72	117	0	0	0	0
	GT1P1{1}	8	-91	72	117	0	0	0	0
C53	V - Stop Tag No.: <None> [ID: C53 2]								
	Gravity{1}	0	-115	0	115	0	0	0	0
	GT1{1}	38	-112	81	144	0	0	0	0
	GT1P1{1}	38	-112	81	144	0	0	0	0
C55	Guide Tag No.: <None> [ID: C55 2]								
	Gravity{1}	0	-84	1	84	0	0	0	0
	GT1{1}	0	-91	1	91	0	0	0	0
	GT1P1{1}	0	-91	1	91	0	0	0	0
C56	Guide Tag No.: <None> [ID: C56 2]								
	Gravity{1}	0	-63	0	63	0	0	0	0
	GT1{1}	0	-55	0	55	0	0	0	0
	GT1P1{1}	0	-55	0	55	0	0	0	0
C57	Guide Tag No.: <None> [ID: C57 2]								
	Gravity{1}	0	-73	0	73	0	0	0	0
	GT1{1}	0	-80	0	80	0	0	0	0
	GT1P1{1}	0	-80	0	80	0	0	0	0
C58	Guide Tag No.: <None> [ID: C58 2]								
	Gravity{1}	0	-71	1	71	0	0	0	0
	GT1{1}	0	-66	1	66	0	0	0	0
	GT1P1{1}	0	-66	1	66	0	0	0	0
C59	V - Stop Tag No.: <None> [ID: C59 2]								
	Gravity{1}	0	-105	0	105	0	0	0	0
	GT1{1}	-35	-108	-79	139	0	0	0	0
	GT1P1{1}	-35	-108	-79	139	0	0	0	0
C60	V - Stop Tag No.: <None> [ID: C60 2]								
	Gravity{1}	0	-94	0	94	0	0	0	0
	GT1{1}	-10	-94	-74	120	0	0	0	0
	GT1P1{1}	-10	-94	-74	120	0	0	0	0

R E S T R A I N T R E A C T I O N S

Point name	Load combination	FORCES (lbf) X	Y	Z	Result	MOMENTS (ft-lb) X	Y	Z	Result
C61	V - Stop Tag No.: <None> [ID: C61 1]								
	Gravity{1}	0	-98	0	98	0	0	0	0
	GT1{1}	2	-98	-79	126	0	0	0	0
	GT1P1{1}	2	-98	-79	126	0	0	0	0
C63	V - Stop Tag No.: <None> [ID: C63 1]								
	Gravity{1}	0	-96	0	96	0	0	0	0
	GT1{1}	3	-96	32	102	0	0	0	0
	GT1P1{1}	3	-96	32	102	0	0	0	0
C64	V - Stop Tag No.: <None> [ID: C64 2]								
	Gravity{1}	0	-99	0	99	0	0	0	0
	GT1{1}	5	-98	78	125	0	0	0	0
	GT1P1{1}	5	-98	78	125	0	0	0	0
C65	V - Stop Tag No.: <None> [ID: C65 1]								
	Gravity{1}	0	-90	0	90	0	0	0	0
	GT1{1}	-1	-91	72	116	0	0	0	0
	GT1P1{1}	-1	-91	72	116	0	0	0	0
C72	V - Stop Tag No.: <None> [ID: C72 1]								
	Gravity{1}	0	-118	0	118	0	0	0	0
	GT1{1}	-33	-116	86	148	0	0	0	0
	GT1P1{1}	-33	-116	86	148	0	0	0	0
C73	Guide Tag No.: <None> [ID: C73 1]								
	Gravity{1}	0	-84	0	84	0	0	0	0
	GT1{1}	0	-88	1	88	0	0	0	0
	GT1P1{1}	0	-88	1	88	0	0	0	0
C74	Guide Tag No.: <None> [ID: C74 1]								
	Gravity{1}	1	-72	0	72	0	0	0	0
	GT1{1}	1	-67	0	67	0	0	0	0
	GT1P1{1}	1	-67	0	67	0	0	0	0
C75	V - Stop Tag No.: <None> [ID: C75 1]								
	Gravity{1}	0	-104	0	104	0	0	0	0
	GT1{1}	-73	-107	45	137	0	0	0	0
	GT1P1{1}	-73	-107	45	137	0	0	0	0
C76	V - Stop Tag No.: <None> [ID: C76 1]								
	Gravity{1}	0	-95	0	95	0	0	0	0
	GT1{1}	-76	-95	-2	121	0	0	0	0
	GT1P1{1}	-76	-95	-2	121	0	0	0	0
C77	V - Stop Tag No.: <None> [ID: C77 1]								
	Gravity{1}	0	-98	0	98	0	0	0	0
	GT1{1}	-6	-98	-5	99	0	0	0	0
	GT1P1{1}	-6	-98	-5	99	0	0	0	0

R E S T R A I N T R E A C T I O N S

Point name	Load combination	FORCES (lbf) X	Y	Z	Result	MOMENTS (ft-lb) X	Y	Z	Result
C78	V - Stop Tag No.: <None> [ID: C78 1]								
	Gravity{1}	0	-94	0	94	0	0	0	0
	GT1{1}	76	-94	0	121	0	0	0	0
	GT1P1{1}	76	-94	0	121	0	0	0	0
C79	V - Stop Tag No.: <None> [ID: C79 1]								
	Gravity{1}	0	-99	0	99	0	0	0	0
	GT1{1}	74	-97	-23	124	0	0	0	0
	GT1P1{1}	74	-97	-23	124	0	0	0	0
C80	Guide Tag No.: <None> [ID: C80 1]								
	Gravity{1}	1	-82	0	82	0	0	0	0
	GT1{1}	1	-86	0	86	0	0	0	0
	GT1P1{1}	1	-86	0	86	0	0	0	0
C82	Guide Tag No.: <None> [ID: C82 1]								
	Gravity{1}	0	-55	0	55	0	0	0	0
	GT1{1}	0	-50	0	50	0	0	0	0
	GT1P1{1}	0	-50	0	50	0	0	0	0
C81	V - Stop Tag No.: <None> [ID: C81 1]								
	Gravity{1}	0	-64	0	64	0	0	0	0
	GT1{1}	52	-66	-10	85	0	0	0	0
	GT1P1{1}	52	-66	-10	85	0	0	0	0
C83	Guide Tag No.: <None> [ID: C83 1]								
	Gravity{1}	0	-64	1	64	0	0	0	0
	GT1{1}	0	-67	1	67	0	0	0	0
	GT1P1{1}	0	-67	1	67	0	0	0	0
C84	Guide Tag No.: <None> [ID: C84 1]								
	Gravity{1}	-1	-58	0	58	0	0	0	0
	GT1{1}	-1	-53	0	53	0	0	0	0
	GT1P1{1}	-1	-53	0	53	0	0	0	0
C70	Anchor Tag No.: <None>					Connected to: Ground			
	Gravity{1}	0	-21	-1	21	-2	-9	10	13
	GT1{1}	-19	-23	29	42	-3	158	16	159
	GT1P1{1}	-19	-23	29	42	-3	158	16	159
D01	Anchor Tag No.: <None>					Connected to: Ground			
	Gravity{1}	-1	-20	2	20	-9	10	0	13
	GT1{1}	-8	-21	-158	159	-10	-4	0	11
	GT1P1{1}	-8	-21	-158	159	-10	-4	0	11
D04 M	V - Stop Tag No.: <None> [ID: D04 M1]								
	Gravity{1}	0	-69	0	69	0	0	0	0
	GT1{1}	6	-66	52	84	0	0	0	0
	GT1P1{1}	6	-66	52	84	0	0	0	0

R E S T R A I N T R E A C T I O N S

Point name	Load combination	FORCES (lbf) X	Y	Z	Result	MOMENTS (ft-lb) X	Y	Z	Result
D13	V - Stop Tag No.: <None> [ID: D13 1]								
	Gravity{1}	0	-85	0	85	0	0	0	0
	GT1{1}	30	-89	65	114	0	0	0	0
	GT1P1{1}	30	-89	65	114	0	0	0	0
D14	Guide Tag No.: <None> [ID: D14 2]								
	Gravity{1}	0	-72	-1	72	0	0	0	0
	GT1{1}	0	-66	-1	66	0	0	0	0
	GT1P1{1}	0	-66	-1	66	0	0	0	0
D15	Guide Tag No.: <None> [ID: D15 2]								
	Gravity{1}	1	-58	0	58	0	0	0	0
	GT1{1}	1	-64	0	64	0	0	0	0
	GT1P1{1}	1	-64	0	64	0	0	0	0
D18	V - Stop Tag No.: <None> [ID: D18 1]								
	Gravity{1}	0	-63	0	63	0	0	0	0
	GT1{1}	-26	-62	42	79	0	0	0	0
	GT1P1{1}	-26	-62	42	79	0	0	0	0
D16	Guide Tag No.: <None> [ID: D16 1]								
	Gravity{1}	1	-56	0	56	0	0	0	0
	GT1{1}	1	-53	0	53	0	0	0	0
	GT1P1{1}	1	-53	0	53	0	0	0	0
D19	Guide Tag No.: <None> [ID: D19 2]								
	Gravity{1}	0	-79	-1	79	0	0	0	0
	GT1{1}	0	-81	-1	81	0	0	0	0
	GT1P1{1}	0	-81	-1	81	0	0	0	0
D25	V - Stop Tag No.: <None> [ID: D25 1]								
	Gravity{1}	0	-104	0	104	0	0	0	0
	GT1{1}	20	-103	-25	108	0	0	0	0
	GT1P1{1}	20	-103	-25	108	0	0	0	0
D20	Guide Tag No.: <None> [ID: D20 1]								
	Gravity{1}	0	-77	-1	77	0	0	0	0
	GT1{1}	0	-74	-1	74	0	0	0	0
	GT1P1{1}	0	-74	-1	74	0	0	0	0
D26	Guide Tag No.: <None> [ID: D26 1]								
	Gravity{1}	0	-62	0	62	0	0	0	0
	GT1{1}	0	-66	0	66	0	0	0	0
	GT1P1{1}	0	-66	0	66	0	0	0	0
D28	V - Stop Tag No.: <None> [ID: D28 1]								
	Gravity{1}	0	-80	0	80	0	0	0	0
	GT1{1}	57	-79	27	101	0	0	0	0
	GT1P1{1}	57	-79	27	101	0	0	0	0

R E S T R A I N T R E A C T I O N S

Point name	Load combination	FORCES (lbf) X	Y	Z	Result	MOMENTS (ft-lb) X	Y	Z	Result
D27	V - Stop Tag No.: <None> [ID: D27 1]								
	Gravity{1}	0	-63	0	63	0	0	0	0
	GT1{1}	50	-63	6	81	0	0	0	0
	GT1P1{1}	50	-63	6	81	0	0	0	0
D22	Anchor Tag No.: <None>					Connected to: Ground			
	Gravity{1}	0	-15	1	15	1	14	6	15
	GT1{1}	-131	-15	-6	132	2	32	7	32
	GT1P1{1}	-131	-15	-6	132	2	32	7	32

ASME B31.3 (2016) CODE COMPLIANCE
(Moments in ft-lb , Force in lbf) (Stress in psi)

Point name	Load combination	Axial Force	In-Pl. Moment	Out-Pl. Moment	Torsion Moment	S.I.F In	S.I.F Out	Index/SIF Ax.	Index/SIF Tor.	Eq. no.	Load type	Code Stress	Code Allow.
*** Segment A begin ***													
A02	Max P{1}									(3a)	HOOP	0	20000
	GR + Max P{1}	19	1	154	10	1.00	1.00	1.00	1.00	23a	SUST	604	20000
	TR:Amb to T1{1}	68	24	69	0	1.00	1.00	1.00	1.00	(17)	DISP	294	30000
	Amb to T1{1}	68	24	69	0	1.00	1.00	1.00	1.00	(17)	DISP	294	30000
A03	Max P{1}									(3a)	HOOP	0	20000
	GR + Max P{1}	19	2	136	10	1.00	1.00	1.00	1.00	23a	SUST	533	20000
	TR:Amb to T1{1}	68	9	69	0	1.00	1.00	1.00	1.00	(17)	DISP	281	30000
	Amb to T1{1}	68	9	69	0	1.00	1.00	1.00	1.00	(17)	DISP	281	30000
A23	Max P{1}									(3a)	HOOP	0	20000
	GR + Max P{1}	19	57	112	10	1.00	1.00	1.00	1.00	23a	SUST	496	20000
	TR:Amb to T1{1}	68	50	69	0	1.00	1.00	1.00	1.00	(17)	DISP	339	30000
	Amb to T1{1}	68	50	69	0	1.00	1.00	1.00	1.00	(17)	DISP	339	30000
A04 N-	Max P{1}									(3a)	HOOP	0	20000
	GR + Max P{1}	19	46	110	10	1.00	1.00	1.00	1.00	23a	SUST	471	20000
	TR:Amb to T1{1}	68	44	69	0	1.00	1.00	1.00	1.00	(17)	DISP	327	30000
	Amb to T1{1}	68	44	69	0	1.00	1.00	1.00	1.00	(17)	DISP	327	30000
A04 N+	Max P{1}									(3a)	HOOP	0	20000
	GR + Max P{1}	19	46	110	10	1.00	1.00	1.00	1.00	23a	SUST	471	20000
	TR:Amb to T1{1}	68	44	69	0	1.00	1.00	1.00	1.00	(17)	DISP	327	30000
	Amb to T1{1}	68	44	69	0	1.00	1.00	1.00	1.00	(17)	DISP	327	30000
A04 F-	Max P{1}									(3a)	HOOP	0	20000
	GR + Max P{1}	26	23	105	10	1.00	1.00	1.00	1.00	23a	SUST	427	20000
	TR:Amb to T1{1}	72	33	68	13	1.00	1.00	1.00	1.00	(17)	DISP	308	30000
	Amb to T1{1}	72	33	68	13	1.00	1.00	1.00	1.00	(17)	DISP	308	30000
A04 F+	Max P{1}									(3a)	HOOP	0	20000
	GR + Max P{1}	26	23	105	10	1.00	1.00	1.00	1.00	23a	SUST	427	20000
	TR:Amb to T1{1}	72	33	68	13	1.00	1.00	1.00	1.00	(17)	DISP	308	30000
	Amb to T1{1}	72	33	68	13	1.00	1.00	1.00	1.00	(17)	DISP	308	30000
A24 -	Max P{1}									(3a)	HOOP	0	20000
	GR + Max P{1}	11	64	31	10	1.00	1.00	1.00	1.00	23a	SUST	282	20000
	TR:Amb to T1{1}	72	76	68	13	1.00	1.00	1.00	1.00	(17)	DISP	404	30000
	Amb to T1{1}	72	76	68	13	1.00	1.00	1.00	1.00	(17)	DISP	404	30000
A24 +	Max P{1}									(3a)	HOOP	0	20000
	GR + Max P{1}	27	64	31	10	1.00	1.00	1.00	1.00	23a	SUST	287	20000
	TR:Amb to T1{1}	37	76	68	13	1.00	1.00	1.00	1.00	(17)	DISP	393	30000
	Amb to T1{1}	37	76	68	13	1.00	1.00	1.00	1.00	(17)	DISP	393	30000

ASME B31.3 (2016) CODE COMPLIANCE
(Moments in ft-lb , Force in lbf) (Stress in psi)

Point name	Load combination	Axial Force	In-Pl. Moment	Out-Pl. Moment	Torsion Moment	S.I.F In	S.I.F Out	Index/SIF Ax.	Index/SIF Tor.	Eq. no.	Load type	Code Stress	Code Allow.
A21	Max P{1}									(3a)	HOOP	0	20000
	GR + Max P{1}	11	78	47	10	1.00	1.00	1.00	1.00	23a	SUST	359	20000
	TR:Amb to T1{1}	37	116	165	13	1.00	1.00	1.00	1.00	(17)	DISP	766	30000
	Amb to T1{1}	37	116	165	13	1.00	1.00	1.00	1.00	(17)	DISP	766	30000
A05 N-	Max P{1}									(3a)	HOOP	0	20000
	GR + Max P{1}	10	57	51	10	1.00	1.00	1.00	1.00	23a	SUST	302	20000
	TR:Amb to T1{1}	37	97	179	13	1.00	1.00	1.00	1.00	(17)	DISP	775	30000
	Amb to T1{1}	37	97	179	13	1.00	1.00	1.00	1.00	(17)	DISP	775	30000
A05 N+	Max P{1}									(3a)	HOOP	0	20000
	GR + Max P{1}	10	50	58	10	1.00	1.00	1.00	1.00	23a	SUST	302	20000
	TR:Amb to T1{1}	37	177	102	13	1.00	1.00	1.00	1.00	(17)	DISP	775	30000
	Amb to T1{1}	37	177	102	13	1.00	1.00	1.00	1.00	(17)	DISP	775	30000
A05 F-	Max P{1}									(3a)	HOOP	0	20000
	GR + Max P{1}	9	67	13	5	1.00	1.00	1.00	1.00	23a	SUST	268	20000
	TR:Amb to T1{1}	29	154	94	4	1.00	1.00	1.00	1.00	(17)	DISP	684	30000
	Amb to T1{1}	29	154	94	4	1.00	1.00	1.00	1.00	(17)	DISP	684	30000
A05 F+	Max P{1}									(3a)	HOOP	0	20000
	GR + Max P{1}	9	0	68	5	1.00	1.00	1.00	1.00	23a	SUST	268	20000
	TR:Amb to T1{1}	29	64	169	4	1.00	1.00	1.00	1.00	(17)	DISP	684	30000
	Amb to T1{1}	29	64	169	4	1.00	1.00	1.00	1.00	(17)	DISP	684	30000
A22	Max P{1}									(3a)	HOOP	0	20000
	GR + Max P{1}	9	6	67	5	1.00	1.00	1.00	1.00	23a	SUST	264	20000
	TR:Amb to T1{1}	29	86	154	4	1.00	1.00	1.00	1.00	(17)	DISP	667	30000
	Amb to T1{1}	29	86	154	4	1.00	1.00	1.00	1.00	(17)	DISP	667	30000
A25 -	Max P{1}									(3a)	HOOP	0	20000
	GR + Max P{1}	6	103	43	5	1.00	1.00	1.00	1.00	23a	SUST	436	20000
	TR:Amb to T1{1}	29	20	110	4	1.00	1.00	1.00	1.00	(17)	DISP	425	30000
	Amb to T1{1}	29	20	110	4	1.00	1.00	1.00	1.00	(17)	DISP	425	30000
A25 +	Max P{1}									(3a)	HOOP	0	20000
	GR + Max P{1}	9	103	43	5	1.00	1.00	1.00	1.00	23a	SUST	437	20000
	TR:Amb to T1{1}	126	20	110	4	1.00	1.00	1.00	1.00	(17)	DISP	456	30000
	Amb to T1{1}	126	20	110	4	1.00	1.00	1.00	1.00	(17)	DISP	456	30000
A26 -	Max P{1}									(3a)	HOOP	0	20000
	GR + Max P{1}	6	68	19	5	1.00	1.00	1.00	1.00	23a	SUST	276	20000
	TR:Amb to T1{1}	126	6	38	4	1.00	1.00	1.00	1.00	(17)	DISP	184	30000
	Amb to T1{1}	126	6	38	4	1.00	1.00	1.00	1.00	(17)	DISP	184	30000
A26 +	Max P{1}									(3a)	HOOP	0	20000
	GR + Max P{1}	9	68	19	5	1.00	1.00	1.00	1.00	23a	SUST	277	20000
	TR:Amb to T1{1}	200	6	38	4	1.00	1.00	1.00	1.00	(17)	DISP	207	30000
	Amb to T1{1}	200	6	38	4	1.00	1.00	1.00	1.00	(17)	DISP	207	30000

ASME B31.3 (2016) CODE COMPLIANCE
(Moments in ft-lb , Force in lbf) (Stress in psi)

Point name	Load combination	Axial Force	In-Pl. Moment	Out-Pl. Moment	Torsion Moment	S.I.F In	S.I.F Out	Index/SIF Ax.	Index/SIF Tor.	Eq. no.	Load type	Code Stress	Code Allow.
A27 -	Max P{1}									(3a)	HOOP	0	20000
	GR + Max P{1}	6	62	5	5	1.00	1.00	1.00	1.00	23a	SUST	242	20000
	TR:Amb to T1{1}	200	4	35	4	1.00	1.00	1.00	1.00	(17)	DISP	195	30000
	Amb to T1{1}	200	4	35	4	1.00	1.00	1.00	1.00	(17)	DISP	195	30000
A27 +	Max P{1}									(3a)	HOOP	0	20000
	GR + Max P{1}	9	62	5	5	1.00	1.00	1.00	1.00	23a	SUST	243	20000
	TR:Amb to T1{1}	181	4	35	4	1.00	1.00	1.00	1.00	(17)	DISP	189	30000
	Amb to T1{1}	181	4	35	4	1.00	1.00	1.00	1.00	(17)	DISP	189	30000
A28 -	Max P{1}									(3a)	HOOP	0	20000
	GR + Max P{1}	6	123	28	5	1.00	1.00	1.00	1.00	23a	SUST	490	20000
	TR:Amb to T1{1}	181	10	121	4	1.00	1.00	1.00	1.00	(17)	DISP	509	30000
	Amb to T1{1}	181	10	121	4	1.00	1.00	1.00	1.00	(17)	DISP	509	30000
A28 +	Max P{1}									(3a)	HOOP	0	20000
	GR + Max P{1}	10	123	28	5	1.00	1.00	1.00	1.00	23a	SUST	491	20000
	TR:Amb to T1{1}	107	10	121	4	1.00	1.00	1.00	1.00	(17)	DISP	486	30000
	Amb to T1{1}	107	10	121	4	1.00	1.00	1.00	1.00	(17)	DISP	486	30000
A29	Max P{1}									(3a)	HOOP	0	20000
	GR + Max P{1}	6	23	57	5	1.00	1.00	1.00	1.00	23a	SUST	239	20000
	TR:Amb to T1{1}	107	21	368	4	1.00	1.00	1.00	1.00	(17)	DISP	1409	30000
	Amb to T1{1}	107	21	368	4	1.00	1.00	1.00	1.00	(17)	DISP	1409	30000
A06 N-	Max P{1}									(3a)	HOOP	0	20000
	GR + Max P{1}	6	15	58	5	1.00	1.00	1.00	1.00	23a	SUST	234	20000
	TR:Amb to T1{1}	107	16	391	4	1.00	1.00	1.00	1.00	(17)	DISP	1494	30000
	Amb to T1{1}	107	16	391	4	1.00	1.00	1.00	1.00	(17)	DISP	1494	30000
A06 N+	Max P{1}									(3a)	HOOP	0	20000
	GR + Max P{1}	6	57	17	5	1.00	1.00	1.00	1.00	23a	SUST	234	20000
	TR:Amb to T1{1}	107	390	27	4	1.00	1.00	1.00	1.00	(17)	DISP	1494	30000
	Amb to T1{1}	107	390	27	4	1.00	1.00	1.00	1.00	(17)	DISP	1494	30000
A06 F-	Max P{1}									(3a)	HOOP	0	20000
	GR + Max P{1}	2	49	56	36	1.00	1.00	1.00	1.00	23a	SUST	320	20000
	TR:Amb to T1{1}	46	209	32	0	1.00	1.00	1.00	1.00	(17)	DISP	803	30000
	Amb to T1{1}	46	209	32	0	1.00	1.00	1.00	1.00	(17)	DISP	803	30000
A06 F+	Max P{1}									(3a)	HOOP	0	20000
	GR + Max P{1}	2	57	47	36	1.00	1.00	1.00	1.00	23a	SUST	320	20000
	TR:Amb to T1{1}	46	26	210	0	1.00	1.00	1.00	1.00	(17)	DISP	803	30000
	Amb to T1{1}	46	26	210	0	1.00	1.00	1.00	1.00	(17)	DISP	803	30000
A30	Max P{1}									(3a)	HOOP	0	20000
	GR + Max P{1}	1	78	44	36	1.00	1.00	1.00	1.00	23a	SUST	375	20000
	TR:Amb to T1{1}	46	32	156	0	1.00	1.00	1.00	1.00	(17)	DISP	609	30000
	Amb to T1{1}	46	32	156	0	1.00	1.00	1.00	1.00	(17)	DISP	609	30000

ASME B31.3 (2016) CODE COMPLIANCE
(Moments in ft-lb , Force in lbf) (Stress in psi)

Point name	Load combination	Axial Force	In-Pl. Moment	Out-Pl. Moment	Torsion Moment	S.I.F In	S.I.F Out	Index/SIF Ax.	Index/SIF Tor.	Eq. no.	Load type	Code Stress	Code Allow.
A31	Max P{1}									(3a)	HOOP	0	20000
	GR + Max P{1}	1	127	28	36	1.00	1.00	1.00	1.00	23a	SUST	525	20000
	TR:Amb to T1{1}	46	30	137	0	1.00	1.00	1.00	1.00	(17)	DISP	539	30000
	Amb to T1{1}	46	30	137	0	1.00	1.00	1.00	1.00	(17)	DISP	539	30000
A07 N-	Max P{1}									(3a)	HOOP	0	20000
	GR + Max P{1}	0	99	25	36	1.00	1.00	1.00	1.00	23a	SUST	420	20000
	TR:Amb to T1{1}	46	23	191	0	1.00	1.00	1.00	1.00	(17)	DISP	732	30000
	Amb to T1{1}	46	23	191	0	1.00	1.00	1.00	1.00	(17)	DISP	732	30000
A07 N+	Max P{1}									(3a)	HOOP	0	20000
	GR + Max P{1}	0	28	98	36	1.00	1.00	1.00	1.00	23a	SUST	420	20000
	TR:Amb to T1{1}	46	190	29	0	1.00	1.00	1.00	1.00	(17)	DISP	732	30000
	Amb to T1{1}	46	190	29	0	1.00	1.00	1.00	1.00	(17)	DISP	732	30000
A07 F-	Max P{1}									(3a)	HOOP	0	20000
	GR + Max P{1}	6	6	26	5	1.00	1.00	1.00	1.00	23a	SUST	108	20000
	TR:Amb to T1{1}	107	372	29	0	1.00	1.00	1.00	1.00	(17)	DISP	1425	30000
	Amb to T1{1}	107	372	29	0	1.00	1.00	1.00	1.00	(17)	DISP	1425	30000
A07 F+	Max P{1}									(3a)	HOOP	0	20000
	GR + Max P{1}	6	26	5	5	1.00	1.00	1.00	1.00	23a	SUST	108	20000
	TR:Amb to T1{1}	107	19	372	0	1.00	1.00	1.00	1.00	(17)	DISP	1425	30000
	Amb to T1{1}	107	19	372	0	1.00	1.00	1.00	1.00	(17)	DISP	1425	30000
A32	Max P{1}									(3a)	HOOP	0	20000
	GR + Max P{1}	6	26	5	5	1.00	1.00	1.00	1.00	23a	SUST	107	20000
	TR:Amb to T1{1}	107	24	349	0	1.00	1.00	1.00	1.00	(17)	DISP	1341	30000
	Amb to T1{1}	107	24	349	0	1.00	1.00	1.00	1.00	(17)	DISP	1341	30000
A33 -	Max P{1}									(3a)	HOOP	0	20000
	GR + Max P{1}	3	119	6	5	1.00	1.00	1.00	1.00	23a	SUST	464	20000
	TR:Amb to T1{1}	107	12	63	1	1.00	1.00	1.00	1.00	(17)	DISP	271	30000
	Amb to T1{1}	107	12	63	1	1.00	1.00	1.00	1.00	(17)	DISP	271	30000
A33 +	Max P{1}									(3a)	HOOP	0	20000
	GR + Max P{1}	6	119	6	5	1.00	1.00	1.00	1.00	23a	SUST	465	20000
	TR:Amb to T1{1}	197	12	63	1	1.00	1.00	1.00	1.00	(17)	DISP	300	30000
	Amb to T1{1}	197	12	63	1	1.00	1.00	1.00	1.00	(17)	DISP	300	30000
A34 -	Max P{1}									(3a)	HOOP	0	20000
	GR + Max P{1}	4	59	16	5	1.00	1.00	1.00	1.00	23a	SUST	238	20000
	TR:Amb to T1{1}	197	3	34	1	1.00	1.00	1.00	1.00	(17)	DISP	190	30000
	Amb to T1{1}	197	3	34	1	1.00	1.00	1.00	1.00	(17)	DISP	190	30000
A34 +	Max P{1}									(3a)	HOOP	0	20000
	GR + Max P{1}	6	59	16	5	1.00	1.00	1.00	1.00	23a	SUST	238	20000
	TR:Amb to T1{1}	267	3	34	1	1.00	1.00	1.00	1.00	(17)	DISP	212	30000
	Amb to T1{1}	267	3	34	1	1.00	1.00	1.00	1.00	(17)	DISP	212	30000

ASME B31.3 (2016) CODE COMPLIANCE
(Moments in ft-lb , Force in lbf) (Stress in psi)

Point name	Load combination	Axial Force	In-Pl. Moment	Out-Pl. Moment	Torsion Moment	S.I.F In	S.I.F Out	Index/SIF Ax.	Index/SIF Tor.	Eq. no.	Load type	Code Stress	Code Allow.
A35 -	Max P{1}									(3a)	HOOP	0	20000
	GR + Max P{1}	3	83	27	5	1.00	1.00	1.00	1.00	23a	SUST	341	20000
	TR:Amb to T1{1}	267	0	37	1	1.00	1.00	1.00	1.00	(17)	DISP	224	30000
	Amb to T1{1}	267	0	37	1	1.00	1.00	1.00	1.00	(17)	DISP	224	30000
A35 +	Max P{1}									(3a)	HOOP	0	20000
	GR + Max P{1}	6	83	27	5	1.00	1.00	1.00	1.00	23a	SUST	342	20000
	TR:Amb to T1{1}	185	0	37	1	1.00	1.00	1.00	1.00	(17)	DISP	198	30000
	Amb to T1{1}	185	0	37	1	1.00	1.00	1.00	1.00	(17)	DISP	198	30000
A36 -	Max P{1}									(3a)	HOOP	0	20000
	GR + Max P{1}	3	44	37	5	1.00	1.00	1.00	1.00	23a	SUST	224	20000
	TR:Amb to T1{1}	185	2	63	1	1.00	1.00	1.00	1.00	(17)	DISP	295	30000
	Amb to T1{1}	185	2	63	1	1.00	1.00	1.00	1.00	(17)	DISP	295	30000
A36 +	Max P{1}									(3a)	HOOP	0	20000
	GR + Max P{1}	5	44	37	5	1.00	1.00	1.00	1.00	23a	SUST	224	20000
	TR:Amb to T1{1}	152	2	63	0	1.00	1.00	1.00	1.00	(17)	DISP	284	30000
	Amb to T1{1}	152	2	63	0	1.00	1.00	1.00	1.00	(17)	DISP	284	30000
A37 -	Max P{1}									(3a)	HOOP	0	20000
	GR + Max P{1}	4	95	40	5	1.00	1.00	1.00	1.00	23a	SUST	402	20000
	TR:Amb to T1{1}	152	21	24	0	1.00	1.00	1.00	1.00	(17)	DISP	169	30000
	Amb to T1{1}	152	21	24	0	1.00	1.00	1.00	1.00	(17)	DISP	169	30000
A37 +	Max P{1}									(3a)	HOOP	0	20000
	GR + Max P{1}	6	95	40	5	1.00	1.00	1.00	1.00	23a	SUST	403	20000
	TR:Amb to T1{1}	104	21	24	0	1.00	1.00	1.00	1.00	(17)	DISP	154	30000
	Amb to T1{1}	104	21	24	0	1.00	1.00	1.00	1.00	(17)	DISP	154	30000
A38	Max P{1}									(3a)	HOOP	0	20000
	GR + Max P{1}	4	40	51	5	1.00	1.00	1.00	1.00	23a	SUST	252	20000
	TR:Amb to T1{1}	104	29	400	0	1.00	1.00	1.00	1.00	(17)	DISP	1529	30000
	Amb to T1{1}	104	29	400	0	1.00	1.00	1.00	1.00	(17)	DISP	1529	30000
A08 N-	Max P{1}									(3a)	HOOP	0	20000
	GR + Max P{1}	3	22	51	5	1.00	1.00	1.00	1.00	23a	SUST	217	20000
	TR:Amb to T1{1}	104	23	424	0	1.00	1.00	1.00	1.00	(17)	DISP	1616	30000
	Amb to T1{1}	104	23	424	0	1.00	1.00	1.00	1.00	(17)	DISP	1616	30000
A08 N+	Max P{1}									(3a)	HOOP	0	20000
	GR + Max P{1}	3	51	23	5	1.00	1.00	1.00	1.00	23a	SUST	217	20000
	TR:Amb to T1{1}	104	423	33	0	1.00	1.00	1.00	1.00	(17)	DISP	1616	30000
	Amb to T1{1}	104	423	33	0	1.00	1.00	1.00	1.00	(17)	DISP	1616	30000
A08 F-	Max P{1}									(3a)	HOOP	0	20000
	GR + Max P{1}	1	48	2	22	1.00	1.00	1.00	1.00	23a	SUST	206	20000
	TR:Amb to T1{1}	48	254	36	2	1.00	1.00	1.00	1.00	(17)	DISP	973	30000
	Amb to T1{1}	48	254	36	2	1.00	1.00	1.00	1.00	(17)	DISP	973	30000

ASME B31.3 (2016) CODE COMPLIANCE
(Moments in ft-lb , Force in lbf) (Stress in psi)

Point name	Load combination	Axial Force	In-Pl. Moment	Out-Pl. Moment	Torsion Moment	S.I.F In	S.I.F Out	Index/SIF Ax.	Index/SIF Tor.	Eq. no.	Load type	Code Stress	Code Allow.
A08 F+	Max P{1}									(3a)	HOOP	0	20000
	GR + Max P{1}	1	3	48	22	1.00	1.00	1.00	1.00	23a	SUST	206	20000
	TR:Amb to T1{1}	48	28	255	2	1.00	1.00	1.00	1.00	(17)	DISP	973	30000
	Amb to T1{1}	48	28	255	2	1.00	1.00	1.00	1.00	(17)	DISP	973	30000
A39	Max P{1}									(3a)	HOOP	0	20000
	GR + Max P{1}	1	13	47	22	1.00	1.00	1.00	1.00	23a	SUST	208	20000
	TR:Amb to T1{1}	48	35	203	2	1.00	1.00	1.00	1.00	(17)	DISP	784	30000
	Amb to T1{1}	48	35	203	2	1.00	1.00	1.00	1.00	(17)	DISP	784	30000
A40	Max P{1}									(3a)	HOOP	0	20000
	GR + Max P{1}	0	48	38	22	1.00	1.00	1.00	1.00	23a	SUST	254	20000
	TR:Amb to T1{1}	48	22	211	2	1.00	1.00	1.00	1.00	(17)	DISP	806	30000
	Amb to T1{1}	48	22	211	2	1.00	1.00	1.00	1.00	(17)	DISP	806	30000
A09 N-	Max P{1}									(3a)	HOOP	0	20000
	GR + Max P{1}	1	50	37	22	1.00	1.00	1.00	1.00	23a	SUST	256	20000
	TR:Amb to T1{1}	48	18	263	2	1.00	1.00	1.00	1.00	(17)	DISP	998	30000
	Amb to T1{1}	48	18	263	2	1.00	1.00	1.00	1.00	(17)	DISP	998	30000
A09 N+	Max P{1}									(3a)	HOOP	0	20000
	GR + Max P{1}	1	37	51	22	1.00	1.00	1.00	1.00	23a	SUST	256	20000
	TR:Amb to T1{1}	48	262	20	2	1.00	1.00	1.00	1.00	(17)	DISP	998	30000
	Amb to T1{1}	48	262	20	2	1.00	1.00	1.00	1.00	(17)	DISP	998	30000
A09 F-	Max P{1}									(3a)	HOOP	0	20000
	GR + Max P{1}	2	26	72	2	1.00	1.00	1.00	1.00	23a	SUST	298	20000
	TR:Amb to T1{1}	103	430	23	0	1.00	1.00	1.00	1.00	(17)	DISP	1641	30000
	Amb to T1{1}	103	430	23	0	1.00	1.00	1.00	1.00	(17)	DISP	1641	30000
A09 F+	Max P{1}									(3a)	HOOP	0	20000
	GR + Max P{1}	2	72	28	2	1.00	1.00	1.00	1.00	23a	SUST	298	20000
	TR:Amb to T1{1}	103	12	431	0	1.00	1.00	1.00	1.00	(17)	DISP	1641	30000
	Amb to T1{1}	103	12	431	0	1.00	1.00	1.00	1.00	(17)	DISP	1641	30000
A41	Max P{1}									(3a)	HOOP	0	20000
	GR + Max P{1}	2	98	27	2	1.00	1.00	1.00	1.00	23a	SUST	394	20000
	TR:Amb to T1{1}	103	16	407	0	1.00	1.00	1.00	1.00	(17)	DISP	1553	30000
	Amb to T1{1}	103	16	407	0	1.00	1.00	1.00	1.00	(17)	DISP	1553	30000
A42 -	Max P{1}									(3a)	HOOP	0	20000
	GR + Max P{1}	1	72	22	2	1.00	1.00	1.00	1.00	23a	SUST	291	20000
	TR:Amb to T1{1}	103	7	19	1	1.00	1.00	1.00	1.00	(17)	DISP	108	30000
	Amb to T1{1}	103	7	19	1	1.00	1.00	1.00	1.00	(17)	DISP	108	30000
A42 +	Max P{1}									(3a)	HOOP	0	20000
	GR + Max P{1}	2	72	22	2	1.00	1.00	1.00	1.00	23a	SUST	291	20000
	TR:Amb to T1{1}	170	7	19	1	1.00	1.00	1.00	1.00	(17)	DISP	129	30000
	Amb to T1{1}	170	7	19	1	1.00	1.00	1.00	1.00	(17)	DISP	129	30000

ASME B31.3 (2016) CODE COMPLIANCE
(Moments in ft-lb , Force in lbf) (Stress in psi)

Point name	Load combination	Axial Force	In-Pl. Moment	Out-Pl. Moment	Torsion Moment	S.I.F In	S.I.F Out	Index/SIF Ax.	Index/SIF Tor.	Eq. no.	Load type	Code Stress	Code Allow.
A43	- Max P{1}									(3a)	HOOP	0	20000
	GR + Max P{1}	1	73	16	2	1.00	1.00	1.00	1.00	23a	SUST	289	20000
	TR:Amb to T1{1}	170	2	75	1	1.00	1.00	1.00	1.00	(17)	DISP	335	30000
	Amb to T1{1}	170	2	75	1	1.00	1.00	1.00	1.00	(17)	DISP	335	30000
A43	+ Max P{1}									(3a)	HOOP	0	20000
	GR + Max P{1}	2	73	16	2	1.00	1.00	1.00	1.00	23a	SUST	290	20000
	TR:Amb to T1{1}	247	2	75	1	1.00	1.00	1.00	1.00	(17)	DISP	359	30000
	Amb to T1{1}	247	2	75	1	1.00	1.00	1.00	1.00	(17)	DISP	359	30000
A44	- Max P{1}									(3a)	HOOP	0	20000
	GR + Max P{1}	1	73	10	2	1.00	1.00	1.00	1.00	23a	SUST	284	20000
	TR:Amb to T1{1}	247	0	16	1	1.00	1.00	1.00	1.00	(17)	DISP	138	30000
	Amb to T1{1}	247	0	16	1	1.00	1.00	1.00	1.00	(17)	DISP	138	30000
A44	+ Max P{1}									(3a)	HOOP	0	20000
	GR + Max P{1}	2	73	10	2	1.00	1.00	1.00	1.00	23a	SUST	285	20000
	TR:Amb to T1{1}	325	0	16	1	1.00	1.00	1.00	1.00	(17)	DISP	163	30000
	Amb to T1{1}	325	0	16	1	1.00	1.00	1.00	1.00	(17)	DISP	163	30000
A45	- Max P{1}									(3a)	HOOP	0	20000
	GR + Max P{1}	1	73	4	2	1.00	1.00	1.00	1.00	23a	SUST	282	20000
	TR:Amb to T1{1}	325	0	8	1	1.00	1.00	1.00	1.00	(17)	DISP	131	30000
	Amb to T1{1}	325	0	8	1	1.00	1.00	1.00	1.00	(17)	DISP	131	30000
A45	+ Max P{1}									(3a)	HOOP	0	20000
	GR + Max P{1}	2	73	4	2	1.00	1.00	1.00	1.00	23a	SUST	282	20000
	TR:Amb to T1{1}	407	0	8	1	1.00	1.00	1.00	1.00	(17)	DISP	157	30000
	Amb to T1{1}	407	0	8	1	1.00	1.00	1.00	1.00	(17)	DISP	157	30000
A46	- Max P{1}									(3a)	HOOP	0	20000
	GR + Max P{1}	1	73	2	2	1.00	1.00	1.00	1.00	23a	SUST	284	20000
	TR:Amb to T1{1}	407	0	4	1	1.00	1.00	1.00	1.00	(17)	DISP	145	30000
	Amb to T1{1}	407	0	4	1	1.00	1.00	1.00	1.00	(17)	DISP	145	30000
A46	+ Max P{1}									(3a)	HOOP	0	20000
	GR + Max P{1}	2	73	2	2	1.00	1.00	1.00	1.00	23a	SUST	285	20000
	TR:Amb to T1{1}	330	0	4	1	1.00	1.00	1.00	1.00	(17)	DISP	121	30000
	Amb to T1{1}	330	0	4	1	1.00	1.00	1.00	1.00	(17)	DISP	121	30000
A47	- Max P{1}									(3a)	HOOP	0	20000
	GR + Max P{1}	1	71	8	2	1.00	1.00	1.00	1.00	23a	SUST	276	20000
	TR:Amb to T1{1}	330	0	11	1	1.00	1.00	1.00	1.00	(17)	DISP	143	30000
	Amb to T1{1}	330	0	11	1	1.00	1.00	1.00	1.00	(17)	DISP	143	30000
A47	+ Max P{1}									(3a)	HOOP	0	20000
	GR + Max P{1}	2	71	8	2	1.00	1.00	1.00	1.00	23a	SUST	276	20000
	TR:Amb to T1{1}	254	0	11	1	1.00	1.00	1.00	1.00	(17)	DISP	120	30000
	Amb to T1{1}	254	0	11	1	1.00	1.00	1.00	1.00	(17)	DISP	120	30000

ASME B31.3 (2016) CODE COMPLIANCE
(Moments in ft-lb , Force in lbf) (Stress in psi)

Point name	Load combination	Axial Force	In-Pl. Moment	Out-Pl. Moment	Torsion Moment	S.I.F In	S.I.F Out	Index/SIF Ax.	Index/SIF Tor.	Eq. no.	Load type	Code Stress	Code Allow.
A48 -	Max P{1}									(3a)	HOOP	0	20000
	GR + Max P{1}	1	80	14	2	1.00	1.00	1.00	1.00	23a	SUST	316	20000
	TR:Amb to T1{1}	254	0	54	1	1.00	1.00	1.00	1.00	(17)	DISP	282	30000
	Amb to T1{1}	254	0	54	1	1.00	1.00	1.00	1.00	(17)	DISP	282	30000
A48 +	Max P{1}									(3a)	HOOP	0	20000
	GR + Max P{1}	2	80	14	2	1.00	1.00	1.00	1.00	23a	SUST	316	20000
	TR:Amb to T1{1}	173	0	54	1	1.00	1.00	1.00	1.00	(17)	DISP	256	30000
	Amb to T1{1}	173	0	54	1	1.00	1.00	1.00	1.00	(17)	DISP	256	30000
A49 -	Max P{1}									(3a)	HOOP	0	20000
	GR + Max P{1}	1	44	20	2	1.00	1.00	1.00	1.00	23a	SUST	187	20000
	TR:Amb to T1{1}	173	2	57	1	1.00	1.00	1.00	1.00	(17)	DISP	266	30000
	Amb to T1{1}	173	2	57	1	1.00	1.00	1.00	1.00	(17)	DISP	266	30000
A49 +	Max P{1}									(3a)	HOOP	0	20000
	GR + Max P{1}	2	44	20	2	1.00	1.00	1.00	1.00	23a	SUST	188	20000
	TR:Amb to T1{1}	127	2	57	1	1.00	1.00	1.00	1.00	(17)	DISP	252	30000
	Amb to T1{1}	127	2	57	1	1.00	1.00	1.00	1.00	(17)	DISP	252	30000
A50 -	Max P{1}									(3a)	HOOP	0	20000
	GR + Max P{1}	1	70	22	2	1.00	1.00	1.00	1.00	23a	SUST	285	20000
	TR:Amb to T1{1}	127	10	4	1	1.00	1.00	1.00	1.00	(17)	DISP	80	30000
	Amb to T1{1}	127	10	4	1	1.00	1.00	1.00	1.00	(17)	DISP	80	30000
A50 +	Max P{1}									(3a)	HOOP	0	20000
	GR + Max P{1}	2	70	22	2	1.00	1.00	1.00	1.00	23a	SUST	285	20000
	TR:Amb to T1{1}	75	10	4	1	1.00	1.00	1.00	1.00	(17)	DISP	64	30000
	Amb to T1{1}	75	10	4	1	1.00	1.00	1.00	1.00	(17)	DISP	64	30000
A51	Max P{1}									(3a)	HOOP	0	20000
	GR + Max P{1}	1	40	28	2	1.00	1.00	1.00	1.00	23a	SUST	190	20000
	TR:Amb to T1{1}	75	15	381	1	1.00	1.00	1.00	1.00	(17)	DISP	1447	30000
	Amb to T1{1}	75	15	381	1	1.00	1.00	1.00	1.00	(17)	DISP	1447	30000
A10 N-	Max P{1}									(3a)	HOOP	0	20000
	GR + Max P{1}	1	26	29	2	1.00	1.00	1.00	1.00	23a	SUST	150	20000
	TR:Amb to T1{1}	75	12	402	0	1.00	1.00	1.00	1.00	(17)	DISP	1525	30000
	Amb to T1{1}	75	12	402	0	1.00	1.00	1.00	1.00	(17)	DISP	1525	30000
A10 N+	Max P{1}									(3a)	HOOP	0	20000
	GR + Max P{1}	1	28	26	2	1.00	1.00	1.00	1.00	23a	SUST	150	20000
	TR:Amb to T1{1}	75	402	15	0	1.00	1.00	1.00	1.00	(17)	DISP	1525	30000
	Amb to T1{1}	75	402	15	0	1.00	1.00	1.00	1.00	(17)	DISP	1525	30000
A10 F-	Max P{1}									(3a)	HOOP	0	20000
	GR + Max P{1}	0	28	19	5	1.00	1.00	1.00	1.00	23a	SUST	134	20000
	TR:Amb to T1{1}	42	303	15	0	1.00	1.00	1.00	1.00	(17)	DISP	1146	30000
	Amb to T1{1}	42	303	15	0	1.00	1.00	1.00	1.00	(17)	DISP	1146	30000

Encasement Piping Low Temp
04/24/2020 2018719 BENTLEY
10:51 AM AutoPIPE Nuclear 12.00.00.16 RESULT PAGE 99

ASME B31.3 (2016) CODE COMPLIANCE
(Moments in ft-lb , Force in lbf) (Stress in psi)

Point name	Load combination	Axial Force	In-Pl. Moment	Out-Pl. Moment	Torsion Moment	S.I.F In	S.I.F Out	Index/SIF Ax.	Index/SIF Tor.	Eq. no.	Load type	Code Stress	Code Allow.
A10 F+	Max P{1}									(3a)	HOOP	0	20000
	GR + Max P{1}	0	19	28	5	1.00	1.00	1.00	1.00	23a	SUST	134	20000
	TR:Amb to T1{1}	42	13	303	0	1.00	1.00	1.00	1.00	(17)	DISP	1146	30000
	Amb to T1{1}	42	13	303	0	1.00	1.00	1.00	1.00	(17)	DISP	1146	30000
A52	Max P{1}									(3a)	HOOP	0	20000
	GR + Max P{1}	0	33	28	5	1.00	1.00	1.00	1.00	23a	SUST	170	20000
	TR:Amb to T1{1}	42	15	266	0	1.00	1.00	1.00	1.00	(17)	DISP	1007	30000
	Amb to T1{1}	42	15	266	0	1.00	1.00	1.00	1.00	(17)	DISP	1007	30000
A53	Max P{1}									(3a)	HOOP	0	20000
	GR + Max P{1}	0	38	23	5	1.00	1.00	1.00	1.00	23a	SUST	173	20000
	TR:Amb to T1{1}	42	10	251	0	1.00	1.00	1.00	1.00	(17)	DISP	953	30000
	Amb to T1{1}	42	10	251	0	1.00	1.00	1.00	1.00	(17)	DISP	953	30000
A11 N-	Max P{1}									(3a)	HOOP	0	20000
	GR + Max P{1}	0	23	22	5	1.00	1.00	1.00	1.00	23a	SUST	127	20000
	TR:Amb to T1{1}	42	8	289	0	1.00	1.00	1.00	1.00	(17)	DISP	1092	30000
	Amb to T1{1}	42	8	289	0	1.00	1.00	1.00	1.00	(17)	DISP	1092	30000
A11 N+	Max P{1}									(3a)	HOOP	0	20000
	GR + Max P{1}	0	23	23	5	1.00	1.00	1.00	1.00	23a	SUST	127	20000
	TR:Amb to T1{1}	42	289	10	0	1.00	1.00	1.00	1.00	(17)	DISP	1092	30000
	Amb to T1{1}	42	289	10	0	1.00	1.00	1.00	1.00	(17)	DISP	1092	30000
A11 F-	Max P{1}									(3a)	HOOP	0	20000
	GR + Max P{1}	1	19	24	0	1.00	1.00	1.00	1.00	23a	SUST	118	20000
	TR:Amb to T1{1}	75	388	11	0	1.00	1.00	1.00	1.00	(17)	DISP	1471	30000
	Amb to T1{1}	75	388	11	0	1.00	1.00	1.00	1.00	(17)	DISP	1471	30000
A11 F+	Max P{1}									(3a)	HOOP	0	20000
	GR + Max P{1}	1	23	19	0	1.00	1.00	1.00	1.00	23a	SUST	118	20000
	TR:Amb to T1{1}	75	8	388	0	1.00	1.00	1.00	1.00	(17)	DISP	1471	30000
	Amb to T1{1}	75	8	388	0	1.00	1.00	1.00	1.00	(17)	DISP	1471	30000
A54	Max P{1}									(3a)	HOOP	0	20000
	GR + Max P{1}	0	37	19	0	1.00	1.00	1.00	1.00	23a	SUST	162	20000
	TR:Amb to T1{1}	75	10	367	0	1.00	1.00	1.00	1.00	(17)	DISP	1393	30000
	Amb to T1{1}	75	10	367	0	1.00	1.00	1.00	1.00	(17)	DISP	1393	30000
A55 -	Max P{1}									(3a)	HOOP	0	20000
	GR + Max P{1}	0	87	17	0	1.00	1.00	1.00	1.00	23a	SUST	344	20000
	TR:Amb to T1{1}	75	5	11	1	1.00	1.00	1.00	1.00	(17)	DISP	69	30000
	Amb to T1{1}	75	5	11	1	1.00	1.00	1.00	1.00	(17)	DISP	69	30000
A55 +	Max P{1}									(3a)	HOOP	0	20000
	GR + Max P{1}	1	87	17	0	1.00	1.00	1.00	1.00	23a	SUST	345	20000
	TR:Amb to T1{1}	153	5	11	1	1.00	1.00	1.00	1.00	(17)	DISP	93	30000
	Amb to T1{1}	153	5	11	1	1.00	1.00	1.00	1.00	(17)	DISP	93	30000

Encasement Piping Low Temp
04/24/2020 2018719 BENTLEY
10:51 AM AutoPIPE Nuclear 12.00.00.16 RESULT PAGE 100

ASME B31.3 (2016) CODE COMPLIANCE
(Moments in ft-lb , Force in lbf) (Stress in psi)

Point name	Load combination	Axial Force	In-Pl. Moment	Out-Pl. Moment	Torsion Moment	S.I.F In	S.I.F Out	Index/SIF Ax.	Index/SIF Tor.	Eq. no.	Load type	Code Stress	Code Allow.
A56	- Max P{1}									(3a)	HOOP	0	20000
	GR + Max P{1}	0	69	15	0	1.00	1.00	1.00	1.00	23a	SUST	273	20000
	TR:Amb to T1{1}	153	1	57	1	1.00	1.00	1.00	1.00	(17)	DISP	260	30000
	Amb to T1{1}	153	1	57	1	1.00	1.00	1.00	1.00	(17)	DISP	260	30000
A56	+ Max P{1}									(3a)	HOOP	0	20000
	GR + Max P{1}	1	69	15	0	1.00	1.00	1.00	1.00	23a	SUST	273	20000
	TR:Amb to T1{1}	228	1	57	1	1.00	1.00	1.00	1.00	(17)	DISP	284	30000
	Amb to T1{1}	228	1	57	1	1.00	1.00	1.00	1.00	(17)	DISP	284	30000
A57	- Max P{1}									(3a)	HOOP	0	20000
	GR + Max P{1}	0	74	13	0	1.00	1.00	1.00	1.00	23a	SUST	291	20000
	TR:Amb to T1{1}	228	0	12	1	1.00	1.00	1.00	1.00	(17)	DISP	118	30000
	Amb to T1{1}	228	0	12	1	1.00	1.00	1.00	1.00	(17)	DISP	118	30000
A57	+ Max P{1}									(3a)	HOOP	0	20000
	GR + Max P{1}	1	74	13	0	1.00	1.00	1.00	1.00	23a	SUST	291	20000
	TR:Amb to T1{1}	308	0	12	1	1.00	1.00	1.00	1.00	(17)	DISP	143	30000
	Amb to T1{1}	308	0	12	1	1.00	1.00	1.00	1.00	(17)	DISP	143	30000
A58	- Max P{1}									(3a)	HOOP	0	20000
	GR + Max P{1}	0	72	11	0	1.00	1.00	1.00	1.00	23a	SUST	281	20000
	TR:Amb to T1{1}	308	0	11	1	1.00	1.00	1.00	1.00	(17)	DISP	138	30000
	Amb to T1{1}	308	0	11	1	1.00	1.00	1.00	1.00	(17)	DISP	138	30000
A58	+ Max P{1}									(3a)	HOOP	0	20000
	GR + Max P{1}	1	72	11	0	1.00	1.00	1.00	1.00	23a	SUST	281	20000
	TR:Amb to T1{1}	257	0	11	1	1.00	1.00	1.00	1.00	(17)	DISP	122	30000
	Amb to T1{1}	257	0	11	1	1.00	1.00	1.00	1.00	(17)	DISP	122	30000
A59	- Max P{1}									(3a)	HOOP	0	20000
	GR + Max P{1}	0	76	9	0	1.00	1.00	1.00	1.00	23a	SUST	295	20000
	TR:Amb to T1{1}	257	0	5	1	1.00	1.00	1.00	1.00	(17)	DISP	100	30000
	Amb to T1{1}	257	0	5	1	1.00	1.00	1.00	1.00	(17)	DISP	100	30000
A59	+ Max P{1}									(3a)	HOOP	0	20000
	GR + Max P{1}	1	76	9	0	1.00	1.00	1.00	1.00	23a	SUST	296	20000
	TR:Amb to T1{1}	180	0	5	1	1.00	1.00	1.00	1.00	(17)	DISP	76	30000
	Amb to T1{1}	180	0	5	1	1.00	1.00	1.00	1.00	(17)	DISP	76	30000
A60	- Max P{1}									(3a)	HOOP	0	20000
	GR + Max P{1}	0	62	7	0	1.00	1.00	1.00	1.00	23a	SUST	241	20000
	TR:Amb to T1{1}	180	2	66	1	1.00	1.00	1.00	1.00	(17)	DISP	304	30000
	Amb to T1{1}	180	2	66	1	1.00	1.00	1.00	1.00	(17)	DISP	304	30000
A60	+ Max P{1}									(3a)	HOOP	0	20000
	GR + Max P{1}	0	62	7	0	1.00	1.00	1.00	1.00	23a	SUST	241	20000
	TR:Amb to T1{1}	108	2	66	1	1.00	1.00	1.00	1.00	(17)	DISP	282	30000
	Amb to T1{1}	108	2	66	1	1.00	1.00	1.00	1.00	(17)	DISP	282	30000

Encasement Piping Low Temp
04/24/2020 2018719 BENTLEY
10:51 AM AutoPIPE Nuclear 12.00.00.16 RESULT PAGE 101

ASME B31.3 (2016) CODE COMPLIANCE
(Moments in ft-lb , Force in lbf) (Stress in psi)

Point name	Load combination	Axial Force	In-Pl. Moment	Out-Pl. Moment	Torsion Moment	S.I.F In	S.I.F Out	Index/SIF Ax.	Index/SIF Tor.	Eq. no.	Load type	Code Stress	Code Allow.
A61 -	Max P{1}									(3a)	HOOP	0	20000
	GR + Max P{1}	0	87	5	0	1.00	1.00	1.00	1.00	23a	SUST	338	20000
	TR:Amb to T1{1}	108	6	87	1	1.00	1.00	1.00	1.00	(17)	DISP	358	30000
	Amb to T1{1}	108	6	87	1	1.00	1.00	1.00	1.00	(17)	DISP	358	30000
A61 +	Max P{1}									(3a)	HOOP	0	20000
	GR + Max P{1}	1	87	5	0	1.00	1.00	1.00	1.00	23a	SUST	338	20000
	TR:Amb to T1{1}	36	6	87	1	1.00	1.00	1.00	1.00	(17)	DISP	335	30000
	Amb to T1{1}	36	6	87	1	1.00	1.00	1.00	1.00	(17)	DISP	335	30000
A62	Max P{1}									(3a)	HOOP	0	20000
	GR + Max P{1}	0	22	3	0	1.00	1.00	1.00	1.00	23a	SUST	84	20000
	TR:Amb to T1{1}	36	13	197	1	1.00	1.00	1.00	1.00	(17)	DISP	748	30000
	Amb to T1{1}	36	13	197	1	1.00	1.00	1.00	1.00	(17)	DISP	748	30000
A12 N-	Max P{1}									(3a)	HOOP	0	20000
	GR + Max P{1}	0	10	3	0	1.00	1.00	1.00	1.00	23a	SUST	40	20000
	TR:Amb to T1{1}	36	11	213	0	1.00	1.00	1.00	1.00	(17)	DISP	807	30000
	Amb to T1{1}	36	11	213	0	1.00	1.00	1.00	1.00	(17)	DISP	807	30000
A12 N+	Max P{1}									(3a)	HOOP	0	20000
	GR + Max P{1}	0	3	10	0	1.00	1.00	1.00	1.00	23a	SUST	40	20000
	TR:Amb to T1{1}	36	213	13	0	1.00	1.00	1.00	1.00	(17)	DISP	807	30000
	Amb to T1{1}	36	213	13	0	1.00	1.00	1.00	1.00	(17)	DISP	807	30000
A12 F-	Max P{1}									(3a)	HOOP	0	20000
	GR + Max P{1}	0	1	35	3	1.00	1.00	1.00	1.00	23a	SUST	134	20000
	TR:Amb to T1{1}	32	200	13	0	1.00	1.00	1.00	1.00	(17)	DISP	760	30000
	Amb to T1{1}	32	200	13	0	1.00	1.00	1.00	1.00	(17)	DISP	760	30000
A12 F+	Max P{1}									(3a)	HOOP	0	20000
	GR + Max P{1}	0	35	1	3	1.00	1.00	1.00	1.00	23a	SUST	134	20000
	TR:Amb to T1{1}	32	11	201	0	1.00	1.00	1.00	1.00	(17)	DISP	760	30000
	Amb to T1{1}	32	11	201	0	1.00	1.00	1.00	1.00	(17)	DISP	760	30000
A63	Max P{1}									(3a)	HOOP	0	20000
	GR + Max P{1}	0	51	1	3	1.00	1.00	1.00	1.00	23a	SUST	198	20000
	TR:Amb to T1{1}	32	13	183	0	1.00	1.00	1.00	1.00	(17)	DISP	694	30000
	Amb to T1{1}	32	13	183	0	1.00	1.00	1.00	1.00	(17)	DISP	694	30000
A64 -	Max P{1}									(3a)	HOOP	0	20000
	GR + Max P{1}	1	79	2	3	1.00	1.00	1.00	1.00	23a	SUST	305	20000
	TR:Amb to T1{1}	32	5	138	0	1.00	1.00	1.00	1.00	(17)	DISP	525	30000
	Amb to T1{1}	32	5	138	0	1.00	1.00	1.00	1.00	(17)	DISP	525	30000
A64 +	Max P{1}									(3a)	HOOP	0	20000
	GR + Max P{1}	0	79	2	3	1.00	1.00	1.00	1.00	23a	SUST	305	20000
	TR:Amb to T1{1}	102	5	138	0	1.00	1.00	1.00	1.00	(17)	DISP	547	30000
	Amb to T1{1}	102	5	138	0	1.00	1.00	1.00	1.00	(17)	DISP	547	30000

Encasement Piping Low Temp
04/24/2020 2018719 BENTLEY
10:51 AM AutoPIPE Nuclear 12.00.00.16 RESULT PAGE 102

ASME B31.3 (2016) CODE COMPLIANCE
(Moments in ft-lb , Force in lbf) (Stress in psi)

Point name	Load combination	Axial Force	In-Pl. Moment	Out-Pl. Moment	Torsion Moment	S.I.F In	S.I.F Out	Index/SIF Ax.	Index/SIF Tor.	Eq. no.	Load type	Code Stress	Code Allow.
A65 -	Max P{1}									(3a)	HOOP	0	20000
	GR + Max P{1}	1	71	6	3	1.00	1.00	1.00	1.00	23a	SUST	276	20000
	TR:Amb to T1{1}	102	1	61	0	1.00	1.00	1.00	1.00	(17)	DISP	262	30000
	Amb to T1{1}	102	1	61	0	1.00	1.00	1.00	1.00	(17)	DISP	262	30000
A65 +	Max P{1}									(3a)	HOOP	0	20000
	GR + Max P{1}	0	71	6	3	1.00	1.00	1.00	1.00	23a	SUST	276	20000
	TR:Amb to T1{1}	179	1	61	0	1.00	1.00	1.00	1.00	(17)	DISP	286	30000
	Amb to T1{1}	179	1	61	0	1.00	1.00	1.00	1.00	(17)	DISP	286	30000
A66 -	Max P{1}									(3a)	HOOP	0	20000
	GR + Max P{1}	1	74	10	3	1.00	1.00	1.00	1.00	23a	SUST	291	20000
	TR:Amb to T1{1}	179	0	7	0	1.00	1.00	1.00	1.00	(17)	DISP	82	30000
	Amb to T1{1}	179	0	7	0	1.00	1.00	1.00	1.00	(17)	DISP	82	30000
A66 +	Max P{1}									(3a)	HOOP	0	20000
	GR + Max P{1}	0	74	10	3	1.00	1.00	1.00	1.00	23a	SUST	291	20000
	TR:Amb to T1{1}	186	0	7	0	1.00	1.00	1.00	1.00	(17)	DISP	84	30000
	Amb to T1{1}	186	0	7	0	1.00	1.00	1.00	1.00	(17)	DISP	84	30000
A67 -	Max P{1}									(3a)	HOOP	0	20000
	GR + Max P{1}	1	68	13	3	1.00	1.00	1.00	1.00	23a	SUST	268	20000
	TR:Amb to T1{1}	186	1	38	0	1.00	1.00	1.00	1.00	(17)	DISP	199	30000
	Amb to T1{1}	186	1	38	0	1.00	1.00	1.00	1.00	(17)	DISP	199	30000
A67 +	Max P{1}									(3a)	HOOP	0	20000
	GR + Max P{1}	0	68	13	3	1.00	1.00	1.00	1.00	23a	SUST	268	20000
	TR:Amb to T1{1}	111	1	38	0	1.00	1.00	1.00	1.00	(17)	DISP	175	30000
	Amb to T1{1}	111	1	38	0	1.00	1.00	1.00	1.00	(17)	DISP	175	30000
A68 -	Max P{1}									(3a)	HOOP	0	20000
	GR + Max P{1}	1	80	17	3	1.00	1.00	1.00	1.00	23a	SUST	318	20000
	TR:Amb to T1{1}	111	4	64	0	1.00	1.00	1.00	1.00	(17)	DISP	275	30000
	Amb to T1{1}	111	4	64	0	1.00	1.00	1.00	1.00	(17)	DISP	275	30000
A68 +	Max P{1}									(3a)	HOOP	0	20000
	GR + Max P{1}	0	80	17	3	1.00	1.00	1.00	1.00	23a	SUST	318	20000
	TR:Amb to T1{1}	36	4	64	0	1.00	1.00	1.00	1.00	(17)	DISP	252	30000
	Amb to T1{1}	36	4	64	0	1.00	1.00	1.00	1.00	(17)	DISP	252	30000
A69	Max P{1}									(3a)	HOOP	0	20000
	GR + Max P{1}	1	37	20	3	1.00	1.00	1.00	1.00	23a	SUST	163	20000
	TR:Amb to T1{1}	36	7	156	0	1.00	1.00	1.00	1.00	(17)	DISP	595	30000
	Amb to T1{1}	36	7	156	0	1.00	1.00	1.00	1.00	(17)	DISP	595	30000
A13 N-	Max P{1}									(3a)	HOOP	0	20000
	GR + Max P{1}	1	23	20	3	1.00	1.00	1.00	1.00	23a	SUST	119	20000
	TR:Amb to T1{1}	36	6	169	0	1.00	1.00	1.00	1.00	(17)	DISP	641	30000
	Amb to T1{1}	36	6	169	0	1.00	1.00	1.00	1.00	(17)	DISP	641	30000

ASME B31.3 (2016) CODE COMPLIANCE
(Moments in ft-lb , Force in lbf) (Stress in psi)

Point name	Load combination	Axial Force	In-Pl. Moment	Out-Pl. Moment	Torsion Moment	S.I.F In	S.I.F Out	Index/SIF Ax.	Index/SIF Tor.	Eq. no.	Load type	Code Stress	Code Allow.
A13 N+	Max P{1}									(3a)	HOOP	0	20000
	GR + Max P{1}	1	21	23	3	1.00	1.00	1.00	1.00	23a	SUST	119	20000
	TR:Amb to T1{1}	36	168	6	0	1.00	1.00	1.00	1.00	(17)	DISP	641	30000
	Amb to T1{1}	36	168	6	0	1.00	1.00	1.00	1.00	(17)	DISP	641	30000
A13 F-	Max P{1}									(3a)	HOOP	0	20000
	GR + Max P{1}	1	18	24	3	1.00	1.00	1.00	1.00	23a	SUST	119	20000
	TR:Amb to T1{1}	25	133	8	1	1.00	1.00	1.00	1.00	(17)	DISP	506	30000
	Amb to T1{1}	25	133	8	1	1.00	1.00	1.00	1.00	(17)	DISP	506	30000
A13 F+	Max P{1}									(3a)	HOOP	0	20000
	GR + Max P{1}	1	24	18	3	1.00	1.00	1.00	1.00	23a	SUST	119	20000
	TR:Amb to T1{1}	25	7	133	1	1.00	1.00	1.00	1.00	(17)	DISP	506	30000
	Amb to T1{1}	25	7	133	1	1.00	1.00	1.00	1.00	(17)	DISP	506	30000
A70	Max P{1}									(3a)	HOOP	0	20000
	GR + Max P{1}	1	38	18	3	1.00	1.00	1.00	1.00	23a	SUST	165	20000
	TR:Amb to T1{1}	25	8	115	1	1.00	1.00	1.00	1.00	(17)	DISP	438	30000
	Amb to T1{1}	25	8	115	1	1.00	1.00	1.00	1.00	(17)	DISP	438	30000
A71 -	Max P{1}									(3a)	HOOP	0	20000
	GR + Max P{1}	1	76	9	3	1.00	1.00	1.00	1.00	23a	SUST	296	20000
	TR:Amb to T1{1}	25	2	211	1	1.00	1.00	1.00	1.00	(17)	DISP	797	30000
	Amb to T1{1}	25	2	211	1	1.00	1.00	1.00	1.00	(17)	DISP	797	30000
A71 +	Max P{1}									(3a)	HOOP	0	20000
	GR + Max P{1}	1	76	9	3	1.00	1.00	1.00	1.00	23a	SUST	296	20000
	TR:Amb to T1{1}	51	2	211	1	1.00	1.00	1.00	1.00	(17)	DISP	805	30000
	Amb to T1{1}	51	2	211	1	1.00	1.00	1.00	1.00	(17)	DISP	805	30000
A72	Max P{1}									(3a)	HOOP	0	20000
	GR + Max P{1}	1	37	1	3	1.00	1.00	1.00	1.00	23a	SUST	143	20000
	TR:Amb to T1{1}	51	4	84	1	1.00	1.00	1.00	1.00	(17)	DISP	330	30000
	Amb to T1{1}	51	4	84	1	1.00	1.00	1.00	1.00	(17)	DISP	330	30000
A14 N-	Max P{1}									(3a)	HOOP	0	20000
	GR + Max P{1}	1	22	0	3	1.00	1.00	1.00	1.00	23a	SUST	88	20000
	TR:Amb to T1{1}	51	3	104	1	1.00	1.00	1.00	1.00	(17)	DISP	403	30000
	Amb to T1{1}	51	3	104	1	1.00	1.00	1.00	1.00	(17)	DISP	403	30000
A14 N+	Max P{1}									(3a)	HOOP	0	20000
	GR + Max P{1}	1	1	22	3	1.00	1.00	1.00	1.00	23a	SUST	88	20000
	TR:Amb to T1{1}	51	103	5	1	1.00	1.00	1.00	1.00	(17)	DISP	403	30000
	Amb to T1{1}	51	103	5	1	1.00	1.00	1.00	1.00	(17)	DISP	403	30000
A14 F-	Max P{1}									(3a)	HOOP	0	20000
	GR + Max P{1}	1	7	16	0	1.00	1.00	1.00	1.00	23a	SUST	68	20000
	TR:Amb to T1{1}	39	67	5	2	1.00	1.00	1.00	1.00	(17)	DISP	263	30000
	Amb to T1{1}	39	67	5	2	1.00	1.00	1.00	1.00	(17)	DISP	263	30000

ASME B31.3 (2016) CODE COMPLIANCE
(Moments in ft-lb , Force in lbf) (Stress in psi)

Point name	Load combination	Axial Force	In-Pl. Moment	Out-Pl. Moment	Torsion Moment	S.I.F In	S.I.F Out	Index/SIF Ax.	Index/SIF Tor.	Eq. no.	Load type	Code Stress	Code Allow.
A14 F+	Max P{1}									(3a)	HOOP	0	20000
	GR + Max P{1}	1	16	7	0	1.00	1.00	1.00	1.00	23a	SUST	68	20000
	TR:Amb to T1{1}	39	5	67	2	1.00	1.00	1.00	1.00	(17)	DISP	263	30000
	Amb to T1{1}	39	5	67	2	1.00	1.00	1.00	1.00	(17)	DISP	263	30000
A73	Max P{1}									(3a)	HOOP	0	20000
	GR + Max P{1}	1	30	7	0	1.00	1.00	1.00	1.00	23a	SUST	119	20000
	TR:Amb to T1{1}	39	6	41	2	1.00	1.00	1.00	1.00	(17)	DISP	169	30000
	Amb to T1{1}	39	6	41	2	1.00	1.00	1.00	1.00	(17)	DISP	169	30000
A15 N-	Max P{1}									(3a)	HOOP	0	20000
	GR + Max P{1}	0	13	11	0	1.00	1.00	1.00	1.00	23a	SUST	65	20000
	TR:Amb to T1{1}	39	0	108	2	1.00	1.00	1.00	1.00	(17)	DISP	417	30000
	Amb to T1{1}	39	0	108	2	1.00	1.00	1.00	1.00	(17)	DISP	417	30000
A15 N+	Max P{1}									(3a)	HOOP	0	20000
	GR + Max P{1}	0	13	11	0	1.00	1.00	1.00	1.00	23a	SUST	65	20000
	TR:Amb to T1{1}	39	0	108	2	1.00	1.00	1.00	1.00	(17)	DISP	417	30000
	Amb to T1{1}	39	0	108	2	1.00	1.00	1.00	1.00	(17)	DISP	417	30000
A15 F-	Max P{1}									(3a)	HOOP	0	20000
	GR + Max P{1}	0	13	11	1	1.00	1.00	1.00	1.00	23a	SUST	65	20000
	TR:Amb to T1{1}	39	0	111	0	1.00	1.00	1.00	1.00	(17)	DISP	427	30000
	Amb to T1{1}	39	0	111	0	1.00	1.00	1.00	1.00	(17)	DISP	427	30000
A15 F+	Max P{1}									(3a)	HOOP	0	20000
	GR + Max P{1}	0	13	11	0	1.00	1.00	1.00	1.00	23a	SUST	65	20000
	TR:Amb to T1{1}	39	0	111	0	1.00	1.00	1.00	1.00	(17)	DISP	427	30000
	Amb to T1{1}	39	0	111	0	1.00	1.00	1.00	1.00	(17)	DISP	427	30000
A16	Max P{1}									(3a)	HOOP	0	20000
	GR + Max P{1}	0	6	12	0	1.00	1.00	1.00	1.00	23a	SUST	52	20000
	TR:Amb to T1{1}	39	2	161	0	1.00	1.00	1.00	1.00	(17)	DISP	613	30000
	Amb to T1{1}	39	2	161	0	1.00	1.00	1.00	1.00	(17)	DISP	613	30000
A17	Max P{1}									(3a)	HOOP	0	20000
	GR + Max P{1}	0	12	13	0	1.00	1.00	1.00	1.00	23a	SUST	68	20000
	TR:Amb to T1{1}	39	3	212	0	1.00	1.00	1.00	1.00	(17)	DISP	804	30000
	Amb to T1{1}	39	3	212	0	1.00	1.00	1.00	1.00	(17)	DISP	804	30000
A18 -	Max P{1}									(3a)	HOOP	0	20000
	GR + Max P{1}	0	26	14	0	1.00	1.00	1.00	1.00	23a	SUST	114	20000
	TR:Amb to T1{1}	39	4	240	0	1.00	1.00	1.00	1.00	(17)	DISP	909	30000
	Amb to T1{1}	39	4	240	0	1.00	1.00	1.00	1.00	(17)	DISP	909	30000
A18 +	Max P{1}									(3a)	HOOP	0	20000
	GR + Max P{1}	0	0	0	0	1.00	1.00	1.00	1.00	23a	SUST	1	20000
	TR:Amb to T1{1}	0	0	0	0	1.00	1.00	1.00	1.00	(17)	DISP	0	30000
	Amb to T1{1}	0	0	0	0	1.00	1.00	1.00	1.00	(17)	DISP	0	30000

```
-----------------------------------------------------------------------------------------------------------------------
Encasement Piping Low Temp
04/24/2020 2018719                                                    BENTLEY
10:51 AM                                                              AutoPIPE Nuclear 12.00.00.16   RESULT PAGE 105
-----------------------------------------------------------------------------------------------------------------------

                              ASME B31.3 (2016)  CODE COMPLIANCE
              (Moments in ft-lb  , Force in lbf  )     (Stress in psi     )
 Point     Load                    Axial  In-Pl. Out-Pl. Torsion   S.I.F   Index/SIF  Eq. Load   Code   Code
 name   combination                Force  Moment  Moment  Moment  In  Out   Ax. Tor.  no. type  Stress Allow.
 ------ ----------------------    ------- ------- ------- ------- ---- ---- ---- ---- ---- ----  ------ ------
 A19    Max P{1}                                                                      (3a) HOOP       0  20000
        GR + Max P{1}                   0       0       0       0 1.00 1.00 1.00 1.00  23a SUST       0  20000
        TR:Amb to T1{1}                 0       0       0       0 1.00 1.00 1.00 1.00 (17) DISP       0  30000
        Amb to T1{1}                    0       0       0       0 1.00 1.00 1.00 1.00 (17) DISP       0  30000

 *** Segment A  end   ***

 *** Segment B  begin ***  Line # RIGID

 B03    Max P{1}                                                                      (3a) HOOP       0  20000
        GR + Max P{1}                  25      38     211      14 1.00 1.00 1.00 1.00  23a SUST     318  20000
        TR:Amb to T1{1}               390      64     114       8 1.00 1.00 1.00 1.00 (17) DISP     254  30000
        Amb to T1{1}                  390      64     114       8 1.00 1.00 1.00 1.00 (17) DISP     254  30000

 B04    Max P{1}                                                                      (3a) HOOP       0  20000
        GR + Max P{1}                  25      13     189      14 1.00 1.00 1.00 1.00  23a SUST     281  20000
        TR:Amb to T1{1}               390      26     188       8 1.00 1.00 1.00 1.00 (17) DISP     339  30000
        Amb to T1{1}                  390      26     188       8 1.00 1.00 1.00 1.00 (17) DISP     339  30000

 B22  - Max P{1}                                                                      (3a) HOOP       0  20000
        GR + Max P{1}                  25     183     160      14 1.00 1.00 1.00 1.00  23a SUST     361  20000
        TR:Amb to T1{1}               390     138     281       8 1.00 1.00 1.00 1.00 (17) DISP     512  30000
        Amb to T1{1}                  390     138     281       8 1.00 1.00 1.00 1.00 (17) DISP     512  30000

 B22  + Max P{1}                                                                      (3a) HOOP       0  20000
        GR + Max P{1}                  25     183     160      14 1.00 1.00 1.00 1.00  23a SUST     361  20000
        TR:Amb to T1{1}               150     138     281       8 1.00 1.00 1.00 1.00 (17) DISP     469  30000
        Amb to T1{1}                  150     138     281       8 1.00 1.00 1.00 1.00 (17) DISP     469  30000

 B06 N- Max P{1}                                                                      (3a) HOOP       0  20000
        GR + Max P{1}                  25     154     158      14 1.00 1.00 1.00 1.00  23a SUST     327  20000
        TR:Amb to T1{1}               150     124     277       8 1.00 1.00 1.00 1.00 (17) DISP     456  30000
        Amb to T1{1}                  150     124     277       8 1.00 1.00 1.00 1.00 (17) DISP     456  30000

 B06 N+ Max P{1}                                                                      (3a) HOOP       0  20000
        GR + Max P{1}                  25     154     158      14 1.00 1.00 1.00 1.00  23a SUST     327  20000
        TR:Amb to T1{1}               150     124     277       8 1.00 1.00 1.00 1.00 (17) DISP     456  30000
        Amb to T1{1}                  150     124     277       8 1.00 1.00 1.00 1.00 (17) DISP     456  30000

 B06 F- Max P{1}                                                                      (3a) HOOP       0  20000
        GR + Max P{1}                  42     103     152      12 1.00 1.00 1.00 1.00  23a SUST     277  20000
        TR:Amb to T1{1}               157     104     268      36 1.00 1.00 1.00 1.00 (17) DISP     437  30000
        Amb to T1{1}                  157     104     268      36 1.00 1.00 1.00 1.00 (17) DISP     437  30000

 B06 F+ Max P{1}                                                                      (3a) HOOP       0  20000
        GR + Max P{1}                  42     103     152      12 1.00 1.00 1.00 1.00  23a SUST     277  20000
        TR:Amb to T1{1}               157     104     268      36 1.00 1.00 1.00 1.00 (17) DISP     437  30000
        Amb to T1{1}                  157     104     268      36 1.00 1.00 1.00 1.00 (17) DISP     437  30000
```

ASME B31.3 (2016) CODE COMPLIANCE
(Moments in ft-lb , Force in lbf) (Stress in psi)

Point name	Load combination	Axial Force	In-Pl. Moment	Out-Pl. Moment	Torsion Moment	S.I.F In	S.I.F Out	Index/SIF Ax.	Index/SIF Tor.	Eq. no.	Load type	Code Stress	Code Allow.
B23 -	Max P{1}									(3a)	HOOP	0	20000
	GR + Max P{1}	8	176	27	12	1.00	1.00	1.00	1.00	23a	SUST	262	20000
	TR:Amb to T1{1}	157	219	106	36	1.00	1.00	1.00	1.00	(17)	DISP	375	30000
	Amb to T1{1}	157	219	106	36	1.00	1.00	1.00	1.00	(17)	DISP	375	30000
B23 +	Max P{1}									(3a)	HOOP	0	20000
	GR + Max P{1}	39	176	27	11	1.00	1.00	1.00	1.00	23a	SUST	268	20000
	TR:Amb to T1{1}	88	219	106	36	1.00	1.00	1.00	1.00	(17)	DISP	363	30000
	Amb to T1{1}	88	219	106	36	1.00	1.00	1.00	1.00	(17)	DISP	363	30000
B24	Max P{1}									(3a)	HOOP	0	20000
	GR + Max P{1}	15	110	61	11	1.00	1.00	1.00	1.00	23a	SUST	187	20000
	TR:Amb to T1{1}	88	247	427	36	1.00	1.00	1.00	1.00	(17)	DISP	714	30000
	Amb to T1{1}	88	247	427	36	1.00	1.00	1.00	1.00	(17)	DISP	714	30000
B09 N-	Max P{1}									(3a)	HOOP	0	20000
	GR + Max P{1}	14	76	67	11	1.00	1.00	1.00	1.00	23a	SUST	151	20000
	TR:Amb to T1{1}	88	207	462	36	1.00	1.00	1.00	1.00	(17)	DISP	733	30000
	Amb to T1{1}	88	207	462	36	1.00	1.00	1.00	1.00	(17)	DISP	733	30000
B09 N+	Max P{1}									(3a)	HOOP	0	20000
	GR + Max P{1}	14	64	78	11	1.00	1.00	1.00	1.00	23a	SUST	151	20000
	TR:Amb to T1{1}	88	456	220	36	1.00	1.00	1.00	1.00	(17)	DISP	733	30000
	Amb to T1{1}	88	456	220	36	1.00	1.00	1.00	1.00	(17)	DISP	733	30000
B09 F-	Max P{1}									(3a)	HOOP	0	20000
	GR + Max P{1}	11	88	4	9	1.00	1.00	1.00	1.00	23a	SUST	131	20000
	TR:Amb to T1{1}	71	405	191	6	1.00	1.00	1.00	1.00	(17)	DISP	645	30000
	Amb to T1{1}	71	405	191	6	1.00	1.00	1.00	1.00	(17)	DISP	645	30000
B09 F+	Max P{1}									(3a)	HOOP	0	20000
	GR + Max P{1}	11	10	87	9	1.00	1.00	1.00	1.00	23a	SUST	131	20000
	TR:Amb to T1{1}	71	122	431	6	1.00	1.00	1.00	1.00	(17)	DISP	645	30000
	Amb to T1{1}	71	122	431	6	1.00	1.00	1.00	1.00	(17)	DISP	645	30000
B25	Max P{1}									(3a)	HOOP	0	20000
	GR + Max P{1}	10	27	85	9	1.00	1.00	1.00	1.00	23a	SUST	133	20000
	TR:Amb to T1{1}	71	168	393	6	1.00	1.00	1.00	1.00	(17)	DISP	616	30000
	Amb to T1{1}	71	168	393	6	1.00	1.00	1.00	1.00	(17)	DISP	616	30000
B26 -	Max P{1}									(3a)	HOOP	0	20000
	GR + Max P{1}	5	177	55	9	1.00	1.00	1.00	1.00	23a	SUST	272	20000
	TR:Amb to T1{1}	71	25	273	6	1.00	1.00	1.00	1.00	(17)	DISP	400	30000
	Amb to T1{1}	71	25	273	6	1.00	1.00	1.00	1.00	(17)	DISP	400	30000
B26 +	Max P{1}									(3a)	HOOP	0	20000
	GR + Max P{1}	11	177	55	9	1.00	1.00	1.00	1.00	23a	SUST	273	20000
	TR:Amb to T1{1}	217	25	273	6	1.00	1.00	1.00	1.00	(17)	DISP	426	30000
	Amb to T1{1}	217	25	273	6	1.00	1.00	1.00	1.00	(17)	DISP	426	30000

Encasement Piping Low Temp
04/24/2020 2018719 BENTLEY
10:51 AM AutoPIPE Nuclear 12.00.00.16 RESULT PAGE 107

ASME B31.3 (2016) CODE COMPLIANCE
(Moments in ft-lb , Force in lbf) (Stress in psi)

Point name	Load combination	Axial Force	In-Pl. Moment	Out-Pl. Moment	Torsion Moment	S.I.F In	S.I.F Out	Index/SIF Ax.	Index/SIF Tor.	Eq. no.	Load type	Code Stress	Code Allow.
B28 -	Max P{1}									(3a)	HOOP	0	20000
	GR + Max P{1}	6	120	24	9	1.00	1.00	1.00	1.00	23a	SUST	180	20000
	TR:Amb to T1{1}	217	5	176	6	1.00	1.00	1.00	1.00	(17)	DISP	287	30000
	Amb to T1{1}	217	5	176	6	1.00	1.00	1.00	1.00	(17)	DISP	287	30000
B28 +	Max P{1}									(3a)	HOOP	0	20000
	GR + Max P{1}	11	120	24	9	1.00	1.00	1.00	1.00	23a	SUST	181	20000
	TR:Amb to T1{1}	351	5	176	6	1.00	1.00	1.00	1.00	(17)	DISP	311	30000
	Amb to T1{1}	351	5	176	6	1.00	1.00	1.00	1.00	(17)	DISP	311	30000
B29 -	Max P{1}									(3a)	HOOP	0	20000
	GR + Max P{1}	6	112	6	9	1.00	1.00	1.00	1.00	23a	SUST	165	20000
	TR:Amb to T1{1}	351	6	223	6	1.00	1.00	1.00	1.00	(17)	DISP	378	30000
	Amb to T1{1}	351	6	223	6	1.00	1.00	1.00	1.00	(17)	DISP	378	30000
B29 +	Max P{1}									(3a)	HOOP	0	20000
	GR + Max P{1}	11	112	6	9	1.00	1.00	1.00	1.00	23a	SUST	166	20000
	TR:Amb to T1{1}	412	6	223	6	1.00	1.00	1.00	1.00	(17)	DISP	389	30000
	Amb to T1{1}	412	6	223	6	1.00	1.00	1.00	1.00	(17)	DISP	389	30000
B31 -	Max P{1}									(3a)	HOOP	0	20000
	GR + Max P{1}	5	201	37	9	1.00	1.00	1.00	1.00	23a	SUST	300	20000
	TR:Amb to T1{1}	412	27	149	6	1.00	1.00	1.00	1.00	(17)	DISP	288	30000
	Amb to T1{1}	412	27	149	6	1.00	1.00	1.00	1.00	(17)	DISP	288	30000
B31 +	Max P{1}									(3a)	HOOP	0	20000
	GR + Max P{1}	12	201	37	9	1.00	1.00	1.00	1.00	23a	SUST	301	20000
	TR:Amb to T1{1}	304	27	149	6	1.00	1.00	1.00	1.00	(17)	DISP	269	30000
	Amb to T1{1}	304	27	149	6	1.00	1.00	1.00	1.00	(17)	DISP	269	30000
B32	Max P{1}									(3a)	HOOP	0	20000
	GR + Max P{1}	6	39	72	9	1.00	1.00	1.00	1.00	23a	SUST	121	20000
	TR:Amb to T1{1}	304	44	1074	6	1.00	1.00	1.00	1.00	(17)	DISP	1572	30000
	Amb to T1{1}	304	44	1074	6	1.00	1.00	1.00	1.00	(17)	DISP	1572	30000
B16 N-	Max P{1}									(3a)	HOOP	0	20000
	GR + Max P{1}	6	24	73	9	1.00	1.00	1.00	1.00	23a	SUST	115	20000
	TR:Amb to T1{1}	304	33	1134	5	1.00	1.00	1.00	1.00	(17)	DISP	1657	30000
	Amb to T1{1}	304	33	1134	5	1.00	1.00	1.00	1.00	(17)	DISP	1657	30000
B16 N+	Max P{1}									(3a)	HOOP	0	20000
	GR + Max P{1}	6	73	26	9	1.00	1.00	1.00	1.00	23a	SUST	115	20000
	TR:Amb to T1{1}	304	1133	59	5	1.00	1.00	1.00	1.00	(17)	DISP	1657	30000
	Amb to T1{1}	304	1133	59	5	1.00	1.00	1.00	1.00	(17)	DISP	1657	30000
B16 F-	Max P{1}									(3a)	HOOP	0	20000
	GR + Max P{1}	2	70	86	47	1.00	1.00	1.00	1.00	23a	SUST	176	20000
	TR:Amb to T1{1}	121	582	57	8	1.00	1.00	1.00	1.00	(17)	DISP	848	30000
	Amb to T1{1}	121	582	57	8	1.00	1.00	1.00	1.00	(17)	DISP	848	30000

ASME B31.3 (2016) CODE COMPLIANCE
(Moments in ft-lb , Force in lbf) (Stress in psi)

Point name	Load combination	Axial Force	In-Pl. Moment	Out-Pl. Moment	Torsion Moment	S.I.F In	S.I.F Out	Index/SIF Ax.	Index/SIF Tor.	Eq. no.	Load type	Code Stress	Code Allow.
B16 F+	Max P{1}									(3a)	HOOP	0	20000
	GR + Max P{1}	2	88	68	47	1.00	1.00	1.00	1.00	23a	SUST	176	20000
	TR:Amb to T1{1}	121	40	584	8	1.00	1.00	1.00	1.00	(17)	DISP	848	30000
	Amb to T1{1}	121	40	584	8	1.00	1.00	1.00	1.00	(17)	DISP	848	30000
B33	Max P{1}									(3a)	HOOP	0	20000
	GR + Max P{1}	2	122	65	47	1.00	1.00	1.00	1.00	23a	SUST	214	20000
	TR:Amb to T1{1}	121	53	431	8	1.00	1.00	1.00	1.00	(17)	DISP	635	30000
	Amb to T1{1}	121	53	431	8	1.00	1.00	1.00	1.00	(17)	DISP	635	30000
B34	Max P{1}									(3a)	HOOP	0	20000
	GR + Max P{1}	1	178	52	47	1.00	1.00	1.00	1.00	23a	SUST	279	20000
	TR:Amb to T1{1}	121	94	407	7	1.00	1.00	1.00	1.00	(17)	DISP	612	30000
	Amb to T1{1}	121	94	407	7	1.00	1.00	1.00	1.00	(17)	DISP	612	30000
B19 N-	Max P{1}									(3a)	HOOP	0	20000
	GR + Max P{1}	0	135	49	47	1.00	1.00	1.00	1.00	23a	SUST	221	20000
	TR:Amb to T1{1}	121	74	560	7	1.00	1.00	1.00	1.00	(17)	DISP	820	30000
	Amb to T1{1}	121	74	560	7	1.00	1.00	1.00	1.00	(17)	DISP	820	30000
B19 N+	Max P{1}									(3a)	HOOP	0	20000
	GR + Max P{1}	0	53	133	47	1.00	1.00	1.00	1.00	23a	SUST	221	20000
	TR:Amb to T1{1}	121	558	90	7	1.00	1.00	1.00	1.00	(17)	DISP	820	30000
	Amb to T1{1}	121	558	90	7	1.00	1.00	1.00	1.00	(17)	DISP	820	30000
B19 F-	Max P{1}									(3a)	HOOP	0	20000
	GR + Max P{1}	5	31	25	13	1.00	1.00	1.00	1.00	23a	SUST	62	20000
	TR:Amb to T1{1}	305	1110	85	2	1.00	1.00	1.00	1.00	(17)	DISP	1627	30000
	Amb to T1{1}	305	1110	85	2	1.00	1.00	1.00	1.00	(17)	DISP	1627	30000
B19 F+	Max P{1}									(3a)	HOOP	0	20000
	GR + Max P{1}	5	26	31	13	1.00	1.00	1.00	1.00	23a	SUST	62	20000
	TR:Amb to T1{1}	305	60	1111	2	1.00	1.00	1.00	1.00	(17)	DISP	1627	30000
	Amb to T1{1}	305	60	1111	2	1.00	1.00	1.00	1.00	(17)	DISP	1627	30000
B35	Max P{1}									(3a)	HOOP	0	20000
	GR + Max P{1}	4	20	30	13	1.00	1.00	1.00	1.00	23a	SUST	56	20000
	TR:Amb to T1{1}	305	77	1051	2	1.00	1.00	1.00	1.00	(17)	DISP	1543	30000
	Amb to T1{1}	305	77	1051	2	1.00	1.00	1.00	1.00	(17)	DISP	1543	30000
B36 -	Max P{1}									(3a)	HOOP	0	20000
	GR + Max P{1}	0	198	17	12	1.00	1.00	1.00	1.00	23a	SUST	291	20000
	TR:Amb to T1{1}	305	45	27	3	1.00	1.00	1.00	1.00	(17)	DISP	129	30000
	Amb to T1{1}	305	45	27	3	1.00	1.00	1.00	1.00	(17)	DISP	129	30000
B36 +	Max P{1}									(3a)	HOOP	0	20000
	GR + Max P{1}	5	198	17	12	1.00	1.00	1.00	1.00	23a	SUST	292	20000
	TR:Amb to T1{1}	458	45	27	3	1.00	1.00	1.00	1.00	(17)	DISP	157	30000
	Amb to T1{1}	458	45	27	3	1.00	1.00	1.00	1.00	(17)	DISP	157	30000

ASME B31.3 (2016) CODE COMPLIANCE
(Moments in ft-lb , Force in lbf) (Stress in psi)

Point name	Load combination	Axial Force	In-Pl. Moment	Out-Pl. Moment	Torsion Moment	S.I.F In	S.I.F Out	Index/SIF Ax.	Index/SIF Tor.	Eq. no.	Load type	Code Stress	Code Allow.
B37 -	Max P{1}									(3a)	HOOP	0	20000
	GR + Max P{1}	1	108	4	12	1.00	1.00	1.00	1.00	23a	SUST	158	20000
	TR:Amb to T1{1}	458	11	200	3	1.00	1.00	1.00	1.00	(17)	DISP	365	30000
	Amb to T1{1}	458	11	200	3	1.00	1.00	1.00	1.00	(17)	DISP	365	30000
B37 +	Max P{1}									(3a)	HOOP	0	20000
	GR + Max P{1}	5	108	4	12	1.00	1.00	1.00	1.00	23a	SUST	159	20000
	TR:Amb to T1{1}	577	11	200	3	1.00	1.00	1.00	1.00	(17)	DISP	386	30000
	Amb to T1{1}	577	11	200	3	1.00	1.00	1.00	1.00	(17)	DISP	386	30000
B38 -	Max P{1}									(3a)	HOOP	0	20000
	GR + Max P{1}	0	140	9	12	1.00	1.00	1.00	1.00	23a	SUST	206	20000
	TR:Amb to T1{1}	577	0	109	3	1.00	1.00	1.00	1.00	(17)	DISP	258	30000
	Amb to T1{1}	577	0	109	3	1.00	1.00	1.00	1.00	(17)	DISP	258	30000
B38 +	Max P{1}									(3a)	HOOP	0	20000
	GR + Max P{1}	5	140	9	12	1.00	1.00	1.00	1.00	23a	SUST	207	20000
	TR:Amb to T1{1}	474	0	109	3	1.00	1.00	1.00	1.00	(17)	DISP	239	30000
	Amb to T1{1}	474	0	109	3	1.00	1.00	1.00	1.00	(17)	DISP	239	30000
B39 -	Max P{1}									(3a)	HOOP	0	20000
	GR + Max P{1}	1	98	22	12	1.00	1.00	1.00	1.00	23a	SUST	148	20000
	TR:Amb to T1{1}	474	10	224	3	1.00	1.00	1.00	1.00	(17)	DISP	401	30000
	Amb to T1{1}	474	10	224	3	1.00	1.00	1.00	1.00	(17)	DISP	401	30000
B39 +	Max P{1}									(3a)	HOOP	0	20000
	GR + Max P{1}	5	98	22	12	1.00	1.00	1.00	1.00	23a	SUST	149	20000
	TR:Amb to T1{1}	363	10	224	3	1.00	1.00	1.00	1.00	(17)	DISP	381	30000
	Amb to T1{1}	363	10	224	3	1.00	1.00	1.00	1.00	(17)	DISP	381	30000
B40 -	Max P{1}									(3a)	HOOP	0	20000
	GR + Max P{1}	1	140	33	12	1.00	1.00	1.00	1.00	23a	SUST	210	20000
	TR:Amb to T1{1}	363	43	86	3	1.00	1.00	1.00	1.00	(17)	DISP	201	30000
	Amb to T1{1}	363	43	86	3	1.00	1.00	1.00	1.00	(17)	DISP	201	30000
B40 +	Max P{1}									(3a)	HOOP	0	20000
	GR + Max P{1}	5	140	33	12	1.00	1.00	1.00	1.00	23a	SUST	211	20000
	TR:Amb to T1{1}	275	43	86	3	1.00	1.00	1.00	1.00	(17)	DISP	185	30000
	Amb to T1{1}	275	43	86	3	1.00	1.00	1.00	1.00	(17)	DISP	185	30000
B42	Max P{1}									(3a)	HOOP	0	20000
	GR + Max P{1}	0	142	46	12	1.00	1.00	1.00	1.00	23a	SUST	219	20000
	TR:Amb to T1{1}	275	56	1105	3	1.00	1.00	1.00	1.00	(17)	DISP	1612	30000
	Amb to T1{1}	275	56	1105	3	1.00	1.00	1.00	1.00	(17)	DISP	1612	30000
B27 N-	Max P{1}									(3a)	HOOP	0	20000
	GR + Max P{1}	0	97	47	12	1.00	1.00	1.00	1.00	23a	SUST	159	20000
	TR:Amb to T1{1}	275	42	1162	2	1.00	1.00	1.00	1.00	(17)	DISP	1691	30000
	Amb to T1{1}	275	42	1162	2	1.00	1.00	1.00	1.00	(17)	DISP	1691	30000

ASME B31.3 (2016) CODE COMPLIANCE
(Moments in ft-lb , Force in lbf) (Stress in psi)

Point name	Load combination	Axial Force	In-Pl. Moment	Out-Pl. Moment	Torsion Moment	S.I.F In	S.I.F Out	Index/SIF Ax.	Index/SIF Tor.	Eq. no.	Load type	Code Stress	Code Allow.
B27 N+	Max P{1}									(3a)	HOOP	0	20000
	GR + Max P{1}	0	45	98	12	1.00	1.00	1.00	1.00	23a	SUST	159	20000
	TR:Amb to T1{1}	275	1160	72	2	1.00	1.00	1.00	1.00	(17)	DISP	1691	30000
	Amb to T1{1}	275	1160	72	2	1.00	1.00	1.00	1.00	(17)	DISP	1691	30000
B27 F-	Max P{1}									(3a)	HOOP	0	20000
	GR + Max P{1}	1	58	70	58	1.00	1.00	1.00	1.00	23a	SUST	157	20000
	TR:Amb to T1{1}	114	678	71	2	1.00	1.00	1.00	1.00	(17)	DISP	983	30000
	Amb to T1{1}	114	678	71	2	1.00	1.00	1.00	1.00	(17)	DISP	983	30000
B27 F+	Max P{1}									(3a)	HOOP	0	20000
	GR + Max P{1}	1	69	60	58	1.00	1.00	1.00	1.00	23a	SUST	157	20000
	TR:Amb to T1{1}	114	52	679	2	1.00	1.00	1.00	1.00	(17)	DISP	983	30000
	Amb to T1{1}	114	52	679	2	1.00	1.00	1.00	1.00	(17)	DISP	983	30000
B43	Max P{1}									(3a)	HOOP	0	20000
	GR + Max P{1}	1	64	61	58	1.00	1.00	1.00	1.00	23a	SUST	154	20000
	TR:Amb to T1{1}	114	68	541	2	1.00	1.00	1.00	1.00	(17)	DISP	791	30000
	Amb to T1{1}	114	68	541	2	1.00	1.00	1.00	1.00	(17)	DISP	791	30000
B45	Max P{1}									(3a)	HOOP	0	20000
	GR + Max P{1}	1	103	70	58	1.00	1.00	1.00	1.00	23a	SUST	201	20000
	TR:Amb to T1{1}	114	51	555	2	1.00	1.00	1.00	1.00	(17)	DISP	808	30000
	Amb to T1{1}	114	51	555	2	1.00	1.00	1.00	1.00	(17)	DISP	808	30000
B30 N-	Max P{1}									(3a)	HOOP	0	20000
	GR + Max P{1}	1	104	71	58	1.00	1.00	1.00	1.00	23a	SUST	202	20000
	TR:Amb to T1{1}	114	42	693	1	1.00	1.00	1.00	1.00	(17)	DISP	1001	30000
	Amb to T1{1}	114	42	693	1	1.00	1.00	1.00	1.00	(17)	DISP	1001	30000
B30 N+	Max P{1}									(3a)	HOOP	0	20000
	GR + Max P{1}	1	70	104	58	1.00	1.00	1.00	1.00	23a	SUST	202	20000
	TR:Amb to T1{1}	114	692	47	1	1.00	1.00	1.00	1.00	(17)	DISP	1001	30000
	Amb to T1{1}	114	692	47	1	1.00	1.00	1.00	1.00	(17)	DISP	1001	30000
B30 F-	Max P{1}									(3a)	HOOP	0	20000
	GR + Max P{1}	3	72	126	7	1.00	1.00	1.00	1.00	23a	SUST	212	20000
	TR:Amb to T1{1}	274	1173	51	3	1.00	1.00	1.00	1.00	(17)	DISP	1707	30000
	Amb to T1{1}	274	1173	51	3	1.00	1.00	1.00	1.00	(17)	DISP	1707	30000
B30 F+	Max P{1}									(3a)	HOOP	0	20000
	GR + Max P{1}	3	124	75	7	1.00	1.00	1.00	1.00	23a	SUST	212	20000
	TR:Amb to T1{1}	274	24	1174	3	1.00	1.00	1.00	1.00	(17)	DISP	1707	30000
	Amb to T1{1}	274	24	1174	3	1.00	1.00	1.00	1.00	(17)	DISP	1707	30000
B46	Max P{1}									(3a)	HOOP	0	20000
	GR + Max P{1}	3	174	74	7	1.00	1.00	1.00	1.00	23a	SUST	276	20000
	TR:Amb to T1{1}	274	34	1117	3	1.00	1.00	1.00	1.00	(17)	DISP	1627	30000
	Amb to T1{1}	274	34	1117	3	1.00	1.00	1.00	1.00	(17)	DISP	1627	30000

Encasement Piping Low Temp
04/24/2020 2018719 BENTLEY
10:51 AM AutoPIPE Nuclear 12.00.00.16 RESULT PAGE 111

ASME B31.3 (2016) CODE COMPLIANCE
(Moments in ft-lb , Force in lbf) (Stress in psi)

Point name	Load combination	Axial Force	In-Pl. Moment	Out-Pl. Moment	Torsion Moment	S.I.F In	S.I.F Out	Index/SIF Ax.	Index/SIF Tor.	Eq. no.	Load type	Code Stress	Code Allow.
B47	- Max P{1}									(3a)	HOOP	0	20000
	GR + Max P{1}	5	124	66	6	1.00	1.00	1.00	1.00	23a	SUST	206	20000
	TR:Amb to T1{1}	274	20	94	2	1.00	1.00	1.00	1.00	(17)	DISP	185	30000
	Amb to T1{1}	274	20	94	2	1.00	1.00	1.00	1.00	(17)	DISP	185	30000
B47	+ Max P{1}									(3a)	HOOP	0	20000
	GR + Max P{1}	3	124	66	6	1.00	1.00	1.00	1.00	23a	SUST	206	20000
	TR:Amb to T1{1}	389	20	94	2	1.00	1.00	1.00	1.00	(17)	DISP	206	30000
	Amb to T1{1}	389	20	94	2	1.00	1.00	1.00	1.00	(17)	DISP	206	30000
B48	- Max P{1}									(3a)	HOOP	0	20000
	GR + Max P{1}	5	129	59	6	1.00	1.00	1.00	1.00	23a	SUST	208	20000
	TR:Amb to T1{1}	389	5	212	2	1.00	1.00	1.00	1.00	(17)	DISP	369	30000
	Amb to T1{1}	389	5	212	2	1.00	1.00	1.00	1.00	(17)	DISP	369	30000
B48	+ Max P{1}									(3a)	HOOP	0	20000
	GR + Max P{1}	3	129	59	6	1.00	1.00	1.00	1.00	23a	SUST	208	20000
	TR:Amb to T1{1}	517	5	212	2	1.00	1.00	1.00	1.00	(17)	DISP	392	30000
	Amb to T1{1}	517	5	212	2	1.00	1.00	1.00	1.00	(17)	DISP	392	30000
B49	- Max P{1}									(3a)	HOOP	0	20000
	GR + Max P{1}	5	128	51	6	1.00	1.00	1.00	1.00	23a	SUST	201	20000
	TR:Amb to T1{1}	517	2	123	2	1.00	1.00	1.00	1.00	(17)	DISP	266	30000
	Amb to T1{1}	517	2	123	2	1.00	1.00	1.00	1.00	(17)	DISP	266	30000
B49	+ Max P{1}									(3a)	HOOP	0	20000
	GR + Max P{1}	3	128	51	6	1.00	1.00	1.00	1.00	23a	SUST	201	20000
	TR:Amb to T1{1}	654	2	123	2	1.00	1.00	1.00	1.00	(17)	DISP	290	30000
	Amb to T1{1}	654	2	123	2	1.00	1.00	1.00	1.00	(17)	DISP	290	30000
B50	- Max P{1}									(3a)	HOOP	0	20000
	GR + Max P{1}	5	128	43	6	1.00	1.00	1.00	1.00	23a	SUST	199	20000
	TR:Amb to T1{1}	654	1	31	2	1.00	1.00	1.00	1.00	(17)	DISP	161	30000
	Amb to T1{1}	654	1	31	2	1.00	1.00	1.00	1.00	(17)	DISP	161	30000
B50	+ Max P{1}									(3a)	HOOP	0	20000
	GR + Max P{1}	3	128	43	7	1.00	1.00	1.00	1.00	23a	SUST	199	20000
	TR:Amb to T1{1}	710	1	31	2	1.00	1.00	1.00	1.00	(17)	DISP	171	30000
	Amb to T1{1}	710	1	31	2	1.00	1.00	1.00	1.00	(17)	DISP	171	30000
B51	- Max P{1}									(3a)	HOOP	0	20000
	GR + Max P{1}	5	126	36	7	1.00	1.00	1.00	1.00	23a	SUST	192	20000
	TR:Amb to T1{1}	710	1	36	2	1.00	1.00	1.00	1.00	(17)	DISP	178	30000
	Amb to T1{1}	710	1	36	2	1.00	1.00	1.00	1.00	(17)	DISP	178	30000
B51	+ Max P{1}									(3a)	HOOP	0	20000
	GR + Max P{1}	3	126	36	7	1.00	1.00	1.00	1.00	23a	SUST	192	20000
	TR:Amb to T1{1}	574	1	36	2	1.00	1.00	1.00	1.00	(17)	DISP	154	30000
	Amb to T1{1}	574	1	36	2	1.00	1.00	1.00	1.00	(17)	DISP	154	30000

ASME B31.3 (2016) CODE COMPLIANCE
(Moments in ft-lb , Force in lbf) (Stress in psi)

Point name	Load combination	Axial Force	In-Pl. Moment	Out-Pl. Moment	Torsion Moment	S.I.F In	S.I.F Out	Index/SIF Ax.	Index/SIF Tor.	Eq. no.	Load type	Code Stress	Code Allow.
B52 -	Max P{1}									(3a)	HOOP	0	20000
	GR + Max P{1}	5	135	28	7	1.00	1.00	1.00	1.00	23a	SUST	202	20000
	TR:Amb to T1{1}	574	2	148	2	1.00	1.00	1.00	1.00	(17)	DISP	313	30000
	Amb to T1{1}	574	2	148	2	1.00	1.00	1.00	1.00	(17)	DISP	313	30000
B52 +	Max P{1}									(3a)	HOOP	0	20000
	GR + Max P{1}	3	135	28	7	1.00	1.00	1.00	1.00	23a	SUST	201	20000
	TR:Amb to T1{1}	437	2	148	2	1.00	1.00	1.00	1.00	(17)	DISP	288	30000
	Amb to T1{1}	437	2	148	2	1.00	1.00	1.00	1.00	(17)	DISP	288	30000
B53 -	Max P{1}									(3a)	HOOP	0	20000
	GR + Max P{1}	5	102	20	7	1.00	1.00	1.00	1.00	23a	SUST	153	20000
	TR:Amb to T1{1}	437	7	161	2	1.00	1.00	1.00	1.00	(17)	DISP	307	30000
	Amb to T1{1}	437	7	161	2	1.00	1.00	1.00	1.00	(17)	DISP	307	30000
B53 +	Max P{1}									(3a)	HOOP	0	20000
	GR + Max P{1}	3	102	20	7	1.00	1.00	1.00	1.00	23a	SUST	153	20000
	TR:Amb to T1{1}	319	7	161	3	1.00	1.00	1.00	1.00	(17)	DISP	286	30000
	Amb to T1{1}	319	7	161	3	1.00	1.00	1.00	1.00	(17)	DISP	286	30000
B54 -	Max P{1}									(3a)	HOOP	0	20000
	GR + Max P{1}	5	139	13	7	1.00	1.00	1.00	1.00	23a	SUST	204	20000
	TR:Amb to T1{1}	319	26	149	3	1.00	1.00	1.00	1.00	(17)	DISP	271	30000
	Amb to T1{1}	319	26	149	3	1.00	1.00	1.00	1.00	(17)	DISP	271	30000
B54 +	Max P{1}									(3a)	HOOP	0	20000
	GR + Max P{1}	3	139	13	7	1.00	1.00	1.00	1.00	23a	SUST	204	20000
	TR:Amb to T1{1}	209	26	149	3	1.00	1.00	1.00	1.00	(17)	DISP	251	30000
	Amb to T1{1}	209	26	149	3	1.00	1.00	1.00	1.00	(17)	DISP	251	30000
B55	Max P{1}									(3a)	HOOP	0	20000
	GR + Max P{1}	5	57	6	7	1.00	1.00	1.00	1.00	23a	SUST	85	20000
	TR:Amb to T1{1}	209	45	1092	3	1.00	1.00	1.00	1.00	(17)	DISP	1580	30000
	Amb to T1{1}	209	45	1092	3	1.00	1.00	1.00	1.00	(17)	DISP	1580	30000
B41 N-	Max P{1}									(3a)	HOOP	0	20000
	GR + Max P{1}	5	34	5	7	1.00	1.00	1.00	1.00	23a	SUST	52	20000
	TR:Amb to T1{1}	209	37	1144	2	1.00	1.00	1.00	1.00	(17)	DISP	1654	30000
	Amb to T1{1}	209	37	1144	2	1.00	1.00	1.00	1.00	(17)	DISP	1654	30000
B41 N+	Max P{1}									(3a)	HOOP	0	20000
	GR + Max P{1}	5	5	34	7	1.00	1.00	1.00	1.00	23a	SUST	52	20000
	TR:Amb to T1{1}	209	1144	43	2	1.00	1.00	1.00	1.00	(17)	DISP	1654	30000
	Amb to T1{1}	209	1144	43	2	1.00	1.00	1.00	1.00	(17)	DISP	1654	30000
B41 F-	Max P{1}									(3a)	HOOP	0	20000
	GR + Max P{1}	1	13	44	12	1.00	1.00	1.00	1.00	23a	SUST	70	20000
	TR:Amb to T1{1}	105	831	43	2	1.00	1.00	1.00	1.00	(17)	DISP	1194	30000
	Amb to T1{1}	105	831	43	2	1.00	1.00	1.00	1.00	(17)	DISP	1194	30000

Encasement Piping Low Temp
04/24/2020 2018719 BENTLEY
10:51 AM AutoPIPE Nuclear 12.00.00.16 RESULT PAGE 113

ASME B31.3 (2016) CODE COMPLIANCE
(Moments in ft-lb , Force in lbf) (Stress in psi)

Point name	Load combination	Axial Force	In-Pl. Moment	Out-Pl. Moment	Torsion Moment	S.I.F In	S.I.F Out	Index/SIF Ax.	Index/SIF Tor.	Eq. no.	Load type	Code Stress	Code Allow.
B41 F+	Max P{1}									(3a)	HOOP	0	20000
	GR + Max P{1}	1	44	13	12	1.00	1.00	1.00	1.00	23a	SUST	70	20000
	TR:Amb to T1{1}	105	36	831	2	1.00	1.00	1.00	1.00	(17)	DISP	1194	30000
	Amb to T1{1}	105	36	831	2	1.00	1.00	1.00	1.00	(17)	DISP	1194	30000
B57	Max P{1}									(3a)	HOOP	0	20000
	GR + Max P{1}	1	71	15	12	1.00	1.00	1.00	1.00	23a	SUST	108	20000
	TR:Amb to T1{1}	105	45	727	2	1.00	1.00	1.00	1.00	(17)	DISP	1048	30000
	Amb to T1{1}	105	45	727	2	1.00	1.00	1.00	1.00	(17)	DISP	1048	30000
B58	Max P{1}									(3a)	HOOP	0	20000
	GR + Max P{1}	1	56	51	12	1.00	1.00	1.00	1.00	23a	SUST	112	20000
	TR:Amb to T1{1}	105	36	716	1	1.00	1.00	1.00	1.00	(17)	DISP	1032	30000
	Amb to T1{1}	105	36	716	1	1.00	1.00	1.00	1.00	(17)	DISP	1032	30000
B44 N-	Max P{1}									(3a)	HOOP	0	20000
	GR + Max P{1}	0	32	54	12	1.00	1.00	1.00	1.00	23a	SUST	93	20000
	TR:Amb to T1{1}	105	29	821	0	1.00	1.00	1.00	1.00	(17)	DISP	1179	30000
	Amb to T1{1}	105	29	821	0	1.00	1.00	1.00	1.00	(17)	DISP	1179	30000
B44 N+	Max P{1}									(3a)	HOOP	0	20000
	GR + Max P{1}	0	54	32	12	1.00	1.00	1.00	1.00	23a	SUST	93	20000
	TR:Amb to T1{1}	105	821	33	0	1.00	1.00	1.00	1.00	(17)	DISP	1179	30000
	Amb to T1{1}	105	821	33	0	1.00	1.00	1.00	1.00	(17)	DISP	1179	30000
B44 F-	Max P{1}									(3a)	HOOP	0	20000
	GR + Max P{1}	5	67	53	0	1.00	1.00	1.00	1.00	23a	SUST	125	20000
	TR:Amb to T1{1}	209	1133	38	5	1.00	1.00	1.00	1.00	(17)	DISP	1639	30000
	Amb to T1{1}	209	1133	38	5	1.00	1.00	1.00	1.00	(17)	DISP	1639	30000
B44 F+	Max P{1}									(3a)	HOOP	0	20000
	GR + Max P{1}	5	52	67	0	1.00	1.00	1.00	1.00	23a	SUST	125	20000
	TR:Amb to T1{1}	209	31	1133	5	1.00	1.00	1.00	1.00	(17)	DISP	1639	30000
	Amb to T1{1}	209	31	1133	5	1.00	1.00	1.00	1.00	(17)	DISP	1639	30000
B64	Max P{1}									(3a)	HOOP	0	20000
	GR + Max P{1}	5	78	67	0	1.00	1.00	1.00	1.00	23a	SUST	151	20000
	TR:Amb to T1{1}	209	38	1081	5	1.00	1.00	1.00	1.00	(17)	DISP	1565	30000
	Amb to T1{1}	209	38	1081	5	1.00	1.00	1.00	1.00	(17)	DISP	1565	30000
B65 -	Max P{1}									(3a)	HOOP	0	20000
	GR + Max P{1}	7	142	60	0	1.00	1.00	1.00	1.00	23a	SUST	226	20000
	TR:Amb to T1{1}	209	20	138	4	1.00	1.00	1.00	1.00	(17)	DISP	234	30000
	Amb to T1{1}	209	20	138	4	1.00	1.00	1.00	1.00	(17)	DISP	234	30000
B65 +	Max P{1}									(3a)	HOOP	0	20000
	GR + Max P{1}	5	142	60	0	1.00	1.00	1.00	1.00	23a	SUST	226	20000
	TR:Amb to T1{1}	343	20	138	4	1.00	1.00	1.00	1.00	(17)	DISP	258	30000
	Amb to T1{1}	343	20	138	4	1.00	1.00	1.00	1.00	(17)	DISP	258	30000

ASME B31.3 (2016) CODE COMPLIANCE
(Moments in ft-lb , Force in lbf) (Stress in psi)

Point name	Load combination	Axial Force	In-Pl. Moment	Out-Pl. Moment	Torsion Moment	S.I.F In	S.I.F Out	Index/SIF Ax.	Index/SIF Tor.	Eq. no.	Load type	Code Stress	Code Allow.
B66	- Max P{1}									(3a)	HOOP	0	20000
	GR + Max P{1}	7	124	54	0	1.00	1.00	1.00	1.00	23a	SUST	199	20000
	TR:Amb to T1{1}	343	5	159	4	1.00	1.00	1.00	1.00	(17)	DISP	286	30000
	Amb to T1{1}	343	5	159	4	1.00	1.00	1.00	1.00	(17)	DISP	286	30000
B66	+ Max P{1}									(3a)	HOOP	0	20000
	GR + Max P{1}	5	124	54	0	1.00	1.00	1.00	1.00	23a	SUST	198	20000
	TR:Amb to T1{1}	470	5	159	4	1.00	1.00	1.00	1.00	(17)	DISP	309	30000
	Amb to T1{1}	470	5	159	4	1.00	1.00	1.00	1.00	(17)	DISP	309	30000
B67	- Max P{1}									(3a)	HOOP	0	20000
	GR + Max P{1}	7	129	47	0	1.00	1.00	1.00	1.00	23a	SUST	202	20000
	TR:Amb to T1{1}	470	1	128	4	1.00	1.00	1.00	1.00	(17)	DISP	265	30000
	Amb to T1{1}	470	1	128	4	1.00	1.00	1.00	1.00	(17)	DISP	265	30000
B67	+ Max P{1}									(3a)	HOOP	0	20000
	GR + Max P{1}	5	129	47	0	1.00	1.00	1.00	1.00	23a	SUST	201	20000
	TR:Amb to T1{1}	608	1	128	4	1.00	1.00	1.00	1.00	(17)	DISP	290	30000
	Amb to T1{1}	608	1	128	4	1.00	1.00	1.00	1.00	(17)	DISP	290	30000
B68	- Max P{1}									(3a)	HOOP	0	20000
	GR + Max P{1}	7	127	41	0	1.00	1.00	1.00	1.00	23a	SUST	196	20000
	TR:Amb to T1{1}	608	0	25	4	1.00	1.00	1.00	1.00	(17)	DISP	145	30000
	Amb to T1{1}	608	0	25	4	1.00	1.00	1.00	1.00	(17)	DISP	145	30000
B68	+ Max P{1}									(3a)	HOOP	0	20000
	GR + Max P{1}	5	127	41	0	1.00	1.00	1.00	1.00	23a	SUST	196	20000
	TR:Amb to T1{1}	745	0	25	4	1.00	1.00	1.00	1.00	(17)	DISP	170	30000
	Amb to T1{1}	745	0	25	4	1.00	1.00	1.00	1.00	(17)	DISP	170	30000
B69	- Max P{1}									(3a)	HOOP	0	20000
	GR + Max P{1}	7	129	35	0	1.00	1.00	1.00	1.00	23a	SUST	196	20000
	TR:Amb to T1{1}	745	0	49	4	1.00	1.00	1.00	1.00	(17)	DISP	203	30000
	Amb to T1{1}	745	0	49	4	1.00	1.00	1.00	1.00	(17)	DISP	203	30000
B69	+ Max P{1}									(3a)	HOOP	0	20000
	GR + Max P{1}	5	129	35	0	1.00	1.00	1.00	1.00	23a	SUST	196	20000
	TR:Amb to T1{1}	767	0	49	4	1.00	1.00	1.00	1.00	(17)	DISP	207	30000
	Amb to T1{1}	767	0	49	4	1.00	1.00	1.00	1.00	(17)	DISP	207	30000
B70	- Max P{1}									(3a)	HOOP	0	20000
	GR + Max P{1}	7	125	28	0	1.00	1.00	1.00	1.00	23a	SUST	188	20000
	TR:Amb to T1{1}	767	0	71	4	1.00	1.00	1.00	1.00	(17)	DISP	237	30000
	Amb to T1{1}	767	0	71	4	1.00	1.00	1.00	1.00	(17)	DISP	237	30000
B70	+ Max P{1}									(3a)	HOOP	0	20000
	GR + Max P{1}	6	125	28	0	1.00	1.00	1.00	1.00	23a	SUST	187	20000
	TR:Amb to T1{1}	633	0	71	4	1.00	1.00	1.00	1.00	(17)	DISP	213	30000
	Amb to T1{1}	633	0	71	4	1.00	1.00	1.00	1.00	(17)	DISP	213	30000

Encasement Piping Low Temp
04/24/2020 2018719 BENTLEY
10:51 AM AutoPIPE Nuclear 12.00.00.16 RESULT PAGE 115

ASME B31.3 (2016) CODE COMPLIANCE
(Moments in ft-lb , Force in lbf) (Stress in psi)

Point name	Load combination	Axial Force	In-Pl. Moment	Out-Pl. Moment	Torsion Moment	S.I.F In	S.I.F Out	Index/SIF Ax.	Index/SIF Tor.	Eq. no.	Load type	Code Stress	Code Allow.
B71 -	Max P{1}									(3a)	HOOP	0	20000
	GR + Max P{1}	7	140	22	0	1.00	1.00	1.00	1.00	23a	SUST	208	20000
	TR:Amb to T1{1}	633	2	282	4	1.00	1.00	1.00	1.00	(17)	DISP	512	30000
	Amb to T1{1}	633	2	282	4	1.00	1.00	1.00	1.00	(17)	DISP	512	30000
B71 +	Max P{1}									(3a)	HOOP	0	20000
	GR + Max P{1}	6	140	22	0	1.00	1.00	1.00	1.00	23a	SUST	208	20000
	TR:Amb to T1{1}	493	2	282	3	1.00	1.00	1.00	1.00	(17)	DISP	487	30000
	Amb to T1{1}	493	2	282	3	1.00	1.00	1.00	1.00	(17)	DISP	487	30000
B72 -	Max P{1}									(3a)	HOOP	0	20000
	GR + Max P{1}	6	81	15	0	1.00	1.00	1.00	1.00	23a	SUST	121	20000
	TR:Amb to T1{1}	493	5	304	3	1.00	1.00	1.00	1.00	(17)	DISP	519	30000
	Amb to T1{1}	493	5	304	3	1.00	1.00	1.00	1.00	(17)	DISP	519	30000
B72 +	Max P{1}									(3a)	HOOP	0	20000
	GR + Max P{1}	6	81	15	0	1.00	1.00	1.00	1.00	23a	SUST	121	20000
	TR:Amb to T1{1}	409	5	304	3	1.00	1.00	1.00	1.00	(17)	DISP	503	30000
	Amb to T1{1}	409	5	304	3	1.00	1.00	1.00	1.00	(17)	DISP	503	30000
B73 -	Max P{1}									(3a)	HOOP	0	20000
	GR + Max P{1}	6	104	12	0	1.00	1.00	1.00	1.00	23a	SUST	153	20000
	TR:Amb to T1{1}	409	28	45	3	1.00	1.00	1.00	1.00	(17)	DISP	149	30000
	Amb to T1{1}	409	28	45	3	1.00	1.00	1.00	1.00	(17)	DISP	149	30000
B73 +	Max P{1}									(3a)	HOOP	0	20000
	GR + Max P{1}	5	104	12	0	1.00	1.00	1.00	1.00	23a	SUST	153	20000
	TR:Amb to T1{1}	339	28	45	3	1.00	1.00	1.00	1.00	(17)	DISP	136	30000
	Amb to T1{1}	339	28	45	3	1.00	1.00	1.00	1.00	(17)	DISP	136	30000
B74	Max P{1}									(3a)	HOOP	0	20000
	GR + Max P{1}	7	83	5	0	1.00	1.00	1.00	1.00	23a	SUST	123	20000
	TR:Amb to T1{1}	339	56	1050	3	1.00	1.00	1.00	1.00	(17)	DISP	1546	30000
	Amb to T1{1}	339	56	1050	3	1.00	1.00	1.00	1.00	(17)	DISP	1546	30000
B56 N-	Max P{1}									(3a)	HOOP	0	20000
	GR + Max P{1}	7	36	5	0	1.00	1.00	1.00	1.00	23a	SUST	54	20000
	TR:Amb to T1{1}	339	16	1172	4	1.00	1.00	1.00	1.00	(17)	DISP	1716	30000
	Amb to T1{1}	339	16	1172	4	1.00	1.00	1.00	1.00	(17)	DISP	1716	30000
B56 N+	Max P{1}									(3a)	HOOP	0	20000
	GR + Max P{1}	7	5	36	0	1.00	1.00	1.00	1.00	23a	SUST	54	20000
	TR:Amb to T1{1}	339	1171	28	4	1.02	1.00	1.00	1.00	(17)	DISP	1741	30000
	Amb to T1{1}	339	1171	28	4	1.02	1.00	1.00	1.00	(17)	DISP	1741	30000
B56 F-	Max P{1}									(3a)	HOOP	0	20000
	GR + Max P{1}	0	14	23	8	1.00	1.00	1.00	1.00	23a	SUST	42	20000
	TR:Amb to T1{1}	122	629	92	69	1.02	1.00	1.00	1.00	(17)	DISP	938	30000
	Amb to T1{1}	122	629	92	69	1.02	1.00	1.00	1.00	(17)	DISP	938	30000

ASME B31.3 (2016) CODE COMPLIANCE
(Moments in ft-lb , Force in lbf) (Stress in psi)

Point name	Load combination	Axial Force	In-Pl. Moment	Out-Pl. Moment	Torsion Moment	S.I.F In	S.I.F Out	Index/SIF Ax.	Index/SIF Tor.	Eq. no.	Load type	Code Stress	Code Allow.
B56 F+	Max P{1}									(3a)	HOOP	0	20000
	GR + Max P{1}	0	23	14	8	1.00	1.00	1.00	1.00	23a	SUST	42	20000
	TR:Amb to T1{1}	122	89	630	69	1.00	1.00	1.00	1.00	(17)	DISP	925	30000
	Amb to T1{1}	122	89	630	69	1.00	1.00	1.00	1.00	(17)	DISP	925	30000
B75	Max P{1}									(3a)	HOOP	0	20000
	GR + Max P{1}	0	42	17	8	1.00	1.00	1.00	1.00	23a	SUST	67	20000
	TR:Amb to T1{1}	122	107	477	69	1.00	1.00	1.00	1.00	(17)	DISP	719	30000
	Amb to T1{1}	122	107	477	69	1.00	1.00	1.00	1.00	(17)	DISP	719	30000
B20 N-	Max P{1}									(3a)	HOOP	0	20000
	GR + Max P{1}	0	22	20	8	1.00	1.00	1.00	1.00	23a	SUST	45	20000
	TR:Amb to T1{1}	122	83	328	66	1.00	1.00	1.00	1.00	(17)	DISP	508	30000
	Amb to T1{1}	122	83	328	66	1.00	1.00	1.00	1.00	(17)	DISP	508	30000
B20 N+	Max P{1}									(3a)	HOOP	0	20000
	GR + Max P{1}	0	21	22	8	1.00	1.00	1.00	1.00	23a	SUST	45	20000
	TR:Amb to T1{1}	122	326	90	66	1.02	1.00	1.00	1.00	(17)	DISP	515	30000
	Amb to T1{1}	122	326	90	66	1.02	1.00	1.00	1.00	(17)	DISP	515	30000
B20 F-	Max P{1}									(3a)	HOOP	0	20000
	GR + Max P{1}	8	35	26	11	1.00	1.00	1.00	1.00	23a	SUST	67	20000
	TR:Amb to T1{1}	338	212	84	60	1.02	1.00	1.00	1.00	(17)	DISP	396	30000
	Amb to T1{1}	338	212	84	60	1.02	1.00	1.00	1.00	(17)	DISP	396	30000
B20 F+	Max P{1}									(3a)	HOOP	0	20000
	GR + Max P{1}	8	25	35	11	1.00	1.00	1.00	1.00	23a	SUST	67	20000
	TR:Amb to T1{1}	338	87	211	60	1.00	1.00	1.00	1.00	(17)	DISP	392	30000
	Amb to T1{1}	338	87	211	60	1.00	1.00	1.00	1.00	(17)	DISP	392	30000
B77	Max P{1}									(3a)	HOOP	0	20000
	GR + Max P{1}	8	53	35	11	1.00	1.00	1.00	1.00	23a	SUST	95	20000
	TR:Amb to T1{1}	338	126	128	60	1.00	1.00	1.00	1.00	(17)	DISP	325	30000
	Amb to T1{1}	338	126	128	60	1.00	1.00	1.00	1.00	(17)	DISP	325	30000
B21 N-	Max P{1}									(3a)	HOOP	0	20000
	GR + Max P{1}	8	24	34	11	1.00	1.00	1.00	1.00	23a	SUST	65	20000
	TR:Amb to T1{1}	338	93	46	60	1.00	1.00	1.00	1.00	(17)	DISP	224	30000
	Amb to T1{1}	338	93	46	60	1.00	1.00	1.00	1.00	(17)	DISP	224	30000
B21 N+	Max P{1}									(3a)	HOOP	0	20000
	GR + Max P{1}	8	34	25	11	1.00	1.00	1.00	1.00	23a	SUST	65	20000
	TR:Amb to T1{1}	338	48	93	60	1.02	1.00	1.00	1.00	(17)	DISP	225	30000
	Amb to T1{1}	338	48	93	60	1.02	1.00	1.00	1.00	(17)	DISP	225	30000
B21 F-	Max P{1}									(3a)	HOOP	0	20000
	GR + Max P{1}	1	54	17	2	1.00	1.00	1.00	1.00	23a	SUST	83	20000
	TR:Amb to T1{1}	124	582	58	25	1.02	1.00	1.00	1.00	(17)	DISP	862	30000
	Amb to T1{1}	124	582	58	25	1.02	1.00	1.00	1.00	(17)	DISP	862	30000

Encasement Piping Low Temp
04/24/2020 2018719 BENTLEY
10:51 AM AutoPIPE Nuclear 12.00.00.16 RESULT PAGE 117

ASME B31.3 (2016) CODE COMPLIANCE
(Moments in ft-lb , Force in lbf) (Stress in psi)

Point name	Load combination	Axial Force	In-Pl. Moment	Out-Pl. Moment	Torsion Moment	S.I.F In	S.I.F Out	Index/SIF Ax.	Index/SIF Tor.	Eq. no.	Load type	Code Stress	Code Allow.
B21 F+	Max P{1}									(3a)	HOOP	0	20000
	GR + Max P{1}	1	18	54	2	1.00	1.00	1.00	1.00	23a	SUST	83	20000
	TR:Amb to T1{1}	124	69	581	25	1.00	1.00	1.00	1.00	(17)	DISP	849	30000
	Amb to T1{1}	124	69	581	25	1.00	1.00	1.00	1.00	(17)	DISP	849	30000
B76	Max P{1}									(3a)	HOOP	0	20000
	GR + Max P{1}	2	39	58	2	1.00	1.00	1.00	1.00	23a	SUST	103	20000
	TR:Amb to T1{1}	124	96	750	25	1.00	1.00	1.00	1.00	(17)	DISP	1090	30000
	Amb to T1{1}	124	96	750	25	1.00	1.00	1.00	1.00	(17)	DISP	1090	30000
B59 N-	Max P{1}									(3a)	HOOP	0	20000
	GR + Max P{1}	2	4	74	2	1.00	1.00	1.00	1.00	23a	SUST	108	20000
	TR:Amb to T1{1}	124	39	1364	27	1.00	1.00	1.00	1.00	(17)	DISP	1951	30000
	Amb to T1{1}	124	39	1364	27	1.00	1.00	1.00	1.00	(17)	DISP	1951	30000
B59 N+	Max P{1}									(3a)	HOOP	0	20000
	GR + Max P{1}	2	4	74	1	1.00	1.00	1.00	1.00	23a	SUST	108	20000
	TR:Amb to T1{1}	124	39	1365	16	1.00	1.00	1.00	1.00	(17)	DISP	1951	30000
	Amb to T1{1}	124	39	1365	16	1.00	1.00	1.00	1.00	(17)	DISP	1951	30000
B59 M-	Max P{1}									(3a)	HOOP	0	20000
	GR + Max P{1}	2	3	74	1	1.00	1.00	1.00	1.00	23a	SUST	109	20000
	TR:Amb to T1{1}	125	38	1373	5	1.00	1.00	1.00	1.00	(17)	DISP	1962	30000
	Amb to T1{1}	125	38	1373	5	1.00	1.00	1.00	1.00	(17)	DISP	1962	30000
B59 M+	Max P{1}									(3a)	HOOP	0	20000
	GR + Max P{1}	2	3	74	1	1.00	1.00	1.00	1.00	23a	SUST	109	20000
	TR:Amb to T1{1}	137	38	1373	5	1.00	1.00	1.00	1.00	(17)	DISP	1965	30000
	Amb to T1{1}	137	38	1373	5	1.00	1.00	1.00	1.00	(17)	DISP	1965	30000
B59 F-	Max P{1}									(3a)	HOOP	0	20000
	GR + Max P{1}	2	3	74	0	1.00	1.00	1.00	1.00	23a	SUST	109	20000
	TR:Amb to T1{1}	137	37	1381	6	1.00	1.00	1.00	1.00	(17)	DISP	1975	30000
	Amb to T1{1}	137	37	1381	6	1.00	1.00	1.00	1.00	(17)	DISP	1975	30000
B59 F+	Max P{1}									(3a)	HOOP	0	20000
	GR + Max P{1}	2	3	74	1	1.00	1.00	1.00	1.00	23a	SUST	109	20000
	TR:Amb to T1{1}	137	37	1381	5	1.00	1.00	1.00	1.00	(17)	DISP	1975	30000
	Amb to T1{1}	137	37	1381	5	1.00	1.00	1.00	1.00	(17)	DISP	1975	30000
B60	Max P{1}									(3a)	HOOP	0	20000
	GR + Max P{1}	2	8	83	1	1.00	1.00	1.00	1.00	23a	SUST	122	20000
	TR:Amb to T1{1}	137	18	1691	5	1.00	1.00	1.00	1.00	(17)	DISP	2413	30000
	Amb to T1{1}	137	18	1691	5	1.00	1.00	1.00	1.00	(17)	DISP	2413	30000
B61	Max P{1}									(3a)	HOOP	0	20000
	GR + Max P{1}	2	0	92	1	1.00	1.00	1.00	1.00	23a	SUST	134	20000
	TR:Amb to T1{1}	137	2	2009	5	1.00	1.00	1.00	1.00	(17)	DISP	2862	30000
	Amb to T1{1}	137	2	2009	5	1.00	1.00	1.00	1.00	(17)	DISP	2862	30000

```
-----------------------------------------------------------------------------------------------------------------------
Encasement Piping Low Temp
04/24/2020 2018719                                                    BENTLEY
10:51 AM                                                              AutoPIPE Nuclear 12.00.00.16   RESULT PAGE 118
-----------------------------------------------------------------------------------------------------------------------

                              ASME B31.3 (2016)  CODE COMPLIANCE
              (Moments in ft-lb  , Force in lbf  )     (Stress in psi     )
 Point     Load                    Axial  In-Pl. Out-Pl. Torsion   S.I.F   Index/SIF  Eq. Load   Code   Code
 name   combination                Force  Moment  Moment  Moment  In  Out   Ax. Tor.  no. type  Stress Allow.
 ------ ----------------------    ------- ------- ------- ------- ---- ---- ---- ---- ---- ----  ------ ------
 B62  - Max P{1}                                                                      (3a) HOOP       0  20000
        GR + Max P{1}                    2      14      97       1 1.00 1.00 1.00 1.00  23a SUST     143  20000
        TR:Amb to T1{1}                137      15    2203       5 1.00 1.00 1.00 1.00 (17) DISP    3136  30000
        Amb to T1{1}                   137      15    2203       5 1.00 1.00 1.00 1.00 (17) DISP    3136  30000

 B62  + Max P{1}                                                                      (3a) HOOP       0  20000
        GR + Max P{1}                    0       1       0       0 1.00 1.00 1.00 1.00  23a SUST       1  20000
        TR:Amb to T1{1}                  0       0       0       0 1.00 1.00 1.00 1.00 (17) DISP       0  30000
        Amb to T1{1}                     0       0       0       0 1.00 1.00 1.00 1.00 (17) DISP       0  30000

 B63    Max P{1}                                                                      (3a) HOOP       0  20000
        GR + Max P{1}                    0       0       0       0 1.00 1.00 1.00 1.00  23a SUST       0  20000
        TR:Amb to T1{1}                  0       0       0       0 1.00 1.00 1.00 1.00 (17) DISP       0  30000
        Amb to T1{1}                     0       0       0       0 1.00 1.00 1.00 1.00 (17) DISP       0  30000

 *** Segment B  end   ***  Line # RIGID

 *** Segment C  begin ***

 C03    Max P{1}                                                                      (3a) HOOP       0  20000
        GR + Max P{1}                    9      20     157       3 1.00 1.00 1.00 1.00  23a SUST     617  20000
        TR:Amb to T1{1}                184      12       2       4 1.00 1.00 1.00 1.00 (17) DISP     104  30000
        Amb to T1{1}                   184      12       2       4 1.00 1.00 1.00 1.00 (17) DISP     104  30000

 C04    Max P{1}                                                                      (3a) HOOP       0  20000
        GR + Max P{1}                    9       5     140       3 1.00 1.00 1.00 1.00  23a SUST     545  20000
        TR:Amb to T1{1}                184       4      29       4 1.00 1.00 1.00 1.00 (17) DISP     169  30000
        Amb to T1{1}                   184       4      29       4 1.00 1.00 1.00 1.00 (17) DISP     169  30000

 C21  - Max P{1}                                                                      (3a) HOOP       0  20000
        GR + Max P{1}                    9      97     118       3 1.00 1.00 1.00 1.00  23a SUST     595  20000
        TR:Amb to T1{1}                184      25      63       4 1.00 1.00 1.00 1.00 (17) DISP     311  30000
        Amb to T1{1}                   184      25      63       4 1.00 1.00 1.00 1.00 (17) DISP     311  30000

 C21  + Max P{1}                                                                      (3a) HOOP       0  20000
        GR + Max P{1}                    9      97     118       3 1.00 1.00 1.00 1.00  23a SUST     595  20000
        TR:Amb to T1{1}                 79      25      63       4 1.00 1.00 1.00 1.00 (17) DISP     278  30000
        Amb to T1{1}                    79      25      63       4 1.00 1.00 1.00 1.00 (17) DISP     278  30000

 C06 N- Max P{1}                                                                      (3a) HOOP       0  20000
        GR + Max P{1}                    9      75     115       3 1.00 1.00 1.00 1.00  23a SUST     533  20000
        TR:Amb to T1{1}                 79      20      64       4 1.00 1.00 1.00 1.00 (17) DISP     275  30000
        Amb to T1{1}                    79      20      64       4 1.00 1.00 1.00 1.00 (17) DISP     275  30000

 C06 N+ Max P{1}                                                                      (3a) HOOP       0  20000
        GR + Max P{1}                    9      75     115       3 1.00 1.00 1.00 1.00  23a SUST     533  20000
        TR:Amb to T1{1}                 79      20      64       4 1.00 1.00 1.00 1.00 (17) DISP     275  30000
        Amb to T1{1}                    79      20      64       4 1.00 1.00 1.00 1.00 (17) DISP     275  30000
```

Encasement Piping Low Temp
04/24/2020 2018719 BENTLEY
10:51 AM AutoPIPE Nuclear 12.00.00.16 RESULT PAGE 119

ASME B31.3 (2016) CODE COMPLIANCE
(Moments in ft-lb , Force in lbf) (Stress in psi)

Point name	Load combination	Axial Force	In-Pl. Moment	Out-Pl. Moment	Torsion Moment	S.I.F In	S.I.F Out	Index/SIF Ax.	Index/SIF Tor.	Eq. no.	Load type	Code Stress	Code Allow.
C06 F-	Max P{1}									(3a)	HOOP	0	20000
	GR + Max P{1}	13	61	112	6	1.00	1.00	1.00	1.00	23a	SUST	500	20000
	TR:Amb to T1{1}	80	18	64	9	1.00	1.00	1.00	1.00	(17)	DISP	274	30000
	Amb to T1{1}	80	18	64	9	1.00	1.00	1.00	1.00	(17)	DISP	274	30000
C06 F+	Max P{1}									(3a)	HOOP	0	20000
	GR + Max P{1}	13	61	112	6	1.00	1.00	1.00	1.00	23a	SUST	500	20000
	TR:Amb to T1{1}	80	18	64	9	1.00	1.00	1.00	1.00	(17)	DISP	274	30000
	Amb to T1{1}	80	18	64	9	1.00	1.00	1.00	1.00	(17)	DISP	274	30000
C22 -	Max P{1}									(3a)	HOOP	0	20000
	GR + Max P{1}	4	83	21	6	1.00	1.00	1.00	1.00	23a	SUST	333	20000
	TR:Amb to T1{1}	80	41	83	9	1.00	1.00	1.00	1.00	(17)	DISP	372	30000
	Amb to T1{1}	80	41	83	9	1.00	1.00	1.00	1.00	(17)	DISP	372	30000
C22 +	Max P{1}									(3a)	HOOP	0	20000
	GR + Max P{1}	12	83	21	6	1.00	1.00	1.00	1.00	23a	SUST	335	20000
	TR:Amb to T1{1}	35	41	83	9	1.00	1.00	1.00	1.00	(17)	DISP	358	30000
	Amb to T1{1}	35	41	83	9	1.00	1.00	1.00	1.00	(17)	DISP	358	30000
C23	Max P{1}									(3a)	HOOP	0	20000
	GR + Max P{1}	6	68	40	6	1.00	1.00	1.00	1.00	23a	SUST	308	20000
	TR:Amb to T1{1}	35	83	166	9	1.00	1.00	1.00	1.00	(17)	DISP	704	30000
	Amb to T1{1}	35	83	166	9	1.00	1.00	1.00	1.00	(17)	DISP	704	30000
C09 N-	Max P{1}									(3a)	HOOP	0	20000
	GR + Max P{1}	5	47	45	6	1.00	1.00	1.00	1.00	23a	SUST	255	20000
	TR:Amb to T1{1}	35	70	184	9	1.00	1.00	1.00	1.00	(17)	DISP	745	30000
	Amb to T1{1}	35	70	184	9	1.00	1.00	1.00	1.00	(17)	DISP	745	30000
C09 N+	Max P{1}									(3a)	HOOP	0	20000
	GR + Max P{1}	5	43	49	6	1.00	1.00	1.00	1.00	23a	SUST	255	20000
	TR:Amb to T1{1}	35	182	75	9	1.00	1.00	1.00	1.00	(17)	DISP	745	30000
	Amb to T1{1}	35	182	75	9	1.00	1.00	1.00	1.00	(17)	DISP	745	30000
C09 F-	Max P{1}									(3a)	HOOP	0	20000
	GR + Max P{1}	8	63	7	6	1.00	1.00	1.00	1.00	23a	SUST	249	20000
	TR:Amb to T1{1}	36	187	69	3	1.00	1.00	1.00	1.00	(17)	DISP	755	30000
	Amb to T1{1}	36	187	69	3	1.00	1.00	1.00	1.00	(17)	DISP	755	30000
C09 F+	Max P{1}									(3a)	HOOP	0	20000
	GR + Max P{1}	8	2	63	6	1.00	1.00	1.00	1.00	23a	SUST	249	20000
	TR:Amb to T1{1}	36	54	192	3	1.00	1.00	1.00	1.00	(17)	DISP	755	30000
	Amb to T1{1}	36	54	192	3	1.00	1.00	1.00	1.00	(17)	DISP	755	30000
C24	Max P{1}									(3a)	HOOP	0	20000
	GR + Max P{1}	8	6	62	6	1.00	1.00	1.00	1.00	23a	SUST	245	20000
	TR:Amb to T1{1}	36	69	175	3	1.00	1.00	1.00	1.00	(17)	DISP	714	30000
	Amb to T1{1}	36	69	175	3	1.00	1.00	1.00	1.00	(17)	DISP	714	30000

Encasement Piping Low Temp
04/24/2020 2018719 BENTLEY
10:51 AM AutoPIPE Nuclear 12.00.00.16 RESULT PAGE 120

ASME B31.3 (2016) CODE COMPLIANCE
(Moments in ft-lb , Force in lbf) (Stress in psi)

Point name	Load combination	Axial Force	In-Pl. Moment	Out-Pl. Moment	Torsion Moment	S.I.F In	S.I.F Out	Index/SIF Ax.	Index/SIF Tor.	Eq. no.	Load type	Code Stress	Code Allow.
C25 -	Max P{1}									(3a)	HOOP	0	20000
	GR + Max P{1}	5	105	40	6	1.00	1.00	1.00	1.00	23a	SUST	439	20000
	TR:Amb to T1{1}	36	25	115	3	1.00	1.00	1.00	1.00	(17)	DISP	452	30000
	Amb to T1{1}	36	25	115	3	1.00	1.00	1.00	1.00	(17)	DISP	452	30000
C25 +	Max P{1}									(3a)	HOOP	0	20000
	GR + Max P{1}	9	105	40	6	1.00	1.00	1.00	1.00	23a	SUST	440	20000
	TR:Amb to T1{1}	132	25	115	3	1.00	1.00	1.00	1.00	(17)	DISP	482	30000
	Amb to T1{1}	132	25	115	3	1.00	1.00	1.00	1.00	(17)	DISP	482	30000
C26 -	Max P{1}									(3a)	HOOP	0	20000
	GR + Max P{1}	6	68	19	6	1.00	1.00	1.00	1.00	23a	SUST	275	20000
	TR:Amb to T1{1}	132	7	42	3	1.00	1.00	1.00	1.00	(17)	DISP	201	30000
	Amb to T1{1}	132	7	42	3	1.00	1.00	1.00	1.00	(17)	DISP	201	30000
C26 +	Max P{1}									(3a)	HOOP	0	20000
	GR + Max P{1}	9	68	19	6	1.00	1.00	1.00	1.00	23a	SUST	276	20000
	TR:Amb to T1{1}	204	7	42	3	1.00	1.00	1.00	1.00	(17)	DISP	224	30000
	Amb to T1{1}	204	7	42	3	1.00	1.00	1.00	1.00	(17)	DISP	224	30000
C28 -	Max P{1}									(3a)	HOOP	0	20000
	GR + Max P{1}	6	61	3	6	1.00	1.00	1.00	1.00	23a	SUST	238	20000
	TR:Amb to T1{1}	204	4	38	3	1.00	1.00	1.00	1.00	(17)	DISP	206	30000
	Amb to T1{1}	204	4	38	3	1.00	1.00	1.00	1.00	(17)	DISP	206	30000
C28 +	Max P{1}									(3a)	HOOP	0	20000
	GR + Max P{1}	8	61	3	6	1.00	1.00	1.00	1.00	23a	SUST	239	20000
	TR:Amb to T1{1}	188	4	38	3	1.00	1.00	1.00	1.00	(17)	DISP	201	30000
	Amb to T1{1}	188	4	38	3	1.00	1.00	1.00	1.00	(17)	DISP	201	30000
C29 -	Max P{1}									(3a)	HOOP	0	20000
	GR + Max P{1}	5	127	24	6	1.00	1.00	1.00	1.00	23a	SUST	501	20000
	TR:Amb to T1{1}	188	10	118	3	1.00	1.00	1.00	1.00	(17)	DISP	503	30000
	Amb to T1{1}	188	10	118	3	1.00	1.00	1.00	1.00	(17)	DISP	503	30000
C29 +	Max P{1}									(3a)	HOOP	0	20000
	GR + Max P{1}	9	127	24	6	1.00	1.00	1.00	1.00	23a	SUST	503	20000
	TR:Amb to T1{1}	113	10	118	3	1.00	1.00	1.00	1.00	(17)	DISP	479	30000
	Amb to T1{1}	113	10	118	3	1.00	1.00	1.00	1.00	(17)	DISP	479	30000
C31	Max P{1}									(3a)	HOOP	0	20000
	GR + Max P{1}	6	4	49	6	1.00	1.00	1.00	1.00	23a	SUST	195	20000
	TR:Amb to T1{1}	113	21	388	3	1.00	1.00	1.00	1.00	(17)	DISP	1485	30000
	Amb to T1{1}	113	21	388	3	1.00	1.00	1.00	1.00	(17)	DISP	1485	30000
C16 N-	Max P{1}									(3a)	HOOP	0	20000
	GR + Max P{1}	6	0	51	6	1.00	1.00	1.00	1.00	23a	SUST	199	20000
	TR:Amb to T1{1}	113	16	412	3	1.00	1.00	1.00	1.00	(17)	DISP	1574	30000
	Amb to T1{1}	113	16	412	3	1.00	1.00	1.00	1.00	(17)	DISP	1574	30000

Encasement Piping Low Temp
04/24/2020 2018719 BENTLEY
10:51 AM AutoPIPE Nuclear 12.00.00.16 RESULT PAGE 121

ASME B31.3 (2016) CODE COMPLIANCE
(Moments in ft-lb , Force in lbf) (Stress in psi)

Point name	Load combination	Axial Force	In-Pl. Moment	Out-Pl. Moment	Torsion Moment	S.I.F In	S.I.F Out	Index/SIF Ax.	Index/SIF Tor.	Eq. no.	Load type	Code Stress	Code Allow.
C16 N+	Max P{1}									(3a)	HOOP	0	20000
	GR + Max P{1}	6	51	1	6	1.00	1.00	1.00	1.00	23a	SUST	199	20000
	TR:Amb to T1{1}	113	411	26	3	1.00	1.00	1.00	1.00	(17)	DISP	1574	30000
	Amb to T1{1}	113	411	26	3	1.00	1.00	1.00	1.00	(17)	DISP	1574	30000
C16 F-	Max P{1}									(3a)	HOOP	0	20000
	GR + Max P{1}	1	43	76	42	1.00	1.00	1.00	1.00	23a	SUST	376	20000
	TR:Amb to T1{1}	48	218	28	0	1.00	1.00	1.00	1.00	(17)	DISP	835	30000
	Amb to T1{1}	48	218	28	0	1.00	1.00	1.00	1.00	(17)	DISP	835	30000
C16 F+	Max P{1}									(3a)	HOOP	0	20000
	GR + Max P{1}	1	78	40	42	1.00	1.00	1.00	1.00	23a	SUST	376	20000
	TR:Amb to T1{1}	48	22	219	0	1.00	1.00	1.00	1.00	(17)	DISP	835	30000
	Amb to T1{1}	48	22	219	0	1.00	1.00	1.00	1.00	(17)	DISP	835	30000
C32	Max P{1}									(3a)	HOOP	0	20000
	GR + Max P{1}	1	102	38	42	1.00	1.00	1.00	1.00	23a	SUST	452	20000
	TR:Amb to T1{1}	48	28	162	0	1.00	1.00	1.00	1.00	(17)	DISP	629	30000
	Amb to T1{1}	48	28	162	0	1.00	1.00	1.00	1.00	(17)	DISP	629	30000
C33	Max P{1}									(3a)	HOOP	0	20000
	GR + Max P{1}	0	138	22	42	1.00	1.00	1.00	1.00	23a	SUST	564	20000
	TR:Amb to T1{1}	48	32	149	1	1.00	1.00	1.00	1.00	(17)	DISP	585	30000
	Amb to T1{1}	48	32	149	1	1.00	1.00	1.00	1.00	(17)	DISP	585	30000
C19 N-	Max P{1}									(3a)	HOOP	0	20000
	GR + Max P{1}	0	108	19	42	1.00	1.00	1.00	1.00	23a	SUST	455	20000
	TR:Amb to T1{1}	49	25	206	1	1.00	1.00	1.00	1.00	(17)	DISP	789	30000
	Amb to T1{1}	49	25	206	1	1.00	1.00	1.00	1.00	(17)	DISP	789	30000
C19 N+	Max P{1}									(3a)	HOOP	0	20000
	GR + Max P{1}	0	23	107	42	1.00	1.00	1.00	1.00	23a	SUST	455	20000
	TR:Amb to T1{1}	49	205	31	1	1.00	1.00	1.00	1.00	(17)	DISP	789	30000
	Amb to T1{1}	49	205	31	1	1.00	1.00	1.00	1.00	(17)	DISP	789	30000
C19 F-	Max P{1}									(3a)	HOOP	0	20000
	GR + Max P{1}	6	1	30	7	1.00	1.00	1.00	1.00	23a	SUST	120	20000
	TR:Amb to T1{1}	113	398	31	0	1.00	1.00	1.00	1.00	(17)	DISP	1527	30000
	Amb to T1{1}	113	398	31	0	1.00	1.00	1.00	1.00	(17)	DISP	1527	30000
C19 F+	Max P{1}									(3a)	HOOP	0	20000
	GR + Max P{1}	6	30	1	7	1.00	1.00	1.00	1.00	23a	SUST	120	20000
	TR:Amb to T1{1}	113	22	399	0	1.00	1.00	1.00	1.00	(17)	DISP	1527	30000
	Amb to T1{1}	113	22	399	0	1.00	1.00	1.00	1.00	(17)	DISP	1527	30000
C34	Max P{1}									(3a)	HOOP	0	20000
	GR + Max P{1}	6	31	0	7	1.00	1.00	1.00	1.00	23a	SUST	126	20000
	TR:Amb to T1{1}	113	27	375	0	1.00	1.00	1.00	1.00	(17)	DISP	1438	30000
	Amb to T1{1}	113	27	375	0	1.00	1.00	1.00	1.00	(17)	DISP	1438	30000

Encasement Piping Low Temp
04/24/2020 2018719 BENTLEY
10:51 AM AutoPIPE Nuclear 12.00.00.16 RESULT PAGE 122

ASME B31.3 (2016) CODE COMPLIANCE
(Moments in ft-lb , Force in lbf) (Stress in psi)

Point name	Load combination	Axial Force	In-Pl. Moment	Out-Pl. Moment	Torsion Moment	S.I.F In	S.I.F Out	Index/SIF Ax.	Index/SIF Tor.	Eq. no.	Load type	Code Stress	Code Allow.
C35	- Max P{1}									(3a)	HOOP	0	20000
	GR + Max P{1}	3	122	9	7	1.00	1.00	1.00	1.00	23a	SUST	476	20000
	TR:Amb to T1{1}	113	14	59	0	1.00	1.00	1.00	1.00	(17)	DISP	263	30000
	Amb to T1{1}	113	14	59	0	1.00	1.00	1.00	1.00	(17)	DISP	263	30000
C35	+ Max P{1}									(3a)	HOOP	0	20000
	GR + Max P{1}	6	122	9	7	1.00	1.00	1.00	1.00	23a	SUST	478	20000
	TR:Amb to T1{1}	206	14	59	0	1.00	1.00	1.00	1.00	(17)	DISP	292	30000
	Amb to T1{1}	206	14	59	0	1.00	1.00	1.00	1.00	(17)	DISP	292	30000
C36	- Max P{1}									(3a)	HOOP	0	20000
	GR + Max P{1}	3	58	18	7	1.00	1.00	1.00	1.00	23a	SUST	236	20000
	TR:Amb to T1{1}	206	3	48	0	1.00	1.00	1.00	1.00	(17)	DISP	246	30000
	Amb to T1{1}	206	3	48	0	1.00	1.00	1.00	1.00	(17)	DISP	246	30000
C36	+ Max P{1}									(3a)	HOOP	0	20000
	GR + Max P{1}	6	58	18	7	1.00	1.00	1.00	1.00	23a	SUST	237	20000
	TR:Amb to T1{1}	276	3	48	0	1.00	1.00	1.00	1.00	(17)	DISP	268	30000
	Amb to T1{1}	276	3	48	0	1.00	1.00	1.00	1.00	(17)	DISP	268	30000
C37	- Max P{1}									(3a)	HOOP	0	20000
	GR + Max P{1}	3	85	27	7	1.00	1.00	1.00	1.00	23a	SUST	346	20000
	TR:Amb to T1{1}	276	0	8	0	1.00	1.00	1.00	1.00	(17)	DISP	115	30000
	Amb to T1{1}	276	0	8	0	1.00	1.00	1.00	1.00	(17)	DISP	115	30000
C37	+ Max P{1}									(3a)	HOOP	0	20000
	GR + Max P{1}	6	85	27	7	1.00	1.00	1.00	1.00	23a	SUST	347	20000
	TR:Amb to T1{1}	201	0	8	0	1.00	1.00	1.00	1.00	(17)	DISP	92	30000
	Amb to T1{1}	201	0	8	0	1.00	1.00	1.00	1.00	(17)	DISP	92	30000
C38	- Max P{1}									(3a)	HOOP	0	20000
	GR + Max P{1}	3	40	36	7	1.00	1.00	1.00	1.00	23a	SUST	211	20000
	TR:Amb to T1{1}	201	3	79	0	1.00	1.00	1.00	1.00	(17)	DISP	357	30000
	Amb to T1{1}	201	3	79	0	1.00	1.00	1.00	1.00	(17)	DISP	357	30000
C38	+ Max P{1}									(3a)	HOOP	0	20000
	GR + Max P{1}	5	40	36	7	1.00	1.00	1.00	1.00	23a	SUST	212	20000
	TR:Amb to T1{1}	153	3	79	0	1.00	1.00	1.00	1.00	(17)	DISP	342	30000
	Amb to T1{1}	153	3	79	0	1.00	1.00	1.00	1.00	(17)	DISP	342	30000
C39	- Max P{1}									(3a)	HOOP	0	20000
	GR + Max P{1}	4	85	41	7	1.00	1.00	1.00	1.00	23a	SUST	366	20000
	TR:Amb to T1{1}	153	16	26	0	1.00	1.00	1.00	1.00	(17)	DISP	163	30000
	Amb to T1{1}	153	16	26	0	1.00	1.00	1.00	1.00	(17)	DISP	163	30000
C39	+ Max P{1}									(3a)	HOOP	0	20000
	GR + Max P{1}	6	85	41	7	1.00	1.00	1.00	1.00	23a	SUST	367	20000
	TR:Amb to T1{1}	102	16	26	0	1.00	1.00	1.00	1.00	(17)	DISP	147	30000
	Amb to T1{1}	102	16	26	0	1.00	1.00	1.00	1.00	(17)	DISP	147	30000

ASME B31.3 (2016) CODE COMPLIANCE
(Moments in ft-lb , Force in lbf) (Stress in psi)

Point name	Load combination	Axial Force	In-Pl. Moment	Out-Pl. Moment	Torsion Moment	S.I.F In	S.I.F Out	Index/SIF Ax.	Index/SIF Tor.	Eq. no.	Load type	Code Stress	Code Allow.
C40	Max P{1}									(3a)	HOOP	0	20000
	GR + Max P{1}	3	48	50	7	1.00	1.00	1.00	1.00	23a	SUST	271	20000
	TR:Amb to T1{1}	102	25	391	0	1.00	1.00	1.00	1.00	(17)	DISP	1494	30000
	Amb to T1{1}	102	25	391	0	1.00	1.00	1.00	1.00	(17)	DISP	1494	30000
C27 N-	Max P{1}									(3a)	HOOP	0	20000
	GR + Max P{1}	3	28	50	7	1.00	1.00	1.00	1.00	23a	SUST	226	20000
	TR:Amb to T1{1}	102	19	414	1	1.00	1.00	1.00	1.00	(17)	DISP	1579	30000
	Amb to T1{1}	102	19	414	1	1.00	1.00	1.00	1.00	(17)	DISP	1579	30000
C27 N+	Max P{1}									(3a)	HOOP	0	20000
	GR + Max P{1}	3	50	30	7	1.00	1.00	1.00	1.00	23a	SUST	226	20000
	TR:Amb to T1{1}	102	413	30	1	1.00	1.00	1.00	1.00	(17)	DISP	1579	30000
	Amb to T1{1}	102	413	30	1	1.00	1.00	1.00	1.00	(17)	DISP	1579	30000
C27 F-	Max P{1}									(3a)	HOOP	0	20000
	GR + Max P{1}	1	47	7	26	1.00	1.00	1.00	1.00	23a	SUST	210	20000
	TR:Amb to T1{1}	47	249	30	2	1.00	1.00	1.00	1.00	(17)	DISP	950	30000
	Amb to T1{1}	47	249	30	2	1.00	1.00	1.00	1.00	(17)	DISP	950	30000
C27 F+	Max P{1}									(3a)	HOOP	0	20000
	GR + Max P{1}	1	6	47	26	1.00	1.00	1.00	1.00	23a	SUST	210	20000
	TR:Amb to T1{1}	47	23	249	2	1.00	1.00	1.00	1.00	(17)	DISP	950	30000
	Amb to T1{1}	47	23	249	2	1.00	1.00	1.00	1.00	(17)	DISP	950	30000
C42	Max P{1}									(3a)	HOOP	0	20000
	GR + Max P{1}	1	2	46	26	1.00	1.00	1.00	1.00	23a	SUST	206	20000
	TR:Amb to T1{1}	47	30	199	2	1.00	1.00	1.00	1.00	(17)	DISP	764	30000
	Amb to T1{1}	47	30	199	2	1.00	1.00	1.00	1.00	(17)	DISP	764	30000
C43	Max P{1}									(3a)	HOOP	0	20000
	GR + Max P{1}	1	57	38	26	1.00	1.00	1.00	1.00	23a	SUST	284	20000
	TR:Amb to T1{1}	47	21	207	2	1.00	1.00	1.00	1.00	(17)	DISP	791	30000
	Amb to T1{1}	47	21	207	2	1.00	1.00	1.00	1.00	(17)	DISP	791	30000
C30 N-	Max P{1}									(3a)	HOOP	0	20000
	GR + Max P{1}	1	58	37	26	1.00	1.00	1.00	1.00	23a	SUST	284	20000
	TR:Amb to T1{1}	47	17	258	2	1.00	1.00	1.00	1.00	(17)	DISP	978	30000
	Amb to T1{1}	47	17	258	2	1.00	1.00	1.00	1.00	(17)	DISP	978	30000
C30 N+	Max P{1}									(3a)	HOOP	0	20000
	GR + Max P{1}	1	36	58	26	1.00	1.00	1.00	1.00	23a	SUST	284	20000
	TR:Amb to T1{1}	47	257	20	2	1.00	1.00	1.00	1.00	(17)	DISP	978	30000
	Amb to T1{1}	47	257	20	2	1.00	1.00	1.00	1.00	(17)	DISP	978	30000
C30 F-	Max P{1}									(3a)	HOOP	0	20000
	GR + Max P{1}	2	25	76	2	1.00	1.00	1.00	1.00	23a	SUST	310	20000
	TR:Amb to T1{1}	101	421	22	0	1.00	1.00	1.00	1.00	(17)	DISP	1607	30000
	Amb to T1{1}	101	421	22	0	1.00	1.00	1.00	1.00	(17)	DISP	1607	30000

ASME B31.3 (2016) CODE COMPLIANCE
(Moments in ft-lb , Force in lbf) (Stress in psi)

Point name	Load combination	Axial Force	In-Pl. Moment	Out-Pl. Moment	Torsion Moment	S.I.F In	S.I.F Out	Index/SIF Ax.	Index/SIF Tor.	Eq. no.	Load type	Code Stress	Code Allow.
C30 F+	Max P{1}									(3a)	HOOP	0	20000
	GR + Max P{1}	2	75	27	2	1.00	1.00	1.00	1.00	23a	SUST	310	20000
	TR:Amb to T1{1}	101	11	422	0	1.00	1.00	1.00	1.00	(17)	DISP	1607	30000
	Amb to T1{1}	101	11	422	0	1.00	1.00	1.00	1.00	(17)	DISP	1607	30000
C45	Max P{1}									(3a)	HOOP	0	20000
	GR + Max P{1}	2	103	27	2	1.00	1.00	1.00	1.00	23a	SUST	412	20000
	TR:Amb to T1{1}	101	15	398	0	1.00	1.00	1.00	1.00	(17)	DISP	1520	30000
	Amb to T1{1}	101	15	398	0	1.00	1.00	1.00	1.00	(17)	DISP	1520	30000
C46 -	Max P{1}									(3a)	HOOP	0	20000
	GR + Max P{1}	1	71	21	2	1.00	1.00	1.00	1.00	23a	SUST	289	20000
	TR:Amb to T1{1}	101	6	20	1	1.00	1.00	1.00	1.00	(17)	DISP	111	30000
	Amb to T1{1}	101	6	20	1	1.00	1.00	1.00	1.00	(17)	DISP	111	30000
C46 +	Max P{1}									(3a)	HOOP	0	20000
	GR + Max P{1}	2	71	21	2	1.00	1.00	1.00	1.00	23a	SUST	289	20000
	TR:Amb to T1{1}	168	6	20	1	1.00	1.00	1.00	1.00	(17)	DISP	132	30000
	Amb to T1{1}	168	6	20	1	1.00	1.00	1.00	1.00	(17)	DISP	132	30000
C47 -	Max P{1}									(3a)	HOOP	0	20000
	GR + Max P{1}	1	73	15	2	1.00	1.00	1.00	1.00	23a	SUST	290	20000
	TR:Amb to T1{1}	168	2	74	1	1.00	1.00	1.00	1.00	(17)	DISP	331	30000
	Amb to T1{1}	168	2	74	1	1.00	1.00	1.00	1.00	(17)	DISP	331	30000
C47 +	Max P{1}									(3a)	HOOP	0	20000
	GR + Max P{1}	2	73	15	2	1.00	1.00	1.00	1.00	23a	SUST	290	20000
	TR:Amb to T1{1}	244	2	74	1	1.00	1.00	1.00	1.00	(17)	DISP	355	30000
	Amb to T1{1}	244	2	74	1	1.00	1.00	1.00	1.00	(17)	DISP	355	30000
C48 -	Max P{1}									(3a)	HOOP	0	20000
	GR + Max P{1}	1	73	9	2	1.00	1.00	1.00	1.00	23a	SUST	284	20000
	TR:Amb to T1{1}	244	0	16	1	1.00	1.00	1.00	1.00	(17)	DISP	135	30000
	Amb to T1{1}	244	0	16	1	1.00	1.00	1.00	1.00	(17)	DISP	135	30000
C48 +	Max P{1}									(3a)	HOOP	0	20000
	GR + Max P{1}	2	73	9	2	1.00	1.00	1.00	1.00	23a	SUST	284	20000
	TR:Amb to T1{1}	322	0	16	1	1.00	1.00	1.00	1.00	(17)	DISP	160	30000
	Amb to T1{1}	322	0	16	1	1.00	1.00	1.00	1.00	(17)	DISP	160	30000
C49 -	Max P{1}									(3a)	HOOP	0	20000
	GR + Max P{1}	1	73	3	2	1.00	1.00	1.00	1.00	23a	SUST	283	20000
	TR:Amb to T1{1}	322	0	8	1	1.00	1.00	1.00	1.00	(17)	DISP	132	30000
	Amb to T1{1}	322	0	8	1	1.00	1.00	1.00	1.00	(17)	DISP	132	30000
C49 +	Max P{1}									(3a)	HOOP	0	20000
	GR + Max P{1}	2	73	3	2	1.00	1.00	1.00	1.00	23a	SUST	283	20000
	TR:Amb to T1{1}	382	0	8	1	1.00	1.00	1.00	1.00	(17)	DISP	151	30000
	Amb to T1{1}	382	0	8	1	1.00	1.00	1.00	1.00	(17)	DISP	151	30000

Encasement Piping Low Temp
04/24/2020 2018719 BENTLEY
10:51 AM AutoPIPE Nuclear 12.00.00.16 RESULT PAGE 125

ASME B31.3 (2016) CODE COMPLIANCE
(Moments in ft-lb , Force in lbf) (Stress in psi)

Point name	Load combination	Axial Force	In-Pl. Moment	Out-Pl. Moment	Torsion Moment	S.I.F In	S.I.F Out	Index/SIF Ax.	Index/SIF Tor.	Eq. no.	Load type	Code Stress	Code Allow.
C50 -	Max P{1}									(3a)	HOOP	0	20000
	GR + Max P{1}	1	72	3	2	1.00	1.00	1.00	1.00	23a	SUST	280	20000
	TR:Amb to T1{1}	382	0	4	1	1.00	1.00	1.00	1.00	(17)	DISP	137	30000
	Amb to T1{1}	382	0	4	1	1.00	1.00	1.00	1.00	(17)	DISP	137	30000
C50 +	Max P{1}									(3a)	HOOP	0	20000
	GR + Max P{1}	2	72	3	2	1.00	1.00	1.00	1.00	23a	SUST	280	20000
	TR:Amb to T1{1}	305	0	4	1	1.00	1.00	1.00	1.00	(17)	DISP	113	30000
	Amb to T1{1}	305	0	4	1	1.00	1.00	1.00	1.00	(17)	DISP	113	30000
C51 -	Max P{1}									(3a)	HOOP	0	20000
	GR + Max P{1}	1	75	9	2	1.00	1.00	1.00	1.00	23a	SUST	293	20000
	TR:Amb to T1{1}	305	0	18	1	1.00	1.00	1.00	1.00	(17)	DISP	162	30000
	Amb to T1{1}	305	0	18	1	1.00	1.00	1.00	1.00	(17)	DISP	162	30000
C51 +	Max P{1}									(3a)	HOOP	0	20000
	GR + Max P{1}	2	75	9	2	1.00	1.00	1.00	1.00	23a	SUST	294	20000
	TR:Amb to T1{1}	227	0	18	1	1.00	1.00	1.00	1.00	(17)	DISP	138	30000
	Amb to T1{1}	227	0	18	1	1.00	1.00	1.00	1.00	(17)	DISP	138	30000
C52 -	Max P{1}									(3a)	HOOP	0	20000
	GR + Max P{1}	1	64	15	2	1.00	1.00	1.00	1.00	23a	SUST	253	20000
	TR:Amb to T1{1}	227	2	68	1	1.00	1.00	1.00	1.00	(17)	DISP	324	30000
	Amb to T1{1}	227	2	68	1	1.00	1.00	1.00	1.00	(17)	DISP	324	30000
C52 +	Max P{1}									(3a)	HOOP	0	20000
	GR + Max P{1}	2	64	15	2	1.00	1.00	1.00	1.00	23a	SUST	253	20000
	TR:Amb to T1{1}	154	2	68	0	1.00	1.00	1.00	1.00	(17)	DISP	301	30000
	Amb to T1{1}	154	2	68	0	1.00	1.00	1.00	1.00	(17)	DISP	301	30000
C53 -	Max P{1}									(3a)	HOOP	0	20000
	GR + Max P{1}	1	107	20	2	1.00	1.00	1.00	1.00	23a	SUST	424	20000
	TR:Amb to T1{1}	154	6	47	0	1.00	1.00	1.00	1.00	(17)	DISP	225	30000
	Amb to T1{1}	154	6	47	0	1.00	1.00	1.00	1.00	(17)	DISP	225	30000
C53 +	Max P{1}									(3a)	HOOP	0	20000
	GR + Max P{1}	2	107	20	2	1.00	1.00	1.00	1.00	23a	SUST	424	20000
	TR:Amb to T1{1}	73	6	47	1	1.00	1.00	1.00	1.00	(17)	DISP	200	30000
	Amb to T1{1}	73	6	47	1	1.00	1.00	1.00	1.00	(17)	DISP	200	30000
C55	Max P{1}									(3a)	HOOP	0	20000
	GR + Max P{1}	1	50	27	2	1.00	1.00	1.00	1.00	23a	SUST	221	20000
	TR:Amb to T1{1}	73	13	376	1	1.00	1.00	1.00	1.00	(17)	DISP	1428	30000
	Amb to T1{1}	73	13	376	1	1.00	1.00	1.00	1.00	(17)	DISP	1428	30000
C41 N-	Max P{1}									(3a)	HOOP	0	20000
	GR + Max P{1}	1	35	28	2	1.00	1.00	1.00	1.00	23a	SUST	173	20000
	TR:Amb to T1{1}	73	10	396	1	1.00	1.00	1.00	1.00	(17)	DISP	1503	30000
	Amb to T1{1}	73	10	396	1	1.00	1.00	1.00	1.00	(17)	DISP	1503	30000

Encasement Piping Low Temp
04/24/2020 2018719 BENTLEY
10:51 AM AutoPIPE Nuclear 12.00.00.16 RESULT PAGE 126

ASME B31.3 (2016) CODE COMPLIANCE
(Moments in ft-lb , Force in lbf) (Stress in psi)

Point name	Load combination	Axial Force	In-Pl. Moment	Out-Pl. Moment	Torsion Moment	S.I.F In	S.I.F Out	Index/SIF Ax.	Index/SIF Tor.	Eq. no.	Load type	Code Stress	Code Allow.
C41 N+	Max P{1}									(3a)	HOOP	0	20000
	GR + Max P{1}	1	27	35	2	1.00	1.00	1.00	1.00	23a	SUST	173	20000
	TR:Amb to T1{1}	73	396	14	1	1.00	1.00	1.00	1.00	(17)	DISP	1503	30000
	Amb to T1{1}	73	396	14	1	1.00	1.00	1.00	1.00	(17)	DISP	1503	30000
C41 F-	Max P{1}									(3a)	HOOP	0	20000
	GR + Max P{1}	0	28	12	8	1.00	1.00	1.00	1.00	23a	SUST	122	20000
	TR:Amb to T1{1}	40	298	13	0	1.00	1.00	1.00	1.00	(17)	DISP	1128	30000
	Amb to T1{1}	40	298	13	0	1.00	1.00	1.00	1.00	(17)	DISP	1128	30000
C41 F+	Max P{1}									(3a)	HOOP	0	20000
	GR + Max P{1}	0	13	28	8	1.00	1.00	1.00	1.00	23a	SUST	122	20000
	TR:Amb to T1{1}	40	11	298	0	1.00	1.00	1.00	1.00	(17)	DISP	1128	30000
	Amb to T1{1}	40	11	298	0	1.00	1.00	1.00	1.00	(17)	DISP	1128	30000
C56	Max P{1}									(3a)	HOOP	0	20000
	GR + Max P{1}	0	26	28	8	1.00	1.00	1.00	1.00	23a	SUST	149	20000
	TR:Amb to T1{1}	40	14	262	0	1.00	1.00	1.00	1.00	(17)	DISP	992	30000
	Amb to T1{1}	40	14	262	0	1.00	1.00	1.00	1.00	(17)	DISP	992	30000
C57	Max P{1}									(3a)	HOOP	0	20000
	GR + Max P{1}	0	42	24	8	1.00	1.00	1.00	1.00	23a	SUST	189	20000
	TR:Amb to T1{1}	40	9	242	1	1.00	1.00	1.00	1.00	(17)	DISP	915	30000
	Amb to T1{1}	40	9	242	1	1.00	1.00	1.00	1.00	(17)	DISP	915	30000
C44 N-	Max P{1}									(3a)	HOOP	0	20000
	GR + Max P{1}	0	27	23	8	1.00	1.00	1.00	1.00	23a	SUST	141	20000
	TR:Amb to T1{1}	40	8	278	0	1.00	1.00	1.00	1.00	(17)	DISP	1051	30000
	Amb to T1{1}	40	8	278	0	1.00	1.00	1.00	1.00	(17)	DISP	1051	30000
C44 N+	Max P{1}									(3a)	HOOP	0	20000
	GR + Max P{1}	0	24	27	8	1.00	1.00	1.00	1.00	23a	SUST	141	20000
	TR:Amb to T1{1}	40	278	10	0	1.00	1.00	1.00	1.00	(17)	DISP	1051	30000
	Amb to T1{1}	40	278	10	0	1.00	1.00	1.00	1.00	(17)	DISP	1051	30000
C44 F-	Max P{1}									(3a)	HOOP	0	20000
	GR + Max P{1}	0	21	22	1	1.00	1.00	1.00	1.00	23a	SUST	116	20000
	TR:Amb to T1{1}	73	376	10	0	1.00	1.00	1.00	1.00	(17)	DISP	1426	30000
	Amb to T1{1}	73	376	10	0	1.00	1.00	1.00	1.00	(17)	DISP	1426	30000
C44 F+	Max P{1}									(3a)	HOOP	0	20000
	GR + Max P{1}	0	21	21	1	1.00	1.00	1.00	1.00	23a	SUST	116	20000
	TR:Amb to T1{1}	73	8	376	0	1.00	1.00	1.00	1.00	(17)	DISP	1426	30000
	Amb to T1{1}	73	8	376	0	1.00	1.00	1.00	1.00	(17)	DISP	1426	30000
C58	Max P{1}									(3a)	HOOP	0	20000
	GR + Max P{1}	0	34	21	1	1.00	1.00	1.00	1.00	23a	SUST	156	20000
	TR:Amb to T1{1}	73	10	356	0	1.00	1.00	1.00	1.00	(17)	DISP	1351	30000
	Amb to T1{1}	73	10	356	0	1.00	1.00	1.00	1.00	(17)	DISP	1351	30000

ASME B31.3 (2016) CODE COMPLIANCE
(Moments in ft-lb , Force in lbf) (Stress in psi)

Point name	Load combination	Axial Force	In-Pl. Moment	Out-Pl. Moment	Torsion Moment	S.I.F In	S.I.F Out	Index/SIF Ax.	Index/SIF Tor.	Eq. no.	Load type	Code Stress	Code Allow.
C59	- Max P{1}									(3a)	HOOP	0	20000
	GR + Max P{1}	0	89	19	1	1.00	1.00	1.00	1.00	23a	SUST	351	20000
	TR:Amb to T1{1}	73	5	7	0	1.00	1.00	1.00	1.00	(17)	DISP	56	30000
	Amb to T1{1}	73	5	7	0	1.00	1.00	1.00	1.00	(17)	DISP	56	30000
C59	+ Max P{1}									(3a)	HOOP	0	20000
	GR + Max P{1}	0	89	19	1	1.00	1.00	1.00	1.00	23a	SUST	351	20000
	TR:Amb to T1{1}	152	5	7	0	1.00	1.00	1.00	1.00	(17)	DISP	81	30000
	Amb to T1{1}	152	5	7	0	1.00	1.00	1.00	1.00	(17)	DISP	81	30000
C60	- Max P{1}									(3a)	HOOP	0	20000
	GR + Max P{1}	0	69	17	1	1.00	1.00	1.00	1.00	23a	SUST	274	20000
	TR:Amb to T1{1}	152	1	53	0	1.00	1.00	1.00	1.00	(17)	DISP	247	30000
	Amb to T1{1}	152	1	53	0	1.00	1.00	1.00	1.00	(17)	DISP	247	30000
C60	+ Max P{1}									(3a)	HOOP	0	20000
	GR + Max P{1}	0	69	17	1	1.00	1.00	1.00	1.00	23a	SUST	274	20000
	TR:Amb to T1{1}	227	1	53	0	1.00	1.00	1.00	1.00	(17)	DISP	270	30000
	Amb to T1{1}	227	1	53	0	1.00	1.00	1.00	1.00	(17)	DISP	270	30000
C61	- Max P{1}									(3a)	HOOP	0	20000
	GR + Max P{1}	0	74	15	1	1.00	1.00	1.00	1.00	23a	SUST	293	20000
	TR:Amb to T1{1}	227	0	12	0	1.00	1.00	1.00	1.00	(17)	DISP	117	30000
	Amb to T1{1}	227	0	12	0	1.00	1.00	1.00	1.00	(17)	DISP	117	30000
C61	+ Max P{1}									(3a)	HOOP	0	20000
	GR + Max P{1}	0	74	15	1	1.00	1.00	1.00	1.00	23a	SUST	293	20000
	TR:Amb to T1{1}	305	0	12	0	1.00	1.00	1.00	1.00	(17)	DISP	141	30000
	Amb to T1{1}	305	0	12	0	1.00	1.00	1.00	1.00	(17)	DISP	141	30000
C63	- Max P{1}									(3a)	HOOP	0	20000
	GR + Max P{1}	0	72	13	1	1.00	1.00	1.00	1.00	23a	SUST	283	20000
	TR:Amb to T1{1}	305	0	9	0	1.00	1.00	1.00	1.00	(17)	DISP	131	30000
	Amb to T1{1}	305	0	9	0	1.00	1.00	1.00	1.00	(17)	DISP	131	30000
C63	+ Max P{1}									(3a)	HOOP	0	20000
	GR + Max P{1}	0	72	13	1	1.00	1.00	1.00	1.00	23a	SUST	283	20000
	TR:Amb to T1{1}	273	0	9	0	1.00	1.00	1.00	1.00	(17)	DISP	121	30000
	Amb to T1{1}	273	0	9	0	1.00	1.00	1.00	1.00	(17)	DISP	121	30000
C64	- Max P{1}									(3a)	HOOP	0	20000
	GR + Max P{1}	0	76	11	1	1.00	1.00	1.00	1.00	23a	SUST	296	20000
	TR:Amb to T1{1}	273	0	0	0	1.00	1.00	1.00	1.00	(17)	DISP	88	30000
	Amb to T1{1}	273	0	0	0	1.00	1.00	1.00	1.00	(17)	DISP	88	30000
C64	+ Max P{1}									(3a)	HOOP	0	20000
	GR + Max P{1}	0	76	11	1	1.00	1.00	1.00	1.00	23a	SUST	296	20000
	TR:Amb to T1{1}	195	0	0	0	1.00	1.00	1.00	1.00	(17)	DISP	63	30000
	Amb to T1{1}	195	0	0	0	1.00	1.00	1.00	1.00	(17)	DISP	63	30000

Encasement Piping Low Temp
04/24/2020 2018719 BENTLEY
10:51 AM AutoPIPE Nuclear 12.00.00.16 RESULT PAGE 128

ASME B31.3 (2016) CODE COMPLIANCE
(Moments in ft-lb , Force in lbf) (Stress in psi)

Point name	Load combination	Axial Force	In-Pl. Moment	Out-Pl. Moment	Torsion Moment	S.I.F In	S.I.F Out	Index/SIF Ax.	Index/SIF Tor.	Eq. no.	Load type	Code Stress	Code Allow.
C65 -	Max P{1}									(3a)	HOOP	0	20000
	GR + Max P{1}	0	63	9	1	1.00	1.00	1.00	1.00	23a	SUST	245	20000
	TR:Amb to T1{1}	195	1	53	0	1.00	1.00	1.00	1.00	(17)	DISP	260	30000
	Amb to T1{1}	195	1	53	0	1.00	1.00	1.00	1.00	(17)	DISP	260	30000
C65 +	Max P{1}									(3a)	HOOP	0	20000
	GR + Max P{1}	0	63	9	1	1.00	1.00	1.00	1.00	23a	SUST	245	20000
	TR:Amb to T1{1}	122	1	53	0	1.00	1.00	1.00	1.00	(17)	DISP	237	30000
	Amb to T1{1}	122	1	53	0	1.00	1.00	1.00	1.00	(17)	DISP	237	30000
C72 -	Max P{1}									(3a)	HOOP	0	20000
	GR + Max P{1}	0	111	7	1	1.00	1.00	1.00	1.00	23a	SUST	432	20000
	TR:Amb to T1{1}	122	4	99	0	1.00	1.00	1.00	1.00	(17)	DISP	408	30000
	Amb to T1{1}	122	4	99	0	1.00	1.00	1.00	1.00	(17)	DISP	408	30000
C72 +	Max P{1}									(3a)	HOOP	0	20000
	GR + Max P{1}	1	111	7	1	1.00	1.00	1.00	1.00	23a	SUST	432	20000
	TR:Amb to T1{1}	36	4	99	0	1.00	1.00	1.00	1.00	(17)	DISP	381	30000
	Amb to T1{1}	36	4	99	0	1.00	1.00	1.00	1.00	(17)	DISP	381	30000
C73	Max P{1}									(3a)	HOOP	0	20000
	GR + Max P{1}	0	42	5	1	1.00	1.00	1.00	1.00	23a	SUST	165	20000
	TR:Amb to T1{1}	36	10	203	0	1.00	1.00	1.00	1.00	(17)	DISP	770	30000
	Amb to T1{1}	36	10	203	0	1.00	1.00	1.00	1.00	(17)	DISP	770	30000
C54 N-	Max P{1}									(3a)	HOOP	0	20000
	GR + Max P{1}	0	28	5	1	1.00	1.00	1.00	1.00	23a	SUST	109	20000
	TR:Amb to T1{1}	36	8	217	1	1.00	1.00	1.00	1.00	(17)	DISP	823	30000
	Amb to T1{1}	36	8	217	1	1.00	1.00	1.00	1.00	(17)	DISP	823	30000
C54 N+	Max P{1}									(3a)	HOOP	0	20000
	GR + Max P{1}	0	5	28	1	1.00	1.00	1.00	1.00	23a	SUST	109	20000
	TR:Amb to T1{1}	36	217	10	1	1.00	1.00	1.00	1.00	(17)	DISP	823	30000
	Amb to T1{1}	36	217	10	1	1.00	1.00	1.00	1.00	(17)	DISP	823	30000
C54 F-	Max P{1}									(3a)	HOOP	0	20000
	GR + Max P{1}	0	3	18	3	1.00	1.00	1.00	1.00	23a	SUST	71	20000
	TR:Amb to T1{1}	28	194	9	0	1.00	1.00	1.00	1.00	(17)	DISP	734	30000
	Amb to T1{1}	28	194	9	0	1.00	1.00	1.00	1.00	(17)	DISP	734	30000
C54 F+	Max P{1}									(3a)	HOOP	0	20000
	GR + Max P{1}	0	18	3	3	1.00	1.00	1.00	1.00	23a	SUST	71	20000
	TR:Amb to T1{1}	28	8	194	0	1.00	1.00	1.00	1.00	(17)	DISP	734	30000
	Amb to T1{1}	28	8	194	0	1.00	1.00	1.00	1.00	(17)	DISP	734	30000
C74	Max P{1}									(3a)	HOOP	0	20000
	GR + Max P{1}	0	31	3	3	1.00	1.00	1.00	1.00	23a	SUST	122	20000
	TR:Amb to T1{1}	28	10	176	0	1.00	1.00	1.00	1.00	(17)	DISP	667	30000
	Amb to T1{1}	28	10	176	0	1.00	1.00	1.00	1.00	(17)	DISP	667	30000

Encasement Piping Low Temp
04/24/2020 2018719 BENTLEY
10:51 AM AutoPIPE Nuclear 12.00.00.16 RESULT PAGE 129

ASME B31.3 (2016) CODE COMPLIANCE
(Moments in ft-lb , Force in lbf) (Stress in psi)

Point name	Load combination	Axial Force	In-Pl. Moment	Out-Pl. Moment	Torsion Moment	S.I.F In	S.I.F Out	Index/SIF Ax.	Index/SIF Tor.	Eq. no.	Load type	Code Stress	Code Allow.
C75	- Max P{1}									(3a)	HOOP	0	20000
	GR + Max P{1}	1	84	1	3	1.00	1.00	1.00	1.00	23a	SUST	324	20000
	TR:Amb to T1{1}	28	4	147	0	1.00	1.00	1.00	1.00	(17)	DISP	557	30000
	Amb to T1{1}	28	4	147	0	1.00	1.00	1.00	1.00	(17)	DISP	557	30000
C75	+ Max P{1}									(3a)	HOOP	0	20000
	GR + Max P{1}	0	84	1	3	1.00	1.00	1.00	1.00	23a	SUST	324	20000
	TR:Amb to T1{1}	101	4	147	0	1.00	1.00	1.00	1.00	(17)	DISP	580	30000
	Amb to T1{1}	101	4	147	0	1.00	1.00	1.00	1.00	(17)	DISP	580	30000
C76	- Max P{1}									(3a)	HOOP	0	20000
	GR + Max P{1}	1	70	5	3	1.00	1.00	1.00	1.00	23a	SUST	271	20000
	TR:Amb to T1{1}	101	1	61	0	1.00	1.00	1.00	1.00	(17)	DISP	261	30000
	Amb to T1{1}	101	1	61	0	1.00	1.00	1.00	1.00	(17)	DISP	261	30000
C76	+ Max P{1}									(3a)	HOOP	0	20000
	GR + Max P{1}	0	70	5	3	1.00	1.00	1.00	1.00	23a	SUST	270	20000
	TR:Amb to T1{1}	177	1	61	0	1.00	1.00	1.00	1.00	(17)	DISP	285	30000
	Amb to T1{1}	177	1	61	0	1.00	1.00	1.00	1.00	(17)	DISP	285	30000
C77	- Max P{1}									(3a)	HOOP	0	20000
	GR + Max P{1}	1	74	9	3	1.00	1.00	1.00	1.00	23a	SUST	291	20000
	TR:Amb to T1{1}	177	0	9	0	1.00	1.00	1.00	1.00	(17)	DISP	89	30000
	Amb to T1{1}	177	0	9	0	1.00	1.00	1.00	1.00	(17)	DISP	89	30000
C77	+ Max P{1}									(3a)	HOOP	0	20000
	GR + Max P{1}	0	74	9	3	1.00	1.00	1.00	1.00	23a	SUST	291	20000
	TR:Amb to T1{1}	182	0	9	0	1.00	1.00	1.00	1.00	(17)	DISP	91	30000
	Amb to T1{1}	182	0	9	0	1.00	1.00	1.00	1.00	(17)	DISP	91	30000
C78	- Max P{1}									(3a)	HOOP	0	20000
	GR + Max P{1}	1	69	13	3	1.00	1.00	1.00	1.00	23a	SUST	272	20000
	TR:Amb to T1{1}	182	1	31	0	1.00	1.00	1.00	1.00	(17)	DISP	174	30000
	Amb to T1{1}	182	1	31	0	1.00	1.00	1.00	1.00	(17)	DISP	174	30000
C78	+ Max P{1}									(3a)	HOOP	0	20000
	GR + Max P{1}	0	69	13	3	1.00	1.00	1.00	1.00	23a	SUST	272	20000
	TR:Amb to T1{1}	107	1	31	0	1.00	1.00	1.00	1.00	(17)	DISP	150	30000
	Amb to T1{1}	107	1	31	0	1.00	1.00	1.00	1.00	(17)	DISP	150	30000
C79	- Max P{1}									(3a)	HOOP	0	20000
	GR + Max P{1}	1	76	17	3	1.00	1.00	1.00	1.00	23a	SUST	301	20000
	TR:Amb to T1{1}	107	4	51	0	1.00	1.00	1.00	1.00	(17)	DISP	226	30000
	Amb to T1{1}	107	4	51	0	1.00	1.00	1.00	1.00	(17)	DISP	226	30000
C79	+ Max P{1}									(3a)	HOOP	0	20000
	GR + Max P{1}	0	76	17	3	1.00	1.00	1.00	1.00	23a	SUST	301	20000
	TR:Amb to T1{1}	33	4	51	0	1.00	1.00	1.00	1.00	(17)	DISP	203	30000
	Amb to T1{1}	33	4	51	0	1.00	1.00	1.00	1.00	(17)	DISP	203	30000

ASME B31.3 (2016) CODE COMPLIANCE
(Moments in ft-lb , Force in lbf) (Stress in psi)

Point name	Load combination	Axial Force	In-Pl. Moment	Out-Pl. Moment	Torsion Moment	S.I.F In	S.I.F Out	Index/SIF Ax.	Index/SIF Tor.	Eq. no.	Load type	Code Stress	Code Allow.
C80	Max P{1}									(3a)	HOOP	0	20000
	GR + Max P{1}	1	53	21	3	1.00	1.00	1.00	1.00	23a	SUST	221	20000
	TR:Amb to T1{1}	33	8	132	0	1.00	1.00	1.00	1.00	(17)	DISP	502	30000
	Amb to T1{1}	33	8	132	0	1.00	1.00	1.00	1.00	(17)	DISP	502	30000
C62 N-	Max P{1}									(3a)	HOOP	0	20000
	GR + Max P{1}	1	37	21	3	1.00	1.00	1.00	1.00	23a	SUST	164	20000
	TR:Amb to T1{1}	33	7	142	0	1.00	1.00	1.00	1.00	(17)	DISP	540	30000
	Amb to T1{1}	33	7	142	0	1.00	1.00	1.00	1.00	(17)	DISP	540	30000
C62 N+	Max P{1}									(3a)	HOOP	0	20000
	GR + Max P{1}	1	22	36	3	1.00	1.00	1.00	1.00	23a	SUST	164	20000
	TR:Amb to T1{1}	33	142	8	0	1.00	1.00	1.00	1.00	(17)	DISP	540	30000
	Amb to T1{1}	33	142	8	0	1.00	1.00	1.00	1.00	(17)	DISP	540	30000
C62 F-	Max P{1}									(3a)	HOOP	0	20000
	GR + Max P{1}	1	19	9	1	1.00	1.00	1.00	1.00	23a	SUST	83	20000
	TR:Amb to T1{1}	20	104	10	2	1.00	1.00	1.00	1.00	(17)	DISP	397	30000
	Amb to T1{1}	20	104	10	2	1.00	1.00	1.00	1.00	(17)	DISP	397	30000
C62 F+	Max P{1}									(3a)	HOOP	0	20000
	GR + Max P{1}	1	9	19	1	1.00	1.00	1.00	1.00	23a	SUST	83	20000
	TR:Amb to T1{1}	20	9	104	2	1.00	1.00	1.00	1.00	(17)	DISP	397	30000
	Amb to T1{1}	20	9	104	2	1.00	1.00	1.00	1.00	(17)	DISP	397	30000
C82	Max P{1}									(3a)	HOOP	0	20000
	GR + Max P{1}	1	20	19	1	1.00	1.00	1.00	1.00	23a	SUST	108	20000
	TR:Amb to T1{1}	20	11	88	2	1.00	1.00	1.00	1.00	(17)	DISP	336	30000
	Amb to T1{1}	20	11	88	2	1.00	1.00	1.00	1.00	(17)	DISP	336	30000
C81 -	Max P{1}									(3a)	HOOP	0	20000
	GR + Max P{1}	1	32	13	1	1.00	1.00	1.00	1.00	23a	SUST	134	20000
	TR:Amb to T1{1}	20	2	104	2	1.00	1.00	1.00	1.00	(17)	DISP	395	30000
	Amb to T1{1}	20	2	104	2	1.00	1.00	1.00	1.00	(17)	DISP	395	30000
C81 +	Max P{1}									(3a)	HOOP	0	20000
	GR + Max P{1}	1	32	13	1	1.00	1.00	1.00	1.00	23a	SUST	134	20000
	TR:Amb to T1{1}	31	2	104	2	1.00	1.00	1.00	1.00	(17)	DISP	399	30000
	Amb to T1{1}	31	2	104	2	1.00	1.00	1.00	1.00	(17)	DISP	399	30000
C83	Max P{1}									(3a)	HOOP	0	20000
	GR + Max P{1}	1	35	7	1	1.00	1.00	1.00	1.00	23a	SUST	140	20000
	TR:Amb to T1{1}	31	5	6	2	1.00	1.00	1.00	1.00	(17)	DISP	41	30000
	Amb to T1{1}	31	5	6	2	1.00	1.00	1.00	1.00	(17)	DISP	41	30000
C66 N-	Max P{1}									(3a)	HOOP	0	20000
	GR + Max P{1}	1	21	6	1	1.00	1.00	1.00	1.00	23a	SUST	85	20000
	TR:Amb to T1{1}	31	4	16	2	1.00	1.00	1.00	1.00	(17)	DISP	71	30000
	Amb to T1{1}	31	4	16	2	1.00	1.00	1.00	1.00	(17)	DISP	71	30000

Encasement Piping Low Temp
04/24/2020 2018719 BENTLEY
10:51 AM AutoPIPE Nuclear 12.00.00.16 RESULT PAGE 131

ASME B31.3 (2016) CODE COMPLIANCE
(Moments in ft-lb , Force in lbf) (Stress in psi)

Point name	Load combination	Axial Force	In-Pl. Moment	Out-Pl. Moment	Torsion Moment	S.I.F In	S.I.F Out	Index/SIF Ax.	Index/SIF Tor.	Eq. no.	Load type	Code Stress	Code Allow.
C66 N+	Max P{1}									(3a)	HOOP	0	20000
	GR + Max P{1}	1	6	21	1	1.00	1.00	1.00	1.00	23a	SUST	85	20000
	TR:Amb to T1{1}	31	16	4	2	1.00	1.00	1.00	1.00	(17)	DISP	71	30000
	Amb to T1{1}	31	16	4	2	1.00	1.00	1.00	1.00	(17)	DISP	71	30000
C66 F-	Max P{1}									(3a)	HOOP	0	20000
	GR + Max P{1}	1	2	18	2	1.00	1.00	1.00	1.00	23a	SUST	69	20000
	TR:Amb to T1{1}	19	19	5	3	1.00	1.00	1.00	1.00	(17)	DISP	80	30000
	Amb to T1{1}	19	19	5	3	1.00	1.00	1.00	1.00	(17)	DISP	80	30000
C66 F+	Max P{1}									(3a)	HOOP	0	20000
	GR + Max P{1}	1	18	2	2	1.00	1.00	1.00	1.00	23a	SUST	69	20000
	TR:Amb to T1{1}	19	6	19	3	1.00	1.00	1.00	1.00	(17)	DISP	80	30000
	Amb to T1{1}	19	6	19	3	1.00	1.00	1.00	1.00	(17)	DISP	80	30000
C84	Max P{1}									(3a)	HOOP	0	20000
	GR + Max P{1}	0	31	2	2	1.00	1.00	1.00	1.00	23a	SUST	122	20000
	TR:Amb to T1{1}	19	7	34	3	1.00	1.00	1.00	1.00	(17)	DISP	136	30000
	Amb to T1{1}	19	7	34	3	1.00	1.00	1.00	1.00	(17)	DISP	136	30000
C67 N-	Max P{1}									(3a)	HOOP	0	20000
	GR + Max P{1}	0	2	5	2	1.00	1.00	1.00	1.00	23a	SUST	22	20000
	TR:Amb to T1{1}	19	1	88	3	1.00	1.00	1.00	1.00	(17)	DISP	335	30000
	Amb to T1{1}	19	1	88	3	1.00	1.00	1.00	1.00	(17)	DISP	335	30000
C67 N+	Max P{1}									(3a)	HOOP	0	20000
	GR + Max P{1}	0	2	5	2	1.00	1.00	1.00	1.00	23a	SUST	22	20000
	TR:Amb to T1{1}	19	1	88	3	1.00	1.00	1.00	1.00	(17)	DISP	335	30000
	Amb to T1{1}	19	1	88	3	1.00	1.00	1.00	1.00	(17)	DISP	335	30000
C67 M	Max P{1}									(3a)	HOOP	0	20000
	GR + Max P{1}	0	2	5	2	1.00	1.00	1.00	1.00	23a	SUST	22	20000
	TR:Amb to T1{1}	19	1	89	2	1.00	1.00	1.00	1.00	(17)	DISP	338	30000
	Amb to T1{1}	19	1	89	2	1.00	1.00	1.00	1.00	(17)	DISP	338	30000
C67 F-	Max P{1}									(3a)	HOOP	0	20000
	GR + Max P{1}	0	2	5	2	1.00	1.00	1.00	1.00	23a	SUST	23	20000
	TR:Amb to T1{1}	19	1	90	1	1.00	1.00	1.00	1.00	(17)	DISP	341	30000
	Amb to T1{1}	19	1	90	1	1.00	1.00	1.00	1.00	(17)	DISP	341	30000
C67 F+	Max P{1}									(3a)	HOOP	0	20000
	GR + Max P{1}	0	2	5	2	1.00	1.00	1.00	1.00	23a	SUST	23	20000
	TR:Amb to T1{1}	19	1	90	1	1.00	1.00	1.00	1.00	(17)	DISP	341	30000
	Amb to T1{1}	19	1	90	1	1.00	1.00	1.00	1.00	(17)	DISP	341	30000
C68	Max P{1}									(3a)	HOOP	0	20000
	GR + Max P{1}	0	6	6	2	1.00	1.00	1.00	1.00	23a	SUST	34	20000
	TR:Amb to T1{1}	19	2	120	1	1.00	1.00	1.00	1.00	(17)	DISP	452	30000
	Amb to T1{1}	19	2	120	1	1.00	1.00	1.00	1.00	(17)	DISP	452	30000

Encasement Piping Low Temp
04/24/2020 2018719 BENTLEY
10:51 AM AutoPIPE Nuclear 12.00.00.16 RESULT PAGE 132

ASME B31.3 (2016) CODE COMPLIANCE
(Moments in ft-lb , Force in lbf) (Stress in psi)

Point name	Load combination	Axial Force	In-Pl. Moment	Out-Pl. Moment	Torsion Moment	S.I.F In	S.I.F Out	Index/SIF Ax.	Index/SIF Tor.	Eq. no.	Load type	Code Stress	Code Allow.
C69	Max P{1}									(3a)	HOOP	0	20000
	GR + Max P{1}	0	2	8	2	1.00	1.00	1.00	1.00	23a	SUST	32	20000
	TR:Amb to T1{1}	19	4	150	1	1.00	1.00	1.00	1.00	(17)	DISP	566	30000
	Amb to T1{1}	19	4	150	1	1.00	1.00	1.00	1.00	(17)	DISP	566	30000
C70 -	Max P{1}									(3a)	HOOP	0	20000
	GR + Max P{1}	0	10	9	2	1.00	1.00	1.00	1.00	23a	SUST	52	20000
	TR:Amb to T1{1}	19	6	167	1	1.00	1.00	1.00	1.00	(17)	DISP	629	30000
	Amb to T1{1}	19	6	167	1	1.00	1.00	1.00	1.00	(17)	DISP	629	30000
C70 +	Max P{1}									(3a)	HOOP	0	20000
	GR + Max P{1}	0	0	0	0	1.00	1.00	1.00	1.00	23a	SUST	1	20000
	TR:Amb to T1{1}	0	0	0	0	1.00	1.00	1.00	1.00	(17)	DISP	0	30000
	Amb to T1{1}	0	0	0	0	1.00	1.00	1.00	1.00	(17)	DISP	0	30000
C71	Max P{1}									(3a)	HOOP	0	20000
	GR + Max P{1}	0	0	0	0	1.00	1.00	1.00	1.00	23a	SUST	0	20000
	TR:Amb to T1{1}	0	0	0	0	1.00	1.00	1.00	1.00	(17)	DISP	0	30000
	Amb to T1{1}	0	0	0	0	1.00	1.00	1.00	1.00	(17)	DISP	0	30000
*** Segment C end ***													
*** Segment D begin ***													
D00	Max P{1}									(3a)	HOOP	0	20000
	GR + Max P{1}	0	0	0	0	1.00	1.00	1.00	1.00	23a	SUST	0	20000
	TR:Amb to T1{1}	0	0	0	0	1.00	1.00	1.00	1.00	(17)	DISP	0	30000
	Amb to T1{1}	0	0	0	0	1.00	1.00	1.00	1.00	(17)	DISP	0	30000
D01 -	Max P{1}									(3a)	HOOP	0	20000
	GR + Max P{1}	0	0	0	0	1.00	1.00	1.00	1.00	23a	SUST	1	20000
	TR:Amb to T1{1}	0	0	0	0	1.00	1.00	1.00	1.00	(17)	DISP	0	30000
	Amb to T1{1}	0	0	0	0	1.00	1.00	1.00	1.00	(17)	DISP	0	30000
D01 +	Max P{1}									(3a)	HOOP	0	20000
	GR + Max P{1}	2	9	10	0	1.00	1.00	1.00	1.00	23a	SUST	52	20000
	TR:Amb to T1{1}	159	2	14	0	1.00	1.00	1.00	1.00	(17)	DISP	102	30000
	Amb to T1{1}	159	2	14	0	1.00	1.00	1.00	1.00	(17)	DISP	102	30000
D02	Max P{1}									(3a)	HOOP	0	20000
	GR + Max P{1}	2	1	9	0	1.00	1.00	1.00	1.00	23a	SUST	36	20000
	TR:Amb to T1{1}	159	1	17	0	1.00	1.00	1.00	1.00	(17)	DISP	115	30000
	Amb to T1{1}	159	1	17	0	1.00	1.00	1.00	1.00	(17)	DISP	115	30000
D03	Max P{1}									(3a)	HOOP	0	20000
	GR + Max P{1}	2	6	8	0	1.00	1.00	1.00	1.00	23a	SUST	40	20000
	TR:Amb to T1{1}	159	0	24	0	1.00	1.00	1.00	1.00	(17)	DISP	140	30000
	Amb to T1{1}	159	0	24	0	1.00	1.00	1.00	1.00	(17)	DISP	140	30000

ASME B31.3 (2016) CODE COMPLIANCE
(Moments in ft-lb , Force in lbf) (Stress in psi)

Point name	Load combination	Axial Force	In-Pl. Moment	Out-Pl. Moment	Torsion Moment	S.I.F In	S.I.F Out	Index/SIF Ax.	Index/SIF Tor.	Eq. no.	Load type	Code Stress	Code Allow.
D04 N-	Max P{1}									(3a)	HOOP	0	20000
	GR + Max P{1}	2	38	5	0	1.00	1.00	1.00	1.00	23a	SUST	149	20000
	TR:Amb to T1{1}	159	3	44	0	1.00	1.00	1.00	1.00	(17)	DISP	214	30000
	Amb to T1{1}	159	3	44	0	1.00	1.00	1.00	1.00	(17)	DISP	214	30000
D04 N+	Max P{1}									(3a)	HOOP	0	20000
	GR + Max P{1}	2	38	5	0	1.00	1.00	1.00	1.00	23a	SUST	149	20000
	TR:Amb to T1{1}	159	3	44	0	1.00	1.00	1.00	1.00	(17)	DISP	214	30000
	Amb to T1{1}	159	3	44	0	1.00	1.00	1.00	1.00	(17)	DISP	214	30000
D04 M-	Max P{1}									(3a)	HOOP	0	20000
	GR + Max P{1}	2	39	5	0	1.00	1.00	1.00	1.00	23a	SUST	151	20000
	TR:Amb to T1{1}	159	3	44	0	1.00	1.00	1.00	1.00	(17)	DISP	215	30000
	Amb to T1{1}	159	3	44	0	1.00	1.00	1.00	1.00	(17)	DISP	215	30000
D04 M+	Max P{1}									(3a)	HOOP	0	20000
	GR + Max P{1}	2	39	5	0	1.00	1.00	1.00	1.00	23a	SUST	151	20000
	TR:Amb to T1{1}	107	3	44	0	1.00	1.00	1.00	1.00	(17)	DISP	198	30000
	Amb to T1{1}	107	3	44	0	1.00	1.00	1.00	1.00	(17)	DISP	198	30000
D04 F-	Max P{1}									(3a)	HOOP	0	20000
	GR + Max P{1}	2	38	5	0	1.00	1.00	1.00	1.00	23a	SUST	149	20000
	TR:Amb to T1{1}	107	3	44	0	1.00	1.00	1.00	1.00	(17)	DISP	198	30000
	Amb to T1{1}	107	3	44	0	1.00	1.00	1.00	1.00	(17)	DISP	198	30000
D04 F+	Max P{1}									(3a)	HOOP	0	20000
	GR + Max P{1}	2	38	5	0	1.00	1.00	1.00	1.00	23a	SUST	149	20000
	TR:Amb to T1{1}	107	3	44	1	1.00	1.00	1.00	1.00	(17)	DISP	198	30000
	Amb to T1{1}	107	3	44	1	1.00	1.00	1.00	1.00	(17)	DISP	198	30000
D13 -	Max P{1}									(3a)	HOOP	0	20000
	GR + Max P{1}	1	56	2	0	1.00	1.00	1.00	1.00	23a	SUST	217	20000
	TR:Amb to T1{1}	107	6	47	1	1.00	1.00	1.00	1.00	(17)	DISP	209	30000
	Amb to T1{1}	107	6	47	1	1.00	1.00	1.00	1.00	(17)	DISP	209	30000
D13 +	Max P{1}									(3a)	HOOP	0	20000
	GR + Max P{1}	2	56	2	0	1.00	1.00	1.00	1.00	23a	SUST	217	20000
	TR:Amb to T1{1}	43	6	47	1	1.00	1.00	1.00	1.00	(17)	DISP	189	30000
	Amb to T1{1}	43	6	47	1	1.00	1.00	1.00	1.00	(17)	DISP	189	30000
D14	Max P{1}									(3a)	HOOP	0	20000
	GR + Max P{1}	1	42	9	0	1.00	1.00	1.00	1.00	23a	SUST	168	20000
	TR:Amb to T1{1}	43	9	176	1	1.00	1.00	1.00	1.00	(17)	DISP	672	30000
	Amb to T1{1}	43	9	176	1	1.00	1.00	1.00	1.00	(17)	DISP	672	30000
D08 N-	Max P{1}									(3a)	HOOP	0	20000
	GR + Max P{1}	1	27	10	0	1.00	1.00	1.00	1.00	23a	SUST	112	20000
	TR:Amb to T1{1}	43	8	191	1	1.00	1.00	1.00	1.00	(17)	DISP	727	30000
	Amb to T1{1}	43	8	191	1	1.00	1.00	1.00	1.00	(17)	DISP	727	30000

ASME B31.3 (2016) CODE COMPLIANCE
(Moments in ft-lb , Force in lbf) (Stress in psi)

Point name	Load combination	Axial Force	In-Pl. Moment	Out-Pl. Moment	Torsion Moment	S.I.F In	S.I.F Out	Index/SIF Ax.	Index/SIF Tor.	Eq. no.	Load type	Code Stress	Code Allow.
D08 N+	Max P{1}									(3a)	HOOP	0	20000
	GR + Max P{1}	1	9	27	0	1.00	1.00	1.00	1.00	23a	SUST	112	20000
	TR:Amb to T1{1}	43	191	9	1	1.00	1.00	1.00	1.00	(17)	DISP	727	30000
	Amb to T1{1}	43	191	9	1	1.00	1.00	1.00	1.00	(17)	DISP	727	30000
D08 F-	Max P{1}									(3a)	HOOP	0	20000
	GR + Max P{1}	1	10	15	0	1.00	1.00	1.00	1.00	23a	SUST	68	20000
	TR:Amb to T1{1}	30	152	8	0	1.00	1.00	1.00	1.00	(17)	DISP	576	30000
	Amb to T1{1}	30	152	8	0	1.00	1.00	1.00	1.00	(17)	DISP	576	30000
D08 F+	Max P{1}									(3a)	HOOP	0	20000
	GR + Max P{1}	1	15	10	0	1.00	1.00	1.00	1.00	23a	SUST	68	20000
	TR:Amb to T1{1}	30	7	152	0	1.00	1.00	1.00	1.00	(17)	DISP	576	30000
	Amb to T1{1}	30	7	152	0	1.00	1.00	1.00	1.00	(17)	DISP	576	30000
D15	Max P{1}									(3a)	HOOP	0	20000
	GR + Max P{1}	1	28	9	0	1.00	1.00	1.00	1.00	23a	SUST	113	20000
	TR:Amb to T1{1}	30	8	130	0	1.00	1.00	1.00	1.00	(17)	DISP	497	30000
	Amb to T1{1}	30	8	130	0	1.00	1.00	1.00	1.00	(17)	DISP	497	30000
D18 -	Max P{1}									(3a)	HOOP	0	20000
	GR + Max P{1}	0	31	4	0	1.00	1.00	1.00	1.00	23a	SUST	121	20000
	TR:Amb to T1{1}	30	1	111	0	1.00	1.00	1.00	1.00	(17)	DISP	424	30000
	Amb to T1{1}	30	1	111	0	1.00	1.00	1.00	1.00	(17)	DISP	424	30000
D18 +	Max P{1}									(3a)	HOOP	0	20000
	GR + Max P{1}	1	31	4	0	1.00	1.00	1.00	1.00	23a	SUST	121	20000
	TR:Amb to T1{1}	4	1	111	0	1.00	1.00	1.00	1.00	(17)	DISP	415	30000
	Amb to T1{1}	4	1	111	0	1.00	1.00	1.00	1.00	(17)	DISP	415	30000
D16	Max P{1}									(3a)	HOOP	0	20000
	GR + Max P{1}	0	23	1	0	1.00	1.00	1.00	1.00	23a	SUST	88	20000
	TR:Amb to T1{1}	4	5	116	0	1.00	1.00	1.00	1.00	(17)	DISP	434	30000
	Amb to T1{1}	4	5	116	0	1.00	1.00	1.00	1.00	(17)	DISP	434	30000
D12 N-	Max P{1}									(3a)	HOOP	0	20000
	GR + Max P{1}	0	11	1	0	1.00	1.00	1.00	1.00	23a	SUST	41	20000
	TR:Amb to T1{1}	4	4	116	0	1.00	1.00	1.00	1.00	(17)	DISP	435	30000
	Amb to T1{1}	4	4	116	0	1.00	1.00	1.00	1.00	(17)	DISP	435	30000
D12 N+	Max P{1}									(3a)	HOOP	0	20000
	GR + Max P{1}	0	1	11	0	1.00	1.00	1.00	1.00	23a	SUST	41	20000
	TR:Amb to T1{1}	4	116	5	0	1.00	1.00	1.00	1.00	(17)	DISP	435	30000
	Amb to T1{1}	4	116	5	0	1.00	1.00	1.00	1.00	(17)	DISP	435	30000
D12 F-	Max P{1}									(3a)	HOOP	0	20000
	GR + Max P{1}	0	5	33	2	1.00	1.00	1.00	1.00	23a	SUST	130	20000
	TR:Amb to T1{1}	1	108	6	0	1.00	1.00	1.00	1.00	(17)	DISP	404	30000
	Amb to T1{1}	1	108	6	0	1.00	1.00	1.00	1.00	(17)	DISP	404	30000

ASME B31.3 (2016) CODE COMPLIANCE
(Moments in ft-lb , Force in lbf) (Stress in psi)

Point name	Load combination	Axial Force	In-Pl. Moment	Out-Pl. Moment	Torsion Moment	S.I.F In	S.I.F Out	Index/SIF Ax.	Index/SIF Tor.	Eq. no.	Load type	Code Stress	Code Allow.
D12 F+	Max P{1}									(3a)	HOOP	0	20000
	GR + Max P{1}	0	33	5	2	1.00	1.00	1.00	1.00	23a	SUST	130	20000
	TR:Amb to T1{1}	1	5	108	0	1.00	1.00	1.00	1.00	(17)	DISP	404	30000
	Amb to T1{1}	1	5	108	0	1.00	1.00	1.00	1.00	(17)	DISP	404	30000
D19	Max P{1}									(3a)	HOOP	0	20000
	GR + Max P{1}	0	49	5	2	1.00	1.00	1.00	1.00	23a	SUST	192	20000
	TR:Amb to T1{1}	1	5	106	0	1.00	1.00	1.00	1.00	(17)	DISP	397	30000
	Amb to T1{1}	1	5	106	0	1.00	1.00	1.00	1.00	(17)	DISP	397	30000
D25 -	Max P{1}									(3a)	HOOP	0	20000
	GR + Max P{1}	1	83	6	2	1.00	1.00	1.00	1.00	23a	SUST	322	20000
	TR:Amb to T1{1}	1	0	75	0	1.00	1.00	1.00	1.00	(17)	DISP	279	30000
	Amb to T1{1}	1	0	75	0	1.00	1.00	1.00	1.00	(17)	DISP	279	30000
D25 +	Max P{1}									(3a)	HOOP	0	20000
	GR + Max P{1}	0	83	6	2	1.00	1.00	1.00	1.00	23a	SUST	322	20000
	TR:Amb to T1{1}	26	0	75	0	1.00	1.00	1.00	1.00	(17)	DISP	287	30000
	Amb to T1{1}	26	0	75	0	1.00	1.00	1.00	1.00	(17)	DISP	287	30000
D20	Max P{1}									(3a)	HOOP	0	20000
	GR + Max P{1}	1	45	8	2	1.00	1.00	1.00	1.00	23a	SUST	178	20000
	TR:Amb to T1{1}	26	5	134	0	1.00	1.00	1.00	1.00	(17)	DISP	508	30000
	Amb to T1{1}	26	5	134	0	1.00	1.00	1.00	1.00	(17)	DISP	508	30000
D17 N-	Max P{1}									(3a)	HOOP	0	20000
	GR + Max P{1}	1	30	8	2	1.00	1.00	1.00	1.00	23a	SUST	120	20000
	TR:Amb to T1{1}	26	4	146	0	1.00	1.00	1.00	1.00	(17)	DISP	552	30000
	Amb to T1{1}	26	4	146	0	1.00	1.00	1.00	1.00	(17)	DISP	552	30000
D17 N+	Max P{1}									(3a)	HOOP	0	20000
	GR + Max P{1}	1	8	30	2	1.00	1.00	1.00	1.00	23a	SUST	120	20000
	TR:Amb to T1{1}	26	146	5	0	1.00	1.00	1.00	1.00	(17)	DISP	552	30000
	Amb to T1{1}	26	146	5	0	1.00	1.00	1.00	1.00	(17)	DISP	552	30000
D17 F-	Max P{1}									(3a)	HOOP	0	20000
	GR + Max P{1}	0	5	15	1	1.00	1.00	1.00	1.00	23a	SUST	62	20000
	TR:Amb to T1{1}	24	138	5	1	1.00	1.00	1.00	1.00	(17)	DISP	523	30000
	Amb to T1{1}	24	138	5	1	1.00	1.00	1.00	1.00	(17)	DISP	523	30000
D17 F+	Max P{1}									(3a)	HOOP	0	20000
	GR + Max P{1}	0	15	6	1	1.00	1.00	1.00	1.00	23a	SUST	62	20000
	TR:Amb to T1{1}	24	4	138	1	1.00	1.00	1.00	1.00	(17)	DISP	523	30000
	Amb to T1{1}	24	4	138	1	1.00	1.00	1.00	1.00	(17)	DISP	523	30000
D26	Max P{1}									(3a)	HOOP	0	20000
	GR + Max P{1}	0	28	5	1	1.00	1.00	1.00	1.00	23a	SUST	109	20000
	TR:Amb to T1{1}	24	5	125	1	1.00	1.00	1.00	1.00	(17)	DISP	474	30000
	Amb to T1{1}	24	5	125	1	1.00	1.00	1.00	1.00	(17)	DISP	474	30000

Encasement Piping Low Temp
04/24/2020 2018719 BENTLEY
10:51 AM AutoPIPE Nuclear 12.00.00.16 RESULT PAGE 136

ASME B31.3 (2016) CODE COMPLIANCE
(Moments in ft-lb , Force in lbf) (Stress in psi)

Point name	Load combination	Axial Force	In-Pl. Moment	Out-Pl. Moment	Torsion Moment	S.I.F In	S.I.F Out	Index/SIF Ax.	Index/SIF Tor.	Eq. no.	Load type	Code Stress	Code Allow.
D28	- Max P{1}									(3a)	HOOP	0	20000
	GR + Max P{1}	1	50	2	1	1.00	1.00	1.00	1.00	23a	SUST	193	20000
	TR:Amb to T1{1}	24	3	56	1	1.00	1.00	1.00	1.00	(17)	DISP	216	30000
	Amb to T1{1}	24	3	56	1	1.00	1.00	1.00	1.00	(17)	DISP	216	30000
D28	+ Max P{1}									(3a)	HOOP	0	20000
	GR + Max P{1}	0	50	2	1	1.00	1.00	1.00	1.00	23a	SUST	193	20000
	TR:Amb to T1{1}	80	3	56	1	1.00	1.00	1.00	1.00	(17)	DISP	234	30000
	Amb to T1{1}	80	3	56	1	1.00	1.00	1.00	1.00	(17)	DISP	234	30000
D27	- Max P{1}									(3a)	HOOP	0	20000
	GR + Max P{1}	1	32	9	1	1.00	1.00	1.00	1.00	23a	SUST	129	20000
	TR:Amb to T1{1}	80	1	48	1	1.00	1.00	1.00	1.00	(17)	DISP	204	30000
	Amb to T1{1}	80	1	48	1	1.00	1.00	1.00	1.00	(17)	DISP	204	30000
D27	+ Max P{1}									(3a)	HOOP	0	20000
	GR + Max P{1}	0	32	9	1	1.00	1.00	1.00	1.00	23a	SUST	129	20000
	TR:Amb to T1{1}	131	1	48	1	1.00	1.00	1.00	1.00	(17)	DISP	220	30000
	Amb to T1{1}	131	1	48	1	1.00	1.00	1.00	1.00	(17)	DISP	220	30000
D21	Max P{1}									(3a)	HOOP	0	20000
	GR + Max P{1}	0	4	13	1	1.00	1.00	1.00	1.00	23a	SUST	51	20000
	TR:Amb to T1{1}	131	0	26	1	1.00	1.00	1.00	1.00	(17)	DISP	137	30000
	Amb to T1{1}	131	0	26	1	1.00	1.00	1.00	1.00	(17)	DISP	137	30000
D22	Max P{1}									(3a)	HOOP	0	20000
	GR + Max P{1}	0	6	14	1	1.00	1.00	1.00	1.00	23a	SUST	58	20000
	TR:Amb to T1{1}	131	1	18	1	1.00	1.00	1.00	1.00	(17)	DISP	109	30000
	Amb to T1{1}	131	1	18	1	1.00	1.00	1.00	1.00	(17)	DISP	109	30000

*** Segment D end ***

R E S U L T S U M M A R Y

Maximum restraint forces (lb)

Maximum X :	416	Point : B03	Load Comb.: GT1{1}
Maximum Y :	-307	Point : B22	Load Comb.: GT1{1}
Maximum Z :	309	Point : B62	Load Comb.: GT1{1}
Max. total:	420	Point : B03	Load Comb.: GT1{1}

Maximum restraint moments (ft-lb)

Maximum X :	22	Point : B03	Load Comb.: GT1{1}
Maximum Y :	-2106	Point : B62	Load Comb.: GT1{1}
Maximum Z :	101	Point : B03	Load Comb.: GT1{1}
Max. total:	2106	Point : B62	Load Comb.: GT1{1}

R E S U L T S U M M A R Y

Maximum sustained stress

Point : C03
Stress psi : 617
Allowable psi : 20000
Ratio : 0.03
Load combination : GR + Max P{1}

Maximum displacement stress

Point : B62
Stress psi : 3136
Allowable psi : 30000
Ratio : 0.10
Load combination : Max Range

Maximum hoop stress

Point : A02
Stress psi : 0
Allowable psi : 20000
Ratio : 0.00
Load combination : Max P{1}

R E S U L T S U M M A R Y

Maximum sustained stress ratio

Point : C03
Stress psi : 617
Allowable psi : 20000
Ratio : 0.03
Load combination : GR + Max P{1}

Maximum displacement stress ratio

Point : B62
Stress psi : 3136
Allowable psi : 30000
Ratio : 0.10
Load combination : Max Range

Maximum hoop stress ratio

Point : A02
Stress psi : 0
Allowable psi : 20000
Ratio : 0.00
Load combination : Max P{1}

* * * The system satisfies ASME B31.3 (2016) code requirements * * *
* * * for the selected options * * *

Warnings:
(1) Maximum hoop stress ratio is zero

APPENDIX D9

AUTOPIPE ANALYSIS – ENCASEMENT SUSTAINED

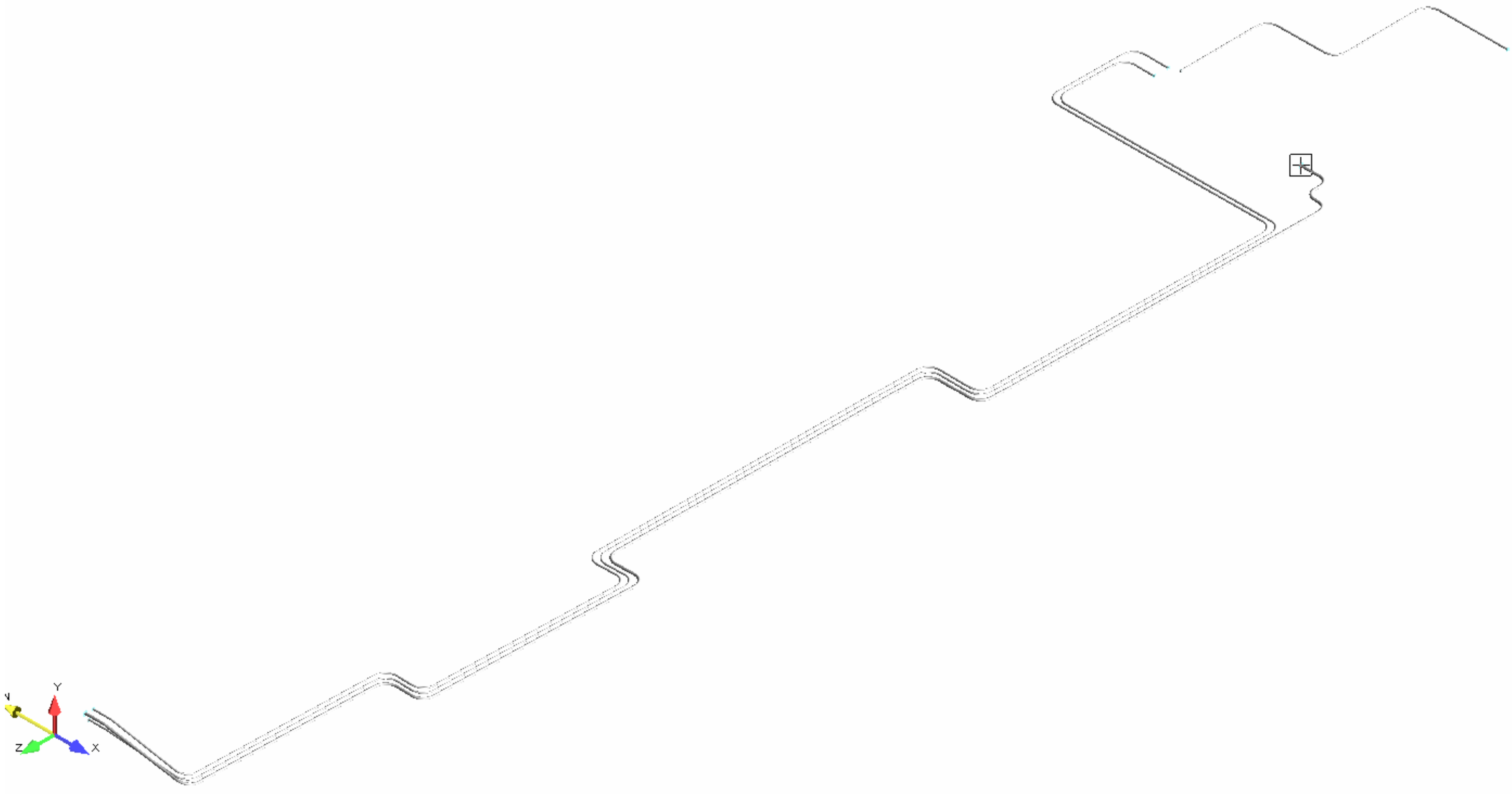
Y
Z
X

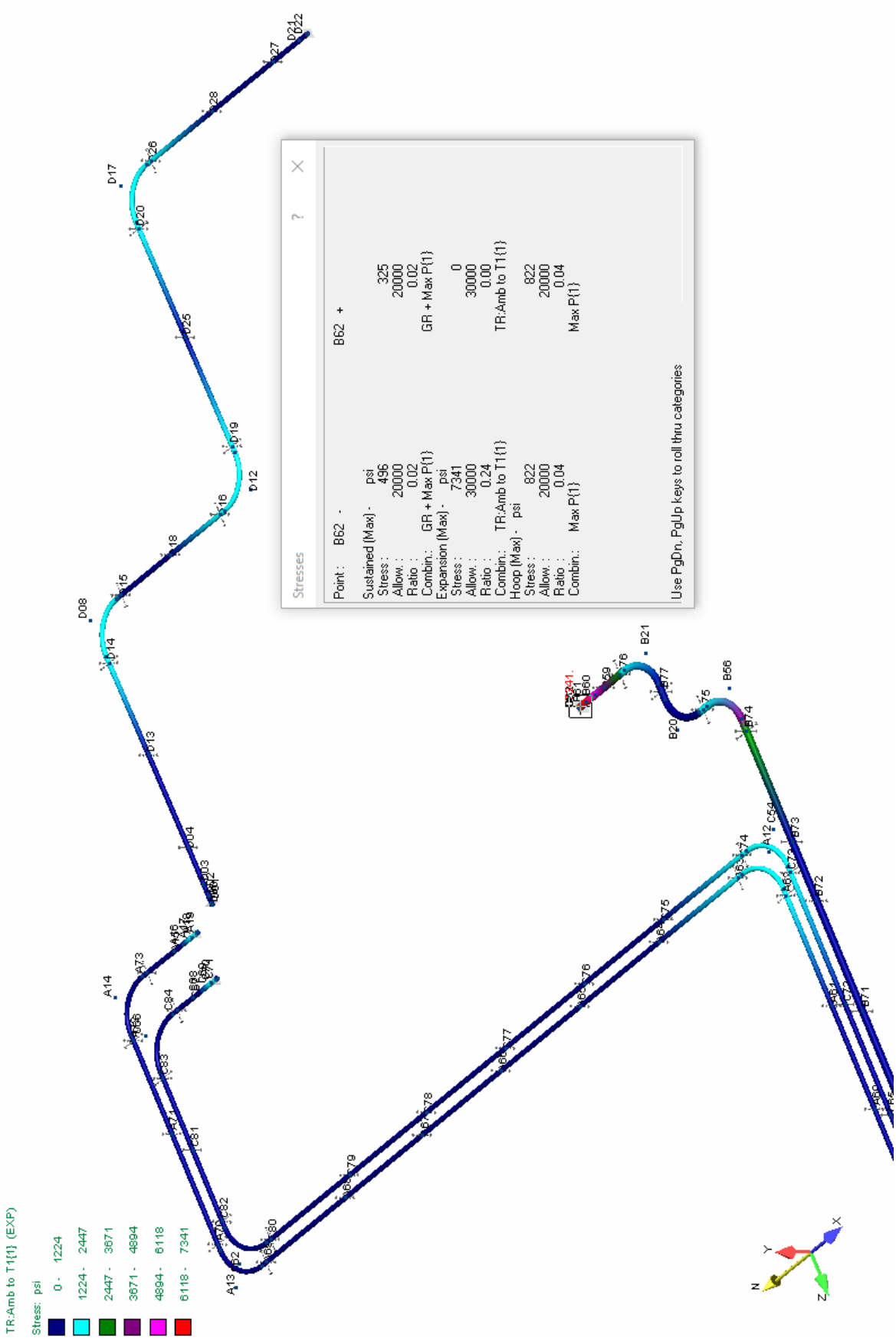
TR:Amb to T1{1} (EXP)
Stress: psi
0 - 1224
1224 - 2447
2447 - 3671
3671 - 4894
4894 - 6118
6118 - 7341
Stresses
Point : B62 -
B62 +
Sustained (Max) - psi
Stress : 496
Allow. : 20000
Ratio : 0.02
Combin.: GR + Max P{1}
Expansion (Max) - psi
Stress : 7341
Allow. : 30000
Ratio : 0.24
Combin.: TR:Amb to T1{1}
Hoop (Max) - psi
Stress : 822
Allow. : 20000
Ratio : 0.04
Combin.: Max P{1}
Sustained
Stress : 325
Allow. : 20000
Ratio : 0.02
Combin.: GR + Max P{1}
Expansion
Stress : 0
Allow. : 30000
Ratio : 0.00
Combin.: TR:Amb to T1{1}
Hoop
Stress : 822
Allow. : 20000
Ratio : 0.04
Combin.: Max P{1}
Use PgDn, PgUp keys to roll thru categories

```
---------------------------------------------------------------------------------------------------------------
Encasement Piping
04/24/2020 2018719                                                                                BENTLEY
08:29 AM                                                                                          AutoPIPE Nuclear 12.00.00.16
---------------------------------------------------------------------------------------------------------------
```

```
        *                             *******   **  *******   *******
       ***               **           **    **  **  **    **  **
      ** **             ******         **    **  **  **    **  **
     **   **    **   **  **   *****   *******   **  *******   *****
    *********   **   **  **  **   **  **        **  **        **
   **       **  **   **  **  **   **  **        **  **        **
  **         **  *****   **   *****   **        **  **        *******
```

Pipe Stress Analysis and Design Program

Version: 12.00.00.16

Edition: Nuclear

Developed and Maintained by

BENTLEY SYSTEMS, INCORPORATED
1065 N. PACIFIC CENTER DRIVE, SUITE 450
ANAHEIM, CA 92806

```
************************************************************
**                                                        **
**              AUTOPIPE SYSTEM INFORMATION               **
**                                                        **
************************************************************
```

SYSTEM NAME : Encasement Piping

PROJECT ID : 2018719

PREPARED BY : _____
JIM HARRINGTON

CHECKED BY : _____
RYAN LANG

1ST APPROVER : _____

2ND APPROVER : _____

PIPING CODE : ASME B31.3

YEAR : 2016

VERTICAL AXIS : Y

AMBIENT TEMPERATURE : 60.0 deg F

COMPONENT LIBRARY : AUTOPIPE

MATERIAL LIBRARY : B313-16

MODEL REVISION NUMBER : 4

T A B L E O F C O N T E N T S

Components..... 1
Coordinates..... 44
Segment Data..... 51
Pipe Properties..... 52
Material Properties..... 53
Material Allowables..... 54
Temperature and Pressure..... 55
Support..... 56
Bend..... 67
Load Case Description..... 68
Analysis Summary..... 69
Support Forces..... 73
Restraint Reactions..... 114
Code Compliance..... 132
Result Summary..... 178

```
-----------------------------------------------------------------------------------------------------------
Encasement Piping
04/24/2020 2018719                                                    BENTLEY
08:29 AM                                                              AutoPIPE Nuclear 12.00.00.16   MODEL  PAGE   1
-----------------------------------------------------------------------------------------------------------

                 C O M P O N E N T   D A T A   L I S T I N G

 ---------------------------------------------------------------------------
 *** SEGMENT A

 ---------------------------------------------------------------------------
 From A02 to A03, DX= 2.00 ft                                          Run

 PIPE DATA:
   Pipe Id= 4SCH40, Material= A53-B, Composition= Carbon Steel, Poisson= 0.300, Nom Size= 4 in, OD= 4.500 inch,
   Sch= 40S, Wall Thk= 0.237 inch, Mill= 0.030 inch, Cor= 0.010 inch, Pipe Density= 489.00 lb/cu.ft,
   Pipe Unit Wgt= 10.78 lb/ft, Insul Thk= 0 inch, Cladding Thickness = 0 inch, Lining Thk= 0 inch,
   Long Weld E factor= 1.00, Long Weld W factor= 1.00, Long Modulus= 29.54083 E6 psi,
   Hoop Modulus= 29.54083 E6 psi, Shear Modulus= 11.36186 E6 psi, Sc= 20000.0 psi, Syc= 35000.0 psi,
   Suc= 60000.0 psi

 OPERATING DATA:
   P1= 60.00 psi, T1= 200.00 deg F, Exp1= 1.07500 in/100ft, E1= 28.80000 E6 psi, Sh1= 20000.00 psi,
   Sy1= 32100.00 psi

 POINT DATA:
   A02, Coordinates, X= 1.46 ft, Y= 693.07 ft, Z= 0.00 ft

 SUPPORT DATA:
   A02, Anchor, Connected to: Ground, KTX= Rigid, KTY= Rigid, KTZ= Rigid, KRX= Rigid, KRY= Rigid, KRZ= Rigid

 ---------------------------------------------------------------------------
 From A03 to A23, DX= 2.50 ft                                          Run

 POINT DATA:
   A03, Coordinates, X= 3.46 ft, Y= 693.07 ft, Z= 0.00 ft

 ---------------------------------------------------------------------------
 From A23 to A04, DX= 0.50 ft                                          Run

 POINT DATA:
   A23, Coordinates, X= 5.96 ft, Y= 693.07 ft, Z= 0.00 ft

 SUPPORT DATA:
   A23, V-Stop, Support Id= A23  1, Connected to Ground, Comp.Wt = 0.000 lb, Gap-Below= 0.00 inch,
   Gap-Above= 1.00 inch, Friction= 0.00, Gaps setting= Weightless

 ---------------------------------------------------------------------------
 From A04 to A24, DX= 8.18 ft, DY= -1.51 ft, L= 8.32 ft                Bend

 COMPONENT DATA (Bend, TIP= A04, Near= A04 N, Far= A04 F):
   Elbow, Radius= 36.00 inch, Bend angle= 10.46 deg, End flanges= 0, Flex= Auto, SIFI= 1.00, SIFO= 1.00

 POINT DATA:
   A04, Coordinates, X= 6.46 ft, Y= 693.07 ft, Z= 0.00 ft
   A04 N, Coordinates, X= 6.19 ft, Y= 693.07 ft, Z= 0.00 ft
   A04 F, Coordinates, X= 6.73 ft, Y= 693.02 ft, Z= 0.00 ft

 ---------------------------------------------------------------------------
 From A24 to A21, DX= 8.18 ft, DY= -1.51 ft, L= 8.32 ft                Run

 POINT DATA:
```

C O M P O N E N T D A T A L I S T I N G

A24, Coordinates, X= 14.64 ft, Y= 691.56 ft, Z= 0.00 ft

SUPPORT DATA:
A24, V-Stop, Support Id= A24 1, Connected to Ground, Comp.Wt = 0.000 lb, Gap-Below= 0.00 inch,
Gap-Above= 1.00 inch, Friction= 0.80, Gaps setting= Weightless

---

From A21 to A05, DX= 3.44 ft, DY= -0.64 ft, L= 3.50 ft Run

POINT DATA:
A21, Coordinates, X= 22.82 ft, Y= 690.05 ft, Z= 0.00 ft

SUPPORT DATA:
A21, Guide, Support Id= A21 1, Connected to Ground, Comp.Wt = 0.000 lb, Stiffness= RIGID,
Gap-Down= 0.00 inch, Gap-Above= 1.00 inch, Gap-Left= 1.00 inch, Gap-Right= 1.00 inch, Friction= 0.00,
Gaps setting= Weightless

From A05 to A22, DY= -0.10 ft, DZ= -3.50 ft, L= 3.50 ft Bend

COMPONENT DATA (Bend, TIP= A05, Near= A05 N, Far= A05 F):
Elbow, Radius= 36.00 inch, Bend angle= 89.70 deg, End flanges= 0, Flex= Auto, SIFI= 1.00, SIFO= 1.00

POINT DATA:
A05, Coordinates, X= 26.26 ft, Y= 689.41 ft, Z= 0.00 ft
A05 N, Coordinates, X= 23.33 ft, Y= 689.96 ft, Z= 0.00 ft
A05 F, Coordinates, X= 26.26 ft, Y= 689.32 ft, Z= -2.98 ft

From A22 to A25, DY= -0.26 ft, DZ= -9.00 ft, L= 9.00 ft Run

POINT DATA:
A22, Coordinates, X= 26.26 ft, Y= 689.31 ft, Z= -3.50 ft

SUPPORT DATA:
A22, Guide, Support Id= A22 2, Connected to Ground, Comp.Wt = 0.000 lb, Stiffness= RIGID,
Gap-Down= 0.00 inch, Gap-Above= 1.00 inch, Gap-Left= 1.00 inch, Gap-Right= 1.00 inch, Friction= 0.00,
Gaps setting= Weightless

From A25 to A26, DY= -0.26 ft, DZ= -9.00 ft, L= 9.00 ft Run

POINT DATA:
A25, Coordinates, X= 26.26 ft, Y= 689.05 ft, Z= -12.50 ft

SUPPORT DATA:
A25, V-Stop, Support Id= A25 2, Connected to Ground, Comp.Wt = 0.000 lb, Gap-Below= 0.00 inch,
Gap-Above= 1.00 inch, Friction= 0.80, Gaps setting= Weightless

---

From A26 to A27, DY= -0.26 ft, DZ= -9.00 ft, L= 9.00 ft Run

POINT DATA:
A26, Coordinates, X= 26.26 ft, Y= 688.79 ft, Z= -21.50 ft

C O M P O N E N T D A T A L I S T I N G

SUPPORT DATA:
A26, V-Stop, Support Id= A26 2, Connected to Ground, Comp.Wt = 0.000 lb, Gap-Below= 0.00 inch,
Gap-Above= 1.00 inch, Friction= 0.80, Gaps setting= Weightless

---

From A27 to A28, DY= -0.26 ft, DZ= -9.00 ft, L= 9.00 ft Run

POINT DATA:
A27, Coordinates, X= 26.26 ft, Y= 688.53 ft, Z= -30.50 ft

SUPPORT DATA:
A27, V-Stop, Support Id= A27 2, Connected to Ground, Comp.Wt = 0.000 lb, Gap-Below= 0.00 inch,
Gap-Above= 1.00 inch, Friction= 0.80, Gaps setting= Weightless

---

From A28 to A29, DY= -0.31 ft, DZ= -10.67 ft, L= 10.67 ft Run

POINT DATA:
A28, Coordinates, X= 26.26 ft, Y= 688.27 ft, Z= -39.50 ft

SUPPORT DATA:
A28, V-Stop, Support Id= A28 2, Connected to Ground, Comp.Wt = 0.000 lb, Gap-Below= 0.00 inch,
Gap-Above= 1.00 inch, Friction= 0.80, Gaps setting= Weightless

---

From A29 to A06, DY= -0.10 ft, DZ= -3.50 ft, L= 3.50 ft Run

POINT DATA:
A29, Coordinates, X= 26.26 ft, Y= 687.96 ft, Z= -50.17 ft

SUPPORT DATA:
A29, Guide, Support Id= A29 1, Connected to Ground, Comp.Wt = 0.000 lb, Stiffness= RIGID,
Gap-Down= 0.00 inch, Gap-Above= 1.00 inch, Gap-Left= 1.00 inch, Gap-Right= 1.00 inch, Friction= 0.00,
Gaps setting= Weightless

From A06 to A30, DX= 3.50 ft, DY= -0.10 ft, L= 3.50 ft Bend

COMPONENT DATA (Bend, TIP= A06, Near= A06 N, Far= A06 F):
Elbow, Radius= 36.00 inch, Bend angle= 89.95 deg, End flanges= 0, Flex= Auto, SIFI= 1.00, SIFO= 1.00

POINT DATA:
A06, Coordinates, X= 26.26 ft, Y= 687.86 ft, Z= -53.67 ft
A06 N, Coordinates, X= 26.26 ft, Y= 687.95 ft, Z= -50.67 ft
A06 F, Coordinates, X= 29.26 ft, Y= 687.77 ft, Z= -53.67 ft

From A30 to A31, DX= 2.76 ft, DY= -0.08 ft, L= 2.76 ft Run

POINT DATA:
A30, Coordinates, X= 29.76 ft, Y= 687.76 ft, Z= -53.67 ft

SUPPORT DATA:
A30, Guide, Support Id= A30 1, Connected to Ground, Comp.Wt = 0.000 lb, Stiffness= RIGID,
Gap-Down= 0.00 inch, Gap-Above= 1.00 inch, Gap-Left= 1.00 inch, Gap-Right= 1.00 inch, Friction= 0.00,

C O M P O N E N T D A T A L I S T I N G

Gaps setting= Weightless

From A31 to A07, DX= 3.50 ft, DY= -0.10 ft, L= 3.50 ft Run

POINT DATA:
A31, Coordinates, X= 32.52 ft, Y= 687.68 ft, Z= -53.67 ft

SUPPORT DATA:
A31, Guide, Support Id= A31 1, Connected to Ground, Comp.Wt = 0.000 lb, Stiffness= RIGID,
Gap-Down= 0.00 inch, Gap-Above= 1.00 inch, Gap-Left= 1.00 inch, Gap-Right= 1.00 inch, Friction= 0.00,
Gaps setting= Weightless

From A07 to A32, DY= -0.11 ft, DZ= -3.50 ft, L= 3.50 ft Bend

COMPONENT DATA (Bend, TIP= A07, Near= A07 N, Far= A07 F):
Elbow, Radius= 36.00 inch, Bend angle= 89.95 deg, End flanges= 0, Flex= Auto, SIFI= 1.00, SIFO= 1.00

POINT DATA:
A07, Coordinates, X= 36.02 ft, Y= 687.58 ft, Z= -53.67 ft
A07 N, Coordinates, X= 33.02 ft, Y= 687.67 ft, Z= -53.67 ft
A07 F, Coordinates, X= 36.02 ft, Y= 687.49 ft, Z= -56.67 ft

From A32 to A33, DY= -0.27 ft, DZ= -9.00 ft, L= 9.00 ft Run

POINT DATA:
A32, Coordinates, X= 36.02 ft, Y= 687.47 ft, Z= -57.17 ft

SUPPORT DATA:
A32, Guide, Support Id= A32 1, Connected to Ground, Comp.Wt = 0.000 lb, Stiffness= RIGID,
Gap-Down= 0.00 inch, Gap-Above= 1.00 inch, Gap-Left= 1.00 inch, Gap-Right= 1.00 inch, Friction= 0.00,
Gaps setting= Weightless

From A33 to A34, DY= -0.27 ft, DZ= -9.00 ft, L= 9.00 ft Run

POINT DATA:
A33, Coordinates, X= 36.02 ft, Y= 687.20 ft, Z= -66.17 ft

SUPPORT DATA:
A33, V-Stop, Support Id= A33 2, Connected to Ground, Comp.Wt = 0.000 lb, Gap-Below= 0.00 inch,
Gap-Above= 1.00 inch, Friction= 0.80, Gaps setting= Weightless

From A34 to A35, DY= -0.27 ft, DZ= -9.00 ft, L= 9.00 ft Run

POINT DATA:
A34, Coordinates, X= 36.02 ft, Y= 686.93 ft, Z= -75.17 ft

SUPPORT DATA:
A34, V-Stop, Support Id= A34 2, Connected to Ground, Comp.Wt = 0.000 lb, Gap-Below= 0.00 inch,
Gap-Above= 1.00 inch, Friction= 0.80, Gaps setting= Weightless

C O M P O N E N T D A T A L I S T I N G

From A35 to A36, DY= -0.28 ft, DZ= -9.00 ft, L= 9.00 ft Run

POINT DATA:
A35, Coordinates, X= 36.02 ft, Y= 686.66 ft, Z= -84.17 ft

SUPPORT DATA:
A35, V-Stop, Support Id= A35 2, Connected to Ground, Comp.Wt = 0.000 lb, Gap-Below= 0.00 inch,
Gap-Above= 1.00 inch, Friction= 0.80, Gaps setting= Weightless

From A36 to A37, DY= -0.08 ft, DZ= -2.68 ft, L= 2.68 ft Run

POINT DATA:
A36, Coordinates, X= 36.02 ft, Y= 686.38 ft, Z= -93.17 ft

SUPPORT DATA:
A36, V-Stop, Support Id= A36 2, Connected to Ground, Comp.Wt = 0.000 lb, Gap-Below= 0.00 inch,
Gap-Above= 1.00 inch, Friction= 0.80, Gaps setting= Weightless

From A37 to A38, DY= -0.27 ft, DZ= -8.99 ft, L= 8.99 ft Run

POINT DATA:
A37, Coordinates, X= 36.02 ft, Y= 686.30 ft, Z= -95.85 ft

SUPPORT DATA:
A37, V-Stop, Support Id= A37 2, Connected to Ground, Comp.Wt = 0.000 lb, Gap-Below= 0.00 inch,
Gap-Above= 1.00 inch, Friction= 0.80, Gaps setting= Weightless

From A38 to A08, DY= -0.11 ft, DZ= -3.50 ft, L= 3.50 ft Run

POINT DATA:
A38, Coordinates, X= 36.02 ft, Y= 686.03 ft, Z= -104.84 ft

SUPPORT DATA:
A38, Guide, Support Id= A38 1, Connected to Ground, Comp.Wt = 0.000 lb, Stiffness= RIGID,
Gap-Down= 0.00 inch, Gap-Above= 1.00 inch, Gap-Left= 1.00 inch, Gap-Right= 1.00 inch, Friction= 0.00,
Gaps setting= Weightless

From A08 to A39, DX= -3.50 ft, DY= -0.09 ft, L= 3.50 ft Bend

COMPONENT DATA (Bend, TIP= A08, Near= A08 N, Far= A08 F):
Elbow, Radius= 36.00 inch, Bend angle= 89.95 deg, End flanges= 0, Flex= Auto, SIFI= 1.00, SIFO= 1.00

POINT DATA:
A08, Coordinates, X= 36.02 ft, Y= 685.92 ft, Z= -108.34 ft
A08 N, Coordinates, X= 36.02 ft, Y= 686.01 ft, Z= -105.34 ft
A08 F, Coordinates, X= 33.02 ft, Y= 685.84 ft, Z= -108.34 ft

From A39 to A40, DX= -4.00 ft, DY= -0.10 ft, L= 4.00 ft Run

C O M P O N E N T D A T A L I S T I N G

POINT DATA:
A39, Coordinates, X= 32.52 ft, Y= 685.83 ft, Z= -108.34 ft

SUPPORT DATA:
A39, Guide, Support Id= A39 1, Connected to Ground, Comp.Wt = 0.000 lb, Stiffness= RIGID,
Gap-Down= 0.00 inch, Gap-Above= 1.00 inch, Gap-Left= 1.00 inch, Gap-Right= 1.00 inch, Friction= 0.00,
Gaps setting= Weightless

From A40 to A09, DX= -3.50 ft, DY= -0.09 ft, L= 3.50 ft Run

POINT DATA:
A40, Coordinates, X= 28.52 ft, Y= 685.73 ft, Z= -108.34 ft

SUPPORT DATA:
A40, Guide, Support Id= A40 1, Connected to Ground, Comp.Wt = 0.000 lb, Stiffness= RIGID,
Gap-Down= 0.00 inch, Gap-Above= 1.00 inch, Gap-Left= 1.00 inch, Gap-Right= 1.00 inch, Friction= 0.00,
Gaps setting= Weightless

From A09 to A41, DY= -0.03 ft, DZ= -3.50 ft, L= 3.50 ft Bend

COMPONENT DATA (Bend, TIP= A09, Near= A09 N, Far= A09 F):
Elbow, Radius= 36.00 inch, Bend angle= 89.99 deg, End flanges= 0, Flex= Auto, SIFI= 1.00, SIFO= 1.00

POINT DATA:
A09, Coordinates, X= 25.02 ft, Y= 685.64 ft, Z= -108.34 ft
A09 N, Coordinates, X= 28.02 ft, Y= 685.72 ft, Z= -108.34 ft
A09 F, Coordinates, X= 25.02 ft, Y= 685.61 ft, Z= -111.34 ft

From A41 to A42, DY= -0.07 ft, DZ= -9.00 ft, L= 9.00 ft Run

POINT DATA:
A41, Coordinates, X= 25.02 ft, Y= 685.61 ft, Z= -111.84 ft

SUPPORT DATA:
A41, Guide, Support Id= A41 1, Connected to Ground, Comp.Wt = 0.000 lb, Stiffness= RIGID,
Gap-Down= 0.00 inch, Gap-Above= 1.00 inch, Gap-Left= 1.00 inch, Gap-Right= 1.00 inch, Friction= 0.00,
Gaps setting= Weightless

From A42 to A43, DY= -0.07 ft, DZ= -9.00 ft, L= 9.00 ft Run

POINT DATA:
A42, Coordinates, X= 25.02 ft, Y= 685.54 ft, Z= -120.84 ft

SUPPORT DATA:
A42, V-Stop, Support Id= A42 2, Connected to Ground, Comp.Wt = 0.000 lb, Gap-Below= 0.00 inch,
Gap-Above= 1.00 inch, Friction= 0.80, Gaps setting= Weightless

---
From A43 to A44, DY= -0.07 ft, DZ= -9.00 ft, L= 9.00 ft Run

POINT DATA:

C O M P O N E N T D A T A L I S T I N G

A43, Coordinates, X= 25.02 ft, Y= 685.47 ft, Z= -129.84 ft

SUPPORT DATA:
A43, V-Stop, Support Id= A43 2, Connected to Ground, Comp.Wt = 0.000 lb, Gap-Below= 0.00 inch, Gap-Above= 1.00 inch, Friction= 0.80, Gaps setting= Weightless

---

From A44 to A45, DY= -0.07 ft, DZ= -9.00 ft, L= 9.00 ft Run

POINT DATA:
A44, Coordinates, X= 25.02 ft, Y= 685.40 ft, Z= -138.84 ft

SUPPORT DATA:
A44, V-Stop, Support Id= A44 2, Connected to Ground, Comp.Wt = 0.000 lb, Gap-Below= 0.00 inch, Gap-Above= 1.00 inch, Friction= 0.80, Gaps setting= Weightless

---

From A45 to A46, DY= -0.07 ft, DZ= -9.00 ft, L= 9.00 ft Run

POINT DATA:
A45, Coordinates, X= 25.02 ft, Y= 685.33 ft, Z= -147.84 ft

SUPPORT DATA:
A45, V-Stop, Support Id= A45 2, Connected to Ground, Comp.Wt = 0.000 lb, Gap-Below= 0.00 inch, Gap-Above= 1.00 inch, Friction= 0.80, Gaps setting= Weightless

---

From A46 to A47, DY= -0.07 ft, DZ= -9.00 ft, L= 9.00 ft Run

POINT DATA:
A46, Coordinates, X= 25.02 ft, Y= 685.26 ft, Z= -156.84 ft

SUPPORT DATA:
A46, V-Stop, Support Id= A46 2, Connected to Ground, Comp.Wt = 0.000 lb, Gap-Below= 0.00 inch, Gap-Above= 1.00 inch, Friction= 0.80, Gaps setting= Weightless

---

From A47 to A48, DY= -0.07 ft, DZ= -9.00 ft, L= 9.00 ft Run

POINT DATA:
A47, Coordinates, X= 25.02 ft, Y= 685.19 ft, Z= -165.84 ft

SUPPORT DATA:
A47, V-Stop, Support Id= A47 2, Connected to Ground, Comp.Wt = 0.000 lb, Gap-Below= 0.00 inch, Gap-Above= 1.00 inch, Friction= 0.80, Gaps setting= Weightless

---

From A48 to A49, DY= -0.07 ft, DZ= -9.00 ft, L= 9.00 ft Run

POINT DATA:
A48, Coordinates, X= 25.02 ft, Y= 685.12 ft, Z= -174.84 ft

SUPPORT DATA:
A48, V-Stop, Support Id= A48 2, Connected to Ground, Comp.Wt = 0.000 lb, Gap-Below= 0.00 inch, Gap-Above= 1.00 inch, Friction= 0.80, Gaps setting= Weightless

C O M P O N E N T D A T A L I S T I N G

From A49 to A50, DX= 0 ft, DY= -0.03 ft, DZ= -3.83 ft, L= 3.83 ft Run

POINT DATA:
A49, Coordinates, X= 25.02 ft, Y= 685.05 ft, Z= -183.84 ft

SUPPORT DATA:
A49, V-Stop, Support Id= A49 2, Connected to Ground, Comp.Wt = 0.000 lb, Gap-Below= 0.00 inch, Gap-Above= 1.00 inch, Friction= 0.80, Gaps setting= Weightless

From A50 to A51, DY= -0.07 ft, DZ= -9.00 ft, L= 9.00 ft Run

POINT DATA:
A50, Coordinates, X= 25.02 ft, Y= 685.02 ft, Z= -187.67 ft

SUPPORT DATA:
A50, V-Stop, Support Id= A50 2, Connected to Ground, Comp.Wt = 0.000 lb, Gap-Below= 0.00 inch, Gap-Above= 1.00 inch, Friction= 0.80, Gaps setting= Weightless

From A51 to A10, DY= -0.03 ft, DZ= -3.50 ft, L= 3.50 ft Run

POINT DATA:
A51, Coordinates, X= 25.02 ft, Y= 684.95 ft, Z= -196.67 ft

SUPPORT DATA:
A51, Guide, Support Id= A51 1, Connected to Ground, Comp.Wt = 0.000 lb, Stiffness= RIGID, Gap-Down= 0.00 inch, Gap-Above= 1.00 inch, Gap-Left= 1.00 inch, Gap-Right= 1.00 inch, Friction= 0.00, Gaps setting= Weightless

From A10 to A52, DX= 3.50 ft, DY= -0.03 ft, L= 3.50 ft Bend

COMPONENT DATA (Bend, TIP= A10, Near= A10 N, Far= A10 F):
Elbow, Radius= 36.00 inch, Bend angle= 90.00 deg, End flanges= 0, Flex= Auto, SIFI= 1.00, SIFO= 1.00

POINT DATA:
A10, Coordinates, X= 25.02 ft, Y= 684.92 ft, Z= -200.17 ft
A10 N, Coordinates, X= 25.02 ft, Y= 684.95 ft, Z= -197.17 ft
A10 F, Coordinates, X= 28.02 ft, Y= 684.89 ft, Z= -200.17 ft

From A52 to A53, DX= 6.91 ft, DY= -0.05 ft, L= 6.91 ft Run

POINT DATA:
A52, Coordinates, X= 28.52 ft, Y= 684.89 ft, Z= -200.17 ft

SUPPORT DATA:
A52, Guide, Support Id= A52 1, Connected to Ground, Comp.Wt = 0.000 lb, Stiffness= RIGID, Gap-Down= 0.00 inch, Gap-Above= 1.00 inch, Gap-Left= 1.00 inch, Gap-Right= 1.00 inch, Friction= 0.00, Gaps setting= Weightless

From A53 to A11, DX= 3.50 ft, DY= -0.02 ft, L= 3.50 ft Run

C O M P O N E N T D A T A L I S T I N G

POINT DATA:
A53, Coordinates, X= 35.43 ft, Y= 684.84 ft, Z= -200.17 ft

SUPPORT DATA:
A53, Guide, Support Id= A53 1, Connected to Ground, Comp.Wt = 0.000 lb, Stiffness= RIGID,
Gap-Down= 0.00 inch, Gap-Above= 1.00 inch, Gap-Left= 1.00 inch, Gap-Right= 1.00 inch, Friction= 0.00,
Gaps setting= Weightless

From A11 to A54, DY= -0.03 ft, DZ= -3.50 ft, L= 3.50 ft Bend

COMPONENT DATA (Bend, TIP= A11, Near= A11 N, Far= A11 F):
Elbow, Radius= 36.00 inch, Bend angle= 90.00 deg, End flanges= 0, Flex= Auto, SIFI= 1.00, SIFO= 1.00

POINT DATA:
A11, Coordinates, X= 38.93 ft, Y= 684.82 ft, Z= -200.17 ft
A11 N, Coordinates, X= 35.93 ft, Y= 684.84 ft, Z= -200.17 ft
A11 F, Coordinates, X= 38.93 ft, Y= 684.79 ft, Z= -203.17 ft

From A54 to A55, DY= -0.07 ft, DZ= -9.00 ft, L= 9.00 ft Run

POINT DATA:
A54, Coordinates, X= 38.93 ft, Y= 684.79 ft, Z= -203.67 ft

SUPPORT DATA:
A54, Guide, Support Id= A54 1, Connected to Ground, Comp.Wt = 0.000 lb, Stiffness= RIGID,
Gap-Down= 0.00 inch, Gap-Above= 1.00 inch, Gap-Left= 1.00 inch, Gap-Right= 1.00 inch, Friction= 0.00,
Gaps setting= Weightless

From A55 to A56, DY= -0.07 ft, DZ= -9.00 ft, L= 9.00 ft Run

POINT DATA:
A55, Coordinates, X= 38.93 ft, Y= 684.72 ft, Z= -212.67 ft

SUPPORT DATA:
A55, V-Stop, Support Id= A55 1, Connected to Ground, Comp.Wt = 0.000 lb, Gap-Below= 0.00 inch,
Gap-Above= 1.00 inch, Friction= 0.80, Gaps setting= Weightless

---
From A56 to A57, DY= -0.07 ft, DZ= -9.00 ft, L= 9.00 ft Run

POINT DATA:
A56, Coordinates, X= 38.93 ft, Y= 684.65 ft, Z= -221.67 ft

SUPPORT DATA:
A56, V-Stop, Support Id= A56 1, Connected to Ground, Comp.Wt = 0.000 lb, Gap-Below= 0.00 inch,
Gap-Above= 1.00 inch, Friction= 0.80, Gaps setting= Weightless

---
From A57 to A58, DY= -0.07 ft, DZ= -9.00 ft, L= 9.00 ft Run

POINT DATA:
A57, Coordinates, X= 38.93 ft, Y= 684.58 ft, Z= -230.67 ft

C O M P O N E N T D A T A L I S T I N G

SUPPORT DATA:
A57, V-Stop, Support Id= A57 1, Connected to Ground, Comp.Wt = 0.000 lb, Gap-Below= 0.00 inch,
Gap-Above= 1.00 inch, Friction= 0.80, Gaps setting= Weightless

---

From A58 to A59, DY= -0.07 ft, DZ= -9.00 ft, L= 9.00 ft Run

POINT DATA:
A58, Coordinates, X= 38.93 ft, Y= 684.51 ft, Z= -239.67 ft

SUPPORT DATA:
A58, V-Stop, Support Id= A58 1, Connected to Ground, Comp.Wt = 0.000 lb, Gap-Below= 0.00 inch,
Gap-Above= 1.00 inch, Friction= 0.80, Gaps setting= Weightless

---

From A59 to A60, DY= -0.07 ft, DZ= -9.00 ft, L= 9.00 ft Run

POINT DATA:
A59, Coordinates, X= 38.93 ft, Y= 684.44 ft, Z= -248.67 ft

SUPPORT DATA:
A59, V-Stop, Support Id= A59 1, Connected to Ground, Comp.Wt = 0.000 lb, Gap-Below= 0.00 inch,
Gap-Above= 1.00 inch, Friction= 0.80, Gaps setting= Weightless

---

From A60 to A61, DX= 0 ft, DY= -0.06 ft, DZ= -8.40 ft, L= 8.40 ft Run

POINT DATA:
A60, Coordinates, X= 38.93 ft, Y= 684.37 ft, Z= -257.67 ft

SUPPORT DATA:
A60, V-Stop, Support Id= A60 1, Connected to Ground, Comp.Wt = 0.000 lb, Gap-Below= 0.00 inch,
Gap-Above= 1.00 inch, Friction= 0.80, Gaps setting= Weightless

---

From A61 to A62, DY= -0.06 ft, DZ= -9.00 ft, L= 9.00 ft Run

POINT DATA:
A61, Coordinates, X= 38.93 ft, Y= 684.31 ft, Z= -266.07 ft

SUPPORT DATA:
A61, V-Stop, Support Id= A61 1, Connected to Ground, Comp.Wt = 0.000 lb, Gap-Below= 0.00 inch,
Gap-Above= 1.00 inch, Friction= 0.80, Gaps setting= Weightless

---

From A62 to A12, DY= -0.03 ft, DZ= -3.50 ft, L= 3.50 ft Run

POINT DATA:
A62, Coordinates, X= 38.93 ft, Y= 684.25 ft, Z= -275.07 ft

SUPPORT DATA:
A62, Guide, Support Id= A62 1, Connected to Ground, Comp.Wt = 0.000 lb, Stiffness= RIGID,
Gap-Down= 0.00 inch, Gap-Above= 1.00 inch, Gap-Left= 1.00 inch, Gap-Right= 1.00 inch, Friction= 0.00,
Gaps setting= Weightless

C O M P O N E N T D A T A L I S T I N G

```
 ---------------------------------------------------------------------------
 From A12 to A63, DX= -3.50 ft, DY= -0.03 ft, L= 3.50 ft                    Bend

 COMPONENT DATA (Bend, TIP= A12, Near= A12 N, Far= A12 F):
   Elbow, Radius= 36.00 inch, Bend angle= 90.00 deg, End flanges= 0, Flex= Auto, SIFI= 1.00, SIFO= 1.00

 POINT DATA:
   A12, Coordinates, X= 38.93 ft, Y= 684.22 ft, Z= -278.57 ft
   A12 N, Coordinates, X= 38.93 ft, Y= 684.25 ft, Z= -275.57 ft
   A12 F, Coordinates, X= 35.93 ft, Y= 684.19 ft, Z= -278.57 ft

 ---------------------------------------------------------------------------
 From A63 to A64, DX= -9.00 ft, DY= -0.07 ft, L= 9.00 ft                    Run

 POINT DATA:
   A63, Coordinates, X= 35.43 ft, Y= 684.19 ft, Z= -278.57 ft

 SUPPORT DATA:
   A63, Guide, Support Id= A63  1, Connected to Ground, Comp.Wt = 0.000 lb, Stiffness= RIGID,
   Gap-Down= 0.00 inch, Gap-Above= 1.00 inch, Gap-Left= 1.00 inch, Gap-Right= 1.00 inch, Friction= 0.00,
   Gaps setting= Weightless

 ---------------------------------------------------------------------------
 From A64 to A65, DX= -9.00 ft, DY= -0.07 ft, L= 9.00 ft                    Run

 POINT DATA:
   A64, Coordinates, X= 26.43 ft, Y= 684.12 ft, Z= -278.57 ft

 SUPPORT DATA:
   A64, V-Stop, Support Id= A64  2, Connected to Ground, Comp.Wt = 0.000 lb, Gap-Below= 0.00 inch,
   Gap-Above= 1.00 inch, Friction= 0.80, Gaps setting= Weightless

 ---------------------------------------------------------------------------
 From A65 to A66, DX= -9.00 ft, DY= -0.06 ft, L= 9.00 ft                    Run

 POINT DATA:
   A65, Coordinates, X= 17.43 ft, Y= 684.05 ft, Z= -278.57 ft

 SUPPORT DATA:
   A65, V-Stop, Support Id= A65  2, Connected to Ground, Comp.Wt = 0.000 lb, Gap-Below= 0.00 inch,
   Gap-Above= 1.00 inch, Friction= 0.80, Gaps setting= Weightless

 ---------------------------------------------------------------------------
 From A66 to A67, DX= -9.00 ft, DY= -0.07 ft, L= 9.00 ft                    Run

 POINT DATA:
   A66, Coordinates, X= 8.43 ft, Y= 683.99 ft, Z= -278.57 ft

 SUPPORT DATA:
   A66, V-Stop, Support Id= A66  2, Connected to Ground, Comp.Wt = 0.000 lb, Gap-Below= 0.00 inch,
   Gap-Above= 1.00 inch, Friction= 0.80, Gaps setting= Weightless

 ---------------------------------------------------------------------------
 From A67 to A68, DX= -8.78 ft, DY= -0.06 ft, L= 8.78 ft                    Run
```

C O M P O N E N T D A T A L I S T I N G

POINT DATA:
A67, Coordinates, X= -0.57 ft, Y= 683.92 ft, Z= -278.57 ft

SUPPORT DATA:
A67, V-Stop, Support Id= A67 2, Connected to Ground, Comp.Wt = 0.000 lb, Gap-Below= 0.00 inch,
Gap-Above= 1.00 inch, Friction= 0.80, Gaps setting= Weightless

---

From A68 to A69, DX= -9.00 ft, DY= -0.06 ft, L= 9.00 ft Run

POINT DATA:
A68, Coordinates, X= -9.35 ft, Y= 683.86 ft, Z= -278.57 ft

SUPPORT DATA:
A68, V-Stop, Support Id= A68 2, Connected to Ground, Comp.Wt = 0.000 lb, Gap-Below= 0.00 inch,
Gap-Above= 1.00 inch, Friction= 0.80, Gaps setting= Weightless

---

From A69 to A13, DX= -3.50 ft, DY= -0.03 ft, L= 3.50 ft Run

POINT DATA:
A69, Coordinates, X= -18.35 ft, Y= 683.80 ft, Z= -278.57 ft

SUPPORT DATA:
A69, Guide, Support Id= A69 1, Connected to Ground, Comp.Wt = 0.000 lb, Stiffness= RIGID,
Gap-Down= 0.00 inch, Gap-Above= 1.00 inch, Gap-Left= 1.00 inch, Gap-Right= 1.00 inch, Friction= 0.00,
Gaps setting= Weightless

From A13 to A70, DY= -0.02 ft, DZ= -3.50 ft, L= 3.50 ft Bend

COMPONENT DATA (Bend, TIP= A13, Near= A13 N, Far= A13 F):
Elbow, Radius= 36.00 inch, Bend angle= 90.00 deg, End flanges= 0, Flex= Auto, SIFI= 1.00, SIFO= 1.00

POINT DATA:
A13, Coordinates, X= -21.85 ft, Y= 683.77 ft, Z= -278.57 ft
A13 N, Coordinates, X= -18.85 ft, Y= 683.80 ft, Z= -278.57 ft
A13 F, Coordinates, X= -21.85 ft, Y= 683.75 ft, Z= -281.57 ft

---

From A70 to A71, DY= -0.05 ft, DZ= -9.00 ft, L= 9.00 ft Run

POINT DATA:
A70, Coordinates, X= -21.85 ft, Y= 683.75 ft, Z= -282.07 ft

SUPPORT DATA:
A70, Guide, Support Id= A70 1, Connected to Ground, Comp.Wt = 0.000 lb, Stiffness= RIGID,
Gap-Down= 0.00 inch, Gap-Above= 1.00 inch, Gap-Left= 1.00 inch, Gap-Right= 1.00 inch, Friction= 0.00,
Gaps setting= Weightless

From A71 to A72, DY= -0.05 ft, DZ= -7.59 ft, L= 7.59 ft Run

POINT DATA:
A71, Coordinates, X= -21.85 ft, Y= 683.70 ft, Z= -291.07 ft

C O M P O N E N T D A T A L I S T I N G

```
 SUPPORT DATA:
   A71, V-Stop, Support Id= A71  2, Connected to Ground, Comp.Wt = 0.000 lb, Gap-Below= 0.00 inch,
   Gap-Above= 1.00 inch, Friction= 0.80, Gaps setting= Weightless

 ------------------------------------------------------------------------------
 From A72 to A14, DY= -0.02 ft, DZ= -3.50 ft, L= 3.50 ft                    Run

 POINT DATA:
   A72, Coordinates, X= -21.85 ft, Y= 683.65 ft, Z= -298.66 ft

 SUPPORT DATA:
   A72, Guide, Support Id= A72  1, Connected to Ground, Comp.Wt = 0.000 lb, Stiffness= RIGID,
   Gap-Down= 0.00 inch, Gap-Above= 1.00 inch, Gap-Left= 1.00 inch, Gap-Right= 1.00 inch, Friction= 0.00,
   Gaps setting= Weightless

 ------------------------------------------------------------------------------
 From A14 to A73, DX= 3.50 ft, DY= -0.06 ft, L= 3.50 ft                     Bend

 COMPONENT DATA (Bend, TIP= A14, Near= A14 N, Far= A14 F):
   Elbow, Radius= 36.00 inch, Bend angle= 89.99 deg, End flanges= 0, Flex= Auto, SIFI= 1.00, SIFO= 1.00

 POINT DATA:
   A14, Coordinates, X= -21.85 ft, Y= 683.63 ft, Z= -302.16 ft
   A14 N, Coordinates, X= -21.85 ft, Y= 683.65 ft, Z= -299.16 ft
   A14 F, Coordinates, X= -18.85 ft, Y= 683.58 ft, Z= -302.16 ft

 ------------------------------------------------------------------------------
 From A73 to A15, DX= 2.96 ft, DY= -0.05 ft, L= 2.96 ft                     Run

 POINT DATA:
   A73, Coordinates, X= -18.35 ft, Y= 683.57 ft, Z= -302.16 ft

 SUPPORT DATA:
   A73, Guide, Support Id= A73  1, Connected to Ground, Comp.Wt = 0.000 lb, Stiffness= RIGID,
   Gap-Down= 0.00 inch, Gap-Above= 1.00 inch, Gap-Left= 1.00 inch, Gap-Right= 1.00 inch, Friction= 0.00,
   Gaps setting= Weightless

 ------------------------------------------------------------------------------
 From A15 to A16, DX= 1.00 ft                                               Bend

 COMPONENT DATA (Bend, TIP= A15, Near= A15 N, Far= A15 F):
   Elbow, Radius= 36.00 inch, Bend angle= 0.97 deg, End flanges= 0, Flex= Auto, SIFI= 1.00, SIFO= 1.00

 POINT DATA:
   A15, Coordinates, X= -15.39 ft, Y= 683.52 ft, Z= -302.16 ft
   A15 N, Coordinates, X= -15.42 ft, Y= 683.52 ft, Z= -302.16 ft
   A15 F, Coordinates, X= -15.36 ft, Y= 683.52 ft, Z= -302.16 ft

 ------------------------------------------------------------------------------
 From A16 to A17, DX= 1.00 ft                                               Run

 POINT DATA:
   A16, Coordinates, X= -14.39 ft, Y= 683.52 ft, Z= -302.16 ft

 ------------------------------------------------------------------------------
```

C O M P O N E N T D A T A L I S T I N G

From A17 to A18, DX= 0.55 ft Run

POINT DATA:
A17, Coordinates, X= -13.39 ft, Y= 683.52 ft, Z= -302.16 ft

From A18 to A19, DX= 0.19 ft Run

POINT DATA:
A18, Coordinates, X= -12.84 ft, Y= 683.52 ft, Z= -302.16 ft
A19, Coordinates, X= -12.65 ft, Y= 683.52 ft, Z= -302.16 ft

SUPPORT DATA:
A18, Anchor, Connected to: Ground, KTX= Rigid, KTY= Rigid, KTZ= Rigid, KRX= Rigid, KRY= Rigid, KRZ= Rigid

---

*** SEGMENT B , LINE # RIGID

From B03 to B04, DX= 2.00 ft Run

PIPE DATA:
Pipe Id= 6SCH40, Composition= Carbon Steel, Nom Size= 6 in, OD= 6.625 inch, Wall Thk= 0.280 inch,
Mill= 0.035 inch, Pipe Density= 489.00 lb/cu.ft, Pipe Unit Wgt= 18.95 lb/ft

POINT DATA:
B03, Coordinates, X= 1.46 ft, Y= 693.07 ft, Z= 2.00 ft

SUPPORT DATA:
B03, Anchor, Connected to: Ground, KTX= Rigid, KTY= Rigid, KTZ= Rigid, KRX= Rigid, KRY= Rigid, KRZ= Rigid

---

From B04 to B22, DX= 2.50 ft Run

POINT DATA:
B04, Coordinates, X= 3.46 ft, Y= 693.07 ft, Z= 2.00 ft

From B22 to B06, DX= 0.50 ft Run

POINT DATA:
B22, Coordinates, X= 5.96 ft, Y= 693.07 ft, Z= 2.00 ft

SUPPORT DATA:
B22, V-Stop, Support Id= B22 2, Connected to Ground, Comp.Wt = 0.000 lb, Gap-Below= 0.00 inch,
Gap-Above= 1.00 inch, Friction= 0.80, Gaps setting= Weightless

---

From B06 to B23, DX= 11.15 ft, DY= -1.83 ft, L= 11.30 ft Bend

COMPONENT DATA (Bend, TIP= B06, Near= B06 N, Far= B06 F):
Elbow, Radius= 36.00 inch, Bend angle= 9.32 deg, End flanges= 0, Flex= Auto, SIFI= 1.00, SIFO= 1.00

POINT DATA:

C O M P O N E N T D A T A L I S T I N G

B06, Coordinates, X= 6.46 ft, Y= 693.07 ft, Z= 2.00 ft
B06 N, Coordinates, X= 6.22 ft, Y= 693.07 ft, Z= 2.00 ft
B06 F, Coordinates, X= 6.70 ft, Y= 693.03 ft, Z= 2.00 ft

From B23 to B24, DX= 7.70 ft, DY= -1.26 ft, L= 7.80 ft Run

POINT DATA:
B23, Coordinates, X= 17.61 ft, Y= 691.24 ft, Z= 2.00 ft

SUPPORT DATA:
B23, V-Stop, Support Id= B23 2, Connected to Ground, Comp.Wt = 0.000 lb, Gap-Below= 0.00 inch,
Gap-Above= 1.00 inch, Friction= 0.80, Gaps setting= Weightless

---

From B24 to B09, DX= 3.45 ft, DY= -0.57 ft, L= 3.50 ft Run

POINT DATA:
B24, Coordinates, X= 25.31 ft, Y= 689.98 ft, Z= 2.00 ft

SUPPORT DATA:
B24, Guide, Support Id= B24 2, Connected to Ground, Comp.Wt = 0.000 lb, Stiffness= RIGID,
Gap-Down= 0.00 inch, Gap-Above= 1.00 inch, Gap-Left= 1.00 inch, Gap-Right= 1.00 inch, Friction= 0.00,
Gaps setting= Weightless

From B09 to B25, DY= -0.10 ft, DZ= -3.50 ft, L= 3.50 ft Bend

COMPONENT DATA (Bend, TIP= B09, Near= B09 N, Far= B09 F):
Elbow, Radius= 36.00 inch, Bend angle= 89.73 deg, End flanges= 0, Flex= Auto, SIFI= 1.00, SIFO= 1.00

POINT DATA:
B09, Coordinates, X= 28.76 ft, Y= 689.41 ft, Z= 2.00 ft
B09 N, Coordinates, X= 25.81 ft, Y= 689.90 ft, Z= 2.00 ft
B09 F, Coordinates, X= 28.76 ft, Y= 689.32 ft, Z= -0.98 ft

From B25 to B26, DY= -0.26 ft, DZ= -9.00 ft, L= 9.00 ft Run

POINT DATA:
B25, Coordinates, X= 28.76 ft, Y= 689.31 ft, Z= -1.50 ft

SUPPORT DATA:
B25, Guide, Support Id= B25 2, Connected to Ground, Comp.Wt = 0.000 lb, Stiffness= RIGID,
Gap-Down= 0.00 inch, Gap-Above= 1.00 inch, Gap-Left= 1.00 inch, Gap-Right= 1.00 inch, Friction= 0.00,
Gaps setting= Weightless

From B26 to B28, DY= -0.26 ft, DZ= -9.00 ft, L= 9.00 ft Run

POINT DATA:
B26, Coordinates, X= 28.76 ft, Y= 689.05 ft, Z= -10.50 ft

SUPPORT DATA:
B26, V-Stop, Support Id= B26 1, Connected to Ground, Comp.Wt = 0.000 lb, Gap-Below= 0.00 inch,

C O M P O N E N T D A T A L I S T I N G

Gap-Above= 1.00 inch, Friction= 0.80, Gaps setting= Weightless

From B28 to B29, DY= -0.26 ft, DZ= -9.00 ft, L= 9.00 ft Run

POINT DATA:
B28, Coordinates, X= 28.76 ft, Y= 688.79 ft, Z= -19.50 ft

SUPPORT DATA:
B28, V-Stop, Support Id= B28 1, Connected to Ground, Comp.Wt = 0.000 lb, Gap-Below= 0.00 inch,
Gap-Above= 1.00 inch, Friction= 0.80, Gaps setting= Weightless

From B29 to B31, DY= -0.27 ft, DZ= -9.00 ft, L= 9.00 ft Run

POINT DATA:
B29, Coordinates, X= 28.76 ft, Y= 688.53 ft, Z= -28.50 ft

SUPPORT DATA:
B29, V-Stop, Support Id= B29 1, Connected to Ground, Comp.Wt = 0.000 lb, Gap-Below= 0.00 inch,
Gap-Above= 1.00 inch, Friction= 0.80, Gaps setting= Weightless

From B31 to B32, DY= -0.30 ft, DZ= -10.17 ft, L= 10.17 ft Run

POINT DATA:
B31, Coordinates, X= 28.76 ft, Y= 688.26 ft, Z= -37.50 ft

SUPPORT DATA:
B31, V-Stop, Support Id= B31 1, Connected to Ground, Comp.Wt = 0.000 lb, Gap-Below= 0.00 inch,
Gap-Above= 1.00 inch, Friction= 0.80, Gaps setting= Weightless

From B32 to B16, DY= -0.10 ft, DZ= -3.50 ft, L= 3.50 ft Run

POINT DATA:
B32, Coordinates, X= 28.76 ft, Y= 687.96 ft, Z= -47.67 ft

SUPPORT DATA:
B32, Guide, Support Id= B32 2, Connected to Ground, Comp.Wt = 0.000 lb, Stiffness= RIGID,
Gap-Down= 0.00 inch, Gap-Above= 1.00 inch, Gap-Left= 1.00 inch, Gap-Right= 1.00 inch, Friction= 0.00,
Gaps setting= Weightless

From B16 to B33, DX= 3.50 ft, DY= -0.08 ft, L= 3.50 ft Bend

COMPONENT DATA (Bend, TIP= B16, Near= B16 N, Far= B16 F):
Elbow, Radius= 36.00 inch, Bend angle= 89.96 deg, End flanges= 0, Flex= Auto, SIFI= 1.00, SIFO= 1.00

POINT DATA:
B16, Coordinates, X= 28.76 ft, Y= 687.86 ft, Z= -51.17 ft
B16 N, Coordinates, X= 28.76 ft, Y= 687.95 ft, Z= -48.17 ft
B16 F, Coordinates, X= 31.76 ft, Y= 687.79 ft, Z= -51.17 ft

C O M P O N E N T D A T A L I S T I N G

```
From B33 to B34, DX= 2.76 ft, DY= -0.06 ft, L= 2.76 ft                    Run

POINT DATA:
  B33, Coordinates, X= 32.26 ft, Y= 687.78 ft, Z= -51.17 ft

SUPPORT DATA:
  B33, Guide, Support Id= B33  2, Connected to Ground, Comp.Wt = 0.000 lb, Stiffness= RIGID,
  Gap-Down= 0.00 inch, Gap-Above= 1.00 inch, Gap-Left= 1.00 inch, Gap-Right= 1.00 inch, Friction= 0.00,
  Gaps setting= Weightless

-------------------------------------------------------------------------------
From B34 to B19, DX= 3.50 ft, DY= -0.08 ft, L= 3.50 ft                    Run

POINT DATA:
  B34, Coordinates, X= 35.02 ft, Y= 687.72 ft, Z= -51.17 ft

SUPPORT DATA:
  B34, Guide, Support Id= B34  2, Connected to Ground, Comp.Wt = 0.000 lb, Stiffness= RIGID,
  Gap-Down= 0.00 inch, Gap-Above= 1.00 inch, Gap-Left= 1.00 inch, Gap-Right= 1.00 inch, Friction= 0.00,
  Gaps setting= Weightless

-------------------------------------------------------------------------------
From B19 to B35, DY= -0.10 ft, DZ= -3.50 ft, L= 3.50 ft                   Bend

COMPONENT DATA (Bend, TIP= B19, Near= B19 N, Far= B19 F):
  Elbow, Radius= 36.00 inch, Bend angle= 89.96 deg, End flanges= 0, Flex= Auto, SIFI= 1.00, SIFO= 1.00

POINT DATA:
  B19, Coordinates, X= 38.52 ft, Y= 687.64 ft, Z= -51.17 ft
  B19 N, Coordinates, X= 35.52 ft, Y= 687.71 ft, Z= -51.17 ft
  B19 F, Coordinates, X= 38.52 ft, Y= 687.55 ft, Z= -54.17 ft

-------------------------------------------------------------------------------
From B35 to B36, DY= -0.25 ft, DZ= -9.00 ft, L= 9.00 ft                   Run

POINT DATA:
  B35, Coordinates, X= 38.52 ft, Y= 687.54 ft, Z= -54.67 ft

SUPPORT DATA:
  B35, Guide, Support Id= B35  2, Connected to Ground, Comp.Wt = 0.000 lb, Stiffness= RIGID,
  Gap-Down= 0.00 inch, Gap-Above= 1.00 inch, Gap-Left= 1.00 inch, Gap-Right= 1.00 inch, Friction= 0.00,
  Gaps setting= Weightless

-------------------------------------------------------------------------------
From B36 to B37, DY= -0.25 ft, DZ= -9.00 ft, L= 9.00 ft                   Run

POINT DATA:
  B36, Coordinates, X= 38.52 ft, Y= 687.29 ft, Z= -63.67 ft

SUPPORT DATA:
  B36, V-Stop, Support Id= B36  2, Connected to Ground, Comp.Wt = 0.000 lb, Gap-Below= 0.00 inch,
  Gap-Above= 1.00 inch, Friction= 0.80, Gaps setting= Weightless

-------------------------------------------------------------------------------
From B37 to B38, DY= -0.25 ft, DZ= -9.00 ft, L= 9.00 ft                   Run
```

C O M P O N E N T D A T A L I S T I N G

POINT DATA:
B37, Coordinates, X= 38.52 ft, Y= 687.04 ft, Z= -72.67 ft

SUPPORT DATA:
B37, V-Stop, Support Id= B37 2, Connected to Ground, Comp.Wt = 0.000 lb, Gap-Below= 0.00 inch, Gap-Above= 1.00 inch, Friction= 0.80, Gaps setting= Weightless

---

From B38 to B39, DY= -0.25 ft, DZ= -9.00 ft, L= 9.00 ft Run

POINT DATA:
B38, Coordinates, X= 38.52 ft, Y= 686.79 ft, Z= -81.67 ft

SUPPORT DATA:
B38, V-Stop, Support Id= B38 2, Connected to Ground, Comp.Wt = 0.000 lb, Gap-Below= 0.00 inch, Gap-Above= 1.00 inch, Friction= 0.80, Gaps setting= Weightless

---

From B39 to B40, DY= -0.22 ft, DZ= -7.67 ft, L= 7.67 ft Run

POINT DATA:
B39, Coordinates, X= 38.52 ft, Y= 686.54 ft, Z= -90.67 ft

SUPPORT DATA:
B39, V-Stop, Support Id= B39 2, Connected to Ground, Comp.Wt = 0.000 lb, Gap-Below= 0.00 inch, Gap-Above= 1.00 inch, Friction= 0.80, Gaps setting= Weightless

---

From B40 to B42, DY= -0.25 ft, DZ= -9.00 ft, L= 9.00 ft Run

POINT DATA:
B40, Coordinates, X= 38.52 ft, Y= 686.32 ft, Z= -98.34 ft

SUPPORT DATA:
B40, V-Stop, Support Id= B40 1, Connected to Ground, Comp.Wt = 0.000 lb, Gap-Below= 0.00 inch, Gap-Above= 1.00 inch, Friction= 0.80, Gaps setting= Weightless

---

From B42 to B27, DY= -0.10 ft, DZ= -3.50 ft, L= 3.50 ft Run

POINT DATA:
B42, Coordinates, X= 38.52 ft, Y= 686.07 ft, Z= -107.34 ft

SUPPORT DATA:
B42, Guide, Support Id= B42 1, Connected to Ground, Comp.Wt = 0.000 lb, Stiffness= RIGID, Gap-Down= 0.00 inch, Gap-Above= 1.00 inch, Gap-Left= 1.00 inch, Gap-Right= 1.00 inch, Friction= 0.00, Gaps setting= Weightless

---

From B27 to B43, DX= -3.50 ft, DY= -0.09 ft, L= 3.50 ft Bend

COMPONENT DATA (Bend, TIP= B27, Near= B27 N, Far= B27 F):
Elbow, Radius= 36.00 inch, Bend angle= 89.96 deg, End flanges= 0, Flex= Auto, SIFI= 1.00, SIFO= 1.00

POINT DATA:

C O M P O N E N T D A T A L I S T I N G

B27, Coordinates, X= 38.52 ft, Y= 685.97 ft, Z= -110.84 ft
B27 N, Coordinates, X= 38.52 ft, Y= 686.06 ft, Z= -107.84 ft
B27 F, Coordinates, X= 35.52 ft, Y= 685.89 ft, Z= -110.84 ft

From B43 to B45, DX= -4.00 ft, DY= -0.10 ft, L= 4.00 ft Run

POINT DATA:
B43, Coordinates, X= 35.02 ft, Y= 685.88 ft, Z= -110.84 ft

SUPPORT DATA:
B43, Guide, Support Id= B43 1, Connected to Ground, Comp.Wt = 0.000 lb, Stiffness= RIGID,
Gap-Down= 0.00 inch, Gap-Above= 1.00 inch, Gap-Left= 1.00 inch, Gap-Right= 1.00 inch, Friction= 0.00,
Gaps setting= Weightless

From B45 to B30, DX= -3.50 ft, DY= -0.08 ft, L= 3.50 ft Run

POINT DATA:
B45, Coordinates, X= 31.02 ft, Y= 685.78 ft, Z= -110.84 ft

SUPPORT DATA:
B45, Guide, Support Id= B45 1, Connected to Ground, Comp.Wt = 0.000 lb, Stiffness= RIGID,
Gap-Down= 0.00 inch, Gap-Above= 1.00 inch, Gap-Left= 1.00 inch, Gap-Right= 1.00 inch, Friction= 0.00,
Gaps setting= Weightless

From B30 to B46, DY= -0.03 ft, DZ= -3.50 ft, L= 3.50 ft Bend

COMPONENT DATA (Bend, TIP= B30, Near= B30 N, Far= B30 F):
Elbow, Radius= 36.00 inch, Bend angle= 89.99 deg, End flanges= 0, Flex= Auto, SIFI= 1.00, SIFO= 1.00

POINT DATA:
B30, Coordinates, X= 27.52 ft, Y= 685.70 ft, Z= -110.84 ft
B30 N, Coordinates, X= 30.52 ft, Y= 685.77 ft, Z= -110.84 ft
B30 F, Coordinates, X= 27.52 ft, Y= 685.67 ft, Z= -113.84 ft

From B46 to B47, DY= -0.08 ft, DZ= -9.00 ft, L= 9.00 ft Run

POINT DATA:
B46, Coordinates, X= 27.52 ft, Y= 685.67 ft, Z= -114.34 ft

SUPPORT DATA:
B46, Guide, Support Id= B46 2, Connected to Ground, Comp.Wt = 0.000 lb, Stiffness= RIGID,
Gap-Down= 0.00 inch, Gap-Above= 1.00 inch, Gap-Left= 1.00 inch, Gap-Right= 1.00 inch, Friction= 0.00,
Gaps setting= Weightless

From B47 to B48, DY= -0.08 ft, DZ= -9.00 ft, L= 9.00 ft Run

POINT DATA:
B47, Coordinates, X= 27.52 ft, Y= 685.59 ft, Z= -123.34 ft

SUPPORT DATA:

C O M P O N E N T D A T A L I S T I N G

B47, V-Stop, Support Id= B47 2, Connected to Ground, Comp.Wt = 0.000 lb, Gap-Below= 0.00 inch,
Gap-Above= 1.00 inch, Friction= 0.80, Gaps setting= Weightless

---

From B48 to B49, DY= -0.08 ft, DZ= -9.00 ft, L= 9.00 ft Run

POINT DATA:
B48, Coordinates, X= 27.52 ft, Y= 685.51 ft, Z= -132.34 ft

SUPPORT DATA:
B48, V-Stop, Support Id= B48 2, Connected to Ground, Comp.Wt = 0.000 lb, Gap-Below= 0.00 inch,
Gap-Above= 1.00 inch, Friction= 0.80, Gaps setting= Weightless

---

From B49 to B50, DY= -0.08 ft, DZ= -9.00 ft, L= 9.00 ft Run

POINT DATA:
B49, Coordinates, X= 27.52 ft, Y= 685.43 ft, Z= -141.34 ft

SUPPORT DATA:
B49, V-Stop, Support Id= B49 2, Connected to Ground, Comp.Wt = 0.000 lb, Gap-Below= 0.00 inch,
Gap-Above= 1.00 inch, Friction= 0.80, Gaps setting= Weightless

---

From B50 to B51, DY= -0.07 ft, DZ= -9.00 ft, L= 9.00 ft Run

POINT DATA:
B50, Coordinates, X= 27.52 ft, Y= 685.35 ft, Z= -150.34 ft

SUPPORT DATA:
B50, V-Stop, Support Id= B50 2, Connected to Ground, Comp.Wt = 0.000 lb, Gap-Below= 0.00 inch,
Gap-Above= 1.00 inch, Friction= 0.80, Gaps setting= Weightless

---

From B51 to B52, DY= -0.08 ft, DZ= -9.00 ft, L= 9.00 ft Run

POINT DATA:
B51, Coordinates, X= 27.52 ft, Y= 685.28 ft, Z= -159.34 ft

SUPPORT DATA:
B51, V-Stop, Support Id= B51 2, Connected to Ground, Comp.Wt = 0.000 lb, Gap-Below= 0.00 inch,
Gap-Above= 1.00 inch, Friction= 0.80, Gaps setting= Weightless

---

From B52 to B53, DY= -0.07 ft, DZ= -9.00 ft, L= 9.00 ft Run

POINT DATA:
B52, Coordinates, X= 27.52 ft, Y= 685.20 ft, Z= -168.34 ft

SUPPORT DATA:
B52, V-Stop, Support Id= B52 2, Connected to Ground, Comp.Wt = 0.000 lb, Gap-Below= 0.00 inch,
Gap-Above= 1.00 inch, Friction= 0.80, Gaps setting= Weightless

---

From B53 to B54, DX= 0 ft, DY= -0.07 ft, DZ= -7.83 ft, L= 7.83 ft Run

C O M P O N E N T D A T A L I S T I N G

POINT DATA:
B53, Coordinates, X= 27.52 ft, Y= 685.13 ft, Z= -177.34 ft

SUPPORT DATA:
B53, V-Stop, Support Id= B53 2, Connected to Ground, Comp.Wt = 0.000 lb, Gap-Below= 0.00 inch, Gap-Above= 1.00 inch, Friction= 0.80, Gaps setting= Weightless

---

From B54 to B55, DY= -0.07 ft, DZ= -9.00 ft, L= 9.00 ft Run

POINT DATA:
B54, Coordinates, X= 27.52 ft, Y= 685.06 ft, Z= -185.17 ft

SUPPORT DATA:
B54, V-Stop, Support Id= B54 2, Connected to Ground, Comp.Wt = 0.000 lb, Gap-Below= 0.00 inch, Gap-Above= 1.00 inch, Friction= 0.80, Gaps setting= Weightless

---

From B55 to B41, DY= -0.03 ft, DZ= -3.50 ft, L= 3.50 ft Run

POINT DATA:
B55, Coordinates, X= 27.52 ft, Y= 684.99 ft, Z= -194.17 ft

SUPPORT DATA:
B55, Guide, Support Id= B55 1, Connected to Ground, Comp.Wt = 0.000 lb, Stiffness= RIGID, Gap-Down= 0.00 inch, Gap-Above= 1.00 inch, Gap-Left= 1.00 inch, Gap-Right= 1.00 inch, Friction= 0.00, Gaps setting= Weightless

---

From B41 to B57, DX= 3.50 ft, DY= -0.02 ft, L= 3.50 ft Bend

COMPONENT DATA (Bend, TIP= B41, Near= B41 N, Far= B41 F):
Elbow, Radius= 36.00 inch, Bend angle= 90.00 deg, End flanges= 0, Flex= Auto, SIFI= 1.00, SIFO= 1.00

POINT DATA:
B41, Coordinates, X= 27.52 ft, Y= 684.96 ft, Z= -197.67 ft
B41 N, Coordinates, X= 27.52 ft, Y= 684.99 ft, Z= -194.67 ft
B41 F, Coordinates, X= 30.52 ft, Y= 684.94 ft, Z= -197.67 ft

From B57 to B58, DX= 6.91 ft, DY= -0.05 ft, L= 6.91 ft Run

POINT DATA:
B57, Coordinates, X= 31.02 ft, Y= 684.94 ft, Z= -197.67 ft

SUPPORT DATA:
B57, Guide, Support Id= B57 1, Connected to Ground, Comp.Wt = 0.000 lb, Stiffness= RIGID, Gap-Down= 0.00 inch, Gap-Above= 1.00 inch, Gap-Left= 1.00 inch, Gap-Right= 1.00 inch, Friction= 0.00, Gaps setting= Weightless

---

From B58 to B44, DX= 3.50 ft, DY= -0.02 ft, L= 3.50 ft Run

POINT DATA:
B58, Coordinates, X= 37.93 ft, Y= 684.89 ft, Z= -197.67 ft

C O M P O N E N T D A T A L I S T I N G

```
 SUPPORT DATA:
   B58, Guide, Support Id= B58  1, Connected to Ground, Comp.Wt = 0.000 lb, Stiffness= RIGID,
   Gap-Down= 0.00 inch, Gap-Above= 1.00 inch, Gap-Left= 1.00 inch, Gap-Right= 1.00 inch, Friction= 0.00,
   Gaps setting= Weightless

 ------------------------------------------------------------------------------
 From B44 to B64, DY= -0.02 ft, DZ= -3.50 ft, L= 3.50 ft                    Bend

 COMPONENT DATA (Bend, TIP= B44, Near= B44 N, Far= B44 F):
   Elbow, Radius= 36.00 inch, Bend angle= 90.00 deg, End flanges= 0, Flex= Auto, SIFI= 1.00, SIFO= 1.00

 POINT DATA:
   B44, Coordinates, X= 41.43 ft, Y= 684.87 ft, Z= -197.67 ft
   B44 N, Coordinates, X= 38.43 ft, Y= 684.89 ft, Z= -197.67 ft
   B44 F, Coordinates, X= 41.43 ft, Y= 684.85 ft, Z= -200.67 ft

 ------------------------------------------------------------------------------
 From B64 to B65, DY= -0.06 ft, DZ= -9.00 ft, L= 9.00 ft                    Run

 POINT DATA:
   B64, Coordinates, X= 41.43 ft, Y= 684.85 ft, Z= -201.17 ft

 SUPPORT DATA:
   B64, Guide, Support Id= B64  1, Connected to Ground, Comp.Wt = 0.000 lb, Stiffness= RIGID,
   Gap-Down= 0.00 inch, Gap-Above= 1.00 inch, Gap-Left= 1.00 inch, Gap-Right= 1.00 inch, Friction= 0.00,
   Gaps setting= Weightless

 ------------------------------------------------------------------------------
 From B65 to B66, DY= -0.06 ft, DZ= -9.00 ft, L= 9.00 ft                    Run

 POINT DATA:
   B65, Coordinates, X= 41.43 ft, Y= 684.79 ft, Z= -210.17 ft

 SUPPORT DATA:
   B65, V-Stop, Support Id= B65  1, Connected to Ground, Comp.Wt = 0.000 lb, Gap-Below= 0.00 inch,
   Gap-Above= 1.00 inch, Friction= 0.80, Gaps setting= Weightless

 ------------------------------------------------------------------------------
 From B66 to B67, DY= -0.06 ft, DZ= -9.00 ft, L= 9.00 ft                    Run

 POINT DATA:
   B66, Coordinates, X= 41.43 ft, Y= 684.73 ft, Z= -219.17 ft

 SUPPORT DATA:
   B66, V-Stop, Support Id= B66  1, Connected to Ground, Comp.Wt = 0.000 lb, Gap-Below= 0.00 inch,
   Gap-Above= 1.00 inch, Friction= 0.80, Gaps setting= Weightless

 ------------------------------------------------------------------------------
 From B67 to B68, DY= -0.06 ft, DZ= -9.00 ft, L= 9.00 ft                    Run

 POINT DATA:
   B67, Coordinates, X= 41.43 ft, Y= 684.67 ft, Z= -228.17 ft

 SUPPORT DATA:
   B67, V-Stop, Support Id= B67  1, Connected to Ground, Comp.Wt = 0.000 lb, Gap-Below= 0.00 inch,
```

C O M P O N E N T D A T A L I S T I N G

Gap-Above= 1.00 inch, Friction= 0.80, Gaps setting= Weightless

From B68 to B69, DY= -0.06 ft, DZ= -9.00 ft, L= 9.00 ft Run

POINT DATA:
B68, Coordinates, X= 41.43 ft, Y= 684.61 ft, Z= -237.17 ft

SUPPORT DATA:
B68, V-Stop, Support Id= B68 1, Connected to Ground, Comp.Wt = 0.000 lb, Gap-Below= 0.00 inch,
Gap-Above= 1.00 inch, Friction= 0.80, Gaps setting= Weightless

From B69 to B70, DY= -0.06 ft, DZ= -9.00 ft, L= 9.00 ft Run

POINT DATA:
B69, Coordinates, X= 41.43 ft, Y= 684.55 ft, Z= -246.17 ft

SUPPORT DATA:
B69, V-Stop, Support Id= B69 1, Connected to Ground, Comp.Wt = 0.000 lb, Gap-Below= 0.00 inch,
Gap-Above= 1.00 inch, Friction= 0.80, Gaps setting= Weightless

From B70 to B71, DY= -0.06 ft, DZ= -9.00 ft, L= 9.00 ft Run

POINT DATA:
B70, Coordinates, X= 41.43 ft, Y= 684.49 ft, Z= -255.17 ft

SUPPORT DATA:
B70, V-Stop, Support Id= B70 1, Connected to Ground, Comp.Wt = 0.000 lb, Gap-Below= 0.00 inch,
Gap-Above= 1.00 inch, Friction= 0.80, Gaps setting= Weightless

From B71 to B72, DY= -0.05 ft, DZ= -9.00 ft, L= 9.00 ft Run

POINT DATA:
B71, Coordinates, X= 41.43 ft, Y= 684.43 ft, Z= -264.17 ft

SUPPORT DATA:
B71, V-Stop, Support Id= B71 1, Connected to Ground, Comp.Wt = 0.000 lb, Gap-Below= 0.00 inch,
Gap-Above= 1.00 inch, Friction= 0.80, Gaps setting= Weightless

From B72 to B73, DX= 0 ft, DY= -0.03 ft, DZ= -4.83 ft, L= 4.83 ft Run

POINT DATA:
B72, Coordinates, X= 41.43 ft, Y= 684.38 ft, Z= -273.17 ft

SUPPORT DATA:
B72, V-Stop, Support Id= B72 1, Connected to Ground, Comp.Wt = 0.000 lb, Gap-Below= 0.00 inch,
Gap-Above= 1.00 inch, Friction= 0.80, Gaps setting= Weightless

From B73 to B74, DY= -0.06 ft, DZ= -9.00 ft, L= 9.00 ft Run

C O M P O N E N T D A T A L I S T I N G

POINT DATA:
B73, Coordinates, X= 41.43 ft, Y= 684.35 ft, Z= -278.00 ft

SUPPORT DATA:
B73, V-Stop, Support Id= B73 1, Connected to Ground, Comp.Wt = 0.000 lb, Gap-Below= 0.00 inch, Gap-Above= 1.00 inch, Friction= 0.80, Gaps setting= Weightless

---

From B74 to B56, DY= -0.02 ft, DZ= -3.50 ft, L= 3.50 ft Run

POINT DATA:
B74, Coordinates, X= 41.43 ft, Y= 684.29 ft, Z= -287.00 ft

SUPPORT DATA:
B74, Guide, Support Id= B74 1, Connected to Ground, Comp.Wt = 0.000 lb, Stiffness= RIGID, Gap-Down= 0.00 inch, Gap-Above= 1.00 inch, Gap-Left= 1.00 inch, Gap-Right= 1.00 inch, Friction= 0.00, Gaps setting= Weightless

---

From B56 to B75, DX= -2.95 ft, DY= -0.03 ft, L= 2.95 ft Bend

COMPONENT DATA (Bend, TIP= B56, Near= B56 N, Far= B56 F):
Elbow, Radius= 30.00 inch, Bend angle= 90.00 deg, End flanges= 0, Flex= Auto, SIFI= 1.02, SIFO= 1.00

POINT DATA:
B56, Coordinates, X= 41.43 ft, Y= 684.27 ft, Z= -290.50 ft
B56 N, Coordinates, X= 41.43 ft, Y= 684.28 ft, Z= -288.00 ft
B56 F, Coordinates, X= 38.93 ft, Y= 684.24 ft, Z= -290.50 ft

From B75 to B20, DX= -2.94 ft, DY= -0.05 ft, L= 2.94 ft Run

POINT DATA:
B75, Coordinates, X= 38.48 ft, Y= 684.24 ft, Z= -290.50 ft

SUPPORT DATA:
B75, Guide, Support Id= B75 1, Connected to Ground, Comp.Wt = 0.000 lb, Stiffness= RIGID, Gap-Down= 0.00 inch, Gap-Above= 1.00 inch, Gap-Left= 1.00 inch, Gap-Right= 1.00 inch, Friction= 0.00, Gaps setting= Weightless

---

From B20 to B77, DY= -0.06 ft, DZ= -3.17 ft, L= 3.17 ft Bend

COMPONENT DATA (Bend, TIP= B20, Near= B20 N, Far= B20 F):
Elbow, Radius= 30.00 inch, Bend angle= 89.98 deg, End flanges= 0, Flex= Auto, SIFI= 1.02, SIFO= 1.00

POINT DATA:
B20, Coordinates, X= 35.54 ft, Y= 684.19 ft, Z= -290.50 ft
B20 N, Coordinates, X= 38.04 ft, Y= 684.23 ft, Z= -290.50 ft
B20 F, Coordinates, X= 35.54 ft, Y= 684.14 ft, Z= -293.00 ft

From B77 to B21, DY= -0.06 ft, DZ= -3.16 ft, L= 3.16 ft Run

POINT DATA:

C O M P O N E N T D A T A L I S T I N G

B77, Coordinates, X= 35.54 ft, Y= 684.13 ft, Z= -293.67 ft

SUPPORT DATA:
B77, Guide, Support Id= B77 1, Connected to Ground, Comp.Wt = 0.000 lb, Stiffness= RIGID,
Gap-Down= 0.00 inch, Gap-Above= 1.00 inch, Gap-Left= 1.00 inch, Gap-Right= 1.00 inch, Friction= 0.00,
Gaps setting= Weightless

From B21 to B76, DX= -3.00 ft, DY= -0.04 ft, L= 3.00 ft Bend

COMPONENT DATA (Bend, TIP= B21, Near= B21 N, Far= B21 F):
Elbow, Radius= 30.00 inch, Bend angle= 89.99 deg, End flanges= 0, Flex= Auto, SIFI= 1.02, SIFO= 1.00

POINT DATA:
B21, Coordinates, X= 35.54 ft, Y= 684.07 ft, Z= -296.83 ft
B21 N, Coordinates, X= 35.54 ft, Y= 684.12 ft, Z= -294.33 ft
B21 F, Coordinates, X= 33.04 ft, Y= 684.04 ft, Z= -296.83 ft

From B76 to B59, DX= -1.85 ft, DY= -0.03 ft, L= 1.85 ft Run

POINT DATA:
B76, Coordinates, X= 32.54 ft, Y= 684.03 ft, Z= -296.83 ft

SUPPORT DATA:
B76, Guide, Support Id= B76 1, Connected to Ground, Comp.Wt = 0.000 lb, Stiffness= RIGID,
Gap-Down= 0.00 inch, Gap-Above= 1.00 inch, Gap-Left= 1.00 inch, Gap-Right= 1.00 inch, Friction= 0.00,
Gaps setting= Weightless

From B59 to B60, DX= -1.00 ft Bend

COMPONENT DATA (Bend, TIP= B59, Near= B59 N, Mid= B59 M, Far= B59 F):
Elbow, Radius= 36.00 inch, Bend angle= 0.93 deg, Mid point at 50.00 percent, End flanges= 0, Flex= Auto,
SIFI= 1.00, SIFO= 1.00

POINT DATA:
B59, Coordinates, X= 30.69 ft, Y= 684.00 ft, Z= -296.83 ft
B59 N, Coordinates, X= 30.71 ft, Y= 684.00 ft, Z= -296.83 ft
B59 M, Coordinates, X= 30.69 ft, Y= 684.00 ft, Z= -296.83 ft
B59 F, Coordinates, X= 30.67 ft, Y= 684.00 ft, Z= -296.83 ft

SUPPORT DATA:
B59 M, V-Stop, Support Id= B59 M1, Connected to Ground, Comp.Wt = 0.000 lb, Gap-Below= 0.00 inch,
Gap-Above= 1.00 inch, Friction= 0.80, Gaps setting= Weightless

---

From B60 to B61, DX= -1.00 ft Run

POINT DATA:
B60, Coordinates, X= 29.69 ft, Y= 684.00 ft, Z= -296.83 ft

From B61 to B62, DX= -0.61 ft Run

C O M P O N E N T D A T A L I S T I N G

POINT DATA:
B61, Coordinates, X= 28.69 ft, Y= 684.00 ft, Z= -296.83 ft

From B62 to B63, DX= -0.25 ft Run

POINT DATA:
B62, Coordinates, X= 28.08 ft, Y= 684.00 ft, Z= -296.83 ft
B63, Coordinates, X= 27.83 ft, Y= 684.00 ft, Z= -296.83 ft

SUPPORT DATA:
B62, Anchor, Connected to: Ground, KTX= Rigid, KTY= Rigid, KTZ= Rigid, KRX= Rigid, KRY= Rigid, KRZ= Rigid

---

*** SEGMENT C

From C03 to C04, DX= 2.00 ft Run

PIPE DATA:
Pipe Id= 4SCH40, Composition= Carbon Steel, Nom Size= 4 in, OD= 4.500 inch, Wall Thk= 0.237 inch,
Mill= 0.030 inch, Pipe Density= 489.00 lb/cu.ft, Pipe Unit Wgt= 10.78 lb/ft

POINT DATA:
C03, Coordinates, X= 1.46 ft, Y= 691.07 ft, Z= 1.00 ft

SUPPORT DATA:
C03, Anchor, Connected to: Ground, KTX= Rigid, KTY= Rigid, KTZ= Rigid, KRX= Rigid, KRY= Rigid, KRZ= Rigid

---

From C04 to C21, DX= 2.50 ft Run

POINT DATA:
C04, Coordinates, X= 3.46 ft, Y= 691.07 ft, Z= 1.00 ft

From C21 to C06, DX= 0.50 ft Run

POINT DATA:
C21, Coordinates, X= 5.96 ft, Y= 691.07 ft, Z= 1.00 ft

SUPPORT DATA:
C21, V-Stop, Support Id= C21 2, Connected to Ground, Comp.Wt = 0.000 lb, Gap-Below= 0.00 inch,
Gap-Above= 1.00 inch, Friction= 0.80, Gaps setting= Weightless

---

From C06 to C22, DX= 10.49 ft, DY= -0.85 ft, L= 10.52 ft Bend

COMPONENT DATA (Bend, TIP= C06, Near= C06 N, Far= C06 F):
Elbow, Radius= 36.00 inch, Bend angle= 4.63 deg, End flanges= 0, Flex= Auto, SIFI= 1.00, SIFO= 1.00

POINT DATA:
C06, Coordinates, X= 6.46 ft, Y= 691.07 ft, Z= 1.00 ft
C06 N, Coordinates, X= 6.34 ft, Y= 691.07 ft, Z= 1.00 ft

C O M P O N E N T D A T A L I S T I N G

C06 F, Coordinates, X= 6.58 ft, Y= 691.06 ft, Z= 1.00 ft

From C22 to C23, DX= 6.99 ft, DY= -0.57 ft, L= 7.01 ft Run

POINT DATA:
C22, Coordinates, X= 16.95 ft, Y= 690.22 ft, Z= 1.00 ft

SUPPORT DATA:
C22, V-Stop, Support Id= C22 2, Connected to Ground, Comp.Wt = 0.000 lb, Gap-Below= 0.00 inch,
Gap-Above= 1.00 inch, Friction= 0.80, Gaps setting= Weightless

---

From C23 to C09, DX= 3.49 ft, DY= -0.28 ft, L= 3.50 ft Run

POINT DATA:
C23, Coordinates, X= 23.94 ft, Y= 689.65 ft, Z= 1.00 ft

SUPPORT DATA:
C23, Guide, Support Id= C23 2, Connected to Ground, Comp.Wt = 0.000 lb, Stiffness= RIGID,
Gap-Down= 0.00 inch, Gap-Above= 1.00 inch, Gap-Left= 1.00 inch, Gap-Right= 1.00 inch, Friction= 0.00,
Gaps setting= Weightless

From C09 to C24, DY= -0.10 ft, DZ= -3.50 ft, L= 3.50 ft Bend

COMPONENT DATA (Bend, TIP= C09, Near= C09 N, Far= C09 F):
Elbow, Radius= 36.00 inch, Bend angle= 89.87 deg, End flanges= 0, Flex= Auto, SIFI= 1.00, SIFO= 1.00

POINT DATA:
C09, Coordinates, X= 27.43 ft, Y= 689.37 ft, Z= 1.00 ft
C09 N, Coordinates, X= 24.45 ft, Y= 689.61 ft, Z= 1.00 ft
C09 F, Coordinates, X= 27.43 ft, Y= 689.28 ft, Z= -1.99 ft

From C24 to C25, DY= -0.26 ft, DZ= -9.00 ft, L= 9.00 ft Run

POINT DATA:
C24, Coordinates, X= 27.43 ft, Y= 689.27 ft, Z= -2.50 ft

SUPPORT DATA:
C24, Guide, Support Id= C24 2, Connected to Ground, Comp.Wt = 0.000 lb, Stiffness= RIGID,
Gap-Down= 0.00 inch, Gap-Above= 1.00 inch, Gap-Left= 1.00 inch, Gap-Right= 1.00 inch, Friction= 0.00,
Gaps setting= Weightless

From C25 to C26, DY= -0.26 ft, DZ= -9.00 ft, L= 9.00 ft Run

POINT DATA:
C25, Coordinates, X= 27.43 ft, Y= 689.01 ft, Z= -11.50 ft

SUPPORT DATA:
C25, V-Stop, Support Id= C25 2, Connected to Ground, Comp.Wt = 0.000 lb, Gap-Below= 0.00 inch,
Gap-Above= 1.00 inch, Friction= 0.80, Gaps setting= Weightless

C O M P O N E N T D A T A L I S T I N G

From C26 to C28, DY= -0.26 ft, DZ= -9.00 ft, L= 9.00 ft Run

POINT DATA:
C26, Coordinates, X= 27.43 ft, Y= 688.75 ft, Z= -20.50 ft

SUPPORT DATA:
C26, V-Stop, Support Id= C26 2, Connected to Ground, Comp.Wt = 0.000 lb, Gap-Below= 0.00 inch,
Gap-Above= 1.00 inch, Friction= 0.80, Gaps setting= Weightless

From C28 to C29, DY= -0.27 ft, DZ= -9.00 ft, L= 9.00 ft Run

POINT DATA:
C28, Coordinates, X= 27.43 ft, Y= 688.49 ft, Z= -29.50 ft

SUPPORT DATA:
C28, V-Stop, Support Id= C28 2, Connected to Ground, Comp.Wt = 0.000 lb, Gap-Below= 0.00 inch,
Gap-Above= 1.00 inch, Friction= 0.80, Gaps setting= Weightless

From C29 to C31, DY= -0.31 ft, DZ= -10.50 ft, L= 10.50 ft Run

POINT DATA:
C29, Coordinates, X= 27.43 ft, Y= 688.22 ft, Z= -38.50 ft

SUPPORT DATA:
C29, V-Stop, Support Id= C29 2, Connected to Ground, Comp.Wt = 0.000 lb, Gap-Below= 0.00 inch,
Gap-Above= 1.00 inch, Friction= 0.80, Gaps setting= Weightless

From C31 to C16, DY= -0.10 ft, DZ= -3.50 ft, L= 3.50 ft Run

POINT DATA:
C31, Coordinates, X= 27.43 ft, Y= 687.91 ft, Z= -49.00 ft

SUPPORT DATA:
C31, Guide, Support Id= C31 2, Connected to Ground, Comp.Wt = 0.000 lb, Stiffness= RIGID,
Gap-Down= 0.00 inch, Gap-Above= 1.00 inch, Gap-Left= 1.00 inch, Gap-Right= 1.00 inch, Friction= 0.00,
Gaps setting= Weightless

From C16 to C32, DX= 3.50 ft, DY= -0.08 ft, L= 3.50 ft Bend

COMPONENT DATA (Bend, TIP= C16, Near= C16 N, Far= C16 F):
Elbow, Radius= 36.00 inch, Bend angle= 89.96 deg, End flanges= 0, Flex= Auto, SIFI= 1.00, SIFO= 1.00

POINT DATA:
C16, Coordinates, X= 27.43 ft, Y= 687.81 ft, Z= -52.50 ft
C16 N, Coordinates, X= 27.43 ft, Y= 687.90 ft, Z= -49.50 ft
C16 F, Coordinates, X= 30.43 ft, Y= 687.74 ft, Z= -52.50 ft

From C32 to C33, DX= 2.76 ft, DY= -0.07 ft, L= 2.76 ft Run

C O M P O N E N T D A T A L I S T I N G

```
 POINT DATA:
   C32, Coordinates, X= 30.93 ft, Y= 687.73 ft, Z= -52.50 ft

 SUPPORT DATA:
   C32, Guide, Support Id= C32  2, Connected to Ground, Comp.Wt = 0.000 lb, Stiffness= RIGID,
   Gap-Down= 0.00 inch, Gap-Above= 1.00 inch, Gap-Left= 1.00 inch, Gap-Right= 1.00 inch, Friction= 0.00,
   Gaps setting= Weightless

 ------------------------------------------------------------------------------
 From C33 to C19, DX= 3.50 ft, DY= -0.08 ft, L= 3.50 ft                    Run

 POINT DATA:
   C33, Coordinates, X= 33.69 ft, Y= 687.66 ft, Z= -52.50 ft

 SUPPORT DATA:
   C33, Guide, Support Id= C33  2, Connected to Ground, Comp.Wt = 0.000 lb, Stiffness= RIGID,
   Gap-Down= 0.00 inch, Gap-Above= 1.00 inch, Gap-Left= 1.00 inch, Gap-Right= 1.00 inch, Friction= 0.00,
   Gaps setting= Weightless

 ------------------------------------------------------------------------------
 From C19 to C34, DY= -0.10 ft, DZ= -3.50 ft, L= 3.50 ft                   Bend

 COMPONENT DATA (Bend, TIP= C19, Near= C19 N, Far= C19 F):
   Elbow, Radius= 36.00 inch, Bend angle= 89.96 deg, End flanges= 0, Flex= Auto, SIFI= 1.00, SIFO= 1.00

 POINT DATA:
   C19, Coordinates, X= 37.19 ft, Y= 687.58 ft, Z= -52.50 ft
   C19 N, Coordinates, X= 34.19 ft, Y= 687.65 ft, Z= -52.50 ft
   C19 F, Coordinates, X= 37.19 ft, Y= 687.49 ft, Z= -55.50 ft

 ------------------------------------------------------------------------------
 From C34 to C35, DY= -0.26 ft, DZ= -9.00 ft, L= 9.00 ft                   Run

 POINT DATA:
   C34, Coordinates, X= 37.19 ft, Y= 687.48 ft, Z= -56.00 ft

 SUPPORT DATA:
   C34, Guide, Support Id= C34  2, Connected to Ground, Comp.Wt = 0.000 lb, Stiffness= RIGID,
   Gap-Down= 0.00 inch, Gap-Above= 1.00 inch, Gap-Left= 1.00 inch, Gap-Right= 1.00 inch, Friction= 0.00,
   Gaps setting= Weightless

 ------------------------------------------------------------------------------
 From C35 to C36, DY= -0.26 ft, DZ= -9.00 ft, L= 9.00 ft                   Run

 POINT DATA:
   C35, Coordinates, X= 37.19 ft, Y= 687.22 ft, Z= -65.00 ft

 SUPPORT DATA:
   C35, V-Stop, Support Id= C35  2, Connected to Ground, Comp.Wt = 0.000 lb, Gap-Below= 0.00 inch,
   Gap-Above= 1.00 inch, Friction= 0.80, Gaps setting= Weightless

 ------------------------------------------------------------------------------
 From C36 to C37, DY= -0.26 ft, DZ= -9.00 ft, L= 9.00 ft                   Run

 POINT DATA:
```

C O M P O N E N T D A T A L I S T I N G

C36, Coordinates, X= 37.19 ft, Y= 686.96 ft, Z= -74.00 ft

SUPPORT DATA:
C36, V-Stop, Support Id= C36 2, Connected to Ground, Comp.Wt = 0.000 lb, Gap-Below= 0.00 inch,
Gap-Above= 1.00 inch, Friction= 0.80, Gaps setting= Weightless

---

From C37 to C38, DY= -0.26 ft, DZ= -9.00 ft, L= 9.00 ft Run

POINT DATA:
C37, Coordinates, X= 37.19 ft, Y= 686.70 ft, Z= -83.00 ft

SUPPORT DATA:
C37, V-Stop, Support Id= C37 2, Connected to Ground, Comp.Wt = 0.000 lb, Gap-Below= 0.00 inch,
Gap-Above= 1.00 inch, Friction= 0.80, Gaps setting= Weightless

---

From C38 to C39, DY= -0.15 ft, DZ= -5.01 ft, L= 5.01 ft Run

POINT DATA:
C38, Coordinates, X= 37.19 ft, Y= 686.44 ft, Z= -92.00 ft

SUPPORT DATA:
C38, V-Stop, Support Id= C38 2, Connected to Ground, Comp.Wt = 0.000 lb, Gap-Below= 0.00 inch,
Gap-Above= 1.00 inch, Friction= 0.80, Gaps setting= Weightless

---

From C39 to C40, DY= -0.27 ft, DZ= -8.99 ft, L= 8.99 ft Run

POINT DATA:
C39, Coordinates, X= 37.19 ft, Y= 686.29 ft, Z= -97.01 ft

SUPPORT DATA:
C39, V-Stop, Support Id= C39 2, Connected to Ground, Comp.Wt = 0.000 lb, Gap-Below= 0.00 inch,
Gap-Above= 1.00 inch, Friction= 0.80, Gaps setting= Weightless

---

From C40 to C27, DY= -0.10 ft, DZ= -3.50 ft, L= 3.50 ft Run

POINT DATA:
C40, Coordinates, X= 37.19 ft, Y= 686.02 ft, Z= -106.00 ft

SUPPORT DATA:
C40, Guide, Support Id= C40 2, Connected to Ground, Comp.Wt = 0.000 lb, Stiffness= RIGID,
Gap-Down= 0.00 inch, Gap-Above= 1.00 inch, Gap-Left= 1.00 inch, Gap-Right= 1.00 inch, Friction= 0.00,
Gaps setting= Weightless

From C27 to C42, DX= -3.50 ft, DY= -0.09 ft, L= 3.50 ft Bend

COMPONENT DATA (Bend, TIP= C27, Near= C27 N, Far= C27 F):
Elbow, Radius= 36.00 inch, Bend angle= 89.96 deg, End flanges= 0, Flex= Auto, SIFI= 1.00, SIFO= 1.00

POINT DATA:
C27, Coordinates, X= 37.19 ft, Y= 685.92 ft, Z= -109.50 ft

C O M P O N E N T D A T A L I S T I N G

C27 N, Coordinates, X= 37.19 ft, Y= 686.01 ft, Z= -106.50 ft
C27 F, Coordinates, X= 34.19 ft, Y= 685.84 ft, Z= -109.50 ft

From C42 to C43, DX= -4.00 ft, DY= -0.10 ft, L= 4.00 ft Run

POINT DATA:
C42, Coordinates, X= 33.69 ft, Y= 685.83 ft, Z= -109.50 ft

SUPPORT DATA:
C42, Guide, Support Id= C42 2, Connected to Ground, Comp.Wt = 0.000 lb, Stiffness= RIGID,
Gap-Down= 0.00 inch, Gap-Above= 1.00 inch, Gap-Left= 1.00 inch, Gap-Right= 1.00 inch, Friction= 0.00,
Gaps setting= Weightless

From C43 to C30, DX= -3.50 ft, DY= -0.09 ft, L= 3.50 ft Run

POINT DATA:
C43, Coordinates, X= 29.69 ft, Y= 685.73 ft, Z= -109.50 ft

SUPPORT DATA:
C43, Guide, Support Id= C43 2, Connected to Ground, Comp.Wt = 0.000 lb, Stiffness= RIGID,
Gap-Down= 0.00 inch, Gap-Above= 1.00 inch, Gap-Left= 1.00 inch, Gap-Right= 1.00 inch, Friction= 0.00,
Gaps setting= Weightless

From C30 to C45, DY= -0.03 ft, DZ= -3.50 ft, L= 3.50 ft Bend

COMPONENT DATA (Bend, TIP= C30, Near= C30 N, Far= C30 F):
Elbow, Radius= 36.00 inch, Bend angle= 89.99 deg, End flanges= 0, Flex= Auto, SIFI= 1.00, SIFO= 1.00

POINT DATA:
C30, Coordinates, X= 26.19 ft, Y= 685.64 ft, Z= -109.50 ft
C30 N, Coordinates, X= 29.19 ft, Y= 685.72 ft, Z= -109.50 ft
C30 F, Coordinates, X= 26.19 ft, Y= 685.61 ft, Z= -112.50 ft

From C45 to C46, DY= -0.07 ft, DZ= -9.00 ft, L= 9.00 ft Run

POINT DATA:
C45, Coordinates, X= 26.19 ft, Y= 685.61 ft, Z= -113.00 ft

SUPPORT DATA:
C45, Guide, Support Id= C45 2, Connected to Ground, Comp.Wt = 0.000 lb, Stiffness= RIGID,
Gap-Down= 0.00 inch, Gap-Above= 1.00 inch, Gap-Left= 1.00 inch, Gap-Right= 1.00 inch, Friction= 0.00,
Gaps setting= Weightless

From C46 to C47, DY= -0.07 ft, DZ= -9.00 ft, L= 9.00 ft Run

POINT DATA:
C46, Coordinates, X= 26.19 ft, Y= 685.54 ft, Z= -122.00 ft

SUPPORT DATA:
C46, V-Stop, Support Id= C46 2, Connected to Ground, Comp.Wt = 0.000 lb, Gap-Below= 0.00 inch,

C O M P O N E N T D A T A L I S T I N G

Gap-Above= 1.00 inch, Friction= 0.80, Gaps setting= Weightless

From C47 to C48, DY= -0.07 ft, DZ= -9.00 ft, L= 9.00 ft Run

POINT DATA:
C47, Coordinates, X= 26.19 ft, Y= 685.47 ft, Z= -131.00 ft

SUPPORT DATA:
C47, V-Stop, Support Id= C47 2, Connected to Ground, Comp.Wt = 0.000 lb, Gap-Below= 0.00 inch,
Gap-Above= 1.00 inch, Friction= 0.80, Gaps setting= Weightless

From C48 to C49, DY= -0.07 ft, DZ= -9.00 ft, L= 9.00 ft Run

POINT DATA:
C48, Coordinates, X= 26.19 ft, Y= 685.40 ft, Z= -140.00 ft

SUPPORT DATA:
C48, V-Stop, Support Id= C48 2, Connected to Ground, Comp.Wt = 0.000 lb, Gap-Below= 0.00 inch,
Gap-Above= 1.00 inch, Friction= 0.80, Gaps setting= Weightless

From C49 to C50, DY= -0.07 ft, DZ= -9.00 ft, L= 9.00 ft Run

POINT DATA:
C49, Coordinates, X= 26.19 ft, Y= 685.33 ft, Z= -149.00 ft

SUPPORT DATA:
C49, V-Stop, Support Id= C49 2, Connected to Ground, Comp.Wt = 0.000 lb, Gap-Below= 0.00 inch,
Gap-Above= 1.00 inch, Friction= 0.80, Gaps setting= Weightless

From C50 to C51, DY= -0.07 ft, DZ= -9.00 ft, L= 9.00 ft Run

POINT DATA:
C50, Coordinates, X= 26.19 ft, Y= 685.26 ft, Z= -158.00 ft

SUPPORT DATA:
C50, V-Stop, Support Id= C50 2, Connected to Ground, Comp.Wt = 0.000 lb, Gap-Below= 0.00 inch,
Gap-Above= 1.00 inch, Friction= 0.80, Gaps setting= Weightless

From C51 to C52, DY= -0.08 ft, DZ= -9.00 ft, L= 9.00 ft Run

POINT DATA:
C51, Coordinates, X= 26.19 ft, Y= 685.19 ft, Z= -167.00 ft

SUPPORT DATA:
C51, V-Stop, Support Id= C51 2, Connected to Ground, Comp.Wt = 0.000 lb, Gap-Below= 0.00 inch,
Gap-Above= 1.00 inch, Friction= 0.80, Gaps setting= Weightless

From C52 to C53, DY= -0.07 ft, DZ= -9.00 ft, L= 9.00 ft Run

C O M P O N E N T D A T A L I S T I N G

POINT DATA:
C52, Coordinates, X= 26.19 ft, Y= 685.11 ft, Z= -176.00 ft

SUPPORT DATA:
C52, V-Stop, Support Id= C52 2, Connected to Ground, Comp.Wt = 0.000 lb, Gap-Below= 0.00 inch, Gap-Above= 1.00 inch, Friction= 0.80, Gaps setting= Weightless

---

From C53 to C55, DX= 0 ft, DY= -0.09 ft, DZ= -10.50 ft, L= 10.50 ft Run

POINT DATA:
C53, Coordinates, X= 26.19 ft, Y= 685.04 ft, Z= -185.00 ft

SUPPORT DATA:
C53, V-Stop, Support Id= C53 2, Connected to Ground, Comp.Wt = 0.000 lb, Gap-Below= 0.00 inch, Gap-Above= 1.00 inch, Friction= 0.80, Gaps setting= Weightless

---

From C55 to C41, DY= -0.03 ft, DZ= -3.50 ft, L= 3.50 ft Run

POINT DATA:
C55, Coordinates, X= 26.19 ft, Y= 684.95 ft, Z= -195.50 ft

SUPPORT DATA:
C55, Guide, Support Id= C55 2, Connected to Ground, Comp.Wt = 0.000 lb, Stiffness= RIGID, Gap-Down= 0.00 inch, Gap-Above= 1.00 inch, Gap-Left= 1.00 inch, Gap-Right= 1.00 inch, Friction= 0.00, Gaps setting= Weightless

---

From C41 to C56, DX= 3.50 ft, DY= -0.03 ft, L= 3.50 ft Bend

COMPONENT DATA (Bend, TIP= C41, Near= C41 N, Far= C41 F):
Elbow, Radius= 36.00 inch, Bend angle= 90.00 deg, End flanges= 0, Flex= Auto, SIFI= 1.00, SIFO= 1.00

POINT DATA:
C41, Coordinates, X= 26.19 ft, Y= 684.92 ft, Z= -199.00 ft
C41 N, Coordinates, X= 26.19 ft, Y= 684.95 ft, Z= -196.00 ft
C41 F, Coordinates, X= 29.19 ft, Y= 684.89 ft, Z= -199.00 ft

From C56 to C57, DX= 6.91 ft, DY= -0.05 ft, L= 6.91 ft Run

POINT DATA:
C56, Coordinates, X= 29.69 ft, Y= 684.89 ft, Z= -199.00 ft

SUPPORT DATA:
C56, Guide, Support Id= C56 2, Connected to Ground, Comp.Wt = 0.000 lb, Stiffness= RIGID, Gap-Down= 0.00 inch, Gap-Above= 1.00 inch, Gap-Left= 1.00 inch, Gap-Right= 1.00 inch, Friction= 0.00, Gaps setting= Weightless

---

From C57 to C44, DX= 3.50 ft, DY= -0.02 ft, L= 3.50 ft Run

POINT DATA:
C57, Coordinates, X= 36.60 ft, Y= 684.84 ft, Z= -199.00 ft

C O M P O N E N T D A T A L I S T I N G

SUPPORT DATA:
C57, Guide, Support Id= C57 2, Connected to Ground, Comp.Wt = 0.000 lb, Stiffness= RIGID,
Gap-Down= 0.00 inch, Gap-Above= 1.00 inch, Gap-Left= 1.00 inch, Gap-Right= 1.00 inch, Friction= 0.00,
Gaps setting= Weightless

From C44 to C58, DY= -0.03 ft, DZ= -3.50 ft, L= 3.50 ft Bend

COMPONENT DATA (Bend, TIP= C44, Near= C44 N, Far= C44 F):
Elbow, Radius= 36.00 inch, Bend angle= 90.00 deg, End flanges= 0, Flex= Auto, SIFI= 1.00, SIFO= 1.00

POINT DATA:
C44, Coordinates, X= 40.10 ft, Y= 684.82 ft, Z= -199.00 ft
C44 N, Coordinates, X= 37.10 ft, Y= 684.84 ft, Z= -199.00 ft
C44 F, Coordinates, X= 40.10 ft, Y= 684.79 ft, Z= -202.00 ft

From C58 to C59, DY= -0.07 ft, DZ= -9.00 ft, L= 9.00 ft Run

POINT DATA:
C58, Coordinates, X= 40.10 ft, Y= 684.79 ft, Z= -202.50 ft

SUPPORT DATA:
C58, Guide, Support Id= C58 2, Connected to Ground, Comp.Wt = 0.000 lb, Stiffness= RIGID,
Gap-Down= 0.00 inch, Gap-Above= 1.00 inch, Gap-Left= 1.00 inch, Gap-Right= 1.00 inch, Friction= 0.00,
Gaps setting= Weightless

From C59 to C60, DY= -0.07 ft, DZ= -9.00 ft, L= 9.00 ft Run

POINT DATA:
C59, Coordinates, X= 40.10 ft, Y= 684.72 ft, Z= -211.50 ft

SUPPORT DATA:
C59, V-Stop, Support Id= C59 2, Connected to Ground, Comp.Wt = 0.000 lb, Gap-Below= 0.00 inch,
Gap-Above= 1.00 inch, Friction= 0.80, Gaps setting= Weightless

---
From C60 to C61, DY= -0.07 ft, DZ= -9.00 ft, L= 9.00 ft Run

POINT DATA:
C60, Coordinates, X= 40.10 ft, Y= 684.65 ft, Z= -220.50 ft

SUPPORT DATA:
C60, V-Stop, Support Id= C60 2, Connected to Ground, Comp.Wt = 0.000 lb, Gap-Below= 0.00 inch,
Gap-Above= 1.00 inch, Friction= 0.80, Gaps setting= Weightless

---
From C61 to C63, DY= -0.06 ft, DZ= -9.00 ft, L= 9.00 ft Run

POINT DATA:
C61, Coordinates, X= 40.10 ft, Y= 684.58 ft, Z= -229.50 ft

SUPPORT DATA:
C61, V-Stop, Support Id= C61 1, Connected to Ground, Comp.Wt = 0.000 lb, Gap-Below= 0.00 inch,

C O M P O N E N T D A T A L I S T I N G

Gap-Above= 1.00 inch, Friction= 0.80, Gaps setting= Weightless

From C63 to C64, DY= -0.07 ft, DZ= -9.00 ft, L= 9.00 ft Run

POINT DATA:
C63, Coordinates, X= 40.10 ft, Y= 684.52 ft, Z= -238.50 ft

SUPPORT DATA:
C63, V-Stop, Support Id= C63 1, Connected to Ground, Comp.Wt = 0.000 lb, Gap-Below= 0.00 inch,
Gap-Above= 1.00 inch, Friction= 0.80, Gaps setting= Weightless

From C64 to C65, DY= -0.06 ft, DZ= -9.00 ft, L= 9.00 ft Run

POINT DATA:
C64, Coordinates, X= 40.10 ft, Y= 684.45 ft, Z= -247.50 ft

SUPPORT DATA:
C64, V-Stop, Support Id= C64 2, Connected to Ground, Comp.Wt = 0.000 lb, Gap-Below= 0.00 inch,
Gap-Above= 1.00 inch, Friction= 0.80, Gaps setting= Weightless

From C65 to C72, DY= -0.07 ft, DZ= -9.00 ft, L= 9.00 ft Run

POINT DATA:
C65, Coordinates, X= 40.10 ft, Y= 684.39 ft, Z= -256.50 ft

SUPPORT DATA:
C65, V-Stop, Support Id= C65 1, Connected to Ground, Comp.Wt = 0.000 lb, Gap-Below= 0.00 inch,
Gap-Above= 1.00 inch, Friction= 0.80, Gaps setting= Weightless

From C72 to C73, DX= 0 ft, DY= -0.08 ft, DZ= -10.74 ft, L= 10.74 ft Run

POINT DATA:
C72, Coordinates, X= 40.10 ft, Y= 684.32 ft, Z= -265.50 ft

SUPPORT DATA:
C72, V-Stop, Support Id= C72 1, Connected to Ground, Comp.Wt = 0.000 lb, Gap-Below= 0.00 inch,
Gap-Above= 1.00 inch, Friction= 0.80, Gaps setting= Weightless

From C73 to C54, DY= -0.02 ft, DZ= -3.50 ft, L= 3.50 ft Run

POINT DATA:
C73, Coordinates, X= 40.10 ft, Y= 684.24 ft, Z= -276.24 ft

SUPPORT DATA:
C73, Guide, Support Id= C73 1, Connected to Ground, Comp.Wt = 0.000 lb, Stiffness= RIGID,
Gap-Down= 0.00 inch, Gap-Above= 1.00 inch, Gap-Left= 1.00 inch, Gap-Right= 1.00 inch, Friction= 0.00,
Gaps setting= Weightless

From C54 to C74, DX= -3.50 ft, DY= -0.03 ft, L= 3.50 ft Bend

C O M P O N E N T D A T A L I S T I N G

```
 COMPONENT DATA (Bend, TIP= C54, Near= C54 N, Far= C54 F):
   Elbow, Radius= 36.00 inch, Bend angle= 90.00 deg, End flanges= 0, Flex= Auto, SIFI= 1.00, SIFO= 1.00

 POINT DATA:
   C54, Coordinates, X= 40.10 ft, Y= 684.22 ft, Z= -279.74 ft
   C54 N, Coordinates, X= 40.10 ft, Y= 684.24 ft, Z= -276.74 ft
   C54 F, Coordinates, X= 37.10 ft, Y= 684.19 ft, Z= -279.74 ft

 ------------------------------------------------------------------------------
 From C74 to C75, DX= -9.00 ft, DY= -0.07 ft, L= 9.00 ft                    Run

 POINT DATA:
   C74, Coordinates, X= 36.60 ft, Y= 684.19 ft, Z= -279.74 ft

 SUPPORT DATA:
   C74, Guide, Support Id= C74  1, Connected to Ground, Comp.Wt = 0.000 lb, Stiffness= RIGID,
   Gap-Down= 0.00 inch, Gap-Above= 1.00 inch, Gap-Left= 1.00 inch, Gap-Right= 1.00 inch, Friction= 0.00,
   Gaps setting= Weightless

 ------------------------------------------------------------------------------
 From C75 to C76, DX= -9.00 ft, DY= -0.07 ft, L= 9.00 ft                    Run

 POINT DATA:
   C75, Coordinates, X= 27.60 ft, Y= 684.12 ft, Z= -279.74 ft

 SUPPORT DATA:
   C75, V-Stop, Support Id= C75  1, Connected to Ground, Comp.Wt = 0.000 lb, Gap-Below= 0.00 inch,
   Gap-Above= 1.00 inch, Friction= 0.80, Gaps setting= Weightless

 ------------------------------------------------------------------------------
 From C76 to C77, DX= -9.00 ft, DY= -0.06 ft, L= 9.00 ft                    Run

 POINT DATA:
   C76, Coordinates, X= 18.60 ft, Y= 684.05 ft, Z= -279.74 ft

 SUPPORT DATA:
   C76, V-Stop, Support Id= C76  1, Connected to Ground, Comp.Wt = 0.000 lb, Gap-Below= 0.00 inch,
   Gap-Above= 1.00 inch, Friction= 0.80, Gaps setting= Weightless

 ------------------------------------------------------------------------------
 From C77 to C78, DX= -9.00 ft, DY= -0.07 ft, L= 9.00 ft                    Run

 POINT DATA:
   C77, Coordinates, X= 9.60 ft, Y= 683.99 ft, Z= -279.74 ft

 SUPPORT DATA:
   C77, V-Stop, Support Id= C77  1, Connected to Ground, Comp.Wt = 0.000 lb, Gap-Below= 0.00 inch,
   Gap-Above= 1.00 inch, Friction= 0.80, Gaps setting= Weightless

 ------------------------------------------------------------------------------
 From C78 to C79, DX= -8.78 ft, DY= -0.06 ft, L= 8.78 ft                    Run

 POINT DATA:
   C78, Coordinates, X= 0.60 ft, Y= 683.92 ft, Z= -279.74 ft
```

C O M P O N E N T D A T A L I S T I N G

```
 SUPPORT DATA:
   C78, V-Stop, Support Id= C78  1, Connected to Ground, Comp.Wt = 0.000 lb, Gap-Below= 0.00 inch,
   Gap-Above= 1.00 inch, Friction= 0.80, Gaps setting= Weightless

 ------------------------------------------------------------------------------
 From C79 to C80, DX= -9.00 ft, DY= -0.06 ft, L= 9.00 ft                    Run

 POINT DATA:
   C79, Coordinates, X= -8.18 ft, Y= 683.86 ft, Z= -279.74 ft

 SUPPORT DATA:
   C79, V-Stop, Support Id= C79  1, Connected to Ground, Comp.Wt = 0.000 lb, Gap-Below= 0.00 inch,
   Gap-Above= 1.00 inch, Friction= 0.80, Gaps setting= Weightless

 ------------------------------------------------------------------------------
 From C80 to C62, DX= -3.50 ft, DY= -0.03 ft, L= 3.50 ft                    Run

 POINT DATA:
   C80, Coordinates, X= -17.18 ft, Y= 683.80 ft, Z= -279.74 ft

 SUPPORT DATA:
   C80, Guide, Support Id= C80  1, Connected to Ground, Comp.Wt = 0.000 lb, Stiffness= RIGID,
   Gap-Down= 0.00 inch, Gap-Above= 1.00 inch, Gap-Left= 1.00 inch, Gap-Right= 1.00 inch, Friction= 0.00,
   Gaps setting= Weightless

 ------------------------------------------------------------------------------
 From C62 to C82, DY= -0.03 ft, DZ= -3.50 ft, L= 3.50 ft                    Bend

 COMPONENT DATA (Bend, TIP= C62, Near= C62 N, Far= C62 F):
   Elbow, Radius= 36.00 inch, Bend angle= 90.00 deg, End flanges= 0, Flex= Auto, SIFI= 1.00, SIFO= 1.00

 POINT DATA:
   C62, Coordinates, X= -20.68 ft, Y= 683.77 ft, Z= -279.74 ft
   C62 N, Coordinates, X= -17.68 ft, Y= 683.80 ft, Z= -279.74 ft
   C62 F, Coordinates, X= -20.68 ft, Y= 683.74 ft, Z= -282.74 ft

 ------------------------------------------------------------------------------
 From C82 to C81, DY= -0.05 ft, DZ= -5.84 ft, L= 5.84 ft                    Run

 POINT DATA:
   C82, Coordinates, X= -20.68 ft, Y= 683.74 ft, Z= -283.24 ft

 SUPPORT DATA:
   C82, Guide, Support Id= C82  1, Connected to Ground, Comp.Wt = 0.000 lb, Stiffness= RIGID,
   Gap-Down= 0.00 inch, Gap-Above= 1.00 inch, Gap-Left= 1.00 inch, Gap-Right= 1.00 inch, Friction= 0.00,
   Gaps setting= Weightless

 ------------------------------------------------------------------------------
 From C81 to C83, DY= -0.04 ft, DZ= -5.83 ft, L= 5.83 ft                    Run

 POINT DATA:
   C81, Coordinates, X= -20.68 ft, Y= 683.69 ft, Z= -289.08 ft

 SUPPORT DATA:
   C81, V-Stop, Support Id= C81  1, Connected to Ground, Comp.Wt = 0.000 lb, Gap-Below= 0.00 inch,
```

C O M P O N E N T D A T A L I S T I N G

Gap-Above= 1.00 inch, Friction= 0.80, Gaps setting= Weightless

From C83 to C66, DY= -0.03 ft, DZ= -3.50 ft, L= 3.50 ft Run

POINT DATA:
C83, Coordinates, X= -20.68 ft, Y= 683.65 ft, Z= -294.91 ft

SUPPORT DATA:
C83, Guide, Support Id= C83 1, Connected to Ground, Comp.Wt = 0.000 lb, Stiffness= RIGID,
Gap-Down= 0.00 inch, Gap-Above= 1.00 inch, Gap-Left= 1.00 inch, Gap-Right= 1.00 inch, Friction= 0.00,
Gaps setting= Weightless

From C66 to C84, DX= 3.50 ft, DY= -0.07 ft, L= 3.50 ft Bend

COMPONENT DATA (Bend, TIP= C66, Near= C66 N, Far= C66 F):
Elbow, Radius= 36.00 inch, Bend angle= 89.99 deg, End flanges= 0, Flex= Auto, SIFI= 1.00, SIFO= 1.00

POINT DATA:
C66, Coordinates, X= -20.68 ft, Y= 683.62 ft, Z= -298.41 ft
C66 N, Coordinates, X= -20.68 ft, Y= 683.65 ft, Z= -295.41 ft
C66 F, Coordinates, X= -17.68 ft, Y= 683.56 ft, Z= -298.41 ft

From C84 to C67, DX= 1.80 ft, DY= -0.03 ft, L= 1.80 ft Run

POINT DATA:
C84, Coordinates, X= -17.18 ft, Y= 683.55 ft, Z= -298.41 ft

SUPPORT DATA:
C84, Guide, Support Id= C84 1, Connected to Ground, Comp.Wt = 0.000 lb, Stiffness= RIGID,
Gap-Down= 0.00 inch, Gap-Above= 1.00 inch, Gap-Left= 1.00 inch, Gap-Right= 1.00 inch, Friction= 0.00,
Gaps setting= Weightless

From C67 to C68, DX= 1.00 ft Bend

COMPONENT DATA (Bend, TIP= C67, Near= C67 N, Mid= C67 M, Far= C67 F):
Elbow, Radius= 36.00 inch, Bend angle= 0.96 deg, Mid point at 50.00 percent, End flanges= 0, Flex= Auto,
SIFI= 1.00, SIFO= 1.00

POINT DATA:
C67, Coordinates, X= -15.38 ft, Y= 683.52 ft, Z= -298.41 ft
C67 N, Coordinates, X= -15.40 ft, Y= 683.52 ft, Z= -298.41 ft
C67 M, Coordinates, X= -15.38 ft, Y= 683.52 ft, Z= -298.41 ft
C67 F, Coordinates, X= -15.36 ft, Y= 683.52 ft, Z= -298.41 ft

From C68 to C69, DX= 1.00 ft Run

POINT DATA:
C68, Coordinates, X= -14.38 ft, Y= 683.52 ft, Z= -298.41 ft

C O M P O N E N T D A T A L I S T I N G

From C69 to C70, DX= 0.55 ft Run

POINT DATA:
C69, Coordinates, X= -13.38 ft, Y= 683.52 ft, Z= -298.41 ft

From C70 to C71, DX= 0.19 ft Run

POINT DATA:
C70, Coordinates, X= -12.83 ft, Y= 683.52 ft, Z= -298.41 ft
C71, Coordinates, X= -12.64 ft, Y= 683.52 ft, Z= -298.41 ft

SUPPORT DATA:
C70, Anchor, Connected to: Ground, KTX= Rigid, KTY= Rigid, KTZ= Rigid, KRX= Rigid, KRY= Rigid, KRZ= Rigid

---

*** SEGMENT D

From D00 to D01, DZ= -0.19 ft Run

PIPE DATA:
Pipe Id= 4SCH40, Composition= Carbon Steel, Pipe Density= 489.00 lb/cu.ft, Pipe Unit Wgt= 10.78 lb/ft

POINT DATA:
D00, Coordinates, X= -10.49 ft, Y= 683.52 ft, Z= -303.06 ft

From D01 to D02, DZ= -0.55 ft Run

POINT DATA:
D01, Coordinates, X= -10.49 ft, Y= 683.52 ft, Z= -303.25 ft

SUPPORT DATA:
D01, Anchor, Connected to: Ground, KTX= Rigid, KTY= Rigid, KTZ= Rigid, KRX= Rigid, KRY= Rigid, KRZ= Rigid

---

From D02 to D03, DZ= -1.00 ft Run

POINT DATA:
D02, Coordinates, X= -10.49 ft, Y= 683.52 ft, Z= -303.80 ft

From D03 to D04, DZ= -3.00 ft Run

POINT DATA:
D03, Coordinates, X= -10.49 ft, Y= 683.52 ft, Z= -304.80 ft

From D04 to D13, DY= 0.09 ft, DZ= -7.50 ft, L= 7.50 ft Bend

COMPONENT DATA (Bend, TIP= D04, Near= D04 N, Mid= D04 M, Far= D04 F):
Elbow, Radius= 36.00 inch, Bend angle= 0.69 deg, Mid point at 50.00 percent, End flanges= 0, Flex= Auto,
SIFI= 1.00, SIFO= 1.00

C O M P O N E N T D A T A L I S T I N G

POINT DATA:
D04, Coordinates, X= -10.49 ft, Y= 683.52 ft, Z= -307.80 ft
D04 N, Coordinates, X= -10.49 ft, Y= 683.52 ft, Z= -307.78 ft
D04 M, Coordinates, X= -10.49 ft, Y= 683.52 ft, Z= -307.80 ft
D04 F, Coordinates, X= -10.49 ft, Y= 683.52 ft, Z= -307.82 ft

SUPPORT DATA:
D04 M, V-Stop, Support Id= D04 M1, Connected to Ground, Comp.Wt = 0.000 lb, Gap-Below= 0.00 inch,
Gap-Above= 1.00 inch, Friction= 0.80, Gaps setting= Weightless

---
From D13 to D14, DY= 0.10 ft, DZ= -7.53 ft, L= 7.53 ft Run

POINT DATA:
D13, Coordinates, X= -10.49 ft, Y= 683.61 ft, Z= -315.30 ft

SUPPORT DATA:
D13, V-Stop, Support Id= D13 1, Connected to Ground, Comp.Wt = 0.000 lb, Gap-Below= 0.00 inch,
Gap-Above= 1.00 inch, Friction= 0.80, Gaps setting= Weightless

---
From D14 to D08, DY= 0.04 ft, DZ= -3.50 ft, L= 3.50 ft Run

POINT DATA:
D14, Coordinates, X= -10.49 ft, Y= 683.71 ft, Z= -322.83 ft

SUPPORT DATA:
D14, Guide, Support Id= D14 2, Connected to Ground, Comp.Wt = 0.000 lb, Stiffness= RIGID,
Gap-Down= 0.00 inch, Gap-Above= 1.00 inch, Gap-Left= 1.00 inch, Gap-Right= 1.00 inch, Friction= 0.00,
Gaps setting= Weightless

From D08 to D15, DX= 3.50 ft, DY= 0.03 ft, L= 3.50 ft Bend

COMPONENT DATA (Bend, TIP= D08, Near= D08 N, Far= D08 F):
Elbow, Radius= 36.00 inch, Bend angle= 89.99 deg, End flanges= 0, Flex= Auto, SIFI= 1.00, SIFO= 1.00

POINT DATA:
D08, Coordinates, X= -10.49 ft, Y= 683.75 ft, Z= -326.33 ft
D08 N, Coordinates, X= -10.49 ft, Y= 683.72 ft, Z= -323.33 ft
D08 F, Coordinates, X= -7.49 ft, Y= 683.78 ft, Z= -326.33 ft

From D15 to D18, DX= 5.65 ft, DY= 0.05 ft, L= 5.65 ft Run

POINT DATA:
D15, Coordinates, X= -6.99 ft, Y= 683.78 ft, Z= -326.33 ft

SUPPORT DATA:
D15, Guide, Support Id= D15 2, Connected to Ground, Comp.Wt = 0.000 lb, Stiffness= RIGID,
Gap-Down= 0.00 inch, Gap-Above= 1.00 inch, Gap-Left= 1.00 inch, Gap-Right= 1.00 inch, Friction= 0.00,
Gaps setting= Weightless

From D18 to D16, DX= 5.65 ft, DY= 0.06 ft, L= 5.65 ft Run

C O M P O N E N T D A T A L I S T I N G

POINT DATA:
D18, Coordinates, X= -1.34 ft, Y= 683.83 ft, Z= -326.33 ft

SUPPORT DATA:
D18, V-Stop, Support Id= D18 1, Connected to Ground, Comp.Wt = 0.000 lb, Gap-Below= 0.00 inch, Gap-Above= 1.00 inch, Friction= 0.80, Gaps setting= Weightless

---

From D16 to D12, DX= 3.50 ft, DY= 0.04 ft, L= 3.50 ft Run

POINT DATA:
D16, Coordinates, X= 4.31 ft, Y= 683.89 ft, Z= -326.33 ft

SUPPORT DATA:
D16, Guide, Support Id= D16 1, Connected to Ground, Comp.Wt = 0.000 lb, Stiffness= RIGID, Gap-Down= 0.00 inch, Gap-Above= 1.00 inch, Gap-Left= 1.00 inch, Gap-Right= 1.00 inch, Friction= 0.00, Gaps setting= Weightless

---

From D12 to D19, DY= 0.05 ft, DZ= -3.50 ft, L= 3.50 ft Bend

COMPONENT DATA (Bend, TIP= D12, Near= D12 N, Far= D12 F):
Elbow, Radius= 36.00 inch, Bend angle= 89.99 deg, End flanges= 0, Flex= Auto, SIFI= 1.00, SIFO= 1.00

POINT DATA:
D12, Coordinates, X= 7.81 ft, Y= 683.93 ft, Z= -326.33 ft
D12 N, Coordinates, X= 4.81 ft, Y= 683.90 ft, Z= -326.33 ft
D12 F, Coordinates, X= 7.81 ft, Y= 683.97 ft, Z= -329.33 ft

From D19 to D25, DY= 0.12 ft, DZ= -8.87 ft, L= 8.87 ft Run

POINT DATA:
D19, Coordinates, X= 7.81 ft, Y= 683.98 ft, Z= -329.83 ft

SUPPORT DATA:
D19, Guide, Support Id= D19 2, Connected to Ground, Comp.Wt = 0.000 lb, Stiffness= RIGID, Gap-Down= 0.00 inch, Gap-Above= 1.00 inch, Gap-Left= 1.00 inch, Gap-Right= 1.00 inch, Friction= 0.00, Gaps setting= Weightless

---

From D25 to D20, DY= 0.11 ft, DZ= -8.86 ft, L= 8.86 ft Run

POINT DATA:
D25, Coordinates, X= 7.81 ft, Y= 684.10 ft, Z= -338.70 ft

SUPPORT DATA:
D25, V-Stop, Support Id= D25 1, Connected to Ground, Comp.Wt = 0.000 lb, Gap-Below= 0.00 inch, Gap-Above= 1.00 inch, Friction= 0.80, Gaps setting= Weightless

---

From D20 to D17, DY= 0.04 ft, DZ= -3.50 ft, L= 3.50 ft Run

POINT DATA:
D20, Coordinates, X= 7.81 ft, Y= 684.21 ft, Z= -347.56 ft

C O M P O N E N T D A T A L I S T I N G

```
 SUPPORT DATA:
   D20, Guide, Support Id= D20  1, Connected to Ground, Comp.Wt = 0.000 lb, Stiffness= RIGID,
   Gap-Down= 0.00 inch, Gap-Above= 1.00 inch, Gap-Left= 1.00 inch, Gap-Right= 1.00 inch, Friction= 0.00,
   Gaps setting= Weightless

 ---------------------------------------------------------------------------
 From D17 to D26, DX= 3.50 ft, DY= 0.02 ft, L= 3.50 ft                    Bend

 COMPONENT DATA (Bend, TIP= D17, Near= D17 N, Far= D17 F):
   Elbow, Radius= 36.00 inch, Bend angle= 90.00 deg, End flanges= 0, Flex= Auto, SIFI= 1.00, SIFO= 1.00

 POINT DATA:
   D17, Coordinates, X= 7.81 ft, Y= 684.25 ft, Z= -351.06 ft
   D17 N, Coordinates, X= 7.81 ft, Y= 684.22 ft, Z= -348.06 ft
   D17 F, Coordinates, X= 10.81 ft, Y= 684.27 ft, Z= -351.06 ft

 ---------------------------------------------------------------------------
 From D26 to D28, DX= 6.93 ft, DY= 0.03 ft, L= 6.93 ft                    Run

 POINT DATA:
   D26, Coordinates, X= 11.31 ft, Y= 684.27 ft, Z= -351.06 ft

 SUPPORT DATA:
   D26, Guide, Support Id= D26  1, Connected to Ground, Comp.Wt = 0.000 lb, Stiffness= RIGID,
   Gap-Down= 0.00 inch, Gap-Above= 1.00 inch, Gap-Left= 1.00 inch, Gap-Right= 1.00 inch, Friction= 0.00,
   Gaps setting= Weightless

 ---------------------------------------------------------------------------
 From D28 to D27, DX= 6.92 ft, DY= 0.03 ft, L= 6.92 ft                    Run

 POINT DATA:
   D28, Coordinates, X= 18.24 ft, Y= 684.30 ft, Z= -351.06 ft

 SUPPORT DATA:
   D28, V-Stop, Support Id= D28  1, Connected to Ground, Comp.Wt = 0.000 lb, Gap-Below= 0.00 inch,
   Gap-Above= 1.00 inch, Friction= 0.80, Gaps setting= Weightless

 ---------------------------------------------------------------------------
 From D27 to D21, DX= 3.00 ft, DY= 0.01 ft, L= 3.00 ft                    Run

 POINT DATA:
   D27, Coordinates, X= 25.16 ft, Y= 684.33 ft, Z= -351.06 ft

 SUPPORT DATA:
   D27, V-Stop, Support Id= D27  1, Connected to Ground, Comp.Wt = 0.000 lb, Gap-Below= 0.00 inch,
   Gap-Above= 1.00 inch, Friction= 0.80, Gaps setting= Weightless

 ---------------------------------------------------------------------------
 From D21 to D22, DX= 1.00 ft                                             Run

 POINT DATA:
   D21, Coordinates, X= 28.16 ft, Y= 684.34 ft, Z= -351.06 ft
   D22, Coordinates, X= 29.16 ft, Y= 684.34 ft, Z= -351.06 ft

 SUPPORT DATA:
```

C O M P O N E N T D A T A L I S T I N G

D22, Anchor, Connected to: Ground, KTX= Rigid, KTY= Rigid, KTZ= Rigid, KRX= Rigid, KRY= Rigid, KRZ= Rigid

Number of points in the system (Pipe + Frame + Soil): 349 + 0 + 0 = 349

Weight of Empty Pipes	+	Weight of Contents	=	Total Weight of System
16777.9 lb	+	0.0 lb	=	16777.9 lb

C O O R D I N A T E S D A T A L I S T I N G

POINT NAME	COORDINATE (ft) X	Y	Z
*** SEGMENT A			
A02	1.46	693.07	0.00
A03	3.46	693.07	0.00
A23	5.96	693.07	0.00
A04 N	6.19	693.07	0.00
A04	6.46	693.07	0.00
A04 F	6.73	693.02	0.00
A24	14.64	691.56	0.00
A21	22.82	690.05	0.00
A05 N	23.33	689.96	0.00
A05	26.26	689.41	0.00
A05 F	26.26	689.32	-2.98
A22	26.26	689.31	-3.50
A25	26.26	689.05	-12.50
A26	26.26	688.79	-21.50
A27	26.26	688.53	-30.50
A28	26.26	688.27	-39.50
A29	26.26	687.96	-50.17
A06 N	26.26	687.95	-50.67
A06	26.26	687.86	-53.67
A06 F	29.26	687.77	-53.67
A30	29.76	687.76	-53.67
A31	32.52	687.68	-53.67
A07 N	33.02	687.67	-53.67
A07	36.02	687.58	-53.67
A07 F	36.02	687.49	-56.67
A32	36.02	687.47	-57.17
A33	36.02	687.20	-66.17
A34	36.02	686.93	-75.17
A35	36.02	686.66	-84.17
A36	36.02	686.38	-93.17
A37	36.02	686.30	-95.85
A38	36.02	686.03	-104.84
A08 N	36.02	686.01	-105.34
A08	36.02	685.92	-108.34
A08 F	33.02	685.84	-108.34
A39	32.52	685.83	-108.34
A40	28.52	685.73	-108.34
A09 N	28.02	685.72	-108.34
A09	25.02	685.64	-108.34
A09 F	25.02	685.61	-111.34
A41	25.02	685.61	-111.84
A42	25.02	685.54	-120.84
A43	25.02	685.47	-129.84
A44	25.02	685.40	-138.84
A45	25.02	685.33	-147.84
A46	25.02	685.26	-156.84
A47	25.02	685.19	-165.84
A48	25.02	685.12	-174.84
A49	25.02	685.05	-183.84
A50	25.02	685.02	-187.67
A51	25.02	684.95	-196.67

C O O R D I N A T E S D A T A L I S T I N G

POINT NAME	COORDINATE (ft) X	Y	Z
A10 N	25.02	684.95	-197.17
A10	25.02	684.92	-200.17
A10 F	28.02	684.89	-200.17
A52	28.52	684.89	-200.17
A53	35.43	684.84	-200.17
A11 N	35.93	684.84	-200.17
A11	38.93	684.82	-200.17
A11 F	38.93	684.79	-203.17
A54	38.93	684.79	-203.67
A55	38.93	684.72	-212.67
A56	38.93	684.65	-221.67
A57	38.93	684.58	-230.67
A58	38.93	684.51	-239.67
A59	38.93	684.44	-248.67
A60	38.93	684.37	-257.67
A61	38.93	684.31	-266.07
A62	38.93	684.25	-275.07
A12 N	38.93	684.25	-275.57
A12	38.93	684.22	-278.57
A12 F	35.93	684.19	-278.57
A63	35.43	684.19	-278.57
A64	26.43	684.12	-278.57
A65	17.43	684.05	-278.57
A66	8.43	683.99	-278.57
A67	-0.57	683.92	-278.57
A68	-9.35	683.86	-278.57
A69	-18.35	683.80	-278.57
A13 N	-18.85	683.80	-278.57
A13	-21.85	683.77	-278.57
A13 F	-21.85	683.75	-281.57
A70	-21.85	683.75	-282.07
A71	-21.85	683.70	-291.07
A72	-21.85	683.65	-298.66
A14 N	-21.85	683.65	-299.16
A14	-21.85	683.63	-302.16
A14 F	-18.85	683.58	-302.16
A73	-18.35	683.57	-302.16
A15 N	-15.42	683.52	-302.16
A15	-15.39	683.52	-302.16
A15 F	-15.36	683.52	-302.16
A16	-14.39	683.52	-302.16
A17	-13.39	683.52	-302.16
A18	-12.84	683.52	-302.16
A19	-12.65	683.52	-302.16
*** SEGMENT B , LINE # RIGID			
B03	1.46	693.07	2.00
B04	3.46	693.07	2.00
B22	5.96	693.07	2.00
B06 N	6.22	693.07	2.00
B06	6.46	693.07	2.00
B06 F	6.70	693.03	2.00

C O O R D I N A T E S D A T A L I S T I N G

POINT NAME	COORDINATE (ft) X	Y	Z
B23	17.61	691.24	2.00
B24	25.31	689.98	2.00
B09 N	25.81	689.90	2.00
B09	28.76	689.41	2.00
B09 F	28.76	689.32	-0.98
B25	28.76	689.31	-1.50
B26	28.76	689.05	-10.50
B28	28.76	688.79	-19.50
B29	28.76	688.53	-28.50
B31	28.76	688.26	-37.50
B32	28.76	687.96	-47.67
B16 N	28.76	687.95	-48.17
B16	28.76	687.86	-51.17
B16 F	31.76	687.79	-51.17
B33	32.26	687.78	-51.17
B34	35.02	687.72	-51.17
B19 N	35.52	687.71	-51.17
B19	38.52	687.64	-51.17
B19 F	38.52	687.55	-54.17
B35	38.52	687.54	-54.67
B36	38.52	687.29	-63.67
B37	38.52	687.04	-72.67
B38	38.52	686.79	-81.67
B39	38.52	686.54	-90.67
B40	38.52	686.32	-98.34
B42	38.52	686.07	-107.34
B27 N	38.52	686.06	-107.84
B27	38.52	685.97	-110.84
B27 F	35.52	685.89	-110.84
B43	35.02	685.88	-110.84
B45	31.02	685.78	-110.84
B30 N	30.52	685.77	-110.84
B30	27.52	685.70	-110.84
B30 F	27.52	685.67	-113.84
B46	27.52	685.67	-114.34
B47	27.52	685.59	-123.34
B48	27.52	685.51	-132.34
B49	27.52	685.43	-141.34
B50	27.52	685.35	-150.34
B51	27.52	685.28	-159.34
B52	27.52	685.20	-168.34
B53	27.52	685.13	-177.34
B54	27.52	685.06	-185.17
B55	27.52	684.99	-194.17
B41 N	27.52	684.99	-194.67
B41	27.52	684.96	-197.67
B41 F	30.52	684.94	-197.67
B57	31.02	684.94	-197.67
B58	37.93	684.89	-197.67
B44 N	38.43	684.89	-197.67
B44	41.43	684.87	-197.67
B44 F	41.43	684.85	-200.67

C O O R D I N A T E S D A T A L I S T I N G

POINT NAME	COORDINATE (ft) X	Y	Z
B64	41.43	684.85	-201.17
B65	41.43	684.79	-210.17
B66	41.43	684.73	-219.17
B67	41.43	684.67	-228.17
B68	41.43	684.61	-237.17
B69	41.43	684.55	-246.17
B70	41.43	684.49	-255.17
B71	41.43	684.43	-264.17
B72	41.43	684.38	-273.17
B73	41.43	684.35	-278.00
B74	41.43	684.29	-287.00
B56 N	41.43	684.28	-288.00
B56	41.43	684.27	-290.50
B56 F	38.93	684.24	-290.50
B75	38.48	684.24	-290.50
B20 N	38.04	684.23	-290.50
B20	35.54	684.19	-290.50
B20 F	35.54	684.14	-293.00
B77	35.54	684.13	-293.67
B21 N	35.54	684.12	-294.33
B21	35.54	684.07	-296.83
B21 F	33.04	684.04	-296.83
B76	32.54	684.03	-296.83
B59 N	30.71	684.00	-296.83
B59	30.69	684.00	-296.83
B59 M	30.69	684.00	-296.83
B59 F	30.67	684.00	-296.83
B60	29.69	684.00	-296.83
B61	28.69	684.00	-296.83
B62	28.08	684.00	-296.83
B63	27.83	684.00	-296.83
*** SEGMENT C			
C03	1.46	691.07	1.00
C04	3.46	691.07	1.00
C21	5.96	691.07	1.00
C06 N	6.34	691.07	1.00
C06	6.46	691.07	1.00
C06 F	6.58	691.06	1.00
C22	16.95	690.22	1.00
C23	23.94	689.65	1.00
C09 N	24.45	689.61	1.00
C09	27.43	689.37	1.00
C09 F	27.43	689.28	-1.99
C24	27.43	689.27	-2.50
C25	27.43	689.01	-11.50
C26	27.43	688.75	-20.50
C28	27.43	688.49	-29.50
C29	27.43	688.22	-38.50
C31	27.43	687.91	-49.00
C16 N	27.43	687.90	-49.50
C16	27.43	687.81	-52.50

C O O R D I N A T E S D A T A L I S T I N G

POINT NAME	COORDINATE (ft) X	Y	Z
C16 F	30.43	687.74	-52.50
C32	30.93	687.73	-52.50
C33	33.69	687.66	-52.50
C19 N	34.19	687.65	-52.50
C19	37.19	687.58	-52.50
C19 F	37.19	687.49	-55.50
C34	37.19	687.48	-56.00
C35	37.19	687.22	-65.00
C36	37.19	686.96	-74.00
C37	37.19	686.70	-83.00
C38	37.19	686.44	-92.00
C39	37.19	686.29	-97.01
C40	37.19	686.02	-106.00
C27 N	37.19	686.01	-106.50
C27	37.19	685.92	-109.50
C27 F	34.19	685.84	-109.50
C42	33.69	685.83	-109.50
C43	29.69	685.73	-109.50
C30 N	29.19	685.72	-109.50
C30	26.19	685.64	-109.50
C30 F	26.19	685.61	-112.50
C45	26.19	685.61	-113.00
C46	26.19	685.54	-122.00
C47	26.19	685.47	-131.00
C48	26.19	685.40	-140.00
C49	26.19	685.33	-149.00
C50	26.19	685.26	-158.00
C51	26.19	685.19	-167.00
C52	26.19	685.11	-176.00
C53	26.19	685.04	-185.00
C55	26.19	684.95	-195.50
C41 N	26.19	684.95	-196.00
C41	26.19	684.92	-199.00
C41 F	29.19	684.89	-199.00
C56	29.69	684.89	-199.00
C57	36.60	684.84	-199.00
C44 N	37.10	684.84	-199.00
C44	40.10	684.82	-199.00
C44 F	40.10	684.79	-202.00
C58	40.10	684.79	-202.50
C59	40.10	684.72	-211.50
C60	40.10	684.65	-220.50
C61	40.10	684.58	-229.50
C63	40.10	684.52	-238.50
C64	40.10	684.45	-247.50
C65	40.10	684.39	-256.50
C72	40.10	684.32	-265.50
C73	40.10	684.24	-276.24
C54 N	40.10	684.24	-276.74
C54	40.10	684.22	-279.74
C54 F	37.10	684.19	-279.74
C74	36.60	684.19	-279.74

C O O R D I N A T E S D A T A L I S T I N G

POINT NAME	COORDINATE (ft) X	Y	Z
C75	27.60	684.12	-279.74
C76	18.60	684.05	-279.74
C77	9.60	683.99	-279.74
C78	0.60	683.92	-279.74
C79	-8.18	683.86	-279.74
C80	-17.18	683.80	-279.74
C62 N	-17.68	683.80	-279.74
C62	-20.68	683.77	-279.74
C62 F	-20.68	683.74	-282.74
C82	-20.68	683.74	-283.24
C81	-20.68	683.69	-289.08
C83	-20.68	683.65	-294.91
C66 N	-20.68	683.65	-295.41
C66	-20.68	683.62	-298.41
C66 F	-17.68	683.56	-298.41
C84	-17.18	683.55	-298.41
C67 N	-15.40	683.52	-298.41
C67	-15.38	683.52	-298.41
C67 M	-15.38	683.52	-298.41
C67 F	-15.36	683.52	-298.41
C68	-14.38	683.52	-298.41
C69	-13.38	683.52	-298.41
C70	-12.83	683.52	-298.41
C71	-12.64	683.52	-298.41
*** SEGMENT D			
D00	-10.49	683.52	-303.06
D01	-10.49	683.52	-303.25
D02	-10.49	683.52	-303.80
D03	-10.49	683.52	-304.80
D04 N	-10.49	683.52	-307.78
D04	-10.49	683.52	-307.80
D04 M	-10.49	683.52	-307.80
D04 F	-10.49	683.52	-307.82
D13	-10.49	683.61	-315.30
D14	-10.49	683.71	-322.83
D08 N	-10.49	683.72	-323.33
D08	-10.49	683.75	-326.33
D08 F	-7.49	683.78	-326.33
D15	-6.99	683.78	-326.33
D18	-1.34	683.83	-326.33
D16	4.31	683.89	-326.33
D12 N	4.81	683.90	-326.33
D12	7.81	683.93	-326.33
D12 F	7.81	683.97	-329.33
D19	7.81	683.98	-329.83
D25	7.81	684.10	-338.70
D20	7.81	684.21	-347.56
D17 N	7.81	684.22	-348.06
D17	7.81	684.25	-351.06
D17 F	10.81	684.27	-351.06
D26	11.31	684.27	-351.06

C O O R D I N A T E S D A T A L I S T I N G

POINT NAME	COORDINATE (ft) X	Y	Z
D28	18.24	684.30	-351.06
D27	25.16	684.33	-351.06
D21	28.16	684.34	-351.06
D22	29.16	684.34	-351.06

S E G M E N T D A T A L I S T I N G

Segment Name	First Node	Last Node	Line Number	Apply Wind	Apply Bowing	Apply Buoyancy
A	A02	A19		No	No	No
B	B03	B63	RIGID	No	No	No
C	C03	C71		No	No	No
D	D00	D22		No	No	No

```
-----------------------------------------------------------------------------------------------------------------------
Encasement Piping
04/24/2020 2018719                                                    BENTLEY
08:29 AM                                                              AutoPIPE Nuclear 12.00.00.16   MODEL  PAGE  52
-----------------------------------------------------------------------------------------------------------------------

                    P I P E   D A T A   L I S T I N G

 Pipe ID/     Nom/ O.D.  -----Thickness(inch)----- Spec  InsuDen/   Weight(lb/ft )    E/  Composition/
 Material     Sch  inch  W.Th. Corr Mill Insu Ling Grav/ LingDen/  Pipe/ Ling/ Total  W/  Steel Group/
 CladMaterial            Clad                        InsMt CladDen   Cont  Insu/        f   Tcr
 ---Line Class---                                          lb/cu.ft        Clad
 ------------ ---- ----- ----- ---- ---- ---- ---- ----- --------  ----- ----- ----- ---- --------------------

 Tag No. : <None>
 4SCH40         4  4.500 0.237 0.01 0.03    0    0     0    0.000  10.78     0 10.78 1.00 Carbon Steel
 A53-B        40S                                          0.000      0     0       1.00 Carbon
                            0                              0.000            0       1.00    650.000



 Tag No. : <None>
 6SCH40         6  6.625 0.280 0.01 0.04    0    0     0    0.000  18.95     0 18.95 1.00 Carbon Steel
 A53-B        40S                                          0.000      0     0       1.00 Carbon
                            0                              0.000            0       1.00    650.000
```

M A T E R I A L D A T A L I S T I N G

Material Name	Pipe ID	Density lb/cu.ft	Pois. Ratio	Temper. deg F	Modulus E6 psi Axial	Hoop	Shear	Expans. in/100ft	Composition
A53-B	4SCH40	489.0	0.30	60.0	29.541	29.541	11.362		Carbon Steel
				200.0	28.800			1.0750	
A53-B	6SCH40	489.0	0.30	60.0	29.541	29.541	11.362		Carbon Steel
				200.0	28.800			1.0750	

M A T E R I A L A L L O W A B L E D A T A L I S T I N G

Material Name	Pipe ID	Temper. deg F	Allow. psi	Yield psi	Ultimate	Weld Reduction Factor W
A53-B	4SCH40	60.0	20000.0	35000.0	60000.0	1.000
		200.0	20000.0	32100.0		1.000
A53-B	6SCH40	60.0	20000.0	35000.0	60000.0	1.000
		200.0	20000.0	32100.0		1.000

OPERATING TEMPERATURE AND PRESSURE DATA
STRESSES IN psi

POINT NAME	CASE	PRESS. psi	TEMPER deg F	EXPAN. in/100ft	MODULUS E6 psi	ALLOW STRESS	YIELD STRESS
*** SEGMENT A							
A02	T1	60.00	200	1.075	28.800	20000	32100
A19	Same as previous point.						
*** SEGMENT B , LINE # RIGID							
B03	T1	60.00	200	1.075	28.800	20000	32100
B63	Same as previous point.						
*** SEGMENT C							
C03	T1	60.00	200	1.075	28.800	20000	32100
C71	Same as previous point.						
*** SEGMENT D							
D00	T1	60.00	200	1.075	28.800	20000	32100
D22	Same as previous point.						

u User-defined value
* Non-code material for allowable stress;
Non-standard material for expansion and modulus

S U P P O R T D A T A L I S T I N G

Point Name	Support Type	Support ID	Conn.to /Dir	Comp.Wt (lb)	Stiff.	Gap 1 (in)	Gap 2 (in)	Fric. Fact.	GapSet /#hgr	Preload (lbf)	Ld.Var	Size	Figure
Tag No.: <None>						Attachment ID: <None>							
A23	V-stop	A23 1	Ground	0.000	Rigid	0.000	1.000	0.00		Weightless			
Tag No.: <None>						Attachment ID: <None>							
A24	V-stop	A24 1	Ground	0.000	Rigid	0.000	1.000	0.80		Weightless			
Tag No.: <None>						Attachment ID: <None>							
A21	Guide-V	A21 1	Ground	0.000	Rigid	0.000	1.000	0.00		Weightless			
	Guide-H	A21 1	Ground	0.000	Rigid	1.000	1.000	0.00		Weightless			
Tag No.: <None>						Attachment ID: <None>							
A22	Guide-V	A22 2	Ground	0.000	Rigid	0.000	1.000	0.00		Weightless			
	Guide-H	A22 2	Ground	0.000	Rigid	1.000	1.000	0.00		Weightless			
Tag No.: <None>						Attachment ID: <None>							
A25	V-stop	A25 2	Ground	0.000	Rigid	0.000	1.000	0.80		Weightless			
Tag No.: <None>						Attachment ID: <None>							
A26	V-stop	A26 2	Ground	0.000	Rigid	0.000	1.000	0.80		Weightless			
Tag No.: <None>						Attachment ID: <None>							
A27	V-stop	A27 2	Ground	0.000	Rigid	0.000	1.000	0.80		Weightless			
Tag No.: <None>						Attachment ID: <None>							
A28	V-stop	A28 2	Ground	0.000	Rigid	0.000	1.000	0.80		Weightless			
Tag No.: <None>						Attachment ID: <None>							
A29	Guide-V	A29 1	Ground	0.000	Rigid	0.000	1.000	0.00		Weightless			
	Guide-H	A29 1	Ground	0.000	Rigid	1.000	1.000	0.00		Weightless			
Tag No.: <None>						Attachment ID: <None>							
A30	Guide-V	A30 1	Ground	0.000	Rigid	0.000	1.000	0.00		Weightless			
	Guide-H	A30 1	Ground	0.000	Rigid	1.000	1.000	0.00		Weightless			
Tag No.: <None>						Attachment ID: <None>							
A31	Guide-V	A31 1	Ground	0.000	Rigid	0.000	1.000	0.00		Weightless			
	Guide-H	A31 1	Ground	0.000	Rigid	1.000	1.000	0.00		Weightless			
Tag No.: <None>						Attachment ID: <None>							
A32	Guide-V	A32 1	Ground	0.000	Rigid	0.000	1.000	0.00		Weightless			
	Guide-H	A32 1	Ground	0.000	Rigid	1.000	1.000	0.00		Weightless			
Tag No.: <None>						Attachment ID: <None>							
A33	V-stop	A33 2	Ground	0.000	Rigid	0.000	1.000	0.80		Weightless			
Tag No.: <None>						Attachment ID: <None>							
A34	V-stop	A34 2	Ground	0.000	Rigid	0.000	1.000	0.80		Weightless			
Tag No.: <None>						Attachment ID: <None>							
A35	V-stop	A35 2	Ground	0.000	Rigid	0.000	1.000	0.80		Weightless			

S U P P O R T D A T A L I S T I N G

Point Name	Support Type	Support ID	Conn.to /Dir	Comp.Wt (lb)	Stiff.	Gap 1 (in)	Gap 2 (in)	Fric. Fact.	GapSet /#hgr	Preload (lbf)	Ld.Var	Size	Figure
Tag No.: <None>						Attachment ID: <None>							
A36	V-stop	A36	2 Ground	0.000	Rigid	0.000	1.000	0.80	Weightless				
Tag No.: <None>						Attachment ID: <None>							
A37	V-stop	A37	2 Ground	0.000	Rigid	0.000	1.000	0.80	Weightless				
Tag No.: <None>						Attachment ID: <None>							
A38	Guide-V	A38	1 Ground	0.000	Rigid	0.000	1.000	0.00	Weightless				
	Guide-H	A38	1 Ground	0.000	Rigid	1.000	1.000	0.00	Weightless				
Tag No.: <None>						Attachment ID: <None>							
A39	Guide-V	A39	1 Ground	0.000	Rigid	0.000	1.000	0.00	Weightless				
	Guide-H	A39	1 Ground	0.000	Rigid	1.000	1.000	0.00	Weightless				
Tag No.: <None>						Attachment ID: <None>							
A40	Guide-V	A40	1 Ground	0.000	Rigid	0.000	1.000	0.00	Weightless				
	Guide-H	A40	1 Ground	0.000	Rigid	1.000	1.000	0.00	Weightless				
Tag No.: <None>						Attachment ID: <None>							
A41	Guide-V	A41	1 Ground	0.000	Rigid	0.000	1.000	0.00	Weightless				
	Guide-H	A41	1 Ground	0.000	Rigid	1.000	1.000	0.00	Weightless				
Tag No.: <None>						Attachment ID: <None>							
A42	V-stop	A42	2 Ground	0.000	Rigid	0.000	1.000	0.80	Weightless				
Tag No.: <None>						Attachment ID: <None>							
A43	V-stop	A43	2 Ground	0.000	Rigid	0.000	1.000	0.80	Weightless				
Tag No.: <None>						Attachment ID: <None>							
A44	V-stop	A44	2 Ground	0.000	Rigid	0.000	1.000	0.80	Weightless				
Tag No.: <None>						Attachment ID: <None>							
A45	V-stop	A45	2 Ground	0.000	Rigid	0.000	1.000	0.80	Weightless				
Tag No.: <None>						Attachment ID: <None>							
A46	V-stop	A46	2 Ground	0.000	Rigid	0.000	1.000	0.80	Weightless				
Tag No.: <None>						Attachment ID: <None>							
A47	V-stop	A47	2 Ground	0.000	Rigid	0.000	1.000	0.80	Weightless				
Tag No.: <None>						Attachment ID: <None>							
A48	V-stop	A48	2 Ground	0.000	Rigid	0.000	1.000	0.80	Weightless				
Tag No.: <None>						Attachment ID: <None>							
A49	V-stop	A49	2 Ground	0.000	Rigid	0.000	1.000	0.80	Weightless				
Tag No.: <None>						Attachment ID: <None>							
A50	V-stop	A50	2 Ground	0.000	Rigid	0.000	1.000	0.80	Weightless				
Tag No.: <None>						Attachment ID: <None>							
A51	Guide-V	A51	1 Ground	0.000	Rigid	0.000	1.000	0.00	Weightless				
	Guide-H	A51	1 Ground	0.000	Rigid	1.000	1.000	0.00	Weightless				

S U P P O R T D A T A L I S T I N G

Point Name	Support Type	Support ID	Conn.to /Dir	Comp.Wt (lb)	Stiff.	Gap 1 (in)	Gap 2 (in)	Fric. Fact.	GapSet /#hgr	Preload (lbf)	Ld.Var	Size	Figure
Tag No.: <None>						Attachment ID: <None>							
A52	Guide-V	A52 1	Ground	0.000	Rigid	0.000	1.000	0.00	Weightless				
	Guide-H	A52 1	Ground	0.000	Rigid	1.000	1.000	0.00	Weightless				
Tag No.: <None>						Attachment ID: <None>							
A53	Guide-V	A53 1	Ground	0.000	Rigid	0.000	1.000	0.00	Weightless				
	Guide-H	A53 1	Ground	0.000	Rigid	1.000	1.000	0.00	Weightless				
Tag No.: <None>						Attachment ID: <None>							
A54	Guide-V	A54 1	Ground	0.000	Rigid	0.000	1.000	0.00	Weightless				
	Guide-H	A54 1	Ground	0.000	Rigid	1.000	1.000	0.00	Weightless				
Tag No.: <None>						Attachment ID: <None>							
A55	V-stop	A55 1	Ground	0.000	Rigid	0.000	1.000	0.80	Weightless				
Tag No.: <None>						Attachment ID: <None>							
A56	V-stop	A56 1	Ground	0.000	Rigid	0.000	1.000	0.80	Weightless				
Tag No.: <None>						Attachment ID: <None>							
A57	V-stop	A57 1	Ground	0.000	Rigid	0.000	1.000	0.80	Weightless				
Tag No.: <None>						Attachment ID: <None>							
A58	V-stop	A58 1	Ground	0.000	Rigid	0.000	1.000	0.80	Weightless				
Tag No.: <None>						Attachment ID: <None>							
A59	V-stop	A59 1	Ground	0.000	Rigid	0.000	1.000	0.80	Weightless				
Tag No.: <None>						Attachment ID: <None>							
A60	V-stop	A60 1	Ground	0.000	Rigid	0.000	1.000	0.80	Weightless				
Tag No.: <None>						Attachment ID: <None>							
A61	V-stop	A61 1	Ground	0.000	Rigid	0.000	1.000	0.80	Weightless				
Tag No.: <None>						Attachment ID: <None>							
A62	Guide-V	A62 1	Ground	0.000	Rigid	0.000	1.000	0.00	Weightless				
	Guide-H	A62 1	Ground	0.000	Rigid	1.000	1.000	0.00	Weightless				
Tag No.: <None>						Attachment ID: <None>							
A63	Guide-V	A63 1	Ground	0.000	Rigid	0.000	1.000	0.00	Weightless				
	Guide-H	A63 1	Ground	0.000	Rigid	1.000	1.000	0.00	Weightless				
Tag No.: <None>						Attachment ID: <None>							
A64	V-stop	A64 2	Ground	0.000	Rigid	0.000	1.000	0.80	Weightless				
Tag No.: <None>						Attachment ID: <None>							
A65	V-stop	A65 2	Ground	0.000	Rigid	0.000	1.000	0.80	Weightless				
Tag No.: <None>						Attachment ID: <None>							
A66	V-stop	A66 2	Ground	0.000	Rigid	0.000	1.000	0.80	Weightless				
Tag No.: <None>						Attachment ID: <None>							
A67	V-stop	A67 2	Ground	0.000	Rigid	0.000	1.000	0.80	Weightless				

S U P P O R T D A T A L I S T I N G

Point Name	Support Type	Support ID	Conn.to /Dir	Comp.Wt (lb)	Stiff.	Gap 1 (in)	Gap 2 (in)	Fric. Fact.	GapSet /#hgr	Preload (lbf)	Ld.Var	Size	Figure
Tag No.: <None>						Attachment ID: <None>							
A68	V-stop	A68 2	Ground	0.000	Rigid	0.000	1.000	0.80	Weightless				
Tag No.: <None>						Attachment ID: <None>							
A69	Guide-V	A69 1	Ground	0.000	Rigid	0.000	1.000	0.00	Weightless				
	Guide-H	A69 1	Ground	0.000	Rigid	1.000	1.000	0.00	Weightless				
Tag No.: <None>						Attachment ID: <None>							
A70	Guide-V	A70 1	Ground	0.000	Rigid	0.000	1.000	0.00	Weightless				
	Guide-H	A70 1	Ground	0.000	Rigid	1.000	1.000	0.00	Weightless				
Tag No.: <None>						Attachment ID: <None>							
A71	V-stop	A71 2	Ground	0.000	Rigid	0.000	1.000	0.80	Weightless				
Tag No.: <None>						Attachment ID: <None>							
A72	Guide-V	A72 1	Ground	0.000	Rigid	0.000	1.000	0.00	Weightless				
	Guide-H	A72 1	Ground	0.000	Rigid	1.000	1.000	0.00	Weightless				
Tag No.: <None>						Attachment ID: <None>							
A73	Guide-V	A73 1	Ground	0.000	Rigid	0.000	1.000	0.00	Weightless				
	Guide-H	A73 1	Ground	0.000	Rigid	1.000	1.000	0.00	Weightless				
Tag No.: <None>						Attachment ID: <None>							
B22	V-stop	B22 2	Ground	0.000	Rigid	0.000	1.000	0.80	Weightless				
Tag No.: <None>						Attachment ID: <None>							
B23	V-stop	B23 2	Ground	0.000	Rigid	0.000	1.000	0.80	Weightless				
Tag No.: <None>						Attachment ID: <None>							
B24	Guide-V	B24 2	Ground	0.000	Rigid	0.000	1.000	0.00	Weightless				
	Guide-H	B24 2	Ground	0.000	Rigid	1.000	1.000	0.00	Weightless				
Tag No.: <None>						Attachment ID: <None>							
B25	Guide-V	B25 2	Ground	0.000	Rigid	0.000	1.000	0.00	Weightless				
	Guide-H	B25 2	Ground	0.000	Rigid	1.000	1.000	0.00	Weightless				
Tag No.: <None>						Attachment ID: <None>							
B26	V-stop	B26 1	Ground	0.000	Rigid	0.000	1.000	0.80	Weightless				
Tag No.: <None>						Attachment ID: <None>							
B28	V-stop	B28 1	Ground	0.000	Rigid	0.000	1.000	0.80	Weightless				
Tag No.: <None>						Attachment ID: <None>							
B29	V-stop	B29 1	Ground	0.000	Rigid	0.000	1.000	0.80	Weightless				
Tag No.: <None>						Attachment ID: <None>							
B31	V-stop	B31 1	Ground	0.000	Rigid	0.000	1.000	0.80	Weightless				
Tag No.: <None>						Attachment ID: <None>							
B32	Guide-V	B32 2	Ground	0.000	Rigid	0.000	1.000	0.00	Weightless				
	Guide-H	B32 2	Ground	0.000	Rigid	1.000	1.000	0.00	Weightless				

S U P P O R T D A T A L I S T I N G

Point Name	Support Type	Support ID	Conn.to /Dir	Comp.Wt (lb)	Stiff.	Gap 1 (in)	Gap 2 (in)	Fric. Fact.	GapSet /#hgr	Preload (lbf)	Ld.Var	Size	Figure
Tag No.: <None>						Attachment ID: <None>							
B33	Guide-V	B33 2	Ground	0.000	Rigid	0.000	1.000	0.00	Weightless				
	Guide-H	B33 2	Ground	0.000	Rigid	1.000	1.000	0.00	Weightless				
Tag No.: <None>						Attachment ID: <None>							
B34	Guide-V	B34 2	Ground	0.000	Rigid	0.000	1.000	0.00	Weightless				
	Guide-H	B34 2	Ground	0.000	Rigid	1.000	1.000	0.00	Weightless				
Tag No.: <None>						Attachment ID: <None>							
B35	Guide-V	B35 2	Ground	0.000	Rigid	0.000	1.000	0.00	Weightless				
	Guide-H	B35 2	Ground	0.000	Rigid	1.000	1.000	0.00	Weightless				
Tag No.: <None>						Attachment ID: <None>							
B36	V-stop	B36 2	Ground	0.000	Rigid	0.000	1.000	0.80	Weightless				
Tag No.: <None>						Attachment ID: <None>							
B37	V-stop	B37 2	Ground	0.000	Rigid	0.000	1.000	0.80	Weightless				
Tag No.: <None>						Attachment ID: <None>							
B38	V-stop	B38 2	Ground	0.000	Rigid	0.000	1.000	0.80	Weightless				
Tag No.: <None>						Attachment ID: <None>							
B39	V-stop	B39 2	Ground	0.000	Rigid	0.000	1.000	0.80	Weightless				
Tag No.: <None>						Attachment ID: <None>							
B40	V-stop	B40 1	Ground	0.000	Rigid	0.000	1.000	0.80	Weightless				
Tag No.: <None>						Attachment ID: <None>							
B42	Guide-V	B42 1	Ground	0.000	Rigid	0.000	1.000	0.00	Weightless				
	Guide-H	B42 1	Ground	0.000	Rigid	1.000	1.000	0.00	Weightless				
Tag No.: <None>						Attachment ID: <None>							
B43	Guide-V	B43 1	Ground	0.000	Rigid	0.000	1.000	0.00	Weightless				
	Guide-H	B43 1	Ground	0.000	Rigid	1.000	1.000	0.00	Weightless				
Tag No.: <None>						Attachment ID: <None>							
B45	Guide-V	B45 1	Ground	0.000	Rigid	0.000	1.000	0.00	Weightless				
	Guide-H	B45 1	Ground	0.000	Rigid	1.000	1.000	0.00	Weightless				
Tag No.: <None>						Attachment ID: <None>							
B46	Guide-V	B46 2	Ground	0.000	Rigid	0.000	1.000	0.00	Weightless				
	Guide-H	B46 2	Ground	0.000	Rigid	1.000	1.000	0.00	Weightless				
Tag No.: <None>						Attachment ID: <None>							
B47	V-stop	B47 2	Ground	0.000	Rigid	0.000	1.000	0.80	Weightless				
Tag No.: <None>						Attachment ID: <None>							
B48	V-stop	B48 2	Ground	0.000	Rigid	0.000	1.000	0.80	Weightless				
Tag No.: <None>						Attachment ID: <None>							
B49	V-stop	B49 2	Ground	0.000	Rigid	0.000	1.000	0.80	Weightless				

S U P P O R T D A T A L I S T I N G

Point Name	Support Type	Support ID	Conn.to /Dir	Comp.Wt (lb)	Stiff.	Gap 1 (in)	Gap 2 (in)	Fric. Fact.	GapSet /#hgr	Preload (lbf)	Ld.Var	Size	Figure
Tag No.: <None>						Attachment ID: <None>							
B50	V-stop	B50	2 Ground	0.000	Rigid	0.000	1.000	0.80	Weightless				
Tag No.: <None>						Attachment ID: <None>							
B51	V-stop	B51	2 Ground	0.000	Rigid	0.000	1.000	0.80	Weightless				
Tag No.: <None>						Attachment ID: <None>							
B52	V-stop	B52	2 Ground	0.000	Rigid	0.000	1.000	0.80	Weightless				
Tag No.: <None>						Attachment ID: <None>							
B53	V-stop	B53	2 Ground	0.000	Rigid	0.000	1.000	0.80	Weightless				
Tag No.: <None>						Attachment ID: <None>							
B54	V-stop	B54	2 Ground	0.000	Rigid	0.000	1.000	0.80	Weightless				
Tag No.: <None>						Attachment ID: <None>							
B55	Guide-V	B55	1 Ground	0.000	Rigid	0.000	1.000	0.00	Weightless				
	Guide-H	B55	1 Ground	0.000	Rigid	1.000	1.000	0.00	Weightless				
Tag No.: <None>						Attachment ID: <None>							
B57	Guide-V	B57	1 Ground	0.000	Rigid	0.000	1.000	0.00	Weightless				
	Guide-H	B57	1 Ground	0.000	Rigid	1.000	1.000	0.00	Weightless				
Tag No.: <None>						Attachment ID: <None>							
B58	Guide-V	B58	1 Ground	0.000	Rigid	0.000	1.000	0.00	Weightless				
	Guide-H	B58	1 Ground	0.000	Rigid	1.000	1.000	0.00	Weightless				
Tag No.: <None>						Attachment ID: <None>							
B64	Guide-V	B64	1 Ground	0.000	Rigid	0.000	1.000	0.00	Weightless				
	Guide-H	B64	1 Ground	0.000	Rigid	1.000	1.000	0.00	Weightless				
Tag No.: <None>						Attachment ID: <None>							
B65	V-stop	B65	1 Ground	0.000	Rigid	0.000	1.000	0.80	Weightless				
Tag No.: <None>						Attachment ID: <None>							
B66	V-stop	B66	1 Ground	0.000	Rigid	0.000	1.000	0.80	Weightless				
Tag No.: <None>						Attachment ID: <None>							
B67	V-stop	B67	1 Ground	0.000	Rigid	0.000	1.000	0.80	Weightless				
Tag No.: <None>						Attachment ID: <None>							
B68	V-stop	B68	1 Ground	0.000	Rigid	0.000	1.000	0.80	Weightless				
Tag No.: <None>						Attachment ID: <None>							
B69	V-stop	B69	1 Ground	0.000	Rigid	0.000	1.000	0.80	Weightless				
Tag No.: <None>						Attachment ID: <None>							
B70	V-stop	B70	1 Ground	0.000	Rigid	0.000	1.000	0.80	Weightless				
Tag No.: <None>						Attachment ID: <None>							
B71	V-stop	B71	1 Ground	0.000	Rigid	0.000	1.000	0.80	Weightless				

S U P P O R T D A T A L I S T I N G

Point Name	Support Type	Support ID	Conn.to /Dir	Comp.Wt (lb)	Stiff.	Gap 1 (in)	Gap 2 (in)	Fric. Fact.	GapSet /#hgr	Preload (lbf)	Ld.Var	Size	Figure
Tag No.: <None>						Attachment ID: <None>							
B72	V-stop	B72	1 Ground	0.000	Rigid	0.000	1.000	0.80	Weightless				
Tag No.: <None>						Attachment ID: <None>							
B73	V-stop	B73	1 Ground	0.000	Rigid	0.000	1.000	0.80	Weightless				
Tag No.: <None>						Attachment ID: <None>							
B74	Guide-V	B74	1 Ground	0.000	Rigid	0.000	1.000	0.00	Weightless				
	Guide-H	B74	1 Ground	0.000	Rigid	1.000	1.000	0.00	Weightless				
Tag No.: <None>						Attachment ID: <None>							
B75	Guide-V	B75	1 Ground	0.000	Rigid	0.000	1.000	0.00	Weightless				
	Guide-H	B75	1 Ground	0.000	Rigid	1.000	1.000	0.00	Weightless				
Tag No.: <None>						Attachment ID: <None>							
B77	Guide-V	B77	1 Ground	0.000	Rigid	0.000	1.000	0.00	Weightless				
	Guide-H	B77	1 Ground	0.000	Rigid	1.000	1.000	0.00	Weightless				
Tag No.: <None>						Attachment ID: <None>							
B76	Guide-V	B76	1 Ground	0.000	Rigid	0.000	1.000	0.00	Weightless				
	Guide-H	B76	1 Ground	0.000	Rigid	1.000	1.000	0.00	Weightless				
Tag No.: <None>						Attachment ID: <None>							
B59 M	V-stop	B59	M1 Ground	0.000	Rigid	0.000	1.000	0.80	Weightless				
Tag No.: <None>						Attachment ID: <None>							
C21	V-stop	C21	2 Ground	0.000	Rigid	0.000	1.000	0.80	Weightless				
Tag No.: <None>						Attachment ID: <None>							
C22	V-stop	C22	2 Ground	0.000	Rigid	0.000	1.000	0.80	Weightless				
Tag No.: <None>						Attachment ID: <None>							
C23	Guide-V	C23	2 Ground	0.000	Rigid	0.000	1.000	0.00	Weightless				
	Guide-H	C23	2 Ground	0.000	Rigid	1.000	1.000	0.00	Weightless				
Tag No.: <None>						Attachment ID: <None>							
C24	Guide-V	C24	2 Ground	0.000	Rigid	0.000	1.000	0.00	Weightless				
	Guide-H	C24	2 Ground	0.000	Rigid	1.000	1.000	0.00	Weightless				
Tag No.: <None>						Attachment ID: <None>							
C25	V-stop	C25	2 Ground	0.000	Rigid	0.000	1.000	0.80	Weightless				
Tag No.: <None>						Attachment ID: <None>							
C26	V-stop	C26	2 Ground	0.000	Rigid	0.000	1.000	0.80	Weightless				
Tag No.: <None>						Attachment ID: <None>							
C28	V-stop	C28	2 Ground	0.000	Rigid	0.000	1.000	0.80	Weightless				
Tag No.: <None>						Attachment ID: <None>							
C29	V-stop	C29	2 Ground	0.000	Rigid	0.000	1.000	0.80	Weightless				
Tag No.: <None>						Attachment ID: <None>							

S U P P O R T D A T A L I S T I N G

Point Name	Support Type	Support ID	Conn.to /Dir	Comp.Wt (lb)	Stiff.	Gap 1 (in)	Gap 2 (in)	Fric. Fact.	GapSet /#hgr	Preload (lbf)	Ld.Var	Size	Figure
C31	Guide-V	C31 2	Ground	0.000	Rigid	0.000	1.000	0.00	Weightless				
	Guide-H	C31 2	Ground	0.000	Rigid	1.000	1.000	0.00	Weightless				
Tag No.: <None>						Attachment ID: <None>							
C32	Guide-V	C32 2	Ground	0.000	Rigid	0.000	1.000	0.00	Weightless				
	Guide-H	C32 2	Ground	0.000	Rigid	1.000	1.000	0.00	Weightless				
Tag No.: <None>						Attachment ID: <None>							
C33	Guide-V	C33 2	Ground	0.000	Rigid	0.000	1.000	0.00	Weightless				
	Guide-H	C33 2	Ground	0.000	Rigid	1.000	1.000	0.00	Weightless				
Tag No.: <None>						Attachment ID: <None>							
C34	Guide-V	C34 2	Ground	0.000	Rigid	0.000	1.000	0.00	Weightless				
	Guide-H	C34 2	Ground	0.000	Rigid	1.000	1.000	0.00	Weightless				
Tag No.: <None>						Attachment ID: <None>							
C35	V-stop	C35 2	Ground	0.000	Rigid	0.000	1.000	0.80	Weightless				
Tag No.: <None>						Attachment ID: <None>							
C36	V-stop	C36 2	Ground	0.000	Rigid	0.000	1.000	0.80	Weightless				
Tag No.: <None>						Attachment ID: <None>							
C37	V-stop	C37 2	Ground	0.000	Rigid	0.000	1.000	0.80	Weightless				
Tag No.: <None>						Attachment ID: <None>							
C38	V-stop	C38 2	Ground	0.000	Rigid	0.000	1.000	0.80	Weightless				
Tag No.: <None>						Attachment ID: <None>							
C39	V-stop	C39 2	Ground	0.000	Rigid	0.000	1.000	0.80	Weightless				
Tag No.: <None>						Attachment ID: <None>							
C40	Guide-V	C40 2	Ground	0.000	Rigid	0.000	1.000	0.00	Weightless				
	Guide-H	C40 2	Ground	0.000	Rigid	1.000	1.000	0.00	Weightless				
Tag No.: <None>						Attachment ID: <None>							
C42	Guide-V	C42 2	Ground	0.000	Rigid	0.000	1.000	0.00	Weightless				
	Guide-H	C42 2	Ground	0.000	Rigid	1.000	1.000	0.00	Weightless				
Tag No.: <None>						Attachment ID: <None>							
C43	Guide-V	C43 2	Ground	0.000	Rigid	0.000	1.000	0.00	Weightless				
	Guide-H	C43 2	Ground	0.000	Rigid	1.000	1.000	0.00	Weightless				
Tag No.: <None>						Attachment ID: <None>							
C45	Guide-V	C45 2	Ground	0.000	Rigid	0.000	1.000	0.00	Weightless				
	Guide-H	C45 2	Ground	0.000	Rigid	1.000	1.000	0.00	Weightless				
Tag No.: <None>						Attachment ID: <None>							
C46	V-stop	C46 2	Ground	0.000	Rigid	0.000	1.000	0.80	Weightless				
Tag No.: <None>						Attachment ID: <None>							
C47	V-stop	C47 2	Ground	0.000	Rigid	0.000	1.000	0.80	Weightless				

S U P P O R T D A T A L I S T I N G

Point Name	Support Type	Support ID	Conn.to /Dir	Comp.Wt (lb)	Stiff.	Gap 1 (in)	Gap 2 (in)	Fric. Fact.	GapSet /#hgr	Preload (lbf)	Ld.Var	Size	Figure
Tag No.: <None>						Attachment ID: <None>							
C48	V-stop	C48	2 Ground	0.000	Rigid	0.000	1.000	0.80	Weightless				
Tag No.: <None>						Attachment ID: <None>							
C49	V-stop	C49	2 Ground	0.000	Rigid	0.000	1.000	0.80	Weightless				
Tag No.: <None>						Attachment ID: <None>							
C50	V-stop	C50	2 Ground	0.000	Rigid	0.000	1.000	0.80	Weightless				
Tag No.: <None>						Attachment ID: <None>							
C51	V-stop	C51	2 Ground	0.000	Rigid	0.000	1.000	0.80	Weightless				
Tag No.: <None>						Attachment ID: <None>							
C52	V-stop	C52	2 Ground	0.000	Rigid	0.000	1.000	0.80	Weightless				
Tag No.: <None>						Attachment ID: <None>							
C53	V-stop	C53	2 Ground	0.000	Rigid	0.000	1.000	0.80	Weightless				
Tag No.: <None>						Attachment ID: <None>							
C55	Guide-V	C55	2 Ground	0.000	Rigid	0.000	1.000	0.00	Weightless				
	Guide-H	C55	2 Ground	0.000	Rigid	1.000	1.000	0.00	Weightless				
Tag No.: <None>						Attachment ID: <None>							
C56	Guide-V	C56	2 Ground	0.000	Rigid	0.000	1.000	0.00	Weightless				
	Guide-H	C56	2 Ground	0.000	Rigid	1.000	1.000	0.00	Weightless				
Tag No.: <None>						Attachment ID: <None>							
C57	Guide-V	C57	2 Ground	0.000	Rigid	0.000	1.000	0.00	Weightless				
	Guide-H	C57	2 Ground	0.000	Rigid	1.000	1.000	0.00	Weightless				
Tag No.: <None>						Attachment ID: <None>							
C58	Guide-V	C58	2 Ground	0.000	Rigid	0.000	1.000	0.00	Weightless				
	Guide-H	C58	2 Ground	0.000	Rigid	1.000	1.000	0.00	Weightless				
Tag No.: <None>						Attachment ID: <None>							
C59	V-stop	C59	2 Ground	0.000	Rigid	0.000	1.000	0.80	Weightless				
Tag No.: <None>						Attachment ID: <None>							
C60	V-stop	C60	2 Ground	0.000	Rigid	0.000	1.000	0.80	Weightless				
Tag No.: <None>						Attachment ID: <None>							
C61	V-stop	C61	1 Ground	0.000	Rigid	0.000	1.000	0.80	Weightless				
Tag No.: <None>						Attachment ID: <None>							
C63	V-stop	C63	1 Ground	0.000	Rigid	0.000	1.000	0.80	Weightless				
Tag No.: <None>						Attachment ID: <None>							
C64	V-stop	C64	2 Ground	0.000	Rigid	0.000	1.000	0.80	Weightless				
Tag No.: <None>						Attachment ID: <None>							
C65	V-stop	C65	1 Ground	0.000	Rigid	0.000	1.000	0.80	Weightless				

S U P P O R T D A T A L I S T I N G

Point Name	Support Type	Support ID	Conn.to /Dir	Comp.Wt (lb)	Stiff.	Gap 1 (in)	Gap 2 (in)	Fric. Fact.	GapSet /#hgr	Preload (lbf)	Ld.Var	Size	Figure
Tag No.: <None>						Attachment ID: <None>							
C72	V-stop	C72 1	Ground	0.000	Rigid	0.000	1.000	0.80		Weightless			
Tag No.: <None>						Attachment ID: <None>							
C73	Guide-V	C73 1	Ground	0.000	Rigid	0.000	1.000	0.00		Weightless			
	Guide-H	C73 1	Ground	0.000	Rigid	1.000	1.000	0.00		Weightless			
Tag No.: <None>						Attachment ID: <None>							
C74	Guide-V	C74 1	Ground	0.000	Rigid	0.000	1.000	0.00		Weightless			
	Guide-H	C74 1	Ground	0.000	Rigid	1.000	1.000	0.00		Weightless			
Tag No.: <None>						Attachment ID: <None>							
C75	V-stop	C75 1	Ground	0.000	Rigid	0.000	1.000	0.80		Weightless			
Tag No.: <None>						Attachment ID: <None>							
C76	V-stop	C76 1	Ground	0.000	Rigid	0.000	1.000	0.80		Weightless			
Tag No.: <None>						Attachment ID: <None>							
C77	V-stop	C77 1	Ground	0.000	Rigid	0.000	1.000	0.80		Weightless			
Tag No.: <None>						Attachment ID: <None>							
C78	V-stop	C78 1	Ground	0.000	Rigid	0.000	1.000	0.80		Weightless			
Tag No.: <None>						Attachment ID: <None>							
C79	V-stop	C79 1	Ground	0.000	Rigid	0.000	1.000	0.80		Weightless			
Tag No.: <None>						Attachment ID: <None>							
C80	Guide-V	C80 1	Ground	0.000	Rigid	0.000	1.000	0.00		Weightless			
	Guide-H	C80 1	Ground	0.000	Rigid	1.000	1.000	0.00		Weightless			
Tag No.: <None>						Attachment ID: <None>							
C82	Guide-V	C82 1	Ground	0.000	Rigid	0.000	1.000	0.00		Weightless			
	Guide-H	C82 1	Ground	0.000	Rigid	1.000	1.000	0.00		Weightless			
Tag No.: <None>						Attachment ID: <None>							
C81	V-stop	C81 1	Ground	0.000	Rigid	0.000	1.000	0.80		Weightless			
Tag No.: <None>						Attachment ID: <None>							
C83	Guide-V	C83 1	Ground	0.000	Rigid	0.000	1.000	0.00		Weightless			
	Guide-H	C83 1	Ground	0.000	Rigid	1.000	1.000	0.00		Weightless			
Tag No.: <None>						Attachment ID: <None>							
C84	Guide-V	C84 1	Ground	0.000	Rigid	0.000	1.000	0.00		Weightless			
	Guide-H	C84 1	Ground	0.000	Rigid	1.000	1.000	0.00		Weightless			
Tag No.: <None>						Attachment ID: <None>							
D04 M	V-stop	D04 M1	Ground	0.000	Rigid	0.000	1.000	0.80		Weightless			
Tag No.: <None>						Attachment ID: <None>							
D13	V-stop	D13 1	Ground	0.000	Rigid	0.000	1.000	0.80		Weightless			
Tag No.: <None>						Attachment ID: <None>							

S U P P O R T D A T A L I S T I N G

Point Name	Support Type	Support ID	Conn.to /Dir	Comp.Wt (lb)	Stiff.	Gap 1 (in)	Gap 2 (in)	Fric. Fact.	GapSet /#hgr	Preload (lbf)	Ld.Var	Size	Figure
D14	Guide-V	D14 2	Ground	0.000	Rigid	0.000	1.000	0.00	Weightless				
	Guide-H	D14 2	Ground	0.000	Rigid	1.000	1.000	0.00	Weightless				
Tag No.: <None>						Attachment ID: <None>							
D15	Guide-V	D15 2	Ground	0.000	Rigid	0.000	1.000	0.00	Weightless				
	Guide-H	D15 2	Ground	0.000	Rigid	1.000	1.000	0.00	Weightless				
Tag No.: <None>						Attachment ID: <None>							
D18	V-stop	D18 1	Ground	0.000	Rigid	0.000	1.000	0.80	Weightless				
Tag No.: <None>						Attachment ID: <None>							
D16	Guide-V	D16 1	Ground	0.000	Rigid	0.000	1.000	0.00	Weightless				
	Guide-H	D16 1	Ground	0.000	Rigid	1.000	1.000	0.00	Weightless				
Tag No.: <None>						Attachment ID: <None>							
D19	Guide-V	D19 2	Ground	0.000	Rigid	0.000	1.000	0.00	Weightless				
	Guide-H	D19 2	Ground	0.000	Rigid	1.000	1.000	0.00	Weightless				
Tag No.: <None>						Attachment ID: <None>							
D25	V-stop	D25 1	Ground	0.000	Rigid	0.000	1.000	0.80	Weightless				
Tag No.: <None>						Attachment ID: <None>							
D20	Guide-V	D20 1	Ground	0.000	Rigid	0.000	1.000	0.00	Weightless				
	Guide-H	D20 1	Ground	0.000	Rigid	1.000	1.000	0.00	Weightless				
Tag No.: <None>						Attachment ID: <None>							
D26	Guide-V	D26 1	Ground	0.000	Rigid	0.000	1.000	0.00	Weightless				
	Guide-H	D26 1	Ground	0.000	Rigid	1.000	1.000	0.00	Weightless				
Tag No.: <None>						Attachment ID: <None>							
D28	V-stop	D28 1	Ground	0.000	Rigid	0.000	1.000	0.80	Weightless				
Tag No.: <None>						Attachment ID: <None>							
D27	V-stop	D27 1	Ground	0.000	Rigid	0.000	1.000	0.80	Weightless				

Spring Manufacturer: Anvil/Grinnell
NOTE 1: No soil supports present in the system.
Gap 1 : V-stop,Guide-V=down, Linestop,Incline,Tie/link=backward, Guide-H=Left
Gap 2 : V-stop,Guide-V=Up , Linestop,Incline,Tie/link=forward , Guide-H=Right
Stiffness units for rotation support: ft-lb/deg, all others: lb/in

B E N D D A T A L I S T I N G

Point Name	Bend Type	Radius (in)	Angle (deg)	OD (in)	tnom (in)	Material	Flan^ /Cuts	SIF in	SIF out	Analysis Set	Flexibility (K)	Pressure Case
A04	Elbow	36.00	10.5	4.500	0.237	A53-B	0/0	1.00	1.00	1	1.00	None
A05	Elbow	36.00	89.7	4.500	0.237	A53-B	0/0	1.00	1.00	1	1.00	None
A06	Elbow	36.00	90.0	4.500	0.237	A53-B	0/0	1.00	1.00	1	1.00	None
A07	Elbow	36.00	89.9	4.500	0.237	A53-B	0/0	1.00	1.00	1	1.00	None
A08	Elbow	36.00	90.0	4.500	0.237	A53-B	0/0	1.00	1.00	1	1.00	None
A09	Elbow	36.00	90.0	4.500	0.237	A53-B	0/0	1.00	1.00	1	1.00	None
A10	Elbow	36.00	90.0	4.500	0.237	A53-B	0/0	1.00	1.00	1	1.00	None
A11	Elbow	36.00	90.0	4.500	0.237	A53-B	0/0	1.00	1.00	1	1.00	None
A12	Elbow	36.00	90.0	4.500	0.237	A53-B	0/0	1.00	1.00	1	1.00	None
A13	Elbow	36.00	90.0	4.500	0.237	A53-B	0/0	1.00	1.00	1	1.00	None
A14	Elbow	36.00	90.0	4.500	0.237	A53-B	0/0	1.00	1.00	1	1.00	None
A15	Elbow	36.00	1.0	4.500	0.237	A53-B	0/0	1.00	1.00	1	1.00	None
B06	Elbow	36.00	9.3	6.625	0.280	A53-B	0/0	1.00	1.00	1	1.65	None
B09	Elbow	36.00	89.7	6.625	0.280	A53-B	0/0	1.00	1.00	1	1.65	None
B16	Elbow	36.00	90.0	6.625	0.280	A53-B	0/0	1.00	1.00	1	1.65	None
B19	Elbow	36.00	90.0	6.625	0.280	A53-B	0/0	1.00	1.00	1	1.65	None
B27	Elbow	36.00	90.0	6.625	0.280	A53-B	0/0	1.00	1.00	1	1.65	None
B30	Elbow	36.00	90.0	6.625	0.280	A53-B	0/0	1.00	1.00	1	1.65	None
B41	Elbow	36.00	90.0	6.625	0.280	A53-B	0/0	1.00	1.00	1	1.65	None
B44	Elbow	36.00	90.0	6.625	0.280	A53-B	0/0	1.00	1.00	1	1.65	None
B56	Elbow	30.00	90.0	6.625	0.280	A53-B	0/0	1.02	1.00	1	1.98	None
B20	Elbow	30.00	90.0	6.625	0.280	A53-B	0/0	1.02	1.00	1	1.98	None
B21	Elbow	30.00	90.0	6.625	0.280	A53-B	0/0	1.02	1.00	1	1.98	None
B59	*Elbow	36.00	0.9	6.625	0.280	A53-B	0/0	1.00	1.00	1	1.65	None
C06	Elbow	36.00	4.6	4.500	0.237	A53-B	0/0	1.00	1.00	1	1.00	None
C09	Elbow	36.00	89.9	4.500	0.237	A53-B	0/0	1.00	1.00	1	1.00	None
C16	Elbow	36.00	90.0	4.500	0.237	A53-B	0/0	1.00	1.00	1	1.00	None
C19	Elbow	36.00	90.0	4.500	0.237	A53-B	0/0	1.00	1.00	1	1.00	None
C27	Elbow	36.00	90.0	4.500	0.237	A53-B	0/0	1.00	1.00	1	1.00	None
C30	Elbow	36.00	90.0	4.500	0.237	A53-B	0/0	1.00	1.00	1	1.00	None
C41	Elbow	36.00	90.0	4.500	0.237	A53-B	0/0	1.00	1.00	1	1.00	None
C44	Elbow	36.00	90.0	4.500	0.237	A53-B	0/0	1.00	1.00	1	1.00	None
C54	Elbow	36.00	90.0	4.500	0.237	A53-B	0/0	1.00	1.00	1	1.00	None
C62	Elbow	36.00	90.0	4.500	0.237	A53-B	0/0	1.00	1.00	1	1.00	None
C66	Elbow	36.00	90.0	4.500	0.237	A53-B	0/0	1.00	1.00	1	1.00	None
C67	*Elbow	36.00	1.0	4.500	0.237	A53-B	0/0	1.00	1.00	1	1.00	None
D04	*Elbow	36.00	0.7	4.500	0.237	A53-B	0/0	1.00	1.00	1	1.00	None
D08	Elbow	36.00	90.0	4.500	0.237	A53-B	0/0	1.00	1.00	1	1.00	None
D12	Elbow	36.00	90.0	4.500	0.237	A53-B	0/0	1.00	1.00	1	1.00	None
D17	Elbow	36.00	90.0	4.500	0.237	A53-B	0/0	1.00	1.00	1	1.00	None

^ = Number of bend ends where either a flange or valve is within distance
(L/D) x Nominal diameter, where L/D is defined under Tools > Model options > Edit
* = Mid-point present

L O A D C A S E D E S C R I P T I O N

Load Case	Load Case Name	Description
GR	Gravity	
T1	Thermal 1	
P1	Press 1	

A N A L Y S I S S U M M A R Y

Current model revision number : 4

Constant values used
Acceleration due to gravity..... 386.40000 in/s/s
Density of water for specific gravity Cal.. 62.400 lb/cu.ft
Density of sea water..... 62.400 lb/cu.ft
Density of ground water ..... 62.400 lb/cu.ft

Static - Analysis set number 1
Date and Time of analysis ..... Apr 24, 2020 8:24 AM
Model Revision Number 4
Number of load cases 3
Load cases analyzed ..... GR T1 P1
Description ..... Analysis Set No.1
Gaps/Friction/Soil considered ..... Yes
Tolerance - Force, Displacement ..... 10.00 lbf 0.0010 in
Friction - Scale Factor, Tolerance 1.00 0.10
Ignore friction for cases E1,E2,E3 .... Yes
Ignore friction for gravity case ..... Yes
Hanger design run ..... No
Cut short included ..... No
Thermal bowing included ..... No
Include Bourdon rotational effect ..... No
Pipe radius for Bourdon calculation ... Mean
Occasional load analysis type ..... Nonlinear
Non-linear analysis summary file ..... Encasement Piping.LOG
Use default load sequence ..... Yes
Base load cases for nonlinear analysis
GR = None
T1 = GR
P1 = T1
Weight of contents included ..... Yes
Fluid density factor for contents 1.00
Pressure stiffening case ..... None
Hot modulus case ..... None
Pressure Extension..... Yes
Water elevation for buoyancy loads .... Not considered
Use corroded thickness in analysis .... Yes
Rigid stiffness factor 1000.0
Support rigid stiffness (translation) . 0.100000E+11 lb/in
Support rigid stiffness (rotation) .... 0.100000E+11 ft-lb/deg
Anchor rigid stiffness (translation) .. 0.100000E+11 lb/in
Anchor rigid stiffness (rotation) ..... 0.100000E+11 ft-lb/deg
Remove Lift-Off Supports ..... No

CODE COMPLIANCE COMBINATIONS

<Description> Combination	Category	Method	Case/Combination	Factor	M/S	K-Factor	Allowable (psi)	D/A/P/C
GR + Max P{1}	Sustain	Sum	GR[1]	1.00			Automatic	Y Y Y Y
			Max Long	1.00				
Max Range	Expansion	Sum	Temp. Range	1.00			Automatic	Y Y Y Y
Amb to T1{1}	Expansion	Sum	T1[1]	1.00			Automatic	Y Y Y Y
Max P{1}	Hoop	Sum	Max Hoop	1.00			Automatic	Y Y Y Y

Notes:

D/A/P/C: [D]efault/[A]uto-Update/[P]rint options/[C]Consistent (Y=Yes, N=No)

NON-CODE COMBINATIONS

<Description> Combination	Method	Case/Combination	Factor	D/A/P/C
Gravity{1}	Sum	GR[1]	1.00	Y Y Y Y
<200.00 deg F> Thermal 1{1}	Sum	T1[1]	1.00	Y Y N N
Pressure 1{1}	Sum	P1[1]	1.00	Y Y N N
GT1{1}	Sum	GR[1]	1.00	Y Y Y Y
		T1[1]	1.00	
GT1P1{1}	Sum	GR[1]	1.00	Y Y Y Y
		T1[1]	1.00	
		P1[1]	1.00	

Notes:

D/A/P/C: [D]efault/[A]uto-Update/[P]rint options/[C]Consistent (Y=Yes, N=No)

CODE COMPLIANCE

```
Y - Factor ............................ 0.40
Design Pressure Factor ................ 1.00
Minimum stress ratio used in reports... 0.00
Number of stress points per span ...... 0
Include corrosion in stress calcs. .... Y
Include corrosion in Hoop stress calcs. Y
Include torsion in code stress ........ N
Include axial force in code stress .... Y
Include sustain load margin ........... Only if allowable stress is exceeded
Use minimum sustained margin........... Y
Set sustained SIF=1 no bends .......... N
Set occasional SIF = 1 ................ N
Set occasional SIF = 0.75i ............ Y
Apply cold/hot modulus ratio .......... N
Disable auto code combinations ........ N
Disable auto non-code combinations .... N
No. of thermal ranges to report ....... 0
Include Max Range combination ......... Y
Total stress .......................... Octahedral
Direct shear .......................... None
Longitudinal pressure calculation ..... AxF/area
Use code case 178 ..................... Y
Inc. Axial Str and Pcase in Sustained.. Y
Use alternate occasional allowable .... N
Apply circumferential weld WC factor .. N
ASME B31J Enabled ..................... N
```

```
-----------------------------------------------------------------------------------------------------------------
Encasement Piping
04/24/2020 2018719                                                    BENTLEY
08:29 AM                                                              AutoPIPE Nuclear 12.00.00.16   RESULT PAGE  73
-----------------------------------------------------------------------------------------------------------------

                                        S U P P O R T    F O R C E S
        ( Force - lbf   , Moment - ft-lb  , Tran. - in  , Rot. - deg   )
 Point/  Connect/    Load                          L O C A L              G L O B A L
 Supp. ID   Type   Combination                Dirn  Force    Deform    Dirn   Force   Deform
 -------- -------- ----------------------     ---- -------- --------   ---- -------- --------

 Tag No.: <None>
 A23                Gravity{1}                down       87   0.000      X             0.000
 A23  1   V - Stop                            -Z              0.012      Y       -87  -0.000
 Stiff   :RIGID                               +X              0.000      Z            -0.012

                    GT1{1}                    down        9   0.000      X             0.048
 Comp.Wt :   0.000                            +Z              0.001      Y        -9  -0.000
                                              +X              0.048      Z             0.001

                    GT1P1{1}                  down        9   0.000      X             0.048
                                              +Z              0.001      Y        -9  -0.000
                                              +X              0.048      Z             0.001

 Tag No.: <None>
 A24                Gravity{1}                down       92   0.000      X             0.000
 A24  1   V - Stop                            -Z              0.084      Y       -92  -0.000
 Stiff   :RIGID                               +X              0.000      Z            -0.084

                    GT1{1}                    down      159   0.000      X        92   0.144
 Comp.Wt :   0.000                            +Z         87   0.052      Y      -159  -0.000
                                              +X         92   0.144      Z        87   0.052

                    GT1P1{1}                  down      159   0.000      X        92   0.145
                                              +Z         87   0.053      Y      -159  -0.000
                                              +X         92   0.145      Z        87   0.053

 Tag No.: <None>
 A21                Gravity{1}                down       91   0.000      X       -17   0.000
 A21  1   Guide                               left            0.171      Y       -89  -0.000
 Stiff   :RIGID                               forw            0.000      Z            -0.171

                    GT1{1}                    up              0.035      X             0.234
 Comp.Wt :   0.000                            rght            0.177      Y            -0.008
                                              forw            0.231      Z             0.177

                    GT1P1{1}                  up              0.035      X             0.235
                                              rght            0.178      Y            -0.008
                                              forw            0.232      Z             0.178

 Tag No.: <None>
 A22                Gravity{1}                down       54   0.000      X            -0.029
 A22  2   Guide                               left            0.029      Y       -54  -0.006
 Stiff   :RIGID                               forw            0.202      Z         2  -0.202

                    GT1{1}                    down      139   0.000      X             0.268
 Comp.Wt :   0.000                            rght            0.268      Y      -139   0.004
                                              back            0.155      Z         4   0.155

                    GT1P1{1}                  down      139   0.000      X             0.269
                                              rght            0.269      Y      -139   0.005
                                              back            0.157      Z         4   0.157
```

```
-----------------------------------------------------------------------------------------------------------------------
Encasement Piping
04/24/2020 2018719                                                                    BENTLEY
08:29 AM                                                                              AutoPIPE Nuclear 12.00.00.16   RESULT PAGE  74
-----------------------------------------------------------------------------------------------------------------------

                                          S U P P O R T    F O R C E S
        ( Force - lbf   , Moment - ft-lb  , Tran. - in  , Rot. - deg   )
 Point/  Connect/    Load                          L O C A L              G L O B A L
 Supp. ID   Type   Combination                 Dirn  Force    Deform    Dirn   Force   Deform
 -------- -------- ----------------------      ---- -------- --------   ---- -------- --------
 Tag No.: <None>
 A25                Gravity{1}                 down      112   0.000      X            -0.072
 A25  2   V - Stop                             -Z             0.203      Y      -112  -0.000
 Stiff   :RIGID                                -X             0.072      Z            -0.203

                    GT1{1}                     down       85   0.000      X        40   0.118
 Comp.Wt :   0.000                             +Z         55   0.058      Y       -85  -0.000
                                               +X         40   0.118      Z        55   0.058

                    GT1P1{1}                   down       85   0.000      X        40   0.119
                                               +Z         55   0.060      Y       -85  -0.000
                                               +X         40   0.119      Z        55   0.060

 Tag No.: <None>
 A26                Gravity{1}                 down       94   0.000      X            -0.086
 A26  2   V - Stop                             -Z             0.203      Y       -94  -0.000
 Stiff   :RIGID                                -X             0.086      Z            -0.203

                    GT1{1}                     down      102   0.000      X        29  -0.025
 Comp.Wt :   0.000                             +Z         76  -0.038      Y      -102  -0.000
                                               +X         29  -0.025      Z        76  -0.038

                    GT1P1{1}                   down      102   0.000      X        29  -0.024
                                               +Z         76  -0.038      Y      -102  -0.000
                                               +X         29  -0.024      Z        76  -0.038

 Tag No.: <None>
 A27                Gravity{1}                 down       90   0.000      X            -0.087
 A27  2   V - Stop                             -Z             0.203      Y       -90  -0.000
 Stiff   :RIGID                                -X             0.087      Z            -0.203

                    GT1{1}                     down       83   0.000      X        -9  -0.097
 Comp.Wt :   0.000                             +Z         66  -0.135      Y       -83  -0.000
                                               -X          9   0.097      Z        66  -0.135

                    GT1P1{1}                   down       83   0.000      X       -10  -0.097
                                               +Z         66  -0.134      Y       -83  -0.000
                                               -X         10   0.097      Z        66  -0.134

 Tag No.: <None>
 A28                Gravity{1}                 down      122   0.000      X            -0.091
 A28  2   V - Stop                             -Z             0.203      Y      -122  -0.000
 Stiff   :RIGID                                -X             0.091      Z            -0.203

                    GT1{1}                     down      129   0.000      X       -98  -0.184
 Comp.Wt :   0.000                             -Z         31   0.232      Y      -129  -0.000
                                               -X         98   0.184      Z       -31  -0.232

                    GT1P1{1}                   down      129   0.000      X       -98  -0.185
                                               -Z         30   0.231      Y      -129  -0.000
                                               -X         98   0.185      Z       -30  -0.231
```

```
-----------------------------------------------------------------------------------------------------------------------
Encasement Piping
04/24/2020 2018719                                                                    BENTLEY
08:29 AM                                                                              AutoPIPE Nuclear 12.00.00.16   RESULT PAGE  75
-----------------------------------------------------------------------------------------------------------------------

                                          S U P P O R T    F O R C E S
        ( Force - lbf   , Moment - ft-lb  , Tran. - in  , Rot. - deg   )
 Point/  Connect/    Load                          L O C A L              G L O B A L
 Supp. ID   Type   Combination                Dirn  Force    Deform    Dirn   Force   Deform
 -------- -------- ----------------------     ---- -------- --------   ---- -------- --------
 Tag No.: <None>
 A29                Gravity{1}                down       66   0.000      X            -0.122
 A29  1   Guide                               left            0.122      Y       -66  -0.006
 Stiff   :RIGID                               forw            0.203      Z         2  -0.202

                    GT1{1}                    down       49   0.000      X            -0.242
 Comp.Wt :   0.000                            left            0.242      Y       -49  -0.010
                                              forw            0.346      Z         1  -0.346

                    GT1P1{1}                  down       49   0.000      X            -0.243
                                              left            0.243      Y       -49  -0.010
                                              forw            0.346      Z         1  -0.346

 Tag No.: <None>
 A30                Gravity{1}                down       41   0.000      X        -1  -0.143
 A30  1   Guide                               left            0.227      Y       -41   0.004
 Stiff   :RIGID                               back            0.143      Z            -0.227

                    GT1{1}                    down      110   0.000      X        -3  -0.098
 Comp.Wt :   0.000                            left            0.236      Y      -110   0.003
                                              back            0.098      Z            -0.236

                    GT1P1{1}                  down      110   0.000      X        -3  -0.099
                                              left            0.236      Y      -110   0.003
                                              back            0.099      Z            -0.236

 Tag No.: <None>
 A31                Gravity{1}                down       91   0.000      X        -3  -0.143
 A31  1   Guide                               left            0.249      Y       -91   0.004
 Stiff   :RIGID                               back            0.143      Z            -0.249

                    GT1{1}                    up              0.001      X            -0.069
 Comp.Wt :   0.000                            left            0.092      Y             0.003
                                              back            0.069      Z            -0.092

                    GT1P1{1}                  up              0.001      X            -0.069
                                              left            0.091      Y             0.003
                                              back            0.069      Z            -0.091

 Tag No.: <None>
 A32                Gravity{1}                down       35   0.000      X            -0.175
 A32  1   Guide                               left            0.175      Y       -35  -0.008
 Stiff   :RIGID                               forw            0.281      Z         1  -0.281

                    GT1{1}                    down       84   0.000      X             0.059
 Comp.Wt :   0.000                            rght            0.059      Y       -84   0.000
                                              back            0.008      Z         3   0.008

                    GT1P1{1}                  down       84   0.000      X             0.059
                                              rght            0.059      Y       -84   0.000
                                              back            0.009      Z         3   0.009
```

```
-----------------------------------------------------------------------------------------------------------------
Encasement Piping
04/24/2020 2018719                                                          BENTLEY
08:29 AM                                                                    AutoPIPE Nuclear 12.00.00.16   RESULT PAGE  76
-----------------------------------------------------------------------------------------------------------------

                                          S U P P O R T    F O R C E S
        ( Force - lbf   , Moment - ft-lb  , Tran. - in  , Rot. - deg   )
 Point/  Connect/    Load                          L O C A L              G L O B A L
 Supp. ID   Type   Combination                Dirn  Force    Deform    Dirn   Force   Deform
 -------- -------- ----------------------     ---- -------- --------   ---- -------- --------
 Tag No.: <None>
 A33                Gravity{1}                down      120   0.000      X            -0.260
 A33  2   V - Stop                            -Z             0.281      Y      -120  -0.000
 Stiff   :RIGID                               -X             0.260      Z            -0.281

                    GT1{1}                    down      100   0.000      X        57  -0.062
 Comp.Wt :   0.000                            +Z         55  -0.089      Y      -100  -0.000
                                              +X         57  -0.062      Z        55  -0.089

                    GT1P1{1}                  down      100   0.000      X        57  -0.061
                                              +Z         56  -0.088      Y      -100  -0.000
                                              +X         57  -0.061      Z        56  -0.088

 Tag No.: <None>
 A34                Gravity{1}                down       88   0.000      X            -0.341
 A34  2   V - Stop                            -Z             0.281      Y       -88  -0.000
 Stiff   :RIGID                               -X             0.341      Z            -0.281

                    GT1{1}                    down       93   0.000      X        32  -0.296
 Comp.Wt :   0.000                            +Z         67  -0.185      Y       -93  -0.000
                                              +X         32  -0.296      Z        67  -0.185

                    GT1P1{1}                  down       93   0.000      X        32  -0.296
                                              +Z         67  -0.185      Y       -93  -0.000
                                              +X         32  -0.296      Z        67  -0.185

 Tag No.: <None>
 A35                Gravity{1}                down      104   0.000      X            -0.411
 A35  2   V - Stop                            -Z             0.281      Y      -104  -0.000
 Stiff   :RIGID                               -X             0.411      Z            -0.281

                    GT1{1}                    down      104   0.000      X        24  -0.411
 Comp.Wt :   0.000                            -Z         51   0.281      Y      -104  -0.000
                                              +X         24  -0.411      Z       -51  -0.281

                    GT1P1{1}                  down      104   0.000      X        24  -0.411
                                              -Z         51   0.281      Y      -104  -0.000
                                              +X         24  -0.411      Z       -51  -0.281

 Tag No.: <None>
 A36                Gravity{1}                down       39   0.000      X            -0.463
 A36  2   V - Stop                            -Z             0.281      Y       -39  -0.000
 Stiff   :RIGID                               -X             0.463      Z            -0.281

                    GT1{1}                    down       28   0.000      X        14  -0.387
 Comp.Wt :   0.000                            -Z         18   0.378      Y       -28  -0.000
                                              +X         14  -0.387      Z       -18  -0.378

                    GT1P1{1}                  down       28   0.000      X        14  -0.386
                                              -Z         18   0.378      Y       -28  -0.000
                                              +X         14  -0.386      Z       -18  -0.378
```

```
-----------------------------------------------------------------------------------------------------------------------
Encasement Piping
04/24/2020 2018719                                                                    BENTLEY
08:29 AM                                                                              AutoPIPE Nuclear 12.00.00.16   RESULT PAGE  77
-----------------------------------------------------------------------------------------------------------------------

                                          S U P P O R T    F O R C E S
        ( Force - lbf   , Moment - ft-lb  , Tran. - in  , Rot. - deg   )
 Point/  Connect/    Load                          L O C A L              G L O B A L
 Supp. ID   Type   Combination                Dirn  Force    Deform    Dirn   Force   Deform
 -------- -------- ----------------------     ---- -------- --------   ---- -------- --------
 Tag No.: <None>
 A37                Gravity{1}                down       88   0.000      X            -0.474
 A37  2   V - Stop                            -Z              0.281      Y       -88  -0.000
 Stiff   :RIGID                               -X              0.474      Z            -0.281

                    GT1{1}                    down      108   0.000      X        55  -0.368
 Comp.Wt :   0.000                            -Z         66   0.407      Y      -108  -0.000
                                              +X         55  -0.368      Z       -66  -0.407

                    GT1P1{1}                  down      108   0.000      X        55  -0.368
                                              -Z         66   0.407      Y      -108  -0.000
                                              +X         55  -0.368      Z       -66  -0.407

 Tag No.: <None>
 A38                Gravity{1}                down       81   0.000      X            -0.491
 A38  1   Guide                               left            0.491      Y       -81  -0.009
 Stiff   :RIGID                               forw            0.281      Z         3  -0.281

                    GT1{1}                    down       59   0.000      X            -0.419
 Comp.Wt :   0.000                            left            0.419      Y       -59  -0.016
                                              forw            0.503      Z         2  -0.503

                    GT1P1{1}                  down       59   0.000      X            -0.419
                                              left            0.419      Y       -59  -0.016
                                              forw            0.504      Z         2  -0.504

 Tag No.: <None>
 A39                Gravity{1}                down       60   0.000      X         1  -0.489
 A39  1   Guide                               rght            0.285      Y       -60  -0.012
 Stiff   :RIGID                               forw            0.489      Z            -0.285

                    GT1{1}                    down       90   0.000      X         2  -0.609
 Comp.Wt :   0.000                            rght            0.342      Y       -90  -0.015
                                              forw            0.609      Z            -0.342

                    GT1P1{1}                  down       90   0.000      X         2  -0.609
                                              rght            0.342      Y       -90  -0.015
                                              forw            0.609      Z            -0.342

 Tag No.: <None>
 A40                Gravity{1}                down       12   0.000      X         0  -0.489
 A40  1   Guide                               rght            0.297      Y       -12  -0.013
 Stiff   :RIGID                               forw            0.489      Z            -0.297

                    GT1{1}                    up              0.007      X            -0.652
 Comp.Wt :   0.000                            rght            0.067      Y            -0.010
                                              forw            0.652      Z            -0.067

                    GT1P1{1}                  up              0.007      X            -0.653
                                              rght            0.066      Y            -0.010
                                              forw            0.653      Z            -0.066
```

```
-----------------------------------------------------------------------------------------------------------------
Encasement Piping
04/24/2020 2018719                                                          BENTLEY
08:29 AM                                                                    AutoPIPE Nuclear 12.00.00.16   RESULT PAGE  78
-----------------------------------------------------------------------------------------------------------------

                                        S U P P O R T    F O R C E S
        ( Force - lbf   , Moment - ft-lb  , Tran. - in  , Rot. - deg   )
 Point/  Connect/    Load                          L O C A L              G L O B A L
 Supp. ID   Type   Combination                Dirn  Force    Deform    Dirn   Force   Deform
 -------- -------- ----------------------     ---- -------- --------   ---- -------- --------
 Tag No.: <None>
 A41                Gravity{1}                down      107   0.000      X            -0.473
 A41  1   Guide                               left            0.473      Y      -107  -0.002
 Stiff   :RIGID                               forw            0.312      Z         1  -0.312

                    GT1{1}                    down      110   0.000      X            -0.816
 Comp.Wt :   0.000                            left            0.816      Y      -110   0.001
                                              back            0.077      Z         1   0.077

                    GT1P1{1}                  down      110   0.000      X            -0.817
                                              left            0.817      Y      -110   0.001
                                              back            0.078      Z         1   0.078

 Tag No.: <None>
 A42                Gravity{1}                down       94   0.000      X            -0.418
 A42  2   V - Stop                            -Z              0.312      Y       -94  -0.000
 Stiff   :RIGID                               -X              0.418      Z            -0.312

                    GT1{1}                    down       94   0.000      X       -55  -0.733
 Comp.Wt :   0.000                            +Z         51  -0.020      Y       -94  -0.000
                                              -X         55   0.733      Z        51  -0.020

                    GT1P1{1}                  down       94   0.000      X       -55  -0.734
                                              +Z         51  -0.019      Y       -94  -0.000
                                              -X         55   0.734      Z        51  -0.019

 Tag No.: <None>
 A43                Gravity{1}                down       97   0.000      X            -0.349
 A43  2   V - Stop                            -Z              0.312      Y       -97  -0.000
 Stiff   :RIGID                               -X              0.349      Z            -0.312

                    GT1{1}                    down       97   0.000      X       -42  -0.474
 Comp.Wt :   0.000                            +Z         66  -0.116      Y       -97  -0.000
                                              -X         42   0.474      Z        66  -0.116

                    GT1P1{1}                  down       97   0.000      X       -42  -0.474
                                              +Z         66  -0.116      Y       -97  -0.000
                                              -X         42   0.474      Z        66  -0.116

 Tag No.: <None>
 A44                Gravity{1}                down       97   0.000      X            -0.269
 A44  2   V - Stop                            -Z              0.312      Y       -97  -0.000
 Stiff   :RIGID                               -X              0.269      Z            -0.312

                    GT1{1}                    down       96   0.000      X       -14  -0.287
 Comp.Wt :   0.000                            +Z         76  -0.213      Y       -96  -0.000
                                              -X         14   0.287      Z        76  -0.213

                    GT1P1{1}                  down       96   0.000      X       -14  -0.287
                                              +Z         76  -0.212      Y       -96  -0.000
                                              -X         14   0.287      Z        76  -0.212
```

```
-----------------------------------------------------------------------------------------------------------------
Encasement Piping
04/24/2020 2018719                                                          BENTLEY
08:29 AM                                                                    AutoPIPE Nuclear 12.00.00.16   RESULT PAGE  79
-----------------------------------------------------------------------------------------------------------------

                                          S U P P O R T    F O R C E S
        ( Force - lbf   , Moment - ft-lb  , Tran. - in  , Rot. - deg   )
 Point/  Connect/    Load                          L O C A L              G L O B A L
 Supp. ID   Type   Combination                Dirn  Force    Deform    Dirn   Force   Deform
 -------- -------- ----------------------     ---- -------- --------   ---- -------- --------
 Tag No.: <None>
 A45                Gravity{1}                down       97   0.000      X            -0.183
 A45  2   V - Stop                            -Z             0.312      Y       -97  -0.000
 Stiff   :RIGID                               -X             0.183      Z            -0.312

                    GT1{1}                    down       96   0.000      X        21  -0.182
 Comp.Wt :   0.000                            +Z         74  -0.309      Y       -96  -0.000
                                              +X         21  -0.182      Z        74  -0.309

                    GT1P1{1}                  down       96   0.000      X        21  -0.182
                                              +Z         74  -0.309      Y       -96  -0.000
                                              +X         21  -0.182      Z        74  -0.309

 Tag No.: <None>
 A46                Gravity{1}                down       97   0.000      X            -0.093
 A46  2   V - Stop                            -Z             0.312      Y       -97  -0.000
 Stiff   :RIGID                               -X             0.093      Z            -0.312

                    GT1{1}                    down       98   0.000      X         5  -0.087
 Comp.Wt :   0.000                            -Z         78   0.405      Y       -98  -0.000
                                              +X          5  -0.087      Z       -78  -0.405

                    GT1P1{1}                  down       98   0.000      X         5  -0.087
                                              -Z         78   0.405      Y       -98  -0.000
                                              +X          5  -0.087      Z       -78  -0.405

 Tag No.: <None>
 A47                Gravity{1}                down       96   0.000      X            -0.006
 A47  2   V - Stop                            -Z             0.312      Y       -96  -0.000
 Stiff   :RIGID                               -X             0.006      Z            -0.312

                    GT1{1}                    down       96   0.000      X         -3  -0.013
 Comp.Wt :   0.000                            -Z         77   0.501      Y       -96  -0.000
                                              -X          3   0.013      Z       -77  -0.501

                    GT1P1{1}                  down       96   0.000      X         -3  -0.013
                                              -Z         77   0.502      Y       -96  -0.000
                                              -X          3   0.013      Z       -77  -0.502

 Tag No.: <None>
 A48                Gravity{1}                down      102   0.000      X             0.077
 A48  2   V - Stop                            -Z             0.312      Y      -102  -0.000
 Stiff   :RIGID                               +X             0.077      Z            -0.312

                    GT1{1}                    down      104   0.000      X        -23  -0.005
 Comp.Wt :   0.000                            -Z         80   0.598      Y      -104  -0.000
                                              -X         23   0.005      Z        -80  -0.598

                    GT1P1{1}                  down      104   0.000      X        -23  -0.006
                                              -Z         80   0.599      Y      -104  -0.000
                                              -X         23   0.006      Z        -80  -0.599
```

```
-----------------------------------------------------------------------------------------------------------------
Encasement Piping
04/24/2020 2018719                                                          BENTLEY
08:29 AM                                                                    AutoPIPE Nuclear 12.00.00.16   RESULT PAGE  80
-----------------------------------------------------------------------------------------------------------------

                                        S U P P O R T    F O R C E S
        ( Force - lbf   , Moment - ft-lb  , Tran. - in  , Rot. - deg   )
 Point/  Connect/    Load                          L O C A L              G L O B A L
 Supp. ID   Type   Combination                 Dirn  Force    Deform    Dirn   Force   Deform
 -------- -------- ----------------------      ---- -------- --------   ---- -------- --------
 Tag No.: <None>
 A49                Gravity{1}                 down       58   0.000      X             0.150
 A49  2   V - Stop                             -Z              0.312      Y       -58  -0.000
 Stiff   :RIGID                                +X              0.150      Z            -0.312

                    GT1{1}                     down       49   0.000      X       -20  -0.079
 Comp.Wt :   0.000                             -Z         34   0.694      Y       -49  -0.000
                                               -X         20   0.079      Z       -34  -0.694

                    GT1P1{1}                   down       49   0.000      X       -20  -0.081
                                               -Z         34   0.696      Y       -49  -0.000
                                               -X         20   0.081      Z       -34  -0.696

 Tag No.: <None>
 A50                Gravity{1}                 down       79   0.000      X             0.177
 A50  2   V - Stop                             -Z              0.312      Y       -79  -0.000
 Stiff   :RIGID                                +X              0.177      Z            -0.312

                    GT1{1}                     down       96   0.000      X       -44  -0.116
 Comp.Wt :   0.000                             -Z         63   0.735      Y       -96  -0.000
                                               -X         44   0.116      Z       -63  -0.735

                    GT1P1{1}                   down       96   0.000      X       -44  -0.118
                                               -Z         63   0.737      Y       -96  -0.000
                                               -X         44   0.118      Z       -63  -0.737

 Tag No.: <None>
 A51                Gravity{1}                 down       76   0.000      X             0.229
 A51  1   Guide                                rght            0.229      Y       -76  -0.003
 Stiff   :RIGID                                forw            0.312      Z         1  -0.312

                    GT1{1}                     down       53   0.000      X            -0.061
 Comp.Wt :   0.000                             left            0.061      Y       -53  -0.007
                                               forw            0.832      Z         0  -0.832

                    GT1P1{1}                   down       53   0.000      X            -0.062
                                               left            0.062      Y       -53  -0.007
                                               forw            0.834      Z         0  -0.834

 Tag No.: <None>
 A52                Gravity{1}                 down       67   0.000      X         0   0.244
 A52  1   Guide                                left            0.298      Y       -67  -0.002
 Stiff   :RIGID                                forw            0.244      Z            -0.298

                    GT1{1}                     down       93   0.000      X        -1   0.133
 Comp.Wt :   0.000                             left            0.664      Y       -93  -0.001
                                               forw            0.133      Z            -0.664

                    GT1P1{1}                   down       93   0.000      X        -1   0.133
                                               left            0.666      Y       -93  -0.001
                                               forw            0.133      Z            -0.666
```

```
-----------------------------------------------------------------------------------------------------------------
Encasement Piping
04/24/2020 2018719                                                          BENTLEY
08:29 AM                                                                    AutoPIPE Nuclear 12.00.00.16   RESULT PAGE  81
-----------------------------------------------------------------------------------------------------------------

                                        S U P P O R T    F O R C E S
        ( Force - lbf   , Moment - ft-lb  , Tran. - in  , Rot. - deg   )
 Point/  Connect/    Load                          L O C A L              G L O B A L
 Supp. ID   Type   Combination                Dirn  Force    Deform    Dirn   Force   Deform
 -------- -------- ----------------------     ---- -------- --------   ---- -------- --------
 Tag No.: <None>
 A53                Gravity{1}                down       70   0.000      X         0   0.244
 A53  1   Guide                               left            0.280      Y       -70  -0.001
 Stiff   :RIGID                               forw            0.244      Z            -0.280

                    GT1{1}                    down       50   0.000      X         0   0.208
 Comp.Wt :   0.000                            left            0.138      Y       -50  -0.001
                                              forw            0.208      Z            -0.138

                    GT1P1{1}                  down       50   0.000      X         0   0.207
                                              left            0.138      Y       -50  -0.001
                                              forw            0.207      Z            -0.138

 Tag No.: <None>
 A54                Gravity{1}                down       73   0.000      X             0.249
 A54  1   Guide                               rght            0.249      Y       -73  -0.002
 Stiff   :RIGID                               forw            0.274      Z         1  -0.274

                    GT1{1}                    down       86   0.000      X             0.396
 Comp.Wt :   0.000                            rght            0.396      Y       -86   0.000
                                              back            0.025      Z         1   0.025

                    GT1P1{1}                  down       86   0.000      X             0.397
                                              rght            0.397      Y       -86   0.000
                                              back            0.026      Z         1   0.026

 Tag No.: <None>
 A55                Gravity{1}                down      105   0.000      X             0.251
 A55  1   V - Stop                            -Z              0.274      Y      -105  -0.000
 Stiff   :RIGID                               +X              0.251      Z            -0.274

                    GT1{1}                    down       98   0.000      X        52   0.427
 Comp.Wt :   0.000                            +Z         59  -0.072      Y       -98  -0.000
                                              +X         52   0.427      Z        59  -0.072

                    GT1P1{1}                  down       98   0.000      X        52   0.428
                                              +Z         59  -0.071      Y       -98  -0.000
                                              +X         52   0.428      Z        59  -0.071

 Tag No.: <None>
 A56                Gravity{1}                down       94   0.000      X             0.242
 A56  1   V - Stop                            -Z              0.274      Y       -94  -0.000
 Stiff   :RIGID                               +X              0.242      Z            -0.274

                    GT1{1}                    down       96   0.000      X        38   0.302
 Comp.Wt :   0.000                            +Z         67  -0.168      Y       -96  -0.000
                                              +X         38   0.302      Z        67  -0.168

                    GT1P1{1}                  down       96   0.000      X        38   0.303
                                              +Z         66  -0.168      Y       -96  -0.000
                                              +X         38   0.303      Z        66  -0.168
```

```
-----------------------------------------------------------------------------------------------------------------------
Encasement Piping
04/24/2020 2018719                                                                    BENTLEY
08:29 AM                                                                              AutoPIPE Nuclear 12.00.00.16   RESULT PAGE  82
-----------------------------------------------------------------------------------------------------------------------

                                          S U P P O R T    F O R C E S
        ( Force - lbf   , Moment - ft-lb  , Tran. - in  , Rot. - deg   )
 Point/  Connect/    Load                          L O C A L              G L O B A L
 Supp. ID   Type   Combination                Dirn  Force    Deform    Dirn   Force   Deform
 -------- -------- ----------------------     ---- -------- --------   ---- -------- --------
 Tag No.: <None>
 A57                Gravity{1}                down       98   0.000      X             0.222
 A57  1   V - Stop                            -Z              0.274      Y       -98  -0.000
 Stiff   :RIGID                               +X              0.222      Z            -0.274

                    GT1{1}                    down       97   0.000      X        -3   0.222
 Comp.Wt :   0.000                            +Z         75  -0.265      Y       -97  -0.000
                                              -X          3  -0.222      Z        75  -0.265

                    GT1P1{1}                  down       97   0.000      X        -3   0.222
                                              +Z         75  -0.265      Y       -97  -0.000
                                              -X          3  -0.222      Z        75  -0.265

 Tag No.: <None>
 A58                Gravity{1}                down       96   0.000      X             0.193
 A58  1   V - Stop                            -Z              0.274      Y       -96  -0.000
 Stiff   :RIGID                               +X              0.193      Z            -0.274

                    GT1{1}                    down       97   0.000      X       -12   0.180
 Comp.Wt :   0.000                            -Z         77   0.361      Y       -97  -0.000
                                              -X         12  -0.180      Z       -77  -0.361

                    GT1P1{1}                  down       97   0.000      X       -12   0.180
                                              -Z         77   0.361      Y       -97  -0.000
                                              -X         12  -0.180      Z       -77  -0.361

 Tag No.: <None>
 A59                Gravity{1}                down       99   0.000      X             0.157
 A59  1   V - Stop                            -Z              0.274      Y       -99  -0.000
 Stiff   :RIGID                               +X              0.157      Z            -0.274

                    GT1{1}                    down      101   0.000      X         0   0.157
 Comp.Wt :   0.000                            -Z         81   0.457      Y      -101  -0.000
                                              +X          0   0.157      Z       -81  -0.457

                    GT1P1{1}                  down      101   0.000      X         0   0.157
                                              -Z         81   0.458      Y      -101  -0.000
                                              +X          0   0.157      Z       -81  -0.458

 Tag No.: <None>
 A60                Gravity{1}                down       89   0.000      X             0.114
 A60  1   V - Stop                            -Z              0.274      Y       -89  -0.000
 Stiff   :RIGID                               +X              0.114      Z            -0.274

                    GT1{1}                    down       86   0.000      X        17   0.183
 Comp.Wt :   0.000                            -Z         67   0.554      Y       -86  -0.000
                                              +X         17   0.183      Z       -67  -0.554

                    GT1P1{1}                  down       86   0.000      X        17   0.184
                                              -Z         67   0.555      Y       -86  -0.000
                                              +X         17   0.184      Z       -67  -0.555
```

```
-----------------------------------------------------------------------------------------------------------------
Encasement Piping
04/24/2020 2018719                                                          BENTLEY
08:29 AM                                                                    AutoPIPE Nuclear 12.00.00.16   RESULT PAGE  83
-----------------------------------------------------------------------------------------------------------------

                                        S U P P O R T    F O R C E S
        ( Force - lbf   , Moment - ft-lb  , Tran. - in  , Rot. - deg   )
 Point/  Connect/    Load                          L O C A L              G L O B A L
 Supp. ID   Type   Combination                Dirn  Force    Deform    Dirn   Force   Deform
 -------- -------- ----------------------     ---- -------- --------   ---- -------- --------
 Tag No.: <None>
 A61                Gravity{1}                down      104   0.000      X             0.070
 A61  1   V - Stop                            -Z              0.274      Y      -104  -0.000
 Stiff   :RIGID                               +X              0.070      Z            -0.274

                    GT1{1}                    down      115   0.000      X        45   0.274
 Comp.Wt :   0.000                            -Z         81   0.644      Y      -115  -0.000
                                              +X         45   0.274      Z       -81  -0.644

                    GT1P1{1}                  down      115   0.000      X        45   0.275
                                              -Z         81   0.645      Y      -115  -0.000
                                              +X         45   0.275      Z       -81  -0.645

 Tag No.: <None>
 A62                Gravity{1}                down       67   0.000      X             0.019
 A62  1   Guide                               rght            0.019      Y       -67  -0.002
 Stiff   :RIGID                               forw            0.274      Z         1  -0.274

                    GT1{1}                    down       46   0.000      X             0.358
 Comp.Wt :   0.000                            rght            0.358      Y       -46  -0.006
                                              forw            0.741      Z         0  -0.741

                    GT1P1{1}                  down       46   0.000      X             0.359
                                              rght            0.359      Y       -46  -0.006
                                              forw            0.742      Z         0  -0.742

 Tag No.: <None>
 A63                Gravity{1}                down       81   0.000      X         1  -0.002
 A63  1   Guide                               rght            0.254      Y       -81  -0.000
 Stiff   :RIGID                               forw            0.002      Z            -0.254

                    GT1{1}                    down      101   0.000      X         1   0.288
 Comp.Wt :   0.000                            rght            0.719      Y      -101   0.002
                                              back            0.288      Z            -0.719

                    GT1P1{1}                  down      101   0.000      X         1   0.289
                                              rght            0.721      Y      -101   0.002
                                              back            0.289      Z            -0.721

 Tag No.: <None>
 A64                Gravity{1}                down      101   0.000      X            -0.002
 A64  2   V - Stop                            -Z              0.200      Y      -101  -0.000
 Stiff   :RIGID                               -X              0.002      Z            -0.200

                    GT1{1}                    down       92   0.000      X        48   0.192
 Comp.Wt :   0.000                            -Z         56   0.425      Y       -92  -0.000
                                              +X         48   0.192      Z       -56  -0.425

                    GT1P1{1}                  down       92   0.000      X        48   0.192
                                              -Z         56   0.427      Y       -92  -0.000
                                              +X         48   0.192      Z       -56  -0.427
```

```
-----------------------------------------------------------------------------------------------------------------
Encasement Piping
04/24/2020 2018719                                                          BENTLEY
08:29 AM                                                                    AutoPIPE Nuclear 12.00.00.16   RESULT PAGE  84
-----------------------------------------------------------------------------------------------------------------

                                          S U P P O R T    F O R C E S
        ( Force - lbf   , Moment - ft-lb  , Tran. - in  , Rot. - deg   )
 Point/  Connect/    Load                          L O C A L              G L O B A L
 Supp. ID   Type   Combination                Dirn  Force    Deform    Dirn   Force   Deform
 -------- -------- ----------------------     ---- -------- --------   ---- -------- --------
 Tag No.: <None>
 A65                Gravity{1}                down       96   0.000      X            -0.002
 A65  2   V - Stop                            -Z             0.149      Y       -96  -0.000
 Stiff   :RIGID                               -X             0.002      Z            -0.149

                    GT1{1}                    down       98   0.000      X        71   0.095
 Comp.Wt :   0.000                            -Z         33   0.194      Y       -98  -0.000
                                              +X         71   0.095      Z       -33  -0.194

                    GT1P1{1}                  down       98   0.000      X        71   0.095
                                              -Z         34   0.195      Y       -98  -0.000
                                              +X         71   0.095      Z       -34  -0.195

 Tag No.: <None>
 A66                Gravity{1}                down       98   0.000      X            -0.002
 A66  2   V - Stop                            -Z             0.101      Y       -98  -0.000
 Stiff   :RIGID                               -X             0.002      Z            -0.101

                    GT1{1}                    down       97   0.000      X        22  -0.002
 Comp.Wt :   0.000                            +Z         12  -0.101      Y       -97  -0.000
                                              +X         22  -0.002      Z        12  -0.101

                    GT1P1{1}                  down       97   0.000      X        22  -0.002
                                              +Z         12  -0.101      Y       -97  -0.000
                                              +X         22  -0.002      Z        12  -0.101

 Tag No.: <None>
 A67                Gravity{1}                down       94   0.000      X            -0.002
 A67  2   V - Stop                            -Z             0.060      Y       -94  -0.000
 Stiff   :RIGID                               -X             0.002      Z            -0.060

                    GT1{1}                    down       93   0.000      X       -73  -0.098
 Comp.Wt :   0.000                            +Z         15  -0.040      Y       -93  -0.000
                                              -X         73   0.098      Z        15  -0.040

                    GT1P1{1}                  down       93   0.000      X       -73  -0.098
                                              +Z         15  -0.040      Y       -93  -0.000
                                              -X         73   0.098      Z        15  -0.040

 Tag No.: <None>
 A68                Gravity{1}                down      102   0.000      X            -0.002
 A68  2   V - Stop                            -Z             0.029      Y      -102  -0.000
 Stiff   :RIGID                               -X             0.002      Z            -0.029

                    GT1{1}                    down      108   0.000      X       -78  -0.192
 Comp.Wt :   0.000                            +Z         37   0.062      Y      -108  -0.000
                                              -X         78   0.192      Z        37   0.062

                    GT1P1{1}                  down      108   0.000      X       -78  -0.193
                                              +Z         37   0.062      Y      -108  -0.000
                                              -X         78   0.193      Z        37   0.062
```

```
-----------------------------------------------------------------------------------------------------------------
Encasement Piping
04/24/2020 2018719                                                          BENTLEY
08:29 AM                                                                    AutoPIPE Nuclear 12.00.00.16   RESULT PAGE  85
-----------------------------------------------------------------------------------------------------------------

                                        S U P P O R T    F O R C E S
        ( Force - lbf   , Moment - ft-lb  , Tran. - in  , Rot. - deg   )
 Point/  Connect/    Load                          L O C A L              G L O B A L
 Supp. ID   Type   Combination                Dirn  Force    Deform    Dirn   Force   Deform
 -------- -------- ----------------------     ---- -------- --------   ---- -------- --------
 Tag No.: <None>
 A69                Gravity{1}                down       74   0.000      X         1  -0.002
 A69  1   Guide                               rght            0.008      Y       -74  -0.000
 Stiff   :RIGID                               forw            0.002      Z            -0.008

                    GT1{1}                    down       63   0.000      X         1  -0.289
 Comp.Wt :   0.000                            left            0.176      Y       -63  -0.002
                                              forw            0.289      Z             0.176

                    GT1P1{1}                  down       63   0.000      X         1  -0.290
                                              left            0.177      Y       -63  -0.003
                                              forw            0.290      Z             0.177

 Tag No.: <None>
 A70                Gravity{1}                down       75   0.000      X            -0.005
 A70  1   Guide                               left            0.005      Y       -75  -0.000
 Stiff   :RIGID                               forw            0.003      Z         0  -0.003

                    GT1{1}                    down       86   0.000      X            -0.314
 Comp.Wt :   0.000                            left            0.314      Y       -86   0.001
                                              back            0.144      Z         0   0.144

                    GT1P1{1}                  down       86   0.000      X            -0.315
                                              left            0.315      Y       -86   0.001
                                              back            0.145      Z         0   0.145

 Tag No.: <None>
 A71                Gravity{1}                down       99   0.000      X            -0.006
 A71  2   V - Stop                            -Z              0.003      Y       -99  -0.000
 Stiff   :RIGID                               -X              0.006      Z            -0.003

                    GT1{1}                    down       96   0.000      X       -74  -0.198
 Comp.Wt :   0.000                            +Z         20   0.047      Y       -96  -0.000
                                              -X         74   0.198      Z        20   0.047

                    GT1P1{1}                  down       96   0.000      X       -74  -0.199
                                              +Z         20   0.048      Y       -96  -0.000
                                              -X         74   0.199      Z        20   0.048

 Tag No.: <None>
 A72                Gravity{1}                down       67   0.000      X            -0.002
 A72  1   Guide                               left            0.002      Y       -67  -0.000
 Stiff   :RIGID                               forw            0.003      Z         0  -0.003

                    GT1{1}                    down       61   0.000      X            -0.130
 Comp.Wt :   0.000                            left            0.130      Y       -61  -0.000
                                              forw            0.034      Z         0  -0.034

                    GT1P1{1}                  down       61   0.000      X            -0.130
                                              left            0.130      Y       -61  -0.000
                                              forw            0.034      Z         0  -0.034
```

```
-----------------------------------------------------------------------------------------------------------------
Encasement Piping
04/24/2020 2018719                                                          BENTLEY
08:29 AM                                                                    AutoPIPE Nuclear 12.00.00.16   RESULT PAGE  86
-----------------------------------------------------------------------------------------------------------------

                                          S U P P O R T    F O R C E S
        ( Force - lbf   , Moment - ft-lb  , Tran. - in  , Rot. - deg   )
 Point/  Connect/    Load                          L O C A L              G L O B A L
 Supp. ID   Type   Combination                Dirn  Force    Deform    Dirn   Force   Deform
 -------- -------- ----------------------     ---- -------- --------   ---- -------- --------
 Tag No.: <None>
 A73                Gravity{1}                down       61   0.000      X        -1   0.000
 A73  1   Guide                               left            0.001      Y       -61  -0.000
 Stiff   :RIGID                               forw            0.000      Z            -0.001

                    GT1{1}                    down       71   0.000      X        -1  -0.059
 Comp.Wt :   0.000                            left            0.036      Y       -71   0.001
                                              back            0.059      Z            -0.036

                    GT1P1{1}                  down       71   0.000      X        -1  -0.059
                                              left            0.036      Y       -71   0.001
                                              back            0.059      Z            -0.036

 Tag No.: <None>
 B22                Gravity{1}                down      208   0.000      X             0.000
 B22  2   V - Stop                            -Z              0.004      Y      -208  -0.000
 Stiff   :RIGID                               +X              0.000      Z            -0.004

                    GT1{1}                    down       92   0.000      X        70   0.048
 Comp.Wt :   0.000                            +Z         24   0.012      Y       -92  -0.000
                                              +X         70   0.048      Z        24   0.012

                    GT1P1{1}                  down       92   0.000      X        70   0.049
                                              +Z         24   0.012      Y       -92  -0.000
                                              +X         70   0.049      Z        24   0.012

 Tag No.: <None>
 B23                Gravity{1}                down      194   0.000      X             0.000
 B23  2   V - Stop                            -Z              0.044      Y      -194  -0.000
 Stiff   :RIGID                               +X              0.000      Z            -0.044

                    GT1{1}                    down      271   0.000      X       138   0.177
 Comp.Wt :   0.000                            +Z        167   0.169      Y      -271  -0.000
                                              +X        138   0.177      Z       167   0.169

                    GT1P1{1}                  down      271   0.000      X       138   0.177
                                              +Z        167   0.171      Y      -271  -0.000
                                              +X        138   0.177      Z       167   0.171

 Tag No.: <None>
 B24                Gravity{1}                down      135   0.000      X       -22   0.000
 B24  2   Guide                               left            0.077      Y      -134  -0.000
 Stiff   :RIGID                               forw            0.000      Z            -0.077

                    GT1{1}                    up              0.049      X             0.262
 Comp.Wt :   0.000                            rght            0.330      Y             0.006
                                              forw            0.258      Z             0.330

                    GT1P1{1}                  up              0.049      X             0.264
                                              rght            0.333      Y             0.006
                                              forw            0.259      Z             0.333
```

```
-----------------------------------------------------------------------------------------------------------------------
Encasement Piping
04/24/2020 2018719                                                                    BENTLEY
08:29 AM                                                                              AutoPIPE Nuclear 12.00.00.16   RESULT PAGE  87
-----------------------------------------------------------------------------------------------------------------------

                                          S U P P O R T    F O R C E S
        ( Force - lbf   , Moment - ft-lb  , Tran. - in  , Rot. - deg   )
 Point/  Connect/    Load                          L O C A L              G L O B A L
 Supp. ID   Type   Combination                Dirn  Force    Deform    Dirn   Force   Deform
 -------- -------- ----------------------     ---- -------- --------   ---- -------- --------
 Tag No.: <None>
 B25                Gravity{1}                down      105   0.000      X            -0.011
 B25  2   Guide                               left            0.011      Y      -105  -0.003
 Stiff   :RIGID                                forw            0.090      Z         3  -0.090

                    GT1{1}                    down      245   0.000      X             0.312
 Comp.Wt :   0.000                             rght            0.312      Y      -245   0.010
                                               back            0.330      Z         7   0.330

                    GT1P1{1}                  down      245   0.000      X             0.314
                                               rght            0.314      Y      -245   0.010
                                               back            0.333      Z         7   0.333

 Tag No.: <None>
 B26                Gravity{1}                down      194   0.000      X            -0.028
 B26  1   V - Stop                             -Z              0.090      Y      -194  -0.000
 Stiff   :RIGID                                -X              0.028      Z            -0.090

                    GT1{1}                    down      142   0.000      X        66   0.204
 Comp.Wt :   0.000                             +Z         92   0.233      Y      -142  -0.000
                                               +X         66   0.204      Z        92   0.233

                    GT1P1{1}                  down      142   0.000      X        66   0.206
                                               +Z         92   0.236      Y      -142  -0.000
                                               +X         66   0.206      Z        92   0.236

 Tag No.: <None>
 B28                Gravity{1}                down      165   0.000      X            -0.035
 B28  1   V - Stop                             -Z              0.090      Y      -165  -0.000
 Stiff   :RIGID                                -X              0.035      Z            -0.090

                    GT1{1}                    down      187   0.000      X        55   0.054
 Comp.Wt :   0.000                             +Z        139   0.137      Y      -187  -0.000
                                               +X         55   0.054      Z       139   0.137

                    GT1P1{1}                  down      187   0.000      X        55   0.055
                                               +Z        139   0.139      Y      -187  -0.000
                                               +X         55   0.055      Z       139   0.139

 Tag No.: <None>
 B29                Gravity{1}                down      160   0.000      X            -0.038
 B29  1   V - Stop                             -Z              0.090      Y      -160  -0.000
 Stiff   :RIGID                                -X              0.038      Z            -0.090

                    GT1{1}                    down      146   0.000      X       -33  -0.075
 Comp.Wt :   0.000                             +Z        112   0.040      Y      -146  -0.000
                                               -X         33   0.075      Z       112   0.040

                    GT1P1{1}                  down      146   0.000      X       -33  -0.076
                                               +Z        112   0.042      Y      -146  -0.000
                                               -X         33   0.076      Z       112   0.042
```

```
-----------------------------------------------------------------------------------------------------------------------
Encasement Piping
04/24/2020 2018719                                                                    BENTLEY
08:29 AM                                                                              AutoPIPE Nuclear 12.00.00.16   RESULT PAGE  88
-----------------------------------------------------------------------------------------------------------------------

                                          S U P P O R T    F O R C E S
        ( Force - lbf   , Moment - ft-lb  , Tran. - in  , Rot. - deg   )
 Point/  Connect/    Load                          L O C A L              G L O B A L
 Supp. ID   Type   Combination                Dirn  Force    Deform    Dirn   Force   Deform
 -------- -------- ----------------------     ---- -------- --------   ---- -------- --------
 Tag No.: <None>
 B31                Gravity{1}                down      208   0.000      X            -0.042
 B31  1   V - Stop                            -Z             0.090      Y      -208  -0.000
 Stiff   :RIGID                               -X             0.042      Z            -0.090

                    GT1{1}                    down      213   0.000      X      -166  -0.187
 Comp.Wt :   0.000                            +Z         38  -0.057      Y      -213  -0.000
                                              -X        166   0.187      Z        38  -0.057

                    GT1P1{1}                  down      213   0.000      X      -165  -0.188
                                              +Z         39  -0.055      Y      -213  -0.000
                                              -X        165   0.188      Z        39  -0.055

 Tag No.: <None>
 B32                Gravity{1}                down      115   0.000      X            -0.054
 B32  2   Guide                               left           0.054      Y      -115  -0.003
 Stiff   :RIGID                               forw           0.090      Z         3  -0.090

                    GT1{1}                    down       99   0.000      X            -0.206
 Comp.Wt :   0.000                            left           0.206      Y       -99  -0.005
                                              forw           0.165      Z         3  -0.165

                    GT1P1{1}                  down      100   0.000      X            -0.207
                                              left           0.207      Y      -100  -0.005
                                              forw           0.165      Z         3  -0.165

 Tag No.: <None>
 B33                Gravity{1}                down       79   0.000      X        -2  -0.062
 B33  2   Guide                               left           0.100      Y       -79   0.001
 Stiff   :RIGID                               back           0.062      Z            -0.100

                    GT1{1}                    down      175   0.000      X        -4  -0.073
 Comp.Wt :   0.000                            left           0.064      Y      -175   0.002
                                              back           0.073      Z            -0.064

                    GT1P1{1}                  down      175   0.000      X        -4  -0.073
                                              left           0.063      Y      -175   0.002
                                              back           0.073      Z            -0.063

 Tag No.: <None>
 B34                Gravity{1}                down      137   0.000      X        -3  -0.062
 B34  2   Guide                               left           0.110      Y      -137   0.001
 Stiff   :RIGID                               back           0.062      Z            -0.110

                    GT1{1}                    up             0.004      X            -0.043
 Comp.Wt :   0.000                            rght           0.072      Y             0.005
                                              back           0.043      Z             0.072

                    GT1P1{1}                  up             0.004      X            -0.043
                                              rght           0.074      Y             0.005
                                              back           0.044      Z             0.074
```

```
-----------------------------------------------------------------------------------------------------------------------
Encasement Piping
04/24/2020 2018719                                                                    BENTLEY
08:29 AM                                                                              AutoPIPE Nuclear 12.00.00.16   RESULT PAGE  89
-----------------------------------------------------------------------------------------------------------------------

                                          S U P P O R T    F O R C E S
        ( Force - lbf   , Moment - ft-lb  , Tran. - in  , Rot. - deg   )
 Point/  Connect/    Load                          L O C A L              G L O B A L
 Supp. ID   Type   Combination                Dirn  Force    Deform    Dirn   Force   Deform
 -------- -------- ----------------------     ---- -------- --------   ---- -------- --------
 Tag No.: <None>
 B35                Gravity{1}                down       79   0.000      X            -0.077
 B35  2   Guide                               left            0.077      Y       -79  -0.003
 Stiff   :RIGID                                forw            0.123      Z         2  -0.123

                    GT1{1}                    down      160   0.000      X             0.083
 Comp.Wt :   0.000                             rght            0.083      Y      -160   0.005
                                               back            0.169      Z         4   0.169

                    GT1P1{1}                  down      160   0.000      X             0.083
                                               rght            0.083      Y      -160   0.005
                                               back            0.172      Z         4   0.171

 Tag No.: <None>
 B36                Gravity{1}                down      205   0.000      X            -0.120
 B36  2   V - Stop                             -Z              0.123      Y      -205  -0.000
 Stiff   :RIGID                                -X              0.120      Z            -0.123

                    GT1{1}                    down      163   0.000      X        82   0.040
 Comp.Wt :   0.000                             +Z        101   0.073      Y      -163  -0.000
                                               +X         82   0.040      Z       101   0.073

                    GT1P1{1}                  down      163   0.000      X        82   0.041
                                               +Z        101   0.075      Y      -163  -0.000
                                               +X         82   0.041      Z       101   0.075

 Tag No.: <None>
 B37                Gravity{1}                down      157   0.000      X            -0.165
 B37  2   V - Stop                             -Z              0.123      Y      -157  -0.000
 Stiff   :RIGID                                -X              0.165      Z            -0.123

                    GT1{1}                    down      171   0.000      X        64  -0.112
 Comp.Wt :   0.000                             +Z        120  -0.023      Y      -171  -0.000
                                               +X         64  -0.112      Z       120  -0.023

                    GT1P1{1}                  down      171   0.000      X        64  -0.111
                                               +Z        120  -0.022      Y      -171  -0.000
                                               +X         64  -0.111      Z       120  -0.022

 Tag No.: <None>
 B38                Gravity{1}                down      179   0.000      X            -0.210
 B38  2   V - Stop                             -Z              0.123      Y      -179  -0.000
 Stiff   :RIGID                                -X              0.210      Z            -0.123

                    GT1{1}                    down      176   0.000      X       101  -0.206
 Comp.Wt :   0.000                             +Z         78  -0.120      Y      -176  -0.000
                                               +X        101  -0.206      Z        78  -0.120

                    GT1P1{1}                  down      176   0.000      X       100  -0.205
                                               +Z         78  -0.119      Y      -176  -0.000
                                               +X        100  -0.205      Z        78  -0.119
```

```
-----------------------------------------------------------------------------------------------------------------------
Encasement Piping
04/24/2020 2018719                                                                    BENTLEY
08:29 AM                                                                              AutoPIPE Nuclear 12.00.00.16   RESULT PAGE  90
-----------------------------------------------------------------------------------------------------------------------

                                          S U P P O R T    F O R C E S
        ( Force - lbf   , Moment - ft-lb  , Tran. - in  , Rot. - deg   )
 Point/  Connect/    Load                          L O C A L              G L O B A L
 Supp. ID   Type   Combination                 Dirn  Force    Deform    Dirn   Force   Deform
 -------- -------- ----------------------      ---- -------- --------   ---- -------- --------
 Tag No.: <None>
 B39                Gravity{1}                 down      148   0.000      X            -0.255
 B39  2   V - Stop                             -Z             0.123      Y      -148  -0.000
 Stiff   :RIGID                                -X             0.255      Z            -0.123

                    GT1{1}                     down      131   0.000      X        62  -0.188
 Comp.Wt :   0.000                             -Z         86   0.216      Y      -131  -0.000
                                               +X         62  -0.188      Z       -86  -0.216

                    GT1P1{1}                   down      131   0.000      X        62  -0.187
                                               -Z         85   0.216      Y      -131  -0.000
                                               +X         62  -0.187      Z       -85  -0.216

 Tag No.: <None>
 B40                Gravity{1}                 down      163   0.000      X            -0.289
 B40  1   V - Stop                             -Z             0.123      Y      -163  -0.000
 Stiff   :RIGID                                -X             0.289      Z            -0.123

                    GT1{1}                     down      203   0.000      X       104  -0.144
 Comp.Wt :   0.000                             -Z        125   0.298      Y      -203  -0.000
                                               +X        104  -0.144      Z      -125  -0.298

                    GT1P1{1}                   down      203   0.000      X       104  -0.144
                                               -Z        125   0.298      Y      -203  -0.000
                                               +X        104  -0.144      Z      -125  -0.298

 Tag No.: <None>
 B42                Gravity{1}                 down      180   0.000      X            -0.325
 B42  1   Guide                                left           0.325      Y      -180  -0.004
 Stiff   :RIGID                                forw           0.123      Z         5  -0.123

                    GT1{1}                     down      103   0.000      X            -0.239
 Comp.Wt :   0.000                             left           0.239      Y      -103  -0.011
                                               forw           0.394      Z         3  -0.394

                    GT1P1{1}                   down      104   0.000      X            -0.240
                                               left           0.240      Y      -104  -0.011
                                               forw           0.395      Z         3  -0.395

 Tag No.: <None>
 B43                Gravity{1}                 down       62   0.000      X         2  -0.336
 B43  1   Guide                                rght           0.113      Y       -62  -0.008
 Stiff   :RIGID                                forw           0.336      Z            -0.113

                    GT1{1}                     down      159   0.000      X         4  -0.444
 Comp.Wt :   0.000                             rght           0.205      Y      -159  -0.011
                                               forw           0.445      Z            -0.205

                    GT1P1{1}                   down      159   0.000      X         4  -0.446
                                               rght           0.205      Y      -159  -0.011
                                               forw           0.446      Z            -0.205
```

```
-----------------------------------------------------------------------------------------------------------------
Encasement Piping
04/24/2020 2018719                                                          BENTLEY
08:29 AM                                                                    AutoPIPE Nuclear 12.00.00.16   RESULT PAGE  91
-----------------------------------------------------------------------------------------------------------------

                                        S U P P O R T    F O R C E S
        ( Force - lbf   , Moment - ft-lb  , Tran. - in  , Rot. - deg   )
 Point/  Connect/    Load                          L O C A L              G L O B A L
 Supp. ID   Type   Combination                Dirn  Force    Deform    Dirn   Force   Deform
 -------- -------- ----------------------     ---- -------- --------   ---- -------- --------
 Tag No.: <None>
 B45                Gravity{1}                down       33   0.000      X         1  -0.336
 B45  1   Guide                               rght            0.104      Y       -33  -0.008
 Stiff   :RIGID                               forw            0.336      Z            -0.104

                    GT1{1}                    up              0.007      X            -0.487
 Comp.Wt :   0.000                            left            0.109      Y            -0.005
                                              forw            0.487      Z             0.109

                    GT1P1{1}                  up              0.007      X            -0.489
                                              left            0.110      Y            -0.005
                                              forw            0.489      Z             0.110

 Tag No.: <None>
 B46                Gravity{1}                down      194   0.000      X            -0.340
 B46  2   Guide                               left            0.340      Y      -194  -0.001
 Stiff   :RIGID                               forw            0.098      Z         2  -0.098

                    GT1{1}                    down      197   0.000      X            -0.676
 Comp.Wt :   0.000                            left            0.676      Y      -197   0.003
                                              back            0.287      Z         2   0.287

                    GT1P1{1}                  down      197   0.000      X            -0.678
                                              left            0.678      Y      -197   0.003
                                              back            0.289      Z         2   0.289

 Tag No.: <None>
 B47                Gravity{1}                down      164   0.000      X            -0.339
 B47  2   V - Stop                            -Z              0.098      Y      -164  -0.000
 Stiff   :RIGID                               -X              0.339      Z            -0.098

                    GT1{1}                    down      163   0.000      X      -101  -0.689
 Comp.Wt :   0.000                            +Z         83   0.190      Y      -163  -0.000
                                              -X        101   0.689      Z        83   0.190

                    GT1P1{1}                  down      163   0.000      X      -101  -0.691
                                              +Z         83   0.192      Y      -163  -0.000
                                              -X        101   0.691      Z        83   0.192

 Tag No.: <None>
 B48                Gravity{1}                down      171   0.000      X            -0.327
 B48  2   V - Stop                            -Z              0.098      Y      -171  -0.000
 Stiff   :RIGID                               -X              0.327      Z            -0.098

                    GT1{1}                    down      174   0.000      X       -97  -0.515
 Comp.Wt :   0.000                            +Z        100   0.094      Y      -174  -0.000
                                              -X         97   0.515      Z       100   0.094

                    GT1P1{1}                  down      174   0.000      X       -97  -0.516
                                              +Z        100   0.095      Y      -174  -0.000
                                              -X         97   0.516      Z       100   0.095
```

```
-----------------------------------------------------------------------------------------------------------------
Encasement Piping
04/24/2020 2018719                                                          BENTLEY
08:29 AM                                                                    AutoPIPE Nuclear 12.00.00.16   RESULT PAGE  92
-----------------------------------------------------------------------------------------------------------------

                                          S U P P O R T    F O R C E S
        ( Force - lbf   , Moment - ft-lb  , Tran. - in  , Rot. - deg   )
 Point/  Connect/    Load                          L O C A L              G L O B A L
 Supp. ID   Type   Combination                 Dirn  Force    Deform    Dirn   Force   Deform
 -------- -------- ----------------------      ---- -------- --------   ---- -------- --------
 Tag No.: <None>
 B49                Gravity{1}                 down      170   0.000      X            -0.305
 B49  2   V - Stop                             -Z              0.098      Y      -170  -0.000
 Stiff   :RIGID                                -X              0.305      Z            -0.098

                    GT1{1}                     down      168   0.000      X       -64  -0.357
 Comp.Wt :   0.000                             +Z        118  -0.002      Y      -168  -0.000
                                               -X         64   0.357      Z       118  -0.002

                    GT1P1{1}                   down      168   0.000      X       -64  -0.358
                                               +Z        118  -0.001      Y      -168  -0.000
                                               -X         64   0.358      Z       118  -0.001

 Tag No.: <None>
 B50                Gravity{1}                 down      171   0.000      X            -0.274
 B50  2   V - Stop                             -Z              0.098      Y      -171  -0.000
 Stiff   :RIGID                                -X              0.274      Z            -0.098

                    GT1{1}                     down      173   0.000      X        41  -0.274
 Comp.Wt :   0.000                             +Z         56  -0.098      Y      -173  -0.000
                                               +X         41  -0.274      Z        56  -0.098

                    GT1P1{1}                   down      173   0.000      X        41  -0.274
                                               +Z         56  -0.098      Y      -173  -0.000
                                               +X         41  -0.274      Z        56  -0.098

 Tag No.: <None>
 B51                Gravity{1}                 down      169   0.000      X            -0.235
 B51  2   V - Stop                             -Z              0.098      Y      -169  -0.000
 Stiff   :RIGID                                -X              0.235      Z            -0.098

                    GT1{1}                     down      168   0.000      X         -9  -0.242
 Comp.Wt :   0.000                             -Z        134   0.194      Y      -168  -0.000
                                               -X          9   0.242      Z      -134  -0.194

                    GT1P1{1}                   down      168   0.000      X         -9  -0.242
                                               -Z        134   0.195      Y      -168  -0.000
                                               -X          9   0.242      Z      -134  -0.195

 Tag No.: <None>
 B52                Gravity{1}                 down      175   0.000      X            -0.191
 B52  2   V - Stop                             -Z              0.098      Y      -175  -0.000
 Stiff   :RIGID                                -X              0.191      Z            -0.098

                    GT1{1}                     down      181   0.000      X       -51  -0.263
 Comp.Wt :   0.000                             -Z        135   0.290      Y      -181  -0.000
                                               -X         51   0.263      Z      -135  -0.290

                    GT1P1{1}                   down      181   0.000      X       -51  -0.264
                                               -Z        135   0.291      Y      -181  -0.000
                                               -X         51   0.264      Z      -135  -0.291
```

```
-----------------------------------------------------------------------------------------------------------------------
Encasement Piping
04/24/2020 2018719                                                                    BENTLEY
08:29 AM                                                                              AutoPIPE Nuclear 12.00.00.16   RESULT PAGE  93
-----------------------------------------------------------------------------------------------------------------------

                                          S U P P O R T    F O R C E S
        ( Force - lbf   , Moment - ft-lb  , Tran. - in  , Rot. - deg   )
 Point/  Connect/    Load                          L O C A L              G L O B A L
 Supp. ID   Type   Combination                Dirn  Force    Deform    Dirn   Force   Deform
 -------- -------- ----------------------     ---- -------- --------   ---- -------- --------
 Tag No.: <None>
 B53                Gravity{1}                down      151   0.000      X            -0.141
 B53  2   V - Stop                            -Z              0.098      Y      -151  -0.000
 Stiff   :RIGID                               -X              0.141      Z            -0.098

                    GT1{1}                    down      137   0.000      X       -59  -0.328
 Comp.Wt :   0.000                            -Z         92   0.387      Y      -137  -0.000
                                              -X         59   0.328      Z       -92  -0.387

                    GT1P1{1}                  down      137   0.000      X       -60  -0.329
                                              -Z         92   0.388      Y      -137  -0.000
                                              -X         60   0.329      Z       -92  -0.388

 Tag No.: <None>
 B54                Gravity{1}                down      173   0.000      X            -0.095
 B54  2   V - Stop                            -Z              0.098      Y      -173  -0.000
 Stiff   :RIGID                               -X              0.095      Z            -0.098

                    GT1{1}                    down      208   0.000      X       -96  -0.358
 Comp.Wt :   0.000                            -Z        136   0.470      Y      -208  -0.000
                                              -X         96   0.358      Z      -136  -0.470

                    GT1P1{1}                  down      208   0.000      X       -96  -0.360
                                              -Z        136   0.472      Y      -208  -0.000
                                              -X         96   0.360      Z      -136  -0.472

 Tag No.: <None>
 B55                Gravity{1}                down      126   0.000      X            -0.040
 B55  1   Guide                               left            0.040      Y      -126  -0.001
 Stiff   :RIGID                               forw            0.098      Z         1  -0.098

                    GT1{1}                    down       65   0.000      X            -0.200
 Comp.Wt :   0.000                            left            0.200      Y       -65  -0.005
                                              forw            0.567      Z         1  -0.567

                    GT1P1{1}                  down       65   0.000      X            -0.201
                                              left            0.201      Y       -65  -0.005
                                              forw            0.569      Z         1  -0.569

 Tag No.: <None>
 B57                Gravity{1}                down      127   0.000      X        -1  -0.018
 B57  1   Guide                               left            0.077      Y      -127   0.000
 Stiff   :RIGID                               back            0.018      Z            -0.077

                    GT1{1}                    down      202   0.000      X        -1   0.039
 Comp.Wt :   0.000                            left            0.339      Y      -202  -0.000
                                              forw            0.039      Z            -0.339

                    GT1P1{1}                  down      203   0.000      X        -1   0.040
                                              left            0.340      Y      -203  -0.000
                                              forw            0.040      Z            -0.340
```

```
-----------------------------------------------------------------------------------------------------------------------
Encasement Piping
04/24/2020 2018719                                                                    BENTLEY
08:29 AM                                                                              AutoPIPE Nuclear 12.00.00.16   RESULT PAGE  94
-----------------------------------------------------------------------------------------------------------------------

                                          S U P P O R T    F O R C E S
        ( Force - lbf   , Moment - ft-lb  , Tran. - in  , Rot. - deg   )
 Point/  Connect/    Load                          L O C A L              G L O B A L
 Supp. ID   Type   Combination                Dirn  Force    Deform    Dirn   Force   Deform
 -------- -------- ----------------------     ---- -------- --------   ---- -------- --------
 Tag No.: <None>
 B58                Gravity{1}                down      116   0.000      X        -1  -0.018
 B58  1   Guide                               left            0.036      Y      -116   0.000
 Stiff   :RIGID                               back            0.018      Z            -0.036

                    GT1{1}                    down       37   0.000      X         0   0.113
 Comp.Wt :   0.000                            rght            0.314      Y       -37  -0.001
                                              forw            0.113      Z             0.314

                    GT1P1{1}                  down       36   0.000      X         0   0.114
                                              rght            0.316      Y       -36  -0.001
                                              forw            0.114      Z             0.316

 Tag No.: <None>
 B64                Gravity{1}                down      134   0.000      X            -0.001
 B64  1   Guide                               left            0.001      Y      -134  -0.000
 Stiff   :RIGID                               forw            0.017      Z         1  -0.017

                    GT1{1}                    down      198   0.000      X             0.340
 Comp.Wt :   0.000                            rght            0.340      Y      -198   0.004
                                              back            0.533      Z         1   0.533

                    GT1P1{1}                  down      198   0.000      X             0.342
                                              rght            0.342      Y      -198   0.004
                                              back            0.536      Z         1   0.536

 Tag No.: <None>
 B65                Gravity{1}                down      180   0.000      X             0.034
 B65  1   V - Stop                            -Z              0.017      Y      -180  -0.000
 Stiff   :RIGID                               +X              0.034      Z            -0.017

                    GT1{1}                    down      149   0.000      X        79   0.441
 Comp.Wt :   0.000                            +Z         89   0.437      Y      -149  -0.000
                                              +X         79   0.441      Z        89   0.437

                    GT1P1{1}                  down      148   0.000      X        79   0.443
                                              +Z         88   0.439      Y      -148  -0.000
                                              +X         79   0.443      Z        88   0.439

 Tag No.: <None>
 B66                Gravity{1}                down      168   0.000      X             0.058
 B66  1   V - Stop                            -Z              0.017      Y      -168  -0.000
 Stiff   :RIGID                               +X              0.058      Z            -0.017

                    GT1{1}                    down      179   0.000      X        85   0.320
 Comp.Wt :   0.000                            +Z        116   0.340      Y      -179  -0.000
                                              +X         85   0.320      Z       116   0.340

                    GT1P1{1}                  down      179   0.000      X        85   0.322
                                              +Z        116   0.342      Y      -179  -0.000
                                              +X         85   0.322      Z       116   0.342
```

```
-----------------------------------------------------------------------------------------------------------------------
Encasement Piping
04/24/2020 2018719                                                                    BENTLEY
08:29 AM                                                                              AutoPIPE Nuclear 12.00.00.16   RESULT PAGE  95
-----------------------------------------------------------------------------------------------------------------------

                                          S U P P O R T    F O R C E S
        ( Force - lbf   , Moment - ft-lb  , Tran. - in  , Rot. - deg   )
 Point/  Connect/    Load                          L O C A L              G L O B A L
 Supp. ID   Type   Combination                 Dirn  Force    Deform    Dirn   Force   Deform
 -------- -------- ----------------------      ---- -------- --------   ---- -------- --------
 Tag No.: <None>
 B67                Gravity{1}                 down      171   0.000      X             0.073
 B67  1   V - Stop                             -Z              0.017      Y      -171  -0.000
 Stiff   :RIGID                                +X              0.073      Z            -0.017

                    GT1{1}                     down      167   0.000      X        50   0.178
 Comp.Wt :   0.000                             +Z        125   0.244      Y      -167  -0.000
                                               +X         50   0.178      Z       125   0.244

                    GT1P1{1}                   down      167   0.000      X        50   0.179
                                               +Z        124   0.246      Y      -167  -0.000
                                               +X         50   0.179      Z       124   0.246

 Tag No.: <None>
 B68                Gravity{1}                 down      170   0.000      X             0.079
 B68  1   V - Stop                             -Z              0.017      Y      -170  -0.000
 Stiff   :RIGID                                +X              0.079      Z            -0.017

                    GT1{1}                     down      170   0.000      X        10   0.091
 Comp.Wt :   0.000                             +Z        136   0.148      Y      -170  -0.000
                                               +X         10   0.091      Z       136   0.148

                    GT1P1{1}                   down      170   0.000      X        10   0.091
                                               +Z        136   0.149      Y      -170  -0.000
                                               +X         10   0.091      Z       136   0.149

 Tag No.: <None>
 B69                Gravity{1}                 down      171   0.000      X             0.079
 B69  1   V - Stop                             -Z              0.017      Y      -171  -0.000
 Stiff   :RIGID                                +X              0.079      Z            -0.017

                    GT1{1}                     down      170   0.000      X       -37   0.060
 Comp.Wt :   0.000                             +Z        132   0.052      Y      -170  -0.000
                                               -X         37  -0.060      Z       132   0.052

                    GT1P1{1}                   down      170   0.000      X       -37   0.059
                                               +Z        133   0.052      Y      -170  -0.000
                                               -X         37  -0.059      Z       133   0.052

 Tag No.: <None>
 B70                Gravity{1}                 down      168   0.000      X             0.072
 B70  1   V - Stop                             -Z              0.017      Y      -168  -0.000
 Stiff   :RIGID                                +X              0.072      Z            -0.017

                    GT1{1}                     down      169   0.000      X       -11   0.070
 Comp.Wt :   0.000                             -Z        131   0.044      Y      -169  -0.000
                                               -X         11  -0.070      Z      -131  -0.044

                    GT1P1{1}                   down      169   0.000      X       -11   0.070
                                               -Z        131   0.044      Y      -169  -0.000
                                               -X         11  -0.070      Z      -131  -0.044
```

```
-----------------------------------------------------------------------------------------------------------------------
Encasement Piping
04/24/2020 2018719                                                                    BENTLEY
08:29 AM                                                                              AutoPIPE Nuclear 12.00.00.16   RESULT PAGE  96
-----------------------------------------------------------------------------------------------------------------------

                                          S U P P O R T    F O R C E S
        ( Force - lbf   , Moment - ft-lb  , Tran. - in  , Rot. - deg   )
 Point/  Connect/    Load                          L O C A L              G L O B A L
 Supp. ID   Type   Combination                 Dirn  Force    Deform    Dirn   Force   Deform
 -------- -------- ----------------------      ---- -------- --------   ---- -------- --------
 Tag No.: <None>
 B71                Gravity{1}                 down      179   0.000      X             0.061
 B71  1   V - Stop                             -Z              0.017      Y      -179  -0.000
 Stiff   :RIGID                                +X              0.061      Z            -0.017

                    GT1{1}                     down      183   0.000      X        84   0.147
 Comp.Wt :   0.000                             -Z        119   0.140      Y      -183  -0.000
                                               +X         84   0.147      Z      -119  -0.140

                    GT1P1{1}                   down      183   0.000      X        84   0.148
                                               -Z        119   0.141      Y      -183  -0.000
                                               +X         84   0.148      Z      -119  -0.141

 Tag No.: <None>
 B72                Gravity{1}                 down      120   0.000      X             0.045
 B72  1   V - Stop                             -Z              0.017      Y      -120  -0.000
 Stiff   :RIGID                                +X              0.045      Z            -0.017

                    GT1{1}                     down      104   0.000      X        64   0.317
 Comp.Wt :   0.000                             -Z         52   0.236      Y      -104  -0.000
                                               +X         64   0.317      Z       -52  -0.236

                    GT1P1{1}                   down      104   0.000      X        64   0.319
                                               -Z         52   0.237      Y      -104  -0.000
                                               +X         64   0.319      Z       -52  -0.237

 Tag No.: <None>
 B73                Gravity{1}                 down      138   0.000      X             0.036
 B73  1   V - Stop                             -Z              0.017      Y      -138  -0.000
 Stiff   :RIGID                                +X              0.036      Z            -0.017

                    GT1{1}                     down      170   0.000      X       111   0.424
 Comp.Wt :   0.000                             -Z         78   0.288      Y      -170  -0.000
                                               +X        111   0.424      Z       -78  -0.288

                    GT1P1{1}                   down      170   0.000      X       111   0.426
                                               -Z         78   0.289      Y      -170  -0.000
                                               +X        111   0.426      Z       -78  -0.289

 Tag No.: <None>
 B74                Gravity{1}                 down      140   0.000      X             0.017
 B74  1   Guide                                rght            0.017      Y      -140  -0.000
 Stiff   :RIGID                                forw            0.017      Z         1  -0.017

                    GT1{1}                     down       49   0.000      X             0.523
 Comp.Wt :   0.000                             rght            0.523      Y       -49  -0.002
                                               forw            0.384      Z         0  -0.384

                    GT1P1{1}                   down       49   0.000      X             0.525
                                               rght            0.525      Y       -49  -0.002
                                               forw            0.386      Z         0  -0.386
```

```
-----------------------------------------------------------------------------------------------------------------------
Encasement Piping
04/24/2020 2018719                                                                    BENTLEY
08:29 AM                                                                              AutoPIPE Nuclear 12.00.00.16   RESULT PAGE  97
-----------------------------------------------------------------------------------------------------------------------

                                          S U P P O R T    F O R C E S
        ( Force - lbf   , Moment - ft-lb  , Tran. - in  , Rot. - deg   )
 Point/  Connect/    Load                          L O C A L              G L O B A L
 Supp. ID   Type   Combination                Dirn  Force    Deform    Dirn   Force   Deform
 -------- -------- ----------------------     ---- -------- --------   ---- -------- --------
 Tag No.: <None>
 B75                Gravity{1}                down       93   0.000      X         2   0.010
 B75  1   Guide                               rght            0.011      Y       -93   0.000
 Stiff   :RIGID                               back            0.010      Z            -0.011

                    GT1{1}                    down      224   0.000      X         4   0.414
 Comp.Wt :   0.000                            rght            0.302      Y      -224   0.007
                                              back            0.414      Z            -0.302

                    GT1P1{1}                  down      224   0.000      X         4   0.416
                                              rght            0.304      Y      -224   0.007
                                              back            0.416      Z            -0.304

 Tag No.: <None>
 B77                Gravity{1}                down       96   0.000      X             0.004
 B77  1   Guide                               rght            0.004      Y       -96  -0.000
 Stiff   :RIGID                               forw            0.005      Z         2  -0.005

                    GT1{1}                    up              0.008      X             0.223
 Comp.Wt :   0.000                            rght            0.223      Y             0.004
                                              forw            0.181      Z            -0.181

                    GT1P1{1}                  up              0.008      X             0.224
                                              rght            0.224      Y             0.004
                                              forw            0.181      Z            -0.182

 Tag No.: <None>
 B76                Gravity{1}                down       85   0.000      X         1  -0.000
 B76  1   Guide                               rght            0.002      Y       -85  -0.000
 Stiff   :RIGID                               back            0.000      Z            -0.002

                    GT1{1}                    down      180   0.000      X         3   0.048
 Comp.Wt :   0.000                            rght            0.090      Y      -180   0.001
                                              back            0.048      Z            -0.090

                    GT1P1{1}                  down      180   0.000      X         3   0.048
                                              rght            0.091      Y      -180   0.001
                                              back            0.048      Z            -0.091

 Tag No.: <None>
 B59 M              Gravity{1}                down       19   0.000      X            -0.000
 B59 M1   V - Stop                            -Z              0.001      Y       -19  -0.000
 Stiff   :RIGID                               -X              0.000      Z            -0.001

                    GT1{1}                    up              0.000      X             0.028
 Comp.Wt :   0.000                            -Z              0.034      Y             0.000
                                              +X              0.028      Z            -0.034

                    GT1P1{1}                  up              0.000      X             0.028
                                              -Z              0.035      Y             0.000
                                              +X              0.028      Z            -0.035
```

```
-----------------------------------------------------------------------------------------------------------------
Encasement Piping
04/24/2020 2018719                                                          BENTLEY
08:29 AM                                                                    AutoPIPE Nuclear 12.00.00.16   RESULT PAGE  98
-----------------------------------------------------------------------------------------------------------------

                                        S U P P O R T    F O R C E S
        ( Force - lbf   , Moment - ft-lb  , Tran. - in  , Rot. - deg   )
 Point/  Connect/    Load                          L O C A L              G L O B A L
 Supp. ID   Type   Combination                Dirn  Force    Deform    Dirn   Force   Deform
 -------- -------- ----------------------     ---- -------- --------   ---- -------- --------
 Tag No.: <None>
 C21                Gravity{1}                down      112   0.000      X             0.000
 C21  2   V - Stop                            -Z              0.012      Y      -112  -0.000
 Stiff   :RIGID                               +X              0.000      Z            -0.012

                    GT1{1}                    down       77   0.000      X        60   0.048
 Comp.Wt :   0.000                            +Z         14  -0.001      Y       -77  -0.000
                                              +X         60   0.048      Z        14  -0.001

                    GT1P1{1}                  down       77   0.000      X        60   0.048
                                              +Z         14  -0.001      Y       -77  -0.000
                                              +X         60   0.048      Z        14  -0.001

 Tag No.: <None>
 C22                Gravity{1}                down       98   0.000      X             0.000
 C22  2   V - Stop                            -Z              0.113      Y       -98  -0.000
 Stiff   :RIGID                               +X              0.000      Z            -0.113

                    GT1{1}                    down      142   0.000      X        79   0.167
 Comp.Wt :   0.000                            +Z         82   0.060      Y      -142  -0.000
                                              +X         79   0.167      Z        82   0.060

                    GT1P1{1}                  down      142   0.000      X        79   0.168
                                              +Z         82   0.061      Y      -142  -0.000
                                              +X         79   0.168      Z        82   0.061

 Tag No.: <None>
 C23                Gravity{1}                down       78   0.000      X        -6   0.000
 C23  2   Guide                               left            0.195      Y       -78  -0.000
 Stiff   :RIGID                               forw            0.000      Z            -0.195

                    GT1{1}                    up              0.013      X             0.242
 Comp.Wt :   0.000                            rght            0.155      Y            -0.006
                                              forw            0.242      Z             0.155

                    GT1P1{1}                  up              0.013      X             0.243
                                              rght            0.156      Y            -0.006
                                              forw            0.243      Z             0.156

 Tag No.: <None>
 C24                Gravity{1}                down       57   0.000      X            -0.033
 C24  2   Guide                               left            0.033      Y       -57  -0.007
 Stiff   :RIGID                               forw            0.231      Z         2  -0.231

                    GT1{1}                    down      127   0.000      X             0.269
 Comp.Wt :   0.000                            rght            0.269      Y      -127   0.004
                                              back            0.129      Z         4   0.129

                    GT1P1{1}                  down      127   0.000      X             0.271
                                              rght            0.271      Y      -127   0.004
                                              back            0.130      Z         4   0.130
```

```
-----------------------------------------------------------------------------------------------------------------
Encasement Piping
04/24/2020 2018719                                                          BENTLEY
08:29 AM                                                                    AutoPIPE Nuclear 12.00.00.16   RESULT PAGE  99
-----------------------------------------------------------------------------------------------------------------

                                        S U P P O R T    F O R C E S
        ( Force - lbf   , Moment - ft-lb  , Tran. - in  , Rot. - deg   )
 Point/  Connect/    Load                          L O C A L              G L O B A L
 Supp. ID   Type   Combination                Dirn  Force    Deform    Dirn   Force   Deform
 -------- -------- ----------------------     ---- -------- --------   ---- -------- --------
 Tag No.: <None>
 C25                Gravity{1}                down      112   0.000      X            -0.091
 C25  2   V - Stop                            -Z              0.231      Y      -112  -0.000
 Stiff   :RIGID                               -X              0.091      Z            -0.231

                    GT1{1}                    down       84   0.000      X        40   0.103
 Comp.Wt :   0.000                            +Z         54   0.032      Y       -84  -0.000
                                              +X         40   0.103      Z        54   0.032

                    GT1P1{1}                  down       84   0.000      X        40   0.104
                                              +Z         54   0.033      Y       -84  -0.000
                                              +X         40   0.104      Z        54   0.033

 Tag No.: <None>
 C26                Gravity{1}                down       94   0.000      X            -0.120
 C26  2   V - Stop                            -Z              0.231      Y       -94  -0.000
 Stiff   :RIGID                               -X              0.120      Z            -0.231

                    GT1{1}                    down      102   0.000      X        29  -0.058
 Comp.Wt :   0.000                            +Z         76  -0.065      Y      -102  -0.000
                                              +X         29  -0.058      Z        76  -0.065

                    GT1P1{1}                  down      102   0.000      X        29  -0.058
                                              +Z         76  -0.064      Y      -102  -0.000
                                              +X         29  -0.058      Z        76  -0.064

 Tag No.: <None>
 C28                Gravity{1}                down       89   0.000      X            -0.137
 C28  2   V - Stop                            -Z              0.231      Y       -89  -0.000
 Stiff   :RIGID                               -X              0.137      Z            -0.231

                    GT1{1}                    down       81   0.000      X        -7  -0.145
 Comp.Wt :   0.000                            +Z         65  -0.161      Y       -81  -0.000
                                              -X          7   0.145      Z        65  -0.161

                    GT1P1{1}                  down       81   0.000      X        -8  -0.146
                                              +Z         65  -0.161      Y       -81  -0.000
                                              -X          8   0.146      Z        65  -0.161

 Tag No.: <None>
 C29                Gravity{1}                down      124   0.000      X            -0.156
 C29  2   V - Stop                            -Z              0.231      Y      -124  -0.000
 Stiff   :RIGID                               -X              0.156      Z            -0.231

                    GT1{1}                    down      132   0.000      X      -100  -0.240
 Comp.Wt :   0.000                            -Z         32   0.258      Y      -132  -0.000
                                              -X        100   0.240      Z       -32  -0.258

                    GT1P1{1}                  down      132   0.000      X      -100  -0.241
                                              -Z         32   0.258      Y      -132  -0.000
                                              -X        100   0.241      Z       -32  -0.258
```

```
-----------------------------------------------------------------------------------------------------------------------
Encasement Piping
04/24/2020 2018719                                                                    BENTLEY
08:29 AM                                                                              AutoPIPE Nuclear 12.00.00.16   RESULT PAGE 100
-----------------------------------------------------------------------------------------------------------------------

                                          S U P P O R T    F O R C E S
        ( Force - lbf   , Moment - ft-lb  , Tran. - in  , Rot. - deg   )
 Point/  Connect/    Load                          L O C A L              G L O B A L
 Supp. ID   Type   Combination                Dirn  Force    Deform    Dirn   Force   Deform
 -------- -------- ----------------------     ---- -------- --------   ---- -------- --------
 Tag No.: <None>
 C31                Gravity{1}                down       55   0.000      X            -0.200
 C31  2   Guide                               left            0.200      Y       -55  -0.007
 Stiff   :RIGID                               forw            0.231      Z         2  -0.231

                    GT1{1}                    down       38   0.000      X            -0.304
 Comp.Wt :   0.000                            left            0.304      Y       -38  -0.011
                                              forw            0.370      Z         1  -0.370

                    GT1P1{1}                  down       38   0.000      X            -0.305
                                              left            0.305      Y       -38  -0.011
                                              forw            0.371      Z         1  -0.370

 Tag No.: <None>
 C32                Gravity{1}                down       53   0.000      X        -1  -0.224
 C32  2   Guide                               left            0.258      Y       -53   0.006
 Stiff   :RIGID                               back            0.224      Z            -0.258

                    GT1{1}                    down      121   0.000      X        -3  -0.163
 Comp.Wt :   0.000                            left            0.263      Y      -121   0.004
                                              back            0.163      Z            -0.263

                    GT1P1{1}                  down      121   0.000      X        -3  -0.163
                                              left            0.263      Y      -121   0.004
                                              back            0.164      Z            -0.263

 Tag No.: <None>
 C33                Gravity{1}                down       90   0.000      X        -2  -0.224
 C33  2   Guide                               left            0.282      Y       -90   0.005
 Stiff   :RIGID                               back            0.224      Z            -0.282

                    GT1{1}                    up              0.000      X            -0.134
 Comp.Wt :   0.000                            left            0.122      Y             0.003
                                              back            0.134      Z            -0.122

                    GT1P1{1}                  up              0.000      X            -0.134
                                              left            0.122      Y             0.004
                                              back            0.134      Z            -0.122

 Tag No.: <None>
 C34                Gravity{1}                down       31   0.000      X            -0.257
 C34  2   Guide                               left            0.257      Y       -31  -0.009
 Stiff   :RIGID                               forw            0.315      Z         1  -0.315

                    GT1{1}                    down       80   0.000      X            -0.010
 Comp.Wt :   0.000                            left            0.010      Y       -80  -0.001
                                              forw            0.026      Z         2  -0.026

                    GT1P1{1}                  down       80   0.000      X            -0.009
                                              left            0.009      Y       -80  -0.001
                                              forw            0.025      Z         2  -0.025
```

```
-----------------------------------------------------------------------------------------------------------------------
Encasement Piping
04/24/2020 2018719                                                                    BENTLEY
08:29 AM                                                                              AutoPIPE Nuclear 12.00.00.16   RESULT PAGE 101
-----------------------------------------------------------------------------------------------------------------------

                                          S U P P O R T    F O R C E S
        ( Force - lbf   , Moment - ft-lb  , Tran. - in  , Rot. - deg   )
 Point/  Connect/    Load                          L O C A L              G L O B A L
 Supp. ID   Type   Combination                 Dirn  Force    Deform    Dirn   Force   Deform
 -------- -------- ----------------------      ---- -------- --------   ---- -------- --------
 Tag No.: <None>
 C35                Gravity{1}                 down      121   0.000      X            -0.343
 C35  2   V - Stop                             -Z             0.315      Y      -121  -0.000
 Stiff   :RIGID                                -X             0.343      Z            -0.315

                    GT1{1}                     down      100   0.000      X        59  -0.137
 Comp.Wt :   0.000                             +Z         55  -0.122      Y      -100  -0.000
                                               +X         59  -0.137      Z        55  -0.122

                    GT1P1{1}                   down      100   0.000      X        59  -0.136
                                               +Z         55  -0.122      Y      -100  -0.000
                                               +X         59  -0.136      Z        55  -0.122

 Tag No.: <None>
 C36                Gravity{1}                 down       87   0.000      X            -0.423
 C36  2   V - Stop                             -Z             0.315      Y       -87  -0.000
 Stiff   :RIGID                                -X             0.423      Z            -0.315

                    GT1{1}                     down       92   0.000      X        34  -0.373
 Comp.Wt :   0.000                             +Z         65  -0.219      Y       -92  -0.000
                                               +X         34  -0.373      Z        65  -0.219

                    GT1P1{1}                   down       92   0.000      X        34  -0.373
                                               +Z         65  -0.218      Y       -92  -0.000
                                               +X         34  -0.373      Z        65  -0.218

 Tag No.: <None>
 C37                Gravity{1}                 down      105   0.000      X            -0.490
 C37  2   V - Stop                             -Z             0.315      Y      -105  -0.000
 Stiff   :RIGID                                -X             0.490      Z            -0.315

                    GT1{1}                     down      105   0.000      X        11  -0.490
 Comp.Wt :   0.000                             -Z         31   0.315      Y      -105  -0.000
                                               +X         11  -0.490      Z       -31  -0.315

                    GT1P1{1}                   down      105   0.000      X        11  -0.490
                                               -Z         31   0.315      Y      -105  -0.000
                                               +X         11  -0.490      Z       -31  -0.315

 Tag No.: <None>
 C38                Gravity{1}                 down       62   0.000      X            -0.539
 C38  2   V - Stop                             -Z             0.315      Y       -62  -0.000
 Stiff   :RIGID                                -X             0.539      Z            -0.315

                    GT1{1}                     down       56   0.000      X        26  -0.469
 Comp.Wt :   0.000                             -Z         36   0.412      Y       -56  -0.000
                                               +X         26  -0.469      Z       -36  -0.412

                    GT1P1{1}                   down       56   0.000      X        26  -0.469
                                               -Z         36   0.412      Y       -56  -0.000
                                               +X         26  -0.469      Z       -36  -0.412
```

```
-----------------------------------------------------------------------------------------------------------------
Encasement Piping
04/24/2020 2018719                                                          BENTLEY
08:29 AM                                                                    AutoPIPE Nuclear 12.00.00.16   RESULT PAGE 102
-----------------------------------------------------------------------------------------------------------------

                                          S U P P O R T    F O R C E S
        ( Force - lbf   , Moment - ft-lb  , Tran. - in  , Rot. - deg   )
 Point/  Connect/    Load                          L O C A L              G L O B A L
 Supp. ID   Type   Combination                Dirn  Force    Deform    Dirn   Force   Deform
 -------- -------- ----------------------     ---- -------- --------   ---- -------- --------
 Tag No.: <None>
 C39                Gravity{1}                down       88   0.000      X            -0.557
 C39  2   V - Stop                            -Z              0.315      Y       -88  -0.000
 Stiff   :RIGID                               -X              0.557      Z            -0.315

                    GT1{1}                    down      102   0.000      X        54  -0.424
 Comp.Wt :   0.000                            -Z         61   0.465      Y      -102  -0.000
                                              +X         54  -0.424      Z       -61  -0.465

                    GT1P1{1}                  down      102   0.000      X        54  -0.423
                                              -Z         61   0.466      Y      -102  -0.000
                                              +X         54  -0.423      Z       -61  -0.466

 Tag No.: <None>
 C40                Gravity{1}                down       87   0.000      X            -0.565
 C40  2   Guide                               left            0.565      Y       -87  -0.009
 Stiff   :RIGID                               forw            0.315      Z         2  -0.315

                    GT1{1}                    down       64   0.000      X            -0.465
 Comp.Wt :   0.000                            left            0.465      Y       -64  -0.016
                                              forw            0.562      Z         2  -0.561

                    GT1P1{1}                  down       64   0.000      X            -0.464
                                              left            0.464      Y       -64  -0.016
                                              forw            0.562      Z         2  -0.562

 Tag No.: <None>
 C42                Gravity{1}                down       56   0.000      X         1  -0.559
 C42  2   Guide                               rght            0.323      Y       -56  -0.014
 Stiff   :RIGID                               forw            0.559      Z            -0.323

                    GT1{1}                    down       86   0.000      X         2  -0.655
 Comp.Wt :   0.000                            rght            0.398      Y       -86  -0.016
                                              forw            0.655      Z            -0.398

                    GT1P1{1}                  down       86   0.000      X         2  -0.656
                                              rght            0.398      Y       -86  -0.016
                                              forw            0.656      Z            -0.398

 Tag No.: <None>
 C43                Gravity{1}                down       11   0.000      X         0  -0.559
 C43  2   Guide                               rght            0.338      Y       -11  -0.014
 Stiff   :RIGID                               forw            0.559      Z            -0.338

                    GT1{1}                    up              0.007      X            -0.698
 Comp.Wt :   0.000                            rght            0.118      Y            -0.011
                                              forw            0.698      Z            -0.118

                    GT1P1{1}                  up              0.007      X            -0.699
                                              rght            0.117      Y            -0.011
                                              forw            0.699      Z            -0.117
```

S U P P O R T F O R C E S
(Force - lbf , Moment - ft-lb , Tran. - in , Rot. - deg)

Point/ Supp. ID	Connect/ Type	Load Combination	L O C A L Dirn	L O C A L Force	L O C A L Deform	G L O B A L Dirn	G L O B A L Force	G L O B A L Deform
Tag No.: <None>								
C45		Gravity{1}	down	110	0.000	X		-0.540
C45 2	Guide		left		0.540	Y	-110	-0.003
Stiff	:RIGID		forw		0.356	Z	1	-0.356
		GT1{1}	down	111	0.000	X		-0.866
Comp.Wt :	0.000		left		0.866	Y	-111	0.000
			back		0.030	Z	1	0.030
		GT1P1{1}	down	111	0.000	X		-0.868
			left		0.868	Y	-111	0.000
			back		0.031	Z	1	0.031
Tag No.: <None>								
C46		Gravity{1}	down	93	0.000	X		-0.477
C46 2	V - Stop		-Z		0.356	Y	-93	-0.000
Stiff	:RIGID		-X		0.477	Z		-0.356
		GT1{1}	down	94	0.000	X	-55	-0.786
Comp.Wt :	0.000		+Z	51	-0.067	Y	-94	-0.000
			-X	55	0.786	Z	51	-0.067
		GT1P1{1}	down	94	0.000	X	-55	-0.788
			+Z	51	-0.066	Y	-94	-0.000
			-X	55	0.788	Z	51	-0.066
Tag No.: <None>								
C47		Gravity{1}	down	97	0.000	X		-0.400
C47 2	V - Stop		-Z		0.356	Y	-97	-0.000
Stiff	:RIGID		-X		0.400	Z		-0.356
		GT1{1}	down	97	0.000	X	-42	-0.524
Comp.Wt :	0.000		+Z	66	-0.163	Y	-97	-0.000
			-X	42	0.524	Z	66	-0.163
		GT1P1{1}	down	97	0.000	X	-42	-0.525
			+Z	65	-0.163	Y	-97	-0.000
			-X	42	0.525	Z	65	-0.163
Tag No.: <None>								
C48		Gravity{1}	down	97	0.000	X		-0.313
C48 2	V - Stop		-Z		0.356	Y	-97	-0.000
Stiff	:RIGID		-X		0.313	Z		-0.356
		GT1{1}	down	96	0.000	X	-14	-0.331
Comp.Wt :	0.000		+Z	76	-0.260	Y	-96	-0.000
			-X	14	0.331	Z	76	-0.260
		GT1P1{1}	down	96	0.000	X	-15	-0.332
			+Z	76	-0.259	Y	-96	-0.000
			-X	15	0.332	Z	76	-0.259

S U P P O R T F O R C E S
(Force - lbf , Moment - ft-lb , Tran. - in , Rot. - deg)

Point/ Supp. ID	Connect/ Type	Load Combination	L O C A L Dirn	L O C A L Force	L O C A L Deform	G L O B A L Dirn	G L O B A L Force	G L O B A L Deform
Tag No.: <None>								
C49		Gravity{1}	down	97	0.000	X		-0.219
C49 2	V - Stop		-Z		0.356	Y	-97	-0.000
Stiff	:RIGID		-X		0.219	Z		-0.356
		GT1{1}	down	97	0.000	X	23	-0.219
Comp.Wt :	0.000		+Z	39	-0.356	Y	-97	-0.000
			+X	23	-0.219	Z	39	-0.356
		GT1P1{1}	down	97	0.000	X	23	-0.219
			+Z	39	-0.356	Y	-97	-0.000
			+X	23	-0.219	Z	39	-0.356
Tag No.: <None>								
C50		Gravity{1}	down	97	0.000	X		-0.123
C50 2	V - Stop		-Z		0.356	Y	-97	-0.000
Stiff	:RIGID		-X		0.123	Z		-0.356
		GT1{1}	down	97	0.000	X	4	-0.118
Comp.Wt :	0.000		-Z	77	0.452	Y	-97	-0.000
			+X	4	-0.118	Z	-77	-0.452
		GT1P1{1}	down	97	0.000	X	4	-0.118
			-Z	77	0.452	Y	-97	-0.000
			+X	4	-0.118	Z	-77	-0.452
Tag No.: <None>								
C51		Gravity{1}	down	99	0.000	X		-0.029
C51 2	V - Stop		-Z		0.356	Y	-99	-0.000
Stiff	:RIGID		-X		0.029	Z		-0.356
		GT1{1}	down	100	0.000	X	-7	-0.045
Comp.Wt :	0.000		-Z	79	0.548	Y	-100	-0.000
			-X	7	0.045	Z	-79	-0.548
		GT1P1{1}	down	100	0.000	X	-7	-0.045
			-Z	79	0.549	Y	-100	-0.000
			-X	7	0.045	Z	-79	-0.549
Tag No.: <None>								
C52		Gravity{1}	down	91	0.000	X		0.059
C52 2	V - Stop		-Z		0.356	Y	-91	-0.000
Stiff	:RIGID		+X		0.059	Z		-0.356
		GT1{1}	down	89	0.000	X	-25	-0.048
Comp.Wt :	0.000		-Z	66	0.645	Y	-89	-0.000
			-X	25	0.048	Z	-66	-0.645
		GT1P1{1}	down	89	0.000	X	-25	-0.049
			-Z	66	0.646	Y	-89	-0.000
			-X	25	0.049	Z	-66	-0.646

```
-----------------------------------------------------------------------------------------------------------------------
Encasement Piping
04/24/2020 2018719                                                                    BENTLEY
08:29 AM                                                                              AutoPIPE Nuclear 12.00.00.16   RESULT PAGE 105
-----------------------------------------------------------------------------------------------------------------------

                                          S U P P O R T    F O R C E S
        ( Force - lbf   , Moment - ft-lb  , Tran. - in  , Rot. - deg   )
 Point/  Connect/    Load                          L O C A L              G L O B A L
 Supp. ID   Type   Combination                Dirn  Force    Deform    Dirn   Force   Deform
 -------- -------- ----------------------     ---- -------- --------   ---- -------- --------
 Tag No.: <None>
 C53                Gravity{1}                down      115   0.000      X             0.138
 C53  2   V - Stop                            -Z              0.356      Y      -115  -0.000
 Stiff   :RIGID                               +X              0.138      Z            -0.356

                    GT1{1}                    down      124   0.000      X       -57  -0.131
 Comp.Wt :   0.000                            -Z         81   0.741      Y      -124  -0.000
                                              -X         57   0.131      Z       -81  -0.741

                    GT1P1{1}                  down      124   0.000      X       -57  -0.132
                                              -Z         81   0.743      Y      -124  -0.000
                                              -X         57   0.132      Z       -81  -0.743

 Tag No.: <None>
 C55                Gravity{1}                down       84   0.000      X             0.211
 C55  2   Guide                               rght            0.211      Y       -84  -0.003
 Stiff   :RIGID                               forw            0.356      Z         1  -0.356

                    GT1{1}                    down       65   0.000      X            -0.091
 Comp.Wt :   0.000                            left            0.091      Y       -65  -0.007
                                              forw            0.854      Z         1  -0.854

                    GT1P1{1}                  down       65   0.000      X            -0.093
                                              left            0.093      Y       -65  -0.007
                                              forw            0.856      Z         1  -0.856

 Tag No.: <None>
 C56                Gravity{1}                down       63   0.000      X         0   0.231
 C56  2   Guide                               left            0.339      Y       -63  -0.002
 Stiff   :RIGID                               forw            0.231      Z            -0.339

                    GT1{1}                    down       87   0.000      X        -1   0.102
 Comp.Wt :   0.000                            left            0.688      Y       -87  -0.001
                                              forw            0.102      Z            -0.688

                    GT1P1{1}                  down       87   0.000      X        -1   0.101
                                              left            0.689      Y       -87  -0.001
                                              forw            0.101      Z            -0.689

 Tag No.: <None>
 C57                Gravity{1}                down       73   0.000      X         0   0.231
 C57  2   Guide                               left            0.313      Y       -73  -0.001
 Stiff   :RIGID                               forw            0.231      Z            -0.313

                    GT1{1}                    down       55   0.000      X         0   0.176
 Comp.Wt :   0.000                            left            0.164      Y       -55  -0.001
                                              forw            0.176      Z            -0.164

                    GT1P1{1}                  down       55   0.000      X         0   0.176
                                              left            0.165      Y       -55  -0.001
                                              forw            0.176      Z            -0.165
```

S U P P O R T F O R C E S
(Force - lbf , Moment - ft-lb , Tran. - in , Rot. - deg)

Point/ Supp. ID	Connect/ Type	Load Combination	L O C A L Dirn	Force	Deform	G L O B A L Dirn	Force	Deform
Tag No.: <None>								
C58		Gravity{1}	down	71	0.000	X		0.239
C58 2	Guide		rght		0.239	Y	-71	-0.002
Stiff	:RIGID		forw		0.303	Z	1	-0.303
		GT1{1}	down	83	0.000	X		0.368
Comp.Wt :	0.000		rght		0.368	Y	-83	0.000
			back		0.000	Z	1	0.000
		GT1P1{1}	down	83	0.000	X		0.368
			rght		0.368	Y	-83	0.000
			back		0.000	Z	1	0.000
Tag No.: <None>								
C59		Gravity{1}	down	105	0.000	X		0.250
C59 2	V - Stop		-Z		0.303	Y	-105	-0.000
Stiff	:RIGID		+X		0.250	Z		-0.303
		GT1{1}	down	99	0.000	X	50	0.415
Comp.Wt :	0.000		+Z	62	-0.096	Y	-99	-0.000
			+X	50	0.415	Z	62	-0.096
		GT1P1{1}	down	99	0.000	X	50	0.415
			+Z	62	-0.097	Y	-99	-0.000
			+X	50	0.415	Z	62	-0.097
Tag No.: <None>								
C60		Gravity{1}	down	94	0.000	X		0.249
C60 2	V - Stop		-Z		0.303	Y	-94	-0.000
Stiff	:RIGID		+X		0.249	Z		-0.303
		GT1{1}	down	96	0.000	X	36	0.306
Comp.Wt :	0.000		+Z	68	-0.193	Y	-96	-0.000
			+X	36	0.306	Z	68	-0.193
		GT1P1{1}	down	96	0.000	X	36	0.306
			+Z	68	-0.194	Y	-96	-0.000
			+X	36	0.306	Z	68	-0.194
Tag No.: <None>								
C61		Gravity{1}	down	98	0.000	X		0.235
C61 1	V - Stop		-Z		0.303	Y	-98	-0.000
Stiff	:RIGID		+X		0.235	Z		-0.303
		GT1{1}	down	97	0.000	X	-1	0.235
Comp.Wt :	0.000		+Z	84	-0.289	Y	-97	-0.000
			-X	1	-0.235	Z	84	-0.289
		GT1P1{1}	down	97	0.000	X	-1	0.235
			+Z	84	-0.290	Y	-97	-0.000
			-X	1	-0.235	Z	84	-0.290

```
-----------------------------------------------------------------------------------------------------------------------
Encasement Piping
04/24/2020 2018719                                                                    BENTLEY
08:29 AM                                                                              AutoPIPE Nuclear 12.00.00.16   RESULT PAGE 107
-----------------------------------------------------------------------------------------------------------------------

                                          S U P P O R T    F O R C E S
        ( Force - lbf   , Moment - ft-lb  , Tran. - in  , Rot. - deg   )
 Point/  Connect/    Load                          L O C A L              G L O B A L
 Supp. ID   Type   Combination                Dirn  Force    Deform    Dirn   Force   Deform
 -------- -------- ----------------------     ---- -------- --------   ---- -------- --------
 Tag No.: <None>
 C63                Gravity{1}                down       96   0.000      X             0.212
 C63  1   V - Stop                            -Z             0.303      Y       -96  -0.000
 Stiff   :RIGID                               +X             0.212      Z            -0.303

                    GT1{1}                    down       96   0.000      X       -12   0.199
 Comp.Wt :   0.000                            -Z         75   0.385      Y       -96  -0.000
                                              -X         12  -0.199      Z       -75  -0.385

                    GT1P1{1}                  down       96   0.000      X       -11   0.199
                                              -Z         75   0.387      Y       -96  -0.000
                                              -X         11  -0.199      Z       -75  -0.387

 Tag No.: <None>
 C64                Gravity{1}                down       99   0.000      X             0.180
 C64  2   V - Stop                            -Z             0.303      Y       -99  -0.000
 Stiff   :RIGID                               +X             0.180      Z            -0.303

                    GT1{1}                    down      101   0.000      X        -2   0.176
 Comp.Wt :   0.000                            -Z         80   0.482      Y      -101  -0.000
                                              -X          2  -0.176      Z       -80  -0.482

                    GT1P1{1}                  down      101   0.000      X        -2   0.176
                                              -Z         80   0.484      Y      -101  -0.000
                                              -X          2  -0.176      Z       -80  -0.484

 Tag No.: <None>
 C65                Gravity{1}                down       90   0.000      X             0.140
 C65  1   V - Stop                            -Z             0.303      Y       -90  -0.000
 Stiff   :RIGID                               +X             0.140      Z            -0.303

                    GT1{1}                    down       88   0.000      X        13   0.191
 Comp.Wt :   0.000                            -Z         69   0.578      Y       -88  -0.000
                                              +X         13   0.191      Z       -69  -0.578

                    GT1P1{1}                  down       88   0.000      X        13   0.192
                                              -Z         69   0.581      Y       -88  -0.000
                                              +X         13   0.192      Z       -69  -0.581

 Tag No.: <None>
 C72                Gravity{1}                down      118   0.000      X             0.093
 C72  1   V - Stop                            -Z             0.303      Y      -118  -0.000
 Stiff   :RIGID                               +X             0.093      Z            -0.303

                    GT1{1}                    down      125   0.000      X        45   0.279
 Comp.Wt :   0.000                            -Z         89   0.675      Y      -125  -0.000
                                              +X         45   0.279      Z       -89  -0.675

                    GT1P1{1}                  down      125   0.000      X        45   0.281
                                              -Z         89   0.678      Y      -125  -0.000
                                              +X         45   0.281      Z       -89  -0.678
```

```
-----------------------------------------------------------------------------------------------------------------------
Encasement Piping
04/24/2020 2018719                                                                    BENTLEY
08:29 AM                                                                              AutoPIPE Nuclear 12.00.00.16   RESULT PAGE 108
-----------------------------------------------------------------------------------------------------------------------

                                          S U P P O R T    F O R C E S
        ( Force - lbf   , Moment - ft-lb  , Tran. - in  , Rot. - deg   )
 Point/  Connect/    Load                          L O C A L              G L O B A L
 Supp. ID   Type   Combination                Dirn  Force    Deform    Dirn   Force   Deform
 -------- -------- ----------------------     ---- -------- --------   ---- -------- --------
 Tag No.: <None>
 C73                Gravity{1}                down       84   0.000      X             0.031
 C73  1   Guide                               rght            0.031      Y       -84  -0.002
 Stiff   :RIGID                               forw            0.303      Z         0  -0.303

                    GT1{1}                    down       69   0.000      X             0.377
 Comp.Wt :   0.000                            rght            0.377      Y       -69  -0.004
                                              forw            0.790      Z         0  -0.790

                    GT1P1{1}                  down       69   0.000      X             0.379
                                              rght            0.379      Y       -69  -0.005
                                              forw            0.793      Z         0  -0.793

 Tag No.: <None>
 C74                Gravity{1}                down       72   0.000      X         1   0.010
 C74  1   Guide                               rght            0.282      Y       -72   0.000
 Stiff   :RIGID                               back            0.010      Z            -0.282

                    GT1{1}                    down       87   0.000      X         1   0.300
 Comp.Wt :   0.000                            rght            0.761      Y       -87   0.002
                                              back            0.300      Z            -0.761

                    GT1P1{1}                  down       88   0.000      X         1   0.301
                                              rght            0.764      Y       -88   0.002
                                              back            0.301      Z            -0.764

 Tag No.: <None>
 C75                Gravity{1}                down      104   0.000      X             0.010
 C75  1   V - Stop                            -Z              0.225      Y      -104  -0.000
 Stiff   :RIGID                               +X              0.010      Z            -0.225

                    GT1{1}                    down       97   0.000      X        51   0.203
 Comp.Wt :   0.000                            -Z         59   0.451      Y       -97  -0.000
                                              +X         51   0.203      Z       -59  -0.451

                    GT1P1{1}                  down       97   0.000      X        50   0.204
                                              -Z         59   0.453      Y       -97  -0.000
                                              +X         50   0.204      Z       -59  -0.453

 Tag No.: <None>
 C76                Gravity{1}                down       95   0.000      X             0.010
 C76  1   V - Stop                            -Z              0.169      Y       -95  -0.000
 Stiff   :RIGID                               +X              0.010      Z            -0.169

                    GT1{1}                    down       97   0.000      X        71   0.107
 Comp.Wt :   0.000                            -Z         32   0.213      Y       -97  -0.000
                                              +X         71   0.107      Z       -32  -0.213

                    GT1P1{1}                  down       97   0.000      X        70   0.107
                                              -Z         32   0.214      Y       -97  -0.000
                                              +X         70   0.107      Z       -32  -0.214
```

```
-----------------------------------------------------------------------------------------------------------------------
Encasement Piping
04/24/2020 2018719                                                                    BENTLEY
08:29 AM                                                                              AutoPIPE Nuclear 12.00.00.16   RESULT PAGE 109
-----------------------------------------------------------------------------------------------------------------------

                                          S U P P O R T    F O R C E S
        ( Force - lbf   , Moment - ft-lb  , Tran. - in  , Rot. - deg   )
 Point/  Connect/    Load                          L O C A L              G L O B A L
 Supp. ID   Type   Combination                Dirn  Force    Deform    Dirn   Force   Deform
 -------- -------- ----------------------     ---- -------- --------   ---- -------- --------
 Tag No.: <None>
 C77                Gravity{1}                down       98   0.000      X             0.010
 C77  1   V - Stop                            -Z              0.117      Y       -98  -0.000
 Stiff   :RIGID                               +X              0.010      Z            -0.117

                    GT1{1}                    down       98   0.000      X        25   0.010
 Comp.Wt :   0.000                            +Z         15  -0.116      Y       -98  -0.000
                                              +X         25   0.010      Z        15  -0.116

                    GT1P1{1}                  down       98   0.000      X        25   0.010
                                              +Z         15  -0.116      Y       -98  -0.000
                                              +X         25   0.010      Z        15  -0.116

 Tag No.: <None>
 C78                Gravity{1}                down       94   0.000      X             0.010
 C78  1   V - Stop                            -Z              0.070      Y       -94  -0.000
 Stiff   :RIGID                               +X              0.010      Z            -0.070

                    GT1{1}                    down       93   0.000      X       -73  -0.086
 Comp.Wt :   0.000                            +Z         14  -0.052      Y       -93  -0.000
                                              -X         73   0.086      Z        14  -0.052

                    GT1P1{1}                  down       93   0.000      X       -73  -0.087
                                              +Z         14  -0.052      Y       -93  -0.000
                                              -X         73   0.087      Z        14  -0.052

 Tag No.: <None>
 C79                Gravity{1}                down       99   0.000      X             0.010
 C79  1   V - Stop                            -Z              0.034      Y       -99  -0.000
 Stiff   :RIGID                               +X              0.010      Z            -0.034

                    GT1{1}                    down      105   0.000      X       -78  -0.181
 Comp.Wt :   0.000                            +Z         32   0.044      Y      -105  -0.000
                                              -X         78   0.181      Z        32   0.044

                    GT1P1{1}                  down      105   0.000      X       -78  -0.181
                                              +Z         32   0.044      Y      -105  -0.000
                                              -X         78   0.181      Z        32   0.044

 Tag No.: <None>
 C80                Gravity{1}                down       82   0.000      X         1   0.010
 C80  1   Guide                               rght            0.008      Y       -82   0.000
 Stiff   :RIGID                               back            0.010      Z            -0.008

                    GT1{1}                    down       69   0.000      X         1  -0.277
 Comp.Wt :   0.000                            left            0.137      Y       -69  -0.002
                                              forw            0.277      Z             0.137

                    GT1P1{1}                  down       69   0.000      X         1  -0.278
                                              left            0.138      Y       -69  -0.002
                                              forw            0.278      Z             0.138
```

```
-----------------------------------------------------------------------------------------------------------------
Encasement Piping
04/24/2020 2018719                                                          BENTLEY
08:29 AM                                                                    AutoPIPE Nuclear 12.00.00.16   RESULT PAGE 110
-----------------------------------------------------------------------------------------------------------------

                                        S U P P O R T    F O R C E S
        ( Force - lbf   , Moment - ft-lb  , Tran. - in  , Rot. - deg   )
 Point/  Connect/    Load                          L O C A L              G L O B A L
 Supp. ID   Type   Combination                Dirn  Force    Deform    Dirn   Force   Deform
 -------- -------- ----------------------     ---- -------- --------   ---- -------- --------
 Tag No.: <None>
 C82                Gravity{1}                down       55   0.000      X             0.005
 C82  1   Guide                               rght            0.005      Y       -55  -0.000
 Stiff   :RIGID                               forw            0.001      Z         0  -0.001

                    GT1{1}                    down       71   0.000      X            -0.295
 Comp.Wt :   0.000                            left            0.295      Y       -71   0.001
                                              back            0.097      Z         1   0.097

                    GT1P1{1}                  down       71   0.000      X            -0.296
                                              left            0.296      Y       -71   0.001
                                              back            0.097      Z         1   0.097

 Tag No.: <None>
 C81                Gravity{1}                down       64   0.000      X             0.000
 C81  1   V - Stop                            -Z              0.001      Y       -64  -0.000
 Stiff   :RIGID                               +X              0.000      Z            -0.001

                    GT1{1}                    down       59   0.000      X       -47  -0.214
 Comp.Wt :   0.000                            +Z               8   0.034      Y       -59  -0.000
                                              -X              47   0.214      Z         8   0.034

                    GT1P1{1}                  down       59   0.000      X       -47  -0.215
                                              +Z               8   0.034      Y       -59  -0.000
                                              -X              47   0.215      Z         8   0.034

 Tag No.: <None>
 C83                Gravity{1}                down       64   0.000      X            -0.001
 C83  1   Guide                               left            0.001      Y       -64  -0.000
 Stiff   :RIGID                               forw            0.001      Z         1  -0.001

                    GT1{1}                    down       56   0.000      X            -0.130
 Comp.Wt :   0.000                            left            0.130      Y       -56  -0.000
                                              forw            0.029      Z         0  -0.029

                    GT1P1{1}                  down       56   0.000      X            -0.131
                                              left            0.131      Y       -56  -0.000
                                              forw            0.029      Z         0  -0.029

 Tag No.: <None>
 C84                Gravity{1}                down       58   0.000      X        -1   0.000
 C84  1   Guide                               left            0.001      Y       -58  -0.000
 Stiff   :RIGID                               back            0.000      Z            -0.001

                    GT1{1}                    down       74   0.000      X        -1  -0.047
 Comp.Wt :   0.000                            left            0.024      Y       -74   0.001
                                              back            0.047      Z            -0.024

                    GT1P1{1}                  down       74   0.000      X        -1  -0.047
                                              left            0.024      Y       -74   0.001
                                              back            0.047      Z            -0.024
```

```
-----------------------------------------------------------------------------------------------------------------------
Encasement Piping
04/24/2020 2018719                                                                    BENTLEY
08:29 AM                                                                              AutoPIPE Nuclear 12.00.00.16   RESULT PAGE 111
-----------------------------------------------------------------------------------------------------------------------

                                          S U P P O R T    F O R C E S
        ( Force - lbf   , Moment - ft-lb  , Tran. - in  , Rot. - deg   )
 Point/  Connect/    Load                          L O C A L              G L O B A L
 Supp. ID   Type   Combination                 Dirn  Force    Deform    Dirn   Force   Deform
 -------- -------- ----------------------      ---- -------- --------   ---- -------- --------
 Tag No.: <None>
 D04 M              Gravity{1}                 down       69   0.000      X            -0.001
 D04 M1   V - Stop                             +Z              0.000      Y       -69  -0.000
 Stiff   :RIGID                                -X              0.001      Z             0.000

                    GT1{1}                     down       77   0.000      X       -16  -0.014
 Comp.Wt :   0.000                             -Z         60   0.049      Y       -77  -0.000
                                               -X         16   0.014      Z       -60  -0.049

                    GT1P1{1}                   down       77   0.000      X       -16  -0.014
                                               -Z         60   0.049      Y       -77  -0.000
                                               -X         16   0.014      Z       -60  -0.049

 Tag No.: <None>
 D13                Gravity{1}                 down       85   0.000      X            -0.004
 D13  1   V - Stop                             +Z              0.000      Y       -85  -0.000
 Stiff   :RIGID                                -X              0.004      Z             0.000

                    GT1{1}                     down       76   0.000      X       -31  -0.082
 Comp.Wt :   0.000                             -Z         52   0.129      Y       -76  -0.000
                                               -X         31   0.082      Z       -52  -0.129

                    GT1P1{1}                   down       76   0.000      X       -31  -0.082
                                               -Z         52   0.130      Y       -76  -0.000
                                               -X         31   0.082      Z       -52  -0.130

 Tag No.: <None>
 D14                Gravity{1}                 down       72   0.000      X            -0.006
 D14  2   Guide                                left            0.006      Y       -72  -0.000
 Stiff   :RIGID                                back            0.000      Z        -1   0.000

                    GT1{1}                     down       86   0.000      X            -0.124
 Comp.Wt :   0.000                             left            0.124      Y       -86   0.002
                                               forw            0.210      Z        -1  -0.210

                    GT1P1{1}                   down       86   0.000      X            -0.125
                                               left            0.125      Y       -86   0.002
                                               forw            0.211      Z        -1  -0.211

 Tag No.: <None>
 D15                Gravity{1}                 down       58   0.000      X         1  -0.005
 D15  2   Guide                                rght            0.001      Y       -58  -0.000
 Stiff   :RIGID                                back            0.005      Z             0.001

                    GT1{1}                     down       45   0.000      X         0  -0.049
 Comp.Wt :   0.000                             left            0.185      Y       -45  -0.000
                                               back            0.049      Z            -0.185

                    GT1P1{1}                   down       45   0.000      X         0  -0.049
                                               left            0.186      Y       -45  -0.000
                                               back            0.049      Z            -0.186
```

S U P P O R T F O R C E S
(Force - lbf , Moment - ft-lb , Tran. - in , Rot. - deg)

Point/ Supp. ID	Connect/ Type	Load Combination	LOCAL Dirn	LOCAL Force	LOCAL Deform	GLOBAL Dirn	GLOBAL Force	GLOBAL Deform
Tag No.: <None>								
D18		Gravity{1}	down	63	0.000	X		-0.005
D18 1	V - Stop		+Z		0.004	Y	-63	-0.000
Stiff	:RIGID		-X		0.005	Z		0.004
		GT1{1}	down	64	0.000	X	25	0.012
Comp.Wt :	0.000		-Z	44	0.025	Y	-64	-0.000
			+X	25	0.012	Z	-44	-0.025
		GT1P1{1}	down	64	0.000	X	25	0.012
			-Z	44	0.025	Y	-64	-0.000
			+X	25	0.012	Z	-44	-0.025
Tag No.: <None>								
D16		Gravity{1}	down	56	0.000	X	1	-0.005
D16 1	Guide		rght		0.009	Y	-56	-0.000
Stiff	:RIGID		back		0.005	Z		0.009
		GT1{1}	down	65	0.000	X	1	0.072
Comp.Wt :	0.000		rght		0.108	Y	-65	0.001
			forw		0.072	Z		0.108
		GT1P1{1}	down	65	0.000	X	1	0.073
			rght		0.108	Y	-65	0.001
			forw		0.073	Z		0.108
Tag No.: <None>								
D19		Gravity{1}	down	79	0.000	X		-0.003
D19 2	Guide		left		0.003	Y	-79	-0.000
Stiff	:RIGID		back		0.012	Z	-1	0.012
		GT1{1}	down	71	0.000	X		0.125
Comp.Wt :	0.000		rght		0.125	Y	-71	-0.001
			back		0.107	Z	-1	0.107
		GT1P1{1}	down	71	0.000	X		0.125
			rght		0.125	Y	-71	-0.001
			back		0.108	Z	-1	0.108
Tag No.: <None>								
D25		Gravity{1}	down	104	0.000	X		0.001
D25 1	V - Stop		+Z		0.012	Y	-104	-0.000
Stiff	:RIGID		+X		0.001	Z		0.012
		GT1{1}	down	104	0.000	X	-28	0.001
Comp.Wt :	0.000		+Z	19	0.012	Y	-104	-0.000
			-X	28	-0.001	Z	19	0.012
		GT1P1{1}	down	104	0.000	X	-28	0.001
			+Z	19	0.012	Y	-104	-0.000
			-X	28	-0.001	Z	19	0.012

```
-----------------------------------------------------------------------------------------------------------------
Encasement Piping
04/24/2020 2018719                                                          BENTLEY
08:29 AM                                                                    AutoPIPE Nuclear 12.00.00.16   RESULT PAGE 113
-----------------------------------------------------------------------------------------------------------------

                                        S U P P O R T    F O R C E S
        ( Force - lbf   , Moment - ft-lb  , Tran. - in  , Rot. - deg   )
 Point/  Connect/    Load                          L O C A L              G L O B A L
 Supp. ID   Type   Combination                Dirn  Force    Deform    Dirn   Force   Deform
 -------- -------- ----------------------     ---- -------- --------   ---- -------- --------
 Tag No.: <None>
 D20                Gravity{1}                down       77   0.000      X             0.001
 D20  1   Guide                               rght            0.001      Y       -77  -0.000
 Stiff   :RIGID                               back            0.012      Z        -1   0.012

                    GT1{1}                    down       84   0.000      X            -0.195
 Comp.Wt :   0.000                            left            0.195      Y       -84   0.001
                                              forw            0.083      Z        -1  -0.083

                    GT1P1{1}                  down       84   0.000      X            -0.196
                                              left            0.196      Y       -84   0.001
                                              forw            0.084      Z        -1  -0.084

 Tag No.: <None>
 D26                Gravity{1}                down       62   0.000      X         0  -0.000
 D26  1   Guide                               rght            0.010      Y       -62  -0.000
 Stiff   :RIGID                               back            0.000      Z             0.010

                    GT1{1}                    down       53   0.000      X         0  -0.192
 Comp.Wt :   0.000                            left            0.133      Y       -53  -0.001
                                              back            0.192      Z            -0.133

                    GT1P1{1}                  down       53   0.000      X         0  -0.192
                                              left            0.133      Y       -53  -0.001
                                              back            0.192      Z            -0.133

 Tag No.: <None>
 D28                Gravity{1}                down       80   0.000      X            -0.000
 D28  1   V - Stop                            +Z              0.005      Y       -80  -0.000
 Stiff   :RIGID                               -X              0.000      Z             0.005

                    GT1{1}                    down       85   0.000      X       -57  -0.117
 Comp.Wt :   0.000                            -Z         37   0.072      Y       -85  -0.000
                                              -X         57   0.117      Z       -37  -0.072

                    GT1P1{1}                  down       85   0.000      X       -57  -0.118
                                              -Z         37   0.072      Y       -85  -0.000
                                              -X         57   0.118      Z       -37  -0.072

 Tag No.: <None>
 D27                Gravity{1}                down       63   0.000      X            -0.000
 D27  1   V - Stop                            +Z              0.001      Y       -63  -0.000
 Stiff   :RIGID                               -X              0.000      Z             0.001

                    GT1{1}                    down       61   0.000      X       -47  -0.043
 Comp.Wt :   0.000                            -Z         13   0.011      Y       -61  -0.000
                                              -X         47   0.043      Z       -13  -0.011

                    GT1P1{1}                  down       61   0.000      X       -47  -0.043
                                              -Z         13   0.011      Y       -61  -0.000
                                              -X         47   0.043      Z       -13  -0.011
```

R E S T R A I N T R E A C T I O N S

Point name	Load combination	FORCES (lbf) X	Y	Z	Result	MOMENTS (ft-lb) X	Y	Z	Result
A02	Anchor Tag No.: <None>					Connected to: Ground			
	Gravity{1}	19	-11	-9	24	10	154	1	154
	GT1{1}	-141	-42	-20	148	-7	19	-44	48
	GT1P1{1}	-141	-42	-20	148	-7	18	-44	48
A23	V - Stop Tag No.: <None> [ID: A23 1]								
	Gravity{1}	0	-87	0	87	0	0	0	0
	GT1{1}	0	-9	0	9	0	0	0	0
	GT1P1{1}	0	-9	0	9	0	0	0	0
A24	V - Stop Tag No.: <None> [ID: A24 1]								
	Gravity{1}	0	-92	0	92	0	0	0	0
	GT1{1}	92	-159	87	203	0	0	0	0
	GT1P1{1}	92	-159	87	203	0	0	0	0
A21	Guide Tag No.: <None> [ID: A21 1]								
	Gravity{1}	-17	-89	0	91	0	0	0	0
	GT1{1}	0	0	0	0	0	0	0	0
	GT1P1{1}	0	0	0	0	0	0	0	0
A22	Guide Tag No.: <None> [ID: A22 2]								
	Gravity{1}	0	-54	2	54	0	0	0	0
	GT1{1}	0	-139	4	139	0	0	0	0
	GT1P1{1}	0	-139	4	139	0	0	0	0
A25	V - Stop Tag No.: <None> [ID: A25 2]								
	Gravity{1}	0	-112	0	112	0	0	0	0
	GT1{1}	40	-85	55	109	0	0	0	0
	GT1P1{1}	40	-85	55	109	0	0	0	0
A26	V - Stop Tag No.: <None> [ID: A26 2]								
	Gravity{1}	0	-94	0	94	0	0	0	0
	GT1{1}	29	-102	76	130	0	0	0	0
	GT1P1{1}	29	-102	76	130	0	0	0	0
A27	V - Stop Tag No.: <None> [ID: A27 2]								
	Gravity{1}	0	-90	0	90	0	0	0	0
	GT1{1}	-9	-83	66	106	0	0	0	0
	GT1P1{1}	-10	-83	66	106	0	0	0	0
A28	V - Stop Tag No.: <None> [ID: A28 2]								
	Gravity{1}	0	-122	0	122	0	0	0	0
	GT1{1}	-98	-129	-31	165	0	0	0	0
	GT1P1{1}	-98	-129	-30	165	0	0	0	0
A29	Guide Tag No.: <None> [ID: A29 1]								
	Gravity{1}	0	-66	2	66	0	0	0	0
	GT1{1}	0	-49	1	49	0	0	0	0
	GT1P1{1}	0	-49	1	49	0	0	0	0

R E S T R A I N T R E A C T I O N S

Point name	Load combination	FORCES (lbf) X	Y	Z	Result	MOMENTS (ft-lb) X	Y	Z	Result
A30	Guide Tag No.: <None> [ID: A30 1]								
	Gravity{1}	-1	-41	0	41	0	0	0	0
	GT1{1}	-3	-110	0	110	0	0	0	0
	GT1P1{1}	-3	-110	0	110	0	0	0	0
A31	Guide Tag No.: <None> [ID: A31 1]								
	Gravity{1}	-3	-91	0	91	0	0	0	0
	GT1{1}	0	0	0	0	0	0	0	0
	GT1P1{1}	0	0	0	0	0	0	0	0
A32	Guide Tag No.: <None> [ID: A32 1]								
	Gravity{1}	0	-35	1	35	0	0	0	0
	GT1{1}	0	-84	3	84	0	0	0	0
	GT1P1{1}	0	-84	3	84	0	0	0	0
A33	V - Stop Tag No.: <None> [ID: A33 2]								
	Gravity{1}	0	-120	0	120	0	0	0	0
	GT1{1}	57	-100	55	127	0	0	0	0
	GT1P1{1}	57	-100	56	128	0	0	0	0
A34	V - Stop Tag No.: <None> [ID: A34 2]								
	Gravity{1}	0	-88	0	88	0	0	0	0
	GT1{1}	32	-93	67	119	0	0	0	0
	GT1P1{1}	32	-93	67	119	0	0	0	0
A35	V - Stop Tag No.: <None> [ID: A35 2]								
	Gravity{1}	0	-104	0	104	0	0	0	0
	GT1{1}	24	-104	-51	118	0	0	0	0
	GT1P1{1}	24	-104	-51	118	0	0	0	0
A36	V - Stop Tag No.: <None> [ID: A36 2]								
	Gravity{1}	0	-39	0	39	0	0	0	0
	GT1{1}	14	-28	-18	36	0	0	0	0
	GT1P1{1}	14	-28	-18	36	0	0	0	0
A37	V - Stop Tag No.: <None> [ID: A37 2]								
	Gravity{1}	0	-88	0	88	0	0	0	0
	GT1{1}	55	-108	-66	138	0	0	0	0
	GT1P1{1}	55	-108	-66	138	0	0	0	0
A38	Guide Tag No.: <None> [ID: A38 1]								
	Gravity{1}	0	-81	3	81	0	0	0	0
	GT1{1}	0	-59	2	59	0	0	0	0
	GT1P1{1}	0	-59	2	59	0	0	0	0
A39	Guide Tag No.: <None> [ID: A39 1]								
	Gravity{1}	1	-60	0	60	0	0	0	0
	GT1{1}	2	-90	0	90	0	0	0	0
	GT1P1{1}	2	-90	0	90	0	0	0	0

R E S T R A I N T R E A C T I O N S

Point name	Load combination	FORCES (lbf) X	Y	Z	Result	MOMENTS (ft-lb) X	Y	Z	Result
A40	Guide Tag No.: <None>	[ID: A40 1]							
	Gravity{1}	0	-12	0	12	0	0	0	0
	GT1{1}	0	0	0	0	0	0	0	0
	GT1P1{1}	0	0	0	0	0	0	0	0
A41	Guide Tag No.: <None>	[ID: A41 1]							
	Gravity{1}	0	-107	1	107	0	0	0	0
	GT1{1}	0	-110	1	110	0	0	0	0
	GT1P1{1}	0	-110	1	110	0	0	0	0
A42	V - Stop Tag No.: <None>	[ID: A42 2]							
	Gravity{1}	0	-94	0	94	0	0	0	0
	GT1{1}	-55	-94	51	120	0	0	0	0
	GT1P1{1}	-55	-94	51	120	0	0	0	0
A43	V - Stop Tag No.: <None>	[ID: A43 2]							
	Gravity{1}	0	-97	0	97	0	0	0	0
	GT1{1}	-42	-97	66	125	0	0	0	0
	GT1P1{1}	-42	-97	66	125	0	0	0	0
A44	V - Stop Tag No.: <None>	[ID: A44 2]							
	Gravity{1}	0	-97	0	97	0	0	0	0
	GT1{1}	-14	-96	76	123	0	0	0	0
	GT1P1{1}	-14	-96	76	123	0	0	0	0
A45	V - Stop Tag No.: <None>	[ID: A45 2]							
	Gravity{1}	0	-97	0	97	0	0	0	0
	GT1{1}	21	-96	74	124	0	0	0	0
	GT1P1{1}	21	-96	74	124	0	0	0	0
A46	V - Stop Tag No.: <None>	[ID: A46 2]							
	Gravity{1}	0	-97	0	97	0	0	0	0
	GT1{1}	5	-98	-78	126	0	0	0	0
	GT1P1{1}	5	-98	-78	126	0	0	0	0
A47	V - Stop Tag No.: <None>	[ID: A47 2]							
	Gravity{1}	0	-96	0	96	0	0	0	0
	GT1{1}	-3	-96	-77	123	0	0	0	0
	GT1P1{1}	-3	-96	-77	123	0	0	0	0
A48	V - Stop Tag No.: <None>	[ID: A48 2]							
	Gravity{1}	0	-102	0	102	0	0	0	0
	GT1{1}	-23	-104	-80	133	0	0	0	0
	GT1P1{1}	-23	-104	-80	133	0	0	0	0
A49	V - Stop Tag No.: <None>	[ID: A49 2]							
	Gravity{1}	0	-58	0	58	0	0	0	0
	GT1{1}	-20	-49	-34	63	0	0	0	0
	GT1P1{1}	-20	-49	-34	63	0	0	0	0

R E S T R A I N T R E A C T I O N S

Point name	Load combination	FORCES (lbf) X	Y	Z	Result	MOMENTS (ft-lb) X	Y	Z	Result
A50	V - Stop Tag No.: <None> [ID: A50 2]								
	Gravity{1}	0	-79	0	79	0	0	0	0
	GT1{1}	-44	-96	-63	123	0	0	0	0
	GT1P1{1}	-44	-96	-63	123	0	0	0	0
A51	Guide Tag No.: <None> [ID: A51 1]								
	Gravity{1}	0	-76	1	76	0	0	0	0
	GT1{1}	0	-53	0	53	0	0	0	0
	GT1P1{1}	0	-53	0	53	0	0	0	0
A52	Guide Tag No.: <None> [ID: A52 1]								
	Gravity{1}	0	-67	0	67	0	0	0	0
	GT1{1}	-1	-93	0	93	0	0	0	0
	GT1P1{1}	-1	-93	0	93	0	0	0	0
A53	Guide Tag No.: <None> [ID: A53 1]								
	Gravity{1}	0	-70	0	70	0	0	0	0
	GT1{1}	0	-50	0	50	0	0	0	0
	GT1P1{1}	0	-50	0	50	0	0	0	0
A54	Guide Tag No.: <None> [ID: A54 1]								
	Gravity{1}	0	-73	1	73	0	0	0	0
	GT1{1}	0	-86	1	86	0	0	0	0
	GT1P1{1}	0	-86	1	86	0	0	0	0
A55	V - Stop Tag No.: <None> [ID: A55 1]								
	Gravity{1}	0	-105	0	105	0	0	0	0
	GT1{1}	52	-98	59	126	0	0	0	0
	GT1P1{1}	52	-98	59	126	0	0	0	0
A56	V - Stop Tag No.: <None> [ID: A56 1]								
	Gravity{1}	0	-94	0	94	0	0	0	0
	GT1{1}	38	-96	67	123	0	0	0	0
	GT1P1{1}	38	-96	66	123	0	0	0	0
A57	V - Stop Tag No.: <None> [ID: A57 1]								
	Gravity{1}	0	-98	0	98	0	0	0	0
	GT1{1}	-3	-97	75	122	0	0	0	0
	GT1P1{1}	-3	-97	75	122	0	0	0	0
A58	V - Stop Tag No.: <None> [ID: A58 1]								
	Gravity{1}	0	-96	0	96	0	0	0	0
	GT1{1}	-12	-97	-77	124	0	0	0	0
	GT1P1{1}	-12	-97	-77	124	0	0	0	0
A59	V - Stop Tag No.: <None> [ID: A59 1]								
	Gravity{1}	0	-99	0	99	0	0	0	0
	GT1{1}	0	-101	-81	129	0	0	0	0
	GT1P1{1}	0	-101	-81	129	0	0	0	0

R E S T R A I N T R E A C T I O N S

Point name	Load combination	FORCES (lbf) X	Y	Z	Result	MOMENTS (ft-lb) X	Y	Z	Result
A60	V - Stop Tag No.: <None> [ID: A60 1]								
	Gravity{1}	0	-89	0	89	0	0	0	0
	GT1{1}	17	-86	-67	110	0	0	0	0
	GT1P1{1}	17	-86	-67	110	0	0	0	0
A61	V - Stop Tag No.: <None> [ID: A61 1]								
	Gravity{1}	0	-104	0	104	0	0	0	0
	GT1{1}	45	-115	-81	147	0	0	0	0
	GT1P1{1}	45	-115	-81	147	0	0	0	0
A62	Guide Tag No.: <None> [ID: A62 1]								
	Gravity{1}	0	-67	1	67	0	0	0	0
	GT1{1}	0	-46	0	46	0	0	0	0
	GT1P1{1}	0	-46	0	46	0	0	0	0
A63	Guide Tag No.: <None> [ID: A63 1]								
	Gravity{1}	1	-81	0	81	0	0	0	0
	GT1{1}	1	-101	0	101	0	0	0	0
	GT1P1{1}	1	-101	0	101	0	0	0	0
A64	V - Stop Tag No.: <None> [ID: A64 2]								
	Gravity{1}	0	-101	0	101	0	0	0	0
	GT1{1}	48	-92	-56	117	0	0	0	0
	GT1P1{1}	48	-92	-56	117	0	0	0	0
A65	V - Stop Tag No.: <None> [ID: A65 2]								
	Gravity{1}	0	-96	0	96	0	0	0	0
	GT1{1}	71	-98	-33	126	0	0	0	0
	GT1P1{1}	71	-98	-34	126	0	0	0	0
A66	V - Stop Tag No.: <None> [ID: A66 2]								
	Gravity{1}	0	-98	0	98	0	0	0	0
	GT1{1}	22	-97	12	100	0	0	0	0
	GT1P1{1}	22	-97	12	100	0	0	0	0
A67	V - Stop Tag No.: <None> [ID: A67 2]								
	Gravity{1}	0	-94	0	94	0	0	0	0
	GT1{1}	-73	-93	15	119	0	0	0	0
	GT1P1{1}	-73	-93	15	119	0	0	0	0
A68	V - Stop Tag No.: <None> [ID: A68 2]								
	Gravity{1}	0	-102	0	102	0	0	0	0
	GT1{1}	-78	-108	37	138	0	0	0	0
	GT1P1{1}	-78	-108	37	138	0	0	0	0
A69	Guide Tag No.: <None> [ID: A69 1]								
	Gravity{1}	1	-74	0	74	0	0	0	0
	GT1{1}	1	-63	0	63	0	0	0	0
	GT1P1{1}	1	-63	0	63	0	0	0	0

R E S T R A I N T R E A C T I O N S

Point name	Load combination	FORCES (lbf) X	Y	Z	Result	MOMENTS (ft-lb) X	Y	Z	Result
A70	Guide Tag No.: <None> [ID: A70 1]								
	Gravity{1}	0	-75	0	75	0	0	0	0
	GT1{1}	0	-86	0	86	0	0	0	0
	GT1P1{1}	0	-86	0	86	0	0	0	0
A71	V - Stop Tag No.: <None> [ID: A71 2]								
	Gravity{1}	0	-99	0	99	0	0	0	0
	GT1{1}	-74	-96	20	123	0	0	0	0
	GT1P1{1}	-74	-96	20	123	0	0	0	0
A72	Guide Tag No.: <None> [ID: A72 1]								
	Gravity{1}	0	-67	0	67	0	0	0	0
	GT1{1}	0	-61	0	61	0	0	0	0
	GT1P1{1}	0	-61	0	61	0	0	0	0
A73	Guide Tag No.: <None> [ID: A73 1]								
	Gravity{1}	-1	-61	0	61	0	0	0	0
	GT1{1}	-1	-71	0	71	0	0	0	0
	GT1P1{1}	-1	-71	0	71	0	0	0	0
A18	Anchor Tag No.: <None>					Connected to: Ground			
	Gravity{1}	0	-31	-1	31	0	-14	26	29
	GT1{1}	29	-26	-59	71	2	-389	13	389
	GT1P1{1}	29	-26	-59	71	2	-390	13	390
B03	Anchor Tag No.: <None>					Connected to: Ground			
	Gravity{1}	25	6	-11	29	14	211	38	215
	GT1{1}	-313	-50	-15	317	-96	-535	-42	546
	GT1P1{1}	-313	-50	-14	317	-97	-544	-42	554
B22	V - Stop Tag No.: <None> [ID: B22 2]								
	Gravity{1}	0	-208	0	208	0	0	0	0
	GT1{1}	70	-92	24	118	0	0	0	0
	GT1P1{1}	70	-92	24	118	0	0	0	0
B23	V - Stop Tag No.: <None> [ID: B23 2]								
	Gravity{1}	0	-194	0	194	0	0	0	0
	GT1{1}	138	-271	167	347	0	0	0	0
	GT1P1{1}	138	-271	167	347	0	0	0	0
B24	Guide Tag No.: <None> [ID: B24 2]								
	Gravity{1}	-22	-134	0	135	0	0	0	0
	GT1{1}	0	0	0	0	0	0	0	0
	GT1P1{1}	0	0	0	0	0	0	0	0
B25	Guide Tag No.: <None> [ID: B25 2]								
	Gravity{1}	0	-105	3	105	0	0	0	0
	GT1{1}	0	-245	7	245	0	0	0	0
	GT1P1{1}	0	-245	7	245	0	0	0	0

R E S T R A I N T R E A C T I O N S

Point name	Load combination	FORCES (lbf) X	Y	Z	Result	MOMENTS (ft-lb) X	Y	Z	Result
B26	V - Stop Tag No.: <None> [ID: B26 1]								
	Gravity{1}	0	-194	0	194	0	0	0	0
	GT1{1}	66	-142	92	182	0	0	0	0
	GT1P1{1}	66	-142	92	182	0	0	0	0
B28	V - Stop Tag No.: <None> [ID: B28 1]								
	Gravity{1}	0	-165	0	165	0	0	0	0
	GT1{1}	55	-187	139	240	0	0	0	0
	GT1P1{1}	55	-187	139	240	0	0	0	0
B29	V - Stop Tag No.: <None> [ID: B29 1]								
	Gravity{1}	0	-160	0	160	0	0	0	0
	GT1{1}	-33	-146	112	187	0	0	0	0
	GT1P1{1}	-33	-146	112	187	0	0	0	0
B31	V - Stop Tag No.: <None> [ID: B31 1]								
	Gravity{1}	0	-208	0	208	0	0	0	0
	GT1{1}	-166	-213	38	272	0	0	0	0
	GT1P1{1}	-165	-213	39	272	0	0	0	0
B32	Guide Tag No.: <None> [ID: B32 2]								
	Gravity{1}	0	-115	3	115	0	0	0	0
	GT1{1}	0	-99	3	99	0	0	0	0
	GT1P1{1}	0	-100	3	100	0	0	0	0
B33	Guide Tag No.: <None> [ID: B33 2]								
	Gravity{1}	-2	-79	0	79	0	0	0	0
	GT1{1}	-4	-175	0	175	0	0	0	0
	GT1P1{1}	-4	-175	0	175	0	0	0	0
B34	Guide Tag No.: <None> [ID: B34 2]								
	Gravity{1}	-3	-137	0	137	0	0	0	0
	GT1{1}	0	0	0	0	0	0	0	0
	GT1P1{1}	0	0	0	0	0	0	0	0
B35	Guide Tag No.: <None> [ID: B35 2]								
	Gravity{1}	0	-79	2	79	0	0	0	0
	GT1{1}	0	-160	4	160	0	0	0	0
	GT1P1{1}	0	-160	4	160	0	0	0	0
B36	V - Stop Tag No.: <None> [ID: B36 2]								
	Gravity{1}	0	-205	0	205	0	0	0	0
	GT1{1}	82	-163	101	208	0	0	0	0
	GT1P1{1}	82	-163	101	208	0	0	0	0
B37	V - Stop Tag No.: <None> [ID: B37 2]								
	Gravity{1}	0	-157	0	157	0	0	0	0
	GT1{1}	64	-171	120	219	0	0	0	0
	GT1P1{1}	64	-171	120	219	0	0	0	0

R E S T R A I N T R E A C T I O N S

Point name	Load combination	FORCES (lbf) X	Y	Z	Result	MOMENTS (ft-lb) X	Y	Z	Result
B38	V - Stop Tag No.: <None> [ID: B38 2]								
	Gravity{1}	0	-179	0	179	0	0	0	0
	GT1{1}	101	-176	78	217	0	0	0	0
	GT1P1{1}	100	-176	78	217	0	0	0	0
B39	V - Stop Tag No.: <None> [ID: B39 2]								
	Gravity{1}	0	-148	0	148	0	0	0	0
	GT1{1}	62	-131	-86	169	0	0	0	0
	GT1P1{1}	62	-131	-85	169	0	0	0	0
B40	V - Stop Tag No.: <None> [ID: B40 1]								
	Gravity{1}	0	-163	0	163	0	0	0	0
	GT1{1}	104	-203	-125	260	0	0	0	0
	GT1P1{1}	104	-203	-125	260	0	0	0	0
B42	Guide Tag No.: <None> [ID: B42 1]								
	Gravity{1}	0	-180	5	180	0	0	0	0
	GT1{1}	0	-103	3	103	0	0	0	0
	GT1P1{1}	0	-104	3	104	0	0	0	0
B43	Guide Tag No.: <None> [ID: B43 1]								
	Gravity{1}	2	-62	0	62	0	0	0	0
	GT1{1}	4	-159	0	159	0	0	0	0
	GT1P1{1}	4	-159	0	159	0	0	0	0
B45	Guide Tag No.: <None> [ID: B45 1]								
	Gravity{1}	1	-33	0	33	0	0	0	0
	GT1{1}	0	0	0	0	0	0	0	0
	GT1P1{1}	0	0	0	0	0	0	0	0
B46	Guide Tag No.: <None> [ID: B46 2]								
	Gravity{1}	0	-194	2	194	0	0	0	0
	GT1{1}	0	-197	2	197	0	0	0	0
	GT1P1{1}	0	-197	2	197	0	0	0	0
B47	V - Stop Tag No.: <None> [ID: B47 2]								
	Gravity{1}	0	-164	0	164	0	0	0	0
	GT1{1}	-101	-163	83	209	0	0	0	0
	GT1P1{1}	-101	-163	83	209	0	0	0	0
B48	V - Stop Tag No.: <None> [ID: B48 2]								
	Gravity{1}	0	-171	0	171	0	0	0	0
	GT1{1}	-97	-174	100	223	0	0	0	0
	GT1P1{1}	-97	-174	100	223	0	0	0	0
B49	V - Stop Tag No.: <None> [ID: B49 2]								
	Gravity{1}	0	-170	0	170	0	0	0	0
	GT1{1}	-64	-168	118	215	0	0	0	0
	GT1P1{1}	-64	-168	118	215	0	0	0	0

R E S T R A I N T R E A C T I O N S

Point name	Load combination	FORCES (lbf) X	Y	Z	Result	MOMENTS (ft-lb) X	Y	Z	Result
B50	V - Stop Tag No.: <None> [ID: B50 2]								
	Gravity{1}	0	-171	0	171	0	0	0	0
	GT1{1}	41	-173	56	186	0	0	0	0
	GT1P1{1}	41	-173	56	186	0	0	0	0
B51	V - Stop Tag No.: <None> [ID: B51 2]								
	Gravity{1}	0	-169	0	169	0	0	0	0
	GT1{1}	-9	-168	-134	215	0	0	0	0
	GT1P1{1}	-9	-168	-134	215	0	0	0	0
B52	V - Stop Tag No.: <None> [ID: B52 2]								
	Gravity{1}	0	-175	0	175	0	0	0	0
	GT1{1}	-51	-181	-135	232	0	0	0	0
	GT1P1{1}	-51	-181	-135	232	0	0	0	0
B53	V - Stop Tag No.: <None> [ID: B53 2]								
	Gravity{1}	0	-151	0	151	0	0	0	0
	GT1{1}	-59	-137	-92	175	0	0	0	0
	GT1P1{1}	-60	-137	-92	175	0	0	0	0
B54	V - Stop Tag No.: <None> [ID: B54 2]								
	Gravity{1}	0	-173	0	173	0	0	0	0
	GT1{1}	-96	-208	-136	266	0	0	0	0
	GT1P1{1}	-96	-208	-136	266	0	0	0	0
B55	Guide Tag No.: <None> [ID: B55 1]								
	Gravity{1}	0	-126	1	126	0	0	0	0
	GT1{1}	0	-65	1	65	0	0	0	0
	GT1P1{1}	0	-65	1	65	0	0	0	0
B57	Guide Tag No.: <None> [ID: B57 1]								
	Gravity{1}	-1	-127	0	127	0	0	0	0
	GT1{1}	-1	-202	0	202	0	0	0	0
	GT1P1{1}	-1	-203	0	203	0	0	0	0
B58	Guide Tag No.: <None> [ID: B58 1]								
	Gravity{1}	-1	-116	0	116	0	0	0	0
	GT1{1}	0	-37	0	37	0	0	0	0
	GT1P1{1}	0	-36	0	36	0	0	0	0
B64	Guide Tag No.: <None> [ID: B64 1]								
	Gravity{1}	0	-134	1	134	0	0	0	0
	GT1{1}	0	-198	1	198	0	0	0	0
	GT1P1{1}	0	-198	1	198	0	0	0	0
B65	V - Stop Tag No.: <None> [ID: B65 1]								
	Gravity{1}	0	-180	0	180	0	0	0	0
	GT1{1}	79	-149	89	190	0	0	0	0
	GT1P1{1}	79	-148	88	190	0	0	0	0

R E S T R A I N T R E A C T I O N S

Point name	Load combination	FORCES (lbf) X	Y	Z	Result	MOMENTS (ft-lb) X	Y	Z	Result
B66	V - Stop Tag No.: <None> [ID: B66 1]								
	Gravity{1}	0	-168	0	168	0	0	0	0
	GT1{1}	85	-179	116	229	0	0	0	0
	GT1P1{1}	85	-179	116	230	0	0	0	0
B67	V - Stop Tag No.: <None> [ID: B67 1]								
	Gravity{1}	0	-171	0	171	0	0	0	0
	GT1{1}	50	-167	125	215	0	0	0	0
	GT1P1{1}	50	-167	124	215	0	0	0	0
B68	V - Stop Tag No.: <None> [ID: B68 1]								
	Gravity{1}	0	-170	0	170	0	0	0	0
	GT1{1}	10	-170	136	218	0	0	0	0
	GT1P1{1}	10	-170	136	218	0	0	0	0
B69	V - Stop Tag No.: <None> [ID: B69 1]								
	Gravity{1}	0	-171	0	171	0	0	0	0
	GT1{1}	-37	-170	132	219	0	0	0	0
	GT1P1{1}	-37	-170	133	219	0	0	0	0
B70	V - Stop Tag No.: <None> [ID: B70 1]								
	Gravity{1}	0	-168	0	168	0	0	0	0
	GT1{1}	-11	-169	-131	214	0	0	0	0
	GT1P1{1}	-11	-169	-131	214	0	0	0	0
B71	V - Stop Tag No.: <None> [ID: B71 1]								
	Gravity{1}	0	-179	0	179	0	0	0	0
	GT1{1}	84	-183	-119	234	0	0	0	0
	GT1P1{1}	84	-183	-119	234	0	0	0	0
B72	V - Stop Tag No.: <None> [ID: B72 1]								
	Gravity{1}	0	-120	0	120	0	0	0	0
	GT1{1}	64	-104	-52	133	0	0	0	0
	GT1P1{1}	64	-104	-52	133	0	0	0	0
B73	V - Stop Tag No.: <None> [ID: B73 1]								
	Gravity{1}	0	-138	0	138	0	0	0	0
	GT1{1}	111	-170	-78	217	0	0	0	0
	GT1P1{1}	111	-170	-78	218	0	0	0	0
B74	Guide Tag No.: <None> [ID: B74 1]								
	Gravity{1}	0	-140	1	140	0	0	0	0
	GT1{1}	0	-49	0	49	0	0	0	0
	GT1P1{1}	0	-49	0	49	0	0	0	0
B75	Guide Tag No.: <None> [ID: B75 1]								
	Gravity{1}	2	-93	0	93	0	0	0	0
	GT1{1}	4	-224	0	224	0	0	0	0
	GT1P1{1}	4	-224	0	224	0	0	0	0

R E S T R A I N T R E A C T I O N S

Point name	Load combination	FORCES (lbf) X	Y	Z	Result	MOMENTS (ft-lb) X	Y	Z	Result
B77	Guide Tag No.: <None>	[ID: B77 1]							
	Gravity{1}	0	-96	2	96	0	0	0	0
	GT1{1}	0	0	0	0	0	0	0	0
	GT1P1{1}	0	0	0	0	0	0	0	0
B76	Guide Tag No.: <None>	[ID: B76 1]							
	Gravity{1}	1	-85	0	85	0	0	0	0
	GT1{1}	3	-180	0	180	0	0	0	0
	GT1P1{1}	3	-180	0	180	0	0	0	0
B59 M	V - Stop Tag No.: <None>	[ID: B59 M1]							
	Gravity{1}	0	-19	0	19	0	0	0	0
	GT1{1}	0	0	0	0	0	0	0	0
	GT1P1{1}	0	0	0	0	0	0	0	0
B62	Anchor Tag No.: <None>					Connected to: Ground			
	Gravity{1}	-2	-33	-9	35	1	97	-13	98
	GT1{1}	-234	0	-746	781	-67	5264	56	5265
	GT1P1{1}	-235	0	-748	784	-67	5285	57	5286
C03	Anchor Tag No.: <None>					Connected to: Ground			
	Gravity{1}	9	2	-9	12	3	157	20	159
	GT1{1}	-188	-13	-26	190	2	46	-2	46
	GT1P1{1}	-188	-13	-26	190	2	45	-2	45
C21	V - Stop Tag No.: <None>	[ID: C21 2]							
	Gravity{1}	0	-112	0	112	0	0	0	0
	GT1{1}	60	-77	14	98	0	0	0	0
	GT1P1{1}	60	-77	14	98	0	0	0	0
C22	V - Stop Tag No.: <None>	[ID: C22 2]							
	Gravity{1}	0	-98	0	98	0	0	0	0
	GT1{1}	79	-142	82	182	0	0	0	0
	GT1P1{1}	79	-142	82	182	0	0	0	0
C23	Guide Tag No.: <None>	[ID: C23 2]							
	Gravity{1}	-6	-78	0	78	0	0	0	0
	GT1{1}	0	0	0	0	0	0	0	0
	GT1P1{1}	0	0	0	0	0	0	0	0
C24	Guide Tag No.: <None>	[ID: C24 2]							
	Gravity{1}	0	-57	2	57	0	0	0	0
	GT1{1}	0	-127	4	127	0	0	0	0
	GT1P1{1}	0	-127	4	127	0	0	0	0
C25	V - Stop Tag No.: <None>	[ID: C25 2]							
	Gravity{1}	0	-112	0	112	0	0	0	0
	GT1{1}	40	-84	54	108	0	0	0	0
	GT1P1{1}	40	-84	54	108	0	0	0	0

R E S T R A I N T R E A C T I O N S

Point name	Load combination	FORCES (lbf) X	Y	Z	Result	MOMENTS (ft-lb) X	Y	Z	Result
C26	V - Stop Tag No.: <None>	[ID: C26 2]							
	Gravity{1}	0	-94	0	94	0	0	0	0
	GT1{1}	29	-102	76	131	0	0	0	0
	GT1P1{1}	29	-102	76	131	0	0	0	0
C28	V - Stop Tag No.: <None>	[ID: C28 2]							
	Gravity{1}	0	-89	0	89	0	0	0	0
	GT1{1}	-7	-81	65	104	0	0	0	0
	GT1P1{1}	-8	-81	65	104	0	0	0	0
C29	V - Stop Tag No.: <None>	[ID: C29 2]							
	Gravity{1}	0	-124	0	124	0	0	0	0
	GT1{1}	-100	-132	-32	169	0	0	0	0
	GT1P1{1}	-100	-132	-32	169	0	0	0	0
C31	Guide Tag No.: <None>	[ID: C31 2]							
	Gravity{1}	0	-55	2	55	0	0	0	0
	GT1{1}	0	-38	1	38	0	0	0	0
	GT1P1{1}	0	-38	1	38	0	0	0	0
C32	Guide Tag No.: <None>	[ID: C32 2]							
	Gravity{1}	-1	-53	0	53	0	0	0	0
	GT1{1}	-3	-121	0	121	0	0	0	0
	GT1P1{1}	-3	-121	0	121	0	0	0	0
C33	Guide Tag No.: <None>	[ID: C33 2]							
	Gravity{1}	-2	-90	0	90	0	0	0	0
	GT1{1}	0	0	0	0	0	0	0	0
	GT1P1{1}	0	0	0	0	0	0	0	0
C34	Guide Tag No.: <None>	[ID: C34 2]							
	Gravity{1}	0	-31	1	31	0	0	0	0
	GT1{1}	0	-80	2	80	0	0	0	0
	GT1P1{1}	0	-80	2	80	0	0	0	0
C35	V - Stop Tag No.: <None>	[ID: C35 2]							
	Gravity{1}	0	-121	0	121	0	0	0	0
	GT1{1}	59	-100	55	128	0	0	0	0
	GT1P1{1}	59	-100	55	128	0	0	0	0
C36	V - Stop Tag No.: <None>	[ID: C36 2]							
	Gravity{1}	0	-87	0	87	0	0	0	0
	GT1{1}	34	-92	65	118	0	0	0	0
	GT1P1{1}	34	-92	65	118	0	0	0	0
C37	V - Stop Tag No.: <None>	[ID: C37 2]							
	Gravity{1}	0	-105	0	105	0	0	0	0
	GT1{1}	11	-105	-31	110	0	0	0	0
	GT1P1{1}	11	-105	-31	110	0	0	0	0

R E S T R A I N T R E A C T I O N S

Point name	Load combination	FORCES (lbf) X	Y	Z	Result	MOMENTS (ft-lb) X	Y	Z	Result
C38	V - Stop Tag No.: <None> [ID: C38 2]								
	Gravity{1}	0	-62	0	62	0	0	0	0
	GT1{1}	26	-56	-36	71	0	0	0	0
	GT1P1{1}	26	-56	-36	71	0	0	0	0
C39	V - Stop Tag No.: <None> [ID: C39 2]								
	Gravity{1}	0	-88	0	88	0	0	0	0
	GT1{1}	54	-102	-61	130	0	0	0	0
	GT1P1{1}	54	-102	-61	130	0	0	0	0
C40	Guide Tag No.: <None> [ID: C40 2]								
	Gravity{1}	0	-87	2	87	0	0	0	0
	GT1{1}	0	-64	2	64	0	0	0	0
	GT1P1{1}	0	-64	2	64	0	0	0	0
C42	Guide Tag No.: <None> [ID: C42 2]								
	Gravity{1}	1	-56	0	56	0	0	0	0
	GT1{1}	2	-86	0	86	0	0	0	0
	GT1P1{1}	2	-86	0	86	0	0	0	0
C43	Guide Tag No.: <None> [ID: C43 2]								
	Gravity{1}	0	-11	0	11	0	0	0	0
	GT1{1}	0	0	0	0	0	0	0	0
	GT1P1{1}	0	0	0	0	0	0	0	0
C45	Guide Tag No.: <None> [ID: C45 2]								
	Gravity{1}	0	-110	1	110	0	0	0	0
	GT1{1}	0	-111	1	111	0	0	0	0
	GT1P1{1}	0	-111	1	111	0	0	0	0
C46	V - Stop Tag No.: <None> [ID: C46 2]								
	Gravity{1}	0	-93	0	93	0	0	0	0
	GT1{1}	-55	-94	51	120	0	0	0	0
	GT1P1{1}	-55	-94	51	120	0	0	0	0
C47	V - Stop Tag No.: <None> [ID: C47 2]								
	Gravity{1}	0	-97	0	97	0	0	0	0
	GT1{1}	-42	-97	66	125	0	0	0	0
	GT1P1{1}	-42	-97	65	125	0	0	0	0
C48	V - Stop Tag No.: <None> [ID: C48 2]								
	Gravity{1}	0	-97	0	97	0	0	0	0
	GT1{1}	-14	-96	76	123	0	0	0	0
	GT1P1{1}	-15	-96	76	123	0	0	0	0
C49	V - Stop Tag No.: <None> [ID: C49 2]								
	Gravity{1}	0	-97	0	97	0	0	0	0
	GT1{1}	23	-97	39	107	0	0	0	0
	GT1P1{1}	23	-97	39	107	0	0	0	0

R E S T R A I N T R E A C T I O N S

Point name	Load combination	FORCES (lbf) X	Y	Z	Result	MOMENTS (ft-lb) X	Y	Z	Result
C50	V - Stop Tag No.: <None> [ID: C50 2]								
	Gravity{1}	0	-97	0	97	0	0	0	0
	GT1{1}	4	-97	-77	124	0	0	0	0
	GT1P1{1}	4	-97	-77	124	0	0	0	0
C51	V - Stop Tag No.: <None> [ID: C51 2]								
	Gravity{1}	0	-99	0	99	0	0	0	0
	GT1{1}	-7	-100	-79	128	0	0	0	0
	GT1P1{1}	-7	-100	-79	128	0	0	0	0
C52	V - Stop Tag No.: <None> [ID: C52 2]								
	Gravity{1}	0	-91	0	91	0	0	0	0
	GT1{1}	-25	-89	-66	114	0	0	0	0
	GT1P1{1}	-25	-89	-66	113	0	0	0	0
C53	V - Stop Tag No.: <None> [ID: C53 2]								
	Gravity{1}	0	-115	0	115	0	0	0	0
	GT1{1}	-57	-124	-81	158	0	0	0	0
	GT1P1{1}	-57	-124	-81	158	0	0	0	0
C55	Guide Tag No.: <None> [ID: C55 2]								
	Gravity{1}	0	-84	1	84	0	0	0	0
	GT1{1}	0	-65	1	65	0	0	0	0
	GT1P1{1}	0	-65	1	65	0	0	0	0
C56	Guide Tag No.: <None> [ID: C56 2]								
	Gravity{1}	0	-63	0	63	0	0	0	0
	GT1{1}	-1	-87	0	87	0	0	0	0
	GT1P1{1}	-1	-87	0	87	0	0	0	0
C57	Guide Tag No.: <None> [ID: C57 2]								
	Gravity{1}	0	-73	0	73	0	0	0	0
	GT1{1}	0	-55	0	55	0	0	0	0
	GT1P1{1}	0	-55	0	55	0	0	0	0
C58	Guide Tag No.: <None> [ID: C58 2]								
	Gravity{1}	0	-71	1	71	0	0	0	0
	GT1{1}	0	-83	1	83	0	0	0	0
	GT1P1{1}	0	-83	1	83	0	0	0	0
C59	V - Stop Tag No.: <None> [ID: C59 2]								
	Gravity{1}	0	-105	0	105	0	0	0	0
	GT1{1}	50	-99	62	127	0	0	0	0
	GT1P1{1}	50	-99	62	127	0	0	0	0
C60	V - Stop Tag No.: <None> [ID: C60 2]								
	Gravity{1}	0	-94	0	94	0	0	0	0
	GT1{1}	36	-96	68	123	0	0	0	0
	GT1P1{1}	36	-96	68	123	0	0	0	0

R E S T R A I N T R E A C T I O N S

Point name	Load combination	FORCES (lbf) X	Y	Z	Result	MOMENTS (ft-lb) X	Y	Z	Result
C61	V - Stop Tag No.: <None> [ID: C61 1]								
	Gravity{1}	0	-98	0	98	0	0	0	0
	GT1{1}	-1	-97	84	128	0	0	0	0
	GT1P1{1}	-1	-97	84	128	0	0	0	0
C63	V - Stop Tag No.: <None> [ID: C63 1]								
	Gravity{1}	0	-96	0	96	0	0	0	0
	GT1{1}	-12	-96	-75	123	0	0	0	0
	GT1P1{1}	-11	-96	-75	123	0	0	0	0
C64	V - Stop Tag No.: <None> [ID: C64 2]								
	Gravity{1}	0	-99	0	99	0	0	0	0
	GT1{1}	-2	-101	-80	128	0	0	0	0
	GT1P1{1}	-2	-101	-80	129	0	0	0	0
C65	V - Stop Tag No.: <None> [ID: C65 1]								
	Gravity{1}	0	-90	0	90	0	0	0	0
	GT1{1}	13	-88	-69	112	0	0	0	0
	GT1P1{1}	13	-88	-69	112	0	0	0	0
C72	V - Stop Tag No.: <None> [ID: C72 1]								
	Gravity{1}	0	-118	0	118	0	0	0	0
	GT1{1}	45	-125	-89	160	0	0	0	0
	GT1P1{1}	45	-125	-89	160	0	0	0	0
C73	Guide Tag No.: <None> [ID: C73 1]								
	Gravity{1}	0	-84	0	84	0	0	0	0
	GT1{1}	0	-69	0	69	0	0	0	0
	GT1P1{1}	0	-69	0	69	0	0	0	0
C74	Guide Tag No.: <None> [ID: C74 1]								
	Gravity{1}	1	-72	0	72	0	0	0	0
	GT1{1}	1	-87	0	87	0	0	0	0
	GT1P1{1}	1	-88	0	88	0	0	0	0
C75	V - Stop Tag No.: <None> [ID: C75 1]								
	Gravity{1}	0	-104	0	104	0	0	0	0
	GT1{1}	51	-97	-59	124	0	0	0	0
	GT1P1{1}	50	-97	-59	124	0	0	0	0
C76	V - Stop Tag No.: <None> [ID: C76 1]								
	Gravity{1}	0	-95	0	95	0	0	0	0
	GT1{1}	71	-97	-32	124	0	0	0	0
	GT1P1{1}	70	-97	-32	124	0	0	0	0
C77	V - Stop Tag No.: <None> [ID: C77 1]								
	Gravity{1}	0	-98	0	98	0	0	0	0
	GT1{1}	25	-98	15	102	0	0	0	0
	GT1P1{1}	25	-98	15	102	0	0	0	0

R E S T R A I N T R E A C T I O N S

Point name	Load combination	FORCES (lbf) X	Y	Z	Result	MOMENTS (ft-lb) X	Y	Z	Result
C78	V - Stop Tag No.: <None>	[ID: C78 1]							
	Gravity{1}	0	-94	0	94	0	0	0	0
	GT1{1}	-73	-93	14	119	0	0	0	0
	GT1P1{1}	-73	-93	14	119	0	0	0	0
C79	V - Stop Tag No.: <None>	[ID: C79 1]							
	Gravity{1}	0	-99	0	99	0	0	0	0
	GT1{1}	-78	-105	32	135	0	0	0	0
	GT1P1{1}	-78	-105	32	135	0	0	0	0
C80	Guide Tag No.: <None>	[ID: C80 1]							
	Gravity{1}	1	-82	0	82	0	0	0	0
	GT1{1}	1	-69	0	69	0	0	0	0
	GT1P1{1}	1	-69	0	69	0	0	0	0
C82	Guide Tag No.: <None>	[ID: C82 1]							
	Gravity{1}	0	-55	0	55	0	0	0	0
	GT1{1}	0	-71	1	71	0	0	0	0
	GT1P1{1}	0	-71	1	71	0	0	0	0
C81	V - Stop Tag No.: <None>	[ID: C81 1]							
	Gravity{1}	0	-64	0	64	0	0	0	0
	GT1{1}	-47	-59	8	76	0	0	0	0
	GT1P1{1}	-47	-59	8	76	0	0	0	0
C83	Guide Tag No.: <None>	[ID: C83 1]							
	Gravity{1}	0	-64	1	64	0	0	0	0
	GT1{1}	0	-56	0	56	0	0	0	0
	GT1P1{1}	0	-56	0	56	0	0	0	0
C84	Guide Tag No.: <None>	[ID: C84 1]							
	Gravity{1}	-1	-58	0	58	0	0	0	0
	GT1{1}	-1	-74	0	74	0	0	0	0
	GT1P1{1}	-1	-74	0	74	0	0	0	0
C70	Anchor Tag No.: <None>					Connected to: Ground			
	Gravity{1}	0	-21	-1	21	-2	-9	10	13
	GT1{1}	2	-12	-44	45	3	-368	-8	368
	GT1P1{1}	2	-12	-44	46	3	-369	-8	370
D01	Anchor Tag No.: <None>					Connected to: Ground			
	Gravity{1}	-1	-20	2	20	-9	10	0	13
	GT1{1}	-5	-17	193	194	-4	171	-1	171
	GT1P1{1}	-5	-17	194	194	-4	172	-1	172
D04 M	V - Stop Tag No.: <None>	[ID: D04 M1]							
	Gravity{1}	0	-69	0	69	0	0	0	0
	GT1{1}	-16	-77	-60	99	0	0	0	0
	GT1P1{1}	-16	-77	-60	99	0	0	0	0

R E S T R A I N T R E A C T I O N S

Point name	Load combination	FORCES (lbf) X	Y	Z	Result	MOMENTS (ft-lb) X	Y	Z	Result
D13	V - Stop Tag No.: <None> [ID: D13 1]								
	Gravity{1}	0	-85	0	85	0	0	0	0
	GT1{1}	-31	-76	-52	97	0	0	0	0
	GT1P1{1}	-31	-76	-52	97	0	0	0	0
D14	Guide Tag No.: <None> [ID: D14 2]								
	Gravity{1}	0	-72	-1	72	0	0	0	0
	GT1{1}	0	-86	-1	86	0	0	0	0
	GT1P1{1}	0	-86	-1	86	0	0	0	0
D15	Guide Tag No.: <None> [ID: D15 2]								
	Gravity{1}	1	-58	0	58	0	0	0	0
	GT1{1}	0	-45	0	45	0	0	0	0
	GT1P1{1}	0	-45	0	45	0	0	0	0
D18	V - Stop Tag No.: <None> [ID: D18 1]								
	Gravity{1}	0	-63	0	63	0	0	0	0
	GT1{1}	25	-64	-44	82	0	0	0	0
	GT1P1{1}	25	-64	-44	82	0	0	0	0
D16	Guide Tag No.: <None> [ID: D16 1]								
	Gravity{1}	1	-56	0	56	0	0	0	0
	GT1{1}	1	-65	0	65	0	0	0	0
	GT1P1{1}	1	-65	0	65	0	0	0	0
D19	Guide Tag No.: <None> [ID: D19 2]								
	Gravity{1}	0	-79	-1	79	0	0	0	0
	GT1{1}	0	-71	-1	71	0	0	0	0
	GT1P1{1}	0	-71	-1	71	0	0	0	0
D25	V - Stop Tag No.: <None> [ID: D25 1]								
	Gravity{1}	0	-104	0	104	0	0	0	0
	GT1{1}	-28	-104	19	109	0	0	0	0
	GT1P1{1}	-28	-104	19	109	0	0	0	0
D20	Guide Tag No.: <None> [ID: D20 1]								
	Gravity{1}	0	-77	-1	77	0	0	0	0
	GT1{1}	0	-84	-1	84	0	0	0	0
	GT1P1{1}	0	-84	-1	84	0	0	0	0
D26	Guide Tag No.: <None> [ID: D26 1]								
	Gravity{1}	0	-62	0	62	0	0	0	0
	GT1{1}	0	-53	0	53	0	0	0	0
	GT1P1{1}	0	-53	0	53	0	0	0	0
D28	V - Stop Tag No.: <None> [ID: D28 1]								
	Gravity{1}	0	-80	0	80	0	0	0	0
	GT1{1}	-57	-85	-37	109	0	0	0	0
	GT1P1{1}	-57	-85	-37	109	0	0	0	0

R E S T R A I N T R E A C T I O N S

Point name	Load combination	FORCES (lbf) X	Y	Z	Result	MOMENTS (ft-lb) X	Y	Z	Result
D27	V - Stop Tag No.: <None> [ID: D27 1]								
	Gravity{1}	0	-63	0	63	0	0	0	0
	GT1{1}	-47	-61	-13	78	0	0	0	0
	GT1P1{1}	-47	-61	-13	78	0	0	0	0
D22	Anchor Tag No.: <None>					Connected to: Ground			
	Gravity{1}	0	-15	1	15	1	14	6	15
	GT1{1}	158	-15	-3	158	-1	-168	5	168
	GT1P1{1}	158	-15	-3	159	-1	-169	5	169

ASME B31.3 (2016) CODE COMPLIANCE
(Moments in ft-lb , Force in lbf) (Stress in psi)

Point name	Load combination	Axial Force	In-Pl. Moment	Out-Pl. Moment	Torsion Moment	S.I.F In	S.I.F Out	Index/SIF Ax.	Index/SIF Tor.	Eq. no.	Load type	Code Stress	Code Allow.
*** Segment A begin ***													
A02	Max P{1}									(3a)	HOOP	661	20000
	GR + Max P{1}	791	1	153	10	1.00	1.00	1.00	1.00	23a	SUST	852	20000
	TR:Amb to T1{1}	160	45	135	17	1.00	1.00	1.00	1.00	(17)	DISP	584	30000
	Amb to T1{1}	160	45	135	17	1.00	1.00	1.00	1.00	(17)	DISP	584	30000
A03	Max P{1}									(3a)	HOOP	661	20000
	GR + Max P{1}	791	2	134	10	1.00	1.00	1.00	1.00	23a	SUST	781	20000
	TR:Amb to T1{1}	160	16	156	17	1.00	1.00	1.00	1.00	(17)	DISP	640	30000
	Amb to T1{1}	160	16	156	17	1.00	1.00	1.00	1.00	(17)	DISP	640	30000
A23	Max P{1}									(3a)	HOOP	661	20000
	GR + Max P{1}	791	57	111	10	1.00	1.00	1.00	1.00	23a	SUST	745	20000
	TR:Amb to T1{1}	160	92	183	17	1.00	1.00	1.00	1.00	(17)	DISP	819	30000
	Amb to T1{1}	160	92	183	17	1.00	1.00	1.00	1.00	(17)	DISP	819	30000
A04 N-	Max P{1}									(3a)	HOOP	661	20000
	GR + Max P{1}	791	46	109	10	1.00	1.00	1.00	1.00	23a	SUST	720	20000
	TR:Amb to T1{1}	160	82	186	17	1.00	1.00	1.00	1.00	(17)	DISP	810	30000
	Amb to T1{1}	160	82	186	17	1.00	1.00	1.00	1.00	(17)	DISP	810	30000
A04 N+	Max P{1}									(3a)	HOOP	661	20000
	GR + Max P{1}	791	46	109	10	1.00	1.00	1.00	1.00	23a	SUST	720	20000
	TR:Amb to T1{1}	160	82	186	17	1.00	1.00	1.00	1.00	(17)	DISP	810	30000
	Amb to T1{1}	160	82	186	17	1.00	1.00	1.00	1.00	(17)	DISP	810	30000
A04 F-	Max P{1}									(3a)	HOOP	661	20000
	GR + Max P{1}	798	23	104	10	1.00	1.00	1.00	1.00	23a	SUST	676	20000
	TR:Amb to T1{1}	166	64	192	18	1.00	1.00	1.00	1.00	(17)	DISP	809	30000
	Amb to T1{1}	166	64	192	18	1.00	1.00	1.00	1.00	(17)	DISP	809	30000
A04 F+	Max P{1}									(3a)	HOOP	661	20000
	GR + Max P{1}	798	23	104	10	1.00	1.00	1.00	1.00	23a	SUST	676	20000
	TR:Amb to T1{1}	166	64	192	18	1.00	1.00	1.00	1.00	(17)	DISP	809	30000
	Amb to T1{1}	166	64	192	18	1.00	1.00	1.00	1.00	(17)	DISP	809	30000
A24 -	Max P{1}									(3a)	HOOP	661	20000
	GR + Max P{1}	782	64	30	10	1.00	1.00	1.00	1.00	23a	SUST	533	20000
	TR:Amb to T1{1}	166	81	278	18	1.00	1.00	1.00	1.00	(17)	DISP	1136	30000
	Amb to T1{1}	166	81	278	18	1.00	1.00	1.00	1.00	(17)	DISP	1136	30000
A24 +	Max P{1}									(3a)	HOOP	661	20000
	GR + Max P{1}	799	64	30	10	1.00	1.00	1.00	1.00	23a	SUST	538	20000
	TR:Amb to T1{1}	63	81	278	18	1.00	1.00	1.00	1.00	(17)	DISP	1104	30000
	Amb to T1{1}	63	81	278	18	1.00	1.00	1.00	1.00	(17)	DISP	1104	30000

ASME B31.3 (2016) CODE COMPLIANCE
(Moments in ft-lb , Force in lbf) (Stress in psi)

Point name	Load combination	Axial Force	In-Pl. Moment	Out-Pl. Moment	Torsion Moment	S.I.F In	S.I.F Out	Index/SIF Ax.	Index/SIF Tor.	Eq. no.	Load type	Code Stress	Code Allow.
A21	Max P{1}									(3a)	HOOP	661	20000
	GR + Max P{1}	782	78	46	10	1.00	1.00	1.00	1.00	23a	SUST	609	20000
	TR:Amb to T1{1}	63	178	356	18	1.00	1.00	1.00	1.00	(17)	DISP	1509	30000
	Amb to T1{1}	63	178	356	18	1.00	1.00	1.00	1.00	(17)	DISP	1509	30000
A05 N-	Max P{1}									(3a)	HOOP	661	20000
	GR + Max P{1}	781	57	50	10	1.00	1.00	1.00	1.00	23a	SUST	551	20000
	TR:Amb to T1{1}	63	148	396	17	1.00	1.00	1.00	1.00	(17)	DISP	1598	30000
	Amb to T1{1}	63	148	396	17	1.00	1.00	1.00	1.00	(17)	DISP	1598	30000
A05 N+	Max P{1}									(3a)	HOOP	661	20000
	GR + Max P{1}	781	49	58	10	1.00	1.00	1.00	1.00	23a	SUST	551	20000
	TR:Amb to T1{1}	63	391	159	17	1.00	1.00	1.00	1.00	(17)	DISP	1598	30000
	Amb to T1{1}	63	391	159	17	1.00	1.00	1.00	1.00	(17)	DISP	1598	30000
A05 F-	Max P{1}									(3a)	HOOP	661	20000
	GR + Max P{1}	780	66	13	5	1.00	1.00	1.00	1.00	23a	SUST	516	20000
	TR:Amb to T1{1}	78	437	154	13	1.00	1.00	1.00	1.00	(17)	DISP	1756	30000
	Amb to T1{1}	78	437	154	13	1.00	1.00	1.00	1.00	(17)	DISP	1756	30000
A05 F+	Max P{1}									(3a)	HOOP	661	20000
	GR + Max P{1}	780	1	67	5	1.00	1.00	1.00	1.00	23a	SUST	516	20000
	TR:Amb to T1{1}	78	72	458	13	1.00	1.00	1.00	1.00	(17)	DISP	1756	30000
	Amb to T1{1}	78	72	458	13	1.00	1.00	1.00	1.00	(17)	DISP	1756	30000
A22	Max P{1}									(3a)	HOOP	661	20000
	GR + Max P{1}	780	6	66	5	1.00	1.00	1.00	1.00	23a	SUST	512	20000
	TR:Amb to T1{1}	78	107	432	13	1.00	1.00	1.00	1.00	(17)	DISP	1686	30000
	Amb to T1{1}	78	107	432	13	1.00	1.00	1.00	1.00	(17)	DISP	1686	30000
A25 -	Max P{1}									(3a)	HOOP	661	20000
	GR + Max P{1}	777	103	43	5	1.00	1.00	1.00	1.00	23a	SUST	688	20000
	TR:Amb to T1{1}	78	53	28	13	1.00	1.00	1.00	1.00	(17)	DISP	252	30000
	Amb to T1{1}	78	53	28	13	1.00	1.00	1.00	1.00	(17)	DISP	252	30000
A25 +	Max P{1}									(3a)	HOOP	661	20000
	GR + Max P{1}	781	103	43	5	1.00	1.00	1.00	1.00	23a	SUST	689	20000
	TR:Amb to T1{1}	134	53	28	13	1.00	1.00	1.00	1.00	(17)	DISP	269	30000
	Amb to T1{1}	134	53	28	13	1.00	1.00	1.00	1.00	(17)	DISP	269	30000
A26 -	Max P{1}									(3a)	HOOP	661	20000
	GR + Max P{1}	778	68	19	5	1.00	1.00	1.00	1.00	23a	SUST	529	20000
	TR:Amb to T1{1}	134	15	127	13	1.00	1.00	1.00	1.00	(17)	DISP	521	30000
	Amb to T1{1}	134	15	127	13	1.00	1.00	1.00	1.00	(17)	DISP	521	30000
A26 +	Max P{1}									(3a)	HOOP	661	20000
	GR + Max P{1}	780	68	19	5	1.00	1.00	1.00	1.00	23a	SUST	530	20000
	TR:Amb to T1{1}	210	15	127	13	1.00	1.00	1.00	1.00	(17)	DISP	545	30000
	Amb to T1{1}	210	15	127	13	1.00	1.00	1.00	1.00	(17)	DISP	545	30000

ASME B31.3 (2016) CODE COMPLIANCE
(Moments in ft-lb , Force in lbf) (Stress in psi)

Point name	Load combination	Axial Force	In-Pl. Moment	Out-Pl. Moment	Torsion Moment	S.I.F In	S.I.F Out	Index/SIF Ax.	Index/SIF Tor.	Eq. no.	Load type	Code Stress	Code Allow.
A27 -	Max P{1}									(3a)	HOOP	661	20000
	GR + Max P{1}	778	62	5	5	1.00	1.00	1.00	1.00	23a	SUST	495	20000
	TR:Amb to T1{1}	210	7	31	13	1.00	1.00	1.00	1.00	(17)	DISP	192	30000
	Amb to T1{1}	210	7	31	13	1.00	1.00	1.00	1.00	(17)	DISP	192	30000
A27 +	Max P{1}									(3a)	HOOP	661	20000
	GR + Max P{1}	780	62	5	5	1.00	1.00	1.00	1.00	23a	SUST	496	20000
	TR:Amb to T1{1}	276	7	31	13	1.00	1.00	1.00	1.00	(17)	DISP	212	30000
	Amb to T1{1}	276	7	31	13	1.00	1.00	1.00	1.00	(17)	DISP	212	30000
A28 -	Max P{1}									(3a)	HOOP	661	20000
	GR + Max P{1}	777	123	28	5	1.00	1.00	1.00	1.00	23a	SUST	742	20000
	TR:Amb to T1{1}	276	15	104	13	1.00	1.00	1.00	1.00	(17)	DISP	483	30000
	Amb to T1{1}	276	15	104	13	1.00	1.00	1.00	1.00	(17)	DISP	483	30000
A28 +	Max P{1}									(3a)	HOOP	661	20000
	GR + Max P{1}	780	123	28	5	1.00	1.00	1.00	1.00	23a	SUST	743	20000
	TR:Amb to T1{1}	245	15	104	12	1.00	1.00	1.00	1.00	(17)	DISP	473	30000
	Amb to T1{1}	245	15	104	12	1.00	1.00	1.00	1.00	(17)	DISP	473	30000
A29	Max P{1}									(3a)	HOOP	661	20000
	GR + Max P{1}	777	23	54	5	1.00	1.00	1.00	1.00	23a	SUST	483	20000
	TR:Amb to T1{1}	245	25	860	12	1.00	1.00	1.00	1.00	(17)	DISP	3288	30000
	Amb to T1{1}	245	25	860	12	1.00	1.00	1.00	1.00	(17)	DISP	3288	30000
A06 N-	Max P{1}									(3a)	HOOP	661	20000
	GR + Max P{1}	777	15	55	5	1.00	1.00	1.00	1.00	23a	SUST	478	20000
	TR:Amb to T1{1}	245	18	905	12	1.00	1.00	1.00	1.00	(17)	DISP	3457	30000
	Amb to T1{1}	245	18	905	12	1.00	1.00	1.00	1.00	(17)	DISP	3457	30000
A06 N+	Max P{1}									(3a)	HOOP	661	20000
	GR + Max P{1}	777	55	17	5	1.00	1.00	1.00	1.00	23a	SUST	478	20000
	TR:Amb to T1{1}	245	904	44	12	1.00	1.00	1.00	1.00	(17)	DISP	3457	30000
	Amb to T1{1}	245	904	44	12	1.00	1.00	1.00	1.00	(17)	DISP	3457	30000
A06 F-	Max P{1}									(3a)	HOOP	661	20000
	GR + Max P{1}	773	48	56	36	1.00	1.00	1.00	1.00	23a	SUST	556	20000
	TR:Amb to T1{1}	91	443	45	11	1.00	1.00	1.00	1.00	(17)	DISP	1690	30000
	Amb to T1{1}	91	443	45	11	1.00	1.00	1.00	1.00	(17)	DISP	1690	30000
A06 F+	Max P{1}									(3a)	HOOP	661	20000
	GR + Max P{1}	773	57	46	36	1.00	1.00	1.00	1.00	23a	SUST	556	20000
	TR:Amb to T1{1}	91	32	444	11	1.00	1.00	1.00	1.00	(17)	DISP	1690	30000
	Amb to T1{1}	91	32	444	11	1.00	1.00	1.00	1.00	(17)	DISP	1690	30000
A30	Max P{1}									(3a)	HOOP	661	20000
	GR + Max P{1}	773	78	44	36	1.00	1.00	1.00	1.00	23a	SUST	616	20000
	TR:Amb to T1{1}	91	41	321	11	1.00	1.00	1.00	1.00	(17)	DISP	1237	30000
	Amb to T1{1}	91	41	321	11	1.00	1.00	1.00	1.00	(17)	DISP	1237	30000

Encasement Piping
04/24/2020 2018719
08:29 AM

BENTLEY
AutoPIPE Nuclear 12.00.00.16 RESULT PAGE 135

ASME B31.3 (2016) CODE COMPLIANCE
(Moments in ft-lb , Force in lbf) (Stress in psi)

Point name	Load combination	Axial Force	In-Pl. Moment	Out-Pl. Moment	Torsion Moment	S.I.F In	S.I.F Out	Index/SIF Ax.	Index/SIF Tor.	Eq. no.	Load type	Code Stress	Code Allow.
A31	Max P{1}									(3a)	HOOP	661	20000
	GR + Max P{1}	772	128	29	36	1.00	1.00	1.00	1.00	23a	SUST	772	20000
	TR:Amb to T1{1}	91	101	353	11	1.00	1.00	1.00	1.00	(17)	DISP	1401	30000
	Amb to T1{1}	91	101	353	11	1.00	1.00	1.00	1.00	(17)	DISP	1401	30000
A07 N-	Max P{1}									(3a)	HOOP	661	20000
	GR + Max P{1}	772	99	26	36	1.00	1.00	1.00	1.00	23a	SUST	666	20000
	TR:Amb to T1{1}	91	80	477	12	1.00	1.00	1.00	1.00	(17)	DISP	1833	30000
	Amb to T1{1}	91	80	477	12	1.00	1.00	1.00	1.00	(17)	DISP	1833	30000
A07 N+	Max P{1}									(3a)	HOOP	661	20000
	GR + Max P{1}	772	29	98	36	1.00	1.00	1.00	1.00	23a	SUST	666	20000
	TR:Amb to T1{1}	91	474	95	12	1.00	1.00	1.00	1.00	(17)	DISP	1833	30000
	Amb to T1{1}	91	474	95	12	1.00	1.00	1.00	1.00	(17)	DISP	1833	30000
A07 F-	Max P{1}									(3a)	HOOP	661	20000
	GR + Max P{1}	777	8	26	5	1.00	1.00	1.00	1.00	23a	SUST	362	20000
	TR:Amb to T1{1}	245	937	86	2	1.00	1.00	1.00	1.00	(17)	DISP	3592	30000
	Amb to T1{1}	245	937	86	2	1.00	1.00	1.00	1.00	(17)	DISP	3592	30000
A07 F+	Max P{1}									(3a)	HOOP	661	20000
	GR + Max P{1}	777	26	8	5	1.00	1.00	1.00	1.00	23a	SUST	362	20000
	TR:Amb to T1{1}	245	59	940	2	1.00	1.00	1.00	1.00	(17)	DISP	3592	30000
	Amb to T1{1}	245	59	940	2	1.00	1.00	1.00	1.00	(17)	DISP	3592	30000
A32	Max P{1}									(3a)	HOOP	661	20000
	GR + Max P{1}	777	26	7	5	1.00	1.00	1.00	1.00	23a	SUST	360	20000
	TR:Amb to T1{1}	245	77	894	2	1.00	1.00	1.00	1.00	(17)	DISP	3428	30000
	Amb to T1{1}	245	77	894	2	1.00	1.00	1.00	1.00	(17)	DISP	3428	30000
A33 -	Max P{1}									(3a)	HOOP	661	20000
	GR + Max P{1}	774	119	5	5	1.00	1.00	1.00	1.00	23a	SUST	716	20000
	TR:Amb to T1{1}	245	41	87	3	1.00	1.00	1.00	1.00	(17)	DISP	435	30000
	Amb to T1{1}	245	41	87	3	1.00	1.00	1.00	1.00	(17)	DISP	435	30000
A33 +	Max P{1}									(3a)	HOOP	661	20000
	GR + Max P{1}	777	119	5	5	1.00	1.00	1.00	1.00	23a	SUST	717	20000
	TR:Amb to T1{1}	301	41	87	3	1.00	1.00	1.00	1.00	(17)	DISP	452	30000
	Amb to T1{1}	301	41	87	3	1.00	1.00	1.00	1.00	(17)	DISP	452	30000
A34 -	Max P{1}									(3a)	HOOP	661	20000
	GR + Max P{1}	774	59	17	5	1.00	1.00	1.00	1.00	23a	SUST	490	20000
	TR:Amb to T1{1}	301	11	206	3	1.00	1.00	1.00	1.00	(17)	DISP	865	30000
	Amb to T1{1}	301	11	206	3	1.00	1.00	1.00	1.00	(17)	DISP	865	30000
A34 +	Max P{1}									(3a)	HOOP	661	20000
	GR + Max P{1}	777	59	17	5	1.00	1.00	1.00	1.00	23a	SUST	491	20000
	TR:Amb to T1{1}	368	11	206	3	1.00	1.00	1.00	1.00	(17)	DISP	886	30000
	Amb to T1{1}	368	11	206	3	1.00	1.00	1.00	1.00	(17)	DISP	886	30000

ASME B31.3 (2016) CODE COMPLIANCE
(Moments in ft-lb , Force in lbf) (Stress in psi)

Point name	Load combination	Axial Force	In-Pl. Moment	Out-Pl. Moment	Torsion Moment	S.I.F In	S.I.F Out	Index/SIF Ax.	Index/SIF Tor.	Eq. no.	Load type	Code Stress	Code Allow.
A35 -	Max P{1}									(3a)	HOOP	661	20000
	GR + Max P{1}	774	83	28	5	1.00	1.00	1.00	1.00	23a	SUST	595	20000
	TR:Amb to T1{1}	368	2	213	3	1.00	1.00	1.00	1.00	(17)	DISP	912	30000
	Amb to T1{1}	368	2	213	3	1.00	1.00	1.00	1.00	(17)	DISP	912	30000
A35 +	Max P{1}									(3a)	HOOP	661	20000
	GR + Max P{1}	777	83	28	5	1.00	1.00	1.00	1.00	23a	SUST	596	20000
	TR:Amb to T1{1}	318	2	213	4	1.00	1.00	1.00	1.00	(17)	DISP	896	30000
	Amb to T1{1}	318	2	213	4	1.00	1.00	1.00	1.00	(17)	DISP	896	30000
A36 -	Max P{1}									(3a)	HOOP	661	20000
	GR + Max P{1}	774	44	36	5	1.00	1.00	1.00	1.00	23a	SUST	475	20000
	TR:Amb to T1{1}	318	2	6	4	1.00	1.00	1.00	1.00	(17)	DISP	123	30000
	Amb to T1{1}	318	2	6	4	1.00	1.00	1.00	1.00	(17)	DISP	123	30000
A36 +	Max P{1}									(3a)	HOOP	661	20000
	GR + Max P{1}	775	44	36	5	1.00	1.00	1.00	1.00	23a	SUST	475	20000
	TR:Amb to T1{1}	300	2	6	4	1.00	1.00	1.00	1.00	(17)	DISP	117	30000
	Amb to T1{1}	300	2	6	4	1.00	1.00	1.00	1.00	(17)	DISP	117	30000
A37 -	Max P{1}									(3a)	HOOP	661	20000
	GR + Max P{1}	775	95	39	5	1.00	1.00	1.00	1.00	23a	SUST	653	20000
	TR:Amb to T1{1}	300	31	93	4	1.00	1.00	1.00	1.00	(17)	DISP	462	30000
	Amb to T1{1}	300	31	93	4	1.00	1.00	1.00	1.00	(17)	DISP	462	30000
A37 +	Max P{1}									(3a)	HOOP	661	20000
	GR + Max P{1}	777	95	39	5	1.00	1.00	1.00	1.00	23a	SUST	654	20000
	TR:Amb to T1{1}	234	31	93	4	1.00	1.00	1.00	1.00	(17)	DISP	441	30000
	Amb to T1{1}	234	31	93	4	1.00	1.00	1.00	1.00	(17)	DISP	441	30000
A38	Max P{1}									(3a)	HOOP	661	20000
	GR + Max P{1}	774	40	47	5	1.00	1.00	1.00	1.00	23a	SUST	495	20000
	TR:Amb to T1{1}	234	19	924	4	1.00	1.00	1.00	1.00	(17)	DISP	3525	30000
	Amb to T1{1}	234	19	924	4	1.00	1.00	1.00	1.00	(17)	DISP	3525	30000
A08 N-	Max P{1}									(3a)	HOOP	661	20000
	GR + Max P{1}	774	22	48	5	1.00	1.00	1.00	1.00	23a	SUST	459	20000
	TR:Amb to T1{1}	234	11	971	2	1.00	1.00	1.00	1.00	(17)	DISP	3698	30000
	Amb to T1{1}	234	11	971	2	1.00	1.00	1.00	1.00	(17)	DISP	3698	30000
A08 N+	Max P{1}									(3a)	HOOP	661	20000
	GR + Max P{1}	774	47	23	5	1.00	1.00	1.00	1.00	23a	SUST	459	20000
	TR:Amb to T1{1}	234	970	35	2	1.00	1.00	1.00	1.00	(17)	DISP	3698	30000
	Amb to T1{1}	234	970	35	2	1.00	1.00	1.00	1.00	(17)	DISP	3698	30000
A08 F-	Max P{1}									(3a)	HOOP	661	20000
	GR + Max P{1}	772	47	2	22	1.00	1.00	1.00	1.00	23a	SUST	442	20000
	TR:Amb to T1{1}	93	548	40	7	1.00	1.00	1.00	1.00	(17)	DISP	2082	30000
	Amb to T1{1}	93	548	40	7	1.00	1.00	1.00	1.00	(17)	DISP	2082	30000

ASME B31.3 (2016) CODE COMPLIANCE
(Moments in ft-lb , Force in lbf) (Stress in psi)

Point name	Load combination	Axial Force	In-Pl. Moment	Out-Pl. Moment	Torsion Moment	S.I.F In	S.I.F Out	Index/SIF Ax.	Index/SIF Tor.	Eq. no.	Load type	Code Stress	Code Allow.
A08 F+	Max P{1}									(3a)	HOOP	661	20000
	GR + Max P{1}	772	3	47	22	1.00	1.00	1.00	1.00	23a	SUST	442	20000
	TR:Amb to T1{1}	93	23	549	7	1.00	1.00	1.00	1.00	(17)	DISP	2082	30000
	Amb to T1{1}	93	23	549	7	1.00	1.00	1.00	1.00	(17)	DISP	2082	30000
A39	Max P{1}									(3a)	HOOP	661	20000
	GR + Max P{1}	772	13	46	22	1.00	1.00	1.00	1.00	23a	SUST	446	20000
	TR:Amb to T1{1}	93	34	432	7	1.00	1.00	1.00	1.00	(17)	DISP	1647	30000
	Amb to T1{1}	93	34	432	7	1.00	1.00	1.00	1.00	(17)	DISP	1647	30000
A40	Max P{1}									(3a)	HOOP	661	20000
	GR + Max P{1}	771	48	40	22	1.00	1.00	1.00	1.00	23a	SUST	502	20000
	TR:Amb to T1{1}	93	1	500	7	1.00	1.00	1.00	1.00	(17)	DISP	1896	30000
	Amb to T1{1}	93	1	500	7	1.00	1.00	1.00	1.00	(17)	DISP	1896	30000
A09 N-	Max P{1}									(3a)	HOOP	661	20000
	GR + Max P{1}	771	50	39	22	1.00	1.00	1.00	1.00	23a	SUST	506	20000
	TR:Amb to T1{1}	93	1	617	8	1.00	1.00	1.00	1.00	(17)	DISP	2332	30000
	Amb to T1{1}	93	1	617	8	1.00	1.00	1.00	1.00	(17)	DISP	2332	30000
A09 N+	Max P{1}									(3a)	HOOP	661	20000
	GR + Max P{1}	771	38	51	22	1.00	1.00	1.00	1.00	23a	SUST	506	20000
	TR:Amb to T1{1}	93	617	4	8	1.00	1.00	1.00	1.00	(17)	DISP	2332	30000
	Amb to T1{1}	93	617	4	8	1.00	1.00	1.00	1.00	(17)	DISP	2332	30000
A09 F-	Max P{1}									(3a)	HOOP	661	20000
	GR + Max P{1}	773	29	72	2	1.00	1.00	1.00	1.00	23a	SUST	555	20000
	TR:Amb to T1{1}	233	1037	13	1	1.00	1.00	1.00	1.00	(17)	DISP	3945	30000
	Amb to T1{1}	233	1037	13	1	1.00	1.00	1.00	1.00	(17)	DISP	3945	30000
A09 F+	Max P{1}									(3a)	HOOP	661	20000
	GR + Max P{1}	773	71	31	2	1.00	1.00	1.00	1.00	23a	SUST	555	20000
	TR:Amb to T1{1}	233	14	1037	1	1.00	1.00	1.00	1.00	(17)	DISP	3945	30000
	Amb to T1{1}	233	14	1037	1	1.00	1.00	1.00	1.00	(17)	DISP	3945	30000
A41	Max P{1}									(3a)	HOOP	661	20000
	GR + Max P{1}	772	98	31	2	1.00	1.00	1.00	1.00	23a	SUST	650	20000
	TR:Amb to T1{1}	233	12	990	1	1.00	1.00	1.00	1.00	(17)	DISP	3771	30000
	Amb to T1{1}	233	12	990	1	1.00	1.00	1.00	1.00	(17)	DISP	3771	30000
A42 -	Max P{1}									(3a)	HOOP	661	20000
	GR + Max P{1}	772	72	23	2	1.00	1.00	1.00	1.00	23a	SUST	545	20000
	TR:Amb to T1{1}	233	4	155	2	1.00	1.00	1.00	1.00	(17)	DISP	653	30000
	Amb to T1{1}	233	4	155	2	1.00	1.00	1.00	1.00	(17)	DISP	653	30000
A42 +	Max P{1}									(3a)	HOOP	661	20000
	GR + Max P{1}	773	72	23	2	1.00	1.00	1.00	1.00	23a	SUST	545	20000
	TR:Amb to T1{1}	284	4	155	2	1.00	1.00	1.00	1.00	(17)	DISP	669	30000
	Amb to T1{1}	284	4	155	2	1.00	1.00	1.00	1.00	(17)	DISP	669	30000

ASME B31.3 (2016) CODE COMPLIANCE
(Moments in ft-lb , Force in lbf) (Stress in psi)

Point name	Load combination	Axial Force	In-Pl. Moment	Out-Pl. Moment	Torsion Moment	S.I.F In	S.I.F Out	Index/SIF Ax.	Index/SIF Tor.	Eq. no.	Load type	Code Stress	Code Allow.
A43	- Max P{1}									(3a)	HOOP	661	20000
	GR + Max P{1}	772	73	15	2	1.00	1.00	1.00	1.00	23a	SUST	542	20000
	TR:Amb to T1{1}	284	1	185	2	1.00	1.00	1.00	1.00	(17)	DISP	780	30000
	Amb to T1{1}	284	1	185	2	1.00	1.00	1.00	1.00	(17)	DISP	780	30000
A43	+ Max P{1}									(3a)	HOOP	661	20000
	GR + Max P{1}	773	73	15	2	1.00	1.00	1.00	1.00	23a	SUST	542	20000
	TR:Amb to T1{1}	350	1	185	2	1.00	1.00	1.00	1.00	(17)	DISP	801	30000
	Amb to T1{1}	350	1	185	2	1.00	1.00	1.00	1.00	(17)	DISP	801	30000
A44	- Max P{1}									(3a)	HOOP	661	20000
	GR + Max P{1}	772	73	9	2	1.00	1.00	1.00	1.00	23a	SUST	537	20000
	TR:Amb to T1{1}	350	0	149	2	1.00	1.00	1.00	1.00	(17)	DISP	667	30000
	Amb to T1{1}	350	0	149	2	1.00	1.00	1.00	1.00	(17)	DISP	667	30000
A44	+ Max P{1}									(3a)	HOOP	661	20000
	GR + Max P{1}	773	73	9	2	1.00	1.00	1.00	1.00	23a	SUST	537	20000
	TR:Amb to T1{1}	426	0	149	2	1.00	1.00	1.00	1.00	(17)	DISP	691	30000
	Amb to T1{1}	426	0	149	2	1.00	1.00	1.00	1.00	(17)	DISP	691	30000
A45	- Max P{1}									(3a)	HOOP	661	20000
	GR + Max P{1}	772	73	4	2	1.00	1.00	1.00	1.00	23a	SUST	535	20000
	TR:Amb to T1{1}	426	0	11	2	1.00	1.00	1.00	1.00	(17)	DISP	174	30000
	Amb to T1{1}	426	0	11	2	1.00	1.00	1.00	1.00	(17)	DISP	174	30000
A45	+ Max P{1}									(3a)	HOOP	661	20000
	GR + Max P{1}	773	73	4	2	1.00	1.00	1.00	1.00	23a	SUST	535	20000
	TR:Amb to T1{1}	500	0	11	2	1.00	1.00	1.00	1.00	(17)	DISP	198	30000
	Amb to T1{1}	500	0	11	2	1.00	1.00	1.00	1.00	(17)	DISP	198	30000
A46	- Max P{1}									(3a)	HOOP	661	20000
	GR + Max P{1}	772	73	2	2	1.00	1.00	1.00	1.00	23a	SUST	537	20000
	TR:Amb to T1{1}	500	0	19	2	1.00	1.00	1.00	1.00	(17)	DISP	230	30000
	Amb to T1{1}	500	0	19	2	1.00	1.00	1.00	1.00	(17)	DISP	230	30000
A46	+ Max P{1}									(3a)	HOOP	661	20000
	GR + Max P{1}	773	73	2	2	1.00	1.00	1.00	1.00	23a	SUST	538	20000
	TR:Amb to T1{1}	422	0	19	2	1.00	1.00	1.00	1.00	(17)	DISP	206	30000
	Amb to T1{1}	422	0	19	2	1.00	1.00	1.00	1.00	(17)	DISP	206	30000
A47	- Max P{1}									(3a)	HOOP	661	20000
	GR + Max P{1}	772	71	9	2	1.00	1.00	1.00	1.00	23a	SUST	529	20000
	TR:Amb to T1{1}	422	0	94	2	1.00	1.00	1.00	1.00	(17)	DISP	484	30000
	Amb to T1{1}	422	0	94	2	1.00	1.00	1.00	1.00	(17)	DISP	484	30000
A47	+ Max P{1}									(3a)	HOOP	661	20000
	GR + Max P{1}	773	71	9	2	1.00	1.00	1.00	1.00	23a	SUST	529	20000
	TR:Amb to T1{1}	345	0	94	2	1.00	1.00	1.00	1.00	(17)	DISP	460	30000
	Amb to T1{1}	345	0	94	2	1.00	1.00	1.00	1.00	(17)	DISP	460	30000

ASME B31.3 (2016) CODE COMPLIANCE
(Moments in ft-lb , Force in lbf) (Stress in psi)

Point name	Load combination	Axial Force	In-Pl. Moment	Out-Pl. Moment	Torsion Moment	S.I.F In	S.I.F Out	Index/SIF Ax.	Index/SIF Tor.	Eq. no.	Load type	Code Stress	Code Allow.
A48 -	Max P{1}									(3a)	HOOP	661	20000
	GR + Max P{1}	772	80	14	2	1.00	1.00	1.00	1.00	23a	SUST	569	20000
	TR:Amb to T1{1}	345	1	142	2	1.00	1.00	1.00	1.00	(17)	DISP	637	30000
	Amb to T1{1}	345	1	142	2	1.00	1.00	1.00	1.00	(17)	DISP	637	30000
A48 +	Max P{1}									(3a)	HOOP	661	20000
	GR + Max P{1}	773	80	14	2	1.00	1.00	1.00	1.00	23a	SUST	570	20000
	TR:Amb to T1{1}	265	1	142	2	1.00	1.00	1.00	1.00	(17)	DISP	612	30000
	Amb to T1{1}	265	1	142	2	1.00	1.00	1.00	1.00	(17)	DISP	612	30000
A49 -	Max P{1}									(3a)	HOOP	661	20000
	GR + Max P{1}	772	44	19	2	1.00	1.00	1.00	1.00	23a	SUST	439	20000
	TR:Amb to T1{1}	265	5	16	2	1.00	1.00	1.00	1.00	(17)	DISP	146	30000
	Amb to T1{1}	265	5	16	2	1.00	1.00	1.00	1.00	(17)	DISP	146	30000
A49 +	Max P{1}									(3a)	HOOP	661	20000
	GR + Max P{1}	772	44	19	2	1.00	1.00	1.00	1.00	23a	SUST	439	20000
	TR:Amb to T1{1}	232	5	16	2	1.00	1.00	1.00	1.00	(17)	DISP	135	30000
	Amb to T1{1}	232	5	16	2	1.00	1.00	1.00	1.00	(17)	DISP	135	30000
A50 -	Max P{1}									(3a)	HOOP	661	20000
	GR + Max P{1}	772	70	21	2	1.00	1.00	1.00	1.00	23a	SUST	537	20000
	TR:Amb to T1{1}	232	29	160	2	1.00	1.00	1.00	1.00	(17)	DISP	682	30000
	Amb to T1{1}	232	29	160	2	1.00	1.00	1.00	1.00	(17)	DISP	682	30000
A50 +	Max P{1}									(3a)	HOOP	661	20000
	GR + Max P{1}	773	70	21	2	1.00	1.00	1.00	1.00	23a	SUST	537	20000
	TR:Amb to T1{1}	168	29	160	2	1.00	1.00	1.00	1.00	(17)	DISP	662	30000
	Amb to T1{1}	168	29	160	2	1.00	1.00	1.00	1.00	(17)	DISP	662	30000
A51	Max P{1}									(3a)	HOOP	661	20000
	GR + Max P{1}	772	40	25	2	1.00	1.00	1.00	1.00	23a	SUST	436	20000
	TR:Amb to T1{1}	168	42	895	2	1.00	1.00	1.00	1.00	(17)	DISP	3398	30000
	Amb to T1{1}	168	42	895	2	1.00	1.00	1.00	1.00	(17)	DISP	3398	30000
A10 N-	Max P{1}									(3a)	HOOP	661	20000
	GR + Max P{1}	772	26	26	2	1.00	1.00	1.00	1.00	23a	SUST	394	20000
	TR:Amb to T1{1}	168	34	936	1	1.00	1.00	1.00	1.00	(17)	DISP	3549	30000
	Amb to T1{1}	168	34	936	1	1.00	1.00	1.00	1.00	(17)	DISP	3549	30000
A10 N+	Max P{1}									(3a)	HOOP	661	20000
	GR + Max P{1}	772	25	26	2	1.00	1.00	1.00	1.00	23a	SUST	394	20000
	TR:Amb to T1{1}	168	936	42	1	1.00	1.00	1.00	1.00	(17)	DISP	3549	30000
	Amb to T1{1}	168	936	42	1	1.00	1.00	1.00	1.00	(17)	DISP	3549	30000
A10 F-	Max P{1}									(3a)	HOOP	661	20000
	GR + Max P{1}	772	26	19	5	1.00	1.00	1.00	1.00	23a	SUST	380	20000
	TR:Amb to T1{1}	82	676	42	1	1.00	1.00	1.00	1.00	(17)	DISP	2556	30000
	Amb to T1{1}	82	676	42	1	1.00	1.00	1.00	1.00	(17)	DISP	2556	30000

ASME B31.3 (2016) CODE COMPLIANCE
(Moments in ft-lb , Force in lbf) (Stress in psi)

Point name	Load combination	Axial Force	In-Pl. Moment	Out-Pl. Moment	Torsion Moment	S.I.F In	S.I.F Out	Index/SIF Ax.	Index/SIF Tor.	Eq. no.	Load type	Code Stress	Code Allow.
A10 F+	Max P{1}									(3a)	HOOP	661	20000
	GR + Max P{1}	772	19	26	5	1.00	1.00	1.00	1.00	23a	SUST	380	20000
	TR:Amb to T1{1}	82	36	677	1	1.00	1.00	1.00	1.00	(17)	DISP	2556	30000
	Amb to T1{1}	82	36	677	1	1.00	1.00	1.00	1.00	(17)	DISP	2556	30000
A52	Max P{1}									(3a)	HOOP	661	20000
	GR + Max P{1}	772	34	26	5	1.00	1.00	1.00	1.00	23a	SUST	418	20000
	TR:Amb to T1{1}	82	44	593	1	1.00	1.00	1.00	1.00	(17)	DISP	2244	30000
	Amb to T1{1}	82	44	593	1	1.00	1.00	1.00	1.00	(17)	DISP	2244	30000
A53	Max P{1}									(3a)	HOOP	661	20000
	GR + Max P{1}	771	38	25	5	1.00	1.00	1.00	1.00	23a	SUST	428	20000
	TR:Amb to T1{1}	82	23	568	2	1.00	1.00	1.00	1.00	(17)	DISP	2149	30000
	Amb to T1{1}	82	23	568	2	1.00	1.00	1.00	1.00	(17)	DISP	2149	30000
A11 N-	Max P{1}									(3a)	HOOP	661	20000
	GR + Max P{1}	771	23	24	5	1.00	1.00	1.00	1.00	23a	SUST	385	20000
	TR:Amb to T1{1}	82	18	652	1	1.00	1.00	1.00	1.00	(17)	DISP	2461	30000
	Amb to T1{1}	82	18	652	1	1.00	1.00	1.00	1.00	(17)	DISP	2461	30000
A11 N+	Max P{1}									(3a)	HOOP	661	20000
	GR + Max P{1}	771	25	23	5	1.00	1.00	1.00	1.00	23a	SUST	385	20000
	TR:Amb to T1{1}	82	652	24	1	1.00	1.00	1.00	1.00	(17)	DISP	2461	30000
	Amb to T1{1}	82	652	24	1	1.00	1.00	1.00	1.00	(17)	DISP	2461	30000
A11 F-	Max P{1}									(3a)	HOOP	661	20000
	GR + Max P{1}	771	22	24	0	1.00	1.00	1.00	1.00	23a	SUST	379	20000
	TR:Amb to T1{1}	168	911	26	1	1.00	1.00	1.00	1.00	(17)	DISP	3455	30000
	Amb to T1{1}	168	911	26	1	1.00	1.00	1.00	1.00	(17)	DISP	3455	30000
A11 F+	Max P{1}									(3a)	HOOP	661	20000
	GR + Max P{1}	771	24	23	0	1.00	1.00	1.00	1.00	23a	SUST	379	20000
	TR:Amb to T1{1}	168	21	911	1	1.00	1.00	1.00	1.00	(17)	DISP	3455	30000
	Amb to T1{1}	168	21	911	1	1.00	1.00	1.00	1.00	(17)	DISP	3455	30000
A54	Max P{1}									(3a)	HOOP	661	20000
	GR + Max P{1}	771	37	22	0	1.00	1.00	1.00	1.00	23a	SUST	421	20000
	TR:Amb to T1{1}	168	25	870	1	1.00	1.00	1.00	1.00	(17)	DISP	3303	30000
	Amb to T1{1}	168	25	870	1	1.00	1.00	1.00	1.00	(17)	DISP	3303	30000
A55 -	Max P{1}									(3a)	HOOP	661	20000
	GR + Max P{1}	771	87	19	0	1.00	1.00	1.00	1.00	23a	SUST	598	20000
	TR:Amb to T1{1}	168	12	135	2	1.00	1.00	1.00	1.00	(17)	DISP	559	30000
	Amb to T1{1}	168	12	135	2	1.00	1.00	1.00	1.00	(17)	DISP	559	30000
A55 +	Max P{1}									(3a)	HOOP	661	20000
	GR + Max P{1}	772	87	19	0	1.00	1.00	1.00	1.00	23a	SUST	598	20000
	TR:Amb to T1{1}	227	12	135	2	1.00	1.00	1.00	1.00	(17)	DISP	578	30000
	Amb to T1{1}	227	12	135	2	1.00	1.00	1.00	1.00	(17)	DISP	578	30000

ASME B31.3 (2016) CODE COMPLIANCE
(Moments in ft-lb , Force in lbf) (Stress in psi)

Point name	Load combination	Axial Force	In-Pl. Moment	Out-Pl. Moment	Torsion Moment	S.I.F In	S.I.F Out	Index/SIF Ax.	Index/SIF Tor.	Eq. no.	Load type	Code Stress	Code Allow.
A56	- Max P{1}									(3a)	HOOP	661	20000
	GR + Max P{1}	771	69	15	0	1.00	1.00	1.00	1.00	23a	SUST	526	20000
	TR:Amb to T1{1}	227	3	137	2	1.00	1.00	1.00	1.00	(17)	DISP	582	30000
	Amb to T1{1}	227	3	137	2	1.00	1.00	1.00	1.00	(17)	DISP	582	30000
A56	+ Max P{1}									(3a)	HOOP	661	20000
	GR + Max P{1}	772	69	15	0	1.00	1.00	1.00	1.00	23a	SUST	526	20000
	TR:Amb to T1{1}	294	3	137	2	1.00	1.00	1.00	1.00	(17)	DISP	603	30000
	Amb to T1{1}	294	3	137	2	1.00	1.00	1.00	1.00	(17)	DISP	603	30000
A57	- Max P{1}									(3a)	HOOP	661	20000
	GR + Max P{1}	771	74	13	0	1.00	1.00	1.00	1.00	23a	SUST	544	20000
	TR:Amb to T1{1}	294	1	67	2	1.00	1.00	1.00	1.00	(17)	DISP	342	30000
	Amb to T1{1}	294	1	67	2	1.00	1.00	1.00	1.00	(17)	DISP	342	30000
A57	+ Max P{1}									(3a)	HOOP	661	20000
	GR + Max P{1}	772	74	13	0	1.00	1.00	1.00	1.00	23a	SUST	544	20000
	TR:Amb to T1{1}	369	1	67	2	1.00	1.00	1.00	1.00	(17)	DISP	365	30000
	Amb to T1{1}	369	1	67	2	1.00	1.00	1.00	1.00	(17)	DISP	365	30000
A58	- Max P{1}									(3a)	HOOP	661	20000
	GR + Max P{1}	771	72	11	0	1.00	1.00	1.00	1.00	23a	SUST	534	20000
	TR:Amb to T1{1}	369	0	21	2	1.00	1.00	1.00	1.00	(17)	DISP	196	30000
	Amb to T1{1}	369	0	21	2	1.00	1.00	1.00	1.00	(17)	DISP	196	30000
A58	+ Max P{1}									(3a)	HOOP	661	20000
	GR + Max P{1}	772	72	11	0	1.00	1.00	1.00	1.00	23a	SUST	534	20000
	TR:Amb to T1{1}	292	0	21	2	1.00	1.00	1.00	1.00	(17)	DISP	172	30000
	Amb to T1{1}	292	0	21	2	1.00	1.00	1.00	1.00	(17)	DISP	172	30000
A59	- Max P{1}									(3a)	HOOP	661	20000
	GR + Max P{1}	771	76	9	0	1.00	1.00	1.00	1.00	23a	SUST	548	20000
	TR:Amb to T1{1}	292	1	81	2	1.00	1.00	1.00	1.00	(17)	DISP	396	30000
	Amb to T1{1}	292	1	81	2	1.00	1.00	1.00	1.00	(17)	DISP	396	30000
A59	+ Max P{1}									(3a)	HOOP	661	20000
	GR + Max P{1}	772	76	9	0	1.00	1.00	1.00	1.00	23a	SUST	548	20000
	TR:Amb to T1{1}	211	1	81	2	1.00	1.00	1.00	1.00	(17)	DISP	370	30000
	Amb to T1{1}	211	1	81	2	1.00	1.00	1.00	1.00	(17)	DISP	370	30000
A60	- Max P{1}									(3a)	HOOP	661	20000
	GR + Max P{1}	771	62	7	0	1.00	1.00	1.00	1.00	23a	SUST	494	20000
	TR:Amb to T1{1}	211	5	140	2	1.00	1.00	1.00	1.00	(17)	DISP	588	30000
	Amb to T1{1}	211	5	140	2	1.00	1.00	1.00	1.00	(17)	DISP	588	30000
A60	+ Max P{1}									(3a)	HOOP	661	20000
	GR + Max P{1}	772	62	7	0	1.00	1.00	1.00	1.00	23a	SUST	494	20000
	TR:Amb to T1{1}	145	5	140	2	1.00	1.00	1.00	1.00	(17)	DISP	567	30000
	Amb to T1{1}	145	5	140	2	1.00	1.00	1.00	1.00	(17)	DISP	567	30000

ASME B31.3 (2016) CODE COMPLIANCE
(Moments in ft-lb , Force in lbf) (Stress in psi)

Point name	Load combination	Axial Force	In-Pl. Moment	Out-Pl. Moment	Torsion Moment	S.I.F In	S.I.F Out	Index/SIF Ax.	Index/SIF Tor.	Eq. no.	Load type	Code Stress	Code Allow.
A61 -	Max P{1}									(3a)	HOOP	661	20000
	GR + Max P{1}	771	87	6	0	1.00	1.00	1.00	1.00	23a	SUST	591	20000
	TR:Amb to T1{1}	145	21	55	2	1.00	1.00	1.00	1.00	(17)	DISP	267	30000
	Amb to T1{1}	145	21	55	2	1.00	1.00	1.00	1.00	(17)	DISP	267	30000
A61 +	Max P{1}									(3a)	HOOP	661	20000
	GR + Max P{1}	772	87	6	0	1.00	1.00	1.00	1.00	23a	SUST	592	20000
	TR:Amb to T1{1}	64	21	55	2	1.00	1.00	1.00	1.00	(17)	DISP	241	30000
	Amb to T1{1}	64	21	55	2	1.00	1.00	1.00	1.00	(17)	DISP	241	30000
A62	Max P{1}									(3a)	HOOP	661	20000
	GR + Max P{1}	771	21	4	0	1.00	1.00	1.00	1.00	23a	SUST	338	20000
	TR:Amb to T1{1}	64	43	436	2	1.00	1.00	1.00	1.00	(17)	DISP	1656	30000
	Amb to T1{1}	64	43	436	2	1.00	1.00	1.00	1.00	(17)	DISP	1656	30000
A12 N-	Max P{1}									(3a)	HOOP	661	20000
	GR + Max P{1}	771	10	4	0	1.00	1.00	1.00	1.00	23a	SUST	294	20000
	TR:Amb to T1{1}	64	36	463	1	1.00	1.00	1.00	1.00	(17)	DISP	1755	30000
	Amb to T1{1}	64	36	463	1	1.00	1.00	1.00	1.00	(17)	DISP	1755	30000
A12 N+	Max P{1}									(3a)	HOOP	661	20000
	GR + Max P{1}	771	4	10	0	1.00	1.00	1.00	1.00	23a	SUST	294	20000
	TR:Amb to T1{1}	64	463	40	1	1.00	1.00	1.00	1.00	(17)	DISP	1755	30000
	Amb to T1{1}	64	463	40	1	1.00	1.00	1.00	1.00	(17)	DISP	1755	30000
A12 F-	Max P{1}									(3a)	HOOP	661	20000
	GR + Max P{1}	771	2	35	3	1.00	1.00	1.00	1.00	23a	SUST	388	20000
	TR:Amb to T1{1}	55	435	39	0	1.00	1.00	1.00	1.00	(17)	DISP	1648	30000
	Amb to T1{1}	55	435	39	0	1.00	1.00	1.00	1.00	(17)	DISP	1648	30000
A12 F+	Max P{1}									(3a)	HOOP	661	20000
	GR + Max P{1}	771	35	2	3	1.00	1.00	1.00	1.00	23a	SUST	388	20000
	TR:Amb to T1{1}	55	35	435	0	1.00	1.00	1.00	1.00	(17)	DISP	1648	30000
	Amb to T1{1}	55	35	435	0	1.00	1.00	1.00	1.00	(17)	DISP	1648	30000
A63	Max P{1}									(3a)	HOOP	661	20000
	GR + Max P{1}	771	51	2	3	1.00	1.00	1.00	1.00	23a	SUST	451	20000
	TR:Amb to T1{1}	55	42	403	0	1.00	1.00	1.00	1.00	(17)	DISP	1531	30000
	Amb to T1{1}	55	42	403	0	1.00	1.00	1.00	1.00	(17)	DISP	1531	30000
A64 -	Max P{1}									(3a)	HOOP	661	20000
	GR + Max P{1}	771	79	2	3	1.00	1.00	1.00	1.00	23a	SUST	557	20000
	TR:Amb to T1{1}	55	17	172	1	1.00	1.00	1.00	1.00	(17)	DISP	663	30000
	Amb to T1{1}	55	17	172	1	1.00	1.00	1.00	1.00	(17)	DISP	663	30000
A64 +	Max P{1}									(3a)	HOOP	661	20000
	GR + Max P{1}	771	79	2	3	1.00	1.00	1.00	1.00	23a	SUST	558	20000
	TR:Amb to T1{1}	103	17	172	1	1.00	1.00	1.00	1.00	(17)	DISP	678	30000
	Amb to T1{1}	103	17	172	1	1.00	1.00	1.00	1.00	(17)	DISP	678	30000

ASME B31.3 (2016) CODE COMPLIANCE
(Moments in ft-lb , Force in lbf) (Stress in psi)

Point name	Load combination	Axial Force	In-Pl. Moment	Out-Pl. Moment	Torsion Moment	S.I.F In	S.I.F Out	Index/SIF Ax.	Index/SIF Tor.	Eq. no.	Load type	Code Stress	Code Allow.
A65 -	Max P{1}									(3a)	HOOP	661	20000
	GR + Max P{1}	771	71	7	3	1.00	1.00	1.00	1.00	23a	SUST	529	20000
	TR:Amb to T1{1}	103	5	247	1	1.00	1.00	1.00	1.00	(17)	DISP	954	30000
	Amb to T1{1}	103	5	247	1	1.00	1.00	1.00	1.00	(17)	DISP	954	30000
A65 +	Max P{1}									(3a)	HOOP	661	20000
	GR + Max P{1}	771	71	7	3	1.00	1.00	1.00	1.00	23a	SUST	529	20000
	TR:Amb to T1{1}	174	5	247	0	1.00	1.00	1.00	1.00	(17)	DISP	977	30000
	Amb to T1{1}	174	5	247	0	1.00	1.00	1.00	1.00	(17)	DISP	977	30000
A66 -	Max P{1}									(3a)	HOOP	661	20000
	GR + Max P{1}	771	74	10	3	1.00	1.00	1.00	1.00	23a	SUST	544	20000
	TR:Amb to T1{1}	174	1	21	0	1.00	1.00	1.00	1.00	(17)	DISP	132	30000
	Amb to T1{1}	174	1	21	0	1.00	1.00	1.00	1.00	(17)	DISP	132	30000
A66 +	Max P{1}									(3a)	HOOP	661	20000
	GR + Max P{1}	771	74	10	3	1.00	1.00	1.00	1.00	23a	SUST	544	20000
	TR:Amb to T1{1}	196	1	21	0	1.00	1.00	1.00	1.00	(17)	DISP	139	30000
	Amb to T1{1}	196	1	21	0	1.00	1.00	1.00	1.00	(17)	DISP	139	30000
A67 -	Max P{1}									(3a)	HOOP	661	20000
	GR + Max P{1}	771	68	13	3	1.00	1.00	1.00	1.00	23a	SUST	520	20000
	TR:Amb to T1{1}	196	2	101	0	1.00	1.00	1.00	1.00	(17)	DISP	439	30000
	Amb to T1{1}	196	2	101	0	1.00	1.00	1.00	1.00	(17)	DISP	439	30000
A67 +	Max P{1}									(3a)	HOOP	661	20000
	GR + Max P{1}	771	68	13	3	1.00	1.00	1.00	1.00	23a	SUST	521	20000
	TR:Amb to T1{1}	123	2	101	0	1.00	1.00	1.00	1.00	(17)	DISP	416	30000
	Amb to T1{1}	123	2	101	0	1.00	1.00	1.00	1.00	(17)	DISP	416	30000
A68 -	Max P{1}									(3a)	HOOP	661	20000
	GR + Max P{1}	771	80	17	3	1.00	1.00	1.00	1.00	23a	SUST	571	20000
	TR:Amb to T1{1}	123	11	88	0	1.00	1.00	1.00	1.00	(17)	DISP	369	30000
	Amb to T1{1}	123	11	88	0	1.00	1.00	1.00	1.00	(17)	DISP	369	30000
A68 +	Max P{1}									(3a)	HOOP	661	20000
	GR + Max P{1}	771	80	17	3	1.00	1.00	1.00	1.00	23a	SUST	571	20000
	TR:Amb to T1{1}	45	11	88	0	1.00	1.00	1.00	1.00	(17)	DISP	344	30000
	Amb to T1{1}	45	11	88	0	1.00	1.00	1.00	1.00	(17)	DISP	344	30000
A69	Max P{1}									(3a)	HOOP	661	20000
	GR + Max P{1}	771	37	21	3	1.00	1.00	1.00	1.00	23a	SUST	416	20000
	TR:Amb to T1{1}	45	20	259	0	1.00	1.00	1.00	1.00	(17)	DISP	986	30000
	Amb to T1{1}	45	20	259	0	1.00	1.00	1.00	1.00	(17)	DISP	986	30000
A13 N-	Max P{1}									(3a)	HOOP	661	20000
	GR + Max P{1}	771	23	21	3	1.00	1.00	1.00	1.00	23a	SUST	373	20000
	TR:Amb to T1{1}	45	17	279	1	1.00	1.00	1.00	1.00	(17)	DISP	1057	30000
	Amb to T1{1}	45	17	279	1	1.00	1.00	1.00	1.00	(17)	DISP	1057	30000

ASME B31.3 (2016) CODE COMPLIANCE
(Moments in ft-lb , Force in lbf) (Stress in psi)

Point name	Load combination	Axial Force	In-Pl. Moment	Out-Pl. Moment	Torsion Moment	S.I.F In	S.I.F Out	Index/SIF Ax.	Index/SIF Tor.	Eq. no.	Load type	Code Stress	Code Allow.
A13 N+	Max P{1}									(3a)	HOOP	661	20000
	GR + Max P{1}	771	21	23	3	1.00	1.00	1.00	1.00	23a	SUST	373	20000
	TR:Amb to T1{1}	45	279	18	1	1.00	1.00	1.00	1.00	(17)	DISP	1057	30000
	Amb to T1{1}	45	279	18	1	1.00	1.00	1.00	1.00	(17)	DISP	1057	30000
A13 F-	Max P{1}									(3a)	HOOP	661	20000
	GR + Max P{1}	771	19	24	3	1.00	1.00	1.00	1.00	23a	SUST	373	20000
	TR:Amb to T1{1}	39	258	22	3	1.00	1.00	1.00	1.00	(17)	DISP	981	30000
	Amb to T1{1}	39	258	22	3	1.00	1.00	1.00	1.00	(17)	DISP	981	30000
A13 F+	Max P{1}									(3a)	HOOP	661	20000
	GR + Max P{1}	771	24	19	3	1.00	1.00	1.00	1.00	23a	SUST	373	20000
	TR:Amb to T1{1}	39	20	259	3	1.00	1.00	1.00	1.00	(17)	DISP	981	30000
	Amb to T1{1}	39	20	259	3	1.00	1.00	1.00	1.00	(17)	DISP	981	30000
A70	Max P{1}									(3a)	HOOP	661	20000
	GR + Max P{1}	771	39	19	3	1.00	1.00	1.00	1.00	23a	SUST	419	20000
	TR:Amb to T1{1}	39	24	236	3	1.00	1.00	1.00	1.00	(17)	DISP	898	30000
	Amb to T1{1}	39	24	236	3	1.00	1.00	1.00	1.00	(17)	DISP	898	30000
A71 -	Max P{1}									(3a)	HOOP	661	20000
	GR + Max P{1}	770	76	9	3	1.00	1.00	1.00	1.00	23a	SUST	548	20000
	TR:Amb to T1{1}	39	6	171	3	1.00	1.00	1.00	1.00	(17)	DISP	652	30000
	Amb to T1{1}	39	6	171	3	1.00	1.00	1.00	1.00	(17)	DISP	652	30000
A71 +	Max P{1}									(3a)	HOOP	661	20000
	GR + Max P{1}	771	76	9	3	1.00	1.00	1.00	1.00	23a	SUST	549	20000
	TR:Amb to T1{1}	58	6	171	3	1.00	1.00	1.00	1.00	(17)	DISP	659	30000
	Amb to T1{1}	58	6	171	3	1.00	1.00	1.00	1.00	(17)	DISP	659	30000
A72	Max P{1}									(3a)	HOOP	661	20000
	GR + Max P{1}	770	37	1	3	1.00	1.00	1.00	1.00	23a	SUST	395	20000
	TR:Amb to T1{1}	58	11	48	3	1.00	1.00	1.00	1.00	(17)	DISP	204	30000
	Amb to T1{1}	58	11	48	3	1.00	1.00	1.00	1.00	(17)	DISP	204	30000
A14 N-	Max P{1}									(3a)	HOOP	661	20000
	GR + Max P{1}	770	22	0	3	1.00	1.00	1.00	1.00	23a	SUST	339	20000
	TR:Amb to T1{1}	58	8	63	3	1.00	1.00	1.00	1.00	(17)	DISP	255	30000
	Amb to T1{1}	58	8	63	3	1.00	1.00	1.00	1.00	(17)	DISP	255	30000
A14 N+	Max P{1}									(3a)	HOOP	661	20000
	GR + Max P{1}	770	0	22	3	1.00	1.00	1.00	1.00	23a	SUST	339	20000
	TR:Amb to T1{1}	58	63	9	3	1.00	1.00	1.00	1.00	(17)	DISP	255	30000
	Amb to T1{1}	58	63	9	3	1.00	1.00	1.00	1.00	(17)	DISP	255	30000
A14 F-	Max P{1}									(3a)	HOOP	661	20000
	GR + Max P{1}	772	7	16	0	1.00	1.00	1.00	1.00	23a	SUST	322	20000
	TR:Amb to T1{1}	29	25	12	7	1.00	1.00	1.00	1.00	(17)	DISP	116	30000
	Amb to T1{1}	29	25	12	7	1.00	1.00	1.00	1.00	(17)	DISP	116	30000

ASME B31.3 (2016) CODE COMPLIANCE
(Moments in ft-lb , Force in lbf) (Stress in psi)

Point name	Load combination	Axial Force	In-Pl. Moment	Out-Pl. Moment	Torsion Moment	S.I.F In	S.I.F Out	Index/SIF Ax.	Index/SIF Tor.	Eq. no.	Load type	Code Stress	Code Allow.
A14 F+	Max P{1}									(3a)	HOOP	661	20000
	GR + Max P{1}	772	16	7	0	1.00	1.00	1.00	1.00	23a	SUST	322	20000
	TR:Amb to T1{1}	29	13	25	7	1.00	1.00	1.00	1.00	(17)	DISP	116	30000
	Amb to T1{1}	29	13	25	7	1.00	1.00	1.00	1.00	(17)	DISP	116	30000
A73	Max P{1}									(3a)	HOOP	661	20000
	GR + Max P{1}	772	30	8	0	1.00	1.00	1.00	1.00	23a	SUST	373	20000
	TR:Amb to T1{1}	29	15	54	7	1.00	1.00	1.00	1.00	(17)	DISP	220	30000
	Amb to T1{1}	29	15	54	7	1.00	1.00	1.00	1.00	(17)	DISP	220	30000
A15 N-	Max P{1}									(3a)	HOOP	661	20000
	GR + Max P{1}	771	13	11	0	1.00	1.00	1.00	1.00	23a	SUST	320	20000
	TR:Amb to T1{1}	29	0	225	7	1.00	1.00	1.00	1.00	(17)	DISP	849	30000
	Amb to T1{1}	29	0	225	7	1.00	1.00	1.00	1.00	(17)	DISP	849	30000
A15 N+	Max P{1}									(3a)	HOOP	661	20000
	GR + Max P{1}	771	13	11	0	1.00	1.00	1.00	1.00	23a	SUST	320	20000
	TR:Amb to T1{1}	29	0	225	7	1.00	1.00	1.00	1.00	(17)	DISP	849	30000
	Amb to T1{1}	29	0	225	7	1.00	1.00	1.00	1.00	(17)	DISP	849	30000
A15 F-	Max P{1}									(3a)	HOOP	661	20000
	GR + Max P{1}	771	13	11	0	1.00	1.00	1.00	1.00	23a	SUST	320	20000
	TR:Amb to T1{1}	29	0	228	3	1.00	1.00	1.00	1.00	(17)	DISP	860	30000
	Amb to T1{1}	29	0	228	3	1.00	1.00	1.00	1.00	(17)	DISP	860	30000
A15 F+	Max P{1}									(3a)	HOOP	661	20000
	GR + Max P{1}	771	13	11	0	1.00	1.00	1.00	1.00	23a	SUST	320	20000
	TR:Amb to T1{1}	29	0	228	3	1.00	1.00	1.00	1.00	(17)	DISP	860	30000
	Amb to T1{1}	29	0	228	3	1.00	1.00	1.00	1.00	(17)	DISP	860	30000
A16	Max P{1}									(3a)	HOOP	661	20000
	GR + Max P{1}	771	6	13	0	1.00	1.00	1.00	1.00	23a	SUST	308	20000
	TR:Amb to T1{1}	29	5	285	3	1.00	1.00	1.00	1.00	(17)	DISP	1072	30000
	Amb to T1{1}	29	5	285	3	1.00	1.00	1.00	1.00	(17)	DISP	1072	30000
A17	Max P{1}									(3a)	HOOP	661	20000
	GR + Max P{1}	771	12	14	0	1.00	1.00	1.00	1.00	23a	SUST	323	20000
	TR:Amb to T1{1}	29	10	343	3	1.00	1.00	1.00	1.00	(17)	DISP	1290	30000
	Amb to T1{1}	29	10	343	3	1.00	1.00	1.00	1.00	(17)	DISP	1290	30000
A18 -	Max P{1}									(3a)	HOOP	661	20000
	GR + Max P{1}	771	26	15	0	1.00	1.00	1.00	1.00	23a	SUST	368	20000
	TR:Amb to T1{1}	29	12	375	3	1.00	1.00	1.00	1.00	(17)	DISP	1410	30000
	Amb to T1{1}	29	12	375	3	1.00	1.00	1.00	1.00	(17)	DISP	1410	30000
A18 +	Max P{1}									(3a)	HOOP	661	20000
	GR + Max P{1}	771	0	0	0	1.00	1.00	1.00	1.00	23a	SUST	254	20000
	TR:Amb to T1{1}	0	0	0	0	1.00	1.00	1.00	1.00	(17)	DISP	0	30000
	Amb to T1{1}	0	0	0	0	1.00	1.00	1.00	1.00	(17)	DISP	0	30000

```
-----------------------------------------------------------------------------------------------------------------------
Encasement Piping
04/24/2020 2018719                                                          BENTLEY
08:29 AM                                                                    AutoPIPE Nuclear 12.00.00.16   RESULT PAGE 146
-----------------------------------------------------------------------------------------------------------------------

                              ASME B31.3 (2016)  CODE COMPLIANCE
              (Moments in ft-lb  , Force in lbf  )     (Stress in psi     )
 Point     Load                    Axial  In-Pl. Out-Pl. Torsion   S.I.F   Index/SIF  Eq. Load   Code   Code
 name   combination                Force  Moment  Moment  Moment  In  Out   Ax. Tor.  no. type  Stress Allow.
 ------ ----------------------    ------- ------- ------- ------- ---- ---- ---- ---- ---- ----  ------ ------
 A19    Max P{1}                                                                      (3a) HOOP     661  20000
        GR + Max P{1}                 771       0       0       0 1.00 1.00 1.00 1.00  23a SUST     253  20000
        TR:Amb to T1{1}                 0       0       0       0 1.00 1.00 1.00 1.00 (17) DISP       0  30000
        Amb to T1{1}                    0       0       0       0 1.00 1.00 1.00 1.00 (17) DISP       0  30000

 *** Segment A  end   ***

 *** Segment B  begin ***  Line # RIGID

 B03    Max P{1}                                                                      (3a) HOOP     822  20000
        GR + Max P{1}                1771      38     203      13 1.00 1.00 1.00 1.00  23a SUST     630  20000
        TR:Amb to T1{1}               339      79     747     109 1.00 1.00 1.00 1.00 (17) DISP    1132  30000
        Amb to T1{1}                  339      79     747     109 1.00 1.00 1.00 1.00 (17) DISP    1132  30000

 B04    Max P{1}                                                                      (3a) HOOP     822  20000
        GR + Max P{1}                1771      13     181      13 1.00 1.00 1.00 1.00  23a SUST     594  20000
        TR:Amb to T1{1}               339      33     754     109 1.00 1.00 1.00 1.00 (17) DISP    1137  30000
        Amb to T1{1}                  339      33     754     109 1.00 1.00 1.00 1.00 (17) DISP    1137  30000

 B22  - Max P{1}                                                                      (3a) HOOP     822  20000
        GR + Max P{1}                1771     183     154      13 1.00 1.00 1.00 1.00  23a SUST     678  20000
        TR:Amb to T1{1}               339     173     763     109 1.00 1.00 1.00 1.00 (17) DISP    1176  30000
        Amb to T1{1}                  339     173     763     109 1.00 1.00 1.00 1.00 (17) DISP    1176  30000

 B22  + Max P{1}                                                                      (3a) HOOP     822  20000
        GR + Max P{1}                1771     183     154      13 1.00 1.00 1.00 1.00  23a SUST     678  20000
        TR:Amb to T1{1}               269     173     763     109 1.00 1.00 1.00 1.00 (17) DISP    1163  30000
        Amb to T1{1}                  269     173     763     109 1.00 1.00 1.00 1.00 (17) DISP    1163  30000

 B06 N- Max P{1}                                                                      (3a) HOOP     822  20000
        GR + Max P{1}                1771     154     151      13 1.00 1.00 1.00 1.00  23a SUST     643  20000
        TR:Amb to T1{1}               269     157     758     109 1.00 1.00 1.00 1.00 (17) DISP    1152  30000
        Amb to T1{1}                  269     157     758     109 1.00 1.00 1.00 1.00 (17) DISP    1152  30000

 B06 N+ Max P{1}                                                                      (3a) HOOP     822  20000
        GR + Max P{1}                1771     154     151      13 1.00 1.00 1.00 1.00  23a SUST     643  20000
        TR:Amb to T1{1}               269     157     758     109 1.00 1.00 1.00 1.00 (17) DISP    1152  30000
        Amb to T1{1}                  269     157     758     109 1.00 1.00 1.00 1.00 (17) DISP    1152  30000

 B06 F- Max P{1}                                                                      (3a) HOOP     822  20000
        GR + Max P{1}                1787     103     146      12 1.00 1.00 1.00 1.00  23a SUST     592  20000
        TR:Amb to T1{1}               275     139     756      14 1.00 1.00 1.00 1.00 (17) DISP    1135  30000
        Amb to T1{1}                  275     139     756      14 1.00 1.00 1.00 1.00 (17) DISP    1135  30000

 B06 F+ Max P{1}                                                                      (3a) HOOP     822  20000
        GR + Max P{1}                1787     103     146      12 1.00 1.00 1.00 1.00  23a SUST     592  20000
        TR:Amb to T1{1}               275     139     756      14 1.00 1.00 1.00 1.00 (17) DISP    1135  30000
        Amb to T1{1}                  275     139     756      14 1.00 1.00 1.00 1.00 (17) DISP    1135  30000
```

ASME B31.3 (2016) CODE COMPLIANCE
(Moments in ft-lb , Force in lbf) (Stress in psi)

Point name	Load combination	Axial Force	In-Pl. Moment	Out-Pl. Moment	Torsion Moment	S.I.F In	S.I.F Out	Index/SIF Ax.	Index/SIF Tor.	Eq. no.	Load type	Code Stress	Code Allow.
B23 -	Max P{1}									(3a)	HOOP	822	20000
	GR + Max P{1}	1753	175	27	12	1.00	1.00	1.00	1.00	23a	SUST	584	20000
	TR:Amb to T1{1}	275	35	534	14	1.00	1.00	1.00	1.00	(17)	DISP	806	30000
	Amb to T1{1}	275	35	534	14	1.00	1.00	1.00	1.00	(17)	DISP	806	30000
B23 +	Max P{1}									(3a)	HOOP	822	20000
	GR + Max P{1}	1784	175	27	12	1.00	1.00	1.00	1.00	23a	SUST	590	20000
	TR:Amb to T1{1}	126	35	534	14	1.00	1.00	1.00	1.00	(17)	DISP	779	30000
	Amb to T1{1}	126	35	534	14	1.00	1.00	1.00	1.00	(17)	DISP	779	30000
B24	Max P{1}									(3a)	HOOP	822	20000
	GR + Max P{1}	1760	110	57	12	1.00	1.00	1.00	1.00	23a	SUST	507	20000
	TR:Amb to T1{1}	126	263	926	14	1.00	1.00	1.00	1.00	(17)	DISP	1382	30000
	Amb to T1{1}	126	263	926	14	1.00	1.00	1.00	1.00	(17)	DISP	1382	30000
B09 N-	Max P{1}									(3a)	HOOP	822	20000
	GR + Max P{1}	1758	76	62	11	1.00	1.00	1.00	1.00	23a	SUST	470	20000
	TR:Amb to T1{1}	126	213	1021	12	1.00	1.00	1.00	1.00	(17)	DISP	1496	30000
	Amb to T1{1}	126	213	1021	12	1.00	1.00	1.00	1.00	(17)	DISP	1496	30000
B09 N+	Max P{1}									(3a)	HOOP	822	20000
	GR + Max P{1}	1758	60	78	11	1.00	1.00	1.00	1.00	23a	SUST	470	20000
	TR:Amb to T1{1}	126	1015	242	12	1.00	1.00	1.00	1.00	(17)	DISP	1496	30000
	Amb to T1{1}	126	1015	242	12	1.00	1.00	1.00	1.00	(17)	DISP	1496	30000
B09 F-	Max P{1}									(3a)	HOOP	822	20000
	GR + Max P{1}	1755	82	4	9	1.00	1.00	1.00	1.00	23a	SUST	445	20000
	TR:Amb to T1{1}	190	1208	262	33	1.00	1.00	1.00	1.00	(17)	DISP	1781	30000
	Amb to T1{1}	190	1208	262	33	1.00	1.00	1.00	1.00	(17)	DISP	1781	30000
B09 F+	Max P{1}									(3a)	HOOP	822	20000
	GR + Max P{1}	1755	10	81	9	1.00	1.00	1.00	1.00	23a	SUST	445	20000
	TR:Amb to T1{1}	190	62	1235	32	1.00	1.00	1.00	1.00	(17)	DISP	1781	30000
	Amb to T1{1}	190	62	1235	32	1.00	1.00	1.00	1.00	(17)	DISP	1781	30000
B25	Max P{1}									(3a)	HOOP	822	20000
	GR + Max P{1}	1755	26	80	9	1.00	1.00	1.00	1.00	23a	SUST	448	20000
	TR:Amb to T1{1}	190	119	1179	32	1.00	1.00	1.00	1.00	(17)	DISP	1708	30000
	Amb to T1{1}	190	119	1179	32	1.00	1.00	1.00	1.00	(17)	DISP	1708	30000
B26 -	Max P{1}									(3a)	HOOP	822	20000
	GR + Max P{1}	1750	176	51	9	1.00	1.00	1.00	1.00	23a	SUST	592	20000
	TR:Amb to T1{1}	190	142	203	32	1.00	1.00	1.00	1.00	(17)	DISP	387	30000
	Amb to T1{1}	190	142	203	32	1.00	1.00	1.00	1.00	(17)	DISP	387	30000
B26 +	Max P{1}									(3a)	HOOP	822	20000
	GR + Max P{1}	1755	176	51	9	1.00	1.00	1.00	1.00	23a	SUST	593	20000
	TR:Amb to T1{1}	284	142	203	32	1.00	1.00	1.00	1.00	(17)	DISP	403	30000
	Amb to T1{1}	284	142	203	32	1.00	1.00	1.00	1.00	(17)	DISP	403	30000

ASME B31.3 (2016) CODE COMPLIANCE
(Moments in ft-lb , Force in lbf) (Stress in psi)

Point name	Load combination	Axial Force	In-Pl. Moment	Out-Pl. Moment	Torsion Moment	S.I.F In	S.I.F Out	Index/SIF Ax.	Index/SIF Tor.	Eq. no.	Load type	Code Stress	Code Allow.
B28 -	Max P{1}									(3a)	HOOP	822	20000
	GR + Max P{1}	1750	120	22	9	1.00	1.00	1.00	1.00	23a	SUST	503	20000
	TR:Amb to T1{1}	284	39	177	32	1.00	1.00	1.00	1.00	(17)	DISP	310	30000
	Amb to T1{1}	284	39	177	32	1.00	1.00	1.00	1.00	(17)	DISP	310	30000
B28 +	Max P{1}									(3a)	HOOP	822	20000
	GR + Max P{1}	1755	120	22	9	1.00	1.00	1.00	1.00	23a	SUST	504	20000
	TR:Amb to T1{1}	423	39	177	32	1.00	1.00	1.00	1.00	(17)	DISP	334	30000
	Amb to T1{1}	423	39	177	32	1.00	1.00	1.00	1.00	(17)	DISP	334	30000
B29 -	Max P{1}									(3a)	HOOP	822	20000
	GR + Max P{1}	1750	112	5	9	1.00	1.00	1.00	1.00	23a	SUST	488	20000
	TR:Amb to T1{1}	423	15	64	32	1.00	1.00	1.00	1.00	(17)	DISP	174	30000
	Amb to T1{1}	423	15	64	32	1.00	1.00	1.00	1.00	(17)	DISP	174	30000
B29 +	Max P{1}									(3a)	HOOP	822	20000
	GR + Max P{1}	1755	112	5	9	1.00	1.00	1.00	1.00	23a	SUST	489	20000
	TR:Amb to T1{1}	535	15	64	32	1.00	1.00	1.00	1.00	(17)	DISP	194	30000
	Amb to T1{1}	535	15	64	32	1.00	1.00	1.00	1.00	(17)	DISP	194	30000
B31 -	Max P{1}									(3a)	HOOP	822	20000
	GR + Max P{1}	1750	201	31	9	1.00	1.00	1.00	1.00	23a	SUST	621	20000
	TR:Amb to T1{1}	535	20	245	32	1.00	1.00	1.00	1.00	(17)	DISP	445	30000
	Amb to T1{1}	535	20	245	32	1.00	1.00	1.00	1.00	(17)	DISP	445	30000
B31 +	Max P{1}									(3a)	HOOP	822	20000
	GR + Max P{1}	1755	201	31	9	1.00	1.00	1.00	1.00	23a	SUST	622	20000
	TR:Amb to T1{1}	573	20	245	32	1.00	1.00	1.00	1.00	(17)	DISP	452	30000
	Amb to T1{1}	573	20	245	32	1.00	1.00	1.00	1.00	(17)	DISP	452	30000
B32	Max P{1}									(3a)	HOOP	822	20000
	GR + Max P{1}	1749	40	64	9	1.00	1.00	1.00	1.00	23a	SUST	435	20000
	TR:Amb to T1{1}	573	2	2136	32	1.00	1.00	1.00	1.00	(17)	DISP	3119	30000
	Amb to T1{1}	573	2	2136	32	1.00	1.00	1.00	1.00	(17)	DISP	3119	30000
B16 N-	Max P{1}									(3a)	HOOP	822	20000
	GR + Max P{1}	1749	25	66	9	1.00	1.00	1.00	1.00	23a	SUST	427	20000
	TR:Amb to T1{1}	573	5	2229	30	1.00	1.00	1.00	1.00	(17)	DISP	3252	30000
	Amb to T1{1}	573	5	2229	30	1.00	1.00	1.00	1.00	(17)	DISP	3252	30000
B16 N+	Max P{1}									(3a)	HOOP	822	20000
	GR + Max P{1}	1749	65	26	9	1.00	1.00	1.00	1.00	23a	SUST	427	20000
	TR:Amb to T1{1}	573	2229	46	30	1.00	1.00	1.00	1.00	(17)	DISP	3252	30000
	Amb to T1{1}	573	2229	46	30	1.00	1.00	1.00	1.00	(17)	DISP	3252	30000
B16 F-	Max P{1}									(3a)	HOOP	822	20000
	GR + Max P{1}	1747	67	85	47	1.00	1.00	1.00	1.00	23a	SUST	487	20000
	TR:Amb to T1{1}	187	1069	60	16	1.00	1.00	1.00	1.00	(17)	DISP	1545	30000
	Amb to T1{1}	187	1069	60	16	1.00	1.00	1.00	1.00	(17)	DISP	1545	30000

ASME B31.3 (2016) CODE COMPLIANCE
(Moments in ft-lb , Force in lbf) (Stress in psi)

Point name	Load combination	Axial Force	In-Pl. Moment	Out-Pl. Moment	Torsion Moment	S.I.F In	S.I.F Out	Index/SIF Ax.	Index/SIF Tor.	Eq. no.	Load type	Code Stress	Code Allow.
B16 F+	Max P{1}									(3a)	HOOP	822	20000
	GR + Max P{1}	1747	87	64	47	1.00	1.00	1.00	1.00	23a	SUST	487	20000
	TR:Amb to T1{1}	187	30	1070	16	1.00	1.00	1.00	1.00	(17)	DISP	1545	30000
	Amb to T1{1}	187	30	1070	16	1.00	1.00	1.00	1.00	(17)	DISP	1545	30000
B33	Max P{1}									(3a)	HOOP	822	20000
	GR + Max P{1}	1746	121	62	47	1.00	1.00	1.00	1.00	23a	SUST	528	20000
	TR:Amb to T1{1}	187	43	782	16	1.00	1.00	1.00	1.00	(17)	DISP	1140	30000
	Amb to T1{1}	187	43	782	16	1.00	1.00	1.00	1.00	(17)	DISP	1140	30000
B34	Max P{1}									(3a)	HOOP	822	20000
	GR + Max P{1}	1745	178	53	47	1.00	1.00	1.00	1.00	23a	SUST	598	20000
	TR:Amb to T1{1}	186	148	798	15	1.00	1.00	1.00	1.00	(17)	DISP	1180	30000
	Amb to T1{1}	186	148	798	15	1.00	1.00	1.00	1.00	(17)	DISP	1180	30000
B19 N-	Max P{1}									(3a)	HOOP	822	20000
	GR + Max P{1}	1745	135	51	47	1.00	1.00	1.00	1.00	23a	SUST	538	20000
	TR:Amb to T1{1}	186	113	1086	14	1.00	1.00	1.00	1.00	(17)	DISP	1576	30000
	Amb to T1{1}	186	113	1086	14	1.00	1.00	1.00	1.00	(17)	DISP	1576	30000
B19 N+	Max P{1}									(3a)	HOOP	822	20000
	GR + Max P{1}	1745	55	133	47	1.00	1.00	1.00	1.00	23a	SUST	538	20000
	TR:Amb to T1{1}	186	1083	144	14	1.00	1.00	1.00	1.00	(17)	DISP	1576	30000
	Amb to T1{1}	186	1083	144	14	1.00	1.00	1.00	1.00	(17)	DISP	1576	30000
B19 F-	Max P{1}									(3a)	HOOP	822	20000
	GR + Max P{1}	1748	37	25	12	1.00	1.00	1.00	1.00	23a	SUST	390	20000
	TR:Amb to T1{1}	574	2246	141	10	1.00	1.00	1.00	1.00	(17)	DISP	3282	30000
	Amb to T1{1}	574	2246	141	10	1.00	1.00	1.00	1.00	(17)	DISP	3282	30000
B19 F+	Max P{1}									(3a)	HOOP	822	20000
	GR + Max P{1}	1748	26	36	12	1.00	1.00	1.00	1.00	23a	SUST	390	20000
	TR:Amb to T1{1}	574	89	2249	10	1.00	1.00	1.00	1.00	(17)	DISP	3282	30000
	Amb to T1{1}	574	89	2249	10	1.00	1.00	1.00	1.00	(17)	DISP	3282	30000
B35	Max P{1}									(3a)	HOOP	822	20000
	GR + Max P{1}	1748	19	36	12	1.00	1.00	1.00	1.00	23a	SUST	384	20000
	TR:Amb to T1{1}	574	117	2156	10	1.00	1.00	1.00	1.00	(17)	DISP	3153	30000
	Amb to T1{1}	574	117	2156	10	1.00	1.00	1.00	1.00	(17)	DISP	3153	30000
B36 -	Max P{1}									(3a)	HOOP	822	20000
	GR + Max P{1}	1743	198	21	12	1.00	1.00	1.00	1.00	23a	SUST	614	20000
	TR:Amb to T1{1}	574	105	492	12	1.00	1.00	1.00	1.00	(17)	DISP	814	30000
	Amb to T1{1}	574	105	492	12	1.00	1.00	1.00	1.00	(17)	DISP	814	30000
B36 +	Max P{1}									(3a)	HOOP	822	20000
	GR + Max P{1}	1749	198	21	12	1.00	1.00	1.00	1.00	23a	SUST	615	20000
	TR:Amb to T1{1}	676	105	492	12	1.00	1.00	1.00	1.00	(17)	DISP	832	30000
	Amb to T1{1}	676	105	492	12	1.00	1.00	1.00	1.00	(17)	DISP	832	30000

ASME B31.3 (2016) CODE COMPLIANCE
(Moments in ft-lb , Force in lbf) (Stress in psi)

Point name	Load combination	Axial Force	In-Pl. Moment	Out-Pl. Moment	Torsion Moment	S.I.F In	S.I.F Out	Index/SIF Ax.	Index/SIF Tor.	Eq. no.	Load type	Code Stress	Code Allow.
B37 -	Max P{1}									(3a)	HOOP	822	20000
	GR + Max P{1}	1744	108	5	12	1.00	1.00	1.00	1.00	23a	SUST	481	20000
	TR:Amb to T1{1}	676	26	432	12	1.00	1.00	1.00	1.00	(17)	DISP	733	30000
	Amb to T1{1}	676	26	432	12	1.00	1.00	1.00	1.00	(17)	DISP	733	30000
B37 +	Max P{1}									(3a)	HOOP	822	20000
	GR + Max P{1}	1749	108	5	12	1.00	1.00	1.00	1.00	23a	SUST	482	20000
	TR:Amb to T1{1}	796	26	432	12	1.00	1.00	1.00	1.00	(17)	DISP	755	30000
	Amb to T1{1}	796	26	432	12	1.00	1.00	1.00	1.00	(17)	DISP	755	30000
B38 -	Max P{1}									(3a)	HOOP	822	20000
	GR + Max P{1}	1744	140	8	12	1.00	1.00	1.00	1.00	23a	SUST	529	20000
	TR:Amb to T1{1}	796	1	783	12	1.00	1.00	1.00	1.00	(17)	DISP	1249	30000
	Amb to T1{1}	796	1	783	12	1.00	1.00	1.00	1.00	(17)	DISP	1249	30000
B38 +	Max P{1}									(3a)	HOOP	822	20000
	GR + Max P{1}	1749	140	8	12	1.00	1.00	1.00	1.00	23a	SUST	529	20000
	TR:Amb to T1{1}	874	1	783	12	1.00	1.00	1.00	1.00	(17)	DISP	1263	30000
	Amb to T1{1}	874	1	783	12	1.00	1.00	1.00	1.00	(17)	DISP	1263	30000
B39 -	Max P{1}									(3a)	HOOP	822	20000
	GR + Max P{1}	1744	98	23	12	1.00	1.00	1.00	1.00	23a	SUST	471	20000
	TR:Amb to T1{1}	874	23	228	12	1.00	1.00	1.00	1.00	(17)	DISP	480	30000
	Amb to T1{1}	874	23	228	12	1.00	1.00	1.00	1.00	(17)	DISP	480	30000
B39 +	Max P{1}									(3a)	HOOP	822	20000
	GR + Max P{1}	1748	98	23	12	1.00	1.00	1.00	1.00	23a	SUST	472	20000
	TR:Amb to T1{1}	789	23	228	12	1.00	1.00	1.00	1.00	(17)	DISP	465	30000
	Amb to T1{1}	789	23	228	12	1.00	1.00	1.00	1.00	(17)	DISP	465	30000
B40 -	Max P{1}									(3a)	HOOP	822	20000
	GR + Max P{1}	1743	140	31	12	1.00	1.00	1.00	1.00	23a	SUST	532	20000
	TR:Amb to T1{1}	789	98	719	12	1.00	1.00	1.00	1.00	(17)	DISP	1166	30000
	Amb to T1{1}	789	98	719	12	1.00	1.00	1.00	1.00	(17)	DISP	1166	30000
B40 +	Max P{1}									(3a)	HOOP	822	20000
	GR + Max P{1}	1748	140	31	12	1.00	1.00	1.00	1.00	23a	SUST	533	20000
	TR:Amb to T1{1}	663	98	719	13	1.00	1.00	1.00	1.00	(17)	DISP	1144	30000
	Amb to T1{1}	663	98	719	13	1.00	1.00	1.00	1.00	(17)	DISP	1144	30000
B42	Max P{1}									(3a)	HOOP	822	20000
	GR + Max P{1}	1743	143	38	12	1.00	1.00	1.00	1.00	23a	SUST	539	20000
	TR:Amb to T1{1}	663	78	2763	13	1.00	1.00	1.00	1.00	(17)	DISP	4024	30000
	Amb to T1{1}	663	78	2763	13	1.00	1.00	1.00	1.00	(17)	DISP	4024	30000
B27 N-	Max P{1}									(3a)	HOOP	822	20000
	GR + Max P{1}	1743	98	39	12	1.00	1.00	1.00	1.00	23a	SUST	477	20000
	TR:Amb to T1{1}	663	50	2878	11	1.00	1.00	1.00	1.00	(17)	DISP	4184	30000
	Amb to T1{1}	663	50	2878	11	1.00	1.00	1.00	1.00	(17)	DISP	4184	30000

Encasement Piping
04/24/2020 2018719
08:29 AM

BENTLEY
AutoPIPE Nuclear 12.00.00.16 RESULT PAGE 151

ASME B31.3 (2016) CODE COMPLIANCE
(Moments in ft-lb , Force in lbf) (Stress in psi)

Point name	Load combination	Axial Force	In-Pl. Moment	Out-Pl. Moment	Torsion Moment	S.I.F In	S.I.F Out	Index/SIF Ax.	Index/SIF Tor.	Eq. no.	Load type	Code Stress	Code Allow.
B27 N+	Max P{1}									(3a)	HOOP	822	20000
	GR + Max P{1}	1743	36	99	12	1.00	1.00	1.00	1.00	23a	SUST	477	20000
	TR:Amb to T1{1}	663	2875	124	11	1.00	1.00	1.00	1.00	(17)	DISP	4184	30000
	Amb to T1{1}	663	2875	124	11	1.00	1.00	1.00	1.00	(17)	DISP	4184	30000
B27 F-	Max P{1}									(3a)	HOOP	822	20000
	GR + Max P{1}	1746	54	71	58	1.00	1.00	1.00	1.00	23a	SUST	461	20000
	TR:Amb to T1{1}	229	1573	140	27	1.00	1.00	1.00	1.00	(17)	DISP	2272	30000
	Amb to T1{1}	229	1573	140	27	1.00	1.00	1.00	1.00	(17)	DISP	2272	30000
B27 F+	Max P{1}									(3a)	HOOP	822	20000
	GR + Max P{1}	1746	69	56	58	1.00	1.00	1.00	1.00	23a	SUST	461	20000
	TR:Amb to T1{1}	229	95	1576	27	1.00	1.00	1.00	1.00	(17)	DISP	2272	30000
	Amb to T1{1}	229	95	1576	27	1.00	1.00	1.00	1.00	(17)	DISP	2272	30000
B43	Max P{1}									(3a)	HOOP	822	20000
	GR + Max P{1}	1745	65	58	58	1.00	1.00	1.00	1.00	23a	SUST	458	20000
	TR:Amb to T1{1}	229	130	1243	27	1.00	1.00	1.00	1.00	(17)	DISP	1807	30000
	Amb to T1{1}	229	130	1243	27	1.00	1.00	1.00	1.00	(17)	DISP	1807	30000
B45	Max P{1}									(3a)	HOOP	822	20000
	GR + Max P{1}	1743	104	76	58	1.00	1.00	1.00	1.00	23a	SUST	517	20000
	TR:Amb to T1{1}	229	18	1403	28	1.00	1.00	1.00	1.00	(17)	DISP	2023	30000
	Amb to T1{1}	229	18	1403	28	1.00	1.00	1.00	1.00	(17)	DISP	2023	30000
B30 N-	Max P{1}									(3a)	HOOP	822	20000
	GR + Max P{1}	1743	104	78	58	1.00	1.00	1.00	1.00	23a	SUST	519	20000
	TR:Amb to T1{1}	229	21	1735	25	1.00	1.00	1.00	1.00	(17)	DISP	2492	30000
	Amb to T1{1}	229	21	1735	25	1.00	1.00	1.00	1.00	(17)	DISP	2492	30000
B30 N+	Max P{1}									(3a)	HOOP	822	20000
	GR + Max P{1}	1743	77	104	58	1.00	1.00	1.00	1.00	23a	SUST	519	20000
	TR:Amb to T1{1}	229	1735	6	25	1.00	1.00	1.00	1.00	(17)	DISP	2492	30000
	Amb to T1{1}	229	1735	6	25	1.00	1.00	1.00	1.00	(17)	DISP	2492	30000
B30 F-	Max P{1}									(3a)	HOOP	822	20000
	GR + Max P{1}	1740	83	126	7	1.00	1.00	1.00	1.00	23a	SUST	543	20000
	TR:Amb to T1{1}	661	3032	24	6	1.00	1.00	1.00	1.00	(17)	DISP	4401	30000
	Amb to T1{1}	661	3032	24	6	1.00	1.00	1.00	1.00	(17)	DISP	4401	30000
B30 F+	Max P{1}									(3a)	HOOP	822	20000
	GR + Max P{1}	1740	124	85	7	1.00	1.00	1.00	1.00	23a	SUST	543	20000
	TR:Amb to T1{1}	661	45	3032	5	1.00	1.00	1.00	1.00	(17)	DISP	4401	30000
	Amb to T1{1}	661	45	3032	5	1.00	1.00	1.00	1.00	(17)	DISP	4401	30000
B46	Max P{1}									(3a)	HOOP	822	20000
	GR + Max P{1}	1740	174	85	7	1.00	1.00	1.00	1.00	23a	SUST	604	20000
	TR:Amb to T1{1}	661	42	2917	5	1.00	1.00	1.00	1.00	(17)	DISP	4240	30000
	Amb to T1{1}	661	42	2917	5	1.00	1.00	1.00	1.00	(17)	DISP	4240	30000

ASME B31.3 (2016) CODE COMPLIANCE
(Moments in ft-lb , Force in lbf) (Stress in psi)

Point name	Load combination	Axial Force	In-Pl. Moment	Out-Pl. Moment	Torsion Moment	S.I.F In	S.I.F Out	Index/SIF Ax.	Index/SIF Tor.	Eq. no.	Load type	Code Stress	Code Allow.
B47	- Max P{1}									(3a)	HOOP	822	20000
	GR + Max P{1}	1738	124	72	7	1.00	1.00	1.00	1.00	23a	SUST	531	20000
	TR:Amb to T1{1}	661	20	858	5	1.00	1.00	1.00	1.00	(17)	DISP	1331	30000
	Amb to T1{1}	661	20	858	5	1.00	1.00	1.00	1.00	(17)	DISP	1331	30000
B47	+ Max P{1}									(3a)	HOOP	822	20000
	GR + Max P{1}	1740	124	72	7	1.00	1.00	1.00	1.00	23a	SUST	531	20000
	TR:Amb to T1{1}	745	20	858	5	1.00	1.00	1.00	1.00	(17)	DISP	1346	30000
	Amb to T1{1}	745	20	858	5	1.00	1.00	1.00	1.00	(17)	DISP	1346	30000
B48	- Max P{1}									(3a)	HOOP	822	20000
	GR + Max P{1}	1738	129	59	7	1.00	1.00	1.00	1.00	23a	SUST	530	20000
	TR:Amb to T1{1}	745	5	295	5	1.00	1.00	1.00	1.00	(17)	DISP	550	30000
	Amb to T1{1}	745	5	295	5	1.00	1.00	1.00	1.00	(17)	DISP	550	30000
B48	+ Max P{1}									(3a)	HOOP	822	20000
	GR + Max P{1}	1740	129	59	7	1.00	1.00	1.00	1.00	23a	SUST	530	20000
	TR:Amb to T1{1}	844	5	295	5	1.00	1.00	1.00	1.00	(17)	DISP	567	30000
	Amb to T1{1}	844	5	295	5	1.00	1.00	1.00	1.00	(17)	DISP	567	30000
B49	- Max P{1}									(3a)	HOOP	822	20000
	GR + Max P{1}	1738	128	48	7	1.00	1.00	1.00	1.00	23a	SUST	521	20000
	TR:Amb to T1{1}	844	2	573	5	1.00	1.00	1.00	1.00	(17)	DISP	961	30000
	Amb to T1{1}	844	2	573	5	1.00	1.00	1.00	1.00	(17)	DISP	961	30000
B49	+ Max P{1}									(3a)	HOOP	822	20000
	GR + Max P{1}	1740	128	48	7	1.00	1.00	1.00	1.00	23a	SUST	522	20000
	TR:Amb to T1{1}	963	2	573	5	1.00	1.00	1.00	1.00	(17)	DISP	982	30000
	Amb to T1{1}	963	2	573	5	1.00	1.00	1.00	1.00	(17)	DISP	982	30000
B50	- Max P{1}									(3a)	HOOP	822	20000
	GR + Max P{1}	1738	128	39	7	1.00	1.00	1.00	1.00	23a	SUST	518	20000
	TR:Amb to T1{1}	963	2	278	5	1.00	1.00	1.00	1.00	(17)	DISP	565	30000
	Amb to T1{1}	963	2	278	5	1.00	1.00	1.00	1.00	(17)	DISP	565	30000
B50	+ Max P{1}									(3a)	HOOP	822	20000
	GR + Max P{1}	1739	128	39	7	1.00	1.00	1.00	1.00	23a	SUST	519	20000
	TR:Amb to T1{1}	1019	2	278	4	1.00	1.00	1.00	1.00	(17)	DISP	575	30000
	Amb to T1{1}	1019	2	278	4	1.00	1.00	1.00	1.00	(17)	DISP	575	30000
B51	- Max P{1}									(3a)	HOOP	822	20000
	GR + Max P{1}	1738	126	33	7	1.00	1.00	1.00	1.00	23a	SUST	513	20000
	TR:Amb to T1{1}	1019	3	355	4	1.00	1.00	1.00	1.00	(17)	DISP	685	30000
	Amb to T1{1}	1019	3	355	4	1.00	1.00	1.00	1.00	(17)	DISP	685	30000
B51	+ Max P{1}									(3a)	HOOP	822	20000
	GR + Max P{1}	1739	126	33	7	1.00	1.00	1.00	1.00	23a	SUST	513	20000
	TR:Amb to T1{1}	885	3	355	5	1.00	1.00	1.00	1.00	(17)	DISP	661	30000
	Amb to T1{1}	885	3	355	5	1.00	1.00	1.00	1.00	(17)	DISP	661	30000

ASME B31.3 (2016) CODE COMPLIANCE
(Moments in ft-lb , Force in lbf) (Stress in psi)

Point name	Load combination	Axial Force	In-Pl. Moment	Out-Pl. Moment	Torsion Moment	S.I.F In	S.I.F Out	Index/SIF Ax.	Index/SIF Tor.	Eq. no.	Load type	Code Stress	Code Allow.
B52 -	Max P{1}									(3a)	HOOP	822	20000
	GR + Max P{1}	1738	135	27	7	1.00	1.00	1.00	1.00	23a	SUST	523	20000
	TR:Amb to T1{1}	885	6	353	5	1.00	1.00	1.00	1.00	(17)	DISP	657	30000
	Amb to T1{1}	885	6	353	5	1.00	1.00	1.00	1.00	(17)	DISP	657	30000
B52 +	Max P{1}									(3a)	HOOP	822	20000
	GR + Max P{1}	1739	135	27	7	1.00	1.00	1.00	1.00	23a	SUST	523	20000
	TR:Amb to T1{1}	749	6	353	4	1.00	1.00	1.00	1.00	(17)	DISP	632	30000
	Amb to T1{1}	749	6	353	4	1.00	1.00	1.00	1.00	(17)	DISP	632	30000
B53 -	Max P{1}									(3a)	HOOP	822	20000
	GR + Max P{1}	1738	102	23	7	1.00	1.00	1.00	1.00	23a	SUST	475	20000
	TR:Amb to T1{1}	749	19	111	4	1.00	1.00	1.00	1.00	(17)	DISP	294	30000
	Amb to T1{1}	749	19	111	4	1.00	1.00	1.00	1.00	(17)	DISP	294	30000
B53 +	Max P{1}									(3a)	HOOP	822	20000
	GR + Max P{1}	1739	102	23	7	1.00	1.00	1.00	1.00	23a	SUST	475	20000
	TR:Amb to T1{1}	658	19	111	4	1.00	1.00	1.00	1.00	(17)	DISP	278	30000
	Amb to T1{1}	658	19	111	4	1.00	1.00	1.00	1.00	(17)	DISP	278	30000
B54 -	Max P{1}									(3a)	HOOP	822	20000
	GR + Max P{1}	1738	139	20	7	1.00	1.00	1.00	1.00	23a	SUST	527	20000
	TR:Amb to T1{1}	658	73	981	4	1.00	1.00	1.00	1.00	(17)	DISP	1507	30000
	Amb to T1{1}	658	73	981	4	1.00	1.00	1.00	1.00	(17)	DISP	1507	30000
B54 +	Max P{1}									(3a)	HOOP	822	20000
	GR + Max P{1}	1739	139	20	7	1.00	1.00	1.00	1.00	23a	SUST	528	20000
	TR:Amb to T1{1}	522	73	981	5	1.00	1.00	1.00	1.00	(17)	DISP	1482	30000
	Amb to T1{1}	522	73	981	5	1.00	1.00	1.00	1.00	(17)	DISP	1482	30000
B55	Max P{1}									(3a)	HOOP	822	20000
	GR + Max P{1}	1738	56	18	7	1.00	1.00	1.00	1.00	23a	SUST	409	20000
	TR:Amb to T1{1}	522	116	2844	5	1.00	1.00	1.00	1.00	(17)	DISP	4114	30000
	Amb to T1{1}	522	116	2844	5	1.00	1.00	1.00	1.00	(17)	DISP	4114	30000
B41 N-	Max P{1}									(3a)	HOOP	822	20000
	GR + Max P{1}	1738	34	18	7	1.00	1.00	1.00	1.00	23a	SUST	378	20000
	TR:Amb to T1{1}	522	97	2948	3	1.00	1.00	1.00	1.00	(17)	DISP	4260	30000
	Amb to T1{1}	522	97	2948	3	1.00	1.00	1.00	1.00	(17)	DISP	4260	30000
B41 N+	Max P{1}									(3a)	HOOP	822	20000
	GR + Max P{1}	1738	18	34	7	1.00	1.00	1.00	1.00	23a	SUST	378	20000
	TR:Amb to T1{1}	522	2947	114	3	1.00	1.00	1.00	1.00	(17)	DISP	4260	30000
	Amb to T1{1}	522	2947	114	3	1.00	1.00	1.00	1.00	(17)	DISP	4260	30000
B41 F-	Max P{1}									(3a)	HOOP	822	20000
	GR + Max P{1}	1745	5	45	12	1.00	1.00	1.00	1.00	23a	SUST	390	20000
	TR:Amb to T1{1}	207	2004	110	1	1.00	1.00	1.00	1.00	(17)	DISP	2872	30000
	Amb to T1{1}	207	2004	110	1	1.00	1.00	1.00	1.00	(17)	DISP	2872	30000

ASME B31.3 (2016) CODE COMPLIANCE
(Moments in ft-lb , Force in lbf) (Stress in psi)

Point name	Load combination	Axial Force	In-Pl. Moment	Out-Pl. Moment	Torsion Moment	S.I.F In	S.I.F Out	Index/SIF Ax.	Index/SIF Tor.	Eq. no.	Load type	Code Stress	Code Allow.
B41 F+	Max P{1}									(3a)	HOOP	822	20000
	GR + Max P{1}	1745	45	5	12	1.00	1.00	1.00	1.00	23a	SUST	390	20000
	TR:Amb to T1{1}	207	93	2005	1	1.00	1.00	1.00	1.00	(17)	DISP	2872	30000
	Amb to T1{1}	207	93	2005	1	1.00	1.00	1.00	1.00	(17)	DISP	2872	30000
B57	Max P{1}									(3a)	HOOP	822	20000
	GR + Max P{1}	1745	72	8	12	1.00	1.00	1.00	1.00	23a	SUST	430	20000
	TR:Amb to T1{1}	207	114	1744	1	1.00	1.00	1.00	1.00	(17)	DISP	2506	30000
	Amb to T1{1}	207	114	1744	1	1.00	1.00	1.00	1.00	(17)	DISP	2506	30000
B58	Max P{1}									(3a)	HOOP	822	20000
	GR + Max P{1}	1744	55	59	12	1.00	1.00	1.00	1.00	23a	SUST	442	20000
	TR:Amb to T1{1}	207	121	1859	4	1.00	1.00	1.00	1.00	(17)	DISP	2669	30000
	Amb to T1{1}	207	121	1859	4	1.00	1.00	1.00	1.00	(17)	DISP	2669	30000
B44 N-	Max P{1}									(3a)	HOOP	822	20000
	GR + Max P{1}	1744	32	63	12	1.00	1.00	1.00	1.00	23a	SUST	426	20000
	TR:Amb to T1{1}	207	98	2120	6	1.00	1.00	1.00	1.00	(17)	DISP	3035	30000
	Amb to T1{1}	207	98	2120	6	1.00	1.00	1.00	1.00	(17)	DISP	3035	30000
B44 N+	Max P{1}									(3a)	HOOP	822	20000
	GR + Max P{1}	1744	63	31	12	1.00	1.00	1.00	1.00	23a	SUST	426	20000
	TR:Amb to T1{1}	207	2120	110	6	1.00	1.00	1.00	1.00	(17)	DISP	3035	30000
	Amb to T1{1}	207	2120	110	6	1.00	1.00	1.00	1.00	(17)	DISP	3035	30000
B44 F-	Max P{1}									(3a)	HOOP	822	20000
	GR + Max P{1}	1737	80	53	0	1.00	1.00	1.00	1.00	23a	SUST	463	20000
	TR:Amb to T1{1}	522	3062	121	17	1.00	1.00	1.00	1.00	(17)	DISP	4422	30000
	Amb to T1{1}	522	3062	121	17	1.00	1.00	1.00	1.00	(17)	DISP	4422	30000
B44 F+	Max P{1}									(3a)	HOOP	822	20000
	GR + Max P{1}	1737	53	81	0	1.00	1.00	1.00	1.00	23a	SUST	463	20000
	TR:Amb to T1{1}	522	103	3063	17	1.00	1.00	1.00	1.00	(17)	DISP	4422	30000
	Amb to T1{1}	522	103	3063	17	1.00	1.00	1.00	1.00	(17)	DISP	4422	30000
B64	Max P{1}									(3a)	HOOP	822	20000
	GR + Max P{1}	1737	79	80	0	1.00	1.00	1.00	1.00	23a	SUST	486	20000
	TR:Amb to T1{1}	522	125	2959	17	1.00	1.00	1.00	1.00	(17)	DISP	4277	30000
	Amb to T1{1}	522	125	2959	17	1.00	1.00	1.00	1.00	(17)	DISP	4277	30000
B65 -	Max P{1}									(3a)	HOOP	822	20000
	GR + Max P{1}	1736	142	68	0	1.00	1.00	1.00	1.00	23a	SUST	551	20000
	TR:Amb to T1{1}	522	66	1095	14	1.00	1.00	1.00	1.00	(17)	DISP	1643	30000
	Amb to T1{1}	522	66	1095	14	1.00	1.00	1.00	1.00	(17)	DISP	1643	30000
B65 +	Max P{1}									(3a)	HOOP	822	20000
	GR + Max P{1}	1737	142	68	0	1.00	1.00	1.00	1.00	23a	SUST	552	20000
	TR:Amb to T1{1}	611	66	1095	14	1.00	1.00	1.00	1.00	(17)	DISP	1659	30000
	Amb to T1{1}	611	66	1095	14	1.00	1.00	1.00	1.00	(17)	DISP	1659	30000

Encasement Piping
04/24/2020 2018719
08:29 AM

BENTLEY
AutoPIPE Nuclear 12.00.00.16 RESULT PAGE 155

ASME B31.3 (2016) CODE COMPLIANCE
(Moments in ft-lb , Force in lbf) (Stress in psi)

Point name	Load combination	Axial Force	In-Pl. Moment	Out-Pl. Moment	Torsion Moment	S.I.F In	S.I.F Out	Index/SIF Ax.	Index/SIF Tor.	Eq. no.	Load type	Code Stress	Code Allow.
B66	- Max P{1}									(3a)	HOOP	822	20000
	GR + Max P{1}	1736	124	56	0	1.00	1.00	1.00	1.00	23a	SUST	521	20000
	TR:Amb to T1{1}	611	17	55	14	1.00	1.00	1.00	1.00	(17)	DISP	191	30000
	Amb to T1{1}	611	17	55	14	1.00	1.00	1.00	1.00	(17)	DISP	191	30000
B66	+ Max P{1}									(3a)	HOOP	822	20000
	GR + Max P{1}	1737	124	56	0	1.00	1.00	1.00	1.00	23a	SUST	521	20000
	TR:Amb to T1{1}	726	17	55	14	1.00	1.00	1.00	1.00	(17)	DISP	212	30000
	Amb to T1{1}	726	17	55	14	1.00	1.00	1.00	1.00	(17)	DISP	212	30000
B67	- Max P{1}									(3a)	HOOP	822	20000
	GR + Max P{1}	1736	129	46	0	1.00	1.00	1.00	1.00	23a	SUST	522	20000
	TR:Amb to T1{1}	726	5	440	14	1.00	1.00	1.00	1.00	(17)	DISP	752	30000
	Amb to T1{1}	726	5	440	14	1.00	1.00	1.00	1.00	(17)	DISP	752	30000
B67	+ Max P{1}									(3a)	HOOP	822	20000
	GR + Max P{1}	1738	129	46	0	1.00	1.00	1.00	1.00	23a	SUST	522	20000
	TR:Amb to T1{1}	851	5	440	14	1.00	1.00	1.00	1.00	(17)	DISP	774	30000
	Amb to T1{1}	851	5	440	14	1.00	1.00	1.00	1.00	(17)	DISP	774	30000
B68	- Max P{1}									(3a)	HOOP	822	20000
	GR + Max P{1}	1736	127	38	0	1.00	1.00	1.00	1.00	23a	SUST	516	20000
	TR:Amb to T1{1}	851	1	374	14	1.00	1.00	1.00	1.00	(17)	DISP	681	30000
	Amb to T1{1}	851	1	374	14	1.00	1.00	1.00	1.00	(17)	DISP	681	30000
B68	+ Max P{1}									(3a)	HOOP	822	20000
	GR + Max P{1}	1737	127	38	0	1.00	1.00	1.00	1.00	23a	SUST	516	20000
	TR:Amb to T1{1}	987	1	374	14	1.00	1.00	1.00	1.00	(17)	DISP	706	30000
	Amb to T1{1}	987	1	374	14	1.00	1.00	1.00	1.00	(17)	DISP	706	30000
B69	- Max P{1}									(3a)	HOOP	822	20000
	GR + Max P{1}	1736	129	31	0	1.00	1.00	1.00	1.00	23a	SUST	515	20000
	TR:Amb to T1{1}	987	0	221	14	1.00	1.00	1.00	1.00	(17)	DISP	489	30000
	Amb to T1{1}	987	0	221	14	1.00	1.00	1.00	1.00	(17)	DISP	489	30000
B69	+ Max P{1}									(3a)	HOOP	822	20000
	GR + Max P{1}	1737	129	31	0	1.00	1.00	1.00	1.00	23a	SUST	516	20000
	TR:Amb to T1{1}	1119	0	221	14	1.00	1.00	1.00	1.00	(17)	DISP	513	30000
	Amb to T1{1}	1119	0	221	14	1.00	1.00	1.00	1.00	(17)	DISP	513	30000
B70	- Max P{1}									(3a)	HOOP	822	20000
	GR + Max P{1}	1736	125	24	0	1.00	1.00	1.00	1.00	23a	SUST	507	20000
	TR:Amb to T1{1}	1119	1	398	14	1.00	1.00	1.00	1.00	(17)	DISP	762	30000
	Amb to T1{1}	1119	1	398	14	1.00	1.00	1.00	1.00	(17)	DISP	762	30000
B70	+ Max P{1}									(3a)	HOOP	822	20000
	GR + Max P{1}	1737	125	24	0	1.00	1.00	1.00	1.00	23a	SUST	508	20000
	TR:Amb to T1{1}	988	1	398	14	1.00	1.00	1.00	1.00	(17)	DISP	739	30000
	Amb to T1{1}	988	1	398	14	1.00	1.00	1.00	1.00	(17)	DISP	739	30000

ASME B31.3 (2016) CODE COMPLIANCE
(Moments in ft-lb , Force in lbf) (Stress in psi)

Point name	Load combination	Axial Force	In-Pl. Moment	Out-Pl. Moment	Torsion Moment	S.I.F In	S.I.F Out	Index/SIF Ax.	Index/SIF Tor.	Eq. no.	Load type	Code Stress	Code Allow.
B71 -	Max P{1}									(3a)	HOOP	822	20000
	GR + Max P{1}	1736	140	20	0	1.00	1.00	1.00	1.00	23a	SUST	529	20000
	TR:Amb to T1{1}	988	4	676	14	1.00	1.00	1.00	1.00	(17)	DISP	1132	30000
	Amb to T1{1}	988	4	676	14	1.00	1.00	1.00	1.00	(17)	DISP	1132	30000
B71 +	Max P{1}									(3a)	HOOP	822	20000
	GR + Max P{1}	1737	140	20	0	1.00	1.00	1.00	1.00	23a	SUST	529	20000
	TR:Amb to T1{1}	869	4	676	14	1.00	1.00	1.00	1.00	(17)	DISP	1111	30000
	Amb to T1{1}	869	4	676	14	1.00	1.00	1.00	1.00	(17)	DISP	1111	30000
B72 -	Max P{1}									(3a)	HOOP	822	20000
	GR + Max P{1}	1736	81	17	0	1.00	1.00	1.00	1.00	23a	SUST	443	20000
	TR:Amb to T1{1}	869	11	200	14	1.00	1.00	1.00	1.00	(17)	DISP	440	30000
	Amb to T1{1}	869	11	200	14	1.00	1.00	1.00	1.00	(17)	DISP	440	30000
B72 +	Max P{1}									(3a)	HOOP	822	20000
	GR + Max P{1}	1736	81	17	0	1.00	1.00	1.00	1.00	23a	SUST	443	20000
	TR:Amb to T1{1}	817	11	200	14	1.00	1.00	1.00	1.00	(17)	DISP	430	30000
	Amb to T1{1}	817	11	200	14	1.00	1.00	1.00	1.00	(17)	DISP	430	30000
B73 -	Max P{1}									(3a)	HOOP	822	20000
	GR + Max P{1}	1736	104	16	0	1.00	1.00	1.00	1.00	23a	SUST	475	20000
	TR:Amb to T1{1}	817	57	366	14	1.00	1.00	1.00	1.00	(17)	DISP	669	30000
	Amb to T1{1}	817	57	366	14	1.00	1.00	1.00	1.00	(17)	DISP	669	30000
B73 +	Max P{1}									(3a)	HOOP	822	20000
	GR + Max P{1}	1737	104	16	0	1.00	1.00	1.00	1.00	23a	SUST	476	20000
	TR:Amb to T1{1}	739	57	366	13	1.00	1.00	1.00	1.00	(17)	DISP	655	30000
	Amb to T1{1}	739	57	366	13	1.00	1.00	1.00	1.00	(17)	DISP	655	30000
B74	Max P{1}									(3a)	HOOP	822	20000
	GR + Max P{1}	1736	83	15	0	1.00	1.00	1.00	1.00	23a	SUST	445	20000
	TR:Amb to T1{1}	739	101	2421	13	1.00	1.00	1.00	1.00	(17)	DISP	3555	30000
	Amb to T1{1}	739	101	2421	13	1.00	1.00	1.00	1.00	(17)	DISP	3555	30000
B56 N-	Max P{1}									(3a)	HOOP	822	20000
	GR + Max P{1}	1735	36	15	0	1.00	1.00	1.00	1.00	23a	SUST	378	20000
	TR:Amb to T1{1}	739	27	2650	16	1.00	1.00	1.00	1.00	(17)	DISP	3875	30000
	Amb to T1{1}	739	27	2650	16	1.00	1.00	1.00	1.00	(17)	DISP	3875	30000
B56 N+	Max P{1}									(3a)	HOOP	822	20000
	GR + Max P{1}	1735	15	35	0	1.00	1.00	1.00	1.00	23a	SUST	378	20000
	TR:Amb to T1{1}	739	2649	54	16	1.02	1.00	1.00	1.00	(17)	DISP	3932	30000
	Amb to T1{1}	739	2649	54	16	1.02	1.00	1.00	1.00	(17)	DISP	3932	30000
B56 F-	Max P{1}									(3a)	HOOP	822	20000
	GR + Max P{1}	1745	9	24	8	1.00	1.00	1.00	1.00	23a	SUST	361	20000
	TR:Amb to T1{1}	229	1374	165	126	1.02	1.00	1.00	1.00	(17)	DISP	2034	30000
	Amb to T1{1}	229	1374	165	126	1.02	1.00	1.00	1.00	(17)	DISP	2034	30000

ASME B31.3 (2016) CODE COMPLIANCE
(Moments in ft-lb , Force in lbf) (Stress in psi)

Point name	Load combination	Axial Force	In-Pl. Moment	Out-Pl. Moment	Torsion Moment	S.I.F In	S.I.F Out	Index/SIF Ax.	Index/SIF Tor.	Eq. no.	Load type	Code Stress	Code Allow.
B56 F+	Max P{1}									(3a)	HOOP	822	20000
	GR + Max P{1}	1745	24	9	8	1.00	1.00	1.00	1.00	23a	SUST	361	20000
	TR:Amb to T1{1}	229	157	1375	127	1.00	1.00	1.00	1.00	(17)	DISP	2004	30000
	Amb to T1{1}	229	157	1375	127	1.00	1.00	1.00	1.00	(17)	DISP	2004	30000
B75	Max P{1}									(3a)	HOOP	822	20000
	GR + Max P{1}	1745	42	14	8	1.00	1.00	1.00	1.00	23a	SUST	388	20000
	TR:Amb to T1{1}	229	191	1043	127	1.00	1.00	1.00	1.00	(17)	DISP	1549	30000
	Amb to T1{1}	229	191	1043	127	1.00	1.00	1.00	1.00	(17)	DISP	1549	30000
B20 N-	Max P{1}									(3a)	HOOP	822	20000
	GR + Max P{1}	1744	23	18	8	1.00	1.00	1.00	1.00	23a	SUST	366	20000
	TR:Amb to T1{1}	230	166	718	119	1.00	1.00	1.00	1.00	(17)	DISP	1095	30000
	Amb to T1{1}	230	166	718	119	1.00	1.00	1.00	1.00	(17)	DISP	1095	30000
B20 N+	Max P{1}									(3a)	HOOP	822	20000
	GR + Max P{1}	1744	18	22	8	1.00	1.00	1.00	1.00	23a	SUST	366	20000
	TR:Amb to T1{1}	230	714	180	119	1.02	1.00	1.00	1.00	(17)	DISP	1110	30000
	Amb to T1{1}	230	714	180	119	1.02	1.00	1.00	1.00	(17)	DISP	1110	30000
B20 F-	Max P{1}									(3a)	HOOP	822	20000
	GR + Max P{1}	1735	38	26	11	1.00	1.00	1.00	1.00	23a	SUST	389	20000
	TR:Amb to T1{1}	738	555	56	4	1.02	1.00	1.00	1.00	(17)	DISP	932	30000
	Amb to T1{1}	738	555	56	4	1.02	1.00	1.00	1.00	(17)	DISP	932	30000
B20 F+	Max P{1}									(3a)	HOOP	822	20000
	GR + Max P{1}	1735	25	38	11	1.00	1.00	1.00	1.00	23a	SUST	389	20000
	TR:Amb to T1{1}	738	65	554	5	1.00	1.00	1.00	1.00	(17)	DISP	920	30000
	Amb to T1{1}	738	65	554	5	1.00	1.00	1.00	1.00	(17)	DISP	920	30000
B77	Max P{1}									(3a)	HOOP	822	20000
	GR + Max P{1}	1734	53	37	11	1.00	1.00	1.00	1.00	23a	SUST	416	20000
	TR:Amb to T1{1}	738	110	399	5	1.00	1.00	1.00	1.00	(17)	DISP	717	30000
	Amb to T1{1}	738	110	399	5	1.00	1.00	1.00	1.00	(17)	DISP	717	30000
B21 N-	Max P{1}									(3a)	HOOP	822	20000
	GR + Max P{1}	1734	24	36	11	1.00	1.00	1.00	1.00	23a	SUST	386	20000
	TR:Amb to T1{1}	738	90	247	4	1.00	1.00	1.00	1.00	(17)	DISP	503	30000
	Amb to T1{1}	738	90	247	4	1.00	1.00	1.00	1.00	(17)	DISP	503	30000
B21 N+	Max P{1}									(3a)	HOOP	822	20000
	GR + Max P{1}	1734	36	25	11	1.00	1.00	1.00	1.00	23a	SUST	386	20000
	TR:Amb to T1{1}	738	248	87	4	1.02	1.00	1.00	1.00	(17)	DISP	508	30000
	Amb to T1{1}	738	248	87	4	1.02	1.00	1.00	1.00	(17)	DISP	508	30000
B21 F-	Max P{1}									(3a)	HOOP	822	20000
	GR + Max P{1}	1743	61	17	2	1.00	1.00	1.00	1.00	23a	SUST	416	20000
	TR:Amb to T1{1}	231	1514	70	21	1.02	1.00	1.00	1.00	(17)	DISP	2215	30000
	Amb to T1{1}	231	1514	70	21	1.02	1.00	1.00	1.00	(17)	DISP	2215	30000

ASME B31.3 (2016) CODE COMPLIANCE
(Moments in ft-lb , Force in lbf) (Stress in psi)

Point name	Load combination	Axial Force	In-Pl. Moment	Out-Pl. Moment	Torsion Moment	S.I.F In	S.I.F Out	Index/SIF Ax.	Index/SIF Tor.	Eq. no.	Load type	Code Stress	Code Allow.
B21 F+	Max P{1}									(3a)	HOOP	822	20000
	GR + Max P{1}	1743	18	61	2	1.00	1.00	1.00	1.00	23a	SUST	416	20000
	TR:Amb to T1{1}	231	99	1512	21	1.00	1.00	1.00	1.00	(17)	DISP	2182	30000
	Amb to T1{1}	231	99	1512	21	1.00	1.00	1.00	1.00	(17)	DISP	2182	30000
B76	Max P{1}									(3a)	HOOP	822	20000
	GR + Max P{1}	1743	40	67	2	1.00	1.00	1.00	1.00	23a	SUST	437	20000
	TR:Amb to T1{1}	231	119	1881	21	1.00	1.00	1.00	1.00	(17)	DISP	2704	30000
	Amb to T1{1}	231	119	1881	21	1.00	1.00	1.00	1.00	(17)	DISP	2704	30000
B59 N-	Max P{1}									(3a)	HOOP	822	20000
	GR + Max P{1}	1742	4	88	2	1.00	1.00	1.00	1.00	23a	SUST	451	20000
	TR:Amb to T1{1}	231	18	3227	16	1.00	1.00	1.00	1.00	(17)	DISP	4599	30000
	Amb to T1{1}	231	18	3227	16	1.00	1.00	1.00	1.00	(17)	DISP	4599	30000
B59 N+	Max P{1}									(3a)	HOOP	822	20000
	GR + Max P{1}	1742	4	88	1	1.00	1.00	1.00	1.00	23a	SUST	451	20000
	TR:Amb to T1{1}	232	18	3227	42	1.00	1.00	1.00	1.00	(17)	DISP	4599	30000
	Amb to T1{1}	232	18	3227	42	1.00	1.00	1.00	1.00	(17)	DISP	4599	30000
B59 M	Max P{1}									(3a)	HOOP	822	20000
	GR + Max P{1}	1742	3	88	0	1.00	1.00	1.00	1.00	23a	SUST	452	20000
	TR:Amb to T1{1}	232	17	3244	68	1.00	1.00	1.00	1.00	(17)	DISP	4625	30000
	Amb to T1{1}	232	17	3244	68	1.00	1.00	1.00	1.00	(17)	DISP	4625	30000
B59 F-	Max P{1}									(3a)	HOOP	822	20000
	GR + Max P{1}	1742	3	88	0	1.00	1.00	1.00	1.00	23a	SUST	452	20000
	TR:Amb to T1{1}	232	16	3261	94	1.00	1.00	1.00	1.00	(17)	DISP	4650	30000
	Amb to T1{1}	232	16	3261	94	1.00	1.00	1.00	1.00	(17)	DISP	4650	30000
B59 F+	Max P{1}									(3a)	HOOP	822	20000
	GR + Max P{1}	1742	3	88	0	1.00	1.00	1.00	1.00	23a	SUST	452	20000
	TR:Amb to T1{1}	232	16	3262	68	1.00	1.00	1.00	1.00	(17)	DISP	4650	30000
	Amb to T1{1}	232	16	3262	68	1.00	1.00	1.00	1.00	(17)	DISP	4650	30000
B60	Max P{1}									(3a)	HOOP	822	20000
	GR + Max P{1}	1742	8	99	0	1.00	1.00	1.00	1.00	23a	SUST	469	20000
	TR:Amb to T1{1}	232	16	3981	68	1.00	1.00	1.00	1.00	(17)	DISP	5665	30000
	Amb to T1{1}	232	16	3981	68	1.00	1.00	1.00	1.00	(17)	DISP	5665	30000
B61	Max P{1}									(3a)	HOOP	822	20000
	GR + Max P{1}	1742	1	111	0	1.00	1.00	1.00	1.00	23a	SUST	485	20000
	TR:Amb to T1{1}	232	49	4718	68	1.00	1.00	1.00	1.00	(17)	DISP	6706	30000
	Amb to T1{1}	232	49	4718	68	1.00	1.00	1.00	1.00	(17)	DISP	6706	30000
B62 -	Max P{1}									(3a)	HOOP	822	20000
	GR + Max P{1}	1742	13	118	0	1.00	1.00	1.00	1.00	23a	SUST	496	20000
	TR:Amb to T1{1}	232	69	5167	68	1.00	1.00	1.00	1.00	(17)	DISP	7341	30000
	Amb to T1{1}	232	69	5167	68	1.00	1.00	1.00	1.00	(17)	DISP	7341	30000

ASME B31.3 (2016) CODE COMPLIANCE
(Moments in ft-lb , Force in lbf) (Stress in psi)

Point name	Load combination	Axial Force	In-Pl. Moment	Out-Pl. Moment	Torsion Moment	S.I.F In	S.I.F Out	Index/SIF Ax.	Index/SIF Tor.	Eq. no.	Load type	Code Stress	Code Allow.
B62	+ Max P{1}									(3a)	HOOP	822	20000
	GR + Max P{1}	1745	1	0	0	1.00	1.00	1.00	1.00	23a	SUST	325	20000
	TR:Amb to T1{1}	0	0	0	0	1.00	1.00	1.00	1.00	(17)	DISP	0	30000
	Amb to T1{1}	0	0	0	0	1.00	1.00	1.00	1.00	(17)	DISP	0	30000
B63	Max P{1}									(3a)	HOOP	822	20000
	GR + Max P{1}	1745	0	0	0	1.00	1.00	1.00	1.00	23a	SUST	324	20000
	TR:Amb to T1{1}	0	0	0	0	1.00	1.00	1.00	1.00	(17)	DISP	0	30000
	Amb to T1{1}	0	0	0	0	1.00	1.00	1.00	1.00	(17)	DISP	0	30000
*** Segment B end *** Line # RIGID													
*** Segment C begin ***													
C03	Max P{1}									(3a)	HOOP	661	20000
	GR + Max P{1}	780	20	156	3	1.00	1.00	1.00	1.00	23a	SUST	866	20000
	TR:Amb to T1{1}	196	22	112	0	1.00	1.00	1.00	1.00	(17)	DISP	486	30000
	Amb to T1{1}	196	22	112	0	1.00	1.00	1.00	1.00	(17)	DISP	486	30000
C04	Max P{1}									(3a)	HOOP	661	20000
	GR + Max P{1}	780	5	139	3	1.00	1.00	1.00	1.00	23a	SUST	794	20000
	TR:Amb to T1{1}	196	8	145	0	1.00	1.00	1.00	1.00	(17)	DISP	605	30000
	Amb to T1{1}	196	8	145	0	1.00	1.00	1.00	1.00	(17)	DISP	605	30000
C21	- Max P{1}									(3a)	HOOP	661	20000
	GR + Max P{1}	780	97	117	3	1.00	1.00	1.00	1.00	23a	SUST	845	20000
	TR:Amb to T1{1}	196	46	187	0	1.00	1.00	1.00	1.00	(17)	DISP	782	30000
	Amb to T1{1}	196	46	187	0	1.00	1.00	1.00	1.00	(17)	DISP	782	30000
C21	+ Max P{1}									(3a)	HOOP	661	20000
	GR + Max P{1}	780	97	117	3	1.00	1.00	1.00	1.00	23a	SUST	845	20000
	TR:Amb to T1{1}	137	46	187	0	1.00	1.00	1.00	1.00	(17)	DISP	763	30000
	Amb to T1{1}	137	46	187	0	1.00	1.00	1.00	1.00	(17)	DISP	763	30000
C06	N- Max P{1}									(3a)	HOOP	661	20000
	GR + Max P{1}	780	75	114	3	1.00	1.00	1.00	1.00	23a	SUST	782	20000
	TR:Amb to T1{1}	137	38	188	0	1.00	1.00	1.00	1.00	(17)	DISP	761	30000
	Amb to T1{1}	137	38	188	0	1.00	1.00	1.00	1.00	(17)	DISP	761	30000
C06	N+ Max P{1}									(3a)	HOOP	661	20000
	GR + Max P{1}	780	75	114	3	1.00	1.00	1.00	1.00	23a	SUST	782	20000
	TR:Amb to T1{1}	137	38	188	0	1.00	1.00	1.00	1.00	(17)	DISP	761	30000
	Amb to T1{1}	137	38	188	0	1.00	1.00	1.00	1.00	(17)	DISP	761	30000
C06	F- Max P{1}									(3a)	HOOP	661	20000
	GR + Max P{1}	784	61	111	6	1.00	1.00	1.00	1.00	23a	SUST	750	20000
	TR:Amb to T1{1}	138	35	188	15	1.00	1.00	1.00	1.00	(17)	DISP	761	30000
	Amb to T1{1}	138	35	188	15	1.00	1.00	1.00	1.00	(17)	DISP	761	30000

ASME B31.3 (2016) CODE COMPLIANCE
(Moments in ft-lb , Force in lbf) (Stress in psi)

Point name	Load combination	Axial Force	In-Pl. Moment	Out-Pl. Moment	Torsion Moment	S.I.F In	S.I.F Out	Index/SIF Ax.	Index/SIF Tor.	Eq. no.	Load type	Code Stress	Code Allow.
C06 F+	Max P{1}									(3a)	HOOP	661	20000
	GR + Max P{1}	784	61	111	6	1.00	1.00	1.00	1.00	23a	SUST	750	20000
	TR:Amb to T1{1}	138	35	188	15	1.00	1.00	1.00	1.00	(17)	DISP	761	30000
	Amb to T1{1}	138	35	188	15	1.00	1.00	1.00	1.00	(17)	DISP	761	30000
C22 -	Max P{1}									(3a)	HOOP	661	20000
	GR + Max P{1}	775	83	21	6	1.00	1.00	1.00	1.00	23a	SUST	585	20000
	TR:Amb to T1{1}	138	57	215	15	1.00	1.00	1.00	1.00	(17)	DISP	876	30000
	Amb to T1{1}	138	57	215	15	1.00	1.00	1.00	1.00	(17)	DISP	876	30000
C22 +	Max P{1}									(3a)	HOOP	661	20000
	GR + Max P{1}	783	83	21	6	1.00	1.00	1.00	1.00	23a	SUST	588	20000
	TR:Amb to T1{1}	56	57	215	15	1.00	1.00	1.00	1.00	(17)	DISP	850	30000
	Amb to T1{1}	56	57	215	15	1.00	1.00	1.00	1.00	(17)	DISP	850	30000
C23	Max P{1}									(3a)	HOOP	661	20000
	GR + Max P{1}	777	68	39	6	1.00	1.00	1.00	1.00	23a	SUST	559	20000
	TR:Amb to T1{1}	56	145	342	15	1.00	1.00	1.00	1.00	(17)	DISP	1407	30000
	Amb to T1{1}	56	145	342	15	1.00	1.00	1.00	1.00	(17)	DISP	1407	30000
C09 N-	Max P{1}									(3a)	HOOP	661	20000
	GR + Max P{1}	777	47	44	6	1.00	1.00	1.00	1.00	23a	SUST	505	20000
	TR:Amb to T1{1}	56	120	383	15	1.00	1.00	1.00	1.00	(17)	DISP	1516	30000
	Amb to T1{1}	56	120	383	15	1.00	1.00	1.00	1.00	(17)	DISP	1516	30000
C09 N+	Max P{1}									(3a)	HOOP	661	20000
	GR + Max P{1}	777	42	49	6	1.00	1.00	1.00	1.00	23a	SUST	505	20000
	TR:Amb to T1{1}	56	379	131	15	1.00	1.00	1.00	1.00	(17)	DISP	1516	30000
	Amb to T1{1}	56	379	131	15	1.00	1.00	1.00	1.00	(17)	DISP	1516	30000
C09 F-	Max P{1}									(3a)	HOOP	661	20000
	GR + Max P{1}	780	62	7	6	1.00	1.00	1.00	1.00	23a	SUST	497	20000
	TR:Amb to T1{1}	81	455	125	9	1.00	1.00	1.00	1.00	(17)	DISP	1787	30000
	Amb to T1{1}	81	455	125	9	1.00	1.00	1.00	1.00	(17)	DISP	1787	30000
C09 F+	Max P{1}									(3a)	HOOP	661	20000
	GR + Max P{1}	780	2	62	6	1.00	1.00	1.00	1.00	23a	SUST	497	20000
	TR:Amb to T1{1}	81	88	463	9	1.00	1.00	1.00	1.00	(17)	DISP	1787	30000
	Amb to T1{1}	81	88	463	9	1.00	1.00	1.00	1.00	(17)	DISP	1787	30000
C24	Max P{1}									(3a)	HOOP	661	20000
	GR + Max P{1}	780	6	61	6	1.00	1.00	1.00	1.00	23a	SUST	493	20000
	TR:Amb to T1{1}	81	114	437	9	1.00	1.00	1.00	1.00	(17)	DISP	1713	30000
	Amb to T1{1}	81	114	437	9	1.00	1.00	1.00	1.00	(17)	DISP	1713	30000
C25 -	Max P{1}									(3a)	HOOP	661	20000
	GR + Max P{1}	777	105	40	6	1.00	1.00	1.00	1.00	23a	SUST	690	20000
	TR:Amb to T1{1}	81	55	27	9	1.00	1.00	1.00	1.00	(17)	DISP	256	30000
	Amb to T1{1}	81	55	27	9	1.00	1.00	1.00	1.00	(17)	DISP	256	30000

ASME B31.3 (2016) CODE COMPLIANCE
(Moments in ft-lb , Force in lbf) (Stress in psi)

Point name	Load combination	Axial Force	In-Pl. Moment	Out-Pl. Moment	Torsion Moment	S.I.F In	S.I.F Out	Index/SIF Ax.	Index/SIF Tor.	Eq. no.	Load type	Code Stress	Code Allow.
C25	+ Max P{1}									(3a)	HOOP	661	20000
	GR + Max P{1}	780	105	40	6	1.00	1.00	1.00	1.00	23a	SUST	691	20000
	TR:Amb to T1{1}	136	55	27	9	1.00	1.00	1.00	1.00	(17)	DISP	274	30000
	Amb to T1{1}	136	55	27	9	1.00	1.00	1.00	1.00	(17)	DISP	274	30000
C26	- Max P{1}									(3a)	HOOP	661	20000
	GR + Max P{1}	777	68	19	6	1.00	1.00	1.00	1.00	23a	SUST	528	20000
	TR:Amb to T1{1}	136	16	133	9	1.00	1.00	1.00	1.00	(17)	DISP	542	30000
	Amb to T1{1}	136	16	133	9	1.00	1.00	1.00	1.00	(17)	DISP	542	30000
C26	+ Max P{1}									(3a)	HOOP	661	20000
	GR + Max P{1}	780	68	19	6	1.00	1.00	1.00	1.00	23a	SUST	529	20000
	TR:Amb to T1{1}	212	16	133	9	1.00	1.00	1.00	1.00	(17)	DISP	566	30000
	Amb to T1{1}	212	16	133	9	1.00	1.00	1.00	1.00	(17)	DISP	566	30000
C28	- Max P{1}									(3a)	HOOP	661	20000
	GR + Max P{1}	777	61	3	6	1.00	1.00	1.00	1.00	23a	SUST	491	20000
	TR:Amb to T1{1}	212	8	19	9	1.00	1.00	1.00	1.00	(17)	DISP	149	30000
	Amb to T1{1}	212	8	19	9	1.00	1.00	1.00	1.00	(17)	DISP	149	30000
C28	+ Max P{1}									(3a)	HOOP	661	20000
	GR + Max P{1}	780	61	3	6	1.00	1.00	1.00	1.00	23a	SUST	492	20000
	TR:Amb to T1{1}	277	8	19	9	1.00	1.00	1.00	1.00	(17)	DISP	169	30000
	Amb to T1{1}	277	8	19	9	1.00	1.00	1.00	1.00	(17)	DISP	169	30000
C29	- Max P{1}									(3a)	HOOP	661	20000
	GR + Max P{1}	777	127	23	6	1.00	1.00	1.00	1.00	23a	SUST	754	20000
	TR:Amb to T1{1}	277	17	105	9	1.00	1.00	1.00	1.00	(17)	DISP	484	30000
	Amb to T1{1}	277	17	105	9	1.00	1.00	1.00	1.00	(17)	DISP	484	30000
C29	+ Max P{1}									(3a)	HOOP	661	20000
	GR + Max P{1}	780	127	23	6	1.00	1.00	1.00	1.00	23a	SUST	755	20000
	TR:Amb to T1{1}	245	17	105	9	1.00	1.00	1.00	1.00	(17)	DISP	474	30000
	Amb to T1{1}	245	17	105	9	1.00	1.00	1.00	1.00	(17)	DISP	474	30000
C31	Max P{1}									(3a)	HOOP	661	20000
	GR + Max P{1}	777	4	47	6	1.00	1.00	1.00	1.00	23a	SUST	438	20000
	TR:Amb to T1{1}	245	29	851	9	1.00	1.00	1.00	1.00	(17)	DISP	3257	30000
	Amb to T1{1}	245	29	851	9	1.00	1.00	1.00	1.00	(17)	DISP	3257	30000
C16	N- Max P{1}									(3a)	HOOP	661	20000
	GR + Max P{1}	777	0	48	6	1.00	1.00	1.00	1.00	23a	SUST	442	20000
	TR:Amb to T1{1}	245	23	897	8	1.00	1.00	1.00	1.00	(17)	DISP	3427	30000
	Amb to T1{1}	245	23	897	8	1.00	1.00	1.00	1.00	(17)	DISP	3427	30000
C16	N+ Max P{1}									(3a)	HOOP	661	20000
	GR + Max P{1}	777	48	1	6	1.00	1.00	1.00	1.00	23a	SUST	442	20000
	TR:Amb to T1{1}	245	896	43	8	1.00	1.00	1.00	1.00	(17)	DISP	3427	30000
	Amb to T1{1}	245	896	43	8	1.00	1.00	1.00	1.00	(17)	DISP	3427	30000

ASME B31.3 (2016) CODE COMPLIANCE
(Moments in ft-lb , Force in lbf) (Stress in psi)

Point name	Load combination	Axial Force	In-Pl. Moment	Out-Pl. Moment	Torsion Moment	S.I.F In	S.I.F Out	Index/SIF Ax.	Index/SIF Tor.	Eq. no.	Load type	Code Stress	Code Allow.
C16 F-	Max P{1}									(3a)	HOOP	661	20000
	GR + Max P{1}	773	41	76	42	1.00	1.00	1.00	1.00	23a	SUST	612	20000
	TR:Amb to T1{1}	91	437	40	11	1.00	1.00	1.00	1.00	(17)	DISP	1666	30000
	Amb to T1{1}	91	437	40	11	1.00	1.00	1.00	1.00	(17)	DISP	1666	30000
C16 F+	Max P{1}									(3a)	HOOP	661	20000
	GR + Max P{1}	773	78	39	42	1.00	1.00	1.00	1.00	23a	SUST	612	20000
	TR:Amb to T1{1}	91	28	438	11	1.00	1.00	1.00	1.00	(17)	DISP	1666	30000
	Amb to T1{1}	91	28	438	11	1.00	1.00	1.00	1.00	(17)	DISP	1666	30000
C32	Max P{1}									(3a)	HOOP	661	20000
	GR + Max P{1}	773	102	37	42	1.00	1.00	1.00	1.00	23a	SUST	693	20000
	TR:Amb to T1{1}	91	36	315	11	1.00	1.00	1.00	1.00	(17)	DISP	1212	30000
	Amb to T1{1}	91	36	315	11	1.00	1.00	1.00	1.00	(17)	DISP	1212	30000
C33	Max P{1}									(3a)	HOOP	661	20000
	GR + Max P{1}	772	138	23	42	1.00	1.00	1.00	1.00	23a	SUST	810	20000
	TR:Amb to T1{1}	91	102	359	12	1.00	1.00	1.00	1.00	(17)	DISP	1424	30000
	Amb to T1{1}	91	102	359	12	1.00	1.00	1.00	1.00	(17)	DISP	1424	30000
C19 N-	Max P{1}									(3a)	HOOP	661	20000
	GR + Max P{1}	772	108	21	42	1.00	1.00	1.00	1.00	23a	SUST	698	20000
	TR:Amb to T1{1}	92	82	482	13	1.00	1.00	1.00	1.00	(17)	DISP	1855	30000
	Amb to T1{1}	92	82	482	13	1.00	1.00	1.00	1.00	(17)	DISP	1855	30000
C19 N+	Max P{1}									(3a)	HOOP	661	20000
	GR + Max P{1}	772	24	107	42	1.00	1.00	1.00	1.00	23a	SUST	698	20000
	TR:Amb to T1{1}	92	480	95	13	1.00	1.00	1.00	1.00	(17)	DISP	1855	30000
	Amb to T1{1}	92	480	95	13	1.00	1.00	1.00	1.00	(17)	DISP	1855	30000
C19 F-	Max P{1}									(3a)	HOOP	661	20000
	GR + Max P{1}	777	4	30	7	1.00	1.00	1.00	1.00	23a	SUST	372	20000
	TR:Amb to T1{1}	245	941	86	3	1.00	1.00	1.00	1.00	(17)	DISP	3604	30000
	Amb to T1{1}	245	941	86	3	1.00	1.00	1.00	1.00	(17)	DISP	3604	30000
C19 F+	Max P{1}									(3a)	HOOP	661	20000
	GR + Max P{1}	777	30	3	7	1.00	1.00	1.00	1.00	23a	SUST	372	20000
	TR:Amb to T1{1}	245	64	943	3	1.00	1.00	1.00	1.00	(17)	DISP	3604	30000
	Amb to T1{1}	245	64	943	3	1.00	1.00	1.00	1.00	(17)	DISP	3604	30000
C34	Max P{1}									(3a)	HOOP	661	20000
	GR + Max P{1}	776	31	2	7	1.00	1.00	1.00	1.00	23a	SUST	378	20000
	TR:Amb to T1{1}	245	82	897	3	1.00	1.00	1.00	1.00	(17)	DISP	3439	30000
	Amb to T1{1}	245	82	897	3	1.00	1.00	1.00	1.00	(17)	DISP	3439	30000
C35 -	Max P{1}									(3a)	HOOP	661	20000
	GR + Max P{1}	774	122	8	7	1.00	1.00	1.00	1.00	23a	SUST	729	20000
	TR:Amb to T1{1}	245	41	81	3	1.00	1.00	1.00	1.00	(17)	DISP	416	30000
	Amb to T1{1}	245	41	81	3	1.00	1.00	1.00	1.00	(17)	DISP	416	30000

ASME B31.3 (2016) CODE COMPLIANCE
(Moments in ft-lb , Force in lbf) (Stress in psi)

Point name	Load combination	Axial Force	In-Pl. Moment	Out-Pl. Moment	Torsion Moment	S.I.F In	S.I.F Out	Index/SIF Ax.	Index/SIF Tor.	Eq. no.	Load type	Code Stress	Code Allow.
C35	+ Max P{1}									(3a)	HOOP	661	20000
	GR + Max P{1}	777	122	8	7	1.00	1.00	1.00	1.00	23a	SUST	730	20000
	TR:Amb to T1{1}	301	41	81	3	1.00	1.00	1.00	1.00	(17)	DISP	433	30000
	Amb to T1{1}	301	41	81	3	1.00	1.00	1.00	1.00	(17)	DISP	433	30000
C36	- Max P{1}									(3a)	HOOP	661	20000
	GR + Max P{1}	774	58	18	7	1.00	1.00	1.00	1.00	23a	SUST	489	20000
	TR:Amb to T1{1}	301	11	208	3	1.00	1.00	1.00	1.00	(17)	DISP	871	30000
	Amb to T1{1}	301	11	208	3	1.00	1.00	1.00	1.00	(17)	DISP	871	30000
C36	+ Max P{1}									(3a)	HOOP	661	20000
	GR + Max P{1}	777	58	18	7	1.00	1.00	1.00	1.00	23a	SUST	489	20000
	TR:Amb to T1{1}	366	11	208	3	1.00	1.00	1.00	1.00	(17)	DISP	892	30000
	Amb to T1{1}	366	11	208	3	1.00	1.00	1.00	1.00	(17)	DISP	892	30000
C37	- Max P{1}									(3a)	HOOP	661	20000
	GR + Max P{1}	774	85	28	7	1.00	1.00	1.00	1.00	23a	SUST	600	20000
	TR:Amb to T1{1}	366	2	192	3	1.00	1.00	1.00	1.00	(17)	DISP	832	30000
	Amb to T1{1}	366	2	192	3	1.00	1.00	1.00	1.00	(17)	DISP	832	30000
C37	+ Max P{1}									(3a)	HOOP	661	20000
	GR + Max P{1}	777	85	28	7	1.00	1.00	1.00	1.00	23a	SUST	601	20000
	TR:Amb to T1{1}	335	2	192	3	1.00	1.00	1.00	1.00	(17)	DISP	823	30000
	Amb to T1{1}	335	2	192	3	1.00	1.00	1.00	1.00	(17)	DISP	823	30000
C38	- Max P{1}									(3a)	HOOP	661	20000
	GR + Max P{1}	774	40	36	7	1.00	1.00	1.00	1.00	23a	SUST	463	20000
	TR:Amb to T1{1}	335	5	78	3	1.00	1.00	1.00	1.00	(17)	DISP	396	30000
	Amb to T1{1}	335	5	78	3	1.00	1.00	1.00	1.00	(17)	DISP	396	30000
C38	+ Max P{1}									(3a)	HOOP	661	20000
	GR + Max P{1}	776	40	36	7	1.00	1.00	1.00	1.00	23a	SUST	463	20000
	TR:Amb to T1{1}	299	5	78	3	1.00	1.00	1.00	1.00	(17)	DISP	384	30000
	Amb to T1{1}	299	5	78	3	1.00	1.00	1.00	1.00	(17)	DISP	384	30000
C39	- Max P{1}									(3a)	HOOP	661	20000
	GR + Max P{1}	774	85	40	7	1.00	1.00	1.00	1.00	23a	SUST	617	20000
	TR:Amb to T1{1}	299	27	118	3	1.00	1.00	1.00	1.00	(17)	DISP	545	30000
	Amb to T1{1}	299	27	118	3	1.00	1.00	1.00	1.00	(17)	DISP	545	30000
C39	+ Max P{1}									(3a)	HOOP	661	20000
	GR + Max P{1}	777	85	40	7	1.00	1.00	1.00	1.00	23a	SUST	618	20000
	TR:Amb to T1{1}	238	27	118	3	1.00	1.00	1.00	1.00	(17)	DISP	526	30000
	Amb to T1{1}	238	27	118	3	1.00	1.00	1.00	1.00	(17)	DISP	526	30000
C40	Max P{1}									(3a)	HOOP	661	20000
	GR + Max P{1}	774	48	47	7	1.00	1.00	1.00	1.00	23a	SUST	515	20000
	TR:Amb to T1{1}	238	20	952	3	1.00	1.00	1.00	1.00	(17)	DISP	3628	30000
	Amb to T1{1}	238	20	952	3	1.00	1.00	1.00	1.00	(17)	DISP	3628	30000

ASME B31.3 (2016) CODE COMPLIANCE
(Moments in ft-lb , Force in lbf) (Stress in psi)

Point name	Load combination	Axial Force	In-Pl. Moment	Out-Pl. Moment	Torsion Moment	S.I.F In	S.I.F Out	Index/SIF Ax.	Index/SIF Tor.	Eq. no.	Load type	Code Stress	Code Allow.
C27 N-	Max P{1}									(3a)	HOOP	661	20000
	GR + Max P{1}	774	28	47	7	1.00	1.00	1.00	1.00	23a	SUST	468	20000
	TR:Amb to T1{1}	238	11	998	5	1.00	1.00	1.00	1.00	(17)	DISP	3802	30000
	Amb to T1{1}	238	11	998	5	1.00	1.00	1.00	1.00	(17)	DISP	3802	30000
C27 N+	Max P{1}									(3a)	HOOP	661	20000
	GR + Max P{1}	774	46	30	7	1.00	1.00	1.00	1.00	23a	SUST	468	20000
	TR:Amb to T1{1}	238	998	37	5	1.00	1.00	1.00	1.00	(17)	DISP	3802	30000
	Amb to T1{1}	238	998	37	5	1.00	1.00	1.00	1.00	(17)	DISP	3802	30000
C27 F-	Max P{1}									(3a)	HOOP	661	20000
	GR + Max P{1}	772	45	7	26	1.00	1.00	1.00	1.00	23a	SUST	443	20000
	TR:Amb to T1{1}	93	565	41	9	1.00	1.00	1.00	1.00	(17)	DISP	2145	30000
	Amb to T1{1}	93	565	41	9	1.00	1.00	1.00	1.00	(17)	DISP	2145	30000
C27 F+	Max P{1}									(3a)	HOOP	661	20000
	GR + Max P{1}	772	6	46	26	1.00	1.00	1.00	1.00	23a	SUST	443	20000
	TR:Amb to T1{1}	93	25	566	9	1.00	1.00	1.00	1.00	(17)	DISP	2145	30000
	Amb to T1{1}	93	25	566	9	1.00	1.00	1.00	1.00	(17)	DISP	2145	30000
C42	Max P{1}									(3a)	HOOP	661	20000
	GR + Max P{1}	772	2	45	26	1.00	1.00	1.00	1.00	23a	SUST	439	20000
	TR:Amb to T1{1}	93	36	447	9	1.00	1.00	1.00	1.00	(17)	DISP	1703	30000
	Amb to T1{1}	93	36	447	9	1.00	1.00	1.00	1.00	(17)	DISP	1703	30000
C43	Max P{1}									(3a)	HOOP	661	20000
	GR + Max P{1}	771	57	39	26	1.00	1.00	1.00	1.00	23a	SUST	531	20000
	TR:Amb to T1{1}	93	4	501	9	1.00	1.00	1.00	1.00	(17)	DISP	1901	30000
	Amb to T1{1}	93	4	501	9	1.00	1.00	1.00	1.00	(17)	DISP	1901	30000
C30 N-	Max P{1}									(3a)	HOOP	661	20000
	GR + Max P{1}	770	58	38	26	1.00	1.00	1.00	1.00	23a	SUST	531	20000
	TR:Amb to T1{1}	93	5	620	9	1.00	1.00	1.00	1.00	(17)	DISP	2345	30000
	Amb to T1{1}	93	5	620	9	1.00	1.00	1.00	1.00	(17)	DISP	2345	30000
C30 N+	Max P{1}									(3a)	HOOP	661	20000
	GR + Max P{1}	770	38	58	26	1.00	1.00	1.00	1.00	23a	SUST	531	20000
	TR:Amb to T1{1}	93	620	0	9	1.00	1.00	1.00	1.00	(17)	DISP	2345	30000
	Amb to T1{1}	93	620	0	9	1.00	1.00	1.00	1.00	(17)	DISP	2345	30000
C30 F-	Max P{1}									(3a)	HOOP	661	20000
	GR + Max P{1}	772	29	76	2	1.00	1.00	1.00	1.00	23a	SUST	568	20000
	TR:Amb to T1{1}	237	1051	11	1	1.00	1.00	1.00	1.00	(17)	DISP	3999	30000
	Amb to T1{1}	237	1051	11	1	1.00	1.00	1.00	1.00	(17)	DISP	3999	30000
C30 F+	Max P{1}									(3a)	HOOP	661	20000
	GR + Max P{1}	772	75	31	2	1.00	1.00	1.00	1.00	23a	SUST	568	20000
	TR:Amb to T1{1}	237	16	1051	1	1.00	1.00	1.00	1.00	(17)	DISP	3999	30000
	Amb to T1{1}	237	16	1051	1	1.00	1.00	1.00	1.00	(17)	DISP	3999	30000

ASME B31.3 (2016) CODE COMPLIANCE
(Moments in ft-lb , Force in lbf) (Stress in psi)

Point name	Load combination	Axial Force	In-Pl. Moment	Out-Pl. Moment	Torsion Moment	S.I.F In	S.I.F Out	Index/SIF Ax.	Index/SIF Tor.	Eq. no.	Load type	Code Stress	Code Allow.
C45	Max P{1}									(3a)	HOOP	661	20000
	GR + Max P{1}	772	103	30	2	1.00	1.00	1.00	1.00	23a	SUST	668	20000
	TR:Amb to T1{1}	237	15	1004	1	1.00	1.00	1.00	1.00	(17)	DISP	3824	30000
	Amb to T1{1}	237	15	1004	1	1.00	1.00	1.00	1.00	(17)	DISP	3824	30000
C46	- Max P{1}									(3a)	HOOP	661	20000
	GR + Max P{1}	772	71	22	2	1.00	1.00	1.00	1.00	23a	SUST	543	20000
	TR:Amb to T1{1}	237	3	166	2	1.00	1.00	1.00	1.00	(17)	DISP	693	30000
	Amb to T1{1}	237	3	166	2	1.00	1.00	1.00	1.00	(17)	DISP	693	30000
C46	+ Max P{1}									(3a)	HOOP	661	20000
	GR + Max P{1}	772	71	22	2	1.00	1.00	1.00	1.00	23a	SUST	543	20000
	TR:Amb to T1{1}	288	3	166	2	1.00	1.00	1.00	1.00	(17)	DISP	709	30000
	Amb to T1{1}	288	3	166	2	1.00	1.00	1.00	1.00	(17)	DISP	709	30000
C47	- Max P{1}									(3a)	HOOP	661	20000
	GR + Max P{1}	772	73	15	2	1.00	1.00	1.00	1.00	23a	SUST	542	20000
	TR:Amb to T1{1}	288	1	180	2	1.00	1.00	1.00	1.00	(17)	DISP	764	30000
	Amb to T1{1}	288	1	180	2	1.00	1.00	1.00	1.00	(17)	DISP	764	30000
C47	+ Max P{1}									(3a)	HOOP	661	20000
	GR + Max P{1}	772	73	15	2	1.00	1.00	1.00	1.00	23a	SUST	543	20000
	TR:Amb to T1{1}	354	1	180	2	1.00	1.00	1.00	1.00	(17)	DISP	785	30000
	Amb to T1{1}	354	1	180	2	1.00	1.00	1.00	1.00	(17)	DISP	785	30000
C48	- Max P{1}									(3a)	HOOP	661	20000
	GR + Max P{1}	772	73	8	2	1.00	1.00	1.00	1.00	23a	SUST	536	20000
	TR:Amb to T1{1}	354	0	149	2	1.00	1.00	1.00	1.00	(17)	DISP	666	30000
	Amb to T1{1}	354	0	149	2	1.00	1.00	1.00	1.00	(17)	DISP	666	30000
C48	+ Max P{1}									(3a)	HOOP	661	20000
	GR + Max P{1}	773	73	8	2	1.00	1.00	1.00	1.00	23a	SUST	537	20000
	TR:Amb to T1{1}	429	0	149	2	1.00	1.00	1.00	1.00	(17)	DISP	690	30000
	Amb to T1{1}	429	0	149	2	1.00	1.00	1.00	1.00	(17)	DISP	690	30000
C49	- Max P{1}									(3a)	HOOP	661	20000
	GR + Max P{1}	772	73	3	2	1.00	1.00	1.00	1.00	23a	SUST	536	20000
	TR:Amb to T1{1}	429	0	14	2	1.00	1.00	1.00	1.00	(17)	DISP	187	30000
	Amb to T1{1}	429	0	14	2	1.00	1.00	1.00	1.00	(17)	DISP	187	30000
C49	+ Max P{1}									(3a)	HOOP	661	20000
	GR + Max P{1}	773	73	3	2	1.00	1.00	1.00	1.00	23a	SUST	536	20000
	TR:Amb to T1{1}	469	0	14	2	1.00	1.00	1.00	1.00	(17)	DISP	199	30000
	Amb to T1{1}	469	0	14	2	1.00	1.00	1.00	1.00	(17)	DISP	199	30000
C50	- Max P{1}									(3a)	HOOP	661	20000
	GR + Max P{1}	772	72	3	2	1.00	1.00	1.00	1.00	23a	SUST	533	20000
	TR:Amb to T1{1}	469	0	32	2	1.00	1.00	1.00	1.00	(17)	DISP	266	30000
	Amb to T1{1}	469	0	32	2	1.00	1.00	1.00	1.00	(17)	DISP	266	30000

ASME B31.3 (2016) CODE COMPLIANCE
(Moments in ft-lb , Force in lbf) (Stress in psi)

Point name	Load combination	Axial Force	In-Pl. Moment	Out-Pl. Moment	Torsion Moment	S.I.F In	S.I.F Out	Index/SIF Ax.	Index/SIF Tor.	Eq. no.	Load type	Code Stress	Code Allow.
C50	+ Max P{1}									(3a)	HOOP	661	20000
	GR + Max P{1}	773	72	3	2	1.00	1.00	1.00	1.00	23a	SUST	533	20000
	TR:Amb to T1{1}	391	0	32	2	1.00	1.00	1.00	1.00	(17)	DISP	242	30000
	Amb to T1{1}	391	0	32	2	1.00	1.00	1.00	1.00	(17)	DISP	242	30000
C51	- Max P{1}									(3a)	HOOP	661	20000
	GR + Max P{1}	772	75	9	2	1.00	1.00	1.00	1.00	23a	SUST	547	20000
	TR:Amb to T1{1}	391	1	114	2	1.00	1.00	1.00	1.00	(17)	DISP	550	30000
	Amb to T1{1}	391	1	114	2	1.00	1.00	1.00	1.00	(17)	DISP	550	30000
C51	+ Max P{1}									(3a)	HOOP	661	20000
	GR + Max P{1}	773	75	9	2	1.00	1.00	1.00	1.00	23a	SUST	547	20000
	TR:Amb to T1{1}	312	1	114	2	1.00	1.00	1.00	1.00	(17)	DISP	525	30000
	Amb to T1{1}	312	1	114	2	1.00	1.00	1.00	1.00	(17)	DISP	525	30000
C52	- Max P{1}									(3a)	HOOP	661	20000
	GR + Max P{1}	772	64	15	2	1.00	1.00	1.00	1.00	23a	SUST	506	20000
	TR:Amb to T1{1}	312	4	138	2	1.00	1.00	1.00	1.00	(17)	DISP	614	30000
	Amb to T1{1}	312	4	138	2	1.00	1.00	1.00	1.00	(17)	DISP	614	30000
C52	+ Max P{1}									(3a)	HOOP	661	20000
	GR + Max P{1}	773	64	15	2	1.00	1.00	1.00	1.00	23a	SUST	506	20000
	TR:Amb to T1{1}	246	4	138	2	1.00	1.00	1.00	1.00	(17)	DISP	594	30000
	Amb to T1{1}	246	4	138	2	1.00	1.00	1.00	1.00	(17)	DISP	594	30000
C53	- Max P{1}									(3a)	HOOP	661	20000
	GR + Max P{1}	772	108	20	2	1.00	1.00	1.00	1.00	23a	SUST	677	20000
	TR:Amb to T1{1}	246	18	61	2	1.00	1.00	1.00	1.00	(17)	DISP	316	30000
	Amb to T1{1}	246	18	61	2	1.00	1.00	1.00	1.00	(17)	DISP	316	30000
C53	+ Max P{1}									(3a)	HOOP	661	20000
	GR + Max P{1}	773	108	20	2	1.00	1.00	1.00	1.00	23a	SUST	677	20000
	TR:Amb to T1{1}	164	18	61	2	1.00	1.00	1.00	1.00	(17)	DISP	291	30000
	Amb to T1{1}	164	18	61	2	1.00	1.00	1.00	1.00	(17)	DISP	291	30000
C55	Max P{1}									(3a)	HOOP	661	20000
	GR + Max P{1}	772	50	25	2	1.00	1.00	1.00	1.00	23a	SUST	470	20000
	TR:Amb to T1{1}	164	36	888	2	1.00	1.00	1.00	1.00	(17)	DISP	3370	30000
	Amb to T1{1}	164	36	888	2	1.00	1.00	1.00	1.00	(17)	DISP	3370	30000
C41	N- Max P{1}									(3a)	HOOP	661	20000
	GR + Max P{1}	772	35	26	2	1.00	1.00	1.00	1.00	23a	SUST	420	20000
	TR:Amb to T1{1}	164	29	927	2	1.00	1.00	1.00	1.00	(17)	DISP	3516	30000
	Amb to T1{1}	164	29	927	2	1.00	1.00	1.00	1.00	(17)	DISP	3516	30000
C41	N+ Max P{1}									(3a)	HOOP	661	20000
	GR + Max P{1}	772	25	35	2	1.00	1.00	1.00	1.00	23a	SUST	420	20000
	TR:Amb to T1{1}	164	927	37	2	1.00	1.00	1.00	1.00	(17)	DISP	3516	30000
	Amb to T1{1}	164	927	37	2	1.00	1.00	1.00	1.00	(17)	DISP	3516	30000

ASME B31.3 (2016) CODE COMPLIANCE
(Moments in ft-lb , Force in lbf) (Stress in psi)

Point name	Load combination	Axial Force	In-Pl. Moment	Out-Pl. Moment	Torsion Moment	S.I.F In	S.I.F Out	Index/SIF Ax.	Index/SIF Tor.	Eq. no.	Load type	Code Stress	Code Allow.
C41 F-	Max P{1}									(3a)	HOOP	661	20000
	GR + Max P{1}	772	26	13	8	1.00	1.00	1.00	1.00	23a	SUST	368	20000
	TR:Amb to T1{1}	79	671	37	2	1.00	1.00	1.00	1.00	(17)	DISP	2532	30000
	Amb to T1{1}	79	671	37	2	1.00	1.00	1.00	1.00	(17)	DISP	2532	30000
C41 F+	Max P{1}									(3a)	HOOP	661	20000
	GR + Max P{1}	772	13	26	8	1.00	1.00	1.00	1.00	23a	SUST	368	20000
	TR:Amb to T1{1}	79	31	671	2	1.00	1.00	1.00	1.00	(17)	DISP	2532	30000
	Amb to T1{1}	79	31	671	2	1.00	1.00	1.00	1.00	(17)	DISP	2532	30000
C56	Max P{1}									(3a)	HOOP	661	20000
	GR + Max P{1}	772	26	26	8	1.00	1.00	1.00	1.00	23a	SUST	397	20000
	TR:Amb to T1{1}	79	39	589	2	1.00	1.00	1.00	1.00	(17)	DISP	2227	30000
	Amb to T1{1}	79	39	589	2	1.00	1.00	1.00	1.00	(17)	DISP	2227	30000
C57	Max P{1}									(3a)	HOOP	661	20000
	GR + Max P{1}	771	42	25	8	1.00	1.00	1.00	1.00	23a	SUST	443	20000
	TR:Amb to T1{1}	79	22	546	3	1.00	1.00	1.00	1.00	(17)	DISP	2066	30000
	Amb to T1{1}	79	22	546	3	1.00	1.00	1.00	1.00	(17)	DISP	2066	30000
C44 N-	Max P{1}									(3a)	HOOP	661	20000
	GR + Max P{1}	771	27	25	8	1.00	1.00	1.00	1.00	23a	SUST	395	20000
	TR:Amb to T1{1}	79	17	629	2	1.00	1.00	1.00	1.00	(17)	DISP	2372	30000
	Amb to T1{1}	79	17	629	2	1.00	1.00	1.00	1.00	(17)	DISP	2372	30000
C44 N+	Max P{1}									(3a)	HOOP	661	20000
	GR + Max P{1}	771	25	27	8	1.00	1.00	1.00	1.00	23a	SUST	395	20000
	TR:Amb to T1{1}	79	628	23	2	1.00	1.00	1.00	1.00	(17)	DISP	2372	30000
	Amb to T1{1}	79	628	23	2	1.00	1.00	1.00	1.00	(17)	DISP	2372	30000
C44 F-	Max P{1}									(3a)	HOOP	661	20000
	GR + Max P{1}	771	23	22	1	1.00	1.00	1.00	1.00	23a	SUST	374	20000
	TR:Amb to T1{1}	164	885	25	0	1.00	1.00	1.00	1.00	(17)	DISP	3356	30000
	Amb to T1{1}	164	885	25	0	1.00	1.00	1.00	1.00	(17)	DISP	3356	30000
C44 F+	Max P{1}									(3a)	HOOP	661	20000
	GR + Max P{1}	771	21	23	1	1.00	1.00	1.00	1.00	23a	SUST	374	20000
	TR:Amb to T1{1}	164	20	885	0	1.00	1.00	1.00	1.00	(17)	DISP	3356	30000
	Amb to T1{1}	164	20	885	0	1.00	1.00	1.00	1.00	(17)	DISP	3356	30000
C58	Max P{1}									(3a)	HOOP	661	20000
	GR + Max P{1}	771	34	23	1	1.00	1.00	1.00	1.00	23a	SUST	412	20000
	TR:Amb to T1{1}	164	24	846	0	1.00	1.00	1.00	1.00	(17)	DISP	3210	30000
	Amb to T1{1}	164	24	846	0	1.00	1.00	1.00	1.00	(17)	DISP	3210	30000
C59 -	Max P{1}									(3a)	HOOP	661	20000
	GR + Max P{1}	771	89	19	1	1.00	1.00	1.00	1.00	23a	SUST	604	20000
	TR:Amb to T1{1}	164	12	136	1	1.00	1.00	1.00	1.00	(17)	DISP	563	30000
	Amb to T1{1}	164	12	136	1	1.00	1.00	1.00	1.00	(17)	DISP	563	30000

ASME B31.3 (2016) CODE COMPLIANCE
(Moments in ft-lb , Force in lbf) (Stress in psi)

Point name	Load combination	Axial Force	In-Pl. Moment	Out-Pl. Moment	Torsion Moment	S.I.F In	S.I.F Out	Index/SIF Ax.	Index/SIF Tor.	Eq. no.	Load type	Code Stress	Code Allow.
C59	+ Max P{1}									(3a)	HOOP	661	20000
	GR + Max P{1}	772	89	19	1	1.00	1.00	1.00	1.00	23a	SUST	604	20000
	TR:Amb to T1{1}	227	12	136	1	1.00	1.00	1.00	1.00	(17)	DISP	582	30000
	Amb to T1{1}	227	12	136	1	1.00	1.00	1.00	1.00	(17)	DISP	582	30000
C60	- Max P{1}									(3a)	HOOP	661	20000
	GR + Max P{1}	771	69	17	1	1.00	1.00	1.00	1.00	23a	SUST	526	20000
	TR:Amb to T1{1}	227	3	126	1	1.00	1.00	1.00	1.00	(17)	DISP	541	30000
	Amb to T1{1}	227	3	126	1	1.00	1.00	1.00	1.00	(17)	DISP	541	30000
C60	+ Max P{1}									(3a)	HOOP	661	20000
	GR + Max P{1}	772	69	17	1	1.00	1.00	1.00	1.00	23a	SUST	526	20000
	TR:Amb to T1{1}	295	3	126	1	1.00	1.00	1.00	1.00	(17)	DISP	562	30000
	Amb to T1{1}	295	3	126	1	1.00	1.00	1.00	1.00	(17)	DISP	562	30000
C61	- Max P{1}									(3a)	HOOP	661	20000
	GR + Max P{1}	771	74	16	1	1.00	1.00	1.00	1.00	23a	SUST	546	20000
	TR:Amb to T1{1}	295	0	66	1	1.00	1.00	1.00	1.00	(17)	DISP	338	30000
	Amb to T1{1}	295	0	66	1	1.00	1.00	1.00	1.00	(17)	DISP	338	30000
C61	+ Max P{1}									(3a)	HOOP	661	20000
	GR + Max P{1}	771	74	16	1	1.00	1.00	1.00	1.00	23a	SUST	546	20000
	TR:Amb to T1{1}	379	0	66	1	1.00	1.00	1.00	1.00	(17)	DISP	364	30000
	Amb to T1{1}	379	0	66	1	1.00	1.00	1.00	1.00	(17)	DISP	364	30000
C63	- Max P{1}									(3a)	HOOP	661	20000
	GR + Max P{1}	771	72	13	1	1.00	1.00	1.00	1.00	23a	SUST	535	20000
	TR:Amb to T1{1}	379	0	14	1	1.00	1.00	1.00	1.00	(17)	DISP	171	30000
	Amb to T1{1}	379	0	14	1	1.00	1.00	1.00	1.00	(17)	DISP	171	30000
C63	+ Max P{1}									(3a)	HOOP	661	20000
	GR + Max P{1}	772	72	13	1	1.00	1.00	1.00	1.00	23a	SUST	535	20000
	TR:Amb to T1{1}	303	0	14	1	1.00	1.00	1.00	1.00	(17)	DISP	147	30000
	Amb to T1{1}	303	0	14	1	1.00	1.00	1.00	1.00	(17)	DISP	147	30000
C64	- Max P{1}									(3a)	HOOP	661	20000
	GR + Max P{1}	771	76	11	1	1.00	1.00	1.00	1.00	23a	SUST	548	20000
	TR:Amb to T1{1}	303	1	67	1	1.00	1.00	1.00	1.00	(17)	DISP	344	30000
	Amb to T1{1}	303	1	67	1	1.00	1.00	1.00	1.00	(17)	DISP	344	30000
C64	+ Max P{1}									(3a)	HOOP	661	20000
	GR + Max P{1}	772	76	11	1	1.00	1.00	1.00	1.00	23a	SUST	549	20000
	TR:Amb to T1{1}	223	1	67	1	1.00	1.00	1.00	1.00	(17)	DISP	319	30000
	Amb to T1{1}	223	1	67	1	1.00	1.00	1.00	1.00	(17)	DISP	319	30000
C65	- Max P{1}									(3a)	HOOP	661	20000
	GR + Max P{1}	771	62	9	1	1.00	1.00	1.00	1.00	23a	SUST	498	20000
	TR:Amb to T1{1}	223	4	136	1	1.00	1.00	1.00	1.00	(17)	DISP	577	30000
	Amb to T1{1}	223	4	136	1	1.00	1.00	1.00	1.00	(17)	DISP	577	30000

ASME B31.3 (2016) CODE COMPLIANCE
(Moments in ft-lb , Force in lbf) (Stress in psi)

Point name	Load combination	Axial Force	In-Pl. Moment	Out-Pl. Moment	Torsion Moment	S.I.F In	S.I.F Out	Index/SIF Ax.	Index/SIF Tor.	Eq. no.	Load type	Code Stress	Code Allow.
C65 +	Max P{1}									(3a)	HOOP	661	20000
	GR + Max P{1}	772	62	9	1	1.00	1.00	1.00	1.00	23a	SUST	498	20000
	TR:Amb to T1{1}	155	4	136	1	1.00	1.00	1.00	1.00	(17)	DISP	556	30000
	Amb to T1{1}	155	4	136	1	1.00	1.00	1.00	1.00	(17)	DISP	556	30000
C72 -	Max P{1}									(3a)	HOOP	661	20000
	GR + Max P{1}	771	111	8	1	1.00	1.00	1.00	1.00	23a	SUST	685	20000
	TR:Amb to T1{1}	155	14	89	1	1.00	1.00	1.00	1.00	(17)	DISP	384	30000
	Amb to T1{1}	155	14	89	1	1.00	1.00	1.00	1.00	(17)	DISP	384	30000
C72 +	Max P{1}									(3a)	HOOP	661	20000
	GR + Max P{1}	772	111	8	1	1.00	1.00	1.00	1.00	23a	SUST	686	20000
	TR:Amb to T1{1}	65	14	89	1	1.00	1.00	1.00	1.00	(17)	DISP	356	30000
	Amb to T1{1}	65	14	89	1	1.00	1.00	1.00	1.00	(17)	DISP	356	30000
C73	Max P{1}									(3a)	HOOP	661	20000
	GR + Max P{1}	771	42	7	1	1.00	1.00	1.00	1.00	23a	SUST	418	20000
	TR:Amb to T1{1}	65	31	448	1	1.00	1.00	1.00	1.00	(17)	DISP	1697	30000
	Amb to T1{1}	65	31	448	1	1.00	1.00	1.00	1.00	(17)	DISP	1697	30000
C54 N-	Max P{1}									(3a)	HOOP	661	20000
	GR + Max P{1}	771	27	7	1	1.00	1.00	1.00	1.00	23a	SUST	362	20000
	TR:Amb to T1{1}	65	26	473	2	1.00	1.00	1.00	1.00	(17)	DISP	1789	30000
	Amb to T1{1}	65	26	473	2	1.00	1.00	1.00	1.00	(17)	DISP	1789	30000
C54 N+	Max P{1}									(3a)	HOOP	661	20000
	GR + Max P{1}	771	7	27	1	1.00	1.00	1.00	1.00	23a	SUST	362	20000
	TR:Amb to T1{1}	65	473	30	2	1.00	1.00	1.00	1.00	(17)	DISP	1789	30000
	Amb to T1{1}	65	473	30	2	1.00	1.00	1.00	1.00	(17)	DISP	1789	30000
C54 F-	Max P{1}									(3a)	HOOP	661	20000
	GR + Max P{1}	771	4	18	3	1.00	1.00	1.00	1.00	23a	SUST	325	20000
	TR:Amb to T1{1}	50	427	28	0	1.00	1.00	1.00	1.00	(17)	DISP	1613	30000
	Amb to T1{1}	50	427	28	0	1.00	1.00	1.00	1.00	(17)	DISP	1613	30000
C54 F+	Max P{1}									(3a)	HOOP	661	20000
	GR + Max P{1}	771	18	5	3	1.00	1.00	1.00	1.00	23a	SUST	325	20000
	TR:Amb to T1{1}	50	26	427	0	1.00	1.00	1.00	1.00	(17)	DISP	1613	30000
	Amb to T1{1}	50	26	427	0	1.00	1.00	1.00	1.00	(17)	DISP	1613	30000
C74	Max P{1}									(3a)	HOOP	661	20000
	GR + Max P{1}	771	31	4	3	1.00	1.00	1.00	1.00	23a	SUST	376	20000
	TR:Amb to T1{1}	50	31	395	0	1.00	1.00	1.00	1.00	(17)	DISP	1493	30000
	Amb to T1{1}	50	31	395	0	1.00	1.00	1.00	1.00	(17)	DISP	1493	30000
C75 -	Max P{1}									(3a)	HOOP	661	20000
	GR + Max P{1}	771	84	1	3	1.00	1.00	1.00	1.00	23a	SUST	577	20000
	TR:Amb to T1{1}	50	14	193	1	1.00	1.00	1.00	1.00	(17)	DISP	738	30000
	Amb to T1{1}	50	14	193	1	1.00	1.00	1.00	1.00	(17)	DISP	738	30000

ASME B31.3 (2016) CODE COMPLIANCE
(Moments in ft-lb , Force in lbf) (Stress in psi)

Point name	Load combination	Axial Force	In-Pl. Moment	Out-Pl. Moment	Torsion Moment	S.I.F In	S.I.F Out	Index/SIF Ax.	Index/SIF Tor.	Eq. no.	Load type	Code Stress	Code Allow.
C75	+ Max P{1}									(3a)	HOOP	661	20000
	GR + Max P{1}	771	84	1	3	1.00	1.00	1.00	1.00	23a	SUST	577	20000
	TR:Amb to T1{1}	101	14	193	1	1.00	1.00	1.00	1.00	(17)	DISP	754	30000
	Amb to T1{1}	101	14	193	1	1.00	1.00	1.00	1.00	(17)	DISP	754	30000
C76	- Max P{1}									(3a)	HOOP	661	20000
	GR + Max P{1}	771	70	6	3	1.00	1.00	1.00	1.00	23a	SUST	524	20000
	TR:Amb to T1{1}	101	4	250	1	1.00	1.00	1.00	1.00	(17)	DISP	965	30000
	Amb to T1{1}	101	4	250	1	1.00	1.00	1.00	1.00	(17)	DISP	965	30000
C76	+ Max P{1}									(3a)	HOOP	661	20000
	GR + Max P{1}	772	70	6	3	1.00	1.00	1.00	1.00	23a	SUST	524	20000
	TR:Amb to T1{1}	171	4	250	0	1.00	1.00	1.00	1.00	(17)	DISP	987	30000
	Amb to T1{1}	171	4	250	0	1.00	1.00	1.00	1.00	(17)	DISP	987	30000
C77	- Max P{1}									(3a)	HOOP	661	20000
	GR + Max P{1}	771	74	9	3	1.00	1.00	1.00	1.00	23a	SUST	544	20000
	TR:Amb to T1{1}	171	1	17	0	1.00	1.00	1.00	1.00	(17)	DISP	116	30000
	Amb to T1{1}	171	1	17	0	1.00	1.00	1.00	1.00	(17)	DISP	116	30000
C77	+ Max P{1}									(3a)	HOOP	661	20000
	GR + Max P{1}	771	74	9	3	1.00	1.00	1.00	1.00	23a	SUST	544	20000
	TR:Amb to T1{1}	196	1	17	0	1.00	1.00	1.00	1.00	(17)	DISP	124	30000
	Amb to T1{1}	196	1	17	0	1.00	1.00	1.00	1.00	(17)	DISP	124	30000
C78	- Max P{1}									(3a)	HOOP	661	20000
	GR + Max P{1}	771	69	13	3	1.00	1.00	1.00	1.00	23a	SUST	525	20000
	TR:Amb to T1{1}	196	3	84	0	1.00	1.00	1.00	1.00	(17)	DISP	375	30000
	Amb to T1{1}	196	3	84	0	1.00	1.00	1.00	1.00	(17)	DISP	375	30000
C78	+ Max P{1}									(3a)	HOOP	661	20000
	GR + Max P{1}	771	69	13	3	1.00	1.00	1.00	1.00	23a	SUST	525	20000
	TR:Amb to T1{1}	123	3	84	0	1.00	1.00	1.00	1.00	(17)	DISP	352	30000
	Amb to T1{1}	123	3	84	0	1.00	1.00	1.00	1.00	(17)	DISP	352	30000
C79	- Max P{1}									(3a)	HOOP	661	20000
	GR + Max P{1}	771	76	17	3	1.00	1.00	1.00	1.00	23a	SUST	554	20000
	TR:Amb to T1{1}	123	12	59	0	1.00	1.00	1.00	1.00	(17)	DISP	264	30000
	Amb to T1{1}	123	12	59	0	1.00	1.00	1.00	1.00	(17)	DISP	264	30000
C79	+ Max P{1}									(3a)	HOOP	661	20000
	GR + Max P{1}	771	76	17	3	1.00	1.00	1.00	1.00	23a	SUST	554	20000
	TR:Amb to T1{1}	45	12	59	0	1.00	1.00	1.00	1.00	(17)	DISP	239	30000
	Amb to T1{1}	45	12	59	0	1.00	1.00	1.00	1.00	(17)	DISP	239	30000
C80	Max P{1}									(3a)	HOOP	661	20000
	GR + Max P{1}	771	53	22	3	1.00	1.00	1.00	1.00	23a	SUST	475	20000
	TR:Amb to T1{1}	45	24	252	0	1.00	1.00	1.00	1.00	(17)	DISP	958	30000
	Amb to T1{1}	45	24	252	0	1.00	1.00	1.00	1.00	(17)	DISP	958	30000

ASME B31.3 (2016) CODE COMPLIANCE
(Moments in ft-lb , Force in lbf) (Stress in psi)

Point name	Load combination	Axial Force	In-Pl. Moment	Out-Pl. Moment	Torsion Moment	S.I.F In	S.I.F Out	Index/SIF Ax.	Index/SIF Tor.	Eq. no.	Load type	Code Stress	Code Allow.
C62 N-	Max P{1}									(3a)	HOOP	661	20000
	GR + Max P{1}	771	36	22	3	1.00	1.00	1.00	1.00	23a	SUST	418	20000
	TR:Amb to T1{1}	45	19	269	1	1.00	1.00	1.00	1.00	(17)	DISP	1021	30000
	Amb to T1{1}	45	19	269	1	1.00	1.00	1.00	1.00	(17)	DISP	1021	30000
C62 N+	Max P{1}									(3a)	HOOP	661	20000
	GR + Max P{1}	771	22	36	3	1.00	1.00	1.00	1.00	23a	SUST	418	20000
	TR:Amb to T1{1}	45	269	21	1	1.00	1.00	1.00	1.00	(17)	DISP	1021	30000
	Amb to T1{1}	45	269	21	1	1.00	1.00	1.00	1.00	(17)	DISP	1021	30000
C62 F-	Max P{1}									(3a)	HOOP	661	20000
	GR + Max P{1}	771	20	9	1	1.00	1.00	1.00	1.00	23a	SUST	338	20000
	TR:Amb to T1{1}	35	238	27	5	1.00	1.00	1.00	1.00	(17)	DISP	905	30000
	Amb to T1{1}	35	238	27	5	1.00	1.00	1.00	1.00	(17)	DISP	905	30000
C62 F+	Max P{1}									(3a)	HOOP	661	20000
	GR + Max P{1}	771	9	20	1	1.00	1.00	1.00	1.00	23a	SUST	338	20000
	TR:Amb to T1{1}	35	25	238	5	1.00	1.00	1.00	1.00	(17)	DISP	905	30000
	Amb to T1{1}	35	25	238	5	1.00	1.00	1.00	1.00	(17)	DISP	905	30000
C82	Max P{1}									(3a)	HOOP	661	20000
	GR + Max P{1}	771	21	20	1	1.00	1.00	1.00	1.00	23a	SUST	363	20000
	TR:Amb to T1{1}	35	29	216	5	1.00	1.00	1.00	1.00	(17)	DISP	824	30000
	Amb to T1{1}	35	29	216	5	1.00	1.00	1.00	1.00	(17)	DISP	824	30000
C81 -	Max P{1}									(3a)	HOOP	661	20000
	GR + Max P{1}	770	32	13	1	1.00	1.00	1.00	1.00	23a	SUST	386	20000
	TR:Amb to T1{1}	35	6	46	5	1.00	1.00	1.00	1.00	(17)	DISP	186	30000
	Amb to T1{1}	35	6	46	5	1.00	1.00	1.00	1.00	(17)	DISP	186	30000
C81 +	Max P{1}									(3a)	HOOP	661	20000
	GR + Max P{1}	771	32	13	1	1.00	1.00	1.00	1.00	23a	SUST	386	20000
	TR:Amb to T1{1}	42	6	46	5	1.00	1.00	1.00	1.00	(17)	DISP	189	30000
	Amb to T1{1}	42	6	46	5	1.00	1.00	1.00	1.00	(17)	DISP	189	30000
C83	Max P{1}									(3a)	HOOP	661	20000
	GR + Max P{1}	770	35	6	1	1.00	1.00	1.00	1.00	23a	SUST	392	20000
	TR:Amb to T1{1}	42	14	35	5	1.00	1.00	1.00	1.00	(17)	DISP	153	30000
	Amb to T1{1}	42	14	35	5	1.00	1.00	1.00	1.00	(17)	DISP	153	30000
C66 N-	Max P{1}									(3a)	HOOP	661	20000
	GR + Max P{1}	770	21	6	1	1.00	1.00	1.00	1.00	23a	SUST	337	20000
	TR:Amb to T1{1}	42	10	34	5	1.00	1.00	1.00	1.00	(17)	DISP	145	30000
	Amb to T1{1}	42	10	34	5	1.00	1.00	1.00	1.00	(17)	DISP	145	30000
C66 N+	Max P{1}									(3a)	HOOP	661	20000
	GR + Max P{1}	770	6	21	1	1.00	1.00	1.00	1.00	23a	SUST	337	20000
	TR:Amb to T1{1}	42	34	10	5	1.00	1.00	1.00	1.00	(17)	DISP	145	30000
	Amb to T1{1}	42	34	10	5	1.00	1.00	1.00	1.00	(17)	DISP	145	30000

Encasement Piping
04/24/2020 2018719
08:29 AM

BENTLEY
AutoPIPE Nuclear 12.00.00.16 RESULT PAGE 172

ASME B31.3 (2016) CODE COMPLIANCE
(Moments in ft-lb , Force in lbf) (Stress in psi)

Point name	Load combination	Axial Force	In-Pl. Moment	Out-Pl. Moment	Torsion Moment	S.I.F In	S.I.F Out	Index/SIF Ax.	Index/SIF Tor.	Eq. no.	Load type	Code Stress	Code Allow.
C66 F-	Max P{1}									(3a)	HOOP	661	20000
	GR + Max P{1}	772	2	18	2	1.00	1.00	1.00	1.00	23a	SUST	322	20000
	TR:Amb to T1{1}	2	154	15	9	1.00	1.00	1.00	1.00	(17)	DISP	581	30000
	Amb to T1{1}	2	154	15	9	1.00	1.00	1.00	1.00	(17)	DISP	581	30000
C66 F+	Max P{1}									(3a)	HOOP	661	20000
	GR + Max P{1}	772	18	2	2	1.00	1.00	1.00	1.00	23a	SUST	322	20000
	TR:Amb to T1{1}	2	16	154	9	1.00	1.00	1.00	1.00	(17)	DISP	581	30000
	Amb to T1{1}	2	16	154	9	1.00	1.00	1.00	1.00	(17)	DISP	581	30000
C84	Max P{1}									(3a)	HOOP	661	20000
	GR + Max P{1}	772	31	3	2	1.00	1.00	1.00	1.00	23a	SUST	376	20000
	TR:Amb to T1{1}	2	19	176	9	1.00	1.00	1.00	1.00	(17)	DISP	661	30000
	Amb to T1{1}	2	19	176	9	1.00	1.00	1.00	1.00	(17)	DISP	661	30000
C67 N-	Max P{1}									(3a)	HOOP	661	20000
	GR + Max P{1}	772	2	6	2	1.00	1.00	1.00	1.00	23a	SUST	277	20000
	TR:Amb to T1{1}	2	4	251	9	1.00	1.00	1.00	1.00	(17)	DISP	937	30000
	Amb to T1{1}	2	4	251	9	1.00	1.00	1.00	1.00	(17)	DISP	937	30000
C67 N+	Max P{1}									(3a)	HOOP	661	20000
	GR + Max P{1}	772	2	6	2	1.00	1.00	1.00	1.00	23a	SUST	277	20000
	TR:Amb to T1{1}	2	4	251	9	1.00	1.00	1.00	1.00	(17)	DISP	937	30000
	Amb to T1{1}	2	4	251	9	1.00	1.00	1.00	1.00	(17)	DISP	937	30000
C67 M	Max P{1}									(3a)	HOOP	661	20000
	GR + Max P{1}	772	2	6	2	1.00	1.00	1.00	1.00	23a	SUST	277	20000
	TR:Amb to T1{1}	2	4	252	7	1.00	1.00	1.00	1.00	(17)	DISP	941	30000
	Amb to T1{1}	2	4	252	7	1.00	1.00	1.00	1.00	(17)	DISP	941	30000
C67 F-	Max P{1}									(3a)	HOOP	661	20000
	GR + Max P{1}	772	2	6	2	1.00	1.00	1.00	1.00	23a	SUST	278	20000
	TR:Amb to T1{1}	2	4	253	5	1.00	1.00	1.00	1.00	(17)	DISP	945	30000
	Amb to T1{1}	2	4	253	5	1.00	1.00	1.00	1.00	(17)	DISP	945	30000
C67 F+	Max P{1}									(3a)	HOOP	661	20000
	GR + Max P{1}	772	2	6	2	1.00	1.00	1.00	1.00	23a	SUST	278	20000
	TR:Amb to T1{1}	2	4	253	5	1.00	1.00	1.00	1.00	(17)	DISP	945	30000
	Amb to T1{1}	2	4	253	5	1.00	1.00	1.00	1.00	(17)	DISP	945	30000
C68	Max P{1}									(3a)	HOOP	661	20000
	GR + Max P{1}	772	6	7	2	1.00	1.00	1.00	1.00	23a	SUST	289	20000
	TR:Amb to T1{1}	2	5	294	5	1.00	1.00	1.00	1.00	(17)	DISP	1099	30000
	Amb to T1{1}	2	5	294	5	1.00	1.00	1.00	1.00	(17)	DISP	1099	30000
C69	Max P{1}									(3a)	HOOP	661	20000
	GR + Max P{1}	772	1	9	2	1.00	1.00	1.00	1.00	23a	SUST	288	20000
	TR:Amb to T1{1}	2	13	336	5	1.00	1.00	1.00	1.00	(17)	DISP	1258	30000
	Amb to T1{1}	2	13	336	5	1.00	1.00	1.00	1.00	(17)	DISP	1258	30000

ASME B31.3 (2016) CODE COMPLIANCE
(Moments in ft-lb , Force in lbf) (Stress in psi)

Point name	Load combination	Axial Force	In-Pl. Moment	Out-Pl. Moment	Torsion Moment	S.I.F In	S.I.F Out	Index/SIF Ax.	Index/SIF Tor.	Eq. no.	Load type	Code Stress	Code Allow.
C70 -	Max P{1}									(3a)	HOOP	661	20000
	GR + Max P{1}	772	10	10	2	1.00	1.00	1.00	1.00	23a	SUST	307	20000
	TR:Amb to T1{1}	2	18	360	5	1.00	1.00	1.00	1.00	(17)	DISP	1345	30000
	Amb to T1{1}	2	18	360	5	1.00	1.00	1.00	1.00	(17)	DISP	1345	30000
C70 +	Max P{1}									(3a)	HOOP	661	20000
	GR + Max P{1}	771	0	0	0	1.00	1.00	1.00	1.00	23a	SUST	254	20000
	TR:Amb to T1{1}	0	0	0	0	1.00	1.00	1.00	1.00	(17)	DISP	0	30000
	Amb to T1{1}	0	0	0	0	1.00	1.00	1.00	1.00	(17)	DISP	0	30000
C71	Max P{1}									(3a)	HOOP	661	20000
	GR + Max P{1}	771	0	0	0	1.00	1.00	1.00	1.00	23a	SUST	253	20000
	TR:Amb to T1{1}	0	0	0	0	1.00	1.00	1.00	1.00	(17)	DISP	0	30000
	Amb to T1{1}	0	0	0	0	1.00	1.00	1.00	1.00	(17)	DISP	0	30000
*** Segment C end ***													
*** Segment D begin ***													
D00	Max P{1}									(3a)	HOOP	661	20000
	GR + Max P{1}	771	0	0	0	1.00	1.00	1.00	1.00	23a	SUST	253	20000
	TR:Amb to T1{1}	0	0	0	0	1.00	1.00	1.00	1.00	(17)	DISP	0	30000
	Amb to T1{1}	0	0	0	0	1.00	1.00	1.00	1.00	(17)	DISP	0	30000
D01 -	Max P{1}									(3a)	HOOP	661	20000
	GR + Max P{1}	771	0	0	0	1.00	1.00	1.00	1.00	23a	SUST	254	20000
	TR:Amb to T1{1}	0	0	0	0	1.00	1.00	1.00	1.00	(17)	DISP	0	30000
	Amb to T1{1}	0	0	0	0	1.00	1.00	1.00	1.00	(17)	DISP	0	30000
D01 +	Max P{1}									(3a)	HOOP	661	20000
	GR + Max P{1}	770	9	11	0	1.00	1.00	1.00	1.00	23a	SUST	307	20000
	TR:Amb to T1{1}	192	5	161	0	1.00	1.00	1.00	1.00	(17)	DISP	663	30000
	Amb to T1{1}	192	5	161	0	1.00	1.00	1.00	1.00	(17)	DISP	663	30000
D02	Max P{1}									(3a)	HOOP	661	20000
	GR + Max P{1}	770	1	10	0	1.00	1.00	1.00	1.00	23a	SUST	292	20000
	TR:Amb to T1{1}	192	3	159	0	1.00	1.00	1.00	1.00	(17)	DISP	654	30000
	Amb to T1{1}	192	3	159	0	1.00	1.00	1.00	1.00	(17)	DISP	654	30000
D03	Max P{1}									(3a)	HOOP	661	20000
	GR + Max P{1}	770	6	9	0	1.00	1.00	1.00	1.00	23a	SUST	295	20000
	TR:Amb to T1{1}	192	0	155	0	1.00	1.00	1.00	1.00	(17)	DISP	638	30000
	Amb to T1{1}	192	0	155	0	1.00	1.00	1.00	1.00	(17)	DISP	638	30000
D04 N-	Max P{1}									(3a)	HOOP	661	20000
	GR + Max P{1}	770	38	6	0	1.00	1.00	1.00	1.00	23a	SUST	402	20000
	TR:Amb to T1{1}	192	9	142	0	1.00	1.00	1.00	1.00	(17)	DISP	592	30000
	Amb to T1{1}	192	9	142	0	1.00	1.00	1.00	1.00	(17)	DISP	592	30000

ASME B31.3 (2016) CODE COMPLIANCE
(Moments in ft-lb , Force in lbf) (Stress in psi)

Point name	Load combination	Axial Force	In-Pl. Moment	Out-Pl. Moment	Torsion Moment	S.I.F In	S.I.F Out	Index/SIF Ax.	Index/SIF Tor.	Eq. no.	Load type	Code Stress	Code Allow.
D04 N+	Max P{1}									(3a)	HOOP	661	20000
	GR + Max P{1}	769	38	6	0	1.00	1.00	1.00	1.00	23a	SUST	402	20000
	TR:Amb to T1{1}	192	9	142	0	1.00	1.00	1.00	1.00	(17)	DISP	592	30000
	Amb to T1{1}	192	9	142	0	1.00	1.00	1.00	1.00	(17)	DISP	592	30000
D04 M-	Max P{1}									(3a)	HOOP	661	20000
	GR + Max P{1}	770	39	6	0	1.00	1.00	1.00	1.00	23a	SUST	404	20000
	TR:Amb to T1{1}	192	9	142	0	1.00	1.00	1.00	1.00	(17)	DISP	592	30000
	Amb to T1{1}	192	9	142	0	1.00	1.00	1.00	1.00	(17)	DISP	592	30000
D04 M+	Max P{1}									(3a)	HOOP	661	20000
	GR + Max P{1}	770	39	6	0	1.00	1.00	1.00	1.00	23a	SUST	404	20000
	TR:Amb to T1{1}	132	9	142	0	1.00	1.00	1.00	1.00	(17)	DISP	573	30000
	Amb to T1{1}	132	9	142	0	1.00	1.00	1.00	1.00	(17)	DISP	573	30000
D04 F-	Max P{1}									(3a)	HOOP	661	20000
	GR + Max P{1}	769	38	6	0	1.00	1.00	1.00	1.00	23a	SUST	401	20000
	TR:Amb to T1{1}	132	9	142	1	1.00	1.00	1.00	1.00	(17)	DISP	571	30000
	Amb to T1{1}	132	9	142	1	1.00	1.00	1.00	1.00	(17)	DISP	571	30000
D04 F+	Max P{1}									(3a)	HOOP	661	20000
	GR + Max P{1}	769	38	6	0	1.00	1.00	1.00	1.00	23a	SUST	401	20000
	TR:Amb to T1{1}	132	9	142	2	1.00	1.00	1.00	1.00	(17)	DISP	571	30000
	Amb to T1{1}	132	9	142	2	1.00	1.00	1.00	1.00	(17)	DISP	571	30000
D13 -	Max P{1}									(3a)	HOOP	661	20000
	GR + Max P{1}	770	56	2	0	1.00	1.00	1.00	1.00	23a	SUST	469	20000
	TR:Amb to T1{1}	132	16	13	2	1.00	1.00	1.00	1.00	(17)	DISP	118	30000
	Amb to T1{1}	132	16	13	2	1.00	1.00	1.00	1.00	(17)	DISP	118	30000
D13 +	Max P{1}									(3a)	HOOP	661	20000
	GR + Max P{1}	769	56	2	0	1.00	1.00	1.00	1.00	23a	SUST	468	20000
	TR:Amb to T1{1}	80	16	13	2	1.00	1.00	1.00	1.00	(17)	DISP	102	30000
	Amb to T1{1}	80	16	13	2	1.00	1.00	1.00	1.00	(17)	DISP	102	30000
D14	Max P{1}									(3a)	HOOP	661	20000
	GR + Max P{1}	770	42	10	0	1.00	1.00	1.00	1.00	23a	SUST	422	20000
	TR:Amb to T1{1}	80	25	405	2	1.00	1.00	1.00	1.00	(17)	DISP	1540	30000
	Amb to T1{1}	80	25	405	2	1.00	1.00	1.00	1.00	(17)	DISP	1540	30000
D08 N-	Max P{1}									(3a)	HOOP	661	20000
	GR + Max P{1}	770	27	11	0	1.00	1.00	1.00	1.00	23a	SUST	366	20000
	TR:Amb to T1{1}	80	21	431	3	1.00	1.00	1.00	1.00	(17)	DISP	1636	30000
	Amb to T1{1}	80	21	431	3	1.00	1.00	1.00	1.00	(17)	DISP	1636	30000
D08 N+	Max P{1}									(3a)	HOOP	661	20000
	GR + Max P{1}	770	11	27	0	1.00	1.00	1.00	1.00	23a	SUST	366	20000
	TR:Amb to T1{1}	80	431	25	3	1.00	1.00	1.00	1.00	(17)	DISP	1636	30000
	Amb to T1{1}	80	431	25	3	1.00	1.00	1.00	1.00	(17)	DISP	1636	30000

Encasement Piping
04/24/2020 2018719
08:29 AM

BENTLEY
AutoPIPE Nuclear 12.00.00.16 RESULT PAGE 175

ASME B31.3 (2016) CODE COMPLIANCE
(Moments in ft-lb , Force in lbf) (Stress in psi)

Point name	Load combination	Axial Force	In-Pl. Moment	Out-Pl. Moment	Torsion Moment	S.I.F In	S.I.F Out	Index/SIF Ax.	Index/SIF Tor.	Eq. no.	Load type	Code Stress	Code Allow.
D08 F-	Max P{1}									(3a)	HOOP	661	20000
	GR + Max P{1}	771	11	14	0	1.00	1.00	1.00	1.00	23a	SUST	323	20000
	TR:Amb to T1{1}	52	347	22	0	1.00	1.00	1.00	1.00	(17)	DISP	1313	30000
	Amb to T1{1}	52	347	22	0	1.00	1.00	1.00	1.00	(17)	DISP	1313	30000
D08 F+	Max P{1}									(3a)	HOOP	661	20000
	GR + Max P{1}	771	15	11	0	1.00	1.00	1.00	1.00	23a	SUST	323	20000
	TR:Amb to T1{1}	52	18	347	0	1.00	1.00	1.00	1.00	(17)	DISP	1313	30000
	Amb to T1{1}	52	18	347	0	1.00	1.00	1.00	1.00	(17)	DISP	1313	30000
D15	Max P{1}									(3a)	HOOP	661	20000
	GR + Max P{1}	771	28	10	0	1.00	1.00	1.00	1.00	23a	SUST	367	20000
	TR:Amb to T1{1}	52	22	307	0	1.00	1.00	1.00	1.00	(17)	DISP	1164	30000
	Amb to T1{1}	52	22	307	0	1.00	1.00	1.00	1.00	(17)	DISP	1164	30000
D18 -	Max P{1}									(3a)	HOOP	661	20000
	GR + Max P{1}	771	31	4	0	1.00	1.00	1.00	1.00	23a	SUST	374	20000
	TR:Amb to T1{1}	52	1	146	0	1.00	1.00	1.00	1.00	(17)	DISP	561	30000
	Amb to T1{1}	52	1	146	0	1.00	1.00	1.00	1.00	(17)	DISP	561	30000
D18 +	Max P{1}									(3a)	HOOP	661	20000
	GR + Max P{1}	771	31	4	0	1.00	1.00	1.00	1.00	23a	SUST	374	20000
	TR:Amb to T1{1}	27	1	146	0	1.00	1.00	1.00	1.00	(17)	DISP	553	30000
	Amb to T1{1}	27	1	146	0	1.00	1.00	1.00	1.00	(17)	DISP	553	30000
D16	Max P{1}									(3a)	HOOP	661	20000
	GR + Max P{1}	771	23	2	0	1.00	1.00	1.00	1.00	23a	SUST	341	20000
	TR:Amb to T1{1}	27	16	349	0	1.00	1.00	1.00	1.00	(17)	DISP	1312	30000
	Amb to T1{1}	27	16	349	0	1.00	1.00	1.00	1.00	(17)	DISP	1312	30000
D12 N-	Max P{1}									(3a)	HOOP	661	20000
	GR + Max P{1}	771	11	3	0	1.00	1.00	1.00	1.00	23a	SUST	296	20000
	TR:Amb to T1{1}	27	13	367	1	1.00	1.00	1.00	1.00	(17)	DISP	1379	30000
	Amb to T1{1}	27	13	367	1	1.00	1.00	1.00	1.00	(17)	DISP	1379	30000
D12 N+	Max P{1}									(3a)	HOOP	661	20000
	GR + Max P{1}	771	3	11	0	1.00	1.00	1.00	1.00	23a	SUST	296	20000
	TR:Amb to T1{1}	27	367	18	1	1.00	1.00	1.00	1.00	(17)	DISP	1379	30000
	Amb to T1{1}	27	367	18	1	1.00	1.00	1.00	1.00	(17)	DISP	1379	30000
D12 F-	Max P{1}									(3a)	HOOP	661	20000
	GR + Max P{1}	771	7	33	2	1.00	1.00	1.00	1.00	23a	SUST	383	20000
	TR:Amb to T1{1}	36	394	18	1	1.00	1.00	1.00	1.00	(17)	DISP	1485	30000
	Amb to T1{1}	36	394	18	1	1.00	1.00	1.00	1.00	(17)	DISP	1485	30000
D12 F+	Max P{1}									(3a)	HOOP	661	20000
	GR + Max P{1}	771	33	6	2	1.00	1.00	1.00	1.00	23a	SUST	383	20000
	TR:Amb to T1{1}	36	13	395	1	1.00	1.00	1.00	1.00	(17)	DISP	1485	30000
	Amb to T1{1}	36	13	395	1	1.00	1.00	1.00	1.00	(17)	DISP	1485	30000

ASME B31.3 (2016) CODE COMPLIANCE
(Moments in ft-lb , Force in lbf) (Stress in psi)

Point name	Load combination	Axial Force	In-Pl. Moment	Out-Pl. Moment	Torsion Moment	S.I.F In	S.I.F Out	Index/SIF Ax.	Index/SIF Tor.	Eq. no.	Load type	Code Stress	Code Allow.
D19	Max P{1}									(3a)	HOOP	661	20000
	GR + Max P{1}	771	49	6	2	1.00	1.00	1.00	1.00	23a	SUST	445	20000
	TR:Amb to T1{1}	36	17	381	1	1.00	1.00	1.00	1.00	(17)	DISP	1436	30000
	Amb to T1{1}	36	17	381	1	1.00	1.00	1.00	1.00	(17)	DISP	1436	30000
D25 -	Max P{1}									(3a)	HOOP	661	20000
	GR + Max P{1}	772	83	7	2	1.00	1.00	1.00	1.00	23a	SUST	575	20000
	TR:Amb to T1{1}	36	1	145	0	1.00	1.00	1.00	1.00	(17)	DISP	552	30000
	Amb to T1{1}	36	1	145	0	1.00	1.00	1.00	1.00	(17)	DISP	552	30000
D25 +	Max P{1}									(3a)	HOOP	661	20000
	GR + Max P{1}	771	83	7	2	1.00	1.00	1.00	1.00	23a	SUST	575	20000
	TR:Amb to T1{1}	55	1	145	0	1.00	1.00	1.00	1.00	(17)	DISP	558	30000
	Amb to T1{1}	55	1	145	0	1.00	1.00	1.00	1.00	(17)	DISP	558	30000
D20	Max P{1}									(3a)	HOOP	661	20000
	GR + Max P{1}	772	45	7	2	1.00	1.00	1.00	1.00	23a	SUST	431	20000
	TR:Amb to T1{1}	55	14	336	0	1.00	1.00	1.00	1.00	(17)	DISP	1272	30000
	Amb to T1{1}	55	14	336	0	1.00	1.00	1.00	1.00	(17)	DISP	1272	30000
D17 N-	Max P{1}									(3a)	HOOP	661	20000
	GR + Max P{1}	772	30	7	2	1.00	1.00	1.00	1.00	23a	SUST	372	20000
	TR:Amb to T1{1}	55	11	363	0	1.00	1.00	1.00	1.00	(17)	DISP	1373	30000
	Amb to T1{1}	55	11	363	0	1.00	1.00	1.00	1.00	(17)	DISP	1373	30000
D17 N+	Max P{1}									(3a)	HOOP	661	20000
	GR + Max P{1}	772	7	30	2	1.00	1.00	1.00	1.00	23a	SUST	372	20000
	TR:Amb to T1{1}	55	363	13	0	1.00	1.00	1.00	1.00	(17)	DISP	1373	30000
	Amb to T1{1}	55	363	13	0	1.00	1.00	1.00	1.00	(17)	DISP	1373	30000
D17 F-	Max P{1}									(3a)	HOOP	661	20000
	GR + Max P{1}	772	4	15	1	1.00	1.00	1.00	1.00	23a	SUST	313	20000
	TR:Amb to T1{1}	54	362	15	2	1.00	1.00	1.00	1.00	(17)	DISP	1368	30000
	Amb to T1{1}	54	362	15	2	1.00	1.00	1.00	1.00	(17)	DISP	1368	30000
D17 F+	Max P{1}									(3a)	HOOP	661	20000
	GR + Max P{1}	772	15	4	1	1.00	1.00	1.00	1.00	23a	SUST	313	20000
	TR:Amb to T1{1}	54	11	362	2	1.00	1.00	1.00	1.00	(17)	DISP	1368	30000
	Amb to T1{1}	54	11	362	2	1.00	1.00	1.00	1.00	(17)	DISP	1368	30000
D26	Max P{1}									(3a)	HOOP	661	20000
	GR + Max P{1}	772	27	4	1	1.00	1.00	1.00	1.00	23a	SUST	361	20000
	TR:Amb to T1{1}	54	14	334	2	1.00	1.00	1.00	1.00	(17)	DISP	1267	30000
	Amb to T1{1}	54	14	334	2	1.00	1.00	1.00	1.00	(17)	DISP	1267	30000
D28 -	Max P{1}									(3a)	HOOP	661	20000
	GR + Max P{1}	772	50	2	1	1.00	1.00	1.00	1.00	23a	SUST	446	20000
	TR:Amb to T1{1}	54	7	44	3	1.00	1.00	1.00	1.00	(17)	DISP	185	30000
	Amb to T1{1}	54	7	44	3	1.00	1.00	1.00	1.00	(17)	DISP	185	30000

ASME B31.3 (2016) CODE COMPLIANCE
(Moments in ft-lb , Force in lbf) (Stress in psi)

Point name	Load combination	Axial Force	In-Pl. Moment	Out-Pl. Moment	Torsion Moment	S.I.F In	S.I.F Out	Index/SIF Ax.	Index/SIF Tor.	Eq. no.	Load type	Code Stress	Code Allow.
D28	+ Max P{1}									(3a)	HOOP	661	20000
	GR + Max P{1}	772	50	2	1	1.00	1.00	1.00	1.00	23a	SUST	446	20000
	TR:Amb to T1{1}	111	7	44	3	1.00	1.00	1.00	1.00	(17)	DISP	203	30000
	Amb to T1{1}	111	7	44	3	1.00	1.00	1.00	1.00	(17)	DISP	203	30000
D27	- Max P{1}									(3a)	HOOP	661	20000
	GR + Max P{1}	772	32	9	1	1.00	1.00	1.00	1.00	23a	SUST	381	20000
	TR:Amb to T1{1}	111	3	164	3	1.00	1.00	1.00	1.00	(17)	DISP	647	30000
	Amb to T1{1}	111	3	164	3	1.00	1.00	1.00	1.00	(17)	DISP	647	30000
D27	+ Max P{1}									(3a)	HOOP	661	20000
	GR + Max P{1}	772	32	9	1	1.00	1.00	1.00	1.00	23a	SUST	381	20000
	TR:Amb to T1{1}	158	3	164	2	1.00	1.00	1.00	1.00	(17)	DISP	662	30000
	Amb to T1{1}	158	3	164	2	1.00	1.00	1.00	1.00	(17)	DISP	662	30000
D21	Max P{1}									(3a)	HOOP	661	20000
	GR + Max P{1}	772	4	11	1	1.00	1.00	1.00	1.00	23a	SUST	300	20000
	TR:Amb to T1{1}	158	1	177	2	1.00	1.00	1.00	1.00	(17)	DISP	711	30000
	Amb to T1{1}	158	1	177	2	1.00	1.00	1.00	1.00	(17)	DISP	711	30000
D22	Max P{1}									(3a)	HOOP	661	20000
	GR + Max P{1}	772	6	12	1	1.00	1.00	1.00	1.00	23a	SUST	307	20000
	TR:Amb to T1{1}	158	1	182	2	1.00	1.00	1.00	1.00	(17)	DISP	728	30000
	Amb to T1{1}	158	1	182	2	1.00	1.00	1.00	1.00	(17)	DISP	728	30000

*** Segment D end ***

R E S U L T S U M M A R Y

Maximum restraint forces (lb)

Maximum X :	-313	Point : B03	Load Comb.: GT1{1}
Maximum Y :	-271	Point : B23	Load Comb.: GT1{1}
Maximum Z :	-748	Point : B62	Load Comb.: GT1P1{1}
Max. total:	784	Point : B62	Load Comb.: GT1P1{1}

Maximum restraint moments (ft-lb)

Maximum X :	-97	Point : B03	Load Comb.: GT1P1{1}
Maximum Y :	5285	Point : B62	Load Comb.: GT1P1{1}
Maximum Z :	57	Point : B62	Load Comb.: GT1P1{1}
Max. total:	5286	Point : B62	Load Comb.: GT1P1{1}

R E S U L T S U M M A R Y

Maximum sustained stress

Point : C03
Stress psi : 866
Allowable psi : 20000
Ratio : 0.04
Load combination : GR + Max P{1}

Maximum displacement stress

Point : B62
Stress psi : 7341
Allowable psi : 30000
Ratio : 0.24
Load combination : Max Range

Maximum hoop stress

Point : B03
Stress psi : 822
Allowable psi : 20000
Ratio : 0.04
Load combination : Max P{1}

R E S U L T S U M M A R Y

Maximum sustained stress ratio

```
Point            : C03
Stress    psi    : 866
Allowable psi    : 20000
Ratio            : 0.04
Load combination : GR + Max P{1}
```

Maximum displacement stress ratio

```
Point            : B62
Stress    psi    : 7341
Allowable psi    : 30000
Ratio            : 0.24
Load combination : Max Range
```

Maximum hoop stress ratio

```
Point            : B03
Stress    psi    : 822
Allowable psi    : 20000
Ratio            : 0.04
Load combination : Max P{1}
```

* * * The system satisfies ASME B31.3 (2016) code requirements * * *
* * * for the selected options * * *

APPENDIX E

****NOT USED****

APPENDIX F

****NOT USED****

APPENDIX G1

FLUID MOMENTUM LOADS AT PUMP STARTUP

Fluid Momentum Loads

Startup of a transfer pump and transfer line flushes will both create fluid momentum loads in the transfer line piping. As the pipe is filled with fluid, there will be loads placed on pipe turns as the slug flow changes direction. The magnitude of the load is a function of the fluid mass, flow rate, and velocity. The flow rate of a flush from the AP service water building is limited to 40 gpm, as required by RPP-RPT-58773 Appendix D, requirement D10. The maximum flow rate from the pump will be significantly higher and with denser fluids, therefore the fluid momentum loads from the pump are higher (bounding) than from a transfer line flush. The maximum pump flow rate recorded by the manufacturer is 286 gpm (see Attachment 1). Conservatively assuming an instantaneous pump flow initiation, zero flow to maximum flow, the fluid momentum load on a change in flow direction can be calculated as:

$$F = \frac{\partial M}{\partial t} * V$$

$$\frac{\partial M}{\partial t} = \rho * A * V$$

Therefore,

$$F = \rho * A * V^2$$

Where:

F = Force

ρ = Density (62.4 lbm/ft^3 x 1.6 = 99.84 lbm/ft^3)

A = Area of Pipe (3-inch)

V = Velocity (286 gallons-per minute in 3-inch schedule 40 pipe)

$$V = \frac{286\frac{gal}{min}}{\frac{\pi(3.068\ in)^2}{4}}\left(231\frac{in^3}{gal}\right)\left(\frac{1\ min}{60\ sec}\right)\left(\frac{1\ ft}{12\ in}\right) = 12.41\frac{ft}{sec}$$

$$F = \frac{99.84\frac{lbm}{ft^3} * \pi * \frac{(3.068\ in)^2}{4} * (12.41\frac{ft}{sec})^2}{32.2\frac{lbm * ft}{lbf * sec^2} * 144\frac{in^2}{ft^2}} = 24.5\ lbf$$

The dynamic force of less than 25 pounds acting on a change in flow direction (elbow) during pump startup, pump shutdown, or transfer line flush is small compared to the mass of the piping system and other occasional loads on the pipe. Fluid momentum loads resulting from a pump start, pump shutdown, or transfer line flush are insignificant, bound by other occasional loads, and do not require further analysis.

Attachment 1

Manufacturer Data

HiLine Engineering & Fabrication, Inc.

HEF Curve #	0
Stages	4
Submergence (ft)	1
Pump Length (ft)	46
Bowl Length (ft)	3.33
Tank Press (psia)	14.277

At Exit of Bowl Assembly - Water		HEF-0 Curve Column loss (estimated)
Flow (gpm)	head (ft)	head (ft)
285.6	85	32
273.9	94	31
261.7	103	29
248.9	112	28
234.6	121	26
218.7	130	24
201.9	139	21
182.6	148	19
161.2	157	16
135.9	166	13
106.5	175	9
71.5	184	5
31.7	193	2
0	200	0

APPENDIX G2

CALCULATION OF SEISMIC MULTIPLIERS

Seismic Multipliers

ASME B31.3 requires earthquake loads to be taken into account as described in ASCE 7. The objective of this calculation is to determine the seismic multipliers for input to the AutoPIPE analysis. This analysis was performed per TFC-ENG-STD-06 to SDC-2 criteria in accordance with Section 3.5.5.1. The component response modification factor is modified for limit state C in accordance with TFC-ENG-STD-06, Table 6 (see Attachment 1 of this Appendix). $R_p/1.2 = 6.0/1.2 = 5.0$.

In accordance with ASCE 7, Equation 13.3-1 the seismic force is determined using the following equation:

$$F_p = \frac{0.4 a_p S_{DS} W_p}{\frac{R_p}{I_P}} (1 + 2\frac{z}{h})$$

Where:

F_p= Seismic design force

a_p= Component amplification factor (2.5)

S_{DS}= Seismic response spectra (0.588)

W_p= Component operating weight

R_p= Component response modification factor modified for limit state C (5.0)

I_p= Importance factor (1.5)

z= Maximum elevation with respect to grade

h= Average height of structure with respect to the base

Modifying the equation to solve for a seismic multiplier and given that the attachments are in the same horizontal plane of the piping ("z" is set to zero):

$$F_{multiplier} = \frac{0.4 a_p I_P S_{DS}}{R_p}$$

$$F_{multiplier} = \frac{0.4(2.5)(1.5)(0.588)}{5.0} = 0.176$$

Equations 13-3-2 and 13-3-3, from ASCE 7 for seismic force *not less than/not greater than* respectively, are reduced to provide a multiplier rather than a force. These bounding multipliers become:

$$F_p^{Greater} = 1.6 S_{DS} I_P = 1.6(0.588)(1.5) = 1.411$$

$$F_p^{Less} = 0.3 S_{DS} I_P = 0.3(0.588)(1.5) = 0.265$$

Therefore the value of $F_p = 0.265$ will be used as the seismic multiplier for the horizontal design force.

The concurrent vertical force seismic multiplier as defined in ASCE 7 Section 13.3.1 is determined using the following equation:

$$F_{Vmultiplier} = \pm 0.2 S_{DS} = \pm 0.2(0.588) = \pm 0.118$$

Since the allowable stress design method is being used the seismic load shall be multiplied by 0.7 (ASCE 7, Section 13.1.7), the seismic multipliers are therefore

$$F_{P\ horizontal} = 0.265(0.7) = 0.186$$

$$P_{P\ vertical} = 0.118(0.7) = 0.083$$

Attachment 1.

Email to Jason Engeman providing direction to modify R_p for Limit State C

James P. Harrington

To: Engeman, Jason K
Subject: RE: ASME B31.3 Calculation Comments

From: Langevin, Ann S <ann_s_langevin@rl.gov>
Sent: Thursday, March 12, 2020 2:51 PM
To: Engeman, Jason K <jason_k_engeman@rl.gov>
Cc: Scott, Mark A <mark_a_scott@rl.gov>
Subject: RE: ASME B31.3 Calculation Comments

Jason
As noted in the waiver, Rp needs to be modified in the same way that R is modified for Limit State. They have essentially the same definition in ASCE 7 as follows:

> *R* = response modification coefficient as given in Tables 12.2-1, 12.14-1, 15.4-1, and 15.4-2
>
> *Rp* = component response modification factor that varies from 1.00 to 12 (select appropriate value from Table 13.5-1 or 13.6-1)

Thanks

Ann Langevin, P.E.
Phone: (509) 376-2236
Cell: (509) 554-6852
Office: Room B-132/2620 Fermi Bldg
Ann_S_Langevin@rl.gov

APPENDIX H

PIPING TO KICK PLATE WELD ANALYSES

The loads/reactions on the welds are taken from the AutoPIPE results using the highest absolute value on any given node or member associated with each weld group.

A "weld as a line" method of weld analysis will be used. This process is used to evaluate the area of the weld as a line and determine the weld size from the results. The square root of the sum of the squares of the resultant stresses in the primary directions (X, Y & Z) is found, providing the resultant stress to evaluate the weld group. A byproduct of the weld as a line process is a missing dimension (in); for instance, area will have units of inches and moment of inertia will have units of in^3. Refer to Blodgett's for weld as a line methodology.

Allowable weld stress for carbon steel is 0.3*UTSweld filler or 0.4*YSbase metal per AWS D1.1 Table 2.3.
Allowable weld stress for stainless steel is 0.3*UTSweld filler or 0.4*YSbase metal per AWS D1.6 Table 2.1.

Weld filler metal is 70ksi ultimate tensile strength per AWS D1.6, Table 3.3.

Define values used repetitively, (F_w)

		$= UTS_{weldfiller}$ =	**70000**	psi
Fillet weld, max allowable stress		$= 0.3 * UTS_{weldfiller}$ =	21000	psi
Stainless steel A312 TP 316L yield strength, minimum	A312	$= YS_{basemetal}$ =	**25000**	psi
Weld, max allowable stress		$= 0.4 * YS_{basemetal}$ =	10000	psi
Carbon steel A36 yield strength, minimum	A36	$= YS_{basemetal}$ =	**36000**	psi
Weld, max allowable stress		$= 0.4 * YS_{basemetal}$ =	14400	psi

Use base metal allowable for weld max allowable.

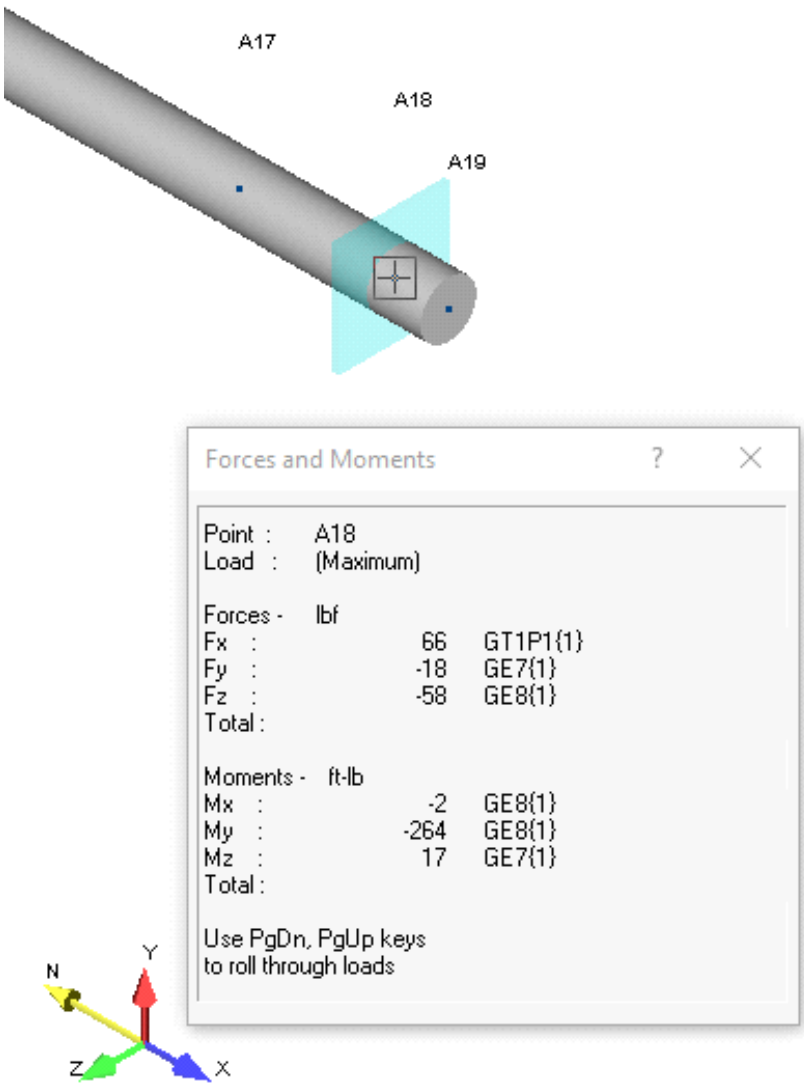

Figure 1. 2-Inch Diameter Pipe Weld Attachment at Point A18.

The Autopipe restraint results at Point A18 are as follows:

$F_x := 66\text{lbf}$ $F_y := -18\text{lbf}$ $F_z := -58\text{lbf}$ $M_x := -2\text{ft}\cdot\text{lbf}$ $M_y := -264\text{ft}\cdot\text{lbf}$ $M_z := 17\text{ft}\cdot\text{lbf}$

Evaluate bevel weld of primary piping to kick plate

W1
Kick Plate

There are 6 total locations of this weld; Point A02, A18, C03, C70, D01 and D22. The worst case has been evaluated for adequacy.
An equivalent weld size is used in this calculation based on the pipe thickness (Sch 40, 0.154") and the total length of weld.

Weld Group Diagram

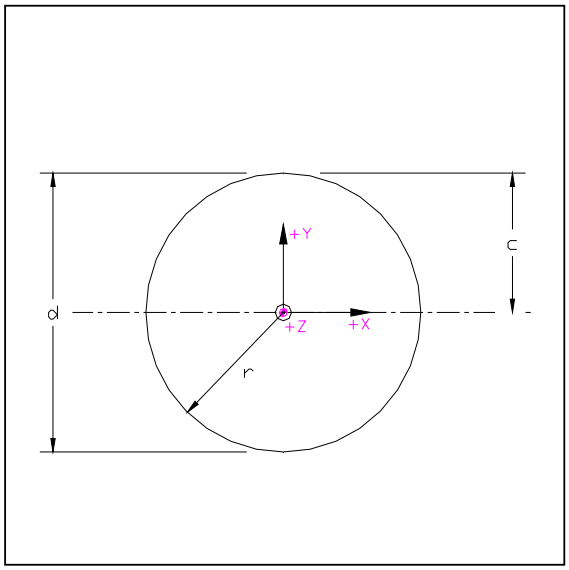

d=	Diameter	d=	2.375 in
c=	Center of gravity	r=	1.1875 in
r=	Radius	c=	1.1875 in
S_w=	Section modulus	S_w=	4.43 in^2
J_w=	Polar moment of inertia	J_w=	10.5216 in^3
A_w=	Area of weld	A_w=	7.46 in

c= d/2
S_w= π*d^2/4
J_w= π*d^3/4

A_w= 2*π*r

Determine resultant stress on weld group

Input from AutoPIPE									
Loads from AutoPIPE, transposed as necessary to align with weld group coordinate system			**Node**	**From Direction**	**Section**	**Stress** (lb/in)	**Basis**	**Influenced Direction**	**Resultant Stress, SRSS** (lb/in)
Px=	58	lbs.	A18	z	N/A	7.8	P_x/A_w	X	**72.8**
Py=	18	lbs.	A18	y	N/A	2.4	P_y/A_w	Y	
Pz=	66	lbs.	A18	x	N/A	8.8	P_z/A_w	Z	
Mz_x=	2	in-lbs.	A18	mx	N/A	0.5	Mc/J_w	Z	
Mz_y=	2	in-lbs.	A18	mx	N/A	0.5	Mc/J_w	Z	
Mx=	17	in-lbs.	A18	mz	N/A	3.8	Mx/S_w	X	
My=	264	in-lbs.	A18	my	N/A	59.6	My/S_w	Y	

Determine minimum allowable weld size (W)

$\sigma_r = (0.707)\ (W)\ (F_w)$ Solve for W: $W = (\sigma_r)/\ (0.707Fw) =$ 0.010 in

The 0.154 inch weld is adequate

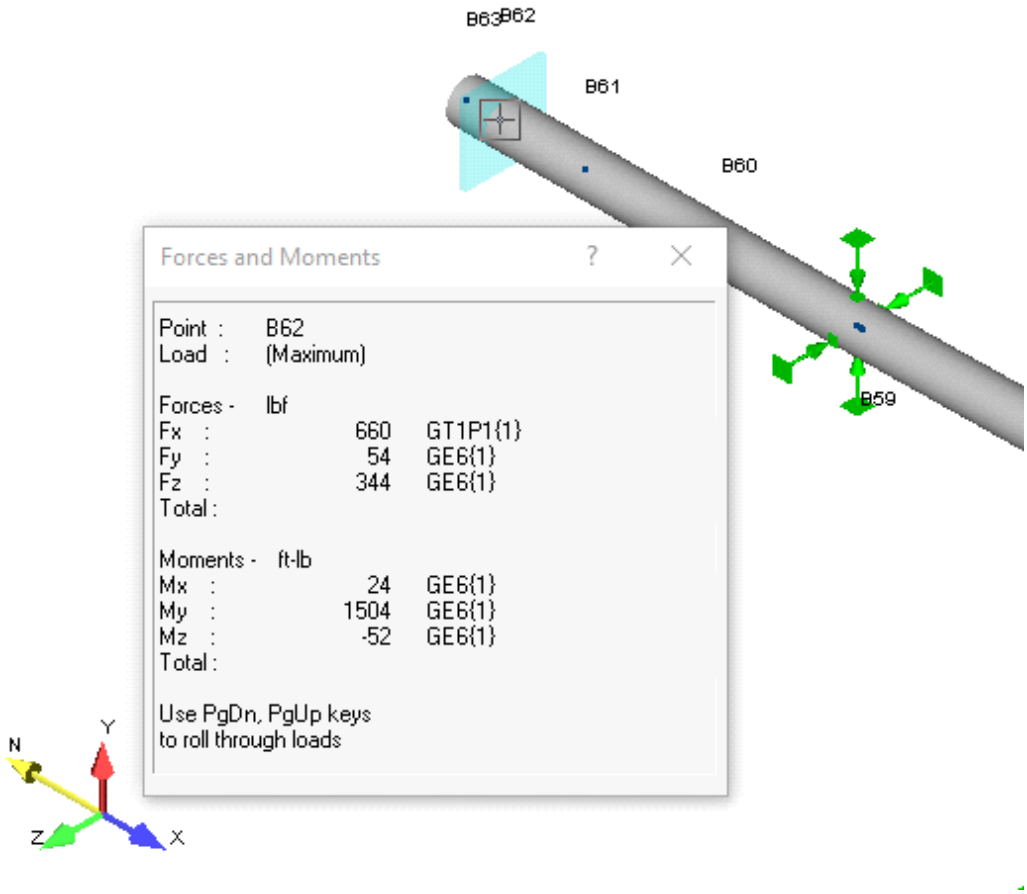

Figure 2. 3-Inch Diameter Pipe Weld Attachment at Point B62.

The Autopipe beam results at Point B62 are as follows:

$F_x := 660\text{lbf}$ $F_y := 54\text{lbf}$ $F_z := 344\text{lbf}$ $M_x := 24\text{ft}\cdot\text{lbf}$ $M_y := 1504\text{ft}\cdot\text{lbf}$ $M_z := -52\text{ft}\cdot\text{lbf}$

Evaluate bevel weld of encasement piping to kick plate

W2
Kick Plate

There are 2 total locations of this weld; Point B03 and Point B62. The worst case has been evaluated for adequacy.

An equivalent weld size is used in this calculation based on the pipe thickness (Sch 40, 0.216") and the total length of weld.

Weld Group Diagram

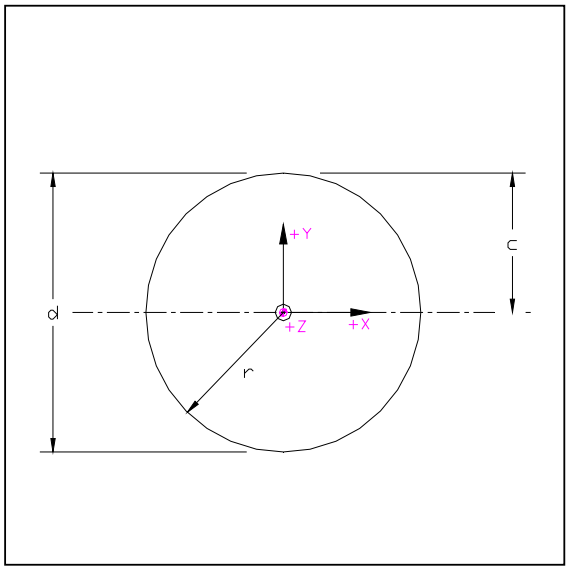

d=	Diameter	d=	3.5 in
c=	Center of gravity	r=	1.75 in
r=	Radius	c=	1.75 in
S_w=	Section modulus	S_w=	9.62 in^2
J_w=	Polar moment of inertia	J_w=	33.6739 in^3
A_w=	Area of weld	A_w=	11.00 in

c= d/2

S_w= π*d^2/4

J_w= π*d^3/4

A_w= 2*π*r

Determine resultant stress on weld group

Input from AutoPIPE									
Loads from AutoPIPE, transposed as necessary to align with weld group coordinate system			**Node**	**From Direction**	**Section**	**Stress** (lb/in)	**Basis**	**Influenced Direction**	**Resultant Stress, SRSS** (lb/in)
Px=	344	lbs.	B62	z	N/A	31.3	P_x/A_w	X	**224.4**
Py=	54	lbs.	B62	y	N/A	4.9	P_y/A_w	Y	
Pz=	660	lbs.	B62	x	N/A	60.0	P_z/A_w	Z	
Mz_x=	24	in-lbs.	B62	mx	N/A	2.5	Mc/J_w	Z	
Mz_y=	24	in-lbs.	B62	mx	N/A	2.5	Mc/J_w	Z	
Mx=	52	in-lbs.	B62	mz	N/A	5.4	Mx/S_w	X	
My=	1504	in-lbs.	B62	my	N/A	156.3	My/S_w	Y	

Determine minimum allowable weld size (W)

$\sigma_r = (0.707)\ (W)\ (F_w)$ Solve for W: $W = (\sigma_r)/\ (0.707Fw) =$ 0.032 in

The 0.216 inch weld is adequate

APPENDIX I1

MINIMUM HYDROSTATIC TEST PRESSURE

Minimum Hydrostatic Test Pressure

Determine the minimum hydrostatic test pressure in accordance with ASME B31.3, Section 345.4.2.

The minimum hydrostatic test pressure is determined in accordance with Section 345.4.2 (a) where the test pressure is not less than 1.5 times the design pressure and Section 345.4.2 (b) where the design temperature is greater than the test temperature. The minimum test pressure is calculated using equation 24.

$$P_T = 1.5\frac{PS_T}{S}$$ ASME B31.3, Section 345.4.2, equation 24

Where:

P = Internal design gage pressure
P_T = Minimum test gage pressure
S = allowable stress at component design temperature
S_T = allowable stress at test temperature

$P_P := 620psi$ Primary piping design Pressure

$P_E := 60psi$ Encasement piping design Pressure

Define the yield strength at room temperature for all piping components using ASME B31.3 Table A-1

$S_{Y_SS} := 25ksi$ Yield strength of ASTM A312, Type 316L, A276 and A403, Type 304L

$S_{Y_36} := 36ksi$ Yield strength of ASTM A36 and ASTM A105

$S_{Y_53} := 35ksi$ Yield strength of ASTM A53 and A106, Grade B

Define the yield strength at design temperature for all piping components using ASME BPV, Section II Pt D, Table Y-1

$F_{Y_SS} := 21.3ksi$ Yield strength at design temperature of ASTM A312, Type 316L, A276 and A403, Type 304L

$F_{Y_36} := 33ksi$ Yield strength at design temperature of ASTM A36 and ASTM A105

$F_{Y_53} := 25.8ksi$ Yield strength at design temperature of ASTM A53 and A106, Grade B

Define the allowable stress at room temperature for all piping components using ASME B31.3 Table A-1

$S_{T_SS} := 16.7ksi$ Allowable stress at test temperature of ASTM A312, Type 316L, A276 and A403, Type 304L

$S_{T_36} := 19.3ksi$ Allowable stress at test temperature of ASTM A36 and ASTM A105

$S_{T_105} := 22ksi$ Allowable stress at test temperature of ASTM A36 and ASTM A105

$S_{T_53} := 20ksi$ Allowable stress at test temperature of ASTM A53 and A106, Grade B

Determine the allowable stress at design temperature for all piping components per ASME B31.3, Table A-1

The allowable stress at design temperature listed in ASME B31.3, Table A-1 for ASTM A312, Type 316L is printed in italics. Per Table A-1 Note (4a) stress values printed in italics exceed two-thirds of the expected yield strength at temperature and are therefore determined in accordance with Section 302.3.2 (d) (3) and (e).

$$S_SS := \min\left(0.9 \cdot F_{Y_SS}, \frac{2}{3} \cdot S_{Y_SS}\right)$$

$S_SS = 16.67 \cdot ksi$ — Allowable stress at design temperature of ASTM A312, Type 316L, A276 and A403, Type 304L

$S_36 := 19.3ksi$ — Allowable stress at design temperature of ASTM A36

$S_105 := 22ksi$ — Allowable stress at design temperature of ASTM A105

$S_53 := 20ksi$ — Allowable stress at design temperature of ASTM A53 and A106, Grade B

Determine the test gage pressure at room temperature for all piping components per ASME B31.3, Section 345.4.2 (b) using equation 24

$$P_{T_SS} := 1.5 \cdot P_P \cdot \frac{S_{T_SS}}{S_SS}$$

$\boxed{P_{T_SS} = 932 \cdot psi}$ — Minimum test gage pressure for ASTM A312, Type 316L, A276 and A403, Type 304L

$$P_{T_36} := 1.5 \cdot P_E \cdot \frac{S_{T_36}}{S_36}$$

$\boxed{P_{T_36} = 90 \cdot psi}$ — Minimum test gage pressure for ASTM A36

$$P_{T_105} := 1.5 \cdot P_E \cdot \frac{S_{T_105}}{S_105}$$

$\boxed{P_{T_105} = 90 \cdot psi}$ — Minimum test gage pressure for ASTM A105

$$P_{T_53} := 1.5 \cdot P_E \cdot \frac{S_{T_53}}{S_53}$$

$\boxed{P_{T_53} = 90 \cdot psi}$ — Minimum test gage pressure for ASTM A53 and A106, Grade B

The calculated allowable stress at design temperature for ASTM A312, Type 316L, A276 and A403, Type 304L is equal to two-thirds of the yield strength at room temperature. Mathcad carries the decimal place whereas ASME B31.3, Table A-1 rounds the number to the nearest tenth. The ratio of ST to S goes to 1.0 and the minimum test gage pressure is 930 psi.

APPENDIX I2

NOZZLE CLOSURE ANALYSIS

Define pipe properties and determine minimum wall thickness for encasement closures in accordance with ASME B31.3, Section 304.4.1

Define variables

$D_6 := 6.625in$	Outside diameter of 6-inch sch 40 pipe, ASTM A53
$D_4 := 4.50in$	Outside diameter of 4-inch sch 40 pipe, ASTM A53
$t_{s6} := 0.280in$	Nominal wall thickness for 6-inch sch 40 pipe, ASTM A53
$t_{s4} := 0.237in$	Nominal wall thickness for 4-inch sch 40 pipe, ASTM A53
$d_6 := D_6 - 2t_{s6} = 6.065 \cdot in$	Inside diameter of 6-inch sch 40 pipe
$d_4 := D_4 - 2t_{s4} = 4.026 \cdot in$	Inside diameter of 4-inch sch 40 pipe
$C_r := 0.0002 \frac{in}{yr} \cdot 50yr = 0.01 \cdot in$	Corrosion allowance of 0.2 mils per year (TFC-ENG-STD-22, Section 3.5.2.1) for a 50 year design life (MT-50400, Page 20)
$P_e := 60psi$	Design Pressure for encasement pipe (MT-50400, Table 4)
$S_{A36} := 16.6ksi$	Maximum allowable stress for A36 plate at 200 °F , ASME BPV, Section II, Part D, Table 1A
$S := S_{A36} = 16.6 \cdot ksi$	Allowable stress for encasement closure plate
$\frac{D_6}{6} = 1.104 \cdot in$	D/6 for ASME B31.3, Section 304.1.1.
$\frac{D_4}{6} = 0.75 \cdot in$	D/6 for ASME B31.3, Section 304.1.1.
$E := 1$	Longitudinal weld joint quality factor, ASME B31.3, Table A-1B/ASME BPV Table UW-12
$W := 1$	Weld joint factor, ASME B31.3, para. 302.3.5(e)
$Y := 0.4$	Coefficient from ASME B3.13, Table 304.1.1
$tol := 12.5\%$	Mill tolerance, ASTM A53 and ASTM A312

Determine the pressure design thickness of the encasement pipe per ASME B31.3, para 304.1.2 for t<D/6

$t_6 := \frac{P_e \cdot d_6}{2 \cdot (S_{A36} \cdot E \cdot W + P_e \cdot Y)} = 0.011 \cdot in$ — Pressure design pipe thickness 6-inch encasement, ASME B31.3, Eq. 3a.

$c_6 := C_r + t_6 \cdot tol = 0.011 \cdot in$ — Sum of corrosion and mechanical allowances

$t_{r6} := t_6 + c_6 = 0.022 \cdot in$ — Minimum required thickness including mechanical and corrosion allowances, ASME B31.3, Equation 2

$t_4 := \frac{P_e \cdot d_4}{2 \cdot (S_{A36} \cdot E \cdot W + P_e \cdot Y)} = 0.007 \cdot in$ — Pressure design pipe thickness for 4-inch encasement, ASME B31.3, Eq. 3a.

$c_4 := C_r + t_4 \cdot tol = 0.011 \cdot in$ — Sum of corrosion and mechanical allowances

$t_{r4} := t_4 + c_4 = 0.018 \cdot in$ — Minimum required thickness including mechanical and corrosion allowances, ASME B31.3, Equation 2

$m_6 := \frac{t_{r6}}{t_{s6}} = 0.080$ — Dimensionless ratio for 6-inch encasement closure

$m_4 := \frac{t_{r4}}{t_{s4}} = 0.077$ — Dimensionless ratio for 4-inch encasement closure

$C = 0.33m$ but not less than 0.2

$C_6 := 0.33m_6 = 0.026$ — Attachment factor for 6-inch encasement closure, ASME BPV Figure UG-34, Sketch (g)

$C_4 := 0.33m_4 = 0.025$ — Attachment factor for 4-inch encasement closure, ASME BPV Figure UG-34, Sketch (g)

$C_{min} := 0.2$ — Minimum value for attachment factor

$$C := \begin{cases} \max(C_6, C_4) & \text{if } \max(C_6, C_4) \geq C_{min} \\ C_{min} & \text{otherwise} \end{cases}$$

$C = 0.2$

$$\boxed{t_{c6} := d_6 \cdot \sqrt{\frac{C \cdot P_e}{S \cdot E}} = 0.163 \cdot in}$$

Minimum design thickness of 6-inch encasement closure plate, ASME BPV UG-34 Equation 1

$T_6 := 0.5in$ — 6-inch encasement closure plate thickness (H-14-111832 and H-14-111833)

$$\boxed{t_{c4} := d_4 \cdot \sqrt{\frac{C \cdot P_e}{S \cdot E}} = 0.108 \cdot in}$$

Minimum design thickness of 4-inch encasement closure plate, ASME BPV UG-34 Equation 1

$T_4 := 0.375in$

4-inch encasement closure plate thickness (H-14-111832 and H-14-111833)

$$DR_6 := \frac{T_6}{t_{c6}} = 3.07$$

Design ratio for 6-inch encasement closure plate thickness

$$DR_4 := \frac{T_4}{t_{c4}} = 3.46$$

Design ratio for 4-inch encasement closure plate thickness

Determine the minimum weld size between the encasement pipe and the closure plate in accordance with ASME BPV UG-34.

Per Figure UG-34, Sketch (g): Tw = 2tr min. Nor less than 1.2ts but need not be greater than t.

$$t_{w6} := \begin{cases} t_{c6} & \text{if } \max(2t_{r6}, 1.2t_{s6}) \geq t_6 \\ \max(2t_{r6}, 1.2t_{s6}) & \text{otherwise} \end{cases}$$

$$\boxed{t_{w6} = 0.163 \cdot in}$$

Minimum thickness of weld between 6-inch encasement pipe and closure plate

$T_{w6} := 0.280in$

6-inch encasement closure plate weld thickness (H-14-111832 and H-14-111833)

$$t_{w4} := \begin{cases} t_{c4} & \text{if } \max(2t_{r4}, 1.2t_{s4}) \geq t_4 \\ \max(2t_{r4}, 1.2t_{s4}) & \text{otherwise} \end{cases}$$

$$\boxed{t_{w4} = 0.108 \cdot in}$$

Minimum thickness of weld between 4-inch encasement pipe and closure plate

$T_{w4} := 0.237in$

4-inch encasement closure plate weld thickness (H-14-111832 and H-14-111833)

$$DR_{w6} := \frac{T_{w6}}{t_{w6}} = 1.72$$

Design ratio for 6-inch encasement closure plate weld

$$DR_{w4} := \frac{T_{w4}}{t_{w4}} = 2.19$$

Design ratio for 4-inch encasement closure plate weld

APPENDIX I3

PIPE SUPPORT ANALYSIS

Check Pipe Supports (H-14-111862, Item 20) in Flexure and Shear

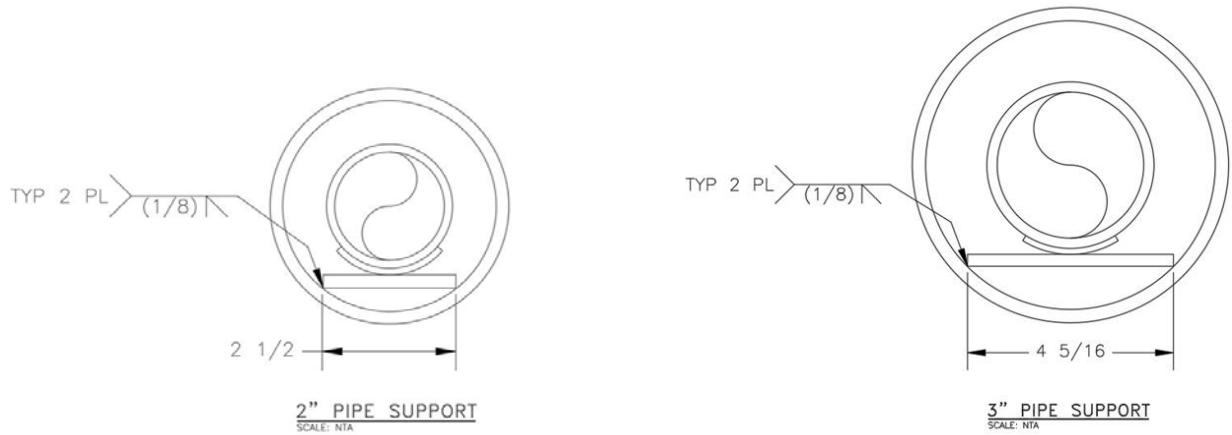

Figure 1. Pipe Supports, H-14-111862, Item 20

Steel Beam Design Per AISC 14th Edition, Chapter F- Design of Members for Flexure, Section F11

Section F11 applies to rectangular bars bent about either *geometric axis* and rounds.

Inputs:

$P_{Y2} := 68lbf$	Maximum vertical load on 2-inch pipe support (Appendix D3, Point A29)
$P_{A2} := 44lbf$	Maximum axial load on 2-inch pipe support (Appendix D3, Point A63)
$P_{Y3} := 175lbf$	Maximum vertical load on 3-inch pipe support (Appendix D3, Point B25)
$P_{A3} := 108lbf$	Maximum axial load on 3-inch pipe support (Appendix D3, Point B25)
$t_p := 0.25 \cdot in$	Thickness of support plate
$d := 3in$	Width of support plate
$A := t_p \cdot d = 0.75 \cdot in^2$	Area of suport plate
$L_{b2} := 2.5in$	Laterally unbraced length of 2-inch pipe support
$L_{b3} := 4.3125in$	Laterally unbraced length of 3-inch pipe support
$S_x := \frac{d \cdot t_p^2}{6} = 0.031 \cdot in^3$	Elastic section modulus taken about the major axis
$Z_x := \frac{d \cdot t_p^2}{4} = 0.047 \cdot in^3$	Plastic section modulus about the major axis

$F_y := 25ksi$ — Minimum yield strength of ASTM A240, Type 316L, ASTM A240

$F_u := 70ksi$ — Ultimate strength of ASTM A240, Type 316L, ASTM A240

$\Omega_b := 1.67$ — Safety factor for flexure, AISC 14th, pg 16.1-46

The *nominal flexural strength, M_n,* shall be the lower value obtained according to the *limit states* of *yielding* (*plastic moment*), as required.

Yielding:

$M_y := F_y \cdot S_x \qquad M_y = 0.78 \cdot kip \cdot in$ — Yield moment about the axis of bending

$$M_p := \left| \begin{array}{l} M \leftarrow 1.6M_y \\ M \quad \text{if} \quad F_y \cdot Z_x > 1.6M_y \\ F_y \cdot Z_x \quad \text{otherwise} \end{array} \right.$$

$M_p = 1.172 \cdot kip \cdot in$ — Plastic bending moment, AISC 14th, Equation F11-1, pg 16.1-63

$M_{n_yield} := M_p = 1.172 \cdot kip \cdot in$ — Nominal flexural moment according to the limit states of plastic moment, AISC 14th, Equation F11-1, pg 16.1-63

Note: For rounds and rectangular bars bent about their minor axis, the limit state of lateral-torsional buckling need not be considered.

Determine bending moment when treated as a simply supported beam with a concentrated load in the center.

$$\frac{M_{n_yield}}{\Omega_b} = 0.70 \cdot kip \cdot in$$ — Allowable flexural strength, AISC 14th, pg 16.1-46

$$M_{max2} := \frac{P_{Y2} \cdot L_{b2}}{4} = 0.043 \cdot kip \cdot in$$ — Maximum moment on 2-inch pipe support, AISC 14th, Table 3-23, Case 7

$$M_{max3} := \frac{P_{Y3} \cdot L_{b3}}{4} = 0.189 \cdot kip \cdot in$$ — Maximum moment on 3-inch pipe support, AISC 14th, Table 3-23, Case 7

$$\boxed{DR_2 := \frac{\frac{M_{n_yield}}{\Omega_b}}{M_{max2}} = 16.51}$$ — Design ratio > 1.0, OK

$$\boxed{DR_3 := \frac{\frac{M_{n_yield}}{\Omega_b}}{M_{max3}} = 3.72}$$ — Design ratio > 1.0, OK

Steel Beam Design Per AISC 14th Edition, Chapter G - Design of Members for Shear, Section G2

Section G2 applies to webs of singly or doubly symmetric members and channels subject to shear in the plane of the web.

$\Omega_v := 1.67$ — Safety factor for shear, AISC 14th, pg 16.1-67

$C_v := 1.0$ — Web shear coefficient, AISC 14th, pg 16.1-68

The *nominal shear strength, V_n,* of unstiffened or stiffened webs, according to the *limit states* of *shear yielding* and *shear buckling,* is:

$V_n := 0.6 \cdot F_y \cdot A \cdot C_v = 11.25 \cdot kip$ — Nominal shear strength, AISC 14th, Equation G2-1, pg 16.1-67

$\frac{V_n}{\Omega_v} = 6.74 \cdot kip$ — Allowable shear strength, AISC 14th, pg 16.1-67

$V_{max2} := \frac{P_{Y2}}{2} = 0.034 \cdot kip$ — Required shear strength of 2-inch pipe support

$V_{max3} := \frac{P_{Y3}}{2} = 0.088 \cdot kip$ — Required shear strength of 3-inch pipe support

$DR_2 := \frac{\frac{V_n}{\Omega_v}}{V_{max2}} = 198.13$ — Design ratio > 1.0, OK

$DR_3 := \frac{\frac{V_n}{\Omega_v}}{V_{max3}} = 76.99$ — Design ratio > 1.0, OK

Check Pipe Support Welds:

$d_{weld1} := d = 3 \cdot in$ — Depth of weld

$A_{w1} := d_{weld1} = 3 \cdot in$ — Area of weld (or length per Blodgett)

$S_{w1} := \frac{d_{weld1}^2}{6} = 1.5 \cdot in^2$ — Per Blodgett, Table 4, Page 6.3-3

$f_2 := \frac{P_{Y2}}{A_{w1}} + \frac{M_{max2}}{S_{w1}} = 51 \cdot \frac{lbf}{in}$ — Force on 2-inch pipe support weld due to combined shear and bending

$f_3 := \frac{P_{Y3}}{A_{w1}} + \frac{M_{max3}}{S_{w1}} = 184.1 \cdot \frac{lbf}{in}$ — Force on 3-inch pipe support weld due to combined shear and bending

Check weld per AISC 14th, Table J2.5:

$D_1 := \frac{1}{8}in$ — Weld size

$F_{EXX} := 70ksi$ — Minimum ultimate strength of weld material, AWS D1.6, Table 3.3

$\Omega_w := 2.00$ — Safety factor, AISC 14th, pg. 16.1-115

$R_{nw1} := 0.6 \cdot F_{EXX} \cdot \frac{\sqrt{2}}{2} \cdot D_1 = 3712 \cdot \frac{lbf}{in}$ — Available strength of weld per linear inch AISC 14th, pg. 16.1-115

$\frac{R_{nw1}}{\Omega_w} = 1856 \cdot \frac{lbf}{in}$ — Available design strength of weld per linear inch

$t_{plate1} := 0.25in$ — Thickness of plate

$A_{gv1} := t_{plate1} \cdot d_{weld1} = 0.75 \cdot in^2$ — Gross area subject to shear

$\Omega_{wg} := 1.50$ — Safety factor based on gross area, AISC 14th, pg. 16.1-129

$R_{nbg1} := 0.60 \cdot F_y \cdot A_{gv1} = 11250\ lbf$ — Available design shear strength of base plate (gross area)

$A_{nv1} := A_{gv1} = 0.75 \cdot in^2$ — Net area subject to shear

$\Omega_{wn} := 2.00$ — Safety factor based on net area, AISC 14th, pg. 16.1-129

$R_{nbn1} := 0.60 \cdot F_u \cdot A_{nv1} = 31500\ lbf$ — Available design shear strength of base plate (net area)

$$R_{nb1} := \min\left(\frac{R_{nw1}}{\Omega_w}, \frac{R_{nbg1}}{\Omega_{wg} \cdot d_{weld1}}, \frac{R_{nbn1}}{\Omega_{wn} \cdot d_{weld1}}\right)$$

$$\boxed{DR_{w1} := \frac{R_{nb1}}{\max(f_2, f_3)} = 10.08}$$

Design ratio > 1.0, OK

Check Guide Supports (H-14-111862, Items 17 and 19) in Flexure and Shear

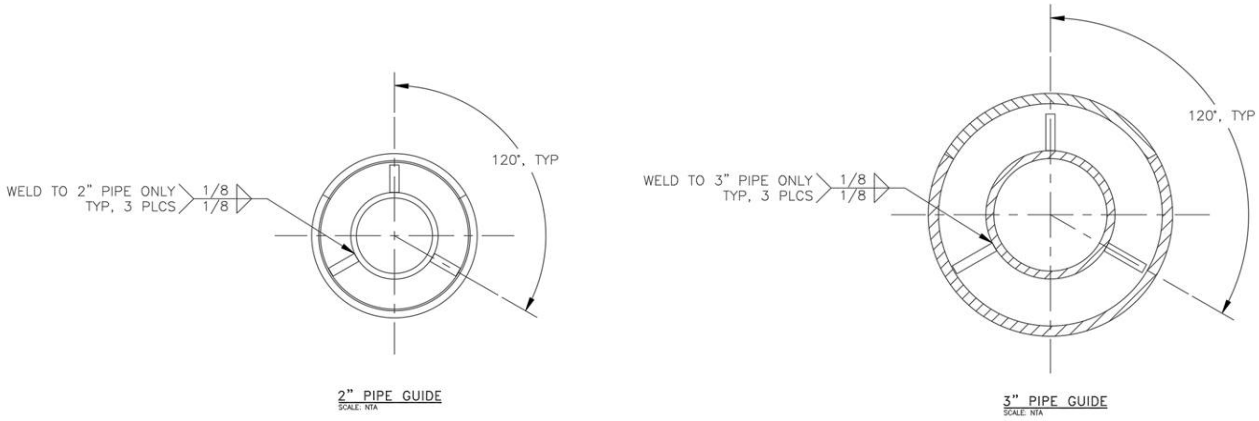

Figure 2. Guide Supports, H-14-111862, Items 17 and 19

Steel Beam Design Per AISC 14th Edition, Chapter F- Design of Members for Flexure, Section F11

Section F11 applies to rectangular bars bent about either *geometric axis* and rounds.

Inputs:

$F_{L2} := 142\text{lbf}$	Maximum lateral load on 2-inch guide support Appendix D3, Point C81)
$F_{V2} := 72\text{lbf}$	Maximum vertical load on 2-inch guide support Appendix D3, Point C21)
$F_{A2} := 101\text{lbf}$	Maximum axial load on 2-inch guide support Appendix D3, Point A50)
$F_{L3} := 356\text{lbf}$	Maximum lateral load on 3-inch guide support Appendix D3, Point B77)
$F_{V3} := 187\text{lbf}$	Maximum vertical load on 3-inch guide support Appendix D3, Point B22)
$F_{A3} := 260\text{lbf}$	Maximum axial load on 23-inch guide support Appendix D3, Point B73)
$F_{bL2} := F_{L2} \cdot \cos(30\text{deg}) = 123.0\,\text{lbf}$	Bending load on 2-inch guide suppor from lateral direction
$F_{bV2} := F_{V2} \cdot \sin(30\text{deg}) = 36.0\,\text{lbf}$	Bending load on 2-inch guide suppor from vertical direction
$F_{b2} := \sqrt{F_{bL2}^2 + F_{bV2}^2} = 128.1\,\text{lbf}$	Bending load on 2-inch guide suppoprt
$F_{bL3} := F_{L3} \cdot \cos(30\text{deg}) = 308.3\,\text{lbf}$	Bending load on 3-inch guide suppor from lateral direction
$F_{bV3} := F_{V3} \cdot \sin(30\text{deg}) = 93.5\,\text{lbf}$	Bending load on 3-inch guide suppor from vertical direction
$F_{b3} := \sqrt{F_{bL3}^2 + F_{bV3}^2} = 322.2\,\text{lbf}$	Bending load on 3-inch guide suppoprt

$t_p := 0.25 \cdot in$ — Thickness of support plate

$d := 4in$ — Width of support plate

$A := t_p \cdot d = 1 \cdot in^2$ — Area of suport plate

$L_{b2} := \frac{13}{16} in$ — Laterally unbraced length of 2-inch pipe support

$L_{b3} := 1.25in$ — Laterally unbraced length of 3-inch pipe support

$S_x := \frac{d \cdot t_p^2}{6} = 0.042 \cdot in^3$ — Elastic section modulus taken about the major axis

$Z_x := \frac{d \cdot t_p^2}{4} = 0.063 \cdot in^3$ — Plastic section modulus about the major axis

$\Omega_b := 1.67$ — Safety factor for flexure, AISC 14th, pg 16.1-46

The *nominal flexural strength, M_n,* shall be the lower value obtained according to the *limit states* of *yielding* (*plastic moment*), as required.

<u>Yielding:</u>

$M_y := F_y \cdot S_x \qquad M_y = 1.04 \cdot kip \cdot in$ — Yield moment about the axis of bending

$$M_p := \left| \begin{array}{l} M \leftarrow 1.6M_y \\ M \quad \text{if} \quad F_y \cdot Z_x > 1.6M_y \\ F_y \cdot Z_x \quad \text{otherwise} \end{array} \right.$$

Plastic bending moment, AISC 14th, Equation F11-1, pg 16.1-63

$M_p = 1.563 \cdot kip \cdot in$

$M_{n_yield} := M_p = 1.563 \cdot kip \cdot in$ — Nominal flexural moment according to the limit states of plastic moment, AISC 14th, Equation F11-1, pg 16.1-63

Note: For rounds and rectangular bars bent about their minor axis, the limit state of lateral-torsional buckling need not be considered.

Determine bending moment when treated as a simply cantilevered beam with a concentrated load at free end.

$\frac{M_{n_yield}}{\Omega_b} = 0.94 \cdot kip \cdot in$ — Allowable flexural strength, AISC 14th, pg 16.1-46

$M_{max2} := F_{b2} \cdot L_{b2} = 0.104 \cdot kip \cdot in$ — Maximum moment on 2-inch guide support, AISC 14th, Table 3-23, Case 22

$M_{max3} := F_{b3} \cdot L_{b3} = 0.403 \cdot kip \cdot in$ — Maximum moment on 3-inch guide support, AISC 14th, Table 3-23, Case 22

$$DR_2 := \frac{\frac{M_{n_yield}}{\Omega_b}}{M_{max2}} = 8.99$$

Design ratio > 1.0, OK

$$DR_3 := \frac{\frac{M_{n_yield}}{\Omega_b}}{M_{max3}} = 2.32$$

Design ratio > 1.0, OK

Steel Beam Design Per AISC 14th Edition, Chapter G - Design of Members for Shear, Section G2

Section G2 applies to webs of singly or doubly symmetric members and channels subject to shear in the plane of the web.

$\Omega_v := 1.67$ Safety factor for shear, AISC 14th, pg 16.1-67

$C_v := 1.0$ Web shear coefficient, AISC 14th, pg 16.1-68

The *nominal shear strength, V_n,* of unstiffened or stiffened webs, according to the *limit states* of *shear yielding* and *shear buckling,* is:

$V_n := 0.6 \cdot F_y \cdot A \cdot C_v = 15 \cdot kip$ Nominal shear strength, AISC 14th, Equation G2-1, pg 16.1-67

$\frac{V_n}{\Omega_v} = 8.98 \cdot kip$ Allowable shear strength, AISC 14th, pg 16.1-67

$V_{max2} := P_{Y2} = 0.068 \cdot kip$ Required shear strength of 2-inch pipe support

$V_{max3} := P_{Y3} = 0.175 \cdot kip$ Required shear strength of 3-inch pipe support

$$DR_2 := \frac{\frac{V_n}{\Omega_v}}{V_{max2}} = 132.09$$

Design ratio > 1.0, OK

$$DR_3 := \frac{\frac{V_n}{\Omega_v}}{V_{max3}} = 51.33$$

Design ratio > 1.0, OK

Check Guide Support Welds:

$b_{weld2} := d = 4 \cdot in$ — Depth of weld

$d_{weld2} := t_p = 0.25 \cdot in$ — Depth of weld

$A_{w2} := 2b_{weld2} = 8 \cdot in$ — Area of weld (or length per Blodgett)

$S_{w2} := b_{weld2} \cdot d_{weld2} = 1 \cdot in^2$ — Per Blodgett, Table 4, Page 6.3-3

$f_{w2} := \frac{F_{A2}}{A_{w2}} + \frac{M_{max2}}{S_{w2}} = 116.7 \cdot \frac{lbf}{in}$ — Force on 2-inch pipe support weld due to combined shear and bending

$f_{w3} := \frac{F_{A3}}{A_{w2}} + \frac{M_{max3}}{S_{w2}} = 435.2 \cdot \frac{lbf}{in}$ — Force on 3-inch pipe support weld due to combined shear and bending

Check weld per AISC 14th, Table J2.5:

$D_1 := \frac{1}{8} in$ — Weld size

$F_{EXX} := 70ksi$ — Minimum ultimate strength of weld material, AWS D1.6, Table 3.3

$\Omega_w := 2.00$ — Safety factor, AISC 14th, pg. 16.1-115

$R_{nw1} := 0.6 \cdot F_{EXX} \cdot \frac{\sqrt{2}}{2} \cdot D_1 = 3712 \cdot \frac{lbf}{in}$ — Available strength of weld per linear inch AISC 14th, pg. 16.1-115

$\frac{R_{nw1}}{\Omega_w} = 1856 \cdot \frac{lbf}{in}$ — Available design strength of weld per linear inch

$t_{plate1} := 0.25in$ — Thickness of plate

$A_{gv1} := t_{plate1} \cdot b_{weld2} = 1 \cdot in^2$ — Gross area subject to shear

$\Omega_{wg} := 1.50$ — Safety factor based on gross area, AISC 14th, pg. 16.1-129

$R_{nbg1} := 0.60 \cdot F_y \cdot A_{gv1} = 15000\ lbf$ — Available design shear strength of base plate (gross area)

$A_{nv1} := A_{gv1} = 1 \cdot in^2$ — Net area subject to shear

$\Omega_{wn} := 2.00$ — Safety factor based on net area, AISC 14th, pg. 16.1-129

$R_{nbn1} := 0.60 \cdot F_u \cdot A_{nv1} = 42000\ lbf$ — Available design shear strength of base plate (net area)

$$R_{nb1} := \min\left(\frac{R_{nw1}}{\Omega_w}, \frac{R_{nbg1}}{\Omega_{wg} \cdot d_{weld1}}, \frac{R_{nbn1}}{\Omega_{wn} \cdot d_{weld1}}\right)$$

$$\boxed{DR_{w1} := \frac{R_{nb1}}{\max(f_{w2}, f_{w3})} = 4.26}$$

Design ratio > 1.0, OK

APPENDIX I4

THERMAL EXPANSION OF PIPE

Determine the thermal expansion/contraction in the primary and encasement piping

Thermal expansion data is taken from ASME B31.3, Table C-1 from 70 °F to indicated temperature

$T_r := \begin{pmatrix} -50 \\ 70 \\ 200 \end{pmatrix} °F$ Temperature range

$\alpha_c := \begin{pmatrix} -0.9 \\ 0 \\ 1.0 \end{pmatrix} \cdot \frac{in}{100 \cdot ft}$ Expansion coefficient for carbon steel

$\alpha_s := \begin{pmatrix} -1.2 \\ 0 \\ 1.4 \end{pmatrix} \cdot \frac{in}{100 \cdot ft}$ Expansion coefficient for stainless steel

$T_{min} := 30\,°F$ Minimum design temperature

$T_{max} := 200\,°F$ Maximum design temperature

$T_{exp} := 60\,°F$ Ambient design temperature for thermal expansion

$T_{con} := 80\,°F$ Ambient design temperature for thermal contraction

$\alpha_{c_30} := \text{linterp}(T_r, \alpha_c, T_{min}) = -0.3 \cdot \frac{in}{100ft}$ Linear contraction of carbon steel at 30 °F

$\alpha_{c_200} := \text{linterp}(T_r, \alpha_c, T_{max}) = 1 \cdot \frac{in}{100ft}$ Linear expansion of carbon steel at 200 °F

$\alpha_{c_60} := \text{linterp}(T_r, \alpha_c, T_{exp}) = -0.075 \cdot \frac{in}{100ft}$ Linear contraction of carbon steel at 60 °F

$\alpha_{c_80} := \text{linterp}(T_r, \alpha_c, T_{con}) = 0.077 \cdot \frac{in}{100ft}$ Linear expansion of carbon steel at 80 °F

$\boxed{\alpha_{c_exp} := \alpha_{c_200} - \alpha_{c_60} = 1.075 \cdot \frac{in}{100ft}}$ Linear expansion of carbon steel from 60 °F to 200 °F

$\boxed{\alpha_{c_con} := \alpha_{c_80} - \alpha_{c_30} = 0.377 \cdot \frac{in}{100ft}}$ Linear contraction of carbon steel from 80 °F to 30 °F

$\alpha_{s_30} := \text{linterp}(T_r, \alpha_s, T_{min}) = -0.4 \cdot \frac{in}{100ft}$ Linear contraction of stainless steel at 30 °F

$\alpha_{s_200} := \text{linterp}(T_r, \alpha_s, T_{max}) = 1.4 \cdot \frac{in}{100ft}$ Linear expansion of stainless steel at 200 °F

$\alpha_{s_60} := \text{linterp}(T_r, \alpha_s, T_{exp}) = -0.1 \cdot \frac{in}{100ft}$ Linear contraction of stainless steel at 60 °F

$\alpha_{s_80} := \text{linterp}(T_r, \alpha_s, T_{con}) = 0.108 \cdot \frac{in}{100ft}$ Linear expansion of stainless steel at 80 °F

$\boxed{\alpha_{s_exp} := \alpha_{s_200} - \alpha_{s_60} = 1.5 \cdot \frac{in}{100ft}}$ Linear expansion of stainless steel from 60 °F to 200 °F

$\boxed{\alpha_{s_con} := \alpha_{s_80} - \alpha_{s_30} = 0.508 \cdot \frac{in}{100ft}}$ Linear contraction of stainless steel from 80 °F to 30 °F

APPENDIX J

MINIMUM WALL THICKNESS FOR PIPE BENDS

Define pipe properties and determine minimum wall thickness at for curved sections of pipe in accordance with ASME B31.3, Section 304.2

Define variables

$OD_6 := 6.625in$	Outside diameter of 6-inch sch 40 pipe, ASTM A53
$OD_4 := 4.50in$	Outside diameter of 4-inch sch 40 pipe, ASTM A53
$OD_3 := 3.50in$	Outside diameter of 3-inch sch 40 pipe, ASTM A312
$OD_2 := 2.375in$	Outside diameter of 2-inch sch 40 pipe, ASTM A312
$OD_1 := 1.315in$	Outside diameter of 1-inch sch 40 pipe, ASTM A53
$c := 0.0002\frac{in}{yr}\cdot 50yr = 0.01\cdot in$	Corrosion allowance of 0.2 mils per year (TFC-ENG-STD-22, Section 3.5.2.1) for a 50 year design life (MT-50400, Page 19)
$R_1 := 36in$	Bend radius
$R_2 := 3in$	Bend radius
$P_e := 60psi$	Design Pressure for encasement pipe (MT-50400, Table 4)
$P_p := 620psi$	Design Pressure for primary pipe (MT-50400, Table 4)
$S_c := 20ksi$	Allowable stress at temperature for ASTM A53/A106, Gr. B, ASME B31.3, Table A-1
$S_s := 16.7ksi$	Allowable stress at temperature for ASTM A312, Type 316L, ASME B31.3, Table A-1
$E := 1$	Quality factor, ASME B31.3, Table A-1B
$W := 1$	Weld joint factor, ASME B31.3, para. 302.3.5(e)
$Y := 0.4$	Coefficient from ASME B3.13, Table 304.1.1

Determine coefficients "I" at the inside bend radius

$$I_{in6} := \frac{4\cdot\left(\frac{R_1}{OD_6}\right) - 1}{4\cdot\left(\frac{R_1}{OD_6}\right) - 2} = 1.051$$

Coefficient for 6-inch inside radius, ASME B31.3, Equation 3d

$$I_{in4} := \frac{4\cdot\left(\frac{R_1}{OD_4}\right) - 1}{4\cdot\left(\frac{R_1}{OD_4}\right) - 2} = 1.033$$

Coefficient for 4-inch inside radius, ASME B31.3, Equation 3d

$$I_{in3} := \frac{4\cdot\left(\frac{R_1}{OD_3}\right) - 1}{4\cdot\left(\frac{R_1}{OD_3}\right) - 2} = 1.026$$

Coefficient for 3-inch inside radius, ASME B31.3, Equation 3d

$$I_{in2} := \frac{4\cdot\left(\frac{R_1}{OD_2}\right) - 1}{4\cdot\left(\frac{R_1}{OD_2}\right) - 2} = 1.017$$

Coefficient for 2-inch inside radius, ASME B31.3, Equation 3d

$$I_{in1} := \frac{4\cdot\left(\frac{R_2}{OD_1}\right) - 1}{4\cdot\left(\frac{R_2}{OD_1}\right) - 2} = 1.14$$

Coefficient for 1-inch inside radius, ASME B31.3, Equation 3d

Determine coefficients "I" at the outside bend radius

$$I_{out6} := \frac{4\cdot\left(\frac{R_1}{OD_6}\right) + 1}{4\cdot\left(\frac{R_1}{OD_6}\right) + 2} = 0.958$$

Coefficient for 6-inch outside radius, ASME B31.3, Equation 3e

$$I_{out4} := \frac{4\cdot\left(\frac{R_1}{OD_4}\right) + 1}{4\cdot\left(\frac{R_1}{OD_4}\right) + 2} = 0.971$$

Coefficient for 4-inch outside radius, ASME B31.3, Equation 3e

$$I_{out3} := \frac{4\cdot\left(\frac{R_1}{OD_3}\right) + 1}{4\cdot\left(\frac{R_1}{OD_3}\right) + 2} = 0.977$$

Coefficient for 3-inch outside radius, ASME B31.3, Equation 3e

$$I_{out2} := \frac{4\cdot\left(\frac{R_1}{OD_2}\right) + 1}{4\cdot\left(\frac{R_1}{OD_2}\right) + 2} = 0.984$$

Coefficient for 2-inch outside radius, ASME B31.3, Equation 3e

$$I_{out1} := \frac{4\cdot\left(\frac{R_2}{OD_1}\right) + 1}{4\cdot\left(\frac{R_2}{OD_1}\right) + 2} = 0.91$$

Coefficient for 1-inch outside radius, ASME B31.3, Equation 3e

Determine the pressure design thickness at the inside bend radius

$$t_{in6} := \frac{P_e\cdot OD_6}{2\cdot\left[\left(\frac{S_c\cdot E\cdot W}{I_{in6}}\right) + P_e\cdot Y\right]} = 0.010\cdot in$$

Pressure design thickness at inside bend radius ASME B31.3, Equation 3c

$$t_{in4} := \frac{P_e\cdot OD_4}{2\cdot\left[\left(\frac{S_c\cdot E\cdot W}{I_{in4}}\right) + P_e\cdot Y\right]} = 0.007\cdot in$$

Pressure design thickness at inside bend radius ASME B31.3, Equation 3c

$$t_{in3} := \frac{P_p\cdot OD_3}{2\cdot\left[\left(\frac{S_s\cdot E\cdot W}{I_{in3}}\right) + P_p\cdot Y\right]} = 0.066\cdot in$$

Pressure design thickness at inside bend radius ASME B31.3, Equation 3c

$$t_{in2} := \frac{P_p\cdot OD_2}{2\cdot\left[\left(\frac{S_s\cdot E\cdot W}{I_{in2}}\right) + P_p\cdot Y\right]} = 0.044\cdot in$$

Pressure design thickness at inside bend radius ASME B31.3, Equation 3c

$$t_{in1} := \frac{P_e\cdot OD_1}{2\cdot\left[\left(\frac{S_c\cdot E\cdot W}{I_{in1}}\right) + P_e\cdot Y\right]} = 0.002\cdot in$$

Pressure design thickness at inside bend radius ASME B31.3, Equation 3c

Determine the pressure design thickness at the outside bend radius

$$t_{out6} := \frac{P_e\cdot OD_6}{2\cdot\left[\left(\frac{S_c\cdot E\cdot W}{I_{out6}}\right) + P_e\cdot Y\right]} = 0.010\cdot in$$

Pressure design thickness at outside bend radius ASME B31.3, Equation 3c

$$t_{out4} := \frac{P_e\cdot OD_4}{2\cdot\left[\left(\frac{S_c\cdot E\cdot W}{I_{out4}}\right) + P_e\cdot Y\right]} = 0.007\cdot in$$

Pressure design thickness at outside bend radius ASME B31.3, Equation 3c

$$t_{out3} := \frac{P_p\cdot OD_3}{2\cdot\left[\left(\frac{S_s\cdot E\cdot W}{I_{out3}}\right) + P_p\cdot Y\right]} = 0.063\cdot in$$

Pressure design thickness at outside bend radius ASME B31.3, Equation 3c

$$t_{out2} := \frac{P_p \cdot OD_2}{2 \cdot \left[\left(\frac{S_s \cdot E \cdot W}{I_{out2}}\right) + P_p \cdot Y\right]} = 0.043 \cdot in$$

Pressure design thickness at outside bend radius ASME B31.3, Equation 3c

$$t_{out1} := \frac{P_e \cdot OD_1}{2 \cdot \left[\left(\frac{S_c \cdot E \cdot W}{I_{out1}}\right) + P_e \cdot Y\right]} = 0.002 \cdot in$$

Pressure design thickness at outside bend radius ASME B31.3, Equation 3c

Determine the minimum pressure design thickness

$t_6 := \max(t_{in6}, t_{out6}) = 0.01 \cdot in$ Minimum pressure design thickness for 6 inch pipe

$t_4 := \max(t_{in4}, t_{out4}) = 0.007 \cdot in$ Minimum pressure design thickness for 4 inch pipe

$t_3 := \max(t_{in3}, t_{out3}) = 0.066 \cdot in$ Minimum pressure design thickness for 3 inch pipe

$t_2 := \max(t_{in2}, t_{out2}) = 0.044 \cdot in$ Minimum pressure design thickness for 2 inch pipe

$t_1 := \max(t_{in1}, t_{out1}) = 0.002 \cdot in$ Minimum pressure design thickness for 1 inch pipe

Determine the required thickness for bipe bends

$\boxed{t_{m6} := t_6 + c = 0.02 \cdot in}$ Required thickness for 6-inch pipe bends ASME B31.3, Equation 2

$\boxed{t_{m4} := t_4 + c = 0.017 \cdot in}$ Required thickness for 4-inch pipe bends ASME B31.3, Equation 2

$\boxed{t_{m3} := t_3 + c = 0.076 \cdot in}$ Required thickness for 3-inch pipe bends ASME B31.3, Equation 2

$\boxed{t_{m2} := t_2 + c = 0.054 \cdot in}$ Required thickness for 2-inch pipe bends ASME B31.3, Equation 2

$\boxed{t_{m1} := t_1 + c = 0.012 \cdot in}$ Required thickness for 1-inch pipe bends ASME B31.3, Equation 2

RPP-CALC-63212
Revision 0

241-AW Tank Farm Waste Transfer Lines SL-170, SL-171, SL-172 and SN-275 Supporting Analysis

Prepared by

JD Yunker
Columbia Energy and Environmental Services, Inc. for
Washington River Protection Solutions, LLC

Date Published
April 2020

Prepared for the U.S. Department of Energy
Office of River Protection

Contract No. DE-AC27-08RV14800

Columbia Energy AND ENVIRONMENTAL SERVICES

Design Verification Checklist

Doc. Number	Rev.	Title
RPP-CALC-63212	0	241-AW Tank Farm Waste Transfer Lines SL-170, SL-171, SL-172 and SN-275 Supporting Analysis

Verification Method (Check One)

☒ Review ☐ Alternate Calculation ☐ Qualification Testing

Verification Results

Yes	No	NA	
☒	☐	☐	Design inputs correctly selected and cited and correctly incorporated.
☒	☐	☐	Input data were checked for consistency with original source information.
☐	☐	☒	Design inputs for interfacing organizations are specified
☒	☐	☐	Necessary assumptions are explicit, adequately described and supported.
☒	☐	☐	Unverified assumptions (requiring verification) are clearly identified.
☒	☐	☐	Analytical and technical approaches and results are reasonable and appropriate.
☒	☐	☐	The version or revision of each reference is cited
☒	☐	☐	Design output is reasonable for design inputs
☒	☐	☐	Results and conclusions address all points in the purpose.
☒	☐	☐	Conclusions are consistent with analytical results and applicable limits.
☐	☐	☒	Suitable materials, parts, processes, and inspection and testing criteria specified
☒	☐	☐	All comments have been adequately addressed and dispositioned
☒	☐	☐	Calculations are sufficiently detailed such that a technically qualified person could reproduce the calc.
☒	☐	☐	Design method(s) are appropriately used and documented.
☒	☐	☐	Computer Program(s) are appropriately used and results support design.
☒	☐	☐	For pre-verified computer programs the V&V document is referenced and specific computer used for the calculation is identified

Ensure calculations that use software include a paper printout, microfiche, CD-ROM, or other electronic file of the input data and identification to the computer, computer codes, and versions used, or provide alternate documentation to uniquely and clearly identify the exact coding and execution process.

Checker Name	Signature	Date
Ryan Lang		04/13/20

Columbia Energy
AND ENVIRONMENTAL SERVICES

Project Title:	242-A Transfer Lines	Project No.:	WRPS 67247 Release 5
		Calculation No.:	RPP-CALC-63212
Calculation Title:	241-AW Tank Farm Waste Transfer Lines SL-170, SL-171, and SN-275 Supporting Analysis		

Revision	0	1	2
Originator	Josh Yunker 4/9/20 Date	Name Date	Name Date
Checker	Ryan Lang 4/9/20 Date	Name Date	Name Date
Project Manager	Ralph Dunham 4/14/20 Date	Name Date	Name Date

Attachments

Attachment No.	Title	No. of Pages
1	RISA Model	41

Affected Documents

Document No.	Document Title	Revision No.
	N/A	

Revision	Description of Revision
0	Initial Release

1806 Terminal Drive
Richland, Washington 99354
www.columbia-energy.com
Phone: 509.946.7111
Fax: 509.946.9363

1.0 INTRODUCTION/BACKGROUND

Slurry Line (SL) 167 failed a recent pressure test. SL-168 also is in need of repair. New transfer lines are to be installed to the AW-02A Central Pump Pit, AW-B Valve Pit, and AW-02E Feed Pump Pit. During placement of the Controlled Density Fill (CDF) that will surround the transfer lines anchorages will be required to stabilize the lines and prevent upward movement due to buoyancy. Additionally the transfer lines will cross under a road located directly to the North of the tank farm.

2.0 OBJECTIVE/PURPOSE

The objective of this calculation is to determine the required anchorages during CDF placement, as well as to determine the capacity of the transfer line CDF encasement to withstand vehicle loading at the road crossing, and any additional protective measures that may be required.

3.0 ASSUMPTIONS

Assumptions not requiring verification:

- Density of CDF will be assumed the same as concrete (145 pcf), this is a conservative assumption that does not need future verification.

Assumptions requiring verification:

- Compressive strength of CDF will be assumed to be 140psi minimum. This assumption will need to be verified at a later date.

4.0 DESIGN INPUTS

- Weight of 2" schedule 40 pipe = 3.66plf, AISC 14th, Table 1-14.
- Weight of 3" schedule 40 pipe = 7.58plf, AISC 14th, Table 1-14.
- Weight of 4" schedule 40 pipe = 10.8plf, AISC 14th, Table 1-14.
- Weight of 6" schedule 40 pipe = 19.0plf, AISC 14th, Table 1-14.

5.0 METHOD OF ANALYSIS

Transfer Line Anchorage Requirements

When the CDF is initially poured into the trench, there may be the potential for the lines to float. The calculation will determine the total weight of the transfer lines without fluid, as well as the total buoyant force that results based on the displacement of the lines. Based on net uplift that occurs the minimum amount and spacing of concrete anchorages will be determined, as well as any issues with upward deflection of the lines. The deflection will be calculated in RISA with various anchor spacings in order to determine the optimal anchorage spacing.

Transfer Line Road Crossing

The transfer lines will be fully jacketed with CDF as they pass under the road. The CDF will protect the pipe lines from deformation and failure due to road loading. The calculation will qualify the CDF under imposed loading due to Grove 150 mobile crane wheel loading which includes the 63,000lb counterweights being attached to the crane while moving. Any additional measures, if required to protect the transfer lines under the roadway, will be identified in this calculation.

5.1 Use of Computer Software

RISA 3D® Version 16.0.5, structural analysis software package suitable for analyzing static structures was used. The software is verified and validated in accordance with ASME NQA-1, Subpart 2.7, Paragraph 302, on computer CE-IT-10131, documented in CE-SVVR-18-001. Computer CE-IT-10131 is a PC with Intel Xeon 4 core processor with Windows 10 Professional, 64-bit operating system.

MathCAD® version 15 computer software is used to document and organize this calculation. All MathCAD computations are checked with a handheld calculator. Microsoft® Excel® is used to tabulate RISA 3D results. Formulas and sample calculations used in Excel tables are shown where used.

Figure 5-1. General Transfer Line Arrangement, North of Road

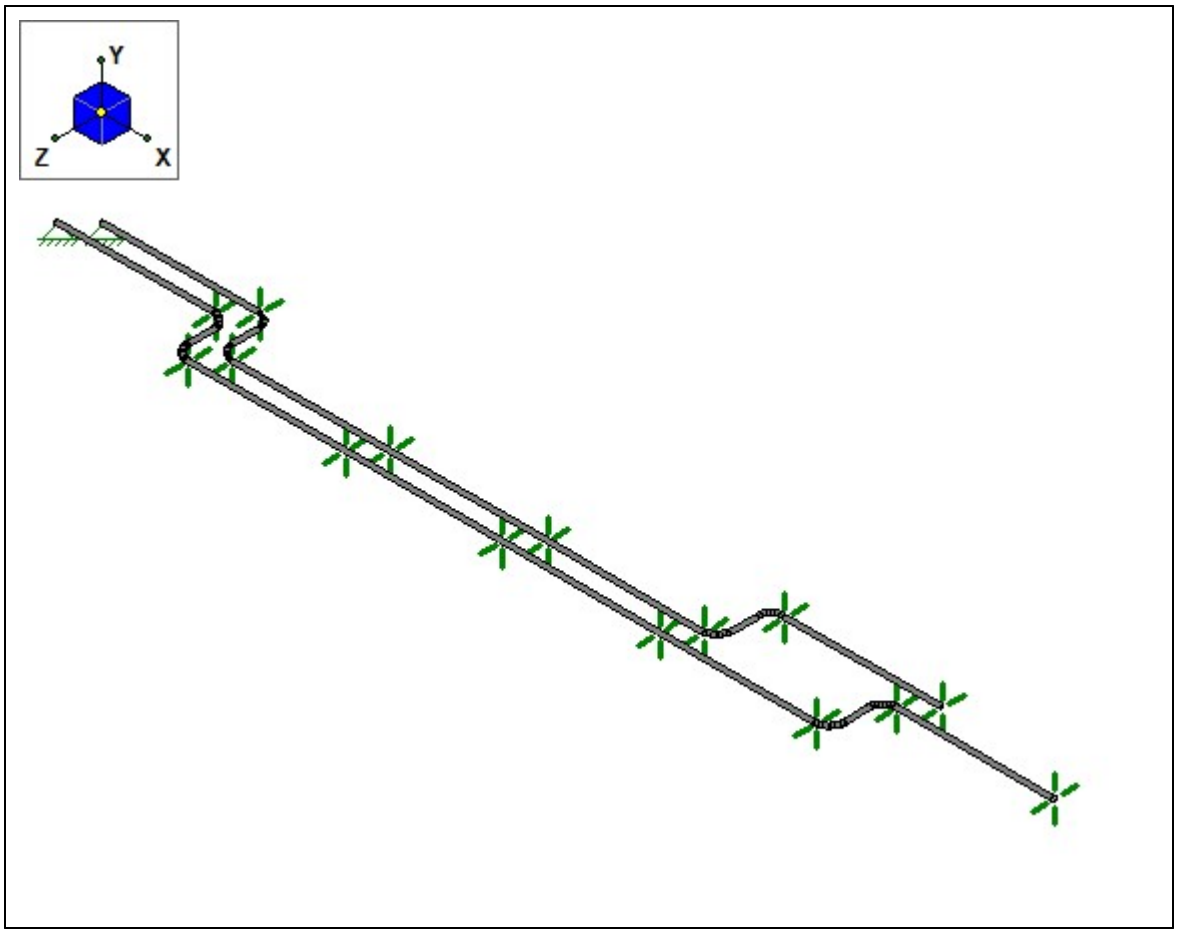

Figure 5-2. Risa 3D Model of Transfer Lines

6.0 RESULTS

6.1 Anchorage During CDF Placement

The maximum distance between anchorages required to resist upward buoyancy forces is 68.5ft. The maximum distance between anchorages is controlled by the deflection due to the buoyancy forces.

The upward deflection of the pipe under buoyancy forces are as shown in the following table.

Pipe Uplifts (inches)				
Pipe Size	Anchorage Spacing			
	20ft	25ft	30ft	35ft
4"	0.024	0.06	0.123	0.226
6"	0.033	0.081	0.167	0.307

Table 1. Pipe Upward Deflection

6.2 Transfer Lines at Road Crossing

The maximum pressure at 3ft burial depth is 23psi per RPP-CALC-61104, *Outrigger and Wheel Loads Versus Buried Pipe Capacities*. This is less than the allowable crushing pressure of 83.3psi for the CDF. A minimum CDF cover of 12" is required at the road crossing.

7.0 CONCLUSIONS

Pipe upward deflections due to buoyancy controls over the total amount of anchorage mass needed at each location. For 30ft spacing or less the upward deflection is acceptable at all lines.

The CDF at the road crossing has sufficient capacity to protect the transfer lines at the road crossing.

8.0 RECOMMENDATIONS

1. Maximum spacing between pipe anchorage locations should be no more than 30ft. This will ensure pipeline upward deflections are low enough to ensure drainage towards the tanks at all locations.
2. Maintain 12" minimum CDF cover over transfer lines at road crossing.

9.0 REFERENCES

1. AASHTO LRFD Bridge Design Specifications, 4th Edition, 2007.
2. H-14-111860, Rev. 0, *DST Transfer Lines Plan and Profile 241-AW to 242-A Evaporator*, Columbia Energy and Environmental Services, Richland, Washington, 2020.
3. RPP-CALC-61104, Rev. 1, *Outrigger and Wheel Loads Versus Buried Pipe Capacities*, Washington River Protection Solutions, LLC, Richland, Washington.

10.0 ANCHORAGE CALCULATIONS

10.1 Material Properties

$\sigma_{cdf} := 145pcf$ Density of cdf

$\sigma_{steel} := 490pcf$ Density of steel

10.2 Loading

10.2.1 Dead Loading

$w_2 := 3.66plf$ Self weight of 2" pipe

$w_3 := 7.58plf$ Self weight of 3" pipe

$w_4 := 10.8plf$ Self weight of 4" pipe

$w_6 := 19plf$ Self weight of 6" pipe

$W_4 := w_2 + w_4 = 14.46 \cdot plf$ Total weight of 2" transfer line with 4" encasement pipe

$W_6 := w_3 + w_6 = 26.58 \cdot plf$ Total weight of 3" transfer line with 6" encasement pipe

10.2.2 Buoyancy Forces

$d_4 := 4.5in$ — Outside diameter of 4" pipe

$d_6 := 6.63in$ — Outside diameter of 6" pipe

$A_4 := \frac{\pi \cdot d_4^2}{4} = 15.9 \cdot in^2$ — Total cross sectional area of 4" pipe

$A_6 := \frac{\pi \cdot d_6^2}{4} = 34.52 \cdot in^2$ — Total cross sectional area of 6" pipe

$B_4 := A_4 \cdot \sigma_{cdf} = 16.01 \cdot plf$ — Buoyant force on 4" pipe based on displaced area of cdf

$B_6 := A_6 \cdot \sigma_{cdf} = 34.76 \cdot plf$ — Buoyant force on 6" pipe based on displaced area of cdf

10.3 Anchorage Requirements

There are two 4" encasements and one 6" encasement at the worst case configuration within the transfer line trench. The combined buoyancy force from these three lines will be used to determine the required anchorage to hold the lines down.

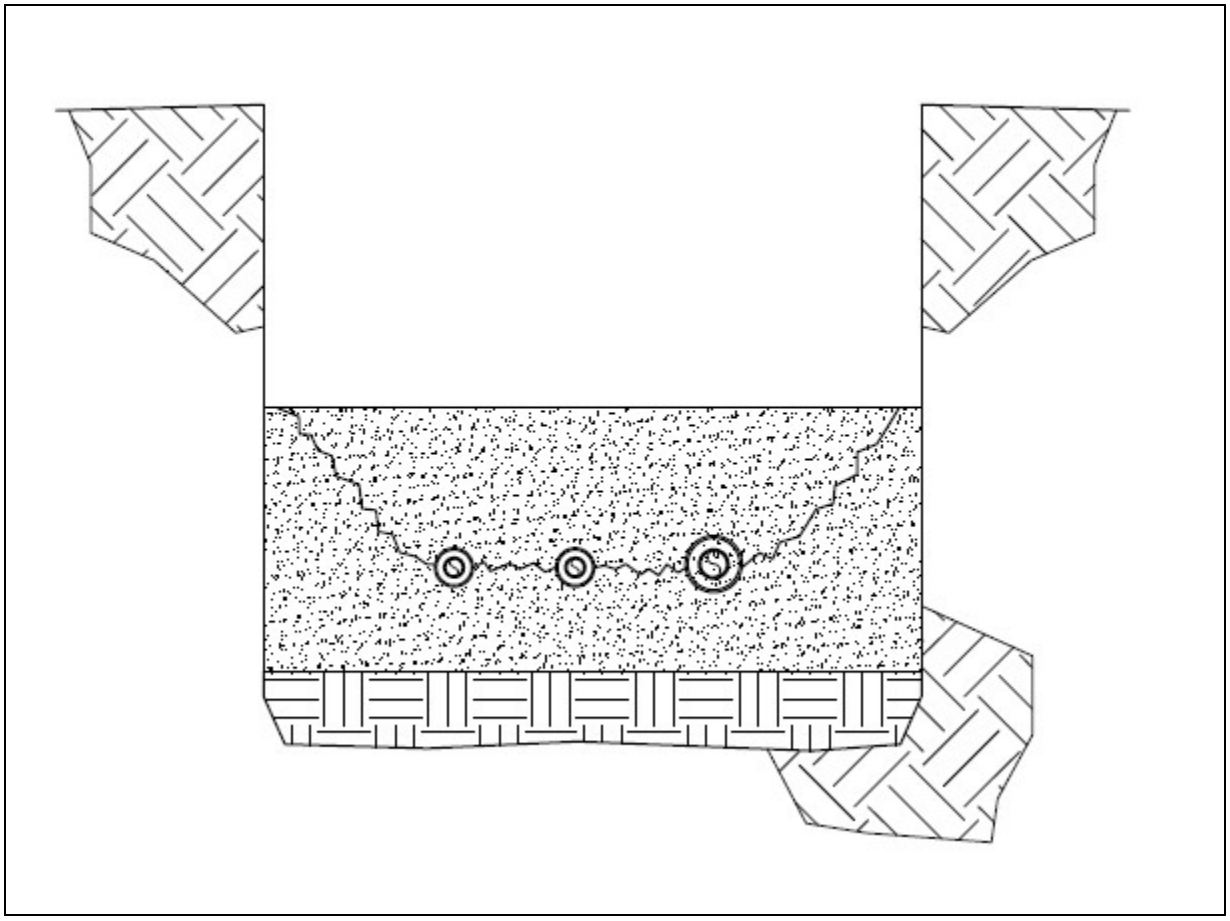

Figure 10-1. Effective Anchorage Block

The width of the trench is on the order of 76" wide. At the most shallow location approximately 18" of CDF can be placed over the transfer lines. Only account of the weight of the CDF over the lines as anchorage, assuming a tension split will form through the plane of the lines.

$l_{blk} := 2ft$ — Length of block to be specified on drawing

$w_{blk} := (2.5ft + 1.5ft) = 4ft$ — Effective width of the block, using 30" space for pipes and 18" for edge.

$h_{blk} := 1ft$ — Height of block

$I_w := 1.5$ Safety factor for uplift resistance

$WT_{blk} := \frac{l_{blk} \cdot w_{blk} \cdot h_{blk} \cdot \sigma_{cdf}}{I_w} = 773.33\ lbf$ Weight of block, including safety factor

Net uplift on pipe:

$F_b := \left(2B_4 + B_6\right) - \left(2W_4 + W_6\right) = 11.29 \cdot plf$ Net uplift on the three transfer lines

$S_{blk} := \frac{WT_{blk}}{F_b} = 68.48\ ft$ Maximum spacing of blocks based on buoyancy resistance only. Clearly this is larger than will actually be used. Determine maximum spacing based on pipe upward deflection next.

10.4 Pipe Uplift Checks

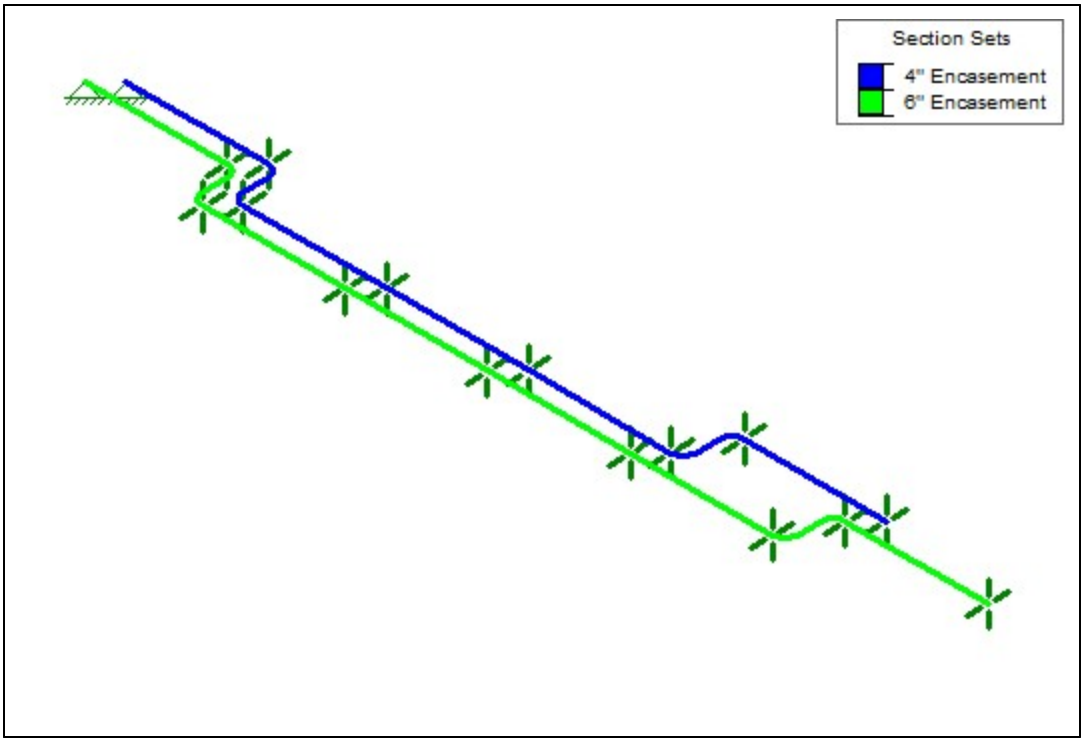

Figure 10-2. RISA Section Sets

Per H-14-111860, the shallow-most slope of the transfer lines is 0.77%. Depending on the spacing of anchors, the maximum allowable deflection of the lines without impeding drainage may be calculated as follows:

$h_{20} := .0077 \cdot 20ft = 1.85 \cdot in$ Total fall across 20ft anchor spacing

$h_{25} := .0077 \cdot 25ft = 2.31 \cdot in$ Total fall across 25ft anchor spacing

$h_{30} := .0077 \cdot 30ft = 2.77 \cdot in$ Total fall across 30ft anchor spacing

$h_{35} := .0077 \cdot 35ft = 3.23 \cdot in$ Total fall across 35ft anchor spacing

Maximum allowable upward deflection of lines without safety factors will be half of the fall value above:

$\delta_{20} := 0.5h_{20} = 0.92 \cdot in$ Maximum deflection that will flatten the line at mid span

$\delta_{25} := 0.5h_{25} = 1.16 \cdot in$ Maximum deflection that will flatten the line at mid span

$\delta_{30} := 0.5h_{30} = 1.39 \cdot in$ Maximum deflection that will flatten the line at mid span

$\delta_{35} := 0.5h_{35} = 1.62 \cdot in$ Maximum deflection that will flatten the line at mid span

Maintain a 0.5% slope at all times to allow for drainage back to tanks when system is not on.

$$\Delta_{20allow} := \frac{\delta_{20} - .005 \cdot 0.5 \cdot 20ft}{2} = 0.16 \cdot in$$

Maximum allowable upward deflection with a factor of safety of 2 included. 20ft span

$$\Delta_{25allow} := \frac{\delta_{25} - .005 \cdot 0.5 \cdot 25ft}{2} = 0.2 \cdot in$$

Maximum allowable upward deflection with a factor of safety of 2 included. 25ft span

$$\Delta_{30allow} := \frac{\delta_{30} - .005 \cdot 0.5 \cdot 30ft}{2} = 0.24 \cdot in$$

Maximum allowable upward deflection with a factor of safety of 2 included. 30ft span

$$\Delta_{35allow} := \frac{\delta_{35} - .005 \cdot 0.5 \cdot 35ft}{2} = 0.28 \cdot in$$

Maximum allowable upward deflection with a factor of safety of 2 included. 35ft span

The four different spacings between anchors noted above are analyzed in order to determine the maximum uplift. The results are tabulated in the following sections.

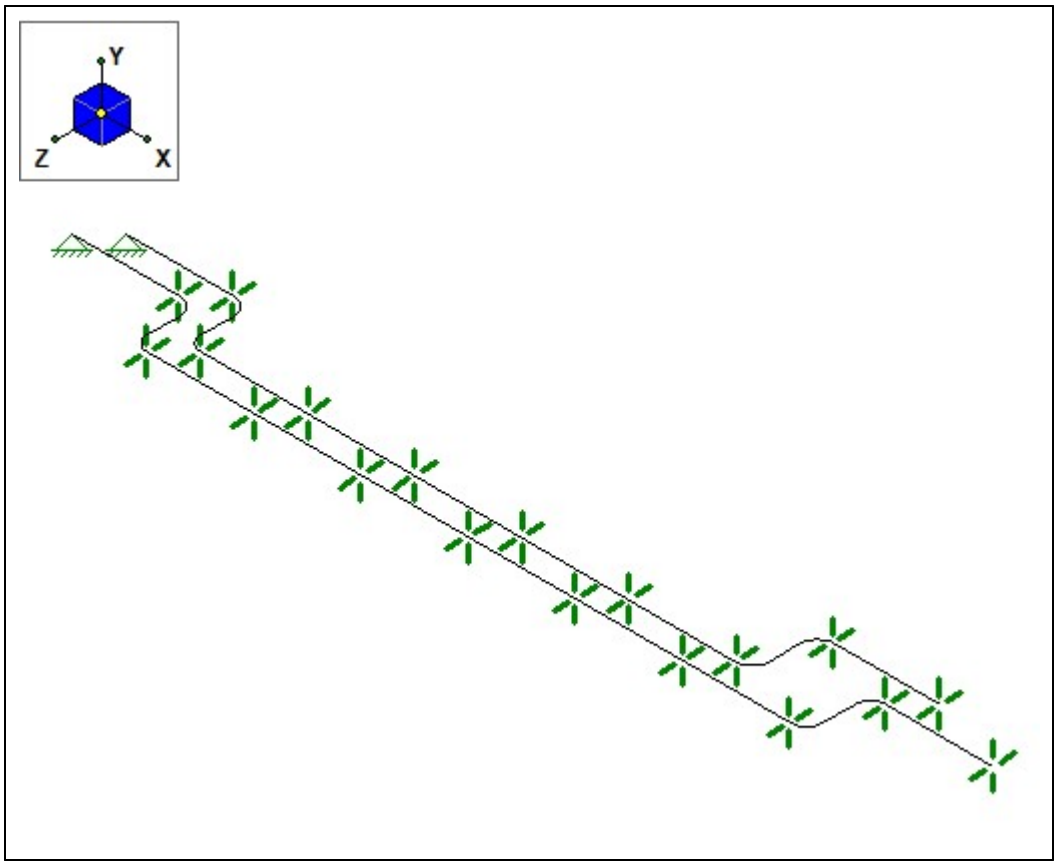

Figure 10-3. RISA 20ft Anchor Spacing

$\delta_4 := 0.024in$ Maximum vertical deflection of 4" encasement.

$\delta_6 := 0.033in$ Maximum vertical deflection of 6" encasement.

$$\frac{\delta_4}{\Delta_{20allow}} = 0.15$$ Ratio < 1.0, OK

$$\frac{\delta_6}{\Delta_{20allow}} = 0.2$$ Ratio < 1.0, OK

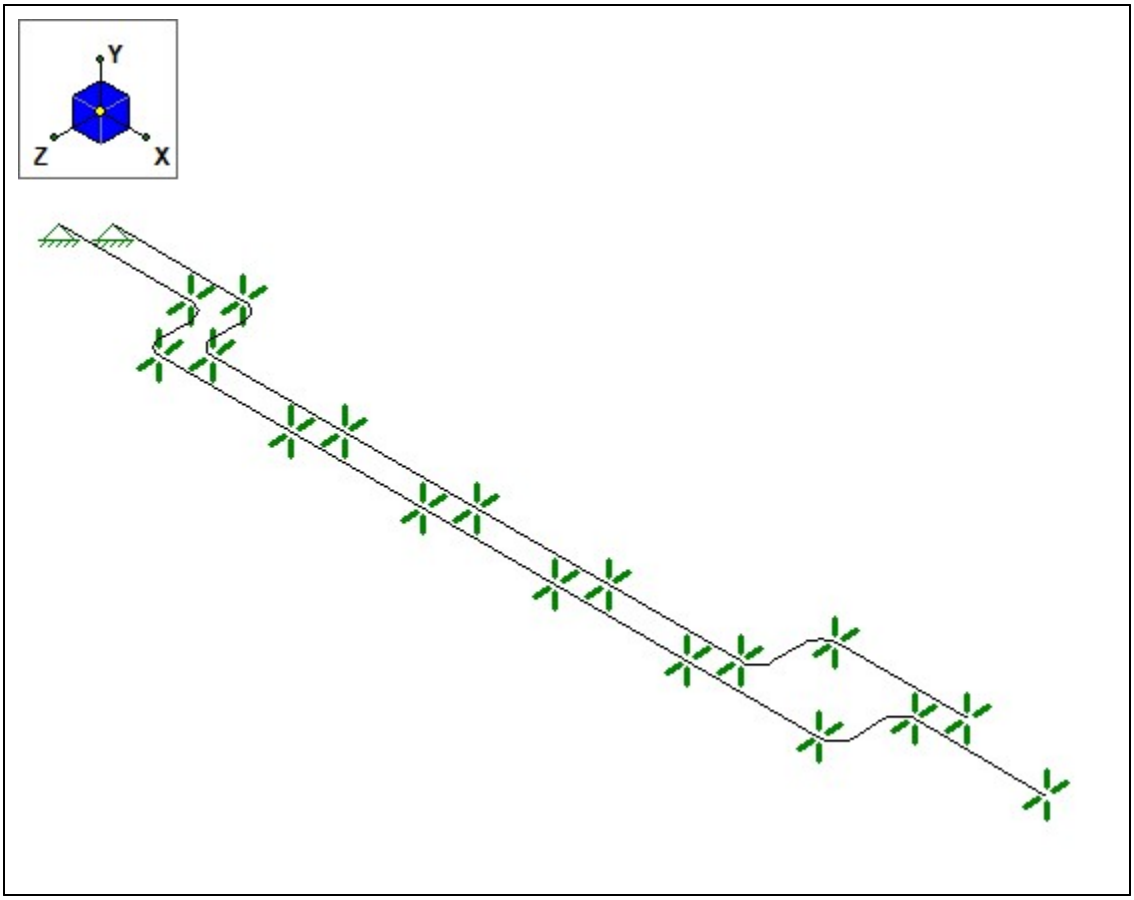

Figure 10-4. RISA 25ft Anchor Spacing

$\delta_4 := 0.06in$ Maximum vertical deflection of 4" encasement.

$\delta_6 := 0.081in$ Maximum vertical deflection of 6" encasement.

$$\frac{\delta_4}{\Delta_{25allow}} = 0.3$$

Ratio < 1.0, OK

$$\frac{\delta_6}{\Delta_{25allow}} = 0.4$$

Ratio < 1.0, OK

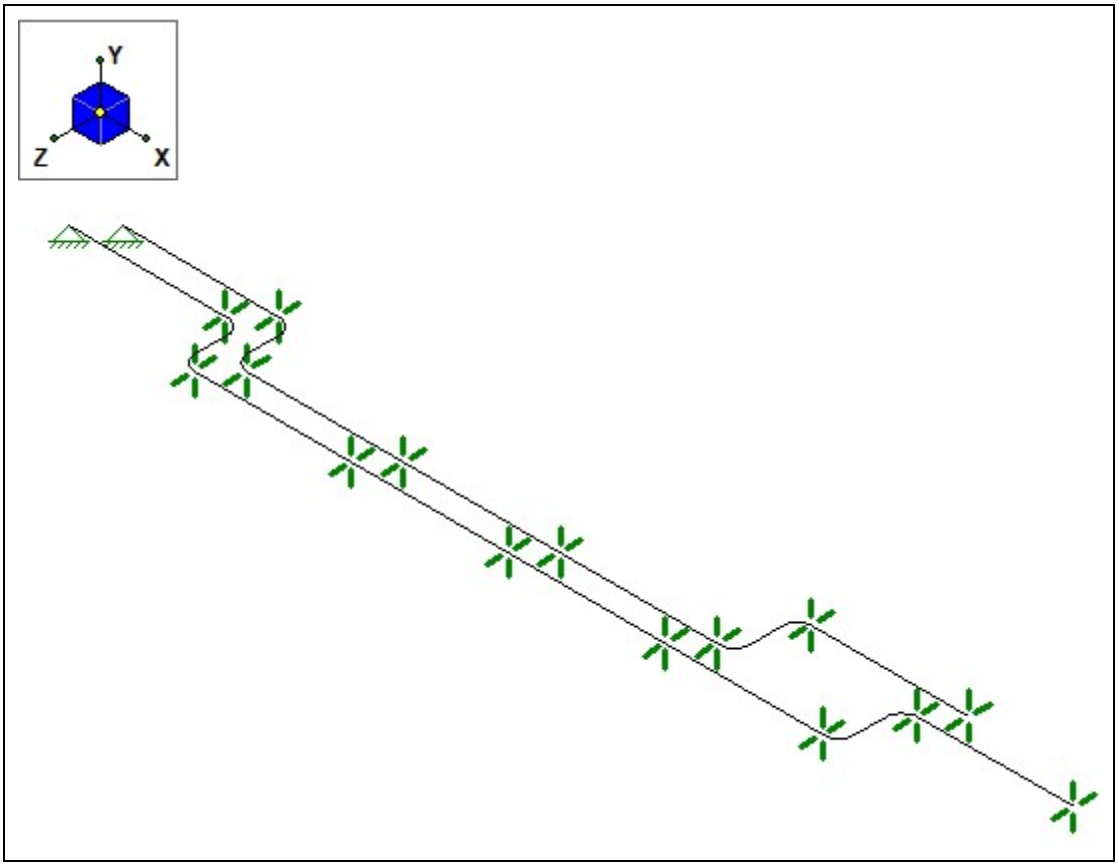

Figure 10-5. RISA 30ft Anchor Spacing

$\delta_4 := 0.123in$ Maximum vertical deflection of 4" encasement.

$\delta_6 := 0.167in$ Maximum vertical deflection of 6" encasement.

$$\frac{\delta_4}{\Delta_{30allow}} = 0.51$$ Ratio < 1.0, OK

$$\frac{\delta_6}{\Delta_{30allow}} = 0.69$$ Ratio < 1.0, OK

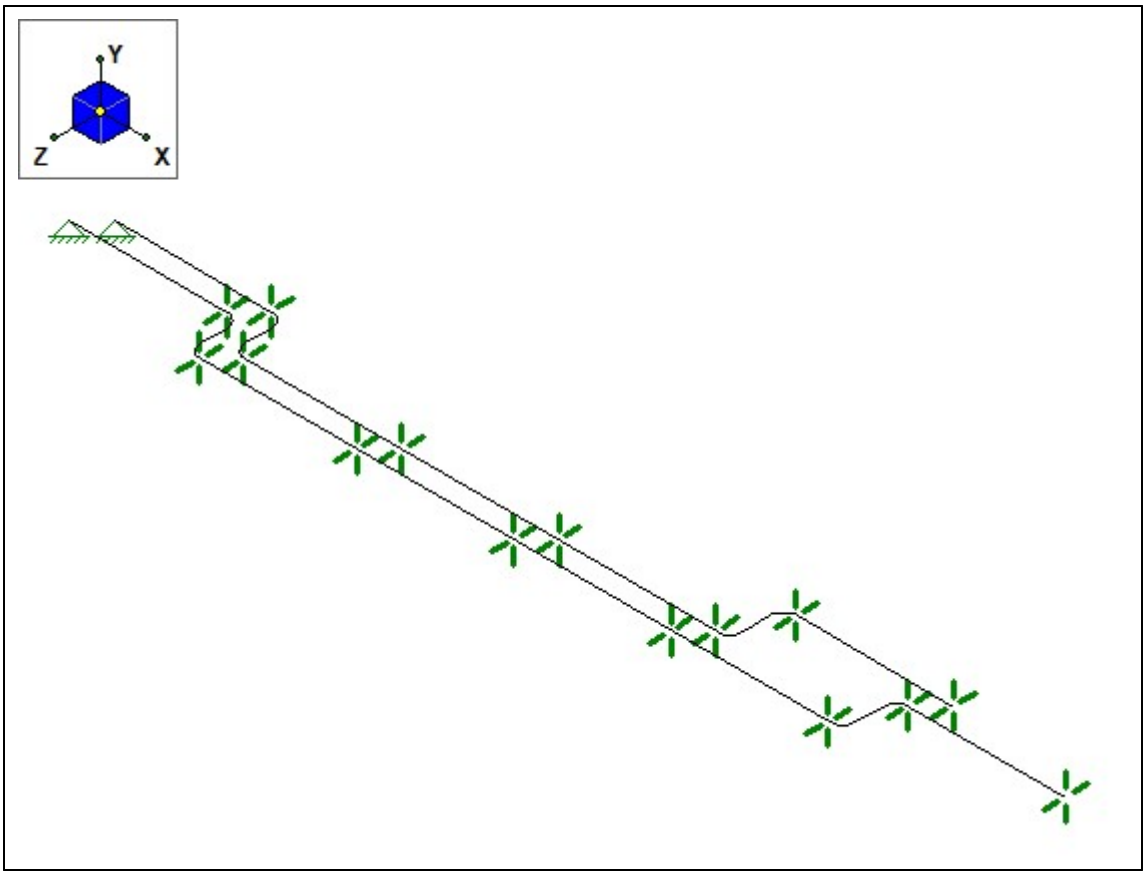

Figure 10-6. RISA 35ft Anchor Spacing

$\delta_4 := 0.226in$ Maximum vertical deflection of 4" encasement.

$\delta_6 := 0.307in$ Maximum vertical deflection of 6" encasement.

$$\frac{\delta_4}{\Delta_{35allow}} = 0.8$$

Ratio < 1.0, OK

$$\frac{\delta_6}{\Delta_{35allow}} = 1.08$$

Ratio > 1.0, Not OK. 30ft is the functional limit to anchorage spacing in order to maintain chosen minimum 0.5% line slope.

10.5 Road Crossing

The transfer lines will cross under the existing roadway to the north of the tank farm with somewhere between three and four feet of cover. Conservatively, check transfer lines using three feet of cover.

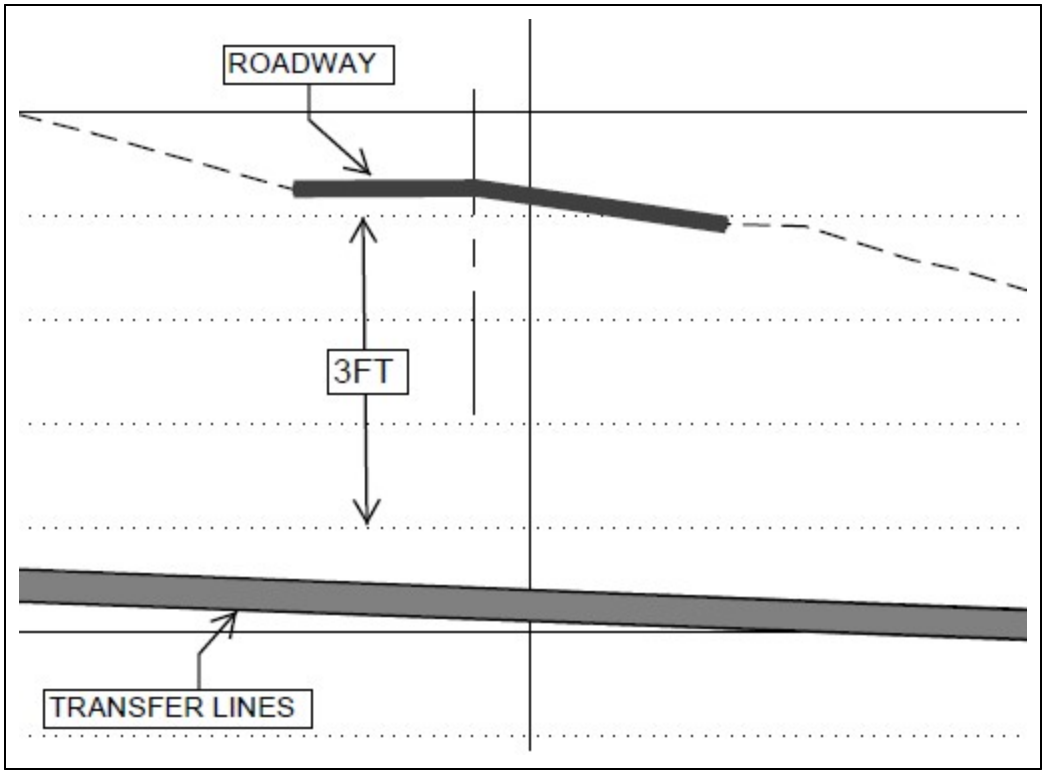

Figure 10-7. Road Crossing

The transfer lines will be fully jacketed with CDF. The following procedure will be used to qualify the transfer lines for applied vehicular traffic loading at the road crossing:

- Check CDF compressive capacity to resist applied loading from traffic.
- Determine top cover required to provide arching action over transfer lines.

RPP-CALC-61104 determines the pressure from various loading scenarios as a function of depth. The Grove 150 mobile crane loading with a 63,000lb counter weight will be used to determine the maximum pressure applied to the CDF protecting the transfer lines.

$P_{max} := 23psi$ Maximum pressure at 3ft burial depth, Table 1, RPP-CALC-61104

10.5.1 CDF Compressive Capacity

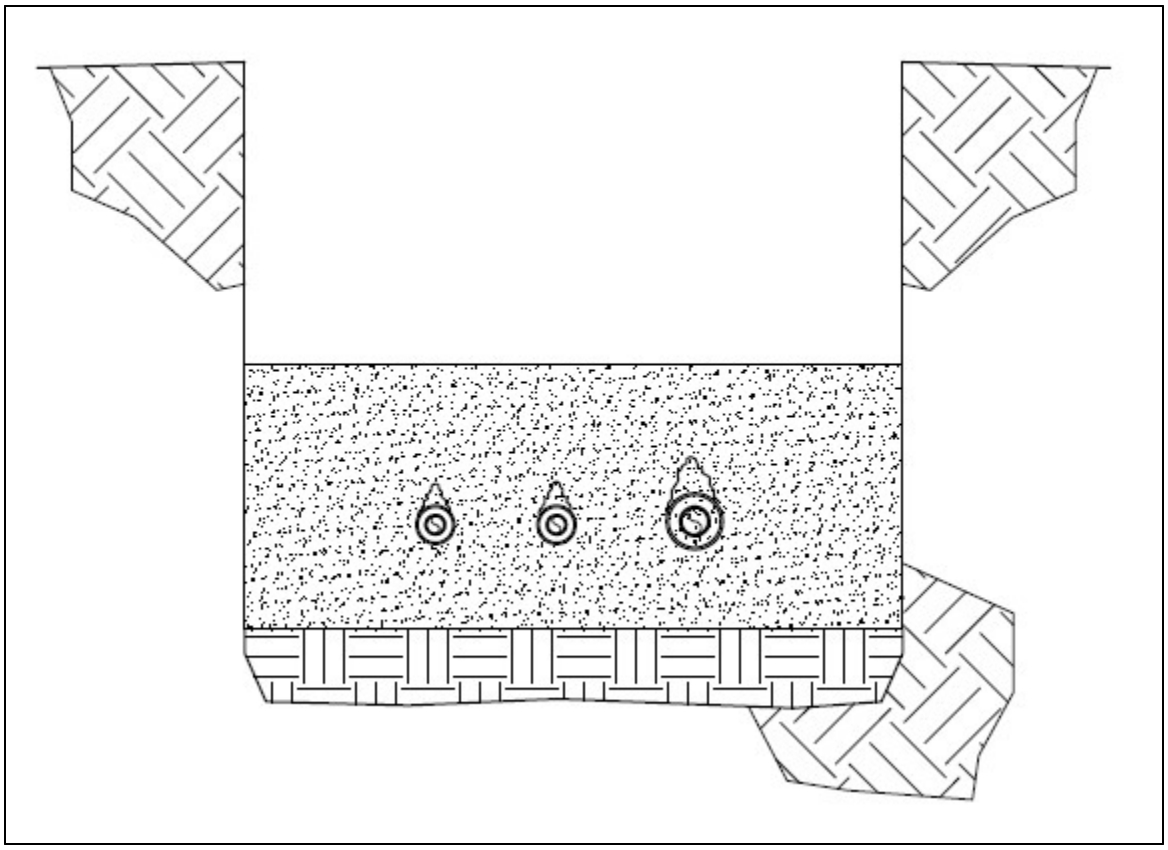

Figure 10-8. CDF Arching Around Pipe

$fc := 140\,psi$ — 90 day compressive strength of CDF

Amplify bearing pressure between encasements to account for load delivered to each side of pipe:

$w_{a1} := 30in + 4in + 6in = 40 \cdot in$ — Effective width that initial pressure is distributed over

$w_{a2} := w_{a1} - 2 \cdot 4in - 6in = 26 \cdot in$ — Final width accounting for arching action re-distributing the force around encasements

$P_{final} := P_{max} \cdot \frac{w_{a1}}{w_{a2}} = 35.38\,psi$ — Final design pressure adjacent to encasement

Base bearing strength capacity on Article 5.7.5 of AASHTO 4th Edition.

$\phi_c := 0.70$ — Resistance factor for bearing on concrete, Article 5.5.4.2

$P_r := \phi_c \cdot 0.85 \cdot fc = 83.3\ psi$ — Bearing capacity for concrete crushing under a bearing load, EQN 5.7.5-2.

$DCR_c := \frac{P_{final}}{P_r} = 0.42$ — Demand capacity ratio < 1.0, OK

10.5.2 Required Cover for Arching Around Pipe

It is appropriate to use a 45 degree distribution for arching around pipe. Based on this, the height of arching that will occur over the largest pipe is 6.63"/2 = 3.32". 12" minimum cover is specified on the drawings, this is sufficient to allow the concrete to arch over the pipe and deliver wheel loading around the transfer lines.

ATTACHMENT 1

RISA Model

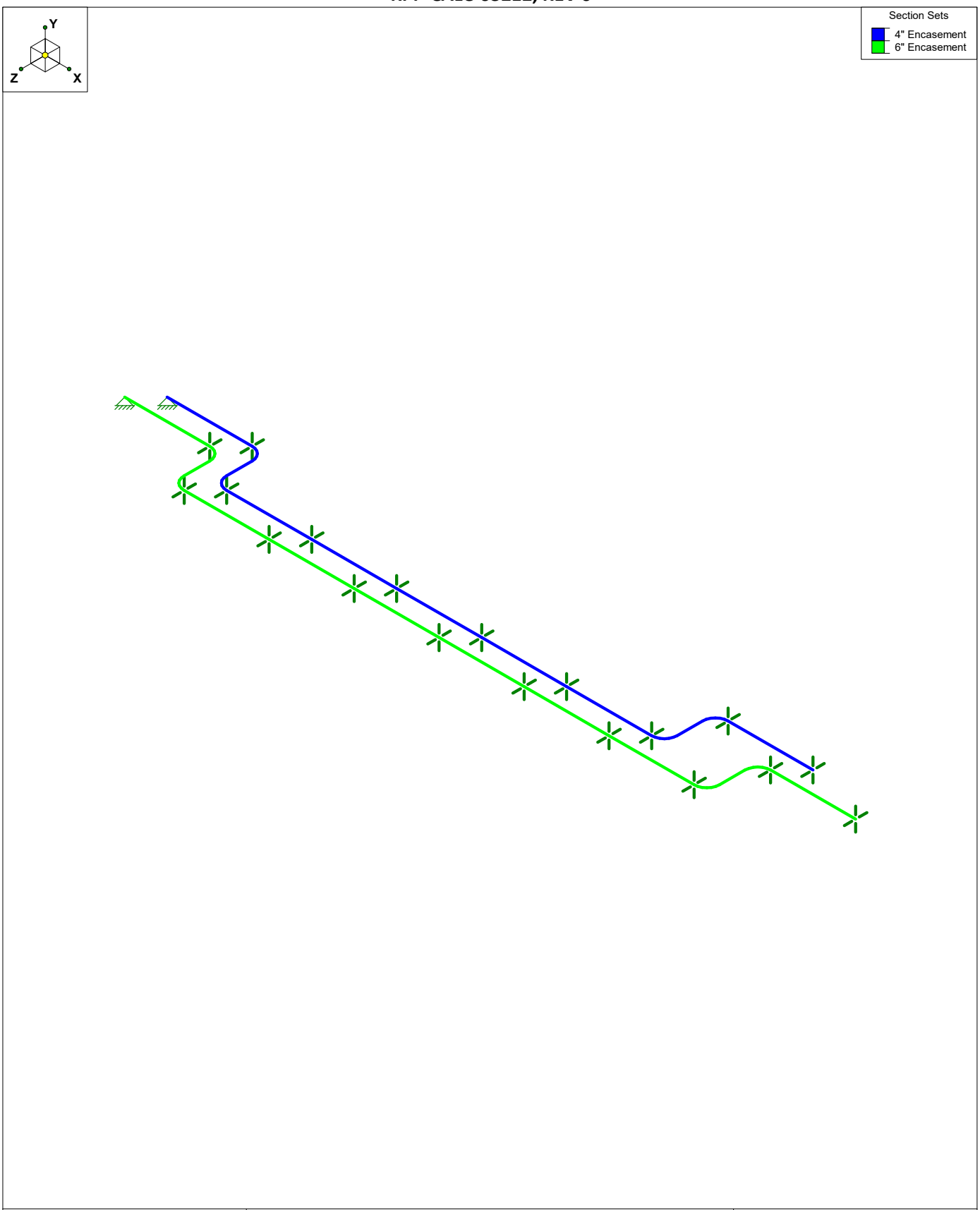

CEES	242A Transfer Line 20ft Anchorage	
JDY		
		Transfer Line Uplift Checks 20ft.r3d

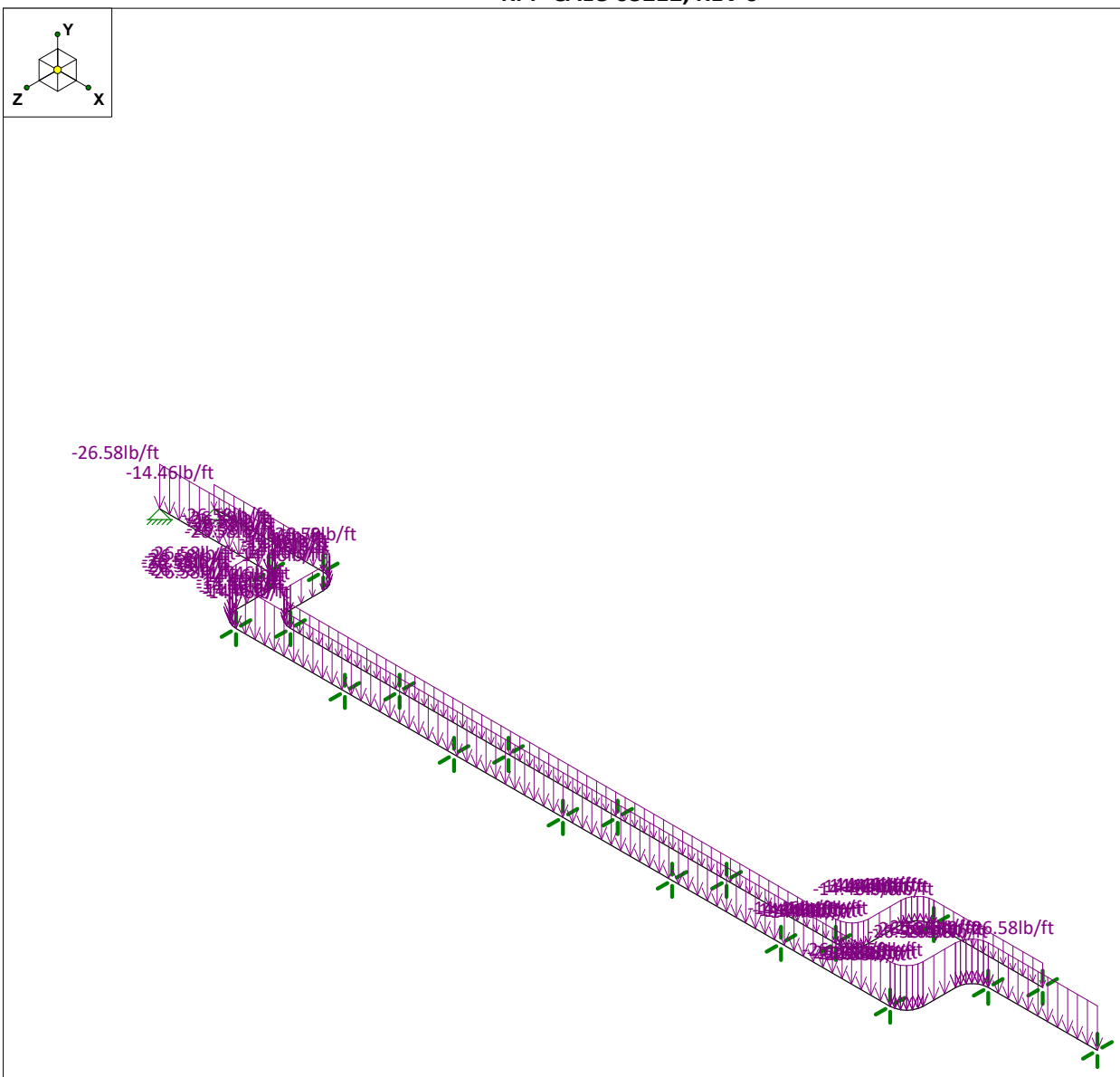

Loads: BLC 1, Pipe Weight

CEES	242A Transfer Line 20ft Anchorage	
JDY		
		Transfer Line Uplift Checks 20ft.r3d

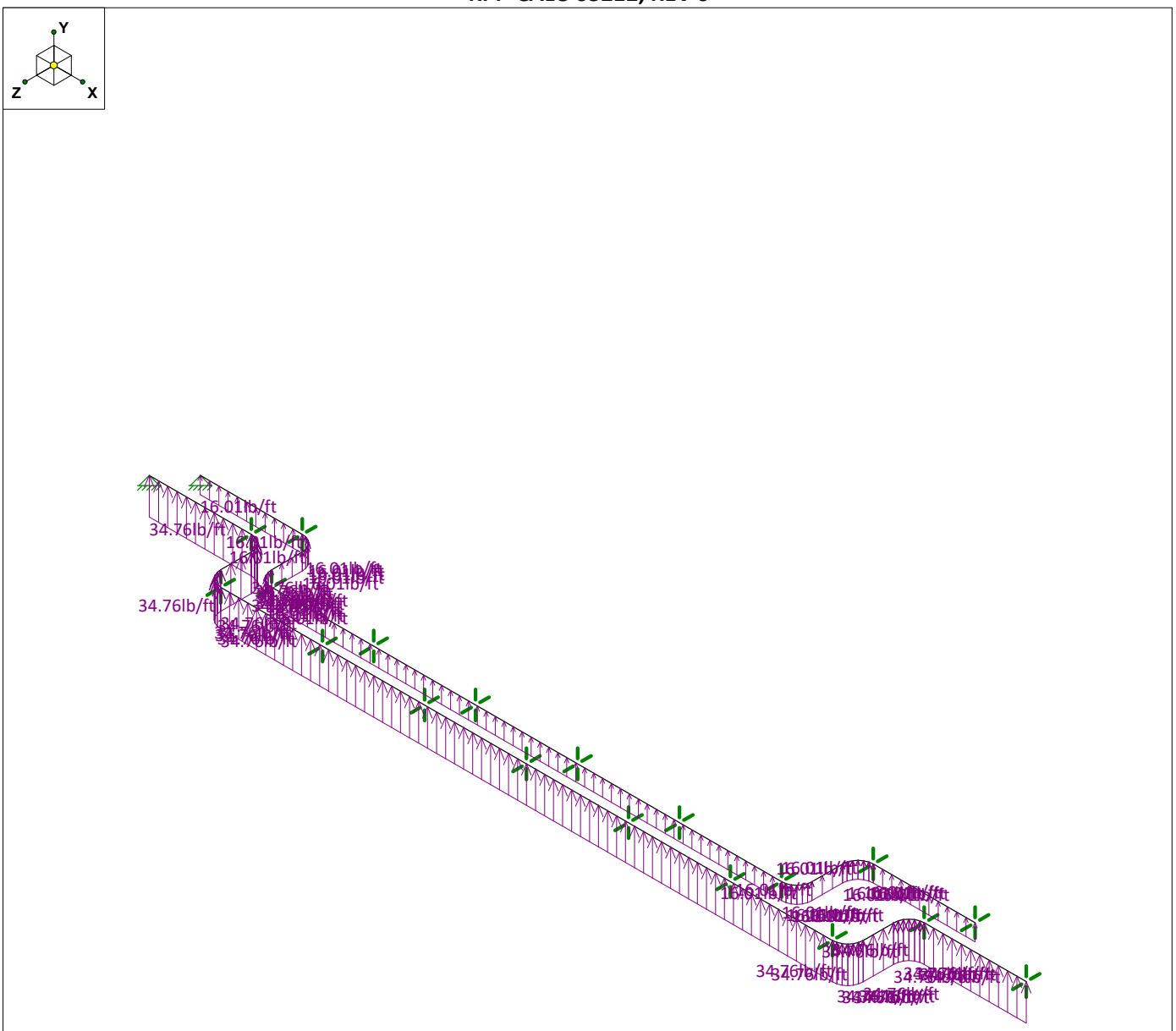

Loads: BLC 2, Uplift

CEES	242A Transfer Line 20ft Anchorage	
JDY		
		Transfer Line Uplift Checks 20ft.r3d

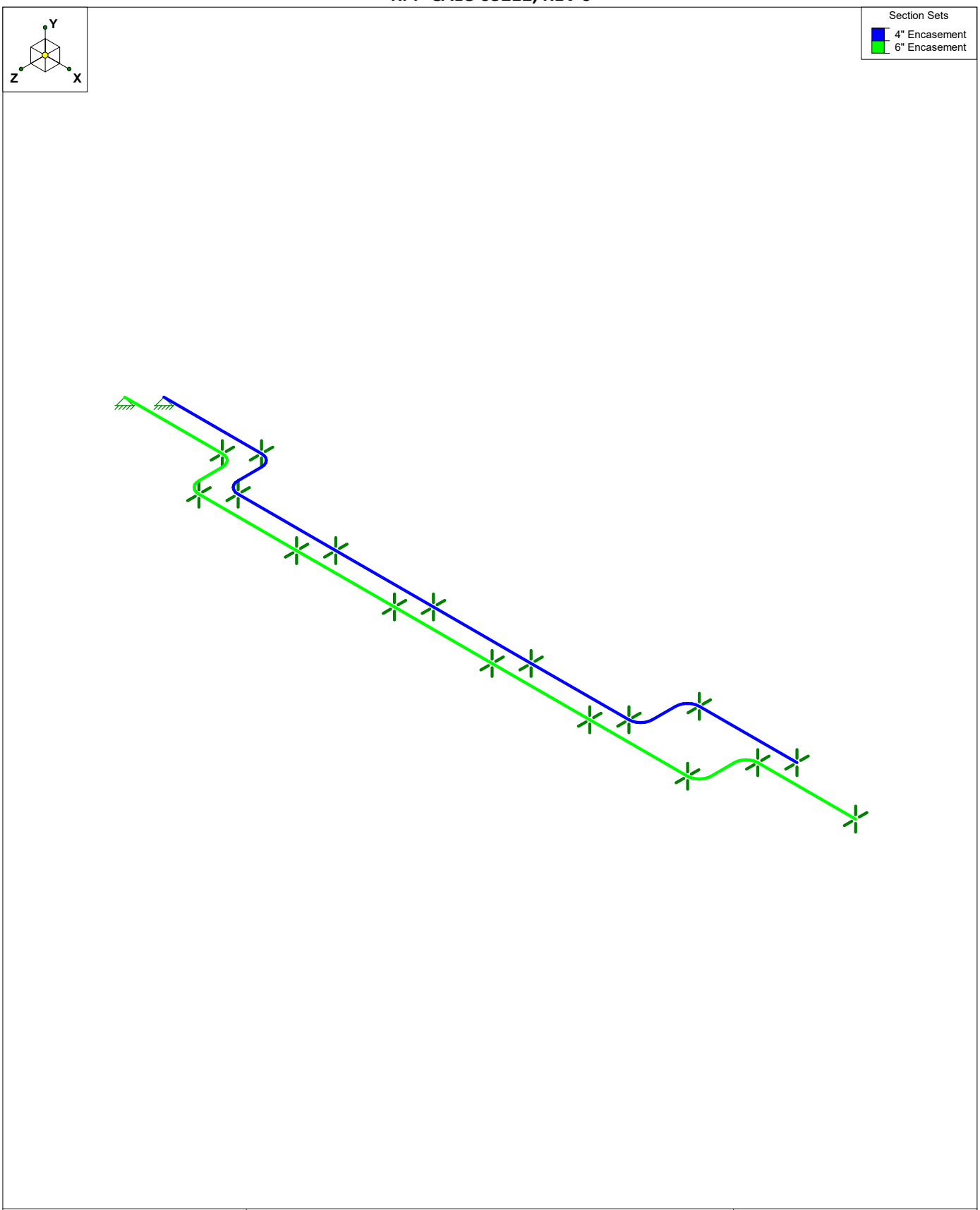

CEES	242A Transfer Line 25ft Anchorage	
JDY		
		Transfer Line Uplift Checks 25ft.r3d

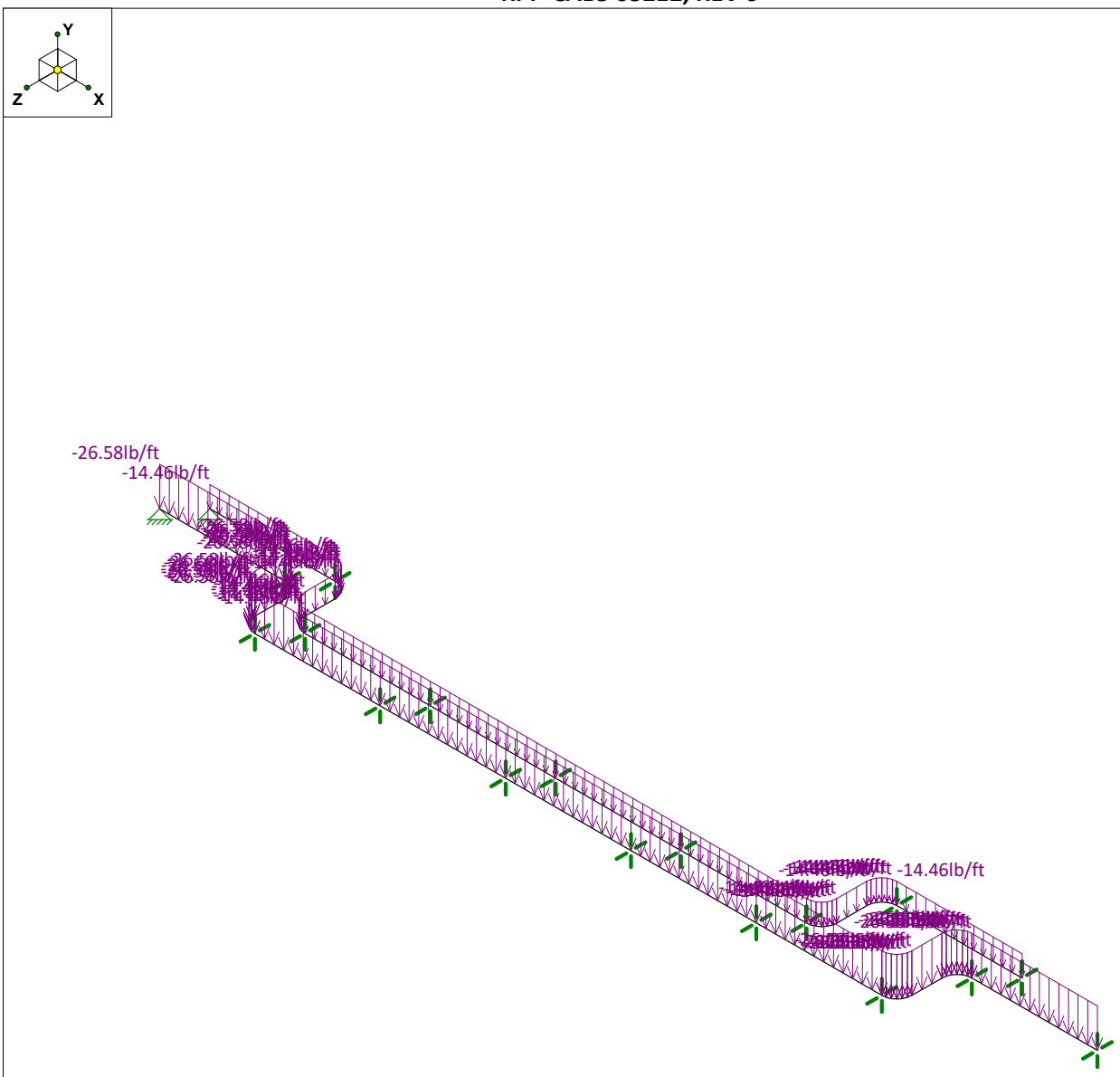

Loads: BLC 1, Pipe Weight

CEES	242A Transfer Line 25ft Anchorage	
JDY		
		Transfer Line Uplift Checks 25ft.r3d

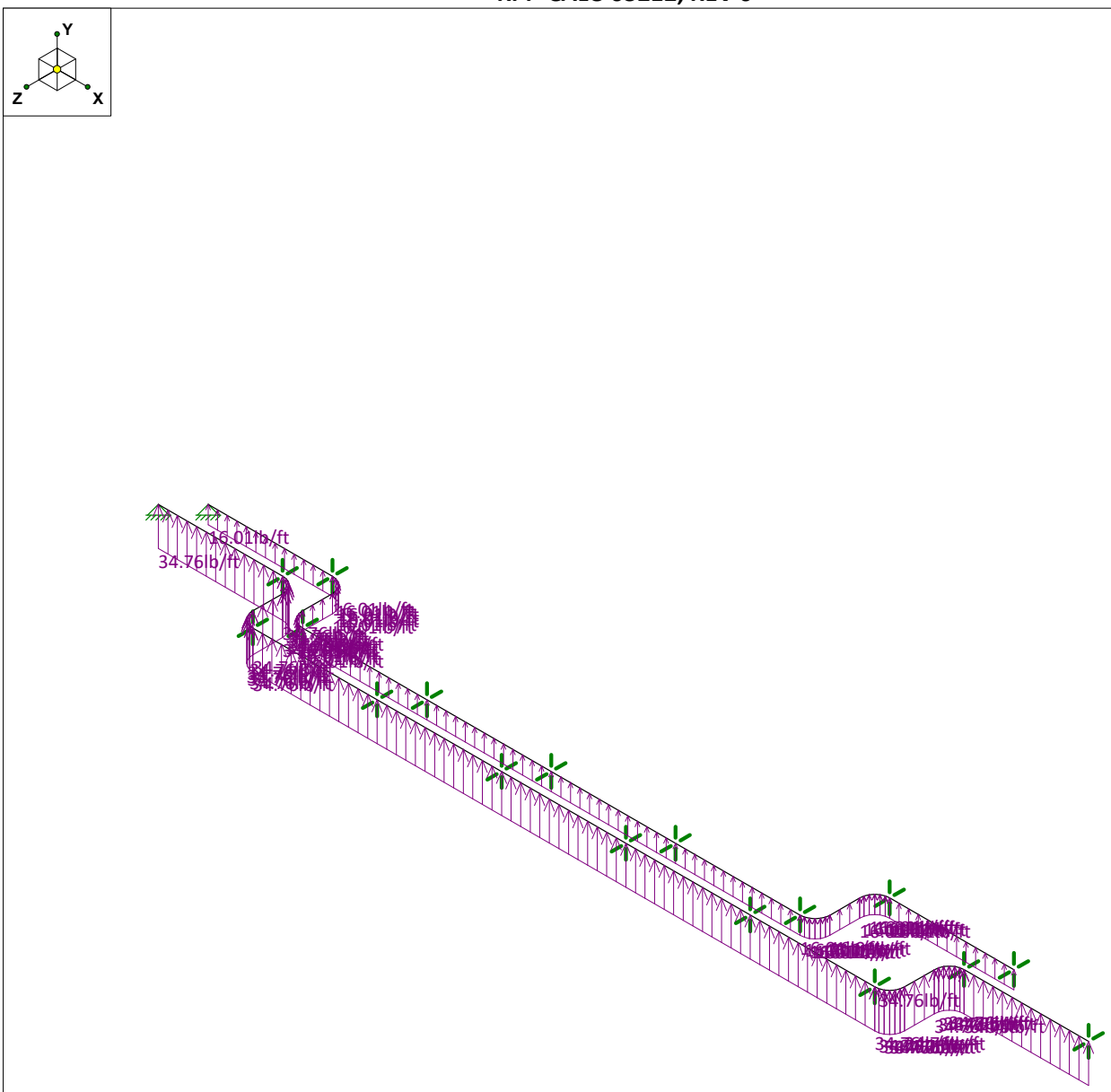

Loads: BLC 2, Uplift

CEES	242A Transfer Line 25ft Anchorage	
JDY		
		Transfer Line Uplift Checks 25ft.r3d

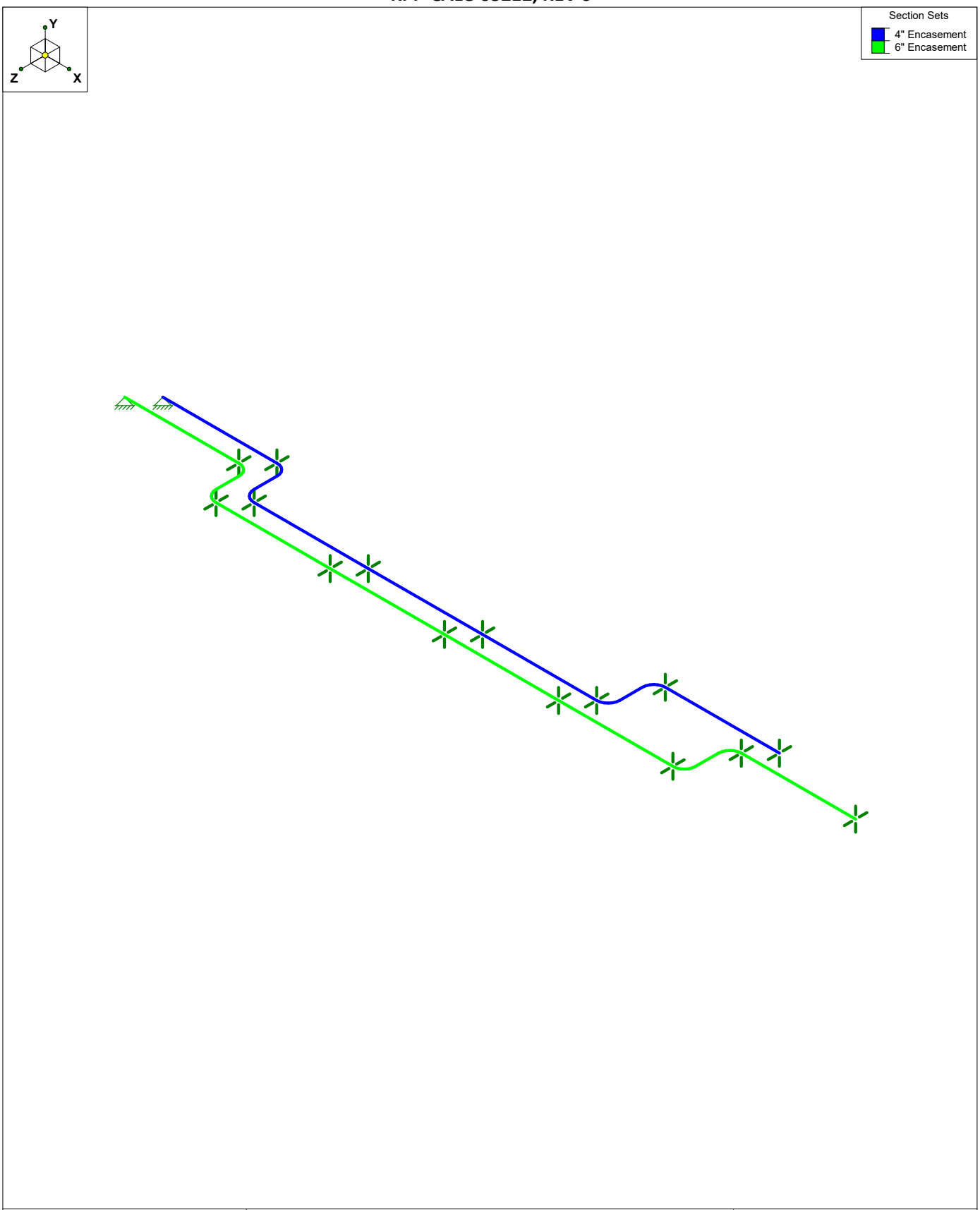

CEES	242A Transfer Line 30ft Anchorage	
JDY		
		Transfer Line Uplift Checks 30ft.r3d

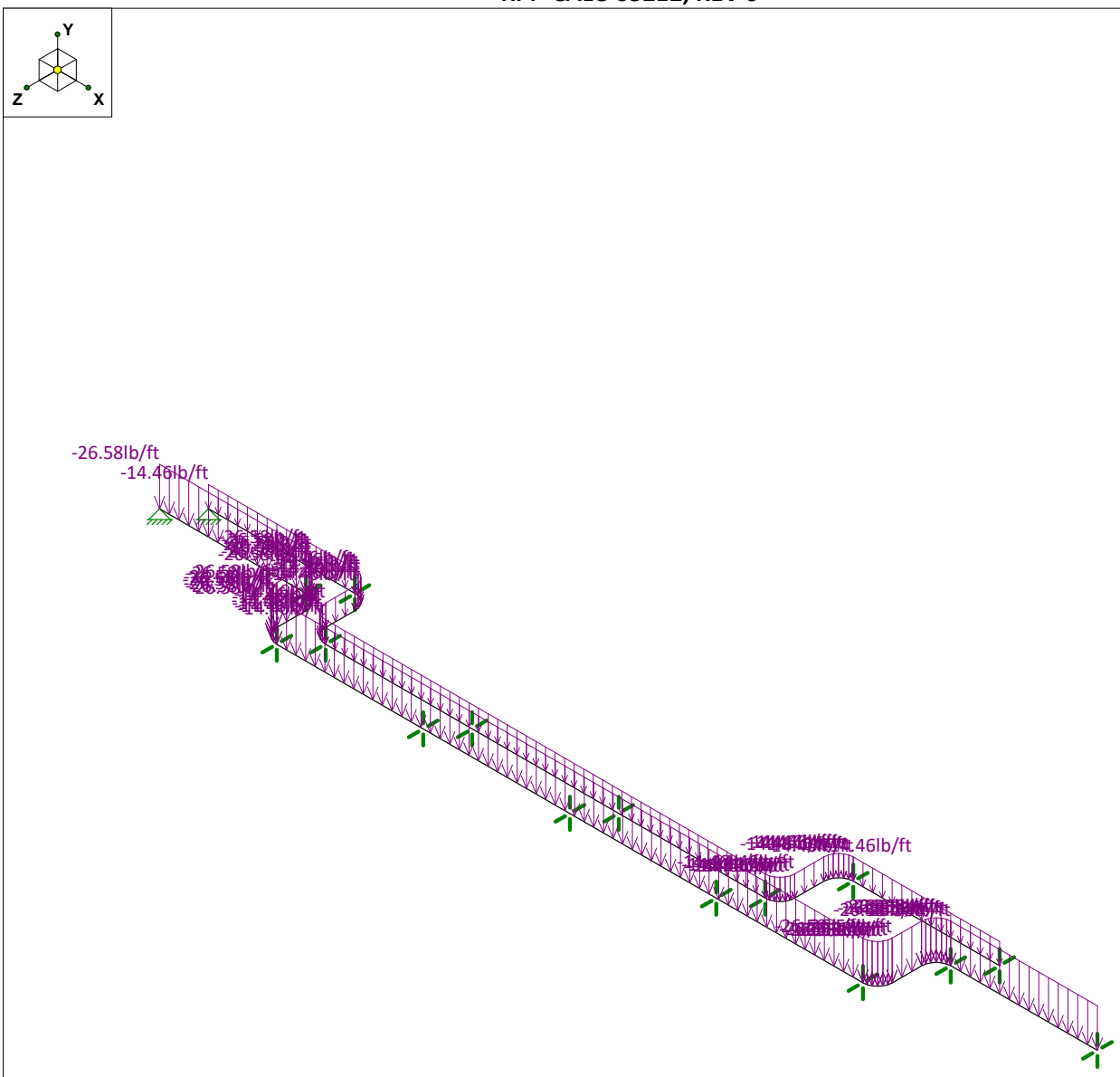

Loads: BLC 1, Pipe Weight

CEES	242A Transfer Line 30ft Anchorage	
JDY		
		Transfer Line Uplift Checks 30ft.r3d

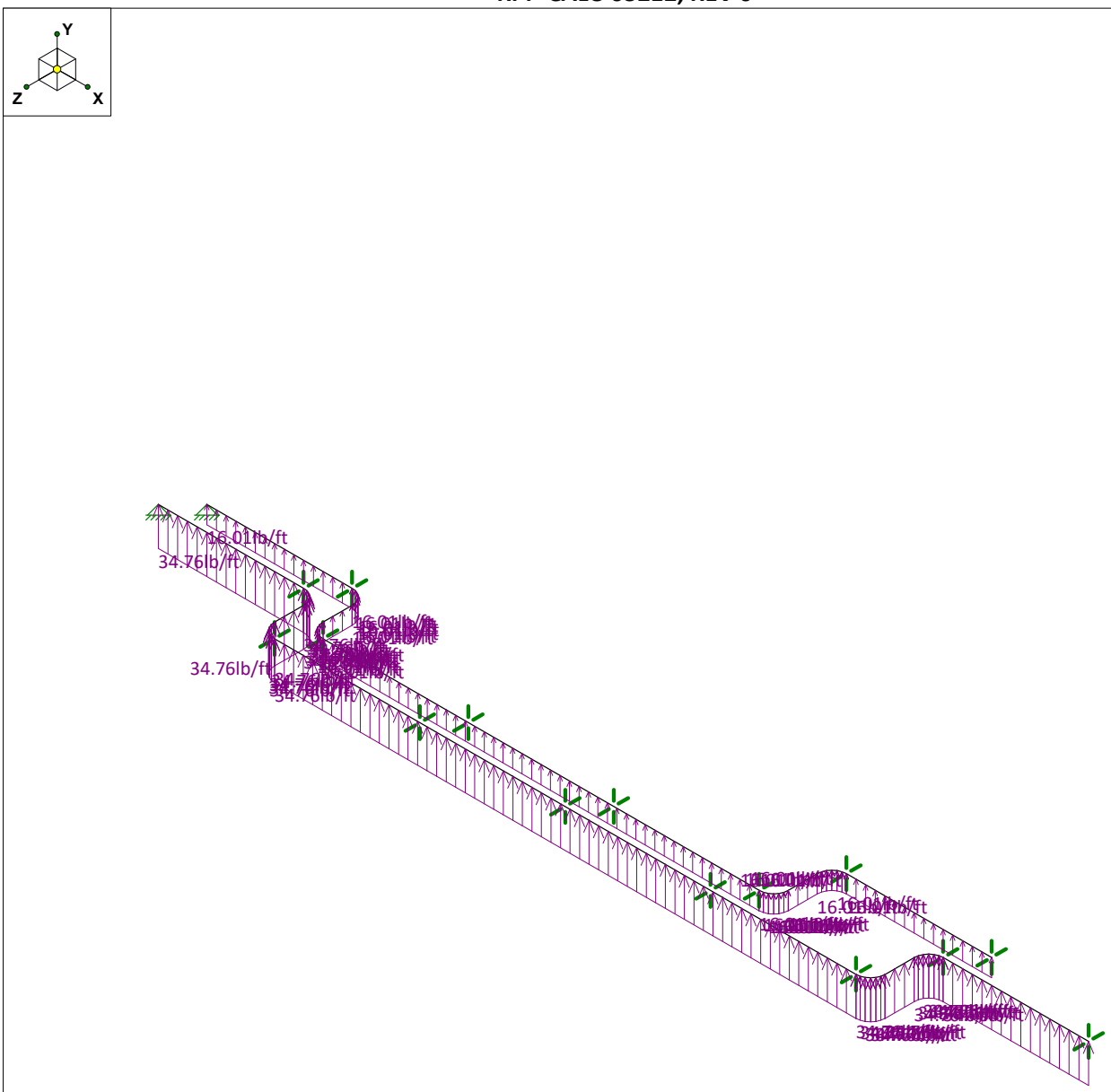

Loads: BLC 2, Uplift

CEES	242A Transfer Line 30ft Anchorage	
JDY		
		Transfer Line Uplift Checks 30ft.r3d

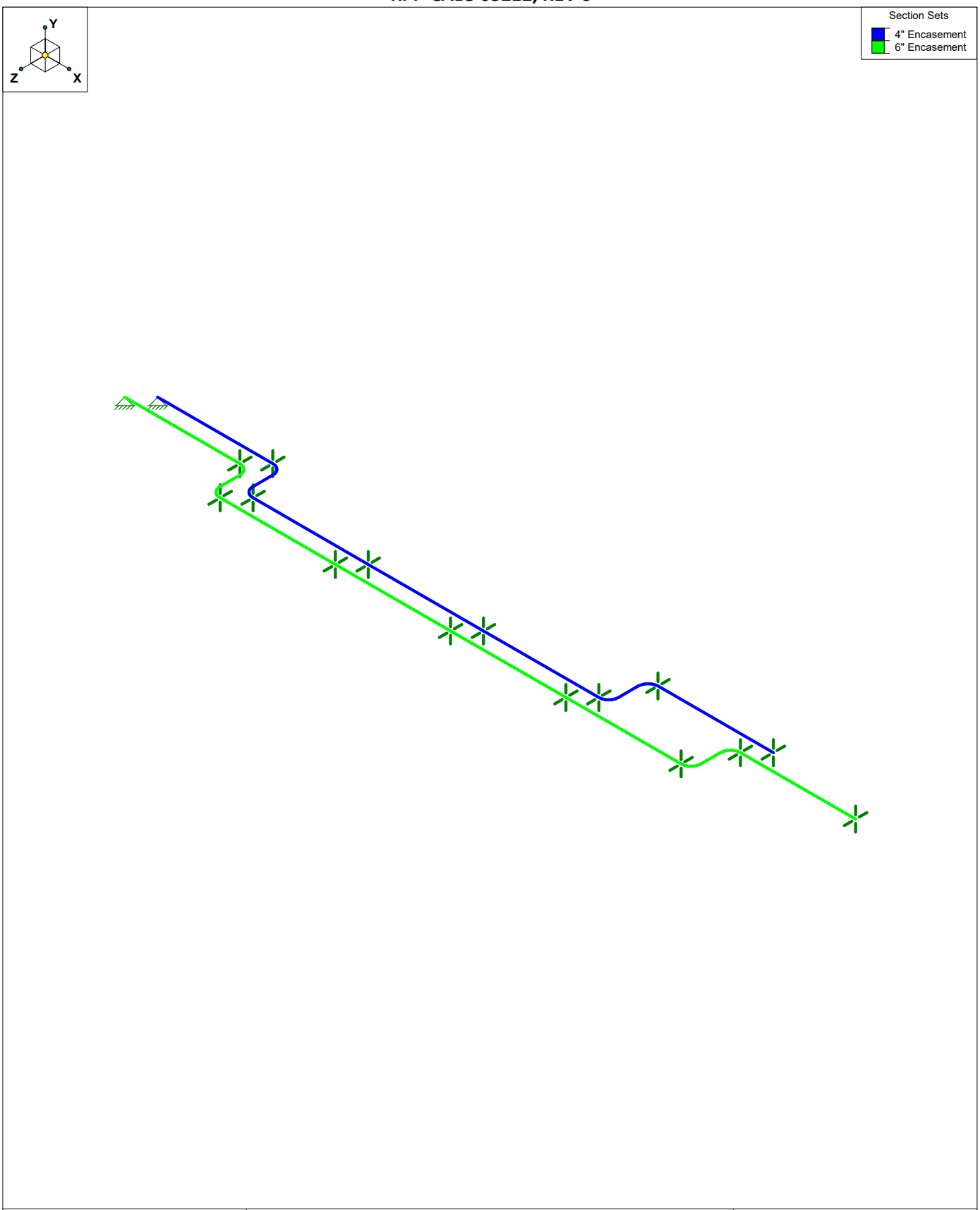

CEES	242A Transfer Line 35ft Anchorage	
JDY		
		Transfer Line Uplift Checks 35ft.r3d

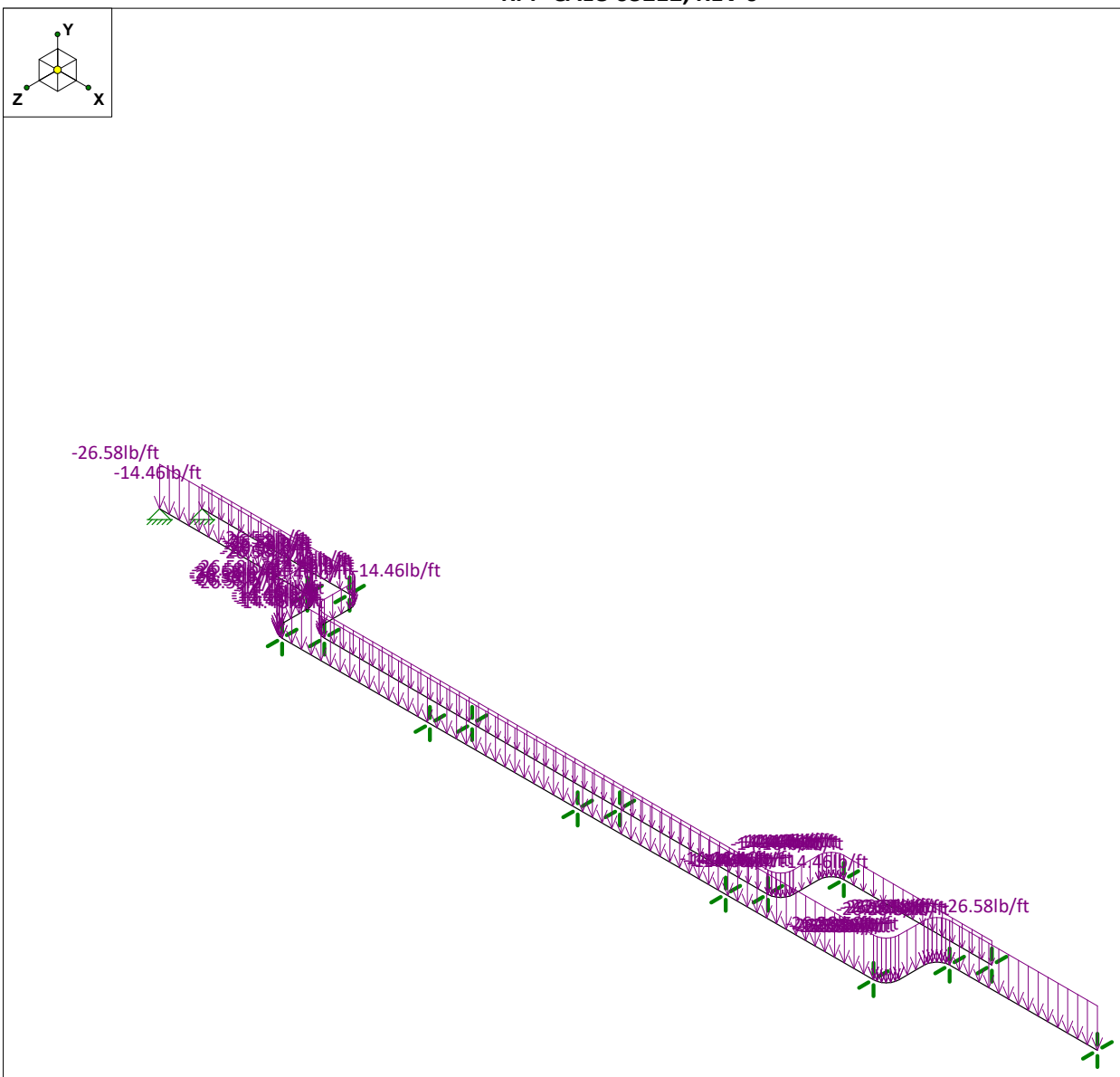

Loads: BLC 1, Pipe Weight

CEES	242A Transfer Line 35ft Anchorage	
JDY		
		Transfer Line Uplift Checks 35ft.r3d

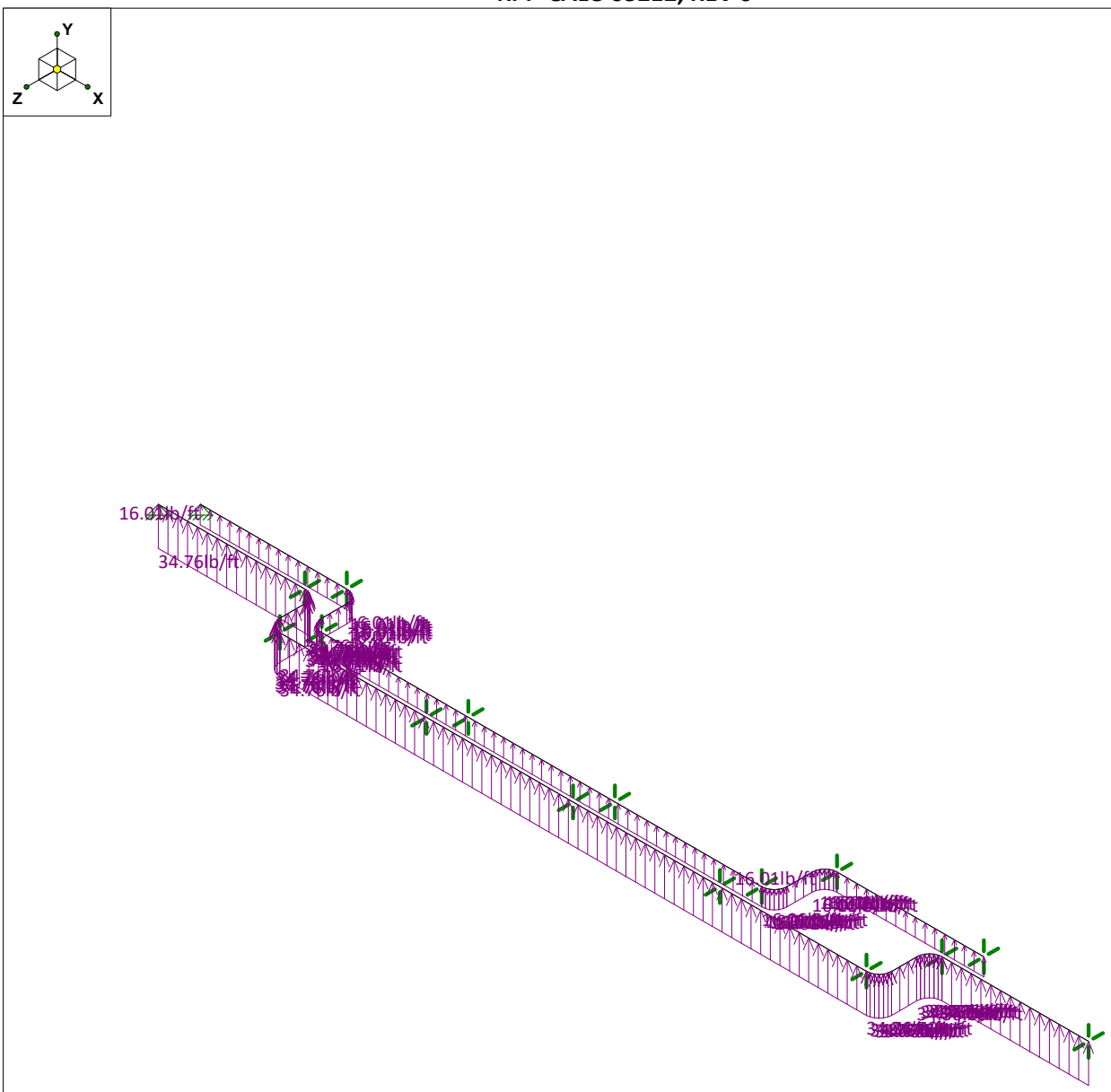

Loads: BLC 2, Uplift

CEES	242A Transfer Line 35ft Anchorage	
JDY		
		Transfer Line Uplift Checks 35ft.r3d

Hot Rolled Steel Section Sets

	Label	Shape	Type	Design List	Material	Design Rules	A [in2]	Iyy [in4]	Izz [in4]	J [in4]
1	4" Encasement	PIPE_4.0	Beam	None	A53 Gr.B	Typical	2.96	6.82	6.82	13.6
2	6" Encasement	PIPE_6.0	Beam	None	A53 Gr.B	Typical	5.2	26.5	26.5	52.9

Basic Load Cases

	BLC Description	Category	X Gravity	Y Gravity	Z Gravity	Joint	Point	Distrib...	Area(M...	Surface(Plat...
1	Pipe Weight	DL						58		
2	Uplift	OL1						58		

Load Combinations

	Description	Sol...	P...	S...	BLC	Fa...	BLC	Fac...	BLC	Fac...	BLC	Factor	BLC	Fact...	BLC	Fac...	BLC	Fac...	BLC	Fa...	BLC	Fa...	BLC	Fac...
1	Uplift Bending Check	Yes	Y		DL	1	OL1	1																

Member Section Deflections Strength

	LC	Member Label	Sec	x [in]	y [in]	z [in]	x Rotate[rad]	(n) L/y' Ratio	(n) L/z' Ratio
1	1	4INCH LINE	1	0	0	0	7.319e-05	NC	NC
2			2	0	.003	0	7.319e-05	NC	NC
3			3	0	.007	0	7.319e-05	NC	NC
4			4	0	.003	0	7.319e-05	NC	NC
5			5	0	0	0	7.319e-05	NC	NC
6	1	6INCH LINE	1	0	0	0	9.936e-05	NC	NC
7			2	0	.009	0	9.936e-05	NC	NC
8			3	0	0	0	9.936e-05	NC	NC
9			4	0	.009	0	9.936e-05	NC	NC
10			5	0	0	0	9.936e-05	NC	NC
11	1	M3	1	0	0	0	-1.556e-04	NC	NC
12			2	0	.018	0	-1.556e-04	NC	NC
13			3	0	.024	0	-1.556e-04	NC	NC
14			4	0	.015	0	-1.556e-04	NC	NC
15			5	0	0	0	-1.556e-04	NC	NC
16	1	M4	1	0	0	0	-1.829e-04	NC	NC
17			2	0	0	0	-1.819e-04	NC	NC
18			3	0	0	0	-1.809e-04	NC	NC
19			4	0	-.001	0	-1.799e-04	7166	NC
20			5	0	-.002	0	-1.789e-04	5468	NC
21	1	M5	1	0	-.002	0	-2.17e-04	NC	NC
22			2	0	-.002	0	-2.145e-04	NC	NC
23			3	0	-.002	0	-2.12e-04	NC	NC
24			4	0	-.003	0	-2.095e-04	NC	NC
25			5	0	-.003	0	-2.07e-04	NC	NC
26	1	M6	1	0	-.003	0	-2.26e-04	NC	NC
27			2	0	-.003	0	-2.225e-04	NC	NC
28			3	0	-.003	0	-2.19e-04	NC	NC
29			4	0	-.003	0	-2.156e-04	NC	NC

Member Section Deflections Strength (Continued)

	LC	Member Label	Sec	x [in]	y [in]	z [in]	x Rotate[rad]	(n) L/y' Ratio	(n) L/z' Ratio
30			5	0	-.003	0	-2.121e-04	NC	NC
31	1	M7	1	0	-.003	0	-2.136e-04	NC	NC
32			2	0	-.003	0	-2.097e-04	NC	NC
33			3	0	-.003	0	-2.059e-04	NC	NC
34			4	0	-.003	0	-2.02e-04	NC	NC
35			5	0	-.003	0	-1.982e-04	NC	NC
36	1	M8	1	0	-.003	0	-1.852e-04	NC	NC
37			2	0	-.003	0	-1.815e-04	NC	NC
38			3	0	-.003	0	-1.778e-04	NC	NC
39			4	0	-.002	0	-1.742e-04	NC	NC
40			5	0	-.002	0	-1.705e-04	NC	NC
41	1	M9	1	0	-.002	0	-1.47e-04	NC	NC
42			2	0	-.002	0	-1.44e-04	NC	NC
43			3	0	-.002	0	-1.409e-04	NC	NC
44			4	0	-.001	0	-1.379e-04	NC	NC
45			5	0	-.001	0	-1.349e-04	NC	NC
46	1	M10	1	0	-.001	0	-1.21e-04	NC	NC
47			2	0	0	0	-1.017e-04	NC	NC
48			3	0	.002	0	-8.24e-05	NC	NC
49			4	0	.002	0	-6.308e-05	NC	NC
50			5	0	.002	0	-4.376e-05	NC	NC
51	1	M11	1	0	.002	0	-3.928e-05	NC	NC
52			2	0	.002	0	-3.625e-05	NC	NC
53			3	0	.002	0	-3.322e-05	NC	NC
54			4	0	.001	0	-3.018e-05	NC	NC
55			5	0	.001	0	-2.715e-05	NC	NC
56	1	M12	1	0	.001	0	-1.334e-05	NC	NC
57			2	0	.001	0	-9.648e-06	NC	NC
58			3	0	.001	0	-5.953e-06	NC	NC
59			4	0	0	0	-2.259e-06	NC	NC
60			5	0	0	0	1.435e-06	NC	NC
61	1	M13	1	0	0	0	1.725e-05	NC	NC
62			2	0	0	0	2.111e-05	NC	NC
63			3	0	0	0	2.497e-05	NC	NC
64			4	0	0	0	2.883e-05	NC	NC
65			5	0	0	0	3.269e-05	NC	NC
66	1	M14	1	0	0	0	4.639e-05	NC	NC
67			2	0	0	0	4.986e-05	NC	NC
68			3	0	0	0	5.334e-05	NC	NC
69			4	0	0	0	5.681e-05	NC	NC
70			5	0	0	0	6.028e-05	NC	NC
71	1	M15	1	0	0	0	6.778e-05	NC	NC
72			2	0	0	0	7.03e-05	NC	NC
73			3	0	0	0	7.281e-05	NC	NC
74			4	0	0	0	7.533e-05	NC	NC
75			5	0	0	0	7.784e-05	NC	NC
76	1	M16	1	0	0	0	7.566e-05	NC	NC
77			2	0	0	0	7.666e-05	NC	NC

Member Section Deflections Strength (Continued)

	LC	Member Label	Sec	x [in]	y [in]	z [in]	x Rotate[rad]	(n) L/y' Ratio	(n) L/z' Ratio
78			3	0	0	0	7.766e-05	NC	NC
79			4	0	0	0	7.867e-05	NC	NC
80			5	0	0	0	7.967e-05	NC	NC
81	1	M17	1	0	0	0	7.967e-05	NC	NC
82			2	0	0	0	7.867e-05	NC	NC
83			3	0	0	0	7.766e-05	NC	NC
84			4	0	0	0	7.666e-05	NC	NC
85			5	0	0	0	7.566e-05	NC	NC
86	1	M18	1	0	0	0	7.784e-05	NC	NC
87			2	0	0	0	7.533e-05	NC	NC
88			3	0	0	0	7.281e-05	NC	NC
89			4	0	0	0	7.03e-05	NC	NC
90			5	0	0	0	6.778e-05	NC	NC
91	1	M19	1	0	0	0	6.028e-05	NC	NC
92			2	0	0	0	5.681e-05	NC	NC
93			3	0	0	0	5.334e-05	NC	NC
94			4	0	0	0	4.986e-05	NC	NC
95			5	0	0	0	4.639e-05	NC	NC
96	1	M20	1	0	0	0	3.269e-05	NC	NC
97			2	0	0	0	2.883e-05	NC	NC
98			3	0	0	0	2.497e-05	NC	NC
99			4	0	0	0	2.111e-05	NC	NC
100			5	0	0	0	1.725e-05	NC	NC
101	1	M21	1	0	0	0	1.435e-06	NC	NC
102			2	0	0	0	-2.259e-06	NC	NC
103			3	0	.001	0	-5.953e-06	NC	NC
104			4	0	.001	0	-9.648e-06	NC	NC
105			5	0	.001	0	-1.334e-05	NC	NC
106	1	M22	1	0	.001	0	-2.715e-05	NC	NC
107			2	0	.001	0	-3.018e-05	NC	NC
108			3	0	.002	0	-3.322e-05	NC	NC
109			4	0	.002	0	-3.625e-05	NC	NC
110			5	0	.002	0	-3.928e-05	NC	NC
111	1	M23	1	0	.002	0	-4.376e-05	NC	NC
112			2	0	.002	0	-6.308e-05	NC	NC
113			3	0	.002	0	-8.24e-05	NC	NC
114			4	0	0	0	-1.017e-04	NC	NC
115			5	0	-.001	0	-1.21e-04	NC	NC
116	1	M24	1	0	-.001	0	-1.349e-04	NC	NC
117			2	0	-.001	0	-1.379e-04	NC	NC
118			3	0	-.002	0	-1.409e-04	NC	NC
119			4	0	-.002	0	-1.44e-04	NC	NC
120			5	0	-.002	0	-1.47e-04	NC	NC
121	1	M25	1	0	-.002	0	-1.705e-04	NC	NC
122			2	0	-.002	0	-1.742e-04	NC	NC
123			3	0	-.003	0	-1.778e-04	NC	NC
124			4	0	-.003	0	-1.815e-04	NC	NC
125			5	0	-.003	0	-1.852e-04	NC	NC

Member Section Deflections Strength (Continued)

	LC	Member Label	Sec	x [in]	y [in]	z [in]	x Rotate[rad]	(n) L/y' Ratio	(n) L/z' Ratio
126	1	M26	1	0	-.003	0	-1.982e-04	NC	NC
127			2	0	-.003	0	-2.02e-04	NC	NC
128			3	0	-.003	0	-2.059e-04	NC	NC
129			4	0	-.003	0	-2.097e-04	NC	NC
130			5	0	-.003	0	-2.136e-04	NC	NC
131	1	M27	1	0	-.003	0	-2.121e-04	NC	NC
132			2	0	-.003	0	-2.156e-04	NC	NC
133			3	0	-.003	0	-2.19e-04	NC	NC
134			4	0	-.003	0	-2.225e-04	NC	NC
135			5	0	-.003	0	-2.26e-04	NC	NC
136	1	M28	1	0	-.003	0	-2.07e-04	NC	NC
137			2	0	-.003	0	-2.095e-04	NC	NC
138			3	0	-.002	0	-2.12e-04	NC	NC
139			4	0	-.002	0	-2.145e-04	NC	NC
140			5	0	-.002	0	-2.17e-04	NC	NC
141	1	M29	1	0	-.002	0	-1.789e-04	5468	NC
142			2	0	-.001	0	-1.799e-04	7166	NC
143			3	0	0	0	-1.809e-04	NC	NC
144			4	0	0	0	-1.819e-04	NC	NC
145			5	0	0	0	-1.829e-04	NC	NC
146	1	M30	1	0	0	0	-1.556e-04	NC	NC
147			2	0	.015	0	-1.556e-04	NC	NC
148			3	0	.024	0	-1.556e-04	NC	NC
149			4	0	.018	0	-1.556e-04	NC	NC
150			5	0	0	0	-1.556e-04	NC	NC
151	1	M31	1	0	0	0	-2.113e-04	NC	NC
152			2	0	.025	0	-2.113e-04	9778	NC
153			3	0	.033	0	-2.113e-04	7369	NC
154			4	0	.021	0	-2.113e-04	NC	NC
155			5	0	0	0	-2.113e-04	NC	NC
156	1	M32	1	0	0	0	-2.483e-04	NC	NC
157			2	0	0	0	-2.469e-04	NC	NC
158			3	0	-.001	0	-2.456e-04	7813	NC
159			4	0	-.002	0	-2.442e-04	5302	NC
160			5	0	-.002	0	-2.429e-04	4046	NC
161	1	M33	1	0	-.002	0	-2.947e-04	NC	NC
162			2	0	-.003	0	-2.913e-04	NC	NC
163			3	0	-.003	0	-2.878e-04	NC	NC
164			4	0	-.003	0	-2.844e-04	NC	NC
165			5	0	-.004	0	-2.81e-04	NC	NC
166	1	M34	1	0	-.004	0	-3.068e-04	NC	NC
167			2	0	-.004	0	-3.021e-04	NC	NC
168			3	0	-.004	0	-2.974e-04	NC	NC
169			4	0	-.004	0	-2.927e-04	NC	NC
170			5	0	-.004	0	-2.88e-04	NC	NC
171	1	M35	1	0	-.004	0	-2.9e-04	NC	NC
172			2	0	-.004	0	-2.848e-04	NC	NC
173			3	0	-.004	0	-2.795e-04	NC	NC

Member Section Deflections Strength (Continued)

	LC	Member Label	Sec	x [in]	y [in]	z [in]	x Rotate[rad]	(n) L/y' Ratio	(n) L/z' Ratio
174			4	0	-.004	0	-2.743e-04	NC	NC
175			5	0	-.004	0	-2.69e-04	NC	NC
176	1	M36	1	0	-.004	0	-2.515e-04	NC	NC
177			2	0	-.004	0	-2.465e-04	NC	NC
178			3	0	-.003	0	-2.414e-04	NC	NC
179			4	0	-.003	0	-2.364e-04	NC	NC
180			5	0	-.003	0	-2.314e-04	NC	NC
181	1	M37	1	0	-.003	0	-1.996e-04	NC	NC
182			2	0	-.003	0	-1.955e-04	NC	NC
183			3	0	-.002	0	-1.913e-04	NC	NC
184			4	0	-.002	0	-1.872e-04	NC	NC
185			5	0	-.002	0	-1.831e-04	NC	NC
186	1	M38	1	0	-.002	0	-1.643e-04	NC	NC
187			2	0	0	0	-1.381e-04	NC	NC
188			3	0	.002	0	-1.119e-04	NC	NC
189			4	0	.003	0	-8.571e-05	NC	NC
190			5	0	.002	0	-5.95e-05	NC	NC
191	1	M39	1	0	.002	0	-5.341e-05	NC	NC
192			2	0	.002	0	-4.929e-05	NC	NC
193			3	0	.002	0	-4.518e-05	NC	NC
194			4	0	.002	0	-4.107e-05	NC	NC
195			5	0	.002	0	-3.695e-05	NC	NC
196	1	M40	1	0	.002	0	-1.819e-05	NC	NC
197			2	0	.002	0	-1.318e-05	NC	NC
198			3	0	.001	0	-8.169e-06	NC	NC
199			4	0	.001	0	-3.158e-06	NC	NC
200			5	0	.001	0	1.854e-06	NC	NC
201	1	M41	1	0	.001	0	2.334e-05	NC	NC
202			2	0	0	0	2.858e-05	NC	NC
203			3	0	0	0	3.382e-05	NC	NC
204			4	0	0	0	3.905e-05	NC	NC
205			5	0	0	0	4.429e-05	NC	NC
206	1	M42	1	0	0	0	6.292e-05	NC	NC
207			2	0	0	0	6.763e-05	NC	NC
208			3	0	0	0	7.234e-05	NC	NC
209			4	0	0	0	7.705e-05	NC	NC
210			5	0	0	0	8.176e-05	NC	NC
211	1	M43	1	0	0	0	9.198e-05	NC	NC
212			2	0	0	0	9.539e-05	NC	NC
213			3	0	0	0	9.88e-05	NC	NC
214			4	0	0	0	1.022e-04	NC	NC
215			5	0	0	0	1.056e-04	NC	NC
216	1	M44	1	0	0	0	1.027e-04	NC	NC
217			2	0	0	0	1.041e-04	NC	NC
218			3	0	0	0	1.054e-04	NC	NC
219			4	0	0	0	1.068e-04	NC	NC
220			5	0	0	0	1.081e-04	NC	NC
221	1	M45	1	0	0	0	1.081e-04	NC	NC

Member Section Deflections Strength (Continued)

	LC	Member Label	Sec	x [in]	y [in]	z [in]	x Rotate[rad]	(n) L/y' Ratio	(n) L/z' Ratio
222			2	0	0	0	1.068e-04	NC	NC
223			3	0	0	0	1.054e-04	NC	NC
224			4	0	0	0	1.041e-04	NC	NC
225			5	0	0	0	1.027e-04	NC	NC
226	1	M46	1	0	0	0	1.056e-04	NC	NC
227			2	0	0	0	1.022e-04	NC	NC
228			3	0	0	0	9.88e-05	NC	NC
229			4	0	0	0	9.539e-05	NC	NC
230			5	0	0	0	9.198e-05	NC	NC
231	1	M47	1	0	0	0	8.176e-05	NC	NC
232			2	0	0	0	7.705e-05	NC	NC
233			3	0	0	0	7.234e-05	NC	NC
234			4	0	0	0	6.763e-05	NC	NC
235			5	0	0	0	6.292e-05	NC	NC
236	1	M48	1	0	0	0	4.429e-05	NC	NC
237			2	0	0	0	3.905e-05	NC	NC
238			3	0	0	0	3.382e-05	NC	NC
239			4	0	0	0	2.858e-05	NC	NC
240			5	0	.001	0	2.334e-05	NC	NC
241	1	M49	1	0	.001	0	1.854e-06	NC	NC
242			2	0	.001	0	-3.158e-06	NC	NC
243			3	0	.001	0	-8.169e-06	NC	NC
244			4	0	.002	0	-1.318e-05	NC	NC
245			5	0	.002	0	-1.819e-05	NC	NC
246	1	M50	1	0	.002	0	-3.695e-05	NC	NC
247			2	0	.002	0	-4.107e-05	NC	NC
248			3	0	.002	0	-4.518e-05	NC	NC
249			4	0	.002	0	-4.929e-05	NC	NC
250			5	0	.002	0	-5.341e-05	NC	NC
251	1	M51	1	0	.002	0	-5.95e-05	NC	NC
252			2	0	.003	0	-8.571e-05	NC	NC
253			3	0	.002	0	-1.119e-04	NC	NC
254			4	0	0	0	-1.381e-04	NC	NC
255			5	0	-.002	0	-1.643e-04	NC	NC
256	1	M52	1	0	-.002	0	-1.831e-04	NC	NC
257			2	0	-.002	0	-1.872e-04	NC	NC
258			3	0	-.002	0	-1.913e-04	NC	NC
259			4	0	-.003	0	-1.955e-04	NC	NC
260			5	0	-.003	0	-1.996e-04	NC	NC
261	1	M53	1	0	-.003	0	-2.314e-04	NC	NC
262			2	0	-.003	0	-2.364e-04	NC	NC
263			3	0	-.003	0	-2.414e-04	NC	NC
264			4	0	-.004	0	-2.465e-04	NC	NC
265			5	0	-.004	0	-2.515e-04	NC	NC
266	1	M54	1	0	-.004	0	-2.69e-04	NC	NC
267			2	0	-.004	0	-2.743e-04	NC	NC
268			3	0	-.004	0	-2.795e-04	NC	NC
269			4	0	-.004	0	-2.848e-04	NC	NC

Member Section Deflections Strength (Continued)

	LC	Member Label	Sec	x [in]	y [in]	z [in]	x Rotate[rad]	(n) L/y' Ratio	(n) L/z' Ratio
270			5	0	-.004	0	-2.9e-04	NC	NC
271	1	M55	1	0	-.004	0	-2.88e-04	NC	NC
272			2	0	-.004	0	-2.927e-04	NC	NC
273			3	0	-.004	0	-2.974e-04	NC	NC
274			4	0	-.004	0	-3.021e-04	NC	NC
275			5	0	-.004	0	-3.068e-04	NC	NC
276	1	M56	1	0	-.004	0	-2.81e-04	NC	NC
277			2	0	-.003	0	-2.844e-04	NC	NC
278			3	0	-.003	0	-2.878e-04	NC	NC
279			4	0	-.003	0	-2.913e-04	NC	NC
280			5	0	-.002	0	-2.947e-04	NC	NC
281	1	M57	1	0	-.002	0	-2.429e-04	4046	NC
282			2	0	-.002	0	-2.442e-04	5302	NC
283			3	0	-.001	0	-2.456e-04	7813	NC
284			4	0	0	0	-2.469e-04	NC	NC
285			5	0	0	0	-2.483e-04	NC	NC
286	1	M58	1	0	0	0	-2.113e-04	NC	NC
287			2	0	.021	0	-2.113e-04	NC	NC
288			3	0	.033	0	-2.113e-04	7369	NC
289			4	0	.025	0	-2.113e-04	9778	NC
290			5	0	0	0	-2.113e-04	NC	NC

Hot Rolled Steel Section Sets

	Label	Shape	Type	Design List	Material	Design Rules	A [in2]	Iyy [in4]	Izz [in4]	J [in4]
1	4" Encasement	PIPE_4.0	Beam	None	A53 Gr.B	Typical	2.96	6.82	6.82	13.6
2	6" Encasement	PIPE_6.0	Beam	None	A53 Gr.B	Typical	5.2	26.5	26.5	52.9

Basic Load Cases

	BLC Description	Category	X Gravity	Y Gravity	Z Gravity	Joint	Point	Distrib...	Area(M...	Surface(Plat...
1	Pipe Weight	DL						58		
2	Uplift	OL1						58		

Load Combinations

	Description	Sol...	P...	S...	BLC	Fa...	BLC	Fac...	BLC	Fac...	BLC	Factor	BLC	Fact...	BLC	Fac...	BLC	Fac...	BLC	Fa...	BLC	Fa...	BLC	Fac...
1	Uplift Bending Check	Yes	Y		DL	1	OL1	1																

Member Section Deflections Strength

	LC	Member Label	Sec	x [in]	y [in]	z [in]	x Rotate[rad]	(n) L/y' Ratio	(n) L/z' Ratio
1	1	4INCH LINE	1	0	0	0	3.405e-05	NC	NC
2			2	0	0	0	3.405e-05	NC	NC
3			3	0	0	0	3.405e-05	NC	NC
4			4	0	0	0	3.405e-05	NC	NC
5			5	0	0	0	3.405e-05	NC	NC
6	1	6INCH LINE	1	0	0	0	4.68e-05	NC	NC
7			2	0	.011	0	4.68e-05	NC	NC
8			3	0	.025	0	4.68e-05	NC	NC
9			4	0	.011	0	4.68e-05	NC	NC
10			5	0	0	0	4.68e-05	NC	NC
11	1	M3	1	0	0	0	-1.972e-04	NC	NC
12			2	0	.045	0	-1.972e-04	6691	NC
13			3	0	.06	0	-1.972e-04	5027	NC
14			4	0	.038	0	-1.972e-04	7848	NC
15			5	0	0	0	-1.972e-04	NC	NC
16	1	M4	1	0	0	0	-2.54e-04	NC	NC
17			2	0	0	0	-2.525e-04	9687	NC
18			3	0	-.002	0	-2.51e-04	4906	NC
19			4	0	-.003	0	-2.495e-04	3312	NC
20			5	0	-.004	0	-2.48e-04	2515	NC
21	1	M5	1	0	-.004	0	-3.375e-04	NC	NC
22			2	0	-.004	0	-3.335e-04	NC	NC
23			3	0	-.005	0	-3.296e-04	NC	NC
24			4	0	-.006	0	-3.256e-04	NC	NC
25			5	0	-.006	0	-3.216e-04	NC	NC
26	1	M6	1	0	-.006	0	-3.804e-04	NC	NC
27			2	0	-.007	0	-3.746e-04	NC	NC
28			3	0	-.007	0	-3.688e-04	NC	NC
29			4	0	-.008	0	-3.63e-04	NC	NC

Member Section Deflections Strength (Continued)

	LC	Member Label	Sec	x [in]	y [in]	z [in]	x Rotate[rad]	(n) L/y' Ratio	(n) L/z' Ratio
30			5	0	-.008	0	-3.572e-04	NC	NC
31	1	M7	1	0	-.008	0	-3.853e-04	NC	NC
32			2	0	-.008	0	-3.784e-04	NC	NC
33			3	0	-.008	0	-3.715e-04	NC	NC
34			4	0	-.008	0	-3.646e-04	NC	NC
35			5	0	-.008	0	-3.577e-04	NC	NC
36	1	M8	1	0	-.008	0	-3.577e-04	NC	NC
37			2	0	-.008	0	-3.505e-04	NC	NC
38			3	0	-.008	0	-3.433e-04	NC	NC
39			4	0	-.008	0	-3.36e-04	NC	NC
40			5	0	-.008	0	-3.288e-04	NC	NC
41	1	M9	1	0	-.008	0	-3.056e-04	NC	NC
42			2	0	-.008	0	-2.988e-04	NC	NC
43			3	0	-.007	0	-2.92e-04	NC	NC
44			4	0	-.007	0	-2.851e-04	NC	NC
45			5	0	-.007	0	-2.783e-04	NC	NC
46	1	M10	1	0	-.007	0	-2.604e-04	NC	NC
47			2	0	-.004	0	-2.118e-04	NC	NC
48			3	0	-.003	0	-1.631e-04	NC	NC
49			4	0	-.001	0	-1.145e-04	NC	NC
50			5	0	0	0	-6.587e-05	NC	NC
51	1	M11	1	0	0	0	-6.647e-05	NC	NC
52			2	0	0	0	-5.964e-05	NC	NC
53			3	0	0	0	-5.281e-05	NC	NC
54			4	0	0	0	-4.598e-05	NC	NC
55			5	0	-.001	0	-3.916e-05	NC	NC
56	1	M12	1	0	-.001	0	-3.505e-05	NC	NC
57			2	0	-.001	0	-2.782e-05	NC	NC
58			3	0	-.001	0	-2.059e-05	NC	NC
59			4	0	-.001	0	-1.336e-05	NC	NC
60			5	0	-.001	0	-6.132e-06	NC	NC
61	1	M13	1	0	-.001	0	-4.727e-07	NC	NC
62			2	0	-.001	0	6.423e-06	NC	NC
63			3	0	-.001	0	1.332e-05	NC	NC
64			4	0	-.001	0	2.021e-05	NC	NC
65			5	0	-.001	0	2.711e-05	NC	NC
66	1	M14	1	0	-.001	0	2.914e-05	NC	NC
67			2	0	-.001	0	3.494e-05	NC	NC
68			3	0	-.001	0	4.074e-05	NC	NC
69			4	0	-.001	0	4.655e-05	NC	NC
70			5	0	-.001	0	5.235e-05	NC	NC
71	1	M15	1	0	-.001	0	4.602e-05	NC	NC
72			2	0	-.001	0	5.e-05	NC	NC
73			3	0	-.001	0	5.398e-05	NC	NC
74			4	0	-.001	0	5.796e-05	NC	NC
75			5	0	0	0	6.194e-05	NC	NC
76	1	M16	1	0	0	0	4.37e-05	NC	NC
77			2	0	0	0	4.52e-05	NC	NC

Member Section Deflections Strength (Continued)

	LC	Member Label	Sec	x [in]	y [in]	z [in]	x Rotate[rad]	(n) L/y' Ratio	(n) L/z' Ratio
78			3	0	0	0	4.671e-05	NC	NC
79			4	0	0	0	4.821e-05	NC	NC
80			5	0	0	0	4.971e-05	NC	NC
81	1	M17	1	0	0	0	4.971e-05	NC	NC
82			2	0	0	0	4.821e-05	NC	NC
83			3	0	0	0	4.671e-05	NC	NC
84			4	0	0	0	4.52e-05	NC	NC
85			5	0	0	0	4.37e-05	NC	NC
86	1	M18	1	0	0	0	6.194e-05	NC	NC
87			2	0	-.001	0	5.796e-05	NC	NC
88			3	0	-.001	0	5.398e-05	NC	NC
89			4	0	-.001	0	5.e-05	NC	NC
90			5	0	-.001	0	4.602e-05	NC	NC
91	1	M19	1	0	-.001	0	5.235e-05	NC	NC
92			2	0	-.001	0	4.655e-05	NC	NC
93			3	0	-.001	0	4.074e-05	NC	NC
94			4	0	-.001	0	3.494e-05	NC	NC
95			5	0	-.001	0	2.914e-05	NC	NC
96	1	M20	1	0	-.001	0	2.711e-05	NC	NC
97			2	0	-.001	0	2.021e-05	NC	NC
98			3	0	-.001	0	1.332e-05	NC	NC
99			4	0	-.001	0	6.423e-06	NC	NC
100			5	0	-.001	0	-4.727e-07	NC	NC
101	1	M21	1	0	-.001	0	-6.132e-06	NC	NC
102			2	0	-.001	0	-1.336e-05	NC	NC
103			3	0	-.001	0	-2.059e-05	NC	NC
104			4	0	-.001	0	-2.782e-05	NC	NC
105			5	0	-.001	0	-3.505e-05	NC	NC
106	1	M22	1	0	-.001	0	-3.916e-05	NC	NC
107			2	0	0	0	-4.598e-05	NC	NC
108			3	0	0	0	-5.281e-05	NC	NC
109			4	0	0	0	-5.964e-05	NC	NC
110			5	0	0	0	-6.647e-05	NC	NC
111	1	M23	1	0	0	0	-6.587e-05	NC	NC
112			2	0	-.001	0	-1.145e-04	NC	NC
113			3	0	-.003	0	-1.631e-04	NC	NC
114			4	0	-.004	0	-2.118e-04	NC	NC
115			5	0	-.007	0	-2.604e-04	NC	NC
116	1	M24	1	0	-.007	0	-2.783e-04	NC	NC
117			2	0	-.007	0	-2.851e-04	NC	NC
118			3	0	-.007	0	-2.92e-04	NC	NC
119			4	0	-.008	0	-2.988e-04	NC	NC
120			5	0	-.008	0	-3.056e-04	NC	NC
121	1	M25	1	0	-.008	0	-3.288e-04	NC	NC
122			2	0	-.008	0	-3.36e-04	NC	NC
123			3	0	-.008	0	-3.433e-04	NC	NC
124			4	0	-.008	0	-3.505e-04	NC	NC
125			5	0	-.008	0	-3.577e-04	NC	NC

Member Section Deflections Strength (Continued)

	LC	Member Label	Sec	x [in]	y [in]	z [in]	x Rotate[rad]	(n) L/y' Ratio	(n) L/z' Ratio
126	1	M26	1	0	-.008	0	-3.577e-04	NC	NC
127			2	0	-.008	0	-3.646e-04	NC	NC
128			3	0	-.008	0	-3.715e-04	NC	NC
129			4	0	-.008	0	-3.784e-04	NC	NC
130			5	0	-.008	0	-3.853e-04	NC	NC
131	1	M27	1	0	-.008	0	-3.572e-04	NC	NC
132			2	0	-.008	0	-3.63e-04	NC	NC
133			3	0	-.007	0	-3.688e-04	NC	NC
134			4	0	-.007	0	-3.746e-04	NC	NC
135			5	0	-.006	0	-3.804e-04	NC	NC
136	1	M28	1	0	-.006	0	-3.216e-04	NC	NC
137			2	0	-.006	0	-3.256e-04	NC	NC
138			3	0	-.005	0	-3.296e-04	NC	NC
139			4	0	-.004	0	-3.335e-04	NC	NC
140			5	0	-.004	0	-3.375e-04	NC	NC
141	1	M29	1	0	-.004	0	-2.48e-04	2515	NC
142			2	0	-.003	0	-2.495e-04	3312	NC
143			3	0	-.002	0	-2.51e-04	4906	NC
144			4	0	0	0	-2.525e-04	9687	NC
145			5	0	0	0	-2.54e-04	NC	NC
146	1	M30	1	0	0	0	-1.972e-04	NC	NC
147			2	0	.038	0	-1.972e-04	7848	NC
148			3	0	.06	0	-1.972e-04	5027	NC
149			4	0	.045	0	-1.972e-04	6691	NC
150			5	0	0	0	-1.972e-04	NC	NC
151	1	M31	1	0	0	0	-2.671e-04	NC	NC
152			2	0	.061	0	-2.671e-04	4928	NC
153			3	0	.081	0	-2.671e-04	3703	NC
154			4	0	.052	0	-2.671e-04	5782	NC
155			5	0	0	0	-2.671e-04	NC	NC
156	1	M32	1	0	0	0	-3.442e-04	NC	NC
157			2	0	-.001	0	-3.421e-04	7156	NC
158			3	0	-.003	0	-3.401e-04	3624	NC
159			4	0	-.004	0	-3.38e-04	2447	NC
160			5	0	-.005	0	-3.36e-04	1858	NC
161	1	M33	1	0	-.005	0	-4.573e-04	NC	NC
162			2	0	-.006	0	-4.519e-04	NC	NC
163			3	0	-.007	0	-4.465e-04	NC	NC
164			4	0	-.008	0	-4.411e-04	NC	NC
165			5	0	-.009	0	-4.357e-04	NC	NC
166	1	M34	1	0	-.009	0	-5.154e-04	NC	NC
167			2	0	-.009	0	-5.076e-04	NC	NC
168			3	0	-.01	0	-4.997e-04	NC	NC
169			4	0	-.01	0	-4.918e-04	NC	NC
170			5	0	-.011	0	-4.839e-04	NC	NC
171	1	M35	1	0	-.011	0	-5.22e-04	NC	NC
172			2	0	-.011	0	-5.126e-04	NC	NC
173			3	0	-.011	0	-5.032e-04	NC	NC

Member Section Deflections Strength (Continued)

	LC	Member Label	Sec	x [in]	y [in]	z [in]	x Rotate[rad]	(n) L/y' Ratio	(n) L/z' Ratio
174			4	0	-.011	0	-4.939e-04	NC	NC
175			5	0	-.011	0	-4.845e-04	NC	NC
176	1	M36	1	0	-.011	0	-4.846e-04	NC	NC
177			2	0	-.011	0	-4.747e-04	NC	NC
178			3	0	-.011	0	-4.649e-04	NC	NC
179			4	0	-.011	0	-4.551e-04	NC	NC
180			5	0	-.011	0	-4.453e-04	NC	NC
181	1	M37	1	0	-.011	0	-4.139e-04	NC	NC
182			2	0	-.01	0	-4.046e-04	NC	NC
183			3	0	-.01	0	-3.953e-04	NC	NC
184			4	0	-.01	0	-3.86e-04	NC	NC
185			5	0	-.009	0	-3.767e-04	NC	NC
186	1	M38	1	0	-.009	0	-3.525e-04	NC	NC
187			2	0	-.006	0	-2.864e-04	NC	NC
188			3	0	-.003	0	-2.203e-04	NC	NC
189			4	0	-.002	0	-1.541e-04	NC	NC
190			5	0	-.001	0	-8.803e-05	NC	NC
191	1	M39	1	0	-.001	0	-8.877e-05	NC	NC
192			2	0	-.001	0	-7.949e-05	NC	NC
193			3	0	-.001	0	-7.021e-05	NC	NC
194			4	0	-.001	0	-6.093e-05	NC	NC
195			5	0	-.001	0	-5.165e-05	NC	NC
196	1	M40	1	0	-.001	0	-4.601e-05	NC	NC
197			2	0	-.001	0	-3.618e-05	NC	NC
198			3	0	-.002	0	-2.636e-05	NC	NC
199			4	0	-.002	0	-1.653e-05	NC	NC
200			5	0	-.002	0	-6.709e-06	NC	NC
201	1	M41	1	0	-.002	0	9.26e-07	NC	NC
202			2	0	-.002	0	1.03e-05	NC	NC
203			3	0	-.002	0	1.966e-05	NC	NC
204			4	0	-.002	0	2.903e-05	NC	NC
205			5	0	-.002	0	3.84e-05	NC	NC
206	1	M42	1	0	-.002	0	4.099e-05	NC	NC
207			2	0	-.002	0	4.887e-05	NC	NC
208			3	0	-.002	0	5.676e-05	NC	NC
209			4	0	-.002	0	6.464e-05	NC	NC
210			5	0	-.002	0	7.252e-05	NC	NC
211	1	M43	1	0	-.002	0	6.365e-05	NC	NC
212			2	0	-.002	0	6.906e-05	NC	NC
213			3	0	-.002	0	7.446e-05	NC	NC
214			4	0	-.001	0	7.986e-05	NC	NC
215			5	0	-.001	0	8.527e-05	NC	NC
216	1	M44	1	0	-.001	0	6.013e-05	7694	NC
217			2	0	0	0	6.217e-05	9749	NC
218			3	0	0	0	6.421e-05	NC	NC
219			4	0	0	0	6.625e-05	NC	NC
220			5	0	0	0	6.829e-05	NC	NC
221	1	M45	1	0	0	0	6.829e-05	NC	NC

Member Section Deflections Strength (Continued)

	LC	Member Label	Sec	x [in]	y [in]	z [in]	x Rotate[rad]	(n) L/y' Ratio	(n) L/z' Ratio
222			2	0	0	0	6.625e-05	NC	NC
223			3	0	0	0	6.421e-05	NC	NC
224			4	0	0	0	6.217e-05	9749	NC
225			5	0	-.001	0	6.013e-05	7694	NC
226	1	M46	1	0	-.001	0	8.527e-05	NC	NC
227			2	0	-.001	0	7.986e-05	NC	NC
228			3	0	-.002	0	7.446e-05	NC	NC
229			4	0	-.002	0	6.906e-05	NC	NC
230			5	0	-.002	0	6.365e-05	NC	NC
231	1	M47	1	0	-.002	0	7.252e-05	NC	NC
232			2	0	-.002	0	6.464e-05	NC	NC
233			3	0	-.002	0	5.676e-05	NC	NC
234			4	0	-.002	0	4.887e-05	NC	NC
235			5	0	-.002	0	4.099e-05	NC	NC
236	1	M48	1	0	-.002	0	3.84e-05	NC	NC
237			2	0	-.002	0	2.903e-05	NC	NC
238			3	0	-.002	0	1.966e-05	NC	NC
239			4	0	-.002	0	1.03e-05	NC	NC
240			5	0	-.002	0	9.26e-07	NC	NC
241	1	M49	1	0	-.002	0	-6.709e-06	NC	NC
242			2	0	-.002	0	-1.653e-05	NC	NC
243			3	0	-.002	0	-2.636e-05	NC	NC
244			4	0	-.001	0	-3.618e-05	NC	NC
245			5	0	-.001	0	-4.601e-05	NC	NC
246	1	M50	1	0	-.001	0	-5.165e-05	NC	NC
247			2	0	-.001	0	-6.093e-05	NC	NC
248			3	0	-.001	0	-7.021e-05	NC	NC
249			4	0	-.001	0	-7.949e-05	NC	NC
250			5	0	-.001	0	-8.877e-05	NC	NC
251	1	M51	1	0	-.001	0	-8.803e-05	NC	NC
252			2	0	-.002	0	-1.541e-04	NC	NC
253			3	0	-.003	0	-2.203e-04	NC	NC
254			4	0	-.006	0	-2.864e-04	NC	NC
255			5	0	-.009	0	-3.525e-04	NC	NC
256	1	M52	1	0	-.009	0	-3.767e-04	NC	NC
257			2	0	-.01	0	-3.86e-04	NC	NC
258			3	0	-.01	0	-3.953e-04	NC	NC
259			4	0	-.01	0	-4.046e-04	NC	NC
260			5	0	-.011	0	-4.139e-04	NC	NC
261	1	M53	1	0	-.011	0	-4.453e-04	NC	NC
262			2	0	-.011	0	-4.551e-04	NC	NC
263			3	0	-.011	0	-4.649e-04	NC	NC
264			4	0	-.011	0	-4.747e-04	NC	NC
265			5	0	-.011	0	-4.846e-04	NC	NC
266	1	M54	1	0	-.011	0	-4.845e-04	NC	NC
267			2	0	-.011	0	-4.939e-04	NC	NC
268			3	0	-.011	0	-5.032e-04	NC	NC
269			4	0	-.011	0	-5.126e-04	NC	NC

Member Section Deflections Strength (Continued)

	LC	Member Label	Sec	x [in]	y [in]	z [in]	x Rotate[rad]	(n) L/y' Ratio	(n) L/z' Ratio
270			5	0	-.011	0	-5.22e-04	NC	NC
271	1	M55	1	0	-.011	0	-4.839e-04	NC	NC
272			2	0	-.01	0	-4.918e-04	NC	NC
273			3	0	-.01	0	-4.997e-04	NC	NC
274			4	0	-.009	0	-5.076e-04	NC	NC
275			5	0	-.009	0	-5.154e-04	NC	NC
276	1	M56	1	0	-.009	0	-4.357e-04	NC	NC
277			2	0	-.008	0	-4.411e-04	NC	NC
278			3	0	-.007	0	-4.465e-04	NC	NC
279			4	0	-.006	0	-4.519e-04	NC	NC
280			5	0	-.005	0	-4.573e-04	NC	NC
281	1	M57	1	0	-.005	0	-3.36e-04	1858	NC
282			2	0	-.004	0	-3.38e-04	2447	NC
283			3	0	-.003	0	-3.401e-04	3624	NC
284			4	0	-.001	0	-3.421e-04	7156	NC
285			5	0	0	0	-3.442e-04	NC	NC
286	1	M58	1	0	0	0	-2.671e-04	NC	NC
287			2	0	.052	0	-2.671e-04	5782	NC
288			3	0	.081	0	-2.671e-04	3703	NC
289			4	0	.061	0	-2.671e-04	4928	NC
290			5	0	0	0	-2.671e-04	NC	NC

Hot Rolled Steel Section Sets

	Label	Shape	Type	Design List	Material	Design Rules	A [in2]	Iyy [in4]	Izz [in4]	J [in4]
1	4" Encasement	PIPE_4.0	Beam	None	A53 Gr.B	Typical	2.96	6.82	6.82	13.6
2	6" Encasement	PIPE_6.0	Beam	None	A53 Gr.B	Typical	5.2	26.5	26.5	52.9

Basic Load Cases

	BLC Description	Category	X Gravity	Y Gravity	Z Gravity	Joint	Point	Distrib...	Area(M...	Surface(Plat...
1	Pipe Weight	DL						58		
2	Uplift	OL1						58		

Load Combinations

	Description	Sol...	P...	S...	BLC	Fa...	BLC	Fac...	BLC	Fac...	BLC	Factor	BLC	Fact...	BLC	Fac...	BLC	Fac...	BLC	Fa...	BLC	Fa...	BLC	Fac...
1	Uplift Bending Check	Yes	Y		DL	1	OL1	1																

Member Section Deflections Strength

	LC	Member Label	Sec	x [in]	y [in]	z [in]	x Rotate[rad]	(n) L/y' Ratio	(n) L/z' Ratio
1	1	4INCH LINE	1	0	0	0	-2.082e-05	NC	NC
2			2	0	.027	0	-2.082e-05	NC	NC
3			3	0	.029	0	-2.082e-05	NC	NC
4			4	0	.027	0	-2.082e-05	NC	NC
5			5	0	0	0	-2.082e-05	NC	NC
6	1	6INCH LINE	1	0	0	0	-3.192e-05	NC	NC
7			2	0	0	0	-3.192e-05	NC	NC
8			3	0	0	0	-3.192e-05	NC	NC
9			4	0	0	0	-3.192e-05	NC	NC
10			5	0	0	0	-3.192e-05	NC	NC
11	1	M3	1	0	0	0	-2.554e-04	NC	NC
12			2	0	.093	0	-2.554e-04	3889	NC
13			3	0	.123	0	-2.554e-04	2924	NC
14			4	0	.079	0	-2.554e-04	4573	NC
15			5	0	0	0	-2.554e-04	NC	NC
16	1	M4	1	0	0	0	-3.532e-04	NC	NC
17			2	0	-.002	0	-3.51e-04	5576	NC
18			3	0	-.003	0	-3.488e-04	2818	NC
19			4	0	-.005	0	-3.466e-04	1899	NC
20			5	0	-.007	0	-3.444e-04	1440	NC
21	1	M5	1	0	-.007	0	-5.049e-04	NC	NC
22			2	0	-.008	0	-4.989e-04	NC	NC
23			3	0	-.009	0	-4.929e-04	NC	NC
24			4	0	-.01	0	-4.869e-04	NC	NC
25			5	0	-.011	0	-4.809e-04	NC	NC
26	1	M6	1	0	-.011	0	-5.947e-04	NC	NC
27			2	0	-.012	0	-5.857e-04	NC	NC
28			3	0	-.013	0	-5.767e-04	NC	NC
29			4	0	-.014	0	-5.677e-04	NC	NC

Member Section Deflections Strength (Continued)

	LC	Member Label	Sec	x [in]	y [in]	z [in]	x Rotate[rad]	(n) L/y' Ratio	(n) L/z' Ratio
30			5	0	-.015	0	-5.587e-04	NC	NC
31	1	M7	1	0	-.015	0	-6.235e-04	NC	NC
32			2	0	-.015	0	-6.124e-04	NC	NC
33			3	0	-.015	0	-6.014e-04	NC	NC
34			4	0	-.016	0	-5.903e-04	NC	NC
35			5	0	-.016	0	-5.792e-04	NC	NC
36	1	M8	1	0	-.016	0	-5.972e-04	NC	NC
37			2	0	-.016	0	-5.851e-04	NC	NC
38			3	0	-.016	0	-5.73e-04	NC	NC
39			4	0	-.016	0	-5.609e-04	NC	NC
40			5	0	-.016	0	-5.488e-04	NC	NC
41	1	M9	1	0	-.016	0	-5.258e-04	NC	NC
42			2	0	-.016	0	-5.138e-04	NC	NC
43			3	0	-.015	0	-5.017e-04	NC	NC
44			4	0	-.015	0	-4.897e-04	NC	NC
45			5	0	-.015	0	-4.777e-04	NC	NC
46	1	M10	1	0	-.015	0	-4.54e-04	NC	NC
47			2	0	-.011	0	-3.651e-04	NC	NC
48			3	0	-.008	0	-2.762e-04	NC	NC
49			4	0	-.006	0	-1.873e-04	NC	NC
50			5	0	-.005	0	-9.84e-05	NC	NC
51	1	M11	1	0	-.005	0	-1.061e-04	NC	NC
52			2	0	-.005	0	-9.406e-05	NC	NC
53			3	0	-.004	0	-8.202e-05	NC	NC
54			4	0	-.004	0	-6.999e-05	NC	NC
55			5	0	-.004	0	-5.795e-05	NC	NC
56	1	M12	1	0	-.004	0	-6.729e-05	NC	NC
57			2	0	-.004	0	-5.52e-05	NC	NC
58			3	0	-.004	0	-4.312e-05	NC	NC
59			4	0	-.004	0	-3.103e-05	NC	NC
60			5	0	-.004	0	-1.894e-05	NC	NC
61	1	M13	1	0	-.004	0	-2.72e-05	NC	NC
62			2	0	-.004	0	-1.613e-05	NC	NC
63			3	0	-.004	0	-5.066e-06	NC	NC
64			4	0	-.004	0	6.001e-06	NC	NC
65			5	0	-.004	0	1.707e-05	NC	NC
66	1	M14	1	0	-.004	0	3.26e-06	NC	NC
67			2	0	-.003	0	1.226e-05	NC	NC
68			3	0	-.003	0	2.127e-05	NC	NC
69			4	0	-.003	0	3.027e-05	NC	NC
70			5	0	-.003	0	3.927e-05	NC	NC
71	1	M15	1	0	-.003	0	1.43e-05	NC	NC
72			2	0	-.003	0	2.029e-05	NC	NC
73			3	0	-.002	0	2.628e-05	NC	NC
74			4	0	-.002	0	3.227e-05	NC	NC
75			5	0	-.002	0	3.826e-05	NC	NC
76	1	M16	1	0	-.002	0	-1.558e-06	5472	NC
77			2	0	-.001	0	6.312e-07	7009	NC

Member Section Deflections Strength (Continued)

	LC	Member Label	Sec	x [in]	y [in]	z [in]	x Rotate[rad]	(n) L/y' Ratio	(n) L/z' Ratio
78			3	0	0	0	2.82e-06	NC	NC
79			4	0	0	0	5.009e-06	NC	NC
80			5	0	0	0	7.197e-06	NC	NC
81	1	M17	1	0	0	0	7.197e-06	NC	NC
82			2	0	0	0	5.009e-06	NC	NC
83			3	0	0	0	2.82e-06	NC	NC
84			4	0	-.001	0	6.312e-07	7009	NC
85			5	0	-.002	0	-1.558e-06	5472	NC
86	1	M18	1	0	-.002	0	3.826e-05	NC	NC
87			2	0	-.002	0	3.227e-05	NC	NC
88			3	0	-.002	0	2.628e-05	NC	NC
89			4	0	-.003	0	2.029e-05	NC	NC
90			5	0	-.003	0	1.43e-05	NC	NC
91	1	M19	1	0	-.003	0	3.927e-05	NC	NC
92			2	0	-.003	0	3.027e-05	NC	NC
93			3	0	-.003	0	2.127e-05	NC	NC
94			4	0	-.003	0	1.226e-05	NC	NC
95			5	0	-.004	0	3.26e-06	NC	NC
96	1	M20	1	0	-.004	0	1.707e-05	NC	NC
97			2	0	-.004	0	6.001e-06	NC	NC
98			3	0	-.004	0	-5.066e-06	NC	NC
99			4	0	-.004	0	-1.613e-05	NC	NC
100			5	0	-.004	0	-2.72e-05	NC	NC
101	1	M21	1	0	-.004	0	-1.894e-05	NC	NC
102			2	0	-.004	0	-3.103e-05	NC	NC
103			3	0	-.004	0	-4.312e-05	NC	NC
104			4	0	-.004	0	-5.52e-05	NC	NC
105			5	0	-.004	0	-6.729e-05	NC	NC
106	1	M22	1	0	-.004	0	-5.795e-05	NC	NC
107			2	0	-.004	0	-6.999e-05	NC	NC
108			3	0	-.004	0	-8.202e-05	NC	NC
109			4	0	-.005	0	-9.406e-05	NC	NC
110			5	0	-.005	0	-1.061e-04	NC	NC
111	1	M23	1	0	-.005	0	-9.84e-05	NC	NC
112			2	0	-.006	0	-1.873e-04	NC	NC
113			3	0	-.008	0	-2.762e-04	NC	NC
114			4	0	-.011	0	-3.651e-04	NC	NC
115			5	0	-.015	0	-4.54e-04	NC	NC
116	1	M24	1	0	-.015	0	-4.777e-04	NC	NC
117			2	0	-.015	0	-4.897e-04	NC	NC
118			3	0	-.015	0	-5.017e-04	NC	NC
119			4	0	-.016	0	-5.138e-04	NC	NC
120			5	0	-.016	0	-5.258e-04	NC	NC
121	1	M25	1	0	-.016	0	-5.488e-04	NC	NC
122			2	0	-.016	0	-5.609e-04	NC	NC
123			3	0	-.016	0	-5.73e-04	NC	NC
124			4	0	-.016	0	-5.851e-04	NC	NC
125			5	0	-.016	0	-5.972e-04	NC	NC

Member Section Deflections Strength (Continued)

	LC	Member Label	Sec	x [in]	y [in]	z [in]	x Rotate[rad]	(n) L/y' Ratio	(n) L/z' Ratio
126	1	M26	1	0	-.016	0	-5.792e-04	NC	NC
127			2	0	-.016	0	-5.903e-04	NC	NC
128			3	0	-.015	0	-6.014e-04	NC	NC
129			4	0	-.015	0	-6.124e-04	NC	NC
130			5	0	-.015	0	-6.235e-04	NC	NC
131	1	M27	1	0	-.015	0	-5.587e-04	NC	NC
132			2	0	-.014	0	-5.677e-04	NC	NC
133			3	0	-.013	0	-5.767e-04	NC	NC
134			4	0	-.012	0	-5.857e-04	NC	NC
135			5	0	-.011	0	-5.947e-04	NC	NC
136	1	M28	1	0	-.011	0	-4.809e-04	NC	NC
137			2	0	-.01	0	-4.869e-04	NC	NC
138			3	0	-.009	0	-4.929e-04	NC	NC
139			4	0	-.008	0	-4.989e-04	NC	NC
140			5	0	-.007	0	-5.049e-04	NC	NC
141	1	M29	1	0	-.007	0	-3.444e-04	1440	NC
142			2	0	-.005	0	-3.466e-04	1899	NC
143			3	0	-.003	0	-3.488e-04	2818	NC
144			4	0	-.002	0	-3.51e-04	5576	NC
145			5	0	0	0	-3.532e-04	NC	NC
146	1	M30	1	0	0	0	-2.554e-04	NC	NC
147			2	0	.079	0	-2.554e-04	4573	NC
148			3	0	.123	0	-2.554e-04	2924	NC
149			4	0	.093	0	-2.554e-04	3889	NC
150			5	0	0	0	-2.554e-04	NC	NC
151	1	M31	1	0	0	0	-3.502e-04	NC	NC
152			2	0	.126	0	-3.502e-04	2859	NC
153			3	0	.167	0	-3.502e-04	2149	NC
154			4	0	.107	0	-3.502e-04	3360	NC
155			5	0	0	0	-3.502e-04	NC	NC
156	1	M32	1	0	0	0	-4.834e-04	NC	NC
157			2	0	-.002	0	-4.804e-04	4097	NC
158			3	0	-.005	0	-4.775e-04	2071	NC
159			4	0	-.007	0	-4.745e-04	1395	NC
160			5	0	-.009	0	-4.715e-04	1058	NC
161	1	M33	1	0	-.009	0	-6.902e-04	NC	NC
162			2	0	-.011	0	-6.821e-04	NC	NC
163			3	0	-.012	0	-6.74e-04	NC	NC
164			4	0	-.014	0	-6.659e-04	NC	NC
165			5	0	-.016	0	-6.578e-04	NC	NC
166	1	M34	1	0	-.016	0	-8.129e-04	NC	NC
167			2	0	-.017	0	-8.007e-04	NC	NC
168			3	0	-.018	0	-7.885e-04	NC	NC
169			4	0	-.019	0	-7.764e-04	NC	NC
170			5	0	-.02	0	-7.642e-04	NC	NC
171	1	M35	1	0	-.02	0	-8.524e-04	NC	NC
172			2	0	-.021	0	-8.374e-04	NC	NC
173			3	0	-.021	0	-8.225e-04	NC	NC

Member Section Deflections Strength (Continued)

	LC	Member Label	Sec	x [in]	y [in]	z [in]	x Rotate[rad]	(n) L/y' Ratio	(n) L/z' Ratio
174			4	0	-.022	0	-8.075e-04	NC	NC
175			5	0	-.022	0	-7.926e-04	NC	NC
176	1	M36	1	0	-.022	0	-8.168e-04	NC	NC
177			2	0	-.022	0	-8.004e-04	NC	NC
178			3	0	-.022	0	-7.841e-04	NC	NC
179			4	0	-.022	0	-7.678e-04	NC	NC
180			5	0	-.022	0	-7.514e-04	NC	NC
181	1	M37	1	0	-.022	0	-7.197e-04	NC	NC
182			2	0	-.021	0	-7.035e-04	NC	NC
183			3	0	-.021	0	-6.872e-04	NC	NC
184			4	0	-.02	0	-6.709e-04	NC	NC
185			5	0	-.02	0	-6.547e-04	NC	NC
186	1	M38	1	0	-.02	0	-6.222e-04	NC	NC
187			2	0	-.015	0	-5.021e-04	NC	NC
188			3	0	-.011	0	-3.821e-04	NC	NC
189			4	0	-.008	0	-2.621e-04	NC	NC
190			5	0	-.006	0	-1.42e-04	NC	NC
191	1	M39	1	0	-.006	0	-1.528e-04	NC	NC
192			2	0	-.006	0	-1.366e-04	NC	NC
193			3	0	-.006	0	-1.203e-04	NC	NC
194			4	0	-.006	0	-1.041e-04	NC	NC
195			5	0	-.005	0	-8.782e-05	NC	NC
196	1	M40	1	0	-.005	0	-1.008e-04	NC	NC
197			2	0	-.005	0	-8.446e-05	NC	NC
198			3	0	-.005	0	-6.814e-05	NC	NC
199			4	0	-.005	0	-5.181e-05	NC	NC
200			5	0	-.005	0	-3.548e-05	NC	NC
201	1	M41	1	0	-.005	0	-4.63e-05	NC	NC
202			2	0	-.005	0	-3.134e-05	NC	NC
203			3	0	-.005	0	-1.639e-05	NC	NC
204			4	0	-.005	0	-1.437e-06	NC	NC
205			5	0	-.005	0	1.352e-05	NC	NC
206	1	M42	1	0	-.005	0	-4.145e-06	NC	NC
207			2	0	-.004	0	8.022e-06	NC	NC
208			3	0	-.004	0	2.019e-05	NC	NC
209			4	0	-.004	0	3.236e-05	NC	NC
210			5	0	-.004	0	4.453e-05	NC	NC
211	1	M43	1	0	-.004	0	1.235e-05	NC	NC
212			2	0	-.003	0	2.045e-05	NC	NC
213			3	0	-.003	0	2.854e-05	NC	NC
214			4	0	-.003	0	3.664e-05	NC	NC
215			5	0	-.002	0	4.474e-05	NC	NC
216	1	M44	1	0	-.002	0	-7.036e-06	4211	NC
217			2	0	-.002	0	-4.077e-06	5385	NC
218			3	0	-.001	0	-1.117e-06	7754	NC
219			4	0	0	0	1.842e-06	NC	NC
220			5	0	0	0	4.802e-06	NC	NC
221	1	M45	1	0	0	0	4.802e-06	NC	NC

Member Section Deflections Strength (Continued)

	LC	Member Label	Sec	x [in]	y [in]	z [in]	x Rotate[rad]	(n) L/y' Ratio	(n) L/z' Ratio
222			2	0	0	0	1.842e-06	NC	NC
223			3	0	-.001	0	-1.117e-06	7754	NC
224			4	0	-.002	0	-4.077e-06	5385	NC
225			5	0	-.002	0	-7.036e-06	4211	NC
226	1	M46	1	0	-.002	0	4.474e-05	NC	NC
227			2	0	-.003	0	3.664e-05	NC	NC
228			3	0	-.003	0	2.854e-05	NC	NC
229			4	0	-.003	0	2.045e-05	NC	NC
230			5	0	-.004	0	1.235e-05	NC	NC
231	1	M47	1	0	-.004	0	4.453e-05	NC	NC
232			2	0	-.004	0	3.236e-05	NC	NC
233			3	0	-.004	0	2.019e-05	NC	NC
234			4	0	-.004	0	8.022e-06	NC	NC
235			5	0	-.005	0	-4.145e-06	NC	NC
236	1	M48	1	0	-.005	0	1.352e-05	NC	NC
237			2	0	-.005	0	-1.437e-06	NC	NC
238			3	0	-.005	0	-1.639e-05	NC	NC
239			4	0	-.005	0	-3.134e-05	NC	NC
240			5	0	-.005	0	-4.63e-05	NC	NC
241	1	M49	1	0	-.005	0	-3.548e-05	NC	NC
242			2	0	-.005	0	-5.181e-05	NC	NC
243			3	0	-.005	0	-6.814e-05	NC	NC
244			4	0	-.005	0	-8.446e-05	NC	NC
245			5	0	-.005	0	-1.008e-04	NC	NC
246	1	M50	1	0	-.005	0	-8.782e-05	NC	NC
247			2	0	-.006	0	-1.041e-04	NC	NC
248			3	0	-.006	0	-1.203e-04	NC	NC
249			4	0	-.006	0	-1.366e-04	NC	NC
250			5	0	-.006	0	-1.528e-04	NC	NC
251	1	M51	1	0	-.006	0	-1.42e-04	NC	NC
252			2	0	-.008	0	-2.621e-04	NC	NC
253			3	0	-.011	0	-3.821e-04	NC	NC
254			4	0	-.015	0	-5.021e-04	NC	NC
255			5	0	-.02	0	-6.222e-04	NC	NC
256	1	M52	1	0	-.02	0	-6.547e-04	NC	NC
257			2	0	-.02	0	-6.709e-04	NC	NC
258			3	0	-.021	0	-6.872e-04	NC	NC
259			4	0	-.021	0	-7.035e-04	NC	NC
260			5	0	-.022	0	-7.197e-04	NC	NC
261	1	M53	1	0	-.022	0	-7.514e-04	NC	NC
262			2	0	-.022	0	-7.678e-04	NC	NC
263			3	0	-.022	0	-7.841e-04	NC	NC
264			4	0	-.022	0	-8.004e-04	NC	NC
265			5	0	-.022	0	-8.168e-04	NC	NC
266	1	M54	1	0	-.022	0	-7.926e-04	NC	NC
267			2	0	-.022	0	-8.075e-04	NC	NC
268			3	0	-.021	0	-8.225e-04	NC	NC
269			4	0	-.021	0	-8.374e-04	NC	NC

Member Section Deflections Strength (Continued)

	LC	Member Label	Sec	x [in]	y [in]	z [in]	x Rotate[rad]	(n) L/y' Ratio	(n) L/z' Ratio
270			5	0	-.02	0	-8.524e-04	NC	NC
271	1	M55	1	0	-.02	0	-7.642e-04	NC	NC
272			2	0	-.019	0	-7.764e-04	NC	NC
273			3	0	-.018	0	-7.885e-04	NC	NC
274			4	0	-.017	0	-8.007e-04	NC	NC
275			5	0	-.016	0	-8.129e-04	NC	NC
276	1	M56	1	0	-.016	0	-6.578e-04	NC	NC
277			2	0	-.014	0	-6.659e-04	NC	NC
278			3	0	-.012	0	-6.74e-04	NC	NC
279			4	0	-.011	0	-6.821e-04	NC	NC
280			5	0	-.009	0	-6.902e-04	NC	NC
281	1	M57	1	0	-.009	0	-4.715e-04	1058	NC
282			2	0	-.007	0	-4.745e-04	1395	NC
283			3	0	-.005	0	-4.775e-04	2071	NC
284			4	0	-.002	0	-4.804e-04	4097	NC
285			5	0	0	0	-4.834e-04	NC	NC
286	1	M58	1	0	0	0	-3.502e-04	NC	NC
287			2	0	.107	0	-3.502e-04	3360	NC
288			3	0	.167	0	-3.502e-04	2149	NC
289			4	0	.126	0	-3.502e-04	2859	NC
290			5	0	0	0	-3.502e-04	NC	NC

Hot Rolled Steel Section Sets

	Label	Shape	Type	Design List	Material	Design Rules	A [in2]	Iyy [in4]	Izz [in4]	J [in4]
1	4" Encasement	PIPE_4.0	Beam	None	A53 Gr.B	Typical	2.96	6.82	6.82	13.6
2	6" Encasement	PIPE_6.0	Beam	None	A53 Gr.B	Typical	5.2	26.5	26.5	52.9

Basic Load Cases

	BLC Description	Category	X Gravity	Y Gravity	Z Gravity	Joint	Point	Distrib...	Area(M...	Surface(Plat...
1	Pipe Weight	DL						58		
2	Uplift	OL1						58		

Load Combinations

	Description	Sol...	P...	S...	BLC	Fa...	BLC	Fac...	BLC	Fac...	BLC	Factor	BLC	Fact...	BLC	Fac...	BLC	Fac...	BLC	Fa...	BLC	Fa...	BLC	Fac...
1	Uplift Bending Check	Yes	Y		DL	1	OL1	1																

Member Section Deflections Strength

	LC	Member Label	Sec	x [in]	y [in]	z [in]	x Rotate[rad]	(n) L/y' Ratio	(n) L/z' Ratio
1	1	4INCH LINE	1	0	0	0	-9.913e-05	NC	NC
2			2	0	.049	0	-9.913e-05	NC	NC
3			3	0	.055	0	-9.913e-05	NC	NC
4			4	0	.049	0	-9.913e-05	NC	NC
5			5	0	0	0	-9.913e-05	NC	NC
6	1	6INCH LINE	1	0	0	0	-1.4e-04	NC	NC
7			2	0	0	0	-1.4e-04	NC	NC
8			3	0	0	0	-1.4e-04	NC	NC
9			4	0	0	0	-1.4e-04	NC	NC
10			5	0	0	0	-1.4e-04	NC	NC
11	1	M3	1	0	0	0	-3.379e-04	NC	NC
12			2	0	.17	0	-3.379e-04	2472	NC
13			3	0	.226	0	-3.379e-04	1862	NC
14			4	0	.144	0	-3.379e-04	2925	NC
15			5	0	0	0	-3.379e-04	NC	NC
16	1	M4	1	0	0	0	-4.895e-04	NC	NC
17			2	0	-.003	0	-4.865e-04	3578	NC
18			3	0	-.005	0	-4.834e-04	1807	NC
19			4	0	-.008	0	-4.804e-04	1216	NC
20			5	0	-.01	0	-4.773e-04	921	NC
21	1	M5	1	0	-.01	0	-7.312e-04	NC	NC
22			2	0	-.012	0	-7.227e-04	NC	NC
23			3	0	-.014	0	-7.141e-04	NC	NC
24			4	0	-.016	0	-7.056e-04	NC	NC
25			5	0	-.018	0	-6.971e-04	NC	NC
26	1	M6	1	0	-.018	0	-8.832e-04	NC	NC
27			2	0	-.02	0	-8.701e-04	NC	NC
28			3	0	-.021	0	-8.571e-04	NC	NC
29			4	0	-.022	0	-8.441e-04	NC	NC

Member Section Deflections Strength (Continued)

	LC	Member Label	Sec	x [in]	y [in]	z [in]	x Rotate[rad]	(n) L/y' Ratio	(n) L/z' Ratio
30			5	0	-.024	0	-8.31e-04	NC	NC
31	1	M7	1	0	-.024	0	-9.438e-04	NC	NC
32			2	0	-.024	0	-9.275e-04	NC	NC
33			3	0	-.025	0	-9.111e-04	NC	NC
34			4	0	-.026	0	-8.948e-04	NC	NC
35			5	0	-.026	0	-8.785e-04	NC	NC
36	1	M8	1	0	-.026	0	-9.192e-04	NC	NC
37			2	0	-.026	0	-9.01e-04	NC	NC
38			3	0	-.026	0	-8.828e-04	NC	NC
39			4	0	-.026	0	-8.646e-04	NC	NC
40			5	0	-.027	0	-8.464e-04	NC	NC
41	1	M9	1	0	-.027	0	-8.226e-04	NC	NC
42			2	0	-.026	0	-8.04e-04	NC	NC
43			3	0	-.026	0	-7.854e-04	NC	NC
44			4	0	-.025	0	-7.668e-04	NC	NC
45			5	0	-.025	0	-7.482e-04	NC	NC
46	1	M10	1	0	-.025	0	-7.163e-04	NC	NC
47			2	0	-.02	0	-5.767e-04	NC	NC
48			3	0	-.015	0	-4.371e-04	NC	NC
49			4	0	-.012	0	-2.974e-04	NC	NC
50			5	0	-.009	0	-1.578e-04	NC	NC
51	1	M11	1	0	-.009	0	-1.755e-04	NC	NC
52			2	0	-.009	0	-1.569e-04	NC	NC
53			3	0	-.008	0	-1.383e-04	NC	NC
54			4	0	-.008	0	-1.197e-04	NC	NC
55			5	0	-.008	0	-1.011e-04	NC	NC
56	1	M12	1	0	-.008	0	-1.284e-04	NC	NC
57			2	0	-.008	0	-1.102e-04	NC	NC
58			3	0	-.007	0	-9.202e-05	NC	NC
59			4	0	-.007	0	-7.381e-05	NC	NC
60			5	0	-.007	0	-5.561e-05	NC	NC
61	1	M13	1	0	-.007	0	-8.107e-05	NC	NC
62			2	0	-.007	0	-6.475e-05	NC	NC
63			3	0	-.006	0	-4.843e-05	NC	NC
64			4	0	-.006	0	-3.211e-05	NC	NC
65			5	0	-.006	0	-1.579e-05	NC	NC
66	1	M14	1	0	-.006	0	-4.784e-05	NC	NC
67			2	0	-.006	0	-3.481e-05	NC	NC
68			3	0	-.005	0	-2.177e-05	NC	NC
69			4	0	-.005	0	-8.741e-06	NC	NC
70			5	0	-.005	0	4.292e-06	NC	NC
71	1	M15	1	0	-.005	0	-4.121e-05	NC	NC
72			2	0	-.004	0	-3.269e-05	NC	NC
73			3	0	-.004	0	-2.416e-05	NC	NC
74			4	0	-.003	0	-1.564e-05	NC	NC
75			5	0	-.003	0	-7.113e-06	NC	NC
76	1	M16	1	0	-.003	0	-7.009e-05	3626	NC
77			2	0	-.002	0	-6.704e-05	4655	NC

Member Section Deflections Strength (Continued)

	LC	Member Label	Sec	x [in]	y [in]	z [in]	x Rotate[rad]	(n) L/y' Ratio	(n) L/z' Ratio
78			3	0	-.001	0	-6.399e-05	6729	NC
79			4	0	0	0	-6.093e-05	NC	NC
80			5	0	0	0	-5.788e-05	NC	NC
81	1	M17	1	0	0	0	-5.788e-05	NC	NC
82			2	0	0	0	-6.093e-05	NC	NC
83			3	0	-.001	0	-6.399e-05	6729	NC
84			4	0	-.002	0	-6.704e-05	4655	NC
85			5	0	-.003	0	-7.009e-05	3626	NC
86	1	M18	1	0	-.003	0	-7.113e-06	NC	NC
87			2	0	-.003	0	-1.564e-05	NC	NC
88			3	0	-.004	0	-2.416e-05	NC	NC
89			4	0	-.004	0	-3.269e-05	NC	NC
90			5	0	-.005	0	-4.121e-05	NC	NC
91	1	M19	1	0	-.005	0	4.292e-06	NC	NC
92			2	0	-.005	0	-8.741e-06	NC	NC
93			3	0	-.005	0	-2.177e-05	NC	NC
94			4	0	-.006	0	-3.481e-05	NC	NC
95			5	0	-.006	0	-4.784e-05	NC	NC
96	1	M20	1	0	-.006	0	-1.579e-05	NC	NC
97			2	0	-.006	0	-3.211e-05	NC	NC
98			3	0	-.006	0	-4.843e-05	NC	NC
99			4	0	-.007	0	-6.475e-05	NC	NC
100			5	0	-.007	0	-8.107e-05	NC	NC
101	1	M21	1	0	-.007	0	-5.561e-05	NC	NC
102			2	0	-.007	0	-7.381e-05	NC	NC
103			3	0	-.007	0	-9.202e-05	NC	NC
104			4	0	-.008	0	-1.102e-04	NC	NC
105			5	0	-.008	0	-1.284e-04	NC	NC
106	1	M22	1	0	-.008	0	-1.011e-04	NC	NC
107			2	0	-.008	0	-1.197e-04	NC	NC
108			3	0	-.008	0	-1.383e-04	NC	NC
109			4	0	-.009	0	-1.569e-04	NC	NC
110			5	0	-.009	0	-1.755e-04	NC	NC
111	1	M23	1	0	-.009	0	-1.578e-04	NC	NC
112			2	0	-.012	0	-2.974e-04	NC	NC
113			3	0	-.015	0	-4.371e-04	NC	NC
114			4	0	-.02	0	-5.767e-04	NC	NC
115			5	0	-.025	0	-7.163e-04	NC	NC
116	1	M24	1	0	-.025	0	-7.482e-04	NC	NC
117			2	0	-.025	0	-7.668e-04	NC	NC
118			3	0	-.026	0	-7.854e-04	NC	NC
119			4	0	-.026	0	-8.04e-04	NC	NC
120			5	0	-.027	0	-8.226e-04	NC	NC
121	1	M25	1	0	-.027	0	-8.464e-04	NC	NC
122			2	0	-.026	0	-8.646e-04	NC	NC
123			3	0	-.026	0	-8.828e-04	NC	NC
124			4	0	-.026	0	-9.01e-04	NC	NC
125			5	0	-.026	0	-9.192e-04	NC	NC

Member Section Deflections Strength (Continued)

	LC	Member Label	Sec	x [in]	y [in]	z [in]	x Rotate[rad]	(n) L/y' Ratio	(n) L/z' Ratio
126	1	M26	1	0	-.026	0	-8.785e-04	NC	NC
127			2	0	-.026	0	-8.948e-04	NC	NC
128			3	0	-.025	0	-9.111e-04	NC	NC
129			4	0	-.024	0	-9.275e-04	NC	NC
130			5	0	-.024	0	-9.438e-04	NC	NC
131	1	M27	1	0	-.024	0	-8.31e-04	NC	NC
132			2	0	-.022	0	-8.441e-04	NC	NC
133			3	0	-.021	0	-8.571e-04	NC	NC
134			4	0	-.02	0	-8.701e-04	NC	NC
135			5	0	-.018	0	-8.832e-04	NC	NC
136	1	M28	1	0	-.018	0	-6.971e-04	NC	NC
137			2	0	-.016	0	-7.056e-04	NC	NC
138			3	0	-.014	0	-7.141e-04	NC	NC
139			4	0	-.012	0	-7.227e-04	NC	NC
140			5	0	-.01	0	-7.312e-04	NC	NC
141	1	M29	1	0	-.01	0	-4.773e-04	921	NC
142			2	0	-.008	0	-4.804e-04	1216	NC
143			3	0	-.005	0	-4.834e-04	1807	NC
144			4	0	-.003	0	-4.865e-04	3578	NC
145			5	0	0	0	-4.895e-04	NC	NC
146	1	M30	1	0	0	0	-3.379e-04	NC	NC
147			2	0	.144	0	-3.379e-04	2925	NC
148			3	0	.226	0	-3.379e-04	1862	NC
149			4	0	.17	0	-3.379e-04	2472	NC
150			5	0	0	0	-3.379e-04	NC	NC
151	1	M31	1	0	0	0	-4.638e-04	NC	NC
152			2	0	.231	0	-4.638e-04	1817	NC
153			3	0	.307	0	-4.638e-04	1369	NC
154			4	0	.195	0	-4.638e-04	2149	NC
155			5	0	0	0	-4.638e-04	NC	NC
156	1	M32	1	0	0	0	-6.704e-04	NC	NC
157			2	0	-.004	0	-6.663e-04	2628	NC
158			3	0	-.007	0	-6.621e-04	1327	NC
159			4	0	-.011	0	-6.58e-04	893	NC
160			5	0	-.014	0	-6.539e-04	676	NC
161	1	M33	1	0	-.014	0	-9.998e-04	NC	NC
162			2	0	-.017	0	-9.883e-04	NC	NC
163			3	0	-.019	0	-9.768e-04	NC	NC
164			4	0	-.022	0	-9.652e-04	NC	NC
165			5	0	-.025	0	-9.537e-04	NC	NC
166	1	M34	1	0	-.025	0	-1.207e-03	NC	NC
167			2	0	-.027	0	-1.19e-03	NC	NC
168			3	0	-.028	0	-1.172e-03	NC	NC
169			4	0	-.03	0	-1.154e-03	NC	NC
170			5	0	-.032	0	-1.137e-03	NC	NC
171	1	M35	1	0	-.032	0	-1.29e-03	NC	NC
172			2	0	-.033	0	-1.268e-03	NC	NC
173			3	0	-.034	0	-1.246e-03	NC	NC

Member Section Deflections Strength (Continued)

	LC	Member Label	Sec	x [in]	y [in]	z [in]	x Rotate[rad]	(n) L/y' Ratio	(n) L/z' Ratio
174			4	0	-.035	0	-1.224e-03	NC	NC
175			5	0	-.036	0	-1.202e-03	NC	NC
176	1	M36	1	0	-.036	0	-1.257e-03	NC	NC
177			2	0	-.036	0	-1.232e-03	NC	NC
178			3	0	-.036	0	-1.208e-03	NC	NC
179			4	0	-.036	0	-1.183e-03	NC	NC
180			5	0	-.036	0	-1.159e-03	NC	NC
181	1	M37	1	0	-.036	0	-1.126e-03	NC	NC
182			2	0	-.035	0	-1.1e-03	NC	NC
183			3	0	-.035	0	-1.075e-03	NC	NC
184			4	0	-.034	0	-1.05e-03	NC	NC
185			5	0	-.034	0	-1.025e-03	NC	NC
186	1	M38	1	0	-.034	0	-9.811e-04	NC	NC
187			2	0	-.027	0	-7.925e-04	NC	NC
188			3	0	-.021	0	-6.038e-04	NC	NC
189			4	0	-.016	0	-4.151e-04	NC	NC
190			5	0	-.012	0	-2.264e-04	NC	NC
191	1	M39	1	0	-.012	0	-2.51e-04	NC	NC
192			2	0	-.011	0	-2.259e-04	NC	NC
193			3	0	-.011	0	-2.007e-04	NC	NC
194			4	0	-.011	0	-1.756e-04	NC	NC
195			5	0	-.01	0	-1.504e-04	NC	NC
196	1	M40	1	0	-.01	0	-1.88e-04	NC	NC
197			2	0	-.01	0	-1.634e-04	NC	NC
198			3	0	-.01	0	-1.388e-04	NC	NC
199			4	0	-.009	0	-1.142e-04	NC	NC
200			5	0	-.009	0	-8.962e-05	NC	NC
201	1	M41	1	0	-.009	0	-1.236e-04	NC	NC
202			2	0	-.009	0	-1.016e-04	NC	NC
203			3	0	-.008	0	-7.952e-05	NC	NC
204			4	0	-.008	0	-5.746e-05	NC	NC
205			5	0	-.008	0	-3.54e-05	NC	NC
206	1	M42	1	0	-.008	0	-7.738e-05	NC	NC
207			2	0	-.007	0	-5.976e-05	NC	NC
208			3	0	-.007	0	-4.214e-05	NC	NC
209			4	0	-.006	0	-2.452e-05	NC	NC
210			5	0	-.006	0	-6.899e-06	NC	NC
211	1	M43	1	0	-.006	0	-6.621e-05	NC	NC
212			2	0	-.005	0	-5.469e-05	NC	NC
213			3	0	-.005	0	-4.316e-05	NC	NC
214			4	0	-.004	0	-3.163e-05	NC	NC
215			5	0	-.003	0	-2.011e-05	NC	NC
216	1	M44	1	0	-.003	0	-1.024e-04	2780	NC
217			2	0	-.003	0	-9.823e-05	3564	NC
218			3	0	-.002	0	-9.41e-05	5145	NC
219			4	0	0	0	-8.997e-05	9914	NC
220			5	0	0	0	-8.585e-05	NC	NC
221	1	M45	1	0	0	0	-8.585e-05	NC	NC

Member Section Deflections Strength (Continued)

	LC	Member Label	Sec	x [in]	y [in]	z [in]	x Rotate[rad]	(n) L/y' Ratio	(n) L/z' Ratio
222			2	0	0	0	-8.997e-05	9914	NC
223			3	0	-.002	0	-9.41e-05	5145	NC
224			4	0	-.003	0	-9.823e-05	3564	NC
225			5	0	-.003	0	-1.024e-04	2780	NC
226	1	M46	1	0	-.003	0	-2.011e-05	NC	NC
227			2	0	-.004	0	-3.163e-05	NC	NC
228			3	0	-.005	0	-4.316e-05	NC	NC
229			4	0	-.005	0	-5.469e-05	NC	NC
230			5	0	-.006	0	-6.621e-05	NC	NC
231	1	M47	1	0	-.006	0	-6.899e-06	NC	NC
232			2	0	-.006	0	-2.452e-05	NC	NC
233			3	0	-.007	0	-4.214e-05	NC	NC
234			4	0	-.007	0	-5.976e-05	NC	NC
235			5	0	-.008	0	-7.738e-05	NC	NC
236	1	M48	1	0	-.008	0	-3.54e-05	NC	NC
237			2	0	-.008	0	-5.746e-05	NC	NC
238			3	0	-.008	0	-7.952e-05	NC	NC
239			4	0	-.009	0	-1.016e-04	NC	NC
240			5	0	-.009	0	-1.236e-04	NC	NC
241	1	M49	1	0	-.009	0	-8.962e-05	NC	NC
242			2	0	-.009	0	-1.142e-04	NC	NC
243			3	0	-.01	0	-1.388e-04	NC	NC
244			4	0	-.01	0	-1.634e-04	NC	NC
245			5	0	-.01	0	-1.88e-04	NC	NC
246	1	M50	1	0	-.01	0	-1.504e-04	NC	NC
247			2	0	-.011	0	-1.756e-04	NC	NC
248			3	0	-.011	0	-2.007e-04	NC	NC
249			4	0	-.011	0	-2.259e-04	NC	NC
250			5	0	-.012	0	-2.51e-04	NC	NC
251	1	M51	1	0	-.012	0	-2.264e-04	NC	NC
252			2	0	-.016	0	-4.151e-04	NC	NC
253			3	0	-.021	0	-6.038e-04	NC	NC
254			4	0	-.027	0	-7.925e-04	NC	NC
255			5	0	-.034	0	-9.811e-04	NC	NC
256	1	M52	1	0	-.034	0	-1.025e-03	NC	NC
257			2	0	-.034	0	-1.05e-03	NC	NC
258			3	0	-.035	0	-1.075e-03	NC	NC
259			4	0	-.035	0	-1.1e-03	NC	NC
260			5	0	-.036	0	-1.126e-03	NC	NC
261	1	M53	1	0	-.036	0	-1.159e-03	NC	NC
262			2	0	-.036	0	-1.183e-03	NC	NC
263			3	0	-.036	0	-1.208e-03	NC	NC
264			4	0	-.036	0	-1.232e-03	NC	NC
265			5	0	-.036	0	-1.257e-03	NC	NC
266	1	M54	1	0	-.036	0	-1.202e-03	NC	NC
267			2	0	-.035	0	-1.224e-03	NC	NC
268			3	0	-.034	0	-1.246e-03	NC	NC
269			4	0	-.033	0	-1.268e-03	NC	NC

Member Section Deflections Strength (Continued)

	LC	Member Label	Sec	x [in]	y [in]	z [in]	x Rotate[rad]	(n) L/y' Ratio	(n) L/z' Ratio
270			5	0	-.032	0	-1.29e-03	NC	NC
271	1	M55	1	0	-.032	0	-1.137e-03	NC	NC
272			2	0	-.03	0	-1.154e-03	NC	NC
273			3	0	-.028	0	-1.172e-03	NC	NC
274			4	0	-.027	0	-1.19e-03	NC	NC
275			5	0	-.025	0	-1.207e-03	NC	NC
276	1	M56	1	0	-.025	0	-9.537e-04	NC	NC
277			2	0	-.022	0	-9.652e-04	NC	NC
278			3	0	-.019	0	-9.768e-04	NC	NC
279			4	0	-.017	0	-9.883e-04	NC	NC
280			5	0	-.014	0	-9.998e-04	NC	NC
281	1	M57	1	0	-.014	0	-6.539e-04	676	NC
282			2	0	-.011	0	-6.58e-04	893	NC
283			3	0	-.007	0	-6.621e-04	1327	NC
284			4	0	-.004	0	-6.663e-04	2628	NC
285			5	0	0	0	-6.704e-04	NC	NC
286	1	M58	1	0	0	0	-4.638e-04	NC	NC
287			2	0	.195	0	-4.638e-04	2149	NC
288			3	0	.307	0	-4.638e-04	1369	NC
289			4	0	.231	0	-4.638e-04	1817	NC
290			5	0	0	0	-4.638e-04	NC	NC

MODIFICATION TRAVELER

Prepared For the U.S. Department of Energy, Assistant Secretary for Environmental Management
By Washington River Protection Solutions, LLC., PO Box 850, Richland, WA 99352
Contractor For U.S. Department of Energy, Office of River Protection, under Contract DE-AC27-08RV14800

TRADEMARK DISCLAIMER: Reference herein to any specific commercial product, process, or service by trade name, trademark, manufacturer, or otherwise, does not necessarily constitute or imply its endorsement, recommendation, or favoring by the United States government or any agency thereof or its contractors or subcontractors. Printed in the United States of America.

Release Stamp

DATE: Mar 19,2020 HANFORD RELEASE

1. **MT No:** MT-50400 **Rev.** 01

2. **Title:**
242-A Evaporator Waste Transfer Line Replacement

SECTION I REQUEST FOR MODIFICATION

3. **Requested Completion Date (Optional):** 10/31/2018

4. **CACN (optional):**

Clearance Review Restriction Type: undefined

5. **Project Number:** ☐N/A T1P207

6. **Design Type:** ☒I ☐II ☐III ☐IV ☐V ☐VI

7. **Project Type:** Project Category 2

8. **Workflow Approval Status**: Design Inputs Approved

9. **Design Authority Designator:**
PRJ - 242-A TRANSFER LINE REPLACEMENT PROJECT

10. **Related Structures, Systems, and Components**

a. **Related Building/Facilities** ☐N/A	b. **Related Systems** ☐N/A	c. **Related Equipment ID Nos. (EIN)** ☐N/A
241-AW	241-WT	AW02A-WT-WTL-SL-170
241-AW-02A	242A	AW02A-WT-WTL-SL-171
241-AW-02E	242A-SL	AW02E-WT-WTL-SN-269
241-AW-B	242A-SN	AW02E-WT-WTL-SN-270
242-A		AW02E-WT-WTL-SN-275
		AWVPB-WT-WTL-SL-167
		AWVPB-WT-WTL-SL-172

11. **Problem Description**

Recent pneumatic testing on the encasement of SL-167 has determined that it cannot maintain pressure, and therefore cannot be used to compliantly transfer waste. Recent visual inspection of SL-168 (the back-up slurry line) and pneumatic testing have identified additional work to be performed in order to attempt to place the line back into service. Until transfer lines have been placed into service, the 242-A Evaporator cannot slurry out concentrated waste to tank farms to allow waste volume reduction. To ensure long-term success of the evaporator, a replacement feed line will also be installed.

12. **Justification**

The primary purpose of the feed and slury lines is to support 242-A evaporator campaigns, specifically to create double-shell tank (DST) space through waste reduction, which supports the overall mission of the River Protection Project to store, treat, and immobilize highly radioactive waste stored in Hanford Site tanks in an environmentally safe, sound, and cost-effective manner.

SECTION II REQUIRED FOR DESIGN TYPE 1 PROJECTS

13. **Project Design Review Required (TFC-ENG-DESIGN-D-17.1)?** ☒ Yes ☐ No ☐ N/A

14. **Major Modification Evaluation Required (Use 1189 Checklist)?** ☐ Yes ☒ No ☐ N/A

15. **Safety In Design Strategy Required?** ☐ Yes ☒ No ☐ N/A

SECTION III PROPOSED SOLUTION

16. **Proposed Solution**

Rev 1 of this MT includes the additional requirements to support the following tasks: Connecting spare conduits into the 242-A Evaporator and the AW-02E pits to support the new feed pump. Adjustable height gear actuators design enhancements. Shoring execution plan. Correction of ACI/AISC code of records years and other misc requirements.

Complete the design within AW Tank Farm and 242-A, and all areas between, in accordance with the design requirements listed in this MT. The design includes:
• Four new permanent underground pipe-in-pipe transfer lines.
• All required pit upgrades at AW-02A, AW-B, and AW-02E (i.e. structural modifications, cover blocks, jumpers, ancillary equipment, etc.).
• All modifications to the 242-A evaporator facility.
• All required electrical and instrumentation upgrades to allow for compliant operation and monitoring.

SECTION IV DESIGN INPUT RECORD

17. **Design Inputs** ☐N/A

Type of Document	Document Number	Rev.	Title
FLOW DIAGRAM AND P&IDs	H-14-020802 SH 004	22	WASTE TRANSFER SYSTEM WT O&M SYSTEM P&ID
FLOW DIAGRAM AND P&IDs	H-14-020802 SH 005	26	WASTE TRANSFER SYSTEM (WT) O&M SYSTEM P&ID
FLOW DIAGRAM AND P&IDs	H-14-020802 SH 006	11	WASTE TRANSFER SYSTEM (WT) O&M SYSTEM P&ID
MECHANICAL	H-14-104240 SH 001	05	JUMPER ARRANGEMENT VALVE PIT 241-AW-A
MECHANICAL	H-14-104242 SH 001	05	JUMPER ARRANGEMENT VALVE PIT 241-AW-B
MECHANICAL	H-2-69337 SH 001	04	PIPING ARRANGEMENT PUMP ROOM & HOT EQUIP. STORAGE PLAN

MODIFICATION TRAVELER

MT No.: MT-50400 **Rev.** 01

17. **Design Inputs** ☐N/A

Type of Document	Document Number	Rev.	Title
MECHANICAL	H-2-69338 SH 001	04	PIPING ARRANGEMENT PUMP ROOM & HOT EQUIP. STORAGE SECTIONS
CIVIL, STRUCTURAL, ARCHITECTURAL	H-2-70398 SH 002	02	PIPING PLAN
CIVIL, STRUCTURAL, ARCHITECTURAL	H-2-70399 SH 001	14	PIPING PLAN 241-AW TANK FARM
CIVIL, STRUCTURAL, ARCHITECTURAL	H-2-70401 SH 001	08	PIPING PLAN VALVE PITS 241-AW-A&B
FLOW DIAGRAM AND P&IDs	H-2-98989 SH 001	28	P&ID SLURRY SYSTEM
MECHANICAL	H-2-99009 SH 001	05	PIPING JUMPER ARRANGEMENT PUMP ROOM
MECHANICAL	H-2-99009 SH 002	00	PIPING JUMPER ARRANGEMENT PUMP ROOM

18. **Other Design Input Requirements:**
See continuation pages.

19. **Other Design Input Considerations:**
See continuation pages.

20. **Preliminary Safety Classification:**
☐SC ☒SS ☐GS ☐N/A

21. **Environmental Risk:**
(TFC-ENG-DESIGN-C-52 Att. D)
☒ Yes ☐ No

22. **Radiological Risk:**
(TFC-ENG-DESIGN-C-52 Att. D)
☒ Yes ☐ No

23. **Hazard Category**
2

24. **Approval Designators**
E, R, EDL-CS, PE, HR, WE, NS, S, EDL-M, EDL-E

SECTION V IMPACTS

25. **Impacted Documents** ☐N/A

Type of Document	Document Number	Rev.	Title

26. **Other Impacts**

SECTION VI DESIGN OUTPUT RECORD

27. **Design Outputs** ☐N/A

Type of Document	Document Number	Rev.	Title

28. **Work Package Numbers:** ☐ N/A

29. **Other Outputs**

SECTION VII DESIGN INPUT AND CLOSURE APPROVALS

30. **Approvals**

Title	Name	Signature	Date
Design Authority Design Input Approval	Engeman, Jason K	*Engeman, Jason K*	02/26/2020
Design Authority Manager	Huntington, Matthew R	*Huntington, Matthew R*	03/19/2020
Design Engineering	Sijgers, Frederik O	*Sijgers, Frederik O*	03/12/2020
Document Control Approval	Scales, Anthony	*Scales, Anthony*	03/19/2020
Environmental Protection	Klages, Deanna L	*Klages, Deanna L*	02/26/2020
Engineering Discipline Lead-Civil/Structural	Langevin, Ann	*Langevin, Ann*	02/27/2020
Engineering Discipline Lead-Electrical	Rambo, Charles L	*Rambo, Charles L*	02/26/2020
Engineering Discipline Lead-Mechanical	Goessmann, Glen E	*Goessmann, Glen E*	03/16/2020
Engineering Hoisting and Rigging SME	McShane, Michael P	*McShane, Michael P*	02/26/2020
Nuclear Safety	Kozlowski, Stephen D	*Kozlowski, Stephen D*	03/16/2020
Originator	Engeman, Jason K	*Engeman, Jason K*	02/26/2020
Process Engineer	Conner, John M	*Conner, John M*	03/13/2020
Radiological Control	Franz, James A	*Franz, James A*	12/02/2019
Industrial Safety	Ladwig, Cevin J	*Ladwig, Cevin J*	11/26/2019
Welding Engineer	Berkey, James	*Berkey, James*	03/16/2020

CODE OF RECORD DOCUMENTS

Table 1-1. Government Documents

Document Number	Title
Code of Federal Regulations (CFR); Washington, D.C.	
10 CFR 830	*Nuclear Safety Management*
10 CFR 835	*Occupational Radiation Protection*
10 CFR 851	*Worker Safety and Health Program*
29 CFR 1910	*Occupational Safety and Health Standards*
40 CFR 264	*Final Status Standards for Owners and Operators of Hazardous Waste Treatment, Storage, and Disposal Facilities*
40 CFR 265	*Interim Status Standards for Owners and Operators of Hazardous Waste Treatment, Storage, and Disposal Facilities*
U.S. Department of Energy (DOE); Washington, D. C.	
DOE O 414.1D	*Quality Assurance*
DOE O 420.1C	*Facility Safety*
DOE/RL-92-36,	*Hanford Site Hoisting and Rigging Manual*
DOE-0344	*Hanford Site Excavating, Trenching and Shoring Procedure (HSETSP)*
DOE-0359	*Hanford Site Electrical Safety Program (HSESP)*
DOE-0360	*Hanford Site Confined Space Procedure (HSCSP)*
DOE-STD-1020 (2016)	*Natural Phenomena Hazards Analysis and Design Criteria for DOE Facilities*
DOE-STD-1189 (2008)	*Integration of Safety into the Design Process*
Washington Administrative Code (WAC); Olympia, Washington	
WAC 296-46B-010	*Electrical Safety Standards, Administration, Inspections, and Installation* – General – Adopted Standards
WAC 173-303-280	*General Requirements for Dangerous Waste Management Facilities*
WAC 173-303-640	*Tank System*

CODE OF RECORD NON-GOVERNMENT DOCUMENTS

Table 1-2. Non-Government Documents (2 Sheets)

Document Number	Title
American Concrete Institute (ACI), Farmington Hills, Michigan	
ACI 301 (2010)	*Specification for Structural Concrete*
ACI 318 (2014)	*Building Code Requirements for Structural Concrete and Commentary*
American Institute of Steel Construction and Commentary (AISC), Chicago, Illinois	
AISC 325 (2011)	*Steel Construction Manual*
AISC 360 (2010)	*Specification for Structural Steel Buildings*
American Society of Civil Engineers (ASCE), Reston, Virginia	
ASCE 7 (2010)	*Minimum Design Loads for Buildings and Other Structures*
American Society of Mechanical Engineers (ASME); New York, New York	
ASME Boiler & Pressure Vessel Code (B&PVC) (2017)	*B&PVC – Rules for Construction of Pressure Vessels*
ASME B31.3 (2016)	*Process Piping*
ASME B30.20 (2018)	*Below-the-Hook Lifting Devices," American Society of Mechanical Engineers*
ASME BTH-1 (2017)	*Design of Below-the-Hook Lifting Devices*
ASME NQA-1 (2008/2009 Addenda)	*Quality Assurance Requirements for Nuclear Facility Applications*.
American Welding Society (AWS); Miami, Florida	
AWS D1.1/D1.1M (2015)	*Structural Welding Code-Steel*
AWS D1.6/D1.6M (2017)	*Structural Welding Code – Stainless Steel*
Instrumentation, Systems, and Automation Society (ISA), Research Triangle Park, North Carolina	
ISA-84.00.01 (2004)	*Functional Safety: Safety Instrumented Systems for the Process Industry Sector*
International Code Council, Washington D.C.	
IBC (2015)	*International Building Code®*[1]
National Association of Corrosion Engineers (NACE); Houston, Texas	
SPO169 (2013)	*Control of External Corrosion on Underground or Submerged Metallic Piping Systems*
National Fire Protection Association (NFPA); Quincy, Massachusetts	
NFPA 101 (2018)	*Life Safety Code®*[2]
Underwriters Laboratories (UL), Inc., Northbrook, Illinois	
UL508A (2013)	*Standard for Industrial Control Panels*

[1] International Building Code® is a registered trademark of the International Code Council of Washington D.C.
[2] Life Safety Code®; registered trademark of the National Fire Protection Association of Quincy. MA.

Table 1-2. Non-Government Documents (2 Sheets)

Other Publications; Washington River Protection Solutions (WRPS), LLC, Richland, Washington	
TFC-ENG-STD-01, Rev. A-7	"Human Factors in Design"
TFC-ENG-STD-02, Rev. A-12	"Environmental/Seasonal Requirements for TFC Systems, Structures, and Components"
TFC-ENG-STD-03, Rev. A-8	"Waste Transfer Confinement Configuration"
TFC-ENG-STD-06, Rev. D-1	"Design Loads for Tank Farm Facilities"
TFC-ENG-STD-08, Rev. B-5	"Post Maintenance Testing"
TFC-ENG-STD-10, Rev. A-16	"Drawing Standard"
TFC-ENG-STD-12, Rev. E-3	"Tank Farm Equipment Identification Numbering and Labeling Standard"
TFC-ENG-STD-13, Rev. G-4	"Ignition Controls for Work Controls in Potentially Flammable Atmospheres"
TFC-ENG-STD-14, Rev. C-3	"Setpoint Standard"
TFC-ENG-STD-15, Rev. C-6	"Standard for Raceway Systems and Flexible Cords& Cables"
TFC-ENG-STD-22, Rev. G-2	"Piping, Jumpers and Valves"
TFC-ENG-STD-26, Rev. C-6	"Waste Transfer, Dilution, and Flushing Requirements"
TFC-ENG-STD-31, Rev. A-4	"Electrical Distribution Studies"
TFC-ENG-STD-34, Rev. A-1	"Standard for the Selection of Non-Metallic Materials in Contact with Tank Waste"
TFC-ENG-STD-39, Rev. A-3	"Civil Survey for Tank Farm Facilities"
TFC-ENG-STD-41, Rev. A-9	"Electrical Installations"
TFC-ENG-STD-42, Rev. A-1	"Tank Farms Waste Transfer System Fitness-for-Service Evaluation"
TFC-ENG-STD-45, Rev. B-2	"Installations for Potentially Flammable Atmospheres",
TFC-ENG-STD-47, Rev. A-1	"Piping Data Specification Standard"
TFC-ENG-STD-51, Rev. A-0	"Vendor Calculation Standard"
TFC-ENG-FACSUP-C-25, REV E-0	"Hoisting, Rigging, Load Handling, and Transport"

NON-GOVERNMENT NON-CODE OF RECORD DOCUMENTS

Table 1-3. Non-Code of Record Documents (3 Sheets)

Document Number	Title
U.S. Department of Energy (DOE); Washington, D. C.	
DOE-0336, Rev. 2A	*Hanford Site Lockout/Tagout Procedure*
DOE-0344, Rev. 4-3	*Hanford Site Excavating, Trenching and Shoring*
Hanford Site, Richland, Washington	
HNF-SD-GN-ER-501, Rev. 3	N*atural Phenomena Hazards, Hanford Site, Washington;*
MSC-POL-EU-60619, Rev. 0	"Electrical Utilities Right of Way"
Tank Farms, Washington River Protection Solutions, LLC, Richland, Washington	
HNF-4160, Rev. 4	*Double-Shell Tank Transfer Valving Subsystem Specification*
HNF-4161, Rev. 6	*Double-Shell Tank Transfer Piping Subsystem Specification*
HNF-5183, Rev. 05N	*Tank Farms Radiological Control Manual (TFRCM)*
HNF-IP-1266	*Tank Farms Operations Administrative Controls*
HNF-SD-WM-HC-017, Rev. 10	*NFPA Flammable Vapor & Gas Hazard Classification for Tank Farms*
RPP-RPT-58290, Rev. 1	*NFPA Flammable Vapor and Gas Hazard Classification for the 242-A Evaporator*
OSD-T-151-00007, Rev. 20	*Tank Farms Waste Transfer Compatibility Program*
OSD-T-151-00010, Rev. 3	*Operating Specifications for Pressure Testing and Leak Detection for Tank Farm Transfer System*
RPP-8360, Rev. 6	*Lifting Attachment and Lifted Item Evaluation, A Hanford Tank Operating Contractor Process*
RPP-13033, Rev. 7K	*Tank Farm Documented Safety Analysis*
HNF-14755, Rev. 6E	*242-A Evaporator Documented Safety Analysis*
HNF-SD-WM-TSR-006, Rev. 8F	*Tank Farms Technical Safety Requirements*
HNF-15279, Rev. 02C	*242-A Evaporator Technical Safety Requirements*
RPP-13909, Rev. 0R	*Transfer Leak Detection Alarm Activation Percent Volume Increase*
RPP-14541, Rev. 8	*Jumper Design, Fabrication, and Testing Specification for Tank Farms*
RPP-25153, Rev, 1	*Volume 3: IQRPE DST System Integrity Assessment – Waste Compatibility*
RPP-CALC-41527, Rev. 1	*Bridge Plate Design for Tank Farms*
RPP-PLAN-34886, Rev. 5	*Investigation and Work Plan for the Resolution of Double-Shell Tank Valve Positioning Problems*
RPP-RPT-41859, Rev. 12	*Safety-Significant Isolation Valves for Double Valve Isolation – Functions and Requirements Evaluation Document*
RPP-RPT-42297, Rev. 19	*Safety-Significant Waste Transfer Primary Piping – Functions and Requirements Evaluation Document*

Table 1-3. Non-Code of Record Documents (3 Sheets)

Document Number	Title
RPP-RPT-52823, Rev. 6	*Tank Farm Waste Transfer Buried Piping Freeze Protection Methodology*
RPP-RPT-58773, Rev. 2	*Assessment of Safety Significant Piping Jumpers to Assure Excess Load Capacity for Potential Water Hammer (Leak Check and Flush) Events* - Supplemental Operation and Design Rules for Water Hammer Evaluation

The use of words “shall,” “must,” “should,” “may,” and “will” within this specification express the following meanings:

- Shall – Denotes a requirement.
- Must – Denotes a requirement.
- Should – Denotes a recommendation. If a “should” recommendation cannot be satisfied, justification of an alternative design shall be submitted to the Project Design Review Team for approval.
- May – Denotes a “permissive” for a stated action, or denotes a possible outcome, depending on the context of the verbiage.
- Will – Denotes a statement of fact.

Waste Transfer System Requirements

1.) Design of the transfer lines shall include one new feed transfer line from the 242-A Evaporator pump room to the AW-02E feed pump pit.

2.) Design of the transfer lines shall include two new slurry transfer lines from the 242-A Evaporator pump room to the AW-02A central pump pit.

3.) Design of the transfer lines shall include one new slurry transfer line from the AW-02A central pump pit to the AW-B valve pit.

4.) The equipment identification numbers (EINs) for the transfer lines should follow the designations identified in Table 1. All nozzle designations are to be new nozzles with no existing tank farm nozzles to be reused:

Table 1 – Transfer Line EINs

Transfer Line (EINs)	From	To
AW02A-WT-WTL-SL-170	242-A, Nozzle 41	AW-02A, Nozzle F
AW02A-WT-WTL-SL-171	242-A, Nozzle 42	AW-02A, Nozzle E
AW02E-WT-WTL-SN-275	AW-02E, Nozzle F	242-A, Nozzle 43
AWVPB-WT-WTL-SL-172	AW-02A, Nozzle W	AW-B, Nozzle R-6

5.) Design of new tank systems or components shall meet the applicable requirements in WAC-173-303-640.

6.) Transfer piping analyses shall be performed in accordance with TFC-ENG-DESIGN-C-60, “Preparation of Piping Analysis for Waste Transfer Systems” and TFC-ENG-STD-22, “Piping, Jumpers, and Valves.”

7.) Waste transfer system design shall minimize inaccessible pockets, crevice, blind holes, socket welds, rough surfaces, or other features and conditions that could trap contamination.

8.) Cover blocks/plates, jumpers, and other components which require the use of a crane for installation shall be provided with lifting attachment points. Design shall be in accordance with DOE/RL-92-36, Hanford Site Hoisting and Rigging Manual and RPP-8360, Lifting Attachment and Lifted Item Evaluation.

9.) Waste transfer system (piping, valves, instruments, etc.) should be welded construction.

10.) The pressure boundary piping that makes up the transfer system route used to support the slurry out transfers shall be a 2-inch Schedule 40 stainless steel. Use of piping of any size and/or material that differs from this requires approval from the WRPS project Design Authority.

11.) The pressure boundary piping that makes up the transfer system route used to primarily support the feed transfers shall be 3-inch Schedule 40 stainless steel. Use of piping of any size and/or material that differs from this requires approval from the WRPS project Design Authority.

12.) Waste transfer system components shall be designed to protect workers from occupational radiation exposures and maintain radiation exposure As Low As Reasonable Achievable (ALARA), including equipment and component disposal, in accordance with the requirements in 10 CFR 835.1001, Occupational Radiation Protection - Design and Control; 10 CFR 835.1002, Occupational Radiation Protection – Facility Design and Modification; HNF-5183, Tank Farms Radiological Control Manual (TFRCM), Table 2-0; and TFC-ESHQ-RP_STD-03, "ALARA Decision Making Methods."

13.) Equipment containing hazardous energy sources (e.g. valves/actuators) shall have locking features to support compliance with 29 CFR 1910.147, Occupational Safety Health Standards – The Control of Hazardous Energy (Lockout/Tagout) and DOE-0336, Hanford Site Lockout/Tagout Program.

14.) Design of tank farms waste transfer system equipment shall utilize the classification of potentially flammable atmospheres as identified HNF-SD-WM-HC-017, NFPA Flammable Vapor and Gas Hazard Classification for the Tank Farms.

15.) Waste transfer lines (primary pressure boundary) shall be classified as a Class 1, Division 1, Group B location. A Design Requirements Compliance Matrix (DRCM) shall demonstrate how the following will be verified:

- Class 1, Division 1, Group B locations shall be identified on a Hazard Area Classification (HAC) plan drawing or on existing drawings in accordance with TFC-ENG-STD-45, Section 3.2.2.
- Equipment suitable for Class I, Division 1, Group B shall be specified in applicable design documents.
- For non-electrical equipment that cannot be specified with ATEX certification, a technical evaluation shall be identified or created to approve equivalent safety of the equipment specified.

16.) Design of 242-A Evaporator waste transfer system equipment shall utilize the classification of potentially flammable atmospheres as identified RPP-RPT-58290, NFPA Flammable Vapor and Gas Hazard Classification for the 242-A Evaporator.

17.) Waste transfer pits shall contain Safety Significant freeze protection (i.e. temperature monitoring and heating) whose design conforms to active systems utilized within the DST WTS unless a technical basis exists which documents why freeze protection is not required.

18.) Waste transfer system component design shall consider winterization requirements. The system shall be designed to sufficiently drain, within the time requirements specified in the DSA so that when the system is shut down there are no low spots that pose a freezing hazard requiring special precautions

19.) New tank systems and addition or modification of existing tank systems shall meet the requirements set forth in 40 CFR 264.192, Standards for Owners and Operators of Hazardous Waste Treatment, Storage, and Disposal Facilities – Design and installation of new tank systems or components and 40 CFR 265.192, Interim Status Standards for

Owners and Operators of Hazardous Waste Treatment, Storage, and Disposal Facilities – Design and installation of new tank systems or components.

20.) The waste transfer piping and jumper shall be designed utilizing the following waste composition properties for the radioactive slurry which will be pumped through the system:

Table 2 – Waste Properties

Waste Property	**Range**
Specific Gravity	1.0-1.6
Viscosity, cP	1-20
Temperature (flushes/transfers)	40ºF – 200ºF
Particle Size (micron)	15-1000
Hardness (MOHS Scale)	3-5
Abrasiveness, Miller Number (ASTM G75-	<100
Solids Loading (vol%)	0-30% by vol
Sodium Hydroxide	0-8.0M
Sodium Aluminate	0-3.0M
Sodium Nitrate (NaNO3)	0-5.0M
Sodium Nitrite (NaNO2)	0-4.43M
Sodium Carbonate	0-2.0M
Sodium Phosphate	0-0.21M
Total Organic Constituents	0-80 gm/L
Cs^{137} Concentration	0.8 Ci/L

21.) Design structural welds in accordance with AWS D1.1 or AWS D1.6 statically loaded criteria for carbon steel or stainless steel, respectively.

22.) The waste transfer system design shall ensure that MSA Electrical Utilities right-of-way boundaries are maintained in accordance with MSC-POL-EU-60619, "Electrical Utilities Right of Way."

23.) Waste transfer system component design shall adhere to the component performance parameter requirements as listed in Table 3 and in accordance with TFC-ENG-STD-06, "Design Loads for Tank Farm Facilities".

Table 3 - Component Performance Parameter Requirements

Item	Safety Function	Safety	Quality	Natural Phenomena Design Category (NDC)	Seismic Design Category	Limit State	Design Code
Buried Piping – Primary	Pressure Containment	SS	QL-2	NDC-2	SDC-2	C	TFC-ENG-STD-22
Buried Piping - Encasement	Pressure Containment	GS	QL-3	NDC-2/1	SDC 2/1	C	TFC-ENG-STD-22
Jumpers	Pressure Containment	SS	QL-2	NDC-2	SDC-2	C	TFC-ENG-STD-22
Cover blocks/ plates	Secondary Containment[3]	GS	QL-3	NDC-2/1	SDC 2/1	C	ACI 318/ AISC 360
Evaporator Walls	Secondary Containment	SS	QL-2	NDC-2	SDC-2	C	ACI 318/ AISC 360
Transfer System Pit Walls	Secondary Containment	GS	QL-3	NDC-2/1	SDC 2/1	C	ACI 318/ AISC 360

[3] These SSCs are designed for higher NDC loads to address system interaction effects (two-over-one phenomena).

242-A Evaporator Waste Transfer System Jumper Design Inputs/Requirements:

1.) The new jumper designs for the 242-A Evaporator shall allow the following operational capability:

- Allow pumping to the new slurry transfer line, SL-170, by connecting pump room Nozzle 5 to the to be installed new slurry transfer line, SL-170, wall nozzle.
- Allow the receipt of supernatant through a new transfer line by connecting pump room Nozzle 13A to the to be installed new supernatant feed nozzle.

2.) The arrangement of the jumper shall be such to allow the tightening and loosening of connector heads remotely via the 242-A Evaporator process crane impact wrench. Exterior dimensions of the impact wrench are available upon request.

3.) The jumper shall conform to the requirements listed in TFC-ENG-STD-22, Piping, Jumpers, and Valves.

4.) Material for the pressure boundary piping that make up the jumpers shall be ASTM A312, Type 304L stainless steel.

5.) The piping analysis for the jumpers shall be prepared in accordance with TFC-ENG-DESIGN-C-60, Preparation of Piping Analyses for Waste Transfer Systems.

6.) RPP-RPT-58773, Assessment of Safety Significant Piping Jumpers to Assure Excess Load Capacity for Potential Water Hammer (Leak Check and Flush) Events shall be used to demonstrate compliance for withstanding pressure transients. Specific design features listed in RPP-RPT-58773 Appendix D shall be incorporated into the jumper design media. A compliance table shall be included in the analysis identifying how each requirement has been met.

7.) The jumpers shall be designed to accommodate the fabrication specification requirements listed in RPP-14541, Jumper Fabrication and Testing Specification for Tank Farms.

8.) Jumpers connected to the replacement slurry waste transfer lines and supernatant feed line are designated as high transfer volume jumpers and their design shall comply with the requirements in TFC-ENG-STD-42, Section 3.2.1.3, “Tank Farms Waste Transfer System Fitness-for-Service Evaluation – Erosion/Corrosion In-Line Monitoring” and TFC-ENG-STD-42, Section 3.3.1.1, “Tank Farms Waste Transfer System Fitness-for-Service Evaluation – Future Erosion/Corrosion Allowance.”

9.) Jumpers shall be designed and fabricated to exclude dead legs.

10.) Nozzle, manifold, and jumper assembly connections installed shall be the Plutonium-Uranium Extraction (PUREX) type designed in accordance with drawings H-2-32420, “Assembly Horiz. & Vert. Conn. 2” Connector,” Sheet 1 – 2 and H-2-32430, “Assembly Horiz. & Vert. Conn. 3” Connector”.

DST Waste Transfer System Jumper Design Inputs/Requirements:

1.) The new safety significant jumper design for the DST waste transfer system (AW-02A, AW-B, and AW-02E pits) shall allow the following operational capabilities.

AW-02A Central Pump Pit:

- Allow the routing of waste transfers between the following transfer lines: New transfer line SL-170 to new transfer line SL-172 via jumpers in AW-02A. Jumper shall include a low point drain valve in AW-02A to drain into the headspace of AW-102.
- Allow the routing of waste transfer between the following transfer lines: SN-609, SN-610, SN-267, SN-268, and SN-272 via jumpers in AW-02A with DVI to isolate each route.
- Allow the receipt of waste into the AW-102 headspace via a drop leg from waste being transferred from SN-609, SN-610, SN-267, SN-268, or SN-272.
- Valve placement shall be such that transfers from SN-272 can enter the headspace of AW-102 via a drop leg in AW-02A while being physically disconnected via DVI from transfers occurring through AW-02A via SN-609, SN-610, SN-267, and SN-268.
- Jumper elevation/hydraulics shall be such that transfers into AW-02A via SN-609, SN-610, SN-267, SN-268, or SN-272 are free draining back to the originating waste transfer pit (e.g. AP valve pit, AW-B valve pit, AW-A valve pit, etc.).
- Design process jumpers to allow installation of encasement process blanks for use during encasement pressure tests.

AW-B Valve Pit:

- Allow the routing of waste transfers between the following transfer lines: SN-268, SL-509, SL-166, SN-264, SN-266, and the new transfer line SL-172 with DVI to isolate each route.
- Jumper elevation/hydraulics shall be such that transfers into AW-B via SN-268, SL-509, SL-166, SN-264, SN-266, and the new transfer line SL-172 are free draining back to the originating waste transfer pit (e.g. AP valve pit, AW-02A pump pit, etc.).
- Isolate existing failed transfer lines SL-167 and SL-164 from the waste transfer system within AW-B.

AW-02E Feed Pump Pit:

- Allow the routing of waste transfers between the following transfer lines/components: new transfer line SN-275, SN-272, and the waste transfer pump installed in the AW-02E 12-inch riser.
- Jumper elevation/hydraulics shall be such that transfers associated with SN-275, SN-272, and the AW-02E feed pump free drain back into AW-102 via the pump column.

2.) Waste transfer jumpers should be designed to allow the installation of blanks to support periodic pneumatic encasement pressure tests at the DST waste transfer line low point encasement drain PUREX nozzles. Blanks shall be installed using a remote impact wrench without the removal of waste transfer system jumpers. If this is not practical, design encasement drain valve jumpers to allow waste transfer system jumpers to remain in place during encasement pressure tests.

3.) The arrangement of the jumpers shall be such to allow the tightening and loosening of connector heads remotely via an electric impact wrench (Part #C-HEFIG-002). Exterior dimensions of the impact wrench are available upon request.

4.) Material for the pressure boundary piping that make up the jumpers shall be ASTM A312, Type 304L stainless steel.

5.) The available valve make/model numbers and flow patterns available for use to support this jumper design may be provided to the Subcontractor upon request. Selection of different valve and/or flow pattern shall require justification by the Subcontractor with concurrence by WRPS engineering prior to proceeding with the design due to the procurement duration required to obtain additional valves.

6.) The new valves shall utilize valve funnels identified on H-14-107471, Valve Funnel Receiver Assemblies, to allow engagement between the valve stem and the gear actuator drive shaft.

7.) Valves which are to be used for DVI valve criteria shall utilize valve body indicator plates identified on H-14-107606, “Valve Indictor Plate Details” to allow remote valve positioning and in-service inspections.

8.) The jumper shall conform to the requirements listed in TFC-ENG-STD-22, Piping, Jumpers, and Valves.

9.) The piping analysis for the jumpers shall be prepared in accordance with TFC-ENG-DESIGN-C-60, Preparation of Piping Analyses for Waste Transfer Systems.

10.) RPP-RPT-58773, Assessment of Safety Significant Piping Jumpers to Assure Excess Load Capacity for Potential Water Hammer (Leak Check and Flush) Events shall be used to demonstrate compliance for withstanding pressure transients. Specific design features listed in RPP-RPT-58773 Appendix D shall be incorporated into the jumper design media. A compliance table shall be included in the analysis identifying how each requirement has been met.

11.) The jumpers shall be designed to accommodate the fabrication specification requirements listed in RPP-14541, Jumper Fabrication and Testing Specification for Tank Farms.

12.) Jumpers connected to the replacement slurry waste transfer line are designated as high transfer volume jumpers and their design shall comply with the requirements in TFC-ENG-STD-42, Section 3.2.1.3, “Tank Farms Waste Transfer System Fitness-for-Service Evaluation – Erosion/Corrosion In-Line Monitoring” and TFC-ENG-STD-42, Section 3.3.1.1, “Tank Farms Waste Transfer System Fitness-for-Service Evaluation – Future Erosion/Corrosion Allowance.”

13.) Jumpers shall be designed and fabricated to exclude dead legs.

14.) Nozzle, manifold, and jumper assembly connections installed shall be the Plutonium-Uranium Extraction (PUREX) type designed in accordance with drawings H-2-32420, "Assembly Horiz. &Vert. Conn. 2" Connector," Sheet 1 – 2 and H-2-32430, "Assembly Horiz. & Vert. Conn. 3" Connector".

15.) Jumper support legs that contact with the flooring or walls as part of installation and/or operation shall use materials at the contact surface that minimize risk of damage to floor and wall protective coatings.

16.) Manual valves in safety-significant jumpers shall meet the Double Valve Isolation (DVI) criteria in TFC-ENG-STD-22, "Piping, Jumpers, and Valves."

Air lift Circulator (ALC) Jumper Design Inputs/Requirements:

1.) New General Service jumpers designed for the ALC system shall allow the following operational capabilities.

- Allow the routing of air from Nozzle P to R and Nozzle S to T

2.) The arrangement of the jumpers shall be such to allow the tightening and loosening of connector heads remotely via an electric impact wrench (Part #C-HEFIG-002). Exterior dimensions of the impact wrench are available upon request.

3.) Material for the pressure boundary piping that make up the jumpers shall be ASTM A312, Type 304L stainless steel.

4.) The jumper shall conform to the requirements listed in TFC-ENG-STD-22, Piping, Jumpers, and Valves where possible as a best practice. This jumper is not a waste transfer jumper is it supports the process air system to connect to the airlift circulator. B31.3 load cases shall be used to include dead weight, thermal, and occasional loads. Inputs to the analysis shall be utilized from TFC-ENG-DESIGN-C-60 where practical to aid in the analysis.

5.) The jumper shall have a design pressure of 125 psig at a design temperature of 100 deg F per the M-7 pipe code specification of Project B-120-C7.

6.) The jumpers shall be designed to accommodate the fabrication specification requirements listed in RPP-14541, Jumper Fabrication and Testing Specification for Tank Farms.

7.) Jumpers shall be designed and fabricated to exclude dead legs.

8.) Nozzle, manifold, and jumper assembly connections installed shall be the Plutonium-Uranium Extraction (PUREX) type designed in accordance with drawings H-2-32410, "Assembly Horiz. &Vert. Conn. 1" Connector,"

9.) Jumper support legs that contact with the flooring or walls as part of installation and/or operation shall use materials at the contact surface that minimize risk of damage to floor and wall protective coatings.

AW-02A Encasement Flanged Spool Design Inputs/Requirements:

1.) Two new General Service encasement drain valve spools shall have a design pressure of 60 psig at a design temperature of 200 deg F.

2.) The encasement drain valves shall interface with the existing 1-1/2 inch encasement flanged end for SN-267 and SN-268 located in the AW-02A central pump pit.

3.) Installation configuration shall be in accordance with H-2-70411 Sht 2 Detail 3, with the exception that the valve shall be stainless steel and the valve funnel shall utilize valve funnels identified on H-14-107471, Valve Funnel Receiver Assemblies, to allow engagement between the valve stem and the gear actuator drive shaft.

4.) The encasement spools shall be designed to accommodate the fabrication specification requirements listed in RPP-14541, Jumper Fabrication and Testing Specification for Tank Farms, as practical.

DST Waste Transfer Pit Cover Block Design Inputs/Requirements:

1.) New cover blocks/plates shall be designed as required to support new jumper arrangements where utilizing the existing cover blocks is not practical. It is anticipated that existing equipment which was previously installed through the cover block will require replacement due to changes in cover block design (i.e. new equipment lengths) to meet current requirements. The cover blocks shall be designed with penetrations to allow installation and operation of the following equipment:

- One Leak Detection Assembly (Reference H-14-100981). To be located adjacent to the drain seal assembly port.
- One Pit Thermocouple Tree (Reference H-14-109814).
- One Pit Drain Seal Assembly (Reference H-14-107249). To be located in the same location as the existing drain seal assembly.
- Valve Gear Actuator(s) Assembly (Reference H-14-110327). To align above each jumper valve centerline.
- Multiple Remote Cameras (Viewport penetrations with minimum inside diameter of 4 inches). Sufficient view ports shall be selected to ensure remote cameras have line of sight to all installed equipment including valves, Purex connectors, leak detector probes, drain, etc.
- One In-Pit Heater (Reference H-14-110254)
- A minimum of one spare gear actuator assembly mating flanges (to support future jumper replacement activities).

2.) Penetrations which will not have equipment installed as part of normal operation (viewport penetrations, spare gear actuator assembly, etc.) will require shield port covers to be listed as details on the applicable cover block design media.

3.) Shield port covers shall utilize gaskets and a drip ledge to prevent water and foreign material intrusion into the applicable pit.

4.) New cover blocks shall be sloped and extend over the outside of the pit walls to allow water to drain off the top of the cover and away from the pit. If utilizing steel plate for the top surface, water intrusion mitigation features (e.g. drip ledges, raised surface, etc.) may be implemented instead of slope as an acceptable means. Minimizing intrusions shall be a consideration to limit shutdowns due to artificial leak detector alarms.

5.) Cover block/plate penetrations shall be sealed adequately to stop rain/snow water intrusion.

6.) Cover blocks/plate configuration shall minimize radiation streaming.

7.) Cover blocks/plate shall be provided with lifting bails positioned to be suitable for balanced lifting by crane.

8.) Cover blocks/plate and process pits shall have a special protective coating to prevent waste absorption from a spray leak.

9.) New cover blocks/plates shall be designed in accordance with TFC-ENG-STD-06, “Design Loads for Tank Farm Facilities” with the natural phenomena design category of NDC-2. The cover blocks are NDC-2/1 (2 over 1), which means their failure could affect NDC-2 equipment (piping inside the pump pits) and they are subjected to the same seismic loads as NDC-2 equipment. Utilize Limit State C for analysis.

10.) Cover block/plate design shall be in accordance with DOE/RL-92-36, Hanford Site Hoisting and Rigging Manual and RPP-8360, Lifting Attachment and Lifted Item Evaluation.

DST Waste Transfer Lines Design Inputs/Requirements:

1.) Locations for the new transfer line nozzle connections into the DST waste transfer system shall occur within AW-Farm. Pit tie-in locations are AW-02A, AW-02E, and AW-B valve pits.

2.) 242-A Evaporator wall nozzles are to be designed for remote installation from the inside of the pump room via the process crane. Support personnel will be located on the outside of the pump room wall to facilitate the final placement/anchorage.

3.) Transfer piping design shall comply with the requirements in TFC-ENG-STD-22, "Piping, Jumpers, and Valves."

4.) New slurry transfer piping shall be comprised of a 2 inch Schedule 40 stainless steel primary pipe and a 4 inch Schedule 40 carbon steel secondary encasement pipe.

5.) New supernatant transfer piping shall be comprised of a 3 inch Schedule 40 stainless steel primary pipe and a 6 inch Schedule 40 carbon steel encasement pipe.

6.) Material for the primary piping within the transfer line shall be seamless grade 316L stainless steel.

7.) Material for the encasement piping of the transfer line shall be seamless carbon steel ASTM A106 or ASTM A53.

8.) The encasement pipe shall extend through the concrete wall of the applicable structure (i.e. pit walls, pump room wall, etc.) to maintain secondary containment.

9.) Waste transfer piping design (primary confinement piping and secondary containment piping) shall have the capability to be pressure tested in accordance with the requirements of ASME B31.3, *Process piping* for normal fluid service.

10.) Underground transfer piping shall be covered by the equivalent of ≥ 3 foot (ft.) of soil to the top of the pipe [RPP-13033, *Tank Farms Documented Safety Analysis*, Section 2.4.2.1 "Transfer Lines"]. The definition of "equivalent" is outlined in RPP-RPT-52823, *Tank Farm Waste Transfer Buried Piping Freeze Protection Methodology*; this design shall comply with the requirements outlined therein.

11.) Underground transfer piping located outside of an RBA shall be covered with appropriate backfill/shielding to ensure that the contact dose rate during a transfer (simultaneous feed and slurry transfers) does not exceed 0.5 mr/hr as measured at grade utilizing the source term cited in Table 1.

12.) Buried piping must be provided with a backfill material that is noncorrosive, porous, and homogeneous substance that is carefully installed so that the backfill is placed completely around the piping and compacted to ensure that the piping is fully and uniformly supported. Controlled density fill (CDF) will be used under and up to at least the horizontal centerline of transfer pipe system.

13.) Buried pipe bends with a minimum of five pipe diameters are preferred to butt-welding elbow and shall be used where possible

14.) The transfer line encasements shall have connection points (i.e., test risers) at or near grade to allow the performance of encasement pneumatic pressure testing and encasement flushing near each low point and high point.

15.) The transfer line encasement connection point shall be configured to aid in the installation of a boroscope into the transfer line encasement (minimum inner diameter of ½-inch test riser required with angled approach into the encasement).

16.) Design of new pipe system to connect to existing piping shall be compatible with the material of construction, nominal pipe size and pipe schedule with interfacing existing piping

17.) New transfer piping shall be designed with a corrosion protection system that complies with the NACE SP0169, which shall include a fusion bonded epoxy layer and cathodic protection.

18.) Waste transfer lines shall be sloped continuously from high point to low point with a minimum slope of 0.5%. If shown that 0.5% is not practical, then the pipe slope shall utilize no less than the absolute minimum of slope of 0.25 %.

19.) Low point encasement drains into the applicable pit shall utilize the pit leak detector as the low point leak detection.

20.) The transfer line encasement low point at the applicable pit structure shall be designed with a 2-inch PUREX nozzle to support periodic pneumatic encasement pressure tests. These 2-inch nozzles should be accessible for the installation of a process blank and isolation blank without the removal of process jumpers. If this is not practical, design encasement drain valve jumpers to allow process jumpers to remain in place during encasement pressure tests.

21.) The transfer lines and associated jumpers shall be designed to the following design pressure/design temperature parameters:

Table 4 – Pressure and Temperature Design Requirements

	Primary Piping		**Encasement Piping**	
Transfer Line Type	Design Pressure	Design Temperature	Design Pressure	Design Temperature
Supernatant	620 psig	200ºF	60 psig	200ºF
Slurry	620 psig	200ºF	60 psig	200ºF

Table 5 – Jumper Pressure and Temperature Design Requirements

Jumper Piping	
Design Pressure	Design Temperature
400 psig	200ºF

Waste Transfer System Material Design Inputs/Requirements:

1.) Equipment, components, and assemblies that may contact waste or waste treatment materials shall be compatible with their physical, chemical, and radioactive properties.

2.) Waste transfer component selection shall use the guidance in TFC-ENG-STD-34, "Standard for the Selection of Non-Metallic Materials in Contact with Tank Waste," for selection of Non-Metallic materials. Material selection is to be based on normal, bounding conditions for DSTs, with the exception of Tank 241-AZ-101. Tank 241-AZ-101 waste characteristics are not part of the normal bounding conditions and shall not be used in the selection of non-metallic materials.

3.) Metallic surfaces which will routinely contact tank waste shall be fabricated from stainless steel.

4.) Materials of construction shall be selected to minimize all forms of corrosion.

5.) Waste transfer system components shall be designed for the 250 Rad/hour radiation environment for direct contact with tank waste utilizing the source term methodology defined in TFC-ENG-STD-34, "Standard for the Selection of Non-Metallic Materials in Contact with Tank Waste", Attachment D, "Derivation of Radiation Source Term" for a non-AZ Tank Farm tank.

6.) Non-metallic materials shall conform to the requirements of TFC-ENG-STD-34, "Standard for the Selection of Non-Metallic Materials in Contact with Tank Waste.

System Design Life Design Inputs/Requirements:

1.) Pit cover blocks/plates shall have a design life of 35 years.

2.) Removable components beneath cover blocks/plates, including valves and jumpers, should have a design life of 25 years without maintenance, where practical.

3.) Buried waste transfer line piping shall have a design life of 50 years.

Electrical Requirements Design Inputs/Requirements:

1.) Electrical systems shall be designed in compliance with the requirements of the NFPA 70, National Electrical Code®, NFPA 101, Life Safety Code® and TFC-ENG-STD-41, "Electrical Installations."

2.) Electrical installations in potentially flammable atmospheres shall meet the requirements of TFC-ENG-STD-45, "Installations for Potentially Flammable Atmospheres."

3.) Outdoor electrical equipment enclosures shall be rated for protection from windblown dust, per NEMA ICS 6, Industrial Control and Systems: Enclosures.

Hand-hole and Buried Conduit Design Input/Requirements:

1.) Hand-holes shall be sized to allow for the installation of a minimum of three 3 inch PVC conduits (for both electrical distribution and instrumentation).

2.) Buried conduit shall be Ocal style PVC-coated rigid conduit and fittings.

3.) Hand-holes shall be selected and load rated for the applicable traffic conditions based upon their location. It is anticipated that all hand-holes shall be rated for higher than light duty (pedestrian traffic only).

4.) Electrical distribution hand-holes shall be separate from instrumentation hand-holes.

5.) Hand-hole locations shall allow for ease of future upgrades to tie into new conduit runs. This includes structures such as the 271-AW building, new electrical distribution building (location to be provided by WRPS Engineering), AW-102 pit structures, nearby hand-holes, and conduit runs on the north side of the 242-A Evaporator to enter the building.

6.) All hand-holes and conduit shall comply to the requirements is TFC-ENG-STD-15 and TFC-ENG-STD-41.

7.) Conduit shall be run to two new terminal boxes to be installed on the south side of the evaporator to allow routing of electrical and instrumentation from the evaporator to the new conduit hand holes.

8.) Core drilling near the southeast corner of the Evaporator into the AMU room shall be performed to allow passage of conduit. Spare cores and pass thru' s shall be in place for future expansion.

9.) Conduit shall be routed along the south face of the evaporator wall to the southeast corner region joining the new TBX to the pass-thru's into the AMU room.

10.) Conduit shall be continued to be routed into the AMU room in the evaporator to join into MCC-001.

11.) Conduit shall be run from the new hand-holes to the AW-02E feed pump pit to allow conductors to tie into the P-102-1 TBX located on the south side of the AW-02E pit.

Evaporator Feed Pump Electrical Design Input/Requirements:

1.) New conductors shall routed from the P-102-1 TBX located by the AW-02E pit to the MCC-001 located in the 242-A Evaporator AMU room to allow the operation of the AW-02E feed pump.

2.) Conductors shall be sized for a minimum of a 20HP motor. Larger conductors are preferred for future pump replacements which may require additional HP requirements.

3.) Existing overload protection and motor contactor shall be replaced in the motor starter compartment if not appropriately sized for the new replacement feed pump.

Hoisting and Rigging Design Inputs/Requirements:

1.) All hoisting and rigging equipment shall comply with the requirements of DOE/RL 92-36, *Hanford Site Hoisting and Rigging Manual*; TFC-ENG-FACSUP-C-25, "Hoisting and Rigging;" RPP-8360, *Lifting Attachment and Lifted Item Evaluation.*

2.) The lifting attachment(s) on the equipment (lifting eyes, lugs, ears, etc.) and the lifted items shall be designed in accordance with site procedures, an exception is that ASME BTH-1, *Design of Below-the-Hook Lifting Devices* should be used to verify lifting lugs hole diameter compared to the shackle pin diameter (the D to d ratio). The design shall consider equipment orientation, i.e., horizontal to vertical.

3.) Lift points for packages and individual components shall be clearly identified.

4.) Design Agent provided structural and mechanical lifting devices, as defined by ASME B30.20, *Below-the-Hook Lifting Devices* and shall conform to the requirements of ASME B30.20.

5.) The design of below-the-hook lifting (BTH) devices shall conform to the requirements of ASME BTH-1*, Design of Below-the-Hook Lifting Devices.*

6.) The Design Agent shall submit calculations required for the design of all BTH devices and associated lifting points. BTH devices shall be load tested to 125% of the rated capacity +0%/-5%.

7.) All lifting devices shall be rated for outdoor service. Lifting devices shall be designed to a minimum temperature of 10 °F.

Actuator Design Enhancements Inputs/Requirements:

1.) The actuator design change shall allow for setting the overall length in the field prior to installation without the requiring welding.
2.) Features shall be included to allow approximately 8-inches of travel adjustment. This distance is based on the uncertainty of where the as-built location of the applicable valve funnel is in elevation.
3.) The preferred design solution involves two hubs that are drawn together using socket head cap screws which squeezes four locking shims onto the face of the driveshaft travel bar. This compression and mating surfaces prevents any torsional deflection/slop to occur.
4.) The design should include a feature to where in the event the compression of the shims fail, the driveshaft travel bar does not fall out of the actuator drive shaft assembly. For example this could be accomplished by two button head screws put in place prior to welding the upper locking hub to the actuator driveshaft piping.
5.) The torsional load this joint needs to withstand are the same as the remaining driveshaft assembly as documented in RPP-CALC-60314, *Manual Valve Gear Operator Supporting Analysis* of 750 ft-lbs.

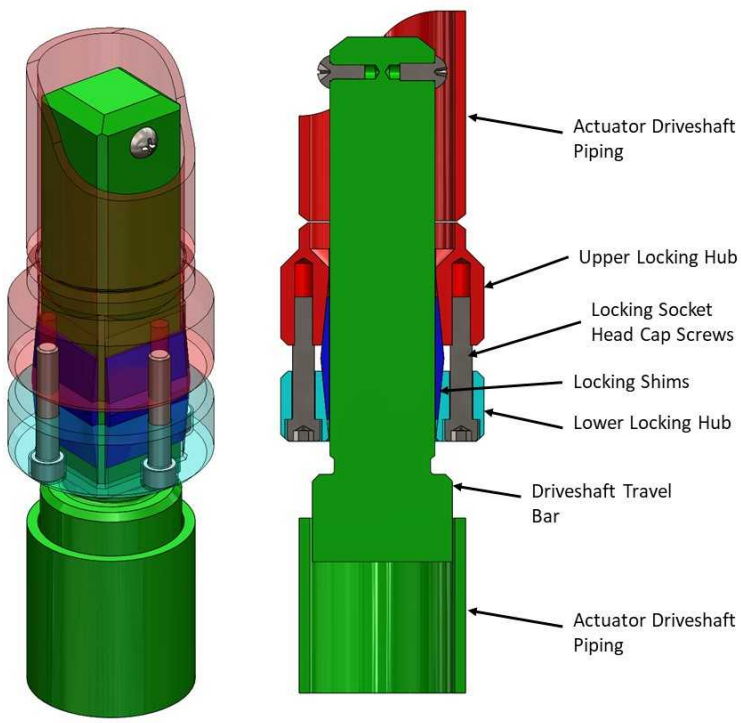

Driveshaft Enhancement Concept

Shoring Plan Design Inputs/Requirements

1.) The shoring system and methods of deployment will comply with the requirements of DOE-0344, Hanford Site Excavating, Trenching and Shoring Procedure (HSETSP).

2.) The shoring system will be required to be compatible with Type C-60 soil.

3.) The shoring system will be required to be in place for 3-6 months at a time.

4.) Excavations will be performed via hand digging (i.e. shovels). The shoring system installation shall be compatible with this type of excavation.

5.) Fall protection will need to be a feature that is that included with the shoring system.

6.) Trench ingress and egress shall be included with the shoring system

7.) The shoring system needs to allow long sections of piping (40-50ft) to be placed in the trench via a crane without cross supports preventing installation.

8.) The shoring system needs to allow 90 degree turns of the excavated trench.

9.) The shoring system needs to account for surcharge loads from nearby facilities.

10.) The shoring system needs to allow for existing infrastructure in unknown locations to cross the excavation.

Interface Points:

1.) The new slurry jumper to be designed/installed in the 242-A Evaporator shall connect to Nozzle 5 which is located on an existing jumper 4 to 5 / 40 to 21 (Reference H-2-836350) in the pump room.

2.) The new supernatant jumper to be designed/installed in the 242-A Evaporator shall connect to Nozzle 13A which is located on the existing jumper D to 13A (Reference H-14-107263) in the pump room.

3.) The new jumpers to be designed/installed in the AW-B Valve Pit shall connect to Nozzle R4 to allow transfer to the AP Valve Pit via SL-509.

DOCUMENT RELEASE AND CHANGE FORM

Prepared For the U.S. Department of Energy, Assistant Secretary for Environmental Management
By Washington River Protection Solutions, LLC., PO Box 850, Richland, WA 99352
Contractor For U.S. Department of Energy, Office of River Protection, under Contract DE-AC27-08RV14800

TRADEMARK DISCLAIMER: Reference herein to any specific commercial product, process, or service by trade name, trademark, manufacturer, or otherwise, does not necessarily constitute or imply its endorsement, recommendation, or favoring by the United States government or any agency thereof or its contractors or subcontractors. Printed in the United States of America.

Release Stamp

DATE:
Apr 30, 2020
HANFORD RELEASE

1. **Doc No:** RPP-PLAN-64037 **Rev.** 00

2. **Title:**
242-A Evaporator Pump Room Transfer Line Wall Nozzles and Jumper Installation and Inspection Plan

3. **Project Number:** T1P207 ☐N/A

4. **Design Verification Required:** ☐Yes ☒No

5. **USQ Number:** ☒ N/A RPP-27195

6. **PrHA Number** **Rev.** ☒ N/A

Clearance Review Restriction Type: public

7. **Approvals**

Title	Name	Signature	Date
Checker	Labelle, Steven	*Labelle, Steven*	04/28/2020
Clearance Review	Ayers, Lynn M	*Ayers, Lynn M*	04/28/2020
Design Authority	Engeman, Jason K	*Engeman, Jason K*	04/28/2020
Document Control Approval	Alvarez, Efren	*Alvarez, Efren*	04/28/2020
Environmental Protection	Heninger, Steve D	*Heninger, Steve D*	04/28/2020
Originator	Engeman, Jason K	*Engeman, Jason K*	04/28/2020
Radiological Control	Franz, James A	*Franz, James A*	04/28/2020
Responsible Manager	Huntington, Matthew R	*Huntington, Matthew R*	04/28/2020

8. **Description of Change and Justification**

Initial Release

9. **TBDs or Holds** ☒N/A

10. **Related Structures, Systems, and Components**

a. **Related Building/Facilities** ☐N/A	b. **Related Systems** ☐N/A	c. **Related Equipment ID Nos. (EIN)** ☐N/A
242-A	241-WT	AW02A-WT-WTL-SL-170 AW02A-WT-WTL-SL-171 AW02E-WT-WTL-SN-275

11. **Impacted Documents – Engineering** ☒N/A

Document Number	Rev.	Title

12. **Impacted Documents (Outside SPF):**

N/A

13. **Related Documents** ☐N/A

Document Number	Rev.	Title
ECN-715004	01	CORE DRILL AND INSTALL WALL NOZZLE 41, 42 AND 43 ASSEMBLIES AT 242-A EVAPORATOR PUMP ROOM
ECN-715005	00	242-A EVAPORATOR PUMP ROOM JUMPER INSTALLATION (41 TO 5 AND 43 TO 13A)
H-14-111832 SH 001	01	WALL NOZZLE ASSEMBLIES 242-A PUMP ROOM
H-14-111832 SH 002	01	WALL NOZZLE ASSEMBLIES 242-A PUMP ROOM
H-14-111832 SH 003	01	WALL NOZZLE ASSEMBLIES 242-A PUMP ROOM
H-14-111832 SH 004	01	WALL NOZZLE ASSEMBLIES 242-A PUMP ROOM
H-14-111832 SH 005	01	WALL NOZZLE ASSEMBLIES 242-A PUMP ROOM
H-14-111832 SH 006	01	WALL NOZZLE ASSEMBLIES 242-A PUMP ROOM
H-14-111832 SH 007	01	WALL NOZZLE ASSEMBLIES 242-A PUMP ROOM
H-14-111832 SH 008	01	WALL NOZZLE ASSEMBLIES 242-A PUMP ROOM
H-14-111832 SH 009	01	WALL NOZZLE ASSEMBLIES 242-A PUMP ROOM
H-14-111832 SH 010	01	WALL NOZZLE ASSEMBLIES 242-A PUMP ROOM
H-14-111832 SH 011	01	WALL NOZZLE ASSEMBLIES 242-A PUMP ROOM
H-14-111832 SH 012	01	WALL NOZZLE ASSEMBLIES 242-A PUMP ROOM
H-14-111832 SH 013	01	WALL NOZZLE ASSEMBLIES 242-A PUMP ROOM
H-14-111832 SH 014	01	WALL NOZZLE ASSEMBLIES 242-A PUMP ROOM
H-14-111832 SH 015	01	WALL NOZZLE ASSEMBLIES 242-A PUMP ROOM
H-14-111832 SH 016	01	WALL NOZZLE ASSEMBLIES 242-A PUMP ROOM
H-14-111832 SH 017	01	WALL NOZZLE ASSEMBLIES 242-A PUMP ROOM
H-14-111834 SH 001	00	JUMPER ASSEMBLY 41 TO 5 242-A PUMP ROOM
H-14-111834 SH 002	00	JUMPER ASSEMBLY 41 TO 5 242-A PUMP ROOM
H-14-111835 SH 001	00	JUMPER ASSEMBLY 43 TO 13A 242-A PUMP ROOM

DOCUMENT RELEASE AND CHANGE FORM

Doc No: RPP-PLAN-64037 **Rev.** 00

13. **Related Documents** ☐N/A

Document Number	Rev.	Title
H-14-111835 SH 002	00	JUMPER ASSEMBLY 43 TO 13A 242-A PUMP ROOM
RPP-CALC-63208	01	Structural Analysis for the 242-A Pump Room Wall Nozzle Assemblies Plus Counterweight Lifting Devices
RPP-CALC-63211	00	ASME B31.3 Analyses of the New SL-170, SL-171, SL-172 and SN-275 Waste Transfer Lines in 241-AW Tank Farm
RPP-CALC-63213	00	ASME B31.3 Analyses of the 41 To 5 and 43 To 13A Jumpers for the 242-A Evaporator Pump Room
RPP-CALC-63214	00	242-A Evaporator Pump Room Jumpers Supporting Analyses
RPP-RPT-61521	00	Material Compatibility Report for Project T1P207, DST Replacement Waste Transfer Lines 241-AW to 242-A Evaporator

14. **Distribution**

Name	Organization
Engeman, Jason K	TANK FARM PROJECTS ENGINEERING
Foster, Jim	242-A/AW/ETF OPERATIONS
Huntington, Matthew R	TANK FARM PROJECTS ENGINEERING
Mattson, Rich B	TFP CONSTRUCTION
May, Dustin R	TFP PROJECT MANAGEMENT
Olson, Will T	242-A/AW OPERATIONS
Thompson, Suzette A	RCRA PERMITTING
Thorne, James D	PROJECTS WORK PLANNING

Report Number _ RPP-PLAN-64037 _____ Revision: ___ 0 ____

Report Title: _ 242-A Evaporator Pump Room Transfer Line Wall Nozzles and Jumper Installation and Inspection Plan

The following checklist is used by checkers to ensure technical reports are complete and in compliance with engineering procedures (i.e., TFC-ENG-DESIGN-C-25). This checklist is also applicable to ECNs that revise these types of documents. DRCF required approvers vary according to the type of document being released. Required approvers are identified in SPF.

Item No.	Yes	No	N/A	Item
				Version/Format
1			x	If revising an existing report, are the changes being made against the current revision in SPF?
2	x			Is the Document Release and Change Form (DRCF) properly filled out?
3	x			Are all of the pages properly labeled with Report Number, Revision Number, and Sequential Page Number?
4	x			Are the Subject and Purpose clearly stated and do they meet the end users' needs?
				References
5	x			Are all References properly documented within the report and can they be easily verified within Document Control, online, or within the library, etc.? If reference documents are not readily available, are they attached?
6	x			Have the correct design bases documents been identified (e.g., codes, standards, DOE Orders, TOC standards, regulatory requirements, etc.)?
				Open Items/Input
7	x			Is there a reference/source for each input?
8	x			Do the identified references/sources fully support the inputs?
9			x	Are all assumptions used to support the report individually listed and numbered?
10			x	Is there a justification written for each assumption that includes a technical basis?
11			x	Do the justifications adequately support the assumptions?
12			x	If the report has open items, TBDs, and/or HOLDs, is there a method identified to track them?
				Results/Conclusion
13			x	Are the results of the report consistent with the input and assumptions?
14			x	Do the results of the report affect any other technical documents?
15			x	Do the results substantiate the conclusion?
				Approvals
16			x	Does the DRCF identify the method of verification and checking and does it have a signature block for the verifier/checker?

Item No.	Comments
n/a	n/a

Checker: Steven A LaBelle (signature and date documented in SPF)

Print Name Signature Date

RPP-PLAN-64037
Revision 0

242-A Evaporator Pump Room Transfer Line Wall Nozzles and Jumper Installation and Inspection Plan

Prepared by

Jason Engeman
Washington River Protection Solutions, LLC

Date Published
April 2020

Prepared for the U.S. Department of Energy
Office of River Protection

Contract No. DE-AC27-08RV14800

Approved for Public Release;
Further Dissemination Unlimited

TABLE OF CONTENTS

1.0 BACKGROUND 1
2.0 PURPOSE 2
3.0 INSTALLATION DESCRIPTION 2
4.0 EQUIPMENT DESIGN 6
4.1 WALL NOZZLE DESIGN 6
4.2 JUMPER DESIGN 7
5.0 EQUIPMENT FABRICATION 8
5.1 WALL NOZZLE FABRICATION 8
5.2 JUMPER FABRICATION 9
6.0 EQUIPMENT INSTALLATION AND INSPECTIONS 9
6.1 WALL NOZZLE INSTALLATION AND INSPECTIONS 9
6.2 JUMPER INSTALLATION AND INSPECTIONS 10
7.0 REFERENCES 12

LIST OF FIGURES

Figure 1: Evaporator to AW-Farm Transfer Line Layout 1
Figure 2: 242-A Pump Room Jumpers and Wall Nozzles 2
Figure 3: Pump Room Nozzle Installation Location 3
Figure 4: Core Catcher Installation 4
Figure 5: Wall Nozzle General Arrangement 5
Figure 6: New Pump Room Jumper Arrangement 6
Figure 7: Typical New Evaporator Cross Section 7

LIST OF TABLES

Table 1: Core Drill and Wall Nozzle Summary 3
Table 2: Wall Nozzle Assembly Details 7
Table 3: Pump Room Jumper Assembly Details 8
Table 4: Wall Nozzle Assembly Installation Inspection Table 9
Table 5: Jumper Assembly Installation Inspection Table 10

LIST OF TERMS

Abbreviations and Acronyms

FIT	Fabrication, Inspection, and Test
IQRPE	Independent Qualified Registered Professional Engineer
PUREX	Plutonium Unranium Extraction
TOC	Tank Operating Contractor

1.0 BACKGROUND

Project T1P207 was created to install replacement transfer lines connecting the 241-AW tank farm (AW Farm) to the 242-A Evaporator (Evaporator). This is in response to the 2018 pneumatic encasement pressure test failure of the slurry transfer line, SL-167, which connects the Evaporator and AW Farm. The transfer lines will replace the previous function of the feed transfer lines (SN-269 and SN-270) and the slurry transfer lines (SL-167 and SL-168). The new feed transfer line, SN-275, will connect the Evaporator to the 241-AW-02E pump pit and the two new slurry transfer lines, SL-170 and SL-171, will connect the Evaporator to the 241-AW-02A pump pit. See Figure 1 for the general layout of the new transfer lines.

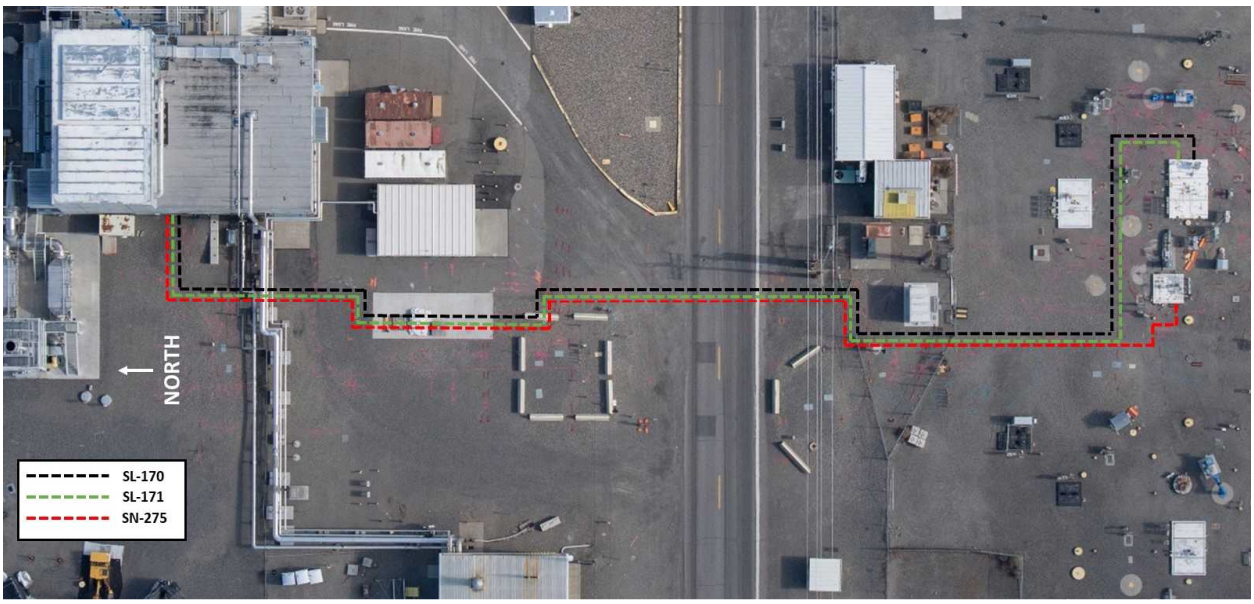

Figure 1: Evaporator to AW-Farm Transfer Line Layout

Connecting waste transfer lines to the Evaporator will require the installation of new wall nozzle assemblies through the reinforced concrete wall. This entails coring penetrations, installation and positioning of wall nozzles, grouting, and final anchoring. The wall nozzles allow the transition of welded buried piping to a mechanical joint in the Evaporator pump room called a PUREX nozzle. The PUREX nozzle is the male side of a mechanical connection where remotely installed jumpers are attached via PUREX connectors to allow the safe movement of tank waste through the process facility. See Figure 2 for a view of the Evaporator pump room where jumpers are installed onto wall nozzles to allow the movement of tank waste through the process. The wall nozzle installation work scope is performed in the first phase of the project to allow transfer line piping to be connected. New jumpers will be installed by the project after the installation of the transfer lines to allow the operation of the Evaporator.

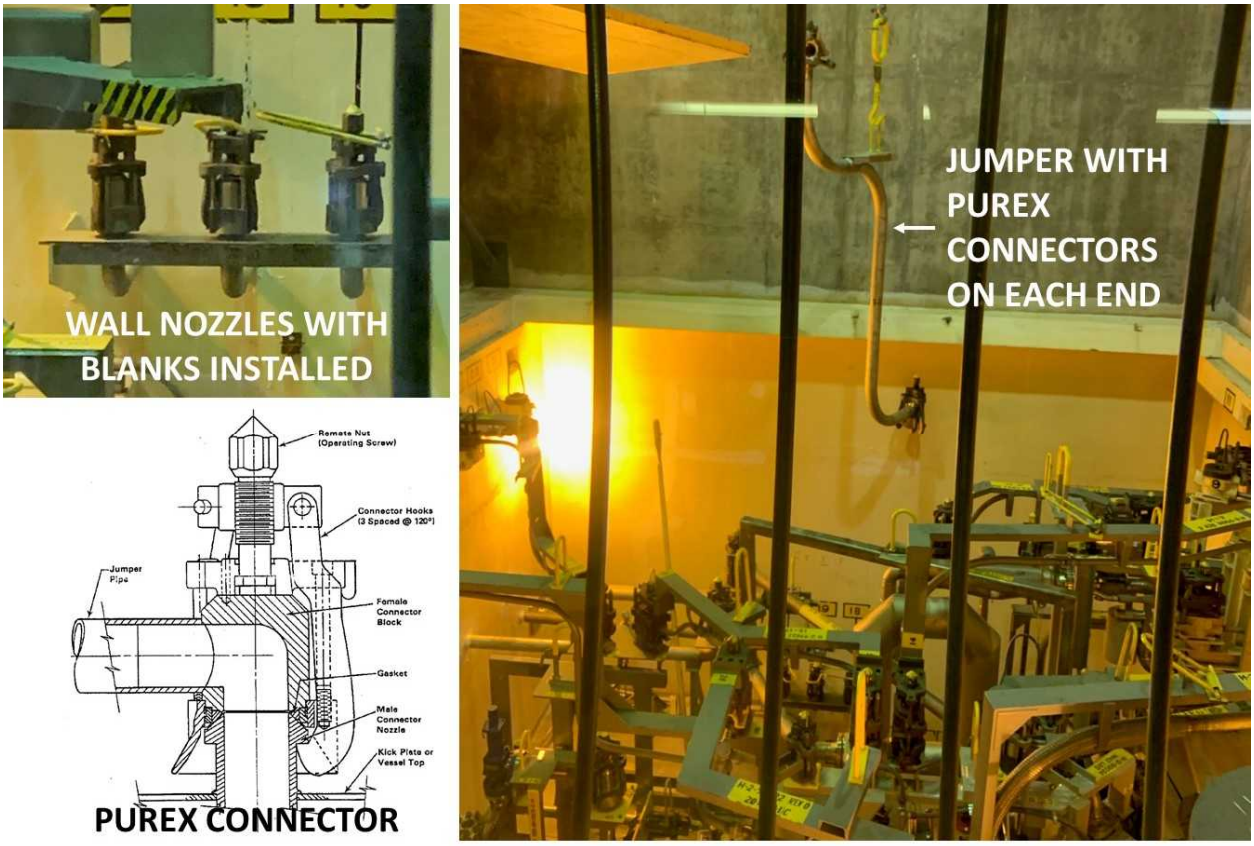

Figure 2: 242-A Pump Room Jumpers and Wall Nozzles

2.0 PURPOSE

The installation of the wall nozzles into the Evaporator structure requires breaching the pump room reinforced concrete wall and modification to the equipment (i.e. jumpers) in the pump room to connect to the new wall nozzles. This document will identify the design, installation methodology, and inspections required to successfully install these components. This inspection plan will identify those items applicable to the work scope to be performed and the acceptance criteria. The Independent Qualified Registered Professional Engineer (IQRPE) will also be performing inspections, or their qualified delegates, for certifying these new components to comply with the Washington Administrative Code 173-303-640, “Tank Systems”. Multiple inspections are identified in the Department of Ecology Publication Number 94-114, *Guidance for Assessing and Certifying Tank Systems*. The IQRPE will have a separate inspection plan and assessment report.

3.0 INSTALLATION DESCRIPTION

The core drilling of the Evaporator will take place on the west wall of the pump room where the reinforced concrete is approximately 22-inches thick. A wall nozzle is installed for each transfer line to be connected to the Evaporator facility. Table 1 provides a cross walk between the

transfer line, nozzle number, and the associated wall nozzle and core drill hole size. This work scope will be performed in accordance with ECN-715004, *Core Drill and Install Wall Nozzle 41, 42, and 43 Assemblies at 242-A Evaporator Pump Room*.

Table 1: Core Drill and Wall Nozzle Summary

Transfer Line Number	Nozzle Number	Wall Nozzle Assembly	Core Drill Hole Size
SL-170	41	H-14-111832-030	8-inch
SL-171	42	H-14-111832-030	8-inch
SN-275	43	H-14-111832-040	10-inch

The work crew will be working on the outside wall of the pump room to facilitate the core drilling. Required excavation shall be performed to allow enough room for installation equipment for the duration of the installation. The project made the decision early in the planning process to implement the engineering strategy and tools to allow the execution of all the tasks required to perform the wall nozzle installation without a manned entry into the pump room. The reason for this is the necessary implementation of As Low As Reasonably Achievable principles. Items to be installed (Core Catcher, wall nozzle assemblies, and jumpers) are designed to be installed via the process crane. All manipulation of the items as well as tightening and loosening of mechanical connections are done with the crane and its equipped electric impact wrench. Figure 3 highlights the region of the pump room wall where the wall nozzles are to be installed and a view of the area after their installation. This region is approximately 10-12 feet above the pump room floor and in close proximity to the pump room sump. Performing manned activities inside of the pump room at this location on the wall would require significant effort that would lead to more worker safety hazards (e.g. fall, contamination, etc.), increased durations in higher radiation fields, increased project cost and duration.

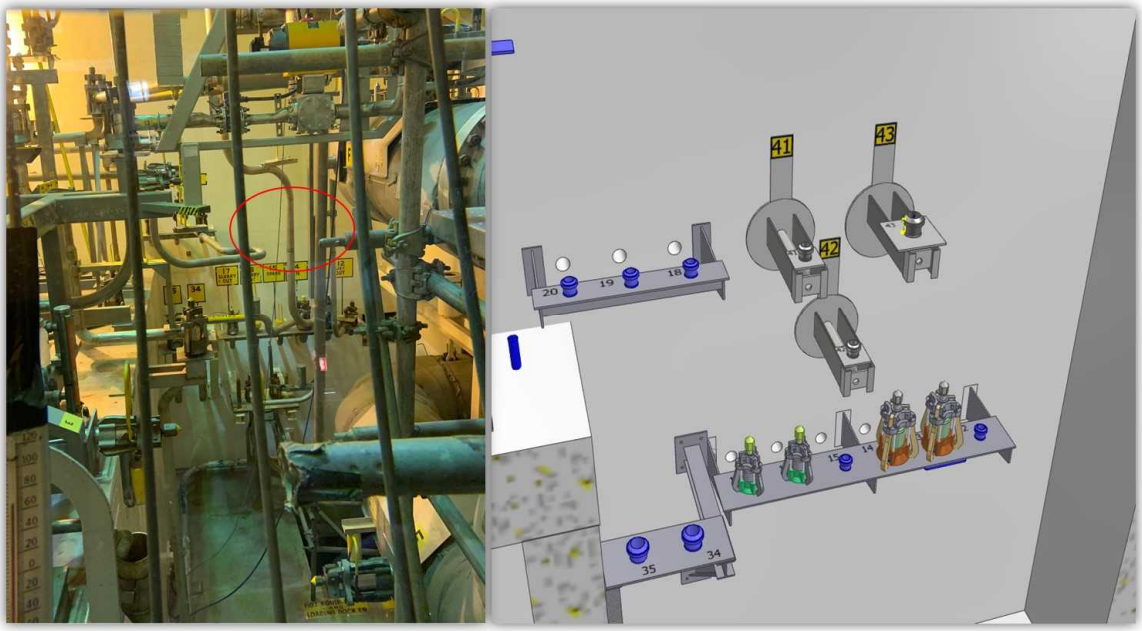

Figure 3: Pump Room Nozzle Installation Location

Prior to core drilling an assembly called a Core Catcher is installed in the pump room to ensure that no coring slurry and/or debris fall into the pump room and potentially damage the special protective coating and/or fall into the pump room sump. The Core Catcher functions by connecting to two pump room wall nozzles via PUREX connectors and then a mechanical system is actuated using the process crane impact wrench. This system moves a track back and forth to compress a containment assembly up against the pump room wall. The location of the containment assembly aligns with the location of each of the core drill locations. A depiction of the installation of the Core Catcher on the pump room west wall is shown in Figure 4.

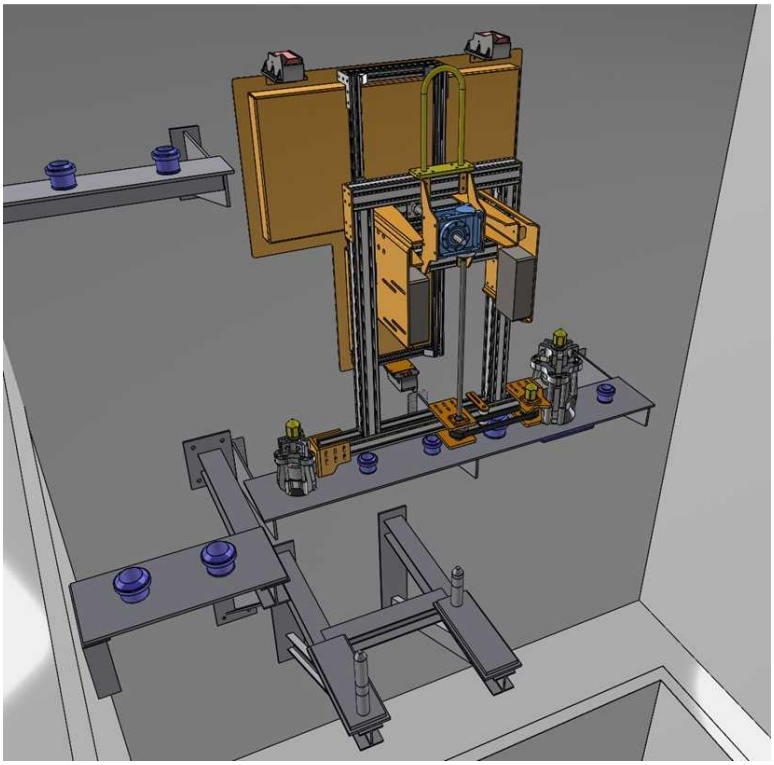

Figure 4: Core Catcher Installation

After completion of the Core Catcher installation, core drilling can commence. The core drilling shall be performed using a Hilti™[1] core drilling machine with custom 24-inch long bits. After completion of the core drilling the holes will be temporarily plugged and the wall nozzles will be installed. The wall nozzles are designed to allow their installation to be conducted without personnel located within the pump room. This is done via the use of a counterweight system attached to the wall nozzle to be lifted by the process crane. Once the wall nozzle has been brought through the wall penetration and secured, the counterweight is then disengaged by the process crane impact wrench and removed from the wall nozzle assembly via the process crane hook. What remains is the useable portion of the wall nozzle to support operational use at the end of the project. See Figure 5 for a view of the wall nozzle arrangement before and after the counterweight has been removed.

[1] Hilti is a trademark of Hilti Aktiengesellschaft.

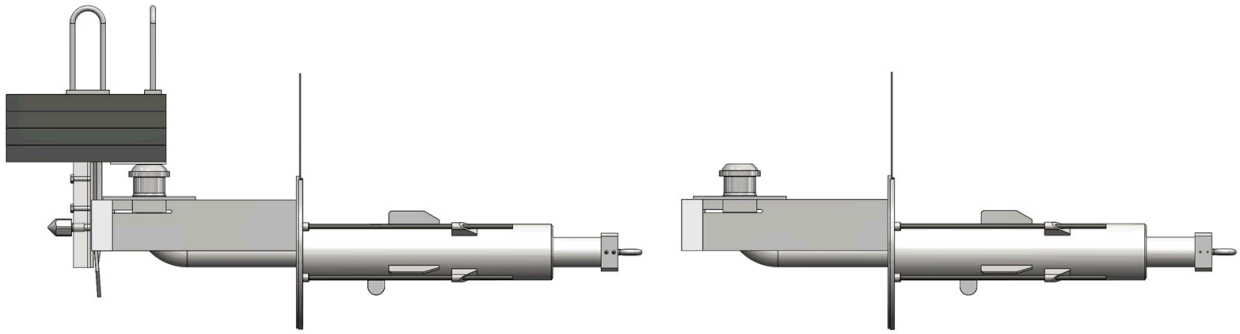

Figure 5: Wall Nozzle General Arrangement

The wall nozzle is designed and fabricated to include features to allow the correct placement of the nozzle as measured from the outside of the pump room wall. This is important to ensure correct fit up of the jumper that will be attached to it prior to operation of the waste transfer line. A custom machined alignment block is located on the end of the primary pipe to correspond to the critical face of the PUREX nozzle. There are fixture plates temporarily anchored to the outside of the pump room wall to allow adjustments to the nozzle placement and to secure the nozzle prior to laser scanning and grouting.

After the nozzle location has been set, crews will deploy a remote laser scanning assembly in the pump room which will accurately capture the position of the new nozzles relative to the other equipment in the pump room. After engineering has completed their review of the laser scan results and the positioning is determined to be adequate, the wall nozzles will be grouted in place using a non-shrink grout. Once the grout has cured, field personnel will remove the fixture plates installed on the outside of the pump room wall and install a permanent anchor plate which is welded to the wall nozzle encasement and is anchored into the concrete wall of the Evaporator.

At the completion of the wall nozzle installation, PUREX connector process blanks will be installed onto the wall nozzles to support transfer line installation. Process blanks will be removed from Nozzles 41 and 43 at the end of the transfer line construction to allow the installation of two new jumpers into the pump room. The two new jumpers will allow the operation of SN-275 for waste feed and SL-170 for pumping slurry back to tank farms. The installation of the jumpers will be performed in accordance with ECN-715005, *242-A Evaporator Pump Room Jumper Installation (41 to 5 and 43 to 13A)*. Jumper 43 to 13A will connect the feed system to the existing pump room jumper assemblies and jumper 41 to 5 will connect the slurry system to the existing pump room jumper assemblies. Figure 6 provides an overview of the new jumpers to be installed. The yellow highlighted component is the 43 to 13A jumper and the pink highlighted component is the 41 to 5 jumper. The process blank will remain on Nozzle 42 to isolate SL-171 until it is needed in the future.

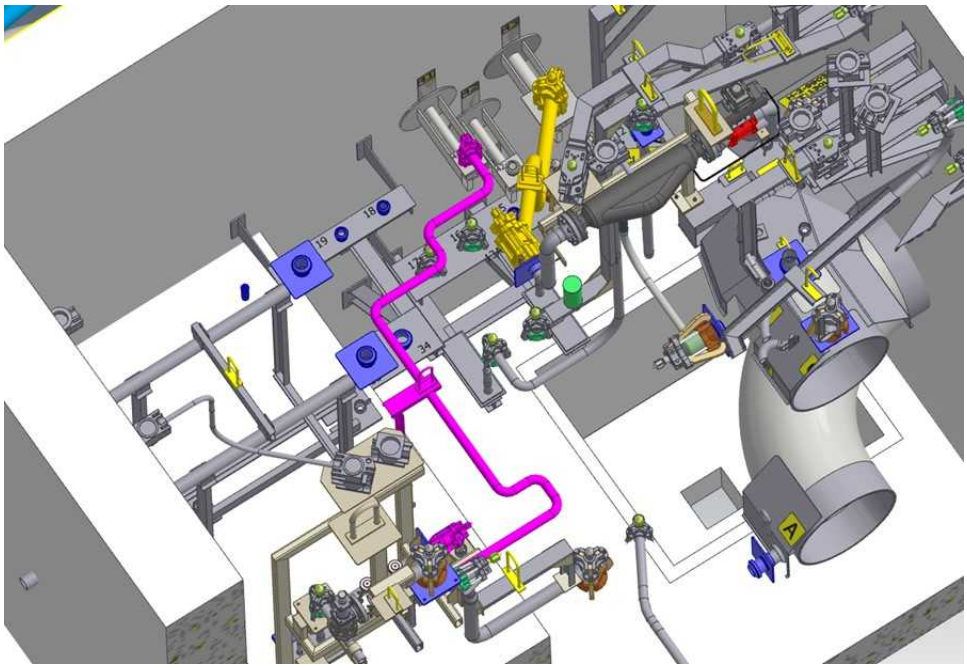

Figure 6: New Pump Room Jumper Arrangement

4.0 EQUIPMENT DESIGN

Project design inputs and code of record for equipment design are located in the project specific modification traveler, MT-50400, *242-A Evaporator Waste Transfer Line Replacement*. The following sections provide more detailed information on the design inputs and output documents that make up the design for the wall nozzles and pump room jumpers.

4.1 WALL NOZZLE DESIGN

The wall nozzles are designed to provide secondary containment through the Evaporator pump room wall. If a leak develops in the wall nozzle primary pipe, fluid will travel down the interior of the respective encasement line (SL-170, SL-171, or SN-275) to the leak detection system in AW Farm. Where the primary pipe exits the transfer line encasement in the pump room, the pump room provides secondary containment. See Figure 7 for a cross section of the wall nozzle. The detailed design of the wall nozzles is documented on H-14-111832, *Wall Nozzle Assemblies 242-A Pump Room*.

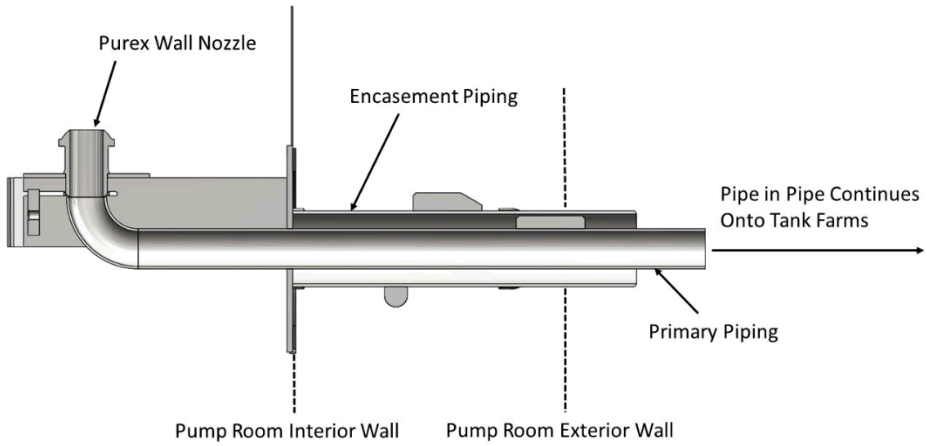

Figure 7: Typical New Evaporator Cross Section

The wall nozzles and the associated installation have been evaluated for both pressure capacity, structural integrity, and material compatibility including corrosion prevention methods. The piping analysis is documented in RPP-CALC-63211, *ASME B31.3 Analyses of the New SL-170, SL-171, SL-172, and SN-275 Waste Transfer Lines in 241-AW Tank Farm*. The structural evaluation for the core drilling and wall nozzle assemblies is documented in RPP-CALC-63208, *Structural Analysis for the 242-A Pump Room Wall Nozzle Assemblies Plus Counterweight Lifting Devices*. Evaluation of the material compatibility of the piping and corrosion protection system is documented in RPP-RPT-61521, *Material Compatibility and Corrosion Protection Report for Project T1P207, DST Replacement Waste Transfer Lines 241-AW to 242-A Evaporator.* Table 2 provides design information for the transfer lines and the associated wall nozzles.

Table 2: Wall Nozzle Assembly Details

	SN-275	**SL-170 and SL-171**
Primary Pipe Size/Wall Thickness	3-inch Schedule 40S	2-Inch Schedule 40S
Primary Pipe Material	Stainless Steel	Stainless Steel
Primary Pipe Design Pressure	620 psig	620 psig
Primary Pipe Design Temperature	200 ºF	200 ºF
Encasement Pipe Size/Wall Thickness	6-inch Schedule 40	4-Inch Schedule 40
Encasement Pipe Material	Carbon Steel	Carbon Steel
Encasement Pipe Design Pressure	60 psig	60 psig
Encasement Pipe Design Temperature	200 ºF	200 ºF
Encasement Special Protective Coating	Fusion Bonded Epoxy/Liquid Epoxy	Fusion Bonded Epoxy/Liquid Epoxy

4.2 JUMPER DESIGN

The jumpers are designed to provide primary containment from the wall nozzles to the adjoining nozzle located on jumpers within the pump room of the Evaporator. As discussed in Section 1.0, the ends of the jumpers utilize PUREX connectors which are a mechanical joint that provides a robust connection utilizing a nonmetallic gasket. The detailed design of the jumpers is

documented on H-14-111834, *Jumper Assembly 41 to 5 242-A Pump Room*, and H-14-111835, *Jumper Assembly 43 to 13A 242-A Pump Room*. Table 3 below provides design information of the jumpers.

The jumpers have been evaluated for both pressure capacity, structural integrity including corrosion prevention methods. The piping analysis and structural integrity is documented in RPP-CALC-63213, *ASME B31.3 Analyses of the 41 To 5 and 43 To 13A Jumpers for the 242-A Evaporator Pump Room* and RPP-CALC-63214, *242-A Evaporator Pump Room Jumpers Supporting Analyses*. Evaluation of the material compatibility of the piping and corrosion protection system is documented in RPP-RPT-61521, *Material Compatibility and Corrosion Protection Report for Project T1P207, DST Replacement Waste Transfer Lines 241-AW to 242-A Evaporator.* Table 3 provides design information for the jumpers to be installed in the Evaporator pump room.

Table 3: Pump Room Jumper Assembly Details

	Jumper 43 to 13A	**Jumper 41 to 5**
Pipe Size/Wall Thickness	3-inch Schedule 40S	2-Inch Schedule 40S
Pipe Material	Stainless Steel	Stainless Steel
Pipe Design Pressure	400 psig	400 psig
Pipe Design Temperature	200 ºF	200 ºF

5.0 EQUIPMENT FABRICATION

Fabrication and testing of the wall nozzles and jumpers will be performed at an off-site facility. The fabrication and testing will comply with the applicable codes and standards called out in the design drawings.

5.1 WALL NOZZLE FABRICATION

The wall nozzles will be fabricated to the detailed design and requirements shown on H-14-111832. Piping welding and testing shall be conducted in accordance with ASME B31.3, *Process Piping*, for normal fluid service. All in-process and post fabrication examination and testing (e.g. radiography of welds, hydrostatic pressure test of the primary pipe, pneumatic pressure test of the encasement pipe, dimensional inspection, etc.) will occur at the off-site fabrication facility prior to the wall nozzle installation. After completion of the examination and testing the special protective coating will be applied and tested. Pressure testing of connecting welds of the wall nozzle to the adjoining transfer line will occur in the field once those welds are made. Documentation of the testing and inspections performed will be contained in the report section of the Fabrication, Inspection, and Test (FIT) Plan generated by the fabrication subcontractor.

5.2 JUMPER FABRICATION

The jumpers will be fabricated to the detailed design and requirements shown on H-14-111834 and 111835. Piping welding and testing shall be conducted in accordance with ASME B31.3, *Process Piping*, for normal fluid service. All in-process and post fabrication examination and testing (e.g. radiography of welds, hydrostatic pressure test of the pipe, dimensional inspection etc.) will occur prior to the jumper installation. Pressure testing of PUREX connector mechanical joints to the adjoining PUREX nozzle will occur in the field once those connectors are made. Documentation of the testing and inspections performed will be contained in the report section of the FIT Plan generated by the fabrication subcontractor.

6.0 EQUIPMENT INSTALLATION AND INSPECTIONS

The installation sequence for equipment is described in Section 3.0. This section identifies the inspections required by WAC 173-303-640 for new tank system components described in Section 4.0. All hydrostatic pressure testing and weld inspections for the three new wall nozzles and the two new jumpers will have been completed during the fabrication process described in Section 5.0. Documentation of the installation inspections listed in Table 4 and 5 below will be in the applicable TOC work package. Changes to the inspections shall be documented and approved in the applicable work packages and engineering change notices. Documentation of completion will include a signature from the quality control personnel in the applicable work package. Documentation of inspections performed by the IQRPE will be in the applicable construction assessment report. All inspections and testing required for the connection of the transfer lines to the associated wall nozzles will be captured via separate TOC work packages as part of the transfer line installation phase.

6.1 WALL NOZZLE INSTALLATION AND INSPECTIONS

Table 4: Wall Nozzle Assembly Installation Inspection Table

Inspection/Test No.	Description of Test	Method of Inspection/Test	Acceptance Criteria
1	Inspect core drilling to verify that there are no cracks developed in the wall.	Visual	No visible cracks
2	Inspect pump room interior wall surface to verify that there is no unacceptable spalling of concrete.	Visual	No spalling of concrete outside of wall nozzle interior plate sealing surface.
3	Ensure primary pipe section of the wall nozzle assemblies are free from packing material or blockages.	Visual	No debris
4	Ensure encasement pipe section of the wall nozzle assemblies are free from packing material or blockages	Visual	No debris

Inspection/Test No.	Description of Test	Method of Inspection/Test	Acceptance Criteria
5	Ensure the Purex nozzle sealing surface is free of damage (e.g. nicks, scratches, etc.).	Visual	No damage
6	Ensure the mounting plate gasket is not damaged and is securely sealed to the back of the wall mounting plate.	Visual	No damage and gasket has not separated from mounting plate.
7	Ensure the wall nozzle assembly has no damage (e.g. weld breaks, punctures, scrapes of special protective coatings).	Visual	No damage
8	Ensure the purex nozzle orientation is correct and the wall nozzle assembly reference block orientation is level.	Visual/Digital Level	Nozzle is facing upwards and the wall nozzle assembly reference block orientation is level +/- 0.25 degrees.
9	Ensure annulus between core drill penetration and exterior of the wall nozzle assembly encasement is filled will grout.	Visual	Steady stream of grout flowing out of the upper vent hole.
10	Ensure exterior plate concrete anchor holes are free of debris	Visual	No debris
11	Ensure exterior plate concrete anchors satisfy the minimum embedment required.	Dimensional	Minimum embedment of 5-1/2 inches
12	Ensure exterior plate concrete anchors are properly secured	Torque Wrench	Torqued to 110 ft-lbs.
13	Inspection of nozzle assembly weld to exterior wall mounting plate.	Visual	ASME B31.3 Table 341.3.2

6.2 JUMPER INSTALLATION AND INSPECTIONS

Table 5: Jumper Assembly Installation Inspection Table

Inspection/Test No.	Description of Test	Method of Inspection/Test	Acceptance Criteria
1	Ensure there is no damage on the Purex connector gasket.	Visual	No damage
2	Ensure the Purex connector gasket retainer ring is tight.	Visual	Retainer ring cannot be loosened or further rotated by hand
3	Ensure connectors on the 41 To 5 Jumper Assembly are free of packing material or blockages	Visual	No debris
4	Ensure connectors on the 43 To 13A Jumper Assembly are free	Visual	No debris

Inspection/Test No.	Description of Test	Method of Inspection/Test	Acceptance Criteria
	of packing materials and blockages		
5	Ensure the jumper assembly has no damage (e.g. weld breaks, punctures, cracks)	Visual	No damage
6	Ensure the connection between the jumper and the adjoining nozzles are free of leakage during a leak check.	Visual/Remote Camera	No leakage

7.0 REFERENCES

1. ASME B31.3, 2016, Process Piping, American Society of Mechanical Engineers, New York, New York.

2. ECN-715004, 2020, *Core Drill and Install Wall Nozzle 41, 42, and 43 Assemblies at 242-A Evaporator Pump Room,* U.S. Department of Energy, Richland, WA.

3. ECN-715005, 2020, *242-A Evaporator Pump Room Jumper Installation (41 to 5 and 43 to 13A),* U.S. Department of Energy, Richland, WA.

4. H-14-111832, 2020, *Wall Nozzle Assemblies 242-A Pump Room,* U.S. Department of Energy, Richland, WA.

5. H-14-111834, 2020, *Jumper Assembly 41 to 5 242-A Pump Room,* U.S. Department of Energy, Richland, WA.

6. H-14-111835, 2020, *Jumper Assembly 43 to 13A 242-A Pump Room,* U.S. Department of Energy, Richland, WA.

7. MT-50400, 2020, *242-A Evaporator Waste Transfer Line Replacement,* U.S. Department of Energy, Richland, WA.

8. RPP-CALC-63208, 2020, *Structural Analysis for the 242-A Pump Room Wall Nozzle Assemblies Plus Counterweight Lifting Devices*, U.S. Department of Energy, Richland, WA.

9. RPP-CALC-63211, 2020, *ASME B31.3 Analyses of the New SL-170, SL-171, SL-172, and SN-275 Waste Transfer Lines in 241-AW Tank Farm*, U.S. Department of Energy, Richland, WA.

10. RPP-CALC-63213, 2020, *ASME B31.3 Analyses of the 41 To 5 and 43 To 13A Jumpers for the 242-A Evaporator Pump Room*, U.S. Department of Energy, Richland, WA.

11. RPP-CALC-63214, 2020, *242-A Evaporator Pump Room Jumpers Supporting Analyses*, U.S. Department of Energy, Richland, WA.

12. RPP-RPT-61521, 2020, *Material Compatibility and Corrosion Protection Report for Project T1P207, DST Replacement Waste Transfer Lines 241-AW to 242-A Evaporator*, U.S. Department of Energy, Richland, WA.

13. WAC 173-303, *Dangerous Waste Regulations*, Washington Administrative Code, Washington State Department of Ecology, Olympia, Washington.

14. Ecology Publication 94-114, 2014, *Guidance for Assessing and Certifying Tank Systems*, Washington State Department of Ecology, Olympia, Washington.