0051553

071138

Department of Energy
Richland Operations Office
P.O. Box 550
Richland, Washington 99352

JUL 20 1999

AUG 1999 RECEIVED EDMC

Mr. Stanislaw Leja
Acting Perimeter Areas Section Manager
Nuclear Waste Program
State of Washington
Department of Ecology
1315 W. Fourth Avenue
Kennewick, Washington 99336-6018

Dear Mr. Leja:

REQUEST FOR REVIEW AND APPROVAL

Attached for your review and approval are the Hanford Generating Plant Sampling and Analysis Plan Part 1, Rev. 0 (Attachment 1), the Hazardous Material Inventories, 6/29/99 (Attachment 2), and the Source Term For Effluent Dose, June 21, 1999 (Attachment 3).

If you have any questions, please contact me at 376-7121.

Sincerely,

J. M. Bruggeman, Project Manager
Decontamination and Decommissioning Project

DDP:JMB

Attachments: As stated

cc w/attachs:
P. R. Staats, Ecology

HANFORD GENERATING PLANT
HAZARDOUS MATERIAL INVENTORIES

LEAD:

There are two sources of lead at the Hanford Generating Plant, batteries and seals on waste pipes and some drains. Lead based paint is not considered in this inventory as the quantity of lead is relatively small. All batteries have been removed from the building and are not considered in this calculation. It is difficult to determine the quantity of lead on the waste pipes and drains since some are in walls covered by sheetrock. Additionally it is difficult to determine the exact thickness of lead poured into the sealing cavity. The size of the pipe varies from 2 in. to 8 in., and 6 in. diameter is the conservative estimate of the average diameter. The following assumptions are made concerning the quantity of lead seals.

Number of seals: approximately 175 (a physical count revealed 145 seals. On piping runs, each seal occurs at 4 ft or 6 ft intervals. The additional 30 seals are an estimate based on what is hidden behind walls and not accessible for counting.)

Average volume of the a seal:

The seal is circular, with dimensions approximately 0.375 in. x 0.375 in.

0.375 in. x 0.375 in. x 6 in. diameter =
0.03126 ft x 0.03126 ft x (0.5 ft x π) =
0.03126 ft x 0.03126ft x 1.571 ft = 0.00154 ft^3

Lead Density = 710 lbs/ft^3

Total Quantity = (175) (0.00154 ft^3) (710 lbs/ft^3) = 191.3 lbs. = 86.9 Kg

In the event the batteries are not removed prior to start of demolition the following calculations are provided:

Quantity of lead by battery size:

(6 in.)(7 in.)(0.25 in.)(12 plates/battery)(20 batteries) = 2,520 $in.^3$

(10 in.)(12 in.)(0.1875 in.)(13 plates/battery)(119 batteries) = 34,807.5 $in.^3$

(12 in.)(16 in.)(0.1875 in.)(8 plates/battery)(1 battery) = 288 $in.^3$

(8 in.)(10 in.)(0.1875 in.)(6 plates/battery)(24 batteries) = 2,160 $in.^3$

Total quantity = (2,520 $in.^3$) + (34,807.5 $in.^3$) + (288 $in.^3$) +(2,160 $in.^3$) = (39,775.5 $in.^3$)

(39,775.5 $in.^3$)(1 ft^3 / 1728 in^3) (710 lbs/ft^3) = 16,343 lbs. = 7,420 Kg

MERCURY:

There are small quantities of mercury enclosed in glass tubes in fire alarms, Mercoid switches and in manometers located in the control room. The amount of mercury contained in the fire alarms is conservatively estimated at 1 in^3 based on information in other hazard inventories. The amount of mercury contained in the 31 Mercoid switches are in a glass tubes 0.5 in. long and 0.375 in. in diameter and is conservatively estimated at 3 in^3. The amount of mercury in the 4 manometers is in a cylinder 1.5 in. wide and 1 in. high and the total is conservatively estimated at 8 in^3.

Mercury Density = 849 lbs/ft^3

Total Quantity = (12 in^3) (1 ft^3 / 1728 in^3) (849 lbs/ft^3) = 5.9 lbs. = 2.7 Kg

ASBESTOS:

There is asbestos contaminated material (ACM) internal and external to the building. It exists in the form of pipe and equipment insulation, floor tiles, paint, and electrical cable insulation. All of the ACM insulation on the pipes and equipment has been abated and removed. All accessible floor tiles have been abated and removed. A footnote to Table 40 CFR 302.4 states that "the RQ for asbestos is limited to the friable forms only". Friable asbestos existed mainly in the form of piping and equipment insulation and paint on the interior and exterior surfaces of the corrugated siding of the building.

Asbestos Density = 153 lbs/ft^3

Amount of Chrysotile (by volume) in paint = 20%

Surface area of the HGP Turbine Building that is covered by the paint (this area is calculated from drawings of the building) = 102,600 ft^2

NOTE: surface area of the corrugated siding (1 linear ft^2 = 1.167 ft^2)

Thickness of paint coating = 10 mils = .01 in

Total Quantity = (102,600 ft^2)(144 in^2/ft^2) x (0.01 in) = (147,744 in^3)(ft^3/1728 in^3) = (85.5 ft^3)(153 lbs/ft^3)(0.20) = 2,616 lbs. = 1,188 Kg

Surface area of the Maintenance Garage that is covered by the paint (this area is calculated from drawings of the building) = 5,952 ft^2

NOTE: surface area of the corrugated siding (1 linear ft^2 = 1.167 ft^2)

Thickness of paint coating = 10 mils = .01 in

Amount of Chrysotile (by volume) in paint = 10%

Total Quantity = (5,952 ft^2)(144 in^2/ft^2) x (0.01 in) = (8571 in^3)(ft^3/1728 in^3) = (5 ft^3)(153 lbs/ft^3)(0.10) = 76.5 lbs. = 34.7 Kg

The roof of the building contains 4 ft x 8 ft x 1 in. pads containing 10% by volume of Chrysotile (identified by previous sampling). These pads were used to identify the walking surface on the building roof. Old photographs indicate that these pads are located around the perimeter of the building roof, and then across the roof in the middle (both the length and width).

Quantity length wise: (4 ft)(395 ft)(0.083 ft) = 131.67 ft^3 x 10% = 13.167 ft^3 x 3 = 39.5 ft^3

Quantity width wise: (4 ft)(116 ft)(0.083 ft) = 38.51 ft^3 x 10% = 3.851 ft^3 x 3 = 11.6 ft^3

Total quantity: (39.5 ft^3) + (11.6 ft^3) = (51.1 ft^3)(153 lbs/ft^3)(0.454) = 3,550 Kg

PCBs:

There are two(2) neutral grounding transformers containing 40 gal of oil each and six (6) surge capacitors containing 3.5 gal oil each in the HGP. The potential transformers were sampled in in 1987. The transformers contain approximately 40 gal of oil each and capacitors contain 3.5 gal of oil each based on technical descriptions and physical size of the transformers and capacitors. There are approximately 854 florescent light fixtures that contain one or more ballasts. These ballasts may contain PCBs. For conservative estimation, 1000 ballasts are contained in the fixtures and contain 0.1 to 0.6 lbs. of PCB containing material (EPA PCB Q&A Manual (1994 edition)) in each ballast. A conservative value of 0.5 lbs. of PCB containing material is used. Conservatively assume the density of oil is 1g/cc. The surge capacitors are considered to be PCB contaminated and contain PCB concentrations of 50 to 499 ppm. A conservative concentration of 400 ppm is used. The 9 transformers located behind the HGP building were sampled in 1980 and contain concentrations of PCBs of less than 5 ppm. They are not considered in this calculation as a contract for removal has been let.

Oil Wt = 1g/cc 1 ppm = 1,000 μg/Kg

Quantity of PCBs in transformers, capacitors, and ballasts:

Transformer measured at 124.8 ppm:

(1g/cc)(1000 cc/ 1 L)(1 L / 0.264 gal)(40 gal)(1 Kg / 1000g) = 152 Kg
PCB Quantity = (152 Kg)(124,800 μg/Kg) = 0.019 Kg

Transformer measured at 105.5 ppm:

(1g/cc)(1000 cc/ 1 L)(1 L / 0.264 gal)(40 gal)(1 Kg / 1000g) = 152 Kg
PCB Quantity = (152 Kg)(105,500 μg/Kg) = 0.016 Kg

Capacitors estimated at 400 ppm:

(1g/cc)(1000 cc/ 1 L)(1 L / 0.264 gal)(21 gal)(1 Kg / 1000g) = 80 Kg
PCB Quantity = (80 Kg)(400,000 μg/Kg) = 0.032 Kg

Ballasts:

(0.5 lbs.)(1000 ballasts)(0.454 Kg/lb.) = 227 Kg

Total Quantity:

(0.019 Kg) + (0.016 Kg) + (0.032 Kg) + (227 Kg) = 227.067 Kg

SUMMARY OF HANFORD GENERATING PLANT HAZARDOUS MATERIAL INVENTORIES

Hazardous Material	Quantity	Comments
Lead	7,506.9 Kg	7,420 Kg is contained in lead acid storage batteries that are scheduled to be removed by the end of July 1999.
Mercury	2.7 Kg	
Asbestos	4,772.7 Kg	
PCB's	227.07 Kg	The 9 transformers located behind the HGP building were sampled at less than 5 ppm. Eight of these transformers are scheduled for removal before the end of August 1999. The remaining transformer is not included in the calculations since the sampled value of PCB's is less than 5 ppm.

071138

HANFORD GENERATING PROJECT

DECOMMISSIONING PROJECT

SOURCE TERM FOR EFFLUENT DOSE

JUNE 21, 1999

TABLE OF CONTENTS

I. SPREADSHEETS

A. Release Fractions per Isotope

B. Surface Area Activity Estimates

C. Estimated Isotopic Activity per cm^2 of Contaminated Surface

II. REFERENCES

A. WHC-SD-NR-ER-100

B. Raytheon Corp., HGP Demolition Study, October, 1996

C. Burns and Roe, Engineering Data Book, Hanford Number One Nuclear Electric Generating Plant, Sections VII and VIII

D. General Electric Corp., drawing no. 186R373, Rev. 0

E. General Electric Corp., Turbine-Generator Instructions, GEI-94474, Volume 1

I. SPREADSHEETS

Hanford Generating Plant
Decommissioning Project

ISOTOPE	Typical Analysis (pCi/g)	Typical Analysis (pCi/g)	Normalized Data	NOTES	6.5 mrem per year at river	Release Fraction 1.00E-04
Co-60	5.555	5.5	1.00	from WHC-SD-NR-ER-100	0.1000	1000
Cs-137	0.591	0.65	0.12	from WHC-SD-NR-ER-100	0.0120	120
Ba-137m			0.11	equilibrium condition	0.0114	114
Sr-90	0.1	0.1	0.02	from WHC-SD-NR-ER-100	0.0020	20
Y-90			0.02	equilibrium condition	0.0020	20
	6.246					

PIPE SURFACE AREA ESTIMATE

(Reference, HGP Demolition Study, Raytheon, October 1996, pages 13 through 15).

Includes piping which definitely contains, or is suspected to contain radiation-contaminated steam. Do not include clean piping systems including instrument air, service air, chlorination, cooling water (except o.d.'s of condenser tubes, see estimate below), fire protection, potable water, service water, roof drains, turbine oil, and pump lubricating water.

Do not include 60 inch i.d. mixing header (see estimate below).

For small piping (1" nominal and below), assume 25% of total length (42,063 feet) is contaminated.

Nominal Pipe Diameter (in)	Schedule (no.)	Inside diameter (in)	Total length (ft)	Surface Area per Foot Length (in^2)	Total Surface Area (in^2)	Total Surface Area (cm^2)	
(small)	40	1.049	10516	39.5	415860	2682961	------> (Note: small piping assumption = 2.43 % of total surface area)
2	40	2.067	524	77.9	40832.2	263433	
3	40	3.068	1003	115.7	116008	748436	
4	40	4.026	1112	151.8	168776	1088873	
6	40	6.065	2356	228.6	538688	3475399	
8	40	7.981	2558	300.9	769642	4965425	
10	40	10.020	933	377.7	352436	2273777	
12	Std.	12.000	1339	452.4	605749	3908052	
14	Std.	13.250	1071	499.5	534979	3451468	
16	Std.	15.250	441	574.9	253536	1635713	
18	Std.	17.250	200	650.3	130062	839108	
24	Std.	23.250	6497	876.5	5694649	3.7E+07	
26	XS	25.000	3270	942.5	3081902	2E+07	
30	Std.	29.250	200	1102.7	220540	1422835	
32	Std.	31.250	139	1178.1	163756	1056485	
36	Std.	29.250	207	1102.7	228259	1472634	

39.4	Std.	31.250	2552	1178.1	3006504	1.9E+07
48	Std.	47.250	403	1781.3	717857	4631327
60	Std.	59.250	32	2233.7	71477.5	461144

Total contaminated pipe length = 35353 feet

Total steam-contaminated surface area = 1.1E+08 cm^2

VALVE SURFACE AREA ESTIMATE

(Reference, HGP Demolition Study, Raytheon, October 1996, pages 7 through 12).

Assume that the allowance for small-bore valve percentage is the same as pipe (2.43% of total surface area).

Assume 50% of large-bore valves contained radiation-contaminated steam.

Assume internal, wetted surface area of valves can be approximated by a circular cylinder with a bore equal to the pipe size, and a length of three times the nominal pipe size.

Nominal Valve Size (in)	Valve quantity	Inside diameter (in)	Total Surface Area (in^2)	Total Surface Area (cm^2)
(small)	-	1.049	10644	68672
2.5	36	2.067	877	5656
3	96	3.068	4164	26863
4	92	4.026	6982	45043
6	91	6.065	15605	100677
8	64	7.981	19256	124233
10	34	10.020	16054	103575
12	14	12.000	9500	61291
14	29	13.250	25350	163550
16	22	15.250	25296	163200
18	24	17.250	35117	226559

20	8	19.250	14514	93640
24	79	23.250	207732	1340201
26	8	25.000	24504	158093
30	8	29.250	33081	213425
32	0	31.250	0	0
36	0	29.250	0	0
39.4	0	31.250	0	0
48	0	47.250	0	0
60	0	59.250	0	0

Total valve surface area = 2894678 cm^2

RECEIVER (BLOWDOWN TANK) SURFACE AREA ESTIMATE

(Reference, Engineering Data Book, Hanford Number One Nuclear Electric Generating Plant, Burns and Roe, Section VII-5)

One per turbine, cylindrical tank, 4 ft- 6 inch inside diam., 7 ft- 6 inch height.

	Surf. Area per tank (in^2)	Surf. Area per tank (cm^2)
	15268	98504
Two turbines		197008

MIXING HEADER SURFACE AREA ESTIMATE

(Reference, Engineering Data Book, Hanford Number One Nuclear Electric Generating Plant, Burns and Roe, Section VII-1)

One per turbine, 60 inch inside diameter, 30 feet long.

	Total surf. area	
	(in^2)	(cm^2)
	67858	437795
Two turbines =		875591

TURBINE INNER WALLS SURFACE AREA ESTIMATE

(Reference: General Electric drawing 186R373, Rev 0)

Two (2) turbines, each with high-pressure casing 10 ft inner diameter, 12 ft long;
four cross-arounds (HP to LP) 9 ft inner diameter, 45 ft long;
two low-pressure casings 20 ft diameter, 24 ft long.
Each turbine casing has two circular ends, matching the casing diameter.
Four extraction points per turbine, 12 inch diameter, 3 ft long.

High-pressure casing

	Inner Surface area (in^2)	Inner Surface area (cm^2)
	54287	350236
Two turbines =		700472

Cross-arounds

	Inner Surface area (in^2)	Inner Surface area (cm^2)
	183218	1182047
Four cross-arounds =		4728189
Two turbines =		9456378

Low-pressure casing

	Inner Surface area (in^2)	Inner Surface area (cm^2)
	217147	1400945
Two per turbine =		2801890
Two turbines =		5603779

Casing ends

	Inner Surface area (in^2)	Inner Surface area (cm^2)
HP casing (2 ends) =	22619	145932
LP casings (4 ends) =	180956	1167454
Two turbines =	407150	2626772

Extraction points

	Inner Surface area (in^2)	Inner Surface area (cm^2)
Four points =	5429	35024
Two turbines =	10857	70047

Total turbine inner walls = 1.8E+07 cm^2

TURBINE BUCKETS AND DIAPHRAM SURFACE AREA ESTIMATE

(Reference: General Electric drawing 186R373, Rev 0)

A 13-stage turbine, HP stages 1 through 9, double-flow; stages 1 through 4 are not fitted with stationary nozzle diaphram partitions
LP stages 10 through 13, double-flow, two sides, all stages with stationary nozzle diaphrams.
The width and diameter of hub and buckets are from the drawing.
Exact bucket configuration not available; estimate number of buckets from photos in
General Electric Steam Turbine-Generator Instructions, GEI-94474, Volume 1.

Assume hub surface area equals a two-sided flat disc plus the outer circumference.

Buckets have two sides; assume 25% overlap, per typical GE photo (GEI-94474, Volume 1, page 2).
Assume the surface area equals a flat disc times the overlap factor of 1.25.

Assume diaphram surface area equals a two-sided flat disc plus outer and inner circumferences.
Assume diaphram surface areas include both inner and outer sections, assume full inner and outer partition diameter.

Nozzles have two sides; assume 50% overlap, per typical GE photo (GEI-94474, Volume 1, page 3).
Assume the surface area equals a flat disc times the overlap factor of 1.50.

High-Pressure Section

	Hub dimensions (inches)			Hub Surf. Area	Hub Surf. Area	Number of Buckets	Bucket dimensions (inches)			Bucket Surf. Area	Bucket Surf. Area
Stage no.	do	di	width	(in^2)	(cm^2)	(est.)	do	di	width	(in^2)	(cm^2)
1	68	32	6	6937	44752	0	-	-	-	-	-
2	70	32	6	7408	47793	0	-	-	-	-	-
3	70	32	7	7628	49211	0	-	-	-	-	-
4	70	32	9	8068	52049	0	-	-	-	-	-
5	72	32	9	8570	55292	0	-	-	-	-	-
6	76	32	9	9613	62021	40	85	32	3	12176	78552
7	80	32	9	10707	69074	60	91	32	4	14249	91929
8	80	32	10	10958	70696	80	95	32	4	15710	101354
9	84	32	12	12642	81560	100	102	32	4	18418	118823

	Diaphram dimensions (inches)			Diaphram Surf. Area (in^2)	Diaphram Surf. Area (cm^2)	Number of Nozzles (est.)	Nozzle dimensions (inches)			Nozzle Surf. Area (in^2)	Nozzle Surf. Area (cm^2)
	do	di	width				do	di	width		
1	-	-	-	-	-	0	-	-	-	-	-
2	-	-	-	-	-	0	-	-	-	-	-
3	-	-	-	-	-	0	-	-	-	-	-
4	-	-	-	-	-	0	-	-	-	-	-
5	-	-	-	-	-	0	-	-	-	-	-
6	120	44	6	22670	146256	40	92	76	3	6333	40861
7	126	44	6	25101	161944	60	100	72	3	11347	73209
8	138	44	6	30304	195508	80	108	80	4	12403	80019
9	150	44	6	35959	231991	100	118	88	4	14561	93944

Total of hubs, buckets, diaphrams, and nozzles = 1.9E+06 cm^2

Double-ended high-pressure section = 3.7E+06 cm^2

Two turbines = 7.5E+06 cm^2

Low-Pressure Section

	Hub dimensions (inches)			Hub Surf. Area (in^2)	Hub Surf. Area (cm^2)	Number of Buckets (est.)	Bucket dimensions (inches)			Bucket Surf. Area (in^2)	Bucket Surf. Area (cm^2)
Stage no.	do	di	width				do	di	width		
10	92	32	6	13421	86586	120	120	92	3	11655	75195
11	92	32	8	13999	90316	140	128	92	4	15551	100328
12	92	32	8	13999	90316	160	150	92	3	27560	177804
13	92	32	15	16022	103368	180	180	92	7	46998	303214

	Diaphram dimensions (inches)			Diaphram Surf. Area (in^2)	Diaphram Surf. Area (cm^2)	Number of Nozzles (est.)	Nozzle dimensions (inches)			Nozzle Surf. Area (in^2)	Nozzle Surf. Area (cm^2)
	do	di	width				do	di	width		
10	140	92	5	21137	136365	120	116	92	3	11762	75885
11	148	48	4	33251	214520	140	122	92	4	15127	97592
12	168	48	6	44787	288945	160	140	92	6	26239	169281
13	192	48	8	60319	389151	180	168	92	7	46558	300376

Total of hubs, buckets, diaphrams, and nozzles = 2.7E+06 cm^2

Double-ended low-pressure section = 5.4E+06 cm^2

Two low-pressure sides = 1.1E+07 cm^2

Two turbines = 2.2E+07 cm^2

CONDENSER VAULT / CONDENSER TUBING SURFACE AREA ESTIMATE

(Reference, Engineering Data Book, Hanford Number One Nuclear Electric Generating Plant, Burns and Roe, Section VIII-1)

Two (2) condensers per turbine, each with 19,920 tubes.
Each condenser vault is 56 ft long, 34 ft wide, 43 ft high, assume 6 surfaces.
Each tube is 40 ft long, 1.00 inch outer diameter, 0.900 inner diameter (outer surface contamination).

	Surf. Area of vault (in^2)	Surf. Area of vault (cm^2)
	1808064	11664906
Two vaults / turbine		23329811
Two turbines		46659623

Tube Outer Surf. Area per 40 ft tube (in^2)	(cm^2)	Number of Tubes	Total Surf. Area (cm^2)
1508	9729	19920	1.9E+08

Two condensers per turbine = 3.9E+08
Two turbines = 7.8E+08

Total surface area of condenser, vaults + tubes = 8.2E+08 **(cm^2)**

DEAREATOR HEATER / STORAGE TANK SURFACE AREA ESTIMATE

(Reference, Engineering Data Book, Hanford Number One Nuclear Electric Generating Plant, Burns and Roe, Section VIII-11,12)

One deaerator/storage tank per turbine.
Deaerator is 9 ft 6 inch diam x 57.33 ft long, and contains 24,320 trays.
Deaerator trays are 1.5 inch wide x 1.5 inch tall x 15 inch long.
Storage tank does not contain trays and is 12 ft diam x 62.33 ft long.

Surf. Area per tray (in^2)	No. of trays	Total Surf. Area (in^2)	Total Surf. Area (cm^2)
67.5	24320	1641600	1.1E+07

Two turbines = 2.1E+07

Surf. Area per tank (in^2)	Surf. Area per tank (cm^2)
338369	2183022

Two turbines = 4366045 cm^2

Total deaerator and storage tank, two turbines = 2.6E+07 cm^2

CONDENSATE POLISHING UNIT (POWDEX)

(Reference, Engineering Data Book, Hanford Number One Nuclear Electric Generating Plant, Burns and Roe, Section VIII-9)

Four per turbine, cylindrical tank, 6 ft inside diam., 6 ft height.

	Surf. Area per tank (in^2)	Surf. Area per tank (cm^2)
	16286	105071
Four per turbine =		420283
Two turbines =		840567

LOW PRESSURE HEATER

(Reference, Engineering Data Book, Hanford Number One Nuclear Electric Generating Plant, Burns and Roe, Section VIII-5)

Two per turbine, contains 5/8" outside diameter tubes, total surface area 10,595 ft^2.

	Total tube surf. Area (in^2)	Total tube surf. Area (cm^2)
	3051360	19686154
Two turbines =	6102720	39372308

TOTAL ACTIVITY ESTIMATE

ISOTOPE	Activity (Ci/cm^2)	Pipe (Ci)	Valves (Ci)	Receiver (Ci)	Mixing Header (Ci)	Turbine Walls (Ci)	Turbine buck / diap (Ci)	Condenser Vault/Tubes (Ci)	Deaerator Heater (Ci)	Condensate Polishing (Ci)	Low Press Heater (Ci)	Total Activity (mCi)
Co-60	9.3E-12	1.0E-03	2.7E-05	1.8E-06	8.2E-06	1.7E-04	2.7E-04	7.7E-03	2.4E-04	7.8E-06	3.7E-04	9.78
Cs-137	1.1E-12	1.2E-04	3.2E-06	2.2E-07	9.8E-07	2.1E-05	3.2E-05	9.2E-04	2.9E-05	9.4E-07	4.4E-05	1.17
Ba-137m	1.1E-12	1.2E-04	3.1E-06	2.1E-07	9.3E-07	2.0E-05	3.1E-05	8.7E-04	2.7E-05	8.9E-07	4.2E-05	1.11
Sr-90	1.9E-13	2.1E-05	5.4E-07	3.7E-08	1.6E-07	3.4E-06	5.4E-06	1.5E-04	4.8E-06	1.6E-07	7.3E-06	0.20
Y-90	1.9E-13	2.1E-05	5.4E-07	3.7E-08	1.6E-07	3.4E-06	5.4E-06	1.5E-04	4.8E-06	1.6E-07	7.3E-06	0.20
% total gross activity=		10.5	0.3	0.0	0.1	1.8	2.8	78.3	2.4	0.1	3.8	

Total Gross Activity = 12.46

ESTIMATED ISOTOPIC ACTIVITY PER CM^2 OF CONTAMINATED SURFACE

Measured Activity = 2400 dpm

Isotope	Type of Radiation	Energy (keV)	I (%)	BR	Norm. Activity	Number of Particles Generated	Particle Fraction	Isotopic Activity (dpm per 100 cm2)	Isotopic Activity (Ci/cm2)	Isotopic Activity BR-based (Ci/cm2)
Co-60	beta-avg	95.79	100		1	1.00	0.862071	2068.97	9.3E-12	
	gamma	1173.23	100							
	gamma	1332.51	100							
Cs-137	beta-avg	156.8	94.6		0.12	0.11	0.097862	234.87	1.1E-12	
	beta-avg	415.2	5.4			0.01	0.005586	13.41		
Ba-137m	gamma	661.62	84.62	0.946						1.1E-12
Sr-90	beta	195.8	100		0.02	0.02	0.017241	41.38	1.9E-13	
Y-90	beta	934.8	99.988	0.999		0.02	0.017239	41.37	1.9E-13	
Totals						1.16	1	2400.00		

II. REFERENCES

Raytheon, HGP Demolition Study, Oct '96

Appendix B

Equipment Lists

Includes:

1. Pumps
2. Motors
3. Tanks
4. Miscellaneous Equipment
5. Electrical Equipment
6. Large Bore Valves
7. Piping
8. Heat Exchanging Equipment

Pumps

Description	Elev	Qty	Capacity gpm	TDH ft	Mfr	Weight lbs	npsh	
Circulating Water pump	ph	4	141000	44		117,000		
Fire Jockey Pump	ph	1	50	300	Fairbanks, Morse			
Fire Pump	ph	2	2000	125 psig	Fairbanks, Morse	6,120		
Fire Pump -diesel driven	ph	1	2000	125 psig	Fairbanks, Morse	12,000		GE Diesel
Lubricating Water Pump	ph	2	400	90	Johnson			Two-stage, vertical turbine
Screen Wash Pump	ph	3	975	231	Allis-Chalmers		16	Single stage, double suction, , horiz, centr
Lift Pump	-16	4						
Air Compressor	-50	4	163 scfm	100 psi	Worthington			Vertical, single stage
Chemical injection pump	-50	4	24 gph	300 psi	Lapp			on skid
Chemical injection pump	-50	4	6 gph	300 psi				on skid
Condensate Drain Pump	-50	2		125	Buffalo			horiz, single stage
Condensate Pump	-50	6	6000	400	BJ	13,650	12	5-stage, vert, centr
Condenser pit sump pump	-50	4	75	65	Buffalo			
Diesel Oil Transfer Pump	-50	1	6.5	30 psig	DeLaval			rotary-gear
Feedwater pump	-50	6	7140	415	FW	4,800	30	Single stage, double suction, hor, centr
Heater Drain Pump	-50	4	1010	260	BJ	3,200	8.5	Single stage, centr, hor
Service Air Compressor	-50	1		100 psi	Joy			Double acting, single cyl, single stage, recip, water cooled
Service Water Pump	-50	3	3000	50	Allis Chalmers	910		Single stage, centr, horiz; Bedplate adds 590 lbs
Sump Pump	-50	8	750	27	Cornell	576		330 lbs for mounting cover
Turbine Oil Circ Pump	-50	2						
Turbine Oil Transfer Pump	-50	1						
Vacuum Pump	-50	4	310 cfm	27" Hg vac	Nash	600		Water cooled
Vacuum Pump	-50	2	60 cfm	20" Hg vac	Nash	180		
Sewage Sump Pump		2			Pacific			Duplex

Motors								
Motor Description	Elev	Qty	Syst	Size	Mfr	RPM	Weight	Comments
Sewage Sump Pump motors	yard	2	440	7.5	GE	1750		
Circulating Water pump motors	ph	4	4160	2250	GE	300	50,000	
Fire Jockey Pump motor	ph	1	440	15	Fairbanks, Morse	3530		
Fire Pump motors	ph	2	440	250	Westinghouse	1750	2,150	
Lubricating Water Pump motors	ph	2	120 ac	15	US Electrical Motors	1800		
Screen Wash pump motors	ph	3		100		1770		
Travelling screen motors	ph	6		7.5	Louis Allis	1800		
Air Washer Fan motors	0	2	440	10				Wtr cooled
Air Washer Fan motors	-16	1	440	75				
Air Washer Fan motors	-33	2	440	75				
Bus duct cooling fan motors	-33	4	440	15	Westinghouse			
Air Compressor motors	-50	4		40	GE	1800		
Chemical injection pump motors	-50	8			Reliance			
Condensate Drain Pump motors	-50	2		10	GE	1750		
Condensate Pump motors	-50	6	4160	750	GE	890		
Condenser pit sump pump motors	-50	4		5	GE	1750		
Diesel Oil Transfer Pump motor	-50	1	440	0.33	GE	1200		Wtr cooled
Feedwater Pump motors	-50	6	4160	800	GE	1770 rpm	5,500	
Heater Drain Pump motors	-50	4	480	100	GE	1800		
Service Air Compressor motor	-50	1		125	Westinghouse	1780		
Service Water Pump motors	-50	3	480	50	Westinghouse	1800	745	
Sump Pump motors	-50	8		10	GE	330		
Turbine Oil Circ Pump motor	-50							
Turbine Oil Transfer Pump	-50							
Vacuum Pump motors	-50	4		60	Westinghouse		795	
Vacuum Pump motors	-50	2			Westinghouse	1760	190	
Elevator motors		2			Cam			

Tanks									
Description	Elev	Qty	Capacity	Mat'l	Dia	Lgth	Ht	Weight	
Diesel Oil Storage Tk	ph	1							
Pumphouse vacuum tk	ph	1			2'	4'			5/16" shell and head
Deaerating Heater storage tk	0	2	39,400					88,000	outside
Fuel oil day tank	0	1	550		4'		8'		
Potable Water Storage	0	1	15,000						Outside
Potable Water Transfer tank	0	1	15,000	A-212 B	10'	27'			Internally lined
Fuel Oil Storage Tank	-10	1	20,000		11'	32'			Buried outside
Turbine oil tanks	-33	2							w/oil coolers (2@) & vapor extractor
Air Receiver tanks	-50	2							
Blowdown Tank	-50	2	190	A-212 Gr B	54"	62.3'	7' 6"	4,052	
Chemical injection tanks	-50	4		304 SS				725	floating heads
Condensate Drain Tank	-50	2	2,000						
Diesel oil tank	-50	1							
Service Air Receiver tank	-50	1			66"		14'-3		
Turbine Oil Storage Tank	-50	1							
Vacuum Tanks	-50	2			2'-6"	5'			5/16" shell and head
Hot Water expansion tank		1	300						
Potable Water daytank			500	A-285 Gr C	3.5'	7.5'			

Miscellaneous Equipment

Description	Elev	Qty	Inlet	Mfr	Weight		
Lubricating Water Filters	is			Cuno Engineering			
Outdoor Overhead crane	is	1		Ederer		25 tons	
Service Water Strainers	is			Zurn		motor operated, multi-basket	
Trash racks	is	6					
Travelling Screens	is	6		Rex Chainbelt			
C02 & H2 bottle sheds	0	2					
Condensate Polishing Units	0	2		Graver	100,000	2 skids @	sump pumps
Control Room	0	1					
Control Room & Battery Rm HVAC units	0	2					
HP Turbines	0	2					
Kitchen	0	1					
LP Turbines	0	4					
Overhead Traveling crane	0	1		Harnischfeger		125 ton main hoist; 40 ton aux hoist	
Vent fan SF-3 & 4	0	2					
Steam Seal Regulators	-16	2					
Underhung bridge.trolley hoist	-21	1		FT Crowe		5 ton in plant area	
Emergency Priming Ejectors	-24	8		Schutte & Koerting			
First Stage Ejectors	-24	5		Westinghouse			
Hogging Ejectors	-24	4		Westinghouse			
Second Stage Ejectors	-24	16		Westinghouse			
Bus duct cooling fans	-33	4		Westinghouse		14000 cfm	
Instrument Panels	-33	3				1-3, 2-3,6	
Low headroom Monorail hoist	-33	1		FT Crowe		1 ton - shop area hatch	
Steam jet air ejectors	-33	4					
Test Moisture Separator	-33	1					
Vent Fan SF-1 & 2	-33	2					
Underhung bridge.trolley hoist	-36	1		FT Crowe		5 ton in service area	
Air Dryers	-50	2					

Boiler stack	-50	1					
Chemical Monitoring Cabinet	-50	1					
Emergency Heater Boiler	-50	1		Cleaver-Brooks	25,400	178 SA-178 tubes, 10 ga	
Hydrogen Seal Oil Units	-50	2					
Instrument Panels	-50	6				2-5,2-4,1-5,1-4,1-1,2-1	
Turbine oil purification unit	-50	2					
Chorination System		1					
Fire Hydrants		8				w/250 ft hose (2.5")	
Outdoor jib cranes				FT Crowe		3 ton	
Unit Heaters		13					

Electrical Equipment

Description	Elev	Qty	Mfr	RPM	KVA	Weight		Length	Width	Height
500 KV Circuit Breakers	sw	2	Westinghouse			75,000		27.5'	35'	23.3
500 KV disconnect switches	sw	9	Schager-Wood			23,250		20'	40'	15'
480 V Switchgear 2A & 1B	ph	2	GE			12,000		12'-8"	5'	7'-8"
480 V Switchgear (DG room)	0	1	GE							
Diesel	0	1	Caterpillar	1200		11,800		186"	87.5"	89"
Diesel Generator	0	1				6,500	480v, 750 kva			
Generator	0	2	GE	1800	432,000	v-3	22,000v			
Main Power Transformers	0	6	Pennsylvania		165,760	268,300	Oil assumed drained	21	12.8	24.1
Startup Transformer	0	1	GE		16,000	52,000	Oil assumed drained			
Station Aux Transformers	0	2	GE		16,000	72,000	W/oil			
4160 V Switchgear	-16	4	GE							
Bus Ducts	-16	6	Westinghouse				Aluminum			
Excitation Cubicile	-16	2								
125 VDC distribution panel	-33	2				250		35"	9.5"	48"
125 VDC load center	-33	2				3,500		7.3'	54"	7.5'
Battery Charger MG sets	-33	3	Westinghouse			1,600		36"	22"	96"
Battery Racks	-33	2	Gould			19,200				
Lighting transformer & panels	-33	2								
MCC 1A-2, 2B-2	-33	2				3,000		100"	20"	90"
Neutral Grounding transformer cubicle	-33	2								
Potential Transformer	-33	2	Westinghouse			510		68"	60"	80"
480 V Switchgear 1A	-50	1	GE			6,000		9'-10"	5'	7'-8"
480 V Switchgear 1B, 2A & B	-50	3	GE			4,800		8'-3"	5'	7'-8"
MCC 2A-1 & 1B-1	-50	2	GE			3,000		100"	20"	90"
MCC 2B-1	-50	1	GE			2,400		80"	20"	90"
Substation Transformers	-50	3	GE			6,450		66"	42"	90"
Substation Transformers	-50	3	GE			7,300		74"	51"	96"
Current Transformers		18					15,000kv			
Transmission towers		8								

Large Bore Valves

Size	Qty	Type	Rating	Ends	Description	Mfr/Fig #	Llimit Switches?	Features	Mark
24	2	gate	400	bw	FW disch main to yard conn	anchor 1569-5a		bevel gear	fpdv-60
		300 # Valves							
12	2	blfy - control	300	bw	aux steam to deaerator	masoneilan 37-3212	yes		asv-54
18	6	check	300	bw	FW pump disch	anchor 1580-5			fpdv-51
4	6	check	300	bw	FW pump recirc	anchor 15-426-5			fpdv-54
10	2	control	300	bw	to cnds makeup tank	masoneilan 38-10132	yes		fpdv-63
3	4	control	300	bw	priming ejector	masoneilan 37-10163	yes		asv-62
2.5	6	control	300	bw	FW pump recirc	masoneilan 37-10161	yes		fpdv-55
2.5	2	control	300	bw	to priming ejectors	masoneilan 37-10172			asv-66
24	1	gate	300	bw	crossover - steam inlet manifolds	Smith G-80	yes		msv-52
16	4	gate	300	bw	FW hdr to cnds makeup hdr	anchor 1573-5a	yes	(4) bevel gear (2) chain operated	fpdv-61
14	2	gate	300	bw	aux steam to deaerator	anchor 1574-5		bevel gear	asv-52
10	8	gate	300	bw	drain hdr	anchor		chain operated	hprv-51
8	6	gate	300	bw	FW pump disch	anchor 1572-5	yes	chain operated	fpdv-52
6	4	gate	300	bw	to priming ejectors and SJAE	anchor 1576-5		(2) chain operated	asv-57
4	14	gate	300	bw	FW pump recirc & drain	anchor 15-453-5			fpdv-53
4	4	gate	300	bw	to priming ejectors and SJAE	anchor 1576-5			asv-59
4	2	gate	300	bw	yard steam lines	anchor 15-435-5			hprv-71
4	3	gate	300	bw	yard steam lines				hprv-72
3	2	gate	300	bw	from aux stm hdr to dearerator	anchor 25-440-5		chain operated	asv-61
3	6	gate	300	bw	manifolds shutoff	anchor 25-440-5			hprv-70
24	2	gate - MOV	300	bw	aux steam to deaerator	anchor 1570-5	yes		asv-51
6	2	gate - MOV	300	bw	to SJAE	anchor 1575-5	yes		asv-69
12	2	globe	300	bw	aux steam to deaerator	anchor 1579-5a			asv-52
10	2	globe	300	bw	control valve bypass (FPDV 63)	anchor 1578-5	yes		fpdv-62

Large Bore Valves

Size	Qty	Type	Rating	Ends	Description	Mfr/Fig #	Llimit Switches?	Features	Mark
8	6	globe	300	bw	to cndsrs	anchor		chain operated	hprv-52
4	3	globe	300	bw	to priming ejectors and SJAE	anchor 25-807-5			asv-60
3	2	globe	300	bw	to deaerator	anchor 25-328-5		chain operated	asv-70
3	2	globe	300	bw	from SJAE	yarway 6911-cb			hprv-53
2.5	4	packless	300	bw	stm packing exh to hotwell	robert shaw-fulton 30228		2 chain operated	condv-109
26	8	Stop	300	bw	Main steam stop valves	Anchor 1571-5	yes		msv-51
		200 # Valves							
2.5	1	3-way-diaphragm	200	scr					hwv-58
2.5	2	check	200	scr					hwv-62
2.5	8	gate	200	scr	hot water recirc				hwv-51
2.5	3	globe	200	scr	misc	Kennedy 0611			pwv-72
		150 # Valves							
14	2	bfly - diaphragm op	150	bw	LP htr to deaerator	masoneilan 37-3212	yes		condv-82
10	2	bfly - diaphragm op	150	bw	inter&after cndsr bypass	masoneilan 37-3212	yes		condv-83
24	4	butterfly	150	flange	MSR & 9th stg extraction to cndsr	masoneilan 37-3211	yes		bsv-56
14	8	butterfly	150	flange	11th stg extraction to cndsr	masoneilan 37-3211	yes		bsv-57
14	2	butterfly	150	flange	9th stg extraction to lp htr	masoneilan 37-3210	yes	extension shaft (8'-9") 7 gear reducer	bsv-63
10	2	butterfly	150	flange	9th stg extraction to cndsr (mst bypass)	masoneilan cp-1027	yes		bsv-64
8	2	butterfly	150	flange	bypass	unk			condv-65
18	6	check	150	bw	cnds pump discharge	anchor 1564-5			condv-79
8	4	check	150	bw	Heater drn pump disch	unk			condv-56
3	8	check	150	bw	transfer pump disch	anchor 15-376-5			tov-51
3	12	check	150	bw	deaerator vents to atm	anchor 1s-316-5			hvv-55

Large Bore Valves

Size	Qty	Type	Rating	Ends	Description	Mfr/Fig #	Limit Switches?	Features	Mark
2.5	2	check	150	bw	cond drn pump disch	anchor			lprv-53
8	4	conrol	150	bw	Deaerator	masoneilan 37-10172			condv-58
10	4	control	150	bw	to cndsr hotwelll	masoneilan 32-20521	yes	lantern glands	condv-53
8	4	control	150	bw	8th stg extraction to cndsr	masoneilan 37-3211	yes		bsv-52
6	2	control	150	bw	stm packing exh to cndsr	masoneilan 38-20521r	yes		condv-86
24	20	gate	150	bw	MSR, 9th & 11th stage extraction to LP htrs	Anchor 1673-5	yes		bsv-55
24	6	gate	150	bw	From LP heater to polisher & deaerator	anchor 1559-5	yes	2 chain operated	condv-74
24	6	gate	150	bw	deaerator storage tk to FWpump suction	anchor 1558-5	yes	chain operated	fpsv-51
20	2	gate	150	bw	condv reducing station block	anchor 1561-5	yes	chain operated	condv-77
18	6	gate	150	bw	cnds pump discharge	anchor 16-564-5	yes	chain operated	condv-78
16	4	gate	150	bw	reducing station block	unk		bevel gear; 2 chain operated	condv-80
12	4	gate	150	bw	Heater drn pump suction	anchor 1568-5			condv-52
12	4	gate	150	bw	to cndsr hotwell (control sta)	anchor 1568-5			condv-55
10	4	gate	150	bw	to cndsr hotwell (control sta)	unk			condv-54
10	2	gate	150	bw	stm packing exh to cndsr block	anchor 5-197-5			condv-87
10	2	gate	150	bw	stm packing exh to cndsr block	unk		lantern glands & bevel gear	condv-110
8	4	gate	150	bw	Heater drns to hotwell	anchor 1563-5	yes	lantern glands, chain operated	condv-51
8	12	gate	150	bw	Heater drn pump disch & @ deaerator	unk			condv-57
8	2	gate	150	bw	polisher backwash	unk		chain operated	condv-66
8	4	gate	150	bw	deaerator storage tk drain	anchor 35-1086-5B			hdvr-51
6	4	gate	150	bw	stm packing exh to cndsr	anchor 0611	yes	lantern glands; chain operated	condv-90
6	4	gate	150	bw	vent hdr to cndsr	anchor 1585-5		lantern gland & 10' external stem	hvv-51
6	4	gate	150	bw	vent header to cndsr	anchor 1585-5		lantern glands	hvv-60
6	1	gate	150	bw	unk	anchor 1585-5			asv-87
6	2	gate	150	bw	cnds drain pump suction	anchor 1585-5			lprv-51

Large Bore Valves

Size	Qty	Type	Rating	Ends	Description	Mfr/Fig #	Limit Switches?	Features	Mark
4	8	gate	150	bw	reservoir & sump drain	anchor 65-205-5		2 w/ extension stems (6'-9")	tov-55
4	4	gate	150	bw	test spool pieces	anchor 65-205-5			condv-92
4	2	gate	150	bw	deaerator storage tk drain	anchor 1558-5			hvdr-58
4	1	gate	150	bw	heating coil shutoff			chain operated	hsv-51
3	4	gate	150	bw	separator to condenser	Anchor 25-469-5			bsv-65
3	4	gate	150	bw	separator to condenser	Anchor 25-469-5			bsv-71
3	8	gate	150	bw	drain to heater	masoneilan		extension stem (10'-3" from valve CL)	bsv-73
3	18	gate	150	bw	transfer pump disch	anchor 25-469-5			tov-52
3	2	gate	150	bw	PHC-1 branch headre				hsv-53
2.5	6	gate	150	bw	bdn & cnod drn tank trank	anchor 25-202-5			lprv-52
6	2	gate -MOV	150	bw	steam seal regulator dishc				bsv-72
24	4	gate - MOV	150	bw	Steam packing exhauster	Anchor 1560-5	yes		condv-73
20	6	gate - MOV	150	bw	LP heater & stm packing exh bypasses	anchor 1562-5	yes		condv-75
16	8	gate - MOV	150	bw	Stm packing exh to LP htr to deaerator	anchor 1567-5	yes		condv-81
12	2	globe	150	bw	inter&after cndsr bypass	anchor 1565-5		bevel gear; 2 chain operated	condv-84
10	4	globe	150	bw	from SJAEs	anchor 1581-5			condv-69
6	4	globe	150	bw	Control station bypass at deaerator	anchor 45-295-5	yes		condv-59
6	2	globe	150	bw	deaerator vents to cndsr	anchor 5s-295-1		lantern glands, chain operated	hvv-52
4	2	globe	150	bw	stm packing exh to cndsr bypass	anchor 45-197-5			condv-88
4	4	globe	150	bw	lp heaters shell vent to cndsr	anchor 5s-197-5		lantern glands	hvv-53
4	2	globe	150	bw	to cndsrs	anchor 45-197-5		chain operated	hsv-77
3	8	globe	150	bw	drain to heater	masoneilan			bsv-74
3	12	globe	150	bw	deaerator vents to atm	anchor 2s-195-5			hvv-54
16	2	globe - MOV	150	bw	condv reducing station bypass	anchor 1561-5	yes	w/ position transmitter	condv-76
30	8	reverse flow check	150	bw	8th stg extraction to deaerator	A&M 202131I	yes		bsv-51
24	20	reverse flow	150	bw	MSR, 9th & 11th stage extraction to	A&M 202121I	yes		bsv-53

Large Bore Valves

Size	Qty	Type	Rating	Ends	Description	Mfr/Fig #	Limit Switches?	Features	Mark
		check			I.P htrs				
		125 # Valves							
6	1	stop check angle	150	bw	emergency boiler outlet	anchor 5362-5			asv-86
10	2	bfly - control	125	flange	from makeup hdr to cndsr	masoneilan 37-3212	yes		condv-104
66	8	bfly - MOV	125	flange	cndsr outlet	pratt r-1-a	yes	position transmitters	cvw-52
66	8	butterfly	125	flange	supply tunnels to conds inlet	pratt r-1-a	yes	extension stem 9'-6"	cwv-51
24	8	butterfly	125	flange	cnds pump suction	Pratt	yes	floor stand	condv-70
24	6	butterfly	125	flange	cnds pump suction	Pratt	yes	floor stand	condv-71
18	1	butterfly	125	flange	cnds makeup hdr at storage tk	Pratt 13-10-90622	yes		condv-94
18	5	butterfly	125	flange	service wtr pump suction	pratt 2f2	yes	chain operated	cwv-56
16	4	butterfly	125	flange	conds makeup hdr to condsr	Pratt 2f2	yes		condv-102
14	3	butterfly	125	flange	SW pump discharge	Pratt 2f2	yes	chain operated	swv-52
14	2	butterfly	125	flange	Main header shutoff	Pratt 2f2			swv-68
14	5	butterfly	125	flange	filters s-6- & s-114	Pratt 2f2		chain operated	swv-69
14	3	check	125	flange	SW pump discharge	kennedy 106			swv-51
6	4	check	125	flange	To priming ejector	Kennedy 106			aev-57
4	4	check	125	flange	vacuum tank	kennedy 106			apv-59
6	2	control	125	flange	hydrogen coolers	masoneilan 37-10132			swv-75
6	2	control	125	flange	hydrogen coolers	masoneilan 37-10132			swv-76
4	4	control	125	flange	from aftercndsr to vent header	masoneilan 37-20521	yes		aev-52
4	1	control	125	flange	to 15,000 gallon tank	masoneilan			pwv-51
12	4	gate	125	flange	conds makeup to cndsrs	anchor 0611	yes	lantern glands; 13'-7" extension stem	condv-85
8	4	gate	125	flange	from SJAE to cndsr	Kennedy 0611			aev-56
8	4	gate	125	flange	turbine oil tk coolers	kennedy 0611			swv-61
8	8	gate	125	flange	TG hydrogen & oil cooler outlets	kennedy 0611			swv-78

Large Bore Valves

Size	Qty	Type	Rating	Ends	Description	Mfr/Fig #	Limit Switches?	Features	Mark
6	32	gate	125	flange	in SJAE from cndsr to priming ej	kennedy 0611	yes	10 with limit switches	aev-51
6	4	gate	125	flange	to stator liquid coolers	kennedy 0611			swv-57
6	5	gate	125	flange	to 15,000 gallon tank	Kennedy 0611		2 chain operated	pwv-55
4	8	gate	125	flange	To hydrogen coolers	kennedy 0611			swv-59
4	4	gate	125	flange	vacuum tank	kennedy 0611			apv-58
4	8	gate	125	flange	conds reversing box drain	kennedy 0611			cwv-53
3	16	gate	125	flange	cnds inlet & outlet box	kennedy 0611			cwv-54
2.5	4	gate	125	flange	bus duct heat exch	kennedy 0611			swv-83
6	4	Gate (MOV).	125	flange	to priming ejector	kennedy 0611	yes		aev-59
14	2	globe	125	flange	conds control sta bypass	unk	yes	spur gear operator	condv-103
8	4	globe	125	flange	turbine oil tk coolers	kennedy 460			swv-62
8	2	globe	125	flange	stator liquid cooler	kennedy 460			swv-79
6	4	globe	125	flange	from stator water coolers	kennedy 460			swv-58
6	4	globe	125	flange	turb oil tank & H2 cooler control bypass	kennedy 460			swv-81
4	8	globe	125	flange	from hydrogen coolers	kennedy 460			swv-60
4	8	globe	125	flange	cndsr drain to waste	kennedy 460			condv-91
4	1	globe	125	flange	to 15,000 gallon tank	Kennedy 460			pwv-56
3	4	globe	125	flange	aftercooler & bus ducts	kennedy 460			swv-80
2.5	4	globe	125	flange	bus duct heat exch	kennedy 460			swv-84
2.5	2	globe	125	flange	stm packing exh to hotwell	kennedy 460			condv-99
4	1	3-way-diaphragm			Main condenser return				hsv-71

Piping								
Description	Size	Wall	Length	Wt	Mat'l	Asb	Insul vol	Insul wt
	(in)	(in) or sch	(ft)	(lbs)		Insul	(ft3)	(lbs)
LP heater vents to cndsr	6	40	285	5,000	A-53 Gr A			
Deaerating htr vent to cndsr	6	40	372	7,000	A-53 Gr A			
Storage tk to cndsr	8	40	338	10,000	A-53 Gr A			
inter/after cndsr vent/relief	4	40	60	639	A-53 Gr A	1	7	86
Steam packing exhauster disch	6	40	231	4,000	A-53 Gr A	1	38	461
inter/after cndsr vent/relief	8	40	1712	48,000	A-53 Gr A	1.5	511	6,130
inter/after cndsr vent	14	0.375	167	9,000		1.5	79	952
Aftercondenser drain to condenser	2	40	40	100		1	3	35
Intercondenser drain to condenser	2	40	40	100		1	3	35
Aux steam	3	40	300	2,200	A-106 Gr B	2	46	550
HP Aux Steam	3	40	100	1,000	A-106 Gr A	1.5	13	157
Heating steam hdr	4	40	700	7,000	A-106 Gr A	1.5	114	1,374
Crossover stm to LP Heaters	14	0.375	100	5,000	A-106 Gr A	1.5	47	569
Extr stm dump lines	14	0.375	400	22,000	A-106 Gr A	1.5	190	2,277
Extr stm to LP heaters	24	0.375	3793	355,000	A-155 Gr C55	1.5	3039	36,473
Crossover Stm dump	24	0.375	200	19,000	A-155 Gr C55	1.5	160	1,923
Crossover stm to LP Heaters	24	0.375	843	79,000	A-155 Gr C55	1.5	675	8,103
Separator to cndsr drain	3	40	400	3,000		1	39	471
Extraction steam dump	8	40	233	7,000	A-106 Gr A	1.5	70	835
8th stage moisture separator	60	0.375	32	8,000	A-155 Gr C55	1.5	63	760
Extr stm to deaerating htr indoors	30	0.375	200	23,000	A-155 Gr C55	1.5	200	2,397
Extr stm to deaerating htr outdors	48	0.375	403	76,000	A-155 Gr C55	2	843	10,113
Instrument air ring header	3	40	1250	9,000	A-53 Gr A		0	
Chlorination system	6	40	75	1,000	A-53 Gr B		0	
After/inter cndsr bypass	16	0.375	60	4,000	A-155 Gr C55		0	
After/inter cndsr lines	18	0.375	200	14,000	A-155 Gr C55		0	
Cnds pump suction	24	0.375	180	17,000	A-155 Gr C55		0	
Cnds pump disch to inter/after cndsr	24	0.375	265	25,000	A-155 Gr C55		0	
Inter/aftercndsr To steam packing exhauster	24	0.375	325	30,000	A-155 Gr C55		0	
Stm pking exhauster To LP heaters	24	0.375	163	15,000	A-155 Gr C55		0	0
LP htrs To deaerating heater	24	0.375	205	19,000	A-155 Gr C55	1.5	164	1,967
To/From polisher	24	0.375	200	19,000	A-155 Gr C55		0	
Common suction hdr	32	0.375	139	17,000	A-155 Gr C55		0	
Cnds makeup line	16	0.375	381	24,000	A53 Gr B	1.5	205	2,465
Cnds makeup line	20	0.375	119	9,000	A53 Gr B	1.5	80	960
Deaerator vent to condenser	6	40	289	5,000			0	
LP heater vent to condenser	6	40	160	3,000		1	27	318
Deaerator storage tank to makeup hdr	8	40	75	2,000			0	
LP Htrs to cndsr	10	40	0	0	A106 Gr A	1.5	0	0
LP Htrs to cndsr	12	0.375	653	32,000	A-106 Gr A	1.5	267	3,206
Heater drn pump suction (from LP heaters)	12	0.375	286	14,000	A106 Gr A	1.5	117	1,403
LP Htrs to cndsr	18	0.375	0	0	A-155 Gr C55	1.5	0	0

Piping								
Description	Size	Wall	Length	Wt	Mat'l	Asb	Insul vol	Insul wt
	(in)	(in) or sch	(ft)	(lbs)		Insul	(ft3)	(lbs)
Heater drn pump disch (to polishing unit)	8	40	0	0	A106 Gr A	1.5	0	0
HD header to FW/polisher	10	40	403	16,000	A106 Gr A	1.5	148	1,778
Condenser CW inlet & outlet	66	0.5	160	55,000	A155 Gr C55		0	
Circ Water Pump disch	84	0.5	48	21,000	A155 Gr C55		0	
Fire Pumps disch	10	40	5	200			0	
Fire Pumps disch	14	40	15	1,000			0	
Fire Protection sprinkler header	10	40	290	12,000			0	
Fire Protection leads to turbine reservoirs	10	40	80	3,000			0	
Fire Protection sprinkler header	6	40	183	3,000			0	
Fire Protection buried loop	16							
FWP recirc to storage tk	4	40	620	7,000	A-106 Gr A	1.5	101	1,218
FWP Disch	24	0.375	582	54,000	A-155 Gr C55	1.5	466	5,597
FW flow element piping	16	40	76	6,000		1.5	41	492
FW flow element piping	18	40	68	7,000		1.5	41	494
Deaerating htr storage to FWPs	36	0.375	207	29,000	A-155 Gr C55	1.5	247	2,963
Valve gland seal	sb	40	0	0	A106 A			
Trap drains to bdn tank	4	40	417	4,000	A-106 B	1.5	68	818
Trap drains to bdn tank	10	40	400	16,000	A-106 B	1.5	147	1,766
Drain to Cndsr	10	40	100	4,000	A-106 B	1.5	37	442
Buried trap drain manifold	12	40	400	21,000	A-106 B	1.5	164	1,963
Heating system -steam supply & conds return	1.5	40	1214	3,000			0	
Heating system -steam supply & conds return	2	40	444	2,000			0	
Heating system -steam supply & conds return	3	40	528	4,000			0	
Heating system -steam supply & conds return	4	40	473	5,000			0	
Heating system	6	40	50	1,000			0	
Chem feed	0.5	80	3098	3,000	A-312 ss			
Chem Feed	0.75	80	200	300	A-312 ss			
Blowdown tk vent	16	0.375	242	15,000	A155 C55	1.5	131	1,567
Aux steam to heating	3	40	75	1,000	A-106 Gr B	2	11	137
To steam seal regulator	4	40	132	1,000	A-106 Gr B	2	26	311
Aux steam to ejectors	6	40	551	10,000	A-106 Gr B	2.5	184	2,208
Aux Steam to deaerating htr	14	40	304	19,000	A-106 Gr B	2.5	223	2,681
Unit crossover line	24	40	485	82,000	A-106 Gr B	2.5	621	7,456
Mixing hdr to stop valves	26	0.5	3270	440,000	A-155 KC 70 cl1	2.5	4546	54,548
From N reactor (38" id)	39.4	0.719	2552	750,000	A-155 KC 70 Cl I	2	4389	52,671
Mixing Headers (60" ID)	61.4	0.719	62	29,000	A 155 KC 70	2	166	1,993
Potable water ring header	2	40	625	2,000	A 72 (CI)		0	
Potable water header	4	40	625	7,000	A 72 (CI)		0	
Service Air risers	1.5	40	660	2,000	A53 Gr A		0	
Service Air ring header	3	40	625	5,000	A53 Gr A		0	
Service Air	4	40	100	1,000	A53 Gr A		0	
Sump Pump Discharge hdr	6	40	418	8,000	A53 Gr A		0	
Roof Drains - ceiling hdr	6	40	532	10,000	A53 Gr A		0	

	Piping								
	Description	Size	Wall	Length	Wt	Mat'l	Asb	Insul vol	Insul wt
		(in)	(in) or sch	(ft)	(lbs)		Insul	(ft3)	(lbs)
X	Roof Drains - ceiling hdr	12	0.375	282	14,000	A53 Gr A		0	
X	Roof drains - downcomer	12	0.375	180	9,000	A53 Gr A		0	
X	Roof drains to settling pond	12	0.375	427	21,000	A53 Gr A		0	
	Sump Pump to CW disch	14	0.375	50	3,000	A155 C55		0	
	Roof drains to settling pond	14	0.375	50	3,000			0	
X	SW to Hydrogen coolers	6	40	50	1,000	A-53 Gr A		0	
X	SW to stator cooler	8	40	0	0	A-53 Gr A		0	
X	SW to Hydrogen coolers	8	40	349	10,000	A-53 Gr A		0	
X	SW to turbine oil coolers	8	40	559	16,000	A-53 Gr A		0	
X	SW effluent	8	40	750	21,000	A-53 Gr A		0	
X	SW to misc	10	40	150	6,000	A-53 Gr A		0	
X	SW Pump disch hdr	14	0.375	94	5,000	A 53 Gr A		0	
X	SW Pump suction hdr	18	0.375	15	1,000	A155 C55		0	
	Screen Wash Disch	4	40	90	1,000	A53 Gr A		0	
	Screen Wash Disch	8	40	200	6,000	A53 Gr A		0	
	Screen Wash suction	10	40	30	1,000	A53 Gr A		0	
X	Turbine Oil System	3	40	749	6,000	A53 Gr A		0	
X	Turbine Oil System	4	40	749	8,000	A53 Gr A		0	
	Small bore allowance	1	40	42,063	70,000			1080	12,960
X	Instrument air small bore risers	1.5	40	660	2,000			0	
	Sump pump discharge lines	3	40	120	1,000			0	
X	CW Pump lubricating water	4	40	150	2,000			0	
X	Emergency heating boiler stack	24	0.375	81	8,000		2.5	104	1,251
		Totals			2,800,000				239,000

Heat Exchanging Equipment					
Description	Elev	Qty	Lgth	Weight	Mfr
Deaerating heater	0	2		95,000	
Hot Water Heat Exchanger	-12	1			
Aftercondenser	-24	4			
Intercondensers	-24	4	8'	1,650	Westinghouse
Bus Duct Heat Exchanger	-33	2			
Bus Duct heat exchanger	-33	2	100"		
LP heaters	-33	4	43	45,000	
Stator cooling equipment	-33	2			
Steam Packing exhauster	-33	2			
Aftercoolers	-50	5			Worthington
Condenser	-50	4			
Service Air Aftercooler					Joy

ENGINEERING
DATA BOOK

032

Hanford Number One
Nuclear Electric Generating Plant
Richland, Washington

Washington Public Power Supply System
Kennewick, Washington

BURNS AND ROE, INC.

Engineers and Constructors
Oradell, New Jersey

VII. LIVE STEAM PIPING SYSTEMS

There are two independent and essentially identical live steam systems, one each for Unit 1 and Unit 2, consisting of main steam system, auxiliary steam system, bleed steam system, and steam piping drain system.

Note:

For piping and insulation data on following systems, see Section XIII "Piping" and Section XIV "Insulation."

A. MAIN STEAM SYSTEM

The main steam system supplies steam to the turbine, turbine shaft seal system, and auxiliary steam system. During the "dual-purpose" phase, steam is supplied at a nominal pressure of 120 psig. Steam is saturated and contains 2% moisture. The main steam piping begins at the four headers on Building 109-N and transports the steam across the yard in eight 38" pipes which enter two 60" mixing headers, one for each unit. The mixing headers, located in pits outside 185-N, have internal baffles and drip pockets to remove moisture. From each mixing header, steam is sent through eight 26" lines (four lines to each side of the turbine) to two turbine stop valve complexes and on to the turbines.

A 24" equalizing line interconnects the two mixing headers and feeds the auxiliary steam system. A normally open manual (gate) valve, with OPEN/CLOSE signal lights on the Vertical Mimic Board, is located approximately midway between the two turbines for unit isolation purposes.

1. MIXING HEADERS (2: one for each unit)

Description and Ratings

a. Mixing headers are located in pits next to Building 185-N. Each header is approximately 30' long, 60" ID, and 7'6" OD overall including projections for pipe connections.

b. Each header has stainless-steel internal baffles for mixing and moisture separation, four nozzles for 38" pipes, eight nozzles for 26" pipe, one nozzle for 24" header interconnecting pipe, one manhole on top and one manhole at end.

D. BLOWDOWN SYSTEM

The blowdown system removes dirt and air when the steam lines require cleaning or purging. Condensate and intermixed solids are collected in 13 drip pockets, four at the main steam header, eight immediately upstream of the turbine stop valves, and one in the 24" main steam equalizing line. Collected materials pass from the drip pockets through individual blowdown valves to the main steam blowdown tank. Gases in the blowdown tank are vented to atmosphere through a 16" stack. Liquids and solids drain to the basement sump and are ultimately removed by the overboard drain system.

1. BLOWDOWN TANKS (2: one for each unit)

Location: El -50', col. F,
row 19 for Unit 1
row 1 for Unit 2

Description and Ratings

a. Tanks are vertical with an ID of 4'6" and a straight shell height of 7'6". Tanks have manhole and cover, and connections for blowdown, drain, and vent.

b. Tanks were designed in accordance with ASME Code for Unfired Pressure Vessels, but without ASME stamp. Design working pressure is 150 psig, 480° F maximum temperature.

c. Tanks are fabricated of carbon steel plates conforming to ASTM A-212 Grade B, with 1/8" corrosion allowance.

References

Burns and Roe Drawings 2015, SK-M-123

E. MAIN STEAM DRAIN SYSTEM

The main steam drain system removes condensed moisture from the main steam system lines during normal operation. Condensate is collected from the 13 drip pockets connected to the blowdown system and from four lines connected to the open floor drains. Collection is also made from drip pockets on the steam transfer lines from 109-N; four drip pockets for Unit 1 and eight for Unit 2. Collected condensate flows to a 2000-gallon Condensate Drain Tank. Bypass lines allow the condensate to be sent either to the blowdown tank or to the condensers.

VIII. TREATED WATER SYSTEMS

A. CONDENSATE SYSTEM (2: one for each unit)

Steam at the turbine exhaust hoods is changed to condensate, purified, and delivered by the condensate system to the feedwater system. The flow rate for each condensate system is from 0 to 12,700 gpm of water. Cooling is accomplished with screened river water. Flow diagram is Burns and Roe Drawing 2007.

1. MAIN CONDENSERS (4: two for each turbine. See Vacuum Systems, Section X for air ejectors)

Manufacturer	Westinghouse Electric Corp.
Serial Numbers	
Condensers	6-A-4469-1, -2, -3, and -4
F-300 air ejectors	16-A-4470-1, -2, -3, and -4
P-90 priming ejectors	16-A-4471-1, -2, -3, and -4
Location	Below low-pressure sections of turbine

Description and Ratings

a. Weights

Condensers with tubes, empty	1,013,700 lb
Circulating water system, filled	1,943,700 lb
Shell, filled for water test	3,607,700 lb
Heaviest piece	
Inlet water box or cover	32,000-38,000 lb

b. Shipping weight

Inlet water box and cover (each)	70,000 lb
Reverse water box (each)	64,000 lb
Hotwell (1/3)	20,000 lb
Steam inlet (1/3)	15,000 lb
Tubed shell section (1/8)	90,000 lb

c. Dimensions

Overall dimensions	56' long x 34' wide x 43' high
Tubed shell section	8'5" x 9'6" x 40'

Inlet water box	15'2" x 17'8" x 8'7"
Inlet cover	14'8-1/2" x 16'9-3/4" x 12"
Shell plate thickness	7/8"
Steam inlet hood plate thickness	7/8"
Tube sheet thickness	1-1/4"

d. Tubes

Number	19,920/shell
Tubes in air cooler section	600/shell approx.
Material	Admiralty metal
Diameter	1" OD
Length	40'
Flow path	2-pass, divided water box
Cleanliness factor	85%
Surface area	207,500 ft^2

e. Hotwell

Capacity	55,000 gallons
Level	5'6" ±18"

f. Operating pressure is 1.5" Hga when supplied with 139,000 gpm of circulating water at 48° F. Steam condensed is 2,435,500 lb/hr. Condensers are controlled from the Mechanical Control Panel.

Alarms in control room

High and low hotwell level
Low vacuum (22" Hg) pretrip
Low vacuum (25" Hg)
Air ejector low steam pressure

References

Burns and Roe Drawings 2005 and 2007
Westinghouse Drawings 672J900, -901, -914 and -915
Performance Curve: Figure VIII-A-1

2. CONDENSATE PUMPS (6: three for each unit)

Manufacturer	Byron Jackson Corp.
Type	VMT
Size	32RXL-28KXH
Serial Number	704251, -2, -3, -4, -5, and -6
Location	El -50', col. C.2

References

Burns and Roe Drawings 2007, 2019, and 3002, Sheet 6
Byron Jackson Corp. Drawings 1F-5151, 2B-11719, and 214242
Performance Curve: Figure VIII-A-2

3. LOW-PRESSURE HEATERS (4: two for each turbine)

Manufacturer	Westinghouse Electric Corp.
Location	El -33', NE corner for 1A and 1B El -33', SE corner for 2A and 2B

Description and Ratings

a. Weights

Empty	45,000 lb
In operation	52,000 lb

b. Heat exchanger sizes

Length	43'
Width	5'
Height	6'

c. Tubes

Number	945
Material	Admiralty metal
Type	U-tubes
Diameter	5/8" OD
Active length	33'
Surface area	10,595 ft^2

d. Tubeside relief valves are set at 250 psig; shellside relief valves at 50 psig. Operating controls are at the Mechanical Control Desk.

e. Heat and flow rates

Feedwater	2,381,000 lb/hr at 92.2° F in, 176.9° F out
In steam	168,140 lb/hr at 7.83 psia 181.9° F (965 Btu/lb)
In drains	189,325 lb/hr at 342.7 Btu/lb

References

Burns and Roe Drawings 2013 and 2029
Mason-Neilan Drawing F-59729-V
Byron Jackson Corp. Drawings 1F-5149, 2C-4215, and 214225
Performance Curves: Figure VIII-A-4, Sheets 1 and 2

5. CONDENSATE POLISHING UNITS (2: one for each turbine)

Manufacturer	Graver Water Conditioning Co.
Model	64-2935, Powdex Plant
Location	Unit 1: operating level, col. B, row 13 Unit 2: operating level, col. B, row 7

Description and Ratings

a. The Powdex resin purification system has four treatment tanks, with sump drains to the overboard drain system, and a slurry tank for Powdex preparation.

b. Tank

Precoat surface area	792 ft^2
Normal flow rate	3.8 gpm/ft^2
Pressure drop	
Maximum	30 psi
Fresh resin	10 psi
Operating pressure	
Normal	140 psig
Maximum	290 psig
Influent temperature	
Normal	177° F
Maximum	190° F
Flow rate (all 4 tanks)	0 to 12,700 gpm

c. Normal condensate influent has up to 100 ppb total solids

Effluent

Total solids	<50 ppb
Silica	<10 ppb
Total iron	<10 ppb
Total copper	<10 ppb
Residual hydrazine	10-20 ppb
Free hydroxides	0
Chlorides	<10 ppb
Fluorides	<10 ppb
pH	Same as influent

d. Weight

Unit empty	100,000 lb
Unit full	150,000 lb
Heaviest piece (25 hp precoat pump motor)	420 lb
5-hp hold pump motor	153 lb
Skid with 3 tanks	100,000 lb
Skid with 1 treatment tank and 1 precoat tank	50,000 lb
Resin per ion exchange bed (dry basis)	80-160 lb

e. Dimensions

Ion exchange tank	
Diameter	6'0" ID
Overall height	6'0" outside
Bed depth	1/4" to 1/2"
Flow area per bed	792 ft^2
Slurry tank	
Diameter	4'6" ID
Overall height	5'0"
Volume	80 ft^3
Each 12,000 gpm unit	
Length	41'
Width	29'3"
Height	16'9"
Clearance height from floor	18'
Precoat pump	
Length	1'6"
Width	4'7"
Height	1'7"
Skid with 3 treatment tanks	27'x10'
Skid with 1 treatment tank and 1 precoat tank	19'x10'

f. Pumps

	Hold Pump	Precoat Pump
Bhp at design capacity	4.0	23.3
Pump efficiency at design capacity	57%	75%
NPSH at design capacity	9.0'	10.0'
Shutoff head	67'	90'
Maximum hp	4.7	24.9
Rated motor hp	5	25
Speed	3600 rpm	1800 rpm

6. DEAERATOR HEATERS (2: one for each turbine)

Manufacturer	Graver Water Conditioning Co.
Type	Tray, with horizontal deaerator on horizontal storage tank
Serial Number	63-2713
Location	El 0', col. A and B: rows 15-18 for Unit 1, rows 2-5 for Unit 2

Description and Ratings

a. Deaerator heater and shell are reinforced to support static and dynamic loads from piping for power plant extraction steam, condensate and feedwater piping. Steam is supplied through 48" bleed steam line or 14" auxiliary steam line. Controls at Mechanical Control Desk.

b. There is a manhole in each tank and two in each deaerator.

c. Weights

Deaerator section (empty)	95,000 lb
Storage tank (empty)	88,000 lb
Total operating	543,000 lb
Total weight when flooded	823,000 lb
Heaviest piece during operation (storage tank)	388,000 lb

d. Dimensions and materials

Deaerator storage tank	
Capacity	39,400 gallon
Diameter	12'
Overall length	62'4"
Straight length	56'
Shell thickness	9/16"
Head thickness	3/4" 212B steel
Storage tank bottom to tank horizontal center line	6'9"
Assembled tank, horizontal center line to deaerator section horizontal center line	12'3"

d. Dimensions and materials - continued

Height of stored water level measured from tank bottom when tank holds 5,270 cu ft or ft^3	9'0"
Assembled deaerator, highest portion to deaerator section horizontal center line	7'3"
Deaerator section	
Diameter	9'6"
Overall length	57' 4"
Straight length	54'0"
Shell thickness	9/16" 212B steel
Head thickness	11/16" 212B steel
Trays	
Length	15"
Width	1-1/2"
Gage thickness	16 USSG
Number per section	24,320
Elevation of water distributor inlets at center line above heater supports	11'

e. Temperature of effluent water when:

Delivering 6,160,000 lb/hr of feedwater with extraction steam at 36.2 psia at deaerator inlet nozzle	261° F
Delivering 6,600,000 lb/hr of feedwater with extraction steam at 38.8 psia at deaerator inlet nozzle	265° F

f. Static pressure required at inlet to water distribution for:

6,160,000 lb/hr effluent	37.7 psia (at 36.2 psia operating pressure)
6,600,000 lb/hr effluent	40.5 psia (at 38.8 psia operating pressure)

NOMENCLATURE

1 Standard and cap, turbine end
2 Exhaust hood, "A", turbine end
3 Bearing, T-1, journal
4 Oil deflector, T-1
5 Steam packing, N-1
6 Nozzle diaphragms
7 Bucket blades
8 Steam packing, N-2
9 Oil deflector, T-2
10 Bearing, T-2, journal
11 Exhaust hood, "A", generator end
12 Rotor, low-pressure, "A"
13 Rotor, high-pressure
14 Thrust bearing wear detector
15 Bearing thrust
16 Bearing, T-3, journal
17 Oil deflector, T-3
18 Steam packing, N-3
19 Cross-around high-pressure to "A" low-pressure
29 Exhaust casing
21 Shell, high-pressure
22 Cross-around high-pressure to "B" low-pressure
23 Steam packing, N-4
24 Oil deflector, T-4
25 Bearing, T-4, journal
26 Rotor, low-pressure, "B"
27 Bearing, T-5, journal
28 Oil deflector, T-5
29 Steam packing, N-5
30 Exhaust hood, "B", turbine end
31 Steam packing, N-6
32 Oil deflector, T-6, turbine side
33 Bearing, T-6, journal
34 Exhaust hood,"B", generator end
35 Turning gear
36 Coupling, generator
37 Oil deflector, T-6, generator side
38 Steam inlet
39 Extractions
40 Exhaust to condenser

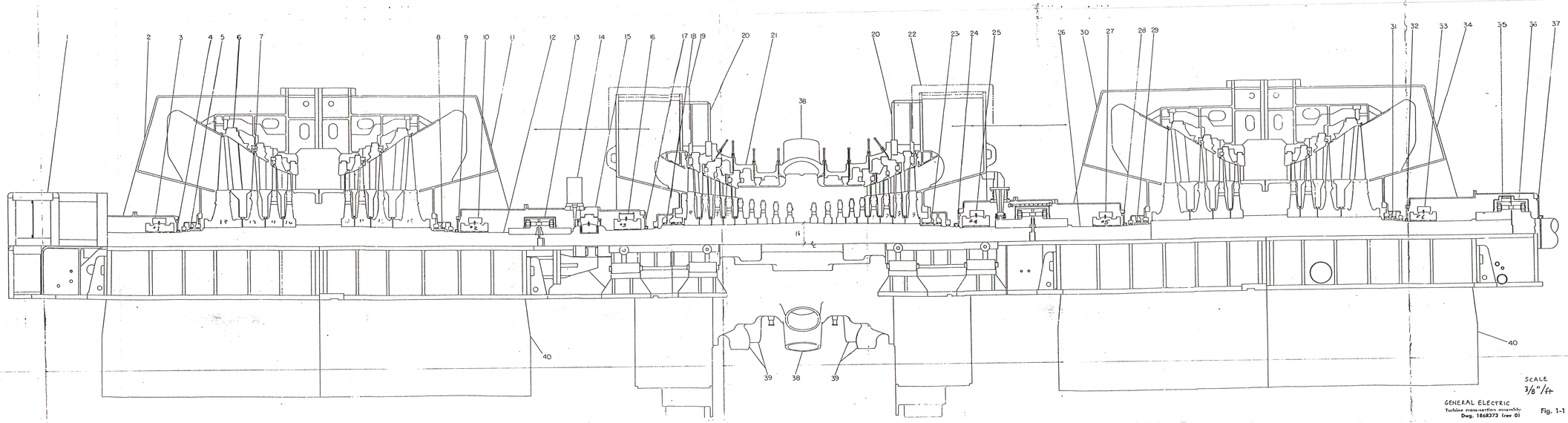

SCALE
3/8"/ft

GENERAL ELECTRIC
Turbine cross-section assembly
Dwg. 1868373 (rev 0)

Fig. 1-1

TURBINE DIVISION

VOL. I

INSTRUCTIONS

STEAM TURBINE-GENERATOR

TURBINES NO. 170X247 AND 170X248

WASHINGTON PUBLIC POWER SUPPLY SYSTEM

HANFORD PROJECT—UNITS NO. 1 AND 2

RICHLAND, WASHINGTON

GENERAL ELECTRIC

GENERAL DESCRIPTION

This turbine is a tandem-compound unit with four-flow low-pressure stages and operates at 1800 rpm. The turbine is designed to operate on saturated steam and materials are used which are highly resistant to water erosion. Provisions for removal of water are provided at a number of points along the steam path.

The turbine consists of two double-flow low-pressure sections and with the double-flow high-pressure section placed in between the low-pressure sections. The steam initially enters the turbine at the center of the high-pressure section and one-half of it flows toward the generator end and one-half toward the turbine end of the machine. The steam flow is controlled by eight control valves which are mounted separately from the turbine and with four valves on each side. After passing through the high-pressure stages, the steam is carried to each double-flow low-pressure section through two cross-arounds. The steam divides again upon entering the low-pressure sections and after leaving the low-pressure stages the steam is exhausted downward into the condenser.

The two exhaust hoods are keyed to the foundation at approximately the centerline of the condenser openings. The high-pressure section is keyed axially to the turbine end or "A" exhaust hood and expands from this point when it heats. Where the high-pressure shell is supported at the generator end it is free to slide on the supports. Material is used at these support points which gives good sliding contact.

The exhaust hoods and shell are separated by horizontal joints for ease in maintenance and inspection. The horizontal joints as well as vertical joints are accurately machined to obtain full metal-to-metal contact and assure steam tightness.

The high-pressure section is constructed so that additional stages can be added and the turbine operated at higher steam pressures.

HIGH-PRESSURE SECTION

The outer shell of the high-pressure section consists of a cast steel center portion and fabricated steel exhaust casings on both ends. The three pieces are jointed together with bolted vertical joints. The high-pressure section is supported near the horizontal centerline on four support bases. Support shims are used to secure correct vertical alignment. Keys are provided on the vertical centerline to maintain transverse alignment of the high-pressure section.

There are no inner shells in the high-pressure section. The diaphragms are supported near the horizontal joints so accurate alignment is maintained over all operating conditions. The shell ledges are faced with special material to protect against moisture erosion and galling.

Some of the diaphragms are stacked together and bolted which eliminates the possibility of steam leakage at these joints.

LOW-PRESSURE SECTION

The upper and lower exhaust hoods are made in two parts with a vertical joint at the centerline of the exhaust opening. The hoods are made of fabricated steel construction. The diaphragms are fitted directly into the exhaust hood structure.

MOISTURE REMOVAL PROVISIONS

Since the turbine operates on saturated steam the design incorporates provisions for removing water from the steam as it flows through the machine.

Moisture removal buckets are used on three stages in the high-pressure section and two stages in the low-pressure sections. The moisture removal buckets have radial grooves in the back side of the vane sections on the admission edge. These grooves trap moisture droplets and cause them to be thrown from the bucket tips into a pocket between the diaphragms from where the accumulated water is drained off.

The other stages, which do not have moisture removal buckets, are provided with pockets for catching the water thrown from the trailing edges of the bucket covers.

Moisture separators are installed in the cross-around structures. These moisture separators consist of a large number of corrugated plates set on edge. Moisture droplets carried in the steam impinge on these plates in passing through the separator and run down to the bottom of the assembly. The water is drained from each set of corrugated plates and carried to the bottom of the separator and piped away.

In addition to the drain facilities mentioned, every point in the shell or hoods where water can accumulate is provided with a drain.

TURBINE ROTORS

The turbine has three rotors each supported on its own two bearings. The rotors are jointed together with bolted couplings and the entire assembly is axially located by the thrust bearing located on the high-pressure rotor near the No. 3 journal bearing.

The three rotors have forged alloy steel shafts. Separate forged wheels with the buckets assembled are shrunk on to the shafts and keyed. The coupling hubs are also shrunk on to the ends of the shafts. The thrust bearing runners are machined from the high-pressure shaft forging. The ring gear for the rotor turning device is mounted on the coupling hub at the generator end of the "B" section rotor.

The coupling between the "A" low-pressure section and the high-pressure section and the coupling between the high-pressure section and the "B" low-pressure section have spacers between the coupling faces. The spacers permit the rotor to be positioned axially with respect to each other.

Prior to machining, various tests are made to assure that all forgings meet the required physical and metallurgical properties.

BUCKETS

The buckets are made from a chrome-iron alloy that is extremely resistant to corrosion and erosion by steam. They are machined from bar stock or forgings and are dovetailed to the wheel rims by a tight machine fit. Metal shroud bands are used to tie together the outer ends of the buckets. The punched shroud bands are fitted in segments over the tenons on the bucket outer tips and then the tenons are hand riveted to hold the bands in place.

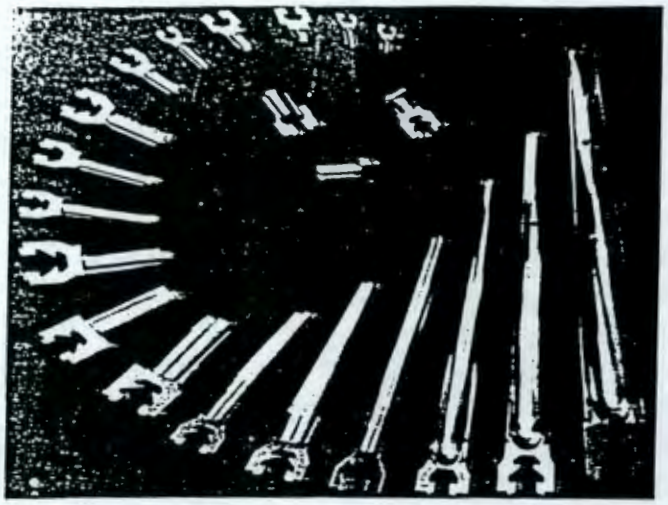

Turbine buckets

On the last-stage buckets where tip speed is high, hardened shields are attached to the upper portion of each bucket as an additional safeguard against erosion due to moisture.

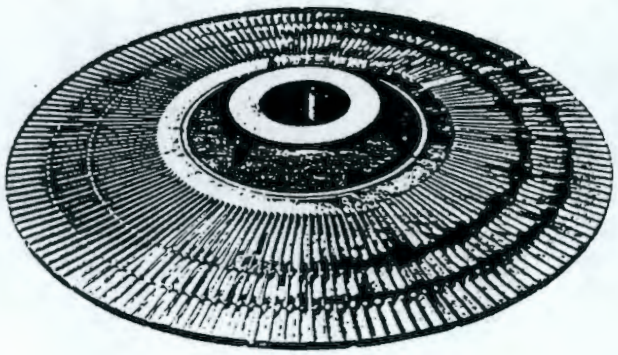

Buckets assembled on wheel

NOZZLE AND DIAPHRAGMS

The steam flow is directed onto the buckets at the proper angle and velocity by the diaphragm partitions. The nozzle areas and angles of discharge are determined by many variables such as volume of steam to be passed, steam pressure drop across the diaphragms and the velocity of the adjacent buckets.

The nozzle partitions are machined from solid chrome-iron alloy and are incorporated into the diaphragm by either a welding or a "cast-in" process. In high-pressure areas welded type nozzle diaphragms are used. The machined chrome-iron alloy partitions are assembled in punched steel bands and tack welded in position. This assembly is then welded to the diaphragm web and to the outer ring. The completed fabrication is then accurately machined.

Nozzle diaphragms in the low-pressure end of the turbine are of the "cast-in" type. Depending on the steam conditions these diaphragms are made from either cast iron or cast steel. In this process the partitions become an integral part of the cast diaphragm.

Because of the high moisture content of the steam in this turbine the outer rings and webs of the diaphragms are made of materials which are extremely resistant to water erosion.

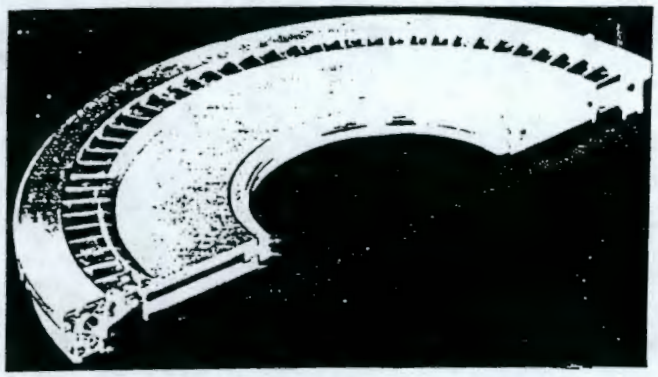

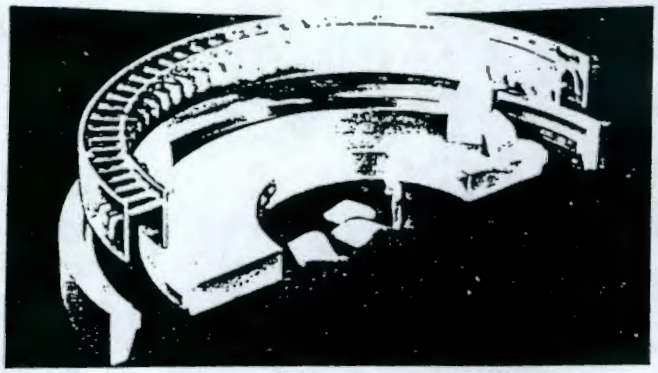

High-pressure diaphragms, showing stages of assembly

Rev. 0

Hanford Generating Plant Sampling and Analysis Plan Part 1

Energy Northwest
WNP-1/3 & HGP Projects
P.O. Box 968
Mail Drop 817
Richland, WA 99352-0968

Rev. 0

Hanford Generating Plant Sampling and Analysis Plan Part 1

Energy Northwest
WNP-1/3 & HGP Projects
P.O. Box 968
Mail Drop 817
Richland, WA 99352-0968

EXECUTIVE SUMMARY

This sampling and analysis plan (SAP) presents the rationale and strategy for characterization of the Hanford Generation Project (HGP). The characterization process is divided into two parts. The first part consists of the HGP building, Pipe Trestle, and transformer yard. The second part contains the rest. This separation allows for the building and adjacent areas to be removed and/or remediated before the outlying area and structures were removed and/or remediated. Detail of the contents of each part is described below. The Removal Action Workplan (RAW) (DOE/RL-98-37, Rev. 0) lists the following facilities and solid waste management units (SWMU's) that are approved for remediation and removal. The following table lists these facilities and areas that are approved, and whether they will be addressed in SAP Part 1 or Part 2. Facilities and areas that are not currently included in the RAW will also be addressed.

Description	Included in RAW	Included in Corrective Measures Study	SAP Part 1	SAP Part 2
185-N HGP Turbine Generator Building	Yes		✔	
1701-NE Gatehouse Area	Yes			✔
1703-N Field Office Building Area	Yes			✔
1716-NE Maintenance Garage	Yes			✔
1802-N Pipe Trestle	Yes		✔	
1908-NE HGP Outfall Structure	Yes			✔
181-NE HGP River Pumphouse	Yes			✔
SWMU #2 Oil Storage Area (Inside 185-N)	Yes	Yes	✔	
SWMU #3 HGP Floor Drains (Inside 185-N)	Yes	Yes	✔	
SWMU #4 Turbine Oil Filter Units	Yes	Yes	✔	
SWMU #7 Outfall Seal Well (1908-NE)	Yes	No		✔
SWMU #8 Maintenance Garage Floor (Inside 1716-NE) & Waste Drains	Yes	No		✔
SWMU #1 HGP Transformer Yard	No	Yes	✔	
SWMU #5 HGP Tile Field	No	Yes		✔
SWMU #6 HGP Settling Pond	No	Yes		✔
SWMU #9 HGP Gate Guard House & Office Building Waste Drains	Yes	Yes		✔
SWMU #10 HGP Bone Yard	No	Yes		✔
HGP Trestle Drains	Yes		✔	

Section 1.0 presents the background and sites history and summarizes the data quality objective process which provides a logical basis for this SAP. Preliminary surveys indicated that some low level radiochemical contamination is present.

Section 2.0 presents the quality assurance project plan, which includes a project management structure, sampling methods and quality control, and oversight of the sampling process.

Section 3.0 presents the Field Sampling Plan. The sampling process is divided into two stages to ensure that radiologically contaminated areas are identified prior to invasive sampling, thus ensuring that appropriate safeguards and procedures are established. Stage 1 is a radiological survey to define the boundaries of isotopic distribution and generate a preliminary list of nuclides present. Stage 2 defines the concentration of radionuclides and chemicals present.

Table 3-1 presents the sampling activities to be performed in Stage 1. Table 3-2 identifies the samples to be taken in Stage 2. Sampling Quality Control requirements are presented in Table 3-3.

CONTENTS

1.0 INTRODUCTION 1-1
1.1 BACKGROUND 1-2
1.1.1 Part 1 Area 1-3
1.1.2 Previous Investigations 1-6
1.1.3 Contaminants of Concern 1-6
1.1.4 Air Emission COC Evaluation 1-6
1.1.5 Asbestos 1-6
1.2 DATA QUALITY OBJECTIVES 1-7
1.2.1 Step 1: State the Problem 1-8
1.2.2 Step 2: Identify the Decisions 1-10
1.2.3 Step 3: Identify Inputs to the Decisions 1-10
1.2.4 Step 4: Define the Study Boundaries 1-10
1.2.5 Step 5: Develop Decision Rules 1-12
1.2.6 Step 6: Specify Limits on Decision Error 1-14
1.2.7 Step 7: Optimize the Design for Obtaining Data 1-14

2.0 QUALITY ASSURANCE PROJECT PLAN 2-1
2.1 PROJECT MANAGEMENT 2-1
2.1.1 Project and Task Organization 2-1
2.1.2 Roles and Responsibilities 2-1
2.1.3 Quality Objectives and Criteria for Measurement Data 2-2
2.1.4 Training Requirments/Certifications 2-6
2.1.5 Documentation and Records 2-7
2.2 MEASUREMENT/DATA ACQUISITION 2-7
2.2.1 Sampling Methods/Requirements 2-9
2.2.2 Sampling Handling and Custody Requirements 2-9
2.2.3 Sample Preservation, Containers, and Holding Times 2-9
2.2.4 Sample Shipping 2-9
2.2.5 Analytical Methods/Requirements 2-9
2.2.6 Radiological Surveys 2-10
2.2.7 Quality Control Requirements 2-10
2.2.8 Instrument/Equipment Testing, Inspections, and Maintenance Requirements 2-11
2.2.9 Instrument Calibration and Frequency 2-11
2.2.10 Inspection/Acceptance Requirements for Supplies and Consumables 2-12
2.2.11 Field Documentation 2-12
2.3 ASSESSMENT/OVERSIGHT 2-12
2.3.1 Assessments and Response Actions 2-12
2.3.2 Reports to Management 2-12
2.4 DATA VALIDATION AND USABILITY 2-12
2.4.1 Data Review, Validation, and Verification Requirements 2-12
2.4.2 Validation Methods 2-13
2.4.3 Reconciliation With User Requirements 2-13
2.5 DATA QUALITY ASSESSMENT 2-15

3.0 FIELD SAMPLING PLAN 3-1
3.1 SAMPLING OBJECTIVES 3-1
3.1.1 Stage 1 Objectives 3-1
3.1.2 Stage 2 Objectives 3-1
3.2 SAMPLING LOCATIONS AND FREQUENCY 3-1
3.2.1 Stage 1 Sampling Locations 3-2
3.2.2 Stage 2 Sampling Locations 3-2
3.2.3 Concrete Sampling 3-5
3.2.4 Paint Samples 3-5
3.2.5 Anomalous Media 3-6
3.3 QUALITY CONTROL SURVEYS/SAMPLING REQUIRMENTS 3-6
3.4 SURVEY/SAMPLING PROCEDURES 3-7
3.5 SAMPLE MANAGEMENT 3-7
3.6 MANAGEMENT OF INVESTIGATION OF DERIVED WASTE 3-7

4.0 HEALTH AND SAFETY 4-1
4.1 EMERGENCY MANAGEMENT 4-1
4.2 HEALTH AND SAFETY PROGRAMS 4-1
4.2.1 Worker Safety Program 4-1
4.2.2 Radiological Controls and Protection 4-1

5.0 REFERENCES 5-1

APPENDIX

A. PLAN VIEW DRAWINGS OF HGP TURBINE AND SUPPORT BUILDINGS A-1
B. SOLID WASTE MANAGEMENT UNITS B-1
C. EVALUATION OF HGP CONTAMINATION POTENTIAL C-1
D. ORGANIZATION CHART D-1

TABLES

1-1 Description of SWMUs at HGP – Part 1 1-5
1-2 Areas, Historical Data Summary, and Potential Contaminants 1-7
1-3 Additional Potentially Contaminated Structures/Items 1-8
1-4 Decision Makers and Planning Team 1-9
1-5 TC Rule Constituents 1-11
1-6 Hanford Generating Plant Sample Requirements 1-17
2-1 Action Level for Decision 2-4
2-2 Analytical Performance Requirements 2-5
3-1 Stage 1 Survey and Sampling Locations, Frequencies, and Methods 3-2
3-2 Stage 2 Survey and Sampling Locations, Frequencies, and Methods 3-3
3-3 Field QC Samples 3-6

ACRONYMS

AHERA	Asbestos Hazard Emergency Response Act
BHI	Bechtel Hanford, Inc.
BPA	Bonneville Power Administration
CFR	Code of Federal Regulations
COC	Contaminant(s) of Concern
COPC	Contaminant(s) of Potential Concern
DOE	U.S. Department of Energy
DQO	Data Quality Objective
EPA	U.S. Environmental Protection Agency
ERDF	Environmental Restoration Disposal Facility
GEA	Gamma Energy Analysis
HGP	Hanford Generating Project
JHA	Job Hazard Analysis
LDR	Landfill Disposal Restrictions
MCC	Motor Control Center
MDA	Minimum Detectable Activities
MDC	Minimum Detectable Concentration
MDL	Method Detection Limit
NPDES	National Pollutant Discharge Elimination System
PCB	Polychlorinated Biphenyls
PPE	Personal Protective Equipment
PRG	Potential Remediation Goal
QA	Quality Assurance
QAPP	Quality Assurance Program Plan
QAPjP	Quality Assurance Project Plan
QC	Quality Control
RCRA	Resource Conservation and Recovery Act of 1976
RFA	RCRA Facility Assessment
RPP	Radiation Protection Plan
RWP	Radiation Work Permit
SAF/FSR	Sample Authorization Form/Field Sampling Request
SAP	Sampling and Analysis Plan
SFL	Standard Fixed Laboratory
SVOA	Semivolatile Organic Analyses
SWMU	RCRA Solid Waste Management Units
TC	Toxicity Characteristic
TCLP	Toxic Characteristic Leaching Procedure
TSCA	Toxic Substances Control Act
UHCs	Underlying Hazardous Constituents
UTS	Universal Treatment Standards
VOA	Volatile Organic Analysis
WAC	Waste Acceptance Criteria
WDOE	Washington Department of Ecology
WDOH	Washington Department of Health

Metric Conversion Chart

Into Metric Units			Out of Metric Units		
If You Know	*Multiply By*	*To Get*	*If You Know*	*Multiply By*	*To Get*
Length			**Length**		
inches	25.4	millimeters	millimeters	0.039	inches
inches	2.54	centimeters	centimeters	0.394	inches
feet	0.305	meters	meters	3.281	feet
yards	0.914	meters	meters	1.094	yards
miles	1.609	kilometers	kilometers	0.621	miles
Area			**Area**		
sq. inches	6.452	sq. centimeters	sq. centimeters	0.155	sq. inches
sq. feet	0.093	sq. meters	sq. meters	10.76	sq. feet
sq. yards	0.0836	sq. meters	sq. meters	1.196	sq. yards
acres	0.405	hectares	hectares	2.47	acres
Mass (weight)			**Mass (weight)**		
ounces	28.35	grams	grams	0.035	ounces
pounds	0.454	kilograms	kilograms	2.205	pounds
Volume			**Volume**		
teaspoons	5	milliliters	milliliters	0.033	fluid ounces
tablespoons	15	milliliters	liters	2.1	pints
fluid ounces	30	milliliters	liters	1.057	quarts
pints	0.47	liters	liters	0.264	gallons
quarts	0.95	liters	cubic meters	35.315	cubic feet
gallons	3.8	liters	cubic meters	1.308	cubic yards
cubic feet	0.028	cubic meters			
cubic yards	0.765	cubic meters			
Temperature			**Temperature**		
Fahrenheit	subtract 32, then multiply by 5/9	Celsius	Celsius	multiply by 9/5, then add 32	Fahrenheit
Radioactivity			**Radioactivity**		
picocuries	37	millibecquerel	millibecquerel	0.027	picocuries

1.0 INTRODUCTION

This Sampling and Analysis Plan (SAP) presents the rationale and strategy for the sampling and analysis activities proposed in support of the decontamination and decommissioning (D&D) of the Hanford Generating Project located in the 100 N area of the Hanford Site.

This project is Part 1 of a two-part project to remove and dispose of the building and equipment that comprise the main facility and to remediate impacted areas. This plan provides requirements for the characterization of waste from D&D operations to help determine the appropriate disposition path. The following table identifies areas covered in Part 1 and Part 2 of the SAP.

Description	Included in RAW	Included in Corrective Measures Study	SAP Part 1	SAP Part 2
185-N HGP Turbine Generator Building	Yes		✔	
1701-NE Gatehouse Area	Yes			✔
1703-N Field Office Building Area	Yes			✔
1716-NE Maintenance Garage	Yes			✔
1802-N Pipe Trestle	Yes		✔	
1908-NE HGP Outfall Structure	Yes			✔
181-NE HGP River Pumphouse	Yes			✔
SWMU #2 Oil Storage Area (Inside 185-N)	Yes	Yes	✔	
SWMU #3 HGP Floor Drains (Inside 185-N)	Yes	Yes	✔	
SWMU #4 Turbine Oil Filter Units	Yes	Yes	✔	
SWMU #7 Outfall Seal Well (1908-NE)	Yes	No		✔
SWMU #8 Maintenance Garage Floor (Inside 1716-NE) & Waste Drains	Yes	No		✔
SWMU #1 HGP Transformer Yard	No	Yes	✔	
SWMU #5 HGP Tile Field	No	Yes		✔
SWMU #6 HGP Settling Pond	No	Yes		✔
SWMU #9 HGP Gate Guard House & Office Building Waste Drains	Yes	Yes		✔
SWMU #10 HGP Bone Yard	No	Yes		✔
HGP Trestle Drains	Yes		✔	

This SAP will include the characterization and sampling of these areas and their contents to support engineering design for the removal of these structures, cleanup of contamination, and characterization of debris for disposal. Information gathered may also be used in support of close out documentation for this effort. There will be two stages to this work. Stage 1 will be characterization to establish/confirm the radionuclide Contaminants of Concern (COC) and to obtain isotopic distributions. Stage 2 is the chemical and radionuclide characterization for disposal of debris and/or room contents. The term debris is used in this document and defined as

construction materials that are being demolished and disposed including, but not limited to, sheet rock, ceiling tiles, external walls and roofing. The term room contents is used in this document and defined as, but not limited to, desks, chairs, light fixtures, equipment, and piping. Depending on a cost benefit analysis, room contents may be salvaged/ recycled, or unconditionally released instead of disposed.

Appendix A shows the plan view of the respective buildings. The primary driver for the debris characterization is the development of appropriate disposal strategies for the buildings and their contents. There are three possible scenarios at this time for disposal of debris and material: 1) unconditional release for salvage/recycling/disposal, insitu concrete disposal; 2) disposal at the Environmental Restoration and Disposal Facility (ERDF); or 3) other approved facility.

Lessons learned from the evaluation of similar structures at the Hanford Site will contribute to assumptions regarding the non-radiological COCs. Characterization will allow for a determination as to the most appropriate and efficient method for disposing of the various waste streams from D&D operations and activities. Once materials are characterized, debris and room contents will be segregated, as appropriate. Items that cannot be unconditionally released using radiological controls for salvage or recycle will be disposed, along with building/room debris, at ERDF. The following tasks and activities are proposed to support the D&D of the 185-N Hanford Generating Plant Turbine Building:

- Conduct radiological and chemical surveys of functional areas and equipment to identify contaminated areas and equipment as necessary to support waste designation.
- Survey and remove uncontaminated furniture, tools, and other salvageable material from each functional area.
- Remove radiologically contaminated materials and dispose as radioactive waste as deemed appropriate.
- Characterize, remove and dispose of residual water from drains and sumps.
- Dismantle and/or demolish the functional area structures and segregate waste streams by radioactive content, physical form, and chemical form.
- Perform radiological surveys and sampling and analysis, as necessary to support waste designation and appropriate disposition.

1.1 BACKGROUND

HGP consists of two 430 megawatt, low-pressure turbine generators and is owned by Energy Northwest. The land under HGP is owned by the DOE and is part of the 100 N area. HGP operated continuously from April 1966 to December 1986, except for N refueling outages, maintenance, and repairs to the systems.

Steam from the N reactor powered the HGP turbines before passing through the turbine condenser, where waste heat was transferred to the cooling water. The condensed steam was returned to N reactor for reuse. The condenser and auxiliary cooling systems were supplied with raw water from the Columbia River by pumps located at the HGP pump house. Cooling water was discharged to the Columbia River through the HGP outfall structure.

The structures are located on a 50 acre HGP tract SW of 100 N reactor and include the main building, pump house, outfall, maintenance garage, old construction storage building area, guardhouse area, gasoline filling area, diesel storage tank, generator, and equipment storage yard. A RCRA Facility Assessment (RFA) was performed in 1992 (EPA 1992). The RFA outlines 11 areas which were identified as RCRA Solid Waste Management Units (SWMUs) and areas which were not indicated as SWMUs. Appendix B describes the SWMUs based on the RFA, EPA and WDOE documents, and personal visual inspection of the site.

The HGP accepted steam from the N reactor for approximately twenty years. Small leaks between the primary and secondary cooling systems inside the N Reactor facility caused the steam to be slightly radioactive.

Due to the nature, type, and level of radioactive contamination present in the HGP facility and systems, Energy Northwest developed and received approval from DOE for its site specific Radiological Protection Plan. The applicable procedures are currently implemented and postings comply with current requirements.

1.1.1 Part 1 Area

The selected areas for Part 1 D&D activities are located in building 185-N (containing SWMU #2, #3, and #4), the transformer yard (SWMU #1), and the steam supply and feed water piping and their associated traps and drains from the N Reactor facility. Currently, these areas are posted as radiological buffer areas (RBAs), posted as contamination areas, or not posted at all. Each area is described below:

1.1.1.1 Transformer Yard (SWMU #1)

Nine large transformers are arranged outside in a row along the northwest wall of the HGP building (about 400 feet in length). Each transformer is approximately 20 feet tall and 8 feet square and is placed on top of a concrete pad about 10 feet square. The bulk of the area is unpaved and covered with crushed rock. Each transformer has a fluid pump attached to one side and a main valve on the adjacent side. The pumps and valves protrude beyond the transformer pads. The valves and pumps of several of the transformers have passive leaks, as indicated by fluids present on the outside of the transformer and oil stains on the concrete pad and crushed rock below.

1.1.1.2 External Steam Supply and Feed Water Return Piping Runs

This structure consists of a pipe trestle, piping (steam and feedwater), and drains. HGP ownership ends at the N-Reactor security fence.

1.1.1.3 Hanford Generating Building (185-N)

This structure contains four operating levels for the turbines, generators, support equipment, control room, and overhead cranes. Attached to the North end of the building, is the support/office facility consisting of five levels. Each floor and level is described below:

1.1.1.3.1 Operating Floor

The operating floor contains the steam turbine and generators, the above grade building support structure, over head crane, main steam stop valves, throttle valves, control room, supply air plenums and fans, condensate polishing units, diesel generator room, and deaerating heater storage tanks. The main steam piping passes underneath this floor and the platform below.

1.1.1.3.2 Platform

The platform floor is at elevation (-) 16'0" and contains the tops of the four condensers, 4160 KV switch gear room, excitation cabinets for the generators, oil lift pumps, communications room, elevated platforms to the main steam lines, bus ducts, and platforms over the steam inlet piping.

1.1.1.3.3 Mezzanine

The mezzanine is at elevation (-) 33'0" and contains the mid parts of the condensers, cooling water inlets to the condensers, Low Pressure heaters, steam jet air ejectors, various Motor Control Centers (MCCs), 480 V switch gear, potential transformers, neutral grounding transformers, oil coolers and tanks, steam packing exhausters, batteries, battery chargers, and vent fans.

1.1.1.3.4 Basement (SWMUs #2, #3, and #4)

The basement is at elevation (-) 50'0" and contains SWMUs #2, #3, and #4 defined in Table 1-1. Additionally, the roof and floor drain sumps, condenser hot wells, condenser sumps, condensate pumps, main feed pumps, heater drain pumps, are located on this level. Also, MCCs, 480 V switch gear, water outlet from the condenser, air compressors and reservoirs, hydrazine and morpholine storage tanks and injection pumps, hydrogen seal oil units and sumps, service water pumps, vacuum pumps and tanks, condensate drain tanks, and blow down tanks are placed on this level.

Table 1-1. Description of SWMUs at HGP – Part 1

SWMU #2	HGP Building Oil Storage – Along the interior northwest wall of the HGP building is a cinder block room approximately 8' x 25'(El.(-) 50'00"). Drums and smaller containers of products (e.g.,, petroleum, oil and lubricants) were stored on the floor and shelving. One drum was labeled for used oil. A blind concrete sump (no outlet) is located below the grated floor.
SWMU #3	HGP Building Floor Drains, Sumps all Piping to the Settling Pond and Outfall – Several floor drains in the basement level (El.(-) 50'00") of the HGP Building collect spills, leaks and any flood waters and direct them to two main sumps. (The elevation of the basement level of the HGP building is below the nearby Columbia River.) The sump contents were then discharged to the settling pond (SWMU 6). Prior to the late 1960s, this water was discharged directly to the HGP outfall, until concern about oil releases led the facility to permanently divert the discharge to the settling pond.
SWMU #4	Turbine oil filter unit – The turbine oil cleaning systems are in the basement (El.(-) 50'00") of the HGP building along the northeast and southeast walls. Each unit consists of a steel tank 8 ft square x 4 ft tall as well as a below-grade sump approximately 6 ft square x 6 ft deep. Under each lid is a series of filters through which the turbine oil flows after being piped directly to each turbine. The entire unit is surrounded by a concrete berm approximately 6 inches high.

1.1.1.4 HGP Attached Support Structure

This five level structure is attached to the North end of the turbine building. Sanitary and shower drains, drain to the Sewage Ejector Pump and Sanitary Drain Trap located on the First Level [(-) 50']. The drains from the Chemical Laboratory roof drains, and the floor drains located in the machine shop drain into the 1A main sump.

1.1.1.4.1 Second Floor

The second floor is at elevation (+) 14'0" and contains offices, an observation platform, restrooms, and chemical laboratory. The chemical laboratory has three drains and a fume hood vent.

1.1.1.4.2 First Floor

The first floor contains restrooms, large meeting/dining area, kitchen, first aid room, and a mechanical equipment room. The mechanical equipment room contains the fans, air conditioning and heating units for the support areas.

1.1.1.4.3 Third Level

The third level is at elevation (-) 16'0" and contains offices, restroom, electrical shop, battery shop, instrument shop, lunchroom, and mechanical equipment room.

1.1.1.4.4 Second Level

The second level is at elevation (-) 33'0" and contains a telephone room, locker room, shower room, restroom, and shop storage area.

1.1.1.4.5 First Level

The first level is at elevation (-) 50'0" and contains a machine shop, office, restroom, elevator machinery room, and the sewage ejection pumps, and sanitary trap pit. All of the floor drains, laboratory drains, roof drains flow to sump 1A. All restroom, sink, and janitor closet drains flow to the sanitary trap pit. In the machine shop, cable runs located in the floor, have holes drilled in the covers for ventilation or drainage. In addition an exhaust vent system runs the length of the shop.

1.1.2 Previous Investigations

Previous investigations include a RCRA Facility Assessment, (EPA 1992) that identified several solid waste management units (SWMUs). Westinghouse Hanford Company conducted a radiation survey in 1993. Those results are summarized in Table 1-2. Bechtel Hanford Inc. (BHI) was contracted in 1996 to conduct preliminary characterization of the HGP Site. Characterization results are published in BHI-00929, Rev. 0 and are summarized in Table 1-2.

1.1.3 Contaminants of Concern (COC)

COCs for this sampling plan and scope of work have been identified and are included in Table 1-2 and Table 1-3. Table 1-3 was generated from walk downs of the HGP facility, and identified areas of concern that were not addressed adequately in the DQO process.

1.1.4 Air Emission COC Evaluation

Air emission issues could stem from the disturbance of COCs. Activities that could cause air emission issues would be centered around asbestos or radioactive particles. Most of the asbestos has been abated from the building via Contract C40111. Small areas that were contaminated with radiation above background remain within the building. Cutting and grinding operations on steam pipes could produce airborne radioactive particles. Engineered controls will be used as appropriate (e.g., greenhouses, glove bags, etc.) in accordance with the HGP Radiological Protection Plan.

1.1.5 Asbestos

An Asbestos Hazard Emergency Response Act (AHERA) inspection was completed for the HGP Project via Contract C40068. The majority of asbestos materials have been removed to the extent possible with only small amounts of friable asbestos remaining.

Table 1-2. Areas, Historical Data Summary, and Potential Contaminants

Area/SWMU	Source of Historical Data	Contaminant Sources	Potential Contaminants and Media
HGP Steam/Turbine System	Comparison of data from HGP Verification Survey (ERC memo August 1996 - verifies data in WHC-SD-NR-ER-100)	Steam from N Reactor	Cobalt-60 confirmed by August 1996 verification, and possibly Sr-90, Cs-137
SWMUs in HGP #2 oil storage #3 floor drains, sumps, piping to outfall #4 turbine oil filter	None	Lubrication oil, equipment oil	Lube oil drums on concrete. Potential radioactive contaminants in SWMU #3
SWMU #1 Transformer Yard	WPPSS analysis data	Transformer PCBs	PCB (in Transformer oil), TPH. Blown in contamination. The media in this area is soil and concrete.
Laboratory in Support Services Building	Plant employee knowledge Hazardous Waste Packing Papers when chemicals from Laboratory shipped for disposal	Various chemicals Little-to-no potential for radiation contamination	MEK, TCE, hydrazine, morpholine, mercury, lead, zinc, phosphoric acid, acetic acid, copper, sulfuric acid, silver
Sanitary Drain Pit, Support Services Building	None	Sanitary facilities, kitchen, showers, and some drains from Support Services Building	Mercury, lead, zinc, copper, sulfuric acid, silver
Additional Areas	AHERA Survey Plant employee knowledge		Asbestos, lead paint, mercury, lead, creosote, morpholine, hydrazine, PCBs, petroleum in media.

1.2 DATA QUALITY OBJECTIVES

The U.S. Environmental Protection Agency's (EPA) Data Quality Objectives (DQO) process was used to develop the DQO for HGP. The DQO process is a systematic, strategic planning approach process for defining the criteria that a data collection design should satisfy. The DQO process has seven steps:

Step 1: State the Problem
Step 2: Identify the decisions
Step 3: Identify the inputs to the decisions
Step 4: Define the study boundaries
Step 5: Develop decision rules
Step 6: Specify limits on decision error
Step 7: Optimize the design for obtaining data.

Table 1-3. Additional Potentially Contaminated Structures/Items

Structure/Item	Potential Contaminants
Pipes	Asbestos (thermal asbestos insulating material and floor tiles have been abated and disposed of, except in contaminated areas)
Walls	Lead Paint
Relay Switches, Manometers, Gauges	Mercury
Batteries	Lead, selenium, cadmium, sulfuric acid
Diesel Tank(s) located SW side of HGP and west side of 185-N	Diesel
Chemical Injection System (tanks, piping, pumps, spills)	Hydrazine, morpholine
Miscellaneous Equipment (snubbers, pumps)	Oil
Transformers	PCBs, mineral oil
Generators	Hydrogen
Light ballasts, Light Bulbs, Electrical Fuses	PCBs, mercury, lead
Air Dryer	Calcium chloride

The DQOs for this SAP were developed (Data Quality Objectives Summary Report in Support of Hanford Generating Project) in 1996. BHI-00929, Rev. 0., provides a complete discussion of the DQO process. A summary of the seven steps of the DQO process as it relates to this SAP is provided below.

1.2.1 Step 1: State the Problem

The initial problem is to establish approximately how much area and equipment needs to be removed and remediated. The information will be used to establish estimated costs of cleanup for radioactive and dangerous waste. This information will subsequently be used to refine remediation and liability cost estimates. Additionally, should DOE-RL take the facility after remediation, cleanup levels need to be verifiable and acceptable to assure successful remediation has been established.

1.2.1.1 Decision Makers and Technical Staff

The Decision Makers and Planning Team are listed in Table 1-4. Many of these personnel are DOE contractors, are advisory, and report only to DOE.

1.2.1.2 Conceptual Model

The conceptual model must be developed based on previous data, site and process history, known sources of contamination types in each media, potential land use, and routes of migration. A conceptual model is not necessarily a numerical model, but a concept of the potential location of contaminants based on general process knowledge, fate and transport in the media, length of

time the constituent has been present, volatility of compounds, and other technical information. Table 1-2 summarizes the historical data, the source of the data, and the potential contaminants.

The model for the oily areas of the building included examination of the oil and any concrete associated with the oil by spill or by containment. The model for the steam piping system assumes areas such as the condenser and the low points between the pipes have the highest level of contaminants.

Table 1-4. Decision Makers and Planning Team

Name	Organization	Role/Responsibility
Paul Pak	DOE-RL	Decision maker not attending meetings. Interviewed during planning and global issue discussion.
David Fraley	Energy Northwest	Decision maker not attending meetings. Interviewed during planning and global issue discussion.
Loren Oakes	Energy Northwest	Decision maker
David Olson	DOE-RL	Decision maker
Phil Staats	Ecology person responsible for 100 N area DOE-RL remediation tasks	Decision maker not attending meetings
Technical Staff		
Hubert Plagge	ERC/BHI	Project Engineer
Rex Miller	ERC	Task Lead
Steve Marske	ERC	Engineer responsible for writing characterization plan
David Enecke	ERC	Chemist
Tom Edwards	ERC	Radiological engineering
Clay Smith	ERC	Risk assessment
Ella Coenenberg	ERC	Regulatory support
Darby Stapp	ERC	Cultural
Alan Krug	ERC	Provide information on 100 NR 1 and 2 remediation plans
Debbie Carlson	Neptune and Co.	Statistical support
Mitizi Miller	EQM	Facilitator

1.2.1.3 Potential Exposure Routes/Receptors

The exposure pathways, receptors, and land use scenarios for HGP must be consistent with the other locations which are part of the 100 NR-1 source units and the 100 NR-2 groundwater. These units are the remediation units defined by the Tri-Party Agreement. The 100 NR-1 and NR-2 Corrective Measures Studies/Feasibility Studies (CMS) contain a section outlining the exposure routes and pathways, the conceptual model, and the remedial action objectives.

The DQO provides a list of constituents of concern and potential remedial action goals (PRGs) which drive sampling and analysis for the HGP. PRGs are used to evaluate risk posed by specific contaminants, to identify contaminants which drive remediation, and to provide target cleanup goals for use in remedial design. Should these PRGs change for the NR-1 and NR-2, any sampling and analysis plans for the HGP may adapt to these changes in order to remain consistent in the 100 N area.

The PRGs for 100 NR-1 and NR-2 are based on a land use scenario which has been agreed upon with Ecology, who is the lead agency for the 100 N area. The land use scenario is rural-residential.

The waste removal levels for the radioactivity in the building are based on the release levels presented in NUREG 1.86 and DOE Order 5400.5 which are presented in Table 2-2.

The cleanup concentration levels for remediation of concrete and building surfaces include the Washington Dangerous Waste Codes, MTCA requirements which relate to TC levels of debris (Table 1-6) and the EPA radiochemical exposure level of 15 mrem total allowable annual dose. MTCA has no specific levels for matrices other than soil and groundwater, therefore, levels in buildings must be negotiated if the structure remains in place after removal of the contents. Final dangerous waste levels assumed for this study were the TC levels for the concrete left behind in the building. The 15 mrem level and the TC levels are negotiable between the regulators and the organization who is responsible for remediation. The TC levels and the 15 mrem dose were used for estimation of the number of samples.

1.2.2 Step 2: Identify the Decisions

A list of decisions that need to be made was identified during the DQO process. These decisions are focused on liability and cleanup costs. Additionally, these decisions provide input to four other decisions that will have to be made.

1.2.3 Step 3: Identify Inputs to the Decisions

For each decision, the information needed to resolve the decision is listed in Table 3-1 of BHI-00929, Rev. 0, Data Quality Objectives Summary Report in Support of the Hanford Generating Project. This table also lists sources of the information needed either via measurement, modeling, or from publications. Appendix C provides a table of potential radioactive contamination inside HGP systems. That table, combined with visual inspection of the facility, suggests that decision 5, "Determine whether any further sampling for radioactivity is needed within the HGP steam/turbine systems prior to D&D," needs revisited. The DQO Summary Report (BHI-00929, Rev. 0) indicates that the team determined that no additional sampling needs to be done until D&D begins. During asbestos removal, samples of dust collected and concentrated from the condenser sump, indicated detectable radioactive contamination. Based on this information, additional sampling for radioactive contaminants will be conducted prior to D&D.

1.2.4 Step 4: Define the Study Boundaries

Although the group agreed that no further sampling was required for the steam pipe system, no boundary discussion for sampling the surrounding media was provided.

Table 1-5. TC Rule Constituents (WAC 173-303-090(8)(c))

EPA WASTE NUMBER	HAZARDOUS CONSTITUENT	DW Threshold (mg/l)	EPA WASTE NUMBER	HAZARDOUS CONSTITUENT	DW Threshold (mg/l)
D004	Arsenic	5.0	D024	m-Cresol	200.0
D005	Barium	100.0	D025	p-Cresol	200.0
D006	Cadmium	1.0	D026	Cresol (total)	200.0
D007	Chromium	5.0	D027	1,4-Dichlorobenzene	7.5
D008	Lead	5.0	D028	1,2-Dichloroethane	0.5
D009	Mercury	0.2	D029	1,1-Dichloroethylene	0.7
D010	Selenium	1.0	D030	2,4-Dinitrotoluene	0.13
D011	Silver	5.0	D031	Heptachlor (& epoxide)	0.008
D012	Endrin	0.02	D032	Hexachlorobenzene	0.13
D013	Lindane	0.4	D033	Hexachloro-1,3-butadiene	0.5
D014	Methoxychlor	10.0	D034	Hexachloroethane	3.0
D015	Toxaphene	0.5	D035	Methyl ethyl ketone	200.0
D016	2,4-D	10.0	D036	Nitrobenzene	2.0
D017	2,4,5-TP (Silvex)	1.0	D037	Pentachlorophenol	100.0
D018	Benzene	0.5	D038	Pyridine	5.0
D019	Carbon tetrachloride	0.5	D039	Tetrachloroethylene	0.7
D020	Chlordane	0.03	D040	Trichloroethylene	0.5
D021	Chlorobenzene	100.0	D041	2,3,5-Trichlorophenol	400.0
D022	Chloroform	6.0	D042	2,4,6-Trichlorophenol	2.0
D023	o-Cresol	200.0	D043	Vinyl chloride	0.2

1.2.4.1 SWMUs External to Buildings - Horizontal Boundary

The boundary of SWMU #1 was discussed for potential sampling. Appendix B provides a description of this area.

1.2.4.2 SWMUs External to Buildings - Vertical Boundary

The goal is to provide data to indicate whether contamination is present at the worst case areas and to identify the potential depth of the contamination up to 15 ft. State regulations indicate that MTCA levels apply to the first 15 ft. of soil that could result in human exposure by direct contact. Subsequent sampling after remediation will provide additional verification for cases where no analytes are found or provide additional data should contamination extend beyond 15 ft. The conceptual model indicated that contaminants are likely to be in the top foot, which is well within the 15 ft. criteria for MTCA.

Based on the conceptual model that contaminants did not migrate below surface, 0-1 ft, no groundwater sampling was planned. Should data indicate contaminates at 15 ft., investigation of the vadose zone, modeling, and groundwater sampling may be considered.

1.2.4.3 SWMUs Inside Buildings

SWMUs inside the buildings contain oil. The oil will be removed and sampled (see Table 1-6 for sample requirements). In areas where staining occurs or areas covered by oil, the concrete will be sampled.

1.2.5 Step 5: Develop Decision Rules

The decisions were presented in Section 2 of the DQO Summary Report (BHI-00929, Rev. 0) document. Decisions 1-4 are commercial decisions to be negotiated between Energy Northwest and DOE are not applicable to this document. Decisions 5-9 have been renumbered for this document. Decision 1 was made by the group based on current data. Decisions 2, 4, and 5 are important to allow cost estimation of the D&D and remediation. These decisions apply to the SWMUs only and not the additional items in Table 1-3, nor to the disposal of the steam system piping.

<u>Primary Decisions</u>

The information from the following decisions will affect disposal, remediation cost, and thus the amount of money which will be negotiated between parties.

1. Determine whether any additional sampling for radioactivity is needed within the HGP steam/turbine system prior to D&D.

2. Determine whether the contents of the facility related to SWMUs 2, 3, 4, and 8 can be disposed of as dangerous waste, radioactive waste, mixed waste, or are uncontaminated.

   - If the composite from concrete samples taken from SWMUs 2, 4, and 8 exceeds the TC criteria listed in Table 1-5 for metals, the material must be disposed as dangerous waste.

   - If the sludge or scale samples from SWMU 4 exceed TC criteria in Table 1-5 for metals, the material must be disposed as dangerous waste.

   - If any of the oil samples have PCB concentrations which exceed TSCA levels of 50 ppm, the oil must be disposed as TSCA waste with waste code W001. If the oil is between 2 and 50 ppm, Washington State regulations require management of the waste as a dangerous waste unless it is managed per TSCA federal regulations.

- If the sludge/scale samples from SWMU 4 exceed the radioactive release levels in HGP Radiological Procedures, the material is a radioactive material and must disposed as such.

- If the sludge/scale samples from SWMU 4 exceed both TC and radioactive waste criteria, the material is mixed waste.

3. Determine whether the HGP building will remain or be removed.

4. Determine whether the building contents and buildings can be disposed of as dangerous waste, radioactive waste, mixed waste or are uncontaminated.

   - In general, the levels used for decision criteria in Table 1-5 and the PCB criteria apply for the building in the same manner as the rules related to decision 2. However, the scope of this sampling plan does not include items such as those listed in Table 1-3.

5. Determine whether the soils in the external SWMU 1 exceed the MTCA levels for residential cleanup or groundwater protection standards.

   - If the results for any sample are above background, and exceed the residential cleanup or groundwater protection standards, additional sampling should be done to determine extent of contamination. These cleanup levels are listed in Tables A6-1, A6-2, A6-5 and A6-6 in Attachment 6 of BHI-00929, Rev. 0. This sampling may be done in concert with remediation.

The purpose of this DQO was to provide criteria for sampling and analysis to support the D&D of the steam system and initial assessment of contamination of the SWMUs. The levels for verification of the remediation of the concrete and other structures were not finalized as the DQO decision makers are focusing on the liability issues. The typical levels for remediation within the building are the TC levels for metals, VOCs, SVOCs, and 15 mrem dose for any radionuclides remaining.

For this SAP, decisions 2, 4, and 5 are important to allow cost estimation of the D&D and remediation. These decisions apply to the SWMUs only and not the additional items in Table 1-3, nor to the disposal of the steam system piping. Below, decisions 2, 4, and 5 are listed along with the associated decision rules.

2. Determine whether the contents of the facility related to SWMUs 2, 3, and 4 can be disposed of as dangerous waste, radioactive waste, mixed waste, or are uncontaminated.

   - If the composite from concrete samples taken from SWMUs 2 and 4 exceeds the TC criteria listed in Table 1-5 for metals, the material must be disposed as dangerous waste.

- If the sludge or scale samples from SWMU 4 exceed TC criteria in Table 1-5 for metals, the material must be disposed as dangerous waste.

- If any of the oil samples have PCB concentrations which exceed TSCA levels of 50 ppm, the oil must be disposed as TSCA waste with waste code W001. If the oil is between 2-50 ppm, Washington State regulations require management of the waste as a dangerous waste unless it is managed per TSCA federal regulations.

- If the sludge/scale samples from SWMU 4 exceed the radioactive release levels of 15 mrem/year, the material is a radioactive material and must disposed as such.

- If the sludge/scale samples from SWMU 4 exceed both TC and radioactive waste criteria, the material is mixed waste.

3. Determine whether the HGP building will remain or be removed. Not applicable to this SAP

4. Determine whether the building contents and buildings can be disposed of as dangerous waste, radioactive waste, mixed waste or are uncontaminated.

   - In general, the levels used for decision criteria in Table 1-5 and the PCB criteria apply for the building in the same manner as the rules related to decision 2.

5. Determine whether the soils in the external SWMU 1 exceed the MTCA levels for residential cleanup, or groundwater protection standards.

   - If the results for any sample are above background, and exceed the residential cleanup or groundwater protection standards, additional sampling should be done to determine extent of contamination. This sampling may be done in concert with remediation.

1.2.6 Step 6: Specify Limits on Decision Error

Section 6.0, "Decision Uncertainty" of the DQO Summary Report (BHI-00929, Rev.0), provides a thorough discussion on the assumptions, and other inputs required to bound the errors. This discussion is based on data taken from one bore hole sample of the settling pond (SWMU #6).

1.2.7 Step 7: Optimize the Design for Obtaining Data

The rationale (obtained from Washington State Department of Ecology Toxics Cleanup Program, "Guidance on Sampling and Data Analysis Methods, and SW 846 Chapter 9) for the number of samples and general location for each of the SWMUs identified in this SAP is listed below:

1. Six (6) random soil samples from stained areas around the transformer yard will be analyzed. Nine transformers, grouped in three's, rest on cement pads which are surrounded by soil; portions of the soil are stained. A sample will consist of a grab

from the most visibly stained soil around each group of three transformers. (40 CFR 761)

2. The HGP Building Oil Storage area is a room in the basement of the HGP building used to store 55-gallon and smaller drums of oil, lubricants, etc. Once the drums are removed, oil-stained concrete may remain as well as a collection of oil in the sump. A single grab sample from the sump oil will be taken. Once the oil has then been removed, a sample of concrete chips taken from the three most visibly stained areas of the floor and walls will be taken. If there are fewer than three stained areas, each will be sampled.
3. Several floor drains direct spills, leaks, etc. to sumps which then drain to the settling pond. Between the sumps and the settling pond, outside of the HGP building, is a manhole which allows access to the effluent pipe. Grab samples will be taken from the sludge at the bottom of each of the sumps and two grab samples will be taken from the effluent pipe, as accessed from the manhole. The effluent pipe grabs will consist of one scale grab and one sludge grab. If one of each cannot be acquired, two of the same medium will be taken.
4. The Turbine Oil Filter Unit consists of two identically arranged bermed areas in the basement of the HGP Building; one on each of the north and south walls. Each area consists of an upper bermed area and a sump. Four (4) samples of concrete chips will be taken from this SWMU, once the oil has been removed: north and south sumps and north and south bermed areas. The sample material will be taken from the most visibly stained portions of the concrete in each area.

Additional sampling is identified in Tables 3-1 and 3-2.

1.2.7.1 Analysis Strategy

Table 1-6 outlines the analytes, the number of samples, sample matrix, and the analytical methods for each SWMU. The potential COCs are generally listed here with discussions related to the analytical methods.

- TC metals to include arsenic, barium, cadmium, chromium, lead, selenium, silver, mercury by appropriate SW 846 methods
- PCBs by SW 846 method 8082
- oils and petroleum products, heavy molecular weight lubricants analyzed by SW 846 method 8015B
- strontium 90 by ITAS-RD-3204, cesium 137, cobalt 60 by Gamma Emission Analysis (GEA) method ITAS-RD-3219 or its equivalent
- additional gamma emitting radionuclides above established baseline values will be reported should these be present

- gross alpha and beta using method ITAS-RD-3214 or its equivalent will be performed. Should alpha exceed 3 pCi/g, or beta exceed 43 pCi/g, additional nuclide specific analyses may be required.

- ammonia which is indicative of morpholine (EPA 350.2).

The accuracy and precision specified in the SW 846 methods will be sufficient for the analyses. For the radiochemical analyses, the accuracy and precision of the methods specified is well within the total variance estimates.

Prior to soil sampling, SWMU #1 will undergo a limited radionuclide survey for total beta/gamma. Any positive responses and the associated activities will be documented.

Table 1-6. Hanford Generating Plant Sample Requirements

HANFORD GENERATING PLANT	RAD ANALYSIS						CHEMICAL ANALYSIS												ANALYSIS INFORMATION
				GEA			Metals									Others			
Sample Point	Gross Alpha	Gross Beta	Sr-90	Co-60	Cs-137	Other Detectable Isotopes	TCLP Extraction	Arsenic	Barium	Cadmium	Chromium	Lead	Selenium	Silver	Mercury	Soxhlet Extraction/ Nonhalogenated Organics using GC/FID	PCB/TPH	Ammonia	Comments
SWMU #1 Transformer Yard																	X		6-total random samples of stained soil (1 from each grouping of three transformers)
SWMU #2 HGP Building Oil Storage							X	X	X	X	X	X	X	X	X	X	X		2-total samples. 1 in the oil sump, 1 of the concrete after all of the oil has been removed.
SWMU #3 Drains, Sumps, Piping	X	X	X	X	X	X	X	X	X	X	X	X	X	X	X	X	X	X	1-sludge and 1-scale sample taken from within the manhole. 1-sludge sample taken from each of the main sumps (2- total)
SWMU #4 Turbine Oil Filter Units							X	X	X	X	X	X	X	X	X	X	X		4-total concrete samples. 1 from the upper bermed area, 1 from the lower sump area (after oil is pumped)

2.0 QUALITY ASSURANCE PROJECT PLAN

This QAPjP presents the objectives, functional activities, methods, and QA/QC procedures associated with the sample collection, field surveys/measurements, and laboratory analyses associated with characterization activities supporting D&D. This QAPjP also follows EPA guidelines contained in the *EPA Requirements for Quality Assurance Project Plans for Environmental Data Operations* (EPA 1994).

2.1 PROJECT MANAGEMENT

2.1.1 Project and Task Field Organization

The project/task field organization for D&D Project Management is the WNP-1/3 and HGP Project Staff. An organizational chart is provided at Appendix D.

The field samplers will be responsible for sample collection, packaging, and shipping. The Radiation Support Group shall provide radiological control. The HGP Environmental, Safety and Health Group shall provide project assistance in performing environmental surveys and collecting environmental samples and safety support as required, while the Quality Assurance/Quality Control (QA/QC) Group shall be responsible for performing independent quality verification activities.

2.1.2 Roles and Responsibilities

This section identifies the responsibilities of various organizations supporting HGP characterization.

2.1.2.1 HGP Project Management

- Prepare the sampling and analysis plan
- Review contractor developed protocols in support of these activities
- Coordinate sampling and analysis activities
- Oversee sampling activities
- Prepare the final characterization report
- Arrange for laboratory analysis of samples
- Receive data packages from the laboratory
- Provide unique sample numbers for sample identification
- Provide laboratory data package
- Validate data to level identified in this plan.

2.1.2.2 Field Sampling Contractors and Personnel

- Develop protocols to support activities
- Perform sampling
- Provide certified clean sampling bottles/containers
- Document sampling activities in a controlled logbook
- Initiate chain-of-custody documentation for samples
- Package and transport samples to the laboratory or shipping center.

2.1.2.3 Environmental, Safety, and Health

- Provide the approved Job Hazard Analysis (JHA)
- Assure the contractor(s) have Health and Safety Plans (HASP)
- Provide field support to the sample team
- Provide coordination with other organizations (Radiation Control, Safety, etc.) to support the sample team.

NOTE: The personal protective equipment (PPE) to be worn during sampling shall be listed on the job-specific JHA and Radiation Work Permit (RWP), as required.

2.1.2.4 Radiological Controls

- Provide the RWPs
- Recommend as low as reasonably achievable actions where necessary
- Coordinate the performance of radiological surveys
- Provide dose rate data for sample collection, packaging, and shipping
- Provide data package summarizing survey results
- Provide radiological survey instrumentation.

2.1.2.5 Quality Assurance/Quality Control Field Organization

- Conduct random surveillances to verify compliance with requirements of this plan
- Ensure the necessary QC checks of samples
- Ensure splits of samples are prepared in accordance with the approved SAP
- Ensure blanks are submitted.

2.1.3 Quality Objectives and Criteria for Measurement Data

A DQO process was conducted in accordance with *Guidance for the Data Quality Objective Process* (EPA 1996). Input to the DQO process was provided by members of the DOE Decommissioning Project and Management Teams. A summary of COCs for HGP and the Transformer Yard are presented in Table 1-2 and Table 1-3. The action levels for waste disposition decision-making is provided in Table 2-1. Limits for unconditional release of radiologically contaminated materials will be in accordance with HGP Radiological Procedure

RP-RAM-301. Release of materials to ERDF will be based on the ERDF Waste Acceptance Criteria (WAC). Detection limits specified for standard fixed laboratory (SFL) analyses are based on the ERDF (BHI 1998b). Minimum detectable activities (MDAs) for unconditional release surveys must be below the decision limits listed in Table 2-2. No risk assessment was necessary under the disposal assumptions for levels of hazardous materials anticipated.

Analytical sample and radiological survey data generated through this SAP must be defensible and certify that the waste is in compliance with the receiving facility's WAC. The waste generator may provide a certification statement with each shipment that is supported by the data. It is therefore imperative that accurate data are generated in a controlled manner on samples directly traceable to samples analyzed.

Radionuclide contaminants are not limited to surfaces of construction materials. They are in the steam piping, steam drains, steam traps, drain collecting tanks, and waste drain collection sumps and pumps. It is suspected that these contaminants may also be in the condenser hot wells, and air ejector systems. Chemical contaminants are in light ballasts, oil tanks, purifiers, sumps, pumps, laboratory drains, laboratory hoods, sanitary drains, and stains on the surface of construction materials.

The QA objective of this plan is to develop implementation guidance that will provide data of known and appropriate quality. Data quality is assessed by representativeness, comparability, accuracy, precision, and completeness. Definitions of these parameters, applicable guidelines, and level of effort are described below. The applicable QC guidelines, quantitative target limits, and levels of effort for assessing data quality are dictated by the intended use of the data and the nature of the analytical method. The SFL detection limits, QC parameters and specifications for the field measurements are presented in Table 2-3. The nomenclature used to describe quality parameters is contained in the following discussion.

Table 2-1. Action Level for the Decision

COC	Action Level[a]
Gross beta-gamma	15 mrem/year
Cost-benefit	Regulatory compliant feasible low cost alternative
Rad Constituents	15 mrem/year
TC Metals	**TCLP Action Levels [a]**
	Soil (mg/kg)
Arsenic	20[b]
Barium	5600
Cadmium	80
Chromium (VI)	400
Lead	250[b]
Mercury	24
Selenium	400
Silver	400
Nonmetals	**(µg/L unless otherwise noted)[a]**
Total Cyanide	1600[b]
Polychlorinated biphenyls (PCBs)	0.13
SVOAs	MTCA Method B
VOAs	MTCA Method B
pH	≤2: ≥12.5
Ignitability	140°

[a] MTCA Method B

[b] MTCA Method A

[c] Federal Maximum Contaminant Limit (MCL)

Table 2-3. Analytical Performance Requirements

Data Type	Analytical Method	Analyte	Preliminary Action Level[a]	Detection Limit Requirements MDL[a]	PQL[a]	Accuracy Req't (% Recovery)	Precision Req't (% RSD or RSD)
Performance Requirements for Identification and Ratio Determination[b]							
Rad	GeLi/HPGe AmAEA	Americium-241	NA	0.1 0.1	1 1	80-120 70-130	±30 ±30
Rad	Chem Sep/Liq Scintillation	Carbon-14	N/A	5	50	70-130	±30
Rad	GeLi/HPGe	Cobalt-60	N/A	0.05	0.1	80-120	±30
Rad	GeLi/HPGe	Cesium-137	N/A	0.05	0.1	80-120	±30
Rad	GeLi/HPGe	Europium-152	N/A	0.1	0.2	80-120	±30
Rad	GeLi/HPGe	Europium-154	N/A	0.1	0.2	80-120	±30
Rad	GeLi/HPGe	Europium-155	N/A	0.05	0.1	80-120	±30
Rad	Chem Sep/Liq Scintillation	Nickel-63	N/A	5	30	70-130	±30
Rad	PuAEA	Plutonium-238	N/A	0.1	1	70-130	±30
Rad	PuAEA	Plutonium-239/240	N/A	0.1	1	70-130	±30
Rad	RADSr	Strontium-90	N/A	0.2	1	70-130	±30
Rad	Distillation Liq Separation	Tritium	N/A	5	400	70-130	±30
Rad	UAEA	Uranium-233/234	N/A	0.1	1	70-130	±30
Rad	UAEA	Uranium-235/236	N/A	0.1	1	70-130	±30
Rad	UAEA	Uranium-238	N/A	0.1	1	70-130	±30
Performance Requirements for Field Measurements							
Rad	Portable Detector	Gross Alpha	100[c]	100[cd]	500[ce]	±80-120[f]	±20[f]
Rad	Portable Detector	Gross Beta/gamma	5000[c]	1000[c]	3000[c]	±80-120[f]	±20[f]
Performance Requirements for Lab Measurements							
Chem	EPA 1311/6010	Arsenic	5.0mg/L	0.05	0.25	70-130	±30
Chem	EPA 1311/6010	Barium	100 mg/L	0.01	0.05	70-130	±30
Chem	EPA 1311/6010	Cadmium	1.0 mg/L	0.005	0.025	70-130	±30
Chem	EPA 1311/6010	Chromium	5.0 mg/L	0.003	0.015	70-130	±30
Chem	EPA 1311/6010	Lead	5.0 mg/L	0.25	1.25	70-130	±30
Chem	EPA 1311/6010	Mercury	0.2 mg/L	0.00005	0.00025	70-130	±30
Chem	EPA 1311/6010	Selenium	1.0 mg/L	0.1	0.5	70-130	±30
Chem	EPA 1311/6010	Silver	5.0 mg/L	0.01	0.05	70-130	±30
Chem	EPA 9010	Cyanide	590	0.25	1	70-130	±30
Chem	EPA 9030	Sulfide	footnote g	4	20	70-130	±30
Chem	EPA 8082	PCBs	footnote h	0.01	0.1	70-130	±30
Chem	EPA 8270	SVOAs	footnote i	0.01[j]		70-130[j]	±30[j]
Chem	EPA 8260	VOAs	footnote i	0.3 60[j]		70-130[j]	±30[j]
Chem	EPA 6010	Sodium	10,000[k]	10	30	70-130	±30
Chem	EPA 6010	Lithium	100,000[k]	1.66	5	70-130	±30
Chem	EPA 9045	pH	≤2; ≥12.5		N/A	N/A	±30
Chem	EPA 1010	Ignitability	140°	N/A	N/A	±1 deg.	±30

[a] Units are in pCi/g or mg/kg unless otherwise specified
[b] Action levels are not applicable for the analyses performed to determine the radionuclide isotope distribution.
[c] Units are in dpm/100cm^2
[d] MDL achieved with static counting
[e] PQL achieved with moving survey
[f] Precision and Bias requirement is the requirement for +/- 20% result of operational check
[g] No limits established. ERDF WAC states that one must deactivate and meets UTS for water reactive waste.
[h] ERDF WAC (BHI 1998b) has no limit for PCB contaminated solid media.
[i] Multiple components have different requirements
[j] VOA and SVOA detection limits and Precision/Accuracy are for "typical" analytes, some analytes will have significantly different detection limits and Precision/Accuracy requirements.
[k] Limits shown apply if only sodium or only lithium are detected. If both are present, or if other Washington State toxics are also detected, the action level must be calculated by application of the "sum of the fractions" mathematical rule.

Representativeness is a measure of how closely the results reflect the actual concentrations or distribution of the chemical and radiological constituents in the matrix sampled. Sampling plan design, radiological survey design, sampling techniques, and sample handling protocols (e.g., storage, preservation, and transportation) have been developed and are discussed in subsequent sections of this document.

Comparability expresses the confidence with which one data set can be compared to another. Data comparability will be maintained using standard procedures, consistent methods, and units. Table 2-3 lists applicable SFL methods for analytes and target detection limits. Actual detection limits will depend on the sample matrix, sample quantity available, and will be reported as defined for the specific samples.

Accuracy is an assessment of the closeness of the measured value to the true value. Accuracy of chemical test results is assessed by spiking samples with known standards and establishing the average recovery. A matrix spike is the addition to a sample of known amounts of a standard compound similar to the compounds being measured. Radionuclide measurements that require chemical separations use this technique to measure method performance. For radionuclide measurements that are analyzed by gamma spectroscopy, laboratories typically compare results of blind audit samples against known standards to establish accuracy. Validity of calibrations are evaluated by comparing results from measurement of standard to known values and/or by generation of in-house statistical limits based on three standard deviations (SD) ($\pm 3\sigma$). Table 2-3 lists the accuracy requirements for SFL analyses for the project.

Precision is a measure of the data spread when more than one measurement has been taken on the same sample. Precision can be expressed as the relative percent difference for duplicate measurements. Precision requirements for SFL analyses are listed in Table 2-3.

Completeness is a measure of the amount of valid data obtained from the analytical measurement process and the complete implementation of defined field procedures. Completeness is set at 90% for chemical and radionuclide analyses. Quantitative definitions are presented in Section 2.4.3 of this SAP.

Detection limits are functions of the analytical method utilized and the quantity of sample available for analyses. In this characterization, sample quantity is expected to be available with sufficient radionuclide activity to perform analyses that exceed the minimum acceptable quantity.

2.1.4 Training Requirements/Certifications

Training or certification requirements needed by personnel will be in accordance with the applicable sections of 29 CFR, 40 CFR, 49 CFR, 10 CFR 835, and/or Washington Administrative Code and completed prior to the start of work. Employee training includes pre-job briefings, on-the-job training, emergency preparedness, plan of the day, and facility/work site orientations.

2.1.5 Documentation and Records

Sample collection, analysis activities, and maintenance of field documents shall be in accordance with the requirements or procedures or protocols identified below:

The sampler will provide the following processes, procedures, or protocols:

Use and content of Field Logbooks

Sample identification and labeling

How Chain of Custody forms will be filled out, and Chain of Custody forms.

Sample Packaging, Shipping, and Labeling

Storage of Samples

Standard Operating Procedures for each type of sample to be taken

The Analytical Laboratory will provide the following:

QA Plan

Standard Operating Procedures for analysis.

Energy Northwest will provide the following processes, plans, procedures, or protocols:

Quality Assurance Program Plan

Quality Assurance Project Plan (QAPjP)

Radiological Records Management HGP Procedure RP-OA-439

2.2 MEASUREMENT/DATA ACQUISITION

The following sections present the requirements for sampling methods, sampling handling and custody, analytical methods, and field and laboratory QC. These sections also address the requirements for instrument calibration and maintenance, owner/owner representative inspections, and data management.

The project is divided into two stages:

Stage 1 – Sampling and SFL Analysis for Radionuclides

The objective of Stage 1 sampling is to verify the radioactive COCs and to generate the isotopic distribution that will be used to support waste profiling. The isotopic distribution developed in Stage 1 will be used to develop scaling factors for estimating the radionuclide inventories from the Stage 2 radiological surveys. Stage 1 does not include chemical analyses.

Stage 2 – Radiological Surveys, Sampling and SFL Laboratory Analysis for Radionuclides and Chemicals

Beta/Gamma surveys will be performed on the interior and exterior of Part II building walls and ceilings to verify compliance with the ERDF WAC, support waste profiling, and for radiological inventory estimating. These radiological surveys will be performed in accordance with HGP Radiological Procedures. The scaling factors developed from the isotopic distributions will be applied to the survey results for inventory estimating.

Release surveys for furniture, light fixtures and surplus material for recycle, reuse, or disposal in a clean landfill will be performed in accordance with HGP Radiological Procedure PR-RAM-301, "Unconditional Release Surveys".

Sampling will be performed for three categories of lab analysis, including:

1. Concrete Samples: radiological COCs, and/or chemical COCs that may be related to the media

2. Paint, chromium, lead

3. Anomalous media: all identifiable chemical COCs that may be related to the media

Sampled paints will be analyzed to determine the concentrations of cadmium, chromium, and lead. The sampling locations will be determined by Energy Northwest technical representative. Paint samples should be collected using a decontaminated scraper or other appropriate method. During sampling, the number of paint layers will be documented, assuming a typical coat of paint 4 mils thick, and a specific gravity of 3 for all paint samples.

Lead-based paint samples will be analyzed by TCLP. If the analytical result exceeds the regulatory limits, the matrix will be evaluated under the debris rule, using the density of the paint and the density of the base material to determine if the paint/matrix combination represent a toxic characteristic waste.

The Chemical Laboratory Fume Hood Exhaust Plenum will be sampled in one location for contaminants. The sample will be collected from the ledge in the exhaust plenum.

The anomalous media is a contingency category provided to allow field decision-making based on observations made during plant walk-down tours. The analytical requirements for anomalous

media will be based on process knowledge. If process knowledge is not available, "unknown media" analysis may be performed on SFL.

2.2.1 Sampling Methods/Requirements

Sampling protocols to be implemented will be submitted by the sampler and reviewed by Energy Northwest personnel prior to start of sampling. Sampling requirements are identified in Part III, Field Sampling Plan. The sampling locations, frequencies, and methods are summarized in Table 3-1. The analytical protocols are identified in Table 2-3.

2.2.2 Sample Handling and Custody Requirements

Field custody. All sample handling, shipping, and custody requirements will be performed in accordance with the requirements identified in section 2.1.5.

The primary concern in this section is tracking the sample location and field sample number from collection to reporting of the data. There must be a clear trail for data to retain credibility for waste profiles and disposal records.

Laboratory custody procedures. Sample custody during laboratory analysis will be addressed in the applicable laboratory Standard Operating Procedures (SOPs) (see Section 2.2.5). Laboratory custody procedures will ensure the maintenance of sample integrity and identification throughout the analytical process

2.2.3 Sample Preservation, Containers, and Holding Times

Sample preservation, holding times and container details will be addressed by the sampler and reviewed by Energy Northwest prior to commencement of sampling.

2.2.4 Sample Shipping

Sample packaging and shipping will be performed in accordance with Sample Packaging, Shipping, and Labeling requirements listed in section 2.1.5. Samples submitted for SFL analysis will be screened as applicable for radioactivity at 185-N before shipment offsite in accordance with HGP Radiological Procedure RP-RAM-301.

2.2.5 Analytical Methods Requirements

SFL analytical parameters and methods are listed in Table 2-3. Laboratory-specific analytical methods are in place. Laboratory SOPs and QA Plans to be used include Corporate Analytical Procedures and QA Plans from the laboratories. Laboratory SOPs are based on the SW-846, Chapters 1-4 (EPA 1996). Detection limits achievable by the laboratory will be dependent on sample quality available. The lab will be instructed to thoroughly mix the sample material within the sample container before extracting aliquots for analysis.

2.2.6 Radiological Surveys

Alpha and beta/gamma surveys will be used. Instruments will be calibrated against known standards representative of the instrument response to the identified analyte, sample geometry, and sample matrix. For radionuclide analyses, the detection system must provide spatial variability information of the Co-60 isotope (and thus the other associated isotopes) present.

For applicable material released for recycle/salvage, reuse, or clean landfill disposal, removable radionuclide contamination will be measured by alpha and beta/gamma total activity surveys followed by collecting smear samples. Unconditional release radiological surveys and sampling will be conducted in accordance with the HGP Radiological procedure RP-RAM-301.

2.2.7 Quality Control Requirements

This characterization effort relies heavily on the use of scaling factors to correlate the field measurement of gross gamma radioactivity (Co-60) to the radionuclide distribution from defined areas in the HGP. QA is necessarily built into each part of the characterization both as QC samples, which monitor sampling and laboratory performance, and field instrument operational checks that monitor field instrumentation performance.

QC measures taken to support field operations performances are:

> Daily calibration checks will be performed and documents on each instrument used to survey or characterized. These checks will be made on standard materials sufficiently like the matrix under consideration that direct comparison of data can be made. Mixed component standards are used to establish linearity of the detector calibration. Analysis times are sufficient to establish detection efficiency and resolution.

For samples collected to support SFL analyses the following QC samples will be collected during sampling and sent to the laboratory.

> Equipment blanks will be collected to assess the cleanliness of the sample equipment and the effectiveness of the sampling equipment decontamination process. Equipment blanks will be collected in the field using clean silica sand of known origin or with de-ionized water as appropriate. One equipment blank will be collected per type of decontamination method for samples obtained during Part II. When sampling results are used for waste designation purposes, pre-cleaned sampling equipment for the manufacture will not require equipment blanks. Equipment blanks will be taken on field decontaminated equipment and equipment decontaminated in accordance with protocols provided by the sampler to Energy Northwest.
>
> Field duplicates are two samples collected from the same material and collected in the same location or from the same material. Field duplicates provide information concerning the homogeneity of the matrix and an evaluation of the precision of the sampling and analysis process. One duplicate sample, or a minimum of one field duplicate per 20 samples of the same matrix, will be collected. If sample volume

requirements are not adequate, field duplication requirements can be waived at the discretion of Energy Northwest contract representative.

Control measures taken to monitor laboratory performance are:

One laboratory method blank for every 20 samples (5% of samples), analytical batch or sample delivery group (whichever is most frequent) will be carried through the complete sample preparation and analytical procedure. The method blank will be used to document contamination resulting from the analytical process.

One laboratory control sample or blank spike will be performed for every batch of samples for each analytical method criteria to monitor the effectiveness of the sample preparation process. The results from the analyses are used to assess laboratory performance.

A matrix spike sample will be prepared and analyzed for every 20 samples (as applicable to method) of the same matrix or sample preparation batch, whichever is most frequent. The matrix spike results are used to document the bias of an analytical process in a given matrix.

Laboratory duplicates or matrix spike duplicates will be used to assess precision and will be analyzed at the same frequency as the matrix spikes.

2.2.8 Instrument/Equipment Testing, Inspection, and Maintenance Requirements

Measurement and testing equipment used in the field or in the laboratory that directly affects the quality of analytical data will be subject to preventative maintenance measures that ensure minimization of measurement system downtime. Laboratories and onsite measurement organizations will be required to maintain their equipment. Maintenance requirements, such as parts lists and instructions, and documentation of routine maintenance, will be included in the individual laboratory and onsite measurements organization QA plan or SOPs.

2.2.9 Instrument Calibration and Frequency

Instruments used for surveys and screening for off-site sample shipment shall be calibrated in accordance with HGP Radiological Control Procedures. Instruments used for non-radiological surveying and sampling will be calibrated in accordance with procedures submitted by the sampler and reviewed by Energy Northwest contract representative. The results from all instrument calibration activities shall be recorded in a bound logbook in accordance with requirements in section 2.1.5. Control documents must specify when the instrument was last calibrated, the results of that calibration, and the date due for a new calibration.

Laboratory SOPs listed in Section 2.2.5 must include procedures for instrument calibration and frequency and documentation of the actual calibration.

2.2.10 Inspection/Acceptance Requirements for Supplies and Consumables

Procurement activities will be limited to providing Energy Northwest with procurement requisition documentation.

2.2.11 Field Documentation

Field documentation shall be kept in accordance with the requirements and procedures identified in section 2.1.5.

2.3 ASSESSMENT/OVERSIGHT

2.3.1 Assessments and Response Actions

The Project manager and/or QA/QC organization may conduct random surveillance and assessments to verify compliance with the requirements outlined in this sampling and analysis plan, and regulatory requirements.

Deficiencies identified by self-assessments shall be reported. When appropriate, corrective actions will be taken by the Project Manager.

2.3.2 Reports to Management

Deficiencies shall be reported. Corrective actions required as a result of surveillance reports, nonconformance reports, or assessments will be documented and dispositioned in accordance with HGP Procedures. Other measurement system, procedures, or plan corrections that may be required as a result of routine review processes will be resolved as required by governing procedures or will be referred to the technical lead for resolution. Routine evaluation of data quality described for this project will be documented and filed along with the data in the project file.

2.4 DATA VALIDATION AND USABILITY

2.4.1 Data Review, Validation, and Verification Requirements

Data verification and validation will be performed on analytical data sets to assure that sampling and chain-of-custody documentation is complete, sample numbers can be tied to the specific sampling location, samples were analyzed within the required holding times, and analyses meets the data quality requirements specified in the characterization plan.

For SFL analyses, a minimum of 5% if the data packages will be validated. All coordination of validation services, execution of data validation activities, and handling/storage of deliverables will be in accordance with HGP Procedures.

Survey data will not undergo a formal validation. The QA/QC processes used in SOPs will be followed to ensure useable data. These include the use of blanks, duplicates, splits, and measurement of known standards. Analytical personnel and the project team will review the data.

2.4.2 Validation Methods

Data validation of SFL will be conducted. WHC-SD-EN-SPP-001, *Data Validation Procedures for Radiological Analyses* (WHC 1993), and WHC-SD-EN-SPP-002, *Data Validation Procedures for Chemical Analyses* (WHC 1993) provide established and proven methodology for data validation. Data will be validated to Level C as defined in these reference documents.

2.4.3 Reconciliation With User Requirements

Following validation, the project team will assess the data. Assessment will include incorporation of the data validation findings into the database by entry of data qualifiers. Assessment will also include review of quantitative DQOs (e.g., accuracy, precision, completeness, and detection limits) and the preparation of a summary report. The final report will include an evaluation of the overall adequacy of the total measurement system with regard to the DQO of the data generated. These quantitative DQOs are defined below.

<u>Precision</u>

If calculated from duplicate measurements:

$$RPD = \frac{(C_1 - C_2) \times 100}{(C_1 + C_2) / 2}$$

where:

RPD	=	relative percent difference
C_1	=	larger of the two observed values
C_2	=	smaller of the two observed values.

If calculated from three or more replicates, use RSD rather than RPD:

$$RSD = (s / \bar{y}) x 100$$

where:

RSD	=	relative standard deviation
s	=	standard deviation
$\bar{y}$	=	mean of replicate analyses.

Standard deviation, s, is defined as follows:

$$S = \sqrt{\sum_{i=1}^{n} \frac{(y_i - \bar{y})}{n - 1}}$$

where:

s	=	standard deviation
y_i	=	measured value of the ith replicate
$\bar{y}$	=	mean of replicate measurements
n	=	number or replicates.

<u>Accuracy</u>

For measurement where matrix spikes are used:

$$\%R = 100x[(S-U)/C_{sa}]$$

where:

%R	=	percent recovery
S	=	measured concentration in spiked aliquot
U	=	measured concentration in unspiked aliquot
C_{sa}	=	actual concentration of spike added.

For situations where a Standard Reference Material (SRM) is used instead of or in addition to matrix spikes:

$$\%R = 100x[C_m/C_{srm}]$$

where:

%R	=	percent recovery
C_m	=	measured concentration of SRM
C_{srm}	=	actual concentration of SRM.

Completeness

Defined as follows for all measurements:

$$\%C = 100x[V/T]$$

where:

%C	=	percent completeness
V	=	number of measurements judged valid
T	=	total number of measurements.

Detection Limit

Defined as follows for metals measurements:

$$MDL = t_{(n-1,\ 1-\alpha=0.99)}\ x\ S$$

where:

MDL	=	method detection limit
S	=	standard deviation of the replicate analyses
$t_{(n-1,\ 1-\alpha=0.99)}$	=	students' t-value appropriate to a 99% confidence level and a standard deviation estimate with n-1 degree of freedom

2.5 DATA QUALITY ASSESSMENT

Data assessment is performed after data validation of the survey and SFL data per Section 2.4. The validation must include evaluation of the method accuracy, precision, and detection limits as required in Table 2-3. The following steps must be considered in data assessment.

1. Review the project DQOs. This includes the conceptual model and any assumptions that are concluded in the data collection design. Because data collection for this project is not determined by a statistical design, hypotheses and error tolerances will not be included in

the original DQOs. However, qualitative assessment of both the SFL data and the survey data can be performed, implementing the procedures outlined below.

2. Examine the distribution of data. The distribution should be examined both spatially on a map of the structure/room being evaluated, and examined for numerical distribution.

3. Determined whether the data (both fixed laboratory and survey data) are constant with the conceptual model. Compare the fixed laboratory to historical data. Determine whether the survey results for each area are consistent with the conceptual model. If the conceptual model differs from the data, the decision-makers and technical staff must determine an alternative course of action, which may involve taking additional surveys or samples, or revising the conceptual model.

4. Perform analyses (quantitative and qualitative) using the statistical parameters shown in the DQO Summary Report (BHI-00929, Rev. 0) that can be used to support the decisions.

   - Compare survey data (average and maximum direct measurements; maximum removable measurements) with surface release criteria for materials under consideration for release.

   - Determine the cost-effectiveness of release, based on costs of decontamination, costs of off-site disposal, costs of salvage.

   - Compare maximum chemical concentrations to toxicity characteristic (TC) criteria for either ERDF, or offsite disposal decisions for demolition materials and room contents.

   - If TC criteria are exceeded, evaluate waste for potential underlying hazardous constituents (UHCs) and evaluate any UHCs against Universal Treatment Standards (UTS).

   - Calculate sum of fractions for maximum concentrations of radionuclides for ERDF or in situ disposal decisions for demolition materials and facility contents.

3.0 FIELD SAMPLING PLAN

3.1 SAMPLING OBJECTIVES

This section builds on the DQO Process presented in Section 1.0 and presents additional details of the sampling and analysis design. The project objective is to remove all interior and exterior walls, ceiling, roof, interior equipment and materials for disposal or salvage/recycle. The interior and exterior walls, ceiling, and roof are referred to as debris. The light fixtures, furniture, and surplus materials are referred to as room contents and a cost benefit may be done to determine whether it is cost-effective to salvage/recycle these items.

The sampling process is divided into two stages. Stage 1 is a radiological survey to define the boundaries of isotopic distribution and generate a preliminary list of nuclides present. Stage 2 defines the concentration of radionuclides and chemicals present. The objectives for Stage 1 and 2 are presented here.

3.1.1 Stage 1 Objective

The objective of Stage 1 sampling and survey design is to verify the radioactive COCs, generate the final COC list for the radionuclides, and to generate the isotopic distribution.

3.1.2 Stage 2 Objectives

The objectives of Stage 2 sampling are:

- Determine the concentration of the other nuclides using calculations from the gamma emitters, assuming Co-60 as the primary gamma isotope,
- Determine the applicability of characteristic waste codes, and Land Disposal Restrictions (LDR) status,
- Determine if waste meets the definition of a toxic dangerous waste, and LDR status,
- Determine if waste meets the definition of a persistent waste, and LDR status,
- Determine if waste is regulated due to PCB concentrations, and
- Determine the nature and extent of radiological contamination on room contents for potential recycle or reuse.

3.2 SAMPLING LOCATIONS AND FREQUENCY

Appendix A shows the rooms and areas to be surveyed, characterized, and material to be removed. With the exception of steam blow-downs, small steam and sampling lines, and floor sumps, the preliminary surveys have shown that little radiochemical contamination is present.

3.2.1 Stage 1 Sampling Locations

The highest radionuclide concentrations are needed for confirmation and identification of the COCs and measuring the isotopes. Table 7-1 of BHI-00929, Rev. 0 "Data Quality Objectives Summary Report in Support of Hanford Generating Plant" provides a partial list of the sampling locations for this sampling activity. Table 3-1 lists the Stage 1 sampling locations, frequency and type of sample.

Table 3-1. Stage 1 Survey and Sampling Locations, Frequencies, and Methods

Sampling Objectives	Sampling Boundaries	Physical Samples	
		Number of Samples/Location*	Survey/Sampling Approach/Comments
1a. Verify the radioactive COCs 1b. Generate the isotopic distribution	HGP, exterior steam supply lines, drains, and traps	1. All main steam supply lines, drain lines, sample lines, traps, drain sumps, main steam stop valves, condenser sumps, condenser hot wells, deaerating heater storage tanks, and blowdown tanks.	Radiological surveys with portable detectors.
1c. Waste regulation due to PCB concentrations	Transformer Yard (SWMU #1)	1. Six (6) random soil samples around the transformer yard and three concrete pad samples will be analyzed. Nine transformers, grouped in three's, sit on concrete pads which are surrounded by soil; portions of the soil and concrete pads are stained. A sample will consist of a grab from the most visibly stained soil around each group of three transformers. (See Appendix A, page A-11)	Grab samples of the stained soil will be taken at 0.0", 12", 24", 36", 5', 10'. and 15' deep for each location as applicable. Two of the samples will be taken using a drill rig and boring through the concrete. Collect concrete composite drillings from holes with 1.25-in. or 1.375-in. diameter drill bits to a depth of ¼ in. Alternate methods of sampling could include scaling, or chipping out the stained area.

* Numbers (1.) relate to the locations on the facility plans located in Appendix A.

3.2.2 Stage 2 Sampling Locations

The locations are presented for radionuclides and chemical, respectively, for each media and room in Table 3-2. The frequency for surveys is based on whether the materials are debris to be disposed onsite or salvage/recycle.

For surveys for onsite disposal, at least 25% of the interior and exterior accessible surface area will be surveyed. For surveys of room contents to be salvaged/recycled, up to 100% of the accessible surface area will be sampled. The only samples collected for fixed laboratory radiochemistry will be in areas that show visual staining or splashes. These areas include oil stains around motors, pumps, or fans. Gamma spectroscopy may be used to analyze any surface concrete samples from the stained areas.

The oil, water and greases will be collected in separate containers. Table 2-3 lists the COC and the analyses for each media. Each container will be sampled after all the materials are collected.

Table 3-2. Stage 2 Survey and Sampling Locations, Frequencies, and Methods (3 Pages)

Sampling Objectives	Sampling Boundaries	Physical Samples	
		Number of Samples/Location*	Survey/Sampling Approach/Comments
2a. Nature and extent of radioactive contamination on structural material for ERDF disposition or unconditional release (HGP Procedure RP-RAM-301)	HGP, steam supply lines, drains, and traps	1. 1 sludge grab and 1 scale grab from manhole near settling pond and 1 sludge grab sample from each of the four main sumps (6 total samples) (SWMU #3) 2. 2 sludge grab or 2 scale grab sample from the four condenser sumps (8 total samples) 3. 1 scale grab sample from each of the H. P. Drain lines located on the (-) 33'0" level (2 total samples) 4. 1 scale grab sample from each of the main steam line drains and steam traps located east of the HGP building. (3 total samples) 5. 1 scale grab sample from each of the blow down tanks (2 total samples) 6. 1 scale grab sample from each of the condenser hot wells (4 total samples) 7. 1 composite scale grab sample from each of the steam sample lines located between the operating floor (El. 0'0") and the ((-) 16'0" level) (2 total samples) 8. 1 composite scale grab sample from main steam stop valves (1 total sample) 9. 2 scale grab sample from the deaerating heater storage tanks (2 total samples) 10. 1 sample of the liquid and/or scale contained in each floor drain. (15 total samples) (SWMU #3) 11. 1 sample of the construction/ expansion basement floor joint material located between the blowdown tank and the floor drain. (2 total samples)	Scrape scale and/or remove water, sand, or sludge Large area to sample as large a cross section as possible Affected areas or pre-sample survey – sample hot spots Visually different areas should be sampled separately NOTE: Scale grab samples may be difficult to obtain due to lack of scale in HP Steam system areas. The floor drains will be sampled according to each sump. Each sump has multiple lines that have floor drains in series. Sumps 1A, 2A, and 2B have four lines, sample one floor drain in each line. Sump 1B has three lines, sample one floor drain in each line. The floor drain to be sampled will be the one closest to the sump and be 12" past the elbow.

Table 3-2. Stage 2 Survey and Sampling Locations, Frequencies, and Methods (3 Pages)

Sampling Objectives	Sampling Boundaries	Physical Samples	
		Number of Samples/Location*	Survey/Sampling Approach/Comments
2b. Applicability of characteristic waste codes and LDR status,	Unique paint colors on structural materials.	1. 1 paint sample from each unique paint color for TCLP analysis/location at the discretion of the lead sampler (interior and exterior to be sampled) NOTE: Exterior paint on the metal siding contains ACM.	Scrape paint sample from surface with decontaminated scraper or other appropriate tool. Sample to contain material from all layers of paint.
	Vent hood exhaust plenum in the Chemical Laboratory	2. 1 scale grab sample of the inside of the exhaust plenum	Scrape deposit sample from surface.
2c. Waste regulations due to PCB concentrations	Florescent light ballasts, Potential Transformers	3. 5% of florescent light ballasts in the HGP 4. 1 sample from each of the #1 and #2 Potential transformers	Remove ballasts from de-energized fixtures (approx. 1000 ballasts)
2b. Applicability of characteristic waste codes and LDR status,	HGP Building Oil Storage (SWMU #2),	5. 1 oil sample from within the sump, then after removal of oil, 1 concrete sample of concrete chips from the most visibly stained area (2 total samples)	Liquids and stained concrete.
	Turbine Oil Filter Unit (SWMU #4),	6. upper area sample and lower area sample; each sample contains Unit 1 and Unit 2 grabs (4 total samples)	Samples of liquids and stained concrete.
2d. Toxic dangerous waste and LDR status, 2e. Persistent dangerous waste and LDR status	Snubber oilers, Pump oilers and oil systems, Turbine Oil Storage Tank and sump, Turbine Oil Coolers	7. 1 oil sample from 3 snubbers (3 total samples) 8. oil sample from each type pump (i.e., Main Feed Pumps, Condensate Pumps, Lift Pumps, etc.). 9. 1 grab sample from the clean side of the Turbine Oil Storage Tank and 1 grab sample from the dirty oil side. (2 total samples) 10. 1 grab sample from each cooler sump (2 total samples)	Location at discretion of lead sampler. Location at discretion of lead sampler. On dirty side, grab sludge with oil sample. Grab sludge with oil sample.
	Sanitary Drains Sump	11. 1 grab sample from the sump. (1 total sample)	Sludge, scale may require scraping
	Floor Drains – Shop Area	12. 1 sample of the liquid, sludge, or scale contained in each floor drain. (5 total samples)	Scale or sludge.
	Shop Area Cable Trench	13. 1 grab sample of liquid, sludge, or scale from floor drain (3 total samples)	Scale or sludge.
	Shop Area Exhaust Vent	14. 1 scale grab sample of the inside of the exhaust plenum	Scrape deposit sample from surface.
	Switches and meters	15. 1 of each from one (1) MCC, one (1) 480 V. Switch Gear, and one (1) Control room panels.	
	Hydrazine and Morpholine Tanks and Pumps	16. 1 sample of the Hydrazine tanks and pumps, and 1 sample of the Morpholine Tanks and Pumps	Scale sample from pumps is most likely source.

Table 3-2. Stage 2 Survey and Sampling Locations, Frequencies, and Methods (3 Pages)

Sampling Objectives	Sampling Boundaries	Physical Samples	
		Number of Samples/Location*	Survey/Sampling Approach/Comments
2b. Applicability of characteristic waste codes and LDR status,	Diesel Oil Tank and Day Tank	17. 1 sample of the diesel oil storage tank and generator day tank (media unknown)	Tank may have been filled with inert media.
2d. Toxic dangerous waste and LDR status.	Chemical Laboratory sink drains	18. 1 sample from each of the three (3) drains in the chemical laboratory (3 total samples)	Take sample from trap under drains. (Sludge. Scale)
2e. Persistent dangerous waste and LDR status	Exposed surface with anomalous media based on observed stains or spills (contingency)	Number/Location at the discretion of Energy Northwest field engineer	At the direction of Energy Northwest field engineer

* Numbers relate to the locations on the facility plans located in Appendix A.

3.2.3 Concrete Sampling

Concrete samples will be obtained by hand drilling in a series of co-located holes, using 1-in. or larger diameter drill bits. The depth gauge shall be set such that the tip of the drill bit stops at a depth of ¼-in. The required sample volume can commonly be attained with 25 to 40 holes. The sample media will be composited into one sample. If required, collect sample media using a clean plastic sheet placed under or around the area to be drilled and transfer the material into a sample container. Alternative methods include scaling or chipping the stained area until no stain is visible.

Access to the sample locations, Health and Safety concerns, Radiological safety concerns (HP support), or environmental constraints may require the selection of an alternate sampling method. The sampler's log book should document the following:

1. Sampling locations,
2. If possible, a photo of sample location with sample numbers written on wall or floor next to sample location,
3. Radiological survey readings for each sample location prior to drilling,
4. Drill bit shape and size,
5. Number of sample holes drilled,
6. Descriptions of field conditions and observations.

3.2.4 Paint Samples

Paint samples should be collected using a decontaminated scrapper or other appropriate method. Sampler's logbook should identify the following information:

1. Sample Location,
2. If possible, a photo of sample location with sample numbers written on wall or floor next to sample location,
3. Number of layers of paint,
4. The colors of each layer of paint
5. Base media type and thickness.

3.2.5 Anomalous Media

Anomalous media includes any unplanned or unexpected material that requires sampling. These materials will be sampled in accordance with established protocols. Energy Northwest contract representative will determine decisions on sample location, sampling method, and analyses. Sampler's logbook should document the following:

1. Location of sample,
2. If possible, a photo of sample location with sample numbers written on wall or floor next to sample location,
3. Description of what is being sampled,
4. Description of method used to retrieve sample,
5. Unusual Observation.

3.3 QUALITY CONTROL SURVEYS/SAMPLING REQUIREMENTS

QC sampling requirements for the field sample collection process are defined in the following subsections and summarized in Table 3-3. The definitions for duplicate and equipment blanks are provided in Section 2.2.7.

Table 3-3. Field QC Samples.

Field Activity	Analytical Parameter	Duplicate	Equipment Blanks[a]	Analysis Method
Stage 1				
Survey	Cs-137, Co-60	N/A	N/A	Beta/gamma
Concrete for fixed laboratory analysis	PCB	Minimum of 1 per ≤ 20 samples.	Minimum of 1 per decon method	Table 2-3
Soil samples for fixed laboratory analysis	PCB	Minimum of 1 per ≤ 20 samples.	Minimum of 1 per decon method	Table 2-3
Stage 2 Survey QC Samples				
Survey	Cs-137, Co-60	N/A	N/A	Beta/gamma
Roof that has old and new materials	Cs-137 Survey each layer	N/A	N/A	Beta/gamma
Stage 2 Fixed Laboratory Samples				
Solid and liquid samples	Radionuclides listed in Table A6-7 of BHI-00929	Minimum of 1 per ≤ 20 samples.	Minimum of 1 per decon method	Table 2-3
Oil	Table 2-3	Minimum of 1 per ≤ 20 samples.	Minimum of 1	Table 2-3
Paint	Table 2-3	Minimum of 1 color	Minimum of 1 per decon method	Table 2-3
Solid and liquid samples	Table 2-3	Minimum of 1 per ≤ 20 samples.	Minimum of 1	Table 2-3
Exposed surfaces with anomalous media/stains or spills	Unknown media	Minimum of 1	Minimum of 1 per decon method	Table 2-3

[a]No equipment blanks will be taken on pre-cleaned disposable sampling equipment.

Quality control measures for radiological surveys include daily calibration checks on each survey instrument. These checks are made on standard materials sufficiently like the matrix under consideration that direct comparison of data can be made. Mixed component standards are used to establish linearity of the detector calibration. Analysis times are sufficient to establish detection efficiency and resolution.

3.4 SURVEY/SAMPLING PROCEDURES

The sampling procedures to be implemented in the field will be in accordance with SW 846, and Washington Administrative Code 173-303-110 requirements.

Work Instructions. Personnel carrying out sampling procedures should be familiar with Section 2.2.1. and the requirements of Section 2.2.5. as it applies to sampling.

3.5 SAMPLE MANAGEMENT

See Section 2.2 for sample management details.

3.6 MANAGEMENT OF INVESTIGATION OF DERIVED WASTE

Radioisotope contaminated waste generated by characterization activities will be managed in accordance with the DOE/RL-98-37, Removal Action Workplan (RAW) for the Hanford Generating Project ancillary facilities. Unused samples and associated laboratory waste for the analysis will be dispositioned in accordance with the laboratory contract and agreements for return to the HGP.

4.0 HEALTH AND SAFETY

4.1 EMERGENCY MANAGEMENT

Activities will be in a manner that ensures the health and safety of workers and the public and the protection of the environment in the event of an abnormal incident. Each contractor will be responsible for establishing an emergency response organization capable of planning for, responding to, and recovering from industrial, security, or hazardous material incidents as appropriate. Emergency response will be provided by the Hanford Fire Department.

4.2 HEALTH AND SAFETY PROGRAM

4.2.1 Worker Safety Program

All subcontractors will comply with the requirements of applicable local, state, and federal regulations to ensure the safety and health of workers during sampling operations. Each contractor must develop a Health and Safety Plan and submit it to Energy Northwest prior to the commencement of work activities.

4.2.2 Radiological Controls and Protection

The Radiological Protection Program is defined in Energy Northwest procedures. This program implements the DOE policy to reduce safety or health risks to levels that are ALARA and to ensure adequate protection of workers. Energy Northwest Radiological Protection Program meets the requirements of 10 CFR 835. Radiological material handling will be managed by the DOE Radiological Control Manual (DOE 1994b). Appropriate dosimetry, RWPs, PPE, ALARA planning, periodic surveys, and radiological control technical support will be provided.

Energy Northwest controls for work in radiological areas has been assessed as adequate to control project activities. These controls provide for radiological controls planning that identify the specific conditions and govern the specific requirements for an activity, periodic radiation and contamination surveys of the work area, and periodic or continuous observation of the work by radiological control. The ALARA planning process may identify shielding requirements, contamination control requirements (including local ventilation controls), radiation monitoring requirements, and other radiation control requirements for the individual tasks conducted during the course of this project. At this time, there are no existing or anticipated shielding requirements due to the low radiation levels in the facility. Energy Northwest has also determined that no minors or visitors will be allowed access within radiological boundaries at the HGP site.

Measures are also to be taken to minimize the possibility of releases to the environment. Appendix B of DOE/RL-98-37 (RAW) will quantitatively address the radionuclide inventory and activities that could case potential release of this inventory, but not to the exclusion of the DOE Radiological Control Manual (DOE 1994b) or 10 CFR 835 requirements.

5.0 REFERENCES

10 CFR 835, "Department of Energy Occupational Radiation Protection", *Code of Federal Regulations*, as amended.

Archeological Resources Protection Act of 1974, 16 U.S.C. 470aa

BHI, 1996, *Data Quality Objectives Summary Report in Support of Hanford Generating Plant*, BHI-00929, Rev. 0, Bechtel Hanford Inc., Richland Washington.

BHI, 1996, *Characterization Plan for the Hanford Generating Plant*, BHI-00936, Rev. 0, Bechtel Hanford Inc., Richland Washington.

Clean Air Act, 40 U.S.C. 7401

Clean Water Act, 33 U.S.C. 1251

DOE/RL,1997, *Engineering Evaluation/Cost Analysis for the 100-N Area Ancillary Facilities and Integration Plan*, DOE/RL-07-22, Rev. 1, U.S. Department of Energy, Richland Operations Office, Richland, Washington.

DOE/RL, 1998, *Removal Action Workplan for the Hanford Generating Plant (HGP)*, DOE/RL-98-37, , U.S. Department of Energy, Richland Operations Office, Richland, Washington.

Ecology, 1999, *100N Area Ancillary Facilities Action Memorandum*, 064829, Washington Department of Ecology, Olympia, Washington.

Endangered Species Act of 1973, 16 U.S.C. 1531

EPA, 1994, *Guidance for the Data Quality Objectives Process*, EPA QA/G-4, U.S. Environmental Protection Agency, Washington, D.C.

EPA, 1996, *Guidance for Data Quality Assessment*, EPA QA/G-9, U.S. Environmental Protection Agency, Washington, D.C.

EPA, 1992, *Resource Conservation and Recovery Act Facility Assessment Final Report*, WAD 7890008967, U.S. Environmental Protection Agency, Washington, D.C.

Hazardous Materials Transportation Act, 49 U.S.C. 1801 –1813

HSRCM-1, 1996, *Hanford Site Radiological Control Manual*, as amended, Hanford Site Contractors, Richland, Washington.

National Historic Preservation Act of 1966, 16 U.S.C. 470

National Pollutant Discharge Elimination System, 40 CFR 122

Native American Graves Protection and Repatriation Act, 25 U.S.C. 3001

Resource Conservation and Recovery Act of 1976, 42 U.S.C. 6901, et seq.

Safe Drinking Water Act, 42 U.S.C. 300j-9

Toxic Substances Control Act of 1976, 15 U.S.C. 2064

WAC 173-303, "Dangerous Waste Regulations," *Washington Administrative Code*, as amended.

WAC 173-304, "Minimum Functional Standards for Solid Waste Handling," *Washington Administrative Code*, as amended.

WAC 173-340, "Model Toxics Control Act Cleanup," *Washington Administrative Code*, as amended.

WAC 173-400, "General Regulation for Air Pollution Sources," *Washington Administrative Code*, as amended.

WAC 173-460, "Controls for New Sources of Toxic Air Pollutants," *Washington Administrative Code*, as amended.

WAC 296, "Washington State Occupational Safety and Health Regulations," *Washington Administrative Code*, as amended.

WHC, 1993, *Engineering Report of the Hanford Generating Plant Radiation Contamination Survey*, WHC-SD-NR-ER-100, Rev. 0, Westinghouse Hanford Company, Richland, Washington.

WHC, 1993a, *Data Validation Procedures for Chemical Analyses*, WHC-SD-EN-SPP-002, Rev. 2, Westinghouse Hanford Company, Richland, Washington.

WHC, 1993b, *Data Validation Procedures for Radiochemical Analyses*, WHC-SD-EN-SPP-001, Rev. 1, Westinghouse Hanford Company, Richland, Washington.

APPENDIX A

PLAN VIEW DRAWINGS OF HGP TURBINE AND SUPPORT BUILDINGS

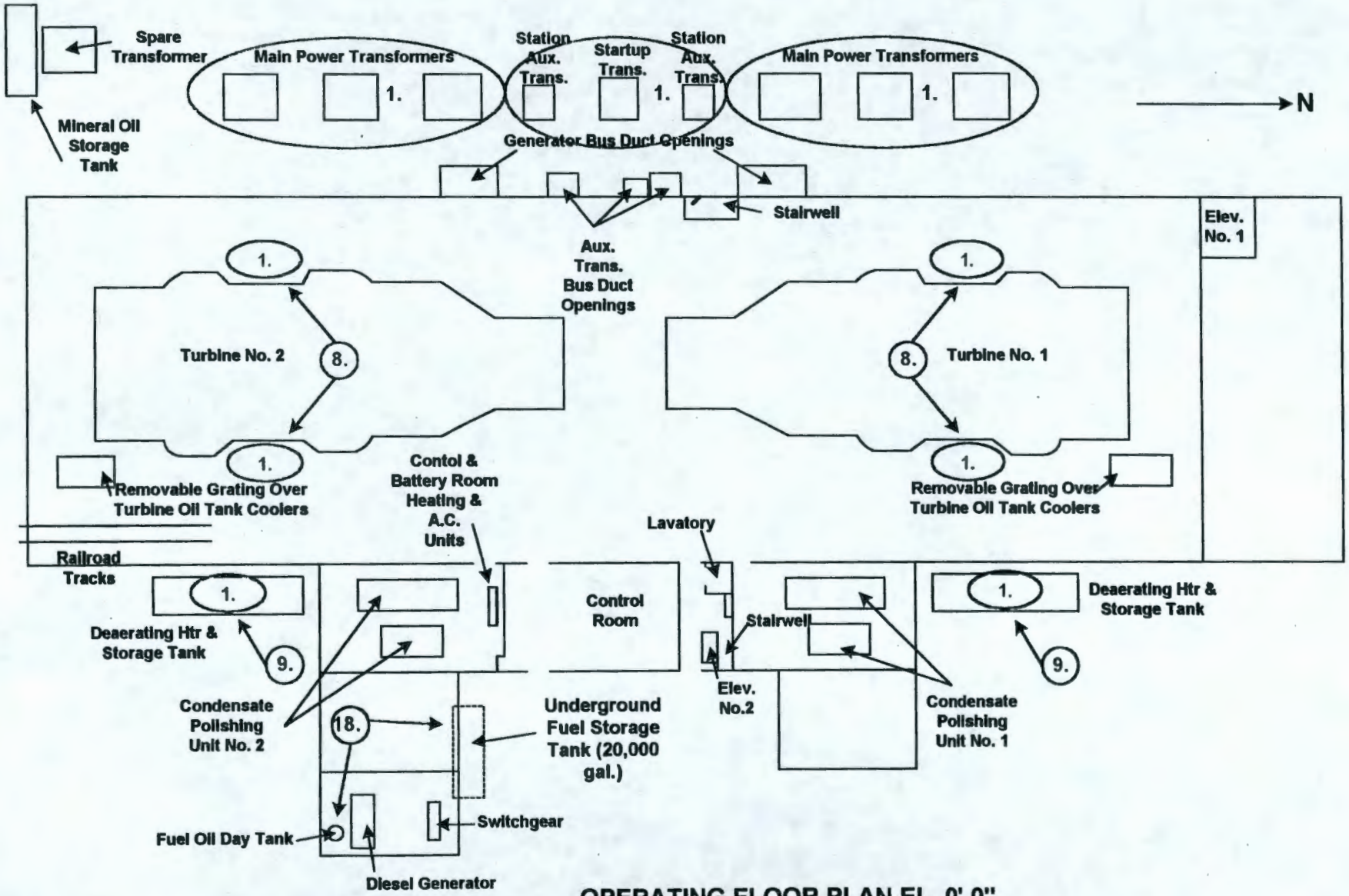

OPERATING FLOOR PLAN EL. 0' 0"

Not to scale

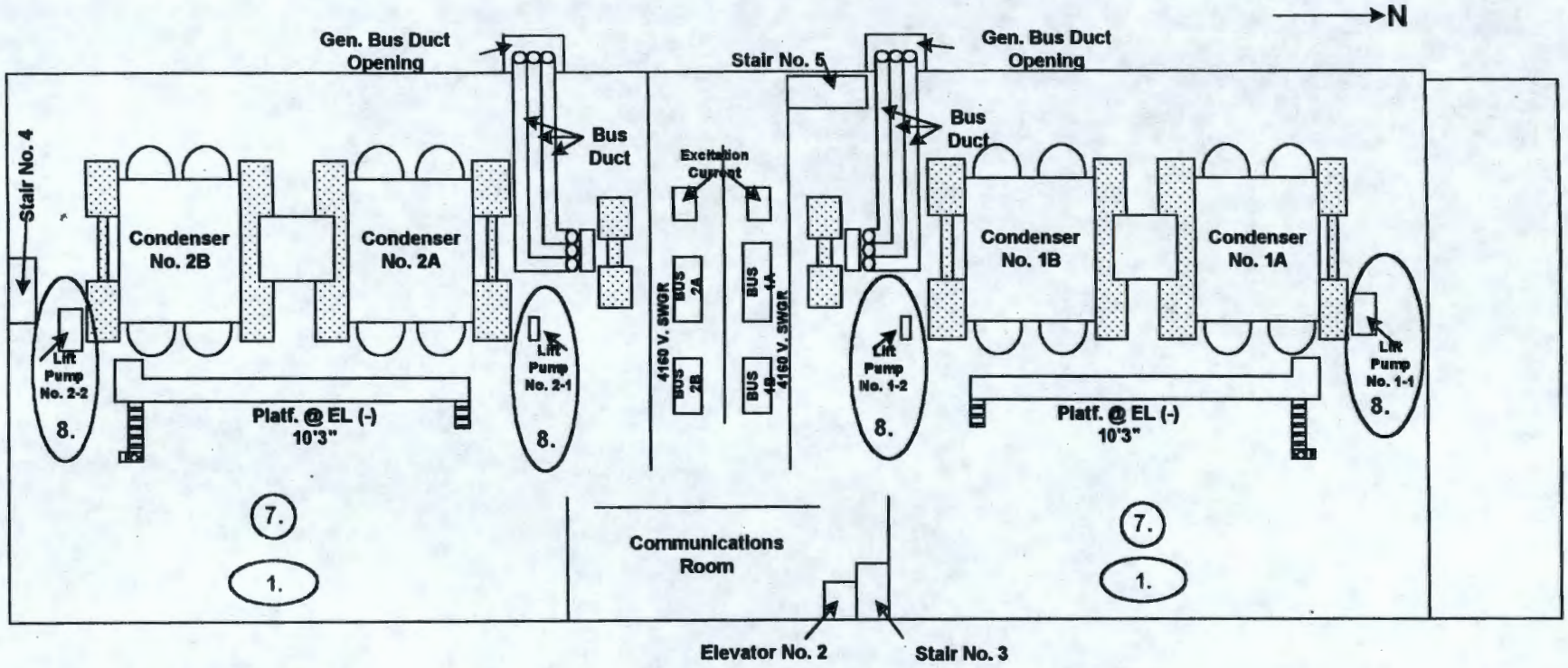

PLAN - PLATFORM ELEV. (-) 16'0"

Not to scale

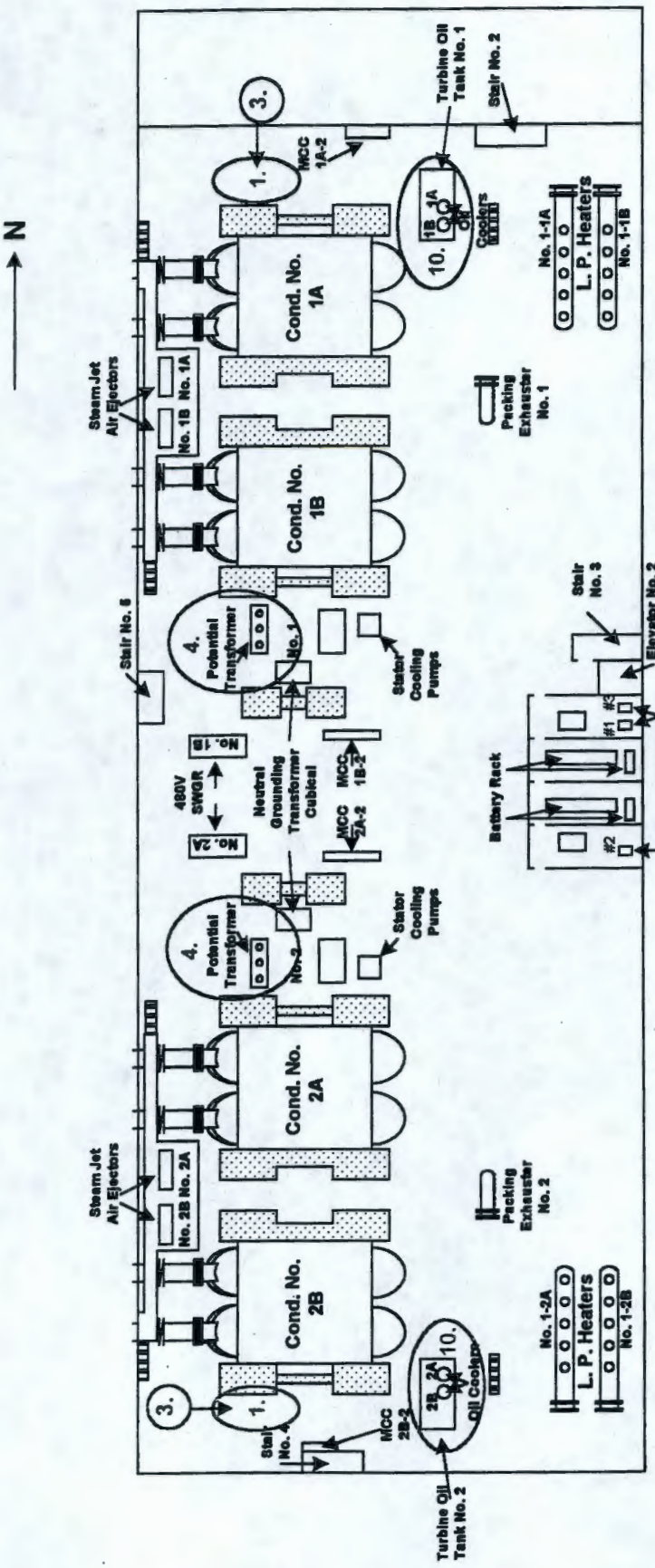

MEZZANINE FLOOR PLAN EL (-) 33'0"

Not to scale

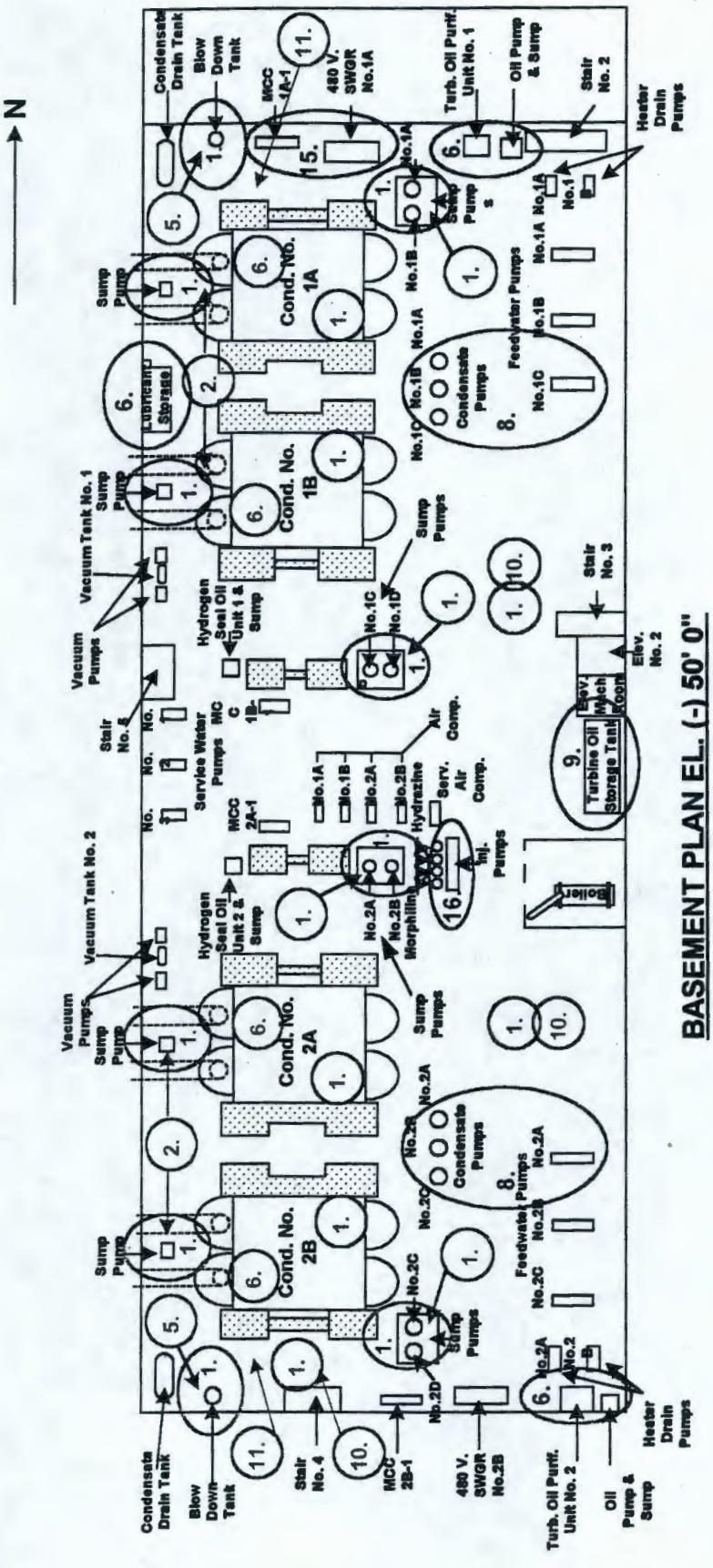

BASEMENT PLAN EL. (-) 50' 0"

Not to scale

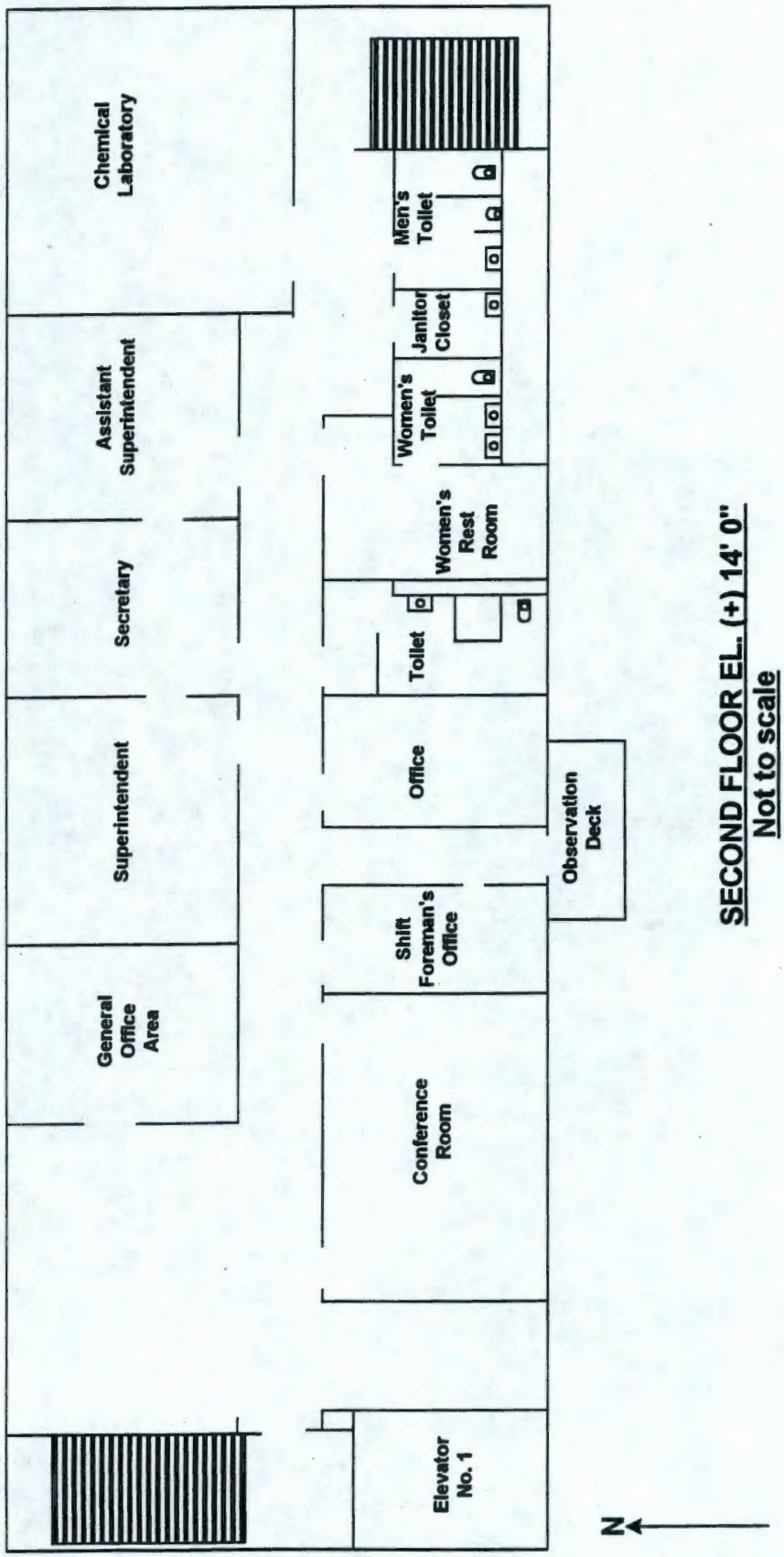

SECOND FLOOR EL. (+) 14' 0"
Not to scale

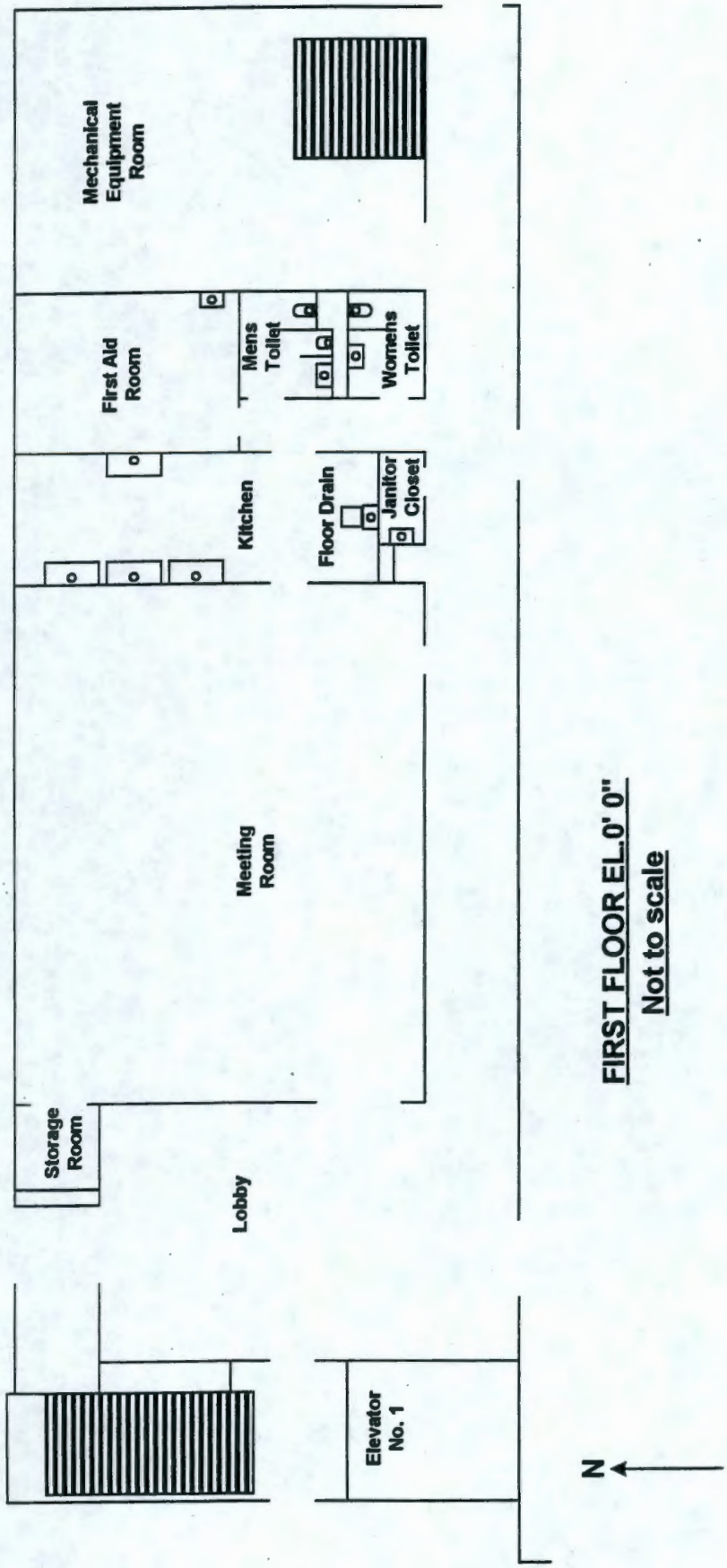

FIRST FLOOR EL.0' 0"
Not to scale

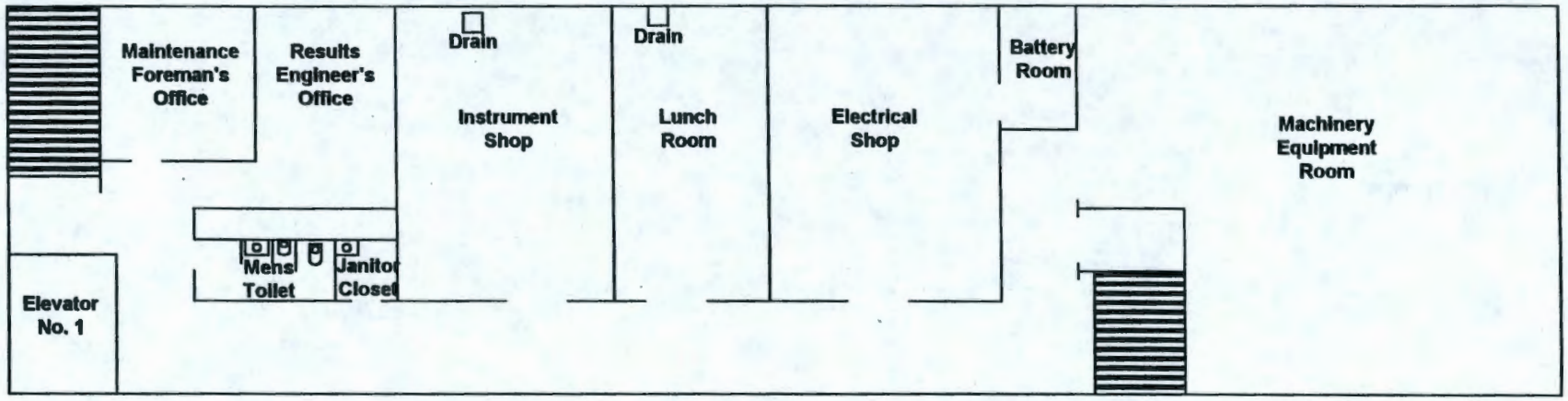

N

THIRD LEVEL - BASEMENT EL. (-) 16' 0"

Not to scale

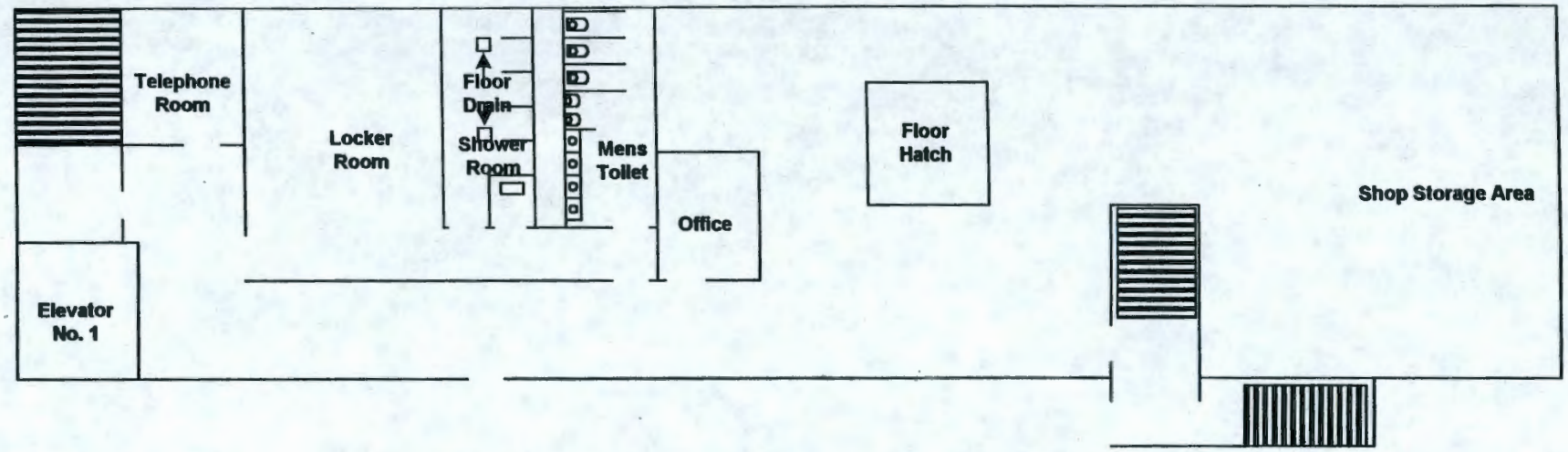

N

SECOND LEVEL - BASEMENT EL. (-) 33' 0"

Not to scale

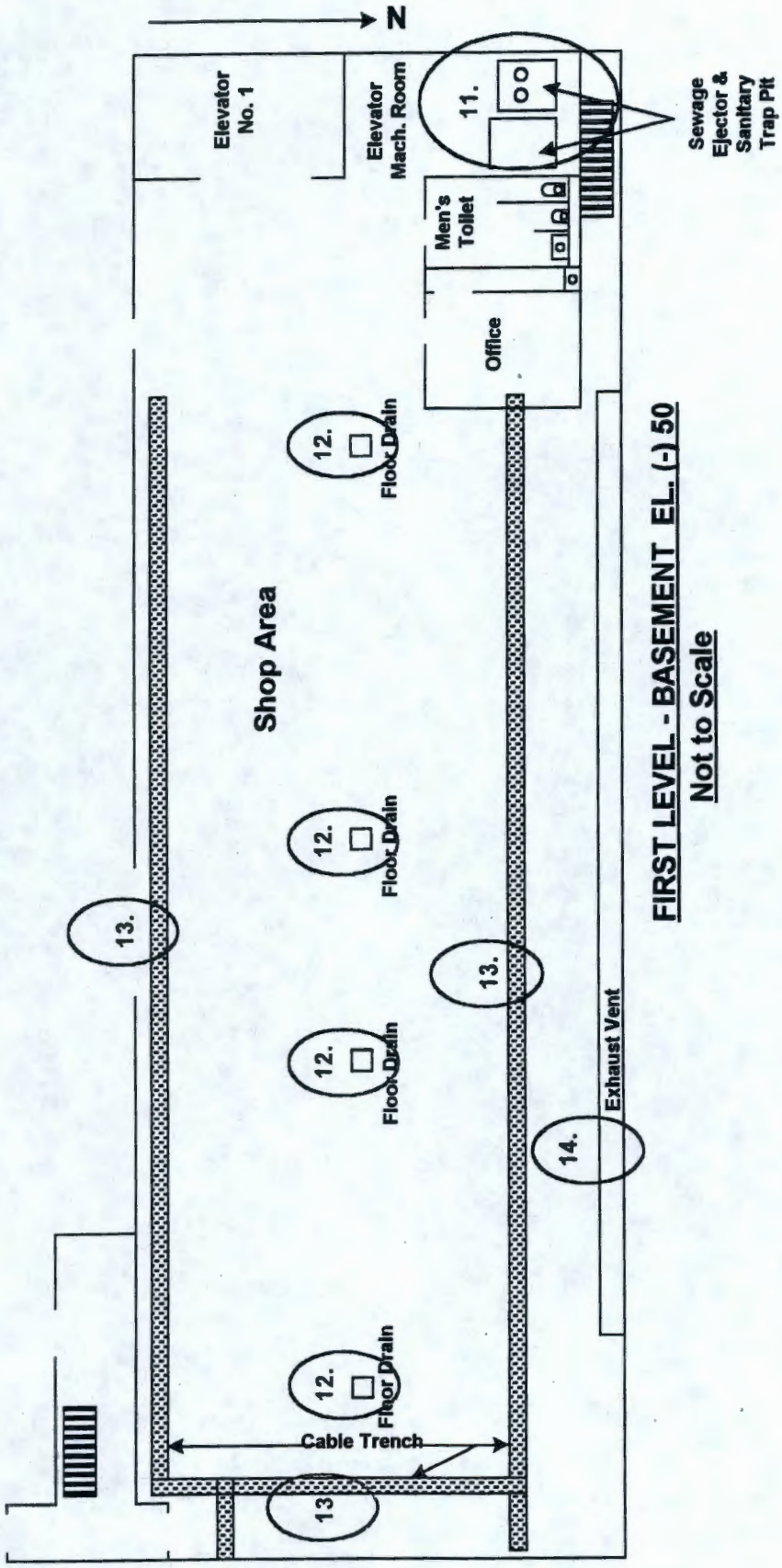

FIRST LEVEL - BASEMENT EL. (-) 50

Not to Scale

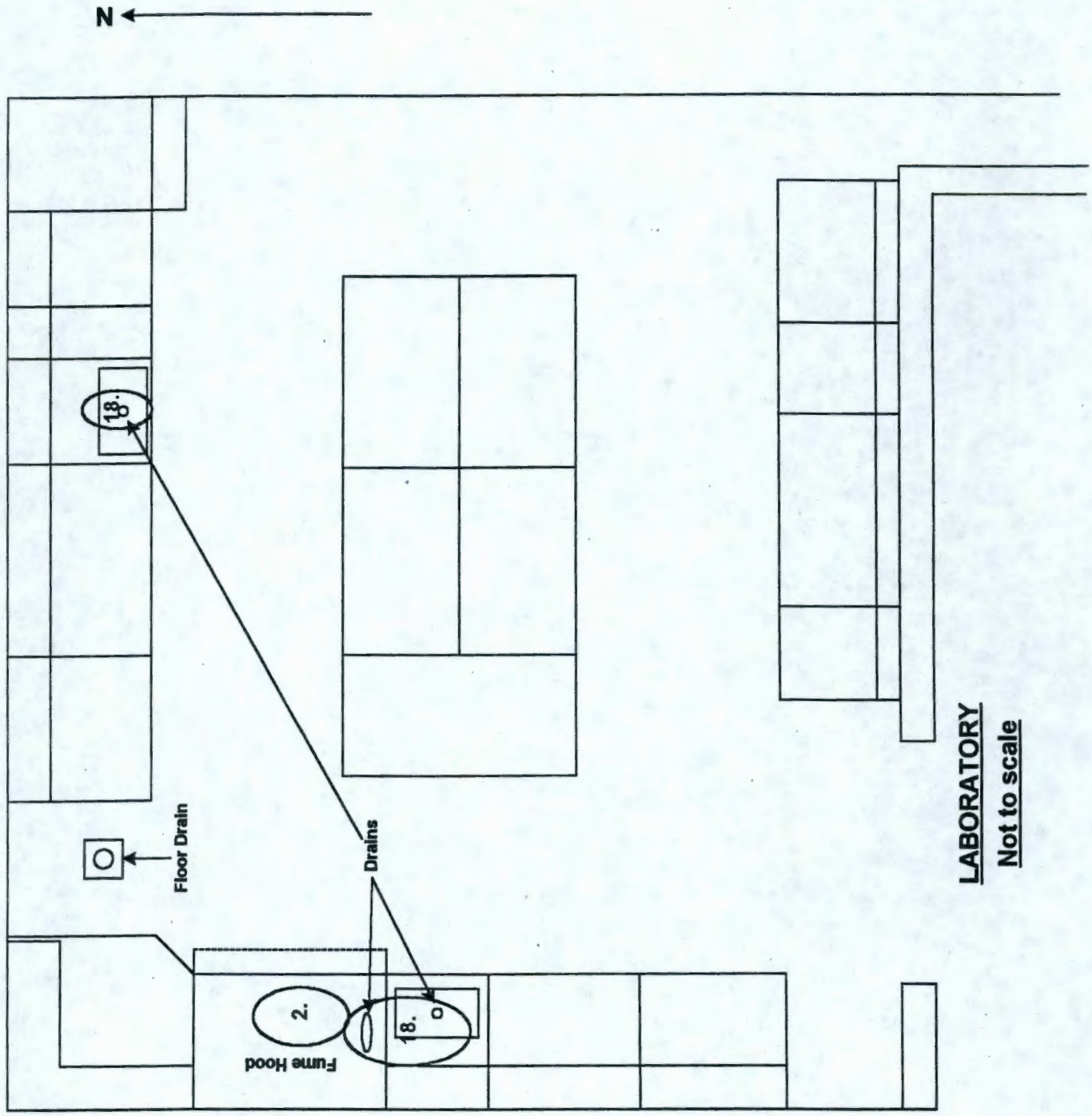
N
Floor Drain
18.
Drains
2.
Fume Hood
18.
LABORATORY
Not to scale

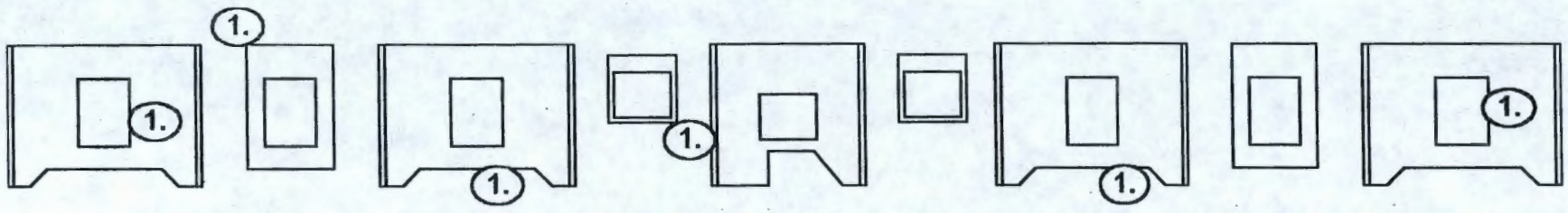

N ←

Solid Waste Management Unit #1
HGP Transformer Yard
Not to Scale

APPENDIX B

SOLID WASTE MANAGEMENT UNITS

SWMU 1 – Transformer Yard	Nine large transformers are arranged outside in a row along the northwest wall of the HGP building (about 400 feet in length). Each transformer is approximately 20 feet tall and 8 feet square and is placed on top of a concrete pad about 10 feet square. The bulk of the area is unpaved and covered with crushed rock. Each transformer has a fluid pump attached to one side and a main valve on the adjacent side. The pumps and valves protrude beyond the transformer pads. The valves and pumps of several of the transformers have passive leaks, as indicated by fluids present on the outside of the transformer and oil stains on the concrete pad and crushed rock below.
SWMU 2 – HGP Building Oil Storage Area	Along the interior northwest wall of the HGP building is a cinder block room approximately 8' x 25'(El.(-) 50'00"). The room has a fire sprinkler system, steel grate floor, and shelving along the wall. Drums and smaller containers of products (e.g.,, petroleum, oil and lubricants) were stored on the floor and shelving. One drum was labeled for used oil. A blind concrete sump (no outlet) is located below the grated floor.
SWMU 3 – Building Floor Drains, and Sumps, and All Piping to the Settling Pond and Outfall	Several floor drains in the basement level(El.(-) 50'00") of the HGP Building collect spills, leaks and any flood waters and direct them to two main sumps. (The elevation of the basement level of the HGP building is below the nearby Columbia River.) The sump contents were then discharged to the settling pond (SWMU 6). Prior to the late 1960s, this water was discharged directly to the HGP outfall, until concern about oil releases led the facility to permanently divert the discharge to the settling pond.
SWMU 4 – Turbine Oil Filter Unit	The turbine oil cleaning systems are in the basement (El.(-) 50'00")of the HGP building along the northeast and southeast walls. Each unit consists of a steel tank 8 ft square x 4 ft tall as well as a below-grade sump approximately 6 ft square and 6 ft deep. Under each lid is a series of filters through which the turbine oil flows after being piped directly to each turbine. The entire unit is surrounded by a concrete berm approximately 6 inches high.
SWMU 5 – Tile Field	The tile field is located behind the HGP building, between the northwest wall and the Columbia River, and consists of a 50-foot square, 10-foot depression with a flat bottom. The side walls slope up at a 2:1 (horizontal to vertical) ratio on three sides. The fourth side is open and the land drops off to the settling pond (SWMU 6). It receives sanitary and laboratory wastes from the HGP building. It is not connected to the floor drains or sumps (SWMU 3) in the HGP building.

SWMU 6 – Settling Pond	The settling pond is located directly below the northwest edge of the tile field (SWMU 5) on a flat shelf of land about 25 feet below the surface level around the plant, and 15 feet lower than the bottom of the tile field. The settling pond is unlined and is approximately 100 feet long, 40 feet wide, and 5 feet deep. The North rim is only 2 feet to 3 feet high and drops off on the far side down the bank to the Columbia River 30 to 40 feet below. The remaining side walls rise to as much as 5 feet high, sloping at a 2:1 (horizontal to vertical) ratio. An outlet pipe drains the pond directly into the HGP outfall.
SWMU 7 - Outfall	There are two parts to this unit, a pipeline and a seal well. The pipeline has diffusers that extend along the bottom of the Columbia River, allowing discharge away from the shore. The seal well consists of a large concrete structure on the river bank and extends 20 feet to 30 feet above the river's surface. The seal well is a chamber into which wastewater was dumped. The wastewater flowed into the Columbia River through the discharge pipe. The seal well also served as a sampling point.
SWMU 8 – Maintenance Garage	The maintenance garage is a separate building located approximately 350 feet east of the HGP building. The garage is similar to a commercial gasoline station, having a front office area, four vehicle bays with roll-up doors, and a back room in the northeast corner, used for storage of painting and maintenance supplies, used oil, and solvents (acetone, toluene, and methyl ethyl ketone). Inside the vehicle bays were several grounds maintenance items, a small boat, and pesticide supplies. Vehicle bays have floor drains and a sink with running water.
SWMU 9 – Wastewater Treatment Units	Three wastewater treatment units are located east of the HGP building. Each consists of a square area of gravel about 10 feet on a side. One near the south corner of the maintenance garage (SWMU 8) contains a 4-foot diameter steel lid. Another, adjacent to the southeast side of the old storage building contains a 6-inch-diameter capped pipe in the center. The third unit which is at the North corner of the guard house contains no visible pipe or tank.
SWMU 10 – Disposal and Storage Yard	Approximately 800 feet to 1,000 feet to the southwest of the HGP Building there is a large storage and disposal area (also known as the bone yard), defined by the bluff overlooking the Columbia River on the northwest side, the HGP property boundary on the southwest side, and the railroad tracks to the southeast. On the southeast side, there is an area of 2 to 5 acres containing scrap iron, electrical components, piping, cable, and miscellaneous pieces of metal equipment. The northwestern side contains another of 2 to 5 acres with several spots of stressed or absent vegetation and deposits of oil-stained soil, sand blast grit, and ion exchange resin beads.

SWMU 11 – Burn Pit	Also know as the "construction debris dump," this unit consists of a large borrow pit covering 5 to 10 acres, 1,000 feet South of the HGP property boundary. The pit has an irregular shape and is 20 to 39 feet deep in the center. Unspecified burning occurred during an unknown time frame.

APPENDIX C

EVALUATION OF HGP SYSTEMS RADIOACTIVE CONTAMINATION POTENTIAL

System/Sub-System/Component	Radioactive Contamination Potential			
	High	Medium	Low	None
Steam Turbine				
Normal Governing Devices				
Control Valves	✓			
Hydraulic Cylinders			✓	
Pilot Valves				✓
Remote Positioning Device				✓
Speed Governor				✓
Speed/Load Changer				✓
Steam Lead Drains	✓			
Heating System	✓			
Long-Range Speed Control				✓
Pre-Emergency Control Devices				
Bowl Pressure Regulator			✓	
Acceleration Relay				✓
Load Sensing Relay				✓
Initial Pressure Regulator		✓		
Emergency Control Devices				
Main Stop Valves	✓			
86SV Lockout Relay Switch				✓
Extraction System Relay Dump Valve		✓		
Emergency Governor and Emergency Trips			✓	
Stop Valve Trip			✓	
Backup Overspeed Trip				✓
Valve Test Station				✓
Desuperheating Sprays in Low Pressure Section	✓			
Steam-Sealed Turbine Shaft Packing	✓			
Steam Seal Regulator	✓			
Steam Packing Exhauster	✓			
Turning Gear				✓
Pressure Lubricating System and Pumps				✓
Electrical Generators				✓
Control Room				✓
Live Steam Piping Systems				
Main Steam System				
Mixing Headers	✓			
Auxiliary Steam Systems				
Condenser Air Removal Steam	✓			
Deaerator Steam	✓			
Heating Steam		✓		
Bleed Steam System	✓			
Blowdown System	✓			
Blowdown Tanks	✓			
Main Steam Drain System	✓			
Auxiliary Steam Drain System	✓			

System/Sub-System/Component	Radioactive Contamination Potential			
	High	Medium	Low	None
Treated Water Systems				
Condensate System				
Main Condensers	✓			
Condensate Pumps	✓			
Low Pressure Heaters	✓			
Low Pressure Heater Drain Pumps	✓			
Condensate Polishing Units	✓			
Deaerator Heaters	✓			
Feed Water Systems				
Feedwater Pumps	✓			
Chemical Feed Systems				
Chemical Feed Tanks				✓
Injection Pumps			✓	
Chemical Monitoring Equipment			✓	
Makeup and Dump System				
Feedwater System Connection		✓		
Condensate System Connection		✓		
Afterheat Removal Storage Tank Connection		✓		
Feedwater Dump Line Connection		✓		
Gland Seal Steam		✓		
River Water Systems				
River Intake System				✓
Circulation Water Systems			✓	
River Outfall System			✓	
Chlorination System				✓
Screen Wash System				✓
Lubricating Water System				✓
Service Water System				✓
Overboard Drain System	✓			
Air Systems				
Air Compressor Station				✓
Instrument Air System				✓
Service Air System				✓
Vacuum Systems				
Condenser Air Removal System	✓			
Main Priming System				✓
Pump House Priming System				✓
Fuel Oil Systems				
Main Fuel Oil System				✓
River Pump House Fuel Oil System				✓
Electrical Service System				
Service AC System				✓
Startup System				✓
Service DC System				✓
Emergency Power System				✓

System/Sub-System/Component	Radioactive Contamination Potential			
	High	Medium	Low	None
Plant Service Systems				
Potable Water System				✓
Steam and Hot Water Heating Systems				
Unit Heaters		✓		
Emergency Heating Boiler				✓
Hot Water Heat Exchanger			✓	
Hot Water Expansion Tank				✓
Hot Water Circulating Pumps				✓
Hot Water Convectors				✓
HVAC System				✓
Fire Protection System				✓
Lighting System				✓
Cranes and Hoists				✓
Miscellaneous				
Communication System				✓
Sanitation System			✓	
Elevators				✓
Machine Shop			✓	
Food Service				✓
Chemical Laboratory			✓	

APPENDIX D

ORGANIZATION CHART

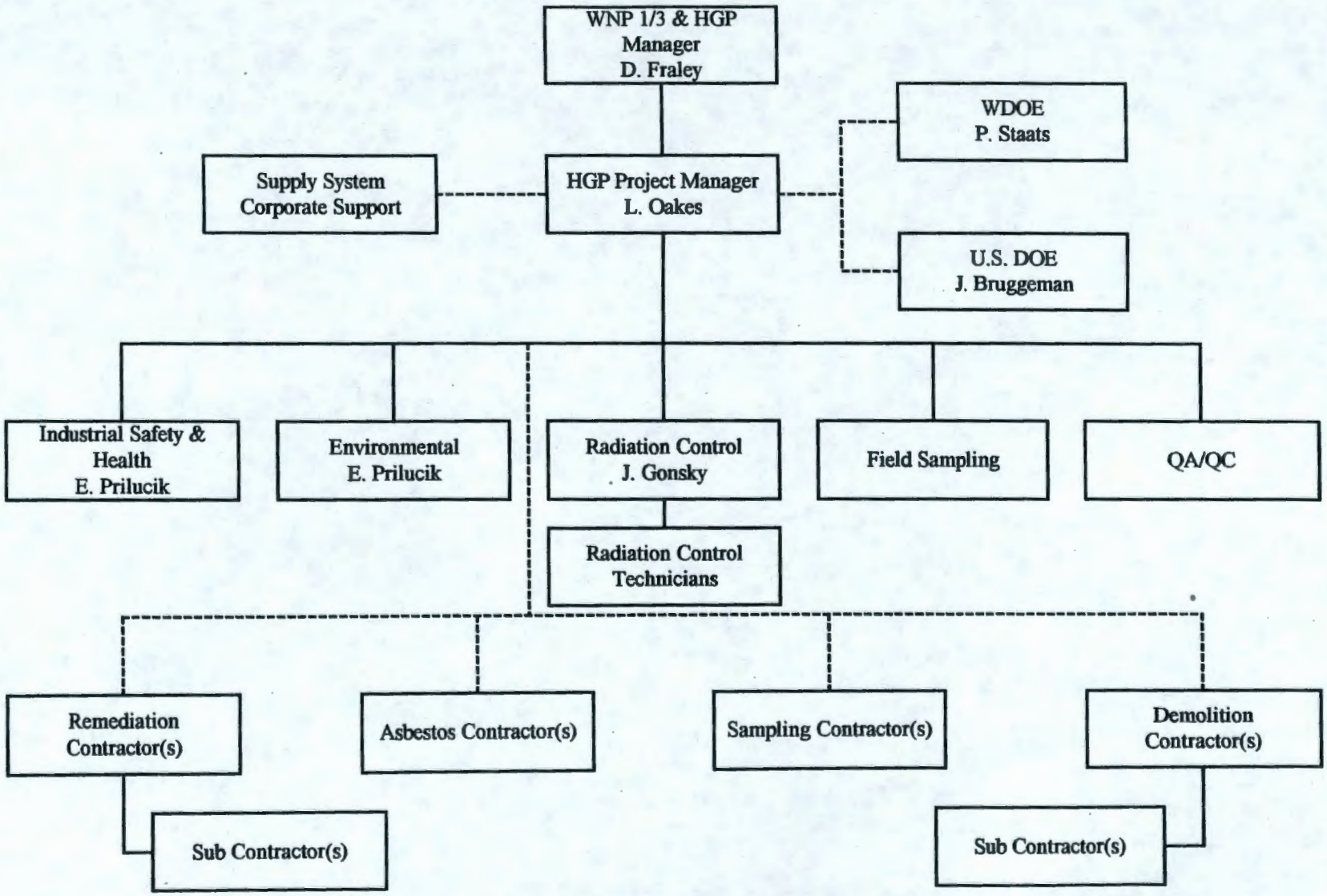
WNP 1/3 & HGP Manager D. Fraley
WDOE P. Staats
Supply System Corporate Support
HGP Project Manager L. Oakes
U.S. DOE J. Bruggeman
Industrial Safety & Health E. Prilucik
Environmental E. Prilucik
Radiation Control J. Gonsky
Field Sampling
QA/QC
Radiation Control Technicians
Remediation Contractor(s)
Asbestos Contractor(s)
Sampling Contractor(s)
Demolition Contractor(s)
Sub Contractor(s)
Sub Contractor(s)