START

0025456

108

WHC-EP-0475-1

UC-721

Facility Effluent Monitoring Plan for the Fast Flux Test Facility

J. M. Nickels
N. R. Dahl

Date Published
November 1992

Prepared for the U.S. Department of Energy
Office of Environmental Restoration
and Environmental Management

Westinghouse Hanford Company
P.O. Box 1970
Richland, Washington 99352

Hanford Operations and Engineering Contractor for the
U.S. Department of Energy under Contract DE-AC06-87RL10930

JAN 1993
RECEIVED
EDMC

Approved for Public Release

LEGAL DISCLAIMER

This report was prepared as an account of work sponsored by an agency of the United States Government. Neither the United States Government nor any agency thereof, nor any of their employees, nor any of their contractors, subcontractors or their employees, makes any warranty, express or implied, or assumes any legal liability or responsibility for the accuracy, completeness, or any third party's use or the results of such use of any information, apparatus, product, or process disclosed, or represents that its use would not infringe privately owned rights. Reference herein to any specific commercial product, process, or service by trade name, trademark, manufacturer, or otherwise, does not necessarily constitute or imply its endorsement, recommendation, or favoring by the United States Government or any agency thereof or its contractors or subcontractors. The views and opinions of authors expressed herein do not necessarily state or reflect those of the United States Government or any agency thereof.

This report has been reproduced from the best available copy. Available in paper copy and microfiche.

Available to the U.S. Department of Energy
and its contractors from
Office of Scientific and Technical Information
P.O. Box 62
Oak Ridge, TN 37831
(615) 576-8401

Available to the public from the U.S. Department of Commerce
National Technical Information Service
5285 Port Royal Road
Springfield, VA 22161
(703) 487-4650

Printed in the United States of America

DISCLM-1.CHP (1-91)

WESTINGHOUSE HANFORD COMPANY APPROVAL PAGE

Document Title: Facility Effluent Monitoring Plan for Fast Flux Test Facility

Prepared by:

N. R. Dahl Plant Engineer, FFTF Regulatory Compliance	11/10/92 Date	J. M. Nickels Principal Engineer Regulatory Analysis	11/9/92 Date

Approved by:

P. C. Miller Manager, Regulatory Compliance	11/10/92 Date	D. J. Swaim Manager, FFTF Plant	11/10/92 Date
G. B. Griffin Manager, FFTF Operations	11/10/92 Date	E. M. Greager Manager, 300 Area Environmental Protection	11-16-92 Date
for 11/20/92 D. G. Farwick Manager, Environmental Services Quality Assurance	11/20/92 Date	Roger J. Landon R. J. Landon Manager, Regulatory Analysis	11/23/92 Date

9 3 1 2 8 6 4 0 2 4 4

Date Received: 10/25/92	INFORMATION RELEASE REQUEST ORIGINAL	Reference: WHC-CM-3-4

Complete for all Types of Release

Purpose

- [] Speech or Presentation
  - [] Full Paper
  - [] Summary
  - [] Abstract
  - [] Visual Aid
  - (Check only one suffix)
- [] Speakers Bureau
- [] Poster Session
- [] Videotape
- [] Reference
- [X] Technical Report
- [] Thesis or Dissertation
- [] Manual
- [] Brochure/Flier
- [] Software/Database
- [] Controlled Document
- [] Other

ID Number (include revision, volume, etc.): WHC-EP-0475-1

List attachments.

Date Release Required: November 9, 1992

Title: Facility Effluent Monitoring Plan for the Fast Flux Test Facility

Unclassified Category: UC-721

Impact Level: 3

New or novel (patentable) subject matter? [X] No [] Yes
If "Yes", has disclosure been submitted by WHC or other company?
[] No [] Yes Disclosure No(s).

Information received from others in confidence, such as proprietary data, trade secrets, and/or inventions?
[X] No [] Yes (Identify)

Copyrights? [X] No [] Yes
If "Yes", has written permission been granted?
[] No [] Yes (Attach Permission)

Trademarks?
[X] No [] Yes (Identify)

Complete for Speech or Presentation

Title of Conference or Meeting: N/A

Group or Society Sponsoring:

Date(s) of Conference or Meeting:

City/State:

Will proceedings be published? [] Yes [] No
Will material be handed out? [] Yes [] No

Title of Journal:

CHECKLIST FOR SIGNATORIES

Review Required per WHC-CM-3-4	Yes	No	Reviewer - Signature Indicates Approval: Name (printed)	Signature	Date
Classification/Unclassified Controlled Nuclear Information	[]	[X]	J.M. Nickels	J.M. Nickels	10/25/92
Patent - General Counsel	[X]	[]	B.D. Williamson	B.D. Williamson	10/27/92
Legal - General Counsel	[X]	[]	B.D. Williamson	B.D. Williamson	10/28/92
Applied Technology/Export Controlled Information or International Program	[]	[X]	J.M. Nickels	J.M. Nickels	10/25/92
WHC Program/Project	[]	[X]	J.M. Nickels	J.M. Nickels	10/25/92
Communications	[]	[X]	J.M. Nickels	J.M. Nickels	10/25/92
RL Program/Project	[X]	[]	E.B. Dagan	E.B. Dagan	11/30/92
Publication Services	[X]	[]	M.P. Curry	M.P. Curry	11/20/92
Other Program/Project	[]	[X]	J.M. Nickels	J.M. Nickels	10/25/92

Information conforms to all applicable requirements. The above information is certified to be correct.

	Yes	No
References Available to Intended Audience	[X]	[]
Transmit to DOE-HQ/Office of Scientific and Technical Information	[]	[X]

Author/Requestor (Printed/Signature): J.M. Nickels J.M. Nickels Date: 10/25/92

Intended Audience: [] Internal [] Sponsor [X] External

Responsible Manager (Printed/Signature): L.P. Diediker Date: 10/25/92

INFORMATION RELEASE ADMINISTRATION APPROVAL STAMP

Stamp is required before release. Release is contingent upon resolution of mandatory comments.

APPROVED FOR RELEASE
OFFICIAL DOCUMENT
Date 11-30-92

Date Cancelled

Date Disapproved

9312536024 5

FACILITY EFFLUENT MONITORING PLAN FOR THE FAST FLUX TEST FACILITY

JM Nickels

ABSTRACT

A facility effluent monitoring plan is required by the U.S. Department of Energy in U.S. Department of Energy Order 5400.1 for any operations that involve hazardous materials and radioactive substances that could affect employee or public safety or the environment. A Facility Effluent Monitoring Plan determination was performed during calendar year 1991 and the evaluation requires the need for a facility effluent monitoring plan. This document is prepared using the specific guidelines identified in A Guide for Preparing Hanford Site Facility Effluent Monitoring Plans, WHC-EP-0438-1**. This facility effluent monitoring plan assesses effluent monitoring systems and evaluates whether they are adequate to ensure the public health and safety as specified in applicable federal, state, and local requirements.*

This facility effluent monitoring plan shall ensure long-range integrity of the effluent monitoring systems by requiring an update whenever a new process or operation introduces new hazardous materials or significant radioactive materials. This document must be reviewed annually even if there are no operational changes, and it must be updated at least every three years.

**General Environmental Protection Program*, DOE Order 5400.1, U.S. Department of Energy, Washington, D.C., 1988.

***A Guide for Preparing Hanford Site Facility Effluent Monitoring Plans*, WHC-EP-0438-1, Westinghouse Hanford Company, Richland, Washington, 1992.

9 3 1 2 8 5 4 0 2 4 6

This facility effluent monitoring plan has been revised to include U.S. Department of Energy/Westinghouse Hanford Company Regulatory Analysis comments, procedure changes (revisions).

9 3 1 2 8 6 4 0 2 4 7

CONTENTS

1.0 FACILITY EFFLUENT MONITORING PLAN 1-1
1.1 INTRODUCTION 1-1
1.1.1 Policy 1-1
1.1.2 Purpose 1-1
1.1.3 Scope 1-1
1.1.4 Discussion 1-2

2.0 FACILITY DESCRIPTION 2-1
2.1 DESCRIPTION OF THE FACILITY 2-1
2.2 DESCRIPTION OF FACILITY OPERATIONS 2-1
2.2.1 Reactor 2-1
2.2.2 Reactor Heat Transport System 2-5
2.2.3 Argon and Nitrogen Systems 2-11
2.2.4 Effluent System Layout 2-11
2.2.5 Radioactive Argon Processing System and Cell Atmosphere Processing System 2-16
2.2.6 Efficiency Values of each Control Device for Removal of Radioactivity 2-19
2.2.7 Efficiency of Radioactive Argon Processing System and Cell Atmosphere Processing System 2-19
2.2.8 Means and Frequency of Testing and Inspecting Effluent Treatment Systems 2-22
2.2.9 Operating Mode 2-23
2.3 IDENTIFICATION AND CHARACTERIZATION OF POTENTIAL SOURCE TERMS 2-23
2.3.1 Radioactive Source Term 2-23
2.3.2 Hazardous Material Source Terms 2-24

3.0 APPLICABLE REGULATIONS 3-1
3.1 FACILITY EFFLUENT MONITORING PLAN REQUIREMENTS 3-1
3.2 HAZARDOUS MATERIAL 3-5
3.3 AIRBORNE EFFLUENTS 3-5
3.3.1 National Emissions Standards for Hazardous Air Pollutants 3-6
3.3.2 U.S. Department of Energy Orders 3-12

4.0 IDENTIFICATION AND CHARACTERIZATION OF EFFLUENT STREAMS 4-1
4.1 IDENTIFICATION AND CHARACTERIZATION OF SOURCE TERMS CONTRIBUTING TO EACH EFFLUENT STREAM 4-1
4.1.1 System Function and Area Exhausted 4-1
4.1.2 Upset Operating Conditions 4-7

5.0 EFFLUENT POINT OF DISCHARGE DESCRIPTION 5-1
5.1 AIRBORNE RELEASE POINT DATA 5-1
5.1.1 Stack Diameter 5-1
5.1.2 Stack Height 5-1
5.1.3 Building Height, Width, and Length 5-1
5.1.4 Annual Average Stack and Ambient Air Temperatures . . . 5-1

9 3 1 2 3 5 4 0 2 4 8

CONTENTS (continued)

5.1.5 Annual Wind Rose 5-1
5.1.6 Chi/Q Data 5-3
5.1.7 Annual Average Volumetric Flow Rate 5-3

6.0 EFFLUENT MONITORING/SAMPLING DESIGN CRITERIA 6-1

7.0 CHARACTERIZATION OF CURRENT EFFLUENT MONITORING SYSTEM 7-1
7.1 DESCRIPTION OF THE EFFLUENT AIRBORNE SAMPLING AND MONITORING SYSTEM 7-1
7.1.1 Stack Flow Measuring System 7-1
7.1.2 Sample Probes 7-2
7.1.3 Number and Location of Sampling Points 7-2
7.1.4 Sample Lines 7-2
7.1.5 Sample Flow Regulation 7-2
7.1.6 Sampling Media 7-3
7.1.7 Frequency of Sampling 7-3
7.1.8 Frequency of Sample Collection 7-3
7.1.9 Calibration and Audit Schedules 7-3
7.2 OPERATIONAL SPECIFICATIONS PERTAINING TO EFFLUENT MONITORING SYSTEM 7-3
7.3 ALTERNATE MONITORING AND ASSESSMENT METHODS 7-4

8.0 HISTORICAL MONITORING/SAMPLING DATA FOR EFFLUENT STREAMS 8-1
8.1 NORMAL CONDITIONS 8-1
8.1.1 Annual Average Release Rates 8-1
8.2 UPSET CONDITIONS 8-2

9.0 SAMPLE ANALYSIS AND LABORATORY PROCEDURES 9-1
9.1 ANALYTICAL LABORATORY AND PROCEDURES 9-1
9.2 SAMPLE AND DATA CHAIN OF CUSTODY 9-1
9.3 U.S. DEPARTMENT OF ENERGY ANALYTICAL AND LABORATORY GUIDELINES 9-2

10.0 NOTIFICATIONS AND REPORTING REQUIREMENTS 10-1
10.1 ENVIRONMENTAL OCCURRENCE 10-1
10.1.1 Occurrence Identification and Immediate Response . . 10-1
10.1.2 Occurrence Categorization 10-1
10.2 PERIODIC ROUTINE EFFLUENT MONITORING REPORTS 10-3

11.0 NEAR-FIELD ENVIRONMENTAL SURVEILLANCE 11-1
11.1 DESCRIPTION 11-1
11.2 PURPOSE 11-1
11.3 BASIS 11-1
11.4 MEDIA SAMPLED & ANALYSES PERFORMED 11-1
11.5 LOCATIONS 11-2
11.6 PROGRAM REVIEW 11-2

9 3 1 2 8 5 4 0 2 4 9

CONTENTS (continued)

11.7 SAMPLER DESIGN 11-2
11.8 COMMUNICATION 11-2
11.9 REPORTS 11-3

12.0 QUALITY ASSURANCE PLAN 12-1
12.1 PURPOSE 12-1
12.2 OBJECTIVE 12-1
12.3 REQUIREMENTS 12-1
12.4 FACILITY SPECIFIC REQUIREMENTS 12-1

13.0 INTERNAL AND EXTERNAL PLAN REVIEW 13-1

14.0 COMPLIANCE ASSESSMENT 14-1
14.1 COMPARISON OF INSTRUMENT SPECIFICATIONS WITH REQUIRED STANDARDS 14-1
14.1.1 American National Standards Institute N42.18-1980 (ANSI 1980b) Compliance 14-1
14.1.2 American National Standards Institute N13.1-1969 Compliance 14-3
14.1.3 Effluent Flow Rate 14-3
14.1.4 Comparison of Projected Effluent Characteristics with Historical Data 14-3
14.1.5 Comparison of Effluent Monitoring Capabilities with Regulatory and Contractor Requirements 14-4
14.2 EXEMPTIONS 14-4

15.0 SUMMARY AND CONCLUSIONS 15-1

16.0 ATTACHMENTS 16-1
16.1 REFERENCES 16-1

9 3 1 2 3 5 4 0 2 5 0

This page intentionally left blank.

9 3 1 2 8 6 4 0 2 5 1

LIST OF FIGURES

2-1 Fast Flux Test Facility 2-2

2-2 Fast Flux Test Facility Plant Arrangement 2-3

2-3 Reactor Cutaway 2-4

2-4 Core Map Showing Typical Arrangement 2-6

2-5 Combined Exhaust Flow Diagram 2-7

2-5a Reactor Heat Transport System Schematic 2-8

2-5b One of the Three Cooling Circuits of the Heat Transport System 2-9

2-6 The Reactor Service Building Unlined Cells Exhaust Flow Path 2-15

2-7 Cover Gas Flow Path 2-17

2-8 Radioactive Argon Processing System and Cell Atmosphere Processing System 2-18

4-1 Containment Vessel 4-2

4-2a Typical Cross Section of Internal Structures Within the Containment Vessel 4-3

4-2b Reactor Containment Building Cutaway 4-4

5-1 Wind Rose for the Fast Flux Test Facility 5-2

LIST OF TABLES

2-1 Reactor Service Building Unlined Cells 2-14

2-2 U.S. Environmental Protection Agency Requirements 2-24

2-3 Hazardous Substances Stored in Building 2-25

3-1 Applicable Regulations and Standards 3-2

8-1 Annual Average Release Rates for 1988 8-1

8-2 Radionuclide Airborne Emissions for 1990 8-3

8-3 Radionuclide Airborne Emissions for 1991 8-3

8-4 Liquid Effluent Releases for 1990 8-3

9-1 Laboratory Procedures 9-3

9-2 Data Analyses and Statistical Treatment 9-4

LIST OF TERMS

ACV	administrative control valve
ALARA	as low as reasonable achievable
ANSI	American National Standards Institute
ASME	American Society of Mechanical Engineers
ASTM	American Society for Testing and Materials
BAT	best available technology
CAPS	Cell Atmosphere Processing System
CERCLA	*Comprehensive Environmental Response, Compensation, and Liability Act of 1980*
CFR	Code of Federal Regulations
CIS	Containment Isolation System
DCG	derived concentration guide
DOE	U.S. Department of Energy
DOH	Washington State Department of Health
Ecology	Washington (State) Department of Ecology
EDE	effective dose equivalent
EMP	Environmental Monitoring Plan
EPA	Environmental Protection Agency
FEMP	Facility Effluent Monitoring Plan
FFTF	Fast Flux Test Facility
FSF	Fuel Storage Facility
HEPA	high-efficiency particulate air (filter)
HPT	Health Physics Technician
HTS-S	Heat Transport Building - South
MRP	Management Requirements and Procedures (Manual)
MW	megawatt
NESHAP	*National Emissions Standards for Hazardous Air Pollutants*
NRC	Nuclear Regulatory Commission
ONC	Occurrence Notification Center
PCB	Polychlorinated Biphenyl
PNL	Pacific Northwest Laboratory
QA	Quality Assurance
QAPjP	Quality Assurance Project Plan
RAPS	Radioactive Argon Processing System
RL	U.S. Department of Energy, Field Office, Richland
RQ	reportable quantity
RSB	Reactor Service Building
TLD	thermoluminescent dosimeter
TSCA	*Toxic Substances Control Act of 1976*
Westinghouse Hanford	Westinghouse Hanford Company
wg	water gauge

9 3 1 2 8 5 4 0 2 5 4

This page intentionally left blank.

9 3 1 2 8 5 4 0 2 5 5

FAST FLUX TEST FACILITY EFFLUENT MONITORING PLAN

1.0 FACILITY EFFLUENT MONITORING PLAN

1.1 INTRODUCTION

The purpose of this section is to provide information on the policy, purpose, and scope of a Facility Effluent Monitoring Plan (FEMP).

1.1.1 Policy

It is the policy of the U.S. Department of Energy (DOE) and its contractor, Westinghouse Hanford Company (Westinghouse Hanford), to conduct facility effluent monitoring (sampling and monitoring) that is adequate in determining whether the public and the environment are sufficiently protected during DOE operations and whether operations are in compliance with DOE and other applicable federal, state, and local emission standards and requirements. It is also DOE and Westinghouse Hanford policy that effluent monitoring programs meet high standards of quality and credibility.

1.1.2 Purpose

The purpose of this plan is to fulfill the *General Environmental Protection Program*, DOE Order 5400.1 (DOE 1988a), for a FEMP to exist for each site, facility, or process that uses, generates, releases, or manages significant pollutants of radioactive or hazardous materials which could impact public and employee safety and the environment. This document is specifically intended to meet this requirement for the Fast Flux Test Facility (FFTF) on the Hanford Site.

The purpose of the FEMP is to assess and document this information to determine if the monitoring, sampling, and controls are sufficient to protect the public and the environment; and to assess whether these systems are in compliance with all federal, state, and local requirements and regulations.

1.1.3 Scope

The scope of this document is limited to effluent streams that, because of the quantity of materials being managed, could exceed 40 Code of Federal Regulations (CFR) Part 61 the *National Emission Standards for Hazardous Air Pollutants* (NESHAP) (EPA 1991a) requirements. Monitoring of streams which do not exceed these requirements are addressed separately in FFTF safety documents.

Facility Effluent Monitoring Plans are written to provide sufficient information on the effluent characteristics and the effluent monitoring systems of facilities so that a compliance assessment against the applicable

9 3 1 2 8 5 4 0 2 5 6

requirements may be easily accomplished. Adequate details are supplied such that radioactive source terms related to specific effluent discharge points can be finally compared to the effluent monitoring system capability.

1.1.4 Discussion

Facility Effluent Monitoring Plans are required for facilities if the total projected effective dose equivalent (EDE) to any member of the public from radionuclide emissions at the facility exceeds 0.1 mrem/yr from any one discharge point or if any one regulated material discharged over a 24 h period from a facility exceeds 100% of the *Comprehensive Environmental Response, Compensation, and Liability Act of 1980* (CERCLA) reportable quantity (RQ) as listed in *Designation, Reportable Quantity, and Notification*, 40 CFR 302.4 (EPA 1991b). The FEMPs are self-supporting in-depth documents which detail the effluents, the effluent discharge points, the monitoring systems, the sampling protocol, and the controls at the facility.

This document was developed under the guidance given in *A Guide For Preparing Hanford Site Facility Effluent Monitoring Plans*, (WHC 1991a).

A FEMP determination was completed in 1991. Results of the determination requires that a FEMP be prepared to address the potential argon emissions released during upset conditions that could exceed the EPA criteria. This document addresses the condition.

9 3 1 2 8 6 4 0 2 5 7

2.0 FACILITY DESCRIPTION

2.1 DESCRIPTION OF THE FACILITY

The FFTF is a 400-megawatt (MW) thermal sodium-cooled, fast neutron flux reactor plant designed specifically for irradiation testing of nuclear reactor fuels and materials for liquid metal fast breeder reactors. The reactor provides extensive capability for in-core irradiation testing, including eight core positions that may be used with independent instrumentation for the test specimens. Four of these positions may be used for independently cooled test loops. In addition to irradiation testing capabilities, the FFTF provides long-term testing and evaluation of plant components and systems for liquid metal fast breeder reactors.

Future missions for the FFTF may include production of medically useful radioisotopes, conversion of radioactive waste to less hazardous material, nuclear weapons neutralization, materials testing for fusion and space reactors, and generation of electricity. Each of these activities will be evaluated, as it is engineered, for its effect on plant emissions both radiological and chemical.

The plant is currently in a standby condition awaiting further direction from DOE. The plant is currently set up for a full-power rating of 291 MW thermal instead of the design full-power rating of 400 MW thermal. The lower value was established to limit temperatures in experimental fuel assemblies presently in the core and known as the Core Demonstration Experiment. If the FFTF continues to operate in the future it will be at 291 MW thermal, although it remains an option to return to the design full-power rating.

The FFTF is a complex of buildings and equipment arranged around a reactor containment building. This arrangement includes the reactor itself, as well as equipment and structures for heat removal, containment, core component handling and examination, instrumentation and control, and for supplying utilities and other essential services, as shown in Figures 2-1 and 2-2.

2.2 DESCRIPTION OF FACILITY OPERATIONS

2.2.1 Reactor

The reactor is located in a shielded cell filled with nitrogen gas. A cutaway of the reactor is shown in Figure 2-3. The reactor consists of the following major components:

- Reactor vessel, reactor guard vessel, and reactor head
- Reactor core
- Above-core in-vessel components
- Ex-vessel neutron flux monitoring and surveillance equipment.

9 3 1 2 8 6 4 0 2 5 8

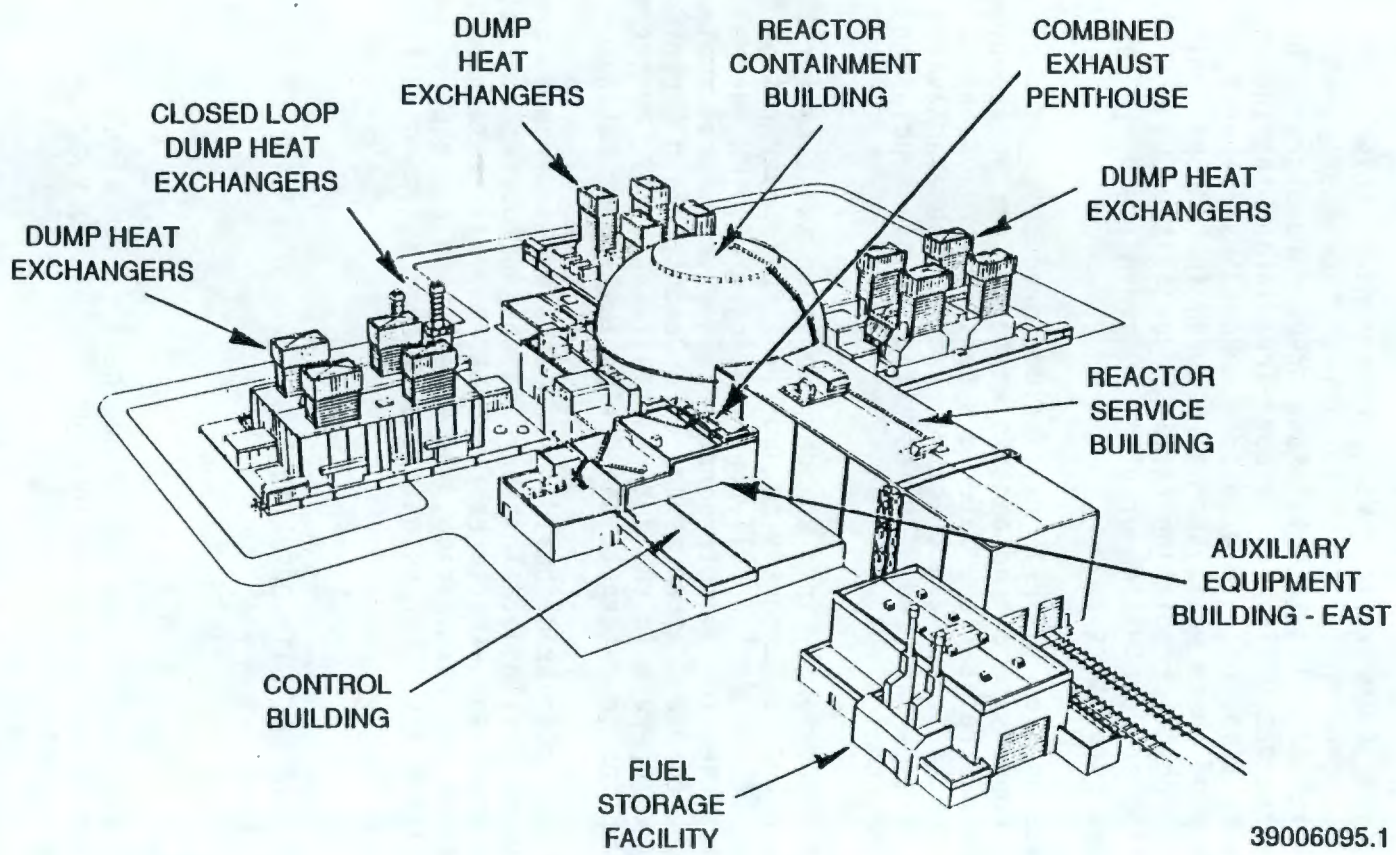

Figure 2-1. Fast Flux Test Facility.

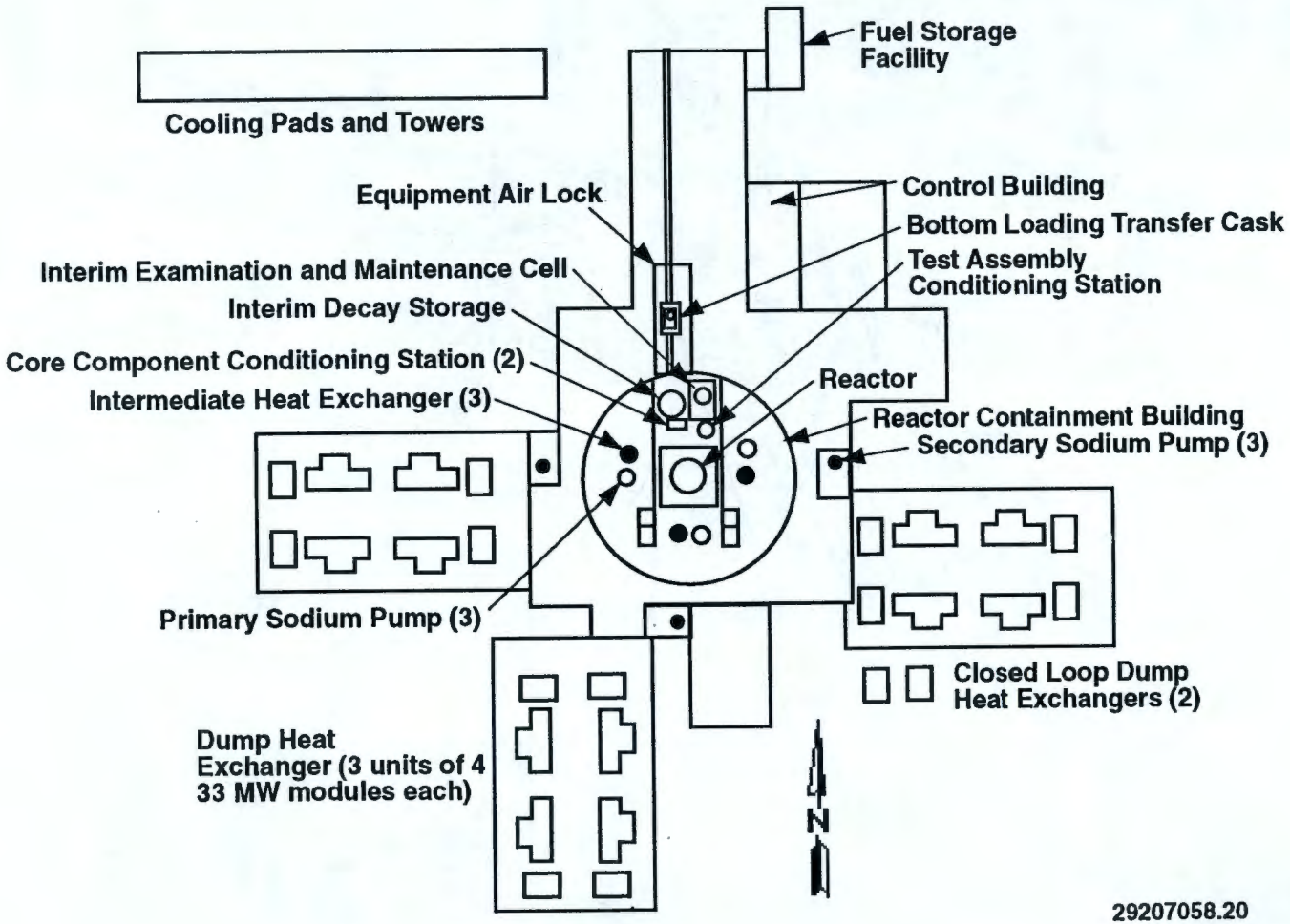

Figure 2-2. Fast Flux Test Facility Plant Arrangement.

Figure 2-3. Reactor Cutaway.

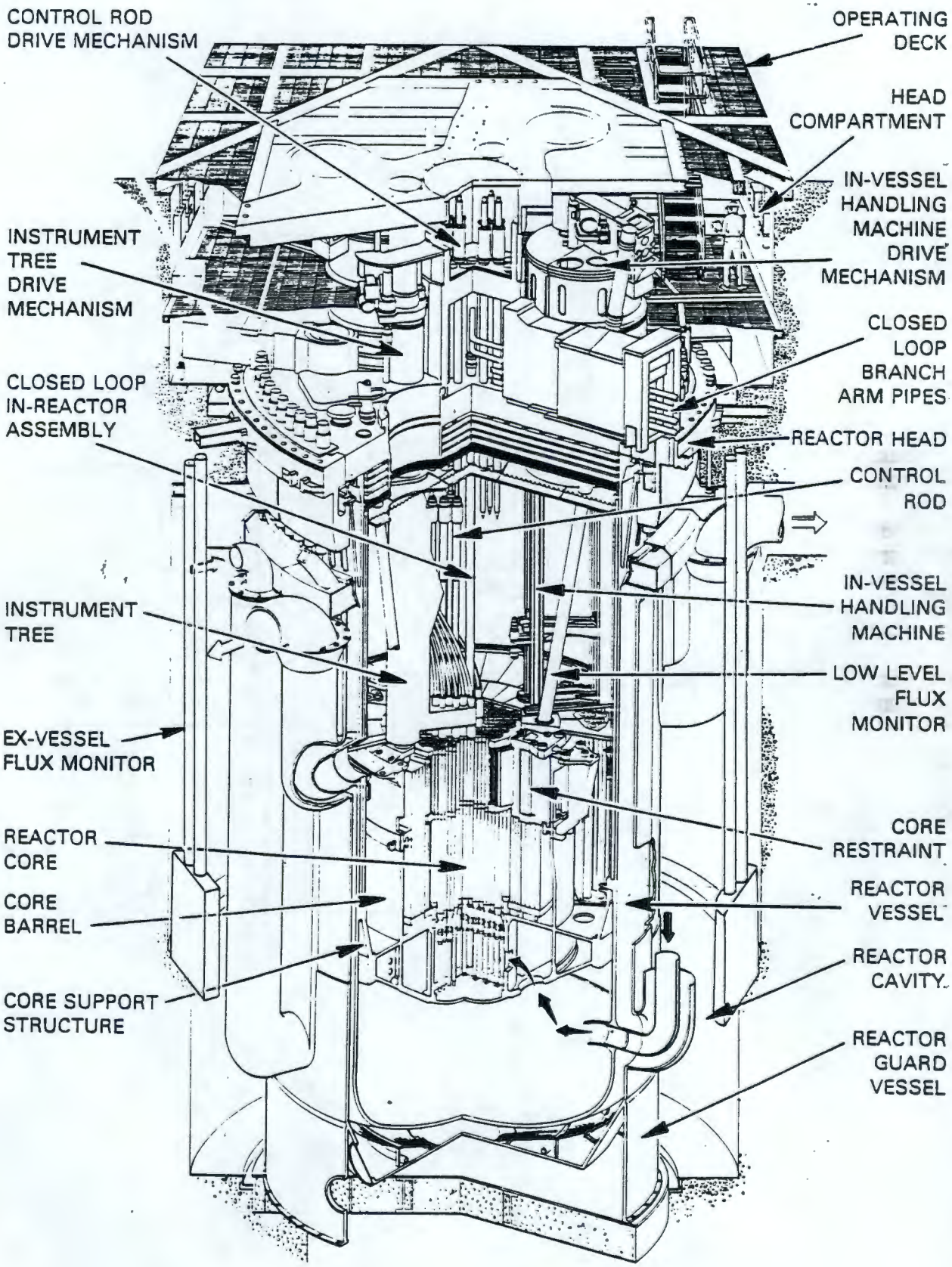

9 3 1 2 8 5 4 0 2 6 1

The reactor core consists of a vertical array of 199 replaceable hexagonal core assemblies, nominally 12 cm across flats. Fast neutron flux is supplied by plutonium dioxide/uranium dioxide driver fuel assemblies. Nuclear control is maintained by nine boron carbide control-rod absorber assemblies (which contain neutron absorber sections that are moved vertically in and out of the core) plus a variable number of fixed-shim absorber assemblies that remain fixed in the core during a particular fuel cycle. Inconel reflectors are used to minimize neutron leakage from the fueled zone of the core. The core will also accommodate up to eight independently instrumented test assemblies that may be used for testing either fissioning materials or nonfissioning materials. Fuels open test assemblies allow irradiation of highly instrumented fuel assemblies in reactor coolant. Materials open test assemblies are designed to test the irradiation behavior of structural materials (nonfissioning materials). The independently instrumented test assemblies may include up to four independently cooled closed-loop in-reactor assemblies. No closed-loop testing has been conducted to date.

Recently the FFTF has begun testing materials for fusion reactors. In special fusion materials open test assemblies, lithium samples are being irradiated in the FFTF's high neutron flux. The resulting tritium gas is analyzed and then captured for disposal in equipment located in a glovebox on the main floor within the reactor containment. A tritium monitor has been added to the final exhaust monitor to measure tritium exiting the plant.

Tritium is the fuel of fusion reactors. In the future, fusion reactors will produce their own fuel by capturing neutrons in lithium located in the reactor walls. High-energy neutrons are produced by the fusion of tritium and deuterium. The FFTF has a high, fast neutron flux that enables testing of fusion materials.

Because the FFTF is an irradiation test reactor, the composition and arrangement of the core are subject to change to meet varying testing requirements. A typical core arrangement is shown in Figure 2-4.

2.2.2 Reactor Heat Transport System

The FFTF is designed so that power generated by the reactor, 400 MW thermal, is removed via the Heat Transport System (Figures 2-5a and 2-5b) by pumping 43,500 gal/min of sodium through the reactor vessel, at a nominal inlet temperature of 680 °F, and an inlet pressure of about 133 lbf/in^2 (gauge), and a nominal outlet temperature of 938 °F. The actual inlet and outlet temperature depend on the operating conditions selected. The reactor currently operates at 291 MW thermal with a nominal inlet temperature of 680 °F, an inlet pressure of about 120 lbf/in^2 (gauge), a nominal outlet temperature of 875 °F, with a flow of approximately 38,400 gal/min.

Dry argon cover gas is used to blanket the sodium in the reactor vessel and throughout the Heat Transport System to avoid contact between sodium and air. The Heat Transport System has three 133-MW thermal stainless-steel sodium-filled piping circuits (Figure 2-5b). Each circuit consists of both a primary loop and a secondary loop with a heat exchanger between to isolate the radioactive primary loop sodium within the containment.

Figure 2-4. Core Map Showing Typical Arrangement.

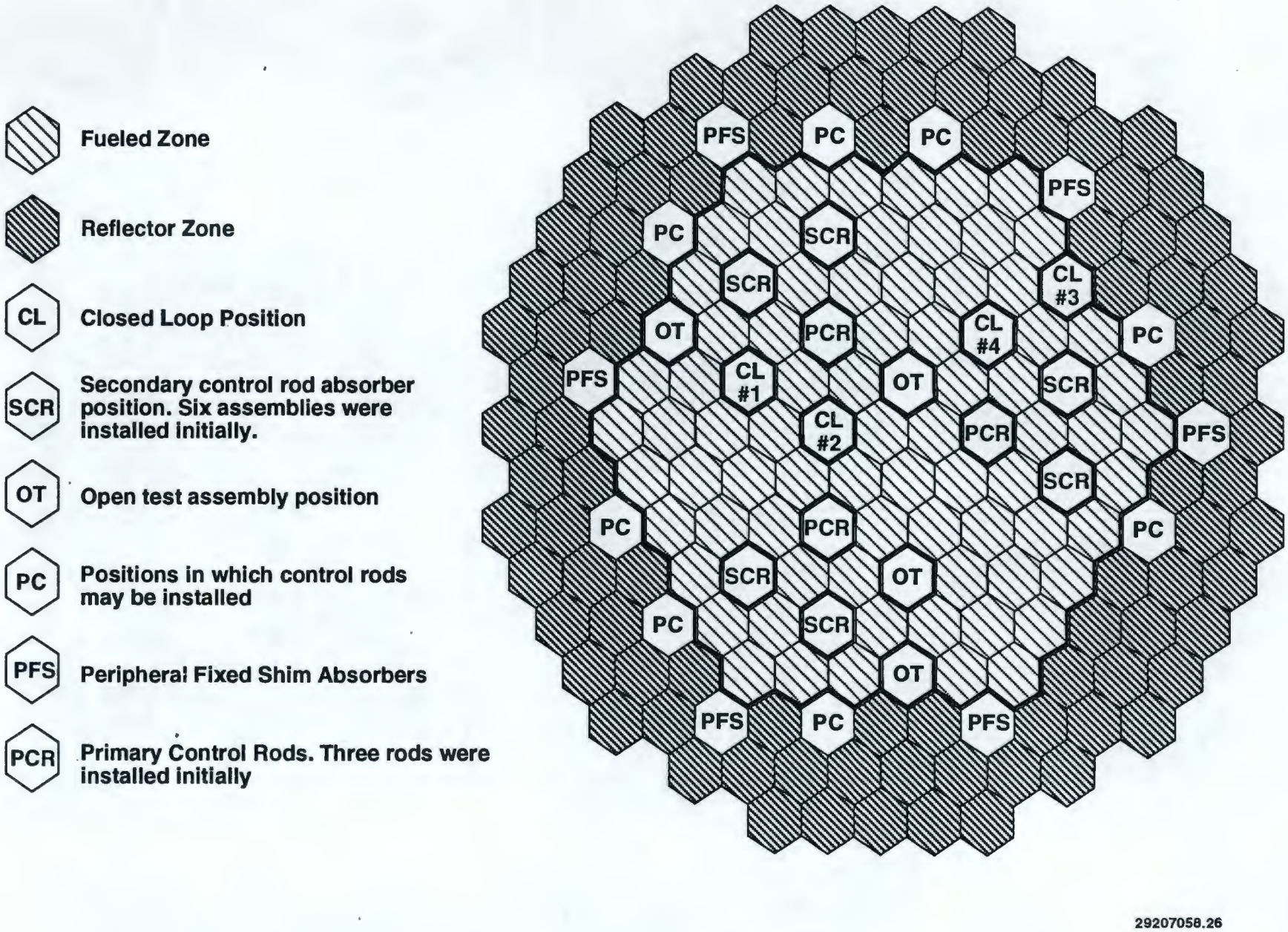

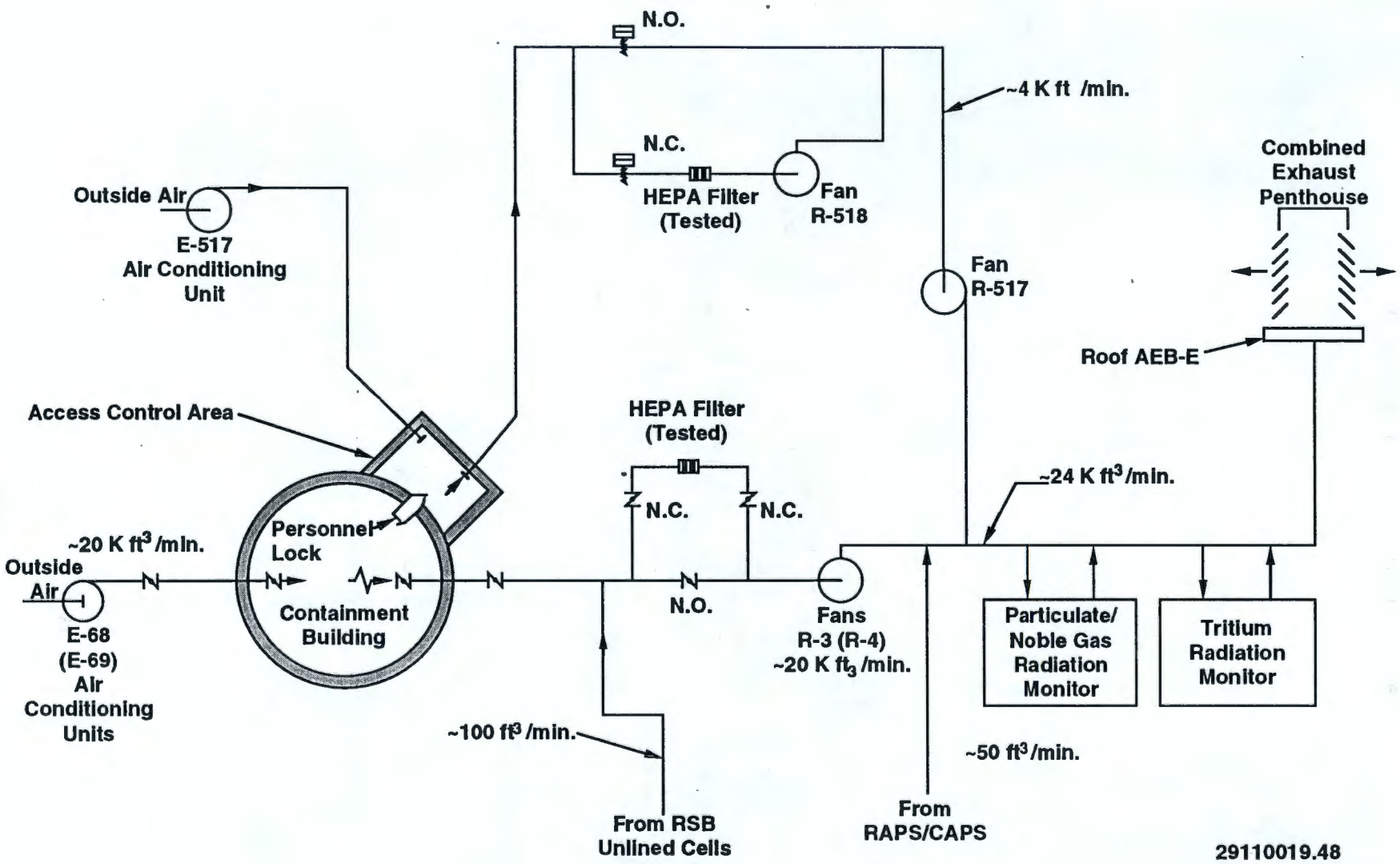

Figure 2-5. Combined Exhaust Flow Diagram.

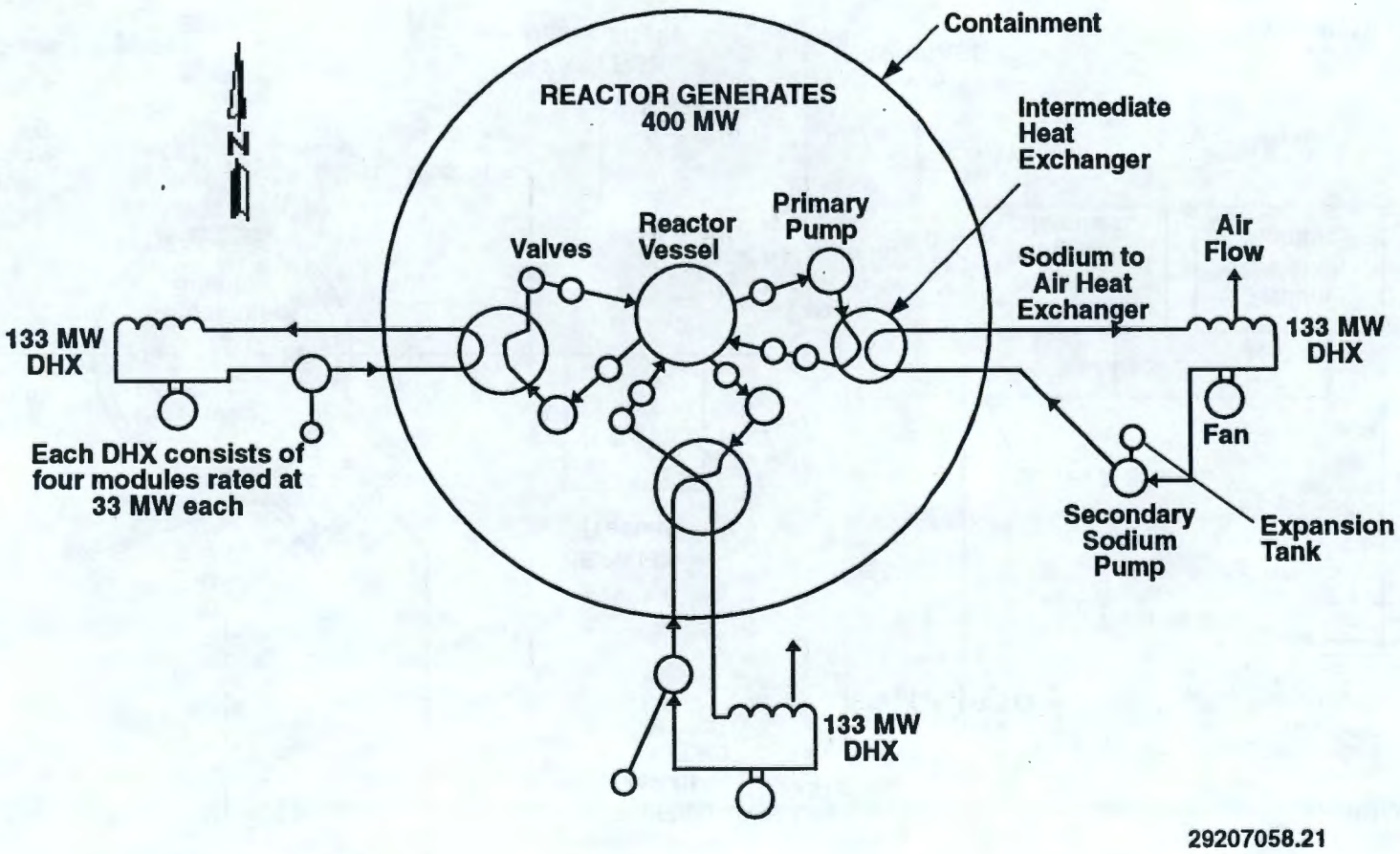

Figure 2-5a. Reactor Heat Transport System Schematic.

Figure 2-5b. One of the Three Cooling Circuits of the Heat Transport System.

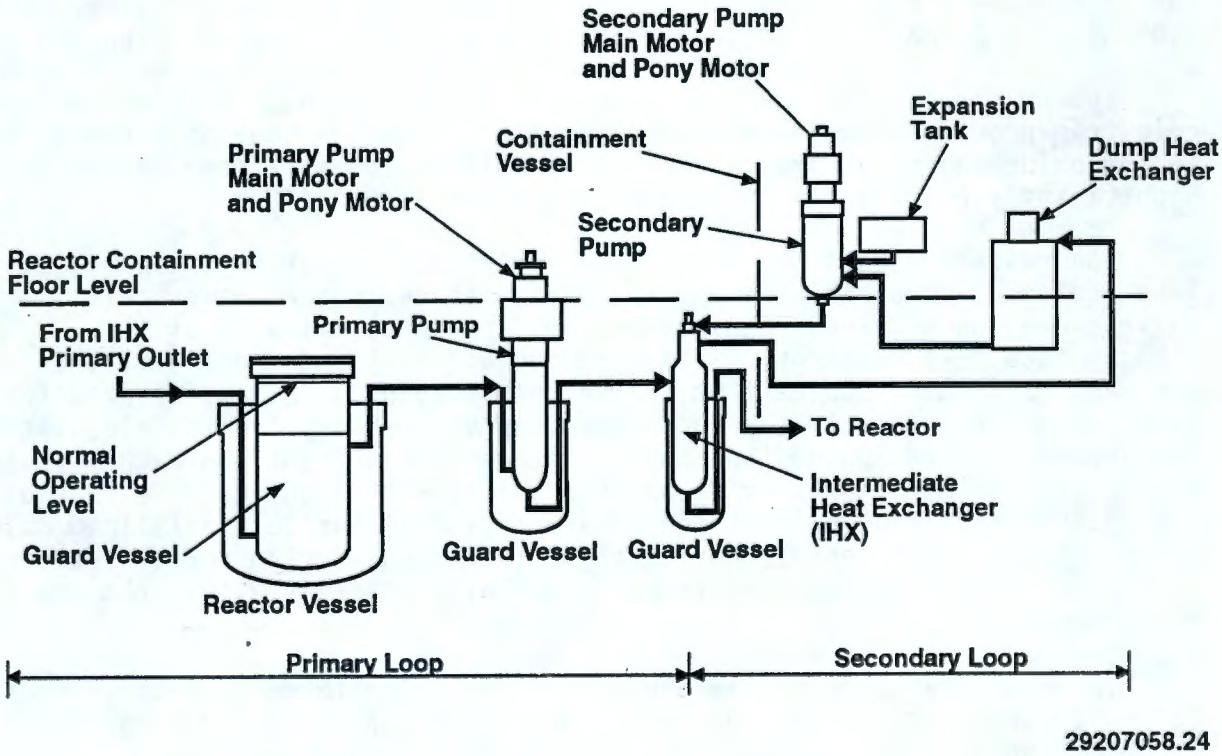

9 3 1 2 8 5 4 0 2 6 6

2.2.2.1 Heat Transport System Primary Loop. The three primary loops transport reactor heat to the intermediate heat exchanger, which thermally links the primary and secondary loops. The sodium coolant enters the reactor vessel below the bottom of the core, flows up through the core and reactor internals, and flows out slightly above the midplane of the reactor vessel. The heated sodium flows from the reactor outlet nozzle to the shell side of the intermediate heat exchanger, where the heat is transferred to secondary sodium. The primary sodium then returns to the reactor, completing the loop.

The primary sodium is purified by circulation through a cold trap. The cold trap provides a means of purifying the sodium by removing dissolved sodium oxide and other impurities by crystallization at a temperature significantly below the main-stream sodium temperature.

The reactor vessel and its head are part of each primary loop; additional loop equipment consists of a primary pump with two motors; two isolation valves; one check valve, required piping; and the shell side of the intermediate heat exchanger. The intermediate heat exchanger isolates radioactive primary sodium from the secondary loop, and transfers reactor heat from the primary loop to the secondary loop via primary flow outside the tubes and secondary flow inside the tubes. Each main component and each vertical run of piping in the primary loops is provided with a guard vessel. Equipment and piping containing primary sodium are installed inside steel-lined shielded cells. These cells contain an inert gas (nitrogen) during normal reactor operation. The three primary loops are located entirely within the reactor containment.

2.2.2.2 Heat Transport System Secondary Loop. The three secondary loops circulate secondary sodium coolant to transport heat from the tube side of the intermediate heat exchanger to the air-cooled dump heat exchanger. Each secondary loop consists of the tube side of the intermediate heat exchanger, a secondary sodium pump with two motors, an expansion tank, and a sodium-to-air dump heat exchanger. No direct sodium interconnections exist among the loops. The dump heat exchanger consists of four 33-MW thermal heat exchanger modules for each loop that transfer heat from the secondary-loop sodium to the ambient air, along with required piping and isolation valving.

An expansion tank having a surge volume filled with argon gas at 90 lbf/in^2 (gauge) is provided in each secondary loop to accommodate sodium thermal expansion and to pressurize the system. Secondary-loop sodium pressure at the intermediate heat exchanger is always maintained above the primary-loop pressure so that if a leak occurs in the intermediate heat exchanger tubing, the leakage would be from the secondary loop into the primary loop. Each secondary loop also is provided with an independent cold trap to remove impurities.

Except for the secondary side of the intermediate heat exchanger and adjacent piping, which is situated inside the Reactor Containment Building, the secondary system components are located in accessible, unshielded areas outside containment. The expansion tanks, secondary pumps, and associated equipment are located in reinforced concrete cells within the Heat Transport System service buildings. Nitrogen lines are available to provide an inert atmosphere to these cells and the pipeways.

9 3 1 2 8 6 4 0 2 6 7

2.2.3 Argon and Nitrogen Systems

Argon is used as the cover gas for the heat removal loops and as the atmosphere for cells where reactor components are handled. For process control, primary-system argon is monitored for oxygen, hydrogen, nitrogen, methane, and carbon monoxide. Reactor-cover-gas argon is monitored also to detect fuel pin or absorber pin failure. (If a failure is detected, the identity of the leaking assembly is revealed by analysis of the unique tag gas released from the assembly.) Reactor-cover-gas argon is purified by removal of sodium vapor and aerosol in a sodium vapor trap, by filtration in a high-efficiency particulate air (HEPA) filter, and by delay of the gas in the Radioactive Argon Processing System (RAPS) in tanks and on cryogenically cooled charcoal to permit decay of short half-life radioactive noble gas isotopes. Processed reactor cover-gas-argon is released via a ventilation system known as the combined exhaust.

Nitrogen is used as the atmosphere for cells and pipeways that house piping and/or equipment containing primary-system sodium. It's purpose is to displace air and preclude a fire in the event of a primary-system sodium leak. The cell atmosphere nitrogen is purified if necessary by the Cell Atmosphere Processing System (CAPS), which is similar to the RAPS. As for the RAPS, processed gas is released from the CAPS via the combined exhaust.

2.2.4 Effluent System Layout

The Combined Exhaust is depicted in Figure 2-7. Air released through the exhaust system from the Reactor Containment Building, which normally bypasses the HEPA filter bank F-6, is directed to a containment exhaust fan, R-3 or R-4 (one being a backup unit). Air from exhaust fans R-3 and R-4 flows to a common exhaust duct, i.e., the combined exhaust. The exhaust from the RAPS and CAPS and the unlined cells in the Reactor Service Building (RSB) vents to the containment exhaust duct immediately downstream of fans R-3 and R-4. Exhaust air from the access control area heating and ventilation system in the Auxiliary Equipment Building - East also enters this common duct. This mixed flow is monitored to detect radioactive particulates and gases and is then vented to the atmosphere from a louvered penthouse on the roof of the Auxiliary Equipment Building - East above the heating and ventilation system equipment room.

The FFTF does not rely on on-line filtration systems as the primary means for removal of radionuclides from the plant exhaust. The RAPS and CAPS employ surge and delay tanks and cryogenic units as the primary method to remove radionuclides from the gas being processed. The combined outlet of the RAPS and CAPS flows through 3-way valves that are automatically redirected to the CAPS if the radioactivity of the effluent exceeds limits. There are inprocess prefilters in these two systems that are not considered in the Section 2.3.1 evaluation. Prefilters are considered part of the process rather than as engineering controls for mitigating releases. Control of radiation releases to the air is maintained by the outlet monitors and the valves (described in Section 2.2.4.1) that redirect the outlet flow to the CAPS inlet.

9 3 1 2 3 5 4 0 2 6 8

The reactor containment building and access control area heating and ventilation systems also do not employ on-line HEPA filters. The reactor containment building heating and ventilation system is designed to automatically isolate radioactivity releases, and a tested HEPA filter can be valved in to remove particulate radioactivity. If excessive radioactivity is detected at the final combined exhaust monitor, the access control area flow is automatically redirected through a tested HEPA filter to remove particulate radioactivity. The RSB unlined cell exhaust is monitored for radioactivity. The RSB unlined cell exhaust system is designed to be automatically rerouted to CAPS for purification upon detection of excessive radioactivity. The function and layout of these exhaust systems is described in the following sections.

2.2.4.1 Reactor Containment Building. The reactor containment building heating and ventilation system contains two redundant air conditioning units that supply outside air to the reactor containment building. The air enters the reactor containment building through a pair of containment isolation valves. The valves are located at each side of the containment boundary. An interlock is provided that automatically shuts down the supply and exhaust fans when any heating and ventilation containment isolation valve closes.

The reactor containment building heating and ventilation system removes air from containment areas through a network of ducts. At the point where the exhaust ducts join, the exhaust air is monitored for radioactivity. A radiation monitor is also located to monitor exhaust from the reactor head compartment, before combining with exhaust from other areas within containment. The function of the monitors is to detect and isolate radioactivity to preclude significant releases to the environment. The exhaust flows from the radiation monitor through a pair of containment isolation valves and the containment isolation damper. This damper, along with the variable pitch of the exhaust fan blades, is used to control the pressure in the reactor containment building. The exhaust is then directed through exhaust fans R-3 and R-4, normally bypassing the F-6 tested HEPA filter bank.

The reactor containment building heating and ventilation system was designed so that inadvertent releases are contained rather than utilizing an on-line filtration system. Should a release occur, the heating and ventilation system within the containment is designed to be isolated automatically. On a high-radiation signal from either radiation monitor described above, the containment supply and exhaust isolation valves are automatically closed. The exhaust duct from the radiation monitors is sized to allow the containment isolation valves to close before the detected release reaches the valves. The heating and ventilation system can remain isolated to allow for the decay of noble gases. The HEPA filter can be valved into the exhaust system to filter radioactive particulates from the containment exhaust when the containment heating and ventilation system is restarted.

Portable filter and exhaust fan units are provided for purging inert gases within containment and for cooling fueling equipment. These units are discharged to the Reactor Containment Building heating and ventilation system.

9 3 1 2 8 5 4 0 2 6 9

2.2.4.2 Access Control Area. The access control area heating and ventilation system is provided fresh air by air conditioning unit E-517. The area is maintained at a slightly negative pressure with respect to the atmosphere of the adjacent rooms by exhaust fan R-517. This negative pressure gradient ensures that radioactive particulates that might accidentally be transported through the containment personnel air lock do not drift to other areas. The exhaust from the access control area is directed through fan R-517 to the combined exhaust, bypassing the access control area HEPA filter/fan unit, R-518 (Figure 2-2b). On detection of high radioactivity at the combined exhaust monitor, the access control area system is automatically diverted through the HEPA filter.

Flow from the access control area is about 110 m^3/min of the total combined exhaust flow, which is approximately 680 m^3/min.

2.2.4.3 Reactor Service Building Unlined Cells. The atmosphere of the unlined cells of the RAPS, CAPS, and the radioactive liquid and solid processing system are pressure controlled by the special cooling and cell atmosphere control system to the combined exhaust. These cells are shown in Figure 2-5 and listed in Table 2-1. The cells are not intentionally rendered inert but may become inert because of the use of nitrogen-actuated valve operators.

The pressure in these cells is maintained at -1.5 $\pm$ 1.0 in. water gauge (wg) pressure, ensuring that all leakage is into the cells to prevent the spread of an accidental release of radioactivity to the rest of the RSB. This pressure is maintained by a pressure control damper that vents exhaust from the unlined cells to the combined exhaust through Fans R-3 or R-4. Each of the serviced areas is sealed from the RSB by means of gas-tight doors.

Airflow in the system is through conduit and pipe penetrations and through door and plug seals into the cells, out the exhaust piping, and into the containment exhaust system through cell 242. The cells are all interconnected with the pipeways that serve as a common exhaust path to the combined exhaust. The exhaust air is monitored for radioactivity before discharge to the combined exhaust. If high radiation is detected in the exhaust air, the normal path to the combined exhaust is automatically diverted to the CAPS. This allows the radionuclides to be removed by the CAPS before discharge.

A fume hood L-15 is located on the middle level of the RSB (Figure 2-6). It is used during sampling of the radioactive liquid waste system. Air flows into the fume hood through a tested HEPA filter on top of the hood and then into the exhaust duct. The fume hood exhaust duct joins the exhaust duct from the unlined cells in the RSB downstream from the system pressure control damper. The combined duct goes to the suction side of the reactor containment building heating and ventilation exhaust fans, R-3 and R-4. Airflow through the hood is controlled by an open-and-shut isolation valve on the fume hood exhaust duct.

9 3 1 2 8 5 4 0 2 7 0

Table 2-1. Reactor Service Building Unlined Cells.

Cell number	Cell name
241	Radioactive Liquid Waste Tank Cell
219	Argon/Nitrogen Supply Pipeway
242	Radioactive Liquid Waste Pipeway
251	Penetration Area Sodium Pipeway
233/222	Radioactive Gas Pipeways
227	RAPS Compressor Cell
228	RAPS Compressor Cell
229	CAPS Compressor Cell
230	CAPS Compressor Cell
245*	Sodium Removal Equipment Cell
208	CAPS Vacuum and Surge Tank
209	CAPS Cold Box Cell
210	Recycle Cover Gas Tank Cell
205	Sodium Removal Equipment Cell - Gas Handling Equipment
201	Sodium Removal Equipment Cell - Water Handling Equipment

*This cell is isolated and contains no equipment at present.

9 3 1 2 8 6 4 0 2 7 1

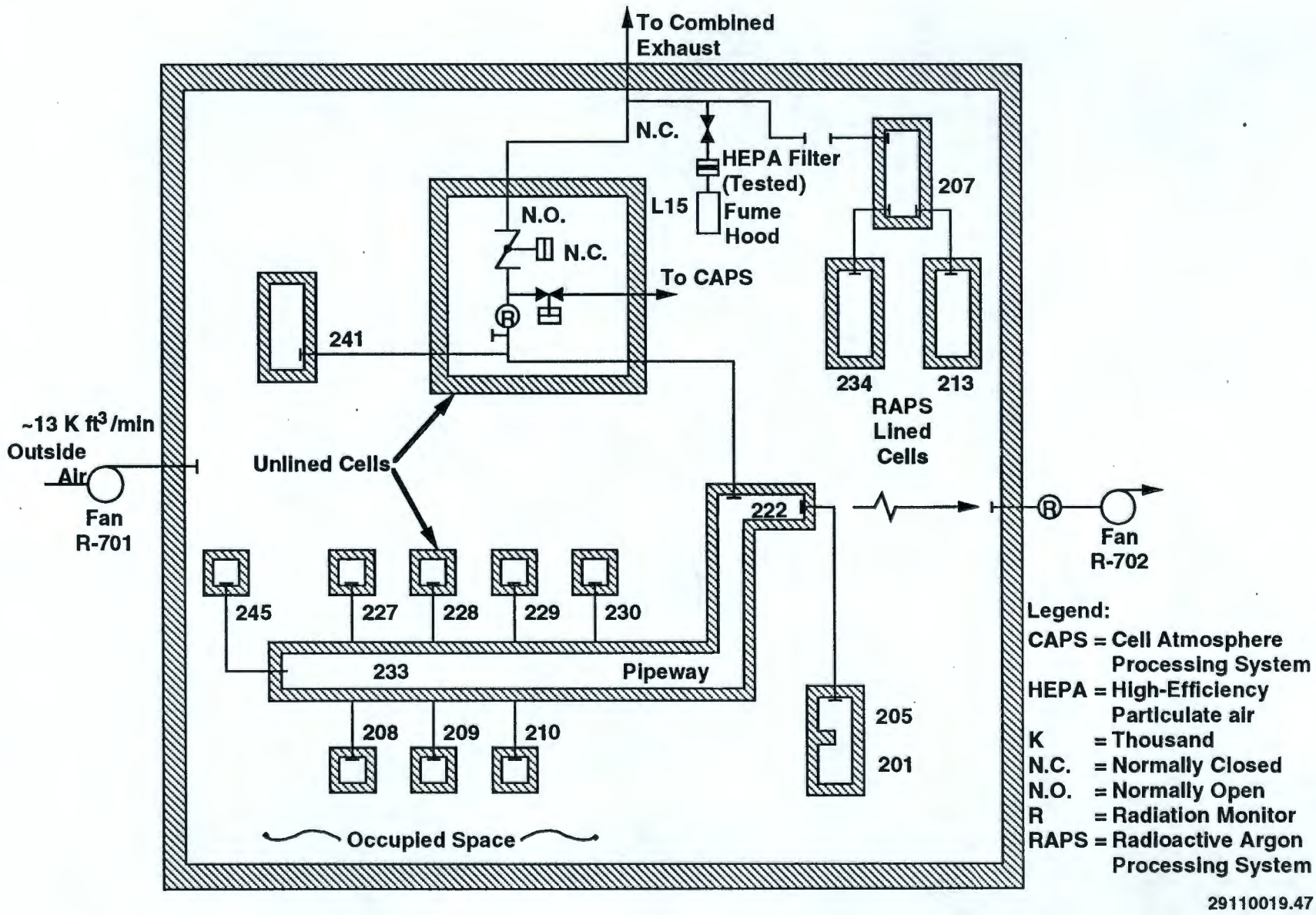

Figure 2-6. The Reactor Service Building Unlined Cells Exhaust Flow Path.

The components of the RAPS potentially containing high levels of radioactivity are maintained in steel-lined RSB cells that are not ventilated and are pressure controlled to the CAPS. These components of the RAPS are the vacuum tank and the surge and delay tank (cell 207), the Noble Gas Storage Tank (cell 213), and the cryogenic beds (cell 234) (see Figure 2-6). The atmosphere of these cells is purged to the CAPS. Pressure in these cells is maintained during normal operation at -1.25 ± 0.75 in. wg pressure. However, during maintenance these cells can be vented along with the other unlined cells in the RSB to the combined exhaust by means of a temporary duct connection.

2.2.5 Radioactive Argon Processing System and Cell Atmosphere Processing System

The RAPS processes only reactor cover gas (argon gas). The flow path for the reactor cover gas is shown in Figure 2-7. Most of that gas (about 5 $stdft^3$/min) comes from the reactor via the primary sodium overflow tank. A small portion of the reactor cover gas (about 1 $stdft^3$/min) passes through an analysis system before going to the RAPS. Both of these flow paths include vapor traps that remove sodium vapor and aerosol. As shown in Figure 2-7, the vapor trap consists of a preheater, condenser, and a sintered metal filter. A 3-way valve permits diversion of the full RAPS flow from the inlet of the RAPS to the inlet of the CAPS, which may act as a backup unit for the RAPS. Reactor cover gas is moved to the RAPS by backup diaphragm compressors R-9 and R-10.

Flow through the RAPS is depicted in Figure 2-8. The vacuum tank is used to stabilize system flows. The surge and delay tank is constructed with internal baffles to lengthen the flow path, which lengthens the traverse time of gas through the tank. The cryogenic unit consists basically of four liquid-nitrogen-cooled charcoal-filled tanks in a steel box filled with insulation. The surge and delay tank and the cryogenic unit function to reduce the concentration of the noble gas radioisotopes by retaining them for intervals sufficiently long to permit their decay. The cold box has an inlet radiation monitor to restrict inlet flow to limit the heat load. The function of the RAPS cold box outlet monitor is to divert the flow to the inlet of the CAPS for further processing if the radiation levels are too high. Two HEPA filters (F-24 and F-36, not tested) are located in front of the compressors R-9 and R-10 to prevent any radioactive particulates that might be present from becoming entrained in the compressors.

The CAPS primarily processes nitrogen from inert cells. The 2 CAPS flow paths also are shown in Figure 2-8 (the bottom 2 flow paths). Normally, gas entering CAPS is not radioactive and is moved directly to the combined exhaust using blowers R-200 or R-201 (in-containment CAPS blowers) via the containment heating and ventilation outlet. If the in-containment CAPS blowers inlet monitor detects excessive radiation, it will isolate the blowers and redirect the CAPS flow to the CAPS surge and delay tank and to the cryogenic unit if needed. The CAPS compressors and tanks are similar to those in the RAPS. The outlet of the RAPS and CAPS are combined upstream from two radiation monitors. One monitor's function is to direct the CAPS flow into its cold box, which is

9 3 1 2 3 6 4 0 2 7 3

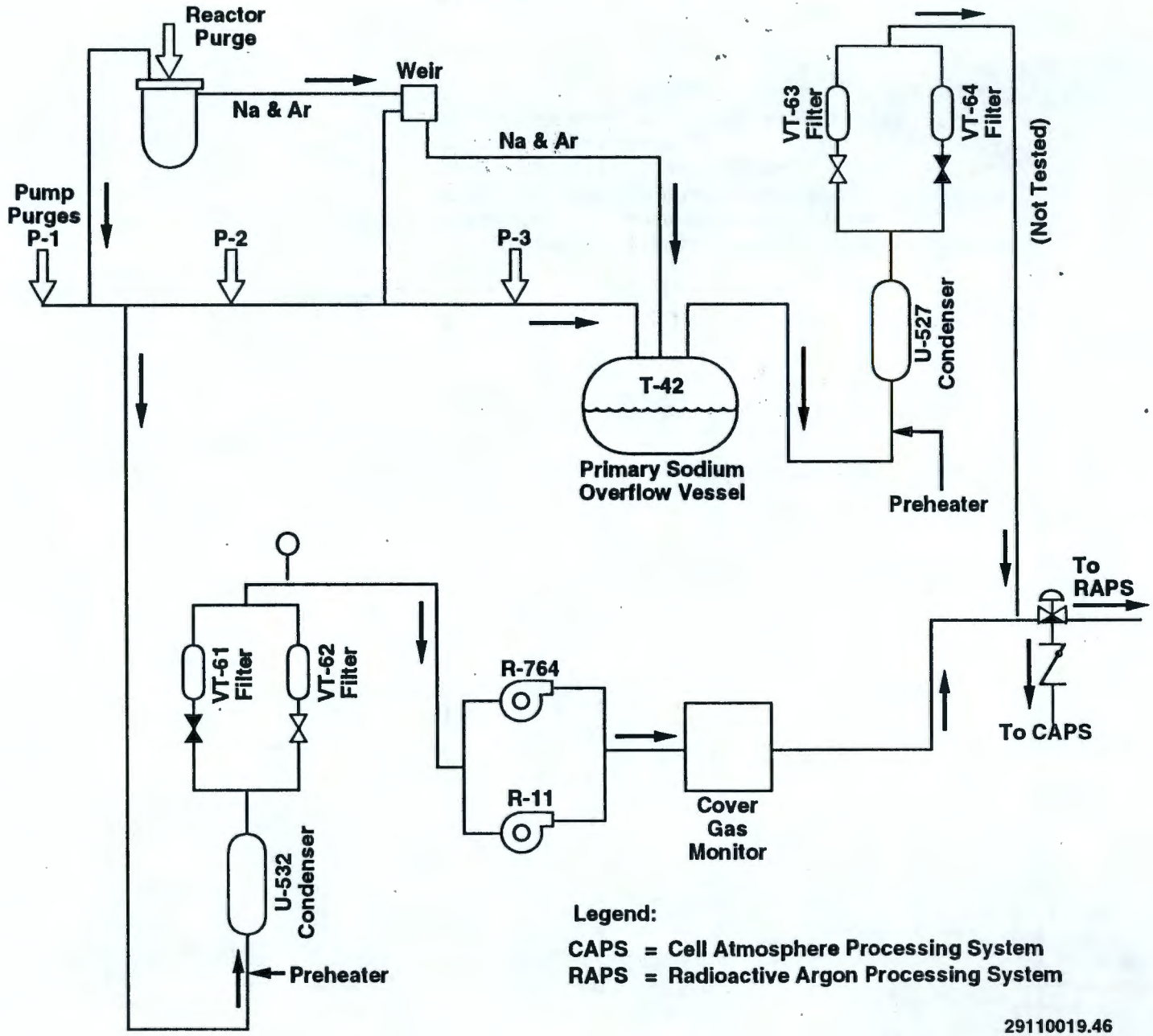

Figure 2-7. Cover Gas Flow Path.

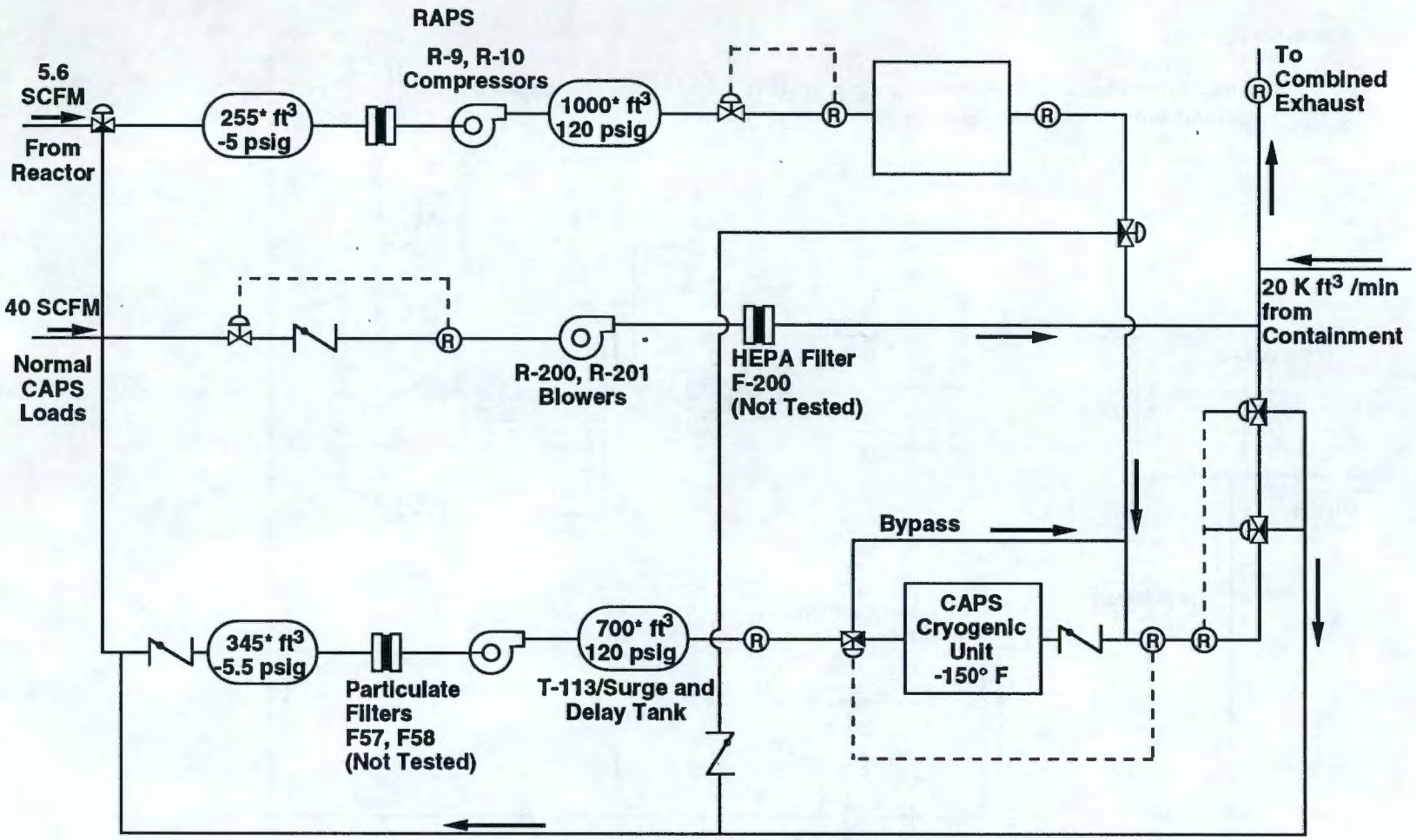

Legend:
* = Tank Volume at Standard Temperature and Pressure
CAPS = Cell Atmosphere Processing System
HEPA = High-Efficiency Particulate Air
psig = Pounds per Square Inch gage
Ⓡ = Radiation Monitors
RAPS = Radioactive Argon Processing System
SCFM = ft^3 /min. at Standard Temperature and Pressure

29110019.45

Figure 2-8. Radioactive Argon Processing System and Cell Atmosphere Processing System.

normally bypassed and not cold. Another monitor, upon detection of excessive radioactivity, blocks the outlet to the combined exhaust and directs the RAPS and CAPS flows to the inlet of CAPS.

As with the RAPS, filters (dacron fiber filters F-57 and F-58, not tested), are located in front of the compressors R-95 and R-96.

2.2.6 Efficiency Values of each Control Device for Removal of Radioactivity

As discussed in Section 2.2.1, the radiation control devices at the FFTF are the radiation monitors and isolation valves that close upon detection of excessive radiation in the effluents. The RAPS and CAPS are the primary process systems utilized for removal of radioactivity from the effluent released to the atmosphere from the FFTF. By this design philosophy, the efficiency of process systems (devices) is not usually calculated or measured in a manner similar to that for HEPA filters. Additionally, they are not tested in a manner similar to that for HEPA filters; however, the function of the process systems (devices) is monitored (Section 2.2.4). What follows is a discussion of the radioactive isotopes of concern and how the FFTF process systems handle them.

Tritium and radioactive noble gases ^{41}Ar and ^{85}Kr in the combined exhaust comprise over 99% of the releases from the FFTF. The ^{41}Ar is the only routinely released radionuclide. Only trace amounts of radioactive particulates (presumed to be primarily ^{137}Cs) at or slightly above detection limits are released to the atmosphere. The radioactive noble gas releases originate from the reactor-cover-gas argon, which is purified by the RAPS system. The gases processed by CAPS are generally not radioactive by comparison to the reactor cover gas processed by RAPS, although some radioactive contamination is present. The capabilities of the RAPS and CAPS to remove radioactivity are described in Section 2.2.4.1. The filters that are used in the exhaust systems are described in Section 2.2.4.2, although they are not the primary means of controlling radioactive releases.

2.2.7 Efficiency of Radioactive Argon Processing System and Cell Atmosphere Processing System

The RAPS functions to decrease the concentration of noble gas radionuclides in the argon cover gas by delaying the gas in RAPS for intervals sufficiently long to permit the decay of the radioactive isotopes. Delay of radioactive gases in the RAPS is accomplished in two ways. First, the reactor cover gas is held in the surge and delay tank for approximately 24 h. Then the gas is fed into a series of four cryogenically cooled charcoal beds. The charcoal at low temperatures has an affinity for the heavier noble gases, krypton and xenon. Krypton and xenon are fission gas products and are also used as tag gases. A failed fuel or absorber (control rod) assembly is located based on the identification of unique mixtures of xenon and krypton isotopes in fuel and absorber pins. Tests have shown that krypton is retained by the beds for about 7 d, and xenon is held for a much longer indeterminate period of months or perhaps years (long enough to essentially eliminate the xenon radionuclides). The efficiency of the RAPS depends on the half-life of

9 3 1 2 8 6 4 0 2 7 6

the noble gas radionuclide. For example, the efficiency of the RAPS for ^{88}Kr (2.84 h half-life) is 100%, as it is held for about 7 d or 59 half-lives. With the exception of ^{85}Kr, all radioactive kryptons are decayed below detectability by the 7 d delay in RAPS. The efficiency of the RAPS for xenons likewise is 100% (i.e., below detection). The estimated decontamination factor for xenon traps based on the adjustment factors in 40 CFR 61, Appendix D (EPA 1991a) is 10. Appendix D also states that efficiency is time dependent.

The ^{85}Kr is a longer half-life (10.76 yr) radioisotope produced in the fuel. It and other shorter half-life krypton and xenon fission product isotopes are infrequently released to the reactor cover gas when a test article or fuel assembly pin develops a fissure in its cladding (such a cladding breach is defined to be an end of life or final data point for reactor experiments). Because of its long half-life, essentially all ^{85}Kr is released to the atmosphere; i.e, the removal efficiency of RAPS for ^{85}Kr is essentially zero.

The ^{41}Ar is the primary radioactive isotope released to the atmosphere from FFTF and is formed from the argon cover gas by activation with neutrons in the reactor core. The ^{41}Ar is not significantly delayed by the charcoal beds. However, because of its short half-life of 1.8 h, ^{41}Ar is essentially eliminated by the delay of the surge and delay tank. This delay of 13.1 half-lives reduces the ^{41}Ar activity by a factor of approximately 8,700, for a removal efficiency of 99.988%. This is equivalent to a decontamination factor of approximately 10,000 where the decontamination factor is described as the reciprocal of one minus the fractional removal efficiency. An adjustment factor for ^{41}Ar removal was not provided in 40 CFR 61, Appendix D (EPA 1991a).

Gross beta analyses indicated that ^{137}Cs is sometimes detected at the final combined exhaust monitor at levels slightly above the detection limits. The source of the cesium is believed to be radioactive particulate contamination in the interim examination and maintenance cell and in the refueling equipment, both of which vent their argon gas atmosphere to the CAPS vacuum header and then to the containment heating and ventilation ducts via the in-containment CAPS blowers. The outlet of the blowers is processed by a HEPA filter (not tested); however, cesium has a low vapor pressure at room temperature, and a few single atoms penetrate the filter. The amount of the cesium in the CAPS vacuum header is quite small. No cesium radioactive particulate is believed to exit the CAPS or RAPS cryogenically cooled charcoal beds. Radiation surveys of the outlet of the beds during annual maintenance activities has detected no contamination at the RAPS/CAPS outlet.

Tritium gas is not retained by the RAPS or CAPS. Tritiated water (i.e., T_2O or HTO) will be retained by the CAPS inlet dryer units when the CAPS cryogenic unit is operating. Water released by the dryer beds during regeneration is retained by the radioactive liquid waste system.

Because of the low levels of radioactivity in the gases processed by CAPS, the gas is normally processed through the in-containment CAPS Blowers, a nontested HEPA filter, and discharged into the Reactor Containment Building exhaust system. The CAPS flowpath that contains the surge and delay tank and cryogenic unit (Figure 2-8) serves only as a backup to RAPS.

9 3 1 2 8 5 4 0 2 7 7

2.2.7.2 Efficiency of Filters. Various types of filters are used in the exhaust systems discussed in this text to assist in removal of radioactivity from the effluents. As stated above, filters are not the primary devices used to control radioactive releases. The filters used include; HEPA filters, dacron fiber filters, sintered metal filters, and a charcoal iodine filter. The only tested filters in the exhaust systems are HEPA filters; and not all HEPA filters are tested. Credit for removal efficiencies is only claimed for tested filters. A tested HEPA filter is located in the RSB fumehood L-15, a tested HEPA filter bank and prefilter are located in the access control area exhaust and the reactor containment building exhaust. The HEPA filter bank in the reactor containment building exhaust is valved into the system only on detection of an alarmed release in containment. The access control area HEPA filter bank is valved into the system automatically on detection of an alarmed release at the combined exhaust monitor. These HEPA filters are tested because they may be required to provide ventilation in containment following such a release and because they are downstream from the containment isolation valves. The HEPA filters in the RAPS, CAPS, and interim examination and maintenance cell are not tested because they are upstream from radiation monitors and isolation valves, which are the control devices.

A HEPA filter is a throw-away, extended-pleated-medium, dry-type filter. The Hanford Site HEPA filters meet the following requirements:

- Permissible penetration at test airflows shall be no greater than 0.03% when tested in accordance with *Quality Assurance Testing of HEPA Filters* (DOE 1990a, Article 6).

- Filters shall have a minimum particle collection efficiency of 99.97% for 0.3-μm particle size, thermally generated dioctyl phthalate aerosol (or equivalent) at 100% and at 20% of rated flow capacity for filters with a nominal airflow rating of 3.5 m^3/min (size 3) and larger and 100% rated flow for filters with a nominal rating below 3.5 m^3/min (DOE 1990a, Article 4).

- The pressure differential for airflow across a clean filter assembly when tested at appropriate nominal flows shall not exceed 1.3 in. wg pressure, for sizes 1 through 3 and sizes 6 through 8 HEPA filters, and 1.0 in. wg pressure for sizes 4 and 5 HEPA filters.

The decontamination factor for a HEPA filter, based on 99.95% removal efficiency for filters tested in place (see Section 2.2.4) is 2,000.

Dacron fiber filters are located before the compressors in the CAPS flowpath containing the surge and delay tank and cryogenic unit (backup system for RAPS). The efficiency values are estimated to 100% for 10 μm and larger and 98% for 2 μm and larger. Ninety-eight percent efficiency equates to a decontamination factor of 50. These filters are used primarily to remove potential radioactive sodium aerosols and sodium vapors for in-plant contamination control.

The sodium vapor trap located in the reactor cover gas flowpath is used to remove radioactive sodium aerosols and sodium vapors. As shown in Figure 2-7, the vapor trap consists of a preheater, condenser, and sintered metal filter.

An iodine adsorbing charcoal filter is located in the exhaust path from the interim examination and maintenance cell. The iodine filter was designed to meet the requirements of the Nuclear Regulatory Commission (NRC) Regulatory Guide 1.140 (NRC 1977). This guide assigns an efficiency of 90% for a 5-cm bed depth. The activated carbon bed depth in the Interim Examination and Maintenance cell filter is 7.5 cm. As a result, the estimated removal efficiency of the iodine filter is estimated to be greater than 99%. This is equivalent to a decontamination factor of 100.

2.2.8 Means and Frequency of Testing and Inspecting Effluent Treatment Systems

As described in Section 2.2.6.1, the RAPS and CAPS are the primary process systems used for removal of radioactivity from the effluent released to the atmosphere from the FFTF. These systems are not tested or inspected per se; however, the function of process equipment is monitored. Temperatures of cryogenically cooled charcoal beds, inlet and outlet flows, and radiation levels at the inlet and outlet of the RAPS are observed by operators several times each day and are logged and compared to limits.

The design philosophy for radiation control at the FFTF is to rely on monitoring and on automatic process flow isolation (valve closure) upon detection of excessive radioactivity. In other words, the FFTF process systems do not rely on filters as the primary means to ensure that release limits are not exceeded. Many of the systems do have tested HEPA filters and other filters which, because of the isolation system philosophy and design, need not be tested. Only the reactor containment building, access control area exhaust, and the RSB fumehood L-15 HEPA filters are tested. The reactor containment building and access control area exhaust HEPA filters are tested once every 5 yr, as they are not on-line filters. The RSB fumehood L-15 HEPA filter is tested annually. The Hanford Site HEPA filter in-place test requirements are as follows:

- All filters shall remove at least 99.95% of the dioctyl phthalate particles, or equivalent, ranging in size from 0.1 μm to 3.0 μm with a mean particle size of 0.5 μm.

- The HEPA filter cartridges shall be replaced when continuous exposure rates exceed 1 rem/h at 6-in. wg pressure, or when the pressure drop across the filter exceeds 4-in. wg pressure. The HEPA filters that have been installed by remote means shall be replaced when the pressure drop across the filter exceeds 4-in. wg pressure, or exposure rates exceed limits provided by Radiation Protection.

Radiation monitors and isolation valves are the plant radiation control devices. The reactor containment building heating and ventilation ducts, as well as all other systems penetrating the containment, have containment

9 3 1 2 8 6 4 0 2 7 9

isolation system valves. The reactor containment building heating and ventilation valves, including the two supply valves and the two exhaust valves, are tested quarterly for operability and are leak tested biannually. During function testing each valve must close in less than 3 sec.

The RAPS and CAPS outlet valves that close and redirect flow back to the CAPS inlet are tested quarterly for cycle time. The RAPS and CAPS outlet valves are not leak tested; they redirect flow to the negative pressure of the CAPS vacuum header.

The radiation monitors that automatic trigger closure of valves are calibrated on an annual basis. The containment isolation system radiation monitors are functionally tested monthly and source checked weekly.

2.2.9 Operating Mode

The FFTF operates routinely in 100+ d full-power cycles. Between full-power cycles the reactor is shut down for several weeks for refueling. The combined exhaust is operated on a continuous basis during full-power cycles and during refueling.

2.3 IDENTIFICATION AND CHARACTERIZATION OF POTENTIAL SOURCE TERMS

Both radioactive and hazardous material are managed at FFTF. The sections below address these materials separately.

2.3.1 Radioactive Source Term

The quantity of uncontainerized radioactive materials in process (Table 2-2) was evaluated against the U.S. Environmental Protection Agency (EPA) requirements, including the radioactive gas generated as a result of normal reactor operations (70% operational capacity).

Due to the active venting of the reactor cover gas to the radioactive argon processing system during reactor operation, the primary coolant is not considered containerized. A cesium, manganese, and sodium activity quantity based on concentration data from primary sodium analysis was used as the source term in the 1,000,000 lb of primary sodium.

Using 40 CFR 61, Subpart H, Appendix D, methodology (EPA 1991b), the potential offsite dose associated was calculated. This methodology assumes that all gas is released, 1/100th of all particulates or liquids are released, and 1/1,000,000th of all solids are released. Containerized material is not required to be included and if high-efficiency particulate air filtration exists on the facility, a filter efficiency of 99% can be assumed. Because HEPA filters that were tested online are not utilized in the design of the FFTF main exhaust, no credit is considered for their existence in Table 2-2. Evaluation of the key hazardous substances within the facility are discussed this section.

Table 2-2. U.S. Environmental Protection Agency Requirements.

40 CFR 61, Subpart H, Appendix D Determination							
Radionuclide	Power level (MW)	Rate (Ci/g)	Source (Ci)	Form	Release % (Assumed)	Offsite (Dose (mrem/Ci)	Dose (mrem/yr)
^{22}Na	300	9 E-07	4 E+02	Liquid/ part.	0.1	2.56 E-02	9.7 E-03
^{54}Mn	300	4 E-09	2 E+00	Liquid/ part.	0.1	7.29 E-03	1.8 E-05
^{134}Cs	300	7 E-09	3 E+00	Liquid/ part.	0.1	4.15 E-02	1.4 E-04
^{137}Cs	300	1 E-09	6 E-01	Liquid/ part.	0.1	3.17 E-02	2.0 E-05
		Ci/day	70%				
^{41}Ar	300	6 E+01	2 E+04	Gas	100	1.65 E-05	2.6 E-01
						Total	2.6 E-01

2.3.2 Hazardous Material Source Terms

Typical quantities of hazardous materials managed at FFTF are listed in Table 2-3. Four of these substances are managed in quantities which exceed the 40 CFR 302 (EPA 1991b) RQ value: sodium, freon (R-12), polychlorinated biphenyls (PCB), and sulfuric acid. The potential for release is discussed below.

Sodium

Normal Plant Operations and Controls. Molten sodium is used as a coolant in FFTF plant systems that are designed and maintained to standards. With the exception of the dump heat exchangers located in concrete pits, secondary containment is provided for in the plant design either via guard vessels or cell liners. Much of the FFTF sodium is located within the FFTF Containment Building, which provides for an additional boundary to prevent release of the material to the environment. Access to the sodium system is normally limited to refueling operations which interface with the various sodium pools from above. The only normal withdrawal of sodium from the system is accomplished remotely in a dedicated sampling area.

Maintenance on the sodium system is performed in a configuration which provides two boundaries between the breaching of the system and any molten sodium. Because of the high sodium melting temperature, all maintenance is performed on frozen sodium systems.

Release History. The only breach of the FFTF sodium piping to occur in the 10-yr operating history of the FFTF was the result of failure of a small sodium pump. Approximately 600 lb of molten sodium were released to a lined

9 3 1 2 8 6 4 0 2 8 1

Table 2-3. Hazardous Substances Stored in Building. (2 sheets)

Product	Maximum quantity of product on hand	Regulated chemical in product	Quantity of regulated chemical (lb)	Quantity of chemical release per year (lb)	RQ for chemical (lb)	% of RQ on hand	Notes
Sodium (Na)	1,940,000 lb	Sodium (Na)	1,940,000	0	10	100	Currently stored in ASME coded systems
Waste Na	5 lb	RCRA Waste D001/D002/D003	5	0	10	50	Would likely use sodium RQ of 10 in the event of spill
Emergency batteries	3,179 lb	Sulfuric acid	3,179	0	1,000	100	Largest battery contains 47 lb
PCB	102,000 lb	PCB	102,000	0	1	100	Contained in 19 TSCA compliant PCB transformers
Cooling tower chemical (scale inhibitor)	5,712 lb	Potassium Hydroxide (10%)	572	1,144	1,000	57.12	
Freon (R-12) dichlorodi-fluromethane	24,000 lb	Freon (R-12)	24,000	10	5,000	100	R-12 used in 8 chillers, each containing 3,000 lb
Sodium-potassium alloy	6,330 lb	No RQ listed					
Lead (installed in facility and components)	666,000 lb	N/A due to form					
Diesel fuel	105,800 gal	Benzene		0	100	10	

Table 2-3. Hazardous Substances Stored in Building. (2 sheets)

Product	Maximum quantity of product on hand	Regulated chemical in product	Quantity of regulated chemical (lb)	Quantity of chemical release per year (lb)	RQ for chemical (lb)	% of RQ on hand	Notes
Ethylene Glycol (45% Glycol, 55% Demineralized Water)	94,000 gal	Ethylene Glycol	752,000	0	1	100	Cooling/chill water in a closed system
Isopropyl alcohol	2 gal	NR					
1, 2 propanediol (propylene glycol)	4 gal	NR					
Algicide used in cooling towers	90 gal	NR					
Heat transfer oil	14,700 lb	NR					
Rheostat Electrolyte (3-4% sodium carbonate)	4,200 gal	NR					In six liquid rheostat

ASME = American Society of Mechanical Engineers
PCB = Polychlorinated biphenyl
RCRA = *Resource Conservation and Recovery Act of 1976*
RQ = reportable quantity
TSCA = *Toxic Substances Control Act of 1976*
NR = Not regulated.

nitrogen-inerted cell. The cause of the event was investigated and determined to be unique to the particular pump in question.

Potential Release Events. Because of the nature of the system design and operation, the release of sodium from the FFTF systems caused by a breach in the pressure boundaries associated with normal operations is very unlikely. A single boundary failure of any portion of the American Society of Mechanical Engineers (ASME) pressure boundary should not be considered as the basis for an upset condition. All likely failure points (e.g., tanks and pumps) are provided with secondary containment either through the use of guard vessels or cell containment systems.

Dichlorodifluoromethane (R-12)

Normal Plant Operations and Controls. Eight centrifugal R-12 chillers are used at FFTF to provide cooling for personnel and equipment. Each chiller contains a maximum of 3,000 lb of refrigerant R-12. Refrigerant R-12 is a vapor at room temperature and any leaks from the equipment represent an airborne fugitive emission. The equipment is constructed of flanged steel joints and copper side stream refrigerant processing loops.

Release History. Fugitive release of refrigerant from the equipment requires the addition of refrigerant to the machine periodically. These releases can be divided into three categories.

1. Catastrophic pressure boundary (copper tubing) failure, which results in the releases of the entire charge. This has occurred on several occasions during the plant's operating history.

2. Releases associated with normal equipment maintenance. Periodic maintenance on the machines requires removal of the refrigerant to the chiller storage tanks and complete disassembly of the compressor unit.

3. Releases that occur as a result of leakage from joints and valves on the chillers.

4. Releases associated with removing excess air from a chiller. The air is released to the atmosphere with small deminimus amounts of refrigerant are also released.

The first release event represents the source of significant release from the chillers. A past release rate of 1,000 lb/yr is an estimate based on the average quantity of refrigerant added to the machines over the past few years that is not related to replacement of refrigerant associated with the first type of release. Because of new maintenance techniques future releases are expected to be <10 lb/yr.

Potential Release Events. The release of the entire charge of R-12 from the chiller can be considered a likely upset condition based on operating experience. Since the total quantity of refrigerant in one machine is less than a RQ value and the chillers are not interconnected on the refrigerant side, no one failure could result in exceeding an RQ in a 24-h period.

Sulfuric Acid

Normal Plant Operations and Controls. Sulfuric acid is used in the lead acid batteries at the FFTF backup electrical supply to plant systems.

Release History. There is no normal operation that results in the routine release of this material to the environment. Failure of individual cells has occurred, which has resulted in the spillage of a small quantity of material within the plant.

Potential Release Events. The largest volume potentially released in any single failure is 47 lb, which is the quantity in the largest storage battery cell.

Polychlorinated Biphenyl (PCB)

Normal Plant Operations and Controls. The PCBs are used in 19 electrical transformers within the FFTF. The transformers are currently compliant with all *Toxic Substances Control Act of 1976* (TSCA) regulations. Storage of flammables in the vicinity of the transformers is not allowed and administrative controls are in place to restrict activity in the area of the transformers. All transformer drain valves are plugged to prevent inadvertent spillage of the fluid.

Release History. There are normal operations that result in the routine release of this material to the environment. Past releases from the transformers involved limited seepage from sample ports caused by improperly installed fittings.

Potential Release Events. Each of the transformers contain about 5,000 lb of PCBs. The largest transformer contains approximately 5,600 lb. Catastrophic failure and release of the bulk transformer fluid is likely in only two events: fire and accidental rupture of the system, both of which are outside the scope of a normal upset condition as the failure of the engineered confinement system. Administrative controls are in place to reduce the risk of these events.

In accordance with TSCA regulations, periodic visual inspections of the transformers are required to ensure no leakage or transformer degradation. Secondary containment of PCB transformers is not required in accordance with the TSCA, as demonstrated by the fact that mounting PCB transformers on a power pole is still allowed by TSCA. Should a leak occur, the transformer may not be repaired and must be taken out of service. While it is recognized that failure of the transformer boundary would likely result in a release exceeding the RQ, based on the lack of regulatory emphasis placed on boundary failure, it is concluded that this type of failure represents a highly unlikely occurrence as compared to other accidents such as fire.

9 3 1 2 8 6 4 0 2 8 5

3.0 APPLICABLE REGULATIONS

Regulations pertaining to effluent releases at the Hanford Site have been developed by several regulatory agencies: EPA, DOE, Washington State Department of Ecology (Ecology), and the Benton-Franklin-Walla Walla Counties Air Pollution Control Authority (APCA). Westinghouse Hanford has established administrative requirements for compliance based on as low as reasonably achievable (ALARA); however, this plan has been prepared against the federal, state, and local regulations, and DOE orders to maintain consistency. Table 3-1 gives a brief summary of the regulations and standards applicable to this FEMP.

3.1 FACILITY EFFLUENT MONITORING PLAN REQUIREMENTS

Requirements for a FEMP are provided in *General Environmental Protection Program*, DOE Order 5400.1 (DOE 1988a). This order provides specific information in Chapter IV on the requirements for effluent monitoring. The order specifies that a written environmental monitoring plan shall be prepared for each site, facility, or process that uses, generates, releases, or manages significant pollutants or hazardous materials.

Environmental monitoring requirements differ between new and existing facilities. For a new facility with the potential for adverse impact on the environment, an environmental survey must be conducted prior to actual start-up. The survey shall establish background levels of radioactive and toxic pollutants, characterize pertinent environmental and ecological parameters, and identify potential pathways for exposure to the environment as a basis for determining the effluent and environmental monitoring program. For existing facilities, subsequent surveys and continued monitoring are required based on the operation and inventory at risk.

Radioactive effluents and nonradioactive pollutants released at the Hanford Site shall be monitored in accordance with the DOE 5400 series of orders. Information on the monitoring requirements for airborne or liquid effluent release pathways is presented according to a specific characteristic of the effluent, whether the effluent is a radioactive or nonradioactive hazardous material. To ensure the health and safety of the public, DOE-controlled facilities are required to monitor effluents that have the potential to contain regulated materials. Regulated substances generally include radioactive and nonradioactive hazardous substances as defined in: DOE orders; 40 CFR 61, Subpart H (EPA 1991a); 40 CFR 302 (EPA 1991b); and *Dangerous Waste Regulations* WAC 173-303 (WAC 1989). Regulations pertaining to the monitoring and environmental surveillance requirements of effluents are typically based on the effluent release limits for that material which are associated with their risk to the public. Monitoring requirements and associated limitations may also be based on best available technology (BAT) or other technologically based criteria.

Table 3-1. Applicable Regulations and Standards. (3 sheets)

Agency/Originator	Regulation No.	HA	HL	RA	RL	Summary/Application
U.S. Department of Energy, (DOE) Washington, D.C.	DOE Order 5400.1, 1988 General Environmental Protection Program	X	X	X	X	Outlines effluent monitoring requirements
	DOE Order 5400.5, 1990 Radiation Protection of the Public and Environment			X	X	Protects public/environment from radiation associated with DOE operations
	DOE Order 5480.4, 1989 Environmental Protection, Safety, and Health Protection Standards	X	X	X	X	Sets requirements for the application of the mandatory environmental protection, safety, and health (ES&H) standards; lists reference ES&H standards
	DOE Order 5484.1, 1981 Environmental Protection, Safety, and Health Protection Information Reporting Requirements	X	X	X	X	Sets requirements for reporting information having environmental protection, safety and health protection significance
	DOE Order 5820.2A, 1988 Radioactive Waste Management	X	X	X	X	Sets radioactive waste management requirements
	DOE/EH-0173T, January 1991 Environmental Regulatory Guide for Radiological Effluent Monitoring and Environmental Surveillance			X	X	Provides guidance for effluent monitoring and sampling.
U.S. Environmental Protection Agency, (EPA) Washington, D.C.	40 CFR 61, 1989 National Emission Standards for Hazardous Air Pollutants	X		X		Sets national emission standards for hazardous air pollutants (NESHAP)
	Subpart A General Provisions	X				Regulates hazardous pollutants
	Subpart H National Emission Standards for Emissions of Radionuclides other than Radon from Department of Energy Facilities			X		Sets emissions standards/monitoring requirements for radionuclides
	40 CFR 122, 1983 EPA Administered Permit Programs: The National Pollutant Discharge ElimInation System		X			Governs release of nonradioactive liquids
	40 CFR 141.16, 1989 Safe Drinking Water Act (National Interim Primary Drinking Water Regulations)		X		X	Sets maximum contaminant levels in public water systems
	40 CFR 191, 1985 Disposal of Spent Nuclear Fuel, High-Level and Transuranic Radioactive Wastes				X	Regulates radioactive waste disposal
	40 CFR 261, 1989 Identification and Listing of Hazardous Waste		X			Identifies and lists hazardous wastes

Table 3-1. Applicable Regulations and Standards. (3 sheets)

Agency/Originator	Regulation No.	HA	HL	RA	RL	Summary/Application
EPA (Cont'd)	40 CFR 302.4, 1980 Comprehensive Environmental Response, Compensation and Liability Act of 1980 (CERCLA): Designation, Reportable Quantities and Notification	X	X	X	X	Designates hazardous materials, reportable quantities, notification process
	40 CFR 355, 1987 Superfund Amendments and Reauthorization Act of 1986 (SARA): Emergency Planning and Notification	X	X			Identifies threshold planning quantities for extremely hazardous substances
American National Standards Institute, (ANSI) New York, New York	N 13.1 - 1969* Guidance to Sampling Airborne Radioactive Materials in Nuclear Facilities			X		Sets standards for effluent monitoring systems
	N 42.18*, 1974 Specification and Performance of On-site Instrumentation for Continuously Monitoring Radioactivity in Effluents			X	X	Recommendations for the selection of instrumentation for the monitoring of radioactive effluents
Washington State Department of Ecology, (Ecology) Olympia, Washington	WAC 173-216, 1989 State Waste Discharge Permit Program		X			Governs discharges to ground and surface waters
	WAC 173-220, 1988 National Pollutant Discharge Elimination system Permit		X		X	Governs wastewater discharges to navigable waterways; controls NPDES permit process
	WAC 173-240, 1990 Submission of Plans and Reports for Construction of Wastewater Facilities		X			Controls release of nonradioactive liquids
	WAC 173-303, 1989 Dangerous Waste Regulations		X			Regulates dangerous wastes; prohibits direct release to soil columns
	WAC 173-400, 1991 General Regulations for Air Pollution Sources	X		X		Sets emissions standards for hazardous air pollutants
	WAC 173-480, Utilities and Transportation Commission	X		X		Endorses the 10 mrem/yr EDE-EPA Standard (40 CFR 61, Subpart H)
Washington State Department of Health, Olympia, Washington	WAC 246-247, Radiation Protection-Air Emission	X		X		Sets standards for registration, permitting, notification, new source review, monitoring and reporting.

Table 3-1. Applicable Regulations and Standards. (3 sheets)

Agency/Originator	Regulation No.	HA	HL	RA	RL	Summary/Application
Benton-Franklin Walla-Walla Counties Air Pollution Control Authority, (APCA) Richland, Washington	General Regulation 80-7, 1980	X				Regulates air quality

HA = hazardous airborne.
HL = hazardous liquid.
RA = radioactive airborne.
RL = radioactive liquid.
*Refers to standards that are referenced in the DOE and EPA regulations.

The monitoring is performed to evaluate the effectiveness of effluent treatment and control, for radioactive material inventory purposes, and to determine compliance with all DOE, EPA, state, and local requirements pertaining to effluents and pollutant releases to the environment. Monitoring should be conducted in a manner that provides accurate measurements of the quantity and/or concentration of liquid and airborne pollutants in effluents as a basis for:

1. Determining compliance with applicable discharge and effluent control limits, including self-imposed administrative limits designed to ensure compliance with in-plant operating limits, effluent standards or guides, and with environmental standards

2. Evaluating the adequacy and effectiveness of containment and waste treatment and control, as well as efforts toward achieving levels of radioactivity that are ALARA considering technical and economical constraints

3. Compiling an annual inventory of the radioactive material released in effluents and onsite discharges.

Effluents should be monitored at the point at which the applicable standards apply. For example, onsite discharges may be monitored at the waste treatment and disposal system; effluents may be monitored at the point after all treatment and control, including retention and decay. In many cases, the monitoring location is specified in the discharge or operating permit.

3.2 HAZARDOUS MATERIAL

EPA regulations pertaining to the release of hazardous substances from DOE facilities are presented in 40 CFR 302 (EPA 1991b). This regulation, in accordance with Sections 101(14) and 102(a) of CERCLA, designates those substances in the statutes of CERCLA, identifies reportable quantities of those substances, and sets forth the notification requirements for releases of these substances. This regulation also sets forth reportable quantities for hazardous substances designated under Section 311(b), (2), (A) of the *Clean Water Act of 1977*. Any credible or potential upset condition identified in the FEMP determination shall evaluate the risk to the environment using the CERCLA values (reportable quantities) as a basis for determining monitoring and/or sampling. The actions necessary to be in compliance with the above requirements shall be stated in the FEMP.

3.3 AIRBORNE EFFLUENTS

Airborne emissions of radioactive materials from DOE-controlled facilities at the Hanford Site are subject to 40 CFR Part 61 (EPA 1991a), as stated in *Radiation Protection of the Public and the Environment*, DOE Order 5400.5 (DOE 1990b), and DOE 5400.1, Chapter IV, "Environmental Monitoring Requirements" (DOE 1988a). The list of hazardous air pollutants regulated under NESHAP is provided in Subpart A, "General Provisions" (EPA 1991a).

The specific emissions standards and monitoring requirements for radionuclides are contained in Subpart H, "National Emissions Standards for Emissions of Radionuclides Other Than Radon From Department of Energy Facilities," (EPA 1991a). Subpart H covers all DOE operations that emit radionuclides other than radon to the air, except for facilities subject to *Environmental Radiation Protection Standards for Management and Disposal of Spent Transuranic Nuclear Fuel, High-level and Radioactive Waste*, 40 CFR Part 191, Subpart B (EPA 1991c), and *Health and Environmental Protection Standards for Uranium and Thorium Project Plans*, and 40 CFR Part 192 (EPA 1991d).

Subpart H (EPA 1991a) presents detailed requirements for emissions monitoring and test procedures (61.93), compliance and reporting (61.94), record-keeping requirements (61.95), and exemptions from the reporting and testing requirements of 40 CFR Part 61.10 (61.97). Radionuclide emission rates from stacks and vents must be measured at all release points that have the potential to discharge radionuclides into the air in quantities that could cause an effective dose equivalent in excess of 1% of the standard of 10 mrem/yr specified in 40 CFR 61.92. This standard establishes the monitoring and measurement requirement at 0.1 mrem/yr.

The potential to discharge radionuclides must be based on the discharge from the effluent stream that would result if all pollution control equipment did not exist, but facility operations were otherwise normal. For release points that have a potential to release radionuclides into the air, but have effluents below the continuous monitoring standard, periodic confirmatory measurements must be made to verify low emissions. The DOE orders require that these confirmatory environmental surveys be conducted at least every 5 yr to confirm that effluents are below the limits which require the FEMPs.

Furthermore, each radionuclide that could contribute greater that 10% of the potential effective dose equivalent for each release point providing the potential for greater than 1% of the 10 mrem/yr standard must be measured individually. With prior EPA approval, alternative methods to the one described, including process knowledge, can be substituted for measurement to determine the emission levels of individual radionuclides.

In Washington State, airborne effluents are regulated by the *Washington Clean Air Act*. General regulations for air pollution sources are presented in WAC 173-400, *General Regulations for Air Pollution Sources*, including emission standards for sources emitting hazardous air pollutants in WAC 173-400-075 (WAC 1991) and radionuclides in WAC 246-247 (1990).

While both the WAC 246-247 and 173-480 list outdated maximum EDE standards, each contains a caveat stating that further stringent federal standards take precedence over the EDE standard specified by the WAC. Therefore, each effectively endorses the 10 mrem/yr EDE standard of the 40 CFR 61, Subpart H.

3.3.1 National Emissions Standards for Hazardous Air Pollutants

For convenience of the reader, some of the more important NESHAPs requirements are given in this section. It should be noted though, because

9 3 1 2 8 6 4 0 2 9 1

the regulations are subject to periodic change, if a particular requirement is of interest, the regulation in question should be consulted rather than what is written here.

Radionuclide emission rates from point sources (stacks or vents) shall be measured in accordance with the following requirements or other procedures for which EPA has granted prior approval (40 CFR 61.93 (b) (1) (EPA 1991a)):

Effluent Flow Measurements--Effluent flow measurements shall be made using the following methods (40 CFR 61.93 (EPA 1991a) (b)(1):

- Method 2 of Appendix A to Part 60 shall be used to determine velocity and volumetric flow rates for stacks and large vents.

  Method 2, "Determination of Stack Gas Velocity and Volumetric Flow Rate (Type S Pilot Tube)," is applicable for measurement of the average velocity of a gas stream and for quantifying gas flow. This procedure is not applicable in the following situations:

  - Cyclonic or swirling gas streams

  - Stack diameters smaller than 0.30 m (12 in.) or stack cross sectional areas less than 0.071 m^2 (113 in^2)

  - Measurement sites which are less than two stack or duct diameters downstream or less than a half diameter upstream from a flow disturbance.

Selection of Measurement Site--Sampling or velocity measurement is performed at a site located at least eight stack or duct diameters downstream and two diameters upstream from any disturbances such as a bend, expansion, or contraction in the stack, or from a visible flame. If necessary, an alternative location may be selected, at a position at least two stack or duct diameters downstream and less than a half diameter upstream from a flow disturbance (40 CFR 60, [EPA 1991e] Appendix A, Method 1, Section 2.1). The extraction point for sampling should be as close as practicable to the point where the emissions from that source are released to the atmosphere while still complying with the defined criteria.

Note: The above paragraph is recommending placing or taking stack flow measurements at least eight stack diameters downstream and two diameters upstream from any disturbances, but it is limiting these measurements to two stack diameters downstream and less than a half diameter upstream. An alternative stack measurement location is explained in 40 CFR 60 (EPA 1991e), Appendix A, Method 1, Section 2.5. This alternative is recommended to be limited to ducts larger than 24 in. in diameter. This alternative method directs the measurements of pitch and yaw angles of the gas flow at 40 or more traverse points. The resultant angle is then calculated and compared with acceptable criteria for mean and standard deviation. Refer to the regulation for specifics.

- Method 2A of Appendix A to Part 60 (EPA 1991e) shall be used to measure flow rates through pipes and small vents, such as in the argon processing systems.

9 3 1 2 8 5 4 0 2 9 2

- Method 2A, "Direct Measurement of Gas Volume Through Pipes and Small Ducts," applies to the measurement of gas flow rates in pipes and small ducts, either in line or at the exhaust positions, within the temperature range of 0 °C to 50 °C (32 °F to 122 °F).

- The frequency of the flow rate measurements shall depend upon the variability of the effluent flow rate. For variable flow rates, continuous or frequent flow rate measurements shall be made. For relatively constant flow rates only periodic measurements are necessary.

Radionuclides--Radionuclides shall be directly monitored or extracted, collected, and measured using the following methods:

- Reference Method 1 of Appendix A Part 60 (EPA 1991e) shall be used to select monitoring sample sites.

  - The Method 1 (Sample And Velocity Traverses For Stationary Sources) site is discussed in paragraph 1.(*i*) above.

  - The velocity measurement location is recommended to be at a site located 8 equivalent stack or duct diameters downstream of the sampling site. This method further stipulates that if such locations are not available, then the sampling site should be located at least 2 equivalent stack or duct diameters downstream and 2½ stack diameters upstream from any flow disturbances. The velocity measurement device should then be located 2 equivalent stack diameters downstream from the sampling site.

    Note: Although this method may apply, the regulations do not specifically refer to this method.

- The effluent stream shall be directly monitored continuously with an in-line detector or representative samples of the effluent stream shall be withdrawn continuously from the sampling site following the guidance presented in American National Standards Institute (ANSI) N13.1-1969, *Guide to Sampling Airborne Radioactive Materials in Nuclear Facilities* (ANSI 1969) (including the guidance presented in Appendix A of ANSI N13.1). Periodic sampling may be used only with prior approval of the EPA (refer to the 40 CFR 61.93 [b] [2] [ii] [EPA 1991a]).

  - ANSIN13.1-1969 is an informative document which discusses both ideal and practical sampling.

    - Appendix A gives guidance on the number and type of sampling probes by size of the stack. If the uniform flow and concentration cannot be demonstrated, or if incomplete mixing is suspected, multiple inlet probes should be considered. Below are the recommended number of probes for each stack or duct diameter:

9 3 1 2 8 6 4 0 2 9 3

Duct diameter (in.)	Minimum number of points
2-6	1
8-12	2
14-18	3
20-28	4
30-48	5
50 and larger	6

- Appendix A also discusses turbulent and laminar flows. For laminar flows, specific probe locations are specified within the stack flow. For turbulent flows the mixing is uniform and probe location is not as critical.

- In addition, this appendix recommends probe design types.

- Radionuclides shall be collected and measured using procedures based on the principles of measurement described in 40 CFR 61, Appendix B, Method 114 (EPA 1991a).

  - Stack Monitoring and Sample Collection Methods (40 CFR 61, Appendix B, Method 114, Section 2)--This section specifies the stack monitoring and sample collection methods appropriate for radionuclides as particulates and as gases, including tritium, iodine, argon, krypton, xenon, oxygen, carbon, nitrogen, and radon.

  - Radionuclide Analysis Methods (40 CFR 61, Appendix B, Method 114, Section 3)--This section specifies radiochemical methods that shall be used in determining the amounts of radionuclides collected by the stack sampling system. Other methods, not specified in this section, must be approved in advance by the EPA Administrator. The methods described within this section are grouped according to principles of measurements for the analysis of alpha, beta, and gamma emitting radionuclides. The listed radionuclides are those most commonly used and that have the greatest potential for causing exposure to members of the public.

- A quality assurance program shall be conducted that meets the performance requirements described in 40 CFR 61, Appendix B, Method 114; Quality Assurance (QA) is discussed further in the following paragraphs.

When it is impractical to measure the effluent flow rate at an existing source in accordance with 40 CFR 61.93 (b)(1) (EPA 1991a), or to monitor or sample an effluent stream at an existing source in accordance with the site selection and sample extraction requirements of 40 CFR 61.93 (b)(2), the facility owner or operator may use alternative effluent flow rate measurement

9 3 1 2 8 5 4 0 2 9 4

procedures or site selection provided the conditions specified in 40 CFR 61.93 (b)(3) are met.

Reporting (40 CFR 61.94)--Compliance with the requirements of 40 CFR 61 Subpart H (EPA 1991a) shall be determined by calculating the highest EDE to any member of the public at any offsite point where there is a residence, school, business, or office. The owners or operators of each facility shall report to both EPA headquarters and the appropriate regional office, by June 30 of each year, the results of monitoring as recorded in DOE's Effluent Information System and the dose calculations required by Part 61.93(a) for the previous calendar year. The report will include the information specified in 40 CFR 61.94(b).

If the facility is not in compliance with the emission limits of 40 CFR Part 61.92 (EPA 1991a) in the calendar year covered by the report, the facility must commence reporting to the Administrator of the EPA, on a monthly basis, the information specified in 40 CFR 61.94(b) for the preceding month. These reports will start the month immediately following the submittal of the annual report for the year of noncompliance and will be due 30 d following the end of each month. This increased level of reporting will continue until the Administrator of the EPA has determined that the monthly reports are no longer necessary. In addition to all the information required in 40 CFR 61.94(b), monthly reports shall include the information specified in 40 CFR 64(c)(1) and (2). In those instances where the information is classified, such information will be made available to EPA separated from the report and will be handled and controlled according to applicable security and classification regulations and requirements.

Record Keeping (40 CFR 61.95) (EPA 1991a)--All facilities must maintain records documenting the source of the input parameters, including the results of all measurements on which they are based, the calculations and/or analytical methods used to derive values for input parameters and procedures used to determine EDE. This documentation should be sufficient to allow an independent auditor to verify the accuracy of the determination made concerning the facility's compliance with the standard. These records must be kept at the site of the facility for at least five years and, on request, be made available for inspection by the administrator or his authorized representative.

Quality Assurance--40 CFR 61.93 (b)(2)(iv) (EPA 1991a) states that a quality assurance program shall be conducted that meets the performance requirements described in Appendix B, Method 114 of 40 CFR 61.

Quality Assurance Methods (40 CFR 61, Appendix B, Method 114, Section 4) (EPA 1991a)--This section specifies quality assurance methods that must be used to ensure these measurements are representative and are of known precision and accuracy and shall include administrative controls to ensure prompt response when emission measurements indicate unexpected large emissions. The program shall consist of a system of policies, organizational responsibilities, written procedures, data quality specifications, audits, corrective actions and reports. This quality assurance program shall include the following program elements.

9 3 1 2 8 5 4 0 2 9 5

- Documentation identifying the organizational structure, functional responsibilities, levels of authority, and lines of communication for all activities related to the emissions measurement program.

- Prescribed administrative controls to ensure prompt response if emission levels increase as a result of unplanned operations.

- A description of the sample collection and analysis procedures used in measuring the emission, including the following where applicable:

  - Identification of sampling sites and number of sampling points, including the rationale for site selection

  - A description of the sampling probes and representativeness of the samples

  - A description of any continuous monitoring systems used to measure emissions, including the sensitivity of the system, calibration procedures, and frequency of calibration

  - A description of the sample collection systems for each radionuclide measured, including frequency of collection, calibration procedures, and frequency of calibration

  - A description of the laboratory analysis procedures used for each radionuclide measured, including frequency of analysis, calibration procedures, and frequency of calibration

  - A description of the sample flow rate measurement systems or procedures, including calibration procedures and frequency of calibration.

- The objectives of the quality assurance program shall be documented and shall state the required precision, accuracy, and completeness of the emission measurement data, including a description of the procedures used to assess these parameters.

- The quality control program shall evaluate and track the quality of the emission measurement data against preset criteria. The program should include, where applicable, a system of replicates; spiked samples; split samples; blanks; and control charts. The number and frequency of such quality control checks shall be identified.

- A sample tracking system shall be established to provide for positive identification of samples and data through all phases of the sampling collection, analysis, and reporting system. Sample handling and preservation procedures shall be established to maintain integrity of the samples during collection, storage, and analysis.

- Periodic internal and external audits shall be performed to monitor compliance with the quality assurance program. These audits shall be performed in accordance with written procedures and conducted by

personnel who do not have responsibility for performing any of the operations being audited.

- A corrective action program shall be established including criteria for when corrective actions will be taken and who is responsible for taking the corrective action.

- Periodic reports to responsible management shall be prepared on the performance of the emission measurements program. These reports should include assessment of the quality of the data, results of audits, and description of corrective actions.

- The quality assurance program should be documented in a quality assurance project plan, which should address each of the above requirements.

A QAPP for radionuclide airborne emissions was prepared (Vance 1991) to address the QA radioactive airborne elements of 40 CFR 61 and was submitted to the EPA.

3.3.2 U.S. Department of Energy Orders

The DOE policy is that effluent monitoring programs meet high standards of quality and credibility. The policy reemphasizes the regulatory requirements and specifies further requirements than those called for by the regulatory agencies. This section is provided to call to the attention of the reader some of those further requirements.

ANSI N317-1980 (ANSI 1980b) is called out to evaluate CAMS.

Where a significant potential (greater than once per year) exists for approaching or exceeding a large fraction of the emission standard (e.g., 20%), continuous monitoring is required.

Air Sampling Systems--It is recommended that air sampling and monitoring systems be calibrated before use, recalibrated any time they are subject to maintenance or modification that may effect the instrument's calibration, and at least annually. They should also be routinely checked with known sources to determine that they are functioning properly.

The EPA Methods 1, 2, and 4 should be used to measure and determine stack velocity, static pressure, temperature, and moisture content.

- Method 1 determines where and how velocity measurements must be taken (NESHAP) (EPA 1991a).

- Method 2 is the actual procedure used to measure and determine stack gas velocity, static pressure, and volumetric flow rate (NESHAP).

- Method 4 is used to determine moisture content in the stack.

9 3 1 2 8 5 4 0 2 9 7

Further specified is:

The sampling probe should be constructed of seamless stainless steel tubing (or, for corrosive atmospheres, other rigid, seamless tubing that will not degrade under sampling conditions) with sharp, tapered edges.

The angle of taper on the sampling probe should be 30°, and the taper should be on the outside edge to preserve a constant internal diameter.

The probes should be designed so that they can be easily removed for cleaning, repair/replacement, or deposition evaluation.

Aerosol transport lines should be rigid and should be electrically grounded to the point where the particles are collected/accumulated.

Aerosol transport lines should be made with radii of curvature greater than five tube diameters (just as the probe is designed).

All sampling systems should, at a minimum, have a gas-flow gauge that is read and recorded daily, unless it can be demonstrated that the flow rate is constant.

Flow measurement devices for the sampler should be located downstream from the collector.

Normally, automatic airflow feedback systems that adjust the sampler flow will not be required. Sample flow adjustment is induced by the monitoring-system sampling pump, which continuously measures the effluent flow to maintain isokinetic sampling conditions. The need for feedback systems should be considered for each emission stream having large fluctuations in flow (greater than a factor of two) and contributing a major fraction (e.g., greater than 10%) of the offsite emission limit for radionuclides from the facility.

This page intentionally left blank.

9 3 1 2 8 6 4 0 2 9 9

4.0 IDENTIFICATION AND CHARACTERIZATION OF EFFLUENT STREAMS

4.1 IDENTIFICATION AND CHARACTERIZATION OF SOURCE TERMS CONTRIBUTING TO EACH EFFLUENT STREAM

Radiological airborne release from the FFTF represents the primary source of effluent from the operation of the plant. This source should not result in significant impact to the surrounding area as a result of normal or anticipated off-normal operations. The following sections provide information relative to the management and controls placed on the radioactive and potential radioactive gaseous release from the FFTF. This includes the system function and area exhausted, the effluent system layout, control devices for removal of radioactivity, the means and frequency of testing and inspecting effluent treatment systems, the FFTF operating mode, chemical and physical forms of releases, and stack data.

4.1.1 System Function and Area Exhausted

The FFTF design for radioactivity control is one of containment (i.e., closure of valves, when excessive radiation is detected in plant exhaust systems). The significant result of this is that primary reliance is not placed on filters to ensure that radiation is not released to the atmosphere. Both inprocess prefilters and tested filters are incorporated into the exhaust systems.

More than 99% of the releases to the atmosphere are from the combined exhaust. Ventilation air from the reactor containment building and from its access control area, air from the unlined cells in the RSB, and processed gas and air from the RAPS and CAPS are combined and vented to the atmosphere through the combined exhaust. These four areas ventilated by the combined exhaust are described in the following sections.

4.1.1.1 Reactor Containment Building. The reactor containment system consists of a cylindrical carbon-steel reactor containment vessel 57 m high by 41 m in diameter, along with several principal structures and equipment pieces within the vessel (Figure 4-1). Steel-lined, reinforced concrete cells and pipeways, which house the reactor components, occupy the lower portion of the containment vessel (below the operating floor) from grade level (elevation 168 m) to approximately 24 m below grade. The reactor components are shown in Figure 4-2b. Cells and pipeways that house piping and/or equipment containing primary-system sodium are provided with an inert atmosphere of nitrogen gas. Steel liners contain the inert atmosphere and protect the concrete from exposure to sodium in case of a spill. Figures 4-2a and 4-2b depict a typical cross section and plan view of the lower portion of the containment vessel.

9 3 1 2 3 5 4 0 3 0 0

Figure 4-1. Containment Vessel.

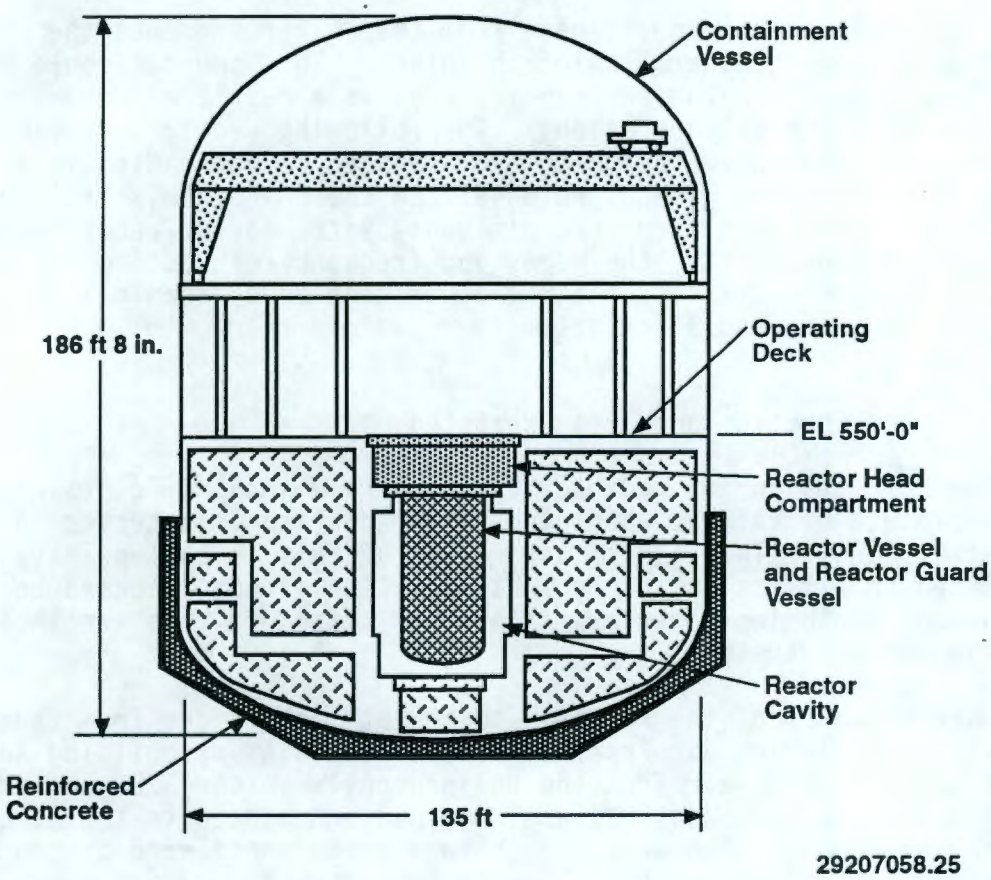

9 3 1 2 8 6 4 0 3 0 1

Figure 4-2a. Typical Cross Section of Internal Structures Within the Containment Vessel.

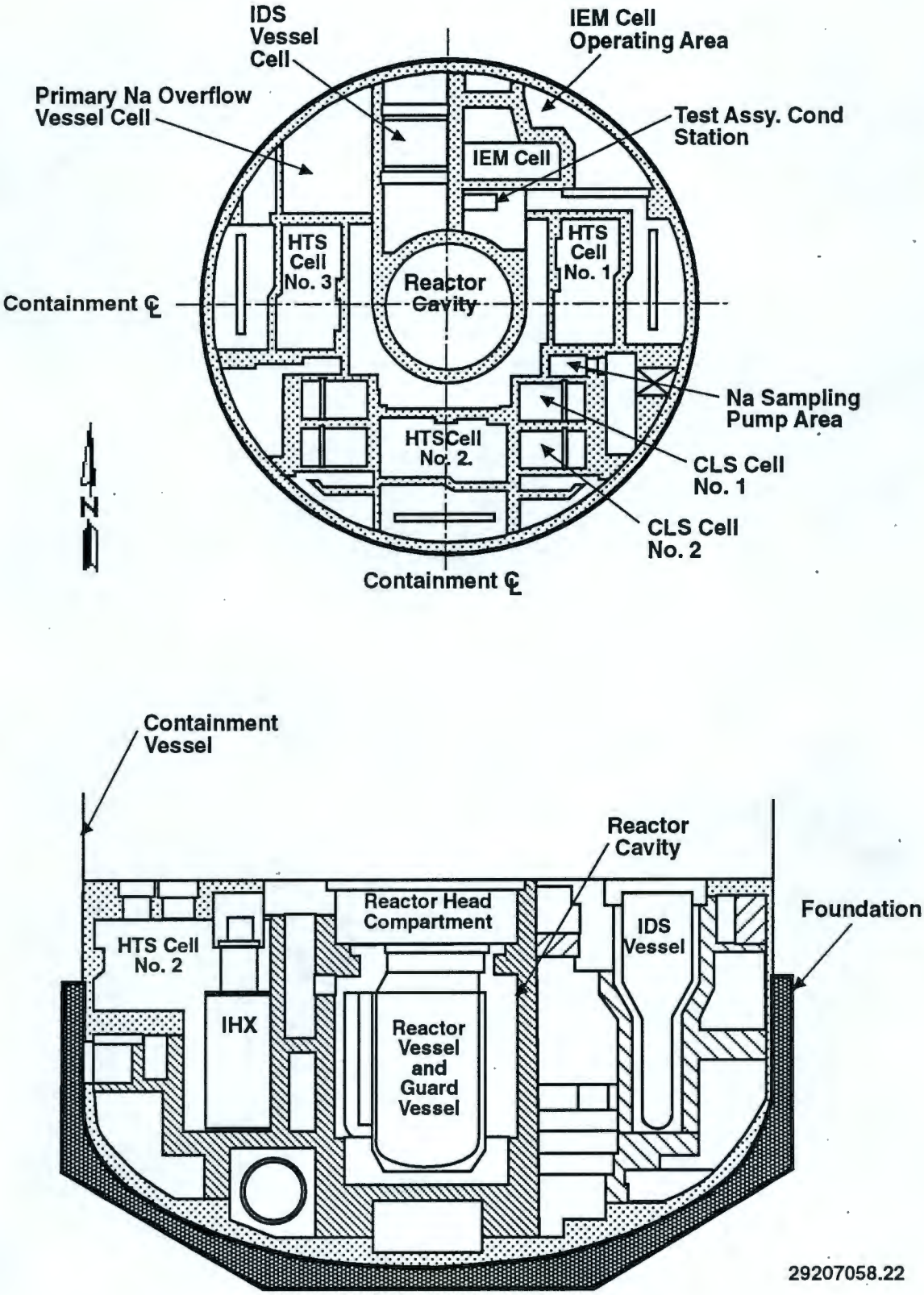

Figure 4-2b. Reactor Containment Building Cutaway.

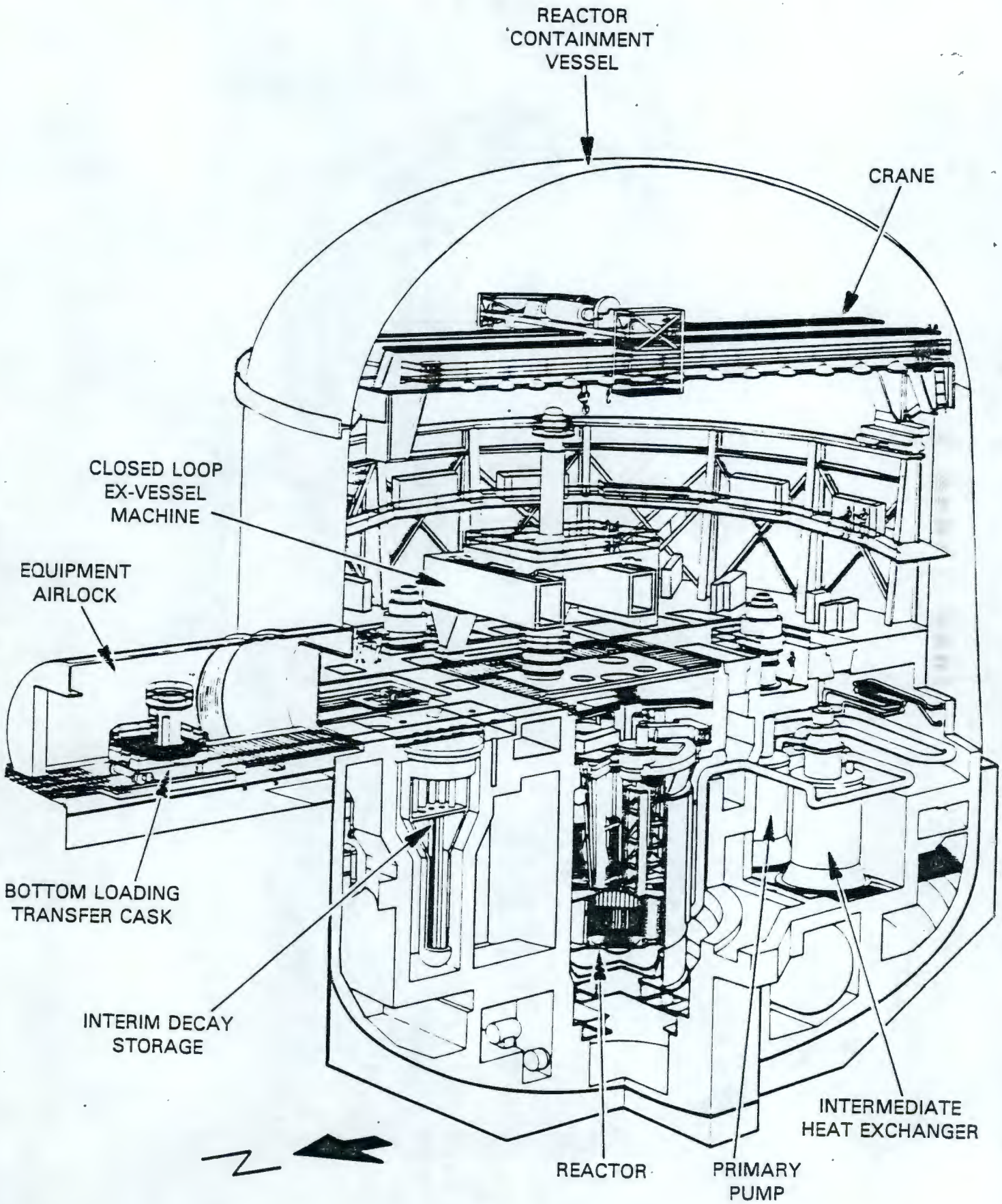

9 3 1 2 3 5 4 0 3 0 3

In the operating area a shielded operating floor is located at grade level. The central portion of the operating floor is occupied by a steel operating deck, which is directly above the reactor head compartment. A large fuel-handling machine is located on the operating floor.

A structural-steel mezzanine is located above the perimeter of the operating floor at an elevation of 173.78 m. The mezzanine provides additional work area plus space for heating and ventilation equipment and a number of control panels. Above the mezzanine, a 200-ton polar gantry crane and a jib crane are provided to satisfy hoisting requirements. A cutaway of the reactor containment building is shown in Figure 4-2b.

The cell atmosphere and the argon cover gas used in the reactor vessel are processed by the CAPS and RAPS, respectively, to remove radioactive aerosols, particulates, and gas. The surrounding work areas are serviced by the reactor containment building heating and ventilation system. This system is supplied by outside air and is vented to the combined exhaust. The inert nitrogen cells are maintained slightly positive relative to containment to aid in limiting the oxygen content. The containment is maintained slightly negative relative to atmospheric pressure to limit the spread through the personnel airlock of radioactive contamination in the event of an accidental release within containment.

Almost all of the radioactive releases from the combined exhaust originate from the RAPS and CAPS. With the exception of small amounts of tritium from the fusion materials open test assemblies glovebox and cesium at minimum detectable levels from the in-containment CAPS blowers, the containment heating and ventilation system releases no radioactivity.

4.1.1.2 Access Control Area. The area immediately outside the containment personnel airlock is called the access control area, which is located in the Auxiliary Equipment Building - East. Persons exiting containment are monitored for radioactivity in this area. The system is designed for a situation in which the containment becomes contaminated and there is the likelihood that personnel will carry radioactivity from the containment through the airlock. The access control area heating and ventilation system is designed to maintain a slightly negative pressure with respect to adjacent rooms to limit airborne contamination to those areas.

4.1.1.3 Reactor Service Building Unlined Cells. The RSB is a structurally independent building with underground cells for offsite shipping cask loading and for storage and processing of radioactive gases and other solid and liquid wastes. The building's superstructure provides access for trucks and railroad cars to the containment's equipment air lock. The RSB contains a 100-ton bridge crane with an auxiliary 25-ton hook for handling equipment and materials. Liquid nitrogen stored in tanks in the RSB is used to cool the RAPS and CAPS cryogenic charcoal beds. The bottom loading transfer cask, which is used to move spent fuel from the containment, is stored in this building.

The cells and pipeways in the RSB include those for the CAPS, the RAPS, and the radioactive liquid waste system. The radioactive liquid waste system components housed in the RSB are part of the sodium removal system. This system's function is to wash sodium from sodium-wetted test articles removed

9 3 1 2 8 6 4 0 3 0 4

that are under study in the interim examination and maintenance cell from the reactor. The interim examination and maintenance cell is a hot cell designed for remote handling of radioactive reactor components and is located in containment. The radioactive sodium hydroxide solution that results from sodium removal operations is stored in tanks located in the RSB and is off-loaded as necessary to railcars and shipped for use in other processes on the Hanford Site. Argon gas from the system is vented to CAPS. The unlined cells (those that have a low potential for containing radioactive materials) in the RSB are interconnected and are pressure controlled by the special cooling and cell atmosphere control system, which discharges to the combined exhaust. The unlined cells in the RSB do not normally contribute any radioactivity to the combined exhaust. The steel-lined RSB cells, those containing part of the RAPS components, are maintained at a negative pressure by the CAPS (see Section 2.2.1.4). These steel-lined cells are not normally vented with the unlined cells; however, during maintenance these steel-lined cells can be vented along with the unlined cells to the combined exhaust.

4.1.1.4 Radioactive Argon Processing System and Cell Atmosphere Processing System. The RAPS processes the argon cover gas from the reactor. Releases from the RAPS comprise virtually all of the radioactivity that is exhausted to the atmosphere. Before processing, the reactor cover gas contains radioactive sodium vapor and aerosols, ^{41}Ar, which is an activation product of the reactor cover gas, and a number of species of radioactive fission product gases krypton and xenon. In addition, the reactor cover gas contains vapors of radionuclides of cesium in quantities that vary depending on the action of sodium purification equipment and the length of time since the last fuel pin release.

Tritium is produced in the reactor by ternary fission, by neutron reaction with boron in the control rods, and by neutron reaction with traces of lithium in the fuel and the sodium coolant. Tritium is intentionally produced and measured by the fusion materials open test assemblies experiment. Tritium readily moves from these sources to the sodium and is captured as sodium hydride. Sodium hydride is relatively insoluble in the sodium and tends to crystalize and be trapped in the FFTF's primary coolant purifier, the cold trap. Because of its ability to diffuse through metals, a small amount of tritium enters the secondary coolant loops via the intermediate heat exchangers. Some tritium enters the reactor cover gas. Small amounts of tritium are found in the combined exhaust. The majority of the tritium measured at the combined exhaust is believed to come from the fusion materials open test assemblies analysis glovebox via the CAPS. Also, the RAPS transports some tritium as well with the reactor cover gas it processes.

Before entering the RAPS, the effluent is processed by a sodium vapor trap to remove and return sodium aerosols and vapors as liquid to the reactor. The RAPS utilizes a surge and delay tank, cryogenic unit, and particulate filter (located upstream of the compressors) to reduce the radionuclide concentration. The delay tanks and charcoal beds reduce the concentration of the noble gas radioisotopes by retaining them for intervals sufficiently long to permit their decay. Cesium species that might be present in the reactor cover gas are removed by the vapor trap, particulate filters, and charcoal beds.

The CAPS processes potentially contaminated nitrogen, air, or argon and discharges it to the atmosphere via the combined exhaust. Inert cell atmosphere purges are the primary source of gas to the CAPS, although several other sources contribute intermittent input to this system. The CAPS equipment, other than the charcoal beds, is used continuously to maintain inert cell pressure control and to process waste gas from the refueling machines, the interim examination and maintenance cell, and other sources. The CAPS effluent normally has only trace quantities of radioisotopes.

The CAPS is similar to the RAPS; however, its charcoal beds are used only infrequently. The primary function of its cryogenically cooled charcoal beds is to process the atmospheres of the inert cells in containment following an accident in which sodium and fission products are released from the primary system in those cells. Such an accident has never happened. The CAPS charcoal beds have a more realistic secondary use, as a backup unit for the RAPS.

4.1.2 Upset Operating Conditions

Activation of the reactor cover gas produces the radioisotope ^{41}Ar. Approximately 1,500 μCi/s of ^{41}Ar are produced when the plant is operating at power. The argon cover gas is processed by the RAPS, reducing the amount of ^{41}Ar released to the atmosphere. The amount released to the atmosphere is 1.5 μCi/s, which is 1×10^{-3} of the facility generation rate.

There is one anticipated event, which is nonroutine, that results in a release of the radioactivity to the atmosphere. This event is a fuel pin cladding breach, which results in the release of ^{85}Kr, a noble gas radioisotope that has a half-life of 10.76 yr. The total activity in a fuel pin that has run 3 cycles (approximately 450 d) at 5.1 MW thermal (plant operating power of 291 MW thermal) is approximately 124,200 Ci. Total noble gas activity is approximately 7,700 Ci, primarily from krypton and xenon radioisotopes. Only 1 Ci of the noble gas ^{85}Kr is expected to be released to the atmosphere from a fuel pin cladding breach. Because the RAPS delays krypton for about 1 wk, ^{85}Kr is not decayed and is released via the combined exhaust. The other kryptons and xenons are short-lived radioisotopes, that are delayed by the RAPS a sufficient length of time to allow for their decay. Other fission products are either retained in the sodium or the RAPS.

There have been 12 fuel pin releases at the FFTF since the beginning of operation in April 1982. All of these events have been single fuel pin breaches with the exception of two fuel pin releases that occurred during the same time period. Generally, only one fuel pin breach occurs at a time; however, the plant systems are designed to operate with 1% breached fuel or about 160 breached fuel pins in the reactor core.

This page intentionally left blank.

9312564037

5.0 EFFLUENT POINT OF DISCHARGE DESCRIPTION

5.1 AIRBORNE RELEASE POINT DATA

The following sections provide information on the dimensions of the main FFTF exhaust stack and building, annual average stack and ambient air temperatures, annual wind rose, Chi/Q data, and annual average volumetric flow rate to the air via the FFTF combined exhaust. Other exhaust points, the RSB, the Heat Transport Building-South (HTS-S) and the Fuel Storage Facility (FSF) are additional potential effluent release points from the FFTF that are monitored. These release points cover areas of the FFTF Plant with limited radiological release potential and do not represent sources of normal or anticipated (non-accident related) off-normal radiological releases. The FSF exhaust point is currently routed to the main exhaust via CAPS and is not active. None of these release point have active effluent treatment controls but are monitoring as required by internal FFTF safety documentation.

5.1.1 Stack Diameter

The FFTF Combined Exhaust exits the plant at a louvered penthouse located on the Auxiliary Equipment Building - East (see Figure 2-1). The combined exhaust penthouse is approximately 137 cm by 137 cm.

5.1.2 Stack Height

The combined exhaust penthouse is 46 cm high.

5.1.3 Building Height, Width, and Length

The Auxiliary Equipment Building - East is 11.89 m high in the area where the combined exhaust penthouse is located. The Auxiliary Equipment Building - East roof, where the combined exhaust penthouse is located, is approximately 17 m by 17 m. It is adjacent to the RSB and the reactor containment building (Figure 2-1), which are both at higher roof elevations than the Auxiliary Equipment Building - East. The roof elevation of the Auxiliary Equipment Building - East is 179.57 m.

5.1.4 Annual Average Stack and Ambient Air Temperatures

The combined exhaust annual average discharge temperature is 70 °F. The annual average ambient air temperature is 53 °F. This average was determined by the Hanford Site Meteorology Station using meteorology data for the Hanford Site area from the period from 1912 to 1980.

5.1.5 Annual Wind Rose

The wind rose for the 400 Area is shown in Figure 5-1.

Figure 5-1. Wind Rose for the Fast Flux Test Facility.

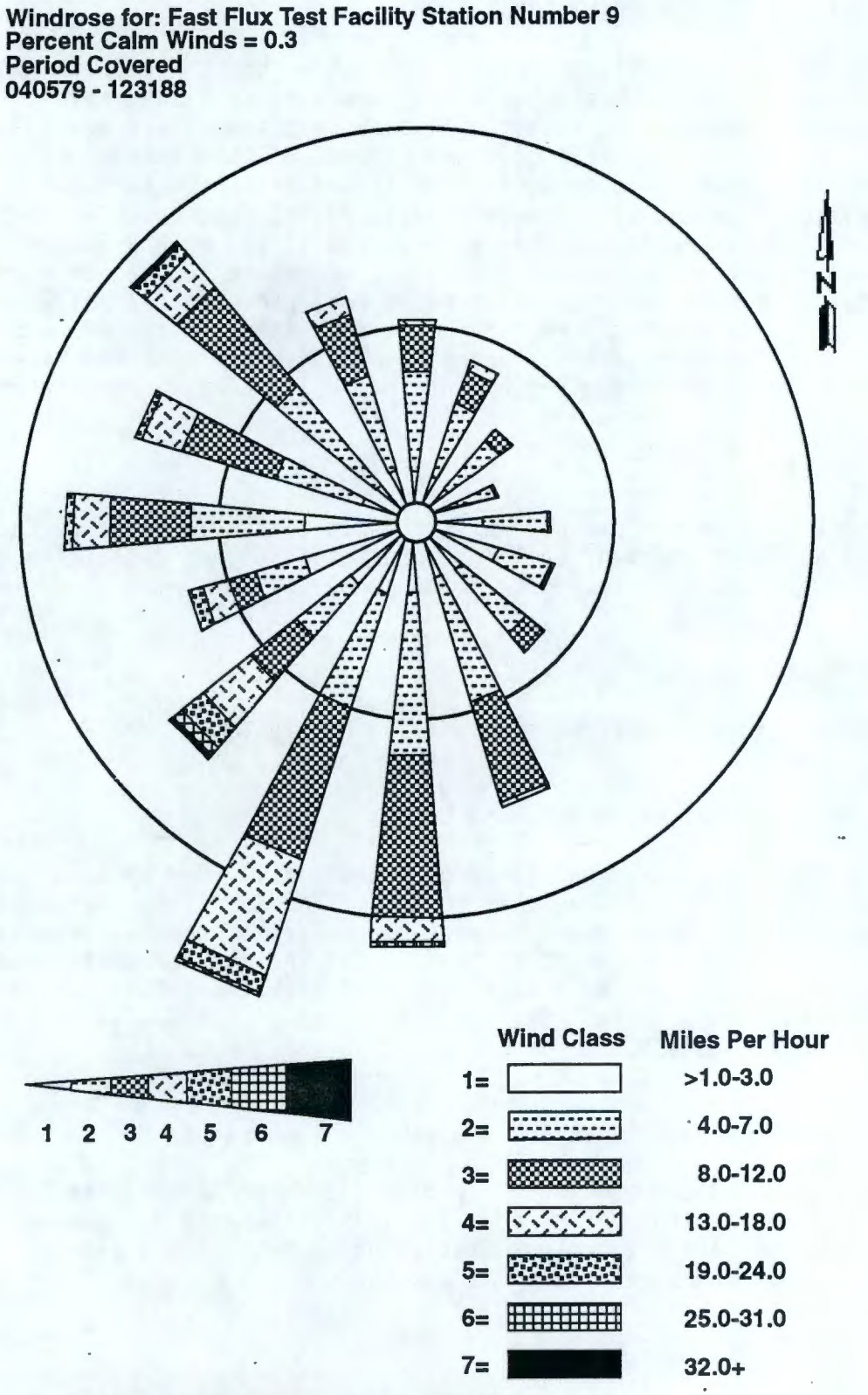

9 3 1 2 8 6 4 0 3 0 9

5.1.6 Chi/Q Data

The Chi/Q data is not available because the AIRDOS-PC computer code described in 40 CFR 61 (EPA 1991a), which was used to calculate the dose values described in Section 3.0, does not display this data.

5.1.7 Annual Average Volumetric Flow Rate

The combined exhaust flow is essentially unvarying at approximately 679.68 m^3/min, 113.28 m^3/min of which originates in the access control area.

This page intentionally left blank.

6.0 EFFLUENT MONITORING/SAMPLING DESIGN CRITERIA

The FFTF combined exhaust monitoring and sampling system was designed in accordance with *Guide to Sampling Airborne Radioactive Materials in Nuclear Facilities*, ANSI N13.1-1969 (ANSI 1969), to ensure that airborne radionuclides released from the facility are maintained ALARA. Details of ANSI N13.1-1969 are contained in Section 3.3.1.

Separate on-line monitoring is utilized to initiate source isolation via the Reactor Containment Isolation System (CIS), which is discussed in Section 2.2.4.1.

The FFTF combined exhaust monitor provides effluent release measurement and alarm notification to the FFTF control room if predetermined concentrations of airborne radionuclides are released from the facility.

This page intentionally left blank.

7.0 CHARACTERIZATION OF CURRENT EFFLUENT MONITORING SYSTEM

7.1 DESCRIPTION OF THE EFFLUENT AIRBORNE SAMPLING AND MONITORING SYSTEM

The combined exhaust effluent is monitored for beta-emitting particulates, beta-emitting gases (noble gases) and tritium in the exhaust duct before discharge to the combined exhaust penthouse. The combined exhaust effluent is also sampled for ^{131}I. The effluent in the flow path is drawn through a multiport isokinetic probe and then through a beta particulate monitor, iodine cartridge, and noble gas monitor, in that order. The beta particulate monitor incorporates a fixed filter and a scintillation detector that measures the gross beta activity. The filter medium has a collection efficiency of at least 99% for aerosol particles and is designed for minimum energy absorption to enhance beta sensitivity. The assembly is shielded against background radiation. The sampled air is then drawn continuously through a cartridge of activated charcoal to provide an integrated measurement of an accidental release of ^{131}I. The iodine cartridge is located in the flow path between the particulate and the noble gas monitors. The effluent is then drawn through the gaseous radioactivity monitor consisting of a beta scintillation detector in a suitable shield. This type of detector is used to improve the sensitivity to the radioactive gases while being relatively insensitive to the background gamma radiation.

The tritium effluent samples are drawn through a separate multiport sample probe. The effluent is drawn through a beta monitor that incorporates two sets of ion chambers to measure the gaseous tritium activity and subtract the effect of external gamma radiation on the tritium measurement. When process monitors indicate that the discharged effluent has the potential to exceed 10% of the derived concentration guides-public value (10^{-7} μCi/mL) at the point of discharge on an annual average, a tritium sampler is activated. The effluent for this sample is drawn through the tritium monitor sample probe. The sample then passes through a catalytic converter to ensure that tritium in forms other than water is oxidized. The sample enters a cartridge containing calcium sulfate desiccant. The cartridge is periodically removed for laboratory analysis.

7.1.1 Stack Flow Measuring System

The combined exhaust exits the FFTF at approximately 680 m^3/min. This is determined by summing the airflow contribution from each exhaust system (Figure 2-4). The reactor containment building supplies approximately 570 m^3/min, the access control area approximately 110 m^3/min, the RAPS/CAPS approximately 1.4 m^3/min, and the RSB unlined cells approximately 2.8 m^3/min. As can be seen, most of the airflow is provided by the reactor containment building and access control area heating and ventilation systems.

There is no stack flow measuring system for the combined exhaust. The only airflow that is actually measured on a routine basis is the inflow to the reactor containment building. The flow of fresh air to the reactor

containment building is measured by a pitot-style flowmeter at the discharge of supply fan E-68 (or the redundant unit E-69). The flowmeter produces a signal used by a control system to maintain a constant volume of fresh air to the reactor containment building by controlling the fan inlet vanes. The containment is maintained at a negative pressure by a control system that regulates the suction pressure at the exhaust fan R-3 (or the redundant unit R-4) in response to slight containment pressure variations. These variations are usually diurnal but can also originate from other sources, such as vented gases or heating- and cooling-system temperature changes.

The access-control-area system is a constant-volume system. The flow in this system is not routinely measured.

7.1.2 Sample Probes

The sample probe for the beta particulate monitor, iodine cartridge, and noble gas monitor is isokinetic, as required by ANSI N13.1-1969 (ANSI 1969). The tritium monitoring and sampling system is not designed to take isokinetic samples because the purpose of this system is to detect tritium gas.

7.1.3 Number and Location of Sampling Points

There are two sample probes, one for beta particulates, ^{131}I, and noble gas, and one for tritium; each probe has eight sample ports. The two sample probes are located in the combined exhaust duct downstream from exhaust fans R-3 and R-4 just before the louvered penthouse (Figure 2-4). The exhaust duct at the location of the isokinetic probes is 121.92 cm wide by 76.20 cm high.

7.1.4 Sample Lines

The sample lines are made of 3/4-in. stainless-steel tubing. The two inlet lines are approximately 6.1 m long with four 45° bends and one 90° bend. The two inlet lines are normal to the duct surface where they connect to the isokinetic sample probes. The isokinetic probe sample ports are aligned directly into the effluent flow path.

7.1.5 Sample Flow Regulation

Particulate and noble gas samples are drawn through a multiport isokinetic sample probe from the combined exhaust duct effluent at a fixed rate between 2 to 10 ft^3/min by regulated air pumps. An indicating flow transmitter displays the flow of the sampling line locally and activates an annunciator in the control room panel to indicate a stoppage or an abnormally high level of flow. The sample flow is automatically regulated by controlling the position of a valve in the sample pump recirculation line. Valve positioning is determined by measuring the differential pressure across a calibrated flow orifice.

Tritium samples are drawn through a multiport isokinetic sample probe from the combined exhaust duct effluent at a fixed rate between 5 and

9 3 1 2 8 6 4 0 3 1 5

10 L/min. An indicating flowmeter locally displays the flow in the sampling line. The sample flow is regulated by manually controlling the position of a valve located on the flowmeter.

7.1.6 Sampling Media

The combined exhaust particulate filter is a 3-μm highly microporous membrane composed of an acrylic copolymer cast on a nonwoven nylon substrate. The iodine cartridge contains trimethylene di-amine impregnated carbon which is an efficient material for capturing organic molecules containing radioactive iodine. The tritium sampling cartridge contains calcium desiccant to remove water vapor containing tritium.

7.1.7 Frequency of Sampling

Continuous sampling is performed for beta particulate activity. Tritium sampling is performed when the effluent has the potential to exceed 10% of the derived concentration guides-public value at the point of discharge on an annual average at the point of discharge.

7.1.8 Frequency of Sample Collection

Particulate filters are changed weekly. Iodine cartridges are changed every 2 wk. Tritium sampling cartridges are changed either daily or weekly, depending on the indication and operability of other process and effluent tritium monitors.

7.1.9 Calibration and Audit Schedules

The monitoring system instrumentation is calibrated annually. The Westinghouse Hanford Environmental Protection Function performs surveillances of the environmental monitoring system at FFTF once a year. Environmental Protection reviews the sampling and monitoring records, checks to ensure the sampling and monitoring equipment is operational, and verifies that the required calibrations are performed. The Westinghouse Hanford Health Physics personnel also perform daily inspections of sampling and monitoring equipment to ensure it is operational.

7.2 OPERATIONAL SPECIFICATIONS PERTAINING TO EFFLUENT MONITORING SYSTEM

The limiting conditions for operations along with the surveillance requirements and actions to be taken in the event that these cannot be met for the effluent monitoring system is described in FFTF safety documentation.

7.3 ALTERNATE MONITORING AND ASSESSMENT METHODS

Alternative monitoring and assessment methods are addressed in FFTF safety documentation. This document requires that all temporary replacement monitors have equivalent functions of the monitor being replaced.

8.0 HISTORICAL MONITORING/SAMPLING DATA FOR EFFLUENT STREAMS

The only permitted effluent stream currently associated with the FFTF is the airborne releases associated with the Washington State Department of Health Radioactive Air Emissions Permit FF01.

8.1 NORMAL CONDITIONS

8.1.1 Annual Average Release Rates

The annual average release rates reported for 1988 are shown in Table 8-1.

Table 8-1. Annual Average Release Rates for 1988.

Isotope	Activity (Ci/yr)
^{41}Ar	3.7 E+01
^{85}Kr	7.6 E-01
^{131}I	1.0 E-05
^{137}Cs	1.5 E-05

The release rates for ^{41}Ar and ^{131}I were obtained from information provided on the Washington State Department of Health (DOH) source registration form. The release rates on the source registration form are for 1988. Information provided on the source registration form concerning release rates was taken from the Hanford Site database, titled *Onsite Discharge Information System/Effluent Information System*. This report is prepared annually and submitted to Idaho Falls (DOE) Low-Level Waste Lead Site April 1, pursuant to DOE Orders 5484.1 (DOE 1981) and 5400.1 (DOE 1988a). Annual release rates for ^{41}Ar are based on a release rate of 1.5 μCi/s at a plant power rating of 291 MW thermal for periods when the plant is operating.

The ^{85}Kr release rates were not reported on the source registration as this information was not available at the time the registration was prepared. The ^{85}Kr releases result from a breached fuel pin. Information concerning the amount of ^{85}Kr potentially available for release from one breached fuel pin (approximately 1 Ci) is combined with information obtained from process monitors upstream of the combined exhaust to estimated the annual release rates of ^{85}Kr.

The ^{90}Sr was originally identified on the source registration as a radionuclide emitted from the FFTF. The ^{90}Sr was assumed to be the radionuclide detected by gross beta analysis of the combined exhaust samples

because ^{90}Sr is present in the fuel and is the fission product with the most restrictive derived concentration guide. However, additional information was gathered to indicate that ^{137}Cs is the fission product present in the effluent. These data include isotopic analyses of smears of contaminated surfaces and isotopic analyses of effluent samples. As a result, ^{137}Cs is assumed to be the radionuclide detected by gross beta analysis of the combined exhaust samples, which is reported in Table 2-3 and in Section 2.2.6 instead of ^{90}Sr. Beta concentrations only exceeded the detection limits 12 times during 1988 (samples are taken weekly).

Weekly analyses of samples taken from the combined exhaust indicate that iodine concentrations have never exceed detection limits. The value reported in the table above is a conservative number based on detection limit values. The detection limit for ^{131}I is 3×10^{-14} to 5×10^{-14}. The potential for releasing iodine to the atmosphere is very small because iodine released from a breached fuel pin is captured and retained by the sodium coolant, and fuel is generally not handled out of sodium for many weeks or months after removal from the core providing ample time for iodine to decay. Iodine isotopes have relatively short half-lives; 8.05 d for ^{131}I and 20.3 h for ^{133}I.

The possibility does exist for an iodine release to the atmosphere if a fuel assembly containing a breached fuel pin is handled in the interim examination and maintenance cell or by the refueling equipment before the iodine has had a chance to decay; however, as stated above, the fuel is stored under sodium for several weeks or months, which results in the decay of most iodine fission products before handling. Gaseous discharges from the interim examination and maintenance cell and the refueling machines are vented to the combined exhaust via the in-containment CAPS blowers. The interim examination and maintenance cell exhaust is filtered by a HEPA filter and a charcoal iodine filter; exhaust from the refueling machines is not filtered. Other gas releases from the plant would pass through cryogenically cooled charcoal beds that remove iodine.

Tritium releases also were not reported on the source registration, which reported 1988 data, because irradiation testing of lithium samples in a special fusion materials open test assemblies was not initiated until January 4, 1990. Tritium monitors and samplers were placed on line in November 1989 in anticipation of the special fusion materials open test assemblies testing.

The environmental releases to account for 1990 and 1991 airborne and liquid releases from the registered stacks/vents are documented in WHC-EP-0527 (Manley 1992a) and WHC-EP-0527-1 (WHC 1992), respectively. The releases are also shown in Tables 8-2 through 8-4.

8.2 UPSET CONDITIONS

The anticipated process upset, a fuel pin failure, and associated releases were described in Section 4.2.7.

Table 8-2. 400 Area Radionuclide Airborne Emissions for 1990.

Facility	Radionuclide	Release (Ci)	Average Concentration (μCi/mL)
FFTF-CB-EX	H	2.9 E+00	8.5 E-09
	^{41}Ar	2.9 E+01	8.5 E-08
	^{137}Cs	4.8 E-07	1.4 E-15
FFTF-RE-SB	^{137}Cs	5.6 E-06	3.3 E-14
FFTF-HT-TR	^{137}Cs	1.1 E-07	1.8 E-15
437-MN+ST, MASF	^{137}Cs	6.3 E-07	2.7 E-15

Table 8-3. 400 Area Radionuclide Airborne Emissions for 1991.

Facility	Radionuclide	Release (Ci)	Average Concentration (μCi/mL)
FFTF-CB-EX	^{41}Ar	2.7 E+01	7.5 E-08
	^{137}Cs	2.1 E-06	5.8 E-15
FFTF-RE-SB	^{137}Cs	4.1 E-06	2.4 E-14
FFTF-HT-TR	^{137}Cs	9.7 E-07	1.6 E-14
437-MN+ST, MASF	^{137}Cs	5.8 E-07	2.5 E-15

Table 8-4. 400 Area Liquid Effluent Releases for 1990.

Facility	Substances	Release	Average Concentration (μCi/mL)
Process Sewer	Beta	1.6 E+07 l/yr 8.0 E-04 Ci	5.0 E-08
Process Pond	Nitrate (annual average)	1.6 mg/l	
	TOC (monthly maximum)	2.3 mg/l	
Sanitary Sewer		2.0 E + 07 l/yr	

This page intentionally left blank.

9.0 SAMPLE ANALYSIS AND LABORATORY PROCEDURES

This section address sample analysis and laboratory procedures used by FFTF.

9.1 ANALYTICAL LABORATORY AND PROCEDURES

All samples collected for analysis at FFTF are collected in accordance with WHC-IP-0692, "5.2.3.1 Air Sample Exchange," (WHC 1991b) and then delivered to the 325 Laboratory, operated by Pacific Northwest Laboratory (PNL), for analyses. The 325 Building was built in the 300 Area in 1953 to accommodate general radiochemical research, development, demonstration, and analytical service to the Hanford Site. The analyses are run using PNL procedures, which are similar to EPA protocols. In addition, the record sampling requirements shall be conducted according to the Part D of WHC-CM-7-5 (WHC 1989b).

9.2 SAMPLE AND DATA CHAIN OF CUSTODY

A chain of custody Desk Instruction #91-X-005 has been developed for air samples taken at FFTF and delivered to the 325 Laboratory for analyses.

The purpose of the desk instruction is to provide guidance to the Health Physics Technician (HPT) for control of the various air samples that are being taken to be analyzed by the PNL counting laboratories.

The following steps are performed for taking the air samples.

1. Prepare the new air samples and envelopes in accordance with WHC-IP-0692, procedure 5.2.3.1.

2. Change out the air samples in accordance with WHC-IP-0692, procedure 5.2.3.1.

3. Exchange air samples.

4. Return the air samples to the FFTF HPT Office.

5. Verify that all of the air samples have been exchanged by comparing the air samples to the list in the air sample book.

6. Sign the Chain-of-Custody form step 1 when this has been completed.

7. Separate the air samples to be counted by PNL from the air samples to be counted by Health and Safety. Place the air samples in separate envelopes then seal the envelopes.

8. Sign the Chain-of-Custody form step 2 when this has been completed.

9. Before transporting the air samples to the counting laboratory(s), the transporting HPT will verify that all the air samples are present. The HPT will compare the air samples in the envelopes to

the description of air samples on the top of the Chain-of-Custody form.

10. Sign the Chain-of-Custody form step 3 when this has been completed.

11. Transport the air samples to the count laboratory(s). Turn the air samples over to the counting laboratory personnel.

12. Have the count laboratory person sign the Chain-of-Custody form step 4.

13. Make a copy of the Chain-of-Custody form to be mailed to the FFTF HPT Office. Leave the original form with the count laboratory person.

14. Sign the copy of the Chain-of-Custody form step 5, then mail it to the FFTF HPT Office.

15. On receipt of the copy of the Chain-of-Custody form, a day-shift HPT will sign step 6, then file the form in the air sample book. The forms are kept on file for a year.

9.3 U.S. DEPARTMENT OF ENERGY ANALYTICAL AND LABORATORY GUIDELINES

The analytical and laboratory procedures for the FEMP activities are identified in the *Quality Assurance Project Plan for the Facility Effluent Monitoring Plan Activities* (WHC 1991c). General requirements for laboratory procedures, data analyses, and statistical treatment are addressed in the QAPjP. General requirements for laboratory procedures, data analyses, and statistical treatment are addressed in the PNL "Quality Assurance Plan MCS-033, "QA Plan for activities conducted by the Analytical Chemistry Laboratory (ACL)." (PNL 1991)

The elements are identified from *Environmental Regulatory Guide for Radiological Effluent Monitoring and Environmental Surveillance.* (DOE/EH 1991). The applicable laboratory procedures are listed in Table 9-1. The applicable data analyses and statistical treatments are provided in Table 9-2.

Table 9-1. Laboratory Procedures.

Element	Documentation
Sample identification system	MCS-033
Procedures preventing crosscontamination	MCS-033
Documentation of methods	MCS-033
Gamma emitting radionuclides	MCS-033
Calibration	MCS-033
Handling of samples	MCS-033
Analysis method and capabilities	To be provided when available
Gross alpha, beta, and gamma measurements	To be provided when available
Direct gamma-ray spectrometry	To be provided when available
Beta counters	To be provided when available
Alpha-energy analysis	To be provided when available
Radiochemical separation procedures	To be provided when available
Reporting of results	MCS-033
Counter calibration	MCS-033
Intercalibration of equipment and procedures	MCS-033
Counter background	MCS-033
Quality assurance	MCS-033

9312864032 4

Table 9-2. Data Analyses and Statistical Treatment.

Element	Documentation
Summary of data and statistical treatment requirements	To be provided when available
Variability of effluent and environmental data	To be provided when available
Summarization of data and testing for outliers	To be provided when available
Treatment of significant figures	To be provided when available
Parent-decay product relationships	To be provided when available
Comparisons to regulatory or administrative control standards and control data	To be provided when available
Quality assurance	To be provided when available

Sampling will be performed according to the sampling and analysis plan (refer to Section 3.4).

9 3 1 2 8 6 4 0 3 2 5

10.0 NOTIFICATIONS AND REPORTING REQUIREMENTS

Notifications and reporting of specific events related to environmental releases and/or events involving effluents and/or hazardous materials shall be made as per DOE Orders 5400.1 (DOE 1988a) and 5000.3A (DOE 1990c). Implementation of the orders is accomplished via *Management Regulations and Procedures*, (MRP), (WHC 1989a), 5.14, Rev 5. Specific implementation, where required, is included in the appropriate facility's occurrence categorization, notification, and reporting procedure. Implementation of environmental limits and requirements is found in the *Environmental Compliance Manual*, WHC-CM-7-5 (WHC 1989b).

10.1 ENVIRONMENTAL OCCURRENCE

The following reporting requirements represent the general site requirements applicable to all facilities. These requirements ensure proper notification of both regular agencies and DOE, per requirements of DOE Order 5000.3A (DOE 1990c).

10.1.1 Occurrence Identification and Immediate Response

1. Each employee shall identify events and conditions and shall promptly notify management of such occurrences.

    a. Call 811 if immediate help such as fire, ambulance, or patrol is required.

    b. Call 3-3800 (the Patrol Operations Center) if assistance other than fire, ambulance, or patrol is required.

    c. After requesting necessary outside assistance, the employee shall notify the supervisor, who shall notify the facility manager, the building emergency director, and the Occurrence Notification Center (ONC) (6-2900).

2. Operations personnel shall take appropriate immediate action to stabilize or return the facility/operation to a safe condition.

3. The oversight organizations shall notify their U.S. Department of Energy, Field Office, Richland (RL) counterparts of the event after receiving notifications from and discussing the event with the facility manager.

10.1.2 Occurrence Categorization

Occurrences (environmental) shall be categorized as soon as practical using the following specific criteria for radioactive and hazardous materials release. These categorizations should be made within 2 h of identification.

Occurrences shall be categorized by their seriousness; if categorization is not clear the occurrence shall be initially categorized at a higher level being considered.

The occurrence categorization shall then be either evaluated, maintained, or lowered as information becomes available.

10.1.2.1 Emergency.

Either of the following events is considered an emergency:

- Any release of radioactive material to controlled or uncontrolled areas in concentrations which, if averaged over a period of 24 h, would exceed 5,000 times the derived concentration guides.
- Any release of radioactive material offsite that is not a normal monitored release and could reasonably be expected to result in an annual dose or dose commitment to any member of the general population greater than 500 mrem.

10.1.2.2 Unusual Occurrence.

An unusual occurrence is defined as follows:

- Release of radionuclide material that violates environmental requirements in permits, regulations, or DOE standards as determined by Westinghouse Hanford Environmental Protection.
- Other release below emergency levels that requires immediate reporting to regulatory agencies or triggers outside agency specific action levels as determined by Westinghouse Hanford Environmental Protection.

10.1.2.3 Off-Normal.

An off-normal event is defined as follows:

- Any release of radionuclides that is not a normally monitored release.
- Any discovery of radionuclides where they are not expected (e.g., storm sewers, sanitary sewers, etc.) and for which no immediate explanation is available.
- Any statistically significant increase in normally monitored releases of radionuclides to an uncontrolled area.
- Any release of radionuclides that will be reported to an outside agency (excluding normal reporting), but is not classified as an unusual occurrence.

9 3 1 2 8 6 4 0 3 2 7

- Any controlled and monitored gaseous radionuclide release exceeding the Westinghouse Hanford-established administrative control value (ACV) on an annual basis or exceeding 10 times the ACV on a weekly basis.

- Any controlled and monitored (instantaneous) gaseous radionuclide release exceeding 5,000 times the derived concentration guide (DCG) over any 4-h period.

10.2 PERIODIC ROUTINE EFFLUENT MONITORING REPORTS

Periodic effluent monitoring data is gathered by the site contractor for all RL facilities. The Environmental Assurance function within Westinghouse Hanford completes and transmits the data to Idaho for DOE and appropriate regulatory agencies.

This page intentionally left blank.

9 3 1 2 8 6 4 0 3 2 9

11.0 NEAR-FACILITY ENVIRONMENTAL SURVEILLANCE

11.1 DESCRIPTION

The site-wide Environmental Monitoring Plan (EMP), as described in the Management Plan for Facility Effluent Monitoring Plan Activities (WHC 1991b), consists of two distinct but related components, environmental surveillance conducted by PNL and effluent monitoring conducted by Westinghouse Hanford. The responsibilities for these two portions of the EMP are delineated in a memorandum of understanding (MOU 1989). Environmental surveillance, conducted by PNL, consists of surveillance of all environmental parameters to demonstrate compliance with regulations. Effluent monitoring includes both in-line and facility effluent monitoring as well as near-facility operational environmental monitoring. Projected EDEs, reported in this FEMP are the products of the in-line effluent monitoring. Near-facility operational environmental monitoring, is required by Part O, "Environmental Monitoring," of WHC-CM-7-5 (WHC 1989b). Procedures are described in *Operational Environmental Monitoring* (WHC 1988b).

11.2 PURPOSE

Operational environmental monitoring determines the effectiveness of environmental controls in preventing unplanned spread of contamination from facilities and sites operated by Westinghouse Hanford for DOE. Effluent monitoring and reporting, monitoring of surplus and waste management units, and monitoring near-facility environmental media are therefore conducted by Westinghouse Hanford for the purposes of controlling operations, determining the effectiveness of facility effluent controls, measuring the adequacy of containment at waste transportation and disposal units, detecting and monitoring upset conditions, and evaluating and upgrading effluent monitoring capabilities.

11.3 BASIS

Near-facility environmental surveillance is conducted to (1) monitor employee protection, (2) monitor environmental protection, and (3) ensure compliance with local, state, and federal regulations. Compliance with parts of DOE Orders 5400.1 *General Environmental Protection Program* (DOE 1988a), 5400.5 *Radiation Protection of the Public and the Environment* (WHC 1990b), 5484.1 (DOE 1981); 5820.2A, *Radioactive Waste Management* (DOE 1988b); and DOE/EH-0173T *Environmental Regulatory Guide for Radiological Effluent Monitoring and Environmental Surveillance* (DOE 1991) are addressed through this activity.

11.4 MEDIA SAMPLED & ANALYSES PERFORMED

Procedure protocols for sampling, analyses, data handling, and reporting are specified in WHC-CM-7-4 (WHC 1988b). Media include ambient air, surface water, groundwater, external radiation dose, soil, sediment, vegetation, and animals at or near active and inactive facilities and/or waste sites.

Parameters monitored include, as needed, Ph, water temperature, radionuclides, radiation exposure, and hazardous constituents. Animals that are not contaminated, as determined by a field-instrument survey, are released at the capture location.

11.5 LOCATIONS

Samples are collected from known or suspected effluent pathways (e.g., down wind of potential releases, liquid streams, or proximal to release points). To avoid duplication, Westinghouse Hanford relies on existing sample locations where PNL has established sample sites (e.g., air samplers in the 300 Area). There are 38 air samplers (4 in the 100 Area, and 34 in the 200/600 Area), 35 surface-water sample sites (22 in the 100 Areas and 13 in the 200/600 Areas), 110 groundwater monitoring wells (20 in the 100 Areas, 89 in the 200/600 Areas, and 1 in the 300/400 Areas), 299 external radiation monitor points (182 survey points and 41 thermoluminescent dosimeter (TLD) sites in the 100 Area, 61 TLD sites in the 200/600 Areas, and 15 TLD sites in the 300/400 Areas), 157 soil sample sites (32 in the 100 Areas, 110 in the 200/600 Areas, and 15 in the 300/400 Areas), and 95 vegetation sample sites (40 in the 100 Areas, 40 in the 200/600 Areas, and 15 in the 300/400 Areas). Animal samples are collected at or near facilities and/or waste sites. Specific locations of sample sites are found in WHC-CM-7-4 (WHC 1988b).

Additionally, surveys to detect surface radiological contamination, scheduled in WHC-CM-7-4 (WHC 1988b), are conducted near and on liquid waste disposal sites (e.g., cribs, trenches, drains, retention basin perimeters, pond perimeters, ditch banks), solid waste disposal sites (e.g., burial grounds, trenches), unplanned release sites, roads, and firebreaks in the Operations Areas. There are 391 sites in the Operations Areas (100 in the 100 Area, 273 in the 200/600 Areas, and 18 in the 300/400 Areas) where radiological surveys are conducted.

11.6 PROGRAM REVIEW

The near-facility operational environmental monitoring program will be reviewed at least annually to determine that the appropriate effluents are being monitored and that the monitor locations are in position to best determine potential releases.

11.7 SAMPLER DESIGN

Sampler design (e.g., air monitors) will be reviewed at least biannually to determine equipment efficiency and compliance with current EPA and industry [e.g., ANSI, and American Society for Testing and Materials (ASTM)] standards.

11.8 COMMUNICATION

The Operations and Engineering Contractor and the Research and Development Contractor shall compare and communicate results of their

9 3 1 2 8 6 4 0 3 3 1

respective monitoring programs at least quarterly and as soon as possible under upset conditions.

11.9 REPORTS

Results of the near-facility operational environmental monitoring program are published in the document series WHC-EP-0145, *Westinghouse Hanford Company Environmental Surveillance Annual Report* (WHC 1989c). Results of routine radiological surveys are also published in WHC-EP-0145. The radionuclide values in these reports are expressed in curies, or portions thereof, for each radionuclide per unit weight of sample (e.g., picocuries per gram) or in field instrument values (e.g., counts per minute) rather than EDE, which is calculated as the summation of the products of the dose equivalent received by specified tissues of the body and a tissue-specific weighing factor.

This page intentionally left blank.

12.0 QUALITY ASSURANCE PLAN

12.1 PURPOSE

This Quality Assurance (QA) Plan describes the quality assurance requirements associated with implementing this FEMP. The plan identifies the FEMP activities and assigns the appropriate QA requirements defined by the Westinghouse Hanford *Quality Assurance Manual*, WHC-CM-4-2 (WHC 1988c). This QA Plan shall be consistent with the requirements in DOE 5700.6C, "Quality Assurance" (DOE 1991). In addition, QA requirements in 40 CFR 60, Appendix A, "Reference Methodologies," (EPA 1991e), shall be considered when performing monitoring calculations and establishing monitoring systems.

12.2 OBJECTIVE

The objective of this plan is to provide a documented QA plan describing QA requirements for facilities implementing the FEMPs.

12.3 REQUIREMENTS

A Quality Assurance Project Plan (QAPjP) (WHC 1991c) has been developed to implement the overall QA program requirements defined by WHC-CM-4-2 (WHC 1988c). The QAPjP applies specifically to the field activities, laboratory analyses, and continuous monitoring performed for all FEMPs conducted by Westinghouse Hanford. Plans and procedures referenced in the QAPjP are available for regulatory review on request by the direction of the Westinghouse Hanford Environmental Assurance Manager.

A QAPP for radioactive airborne emissions was prepared (Vance 1991) to address the QA elements of 40 CFR 61 and was submitted to the EPA.

12.4 FACILITY SPECIFIC REQUIREMENTS

Table A-1 of the QAPjP includes a list of analytes of interest and analytical methods for gaseous and liquid effluent sampling at the Hanford Site. This list includes detection limits and precision and accuracy requirements for each analyte. Analytes of interest for FFTF are gross alpha, gross beta, ^{137}Cs, and argon. There are no nonradiological analytes present in the gaseous effluent.

This page intentionally left blank.

9 3 1 2 8 6 4 0 3 3 5

13.0 INTERNAL AND EXTERNAL PLAN REVIEW

The *General Environmental Protection Program*, DOE Order 5400.1, Chapter IV.4 (DOE 1988a), requires that the facility effluent monitoring plan be reviewed annually and updated every 3 yr. The FEMP should be reviewed and updated as necessary after each major change or modification in the facility processes, facility structure, ventilation and liquid collection systems, monitoring equipment, waste treatment, or a significant change to the safety analysis reports. In addition, EPA regulations require that records on the results of radioactive airborne emissions monitoring be maintained on site for 5 yr. Operations management shall maintain records of reports on measurements of stack particulates or other nonradioactive hazardous pollutant emissions for a minimum of 3 yr.

Facility operators will have to certify on a semiannual basis that no changes in operations that would require new testing have occurred. Although the report is based on the calendar year, the emission limits apply to any period of 12 consecutive months. Westinghouse Hanford Environmental Protection prepares an annual effluent discharges report for each area on the Hanford Site to cover both airborne and liquid release pathways. In addition, a report on the air emissions and compliance to the *Clean Air Act of 1977* and NESHAPs (EPA 1991a) is prepared by Environmental Protection and submitted to EPA and DOE-HQ.

Facility management is to obtain the Environmental Protection function's approval for all changes to the FEMPs, including those generated in the annual review and update. In addition, the FEMP shall be reviewed by Quality Assurance and Regulatory Analysis.

This page intentionally left blank.

9 3 1 2 8 5 4 0 3 3 7

14.0 COMPLIANCE ASSESSMENT

This section documents the evaluation of the existing FFTF combined exhaust against specific design requirements. The design requirements are contained in ANSI N42.18-1980 (ANSI 1980b), *Specification and Performance of On-Site Instrumentation for Continuously Monitoring Radioactivity in Effluents* and ANSI N131.1-1969 (ANSI 1969).

14.1 COMPARISON OF INSTRUMENT SPECIFICATIONS WITH REQUIRED STANDARDS

14.1.1 American National Standards Institute N42.18-1980 (ANSI 1980b) Compliance

A compliance assessment of the effluent monitoring system components with the requirements of ANSI 42.18-1980 (ANSI 1980b) was performed. Four areas of the ANSI requirements are not fully satisfied. These are relative humidity, mechanical effects, voltage and frequency variations, and radio frequency/ microwave interference.

1. Relative Humidity: The instrument shall be capable of continuous operation in relative humidities of 10% to 95% within the accuracy required.

   - Status: Requirement not satisfied. Manufacturer performed acceptance testing over the range of 30% to 80% relative humidity.

   - Evaluation: The environmental monitors are installed and operate in an environment where relative humidity is controlled between 22% and 55% at a 60 °F dry bulb temperature. Further, there is no post-accident condition that would present a prolonged elevation of humidity. This provides a relative mild climate for the instrumentation and has resulted in stable operation. The equipment has performed acceptably as designed. The addition of equipment that meets this requirement would not improve or enhance the safety of the facility or change the impact of the facility on the environment.

2. Mechanical: Accelerations of less than or equal to 1 g in each of three mutually orthogonal axes over the frequency range 1 to 33 Hz shall result in reading variations of no greater than ± 5 percent at the minimum detectable level.

   - Status: Requirement not satisfied. No mechanical testing was originally specified. Testing has not been performed.

   - Evaluation: The environmental monitors are classified as seismic category III and have not undergone acceleration testing. Operator actions are specified that would shut down the reactor in the event of an earthquake with peak vibratory acceleration exceeding 0.05 g, as measured by the seismic monitoring system. This action is also

taken if the symptoms of a seismic event in PR-12, Seismic Disturbance, are observed. Additionally, following a confirmed earthquake a principal containment isolation is initiated. Supplemental non-environmental and safety-related systems, the CAPS exhaust radiation monitors and diversion valves and the CIS detectors/isolation system, are seismically qualified and 1E powered and would ensure that the process boundary would survive a Design Basis Earthquake and that no release would occur necessitating the survival of the monitors.

No normal sources of shock or vibration are present to adversely affect the operation of the environmental monitors. The addition of equipment that meets this requirement would not improve or enhance the safety of the facility or change the impact of the facility on the environment.

3. Voltage and Frequency Variations: Voltage and frequency variations of ± 15% within the design values shall result in reading variations of no greater than ± 5% at the minimum detectable level.

- Status: Requirement not satisfied. Acceptance testing performed only for voltage drop to 75% of normal (90 VAC).

- Evaluation: Voltage and frequency are closely regulated, as listed in Table 1, and provide a stable power source for the instrumentation. The equipment has demonstrated an insensitivity to normal plant power source variations and is acceptable as designed, The addition of equipment that meets this requirement would not improve or enhance the safety of the facility or change the impact of the facility on the environment.

4. Radio Frequency/Microwave Interference: Radio frequency and microwave signals of less than or equal to 10 uW/cm^2 shall result in reading variations of no greater than ± 5% at the minimum detectable level.

- Status: Requirement not satisfied. Acceptance testing was performed using a specified noise source with cable running for at least 20 ft within 18 in. of the equipment input and output cables. Testing verified channel accuracy requirements were met with no spurious high radiation alarms.

- Evaluation: The equipment has demonstrated an insensitivity to the electromagnetic interference generated at the FFTF and is acceptable as designed. The addition of equipment that meets this requirement would not improve or enhance the safety of the facility or change the impact of the facility on the environment.

9312864033 9

14.1.2 American National Standards Institute N13.1-1969 Compliance

Compliance with the intent of ANSI N13.1-1969 (ANSI 1969) has been previously evaluated. The system has some inefficiencies associated with particulate monitoring which have been compensated for by lowering alarm setpoints (Letter, D. O. Hess to Distribution, "Setpoints for System 96 Radiation Monitors," February 4, 1982). Since the effluent of concern is noble gas, which is not particulate in nature, the system meets the requirements of ANSI 13.1-1969 (ANSI 1969) for noble gas monitoring.

14.1.3 Effluent Flow Rates

The flow measurements have been confirmed by methods discussed in Section 3.3.1.

14.1.4 Comparison of Projected Effluent Characteristics with Historical Data

Activation of the reactor cover gas produces the radioisotope ^{41}Ar. Approximately 1,500 μCi/s of ^{41}Ar are produced when the plant is operating at power. Argon cover gas is processed by RAPS, reducing the amount of ^{41}Ar released to the atmosphere. The amount released to the atmosphere is 1.5 μCi/s, which is 1×10^{-3} of the facility generation rate. Historically, the number of curies of ^{41}Ar has ranged from 13.2 Ci to 37.2 Ci/yr since the start of reactor operations in 1982. Future operations are expected to remain in this range.

There is one anticipated event, which is nonroutine, that results in a release of radioactivity to the atmosphere. This event is a fuel pin cladding breach, which results in a the release of ^{85}Kr, a noble gas radioisotope that has a half-life of 10.76 yr. The total activity in a fuel pin that has run 3 cycles (approximately 450 d) at 5.1 MW thermal (plant operating power of 291 MW thermal) is approximately 124,200 Ci. Total noble gas activity is approximately 7,700 Ci, primarily from krypton and xenon radioisotopes. Only 1 Ci of the noble gas ^{85}Kr is expected to be released to the atmosphere from a fuel pin cladding breach. Because the RAPS delays krypton for about 1 wk, ^{85}Kr is not decayed and is released via the combined exhaust. The other kryptons and xenons are short-lived radioisotopes, which are delayed by the RAPS a sufficient length of time to allow for their decay. Other fission products are either retained in the sodium or the RAPS.

There have been 12 fuel pin releases at the FFTF since the beginning of operation in April 1982. All of these events have been single fuel pin breaches with the exception of two fuel pin releases that occurred during the same time period. Generally, only one fuel pin breach occurs at a time; however, the plant systems are designed to operate with 1% breached fuel or about 160 breached fuel pins in the reactor core.

14.1.5 Comparison of Effluent Monitoring Capabilities with Regulatory and Contractor Requirements

With the exception of items listed in Section 14.1.1 the system meets the current requirements.

14.2 EXEMPTIONS

Requests for exemptions to the items discussed in Section 14.1.1 are currently under review by DOE.

9 3 1 2 8 6 4 0 3 4 1

15.0 SUMMARY AND CONCLUSIONS

It has been determined by Westinghouse Hanford and reported in the FEMP determination (WHC-EP-0442) (WHC 1991d) that a FEMP was required for FFTF. This determination was based on 40 CFR 61, Subpart H, Appendix D (EPA 1991a) methodology and resulted in a projected offsite dose of 0.26 mrem. Although it is recognized that, by design, there is no process upset condition that could result in such a release, the FFTF does manage a material (^{41}Ar noble gas) in sufficient quantity to represent an offsite risk.

With the exception of areas outlined in Chapter 14.0, the FFTF effluent monitoring system is in compliance with applicable regulations and standards. The four areas not in compliance with the DOE regulatory guide (DOE 1991) and ANSI 42.18-1980 have been determined by FFTF Engineering to not adversely affect the operations of the effluent monitors. An exemption has been requested from the DOE and is awaiting approval.

This page intentionally left blank.

9 3 1 2 8 6 4 0 3 4 3

16.0 ATTACHMENTS

16.1 REFERENCES

ANSI, 1969, *Guide to Sampling Airborne Radioactive Materials in Nuclear Facilities*, ANSI N13.1-1969, American National Standards Institute, New York, New York.

ANSI, 1980a, *Specifications and Performances of On-Site Instrumentation for Continuously Monitoring Radioactivity in Effluents*, ANSI N13.10, American National Standards Institute, Washington, D.C., re-issued in 1980 as ANSI N42-18.

ANSI, 1980b, *Performance Criteria for Instrumentation Used for Inplant Plutonium Monitoring*, ANSI N317-1980, American National Standards Institute, New York, New York.

CERCLA, *Comprehensive Environmental Response, Compensation, and Liability Act of 1980*.

Clean Air Act of 1977, as amended, 33 USC 1251.

Clean Water Act of 1977, as amended, Public Law 95-217, 92 Stat 1566, 33 USC 1251.

DOE, 1981, *Environmental Protection - Safety and Health Protection Information Reporting Requirements*, DOE Order 5484.1, U.S. Department of Energy, Washington, D.C.

DOE, 1988a, *General Environmental Protection Program*, DOE Order 5400.1, U.S. Department of Energy, Washington, D.C.

DOE, 1988b, *Radioactive Waste Management*, DOE Order 5820.2A, U.S. Department of Energy, Washington, D.C.

DOE, 1990a, *Quality Assurance Testing of HEPA Filters*, Nuclear Office of Scientific and Technical Information, Standard NE F3-43, Oakridge, Tennessee.

DOE, 1990b, *Radiation Protection of the Public and the Environment*, DOE Order 5400.5, U.S. Department of Energy, Washington, D.C., February 8, 1990.

DOE, 1990c, *Occurrence Reporting and Processing of Operations Information*, DOE Order 5000.3A, U.S. Department of Energy, Washington, D.C.

DOE, 1991, *Environmental Regulatory Guide for Radiological Effluent Monitoring and Environmental Surveillance*, DOE/EH-0173T, U.S. Department of Energy, Washington, D.C.

DOE, 1992, *Quality Assurance*, DOE Order 5700.6C, U.S. Department of Energy, Washington, D.C.

9312854034 4

EPA, 1991a, *National Emission Standards for Hazardous Air Pollutants (NESHAP)*, Title 40 Code of Federal Regulations, Part 61, U.S. Environmental Protection Agency, Washington, D.C.

EPA, 1991b, *Designation, Reportable Quantity, and Notification*, Title 40, Code of Federal Regulations, Part 302, U.S. Environmental Protection Agency, Washington, D.C.

EPA, 1991c, *Environmental Radiation Protection Standards for Management and Disposal of Spent Nuclear Fuel, High-Level, and Transuranic Radioactive Wastes*, Title 40, Code of Federal Regulations, Part 191, as amended, U.S. Environmental Protection Agency, Washington, D.C.

EPA, 1991d, *Health and Environmental Protection Standards for Uranium and Thorium Project Plans*, Title 40, Code of Federal Regulations, Part 192, as amended, U.S. Environmental Protection Agency, Washington, D.C.

EPA, 1991e, *Quality Assurance Methods*, Title 40, Code of Federal Regulations, Part 60, U.S. Environmental Protection Agency, Washington, D.C.

EPA, 1989b, *Users Guide for AIRDOS-PC Version 3.0*, 520/6-89-035, U.S. Environmental Protection Agency, Office of Radiation Programs, Las Vegas Facility, Las Vegas, Nevada.

Manley, C. L., 1992, *Environmental Release Report for Calendar Year 1990*, WHC-EP-0527, Westinghouse Hanford Company, Richland, Washington.

MOU, 1989, Battelle-Pacific Northwest Laboratory and Westinghouse Hanford Company, "Memorandum of Understanding," July 1989.

NRC, 1977, *U.S. Nuclear Regulatory Commission Regulatory Guide 1.109*, U.S. Nuclear Regulatory Commission, Washington, D.C.

Toxic Substances Control Act of 1976, Public Law 94-469, 90 Stat. 2003, 15 USC 2601 et seq.

Vance, L. W., 1991, *Quality Assurance Program Plan for Radionuclide Airborne Emissions Monitoring*, WHC-EP-0536, Westinghouse Hanford Company, Richland, Washington.

WAC, 1989, *Dangerous Waste Regulations*, Washington Administrative Code 173-303, Washington State Department of Ecology, Olympia, Washington.

WAC, 1990, *General Regulations for Air Pollution Sources*, WAC 173-400 through 495, Washington State Department of Ecology, Olympia, Washington.

WHC, 1988b, *Operational Environmental Monitoring*, WHC-CM-7-4, Westinghouse Hanford Company, Richland, Washington.

WHC, 1988c, *Quality Assurance Manual*, WHC-CM-4-2, Westinghouse Hanford Company, Richland, Washington.

WHC, 1989a, *Management Regulations and Procedures*, WHC-CM-1-3, Westinghouse Hanford Company, Richland, Washington, March 1989.

WHC, 1989b, *Environmental Compliance Manual*, WHC-CM-7-5, Westinghouse Hanford Company, Richland, Washington, August 1988.

WHC, 1989c, *Westinghouse Hanford Company Environmental Surveillance Annual Report*, WHC-EP-0145, Westinghouse Hanford Company, Richland, Washington.

WHC, 1990, *Plutonium Finishing Plan Wastewater Stream-Specific Report*, WHC-EP-0342, Westinghouse Hanford Company, Richland, Washington.

WHC, 1991a, *A Guide for Preparing Hanford Site Facility Effluent Monitoring Plans*, WHC-EP-0438, Westinghouse Hanford Company, Richland, Washington.

WHC, 1991b, *Health Physics Procedures Manual*, WHC-IP-0692, Westinghouse Hanford Company, Richland, Washington.

WHC, 1991c, *Quality Assurance Project Plan for Facility Effluent Monitoring Plan Activities*," WHC-EP-0446, Westinghouse Hanford Company, Richland, Washington.

WHC, 1991d, *Facility Effluent Monitoring Plan Determination of the 400 Area Facilities*, WHC-EP-0442, Westinghouse Hanford Company, Richland, Washington.

WHC, 1992, *Environmental Releases for Calendar Year 1991*, WHC-EP-0527-1, Westinghouse Hanford Company, Richland, Washington.

This page intentionally left blank.

9 3 1 2 3 5 4 0 3 1 7

DISTRIBUTION

Number of Copies		
OFFSITE		
3	Westinghouse Idaho Nuclear Company PO Box 4000 Idaho Falls, Idaho 83403	
	K. Kouri	32-02
ONSITE		
7	U.S. Department of Energy Field Office, Richland	
	G. M. Bell	A5-52
	R. F. Brich	A5-55
	S. S. Clark	A6-55
	E. B. Dagan	A5-19
	S. D. Stites	A5-19
	Public Reading Room	A1-65
1	Hanford Environmental Health Foundation	
	J. J. Maher	B2-75
1	Kaiser Engineers Hanford	
	B. J. Dixon	E3-33
	D. R. Pratt	E3-33
7	Pacific Northwest Laboratory	
	W. J. Bjorklund	P7-68
	T. D. Chikalla	P7-75
	G. R. Hoenes	P7-78
	R. E. Jaquish	K1-30
	D. L. Klages	P7-68
	A. K. Stalker	P7-60
	R. K. Woodruff	K6-13
	Technical Files	K1-11

DISTRIBUTION (continued)

Number of Copies

ONSITE

29 Westinghouse Hanford Company

R. J. Bliss	B3-04
G. D. Carpenter	B2-16
N. R. Dahl (5)	N2-04
L. P. Diediker (2)	T1-30
J. J. Dorian	B2-16
B. G. Erlandson	B2-19
D. G. Farwick	H4-16
K. A. Gano	X0-21
E. M. Greager	L6-60
G. B. Griffin	N2-34
K. A. Hadley	N1-35
R. J. Landon	B2-19
P. C. Miller	N2-04
J. M. Nickels (2)	T1-30
D. J. Swaim	N2-51
L. W. Vance	H4-16
D. J. Watson	X0-41
Document Processing and Distribution (2)	L8-15
Central Files	L8-04
Information Release Administration (3)	R1-08