START

0032544

Incoming:9307041

Department of Energy
Richland Field Office
P.O. Box 550
Richland, Washington 99352

JUL 29 1993

93-RPS-274

Ms. Ann Pontius, Chief
Air Compliance & Permits Section
U.S. Environmental Protection Agency
Region 10
1200 Sixth Avenue
Seattle, Washington 98101

Dear Ms. Pontius:

REQUEST FOR CONCURRENCE WITH INTERPRETATION OF APPLICABILITY OF PERMIT PSD-X80-14 TO DEACTIVATION OF PUREX FACILITY

This letter requests that the U.S. Environmental Protection Agency (EPA), Region 10, provide written concurrence with informal guidance provided during a June 16, 1993, meeting, between representatives of the EPA, the U.S. Department of Energy, Richland Operations Office (RL), and the Westinghouse Hanford Company (WHC) regarding applicability of Prevention of Significant Deterioration (PSD) permit PSD-X80-14 (the PSD permit for the Hanford Site) to the proposed deactivation of the Plutonium-Uranium Extraction (PUREX) Plant.

The Hanford Site includes a number of facilities that housed various processes associated with the Site's former mission. These facilities will eventually be deactivated, then decontaminated, and decommissioned. The PUREX Plant will be the first such major facility to undergo this process since enactment of the 1990 Clean Air Act Amendments. As such, the air emissions evaluation process established for PUREX deactivation activities will strongly influence evaluations for similar activities at other Hanford Site facilities. During the June 16, 1993, meeting, the following was set forth by the RL and WHC representatives.

- Since March of 1990, PUREX has not operated
- RL is proposing to deactivate the PUREX Plant over the next three-year period. Deactivation is scheduled to commence in October 1993, though certain activities may commence as early as August 1993, contingent upon availability of resources and receipt of required regulatory approvals. Completion is planned for September 1996

NOV 1993
RECEIVED
EPIC

- Proposed deactivation activities will result in the emission of oxides of nitrogen (NO_x) to the atmosphere

  - While it is expected that NO_x emissions associated with deactivation will exceed NO_x emissions during the standby period, NO_x emissions from deactivation will be controlled well below the permitted level of 424 metric tons/year and 3,410 kg/day

  - Enclosure 1 is a copy of the presentation provided during the June 16, 1993, meeting, regarding the Nitric Acid Disposition Activity. It is this activity which will account for more than 95 percent of the NO_x produced during deactivation

- Proposed deactivation activities will involve modifications to the routing of flow within the existing heating, ventilation, and air-conditioning system, by combining air streams, eliminating discharge points, and reducing total flow, but with no change in NO_x control capabilities or measurement capabilities

  - The NO_x control equipment identified in permit PSD-X80-14 (Enclosure 2), and described in the documentation (Enclosure 3) submitted in support of the permit application, will not be by-passed

- It is understood by RL and WHC, based on information provided by the EPA in earlier conversations, that permit PSD-X80-14:

  - was written and issued by EPA,

  - is administered by EPA,

  - does not have an expiration date,

  - is, therefore, still valid,

  - and currently permits the discharge of NO_x from PUREX to atmosphere of 424 metric tons/year and 3,410 kg/day

- It is the conclusion of RL that the proposed deactivation activities do not constitute a modification to Permit PSD-X80-14 and that, pursuant to regulations governing the administration of the PSD program, no approval is required prior to commencement of deactivation activities.

9413149.0003

Based upon the information above, EPA provided the guidance that if NO_x emissions from PUREX do not exceed 424 metric tons/year and 3,410 kg/day, and if there are no piping changes that would involve the installation of new control equipment or elimination of existing control equipment described in RHO-CD-569, and if NO_x emissions control equipment described in RHO-C-569 is not by-passed, then EPA concurs with the last bullet, above, and agrees that approval from the EPA is not required prior to commencement of deactivation activities. A written response confirming this guidance is requested.

Should you have questions regarding this letter, please contact me or Mr. S. D. Stites of my staff on (509) 376-8566.

Sincerely,

Robert D. Holt/for
James E. Rasmussen, Acting Program Manager
Office of Environmental Assurance,
Permits, and Policy

EAP:SDS

Enclosures:
1. Nitric Acid Disposition Activity
2. Permit PSD-X80-14
3. NO_x Emissions (RHO-CD-569)

cc w/encls:
D. Jansen, Ecology
G. Tebb, Ecology
D. Duncan, EPA
R. Nye, EPA
D. Sherwood, EPA
R. Oldham, WHC
D. Washenfelder, WHC

9413149.0004

Enclosure 1

9413149.0005

PUREX GOAL STATEMENT

- The disposition of the nitric acid is one activity which must be completed during the deactivation of the PUREX Facility

- The goal of the deactivation project is to complete all transition to deactivation activities by October 1, 1996. In the deactivation state the PUREX Facility will be locked and unoccupied, it will be monitored on a quarterly basis and will not constitute an environmental or safety hazard.

9413149.0006

9413149.0007

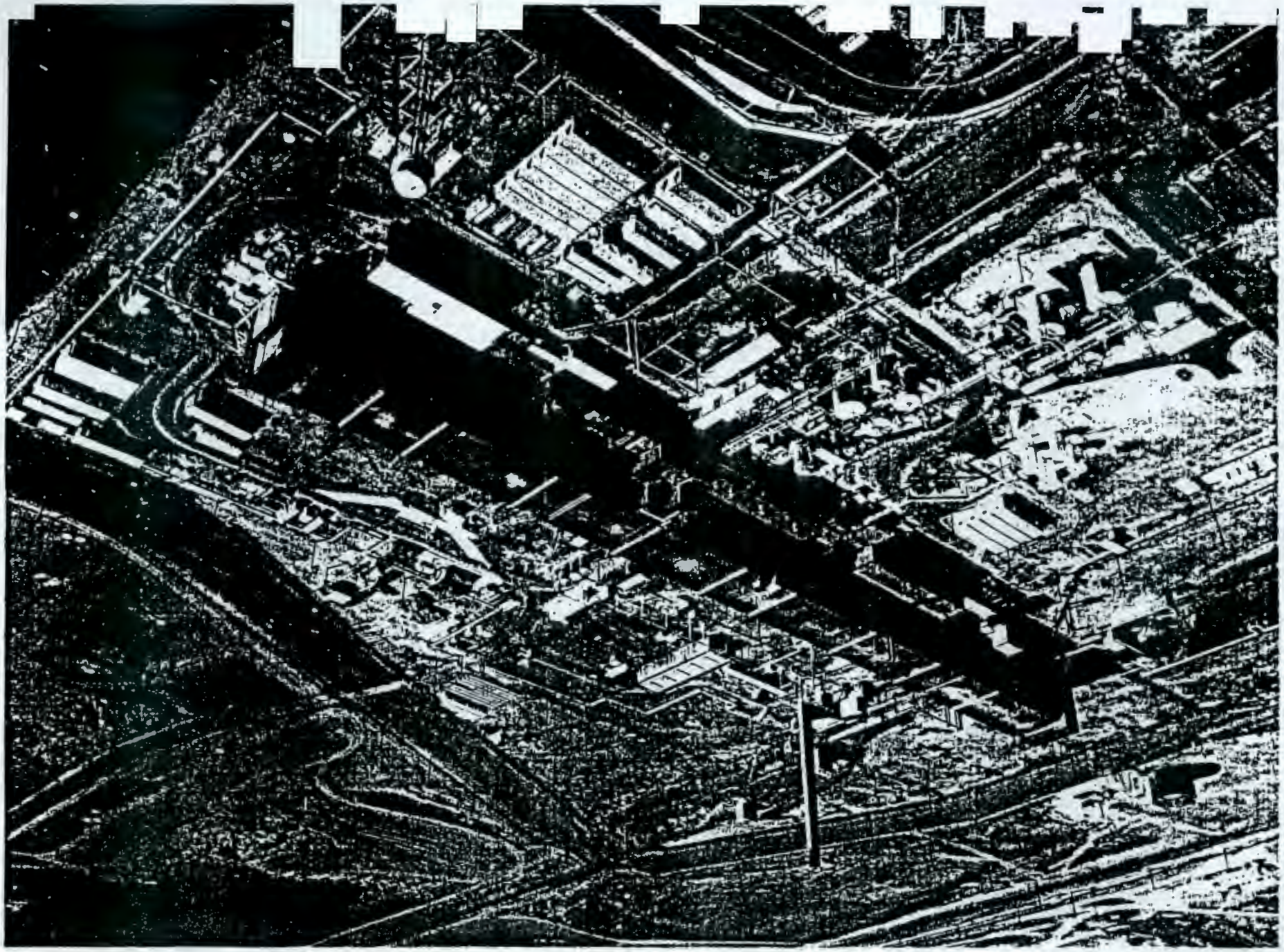

ISSUES

- UNH stored at PUREX
- P-Tank Integrity
- UNH disposal/stabilization options
- Nitric acid production
- Nitric acid disposition options
- Sugar Denitration

UNH STORED AT PUREX

- Following PUREX Stabilization Campaign ≈ 180,000 gallons of UNH solution was stored in 203-A area at PUREX
  - UNH is a product stream from the PUREX solvent extraction process
  - UNH Characteristics
    - 300 - 450 g/l U
    - PPB quantities of Pu, μCi quantities of FPs
    - .1 - .5m HNO_3
  - UNH batch transferred to 100,000 gallon tanks in 203-A area (Tks P2, P3, and P4)

P-TANKS INTEGRITY ISSUES

- Tanks constructed of 304-L stainless steel, a material designed for long-term storage of acidic solutions
- Production of 304-L stainless includes passivation by high acid solution to enhance corrosion resistance

P-TANKS INTEGRITY ISSUES (Cont.)

- Corrosion rate for 304-L stainless steel
  - For 50% wt nitric at ambient temperatures corrosion rate is 0.0 to 0.005 inches/year*
  - P-Tank construction
    - Tank bottom & lower 12 feet
      - 0.25 inch thickness
    - Tank top & upper 18 feet
      - 0.1875 inch thickness
  - Tanks: P2, P3, and P4 were empty from 1972 to 1983
  - Tk-P1 has been used for steam condensate/rain water storage

*Corrosion Engineering, Fontana & Greene, McGraw Hill, 1967, Figure 7-15

P-TANKS INTEGRITY ISSUES (Cont.)

- Conclusion
  - Visual Inspection did not reveal our obvious signs of corrosion or other defects regarding tank integrity
  - Structural integrity adequate for the continued use of tanks

UNH DISPOSAL/STABILIZATION OPTIONS

- Processing at UO_3 Plant
- Neutralization and transfer to Tank Farms
- Direct Grouting
- Long term storage not considered a viable option and not consistent with deactivation objectives

NITRIC ACID PRODUCTION

- Nitric acid is by-product of UO_3 process
  - This acid is contaminated with uranium ($\approx$ 10 g/l) and PPB quantities of plutonium
- UO_3 acid always returned to PUREX for re-use
- UO_3 acid production from UNH conversion
  - 120,000 gallons
- Nitric acid currently stored at PUREX
  - 80,000 gallons
- Total nitric acid to be disposed
  - 200,000 gallons

NITRIC ACID DISPOSITION OPTIONS

- Long term storage
- Direct neutralization and transfer to Tank Farms
- Off-site uses/disposal
- Denitration with catalytic conversion
- Denitration with NO_x exhaust

LONG TERM STORAGE OPTIONS

- At PUREX
- On-site
- Off-site

LONG TERM STORAGE AT PUREX

- Tank structural integrity not a major concern in near-term, but long-term (decades) storage would result in eventual tank failure
- Secondary retention basins would require upgrading (estimated cost $820,000)
- Continued surveillance/maintenance costs which conflicts with goal to deactivate PUREX
- Catastrophic tank failure due to external phenomena would result in unacceptable on-site and off-site consequences

LONG TERM STORAGE ON-SITE

- All large bulk storage tanks older than those at PUREX
  - UO_3
  - REDOX
  - B-Plant
- Continued surveillance/maintenance costs
- Potential for higher, off-site impacts in event of tank failure, when compared to storage at PUREX
- No future on-site users identified

LONG TERM STORAGE OFF-SITE

- Identification/acceptance of storage location would require an extensive amount of time
- Potential shipment/transportation impacts
- Potential to increase risks and liabilities

DIRECT NEUTRALIZATION AND TRANSFER TO TANK FARMS

- Treatment of acid to meet Tank Farms specifications will result in 450,000 gallons transferred from PUREX to Tank Farms
  - 200,000 gallons acid to treat
  - 125,000 gallons of sodium hydroxide added to treat acid (adjust pH to >12)
  - 125,000 gallons of water added to dilute waste to meet Tank Farms sodium limits

- No further treatment of waste to reduce volume will be accomplished until final waste form is determined (glass)

- If glass is final waste form, NO_x will be released during processing operation

OFF-SITE USES/DISPOSAL

- No off-site disposal/stabilization option exists
- Potential for off-site re-use of the acid
  - WINCO - investigating possible uses of a portion of the acid

DENITRATION WITH CATALYTIC CONVERSION

- Utilize sugar denitration with off-gases routed through a catalytic converter
- Need for extensive safety review
  - Very high temperature flame required
- Exhaust gas composition not compatible with available catalytic systems

DENITRATION WITH NO_X EMISSIONS

- Similarities to past operation
- Deviations from past operation
- Projected total discharge
- Projected duration

SIMILARITIES WITH PAST OPERATIONS

- Utilize 2,500 gallons per batch
- Denitrate to 1.0 M
- Neutralize and transfer to Tank Farms

PROJECTED TOTAL DISCHARGE

- Total NO_x discharge will be 286 tonnes (PSD allowed 424 tonnes/yr)
- Total transfer of concentrated, neutralized waste to Tank Farms will be 65,000 gallons

DEVIATION FROM PAST OPERATIONS

- Drastically reduced radionuclide levels
  - Microcurie us megacurie
- Off-Gas routed directly to wind tunnel
- Sugar addition period much longer due to higher acid concentration (11 molar vs 3 molar)

PUREX PROCESS
SUGAR DENITRATION FLOW DIAGRAM

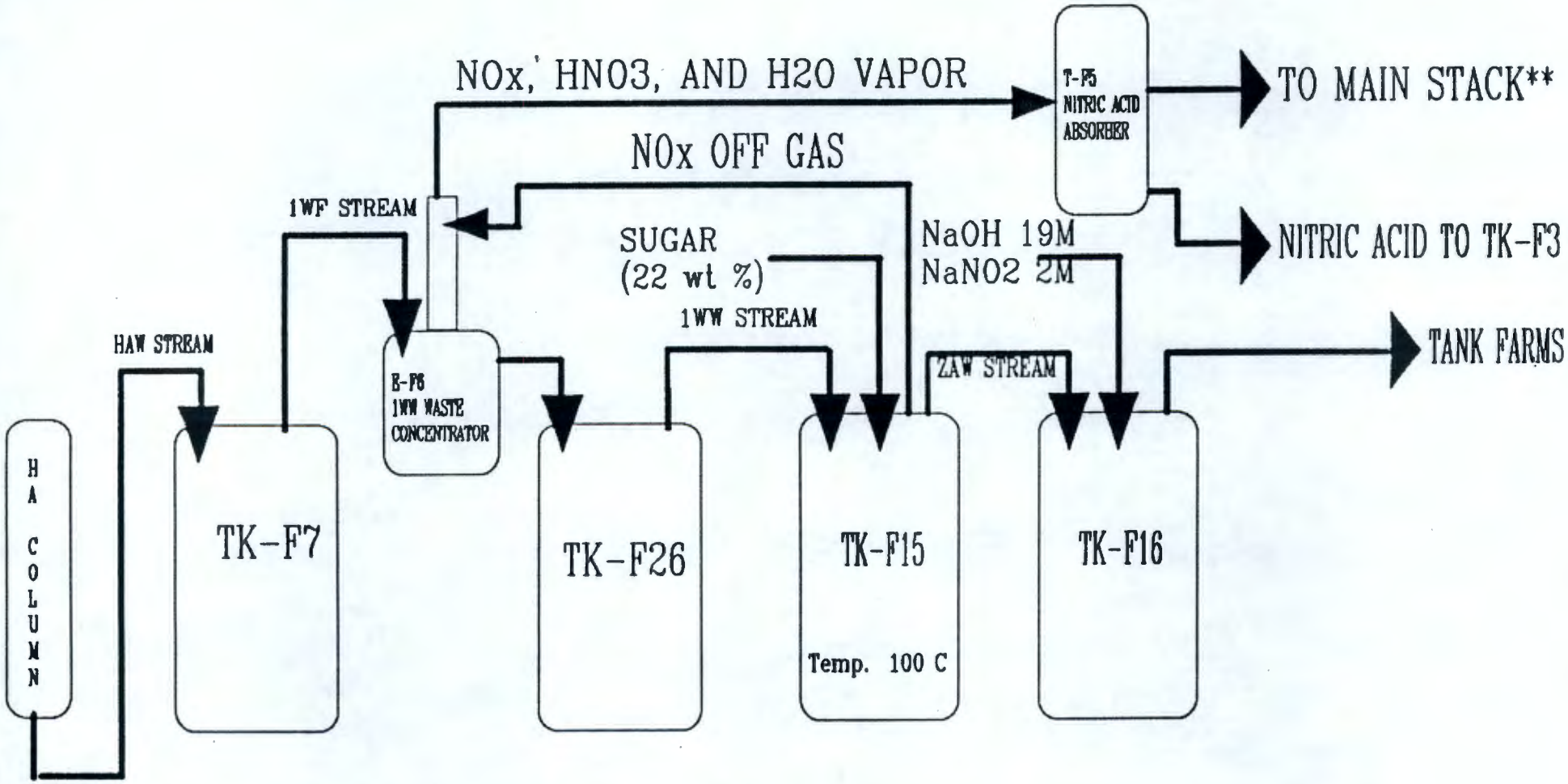

* SEE ATTACHED TABLE FOR STREAM COMPOSITIONS.
** PREVIOUS PCM LIMIT OUT MAIN STACK WAS 424 TONNES PER YEAR.

PUREX SHUTDOWN
SUGAR DENITRATION FLOW DIAGRAM

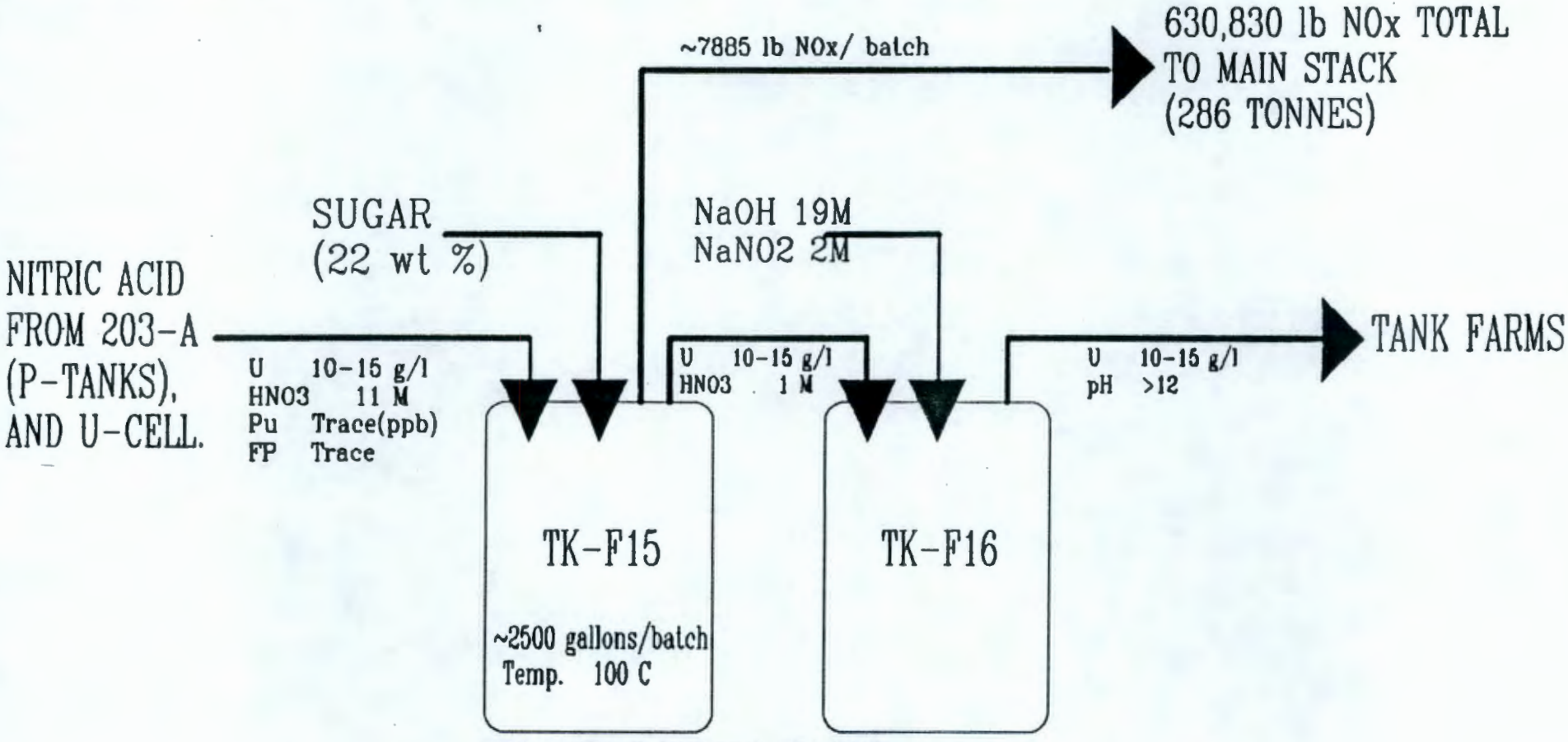

PREDOMINANT CHEMICAL REACTION:

$$12(HNO_3) + C_{12}H_{22}O_{11} \longrightarrow 12CO + 6(NO + NO_2) + 17H_2O$$

* ALL VALUES ARE NOMINAL +/-20%

SUMMARY

- Tank integrity not an issue with regard to acid storage
  - Long term storage may require secondary containment upgrades
- Sugar denitration with direct NO_x discharge is the preferred option for acid disposal
  - Off-site user (WINCO) being pursued as a parallel effort

Enclosure 2
9355592D

9413149.0030

MEMO ROUTE SLIP
AEC-95 (Rev. May 14, 1947) AECM 0240

See me about this.	For concurrence.
Note and return.	For signature.
For action.	For information.

Name and unit	Initials / Date	Remarks
:. Kinzer, :well		Attached for your information is a copy of the Prevention of Significant Deterioration (PSD) permit recently issued by EPA under the Clean Air Act which
). Honeyman :well		identifies a best available control technology and establishes effluent release limitations for NO_x for the PUREX and UO_3 plants in anticipation of
		startup. As discussed with Chirs Evoniuk of your staff, the final permit is responsive to our comments on the draft permit and it appears that there will be
(Name and unit) C. Whitfield, DOE ety & Envt'l. ot. Div.	Remarks	no technical problems in meeting the requirements set forth. If you would like more information or have any questions, please give me a call on 6-2048.
2048	Date 10/08/80	

USE OTHER SIDE FOR ADDITIONAL REMARKS

GPO : 1971 O - 488-488

PSD NO_x Permit

RECEIVED
OCT 10 1980
J. D. HONEYMAN

9813149.0031

FINAL DETERMINATION ANALYSIS DOCUMENT
PREVENTION OF SIGNIFICANT DETERIORATION AND

APPROVAL OF OPERATION OF
THE DEPARTMENT OF ENERGY NUCLEAR FUEL REPROCESSING FACILITIES
NEAR RICHLAND, WASHINGTON

SCOPE

This document presents the final determination by the Environmental Protection Agency (EPA) to approve the operation of the nuclear fuel reprocessing facilities at the Hanford reservation near Richland, Washington, under the federal requirements of Part C, Title 1, of the Clean Air Act; "Prevention of Significant Deterioration of Air Quality (PSD)".

BACKGROUND

On February 27, 1980, EPA Region 10 received from the Department of Energy a complete PSD permit application requesting approval to resume operation of the Hanford nuclear fuel reprocessing facilities near Richland, Washington. EPA reviewed this material and presented its findings in a preliminary determination document which was released for public comment and published in the "Tri-Cities Herald" on August 31, 1980. A preliminary determination to approve the facility was issued on the basis that the National Ambient Air Quality Standards (NAAQS) would not be exceeded and that Best Available Control Technology (BACT) would be employed. Affected governmental agencies and the general public were notified of their opportunity to submit written comments and request a public hearing regarding EPA's preliminary determination.

PUBLIC COMMENT

On September 15, 1980, EPA received comments from the Department of Energy requesting that certain findings in the technical analysis be changed.

COMMENT

1. The DOE contends that the 0.4% NO_x concentration limit indicated in the technical analysis document for the Uranium Oxide plant is in error. The DOE believes the relative flow rates, considering the combination of gas streams, suggest a concentration limit of 4% rather than 0.4%.

9413149.0032

9413149.0033

U.S. ENVIRONMENTAL PROTECTION AGENCY
REGION 10
SEATTLE, WASHINGTON 98101

APPLICATION OF:	)	
	)	
Department of Energy	)	No. PSD-X80-14
Richland Operations Office	)	APPROVAL OF APPLICATION
P.O. Box 360	)	TO CONSTRUCT
Richland, Washington 99352	)	
	)	

Pursuant to the Agency regulations for the Prevention of Significant Deterioration of Air Quality (PSD) set forth at Title 40, Code of the Federal Regulations, Part 52 and based upon information submitted on February 27, 1980 by the Department of Energy, the Regional Administrator now finds as follows:

FINDINGS

1. The Department of Energy proposes to resume operation of the Hanford nuclear fuel reprocessing facilities near Richland, Washington.

2. An analysis of projected emissions indicates that this project has the potential to emit more than 250 tons per year of nitrogen oxides (NO_x) and is therefore subject to review for this pollutant.

3. The proposed modification is located in an area designated as "Class II" under Section 162(b) of the Clean Air Act.

4. Modeling analysis of NO_x has been conducted and demonstrates that while emissions of this pollutant will increase, the modification will not cause any violations of the applicable National Ambient Air Quality Standards so long as the plants are operated in accordance with the conditions specified below. There are no PSD increments for the subject pollutant. With the application of best available control technology, as required by Section 165 (a)(4), operation of the nuclear fuel reprocessing facilities will meet the applicable PSD requirements.

Accordingly, it is hereby determined that, subject to the conditions set forth below, the Department of Energy will be permitted to resume operation of the nuclear fuel reprocessing facilities on the Hanford reservation.

APPROVAL CONDITIONS

1. Emissions of nitrogen oxides (NO_x) shall not exceed the following:

NO_x Emission Limitations

Source	Concentration Volume percent, dry basis	kg/day	Mass Emission Rate metric tons/year
Purex Plant			
NO_x Absorber Exit	2.0	1,160	
Main Stack	-	2,250	424
Uranium Oxide Plant			
Exit of final condenser (upstream of dilution air addition)	4.0	858	50

2. With the exception of NO_x, increases in potential emissions of any pollutant regulated under the Clean Air Act resulting from this operation will be less than 250 tons per year.

9413149.0034

3. The Department of Energy shall notify the Benton-Franklin-Walla Walla Counties Air Pollution Control Authority (BFWW) of any occurrence of any emissions in excess of limits specified in Condition Numbers 1 and 2 above; such notification shall be forwarded to BFWW in writing in a timely fashion and in each instance no later than ten (10) days from the date of such occurrence. The notification shall include an estimate of the resultant emissions and a narrative report of the cause, duration and steps taken to correct the problem and avoid a recurrence. The Department of Energy shall contemporaneously send a copy of all such reports to EPA.

4. This approval shall become void if on-site construction is not commenced within eighteen (18) months after receipt of the approval or if on-site construction once initially commenced is discontinued for a period of eighteen (18) months.

5. As approved and conditioned by this permit any construction, modification or operation of the proposed facility shall be in accordance with the application which resulted in this permit. Moreover, any such activity which is undertaken in a manner which is inconsistent with this permit shall be subject to EPA enforcement activities under the Clean Air Act. Nothing in this permit shall be construed to relieve the Department of Energy of its obligations under any state or federal laws.

6. Compliance with emission limitations shall be demonstrated by source tests and a program of emission monitoring as described below:

a. Compliance Demonstration:

9413149.0035

Compliance testing shall be conducted within 60 days after achieving the maximum production rate at which the nuclear fuel reprocessing plants will be operated, but not later than 180 days after start up of the process. EPA Method 7 shall be used for determining NO_x concentration and EPA Methods 1 and 2 for measuring total gas flow.

b. Emission Monitoring:

Continuous stack monitors for NO_x and gas flow rate shall be installed and operated. The NO_x monitors must meet performance specification requirements of 40 CFR Part 60, Appendix B, Specification Test 2. Prior to start up, the Department of Energy shall submit for EPA approval a monitoring plan which describes the details of the continuous monitoring equipment installation and operation. Monitoring records shall be made available to EPA for inspection upon request, and the records shall be maintained for a period of two (2) years. Excess emission reports shall be made to EPA on a quarterly basis.

7. EPA and BFWW shall be notified of the commencement of construction and the start up date within thirty (30) days of the date of their occurrence.

Access to the source by EPA or State regulatory personnel will be permitted upon request for the purpose of compliance assurance inspections. Failure to allow such access is grounds for revocation of this permit.

[illegible]

Date

Donald P. Dubois
Regional Administrator

9413149.0036

Enclosure 3
9355592D

9413149.0037

NO_x EMISSIONS FROM HANFORD NUCLEAR FUELS REPROCESSING PLANTS

A. L. Pajunen
Separations Process Support Unit
Separations Process Engineering Group
Process Engineering Department
Research and Engineering Division

R. L. Dirkes
Environmental Protection Group
Environmental and Occupational Safety Department
Health, Safety and Environmental Division

8000349131946

September 15, 1978

APPROVED: Wayne Ogren 9-14-78
Manager, Separations Process Support Unit

APPROVED: J. Vincent Panek
Manager, Environmental Protection Group

Operated For The Department of Energy by
Rockwell Hanford Operations under Contract EY-77-C-06-1030

NO_x EMISSIONS FROM HANFORD NUCLEAR FUELS REPROCESSING PLANTS

EXECUTIVE SUMMARY

Operation of the existing Hanford nuclear fuel reprocessing facilities will increase the release of nitrogen oxides (NO_x) to the atmosphere over present emission rates. Stack emissions from two reprocessing facilities, one waste storage facility and two coal burning power plants will contain increased concentrations of NO_x. The opacity of the reprocessing facilities' emissions is predicted to periodically exceed the State and local opacity limit of twenty percent.

Past measurements failed to detect differences in the ambient air NO_x concentration with and without reprocessing plant operations. Since the facilities are not presently operating, increases in the non-occupational ambient air NO_x concentration were predicted from theoretical diffusion models. Based on the calculations, the annual average ambient air NO_x concentration will increase from the present level of less than 0.004 ppm to less than 0.006 ppm at the Hanford site boundaries. The national standard for the annual mean ambient air NO_2 concentration is 0.05 ppm. Therefore, the non-occupational ambient air NO_x concentration will not be increased to significant levels by reprocessing operations in the Hanford 200 Areas.

9413169.0039

TABLE OF CONTENTS

	Page No.
EXECUTIVE SUMMARY	2
INTRODUCTION	5
DESCRIPTION OF SOURCES	5
BACKGROUND INFORMATION	5
THE PUREX PLANT	8
Uranium Metal Dissolution	8
Treatment of Acidic Wastes	12
Minor Process Sources	12
Trace Sources	14
Quantification of Emissions	14
AR VAULT	18
THE UO_3 PLANT	19
Feed Concentration	19
Uranium Calcination	19
Trace Sources	22
Quantification of Emissions	22
POWER PLANTS	23
IMPACT OF 200 AREA NO_x EMISSIONS ON THE AMBIENT AIR QUALITY	24
OCCUPATIONAL AREAS	24
NON-OCCUPATIONAL AREAS	26
Past Offsite Measurements	26
Recent Measurements	29
Predicted Incremental Impact of Reprocessing Operations	30
REFERENCES	34

9413 0040

LIST OF FIGURES

		Page No.
Figure 1	Hanford Fuel Reprocessing NO_x Source Locations	6
Figure 2	Plot Plan of the Purex Dissolver and Main Building Ventilation Systems	9
Figure 3	Dissolver Off-Gas System	11
Figure 4	Sugar Denitration Off-Gas System	13
Figure 5	Estimated Variation of Average NO_x Concentration and Flowrates of Off-Gases Entering the Main Purex Stack	17
Figure 6	AR Vault Off-Gas System	20
Figure 7	UO_3 Plant Off-Gas System	21
Figure 8	Ambient Air Monitoring Site Locations Near the Purex Plant, February to June, 1968	25
Figure 9	Hanford Area Ambient Air Monitoring Sites, 1969 to 1975	27
Figure 10	Hanford Area Ambient Air Monitoring Sites, July and August, 1978	32

LIST OF TABLES

Table I	Hanford Fuel Reprocessing NO_x Sources	7
Table II	Estimated Daily Duration and Percent of Total Plant Emissions For Purex Processes Evolving NO_x	15
Table III	Estimated Fluctuation of Average Purex Plant NO_x Emissions	16
Table IV	Annual Purex Plant NO_x Emissions	18
Table V	Estimated AR Vault NO_x Emissions	19
Table VI	UO_3 Plant NO_x Emissions	22
Table VII	Annual UO_3 Plant NO_x Emissions	23
Table VIII	Power Plant NO_x Emissions	24
Table IX	Quarterly Average NO_2 Concentrations	28
Table X	Annual Average NO_2 Concentrations	29
Table XI	Average 200 Area Ambient Air NO_x Concentrations, July and August, 1978	29
Table XII	Predicted Incremental Contributions to Non-Occupational Ambient Air NO_x Concentrations	31
Table XIII	Hanford Reprocessing Facilities Contribution to Non-Occupational Ambient Air NO_x Concentrations	33

NO_x EMISSIONS FROM HANFORD NUCLEAR FUELS REPROCESSING PLANTS

INTRODUCTION

Rockwell Hanford Operations, under contract to the Department of Energy, is preparing to start-up the Hanford Facilities for reprocessing spent nuclear fuels. Operation of the existing facilities will increase the release of nitrogen oxides (NO_x) to the atmosphere over present emission rates. Nitrogen oxide emissions from the facilities will be subject to Federal, State and local emission standards. Observations by plant personnel during previous operating periods indicate that some stack emissions will not comply with the twenty percent opacity limit. Therefore, a variance from the opacity emission standard will be required to allow operation of the existing facilities without additional NO_x abatement equipment.

Preliminary estimates indicate that the occupational ambient air NO_x concentration will remain within Federal guidelines, but, plant emissions may be subject to the Prevention of Significant Deterioration (PSD) regulations of the 1977 Clean Air Act Amendments which became effective after fuel reprocessing operations at Hanford were discontinued. The following report describes the NO_x sources related to fuel reprocessing in the Hanford 200 Areas and discusses the predicted impact of increased NO_x emissions on the ambient air quality of regions surrounding the reprocessing facilities. The discussion is intended to provide background information to support the application for a variance from the local opacity emission standard and aid in determining if plant emissions are subject to PSD regulations.

DESCRIPTION OF SOURCES

Reprocessing spent nuclear fuels at Hanford will result in an increase of NO_x emissions from five points or stacks in the 200 Areas. The source locations are shown on the map sketched in Figure 1. Emission points include two chemical processing plants, two coal-fired power plants and one waste storage facility. The source name, function, location and major constituent of the emitted NO_x are listed in Table I.

BACKGROUND INFORMATION

Nitrogen oxides are produced by the Hanford reprocessing facilities in the form of nitric oxide (NO) and/or nitrogen dioxide (NO_2). Nitric oxide is a colorless gas which reacts with oxygen to form nitrogen dioxide. Nitrogen dioxide is a brown colored gas which rapidly comes to equilibrium with the

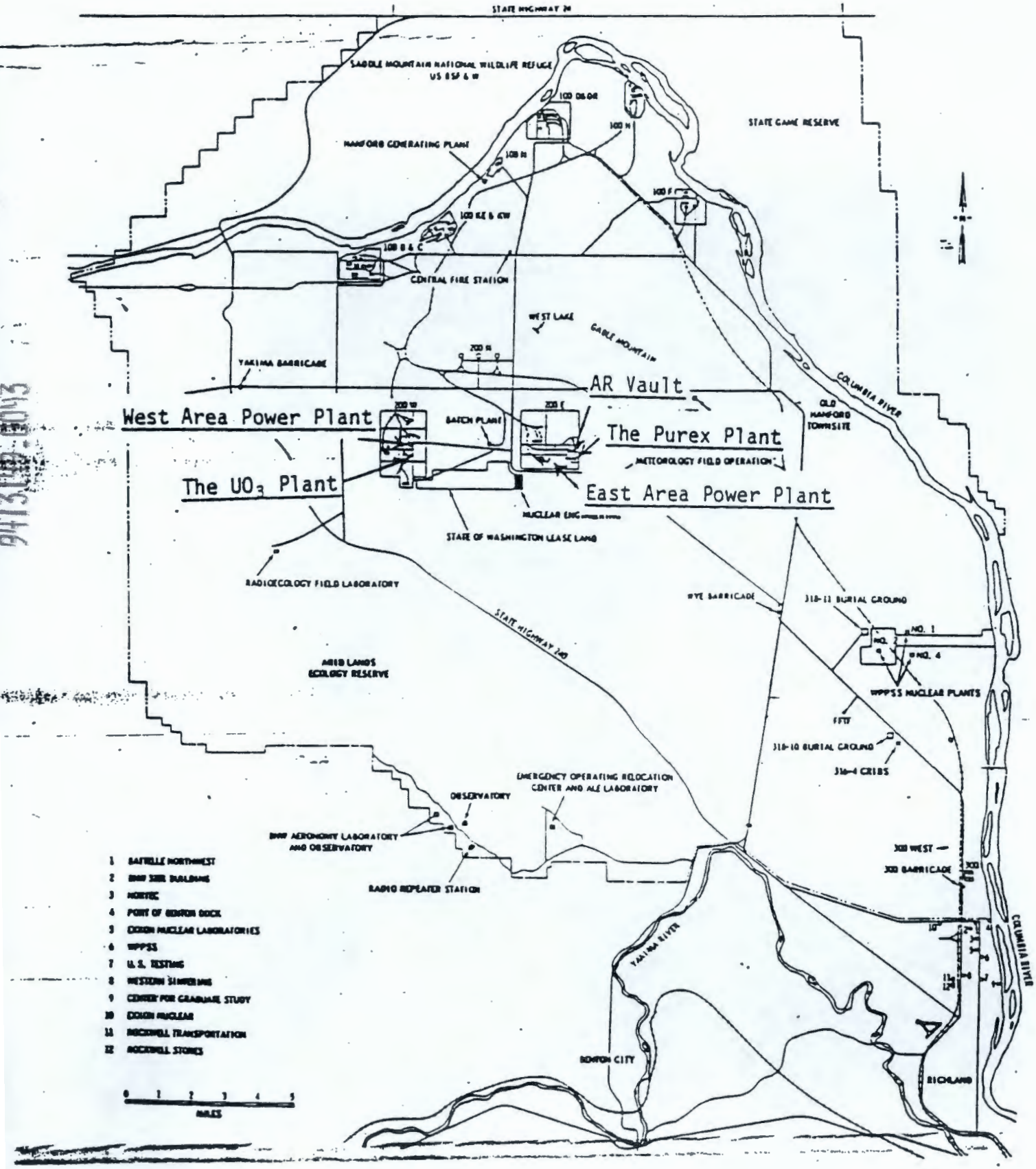

FIGURE 1

Hanford Fuel Reprocessing NO_x Source Locations

colorless dimer, dinitrogen tetroxide (N_2O_4). The reaction sequence is summarized by

$$\underset{\text{(colorless)}}{2\ NO\ (g)} + \underset{\text{(colorless)}}{O_2\ (g)} \rightarrow \underset{\text{(brown)}}{2\ NO_2\ (g)} \rightleftharpoons \underset{\text{(colorless)}}{N_2O_4\ (g)}$$

TABLE I

Hanford Fuel Reprocessing NO_X Sources

Name	Function	Location	Major NO_X Constituent
The Purex Plant (202-A Building)	Dissolves and processes spent fuel rods to separate fission products, uranium, neptunium and plutonium. The products are uranium and neptunium solutions and a plutonium oxide powder.	200-E Area	Nitrogen Dioxide (NO_2)
AR Vault (244-AR Building)	Accumulates treated acidic wastes containing fission products before further processing and storage.	200-E Area	NO_2
The UO_3 Plant (224-U Building)	Processes uranium solutions from the Purex Plant producing uranium oxide powder which is packaged for shipping.	200-W Area	NO_2
Power Plants (284-E and 284-W Buildings)	Burns coal to produce steam for process uses.	One in 200-E and one in 200-W Areas	Nitric Oxide (NO)

The opacity of an off-gas plume is dependent on: the concentration of color producing contaminant; stack diameter; angle relationship between the sun, plume and observer; background weather conditions; and the individual observer (1). Therefore, an increase in the concentration of the color producing contaminant (in the case of NO_X emissions the colored contaminant is NO_2) will increase the opacity of the stack off-gases. Table I shows that emissions from the Purex Plant, AR Vault and UO_3 Plant will be colored due to releases of NO_2. The opacity of power plant emissions will not be affected by changes in the NO_X concentration since the major constituent of NO_X released is in the form of colorless NO. A quantitative NO_X concentration has not been associated with the twenty percent opacity limit for an off-gas plume. Therefore, the opacity of each plant plume is described in qualitative terms.

Regulations, concerning the Prevention of Significant Deterioration of air quality, were promulgated in 1977 to protect the national ambient air quality from significant incremental increases in pollutant content (2). The original regulations set limits for the maximum allowable increase of particulates and sulfur dioxide over baseline ambient air concentrations. At this time, no quantitative limit has been established for the impact of NO_x on the ambient air quality.

THE PUREX PLANT

The Plutonium Uranium Extraction (Purex) Plant separates uranium, neptunium, plutonium and waste fission products. Spent fuel rods are dissolved in nitric acid to form feed solutions which are processed, separating products from wastes in solvent extraction columns. A majority of the NO_x released from the Purex Plant is created by the dissolution of uranium metal and treatment of acidic wastes with sucrose. Smaller quantities of NO_x are evolved from the dissolution of recovered uranium dioxide (UO_2) and the conversion of plutonium solutions to plutonium oxide powder (plutonium denitration). Off-gases from the waste treatment, recovered UO_2 dissolution and plutonium denitration processes are combined with ventilation air exhausted from the main building. The building ventilation air is then combined with the dissolver off-gases and released via a stack, 7 feet in diameter and 200 feet high. A plot plan sketch of the Purex dissolver and main building ventilation system is shown in Figure 2.

Uranium Metal Dissolution

The initial processing or feed preparation steps of the Purex process convert batches of metal fuel rods into a solution which is fed to solvent extraction columns. Present processing methods remove the thin Zircaloy (trade name) coating which encases each rod by dissolution in an ammonium fluoride ammonium nitrate solution. The exposed uranium metal and fission products are then dissolved in a mixture of boiling nitric acid and aluminum nitrate. The metal dissolution reaction evolves NO_x such that the NO_x evolution rate is directly related to the metal dissolution rate. The reaction rate increases with:

- increasing acid, nitrate and dissolved uranium concentration
- increasing temperature
- increasing uranium metal surface area

As the metal rods dissolve, the solution ion concentrations, temperature and metal surface area change, causing the NO_x evolution rate to vary with time and creating peaks in the NO_x concentration of dissolver off-gases.

The fuel rod dissolution is carried out in three annular dissolvers which are maintained at a slight vacuum by individual off-gas systems. A schematic of a typical dissolver off-gas system is shown in Figure 3. Nitrogen oxides produced during dissolution are mixed with air before leaving the dissolver vessel via the downdraft condenser tower. The downdraft tower is a finned tube condenser which passes process vapors down

9413149.0046

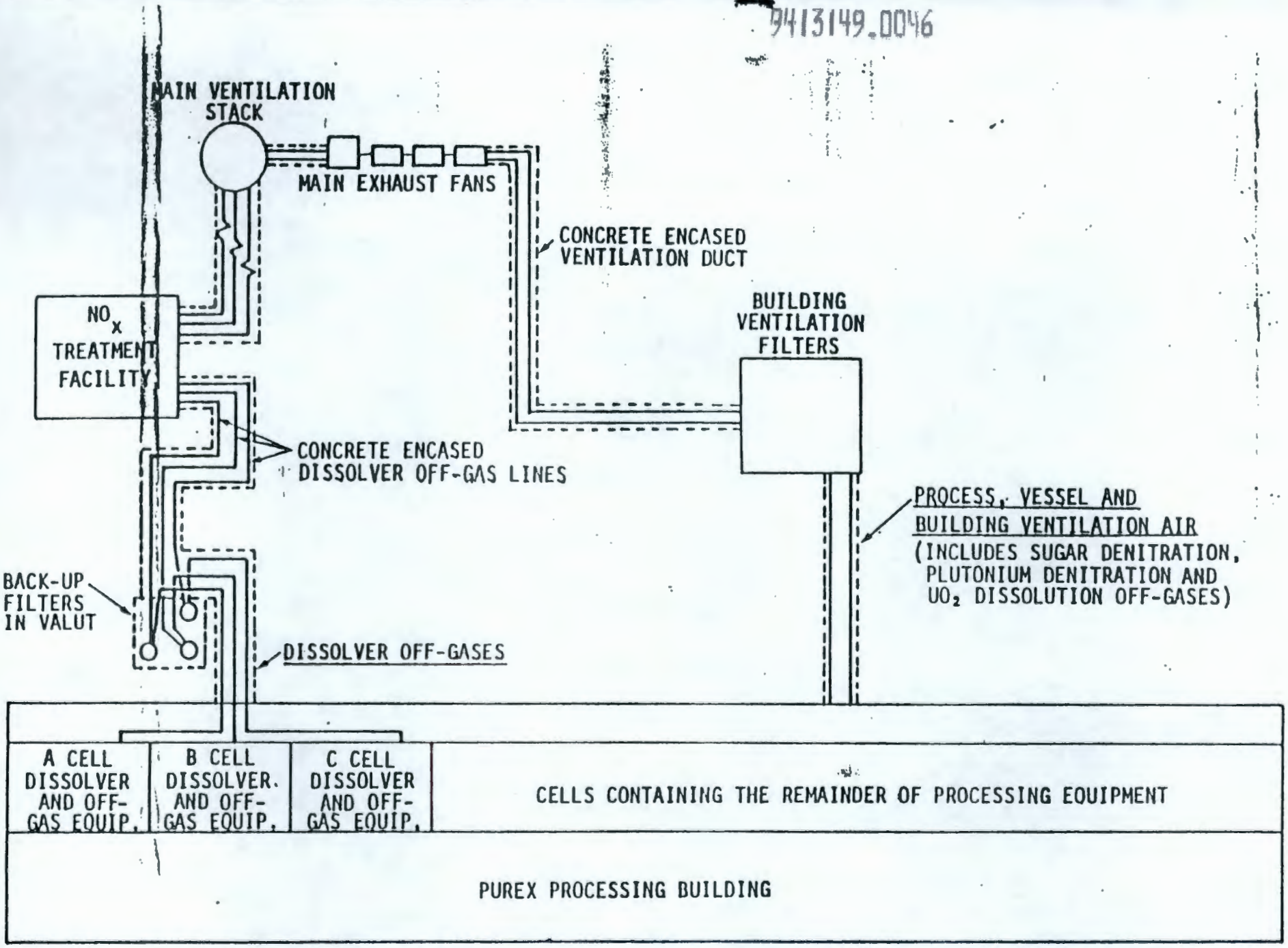

FIGURE 2
PLOT PLAN OF THE PUREX DISSOLVER AND MAIN BUILDING VENTILATION SYSTEMS

the shell side of the vessel and cooling water up through the tubes. Water and nitric acid vapors condense on the outside of the tubes, flow to the bottom of the condenser and back to the dissolver. In addition to vapor recovery, approximately 10 percent of the NO_x entering the tower is absorbed in the condensate and returned to the dissolver as nitric acid.

Dissolver off-gases leave the downdraft tower at approximately 30°C and pass through a tower packed with Pall rings. The packed tower functions as an ammonia scrubber during the coating removal process and is operated dry during metal dissolution. After leaving the ammonia scrubber, the dissolver off-gas is heated to approximately 200°C by a steam heater and electric heater in series. The off-gas then enters a second tower, or silver reactor, packed with Berl saddles. The tower packing is impregnated with silver nitrate which removes iodine from the process gases.

The dissolver off-gas is next filtered through two Fiberglas (Dow Corning Trade name) filter bed units for removal of any remaining particulate materials. The primary filter, along with the dissolvers and connecting dissolver off-gas equipment, is located in a concrete cell within the main processing building. The back-up or secondary filter for each dissolver off-gas system is located in a vault, outside the main building (see Figure 2). Three parallel eight inch pipes, supported in a concrete encasement contain the off-gases as they flow from the main building to the back-up filter vault and on to the NO_x treatment facility.

Within the NO_x treatment facility, piping arrangements allow for the off-gas from one, two or all three dissolvers to be combined and fed to the treatment facility or by-pass the facility to be released via the stack. Off-gases from the dissolvers during the coating removal process are allowed to by-pass the facility since no NO_x is produced during this phase of operation. The NO_x from metal dissolution is routed through the two bubble-cap tray towers located within the treatment facility.

Off-gases pass through the two NO_x absorption columns at atmospheric pressure. Between 40 and 60 percent of the entering NO_x is absorbed in dilute nitric acid which is recycled from collection tanks located below the towers. Each tower contains eight trays with between 22 and 33 six-inch bubble caps per tray. Acid recycled to the first column (T-XA) is cooled by a heat exchanger. Additional liquid cooling is accomplished by routing inter-stage liquids from the top four plates to a second heat exchanger. Acid recycled to the second tower (T-XB) is cooled via a cooling coil installed within the acid collection tank. The acid recovered from the NO_x treatment facility is returned to the main building for concentration and reuse in the Purex process.

The off-gas is pulled from the dissolver, off-gas equipment and NO_x treatment facility by three large steam jets which may operate independently when the treatment facility is being bypassed, or in unison when pulling off-gases through the treatment facility. The off-gas then flows through three encased eight inch pipes to be discharged at the bottom of the 200 foot main ventilation stack.

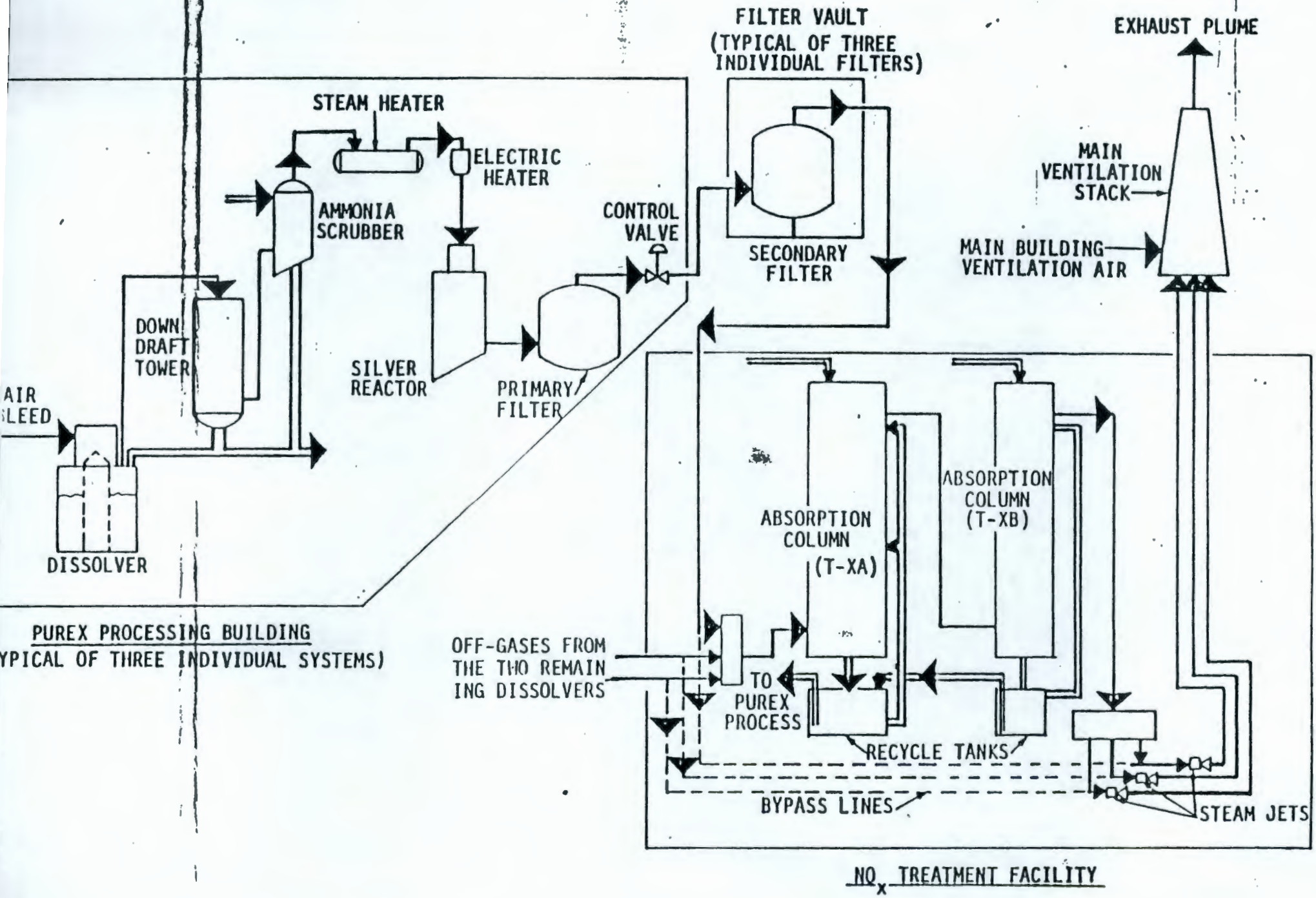
FILTER VAULT
(TYPICAL OF THREE
INDIVIDUAL FILTERS)
EXHAUST PLUME
STEAM HEATER
ELECTRIC
HEATER
AMMONIA
SCRUBBER
CONTROL
VALVE
SECONDARY
FILTER
MAIN
VENTILATION
STACK
MAIN BUILDING
VENTILATION AIR
DOWN
DRAFT
TOWER
SILVER
REACTOR
PRIMARY
FILTER
AIR
BLEED
DISSOLVER
ABSORPTION
COLUMN
(T-XA)
ABSORPTION
COLUMN
(T-XB)
PUREX PROCESSING BUILDING
(TYPICAL OF THREE INDIVIDUAL SYSTEMS)
OFF-GASES FROM
THE TWO REMAIN
ING DISSOLVERS
TO
PUREX
PROCESS
RECYCLE TANKS
BYPASS LINES
STEAM JETS
NOx TREATMENT FACILITY

FIGURE 3

Treatment of Acidic Wastes

The Purex process produces an acidic waste stream which is processed to remove cesium and strontium, solidified and stored in tanks. The waste is accumulated in batches within the main processing building and treated in a processing step called sugar denitration. The sugar denitration process reduces the acid content of wastes before extracting cesium and strontium, resulting in reduced solid waste volumes to be stored in underground, double-shell tanks. The process requires the addition of sucrose to each batch of waste. The solution is heated to approximately 95°C and allowed to digest for 20 to 30 hours. Sucrose reacts with nitric acid in the waste to produce NO_x, carbon dioxide and water. The NO_x evolution rate is directly related to the rate of reaction which is dependent on:

- The sucrose concentration
- The acid concentration
- The metallic salt concentration
- The solution temperature

Each rate parameter listed above varies as the waste digests and the reaction proceeds, therefore, the NO_x concentration of the off-gas changes with time, producing peaks similar to peaks evolved from the uranium metal process.

A schematic drawing of the sugar denitration off-gas routing is shown in Figure 4. Sucrose is added to concentrated waste solutions in the first digestion tank (F15) and heated to approximately 95°C. Process off-gases are drawn through the tank vent to the waste concentrator where the gases combine with nitric acid vapors driven off during the concentration of dilute acid wastes. The NO_x and acid vapors flow through a demistor to a bubble cap tray column where most of the acid vapor, but very little NO_x, is recovered. The off-gases are then routed through a condenser to a header system where they mix with gases vented from other process vessels.

After digesting in tank F15, the waste solution is transferred to a second digestion tank (F16). The denitration reaction is usually allowed to proceed to completion before transferring waste to tank F16. Premature transfers are sometimes required due to process upsets within the plant. Tank F16 is vented directly to the vessel vent system and no provisions are made to recover NO_x from the off-gas. Treated waste liquors are routed from tank F16 out of the main building to be collected in the AR vault.

Process and vessel vent off-gases are combined, routed through iodine and particulate control equipment to be mixed with air leaving the main building ventilation system. The combined gases are drawn through filters by three parallel fans, discharging to the main ventilation stack.

Minor Process Sources

The dissolution of Zircaloy coatings also removes small amounts of uranium

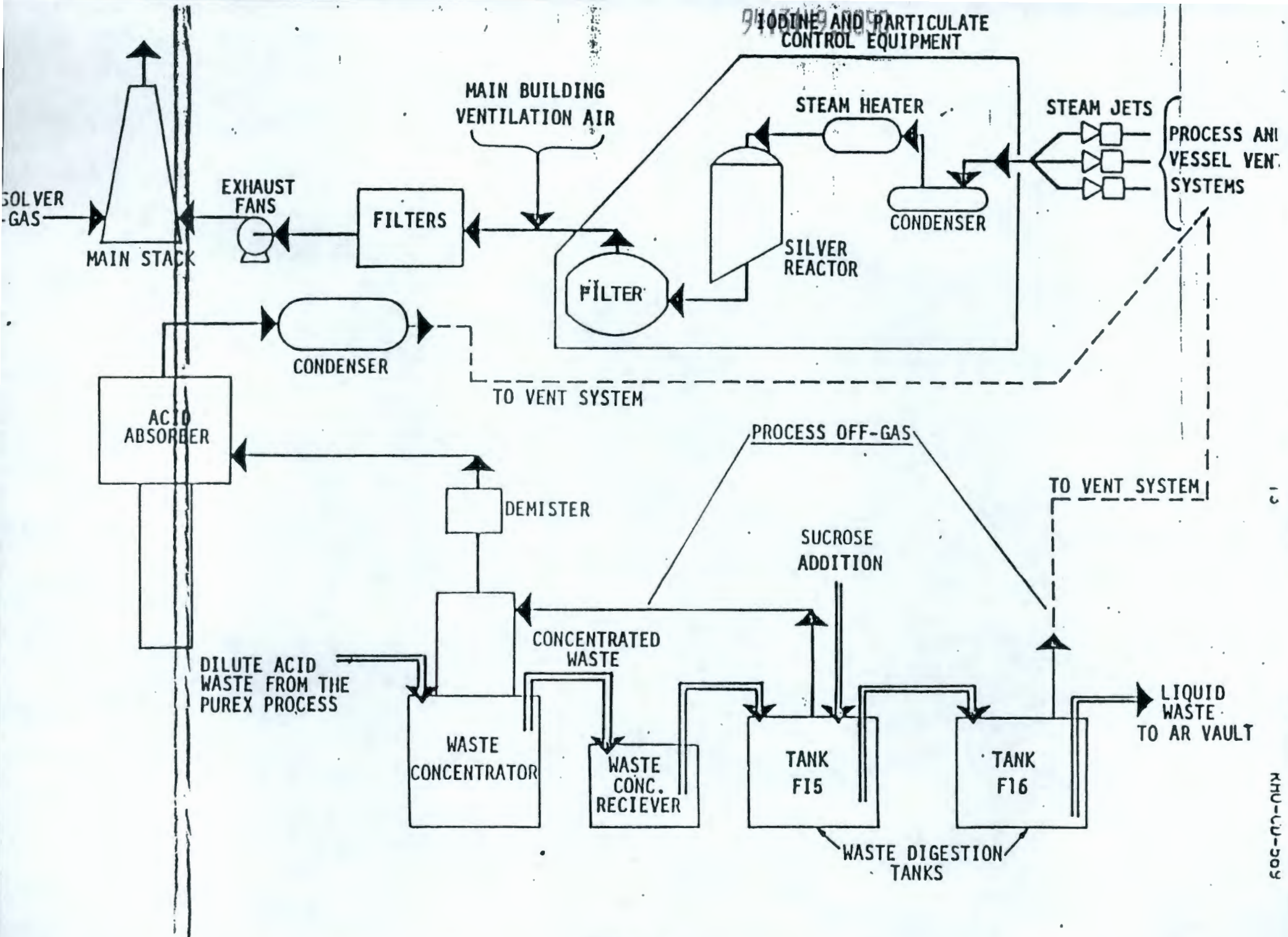

FIGURE 4
SUGAR DENITRATION OFF-GAS SYSTEM

from the fuel rods. To minimize uranium losses, coating wastes are processed, recovering a majority of the dissolved uranium. The recovery process converts uranium dissolved in the coating waste to uranium dioxide (UO_2) which is centrifuged and dissolved in nitric acid. The dissolution reaction produces NO_x at a rate dependent on the solution temperature and acid concentration; therefore, the NO_x evolution rate can be controlled by limiting the acid addition rate. Off-gases produced during the dissolution of recovered UO_2 are vented directly to the vessel vent system to be released via the main stack.

The Purex Plant will be provided with two processes for converting plutonium nitrate solutions to plutonium oxide powder. One of the processing methods, direct plutonium denitration, evolves small quantities of NO_x. Product solutions of plutonium nitrate are fed to a screw calciner where the solutions are heated, boiling off the acid and converting the nitrate to plutonium oxide. The conversion reaction produces NO_x. Calciner off-gases are scrubbed in a spray tower recovering nitric acid vapors while the remaining off-gas is released via the process vent system and main stack. No NO_x is recovered from the UO_2 dissolution or plutonium denitration off-gases.

9413160001

Trace Sources

Trace emissions of NO_x result from:

- Nitric acid and uranium nitrate solution storage tank vents.
- Transfers of nitric acid from rail cars to storage tanks.
- Transfer of uranium nitrate solutions from storage tanks to tank trailers.
- Decontamination operations.

The listed sources are negligible when compared to process emissions and of intermittent duration, but, will contribute to the NO_x concentration of ambient air surrounding the Purex facility.

Quantification of Emissions

The NO_x composition of off-gas from the uranium metal dissolution and sugar denitration processes vary continuously (see previous sections). Therefore, instantaneous Purex Plant NO_x emissions will fluctuate around a daily average rate. The average NO_x emission rate is dependent upon the overall plant processing rate and whether the uranium metal and UO_2 dissolution processes are operating, while the magnitude of instantaneous NO_x emissions vary with:

- The number of batches of uranium metal dissolving simultaneously and the NO_x evolution rate from each dissolver.
- The number of batches of acidic waste denitrating simultaneously and the NO_x evolution rate from each tank.

- The NO_x evolution rate from the dissolution of UO_2.
- The NO_x evolution rate from the direct denitration of plutonium.

The dissolver off-gas system contains the only effective NO_x abatement equipment in the Purex Plant. This equipment is assumed to recover approximately 46 percent of the NO_x generated from the dissolvers under controlled conditions. Uncontrolled dissolver emissions were estimated assuming no recovery in the NO_x treatment facility. Since the off-gas systems of the sugar denitration, UO_2 dissolution and plutonium denitration processes contain no effective NO_x recovery equipment, the contribution of these processes to total Purex Plant NO_x emissions will not vary during controlled and uncontrolled operating conditions.

The four NO_x generating processes in the Purex Plant independently evolve NO_x at varying rates during different time periods each day. Table II lists estimates of the average daily emission durations and percent of total Purex Plant NO_x emissions evolved from each process under controlled and uncontrolled operating conditions.

9413149.0052

TABLE II

Estimated Daily Duration and Percent of Total Plant Emissions For Purex Processes Evolving NO_x

Process	Average Daily Duration of Process NO_x Emission, Hours	Percent of Total[1] Daily Plant Emissions Evolved	
		Controlled Conditions	Uncontrolled Conditions
Uranium Dissolution	8	73	83
Waste Denitration	24	25	15
UO_2 Dissolution	4	1	1
Plutonium Denitration	24	1	1

[1] Controlled conditions assume 46 percent of the NO_x entering the dissolver off-gas equipment is recovered which is equivalent to assuming normal operation of all Purex NO_x abatement equipment (downdraft tower and gas absorbers). Uncontrolled conditions assume no recovery of NO_x from dissolver off-gases. Under controlled operating conditions, the dissolution of uranium evolves 73 percent of the total daily plant NO_x emissions in an eight hour period while a majority of the remaining daily emissions are spread out over a 24 hour period.

Plant operations allow a typical day to be divided into three time periods, during which emissions reflect different combinations of the four processes evolving NO_x. Instantaneous plant emissions will vary about a different

average value throughout each time period. Estimates of the duration and average NO_x concentration of stack effluents, assuming sequential operation of the uranium and UO_2 dissolution processes, are listed in Table III for controlled and uncontrolled conditions.

TABLE III

Estimated Fluctuation of Average Purex Plant NO_x Emissions

Time Period	Processes Assumed[1] To Generate NO_x During Time Period	Average Duration of Time Period, Hours	Average NO_x Concentration[2] of Purex Plant Effluents	
			Controlled Conditions	Uncontrolled Conditions
A	UD + WD + PuD	8	800 ppm	1400 ppm
B	WD + UO_2D + PuD	4	110 ppm	110 ppm
C	WD + PuD	12	85 ppm	85 ppm
Time Weighted Daily Average	-	-	325 ppm	530 ppm

[1] UD = Uranium Dissolution, WD = Waste Denitration, UO_2D = UO_2 dissolution, PuD = Plutonium Denitration.

[2] Off-gas compositions were estimated assuming a total gas flowrate of 57,000 liters per second (121,000 cfm) at 40°C and 1 atmosphere. Controlled conditions assume that the dissolver off-gas abatement equipment recovers 46 percent of the entering NO_x while uncontrolled conditions assume no NO_x recovery.

Figure 5 shows the estimated variation of the average flowrate and NO_x concentration of off-gases entering the main Purex stack under controlled and uncontrolled conditions.

Peak NO_x evolution rates from the uranium dissolution and sugar denitration processes were estimated from past operating and laboratory data, modified to reflect flowsheet changes. Since the dissolution and denitration processes are operated independently, off-gases from different processes may peak simultaneously. A basis for worst case operating conditions was estimated to be represented by the simultaneous operation of:

- One dissolver at the average dissolution rate
- One dissolver at the peak dissolution rate
- One waste tank at the average digestion rate
- One waste tank at the peak digestion rate
- UO_2 dissolution and plutonium denitration at average rates

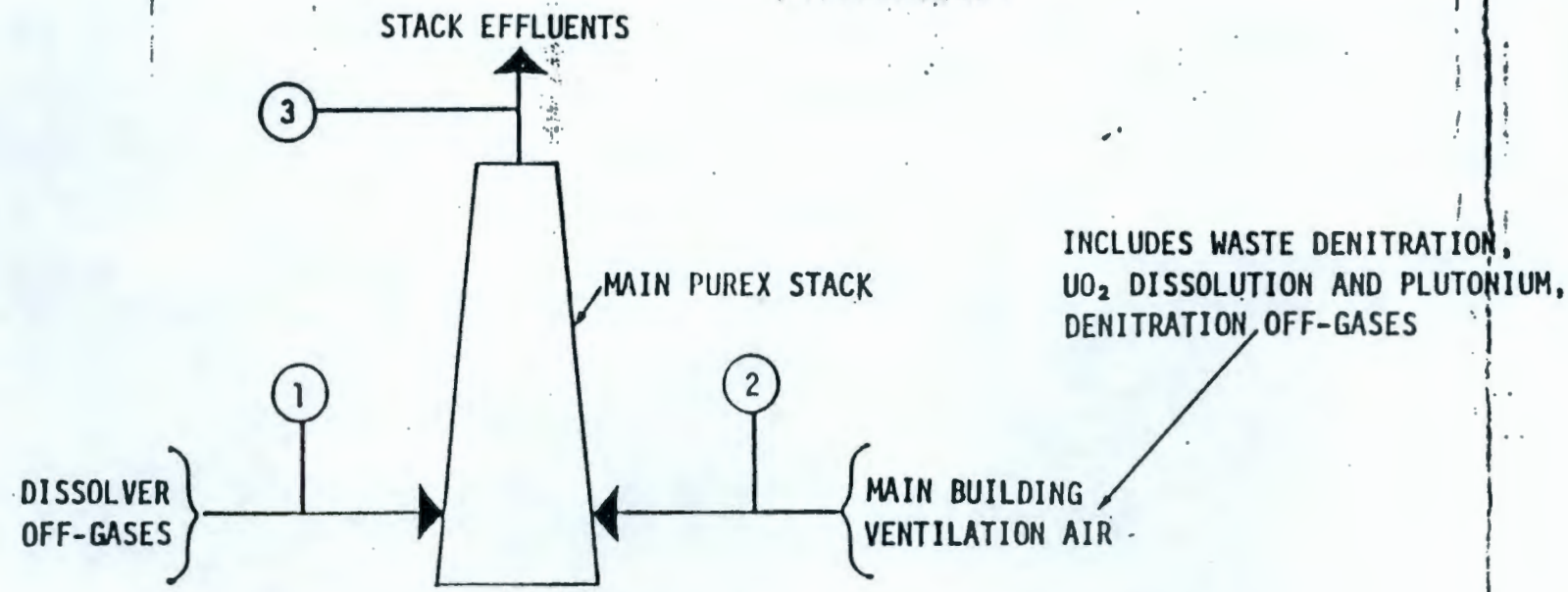

Time[1] Period	Reference Point	Off-Gas Properties at Reference Point			
		Controlled Conditions		Uncontrolled Conditions	
		Flowrate,[2] Liters/Sec.	NO_x Concentration, PPM	Flowrate[2] Liters/Sec.	NO_x Concentration, PPM
A	1	330	121,500	380	197,500
	2	56,600	85	56,600	85
	3	57,000	800	57,000	1,400
B	1	-	0	-	0
	2	56,600	110	56,600	110
	3	56,600	110	56,600	110
C	1	-	0	-	0
	2	56,600	85	56,600	85
	3	56,600	85	56,600	85

(1) Time period durations and operating processes defined in Table III.

(2) Assumed off-gas conditions: 40°C and 1 atmosphere. Controlled conditions assume that dissolver off-gas abatement equipment recover 46% of the entering NO_x while uncontrolled conditions assume no NO_x recovery.

FIGURE 5

[illegible] AND FLOWRATES FOR OFF-GASES ENTERING THE MAIN PUREX STACK

Assuming the above basis, a total off-gas flowrate of 56,600 liters per second at 1 atmosphere and 40°C and normal operation of the Purex NO_x abatement equipment, the Purex main stack effluents are estimated to reach an instantaneous peak NO_x concentration of 4700 ppm. The peak conditions represent a theoretical maximum NO_x emission rate and will not generally occur unless a number of operating problems are encountered simultaneously.

Annual NO_x emissions from the Purex Plant are directly related to the amount of fuel processed each year. Estimates of controlled and uncontrolled emissions for the present projected production schedule are listed by year in Table IV.

TABLE IV

Annual Purex Plant NO_x Emissions

Calender Year	Total Uranium Processed, Metric Tons	Annual NO_x Emissions,[1] in Metric Tons of NO_2	
		Controlled Conditions	Uncontrolled Conditions
1981	517	145	238
1982	856	240	394
1983	1026	288	472
1984	688	193	316

(1) Controlled conditions assume 46 percent of the NO_x entering the dissolver off-gas equipment is recovered. Uncontrolled conditions assume no recovery of NO_x from dissolver off-gases.

Operating periods for the Purex Plant will average approximately six months per year, including time for start-up, mechanical failures and operating difficulties. The plant will emit NO_x only during the time periods when fuel is being processed. On-line processing periods are estimated to last a maximum of 112 days per year. The impact of Purex Plant NO_x emissions on the ambient air quality will be predicted assuming a daily time averaged effluent of 57,000 liters per second containing 325 ppm NO_x and lasting 112 days per year. The opacity of the off-gas plume is expected to exceed emission standards due to the presence of NO_2.

AR VAULT

Acidic wastes from the Purex process are accumulated in two tanks within AR Vault. The accumulated batches of waste are then used as feed solutions for the waste fractionization facility where cesium and strontium are recovered. The stored waste contains dilute nitric acid, therefore, the tank ventilation air will contain small qualities of NO_x.

9413149:0055

The ventilation system for acid waste storage tanks in the AR Vault is shown in Figure 6. Vapors from the storage tanks are collected in a vent header. The off-gas is then heated, filtered through a three stage filter and prefilter, reheated and passed through a second three stage filter. The off-gas system is maintained at a negative gauge pressure by a fan or emergency air jet which exhaust into a stack, 150 feet high and 8 inches in diameter. A worst case estimate of AR vault NO_x emissions is listed in Table V.

TABLE V

Estimated AR Vault NO_x Emissions

Total Off-Gas Flowrate[1]	310 liters/second
Maximum NO_x Concentration	18 ppm
Annual Total NO_x Emissions	0.36 Metric Tons NO_2

[1] Assumed Off-gas Conditions: 1 atmosphere and 30°C

The impact of AR Vault emissions on the ambient air quality is predicted by assuming a continous stack off-gas of 310 liters per second containing 18 ppm NO_x for 365 days per year. The opacity of AR Vault emissions will comply with emission standards during normal operating conditions.

THE UO_3 PLANT

Uranium nitrate product solutions from the Purex process are transported by truck to the UO_3 Plant for conversion to uranium trioxide (UO_3) powder. The UO_3 is then packaged and shipped to off-site locations for enrichment and reuse as reactor fuel. Two UO_3 Plant processes evolve NO_x, concentration of the uranium nitrate feed solution and calcination of the concentrated feed to UO_3 powder.

Feed Concentration

The initial step in processing uranium nitrate solutions at the UO_3 Plant is feed concentration. Feed liquors from the Purex Plant are heated in one of three concentrators, driving off water, nitric acid vapor and small amounts of NO_x. A sketch of the UO_3 Plant off-gas system is shown in Figure 7. Off-gases leave each concentrator through a knock-out pot and are combined in a vent header. The off-gases then pass through a catch tank, condenser and steam jet before combining with the off-gases from the uranium calciners.

Uranium Calcination

Concentrated uranium solution is fed to one of six stirred bed calciners. The solution is heated to approximately 270°C to form UO_3 while liberating NO_x, water and oxygen. Off-gases from each calciner are passed through a

9413149.0056

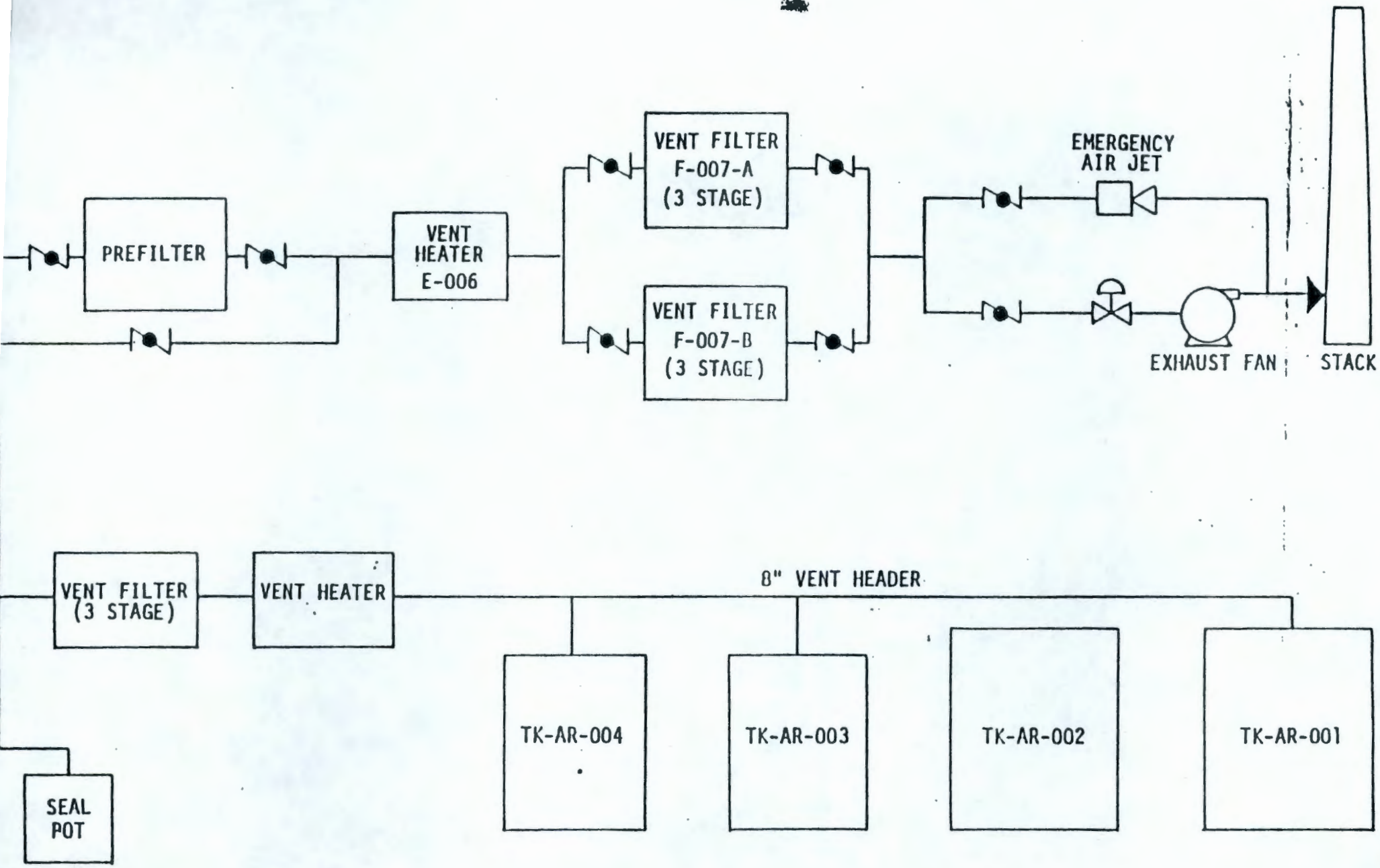

FIGURE 6
AP VAULT OFF GAS SYSTEM

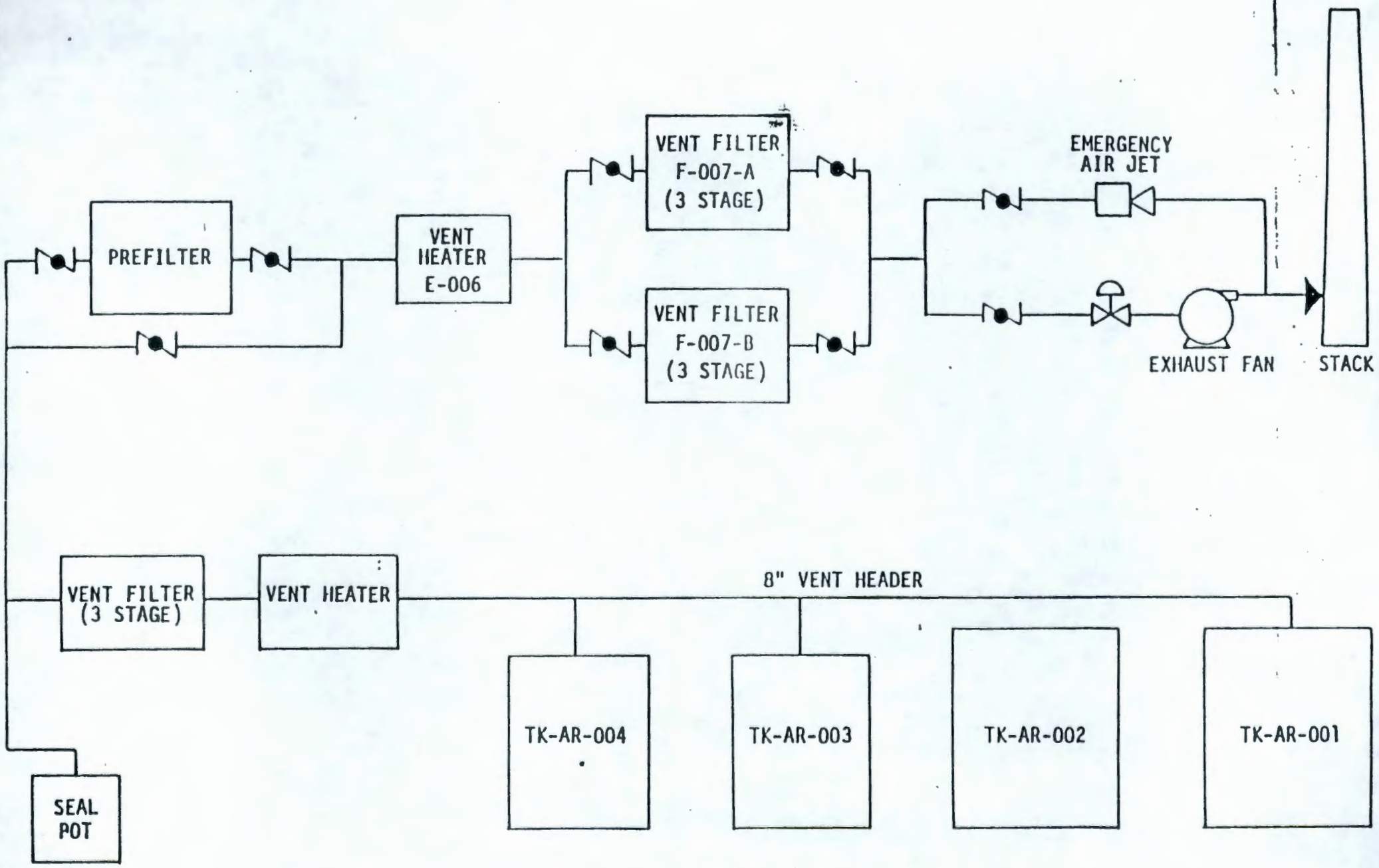
PREFILTER
VENT HEATER E-006
VENT FILTER F-007-A (3 STAGE)
VENT FILTER F-007-B (3 STAGE)
EMERGENCY AIR JET
EXHAUST FAN
STACK
VENT FILTER (3 STAGE)
VENT HEATER
8" VENT HEADER
TK-AR-004
TK-AR-003
TK-AR-002
TK-AR-001
SEAL POT

FIGURE 6

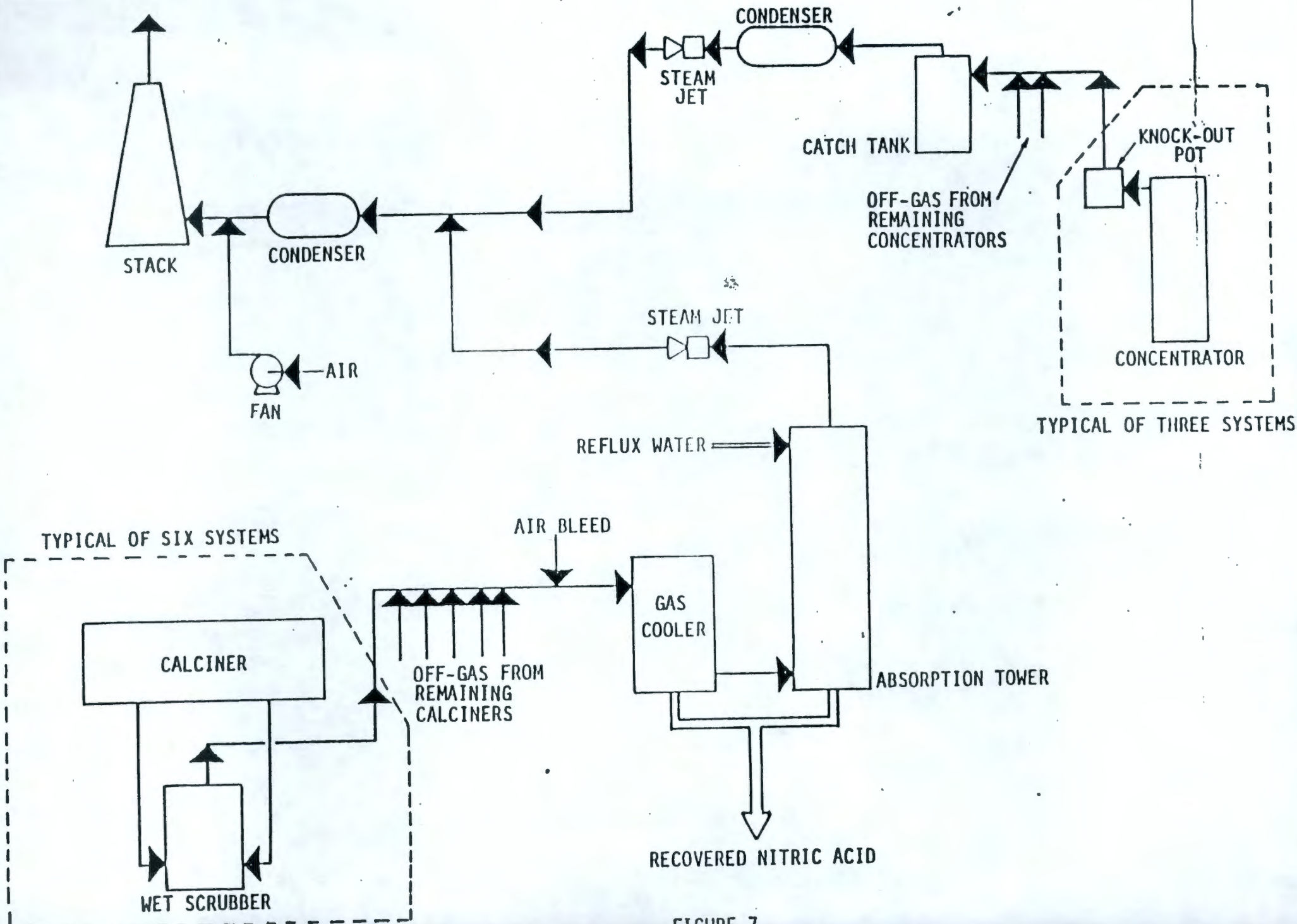
CONDENSER
STEAM JET
CATCH TANK
KNOCK-OUT POT
OFF-GAS FROM REMAINING CONCENTRATORS
CONCENTRATOR
TYPICAL OF THREE SYSTEMS
STACK
CONDENSER
STEAM JET
AIR
FAN
REFLUX WATER
AIR BLEED
TYPICAL OF SIX SYSTEMS
GAS COOLER
CALCINER
OFF-GAS FROM REMAINING CALCINERS
ABSORPTION TOWER
RECOVERED NITRIC ACID
WET SCRUBBER

FIGURE 7

wet scrubber which removes entrained UO_3 powder, cools the off-gas and absorbs a small amount of NO_x. The vapors from each calciner are then combined in a vent header and air added before routing the off-gas to a gas cooler.

The gas cooler consists of a finned tube heat exchanger with process vapor on the shell side and cooling water on the tube side. Process vapors are cooled to 30°C, condensing out water which runs down the fins and outer tube walls, absorbing approximately 40 percent of the NO_x entering the cooler. After leaving the gas cooler, the off-gases enter an acid absorption tower. The tower contains 20 bubble cap trays with cooling coils on the bottom 11 trays and operates at atmospheric pressure. NO_x is absorbed by dilute nitric acid to form a product which is approximately 50 weight percent acid. A steam jet pulls the gases through the calciner off-gas system and combines the gases with vapors from the feed concentrators. The combined vapors are passed through a condenser and mixed with air before exhausting to a stack, 80 feet high and 10 inches in diameter.

9413149.0060

Trace Sources

Trace emissions of NO_x will be evolved from sources identical to the trace sources identified for the Purex Plant. The NO_x emitted from these sources will contribute to the NO_x concentration of ambient air surrounding the UO_3 Plant, but, will be negligible in comparison to process emissions.

Quantification of Emissions

The UO_3 Plant will produce an off-gas stream of constant composition for approximately 30 days per year. Controlled NO_x emissions from the UO_3 Plant are estimated from overall material balances and past operating data, indicating an overall UO_3 Plant NO_x recovery efficiency of 95 to 97 percent. Uncontrolled emissions are estimated assuming no NO_x is recovered from the plant off-gases, representing the failure of the gas cooler - absorption tower system. Estimates of controlled and uncontrolled UO_3 Plant stack emissions are summarized in Table VI.

TABLE VI

UO_3 Plant NO_x Emissions

	Operating Conditions[1]	
	Controlled	Uncontrolled
Flowrate, Liters/second[2]	1900	1,900
NO_x Concentration, ppm	3000	42,000

[1] Controlled emissions assume an overall plant NO_x recovery efficiency of 95 percent.

[2] Assumed off-gas conditions: 1 atmosphere and 30°C.

Total annual UO_3 Plant NO_x emissions will depend upon the Purex Plant production schedule. Table VII lists controlled and uncontrolled annual emissions from the UO_3 Plant assuming the present projected processing schedule.

TABLE VII

Annual UO_3 Plant NO_x Emissions

Calender Year	Uranium Processed, Metric Tons	Annual NO_x Emissions,[1] in Metric Tons of NO_2	
		Controlled Conditions	Uncontrolled Conditions
1982	686	13	266
1983	1,372	26	532
1984	680	13	266

[1] Controlled emissions assume an overall plant NO_x recovery efficiency of 95 percent.

The impact of UO_3 Plant NO_x emissions will be estimated assuming a stack effluent of 1,900 liters per second containing 3,000 ppm NO_x for a duration of 30 days per year. Observations by operating personnel indicate that the resultant plume opacity will exceed the State and local opacity standard.

Power Plants

Two coal burning power plants, one located in each of the 200 areas, produce process steam for the Purex and UO_3 Plants. The east area powerhouse provides steam to the Purex Plant while the west area powerhouse supplies the UO_3 Plant. Annual and instantaneous emissions from the power plants, with and without the reprocessing facilities operating, are listed in Table VIII. By fiscal year 1981, pollution abatement scrubbers are proposed to be in operation, reducing particulate and sulfur oxide emissions from the power plant stacks. No significant changes in the rate of powerhouse NO_x emissions are expected after installation of the new equipment. The impact of power plant NO_x emissions on the ambient air quality is predicted by assuming an incremental increase in the powerhouse NO_x emission rate of 35 ppm NO_x at a flowrate of 69,800 liters per second for 365 days per year. Since the major component of powerhouse NO_x emissions is in the form of colorless nitric oxide, changes in the powerhouse NO_x emission rates will not affect the opacity of powerhouse plumes.

9413149.0061

TABLE VIII

Power Plant NO_x Emissions

	Annual Coal Consumption, Metric Tons	Off-Gas[1] Flowrate, Liters/Second	NO_x Concentration, PPM	Total Annual NO_x Emissions, Metric Tons
Reprocessing Facilities not[2] Operating	93,000	69,800	375	700
Reprocessing Facilities Operating	100,000	69,800	410	760

[1] Combines off-gases from both east and west powerhouses. Assumed off-gas conditions: 1 atmosphere and 200°C.

[2] Annual average of 1977 and 1978.

9413149.0062

IMPACT OF 200 AREA NO_x EMISSIONS ON THE AMBIENT AIR QUALITY

OCCUPATIONAL AREAS

Nitrogen dioxide (NO_2) concentrations in the air near the Purex Plant were measured during February, 1968 through June, 1968 by Battelle Pacific Northwest Laboratories[3] while the plant was operating. NO_x in ambient air is measured as NO_2 since this is the predominant form found under ambient conditions ($2\ NO + O_2 \rightarrow 2\ NO_2$, at ambient temperatures). Measurements were obtained from three separate locations: 1) A site approximately one mile southeast of the Purex Plant, 2) a site at the southeast corner of the 200 East Area, and 3) a site directly east of Purex. The sample locations are illustrated in Figure 8. A wind rose, typical of the Hanford Reservation, is included to demonstrate the sample locations with respect to the predominant winds. Sources, besides Purex, which influence NO_x concentrations at these locations are the AR Vault and the East Area powerhouse.

During the four and one-half month study, background levels of 0.012 part per million (ppm) NO_2 were observed 90 percent of the time. Levels above background never exceeded 0.27 ppm. These concentrations fall well below the occupational Threshold Limit Value (TLV) for an eight-hour day of 5.0 ppm. NO_x emissions, following the resumption of fuel reprocessing in the 200 Areas, are expected to remain at those levels experienced during previous operating periods. Therefore, NO_x concentrations in the vicinity of processing facilities are expected to be similar to those previously reported near Purex.

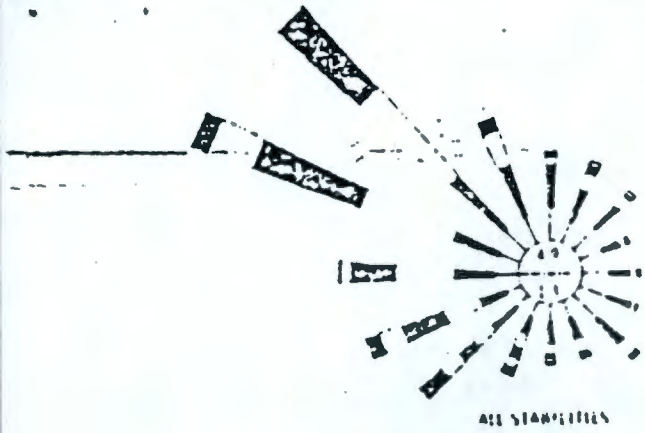

Typical Hanford Wind Rose

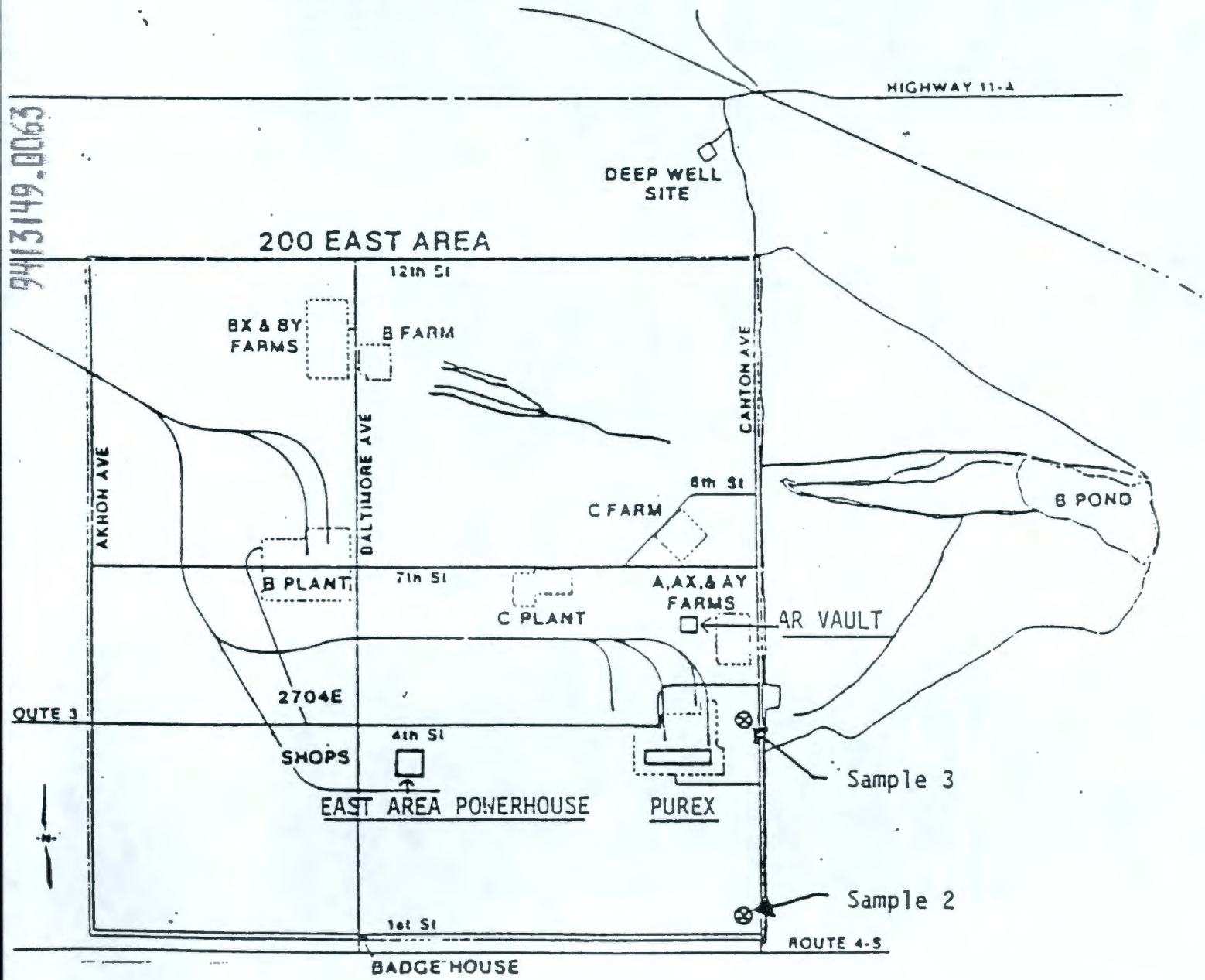

Figure 8
Ambient Air Monitoring Site Locations Near The Purex Plant, February to June, 1968.

9413149.0063

Studies on the effect of low concentrations of NO_x on human health have not agreed upon a specific concentration at which adverse effects occur. Findings of the World Health Organization (WHO) indicate that increases in respiratory illness result from intermittent exposures of 0.47 ppm NO_2. This concentration was selected by WHO as the lowest NO_2 concentration at which adverse health effects might be expected (4). The American Lung Association (ALA) report change in ventilatory function and increase in respiratory illness occur at concentrations as low as 0.15 ppm NO_2 (5). Further studies indicate that no association exists between continual exposure to ambient NO_2 concentrations, ranging from 0.053 ppm to 0.30 ppm, and increases in respiratory diseases (6).

NO_x concentrations in the vicinity of the Purex Plant during past operations did not result in any noticeable adverse health effects on workers. Similarly, future NO_x concentrations near Purex due to operations are not expected to pose any significant health hazards.

9413149.0064

NONOCCUPATIONAL AREAS

Past Measurements

Offsite ambient air NO_x concentrations (measured as NO_2) have been determined and reported quarterly by the Hanford Environmental Health Foundation (HEHF). Ambient air measurements were made both while Purex was operating (1969, 70, 71, and 72) and during the years following its shutdown (1973, 74, and 75). Several sampling locations were located opposite the project boundary in the predominantly downwind direction from Purex (see Figure 9). A wind rose demonstrates the relationship between the sampling locations and the predominant wind conditions.

The quarterly average concentrations reported by HEHF are illustrated in Table IX (7). Only the Richland, North Richland, and 300 Area locations were sampled throughout the period of interest.

The annual average concentrations were calculated from the quarterly averages and are presented in Table X. Annual averages ranged from 0.0076 ppm to 0.0016 ppm, all well below the national ambient air standard for NO_2 of 0.05 ppm, annual arithmetic mean. A comparison of annual averages for the individual sites during and following Purex operations yields no trends or significant differences, demonstrating that Purex operations had no measureable influence on offsite concentrations.

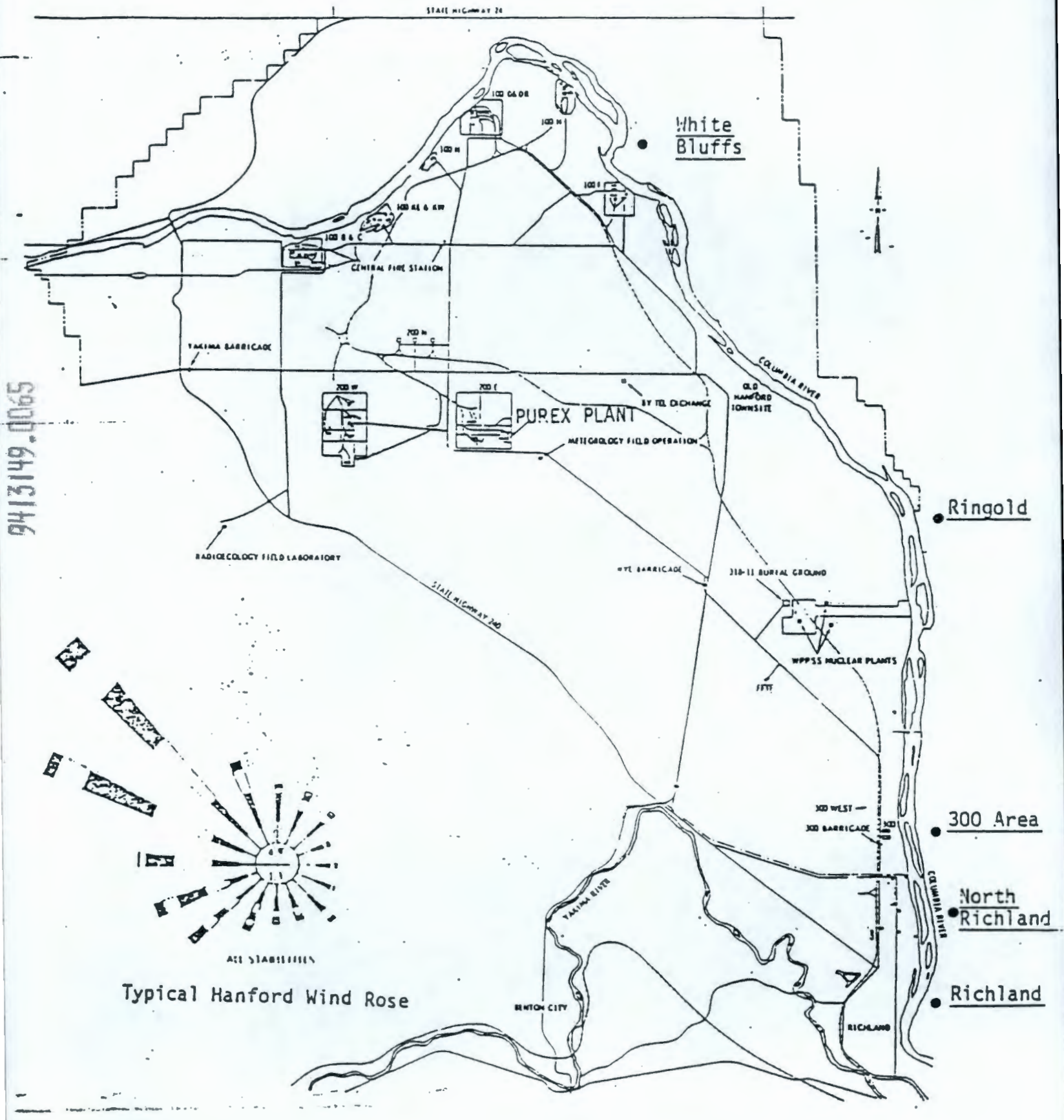

9413149.0065

Figure 9.

Hanford Area Ambient Air Monitoring Sites, 1969 to 1975.

TABLE IX

Quarterly Average NO_2 Concentrations, ppm[1]

Date	Opposite Richland[2]	Opposite N. Richland[2]	Opposite 300 Area	Ringold[3]	White Bluffs[3]
During Operations					
1969 1st Qtr.	-	-	0.0020	0.0017	0.0017
2nd Qtr.	-	-	0.0013	0.0018	0.0016
3rd Qtr.	-	-	-	-	-
4th Qtr.	-	-	< 0.0023	< 0.0024	0.0015
1970 1st Qtr.	0.0036	0.0052	0.0020	< 0.0020	0.0014
2nd Qtr.	0.0026	0.0028	0.0020	0.0020	0.0027
3rd Qtr.	0.0130	0.0100	0.0070	0.0090	0.0100
4th Qtr.	0.0090	0.0080	0.0080	0.0080	0.0070
1971 1st Qtr.	0.0070	0.0050	0.0060	0.0060	0.0060
2nd Qtr.	0.0030	0.0030	0.0040	0.0050	0.0050
3rd Qtr.	0.0070	0.0080	0.0090	0.0100	0.0090
4th Qtr.	0.0040	0.0030	0.0040	0.0040	0.0040
1972 1st Qtr.	< 0.0050	< 0.0020	< 0.0010	< 0.0030	< 0.0010
2nd Qtr.	0.0050	0.0020	0.0030	0.0020	0.0040
3rd Qtr.	0.0060	0.0060	0.0050	0.0050	-
4th Qtr.	0.0090	0.0060	0.0060	0.0070	-
Following Operations					
1973 1st Qtr.	0.0037	0.0055	0.0050	0.0100	-
2nd Qtr.	0.0070	0.0060	0.0050	0.0060	-
3rd Qtr.	0.0090	0.0110	0.0120	0.0050	-
4th Qtr.	-	0.0080	0.0060	-	-
1974 1st Qtr.	0.0040	0.0040	0.0030	-	-
2nd Qtr.	-	0.0050	0.0060	-	-
3rd Qtr.	0.0070	0.0070	0.0050	-	-
4th Qtr.	0.0050	0.0060	0.0050	-	-
1975 1st Qtr.	0.0030	0.0040	0.0030	-	-
2nd Qtr.	0.0030	0.0030	0.0030	-	-
3rd Qtr.	0.0050	0.0050	0.0040	-	-
4th Qtr.	0.0050	0.0050	0.0040	-	-

[1] Detection level of 0.001 ppm

[2] Sampling initiated 1970

[3] Sampling discontinued 1973

\- Indicates no sample taken

9413149.0066

TABLE X

Annual Average NO_2 Concentrations, ppm

Year	Opposite Richland	Opposite N. Richland	Opposite 300 Area	Ringold	White Bluffs
1969	-	-	0.0019	0.0020	0.0016
1970	0.0070	0.0065	0.0048	0.0053	0.0053
1971	0.0053	0.0048	0.0058	0.0063	0.0060
1972	0.0063	0.0040	0.0038	0.0043	0.0025
1973	0.0066	0.0076	0.0070	0.0070	-
1974	0.0053	0.0055	0.0048	-	-
1975	0.0040	0.0043	0.0035	-	-

9413149.0067

Recent Measurements

The collection and analysis of ambient air samples for NO_x concentrations was discontinued in 1975 since it appeared that no measureable changes were occurring over the years. During July 1978, in conjunction with the Purex preoperational surveillance program, the measurement of ambient NO_x concentrations was reinitiated. Figure 10 shows the sampling locations chosen to best evaluate the environment around Purex prior to and following its start-up. Average NO_2 concentrations (ppm) observed at these locations during July 1978 through August 1978 are given in Table XI below:

TABLE XI

Average 200 Area Ambient Air NO_x Concentrations, July and August, 1978 (1)

Monitoring Site Location	Average Ambient NO_x Concentration, ppm
Sullivan Barn	<0.005
ALE Laboratory	<0.004
Rattlesnake Springs	<0.004
100-B Area	<0.004
100-D Area	<0.003
615 Building	<0.004
Army Barracks	<0.004
FFTF	<0.004

(1) Detection level = 0.003 ppm

Average concentrations are reported as "less than" values since some of the individual samples taken during this time period were below the instrument detection level and were reported as "less than" numbers. All the recently determined average concentrations range between <0.003 ppm and 0.005 ppm. These concentrations fall within the range of concentrations reported during 1969 through 1975.

Predicted Incremental Impact of Reprocessing Operations

The atmospheric dispersion of pollutants is commonly described mathematically by a normal distribution model. Dispersion coefficients explaining the lateral and vertical diffusion of the plume are estimated using one of several methods. Using the following model, ground level concentrations for various locations can be predicted.

$$x = \frac{Q}{\pi \sigma_y \sigma_z u} \exp\left[-\frac{y^2}{2\sigma_y^2} - \frac{h^2}{2\sigma_z^2}\right]$$

where,

x = ground level concentration, ppm

Q = source strength, ppm (^{m3}/sec)

π = pi, 3.1416

y = crosswind distance measured horizontally from centerline of cloud, m

σ_y = crosswind lateral standard deviation of cloud concentration, m

σ_z = crosswind vertical standard deviation of cloud concentration, m

u = wind speed in direction of travel, ^{m}/sec

h = height of release, m

from: Air Pollution Control, Environmental Science and Technology, Wiley-Interscience, 1971. (8)

Assuming that we are interested only in centerline concentrations and that the stack height is the effective plume height, both worst case assumptions, the dispersion model equation is further simplified to:

$$x = \frac{Q}{\pi \sigma_y \sigma_z u} \exp\left[-\frac{h^2}{2\sigma_z^2}\right]$$

Using the above model with dispersion coefficients derived from Pasquill's curves (8), ground level concentrations were predicted for six locations around the Hanford Reservation. These locations are: (see Figure 10 for map)

9413149.0068

1) Opposite 300 Area
2) Opposite Richland
3) ALE - Rattlesnake Mountain
4) Yakima Barricade
5) White Bluffs
6) Ringold

In determining the theoretical NO_x concentrations due to Purex operations at these locations, several assumptions were made. Where practical, worst case conditions were assumed in order to ensure that conservative values were predicted. That is, predicted values should be higher than actually observed in the field. These assumptions are listed below:

- effective plume height equals stack height
- interested only in centerline concentrations
- constant emission rates from stack

Once concentrations were predicted for a source over all the atmospheric stability categories, an average concentration was calculated using the percentage of time each stability generally exists per year over the Hanford Reservation. Next, the annual contribution to a certain location was calculated based on what percentage of time the general wind direction is towards the site of concern. Finally, the annual contribution of NO_x to the annual average ambient concentration at each location was further reduced based on the amount of time the various plants were actually operating during the year.

Results of the predescribed calculations are reported in Table XII for those facilities with NO_x emissions which are attributable to the startup and operation of Purex.

TABLE XII

Predicted Incremental Contributions to Non-Occupational Ambient Air NO_x Concentrations, ppm

	Purex	UO_3 Plant	Powerhouse	AR Vault
Opposite 300 Area	0.0010	0.0001	0.0005	negligible
Opposite Richland	0.0010	0.0001	0.0005	"
ALE - Rattlesnake Mtn.	0.0010	0.0001	0.0004	"
Yakima Barricade	0.0008	0.0001	0.0004	"
White Bluffs	0.0008	0.0001	0.0003	"
Ringold	0.0010	0.0001	0.0005	"

9413149.0069

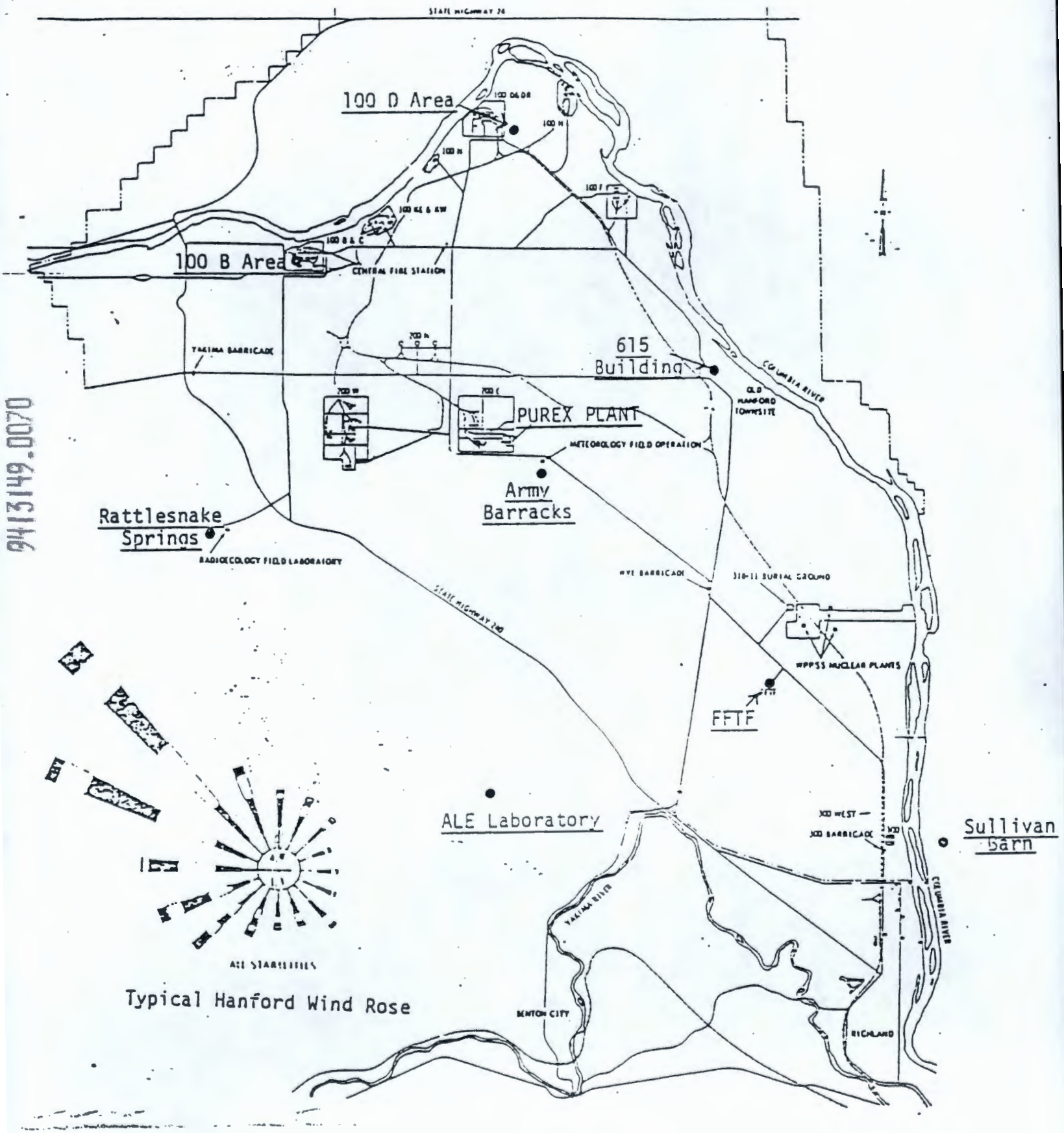

FIGURE 10

Hanford Area Ambient Air Sampling Sites,
July and August 1978

NO_x emissions from the AR Vault are considered negligible since calculations showed concentrations at the site boundary of 1.0×10^{-6} ppm or less. The total effect of the 200 Area NO_x emissions on the offsite ambient air quality was calculated by combining all the sources for each given location. (see Table XIII).

TABLE XIII

Hanford Reprocessing Facilities Contribution to Non-Occupational Ambient Air NO_x Concentrations

Monitoring Site Location	Ambient NO_x Concentration, ppm
Opposite 300 Area	0.002
Opposite Richland	0.002
ALE - Rattlesnake Mtn.	0.002
Yakima Barricade	0.001
White Bluffs	0.001
Ringold	0.002

Based on the theoretical calculations, the largest increase to the offsite ambient air NO_x concentration is 0.002 ppm on an annual average basis. Present ambient air NO_x concentration levels are less than 0.004 ppm. Therefore, the non-occupational ambient air NO_x concentration will not be increased to significant levels by reprocessing operations in the Hanford 200 Areas.

9413149.0071

REFERENCES

1. Weir, A., "Clearing the Opacity Issue", Environmental Science and Technology, Volume 11, Number 6, pp. 561-563, June 1977.

2. Federal Laws, Environmental Reporter, "Clean Air Act - Part C", pp. 71:1134-71:1142.

3. BNWL-CC-1887, "Nitrogen Dioxide Concentrations in Ambient Air Near Purex February 1968 through June 1968", October 21, 1968.

4. Environment Reporter, Volume 8, Number 41, page 1558, February 10, 1978.

5. Environment Reporter, Volume 9, Number 13, page 1872, July 28, 1978.

6. Medical and Biologic Effects of Environmental Pollutants - Nitrogen Oxides, National Academy of Sciences, 1977.

7. Quarterly Reports, "Chemical and Biological Pollution Surveillance of the Hanford Environs", Hanford Environmental Health Foundation.

8. Air Pollution Control, Environmental Science and Technology, Wiley-Interscience, 1971.

9413149.0072

CORRESPONDENCE DISTRIBUTION COVERSHEET

Author	Addressee	Correspondence No.
J. E. Rasmussen, RL (J. J. Luke, WHC)	Ann Pontius, EPA	Incoming:9307041 XRef:9355592D

Subject: REQUEST FOR CONCURRENCE WITH INTERPRETATION OF APPLICABILITY OF PERMIT PSD-X80-14 TO DEACTIVATION OF PUREX PLANT

INTERNAL DISTRIBUTION

Approval	Date	Name	Location	w/att
		Correspondence Control	A3-01	
		J. A. Bates	H6-22	
		R. C. Bowman	H6-24	
		R. W. Brown	H6-30	
		R. H. Engelmann	H6-26	
		G. W. Jackson, Assignee	H6-21	
		R. J. Landon	H6-21	
		G. J. LeBaron	S6-19	
		R. E. Lerch	B3-63	
		J. J. Luke	H6-25	
		P. J. Mackey	B3-15	
		H. E. McGuire, Level 1	B3-63	
		J. C. Midgett	N2-51	
		J. M. Nickels	H6-22	
		W. A. Peiffer	S6-18	
		S. M. Price	H6-23	
		R. C. Roal	S6-17	
		F. A. Ruck	H6-23	
		J. R. Robertson	H6-30	
		D. J. Washenfelder	S6-18	
		EPIC	H6-08	
		JJL/File/LB	H6-25	

9413149.0073