START

Bin - 1315 0016017
Box - 105778

UNCLASSIFIED

UNITED NUCLEAR INDUSTRIES, INC.
A SUBSIDIARY OF UNITED NUCLEAR CORPORATION

PREPARED FOR THE
UNITED STATES DEPARTMENT OF ENERGY
UNDER CONTRACT NUMBER EY-76-C-06-1857

Document No. UNI-1001

Date March 13, 1978 Copy No. 24

Title
PRODUCTION REACTOR DECOMMISSIONING STUDY
100-F SITE AND FACILITIES DESCRIPTION

RECORD CENTER FILE

REFERENCE COPY
RECEIVED
MAR 13 1978
TO
UNITED NUCLEAR INDUSTRIES, INC.
DOCUMENT CONTROL CENTER

Author
PLANNING DIVISION

Subject Index

DISTRIBUTION

NAME	BLDG.	NAME	BLDG.	NAME	BLDG.
1. R.W. Ramsey-DOE/Wash					
2. R.W. Ramsey-DOE/Wash					
3. W.S. Scheib-DOE/Wash					
4. O.J. Elgert-DOE/RL					
5. O.J. Elgert-DOE/RL					
6. O.J. Elgert-DOE/RL					
7. G.O. Amy	Fed.				
8. L.V. Barker	1104-N				
9. T.E. Dabrowski	1105-N				
10. R.E. Dunn	1101-N				
11. J.W. Jones	313				
12. A.K. Koochi	313				
13. D.S. Lewis	1101-N				
14. A.R. Maguire	313				
15. W.M. Mathis	Fed.				
16. N.R. Miller	1101-N				
17. J.F. Nemec	Fed.				
18. E.A. Powers	313				
19. P. Robinson	313				
20. J. Toombs	313				
21. R.K. Wahlen	1720-K				
22. E.A. Wegener	313				
23. UNI File					
24. UNI Record					
25-34 Extra					

BEST AVAILABLE COPY

SEP 1981 RECEIVED EDMC

ROUTE TO	PAYROLL NO.	LOCATION	FILES ROUTE DATE	SIGNATURE AND DATE
UNI RECORD				

UNCLASSIFIED

BM-5100-184 (10-77)

CONTENTS

		Page
	DISTRIBUTION	i
	LIST OF FIGURES	v
	LIST OF TABLES	vi
	INTRODUCTION	1
1.0	100-F AREA SITE	2
2.0	105-F REACTOR BUILDING	6
	2.1 Description	6
	2.1.1 105-F Reactor A. Graphite Stack B. Thermal Shield C. Biological Shields	6
	2.1.2 Reactor Inlet Water Piping	12
	2.1.3 Process Tube Assembly	13
	2.1.4 Reactor Outlet Piping	15
	2.1.5 Reactivity Control System A. Horizontal Control Rod System B. Vertical Safety Rods C. Ball 3X Safety System	16
	2.1.6 Fuel Handling and Storage Systems A. Front and Rear Work Platforms B. Fuel Storage Basin and Transfer Area	20
	2.1.7 Reactor Recirculating Gas System	23
	2.1.8 Ventilation and Exhaust System	24
	2.1.9 Control Room	26
	2.1.10 Gamma Monitor System	26
	2.2 Radiation and Contamination Levels	27
	2.2.1 105-F Reactor	27
	2.2.2 Reactor Inlet Coolant Piping	28
	2.2.3 Process Tube Assembly	29
	2.2.4 Reactor Outlet Coolant Piping	30
	2.2.5 Reactor Reactivity Control A. Horizontal Control Rod System B. Vertical Safety Rod System C. Ball 3X Safety System	30

CONTENTS (cont.)

		Page
	2.2.6 Fuel Handling and Storage Systems A. Front Work Platform and Work Area B. Rear Work Platform and Discharge Area C. Storage and Transfer Area	32
	2.2.7 Reactor Recirculating Gas System	34
	2.2.8 Ventilation and Exhaust System	34
	2.2.9 Reactor Control Room	35
	2.2.10 Gamma Monitor System	35
	2.3 Reference Drawings	35
3.0	EFFLUENT WATER SYSTEM	65
	3.1 Effluent Water System - Effluent Lines, 107-F Retention Basin, 1904-F Outfall and 107-F Liquid Waste Disposal Trench	65
	3.1.1 General Description	65
	3.1.2 Effluent Lines	66
	3.1.3 107-F Retention Basin	66
	3.1.4 107-F Discharge Line	67
	3.1.5 Outfall Structure (1904-F), River Discharge Lines and Spillway	67
	3.1.6 107-F Liquid Waste Disposal Trench	68
	3.2 Radiation and Contamination Levels	68
	3.3 Reference Drawings	70
4.0	108-F BUILDING - BIOLOGICAL LABORATORY	77
	4.1 Description	77
	4.2 Radiation and Contamination Levels	78
	4.3 Reference Drawings	78
5.0	115-F BUILDING - REACTOR GAS RECIRCULATION BUILDING	89
	5.1 Description	89
	5.2 Radiation and Contamination Levels	91
	5.3 Reference Drawings	91

CONTENTS (Cont.)

		Page
6.0	117-F FILTER BUILDING - UNDERGROUND DUCTS, AND 105-F EXHAUST STACK (116-F BLDG.)	96
	6.1 General Description	96
	6.1.1 117-F Building	96
	6.1.2 Inlet and Exhaust Air Ducts	96
	6.1.3 Exhaust Stack (116-F Buildings)	97
7.0	141-C BUILDING - LARGE ANIMAL BARN AND BIOLOGY LABORATORY	108
	7.1 Description	108
	7.2 Radiation and Contamination Levels	108
	7.3 Reference Drawings	108
8.0	1608-F BUILDING	110
	8.1 Description	110
	8.2 Radiation and Contamination Levels	110
	8.3 Reference Drawings	111
9.0	100-F BURIAL GROUNDS, CRIBS, AND TRENCHES	113
	9.1 Introduction	113
	9.1.1 Burial Ground No. 1	113
	9.1.2 Burial Ground No. 2	114
	9.1.3 Burial Ground No. 3	114
	9.1.4 Burial Pit - 115-F	115
	9.1.5 Sawdust Burial Grounds	115
	9.1.6 Solid Waste Burial Grounds	115
	9.1.7 Lewis Canal	116
	9.1.8 105-F Storage Basin Trench	116
	9.1.9 105-F Pluto Crib	117
	9.1.10 1608-F Liquid Waste Disposal Trench	117
	9.1.11 117-F Crib	117
	9.1.12 Animal Waste Leaching Trench	118
	9.1.13 Ball Washer Crib	118
	9.2 Radiation and Contamination Levels	118
	9.3 Reference Drawings	119

9112221215

LIST OF FIGURES

		Page
1.1-1	100-F Pre-Decommissioning	4
1.1-2	100-F Current Status	5
2.1-1	105-F Reactor Building	39
2.1-2	105-F Ground Floor Plan of Building	40
2.1-3	105-F Reactor - Graphite Stacking	41
2.1-4	105-F External Isometric View of Graphite Assembly	42
2.1-5	105-F Isometric View of Graphite Assembly	43
2.1-6	105-F Sectional View of Reactor From Discharge End	44
2.1-7	105-F Sectional View of Reactor From Top	45
2.1-8	105-F Sectional View of Reactor From Control Rod Side	46
2.1-9	105-F Reactor - Front and Rear Thermal and Biological Shields - Cross Section	47
2.1-10	105-F Valve Pit (Partially Dismantled)	48
2.1-11	105-F Valve Pit to Inlet Nozzle Coolant Piping	49
2.1-12	105-F Reactor - Process Tube Cross Section	50
2.1-13	105-F Process Tube Channel Cross Section	51
2.1-14	105-F Reactor - Inlet Nozzle Assembly Cross Section	52
2.1-15	105-F Inlet and Outlet Nozzle and Connector Assembly	53
2.1-16	105-F Reactor - Outlet Coolant Piping	54
2.1-17	105-F Reactor - Charge/Discharge Facilities	55
2.1-18	105-F Reactor - Horizontal Control Rod	56
2.1-19	HCR - Layout and Cross Section	57
2.1-20	105-F Inner Rod Room	58
2.1-21	105-F Outer Rod Room	59
2.1-22	105-F Top of Unit VSR Pattern	60
2.1-23	105-F Ball 3X Safety System - Hopper Stop Plug Assembly	61
2.1-24	105-F Ball 3X Safety System Ball Hopper Assembly	62
2.1-25	105-F Ventilation and Exhaust System Flow Diagram	63
2.1-26	105-F Steam-Driven Supply Fan	64
3.1-1	100-F Effluent Water System	71
3.1-2	100-F North Effluent Line 60-inch Diameter	72
3.1-3	100-F South Effluent Line 42-inch Diameter	73

LIST OF FIGURES (Cont.)

		Page
3.1-4	100-F Effluent Line Entry 107 Retention Basin	74
3.1-5	1904-F Outfall Structure	75
3.1-6	107-F Retention Basin Dirt Fill	76
4.1-1	108-F Building - Biological Laboratory	79
4.1-2	108-F Building - Biology Laboratory	80
4.1-3	108-F Building - Typical Laboratory and Hood Installation	81
4.1-4A	108-B Radiation Survey Report	82
4.1-4B	108-B Radiation Survey Report	83
4.1-4C	108-B Radiation Survey Report	84
4.1-4D	108-B Radiation Survey Report	85
4.1-4E	108-B Radiation Survey Report	86
4.1-4G	108-B Radiation Survey Report	87
5.1-1	105-F Reactor - Gas Flow Diagram	93
5.1-2	115-F Building - South Side - East End	94
5.1-3	115-F Building - North Side - East End	95
6.1-1	105-F Reactor - Confinement Flow Diagram	101
6.1-2	117-F Building - Above Grade Structure	102
6.1-3	105-B Building - Confinement System Layout	103
6.1-4	117-F Filter Building Piping Arrangement	104
6.1-5	117-F - Confinement Filter Building	105
6.1-6	117-F - Confinement Filger Building	106
6.1-7	117-F Typical Filter Bank Arrangement	107
7.1-1	100-F Area - 141-C Building	109
8.1-1	1608-F Building - Waste Water Pump House	112
9.1-1	100-F - Burial Grounds	120
9.1-2	100-F - Cribs and Trenches	121

LIST OF TABLES

I	Radiation and Contamination Levels - August, 1976	91

100-F AREA

DESCRIPTION OF AREA SITE AND CONTAMINATED FACILITIES

Introduction

This document presents a brief description of the 100-F Area site as well as the contaminated and potentially contaminated facilities which remain in the area. These facilities are included in the demonstration project beginning in FY 1979 to decommission the 100-F production reactor site. The facilities described contain varying amounts of radioactive materials ranging from the extreme case of the 105-F reactor itself to the rather minor contamination found in the 1904-F outfall structure. The descriptions are intended to provide personnel who are both directly and indirectly interested in the project, with sufficient background information regarding the past usage, construction and current status of the facilities to permit them to properly evaluate the scope and complexity of the problems which may be encountered.

It should be noted that no estimate of the radionuclide inventory and concentration contained within the 100-F facilities is included here. The gathering of this information is the subject of a study being conducted by the Environmental and Radiological Control Section, UNI. The results of their findings is scheduled for publication in March, 1978.

1.0 100-F AREA SITE

1.1 Description

The 100-F Area is located within the Hanford Reservation on the south bank of the Columbia River approximately 30 river miles (48.3 km) upstream of the City of Richland, about 20 miles by road (32.3 km), in the southeastern corner of the State of Washington. Of the six reactor sites included within the Hanford Reservation, the 100-F site is the furthest downstream. The complex was built during World War II as a weapons grade plutonium production facility with the 105-F reactor being the actual production machine. The reactor is a graphite moderated,water cooled, single pass type that used aluminum clad solid uranium fuel elements which were contained in aluminum process tubes within the reactor. The coolant was also contained in the process tubes. The 105-F reactor was in production from 1945 to 1965 when it was permanently retired from service. In the intervening years, many of the uncontaminated buildings have been removed in junction with a site cleanup program. Today, only the 105-F Building (which contains the reactor), several reactor related buildings and facilities, and two buildings which were used as biology laboratories for the study of the effects of radiation on local plant and animal life, remain on the site. Several burial sites, which contain contaminated materials, also remain within the area. The removal of the radioactive and contaminated equipment and materials from these buildings, the decontamination of the buildings, the demolition of the buildings and the ultimate release of the site for controlled industrial use and public access after a final radiation and contamination survey, will complete the decommissioning of the 100-F site.

Figure 1.1-1 shows 100-F Area almost as it was prior to the start of the site cleanup program - one building, the Power House (184-F) had been previously removed. Figure 1.1-2 illustrates the current status of the area. The 107-F Retention Basin, 1904-F Outfall structure and 107-F Liquid Waste Disposal Trench are included in the area, but do not show in the photographs.

Due to the contaminated status of some of the facilities and the relatively large quantities of radioactivity remaining in several locations, the site requires close surveillance and control to insure that only properly authorized personnel are permitted to work within the area. The current radiological condition of the site is well defined and the contaminated areas are either marked with warning signs (ie., areas within a building) or have been stabilized to insure that the contamination will not spread (ie., an outside trench or basin). As a result, personnel can move freely about the site, observing special precautions only when entering specifically designated locations.

The status of the specific buildings and facilities remaining on the 100-F site is included in the description of the individual buildings.

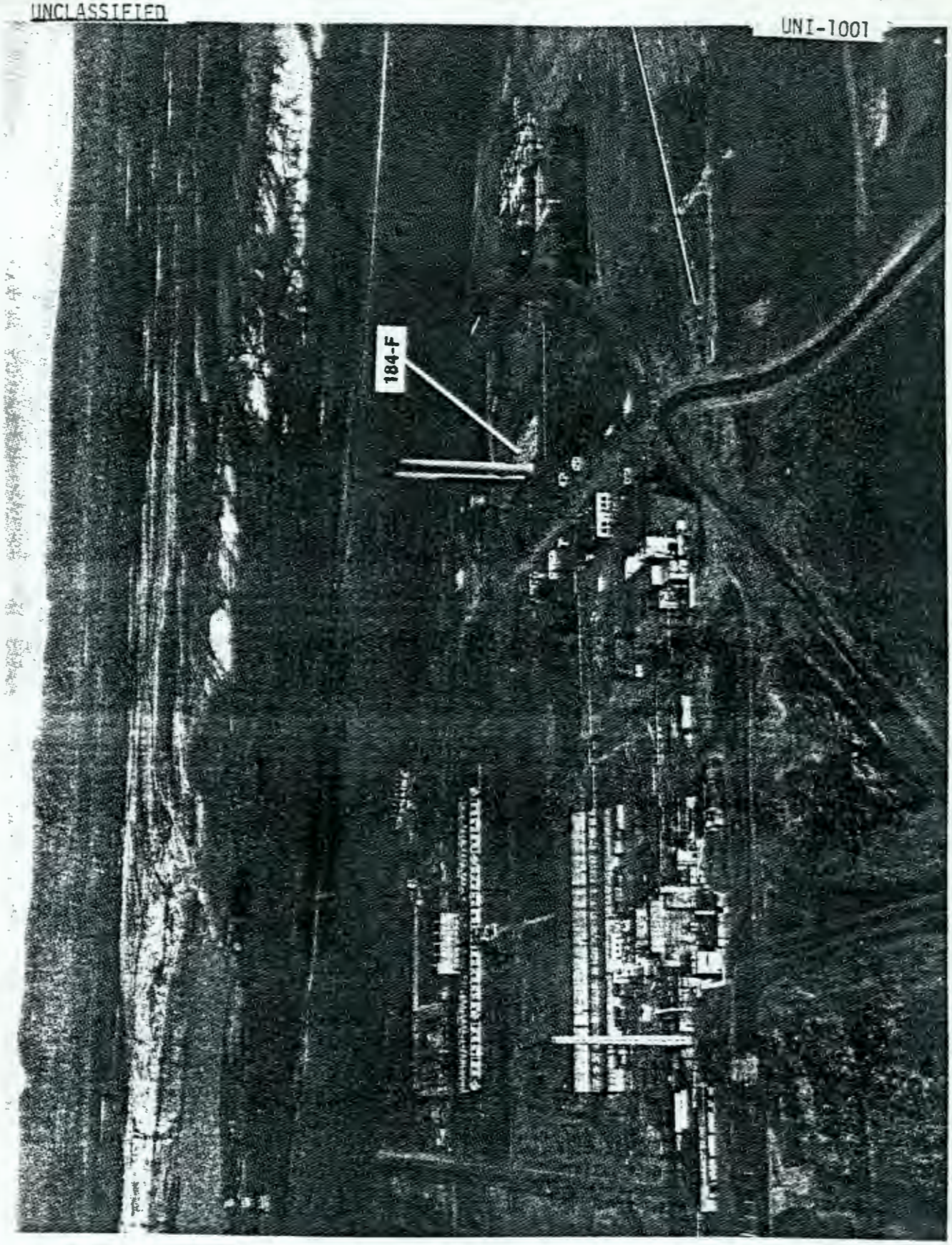

100-F Pre-Decommissioning

Figure 1.1-1

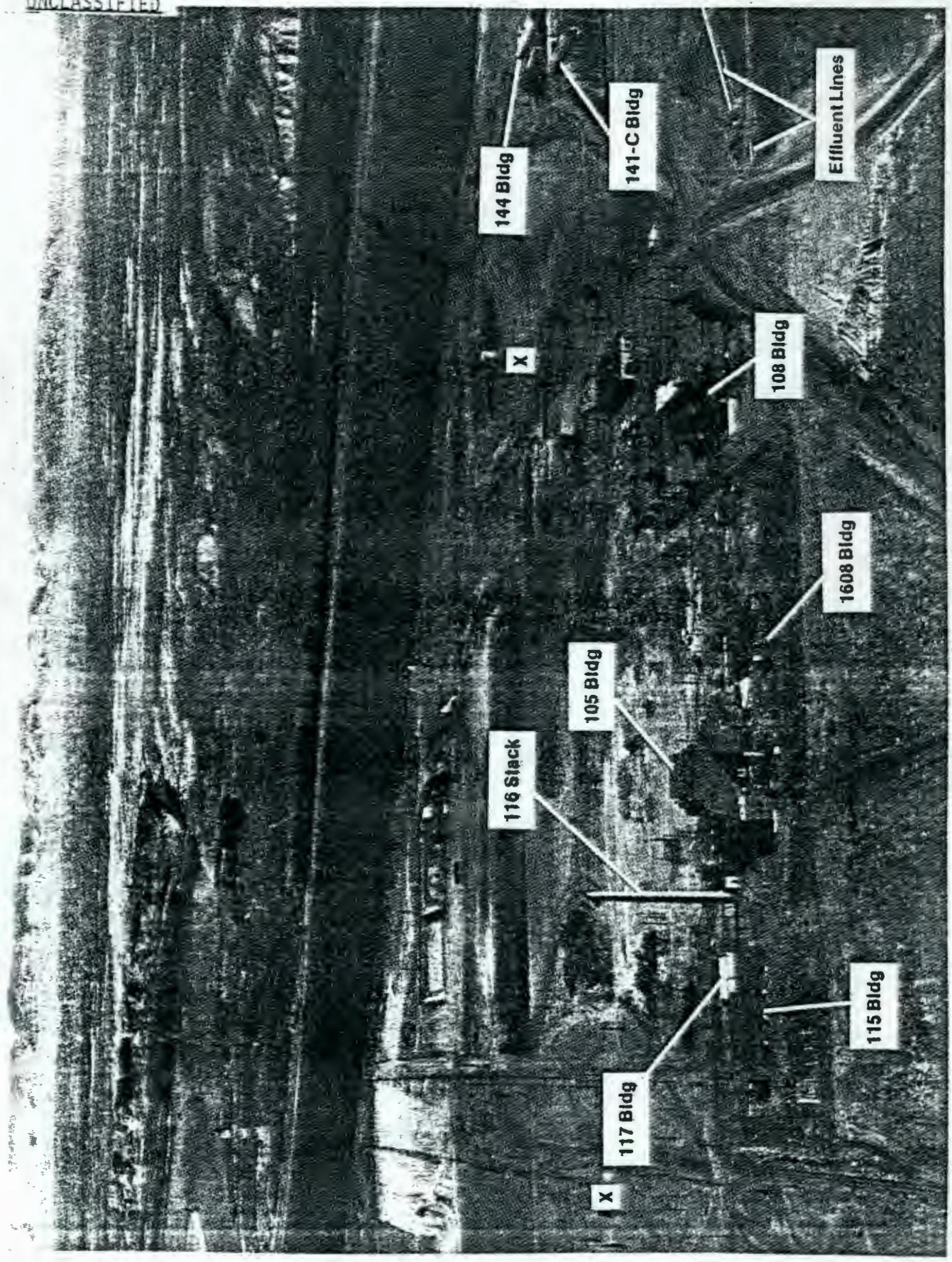

100-F Current Status

Figure 1.1-2

2.0 105-F REACTOR BUILDING

2.1 Introduction

The 105-F Building is a light, nonairtight industrial structure of reinforced concrete, 3-5 feet thick (.9-1.5 m), in the lower portion while the upper portions are concrete block topped with a precast concrete tile and reinforced concrete roof.

The reactor building contains the 105-F reactor; the reactor control room; a spent fuel discharge pool, fuel storage basin and associated fuel handling equipment; fans and ducts for the ventilation and containment systems; and supporting offices, shops and laboratories. See Figure 2.1-1 for a cutaway of the reactor building. Figure 2.1-2 shows the ground floor plan of the 105 Building.

2.1.1 105-F Reactor

The 105-F reactor includes the main components listed below:

- The reactor moderator stack; an assembly of graphite blocks some of which are cored to provide channels for the process tubes, control and safety rods and other equipment.

- Aluminum process tubes which held the aluminum clad uranium metal fuel elements and provided channels for cooling water.

- Control and safety rods, monitoring equipment, experimental test holes, etc.

- The cast iron thermal and laminated steel and masonite biological shields.

- A welded steel plate box which enclosed the biological shield and serves to confine the gas atmosphere within the reactor.

A. Graphite Stack

The nominal overall dimensions of the graphite moderator stack are: front to rear - 28 feet (8.5 m), top to bottom 36 feet (10.97 m), and side to side - 36 feet (10.97 m). The stack is made up of high purity graphite blocks 3-3/16 inches (8.1 cm) square by 48 inches (1.22 m) long. The graphite is stacked in layers with the long dimensions of the blocks parallel within a layer and at right angles to the long dimensions of the blocks in the adjacent layers. Block joints in the graphite layers are staggered to provide for greater stability in the stack. This staggered joint pattern is obtained by substituting shorter graphite blocks for the normal 48-inch (1.22 m) long blocks at certain locations in the layers. Figure 2.1-3 illustrates the graphite stacking configuration. The bottom graphite layer rests on a carefully leveled surface made up of cast iron blocks which are used as a thermal shield. These in turn are laid in grout on top of a massive concrete foundation prepared for the reactor. Alternate blocks in the front to rear graphite layers are pierced for process tubes, giving a total of 2004 tubes in the reactor. Process tubes are located in a square array, or lattice, with a spacing of 8-3/8 inches (21.3 cm) from center to center of the tube channels.

The criss-cross stacking arrangement of the graphite blocks results in the stack being relatively stable against mechanical distortion. In addition, the graphite blocks are further restricted from movement by keying systems in both the horizontal and vertical direction in the stack; the keys are made from the same graphite as the blocks. See Figures 2.1-4, 2.1-5, 2.1-6, 2.1-7, and 2.1-8 for isometric and sectional views of the graphite assembly.

Other penetrations in the graphite stack provide access for the following:

- The nine horizontal control rod channels penetrate the left side of the stack when facing the front face and extend through the process tube pattern in the stack. (See section on Reactivity Control.)

- Vertical Safety rod channels extend from the top to the bottom of the stack. There are 29 channels. These channels are also used for emergency shutdown of the reactor via the ball 3X system, ie., poison steel balls which drop into the channels if the VSR's fail to go in on demand. (See section on Reactivity Control.)

- Experimental test holes are located on the right side of the stack and are similar to the horizontal control rod channels. Some of the channels extend through the stack while others extend only into the core of the stack. Six test holes are provided.

- Instrument monitoring penetrations are located throughout the stack.

B. Thermal Shield

The thermal shield surrounds the graphite moderator stack on all six sides. The shield is fabricated of cast iron blocks of varying size and thickness depending upon their location on the reactor assembly.

- The bottom thermal shield blocks measure 2 feet, 2 inches (.66 m) by 2 feet, 8 inches (.81 m) by 10-1/4 inches (26.0 cm) thick (average dimension). A total of 136 blocks make up the bottom shield assembly. The blocks, each of which contains three slots for cooling tubes, are layed end-to-end

so that these slots provide a continuous channel from the front to the rear of the reactor. The cooling tubes are 3/4-inch stainless steel pipe and are leaded in the slots. The blocks rest on the concrete foundation of the reactor. They are grouted in place and provide a level base for the moderator stack.

- The top thermal shield cast iron blocks measure 2 feet, 1-1/8 inches (.64 m) by 3 feet, 8-1/2 inches (1.13m) by 8-1/2 inches (21.6 cm) thick (average dimension). A total of 144 blocks make up the top shield assembly. These blocks, like those which make up the bottom thermal shield, are slotted to receive cooling tubes, and are arranged in such a way as to provide front to rear flow of the coolant through the 3/4-inch stainless steel cooling tubes. The tubes are leaded in the slots. The top cast iron thermal shield blocks rest directly on top of the graphite moderator stack.

- The right and left side thermal shield blocks measure 2 feet, 4-1/2 inches (.72 m) by 2 feet, 11 inches (.89 m) by 8 inches (2.3 cm) thick (average dimension). There are approximately 178 blocks per side or a total of 356 blocks on both sides of the reactor. The side thermal shield blocks are stacked one on top of the other and are immediately adjacent to the inner skin plate of the side biological shield. These blocks, like the bottom and top cast iron thermal shield blocks, are slotted for cooling tubes which run from the front to the rear of the reactor. The cooling tubes, 3/4-inch stainless steel pipe, are leaded in the slots and add stability to the side thermal shield assembly.

- The inlet and outlet (or front and rear) thermal shields are identical in their construction. They are made of small cast iron blocks (as compared to the top, bottom and side shields) which, in that portion of the front and rear

reactor faces outside of the process tube pattern, are stacked on top of each other to form a solid wall, while those within the tube pattern are bored to fit over and be supported by the gunbarrel. The blocks are in contact with the graphite moderator but a spacing of 3-9/16 inches (9.1 cm) is maintained between the thermal shield blocks and the inside face of the biological shield. The average block measures 8-3/4 inches (22.2 cm) by 1 foot, 2-3/4 inches (37.5 cm) by 10-1/4 inches (26.0 cm) thick. A total of approximately 3500 individual blocks is involved in the makeup of the inlet and outlet thermal shields. No cooling tubes are installed in the front and rear shields. Cooling of the cast iron blocks is via the gunbarrel-process tube assembly as it passes through the thermal shield blocks. Figure 2.1-9 shows a sectional view of the front and rear thermal and biological shields. The bottom, side and top thermal shields are shown on Figure 2.1-6, 7 and 8.

C. Biological Shields

Surrounding the thermal shields on all sides except the bottom is a 52 inch (1.32 m) thick biological shield made up of alternate layers of steel and masonite. This shield absorbed energy radiated from the reactor which passed through the thermal shield. This energy consisted largely of fast neutrons. The neutrons are slowed to an intermediate energy level by inelastic scattering in the steel layers of the biological shield and then are moderated to thermal energy in the masonite.

The side biological shields were fabricated in place, ie., vertical steel memebers, the Tee sections, were erected and were spaced and aligned in such a manner as to form long vertical cells or channels 4 feet, 4 inches (1.32 m) deep by 4 feet (1.22 m) wide by 46 feet (14 m) high. These cells were then filled with alternate layers of steel and masonite;

six layers of each. The steel layers are made up of two 1-7/8 inch (4.76 cm) thick plates for a total thickness of 3-3/4 inches (9.53 cm). The steel plates which constitute the various layers are of different lengths and widths and are placed in such a way as to stagger the plate joints in order to avoid straight-through paths for radiation leakage. The masonite layers are 4-1/2 inches (11.4 cm) thick and again, random lengths of masonite sheets are used with staggered joints. In addition to the six steel laminations noted above, a final 2-1/2 inch (6.4 cm) thick steel plate is installed on the innermost skin of the structure.

The inlet and outlet biological shields are fabricated of the same materials and to the same dimensions, thicknesswise, as are the side shields. However, instead of being fabricated in place, the inlet and outlet shields were fabricated off-site as a series of very accurately machined blocks which were then assembled and very carefully fastened in place on the reactor. This procedure was made necessary due to the large numbers of penetrations for the process tubes (2004) which had to be built into the two faces of the reactor. These penetrations had to be very accurately located in relation to each other on the same face and also on the opposite face (and to the graphite moderator). The individual blocks are approximately 4 feet (1.22 m) square and are built with stepped sides, top and bottom so when they are stacked, no straight-through radiation path exists. One hundred thirty-two "B" blocks make up each shield. The "B" blocks are held in place by means of "tie straps" which are two 1-1/4 inch (3.17 cm) thick steel plates welded over the entire structure on both the inside and outside of the blocks. These then form the inner and outer skin of the biological shield.

Fabrication of the top biological shield is similar to that of the side shields, except that it is built horizontally. The materials, thickness and construction is the same. The top shield was installed after the graphite moderator and all internal components of the reactor were in place.

All of the biological shield corner and top joints are made in a stepside fashion to eliminate the potential for straight-through leakage. Also, all biological shield penetrations are fitted with step-plug or small and large diameter rings or donut-type assemblies which preserve the integrity of the shield. The biological shield rests directly on the concrete which forms the base or foundation of the reactor. It extends down below the lowest graphite thereby forming a skirt which prevents leakage of radiation through the sides of the concrete foundation.

The concrete base of the reactor is overlayed with steel plates which are welded to each other and to the bottom of the biological shield. While this steel is not a part of the biological shield, it does complete what amounts to a leak-tight steel box which completely encloses the reactor. Neoprene expansion joints are provided at the corners of the shield to allow for thermal expansion of the structure.

Figure 2.1-9 shows the laminated steel and masonite construction of the biological shield and Figures 2.1-6, 2.1-7, and 2.1-8 indicate its location and configuration.

2.1.2 Reactor Inlet Water Piping

The reactor cooling water enters the 105-F Building via twelve parallel 12-inch diameter lines from the 190-F Building pumps. Six of these lines supply one 36-inch diameter manifold on the right side of the 105-F valve pit and the remaining six supply a similar header on the left side of the valve pit. One 36-inch diameter pipe takes off from each of the manifolds and proceeds under the 105-F work area to the right (far) and left (near) side of the front face of the reactor where they connect to the front face risers, one 36-inch diameter riser on each side. The risers extend up the full height of the reactor.

Figure 2.1-10 is a photograph of one side of the 105-F Valve Pit showing the coolant supply lines from the 109-F Building, the 36-inch manifold and the 36-inch line to the reactor front face riser. Partial dismantlement of the valve pit pipe has already been accomplished.

Four-inch diameter crossheaders which run horizontally across the face of the reactor, are supplied with water from the risers. The crossheaders are positioned between the rows of process tubes and between the face of the reactor and the process tube nozzle flange. They rest in saddles which are affixed to the reactor face. Each crossheader is connected to both risers so water is supplied from two directions. The crossheaders are equipped with a 4-inch gate valve and strainer on each end immediately adjacent to the riser. There are 39 crossheaders which supply 46 horizontal rows of process tubes, 2004 tubes total. The water connection from the crossheader to the inlet nozzle of the process tube is made through a flexible connector which will flex as thermal expansion occurs within the piping system.

Figure 2.1-11 illustrates the Valve Pit to the process tube inlet nozzle piping.

Encircling the reactor face, just outside of the process tube pattern, is a 4-inch diameter stainless steel pipe loop (the thermal shield cooling loop) which supplies coolant to the top, bottom and side thermal shield, a total of 208 3/4-inch diameter stainless steel pipe cooling tubes. The connector between the loop header and the tubes is a pigtail-type fabricated of 1/2-inch stainless steel tubing. The thermal shield cooling loop is shown on Figure 2.1-11.

2.1.3 Process Tube Assembly

The aluminum clad solid uranium elements with which the 105-F reactor was fueled were contained in 2004 process tubes which ran from the front to the rear of the reactor through the

graphite moderator stack. A cross section of the tube is shown in Figure 2.1-12. The tubes are installed with the two ribs on the bottom (as in the illustration). These support the fuel elements and provide a passage for the coolant under the fuel pieces.

The process tube extends completely through the reactor and protrudes approximately 1 foot (.31 m) beyond the biological shields on both the front and rear face. In order to protect and support the process tube as it passes through the thermal and biological shield, a "gunbarrel" was first installed. The gunbarrel is fabricated of carbon steel and is approximately 7 feet, 8 inches (2.33 m) long with a maximum O.D. of 2.375 inches (66.0 cm). The in-reactor end of the gunbarrel extends through the cast iron thermal shield blocks and 8 inches (20.3 cm) into the first graphite block. The diameter of the bore in the graphite block is large enough to receive the end of the gunbarrel plus an 8-inch (20.3 cm) long steel sleeve into which the end of the gunbarrel fits. A steel washer approximately 3/16 inch (.48 cm) thick fits between the end of the sleeve and the graphite. The outside end of the gunbarrel extends approximately 12-3/4 inches (.32 m) beyond the face of the reactor. The process tube extends from the outside end of the front gunbarrel to the outside end of the rear gunbarrel and is mated to the gunbarrel via a "van stone" flange. The van stone flange is formed by first trimming the aluminum tube to length and then flaring the tube end back over the end of the gunbarrel.

The gunbarrel is not fastened to the biological shield. A freedom of movement is permitted to allow for thermal expansion of the process tube and/or the shield. However, the gunbarrel is keyed to the shield in order to prevent rotation of the process tube assembly. This key is located at the face of the reactor as the gunbarrel enters the biological shield. In order to obtain a gas seal at this joint of entry, a bellows with one end brazed to the reactor face and the other to the outside diameter of the gunbarrel, is installed. This permits in and out movement of the gunbarrel, but maintains a gas tight joint.

The outer end of the gunbarrel is threaded on the outside diameter to receive the "gunbarrel flange" which is fabricated of carbon steel and is 6-1/2 inches (16.5 cm) in diameter and 1-13/16 inches (4.6 cm) thick. The flange is bored to receive four 3/4-inch studs for bolting on the nozzle assembly. After the flange is screwed on to the gunbarrel, the two are maintained in position by means of a key.

The process tube nozzle (both front and rear) is an aluminum casting with machined surfaces where required. The nozzle is approximately 14 inches (.36 m) long and is bolted to the gunbarrel flange with four 3/4-inch bolts. The end of the nozzle is sealed with a removable cap.

Water is supplied to the process tube from the front face crossheader via a flexible connector. The connectors are approximately 18 inches (.46 m) long and are made up of braided steel wire lamination with a screw-type coupling on both ends. After the coolant has passed through the reactor, it exits the process tube via the rear nozzle and a connector into the rear crossheader. The rear connector is made of steel tubing formed in a typical "pig tail" shape to provide flexibility. It too has a screw-type coupling on either end.

Figure 2.1-13 illustrates the manner in which the inlet and outlet gunbarrel process tube assembly penetrates the biological and thermal shields and extends into the graphite moderator. Figure 2.1-14 is a detailed drawing of the process tube inlet nozzle while Figure 2.1-15 shows the nozzle-to-gunbarrel fastening arrangement and the nozzle-to-header connection. (Note: The inlet connector shown is not the type which is now on the reactor.)

2.1.4 Reactor Outlet Piping

The outlet cooling water piping arrangement on the rear face of the reactor is essentially a duplicate of the inlet piping arrangement. Water from the process tubes flow from the rear

nozzle, through the rear flexible connector or pigtail, into the horizontal crossheaders. The crossheaders join two vertical risers, one on each side of the reactor face. On one side the water flows upward in the riser and through a crossover line where it is joined by the water from the other riser, the total flow is then downward into the downcomer. Each crossheader is equipped with a valve on either end just before the crossheader enters the riser. The individual crossheaders are also provided with a bypass line and valve which connects them into a drain riser. By proper valving arrangement, a crossheader could be isolated from the normal effluent system and the coolant from that header be flowed directly to the effluent line. From the downcomer outlet, the water flows by gravity through the effluent system piping to the retention basin. The risers are 36-inch diameter stainless steel pipes and tie into the crossover line which is located on the face of the reactor abofe the process tube pattern and extends across the reactor face. The crossover line is of the same diameter and material as the risers but increases in size to a 42-inch diameter pipe at the downcomer approach. The single downcomer is a rectangular vessel encased in concrete, approximately 6 feet (1.8 m) by 10 feet (3.1 m) by 55 feet (16.8 m) long with baffles spaced at six foot intervals to dissipate the energy of the falling effluent water.

There is another drain system in the outlet process piping system called the crossunder line. This line is a 20-inch diameter line connected directly to the bottom of a rear riser and discharges into the effluent system. The function of the crossunder system is to remove the static water pressure in the crossheaders during shutdown when the reactor flow is reduced. Figure 2.1-16 shows the outlet piping arrangement and downcomer.

2.1.5 Reactivity Control System

Reactivity control of the 100-F reactor was maintained by independent systems: the horizontal control rods (HCR's), the vertical safety rods (VSR's) and the ball 3X safety system.

A. Horizontal Control Rod System

The HCR system had two functions; to control the reactor power level during routine operation, both equilibrium and transient, and to maintain a balanced and steady flux distribution, especially during equilibrium operation.

The reactor is equipped with nine horizontal rods all of which enter from the near or left side in a 3 by 3 pattern. Entry through the biological and thermal shield is made via a step plug arrangement which eliminates radiation leakage from the penetration. The channel in the graphite is located in a filler block layer and runs at right angles to the process tubes. Each rod is 75.5 feet (23 m) long with the tip or poison section being approximately 29.5 feet (9.0 m) in length. The tip is that portion of the HCR which actually enters the reactor and is, therefore, irradiated. The rods are water cooled. The coolant is supplied to the rear end of the rack or drive section of the rod via a hose reel, and, after having traveled the full length of the rod through one tube and returned through another, is removed by means of a second hose reel. The poison material in the tip section is boron carbide which surrounds the aluminum cooling tubes. The main body of the rod is also aluminum. The rod configuration is shown in Figure 2.1-18 and a cross section of the rod in Figure 2.1-19.

The HCR's are driven by a rack and pinion system powered by hydraulic motors which are supplied with oil at high pressure. The HCR's, the hydraulic drive system, the control system and the inlet and outlet coolant hose reels are located in two rooms on the near side of the reactor; the inner and outer rod rooms. The inner rod room butts against the biological shield of the reactor and is itself shielded with 3-foot (.91 m) thick concrete walls and 4-foot (1.2 m) thick concrete floor. The room measures 27 feet (8.2 m) by 36 feet (11 m) by 18 feet (5.5 m) high. Entry to the room is through a labyrinth. The shielding was necessary because

during reactor operation (and often during reactor shutdown), the "hot" rod tips were pulled out into the inner rod room. the room contains the heavy steel frame and tracks that support and guide the three rows of HCS's. The inner rod room was not accessible during reactor operation. The outer rod room, in addition to the steel that supports the rods and the guide tracks, contains the hydraulic drive motors, the pumps which provide the oil to the drives, the control valve rack and the inlet and outlet coolant hose reels. The inner and outer rod rooms are separated by a 2-foot (.61 m) thick concrete wall which is covered with 4 inches (10.1 cm) of steel, 2 inches (5.08 cm) on each side. The rest of the outer rod room walls are constructed of concrete block. The room measures 36 feet (11 m) by 52 feet (15.8 m) by 18 feet (5.5 m) high. The room was accessible during reactor operation.

Figure 2.1-20 is a photograph taken in the 105-F Inner Rod room showing five HCR's (under their sheetmetal covers), the side of the reactor, and the face of the step plugs through which the rods enter the biological shield. Figure 2.1-21 is a photo taken in the Outer Rod room showing three rod drive racks, the drive motors and drive pinions, the hydraulic oil piping and the wall between the Inner and Outer Rod rooms.

Emergency driving power to seven of the HCR's is supplied by hydraulic accumulators that are located in a room adjacent to the outer rod room. These consist of large steel tanks containing sand and gravel ballast which sit on top of a large diameter hydraulic cylinder. During reactor operation, the tanks or accumulators were maintained in the up position and, upon receipt of a signal that an emergency condition existed, they would drop forcing the oil from the cylinder into the rod drive system. The rods would be driven into the reactor at a speed of 30 inches (.76 m) per second. Two hydraulic pumps were provided for pumping the accumulators

to and maintaining them at the full up position. Each accumulator is mounted on an octagon shaped base measuring 6 feet, 9 inches (2.06 m) across the flats.

B. Vertical Safety Rods

The function of the vertical safety rod system (VSR) was to provide the necessary control capability to maintain the reactor (with cooling water system in operation) sub-critical even after complete xenon decay and to effect a rapid reactor shutdown under emergency conditions. The VSR's enter the reactor through the top biological and thermal shields via a step plug arrangement which limits the escape of radiation around the rod when the reactor was operating. There are 29 VSR's.

The rods are fabricated of 2-1/4-inch diameter stainless steel with a 3/16-inch wall thickness containing 1.5 to 2.0 percent boron as a reactor poisoning material. They are approximately 32 feet (9.75 m) long and are made up in sections which are joined to form the full length rod. Two types of VSR's were used, the rigid and the flexible. The flexible rod was made up of a large number of short sections which were loosely joined. This design permitted more rapid rod insertion in VSR channels having excessive graphite distortion. The VSR's are inserted or fall into vertical channels which were designed into the graphite stack to receive them.

Each of the VSR's is equipped with a winch that is used to raise and lower the rod during normal operation. The winches are located on a steel platform about 40 feet (12.2 m) directly above the top of the reactor. The winch assembly consists of an electric motor, a magnetic clutch, the winch drum and a hydraulic break plus the cable between the winch drum and the rod. When the rods were up and the proper signal

received, the magnetic break released and the rods fell into the reactor by gravity. Spring loaded shock absorbers located on top of the reactor help to break the fall of the rods.

Figure 2.1-22 is a photograph of the top of the 105-F Reactor showing the top end of the vertical rods resting on the ball hopper-bumper assembly and the VSR lifting cables.

C. Ball 3X Safety System

The ball 3X safety system was designed to provide an independent safety control system with the capacity to hold the reactor sub-critical under the most limiting conditions including water loss with the reactor xenon-free. The system requires no power supply and operates by gravity. It utilized boron steel balls approximately 3/8 inch (.95 cm) in diameter which drop into the vertical safety rod channels upon a trip of the ball 3X circuit. The balls are contained in hoppers located over each of the 29 VSR channels. Each hopper holds 925 pounds (420 kg) of balls which can run into and fill the channel in 16 seconds. The ball hopper-step plug assembly is shown in Figure 2.1-23. The removal of the balls from the VSR channels is accomplished by the use of a vacuum system which, through the use of long tubes, lifts the balls out of the individual channels. The vacuum producer and auxiliary equipment is located on top of the reactor.

Figure 2.1-24 is a closeup photograph of a ball hopper showing the till caps and the top of the VSR resting on top of the hopper.

2.1.6 Fuel Handling and Storage Systems

The reactor is provided with a fuel charging machine at the front face and a discharge chute and spent fuel storage basin at the rear. See Figure 2.1-17 for the reactor charge-discharge facilities.

During a reactor outage, new fuel elements were pushed into the front face end of uncapped process tubes, causing the displacement of the irradiated fuel elements in the tube and their discharge into the spent fuel storage basin.

A. Front and Rear Work Platforms

The front face work platform is approximately 62 feet (18.9 m) long and 12 feet (3.66 m) wide. It extends beyond the reactor face on both sides thereby providing access to the crossheader valves near the risers. Vertically, the platform rose from ground level to a point where its floor was level with the top of the reactor. The reactor refueling equipment (charging machines) was located on the platform. The platform was also used as a movable work base for maintenance and repair of the reactor. The front face platform was serviced by a small elevator located at its far or right end. This elevator operated independently of the work platform and was used to bring up supplies and materials to the main platform. The service elevator measures approximately 4 feet (1.22 m) by 6 feet (1.83 m) and has a lift comparable to that of the work platform.

The rear face work platform is similar to that on the front face, except that it is narrower, approximately 7 feet (2.13 m) wide. This is the maximum width that will fit into the discharge area. The platform travels from ground level to the top of the reactor. There are four levels at which direct entry to the platform may be gained (through labyrinth type passageways) - 0 feet, 10 feet, 20 feet and 30 feet. Both work platforms are powered by electric motors and make use of a counter balance system to lower the power requirement.

B. Fuel Storage Basin and Transfer Area

The fuel storage basin and transfer area served as a collection, storage and transfer facility for the irradiated fuel elements after they were discharged from the reactor.

The storage basin is basically a large concrete tank which measures approximately 81 feet (24.7 m) by 74 feet (22.6 m) by 20 feet, 9 inches (6.32 m) deep. The basin was normally filled with water to a depth of 18 feet (5.5 m). The heavy concrete walls which shield the back face of the reactor, form one end of the basin. An underwater chute through this wall provides access from the basin into the rear face and it is through this chute that the fuel elements fell as they were discharged from the reactor. In this area, the pick-up chutes or segregation area, the fuel elements were sorted from the fuel spacers or positioners and placed into metal buckets which supported on an overhead monorail by means of long steel yoke. The full buckets were brought out into the storage basin proper by means of the monorail. The storage basin monorail system was set up to provide 20 parallel rows of bucket storage on 4-foot (1.22 m) center and each 60 feet (18.3 m) long. Rows of concrete columns between the rows supported the wood decking which formed the storage area floor. The monorail system included the switches and cross tracks necessary to position the fuel storage basket at any desired location within the basin. The buckets of irradiated elements were lowered to the basin floor where the short-lived radionuclides were allowed to decay prior to the fuel being shipped to the 200 Area for processing.

The transfer area is located alongside of, and is open to both the storage area basin and building. The transfer area building is approximately 26 feet (7.92 m) wide by 74 feet (22.6 m) long by 38 feet (11.6 m) high. Two transfer pits which measure 6 feet, 4 inches (1.93 m) wide by 9 feet (2.74 m) long by 27 feet (8.23 m) deep, are located in the end of the transfer area which is open to the storage area. The transfer pits are connected to the storage area basin by a canal over which the monorail system runs. Railroad tracks entered the

building through a large door on the end opposite the transfer pits. The building was equipped with a 30 ton capacity bridge crane which was used to lift the heavy steel and lead fuel element shipping cask out of the railroad well car and lower it into the transfer pit. Here the bucket of irradiated fuel was lowered into the cask by means of an hydraulic hoist located over the pit. When loaded, the cask was raised by the crane and replaced in the well car. The building is equipped with steel supported operating balconys for the crane operator. A third pit, also connected to the storage area system was located in one corner of the transfer area. This was equipped to permit the underwater examination of individual fuel elements, process tubing sections, etc.

At the rear of the storage area and included under the same roof, there is concrete pad - the wash pad - which measures 15 feet (4.57 m) by 82 feet (25 m) and is approximately 8 inches (20.3 cm) thick. A small elevator which would handle one storage bucket at a time, is located on this pad. With it buckets of fuel spacers (and other materials) could be lifted out of the storage basin for cleaning, repair or disposal.

2.1.7 Reactor Recirculating Gas System

This system is discussed in detail in Section 3.4, 115-F Building, Reactor Gas Recirculation Building. Only how the inert gas (helium or a helium-nitrogen mixture) entered and left the reactor will be touched upon here.

The gas entered the105-F Building from the 115-F Building via a 16-inch diameter pipe which is located in the gas tunnel. This main connects with a 24-inch diameter pipe that enters the concrete base of the reactor and, at a point located on the front to rear centerline of the reactor, angles up and out toward the front face of the reactor and connects to a mainfold which opens in a series of ducts or risers into the plenum which exists between the thermal and biological shields. The gas flows through the reactor from front to rear via passageways in the graphite. On the rear it is collected in a plenum and

flowed out of the reactor through a series of ducts and into a 24-inch diameter manifold and pipe in the reactor base similar to the inlet arrangement. It was then transported to the 115-F Building in a 16-inch diameter gas main for processing.

2.1.8 Ventilation and Exhaust System

Confinement control within the 105-F Building was achieved by confining the flow of the ventilation air in the building to a definite path and through filters before release from the exhaust stack. Two design principles were used to attain this control. The confinement zones within the 105-F Buildings were maintained at pressure slightly less than atmospheric and the exhaust equipment was designed for maximum reliability. The confinement zones in the building include the reactor rear face enclosure (discharge area), the work area, the top of the reactor, the X-levels, the inner rod room, and the exhaust tunnel leading to the exhaust fans. Figure 2.1-25 is a simplified flow chart of the 105-F Building ventilation and exhaust system.

Four identical centrifugal fans were provided in the ventilation supply system. Two are electric driven, V-belt connected; and two are steam-driven, direct connected. The electric fans were normally operated with the steam-driven fans on standby. The capacity of each fan is 50,000 cfm (1415 m^3/min) and each is equipped with a 75 hp drive unit. The supply fans are located in the fan room (a concrete block structure) and the fan intake are equipped with a filter system and heating and cooling coils. Figure 2.1-26 shows one of the steam-driven supply fan units.

The four fans in the exhaust system are also identical and include two electric-driven, V-belt connected and two steam driven, directed connected units. Each fan is located in a separate fan room or cell which is constructed of reinforced concrete with walls 10 inches (.254 m) thick. The cells are

immediately adjacent to the above ground exhaust tunnel with each having two concrete seal wells (inlet and outlet) between it and the tunnel. The seal wells permit isolation of the cells if necessary. The electric fans were normally operated with the steam fans on standby. The fans are rated at 75,000 cfm (2124 m^3/min) capacity and are driven by 150 hp units.

Air was supplied to the building by two separate duct systems; one supplied the non-confinement zones, the other, the confinement zones. The ventilation air supplied to the building spaces outside of the confinement zone was exhausted to the atmosphere through roof ventilators. Air supplied to the confinement zone was collected by exhaust ducts which discharge into the exhaust tunnel.

Movement of air within the confinement zones was as follows: Air supplied to the work area flowed toward the reactor front face, swept up the face (a canvas curtain was lowered in front of the reactor face to insure up-flow of the air) and over the top of the reactor to an exhaust duct located on the far (right) side of the reactor. Air was supplied to the inner rod room through the outer rod room and was exhausted into a duct which runs over the reactor and connects into a common duct on the far side. Supply air to the reactor rear face enclosure entered at the base of the reactor, swept up the rear face and was exhausted to the common duct on the far side. The air in the exhaust tunnel flowed to the exhaust fans where it became pressurized and was exhausted through the above ground concrete duct which runs to the base of the 200-foot (61 m) high exhaust stack (116-F Building, see Section 6.1). At the base of the stack, the exhaust flow was directed into an undergound reinforced concrete duct which leads to the 117-F Filter Building (See Section 6.1).

The above ground exhaust duct or tunnel and the fan cell seal wells are constructed of reinforced concrete with a floor, wall and roof thickness of 18 inches (.46 m). The tunnel is approximately 18 feet (5.5 m) wide (including the seal wells) by 38 feet (11.6 m) high by 112 feet (39 m) long.

2.1.9 Control Room

The 105-F reactor control room is located at ground level and is directly below the outer rod room on the left or near side of the reactor. The control room measures approximately 36 feet (11 m) by 38 feet (11.6 m) by 9 feet (2.74 m) high. All of the instruments and controls required for the operation and monitoring of the reactor are contained in the room.

Immediately adjacent to the control room are a 16-foot (4.9 m) by 18-foot (5.5 m) office facility and a 12-1/2-foot (3.81 m) by 27-foot (8.2 m) air conditioning room which contained an air conditioning unit of sufficient size to adequately control the temperature and humidity within the control room and office.

2.1.10 Gamma Monitor System

The gamma monitor system was provided as a means of early fuel element failure detection and location. A continuous sample was taken of the effluent water at either end of each rear crossheader. This sample was directed to a gamma monitor sample room where it passed in front of an instrument which measured the rate of gamma emission it was producing. If the sample contained residue from a ruptured fuel element, it would show a very high emission rate. The results of the sample monitoring were recorded in the 105-F control room.

There are six gamma monitor sample rooms; three on each side of the reactor, one above the other, at the 0 - 10, and 20-foot levels. They are located just off of the rear face enclosure. The sample lines from the rear face penetrate the

wall between the sample room and the discharge area with a third of the lines going to each room on either side. The rooms contain a large, round (4-feet in diameter) turret like device in which all of the sample lines to that room terminate. The turret is fabricated of steel and is packed with lead shot to provide the shielding required for accurate monitoring of the sample and to reduce the radiation background in the room. The instrumentation required for the monitoring is also in the sample room.

The three sample rooms are built of reinforced concrete and measure approximately 12 feet (3.66 m) by 18 feet (5.5 m) by 10 feet (3.1 m) high. The floor between the rooms is 1 foot (.305 m) thick; one side wall is 3-1/2 feet (1.07 m) thick and the other is 3 feet (.91 m); and one end wall (adjacent to the reactor) is 5 feet (1.5 m) thick while the other is 2 feet (.61 m).

2.2 Radiation and Contamination Levels

The radiation and contamination levels which prevail within the 105-F Building vary from minor to extreme. The highest personnel exposure dose rates and the greatest amount of loose contamination occur within the 105-F Reactor since the interior components of the reactor are highly irradiated. A large portion of the building and the equipment is free of contamination and is open to unrestricted entry. The specific conditions which exist in the 105-F Building areas and systems discussed in Section 2.1 above, are outlined below:

2.2.1 105-F Reactor

As indicated above, the highest concentration and inventory of radioactivity remain in 100-F Area is contained within the 105-F Reactor block. Samples of the interior components (graphite blocks, thermal shield cast iron, process tubes, biological shield steel, etc.) have been obtained by core drilling in connection with a site characterization study.

From this data it is possible to estimate the dose rates and contamination circumstances which exist within the reactor.

The thermal shield cast iron has the highest concentration of gamma activity in the reactor. Calculations have indicated that in-situ dose rates on thermal shield could be as high as 300 R/hr on the in-reactor side of the blocks with a dose rate of 2-3 R/hr on the back side (next to the biological shield).

The steel and masonite lamination which make up the biological shield are also irradiated and add to the dose rate within the reactor block. The in-situ dose rates on the inside steel face of the biological shield is calculated to be approximately 2-3 R/hr. This drops off rapidly until at about the middle of the shield, the dose rate is zero. Because of its brittleness and tendency to powder, the masonite presents a contamination problem.

The graphite moderator per se, makes a minor contribution to the overall radiation level, dose rate wise, within the reactor. However, it is the major contributor of contamination due to its brittle nature and the ease with which it can be fractured and/or powdered. Also, the graphite contains a significant amount of C^{14}, a weak beta-emitter. Samples taken from the reactor core indicate the presence of "hot" spots which are very likely due to fuel element failures which also ruptured the process tube and allowed fission products to escape into the graphite moderator. These are localized areas and their specific location cannot be predicted.

2.2.2 Reactor Inlet Coolant Piping

The reactor inlet coolant piping is contaminated to a very minor degree and, very likely, on the outside surfaces only. All of the crossheader valves and strainers together with a short section of each crossheader, have been removed. The

exposure rate for working on the front face of the reactor is 2-3 mR/hr with none of this coming from the piping.

2.2.3 Process Tube Assembly

The various components which make up the total process tube assembly must be considered individually in order to get a true picture of their radiation and contamination status.

a) The aluminum process tube after ten plus years of decay, are only mildly radioactive. In fact, the exposure rate from a tube or piece of tube is probably only a few mR/hr. However, any specific tube, if it is removed from the reactor may also bring out rupture debris which would increase the dose rate greatly. In general, handling the process tubes presents no major problems.

b) The gunbarrels are mild steel and the end which protrudes beyond the biological shield, through the thermal shield and into the graphite moderator, is irradiated. Dose rates of several R/hr may eminate from the inner most 18 inches (45.7 cm) of the gunbarrels. The remainder of the gunbarrel may be slightly contaminated but the exposure received from handling it is negligible.

c) The front nozzle-connector assembly is also relatively clean with little exposure being received from them or while working around them. They may be lightly contaminated, 500 c/m, due to having had water from the process tubes run over them during the charge/discharge operation.

The rear nozzle-connector assembly is contaminated to a much greater extent than the front, up to 5000 c/m. Exposure rates while working on the rear work platform vary from 20 to 30 mR/hr, depending upon the specific location.

2.2.4 Reactor Outlet Coolant Piping

The entire rear face area of the 105-F Reactor is more highly contaminated than the front face. This occurred as a result of irradiated corrosion products being flushed out of the process tubes during the charge/discharge operation, small amounts of fission products being released during ruptured fuel element removal, contamination spread during process tube replacement, etc. As a result, all of the reactor outlet coolant piping, the crossheaders, the risers, the cross-over and cross-under lines, etc. are all contaminated both inside and out. The exposure rates and contamination levels are as noted for the rear face nozzle connector assembly above, approximately 20-30 mR/hr and 5,000 c/m.

2.2.5 Reactor Reactivity Control

The radiation and contamination status of the three systems which constitute the reactor reactivity control package is as follows:

A. Horizontal Control Rod System

The tip section of the horizontal control rods are irradiated. The tips are currently retained in the reactor where they are shielded and do not add to the background dose rate in the inner rod room. No survey of the rod tips has been made for some time. Therefore, their exact current status, radiation-wise, is not known. The average background dose rate in the inner rod room is 5 mR/hr. However, there are spots within the room where dose rates of up to 5 rad/hr and contamination levels of 100,000 c/m may be encountered. These are isolated locations which can be shielded and eventually cleaned up.

The outer rod room is in much better condition with the general background at less than 1 mR/hr and less than 200 c/m contamination outside of the rod rack area and

4 mR/hr and 1200 c/m within the rod area. The rod racks and drive motors are contaminated to the same degree. The accumulator room is clean, less than 100 c/m smearable and less than 1 mR/hr background.

B. Vertical Safety Rod System

The vertical safety rods are presently in the reactor where they are shielded and do not add to the general background on top of the reactor. The tips of the rods, the bottom 6 to 8 feet (1.8 to 2.4 m), are radioactive. Since no radiological survey of the rod tips has been made recently, (the rods would have to be pulled from the reactor to do so) their current condition is not precisely known. There are actually three building levels upon which the VSR's function; the winch level, the basket level (where the tops of the rods are when the rods are out of the reactor) and the top of the unit. The radiation and contamination status of each of these areas and the equipment contained therein is as follows:

a) Winch Level - 3 mR/hr and 2000 c/m
b) Basket Level - 3 mR/hr to 1000 c/m
c) Top of Reactor:
   Inside VSR Enclosure:
      Hot spots up to 50 mR/hr and 50,000 c/m
      Avg. dose rate - 6 mR/hr field
   Outside VSR Enclosure:
      Hot spots - vacuum lines - 70 mR/hr; VSR tip cask - 30 mR/hr and 6000 c/m
      Avg. dose rates - 3 mR/hr field

C. Ball 3X Safety System

The Ball 3X Safety System equipment is totally contained within the VSR rod enclosure on top of the reactor. The balls have been removed from the hoppers. The same top of the reactor conditions of radiation and contamination described above apply to the area containing the ball 3X

equipment. The internal condition of the hoppers has not been determined.

2.2.6 Fuel Handling and Storage Systems

The fuel handling and storage systems within the 105-F buildings, are included in four separate locations. The radiation and contamination circumstances which exist in each of these are described below:

A. Front Work Platform and Work Area

The front work platform is contaminated to a minor degree, <500 c/m. The background dose rate on the platform is 2-3 mR/hr. As the face of the reactor is approached, hot spot readings of up to 5-6 mR/hr may be obtained. The work area is clean and is open to unrestricted entry (<200 c/m smearable with an average background exposure rate of less then 1 mR/hr field).

B. Rear Work Platform and Discharge Area

The rear work platform is also contaminated. Some cleanup work has been done with the result that the contamination on the surface of the center portion (lengthwise) of the platform is less then 100 c/m smearable while that on the ends is up to 5000 c/m. The background dose rate on the work platform is 20-30 mR/hr.

The status of the discharge area walls, entrance labyrinths, and pads below the work platform is as follows:

Rear Wall - Hot spots up to 50 mR/hr (reading at platform rear railing) and 9000 c/m smearable.

10-Foot Labyrinth - less than 3 mR/hr at 1 foot and less than 100 c/m smearable.

0, 20 and 30-Foot Labyrinths - less than 3 mR/hr at 1 foot and up to 17,000 c/m smearable.

Pads Below Work Platform - 30 mR/hr field and 1500 c/m smearable.

C. Storage and Transfer Area

The storage and transfer areas consist of an above grade facility and a below grade basin or pool. The above grade storage area building and the equipment it contains, with the exception of the wash pad at the rear end of the building, are not contaminated and personnel working in the area receive no exposure. The wash pad is contaminated and contains a number of pieces of contaminated equipment. Since no survey of the wash pad has been conducted recently, the actual level of contamination and radiation present, is not recorded here. However, the area is not highly contaminated and the dose rates are probably on the order of 3-5 mR/hr.

The transfer area building is also clean and open to unrestricted entry. The 30 ton crane which was used for handling the well car casks, has been removed from the building.

The storage and transfer area basin have both been totally filled with dirt. This was done to contain and cover the layer of contaminated sludge on the basin floor. This layer is approximately 6 inches (15 cm) thick and contains a significant amount of transuranic contamination. The concrete surface of the basin is contaminated. In addition, prior to backfilling the basin with dirt, the wood decking which formed the floor of the building over the basin, was dumped into the pool. This must also be considered contaminated.

2.2.7 Reactor Recirculating Gas System

That portion of the reactor recirculating gas system discussed in this section, is almost totally contained within the massive concrete base of the reactor or inside of the reactor block. Therefore, the pipe and ducts which makeup the system, cannot be surveyed and no data is available that will permit an evaluation of their radiation and contamination status. It can be assumed that the portion of the ducts which extend up to the front and rear fan gas plenums will be irradiated. How far back into the concrete base the radiation of the pipes may proceed is not known. It may also be assumed that the internal surfaces of the pipes are contaminated to about the same degree as are those of the continuation of the same pipes as they proceed through the tunnel to the 115-F Building. Surveys of these pipes indicate that the internal contamination is at a very low level.

2.2.8 Ventilation and Exhaust System

The fans and ducts which provide the supply air to both the confinement and non-confinement zones within the 105-F Building are uncontaminated and there is no exposure to personnel working on the system. Of the four supply fans (2 electric driven and 2 steam powered) orginally provided in the system, one complete motor-fan assembly and one complete steam turbine-fan assembly have been removed from the facility. In addition, the second electric motor has been removed.

The fans and ducts that remove the air from the confinement zones are contaminated. Surveys of the exhaust tunnels indicate that contamination levels of 4 to 5000 c/m and 200 d/m exist with a dose rate of 3 mR/hr.

The motors which powered the two electric driven exhaust fans have been removed.

2.2.9 Reactor Control Room

The reactor control room is a clean area and is open to unrestricted entry.

2.2.10 Gamma Monitor System

The equipment which comprises the gamma monitor system is contaminated internally, but to what degree has not yet been determined.

The sample rooms in which the gamma monitor equipment is located contain hot spots that read up to 500 mrad/hr (on the monitor chamber drain troughs) and contamination of less then 1000 c/m smearable. The general average background exposure rate to personnel working in the sample room is less than 3 mR/hr field.

2.3 Reference Drawings

The following is a list of drawings which describe the facilities and equipment discussed in this section. The number which precedes each title is the number of the subsection in which that subject is covered.

2.1 105-F Reactor Building

W-73335	105-F	Concrete Foundation Plan
W-73336	105-F	Concrete Ground Floor Plan
W-70647	105-F	Concrete Plan at Apparatus Floor
W-73325	105-F	Concrete Wall Elevations
W-70830	105-F	Ground Floor Plan Arch.
W-70832	105-F	Upper Floor Plan Arch.

2.1.1-A Graphite Stack

W-72322	Packing Block Layer Assembly Gen. Arrgt.
W-72323	Packing Block Layers Assembly Typical
W-72324	Packing Block Layer Assembly Isometric Arrgt.

2.1.1-B Thermal Shield

W-70258	Bottom Cast Iron Blocks Arrgt.
W-70259	Top Cast Iron Blocks Arrgt.
W-70260	Inlet End Cast Iron Blocks Arrgt.
W-70261	Outlet End Cast Iron Blocks Arrgt.
W-70262	Left Side Cast Iron Blocks Arrgt.
W-70263	Right Side Cast Iron Blocks Arrgt.

2.1.1-C Biological Shield

W-70497	Outlet End "B" Blocks Arrgt.
W-72766	B Cover Structural Framing Left Side Plate Erection Diag.
W-72767	B Cover Structural Framing Right Side Plate Erection Diag.
W-72768	B Cover Structural Framing Top Plates Erection Diag.
W-71312	Typical Arrgt. Sections of Tubes and Rods - Outlet End - "B" Blocks

2.1.2 Reactor Inlet Coolant Piping

H-1-197	Valve Pit Arrgt.
W-72901	Process and Cooling Water Piping Arrgt. Valve Pit to Process Area
H-1-26768	Process Water Piping Front Face Piping Details
W-70682	Process Water Piping Arrgt. Elevation - Inlet End

2.1.3 Process Tube Assembly

H-1-70491	Gunbarrel Data
H-1-2329	Inlet Nozzle
H-1-12567	Outlet Nozzle Details
H-1-12018	Process Tube Assembly - Cross Section

2.1.4 Reactor Outlet Piping

W-70661	Process Water Piping Arrgt. Elevation - Outlet End
H-1-3559	Process Area Downcomer Assembly and Details

2.1.5-A Horizontal Control Rod System

W-71344	Horizontal Rod Arrangement
H-1-71620	Horizontal Control Rod Tip Section Assembly and details

2.1.5-B Vertical Safety Rod System

H-1-3141	V.S. Rods Details Ball Third Safety System
H-1-1734	Vertical Rod Exterior Shielding
H-1-3552	Sleeve for VSR Hole in Thermal Shield
H-1-13866	Universal Flexible VSR

2.1.5-C Ball 3X Safety System

H-1-3141	V.S. Rods Details Ball Third Safety System
H-1-3170	Lower Hopper Sections - Ball Third Safety System
H-1-3189	Hopper Covers - Ball Third Safety System
H-1-3274	Installation Orientation Diag. - Ball Third Safety System

2.1.6-A Front and Rear Work Platforms

H-1-33811	Modification for C Work Platform
H-1-33812	C Work Platform Sections and Details
H-1-33813	Modification for D Work Platform

2.1.6-B Fuel Basin and Transfer Area

W-70681	Transfer Station and Storage Basin Arrgt. Plan
W-70480	Concrete Storage and Transfer Basin Found. Plan
W-70481	Concrete Storage and Transfer Basin - Plan Above Grade

2.1.6-B Fuel Basin and Transfer Area (Contd.)

W-71381	Steel Framing Transfer Station

2.1.7 Reactor Recirculating Gas System

D-61903	Instrument and "G" Ducts
W-71313	Instrument and "G" Ducts in Foundation Arrgt.

2.1.8 Ventilation and Exhaust System

H-1-1081	Ventilation System Plan and Section
H-1-11531	Ventilation Supply and Exhaust System Flow Diag.
W-72482	Ventilation Air Supply System Arrgt.
W-72878	Ventilation Supply and Exhaust Systems Arrgt.
W-73570	Ventilation Exhaust System Arrgt.

2.1.9 Reactor Control Room

H-1-14007	Control Room Panel Arrgt. - Key Plan
H-1-14011	Control Room Panel Arrgt. - Console Panel

2.1.10 Gamma Monitor System

SK-1-1256	Gamma Type Water Monitor System Details

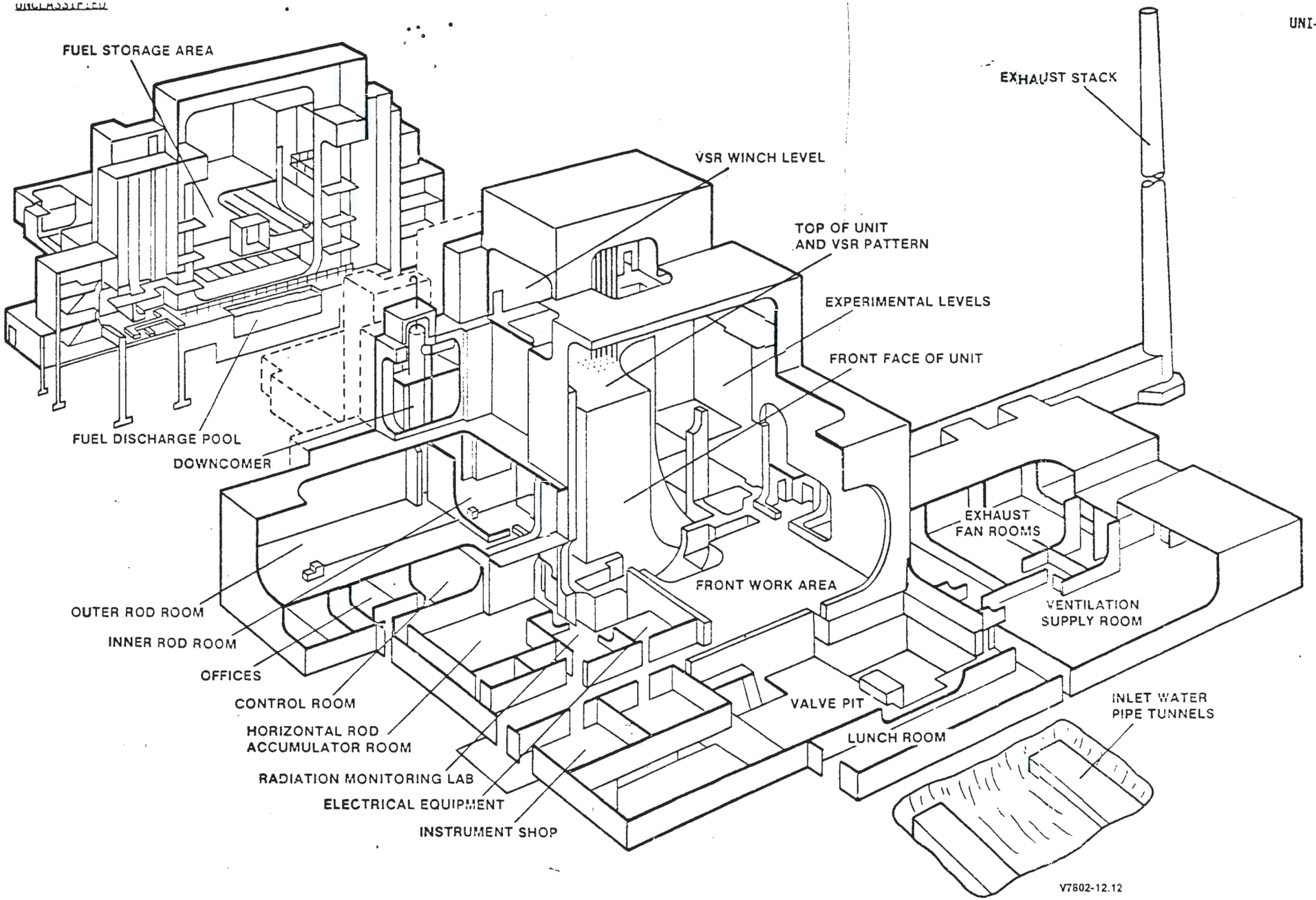

105-F Reactor Building

Figure 2.1-1

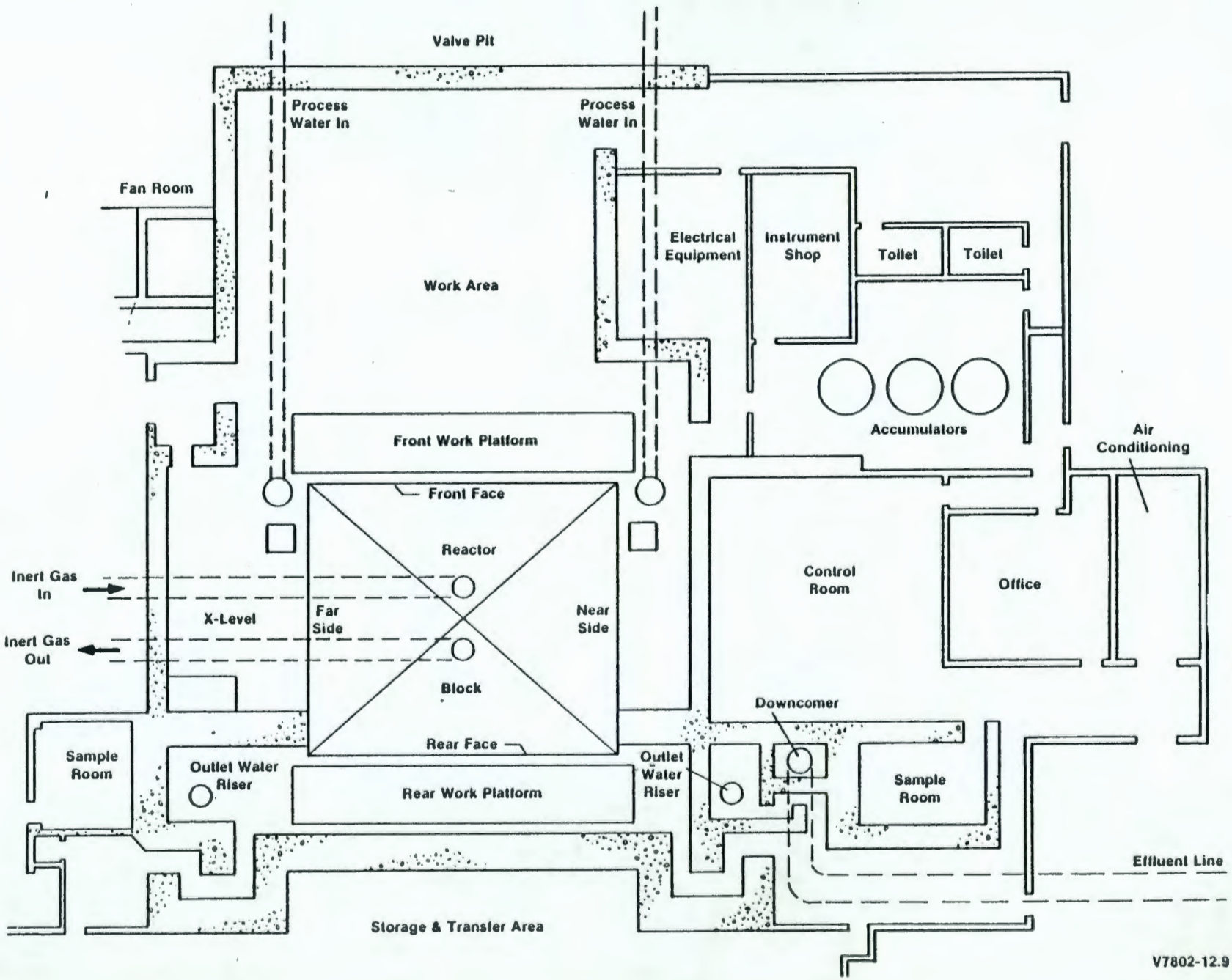

105-F - Ground Floor Plan of Building

Figure 2.1-2

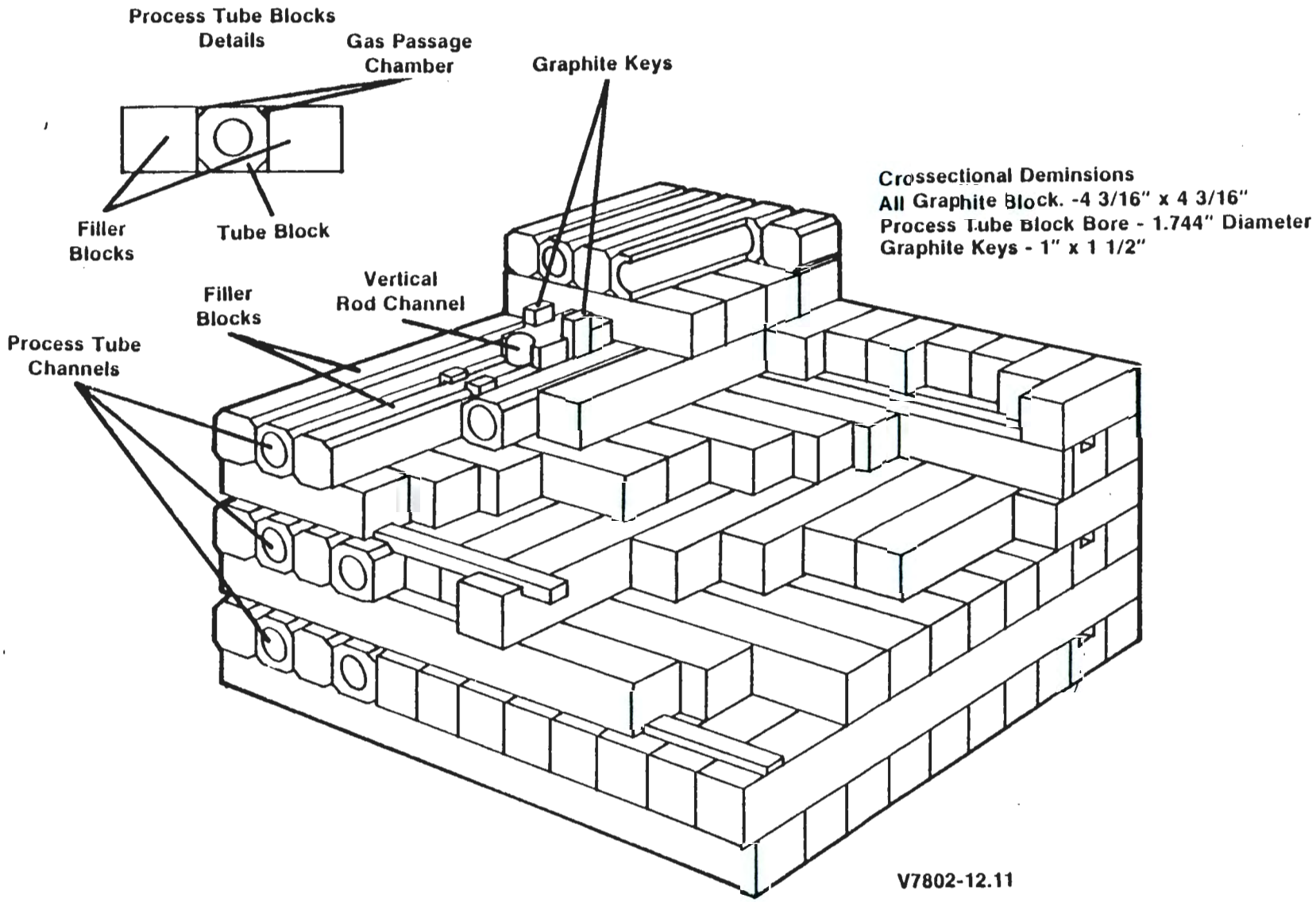

105-F Reactor - Graphite Stacking

Figure 2.1-3

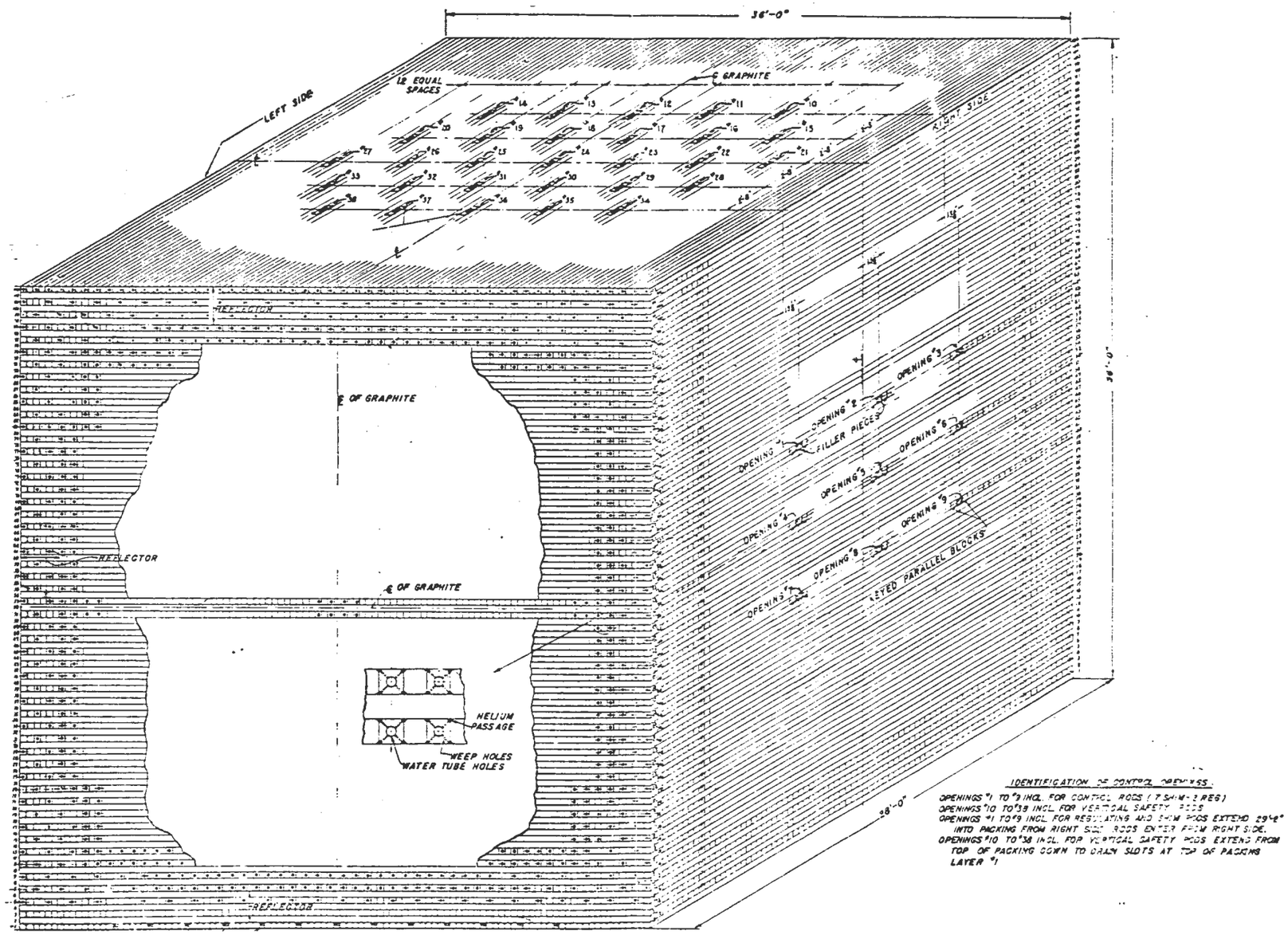

105-F External Isometeric View of Graphite Assembly

Figure 2.1-4

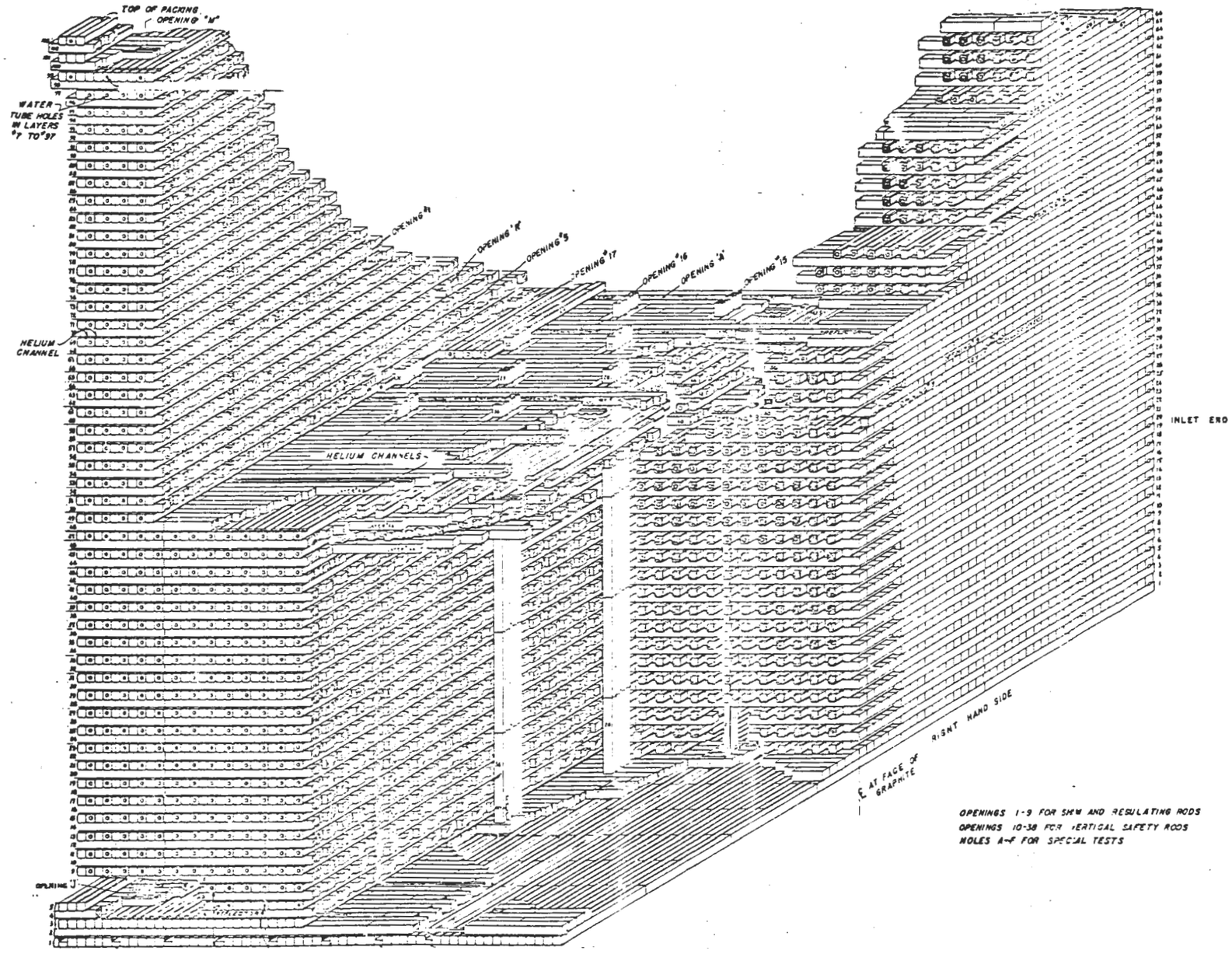

105-F Isometeric View of Graphite Assembly

Figure 2.1-5

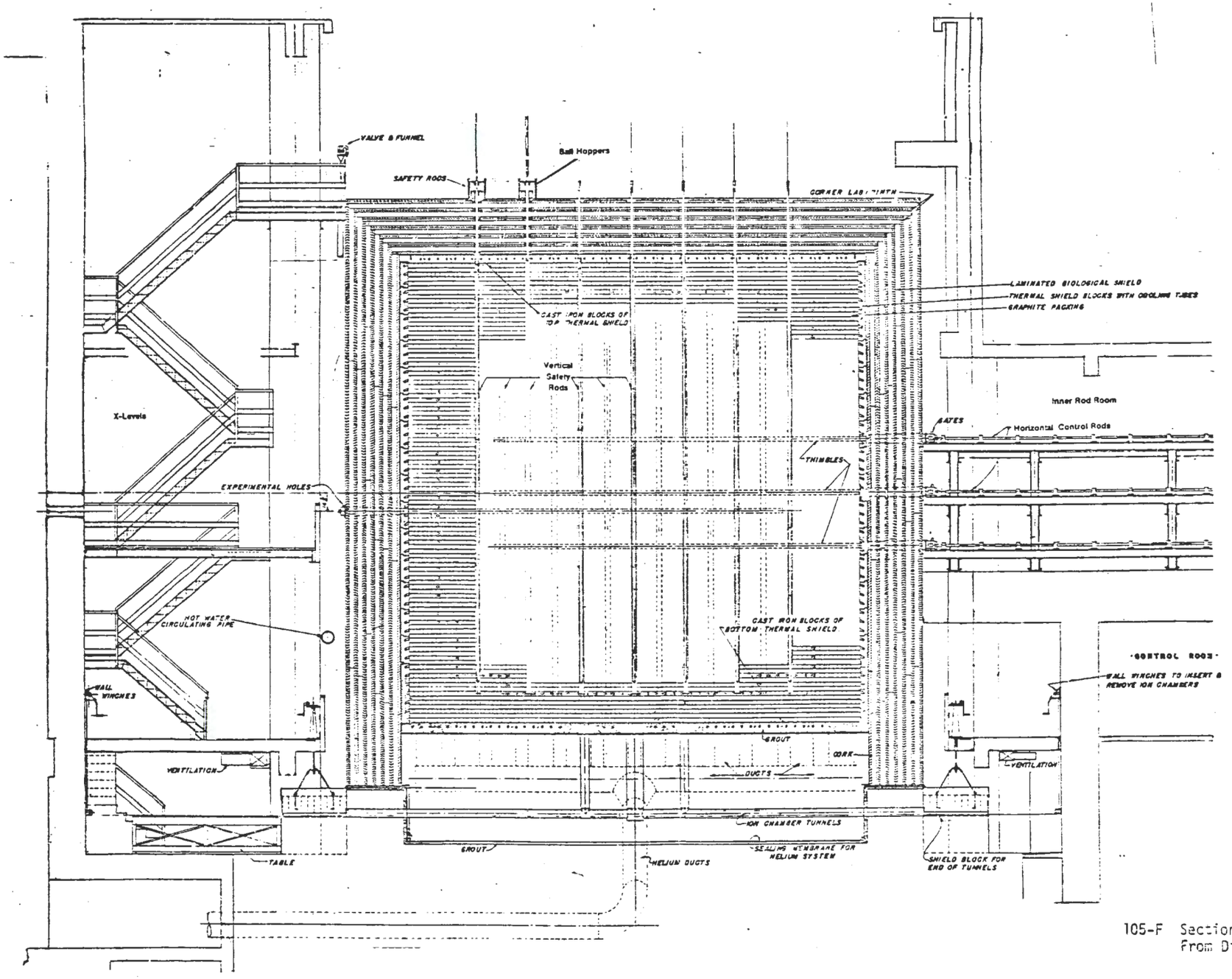

105-F Sectional View of Reactor From Discharge End

Figure 2.1-6

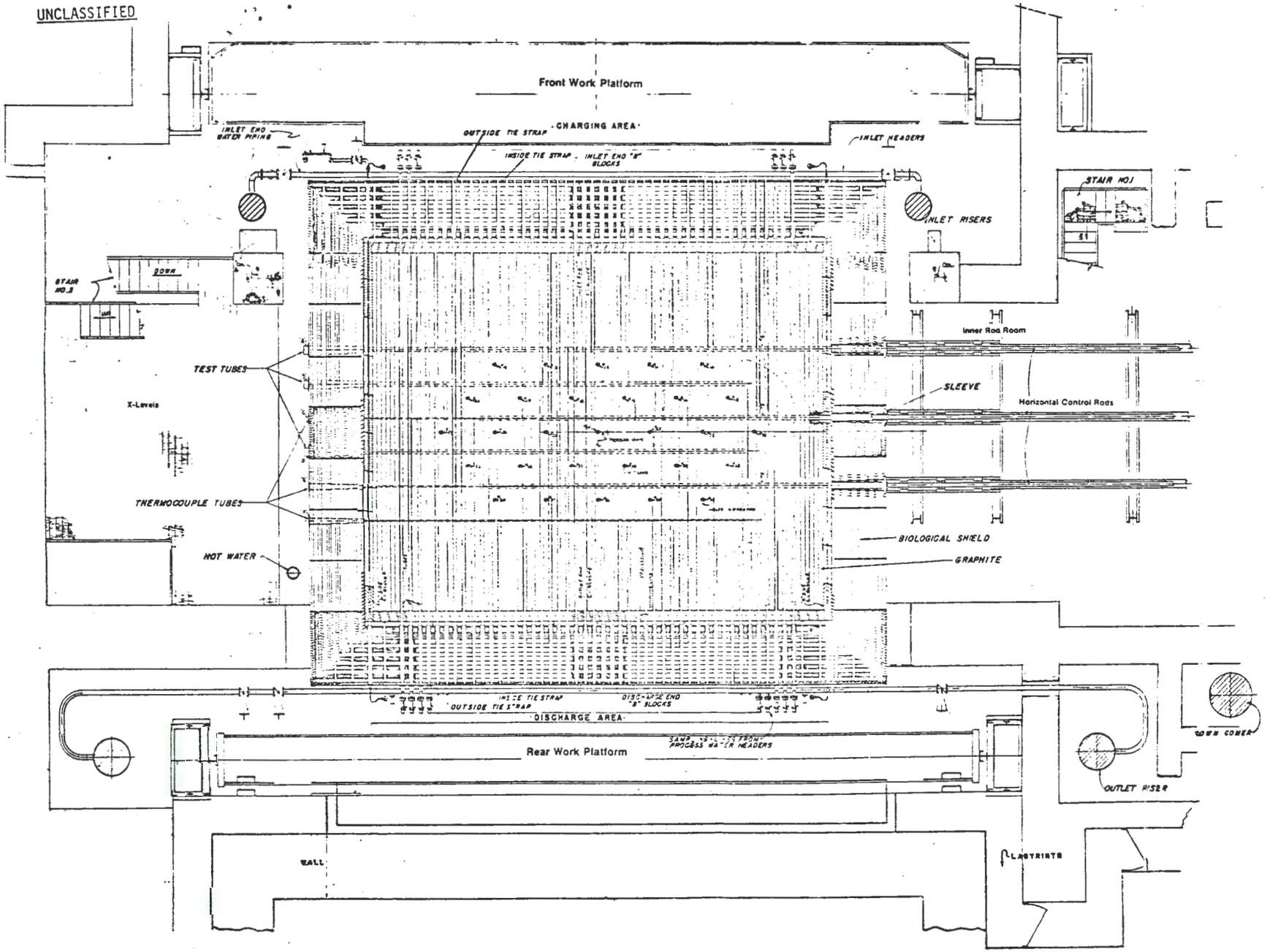

105-F Sectional View of Reactor From Top

Figure 2.1-7

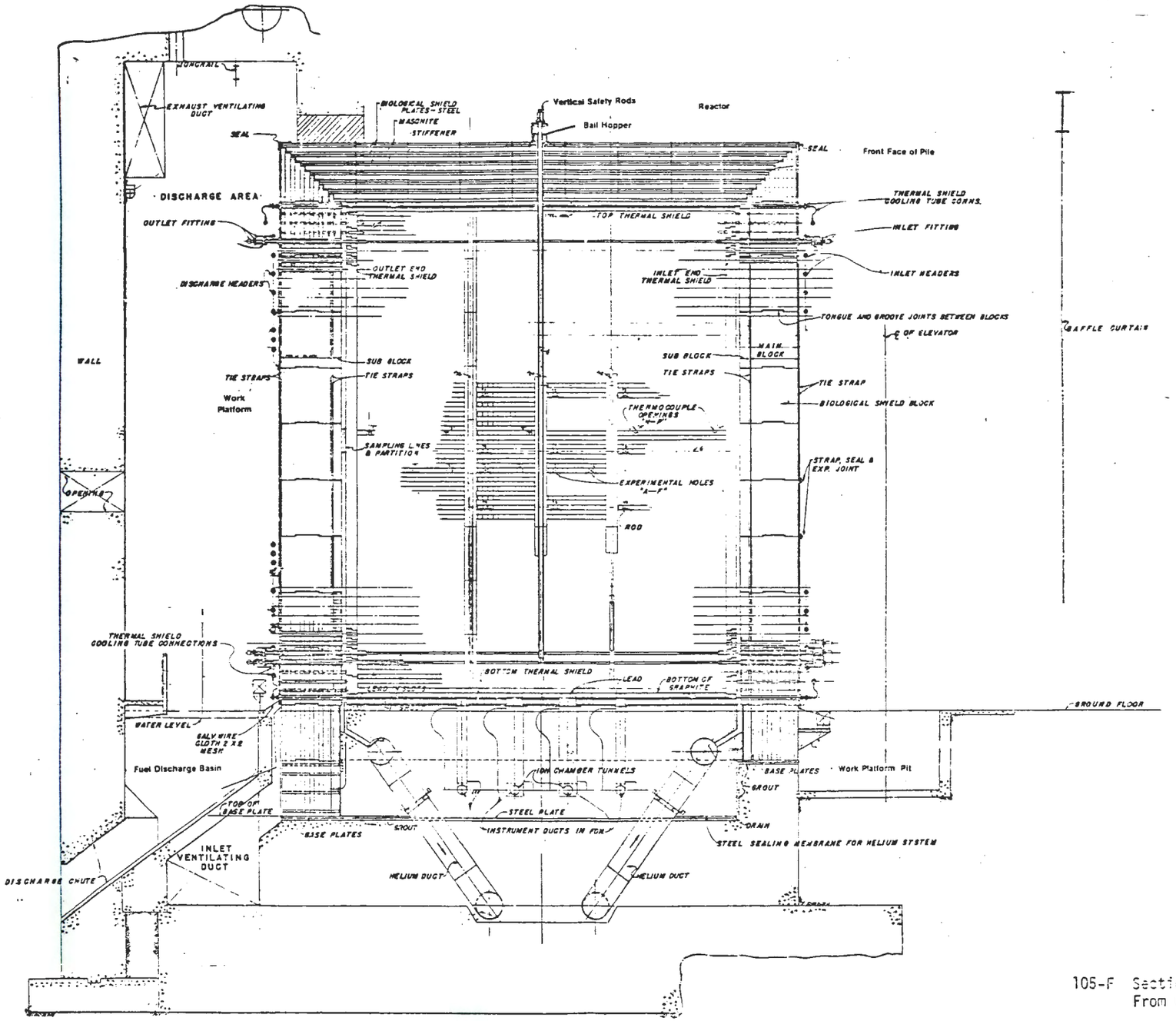

105-F Sectional View of Reactor From Control Rod Side

Figure 2.1-8

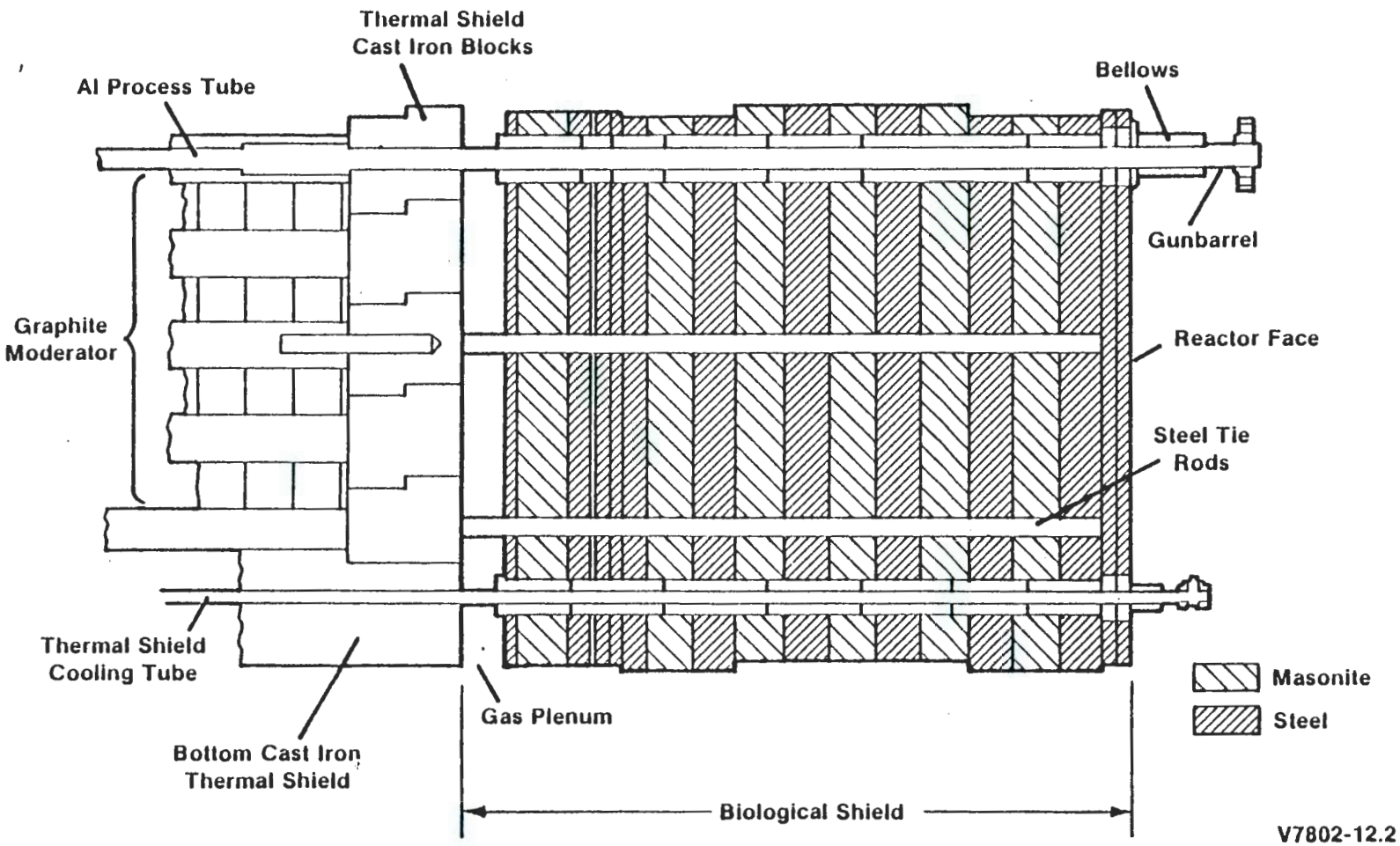

105-F Reactor - Front and Rear Thermal and Biological Shields - Cross Section

Figure 2.1-9

UNI-1001

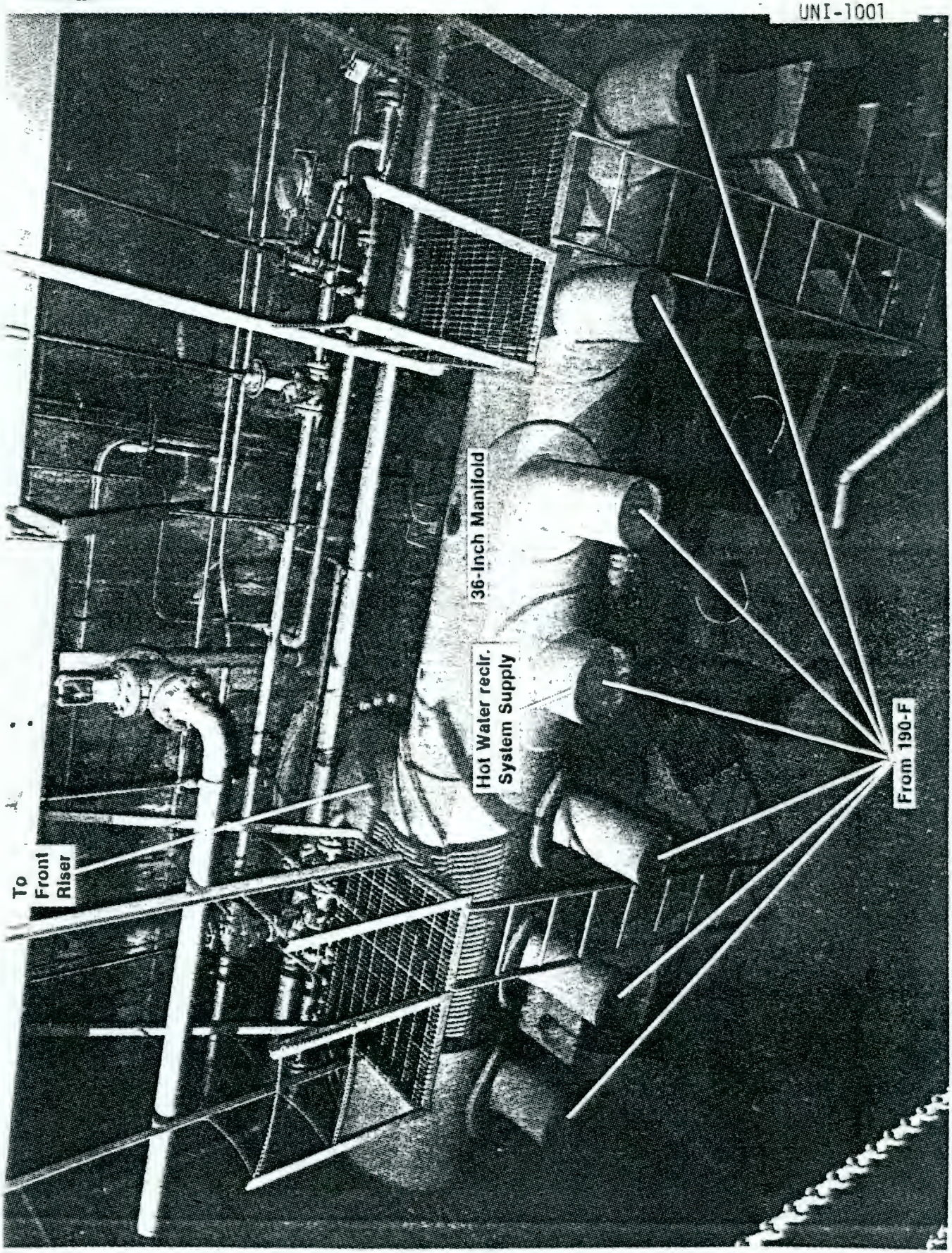

105-F Valve Pit (Partially Dismantled)

Figure 2.1-10

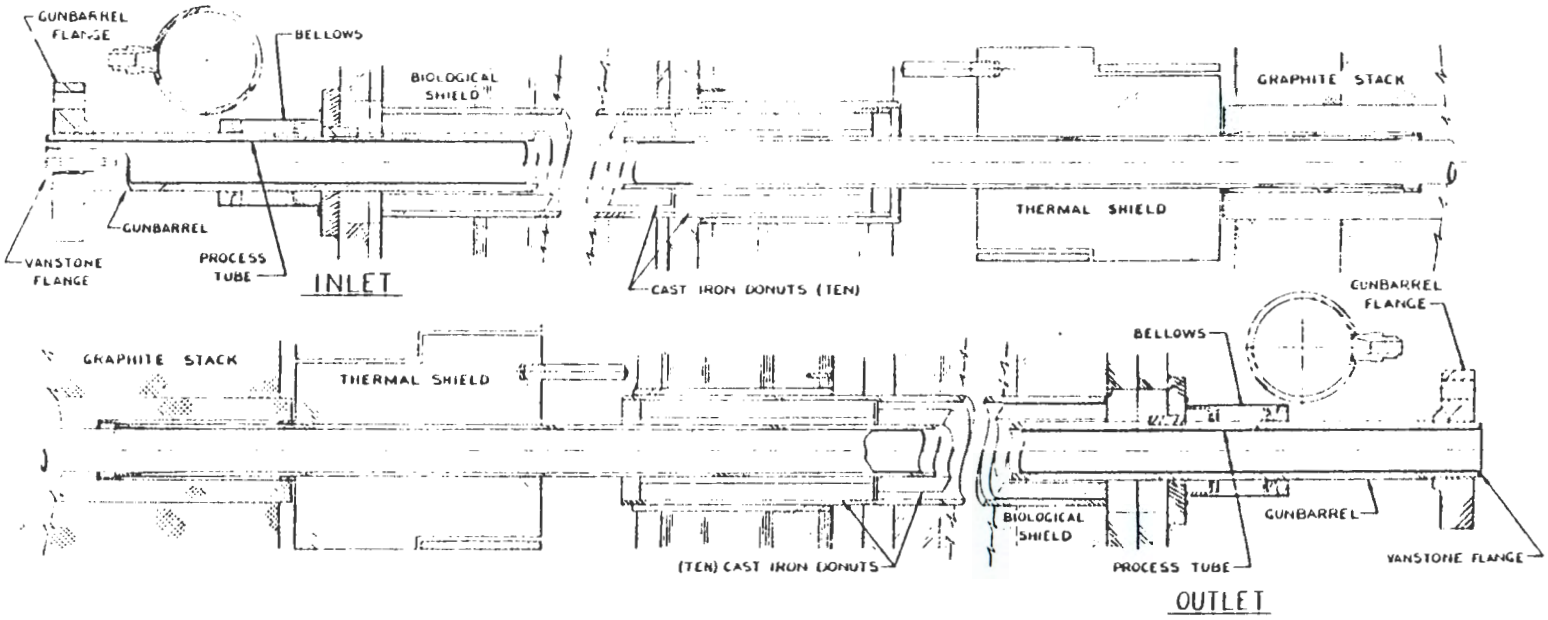

105-F - Process Tube Channel Cross Section

Figure 2.1-13

UNI-1001

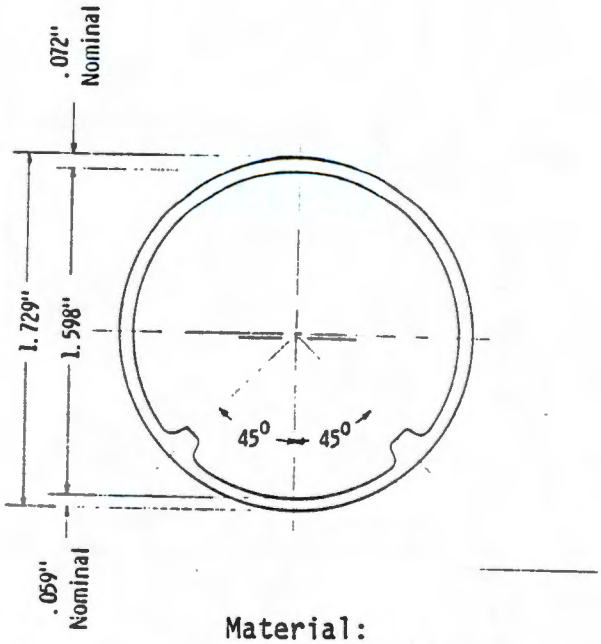

Material:

Aluminum Alloy (1100)

105-F Reactor - Process Tube
Cross Section

Figure 2.1-12

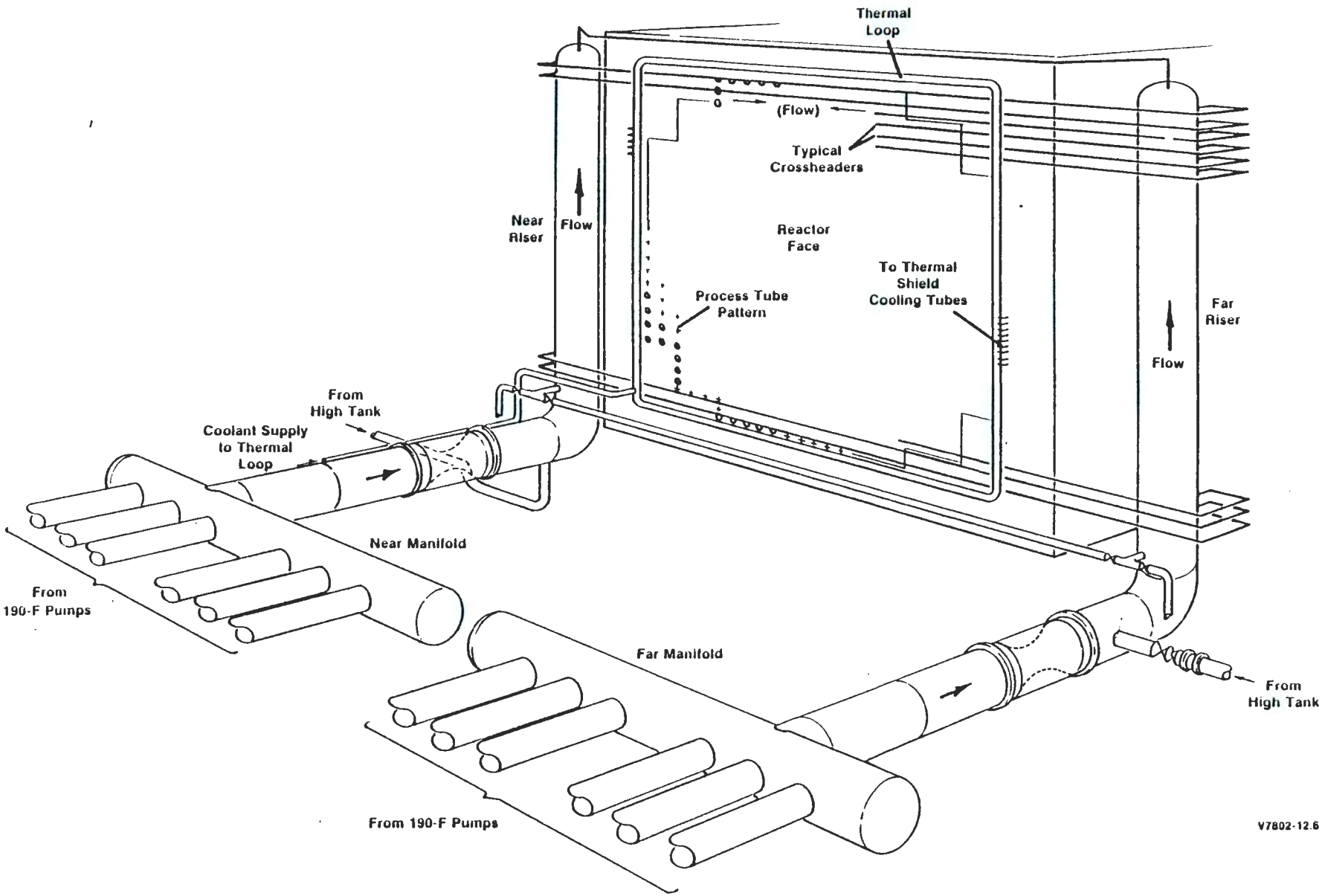

105-F - Valve Pit to Inlet Nozzle Coolant Piping

Figure 2.1-11

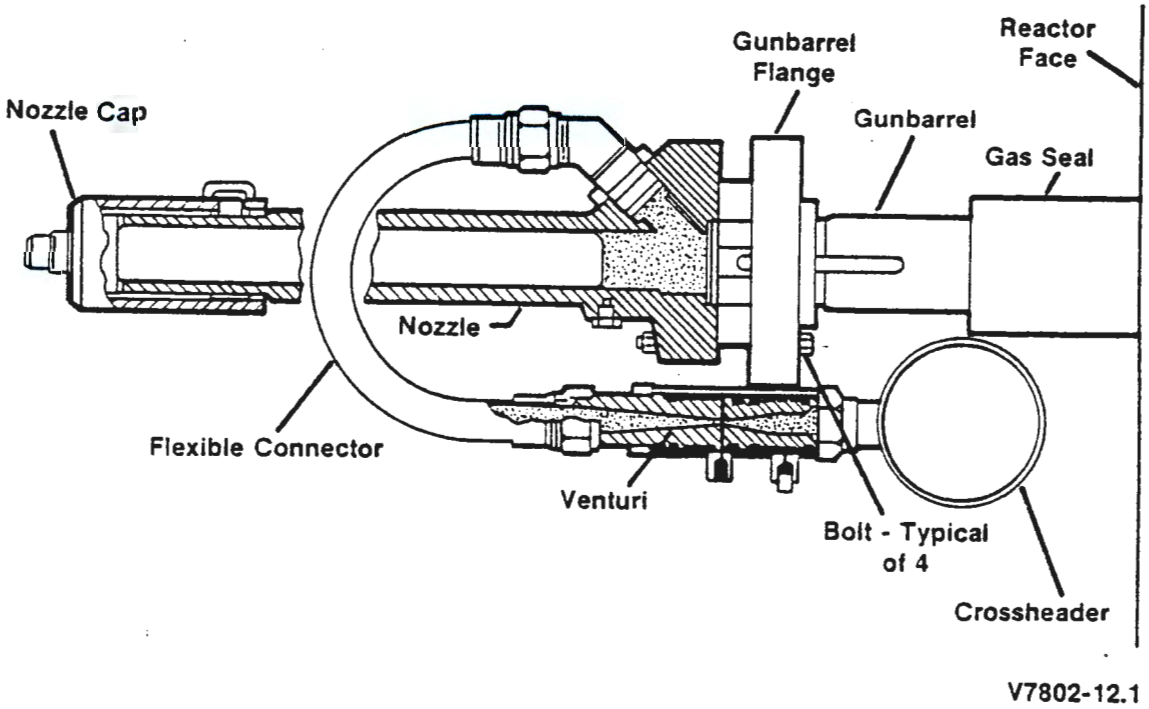

105-F Reactor - Inlet Nozzle Assembly
Cross Section

Figure 2.1-14

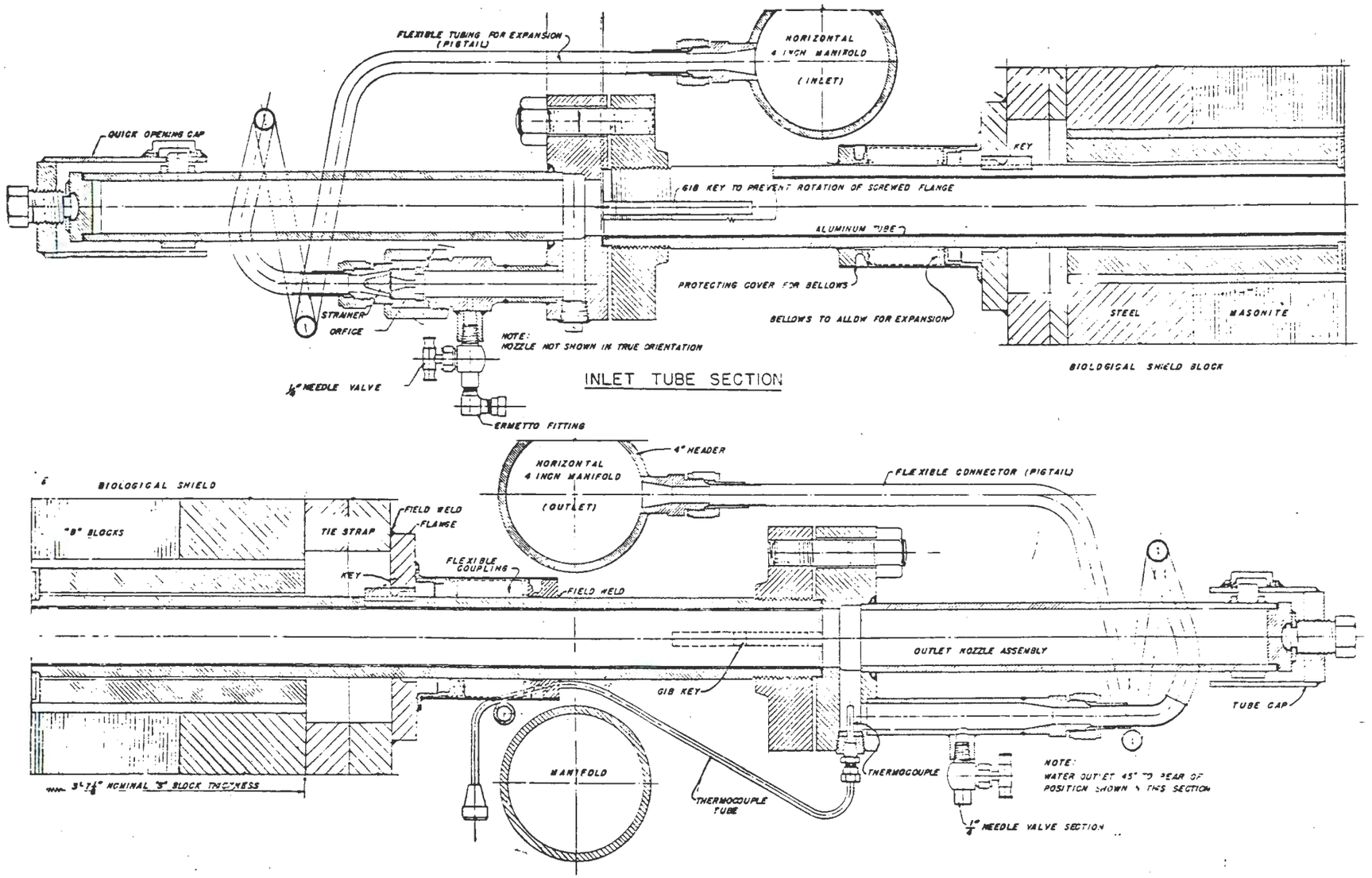

105-F Inlet and Outlet Nozzle and Connector Assembly

Figure 2.1-15

UNI-1001

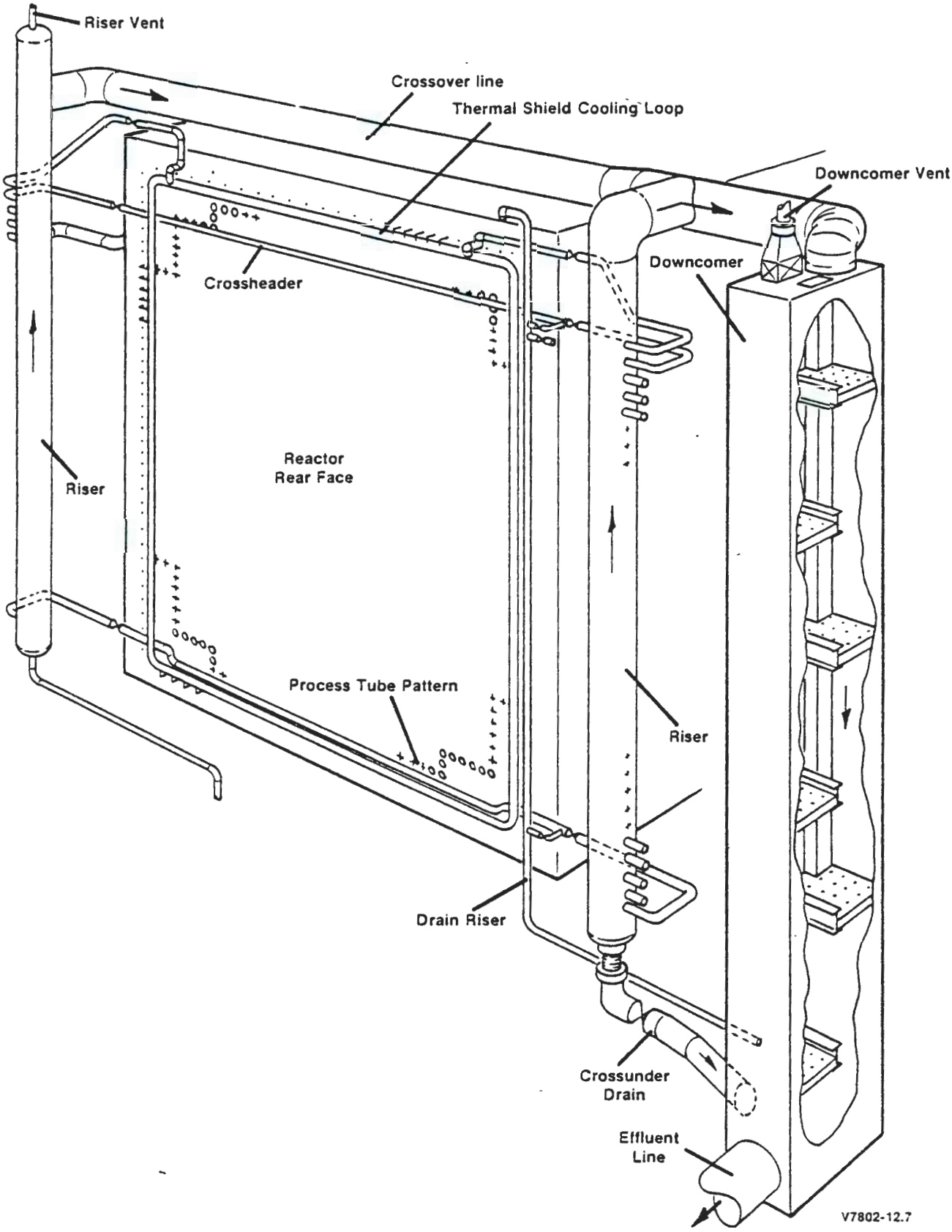

105-F Reactor - Outlet Coolant Piping

Figure 2.1-16

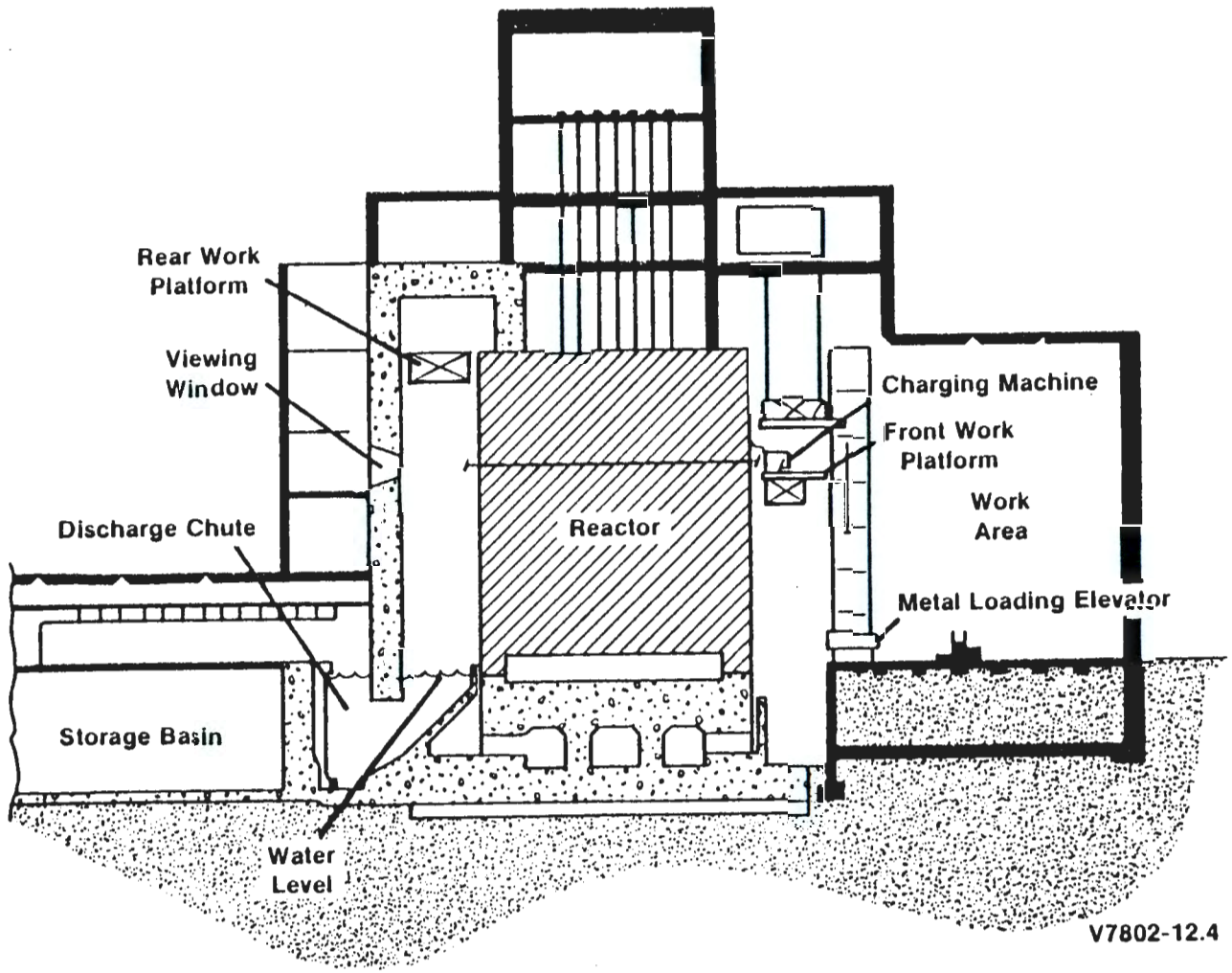

105-F Reactor - Charge-Discharge Facilities

Figure 2.1-17

UNI-1001

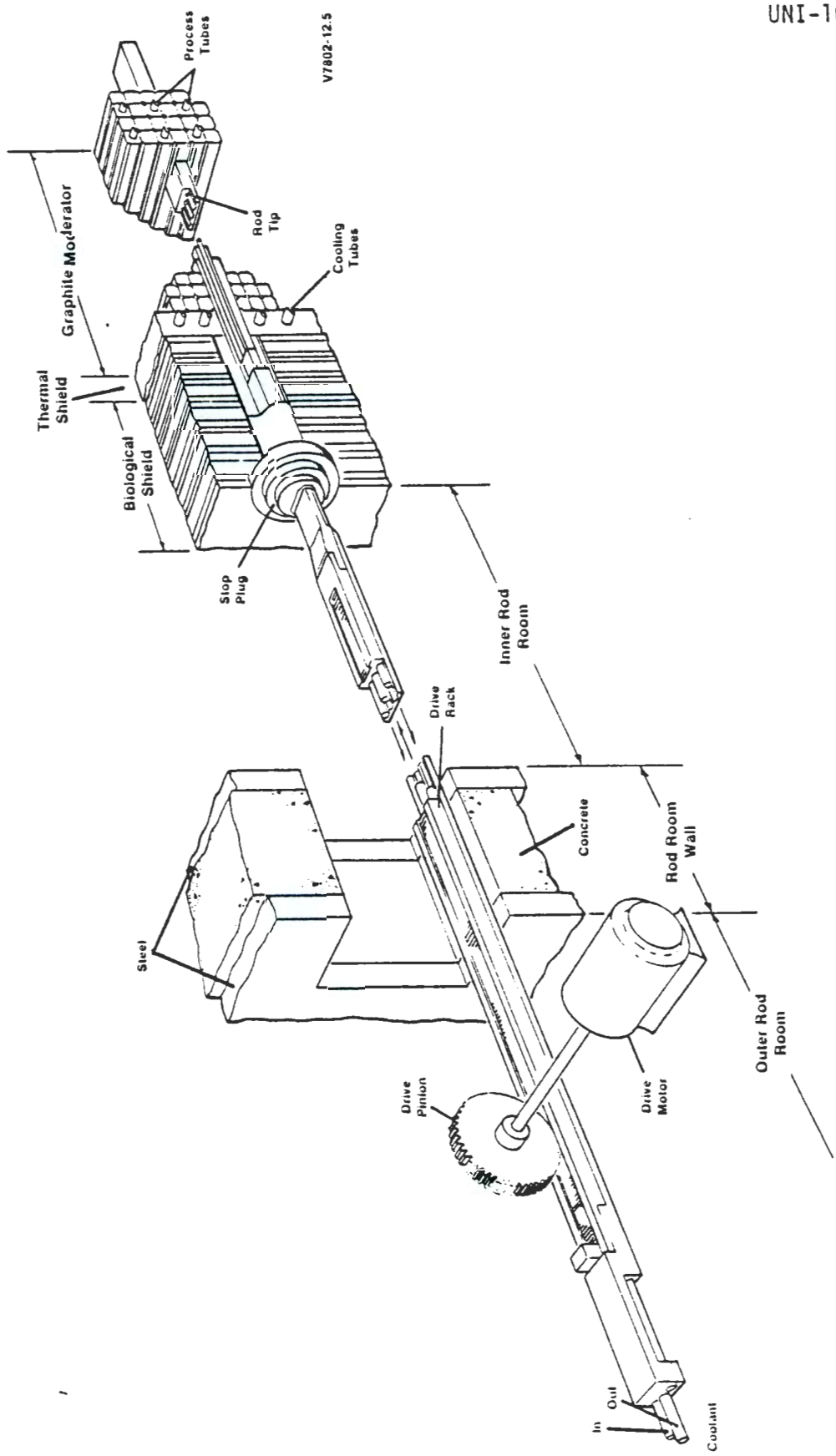

105-F Reactor - Horizontal Control Rod

Figure 2.1-18

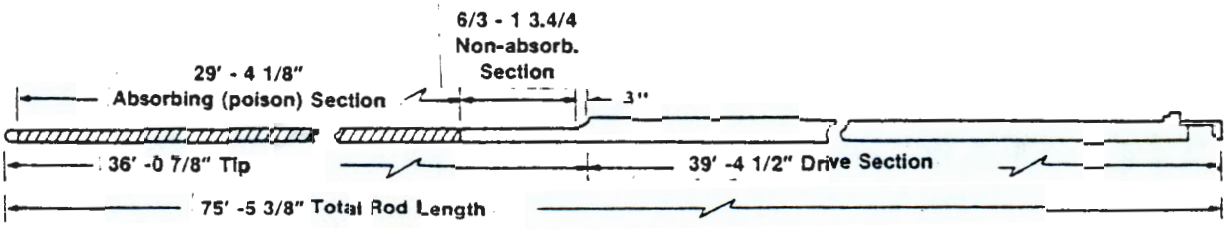

HCR Layout

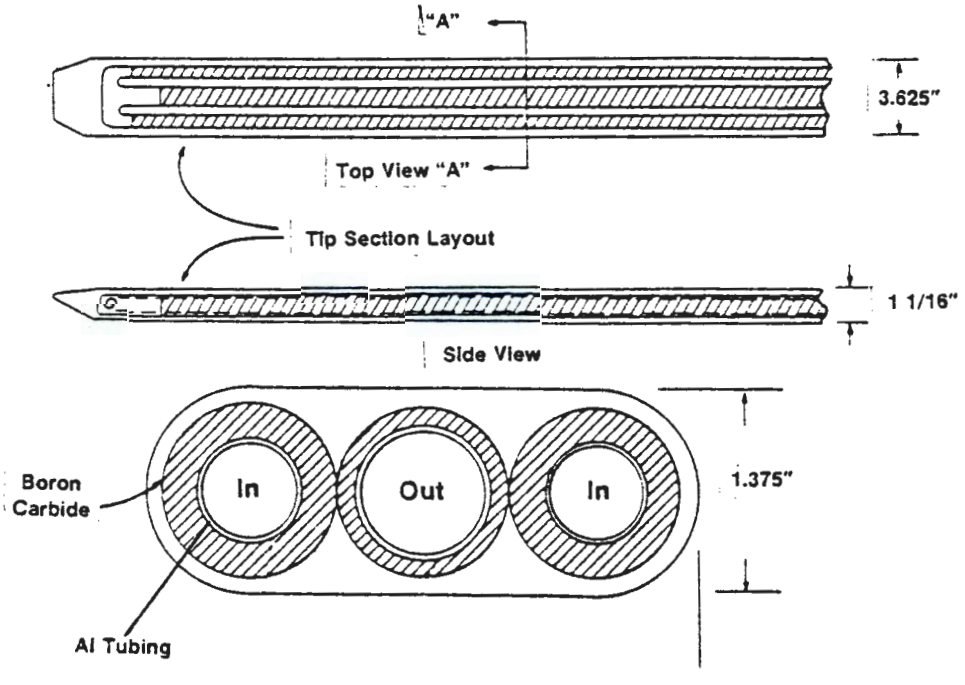

Section "A-A" - Coolant Flow

105-F - HCR - Layout and Cross Section

Figure 2.1-19

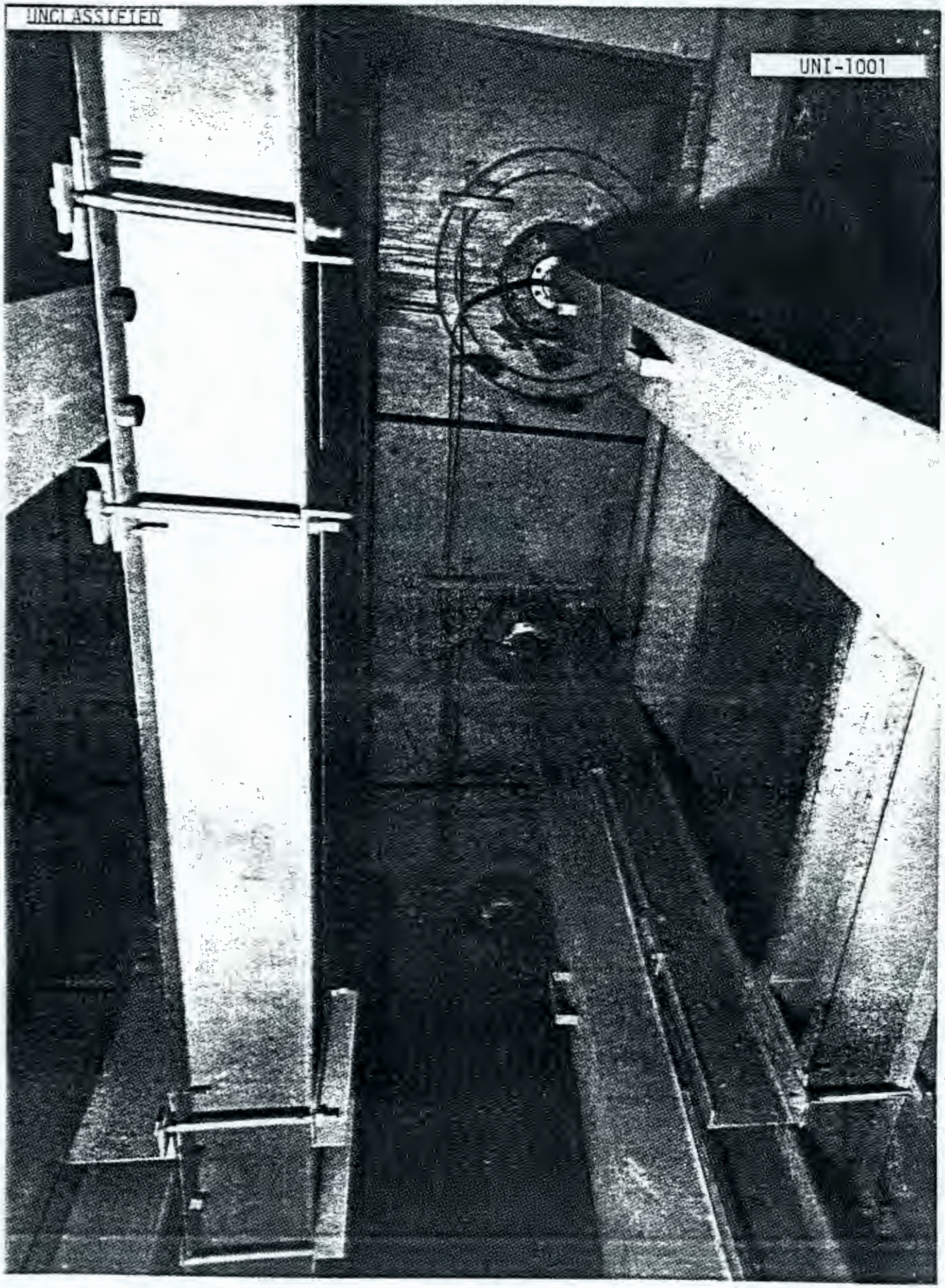

105-F - Inner Rod Room

Figure 2.1-20

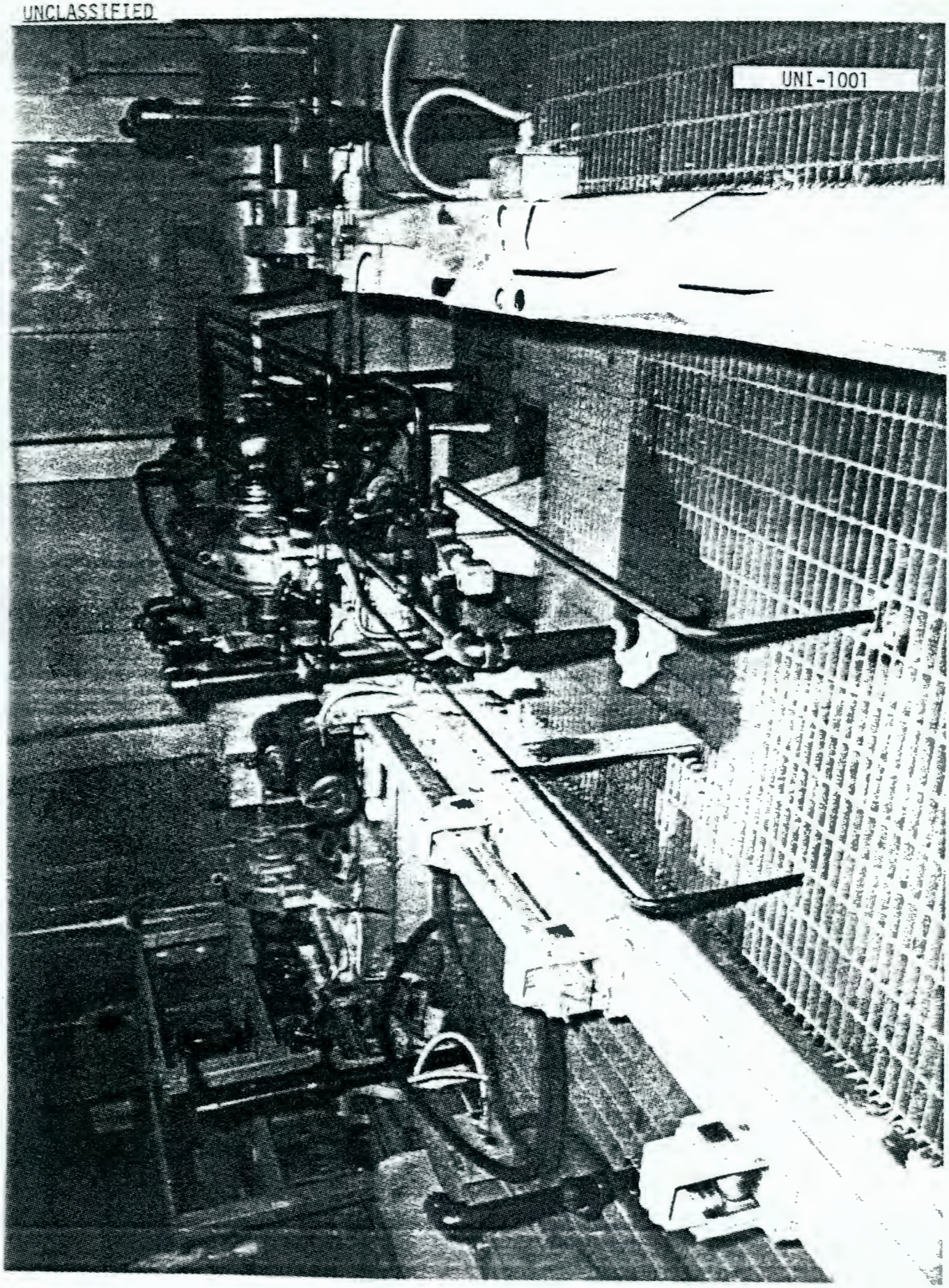

105-F - Outer Rod Room

Figure 2.1-21

105-F - Top of Unit
VSR Pattern

Figure 2.1-22

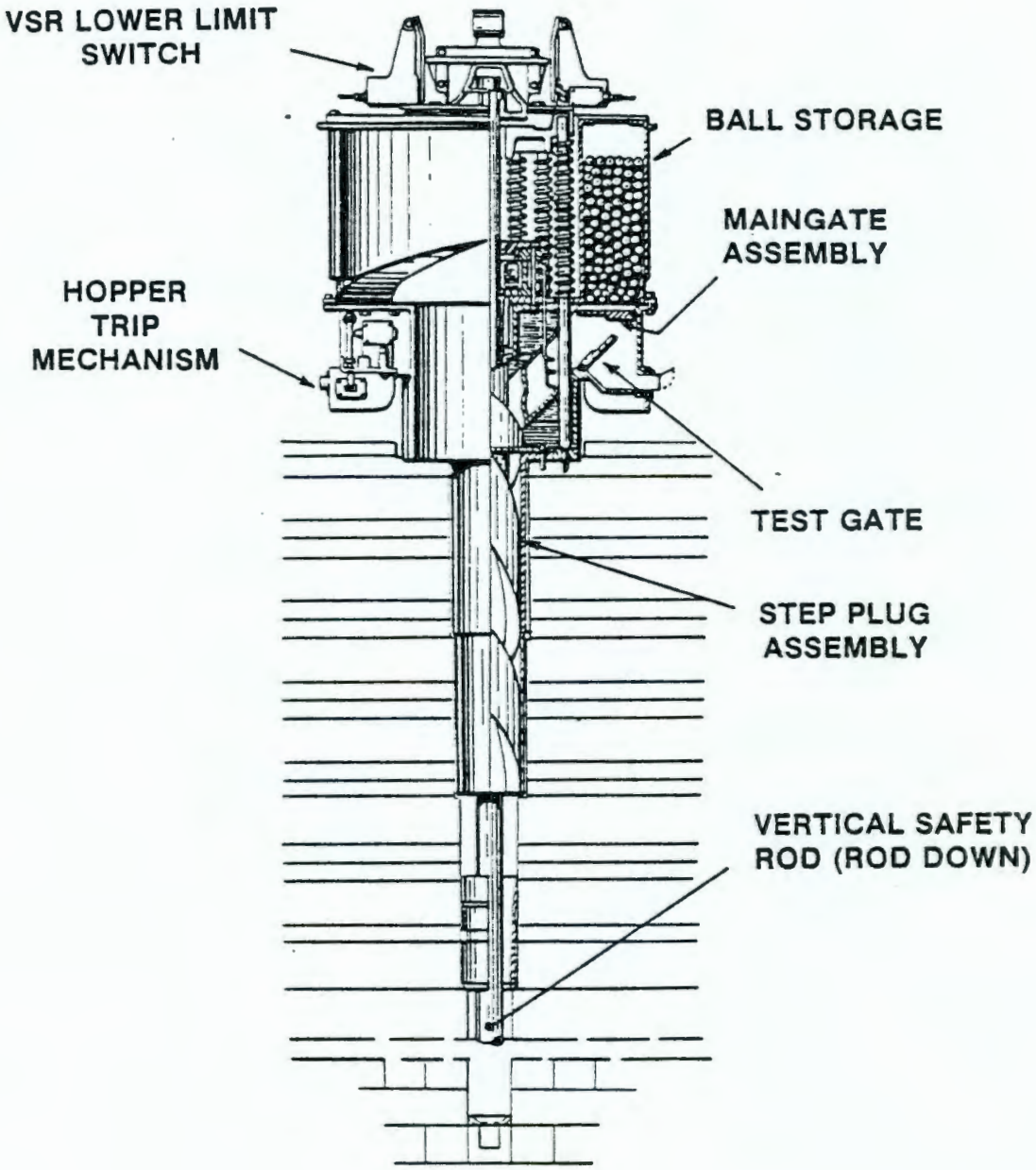

105-F - Ball 3X Safety System - Hopper Stop Plug Assembly

Figure 2.1-23

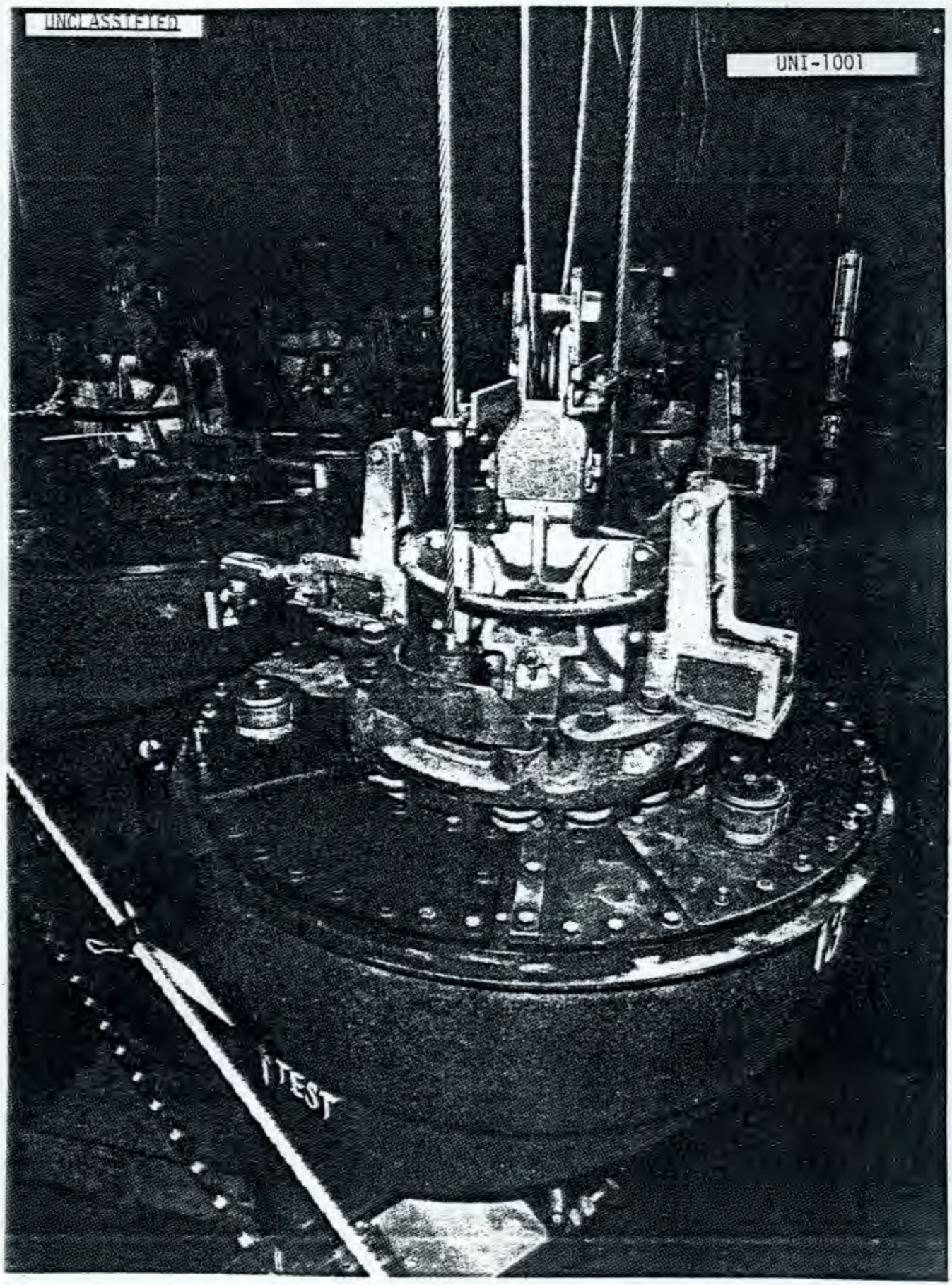

105-F - Ball 3X Safety System
Ball Hopper Assembly

Figure 2.1-24

UNCLASSIFIED

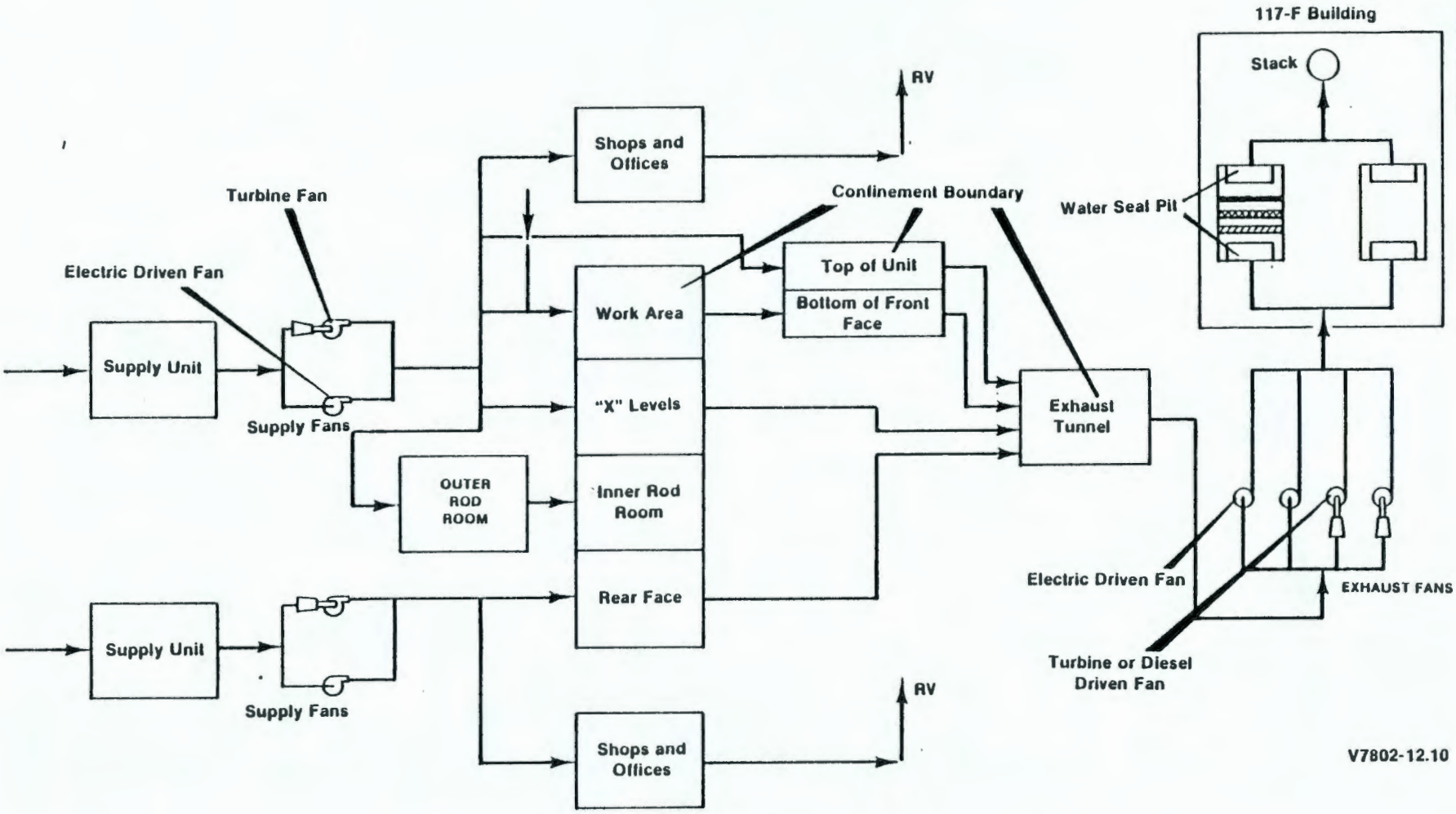

105-F - Ventilation and Exhaust System Flow Diagram

Figure 2.1-25

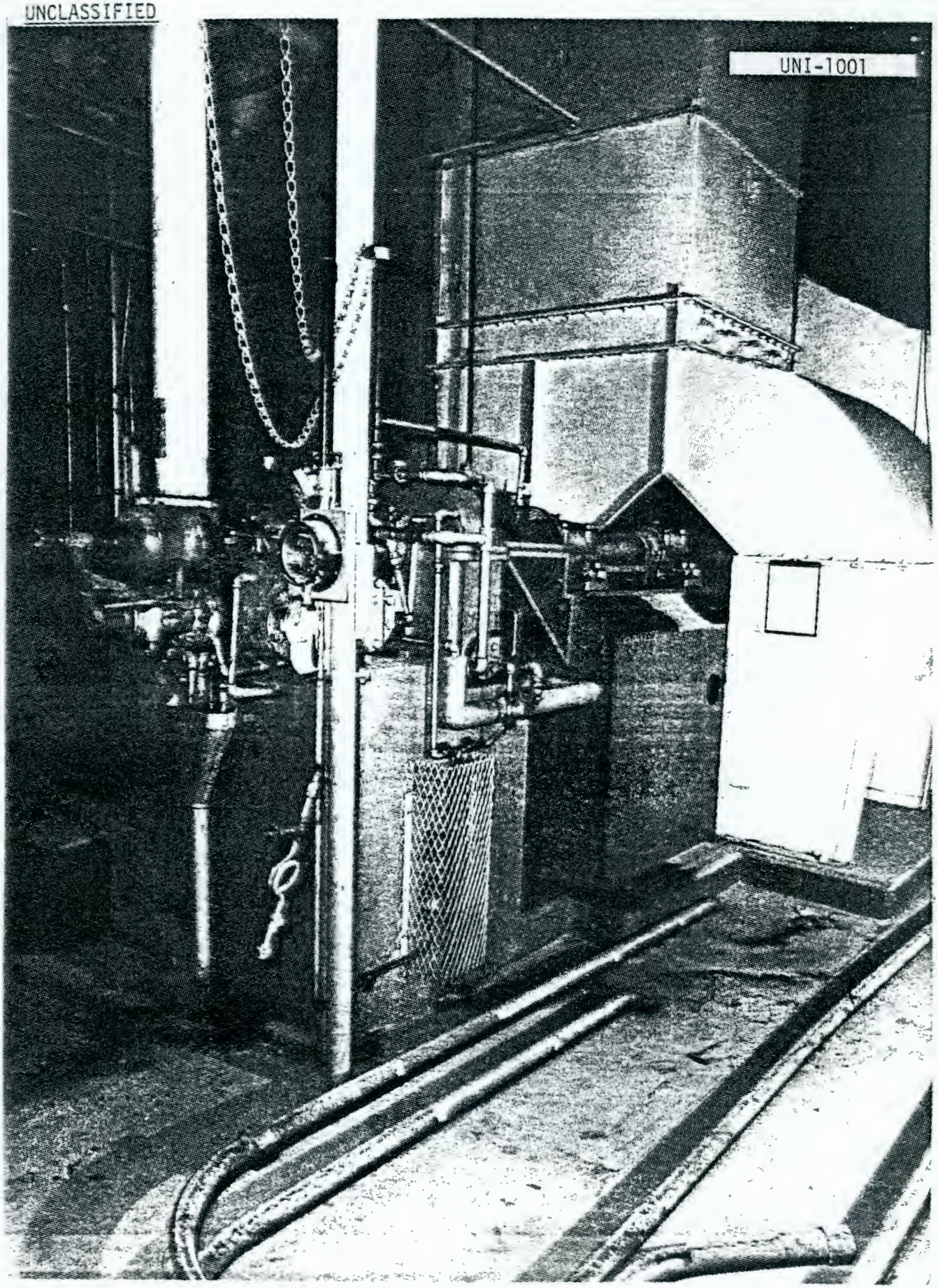

105-F - Steam-Driven Supply Fan

Figure 2.1-26

3.0 EFFLUENT WATER SYSTEM

3.1 Effluent Water System - Effluent Lines, 107-F Retention Basin, 1904-F Outfall and 107-F Liquid Waste Disposal Trench

3.1.1 General Description

Cooling of the 105-F Reactor during operation required that a large volume, ∿100,000 gpm (380,000 l/min), of high quality water be continuously supplied to the reactor on a single pass basis. This water was obtained from the Columbia River and, after chemical treatment and filtering in the water treatment plant, was directed through the reactor process tubes. As it passed through the reactor, the cooling water became radioactive to a degree due to irradiation of the remaining impurities and the pick-up of corrosion products from within the piping and process tubes. Upon exiting from the reactor, the coolant was conveyed to the 107-F Retention Basin by gravity flow via a large diameter pipe, the effluent water line. After being retained in the 107-F Retention Basin long enough to permit decay of the short half-life radioactive elements, the water flowed through another large diameter pipe to the 1904-F Outfall structure which is, in effect, an open weir box. Normally, the water flowed out of the outfall through two large diameter pipes, the river discharge lines which ran under the river surface to a point near the middle of the river when it discharged. On occasions of high water or if one or both of the two river discharge lines became obstructed, the water would overflow the outfall structure and discharge to the river via a spillway.

Occasionally during reactor operation, failure of the protective cladding on one of the fuel elements would occur. The reactor coolant would then pick up debris from this failure and, for a limited time, be contaminated with long half-life radionuclides. On these occasions, the effluent would not be permitted to return directly to the river, but would be diverted from the 107-F Retention Basin to the 107-F Liquid Waste Disposal Trench which was located near the retention basin. The trench functioned as a large filter with the highly radioactive particulate matter being retained in the soil below the trench and the purified water eventually finding its way back to the river.

The Effluent Water System is shown schematically in Figure 3.1-1.

3.1.2 Effluent Lines

The effluent water lines run from the bottom of the downcomer at the rear of the reactor in the 105-F Building, to the 107-F Retention Basin. The F Area effluent system is made up of two independent steel lines, one 60 inches in diameter and the other 42-inches, which proceed from the downcomer to the 107-F Retention Basin by different routes. Approximately the first 800 feet (244 m) of the lines are underground; the remainder run at or slightly above ground level. Support piers and expansion joints which permit the steel line to expand and contract as it is heated and cooled, are spaced along the length of each line. A portion of the southern-most line, approximately 300 feet (91 m) has been removed and the open ends of the pipe are capped. Figure 3.1-1 indicates the routing of the effluent lines. Figures 3.1-2 and 3.1-3 show the north and south effluent lines in detail and Figure 3.1-4 shows the entry of both lines into the 107-F Retention Basin.

3.1.3 107-F Retention Basin

The 107-F Retention Basin is located approximately 1300 feet (400 m) northeast of the 105-F Building. The basin is a rectangular concrete reservoir designed for pool depths of of approximately 15 feet. It is 230 feet (70 m) wide by 467 feet (142 m) long with approximately 19-foot (5.8 m) high walls. A vertical baffle runs down the middle of the basin essentially dividing it into two tanks. The floor of the retention basin consists of 6-inch (15.2 cm) thick reinforced concrete slabs. The sidewalls of the basin slope upward at a 26 degree angle to a point 10 feet (3.04 m) above the floor slab before rising vertically to its full height of 18 feet,10 inches (5.7 m) above the floor. The sloping wall sections are 4-inch (10.1 cm) thick concrete slabs and the vertical walls are of buttress-type, reinforced

concrete construction with a minimum thickness of 1 foot (.305 m) at the top and a maximum thickness of 5.75 feet (1.75 m) at the bottom. The basin structure also includes inlet and outlet chambers.

3.1.4 107-F Discharge Line

The line through which the water from the 107-F Retention Basin was conveyed to the outfall structure (1904-F), is a 60-inch diameter steel line and is located below ground for its entire length. The section of pipe which make up the line are joined with dresser couplings which permit the line to expand and contract.

3.1.5 Outfall Structure (1904-F), River Discharge Lines and Spillway

The 1904-F facility (outfall structure) is located approximately 700 feet (214 m) north-northwest of the north end of the 107-F Retention Basin on the bank of the Columbia River. It is a reinforced concrete box-like structure partitioned in such a way as to permit the water to exit the box by either of two paths. Normal effluent discharge was to a point near the center of the Columbia River via two 42-inch diameter lines which run under the surface of the river. The first 155 feet (47 m) of the two lines, i.e., down the river bank to about the high water mark, are fabricated of reinforced concrete; the remaining 295 feet (90 m) of the pipes, i.e., that portion which runs on the bottom of the river, are steel.

The second water exit path from the 1904-F structure to the river, was via a flume or spillway which ran from the outfall chamber, down the river bank and emptied into the river at the shoreline. The spillway is constructed of reinforced concrete and is 14 feet (4.3 m) by 2 feet (.61 m) deep by approximately 130 feet (40 m) long. This flow path was provided as an alternative means of getting the effluent into the river in the event a blockage of or damage to the two 42-inch discharge lines occurred and/or it could be used as a means of directing the flow if these lines require maintenance or repair.

Figure 3.1-5 is a photograph of the 100-D Outfall structure. It is similar to the 100-F structure and is presented since no picture of the 100-F Outfall is available.

3.1.6 107-F Liquid Waste Disposal Trench

The 107-F Liquid Waste Disposal Trench is located 150 feet (46 m) southeast of the southeast corner of the 107-F Retention Basin. This facility is a below grade earthen structure approximately 550 feet (168 m) long by 200 feet (61 m) wide by 20 feet (6.1 m) deep with a V-shaped cross section and lined with fairly coarse gravel. The trench was used to receive the reactor effluent during outages occasioned by a fuel cladding rupture.

Originally the trench was supplied by directing the water as it exited the 107-F Retention Basin from its normal path down to the 1904-F Outfall structure into a special 12-inch diameter pipe line which ran to the head (north end) of the trench. However, changes were eventually made in the total effluent system which permitted bypassing the retention basin by diverting the reactor effluent to the trench directly from the 42-inch effluent line before it entered the basin. In order to do this, a feeder trench between the effluent line and the main waste disposal trench was provided. This ditch was approximately 300 feet long and entered the main trench about 100 feet (30.5 m) below its north end. This configuration is shown on Figure 3.1-1.

3.2 Radiation and Contamination Levels

The radiation level (and/or personnel exposure level), both external and internal to the 100-F Area Effluent Water System, are low and pose no unusual problems. The system contains varying amounts of contamination depending upon the specific portion being discussed. Transuranic radionuclides in significant quantities are contained in some sections of the system.

The current status of the facilities which constitute the effluent water system is as follows:

- The effluent lines are capped in such a manner as to prevent unauthorized access by personnel. External radiation exposure and contamination along the length of the lines is no greater than the general area background. Internally, the pipes are rusted and scaled and are contaminated to the extent of 40-50,000 c/m. Exposure rates to personnel working on an open line are low, in the order of 5 mR/hr.

- The 107-F retention basin has been backfilled with uncontaminated dirt to a depth of at least 5 feet (1.52 m). The soil is piled up over the center baffle and the outside walls. Figure 3.1-6 show the dirt filled basin. Filling the basin with dirt was done to reduce the exposure level and eliminate the spread of contamination eminating from the contaminated layer of sludge which remains on the floor and up the walls of the facility. Currently, the exposure level in and around the basin is no greater than the general area background.

  The sludge contained within the basin contains a variety of radionuclides including trace amounts of transuranics. Exposure rates in the order of 50 mR/hr are encountered on the exposed sludge layer. Contamination has also been absorbed into the concrete floor and walls of the basin. The depth of penetration has not yet been determined. Also, some leakage of contaminated water out of the basin through the walls and floor slab joints occurred. Therefore, pockets of contaminated soil may be found under the basin floor.

- The 107-F Discharge Line is sealed to prevent unauthorized personnel entry. The radiation and contamination status of this line is similar to that of the effluent lines, i.e., no exposure to personnel above background and internal contamination up to 40-50,000 c/m.

- The 1904-F Outfall structure has been backfilled with uncontaminated soil in order to reduce the personnel exposure rate and control the

the spread of contamination from the loose sludge in the facility. The exposure rate is now at background level. Even without the protective dirt layer, the radiation and contamination levels in the 1904-F facility are low, 1 mR and 2550/3000 c/m.

- The 107-F Liquid Waste Disposal Trench has also been backfilled with uncontaminated dirt primarily as a means of controlling contamination spread. Personnel exposure rate in the trench is at the area background level. Core samples taken 20 feet (6.1 m) below grade, in the region of highest radionuclide content read 600-1000 c/m.

3.3 Reference Drawings

The following drawings describe the various facilities included in the 100-F Effluent Water System:

H-1-70185	Process Effluent System - Plan and Profile
H-1-26715	Plan and Profile - Effluent Line from 105-F to 107-F
H-1-950	Effluent Line - 105-F to 107-F
H-1951	Effluent Line - 105-F to 107-F
W-73199	Bldg. 107-F - Concrete - Plan and Details
W-69714	Bldg. 107-F - Concrete - Details
H-1-26718	Effluent Line - Plan and Profile - 107-F to River
W-72093	Process Sewers - 1904-F Plan - Profile and Concrete

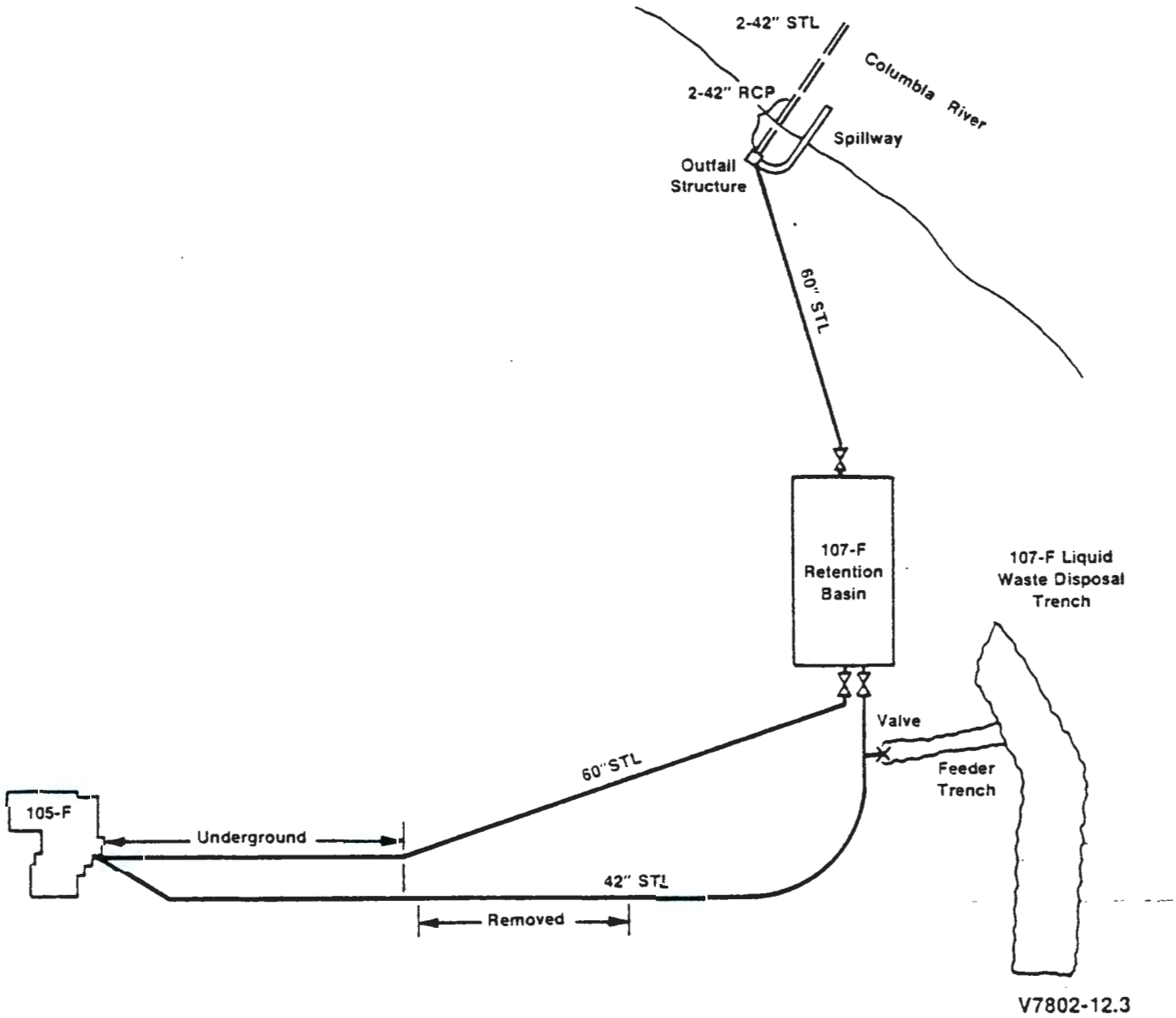

100-F - Effluent Water System

Figure 3.1-1

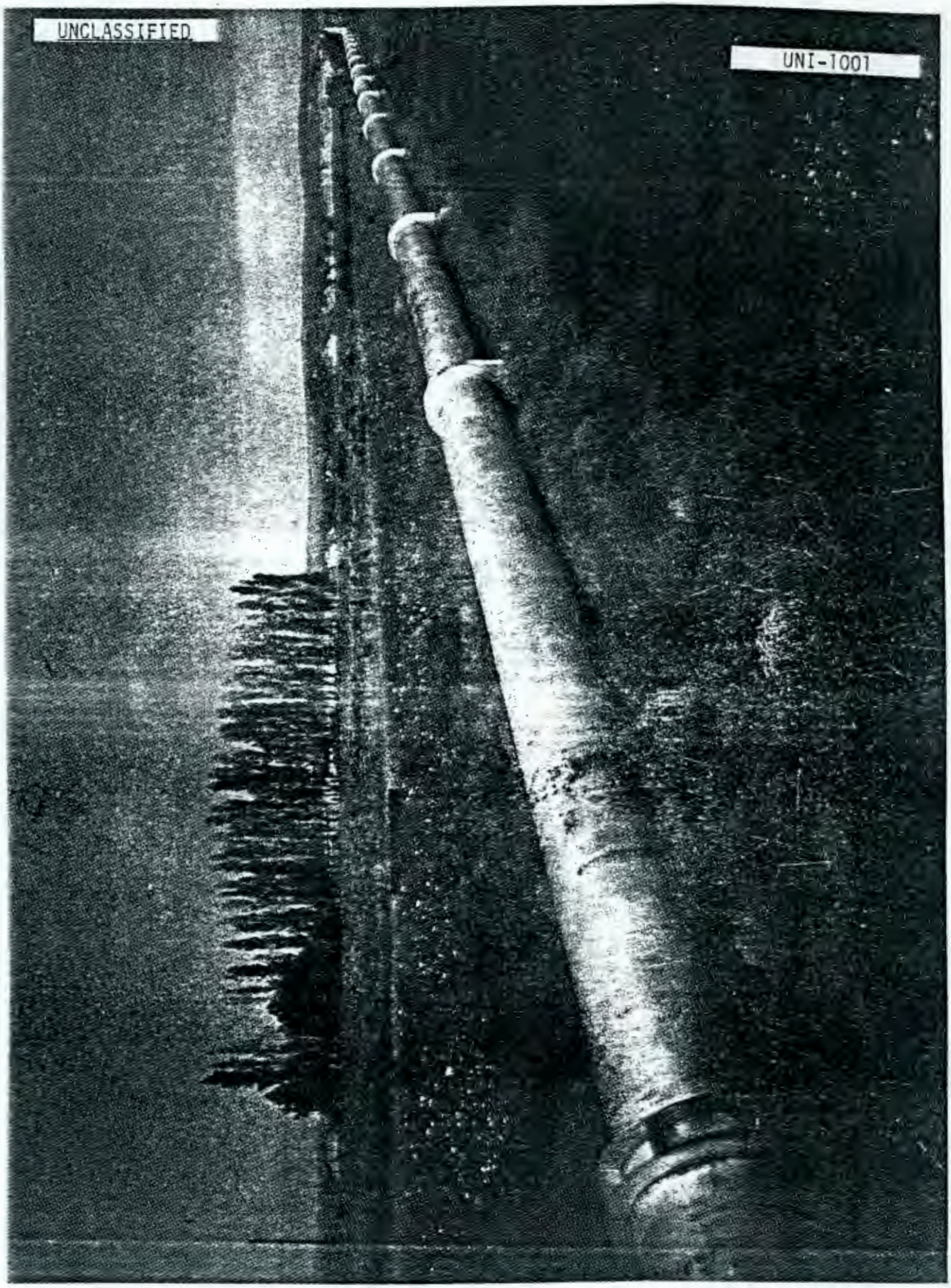

100-F - North Effluent Line
60-inch Diameter

Figure 3.1-2

100-F - South Effluent Line
42-inch Diameter

Figure 3.1-3

UNCLASSIFIED

9112 0 0 2 1 0

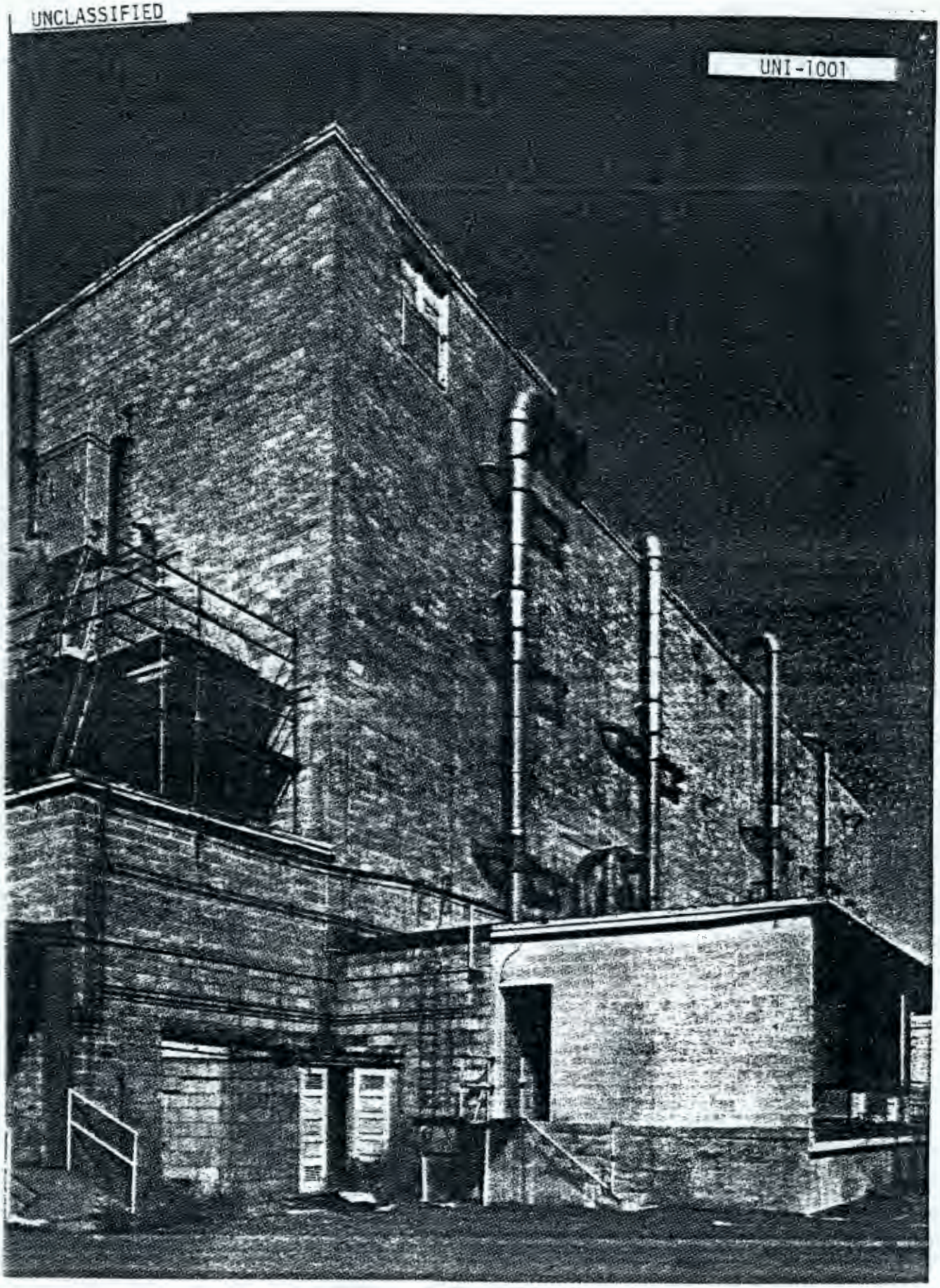

108-F Building - Biology Laboratory

Figure 4.1-2

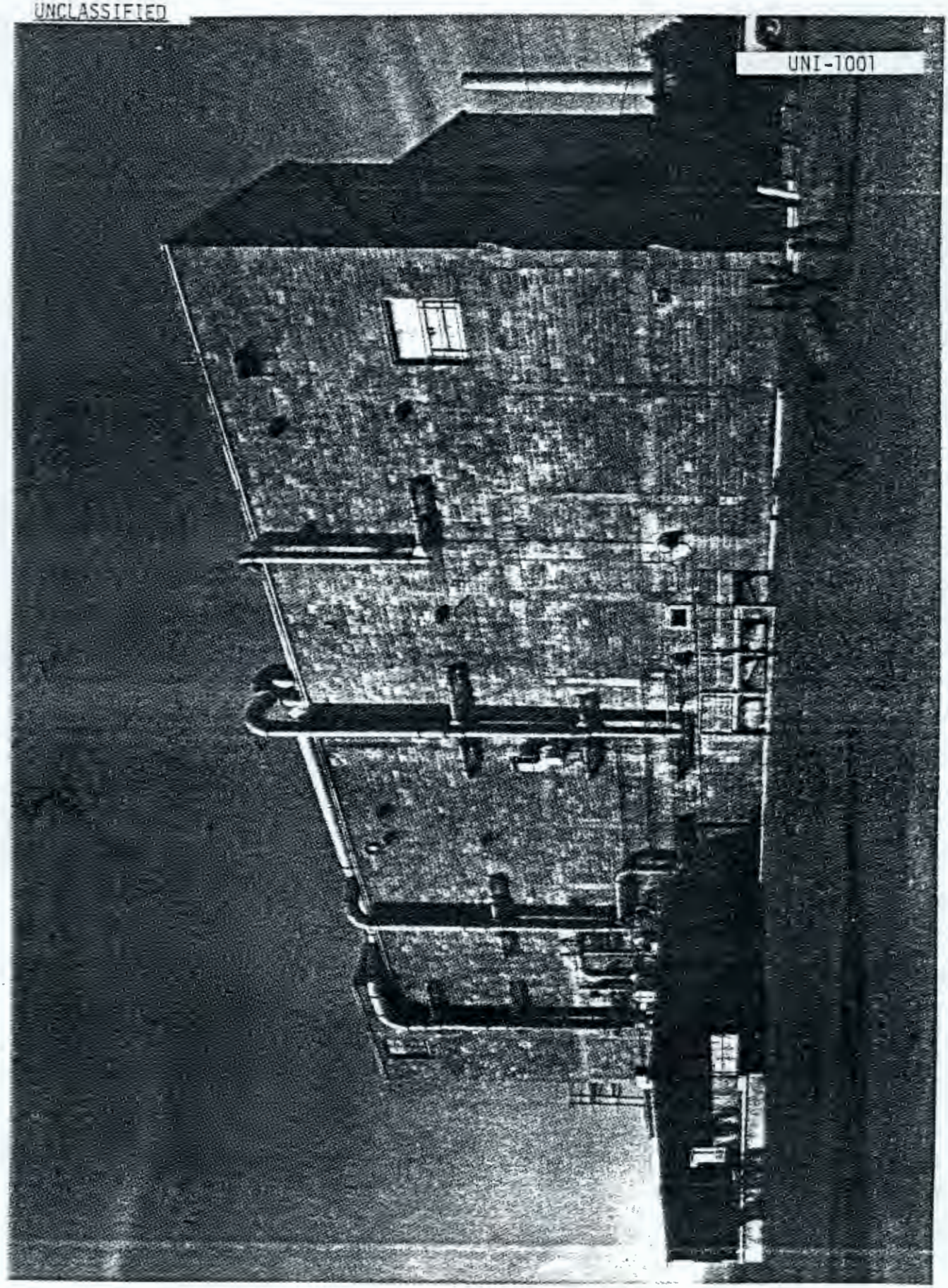

108-F Building - Biological Laboratory

Figure 4.1-1

9 1 1 2 2 1 1 6 2

4.2 Radiation and Contamination Levels

In November, 1977 a number of radiation surveys were carried out in the 108-F Building in connection with a housekeeping type program being conducted in the building. These surveys provide a good indication of the radiation and contamination status of the building. In general, the large majority of the building is open to unrestricted entry. A limited number of rooms are generally contaminated and therefore, are on controlled entry status. The overall background exposure rate to personnel working in the building is 1 mR/hr. Copies of several of the Radiation Survey Report sheets are attached as Figures 4.1-5, a through g.

4.3 Reference Drawings

The following drawings depict the construction and layout of the 108-F building:

W-74382	108-F Architectural - Plans and Schedules
H-1-1936	108-F Lab. Furniture Arrgt.
	Sheet 1 - 1st Floor
	Sheet 2 - 2nd Floor
	Sheet 3 - 3rd Floor
	Sheet 4 - 4th Floor
H-1-1979	108-F Architectural - Sheets 1 through 24
W-74355	108-F Concrete Foundation and Ground Floor Plans

4.0 108-F BUILDING - BIOLOGICAL LABORATORY

4.1 Description

The 108-F Building was a part of the original area construction and was intended to provide facilities for the mixing and addition of chemicals used in the treatment of the reactor cooling water. Shortly after the reactor began operation, it was determined that such treatment of the reactor coolant was not required or that mixing and addition function could be better performed elsewhere in the systems. The 108-F Building was then converted to use as a biology laboratory in which programs to determine the effects of radiation and contamination resulting from the Hanford Operation on plant and animal life, could be pursued.

The original 108-F Building was a four-story, steel frame and concrete block structure with reinforced concrete foundation and floors. The building is located approximately 100 yards (91.4 m) due east of the 105-F Building. The original building had a floor area of about 20,000 ft^2 (1858 m^2). This was later increased by the addition of an 11,000 ft^2 (1022 m^2) annex. The addition is a three-story, concrete block structure adjoining the older building. Figures 4.1-1 and 4.1-2 show the exterior of the 108-F building from different angles.

The interior of the building is layed out in typical laboratory fashion, i.e., many small rooms equipped for laboratory use, a number of small offices, a large conference room, an administrative section, a library, lunch and locker rooms, etc. Since radioactive materials were used in the work performed within the building, many of the laboratories and storage rooms were (and are) maintained in a controlled status. Many of the facilities (sinks, exhaust hoods, piping, duct work, etc.) are contaminated.

The 108-F Building contains all of the services and utilities normally provided in a laboratory facility including a heating and ventilating system, an adequate electrical power supply system, compressed air, special air conditioning facilities in specific locations (instrument room and small animal quarters) and an exhaust air system with filters and collectors. Figure 4.1-3 is a photograph of the type of exhaust hoods in the building.

107-F Retention Basin
Dirt Fill

Figure 3.1-6

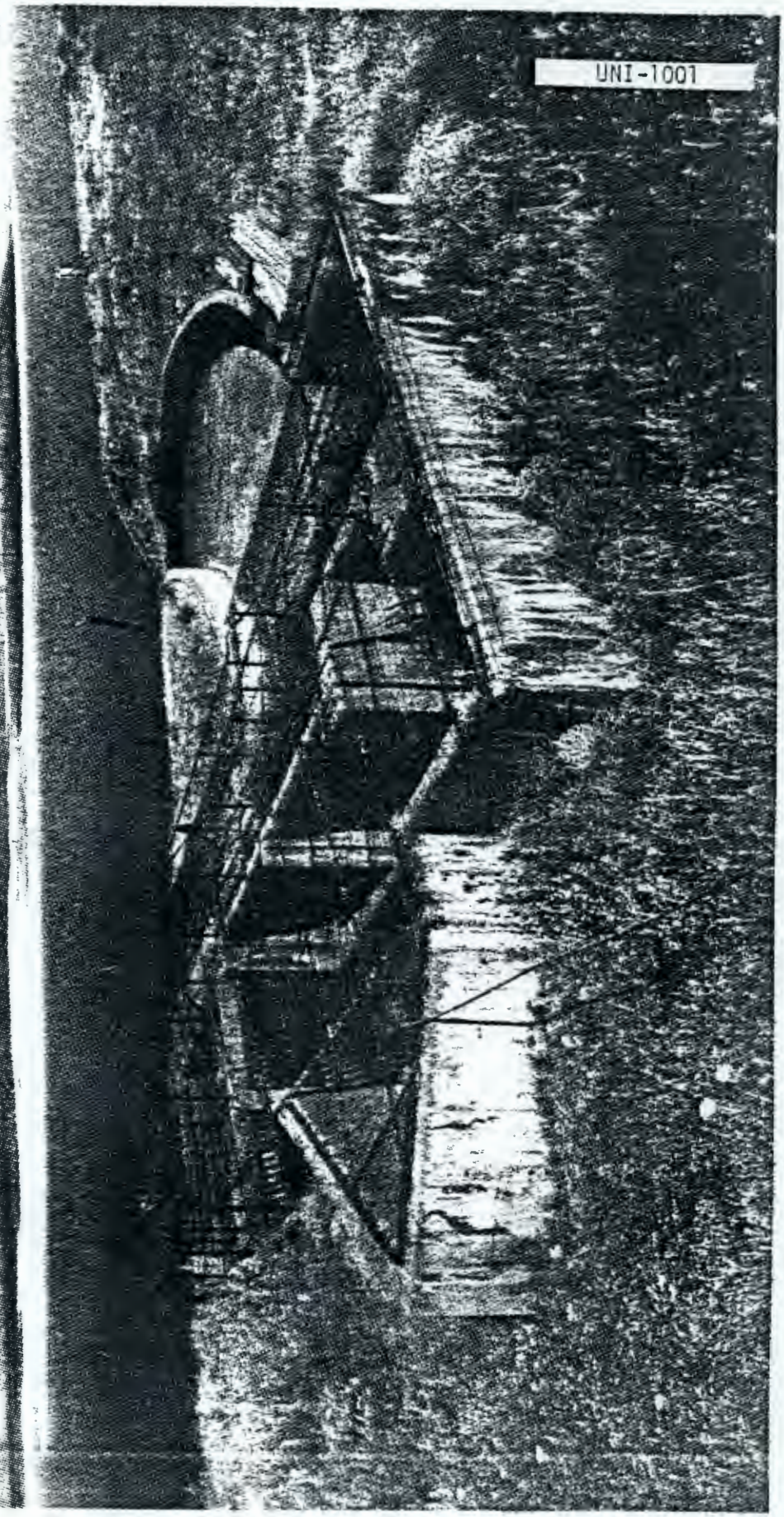

1904-D Outfall Structure

Figure 3.1-5

100-F - Effluent Line Entry
107 Retention Basin

Figure 3.1-4

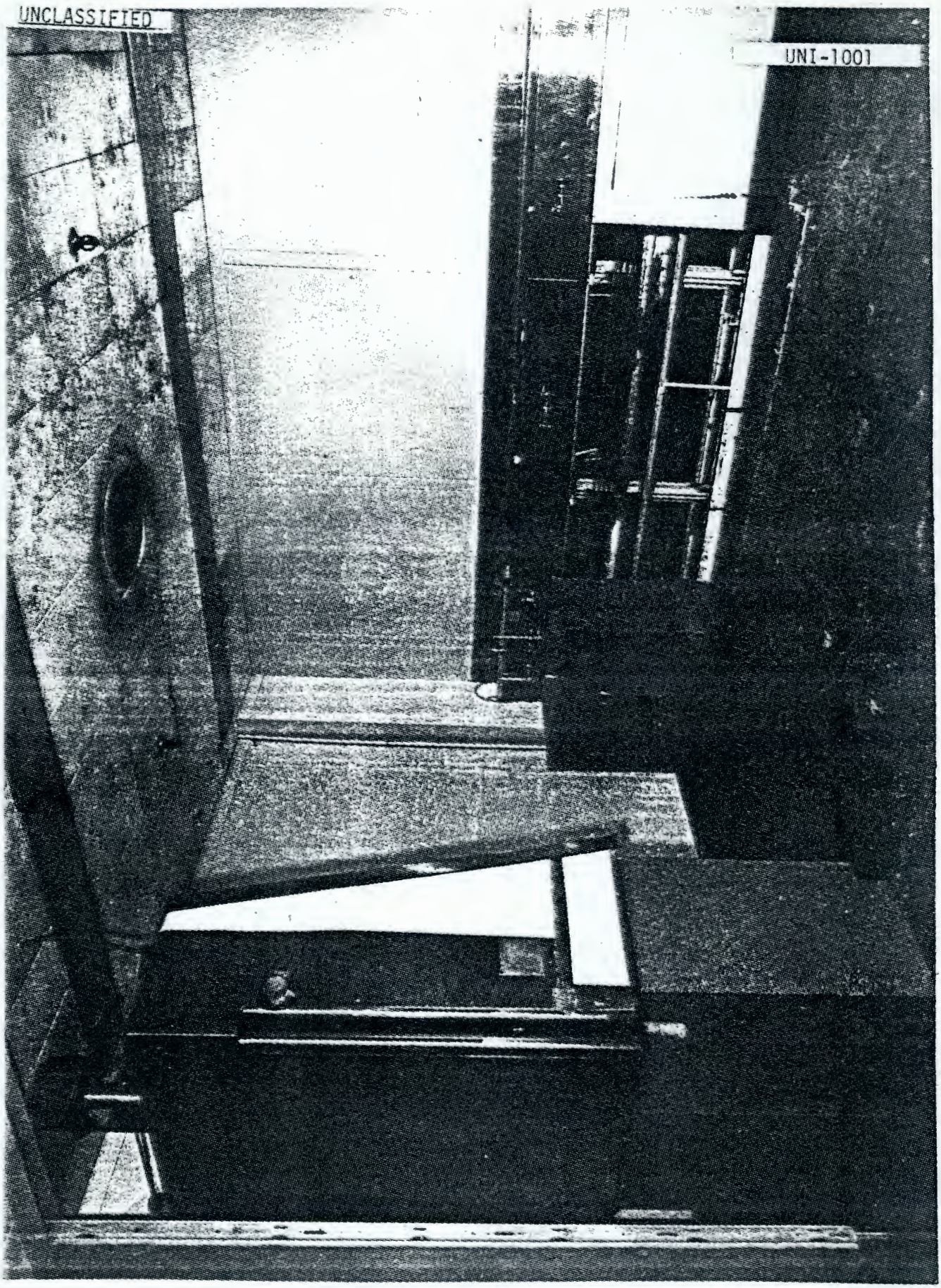

108-F Building - Typical Laboratory
and Hood Installation

Figure 4.1-3

UNITED NUCLEAR INDUSTRIES, INC.

RADIATION SURVEY REPORT

REPORT # 1059 10-12-77

TIME PERIOD 0730am TO 400pm | BUILDING 108-F | LOCATION 1st Floor

DESCRIPTION OF JOB

MONITOR SURVEY TO CLEAN TRASH OUT OF LABS & OFFICES AND PUT INTO BOXES FOR DISPOSAL AT 100-N. NON CONTAMINATED TRASH TO CLEAR AT 100-N

MEASUREMENTS MADE

ITEM OR LOCATION	DOSE RATES OBSERVED: DISTANCE & SOURCE SIZE	β mrad/hr	γ mr/hr	α, β dpm/100 cm²	CONTAMINATION LEVELS: dpm/100 cm² at 1 meter	dpm/100 cm² at (DIST)
1 Direct scan of offices	1"			<100	<500	Alpha
2 Smears of offices	5			<100	<500	Alpha
3 Direct scan of halls	1"			<100	<500	Alpha
4 Smears of halls	5			<100	<500	Alpha
5 Equipment smears	5			<100	<500	Alpha
6 Drain line smears	5			<100	<500	Alpha
7						
8						
9						
10						

INSTRUMENTS USED: 6m NMC-M CP JUNO OTHER: NEUTRON ALLOWANCE dpm/hr

DOSE RATES TO PERSONNEL

PHASE OF WORK	BASED ON MEASUREMENTS	AVERAGE TRUE LIMITING DOSE RATE	LIMIT APPLYING	ANNOUNCED DOSE RATE (TIMEKEEPING UNITS)
Scan & Sample				

TIMEKEEPER PROVIDED: YES NO. | GAS CLOUD INVOLVED: NOBLE GAS REACTOR GAS NONE | RESP. PROT. WORN: SUPPLIED AIR FILTER NONE | EYE PROTECTION WORN: YES NO.

WORK WAS PERFORMED ON: SWP RWP NUMBER | DID THE WHOLE BODY γ DOSE RATE EXCEED THE WHOLE BODY β DOSE RATE? YES NO

COMMENTS

ACTION TAKEN

REFERENCES | MAX. PERS. DOSE RATE (TIMEKEEPING UNITS) | MAX. DOSE RATE OBSERVED | SIGNED

SA-0800-004 (7-73)

108-B Radiation Survey Report

Figure 4.1-4A

UNITED NUCLEAR INDUSTRIES, INC.
RADIATION SURVEY REPORT

NUMBER UC1CS1 DATE 12-12-77

TIME PERIOD 0730AM TO 4:00PM | BUILDING 108-F | LOCATION 1ST FLOOR

DESCRIPTION OF JOB

MONITOR FOR IAT TO CLEAN UP CONTAMINATED PUT TRASH INTO BOXES FOR BURIAL AT 200-W NON-CONTAMINATED TRASH PUT IN CLEAN WELL AT 100-H

MEASUREMENTS MADE

NO.	ITEM OR LOCATION	DOSE RATES OBSERVED: DISTANCE & SOURCE SIZE	β mR/hr	γ mR/hr	CONTAMINATION LEVELS: c/s or d/s	dpm/hr at 3"	dpm/hr incl	dpm/hr at (DIST)
1	101 TO 106 DIRECT + SMEARS	1"+S			<200 c/m	<500 d/m ALPHA		
2	ROOMS 108 + 109 DIRECT + SMEARS	1"+S			<200 c/m	<500 d/m ALPHA		
3	ROOM 107 IS NOT CLEAN YET FLOOR SMEARS				<200 c/m	50,000 d/m ALPHA		
4	101 TO 104 DRAINS + SINKS	1"+½"			1000 c/m	5000 d/m ALPHA		
5	DIRECT + SMEARS OF HALLS	1"+S			<200 c/m	<500 d/m ALPHA		
6	DIRECT SCAN + SMEARS OF BASEMENT				<200 c/m	<500 d/m ALPHA		
7	ROOM 105 (HOOD)	1"+½"			4000 c/m	10,000 d/m ALPHA		
8	EQUIPMENT SURFACES	F			<200 c/m	<500 d/m ALPHA		
9	PERSONNEL SURFACES	F			<200 c/m	<500 d/m ALPHA		
10								

INSTRUMENTS USED: GM NMG-4 CP JUNO OTHER - Pam NEUTRON ALLOWANCE N/A mrem/hr

DOSE RATES TO PERSONNEL

PHASE OF WORK	BASED ON MEASUREMENTS	AVERAGE TRUE LIMITING DOSE RATE	LIMIT APPLYING	ANNOUNCED DOSE RATE (TIMEKEEPING UNITS)
SAME AS ABOVE	ALL	<1	WBP	<1

TIMEKEEPER PROVIDED: YES NO | GAS CLOUD INVOLVED: NOBLE GAS REACTOR GAS NONE | RESP. PROT. WORN: SUPPLIED AIR FILTER NONE | EYE PROTECTION WORN: YES NO

WORK WAS PERFORMED ON SWP RWP NUMBER _____ | DID THE WHOLE BODY γ DOSE RATE EXCEED THE WHOLE BODY β DOSE RATE? YES NO

COMMENTS 108-F IS RELEASED FOR DEGRADED CONTAMINATION IN LABS, OFFICES + HALLS. ALL VENTS + DRAINS TAPED AND SEALED. FIXED CONTAMINATION IN SINKS.

ACTION TAKEN ROOMS THAT ARE STILL CONTAMINATED ARE SEALED AND MARKED (illegible)

REFERENCES | MAX. PERS. DOSE RATE (TIMEKEEPING UNITS) <1 | MAX. DOSE RATE OBSERVED <1 | SIGNED C. / CONSTINE

34-6800-004 (7-73)

108-B Radiation Survey Report

Figure 4.1-4B

UNITED NUCLEAR INDUSTRIES, INC.

RADIATION SURVEY REPORT

TIME PERIOD: 0830am TO 4:00pm | BUILDING: 108-F | LOCATION: 2ND FLOOR | TIMEKEEPER: [illegible] | DATE: 10-10-77

DESCRIPTION OF JOB

MONITOR FOR IAT TO CLEAN OFFICES & LABS
PUT TRASH INTO BOXES FOR BURIAL AT 200-W NOW
CONTAMINATED TRASH PUT IN CLEAN WELL AT 100-H

MEASUREMENTS MADE

No.	ITEM OR LOCATION	DISTANCE & SOURCE SIZE	DOSE RATES OBSERVED: β mrad/hr	γ mr/hr	CONTAMINATION LEVELS: c/s or d/s	dpm/100 cm² α	dpm/100 cm² β (DIST)
1	DIRECT SCAN OF ALL OFFICES	1"			<100/m	<500/m	ALPHA
2	SMEARS OF ALL OFFICES	S			<100/m	<500/m	ALPHA
3	DIRECT SCAN OF HALLS [redacted]	1"			<100/m	<500/m	ALPHA
4	SMEARS OF ALL OFFICES	S			<100/m	<500/m	ALPHA
5	EQUIPMENT SMEARS	F			<100/m	<500/m	ALPHA
6	PERSONNEL SMEARS	F			<100/m	<500/m	ALPHA
7							
8							
9							
10							

INSTRUMENTS USED: GM [illegible] CP JUNO OTHER: IAT | NEUTRON ALLOWANCE: n/a | DPM/CM² | DPM

DOSE RATES TO PERSONNEL

PHASE OF WORK	BASED ON MEASUREMENTS	AVERAGE TOTAL LIMITING DOSE RATE	LIMIT APPLYING	APPROVED DOSE RATE (TIMEKEEPING UNITS)
SAME AS ABOVE	ALL	<1	NUP	<1

TIMEKEEPER PROVIDED: YES (NO) | GAS CLOUD INVOLVED: NOBLE GAS / REACTOR GAS (NONE) | RESP. PROT. WORN: NUMBER AIR / FILTER (NONE) | EYE PROTECTION WORN: YES (NO)

WORK WAS PERFORMED ON: SWP / RWP NUMBER | DID THE WHOLE BODY γ DOSE RATE EXCEED THE WHOLE BODY β DOSE RATE? YES (NO)

COMMENTS: ALL TRASH TO 100-H CLEAN WELL <100/m <500/m ALPHA
DIRECT SCAN & SMEARS OF OFFICES THAT HAVE BEEN CLEANED
[illegible]

ACTION TAKEN

REFERENCES | MAX. PERS. DOSE RATE (TIMEKEEPING UNITS) <1 | MAX. DOSE RATE OBSERVED <1 | SIGNED [illegible]

94-6800-2004 (7-73)

108-B Radiation Survey Report

Figure 4.1-4C

UNITED NUCLEAR INDUSTRIES, INC.
RADIATION SURVEY REPORT

NUMBER 001057 DATE 10-11-77

TIME PERIOD 0230 AM TO 4:00 PM BUILDING 108-F LOCATION 2ND FLOOR

DESCRIPTION OF JOB

MONITOR EVR PAT TO CLEAN UP OF FLASH AND PAT INTO BOXES FOR BURIAL AT LOC-W. VON CONTAMINATED FLASH PAT IN CLEAN WELL AT 100-H

MEASUREMENTS MADE

NO.	ITEM OR LOCATION	DISTANCE & SOURCE SIZE	DOSE RATES OBSERVED β mrad/hr	γ mr/hr	CONTAMINATION LEVELS c/s or d/m	mrad/hr AT 5 INCL	mr/hr AT (DIST)
	Rm 201 DRAINS	1 3/4"			1,000 c/m	<500 c/m ALPHA	
	Rm 202 DRAINS	"			1,000 c/m	<500 c/m ALPHA	
	Rm 203 1 HOOD	"			<200 c/m	200 c/m ALPHA	
	Rm 204 SINKS + DRAINS	"			1000 c/m	2000 c/m ALPHA	
	Rm 205 SINKS + DRAINS	"			1,000 c/m	2000 c/m ALPHA	
	Rm 206 1 HOOD	"			5,000 c/m	10,000 c/m ALPHA	
	Rm 207 1 HOOD	"			1000 c/m	5,000 c/m ALPHA	
	Rm 208 1 HOOD	"			<200 c/m	100,000 c/m ALPHA	
	Rm 209 1 HOOD	"			1,000 c/m	5,000 c/m ALPHA	
	Rm 210 1 HOOD	"			1000 c/m	10,000 c/m ALPHA	

INSTRUMENTS USED: GM WRG-M CP JUNO OTHER - PAM NEUTRON ALLOWANCE N/A mrem/hr

DOSE RATES TO PERSONNEL

PHASE OF WORK	BASED ON MEASUREMENTS	AVERAGE TRUE LIMITING DOSE RATE	LIMIT APPLYING	ANNOUNCED DOSE RATE (TIMEKEEPING UNITS)
SAME AS ABOVE	ALL	<1	WDP	<1

TIMEKEEPER PROVIDED YES (NO) GAS CLOUD INVOLVED NOBLE GAS REACTOR GAS (NONE) RESP. PROT. WORN SUPPLIED AIR FILTER (NONE) EYE PROTECTION WORN YES (NO)

WORK WAS PERFORMED ON SWP RWP NUMBER DID THE WHOLE BODY γ DOSE RATE EXCEED THE WHOLE BODY β DOSE RATE? YES (NO)

COMMENTS

RM. 206 2 HOODS WITH NO DETECTABLE CONTAMINATION
OUT IN HALL WAY 2 HOODS WITH NO DETECTABLE CONTAMINATION
PERSONNEL SURVEYS <500 c/m <200 c/m
SMEARS OF FLOORS IN LABS <500 c/m <200 c/m
SMEARS OF HALLS <500 c/m <200 c/m

ACTION TAKEN

2ND FLOOR RELEASED NO UNFIXABLE CONTAMINATION

REFERENCES MAX. PERS. DOSE RATE (TIMEKEEPING UNITS) <1 MAX. DOSE RATE OBSERVED <1 SIGNED: C. Compton Fine

Sw-8500-006 (7-73)

108-B Radiation Survey Report

Figure 4.1-4D

UNITED NUCLEAR INDUSTRIES, INC.

RADIATION SURVEY REPORT

NUMBER: 001051 DATE: 10-6-77

TIME PERIOD: 0900 AM TO 400 PM BUILDING: 108-B LOCATION: 3RD FLOOR

DESCRIPTION OF JOB

MONITOR FOR SAT TO CLEAN UP OF 3RD FLOOR TO REMOVE ALL TRASH AND TO BOX CONTAMINATED TRASH FOR BURIAL AT 200-W EQUIPMENT SURVEYS & PERSONNEL SURVEYS

MEASUREMENTS MADE

ITEM OR LOCATION (NO.)	DOSE RATES OBSERVED: DISTANCE & SOURCE SIZE	γ mrad/hr	γ mr/hr	CONTAMINATION LEVELS: c.p.m. d/m	dpm d/m AT 3 inch	dpm/100 cm² AT (DIST)
1 DIRECT SCAN OF TRASH FOR BURIAL AT 150-F				<400 d/m	<5000 d/m	
2 DIRECT SCAN OF TRASH TO 200-W				1,000 d/m	<500 d/m	
3 SMEARS OF ROOMS CLEANED				<400 d/m	<5000 d/m	
4 SMEARS OF HALLS				<400 d/m	<5000 d/m	
5 EQUIPMENT SURVEYS				<400 d/m	<500 d/m	
6 PERSONNEL SURVEYS				<400 d/m	<500 d/m	
7						
8						
9						
10						

INSTRUMENTS USED: GM (MRG-M) CP JUNO OTHER: PAM NEUTRON ALLOWANCE: N/A dpm/hr

DOSE RATES TO PERSONNEL

PHASE OF WORK	BASED ON MEASUREMENTS	AVERAGE TIME LIMITING DOSE RATE	LIMIT APPLYING	ANNOUNCED DOSE RATE (TIMEKEEPING UNITS)
SAME AS ABOVE	2	<1	WOP	<1

TIMEKEEPER PROVIDED: YES (NO) GAS CLOUD INVOLVED: DOUBLE GAS REGULTOR GAS (NONE) RESP. PROT. WORN: SUPPLIED AIR FILTER (NONE) EYE PROTECTION WORN: YES (NO)

WORK WAS PERFORMED ON: SWP RWP NUMBER DID THE WHOLE BODY γ DOSE RATE EXCEED THE WHOLE BODY β DOSE RATE? YES (NO)

COMMENTS

ACTION TAKEN

REFERENCES MAX. PERS. DOSE RATE (TIMEKEEPING UNITS) <1 MAX. DOSE RATE OBSERVED <1 SIGNED [illegible]

54-0000-004 (7-73)

108-B Radiation Survey Report

Figure 4.1-4E

UNITED NUCLEAR INDUSTRIES, INC.
RADIATION SURVEY REPORT

NUMBER 001053 DATE 15-6-77

TIME PERIOD 0830AM TO 4:00PM BUILDING 108-F LOCATION 3RD FLOOR

DESCRIPTION OF JOB

MONITOR FOR [illegible] IN CLEAN OFFICES & ABS. PUT TRASH IN BOXES FOR BURIAL AT 200-W, MOV UNCONTAMINATED TRASH OUT IN CLEAN CELL AT 100-H

MEASUREMENTS MADE

ITEM OR LOCATION NO.		DOSE RATES OBSERVED: DISTANCE & SOURCE SIZE	β mrad/hr	γ mr/hr	CONTAMINATION LEVELS: c/m or d/m	RFRD/hr AT 1"	MCL	RF/hr AT (DIST)
RM 301	DRAIN PIPES				1,000 c/m			1,000 c/m ALPHA
RM 302	CONTAMINATED FLOOR SMEARABLE				<200 c/m			500 c/m ALPHA
RM 303	1 HOOD				<200 c/m			50,000 c/m ALPHA
" "	DRAIN PIPES				1000 c/m			1000 c/m ALPHA
RM 304	CONTAMINATED FLOOR SMEARABLE				1,000 c/m			5,000 c/m ALPHA
RM 305	DRAIN PIPES				1,000 c/m			<500 c/m ALPHA
RM 306	1 HOOD				2,000 c/m			10,000 c/m ALPHA
RM 307	1 HOOD				<200 c/m			1,000 c/m ALPHA
RM 308	2 HOODS				<200 c/m			6,000 c/m ALPHA
RM 309	2 HOODS				<200 c/m			3000 c/m + 500 c/m ALPHA

INSTRUMENTS USED: GM MICA CP JUNO OTHER: PA m NEUTRON ALLOWANCE N/A mrem/hr

DOSE RATES TO PERSONNEL

PHASE OF WORK	BASED ON MEASUREMENTS	AVERAGE TRUE LIMITING DOSE RATE	LIMIT APPLYING	ANNOUNCED DOSE RATE (TIMEKEEPING UNITS)
SAME AS ABOVE	ALL	<1	WBP	<1

TIMEKEEPER PROVIDED YES (NO) GAS CLOUD INVOLVED NOBLE GAS REACTOR GAS (NONE) RESP. PROT. WORN SUPPLIED AIR FILTER (NONE) EYE PROTECTION WORN YES (NO)

WORK WAS PERFORMED ON SWP RWP NUMBER _____ DID THE WHOLE BODY γ DOSE RATE EXCEED THE WHOLE BODY β DOSE RATE? YES (NO)

COMMENTS SINKS IN RM 308 READING 1,000 c/m
DIRECT SCAN & SMEARS OF ROOMS 301, 303, 305-309 <200 c/m <500 c/m
DIRECT SCAN & SMEARS OF HALLS & OFFICES <200 c/m <500 c/m
PERSONNEL SURVEYS <200 c/m <500 c/m
EQUIPMENT SURVEYS <200 c/m <500 c/m

ACTION TAKEN 3RD FLOOR RELEASED W/ SMEARABLE CONTAMINATION IN OFFICES + HALLS

REFERENCES MAX. PERS. DOSE RATE (TIMEKEEPING UNITS) <1 MAX. DOSE RATE OBSERVED <1 SIGNED [illegible]

54-3800-004 (7-73)

108-B Radiation Survey Report

Figure 4.1-4F

UNITED NUCLEAR INDUSTRIES, INC.

RADIATION SURVEY REPORT

NUMBER UI-1052 DATE 10-5-77

TIME PERIOD 0830AM TO 4:00PM BUILDING 108-F LOCATION 4TH FLOOR

DESCRIPTION OF JOB

MONITOR FOR JAT TO CLEAN OFFICES & LABS PUT TRASH IN BOXES FOR BURIAL AND NON CONTAMINATED TRASH IN CLEAR WEEK AT 100-M

MEASUREMENTS MADE

NO.	ITEM OR LOCATION	DOSE RATES OBSERVED: DISTANCE & SOURCE SIZE	β mrad/hr	γ mr/hr	c/s or d/s	CONTAMINATION LEVELS: dpm/hr AT 1 INCH	dpm/hr AT (DIST)
1	ROOM 401 & 402 SINKS & DRAINS				1,000 c/m	10,000 d/m ALPHA	
2	ROOM 403 HOOD				<200 c/m	1,200 d/m ALPHA	
3	ROOM 404 AIR CONDIS				1,000 c/m	50,000 d/m ALPHA	
4	ROOM 405 SINKS & DRAINS				1,000 c/m	5000 d/m ALPHA	
5	ROOM 406 SINKS & DRAINS				1,000 c/m	NO ALPHA	
6	ROOM 407 HOOD				1,000 c/m	NO ALPHA	
7	ROOM 408 HOOD				<200 c/m	40,000 d/m ALPHA	
8	OFFICES DIRECT SCAN & SMEARS				<200 c/m	<500 d/m ALPHA	
9	DIRECT SCAN AND SMEARS OF ROOMS 401 TO 408				<200 c/m	<500 d/m ALPHA	
10	DIRECT SCAN AND SMEARS OF HALL & STAIRS				<200 c/m	<500 d/m ALPHA	

INSTRUMENTS USED: GM (WRG-M) CP JUNO OTHER: PAM NEUTRON ALLOWANCE NONE RPM/HR

DOSE RATES TO PERSONNEL

PHASE OF WORK	BASED ON MEASUREMENTS	AVERAGE TRUE LIMITING DOSE RATE	LIMIT APPLYING	ANNOUNCED DOSE RATE (TIMEKEEPING UNITS)
SAME AS ABOVE	NO	<1	NBP	<1

TIMEKEEPER PROVIDED: YES (NO) GAS CLOUD INVOLVED: NOBLE GAS REACTOR GAS (NONE) RESP. PROT. WORN: SUPPLIED AIR FILTER NONE EYE PROTECTION WORN: YES (NO)

WORK WAS PERFORMED ON SWP RWP NUMBER ____ DID THE WHOLE BODY γ DOSE RATE EXCEED THE WHOLE BODY β DOSE RATE? YES (NO)

COMMENTS

ALL TRASH PUT INTO BOXES FOR BURIAL <1000 c/m

NO ALPHA CONTAMINATION

DECONTAMINATION SURVEYS <500 d/m

EQUIPMENT SURVEYS <1000 c/m <500 d/m

ACTION TAKEN

4TH FLOOR RELEASED NO REMOVABLE CONTAMINATION OK FIXED ON FLOOR

REFERENCES MAX. PERS. DOSE RATE (TIMEKEEPING UNITS) <1 MAX. DOSE RATE OBSERVED <1 SIGNED [illegible]

54-5530-004 (7-73)

108-B Radiation Survey Report

Figure 4.1-4G

5.0 115-F BUILDING - REACTOR GAS RECIRCULATION BUILDING

5.1 Description

The 105-F Reactor facility included a recirculating gas system which provided an inert, nonradioactive gas environment within the reactor. The purpose of the inert atmosphere was to: a) remove moisture and foreign gases from the reactor, b) transfer heat from the graphite to the process tubes, c) control reactivity, d) allow detection of water leaks within the reactor, and e) minimize the oxidation or burn-out of the graphite moderator. A mixture of helium and carbon dioxide was used as the circulating medium to perform these functions (a helium-nitrogen mixture was used for the last several years of F Reactor operation). The gas system required that a large volume of gas at very low pressure be continuously moved through the reactor on a recirculating basis. The recirculation cycle included cooling, drying and filtering of the gas prior to reentry into the reactor. The 115-F Building provided the equipment for pumping the gas through the system, processing it prior to recirculation through the reactor, monitoring for moisture content and for regulation of the proper He-CO_2 mixture. Figure 5.1-1 illustrates the gas flow through the recirculating system.

The 115-F Building is a single story reinforced concrete structure which is located approximately 200 feet (61 m) due west of the 105-F Building. The building is approximately 168 feet (51 m) long by 98 feet (30 m) wide and 20 feet (6.1 m) high. An 18 foot (5.5 m) wide operating gallery extends 132 feet (40.2 m) down the center of the building. It is flanked on either side by the rooms of cells which contain the gas processing equipment. No entry to the equipment cells can be made from the operating gallery; cell entry is from the outside of the building via a labyrinth. The equipment cell walls and floors are constructed of reinforced concrete and are 3 feet (.91 m) thick. At right angles to the operating gallery and extending across the full width of the west end of the building is the service section of the building which contains the ventilation fan, air compressor, office, locker room, etc. Figures 5.1-2 and 5.1-3 present two exterior views of the 115-F Building.

A pipe tunnel 36 feet (11 m) wide by 8 feet (2.44 m) high runs beneath the full length of the building. The main gas lines to and from the

105-F Building enter the 115-F Building through this tunnel. Appropriately sized piping connects the various process rooms or cells with the main inlet and outlet gas headers in the tunnel.

The processing of the recirculating gas consisted of first cooling the gas and condensing out the major portion of the moisture it had picked up from the reactor; then passing the gas through a drying tower which contained silica gel to absorb the small amount of moisture which remained in the gas; and then filtering the mixture before feeding it back into the reactor inlet gas header. The gas process equipment as well as the blowers which move the gas through the system is located in the various process cells or rooms which are aligned along the length of the 115-F Building operating gallery. Figure 5.1-2 shows the process cell arrangement and building layout.

A considerable quantity of equipment is contained within the various process cells of the 115-F building. The following table lists the major components located in the building.

Item	No.	Approximate Size
1. Silica Gel Towers	3	7-ft (2.13 m) dia. x 7-ft (2.13 m) high
2. Filters	2	6-ft (1.88 m) x 6-ft (1.83 m) (Filtered area)
3. Heater-Coolers	3	3-ft (.91 m) x 3-ft (.91 m) x 1.5-ft (.46 m)
4. Coolers	2	2-ft (.61 m) dia. x 6-ft (1.83 m) long
5. Condensers	3	2-ft (.61 m) dia. x 6-ft (1.83 m) long
6. Blowers	5	1800 cfm (51 m^3/min)

Also included in the contents of the building are all of the piping (both process and service), instrumentation, electrical wiring and control centers, etc. required to successfully operate and control the treatment of a large volume of gas on a continuous basis.

The major items of equipment contained in the service section of the 115-F Building (west end) are the supply fan for the heating and ventilating system and two large air compressors, one electric powered and one steam powered.

5.2 Radiation and Contamination Levels

The radiation and contamination levels which are present in the 115-F building, are low and present no particular problems to personnel working within the building. Typical results of a series of surveys run in August, 1976 are shown in Table I.

5.3 Reference Drawings

The following drawings present the structural details of the 115-F building:

W-72675	Bldg. 115-B, D & F - Concrete - Ground Floor Plan
W-72677	Bldg. 115-B, D & F - Concrete - Sections and Details
W-73157	Bldg. 115-B, D & F - Steel Framing - Plans, Sections and Details
W-73193	Bldg. 115-B, D & F - Concrete - Equipment Foundation Details
W-73199	Bldg. 115-B, D & F - Concrete - Pipe Tunnel - Plan and Details
W-73307	Bldg. 115-D & F - Fan Room - Arrangement and Piping
HW-72703	Bldg. 115-B, D & F - First Floor - Plan and Arrangement
HW-72705	Bldg. 115-D & F - Arrangement and Piping - Sections - Sh. No. 2
W-72702	Bldg. 115-D & F - Arrangement and Piping - Basement Plan and Elevation - Sh. No. 1

TABLE I

Location	Distance	c/m or d/m		
1. 1, 2 & 3 Drier Rooms		#1	#2	#3
General Background	F	500 c/m	500	500
Condenser	1"	1,500 c/m	25,000	2,500
Condensate Drain	1"	2,000 c/m	8,000	3,000
Blower	1"	3,000 c/m	2,000	4,000
Sample - Inside Condenser	1"	-	10,000 c/m	-
Floor and Walls - Smears	S	300 c/m	300	400
Alpha Smears	S	200 d/m	200	200
Dose Rate	-	1 mR/hr	7	1
2. 1 & 2 Filter Rooms		1		2
General Background	F	600 c/m		200
Max. Reading on Filter	S	1,000 c/m		200
Floor & Walls - Smears	S	500 c/m		300
Filter Box - Smears	S	500 c/m		300
Alpha Smears	S	200 d/m		200
Dose Rate	-	1 mR/hr		1
3. Tunnel				
General Background - East End	F		200 c/m	
General Background - West End	F		600 c/m	
Piping - East End	1"		300 c/m	
Piping - West End	1"		15,000 c/m	
Floor Drain	1"		200 c/m	
Floor & Walls - Smears	S		300 c/m	
Piping - Smears	S		300 c/m	
Alpha Smears	S		200 d/m	
Dose Rate	-		5 mR/hr	
4. Storage Room - Operations				
Direct Scan	1"		200 c/m	
Smears	S		200 c/m	
Alpha Smears	S		200 d/m	
Dose Rate	-		1 mR/hr	
5. Storage Room - Maintenance				
Direct Scan	1"		200 c/m	
Smears	S		200 c/m	
Alpha Smears	S		200 d/m	
Dose Rate	-		1 mR/hr	

Key

F - Field

S - Surface

1" - 2.54 cm

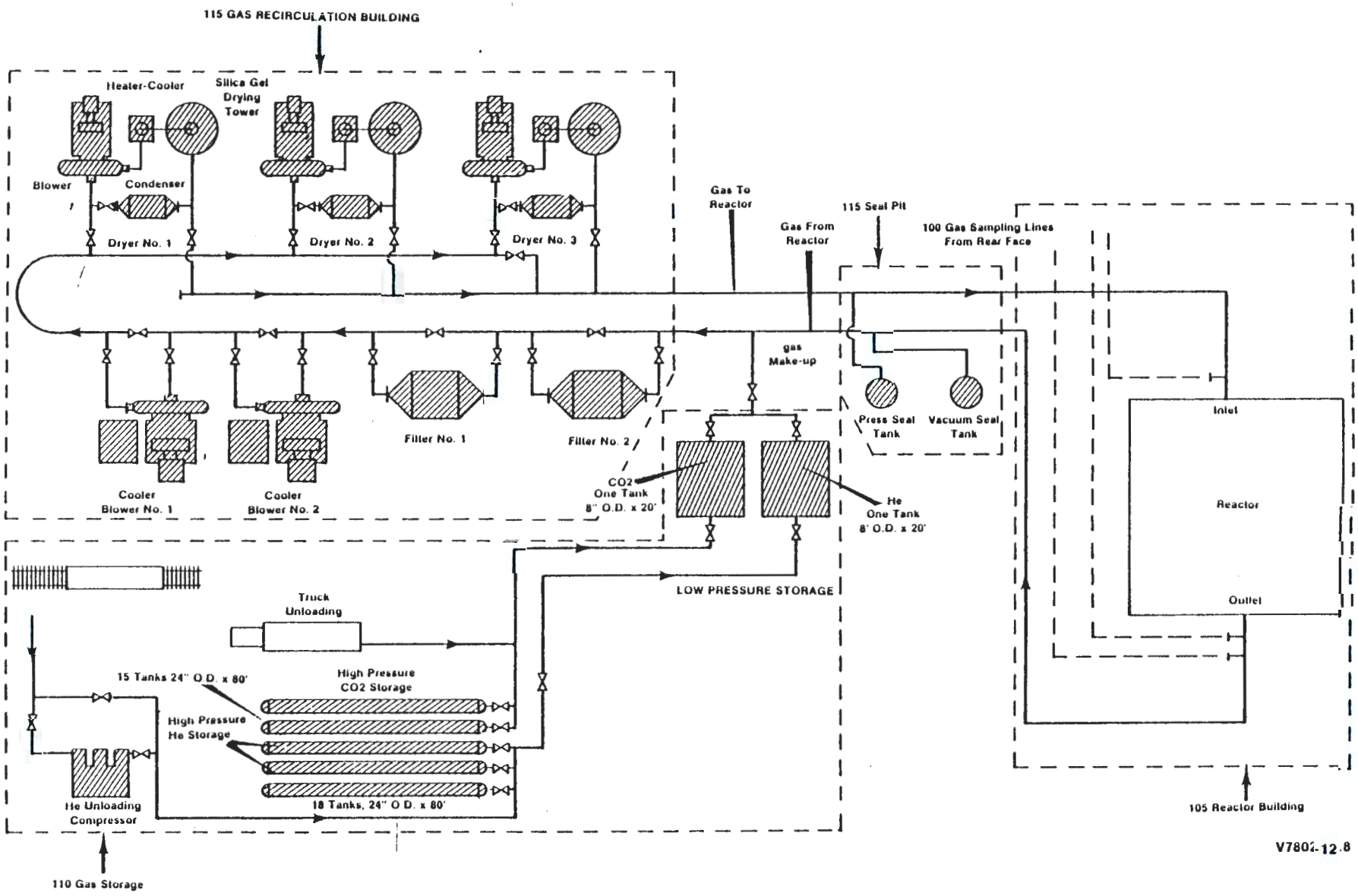

105-F Reactor - Gas Flow Diagram

Figure 5.1-1

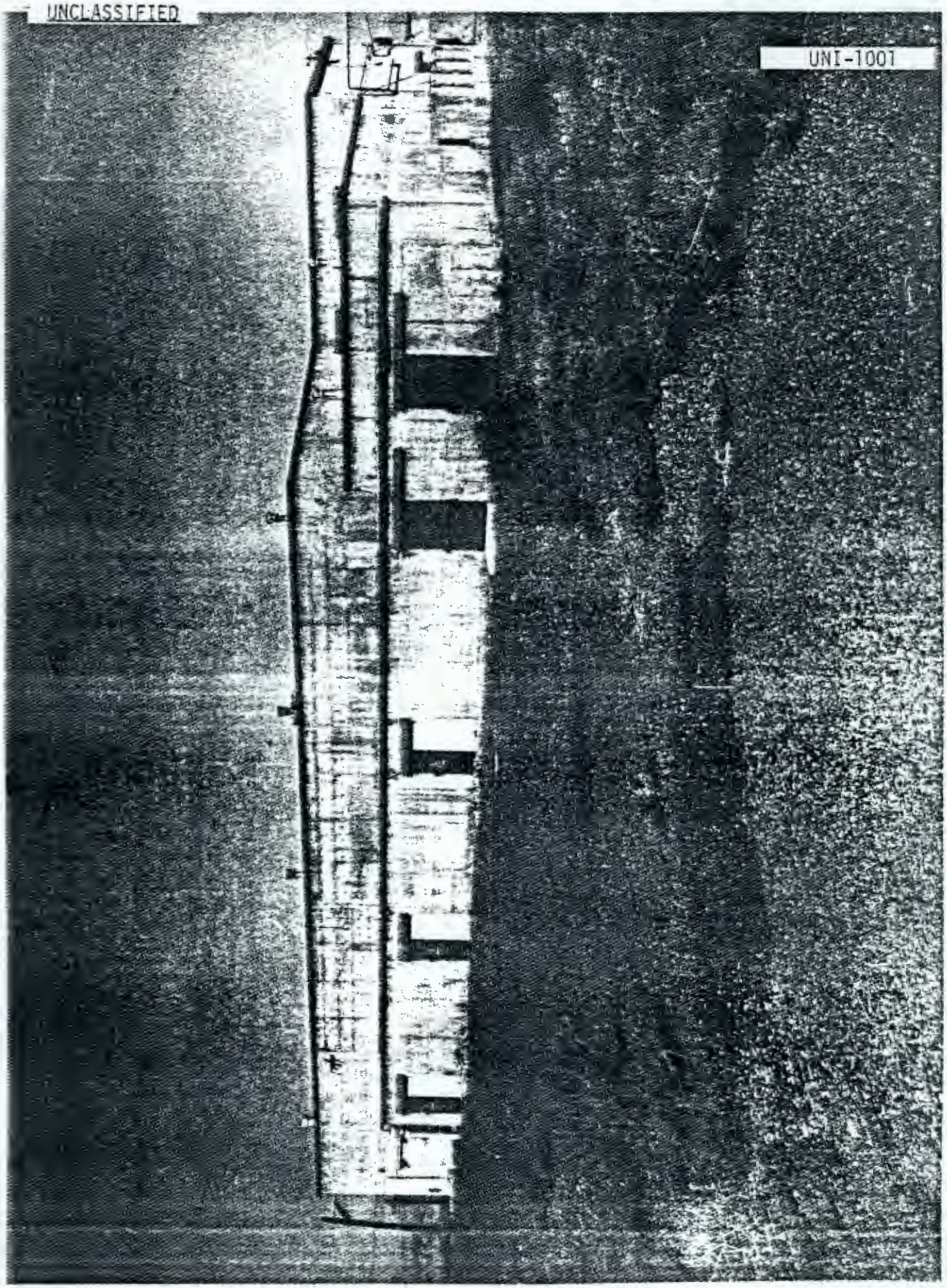

115-F Building - South Side - East End

Figure 5.1-2

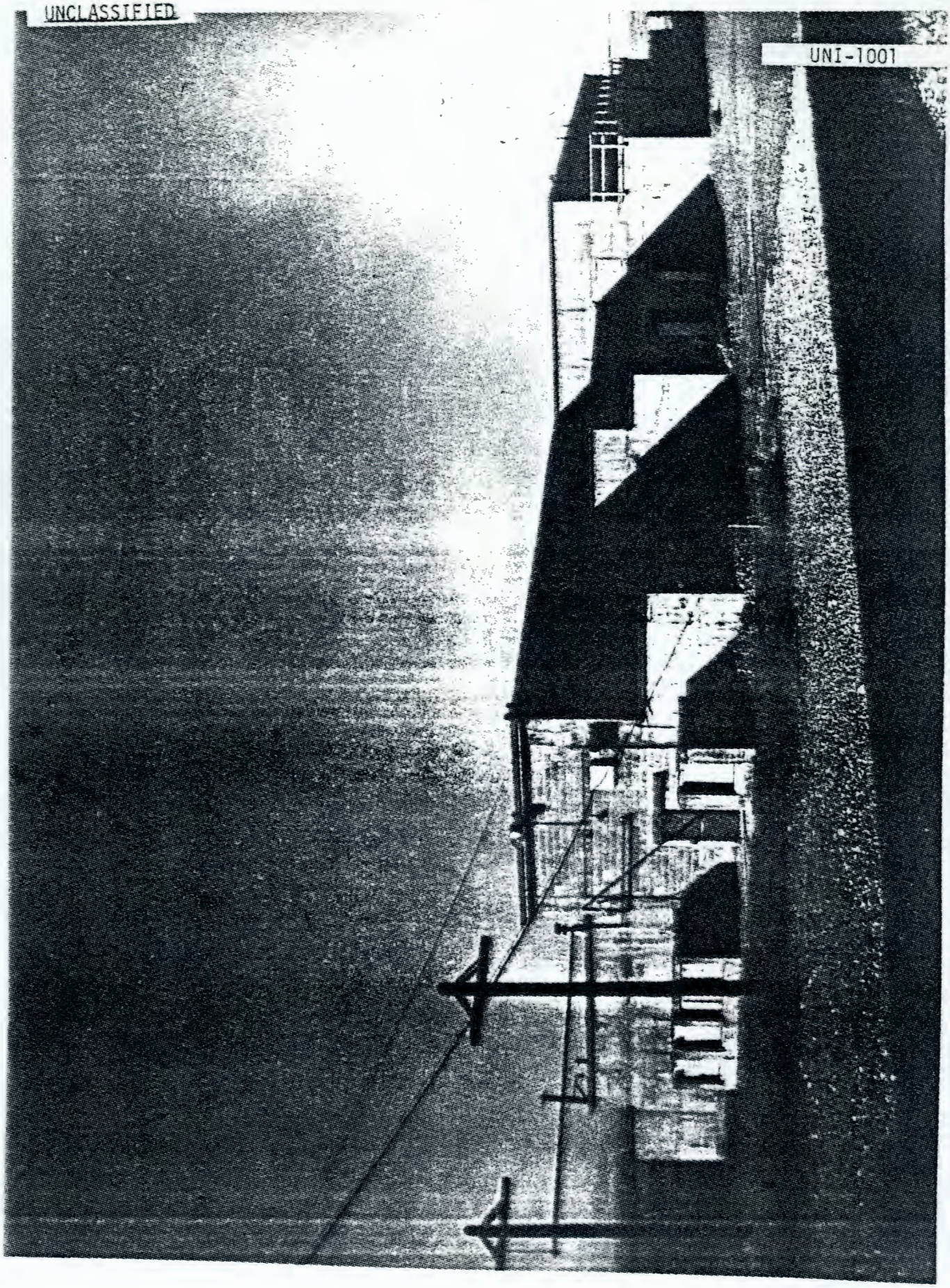

115-F Building - North Side - East End

Figure 5.1-3

6.0 117-F FILTER BUILDING - UNDERGROUND DUCTS, AND 105-F EXHAUST STACK (116-F BLDG.)

6.1 General Description

The ventilation system installed in the 105-F Building (reactor building) was designed to provede uncontaminated air to the various work sites within the building, to maintain low levels of air contamination in these areas and to remove contaminated and potentially contaminated air from the building. The clean air was supplied to the non-contaminated portions of the 105-F Building; was then moved through zones with increasing levels of contamination (the confinement zones) and was finally exhausted from the building. The exhaust air was directed to the 117-F building where the air was passed through "absolute" (particulate) and "halogen" (activated charcoal) filters and was then discharged to the atmosphere through the 105-B stack (116-F Building). Figure 6.1-1 illustrates the air flow through the 105-F and 117-F Buildings.

6.1.1 117-F Building

The 117-F Building houses the 105-F Reactor Building exhaust air filters, the air flow control system and the exhaust air monitoring (radioactivity) system. The building is a reinforced concrete structure approximately 59 feet (18 m) long, 39 feet (11.9 m) wide and 35 feet (10.7 m) high and is located almost completely below grade. The above ground portion of the building is shown in Figure 6.1-2. Maximum thickness of the concrete in any of the building walls and floors is 2 feet (.61 m) with the majority of the structure having walls and/or floors 1 foot (.3 m) or less thick. The filter building is connected to the 105-F building exhaust air system by an underground concrete duct or tunnel which runs from the 105-F Building exhaust fan discharge to the 117-F building filter inlet plenum. A second concrete duct or tunnel conveys the filtered air from the filter building exhaust plenum to the 105-F building exhaust stack (116-F Bldg.). Figures 6.1-3, 6.1-4 and 6.1-5 illustrate this arrangement. Turning vanes are installed at the bottom of the inlet and exhaust plenums to assist in deflecting the air into or out of the filter cells.

The 117-F Building contains two identical filter cells separated by a two-story operating gallery. Each cell has positions for three banks of filters (normally only two banks were installed); and each bank in each cell is provided with aluminum inserts and guides and concrete covers for positioning the filter frames and sealing them in place. The filters have been removed from both cells of the 117-F Building. Figures 6.1-6 and 6.1-7 illustrate the filter cell and filter arrangement.

The 117-F building also contains a minimal amount of small diameter piping, valves and fittings for service water, compressed air and instrument lines to the building plus a small amount of electrical wiring and switch gear for building lighting and electrical power service. One 200 gpm (760 l/min) sump pump is located in the lowest level of the building.

6.1.2 Inlet and Exhaust Air Ducts

The inlet and exhaust air ducts through which the exhaust air from the 105-F Building is transported to the 117-F Building and the exhaust air from the 117-F Building is moved to the stack, are totally underground and are constructed of reinforced concrete with a maximum thickness of 1-1/2 feet (.46 m). The ducts are both approximately 5 feet (1.5 m) wide by 11 feet,7 inches high (3.4 m); the inlet duct is approximately 114 feet (35 m) long and the exhaust duct is about 91 feet (28 m) long. The maximum depth of the tunnel roof below grade is approximately 8 feet (2.43 m).

6.1.3 Exhaust Stack (116-F Building)

The 105-F confinement air, after passing through the 117-F Building filters, was exhausted to the atmosphere via a 200 foot (61 m) high stack which is located between the 105-F and 117-F Buildings. The stack is of reinforced concrete construction, round, with a base diameter of 16 feet 7 inches (5.05 m). Maximum wall thickness of concrete is 1-1/2 feet (.46 m) at the stack base. The stack rests on a double octagonal shaped base which extends 17-1/2 feet (5.33 m) below grade. The upper octagon measures 18-1/2 feet (5.64 m) across the flats and is 11-1/2 feet (3.5 m) thick;

the lower octagon is 27 feet (8.33 m) across the flats and 6 feet (1.83 m) thick. A 6-inch drain pipe is installed in the bottom of the stack.

6.2 Radiation and Contamination Levels

The radiation and contamination levels within the 117-F, 116-F and the inlet and exhaust duct complex are generally quite low and present no unusual problems to personnel working in or around the facilities.

- Those portions of the 117-F Building which were in contact with the reactor confinement zone exhaust air, contain varying amounts of surface contamination, none of high level. Background radiation levels in the building are generally less than 1 mR/hr with readings through piping and other equipment up to 25,000 c/m on a GM probe. Contamination level surveys of specific portions of the building, made in August, 1976, provide the following data:

	LOCATION	DISTANCE	c/m or d/m
1.	A-2 Filters	1"	2,000 c/m max.
2.	Floor Drains	1"	2,000 c/m max.
3.	A-1 & A-2 Cells	F	300 c/m - Gen. Bkgrnd.
4.	Filters (Smears)	S	1,000 c/m
5.	Floors & Walls, A-1 & A-2 Cells	S	1,000 c/m
6.	Alpha Smears, A-1 & A-2 Cells	S	200 d/m
7.	Inlet Tunnel	F	300 c/m - Gen. Bkgrnd.
8.	Inlet Tunnel - Scan of Floor	1"	600 c/m
9.	Inlet Tunnel - Scan of Turning Vanes	1"	600 c/m
10.	Inlet Tunnel - Smears - Floor & Walls	S	1,500 c/m
11.	Inlet Tunnel - Smears - Turning Vanes	S	1,000 c/m
12.	Inlet Tunnel - Alpha Sources	S	200 d/m
13.	Exhaust Tunnel	F	200 c/m - Gen. Bkgrnd.
14.	Exhaust Tunnel Scan of Floor & Walls	1"	200 c/m
15.	Exhaust Tunnel - Smears - Floor & Walls	S	600 c/m
16.	Exhaust Tunnel - Smears - Turning Vanes	S	600 c/m
17.	Exhaust Tunnel - Alpha Smears	S	200 d/m

(F-Field; S-Surface; 1"=2.54 cm)

Maximum dose rate to personnel while taking the above data was approximately 2 mR/hr.

- The contamination level within the inlet duct to the 117-F Building is on the order of 4,000 to 5,000 c/m with a dose rate to personnel working within the tunnel of 3 mR/hr. A considerable amount of loose contamination is present.

- The levels within the 117-F exhaust duct is somewhat lower than those in the inlet duct; on the 1,000 to 2,000 c/m with dose rates of approximately 1 mR/hr some looser contamination is present.

- The radiation and contamination level which exist at the base of the 116-F stack are similar to those of the exhaust duct, approximately 2,000 c/m with a dose rate of approximately 1 mR/hr. How far up the stack these conditions prevail, has not been determined. It is surmised that the levels become lower at higher stack elevations. A considerable quantity of loose debris (dirt, sand, bugs, etc.) has collected inside of the stack.

6.3 Reference Drawings

The following drawings depict the structural and architectural aspects plus the installed service and equipment facilities within the 117-F Buildings:

H-1-19838 - Structural Concrete - Sections and Details
H-1-19839 - Structural Concrete - Sections and Details
H-1-19840 - Structural Concrete - Sections and Details
H-1-19888 - Duct Turning Vanes
H-1-19874 - Piping - Filter Bldg. - Arrangement and Sections
H-1-19875 - Piping - Filter Bldg. - Sections and Details
H-1-19876 - Piping - Filter Bldg. - Details
H-1-19803 - Plot Plan - 117-F Bldg.

Drawings which provide information regarding the construction and layout of the 117-F Building inlet and exhaust ducts are:

H-1-19818 - Air Intake and Exhaust Duct Profiles

H-1-19803 - Plot Plan - 117-F Filter Bldg.

The following drawings illustrate the construction of the 116-F Building Exhaust Stack:

W-72485 - Bldgs. 116-B, D, and F - Concrete Stack Foundations

W-19854 - Stack Breeching - Plant and Details

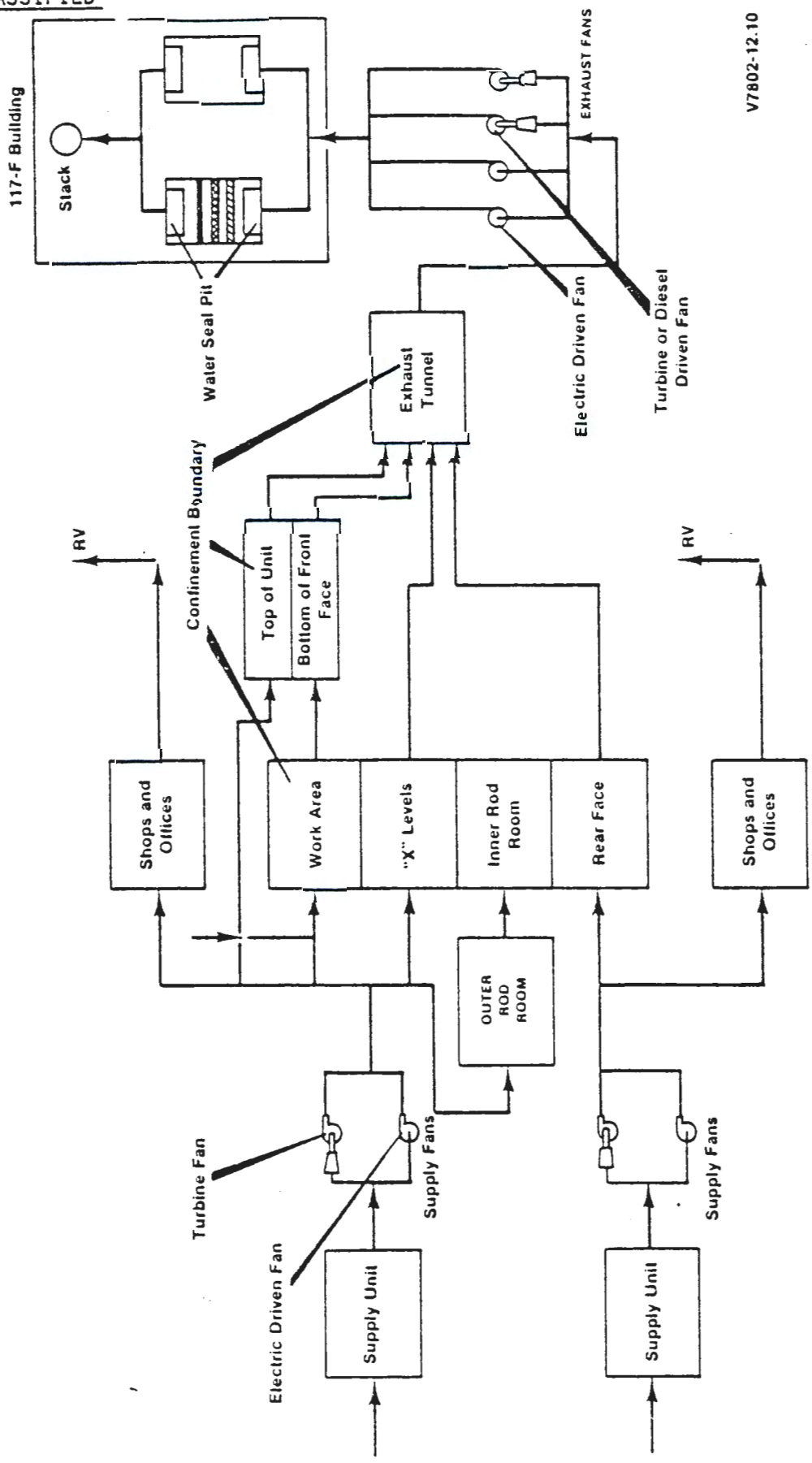

105-F Reactor - Confinement Flow Diagram

Figure 6.1-1

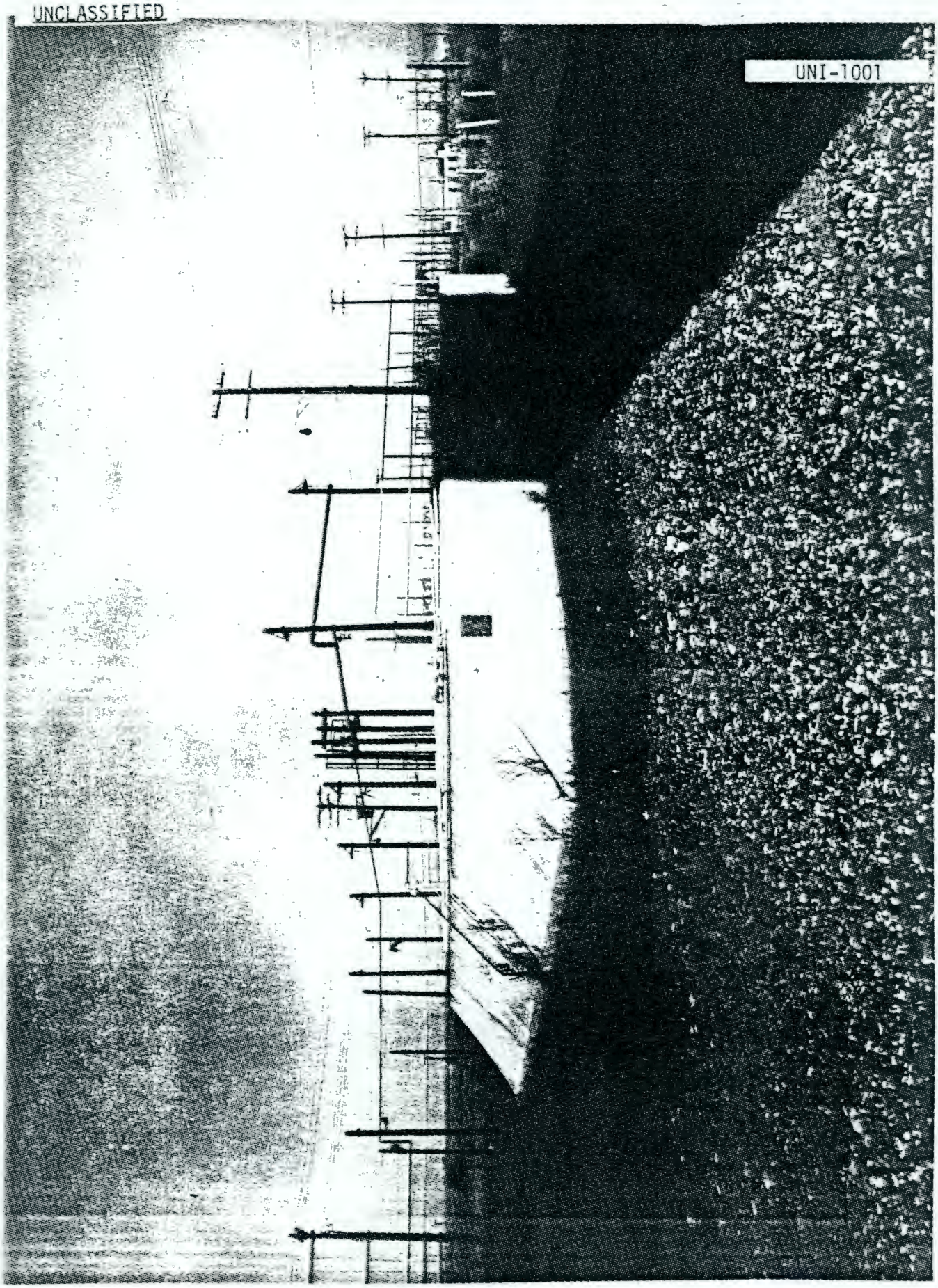

117-F Building - Above Grade Structure

Figure 6.1-2

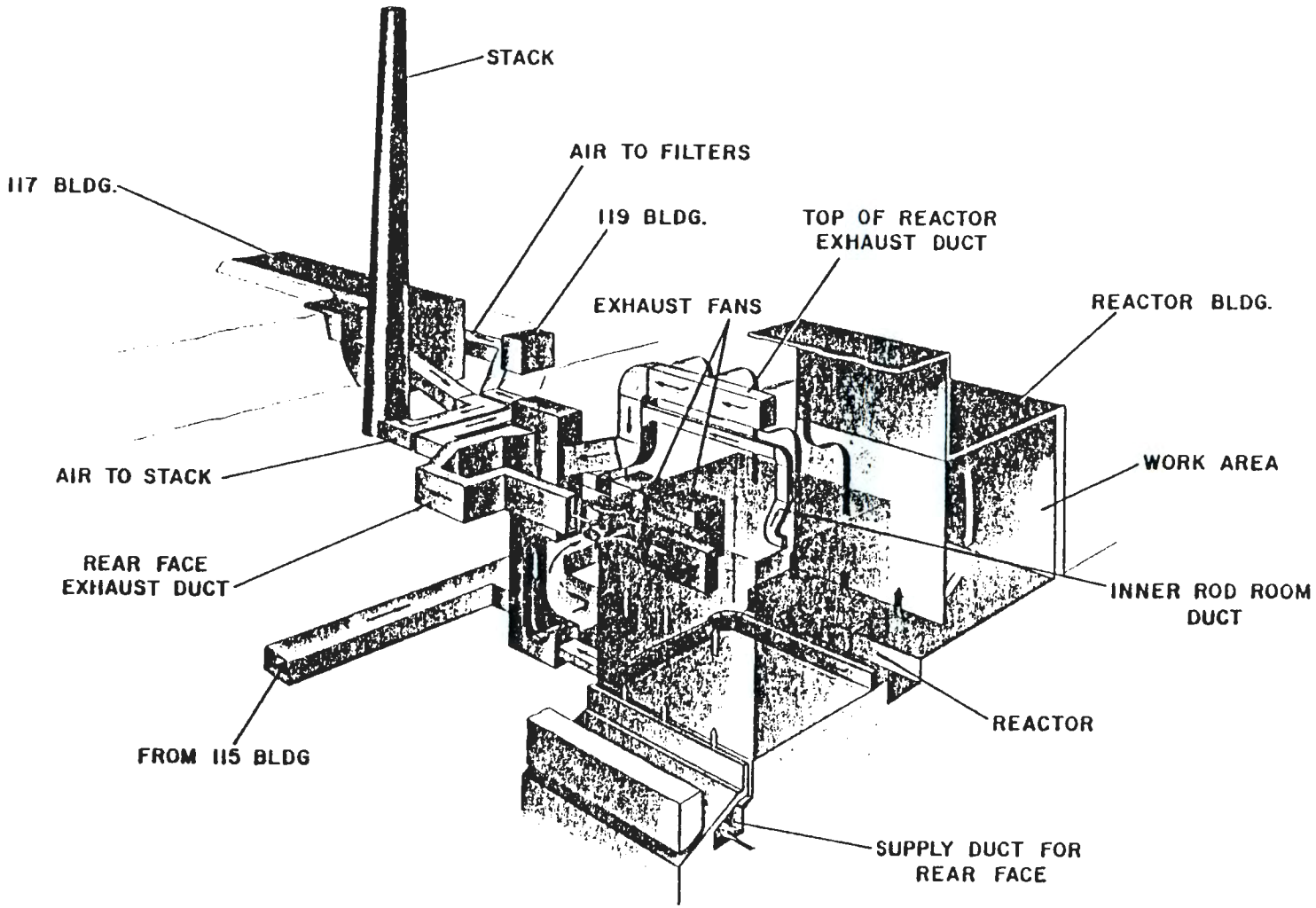

105-F Building - Confinement System Layout

Figure 6.1-3

UNI-1001

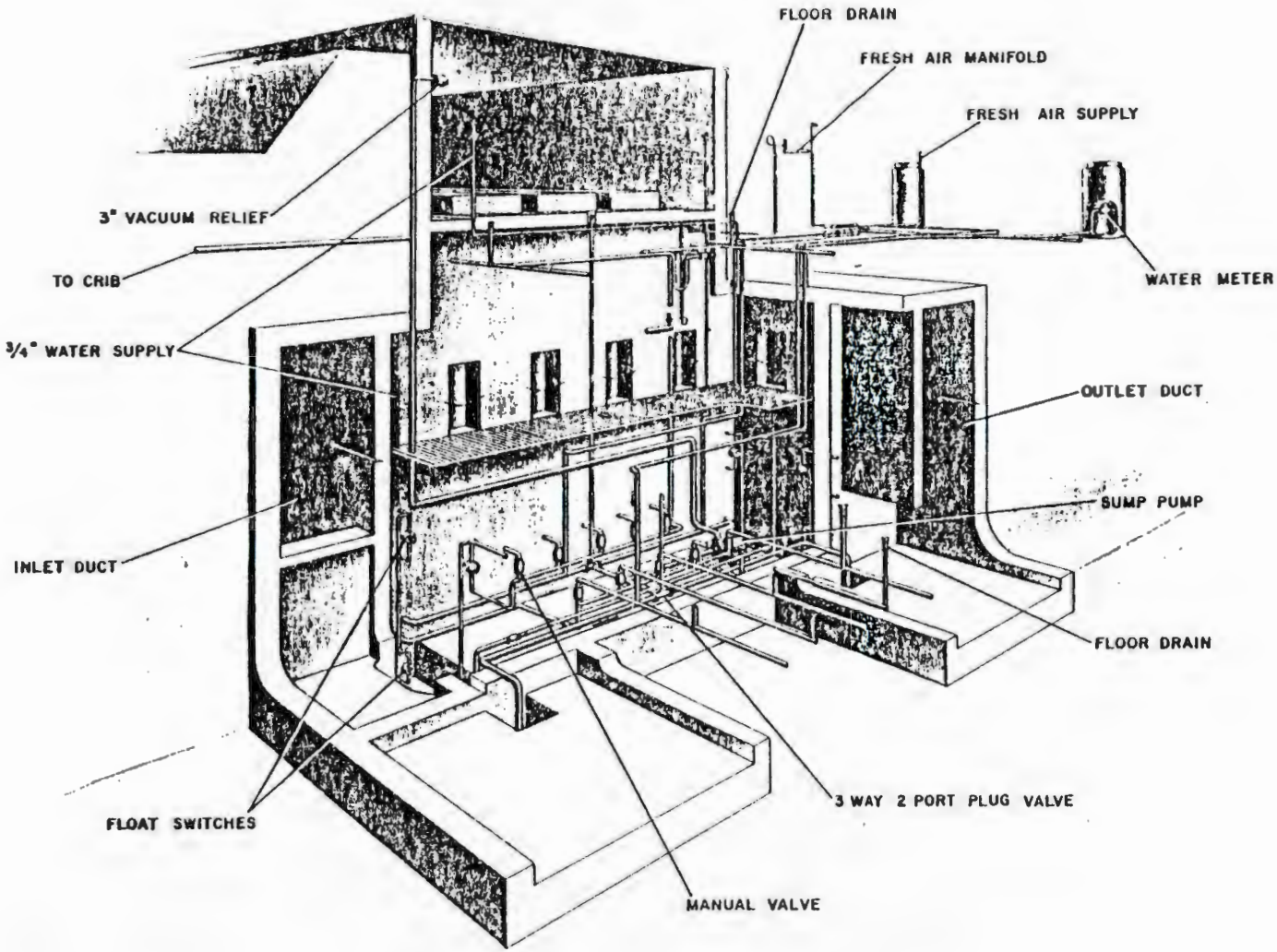

117-F Filter Building Piping Arrangement

Figure 6.1-4

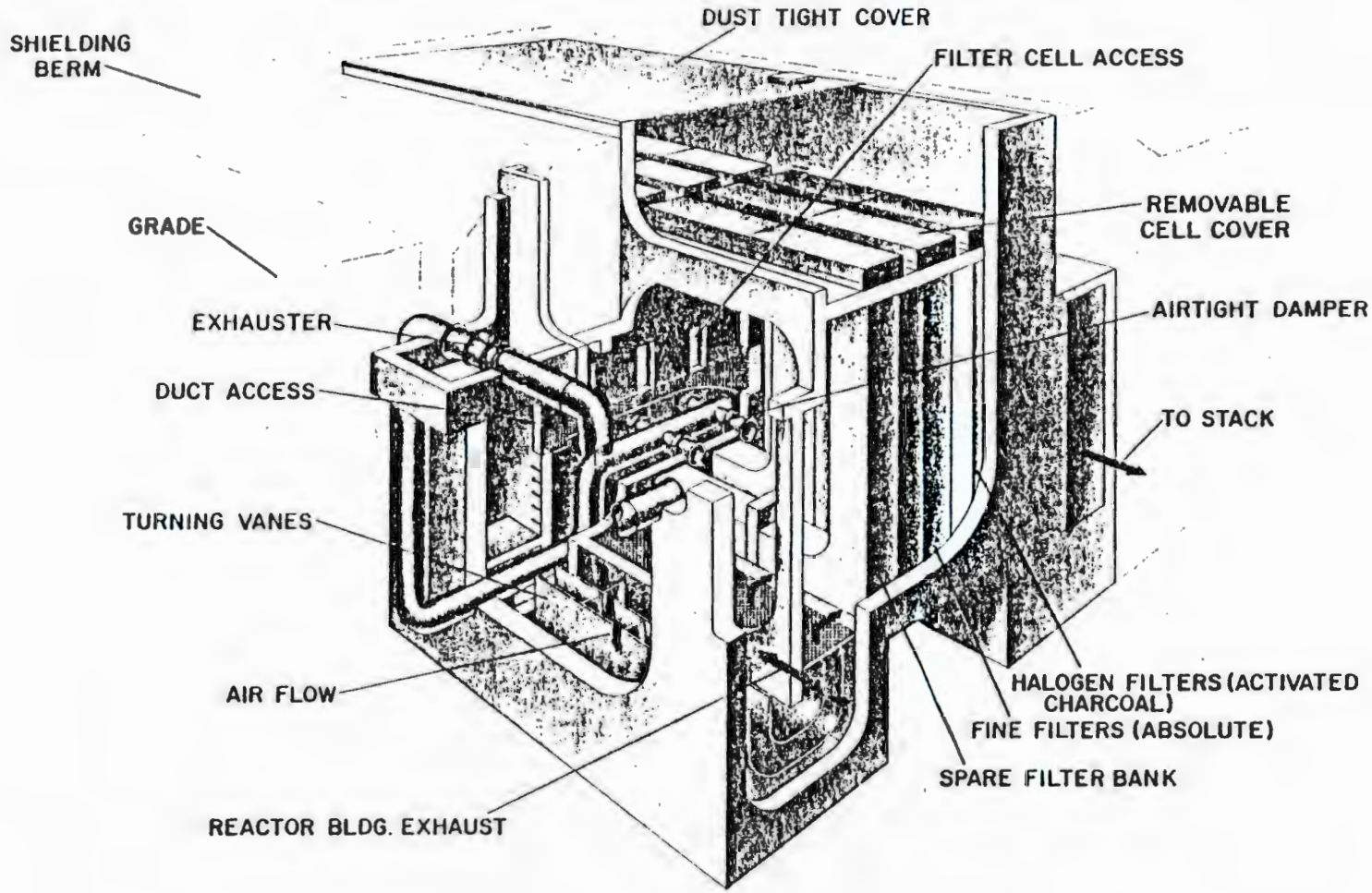

UNI-1001

117-F - Confinement Filter Building

Figure 6.1-5

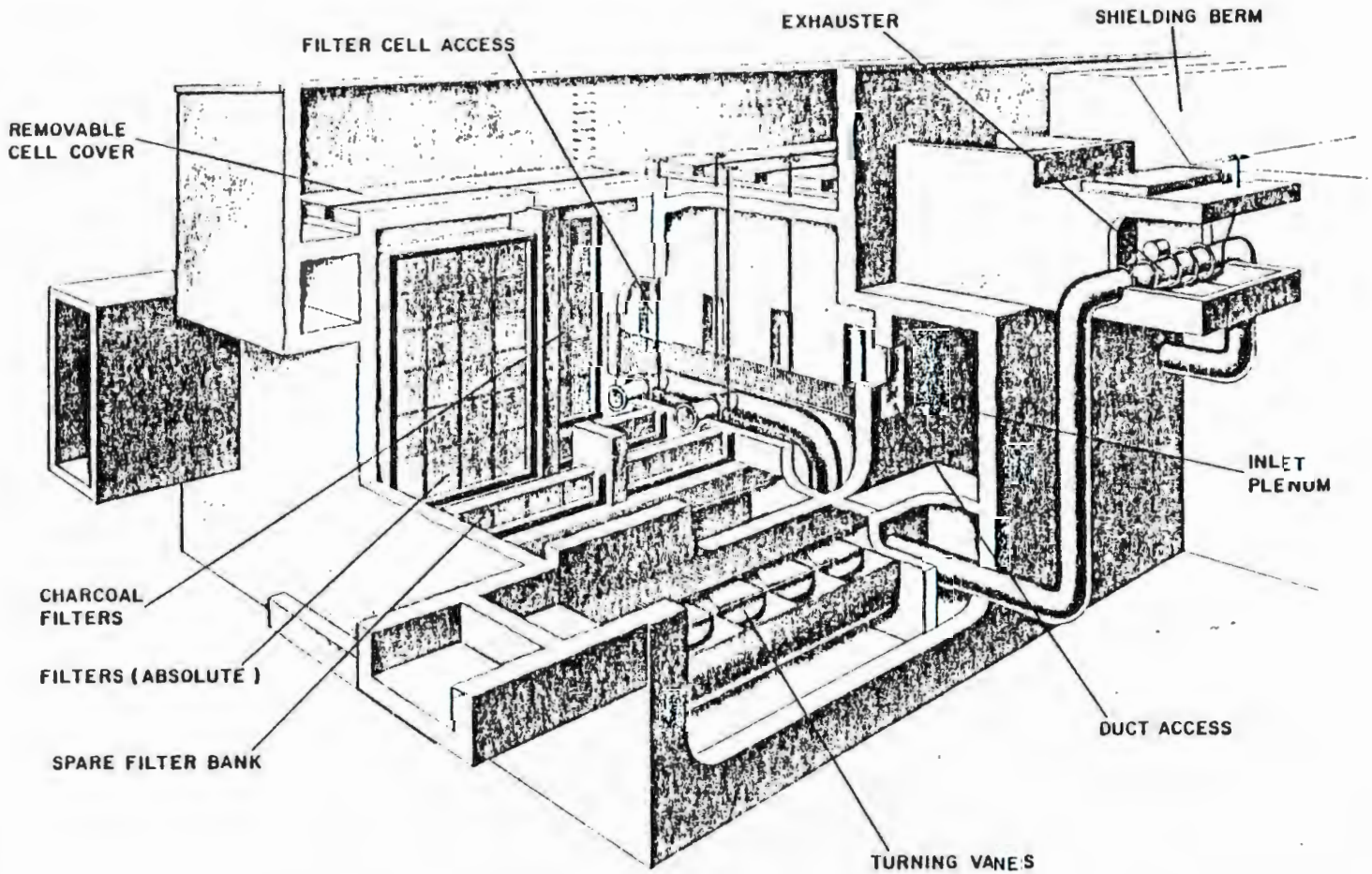

117-F - Confinement Filter Building

Figure 6.1-6

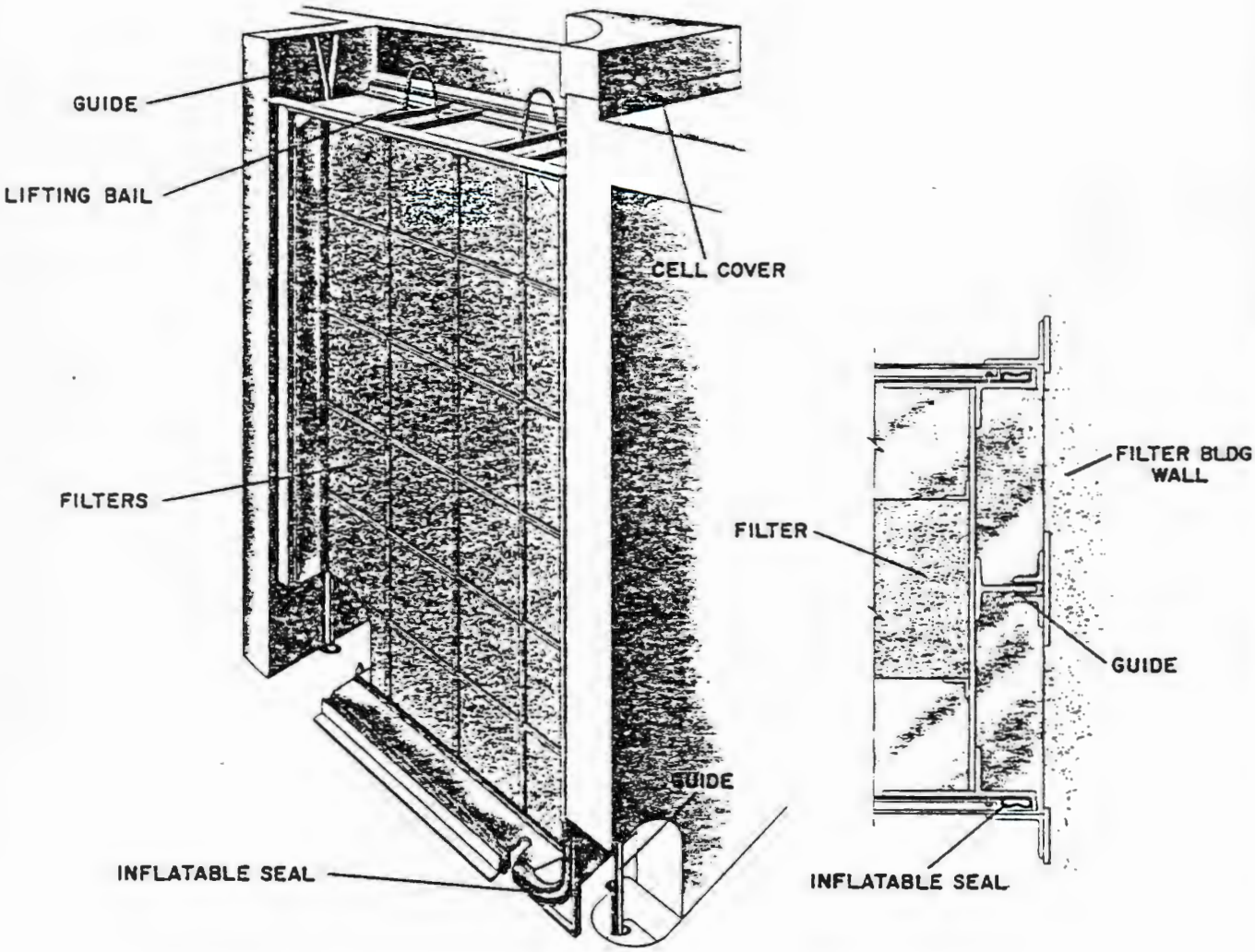

117-F - Typical Filter Bank Arrangement

Figure 6.1-7

7.0 141-C BUILDING - LARGE ANIMAL BARN AND BIOLOGY LABORATORY

7.1 Description

A portion of the radiobiological experiments carried out at 100-F Area involved in use of large animals. The 141-C Building provided facilities for the long term housing and caring of these animals.

The building is located approximately 1700 feet (518 m) northeast of the 105-F Building. It is a single-story "L" shaped structure with each wing measuring 116 feet (35.4 m) long by 20 feet (6.1 m) wide by 8 feet (2.44 m) high. It is a "Butler" type building of all steel construction and is set on a concrete pad. The animal stalls are of steel construction and each is equipped with feeding and watering facilities. A common drainage trench serves all of the stalls.

Also included in the building layout is a 200 ft^2 (18.6 m^2) biology laboratory facility plus two small shed-type appendages which were used for the storage of animal feed and other supplies. The building is equipped with all of the normal services and utilities required to ensure proper functional performance. Figure 7.1-1 shows the exterior of the 141-C Building.

7.2 Radiation and Contamination Levels

Radiation surveys of the 141-C Building made in June, 1977 provide the following data:

Location	Distance	c/m	d/m (Alpha)
Smears on Floors	S	25,000 to 90,000	α500
Smears on Walls-Max	S	10,000	α500
Drains	1"	90,000	α500
Equipment Survey	F	20	α500

These surveys were made prior to permitting craftsmen to paint the interior of the building in order to fix the loose contamination. This work has been completed. THe dose rate ot the craftsmen involved in the painting was determined to be less than 1 mR/hr.

7.3 Reference Drawings

None.

100-F Area - 141-C Building

Figure 7.1-1

8.0 1608-F BUILDING

8.1 Description

In order to ensure that all potentially radioactive or contaminated liquids (with the exception of the reactor effluent) from the 105-F Building, were kept separate from uncontaminated wastes and were properly disposed of, a radioactive sewer system was provided within the 105-F Building. This system collected contaminated and potentially contaminated wastes throughout the building and directed them to the Waste Water Pump House or 1608-F Building. This building functioned as a sump for the collection of such liquid wastes and provided the facilities for pumping the water into the reactor effluent lines for final disposal through the effluent system.

The 1608-F Building is located approximately 100 feet (30.48 m) directly southeast of the 105-F Building. It is a reinforced concrete structure which measures 36.5 feet (11.1 m) by 34 feet (10.4 m) by 45 feet (13.7 m) deep at its lowest point. Twelve feet, eight inches (3.86 m) of the building is above grade. The operating floor and pumping equipment is located at ground level. A basement which provides access to the pump sump inlet chamber is located above those chambers. The maximum thickness of concrete in the structure, 2 feet (.61 m), occurs in three locations; at the base of the sump walls, the floor over the sump inlet chamber and the floor over the sump chamber. Figure 8.1-1 is a photograph of the exterior of the building.

The major items of equipment currently contained within the 1608-F Building are two vertical turbine type pumps, both rated at 3,000 gpm (11,370 ℓ/min); one driven by a 75 hp electric motor and the other by a 75 hp steam turbine, and their associated controls and electrical switchgear. (Orginally the building also contained an 11,000 gpm (41,690 ℓ/min) pump powered by a 300 hp electric motor. This has been removed.)

8.2 Radiation and Contamination Levels

The most recent radiation and contamination survey data relating to the 1608-F Building (obtained in August, 1976) provides the following information regarding the status of the building:

Location	Distance	c/m or d/m
1. Steam Turbine Pump Room	Surface	
a. Walls & Floor (smears)		ℓ200 c/m
b. Inside Pump	-	ℓ400 c/m
c. Alpha Smears	Surface	ℓ200 d/m
2. No. 1 & No. 2 Electric Pump Rm. & Basement		
a. Floors & Walls (smears)	Surface	ℓ200 c/m
b. Pumps, Motors & Piping	Surface	ℓ200 c/m
c. Alpha Smears	Surface	ℓ200 c/m

No radiation and/or contamination surveys of the pump sump inlet chamber or the pump sump have been made. These locations contain a collection of sludge, rust and debris which is certainly contaminated However, the level of contamination is very likely no greater than that contained in the bottom of the 107-F Retention Basin (see Section 3.2.2). Radiation and contamination surveys of these locations will be made in the near future.

8.3 Reference Drawings

The drawings listed below provide information regarding the construction and layout of the 1608-F Building.

H-1-70185 - Process Effluent Systems - Plan & Profile

W-75067 - Building 1608-F - Concrete & Drainage - Foundation, Floors & Roof Plans.

W-75068 - Building 1608-F - Concrete - Section and Details - Sheet 1

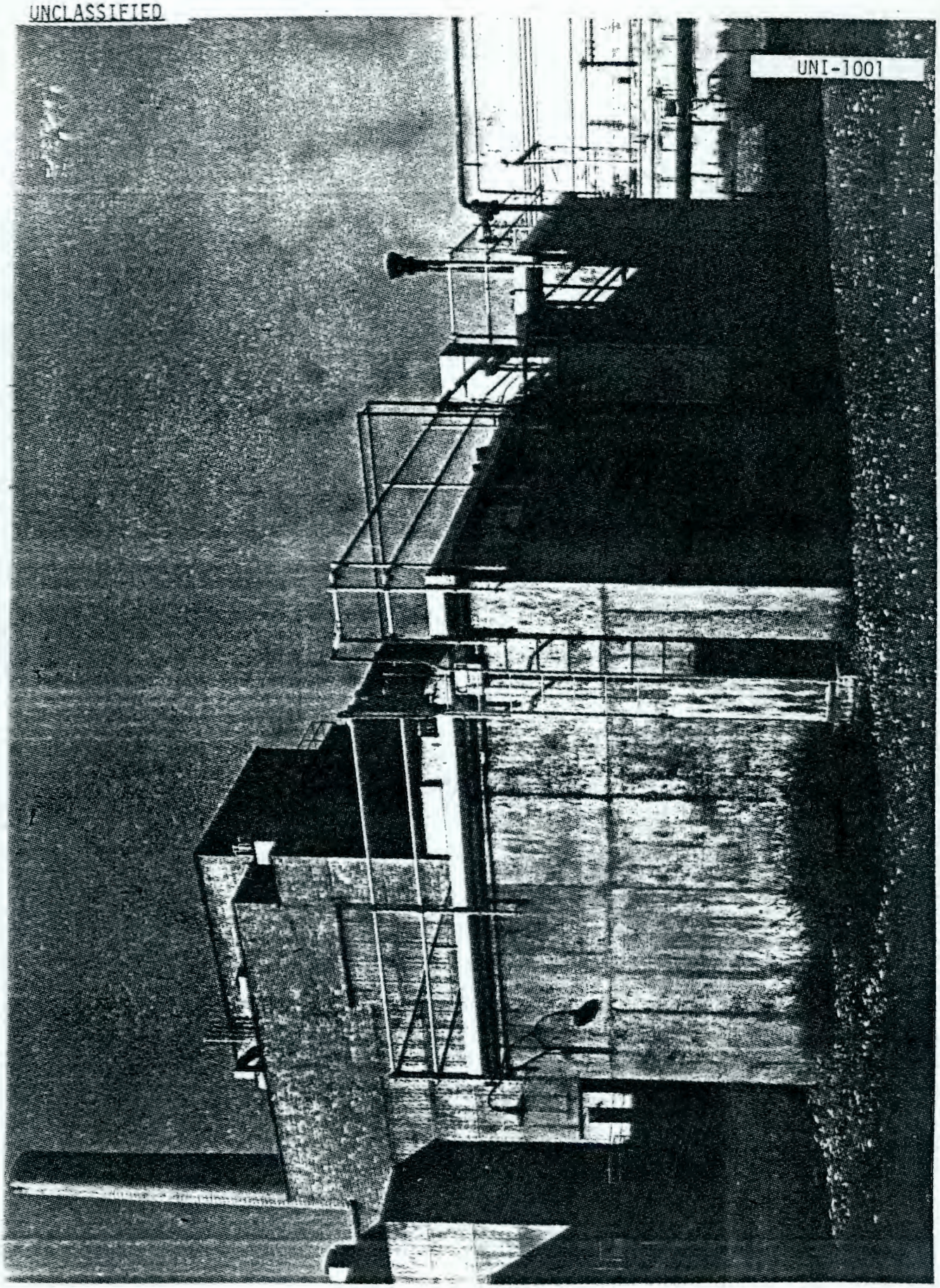

1608-F Building - Waste Water
Pump House

Figure 8.1-1

9.0 100-F BURIAL GROUNDS, CRIBS, AND TRENCHES

9.1 Introduction

The operation of the 100-F reactor resulted in the generation of a considerable quantity of radioactive and contaminated waste - both liquid and solid - most of which was buried or disposed of within the 100-F area boundaries. Typical solid wastes included such items as irradiated dummy fuel elements, horizontal control rods, gun barrels, paper, rags, etc. This material was placed in trenches or pits which were backfilled to grade. Liquid wastes, drained to cribs and trenches, resulted primarily from three sources: normal reactor outage effluent; reactor outage effluent containing fuel rupture debris; and liquids from various specific decontamination efforts and from equipment decontamination facilities. The cribs and trenches also have been backfilled to some extent - sufficient to return the ground surface dose rate to less than 1 mR/hr, and prevent the contamination from spreading. The location of most of the solid and liquid waste disposal sites within the 100-F area is identified with markers or monuments of some sort.

A detailed description of the various burial grounds, cribs, and trenches located in 100-F area is as follows:
(NOTE: The number in parenthesis following the name of each facility is the numerical designation assigned to that facility in document BNWL-MA-88, entitled Resource Book - Disposition (D&D) of Retired Contaminated Facilities at Hanford, prepared by the staff of Battelle Pacific Northwest Laboratories, and dated October 1975.)

9.1.1 Burial Ground No. 1 (118-F-1)

100-F Burial Ground No. 1 is located approximately 1500 feet (457 m) southwest of the 105-F Building (see Figure 9.1-1), and is 600 feet (183 m) long with a maximum width of 500 feet (152 m) with the long axis running in a north-south direction. The facility was in service from 1954 through 1965.

Three trenches are included in the site. Each trench was 20 feet (7 m) deep and, as they were filled with the miscellaneous waste from

the reactor building, the trenches were backfilled with clean dirt to a depth of at least 2 feet (.7 m). A number of pits which contain irradiated process tubing, dummy fuel elements, and other miscellaneous contaminated material, are located along the west edge of the burial ground. These pits are covered with a minimum of 2 feet of soil.

The boundary of Burial Ground No. 1 is permanently marked by a series of concrete posts.

9.1.2 Burial Ground No. 2 (118-F-2)

100-F Burial Ground No. 2 is located approximately 1500 feet (457 m) west of the 105 Building (see Figure 9.1-1), and is 365 feet (121 m) long by 325 feet (99 m) wide. The facility was in service from 1945 to 1965.

A total of nine trenches, each approximately 20 feet (7 m) deep are included in the site. One of the trenches contains a quantity of soild waste from the biological labroatory facility in 100-F area. All of the trenches were backfilled with at least 20 feet (.7 m) of soil. In addition to the trenches, the burial of several specific items in isolated locations within the site occurred. For example, three horizontal control rods are buried near the southern boundary of the area.

The boundary of Burial Ground No. 2 is permanently marked with a series of numbered concrete posts.

9.1.3 Burial Ground No. 3 (118-F-3)

100-F Burial Ground No. 3 is located approximately 400 feet (122 m) southwest of the 105-F Building (see Figure 9.1-1), and is 175 feet (53 m) long and 50 feet (15 m) wide with the long axis running in a north-south direction.

Burial Ground No. 3 was established in 1952 for the specific purpose of receiving the wastes generated during a major overhaul of the

105-F reactor. The site was closed out in the same year. The irradiated and contaminated material—aluminum vertical safety rod thimbles, steel steep-plugs, etc.—are buried in a 15 foot (4.6 m) deep trench with 5 feet (1.5 m) of soil backfill.

The boundaries of the site are marked by a series of numbered concrete posts.

9.1.4 Burial Pit - 115-F (118-F-4)

The 115-F Burial Pit is located approximately 400 feet (122 m) west-southwest of the 105-F Building as noted in Figure 9.1-1. The facility consists of a small pit which was excavated in 1949 specifically to receive the silica gel which was removed from the drying towers in the 115-F dryer rooms. The pit was promptly backfilled to grade with approximately 5 feet (1.5 m) of soil covering the gel. The site is identified by a single yellow steel post.

9.1.5 Sawdust Burial Grounds (118-F-5)

The Sawdust Burial Ground is located approximately 1100 feet (336 m) southeast of the 107-F Retention Basin as noted in Figure 9.1-1. The facility measures approximately 500 feet (153 m) by 150 feet (46 m), and was in service from 1954 to 1975. The site contains several trenches that were used to receive low level activity sawdust bedding from animals pens which were maintained as part of the biological laboratory facilities. The trenches were backfilled with earth and rock to grade with a minimum depth of 4 feet (1.2 m) of fill over the contaminated material.

The site is identified by a series of concrete posts which outline the burial ground boundaries.

9.1.6 Solid Waste Burial Ground (118-F-6)

The Solid Waste Burial Ground is located 1200 feet (336 m) south of the 105-F Building as noted in Figure 9.1-1. The facility consisted of an area measuring 400 feet (122 m) long by 200 feet (61 m) wide, which included a trench running in a north-south direction where the

actual burial took place. The site was in service from 1965 to 1973, and was used for the disposal of solid animal and laboratory wastes from the biological research facilities. The trench has been back-filled to grade.

The location of the Solid Waste Burial Ground is identified by a series of concrete posts which outline the perimeter of the site.

9.1.7 Lewis Canal (116-F-1)

The Lewis Canal is an "L" shaped trench or ditch located 750 feet (259 m) northwest of the 105-F Building (see Figure 9.1-2). The trench is approximately 3000 feet (915 m) long, 10 feet (3.1 m) deep, with a bottom width of 40 feet (12 m). The facility was in service from 1953 to 1965.

Miscellaneous liquid wastes from 105-F and 190-F Buildings as well as decontamination waste from a tool and equipment decontamination facility located in the 189-F Building, were routinely released to the trench. On several occasions, during reactor outages when the normal effluent system was taken out of service for maintenance and for modification, the reactor effluent was directed to the Columbia River via the Lewis Canal.

No markers specifically identify the boundaries of the trench. However, the typical canal cross-section and the disturbed condition of the earth make it easy to spot the canal from ground level.

9.1.8 105-F Storage Basin Trench (116-F-3)

The 105-F Storage Basin Trench is located approximately 130 feet (40 m) south of the 105-F Building (see Figure 9.1-2). The trench was approximately 100 feet (31 m) long by 20 feet (6 m) wide by 10 feet (3.1 m) deep, and with the long axis running in an east-west direction. The facility was in service from the late 1940's to 1951.

The Storage Basin Trench was used to receive reactor outage effluent from process tubes which contained ruptured fuel elements. In 1951,

an attempt was made to clean out the 105-F metal storage basin. The sludge resulting from this effort was placed in this trench and then covered to grade with about 8 feet (2.4 m) of soil.

The location of the Storage Basin Trench is not identified with markers.

9.1.9 105-F Pluto Crib (116-F-4)

The 105-F Pluto Crib is located approximately 100 feet (31 m) south of the south-west corner of the 105-F Building as noted in Figure 9.1-2. The dimensions of the crib are 10 feet (3.1 m) by 10 feet (3.1 m) by 10 feet (3.1 m), and the sidewalls were lined with heavy wood timbers. After being in use from 1950 to 1958, the crib was backfilled with clean dirt to grade.

The Pluto Crib was constructed and used specifically for the disposal of reactor coolant from process tubes which contained ruptured fuel elements. The crib location is identified by a vent pipe and a steel post.

9.1.10 1608-F Liquid Waste Disposal Trench (116-F-6)

The 1608-F Liquid Waste Disposal Trench is located 180 feet (55 m) south of the southwest corner of the 105-F Building (see Figure 9.1-2), and is 100 feet (31 m) long with a bottom width of 10 feet (3.1 m). The trench was 51 feet (4.6 m) deep and has been backfilled to grade. The site was used from 1952 to 1965 for the disposal of reactor outage effluent water upon those occasions when the normal effluent system was out of service for maintenance or for modification.

A chain fence outlines the perimeter of the trench.

9.1.11 117-F Crib (116-F-7)

The 117-F Crib is located 450 feet (137 m) south of the southwest corner of the 105-F Building (see Figure 9.1-2). The crib was used during the years from 1960 to 1965 to receive the drainage from the 117-F Building filter seal pits - water containing a small amount of short half-life contamination.

The facility has been backfilled to grade and is marked by a vent pipe and four steel posts.

9.1.12 Animal Waste Leaching Trenches (116-F-9)

The Animal Waste Leaching Trenches are located 150 feet (46 m) northeast of the 107-F Retention Basin as noted in Figure 9.1-2. The facility consists of two trenches each measuring 20 feet (6.1 m) by 30 feet (9.2 m), and of unknown depth. The trenches were used from 1960 through 1972 to receive contaminated waste water from the buildings in which animals being used in biological experiments were quartered.

The trenches have been backfilled to grade; no markers are in place to identify their location.

9.1.13 Ball Washer Crib (116-F-5)

The Ball Washer Crib is located 250 feet (76 m) south-southeast of the 105-F Building as indicated in Figure 9.1-2. The crib measures 10 feet (3.1 m) by 10 feet (3.1 m), and is 10 feet (3.1 m) deep. The facility was used to receive the waste water from the ball washer - a device through which the boron-steel balls for the 3X system were cycled for cleaning following their removal from the reactor and prior to being reloaded into the ball hoppers. This water contained low level contamination. The crib was in use during the early 1950's and in 1953 it was backfilled to grade with clean soil. A chain fence indicated the site location.

9.2 Radiation and Contamination Levels

The personnel exposure rate at ground surface resulting from any of the 100-F area liquid and solid waste burial grounds, trenches and cribs, does not exceed 1 mR/hr. Also, all of the facilities have been backfilled or covered in such a manner as to ensure that there is no loose contamination at the site and there is no possibility that any can escape. Therefore, unrestricted entry to the burial ground, crib, and trench sites for the purpose of ground level inspection and/or radiological surveying, is possible.

The below grade circumstance will vary for each of the facilities, depending upon the material or liquid which was deposited in each. In some cases, the 117-F crib, for example, the liquid waste drained to the facility contained only a small quantity of short half-life contaminants. These have now decayed to the point where the crib has been released from radiation zone status. On the other hand, Burial Ground No. 1 was the recipient of such items as gun barrel tips, steel sleeves and cutting removed from the inside of the reactor, filter boxes from graphite boring operations, etc. These are longer half-life materials which were quite "hot" when they were buried and will continue to be "hot" for several years. However, most of the solid and liquid waste disposal sites received relatively low level materials, and therefore, the contamination level in the trench or crib is now quite low.

All of the 100-F burial grounds, cribs, and trenches were sampled and the radiological content analyzed as a part of the radiological characterization study of the radionuclides present in the production reactor sites. The results of the analysis are reported in document UNI-946, entitled, Radiological Characterization of the Retired 100 Areas, dated May, 1978.

9.3 Reference Drawings

None.

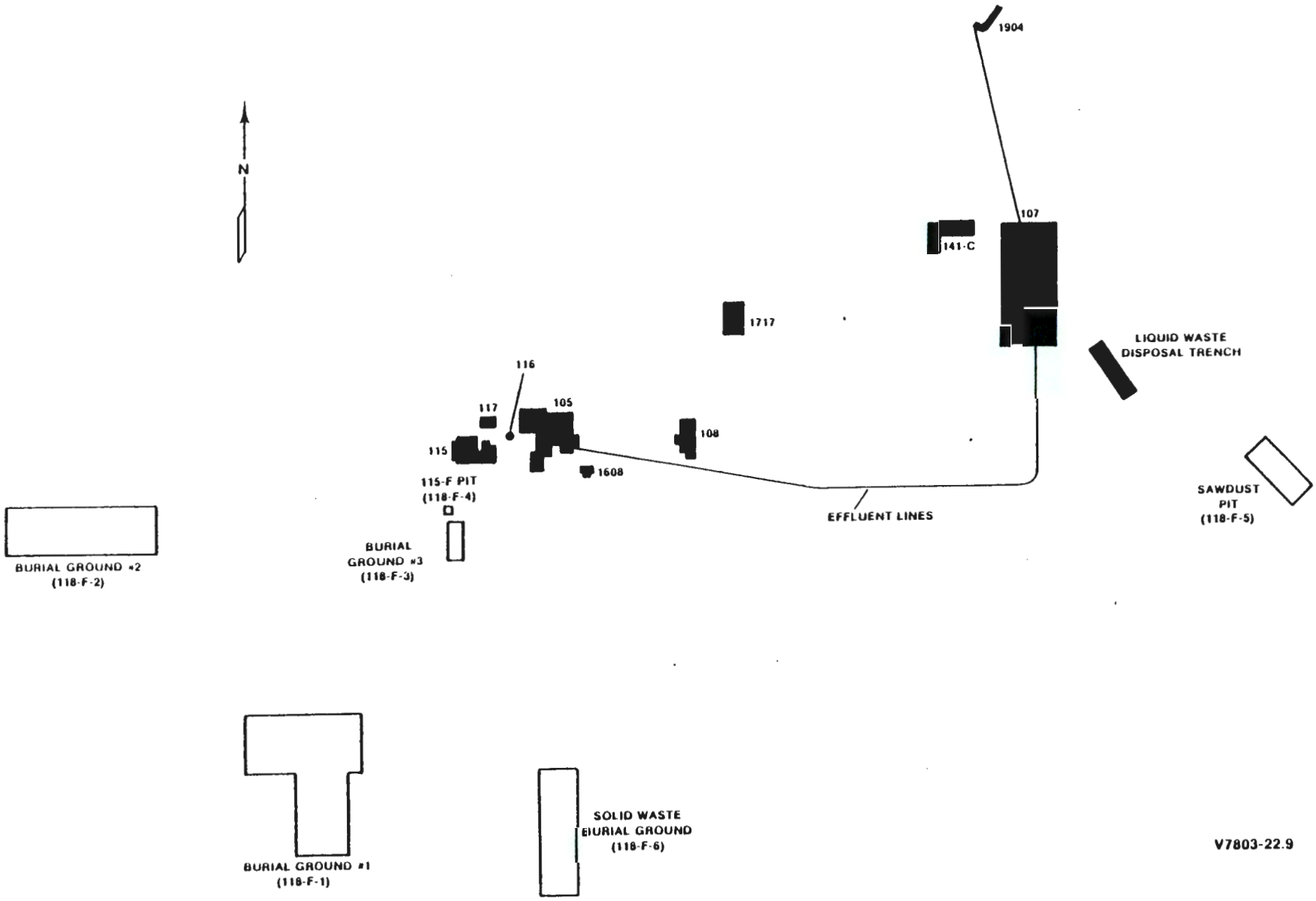

100-F Burial Grounds

Figure 9.1-1

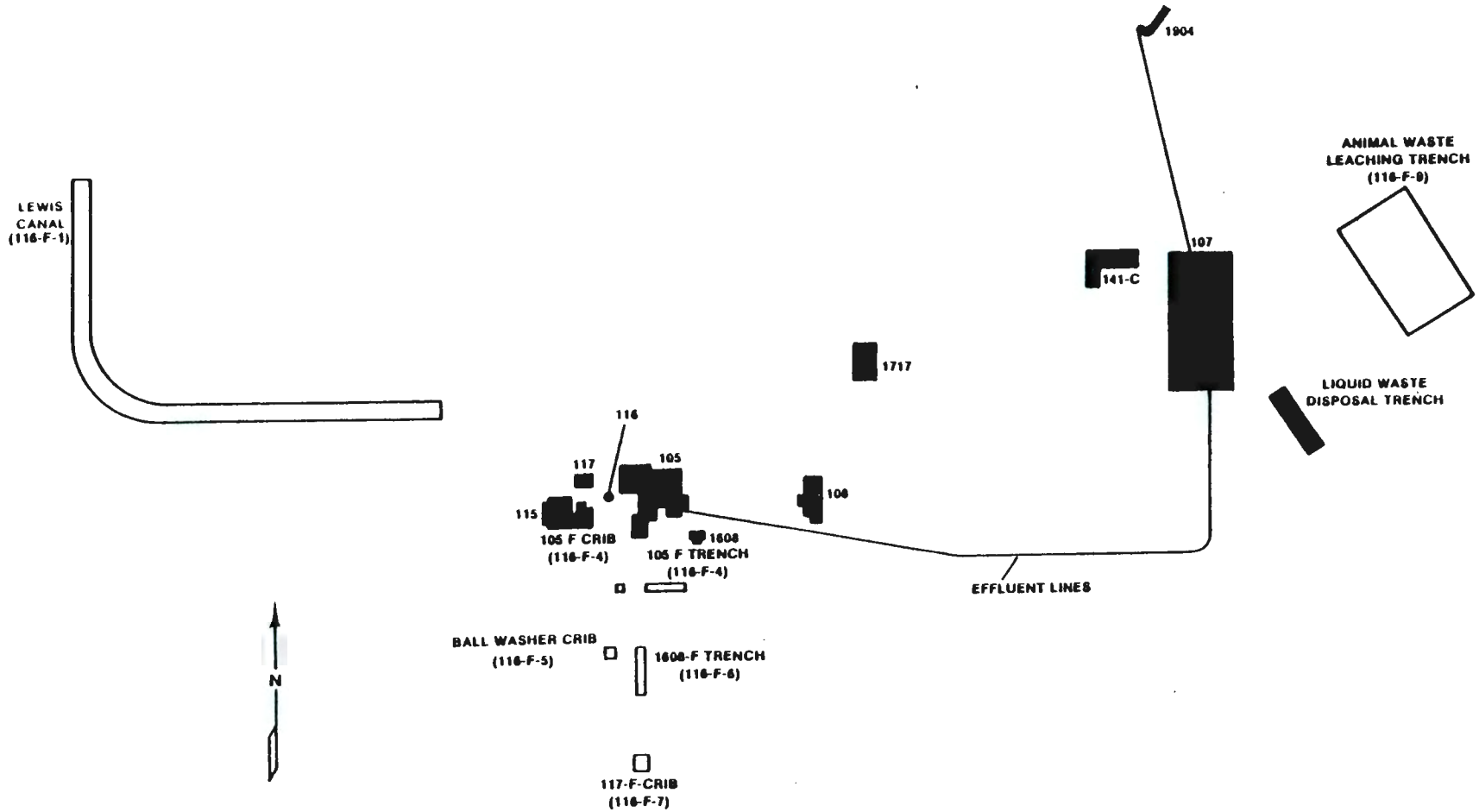

100-F - Cribs and Trenches

Figure 9.1-2

UNITED NUCLEAR INDUSTRIES, INC.

DISTRIBUTION:

File

DATE August 21, 1978

TO Eva Brown

FROM E. A. Wegener

SUBJECT REVISION - PAGE 68, DOCUMENT UNI-1001

Attached are 35 plus copies of revised page 68 of document UNI-1001. These are to replace the same page currently in the document. Please issue this revision to the document holders.

EAW:aks

Att.

9112242139

Figure 3.1-5 is a photograph of the 100-D Outfall structure. It is similar to the 100-F structure and is presented since no picture of the 100-F Outfall is available.

3.1.6 107-F Liquid Waste Disposal Trench

The 107-F Liquid Waste Disposal Trench is located 150 feet (46 m) southeast of the southeast corner of the 107-F Retention Basin. This facility is a below grade earthen structure approximately 550 feet (168 m) long by 200 feet (61 m) wide by 20 feet (6.1 m) deep with a V-shaped cross section and lined with fairly coarse gravel. The trench was used to receive the reactor effluent during outages occasioned by a fuel cladding rupture.

it exited the 107-F Retention Basin from its normal path down to the 1904-F Outfall structure into a special 12-inch diameter pipe line which ran to the head (north end) of the trench. However, changes were eventually made in the total effluent system which permitted bypassing the retention basin by diverting the reactor effluent to the trench directly from the 42-inch effluent line before it entered the basin. In order to do this, a feeder trench between the effluent line and the main waste disposal trench was provided. This ditch was approximately 300 feet long and entered the main trench about 100 feet (30.5 m) below its north end. This configuration is shown on Figure 3.1-1.

3.2 Radiation and Contamination Levels

The radiation level (and/or personnel exposure level) both external and internal to the 100-F Area Effluent Water System, are low and pose no unusual problems. The system contains varying amounts of contamination depending upon the specific portion being discussed. Transuranic radionuclides in significant quantities are contained in some sections of the system.

UNITED NUCLEAR INDUSTRIES, INC.

DISTRIBUTION:

File

DATE May 26, 1978

TO Eva Brown

FROM E. A. Wegener

SUBJECT ADDITIONS AND REVISIONS TO UNI-1001 - 100-F SITE AND FACILITIES DESCRIPTION

The attached packets include several additions and revisions which are to be made to document UNI-1001. A detailed listing of these changes is as follows:

1. Add divider sheet 9.0 and pages 113 through 121, inclusive, behind page 112.

2. Remove page iv of the Table of Contents and insert revised page iv.

3. Remove page vi of the List of Figures and insert revised page vi.

4. Remove page 70 and insert revised page 70.

5. Insert large white sheet with UNI logo in pocket on back outside surface of binder.

EAW:aks

CONTENTS (cont.)

		Page
6.0	117-F FILTER BUILDING - UNDERGROUND DUCTS, AND 105-F EXHAUST STACK (116-F BLDG.)	96
	6.1 General Description	96
	6.1.1 117-F Building	96
	6.1.2 Inlet and Exhaust Air Ducts	97
	6.1.3 Exhaust Stack (116-F Building)	97
	6.2 Radiation and Contamination Levels	98
	6.3 Reference Drawings	99
7.0	141-C BUILDING - LARGE ANIMAL BARN AND BIOLOGY LABORATORY	108
	7.1 Description	108
	7.2 Radiation and Contamination Levels	108
	7.3 Reference Drawings	108
8.0	1608-F BUILDING	110
	8.1 Description	110
	8.2 Radiation and Contamination Levels	110
	8.3 Reference Drawings	111

LIST OF FIGURES (cont.)

		Page
3.1-4	100-F Effluent Line Entry 107 Retention Basin	74
3.1-5	1904-D Outfall Structure	75
3.1-6	107-F Retention Basin Dirt Fill	76
4.1-1	108-F Building - Biological Laboratory	79
4.1-2	108-F Building - Biology Laboratory	80
4.1-3	108-F Building - Typical Laboratory and Hood Installation	81
4.1-4A	108-B Radiation Survey Report	82
4.1-4B	108-B Radiation Survey Report	83
4.1-4C	108-B Radiation Survey Report	84
4.1-4D	108-B Radiation Survey Report	85
4.1-4E	108-B Radiation Survey Report	86
4.1-4G	108-B Radiation Survey Report	87
5.1-1	105-F Reactor - Gas Flow Diagram	93
5.1-2	115-F Building - South Side - East End	94
5.1-3	115-F Building - North Side - East End	95
6.1-1	105-F Reactor - Confinement Flow Diagram	101
6.1-2	117-F Building - Above Grade Structure	102
6.1-3	105-F Building - Confinement System Layout	103
6.1-4	117-F Filter Building Piping Arrangement	104
6.1-5	117-F - Confinement Filter Building	105
6.1-6	117-F - Confinement Filter Building	106
6.1-7	117-F Typical Filter Bank Arrangement	107
7.1-1	100-F Area - 141-C Building	109
8.1-1	1608-F Building - Waste Water Pump House	112

LIST OF TABLES

I	Radiation and Contamination Levels - August, 1976	91

the spread of contamination from the loose sludge in the facility. The exposure rate is now at background level. Even without the protective dirt layer, the radiation and contamination levels in the 1904-F facility are low , 1 mR and 2500/3000 c/m.

- The 107-F Liquid Waste Disposal Trench has also been backfilled with uncontaminated dirt primarily as a means of controlling contamination spread. Personnel exposure rate in the trench is at the area background level. Core samples taken 20 feet (6.1 m) below grade (in the region of highest radionuclide content read 600-1000 c/m.

3.3 Reference Drawings

The following drawings describe the various facilities included in the 100-F Effluent Water System:

H-1-70185	Process Effluent System - Plan and Profile
H-1-26715	Plan and Profile - Effluent Line from 105-F to 107-F
H-1-950	Effluent Line - 105-F to 107-F
H-1-951	Effluent Line - 105-F to 107-F
W-73199	Bldg. 107-F - Concrete - Plant and Details
W-69714	Bldg. 107-F - Concrete - Details
H-1-26718	Effluent Line - Plan and Profile - 107-F to River
W-72093	Process Sewers - 1904-F Plan - Profile and Concrete