STATE OF WASHINGTON
DEPARTMENT OF ECOLOGY
3100 Port of Benton Blvd • Richland, WA 99354 • (509) 372-7950
711 for Washington Relay Service • Persons with a speech disability can call 877-833-6341

June 5, 2019 19-NWP-083

Brian T. Vance, Manager
United States Department of Energy
Office of River Protection
PO Box 450, MSIN: H6-60
Richland, Washington 99352

Mark A. Lindholm, President
Washington River Protection Solutions, LLC
PO Box 850, MSIN: H3-21
Richland, Washington 99352

Re: Proposed Agency Initiated Draft of the *Dangerous Waste Research, Development and Demonstration Permit for the Test Bed Initiative Phase 2 Project*, Environmental Protection Agency (EPA) ID Number WA7890008967

References: See page 2

Dear Brian Vance and Mark Lindholm:

This letter transmits the proposed draft of the *Dangerous Waste Research, Development and Demonstration Permit for the Test Bed Initiative (TBI) Phase 2 Project*, EPA ID Number WA7890008967, in accordance with Washington Administrative Code (WAC) 173-303-809.

The Department of Ecology (Ecology) accepts the permit application submittal (References) for inclusion of the proposed agency initiated draft of the *Dangerous Waste Research, Development and Demonstration Permit for the TBI Phase 2 Project*. The proposed draft permit includes permit conditions, the submitted permit application with supporting technical information, reports, and engineering drawings for the design and construction of the TBI Phase 2 Project that is located in the 200 West Area of the Hanford Site.

WAC 173-303-840(3)(d) requires a 45-day public comment period for the draft permit application. Ecology will hold this public comment period from June 7, 2019 through July 22, 2019. In accordance with WAC 173-303-840(5)(a), Ecology scheduled a public hearing for this comment period on July 11, 2019. The public hearing will start at 5:30pm at the Richland Public Library located at 955 Northgate Drive in Richland, Washington.

The proposed draft permit is on the enclosed DVD. Copies of this DVD are available at the Hanford Public Information Repositories in Richland, Spokane, and Seattle, Washington, as well as Portland, Oregon.

A DVD is also available for review at the following locations:

Department of Ecology
Nuclear Waste Program
3100 Port of Benton Boulevard
Richland, Washington 99354

United States Department of Energy
Administrative Record
2440 Stevens Center Place
Richland, Washington 99354

The proposed draft permit is also available on the Ecology website at: https://ecology.wa.gov/Waste-Toxics/Nuclear-waste/Public-comment-periods.

If there are any questions regarding this permit modification, please contact Brigitte Weese, Permit Lead, at brigitte.weese@ecy.wa.gov or (509) 372-7936 or Annette Carlson, Project Manager, at annette.carlson@ecy.wa.gov or (509) 372-7897.

Sincerely,

Suzanne Dahl
Dangerous Waste Permit Manager
Nuclear Waste Program

bw/sh
Enclosure

References:

1. Letter 19-ECD-0033, dated May 10, 2019, "Submittal of the Test Bed Initiative Phase 2 Research, Development, and Demonstration Permit Application"
2. Letter 19-ECD-0039, dated May 14, 2019, "Engineering Supplemental Information for the Test Bed Initiative Phase 2 Research, Development, and Demonstration Permit Application"

cc: See page 3

cc electronic w/o enc:

Dave Bartus, EPA
David Einan, EPA
Mary Beth Burandt, USDOE
Duane Carter, USDOE
Janet Diediker, USDOE
Joe Franco, USDOE
Rob Hastings, USDOE
Lori Huffman, USDOE
Mostafa Kamal, USDOE
Christopher Kemp, USDOE
Tony McKarns, USDOE
Donna Yasek, BNI
Laura Cusack, CHPRC
Moussa Jaraysi, CHPRC
Lucinda Borneman, WRPS
Christopher Burke, WRPS
Jessica Joyner, WRPS
Jennie Stults, WRPS
Curt Clement, MSA
Jon Perry, MSA
Darci Teel, MSA
Michael Stephenson, PNNL
ERWM Staff, YN
Debra Alexander, Ecology
Jennifer Cantu, Ecology
Annette Carlson, Ecology
Suzanne Dahl, Ecology
Mandy Jones, Ecology
Steven Lowe, Ecology
Mark Pakula, Ecology
Stephanie Schleif, Ecology
Alex Smith, Ecology
Brigitte Weese, Ecology
Jerry Yokel, Ecology

cc w/enc, DVD:

Tim Hamlin, EPA
Tony McKarns, USDOE
Matt Johnson, CTUIR
Jack Bell, NPT
Alyssa Buck, Wanapum
Laurene Contreras, YN
Susan Leckband; HAB
Ken Niles, ODOE
John Fowler, ACHP
Robin Priddy, BCAA
Donald Redman, USACE
Trevor Fox, USFW
Mike Livingston, WDFW
John Martell, WDOH
John Wiesman, WDOH
Sonia Soelter, WSDA
Allyson Brooks, WSDAHP
Cindy Preston, WSDNR
BNI Correspondence Control
CHPRC Correspondence Control
Environmental Portal
Gonzaga University, Foley Center Library
Hanford Facility Operating Record
MSA Correspondence Control
PNNL Correspondence Control
Portland State University Library, Government Information
University of Washington Suzzallo Library, Government Publications
USDOE-ORP Correspondence Control
USDOE Public Reading Room, CIC
USDOE-RL Correspondence Control
USEPA Region 10 Hanford Field Office Correspondence Control
WRPS Correspondence Control

cc w/enc, DVD and hard copy:

Hanford Administrative Record: Hanford Site-wide Permit
NWP Central File

DEPARTMENT OF
ECOLOGY
State of Washington

Fact Sheet

Proposed Draft
Dangerous Waste Research, Development and Demonstration Permit
for the Test Bed Initiative Phase 2 Project,
EPA ID Number WA7890008967

June 2019

This page is intentionally left blank.

Fact Sheet

Proposed Draft
Dangerous Waste Research, Development and Demonstration Permit for the Test Bed Initiative Phase 2 Project, EPA ID Number WA7890008967

Permittees

United States Department of Energy
Office of River Protection
(Owner/Operator)
P.O. Box 450, MSIN H6-60
Richland, Washington 99352

Washington River Protection Solutions, LLC
(Co-Operator)
P.O. Box 1500, MSIN: H6-63
Richland, Washington 99352

This fact sheet has been developed by the Washington State Department of Ecology (Ecology) in accordance with the requirements of Washington Administrative Code (WAC) 173-303-840(2)(f). Its purpose is to discuss the proposed draft research, development, and demonstration (RD&D) permit for the United States Department of Energy (USDOE), and the Office of River Protection (ORP) for the proposed Test Bed Initiative (TBI) Phase 2 Project located in the 200 West Area of the Hanford Site.

This Fact Sheet is divided into six sections:

1.0 RD&D Permit Overview.

2.0 Description of the TBI Phase 2 Project.

3.0 General requirements and administration for an RD&D permit in Washington.

4.0 Summary of the approach and permit requirements in the draft RD&D permit for the TBI Phase 2 Project.

5.0 Procedures for reaching a final decision on the TBI Phase 2 Project RD&D Draft Permit.

1.0 RD&D Permit Overview

The purpose of the TBI Phase 2 Project RD&D Permit is to demonstrate and evaluate the feasibility of pretreating liquid tank waste using an in-tank column. The proposed TBI Phase 2 Project will filter and perform ion exchange on 2,000 gallons of supernatant from a tank (SY-101) in the SY Farm located in the 200 West Area of the Hanford Site. Supernatant is the liquid portion of the tank waste. Once the tank waste is pre-treated, it will be deposited into portable containers (totes). This RD&D Permit is currently anticipated to be effective for 365 calendar days and limits the quantities of dangerous and/or mixed waste to be treated during the TBI Phase 2 Project. The Permit also includes stringent terms to protect public health and the environment.

The initial Phase 1 proof-of-concept demonstration with a small quantity of Hanford tank waste was completed as a Resource Conservation and Recovery Act of 1976 (RCRA) Treatability Study in 2017. This initial phase included:

1. Pretreatment and filtration of ^{137}Cs and other radionuclides from three gallons of tank waste at the Hanford 222S laboratory and certification that the pretreated liquid could be managed as Mixed Low Level Waste (MLLW).

2. Treatment (stabilization) of the pretreated liquid waste using a grouting process in an off-site RCRA permitted facility in Richland, WA.
3. Transport and permanent disposal of the treated waste at the RCRA permitted disposal site in Andrews, TX.

Under this RD&D Permit, the Permittees will demonstrate the in-tank pretreatment process, using filter and Ion Exchange Column removal technology, which will provide information and data to future projects. The project is designed to investigate requirements for feed material handling, equipment operation, disposition of secondary wastes, and potential environmental impacts associated with the process. The demonstration will be used to evaluate:

- The capability to pretreat tank waste with an in-tank system that can perform both: 1) filtration to remove suspended solids from the supernatant; and 2) ion exchange (IX) to remove 99% of the Cesium-137 from the liquid waste stream.
- The ability for the pretreated liquid waste to meet the waste acceptance criteria for an off-site permitted treatment facility and permitted disposal facility;
- Efficiency, cost-effectiveness, and feasibility for full-scale application;
- Safety and overall protectiveness of human health and the environment.

The treatment process which would be developed under this Permit could enhance retrievals from Single Shell Tanks (SSTs) and further conserve space in existing Double Shell Tanks (DSTs).

The retrieval, treatment, and disposal of tank waste is governed by the Hanford Federal Facilities Agreement and Consent Order (HFFACO) (Ecology et. sl. 1989), and interim status standards in WAC 173-303-805.

2.0 Description of the Test Bed Initiative Phase 2 Project

Ecology received a Dangerous Waste Permit Application for the TBI Phase 2 Project on May 14, 2019 from the Permittees. The TBI Phase 2 Project is operated by USDOE ORP and co-operated by Washington River Protection Solutions, LLC (WRPS). After receipt of the TBI Phase 2 application material, Ecology developed the associated proposed draft permit conditions and permit sections included in this RD&D Permit. USDOE ORP will have the responsibility for all administrative, operational, regulatory compliance, and other responsibilities associated with activities under the proposed RD&D Permit. All activities will be conducted at the Hanford Site, Richland, Washington. The United States Environmental Protection Agency (EPA) identification number is WA7 890008 967, which covers the entire Hanford Site. The RD&D Draft Permit to support the TBI Phase 2 Project is not part of the Dangerous Waste Portion of the RCRA Permit for the Treatment, Storage, and Disposal of Dangerous Waste Permit issued to USDOE May 2, 2019, which has the same EPA identification number.

In addition to the RD&D Permit, USDOE ORP will apply for and obtain the following prior to operations:

- An alternate approval from Washington State Department of Health and the Environmental Protection Agency to AIR 15-414 , "Notice of Construction 945, Tank Farm Operations Diffuse and Fugitive License," to allow the TBI Phase 2 Project to be conducted as a source of diffuse and fugitive emissions.

The overall project goal for TBI Phase 2 is to pretreat liquid supernatant from SY-101 and transfer waste to DOT compliant totes for shipment to off-site treatment and disposal facilities. The TBI Phase 2 Project implements a unit operational process to pretreat liquid waste from SY-101. SY-101 has been in static condition and solids have already settled in the tank; therefore pretreating only the supernatant eliminates some certain key radionuclides from the waste stream. By removing only the supernatant, and using a

combination of filtration and IX to pre-treat approximately 2,000 gallons of tank supernatant, the TBI Phase 2 Project will be removing certain key radionuclides.

The TBI Phase 2 Project consists of two subsystems, as shown in the process flow diagram (Figure 1). The first subsystem will consist of in-tank components installed in SY 101. This subsystem will include within a single assembly: a filter, a pump, and an ion exchange column (IXC) filled with crystalline silicotitanate (CST) media. This system will be installed through Riser-014, a 12 inch riser. The second subsystem is comprised of the above ground equipment that will support transferring the pretreated tank waste stream into a delay tote, which will allow for verification that any dose rate from the packages is the result of barium decay and not high levels of Cesium-137. After the surveys are completed, the contents of the delay tote will be transferred to one of the process totes suitable for transportation in accordance with DOT requirements (49 CFR). All of the above ground components that transfer or store waste have or will be in secondary containment to prevent spills or releases to the environment.

Following the pretreatment, the supernatant will be sampled, analyzed, and the results will be used to support a Waste Incidental to Reprocessing (WIR) evaluation and determination. The required sample(s) from the tote(s) will be sent to the 222-S Laboratory on the Hanford Site for analysis. The analytical data will be used to determine if the pretreated waste meets requirements to be treated and disposed of at off-Hanford Site permitted facilities.

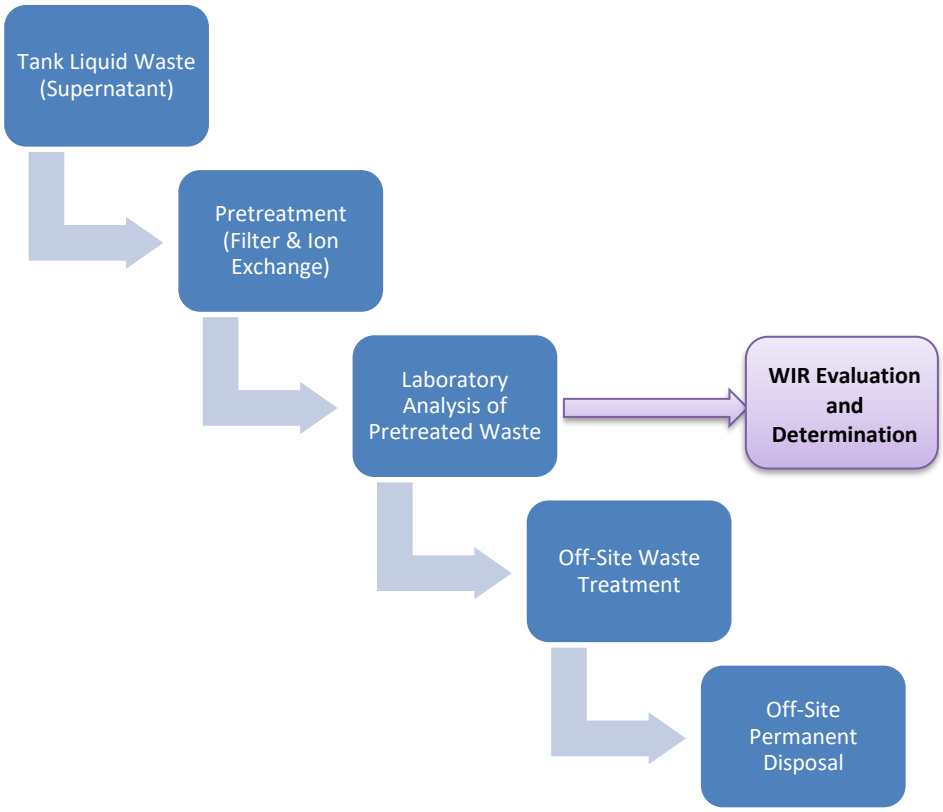

Figure 1: Test Bed Initiative Phase 2 Overview

3.0 General requirements and administration for an RD&D permit in Washington

The Washington State Hazardous Waste Management Act, Chapter 70.105 Revised Code of Washington (RCW) and the regulations promulgated there under in Chapter 173-303 of the WAC, regulates the management of dangerous waste in Washington. Ecology may issue an RD&D Permit to a facility that proposes to utilize an innovative and experimental dangerous waste treatment technology or process as specified in WAC 173-303-809. The following significant provisions of the regulations apply to permitting RD&D facilities:

- Ecology has the responsibility to ensure that an RD&D Permit includes terms and conditions on the design and operation of the facility to assure protection of human health and the environment. [WAC 173-303-809(1)]
- This RD&D Permit will provide for the pretreatment of waste at Hanford and shipment to other permitted facilities off the Hanford Site. [WAC-173-303-809(1)(b)]
- RD&D Permits will include such requirements that are necessary to protect human health and the environment (including, but not limited to, requirements regarding monitoring, operation, financial responsibility, closure, and remedial action), and such requirements that are necessary for the purposes of testing and providing information on the operation of the facility. [WAC 173-303-809(1)(c)]
- Ecology has some discretion when determining which permitting requirements of a dangerous waste treatment facility should be applied to an RD&D facility. However, the primary mandate to protect human health and the environment must be assured. [WAC 173-303-809(2)]
- Ecology has the authority to immediately terminate all operations at an RD&D facility at any time it determines that termination is necessary to protect human health and the environment. [WAC 173-303-809(3)]
- Operation of an RD&D facility is limited to one year (based on 365 separate "calendar days"). [WAC 173-303-809(1)]

The draft permit indicates Ecology's tentative decision to issue an RD&D Permit for the TBI Phase 2 Project. This tentative decision is subject to public review and comment. Ecology will consider all public comments before making its final decision on whether to issue an RD&D Permit to the TBI Phase 2 Project. [Regulatory requirements for the public review process are in WAC 173-303-840(3) through (9), and discussed in Section 4 of this Fact Sheet.]

If Ecology decides to issue a final permit to support the TBI Phase 2 Project, Ecology will sign the RD&D Permit. Ecology has responsibility for ensuring compliance with regulations for dangerous and/or the dangerous waste portion of mixed waste, including making permitting decisions.

4.0 Summary of the approach and permit requirements in the draft RD&D permit for the TBI Phase 2 Project

Ecology proposes to incorporate permit conditions into RD&D Permit for the TBI Phase 2 Project. These conditions are necessary to make the proposed permit sections enforceable. The permit conditions are separated into the following parts:

Part I: Standard Conditions

Part II: General Facility Conditions

Part III: Containers

Part IV: Tank Systems.

Within these specific TBI Phase 2 permit conditions, Ecology included the following:

- "Ecology has determined that the HLVIT treatment standard is attached to this waste in addition to the applicable 40 CFR 268.40 treatment standards for the dangerous waste codes other than D002 and D004-011 identified in the Double-Shell Tank Part A Permit Application, dated December 14, 2009, as modified by the TBI Phase 2 RD&D permit application submitted on May 14, 2019."
- "The Ion Exchange Column (IXC) will be placed in a Department of Transportation (DOT) compliant container and shipped from the SY Farm to the Central Waste Complex for interim storage, pending final treatment and disposal. The CWC facility is operating pursuant to interim status standards set forth in WAC 173-303-805. The IXC will be managed as mixed High Level Waste."

The proposed permit is divided into the following sections which detail the approach to ensure protection of human health and the environment as required by WAC 173-303-809:

- Facility Description: The facility information includes general information on the TBI Phase 2 RD&D Permit. Included in the section is information specific to the project schedule, security, personnel training, and preparedness, prevention, emergency procedures, and contingency plans.
- Process Description: The Process Description describes the TBI Phase 2 Project's two subsystems. The first subsystem will consist of in-tank components installed through a 12 inch riser in SY-101 and includes a filter, a pump, and an IXC filled with CST media. The second subsystem is comprised of the above ground equipment that will support transferring the pretreated tank waste stream into totes. A sample of the last filled tote will be taken to confirm compliance with various requirements and support a WIR evaluation and determination that the waste meets standards to be managed as MLLW. Following confirmation via sampling, the filled totes will be transported to off-site permitted facilities for further treatment and disposal.
- Waste Analysis Plan (WAP): The purpose of the WAP is to ensure that all waste generated from TBI Phase 2 is managed in accordance with WAC 173-303-300. The WAP provides the basis for measuring the adequacy of the waste pretreatment system and assists in optimizing the pretreatment operation based on the analysis of the pretreated waste. It also provides information on secondary waste streams to determine the required type and level of treatment, and/or appropriate disposal path. The WAP addresses the sampling and analyses necessary to manage waste at the TBI Phase 2 according to requirements in WAC 173-303. The permittees will complete the Data Quality Objectives (DQO) process and prepare a Tank Sampling and Analysis Plan (TSAP) prior to project operations. The lab will provide certification that the pretreated liquid could be managed as MLLW.
- Inspection Plan: The Inspection Plan will describe how inspections will be conducted during the operation and closure of the TBI Phase 2 project. This includes how inspections will meet applicable regulatory requirements including: WAC 173-303-320, WAC 173-303-630(6) and WAC 173-303-640(6).
- Recordkeeping and Reporting: Recordkeeping and Reporting for the TBI Phase 2 Project will describe TBI Phase 2 Operating Record requirements and the Final Report required for the TBI Phase 2 RD&D permit.
- Closure Plan: The Closure Plan describes how the scope of the closure activities is limited to the actions applicable to decontamination and removal of TBI Phase 2 equipment; decontamination of the site, if applicable; and restoration of the site to its pre-RD&D activity state.
- Engineering Drawings: The following engineering drawings will be included in the permit:
    - DOE TBI SY-101 Site Plan.
    - DOE TBI SY-101 P&ID.
    - DOE TBI SY-101 PFD.

- DOE TBI SY-101 IX Riser Adapter Assembly.
- DOE TBI SY-101 Pump Column Assembly.
- DOE TBI SY-101 Hose Assemblies.
- DOE TBI SY-101 Pipe Stands.
- DOE TBI SY-101 Distribution Valve Manifold.
- DOE TBI SY-101 Delay Tote Assembly.
- DOE TBI SY-101 Backflush Skid Assembly.
- DOE TBI SY-101 IX Column Vessel.
- DOE TBI SY-101 Filter Assembly.
- DOE TBI SY-101 Process Tote Assembly.
- DOE TBI SY-101 Spray Ring.
- DOE TBI SY-101 Pipe in Pipe.
- Process Control Plan for the TBI System.

5.0 Procedures for reaching a final decision on the TBI Phase 2 Project RD&D Draft Permit

The public may review and comment on this draft permit, from June 7th through July 22nd, 2019. Ecology will consider all comments before deciding whether to issue a final permit. WAC 173-303-840(3) through (9) describe the public review process.

Ecology has determined that the proposed actions covered by this permit are categorically exempt from threshold determination and EIS requirements.

> WAC 197-11-800 (17) Information collection and research. Basic data collection, research, resource evaluation, requests for proposals (RFPs), and the conceptual planning of proposals shall be exempt. These may be strictly for information-gathering, or as part of a study leading to a proposal that has not yet been approved, adopted or funded; this exemption does not include any agency action that commits the agency to proceed with such a proposal. (Also see WAC197-11-070.)

This draft permit was prepared according to the procedures in WAC 173-303-840(2). As required by WAC 173-303-840(3)(d), draft permits issued by Ecology will have at least a 45-day public comment period. The public comment period for this draft permit will be June 7th through July 22nd, 2019.

Comments must be post-marked, received by e-mail, or hand-delivered no later than close of business (5:00 p.m. PST) July 22, 2019.

Direct all written comments to:

Daina McFadden
Washington State Department of Ecology
3100 Port of Benton Boulevard
Richland, Washington 99354
E-mail address: hanford@ecy.wa.gov

Ecology will consider and respond to all written comments on this draft permit that are submitted by the July 22nd deadline. If Ecology decides to issue a final permit, the permit will become effective 30 days after the issuance date. If the final decision includes substantial changes to the draft permit because of public comment, we will consider initiating a new public comment period.

In accordance with WAC 173-303-840(5)(a), a public hearing is scheduled for this comment period on July 11, 2019, at the Richland Public Library, 955 Northgate Dr, at 5:30 p.m. For more information, please contact:

Daina McFadden
Washington State Department of Ecology
(509) 372-7950

E-mail address: hanford@ecy.wa.gov

After completion of the 45-day public comment period, Ecology will make a decision on issuance of the final Research Development and Demonstration Permit for the TBI Phase 2 Project to the permittees. NWP will also issue a Response to Comments document to the permittees and the public. The final permit decision may be appealed within 30 days after issuance of that decision. If there is no appeal, the permit will stand as issued.

Copies of the following documents for the draft Research Development and Demonstration Permit for the TBI Phase 2 Project are available for review at the Hanford Public Information Repositories locations listed below:

- RD&D Permit Conditions for the TBI Phase 2 Project.
- RD&D Permit for the TBI Phase 2 Project.
- Appendix A: TBI Phase 2 Engineering Drawings and Process Control Plan

For additional information call (509) 372-7950 or e-mail hanford@ecy.wa.gov.

Hanford Public Information Repositories

Richland, Washington

Ecology Nuclear Waste Program Resource Center
3100 Port of Benton Blvd. Richland, WA 99354
509-372-7950

U.S. Department of Energy Administrative Record
2440 Stevens Drive, Room 1101 Richland, WA 99354
509-376-2530

Washington State University Tri-Cities
Department of Energy Reading Room
2770 Crimson Way, Room 101L Richland, WA 99354
509-375-7443

Other Locations:

Portland

Portland State University
Branford Price Millar Library
1875 Southwest Park Avenue
Portland, Oregon 97201
(503) 725-4542

Seattle

University of Washington Suzzallo Library
P.O. Box 352900
4000 15th Avenue Northeast

Seattle, Washington 98195
(206) 543-5597

Spokane

Gonzaga University
Foley Center
502 East Boone Avenue
Spokane, Washington 99258
(509) 313-6110

Information on the proposed permit is also available online at http://www.ecy.wa.gov/programs/nwp/commentperiods.htm. If special accommodations are needed for public comment, contact Ecology's Nuclear Waste Program at (509)372-7950.

DANGEROUS WASTE RESEARCH, DEVELOPMENT AND DEMONSTRATION PERMIT FOR THE TEST BED INITIATIVE PHASE 2 PROJECT

CHANGE CONTROL LOG

Change Control Logs ensure that changes to this unit are performed in a methodical, controlled, coordinated, and transparent manner. Each unit section will have a "**Last Modification Date**" which represents the last date the portion of the unit has been modified. The "**Modification Number**" represents Ecology's method for tracking the different versions of the permit. This log will serve as an up to date record of modifications and version history of the unit.

Last modification to Dangerous Waste Research, Development and Demonstration Permit for the Test Bed Initiative Phase 2 Project

Permit Documents	Last Modification Date	Modification Number
Unit-Specific Conditions		
Dangerous Waste Research, Development and Demonstration Permit for the Test Bed Initiative Phase 2 Project		

DRAFT

This page intentionally left blank.

DRAFT

DANGEROUS WASTE RESEARCH, DEVELOPMENT AND DEMONSTRATION PERMIT FOR THE TEST BED INITIATIVE PHASE 2 PROJECT PERMIT CONDITIONS

CHANGE CONTROL LOG

Change Control Logs ensure that changes to this unit are performed in a methodical, controlled, coordinated, and transparent manner. Each unit section will have its own change control log with a modification history table. The "**Modification Number**" represents Ecology's method for tracking the different versions of the permit. This log will serve as an up to date record of modifications and version history of the unit.

Modification History Table

Modification Date	Modification Number
Unit-Specific Conditions	

DRAFT

This page intentionally left blank.

DRAFT

Dangerous Waste Research, Development and Demonstration Permit for the Test Bed Initiative Phase 2 Project

Washington State Department of Ecology
Nuclear Waste Program
3100 Port of Benton Boulevard
Richland, Washington 99354-1670
Telephone: (509) 372-7950

This Permit is issued in accordance with the applicable provisions of the Hazardous Waste Management Act, Chapter 70.105 Revised Code of Washington (RCW), and the regulations promulgated hereunder in Chapter 173-303 Washington Administrative Code (WAC).

ISSUED TO: United States Department of Energy
Office of River Protection
Owner/Operator
P.O. Box 450
Richland, Washington 99354

Co-Permittee: Washington River Protection Solutions, LLC
P.O. Box 1500
Richland, Washington 99354

This Permit is effective as of "To Be Determined" and shall remain in effect until "To Be Determined" unless modified or revoked and reissued under WAC 173-303-830(3), or terminated under WAC 173-303-809(3) or WAC 173-303-830(5). This Permit shall not exceed 365 calendar days of the Dangerous Waste Research, Development, and Demonstration Activity authorized by this Permit.

ISSUED BY: WASHINGTON STATE DEPARTMENT OF ECOLOGY

Alexandra K. Smith, Program Manager
Nuclear Waste Program
Washington State Department of Ecology

Date Signed _____

DRAFT

This page intentionally left blank.

DRAFT

TABLE OF CONTENTS

Part I STANDARD CONDITIONS 10
I.A. Effect of Permit 10
I.B. General Permit Conditions 10
I.C. Permit Actions 10
I.D. Severability 10
I.E. Duties and Requirements 11
I.F. Monitoring, Records, and Reporting 12
I.G. Compliance not Constituting Defense 13
I.H. Transfer of Permits 13
I.I. Permit Expiration 13
I.J. Reports, Notifications, and Submissions 13
I.K. Signatory Requirements 13
Part II GENERAL FACILITY CONDITIONS 14
II.A. General Waste Management 14
II.B. Waste Analysis 14
II.C. Preparedness and Prevention 15
II.D. Inspection Plan 15
II.E. Training 15
II.F. Contingency Plan 15
II.G. Recordkeeping and Reporting 16
II.H. Closure 18
II.I. Cleanup of Released Material 19
II.J. Financial Assurance and Liability Requirements 20
II.K. Land Disposal Restrictions 20
Part III CONTAINERS 21
III.B. Container Storage Areas 21
III.C. Container Management Practices 21
III.D. Identification of Containers and Container Storage Areas 21
III.E. Container Storage Area Inspections and Recordkeeping 22
PART IV TANK SYSTEMS 23
IV.A. Tank Systems 23

DRAFT

INTRODUCTION

Permittees:

Owner/Operator:	United States Department of Energy Office of River Protection
Facility Manager/Co-Operator:	Washington River Protection Solutions, LLC
EPA/State Identification Number;	WA7890008967

Pursuant to:

> Chapter 70.105 Revised Code of Washington (RCW), the Hazardous Waste Management Act of 1976, as amended, and regulations codified in Washington Administrative Code (WAC) Chapter 173-303.

A Research, Development and Demonstration (RD&D) Permit is issued to the United States Department of Energy (USDOE), Office of River Protection (ORP) and Washington River Protection Services, LLC (WRPS) (hereinafter called the Permittees), to operate a Dangerous Waste Research, Development, and Demonstration activity for the Test Bed Initiative (TBI) Phase 2 project in the 200 West Area of the Hanford Site. This RD&D Permit is not a part of the Hanford Facility Resource Conservation and Recovery Act (RCRA) Permit, Dangerous Waste Portion for the Treatment, Storage, and Disposal of Dangerous Waste issued to USDOE May 02, 2019.

The Permittees must comply with all terms and conditions set forth in these Permit Conditions (Parts I–IV) and Permit Sections 1.0-7.0. In the event that the Permit Conditions and the Sections 1.0 through 7.0 are in conflict, the wording of the Permit Conditions will prevail. The Permittees shall also comply with all applicable state and federal regulations, including Chapter 173-303 WAC, and those specified in the Permit. Any procedure, method, data, or information contained in this document that relates to the radioactive source, byproduct material, and/or special nuclear components of mixed waste (as defined by the Atomic Energy Act of 1954, as amended) is not provided for the purpose of regulating such components under the authority of this Permit and Chapter 70.105 RCW.

"Applicable state and federal regulations" are those which are in effect on the date of final administrative action on this Permit and any self-implementing statutory provisions and related regulations which, according to the requirements of RCRA (as amended) or state law, are automatically applicable to the Permittees' dangerous waste management activities notwithstanding the conditions of this Permit.

This Permit is based upon the Administrative Record, as required by WAC 173-303-840. The Permittees' failure in the application or during the Permit issuance process to fully disclose all relevant facts, or the Permittees' misrepresentation of any relevant facts at any time, shall be grounds for the termination or modification of this Permit and/or initiation of an enforcement action, including criminal proceedings. The Permittees shall inform the Director of the Washington State Department of Ecology (hereafter called the Director) of any deviations from permit conditions or changes from information provided in the Research, Development, and Demonstration Permit Application. In particular, the Permittees shall inform the Director of any proposed changes that might affect the ability of the Permittees to comply with applicable regulations and permit conditions or that alter any of the conditions of the Permit in any way.

The Washington State Department of Ecology (hereafter called Ecology) will enforce all conditions of this Permit, based on federal regulations for which the state of Washington has received final authorization and all conditions that are state-only requirements (i.e., required by state regulations, but not by federal regulations). Any challenges of any permit condition that concern state requirements (i.e., conditions of this Permit for which the state of Washington is authorized or conditions which are state-only requirements) shall be appealed to the Pollution Control Hearings Board in accordance with

DRAFT

WAC 173-303-845. In the event that Ecology does not maintain its authorization for the state Hazardous Waste Program under RCRA, then the U.S. Environmental Protection Agency (EPA) will enforce all permit conditions except those that are state-only requirements.

DRAFT

LIST OF SECTIONS

The following Sections of the TBI Phase 2 RD&D Permit Application, dated May 14, 2019, (DOE/ORP-2019-02) are hereby incorporated, in their entirety, to the RD&D Permit. Ecology has, as deemed necessary, modified specific language in the Sections detailed below.

The changes made to the TBI RD&D Permit include minor editorial changes and additional technical changes as follows:

- Section 1.3, page 2, line 21, added "as amended" after (Ecology et al. 1989).
- Section 1.4, page 5, line 9, sentence was changed to read, "…of the pretreatment system, interim storage of the ion exchange column (IXC), shipment of the waste totes…"
- Section 1.6.1, page 6, line 9, changed "treated" to "managed" and changed sentence to read, "…minimizes waste handling and provides a new way to perform tank waste pretreatment at Hanford."
- Section 2.3, page 8, line 8, sentence was changed to read, "…therefore supernatant is already separated within the tank. By removing only the supernatant, and using a combination of filtration and IX to pre-treat approximately 2,000 gallons of tank supernatant, the TBI Phase 2 project will be removing certain key radionuclides."
- Section 2.3, page 8, line 15, sentence was changed to read, "…undissolved solids (Strontium [Sr]) and the IXC will remove certain key radionuclides (^{137}Cs) from the liquid waste stream."
- Section 2.4, page 8, line 23, changed "operating" to "calendar."
- Table 2-1 a footnote was removed from the table because it was specific to the permittee's project schedule and not applicable to the RD&D Permit.
- Removed Figure 2-2, and all references to the figure in the Permit.
- Section 2.8, page 9, line 17 a reference was added to the end of the sentence.
- Section 3.0, page 13, line 10, sentence was changed to read, "…which will allow surveys to be performed to confirm barium decay as described in Section 3.6."
- Section 3.0, page 13, line 16, added "process" in front of totes.
- Section 3.4, page 15, line 40, the term IQRPE was added in front of "certifications."
- Section 3.4, page 16, line 2, the following sentence was added "The engineering drawings are located in Appendix A of this Permit."
- Section 3.6, page 17, line 28, the sentence was changed to read "…which is included in Appendix A of this Permit and also…"
- Section 3.8.2, page 20, line 11, changed sentence to read, "…interim storage at the Central Waste Complex (CWC) pending final treatment and disposal."
- Section 4.2, page 22, line 4, sentence was changed to read, "…and to collect the data to support waste management of the pretreated waste." And, "Through development of a TSAP, pretreated waste will be sampled and analyzed to gather data to support waste management and analysis…"
- Section 4.4, page 23, line 29, sentence was changed to read, "The IXC will be packaged and stored at the CWC Storage Facility…"
- Section 7.3, page 29, line 1, paragraph changed to read, "If there is evidence of a release to the surrounding soils as identified….The amended closure plan will include additional closure activities as necessary to assure that levels of dangerous waste constituents or residues do not exceed numeric cleanup levels…"

DRAFT

- Section 7.5.5, page 31, line 3, sentence was changed to read, "…will be prepared and submitted…"
- Section 8.0, added the following references: "RPP-PLAN-62774, *Tank 241-SY-101 Grab Sampling and Analysis Plan in Support of Test Bed Initiative-Phase 2*, Rev. 0, Washington River Protection Solutions, LLC, Richland, Washington." And "RPP-RPT-61303, *Final Analytical Report for Tank 241-SY-101 TBI Grab Sampling 2018*, Rev. 2, U.S. Department of Energy Contract DE-AC27-08RV14800, Richland, Washington."

The incorporated Sections and associated documents and drawings are enforceable conditions of this Permit, as modified by specific permit conditions.

Section 1.0 Introduction
- 1.1 Regulatory Basis
- 1.2 Facility Operator Owner Information
- 1.3 Background Information
  - 1.3.1 Previous Phases of the Test Bed Initiative
- 1.4 Purpose of the TBI Phase 2 RD&D Project
- 1.5 Project Objectives
- 1.6 Justification for Project
  - 1.6.1 Compliance with Requirement
- 1.7 Planned Scale of Operation

Section 2.0 Facility Description
- 2.1 Facility Siting
- 2.2 Infrastructure
- 2.3 Scope of the RD&D Project
- 2.4 Project Schedule
- 2.5 TBI System Components and Operations
- 2.6 Waste Characteristics
- 2.7 Secondary Wastes
- 2.8 Ignitable, Reactive and/or Incompatible Materials
- 2.9 Total Amount of Waste Processed
  - 2.9.1 Pretreated Waste Disposition
- 2.10 Support Systems
- 2.11 Non-Regulated Materials and Utilities
- 2.12 Other Facility Permits
- 2.13 Security
  - 2.13.1 Hanford Facility Security
  - 2.13.2 Warning Signs
  - 2.13.3 Surveillance System
  - 2.13.4 Artificial or Natural Barriers
- 2.14 Preparedness, Prevention, Emergency Procedures and Contingency Plans
- 2.15 Training
- 2.16 Occupational Safety and Health

DRAFT

Section 3.0 Process Description
- 3.1 In-Tank Subsystem
  - 3.1.1 Filter and Ion Exchange Column Design
- 3.2 Above Ground Subsystem
  - 3.2.1 Secondary Containment and Leak Detection for the Above Ground Subsystem
  - 3.2.2 Raw Water
  - 3.2.3 Electrical System
  - 3.2.4 Data Acquisition System
- 3.3 Fire Protection
- 3.4 Design, Fabrication and Installation Verification
- 3.5 Container Storage Area and Container Management
- 3.6 Operational Activities Overview
  - 3.6.1 Operational Limits
  - 3.6.2. Pre-Operation Testing Activities (Startup)
  - 3.6.3 TBI Processing
  - 3.6.4 Backflush Operations
  - 3.6.5 Waste Returns to SY-101
- 3.7 Post-Operational Activities
- 3.8 Secondary Waste Streams
  - 3.8.1 Liquid Effluent Secondary Waste Streams
  - 3.8.2 Solid/Semisolid Secondary Waste Streams
- 3.9 Criteria to Modify or Suspend Operations

Section 4.0 Waste Analysis Plan
- 4.1 Waste Feed Characteristics
  - 4.1.1 Dangerous Waste Designations
  - 4.1.2 Waste Feed Chemical Properties
- 4.2 Pretreated Waste Sampling
  - 4.2.1 Sampling Methods and Frequency
- 4.3 Secondary Waste Stream Sampling
  - 4.3.1 Secondary Solid Waste
- 4.4 Ion Exchange Column
- 4.5 Sampling the SY Farm Exhauster System
- 4.6 Quality Assurance and Quality Control
  - 4.6.1 General
  - 4.6.2 Chain of Custody Requirements
  - 4.6.3 Trip Blanks and Equipment Blanks
  - 4.6.4 Duplicate Sampling Requirements & Blanks
  - 4.6.5 Matrix Spike and Matrix Spike Duplicate Samples
  - 4.6.6 Verification and Validation of Analytical Data

Section 5.0 Inspection Plan
- 5.1 Project Requirements

DRAFT

5.2 Inspection Schedule
5.2.1 General
5.2.2 Daily Inspections
5.2.3 Weekly Inspections
5.2.4 Monthly Inspections
5.3 Documentation
5.4 Corrective Action for Discrepancies and Non-compliances
Section 6.0 Recordkeeping and Reporting
6.1 General
6.2 Operating Record Requirements
6.3 RD&D Project Final Report
Section 7.0 Closure Plan
7.1Introduction
7.2Regulatory Compliance
7.3 Health and Safety Requirements During Closure
7.4 Closure Performance Standards
7.5 Closure Activities
7.5.1 Removal of Waste Containers
7.5.2 Decontaminating and Removing Structures and Equipment
7.5.3 Removing Dangerous Waste Residues
7.5.4 Removal and Closure of Secondary Containment
7.5.5 Sampling and Analysis to Identify Extent of Decontamination/Removal and to Verify Achievement of Closure Standard
7.6 Schedule for Closure
7.7 Certification of Closure
Section 8.0 References

DRAFT

PART I STANDARD CONDITIONS

I.A. Effect of Permit

The Permittees are authorized to store and treat dangerous waste in accordance with the conditions of this Permit and the applicable provisions of Chapter 173-303 WAC. Any storage or treatment of dangerous and/or mixed waste by the Permittees at this facility that is not authorized by this Permit or by WAC 173-303-809 and for which a permit is required under WAC 173-303-800 is prohibited. Issuance of this Permit does not convey any property rights of any sort or any exclusive privilege [WAC 173-303-810(8)(b)]. Issuance of this Permit does not authorize any injury to persons or property, any invasion of other private rights, or any infringement of state or local law or regulations [WAC 173-303-810(8)(c)].

I.B. General Permit Conditions

I.B.1. The general permit conditions under WAC 173-303-810, and final facility standards under WAC 173-303 as set forth in WAC 173-303-600, are incorporated as specified in Parts I through IV of this Permit and shall be adhered to by the Permittees. The Permittees shall also comply with any self-implementing statutory provisions, which according to the requirements of state law, are automatically applicable to the Permittees' dangerous and/or mixed waste activity, notwithstanding the conditions of this Permit.

I.B.2. The Sections 1.0 through 7.0 of this Permit are enforceable according to WAC 173-303. Facility operations shall be in accordance with the contents of the Permit, as revised by this Permit.

I.C. Permit Actions

I.C.1. This Permit may be modified, revoked, or terminated by Ecology for cause as specified in WAC 173-303-830(3), (4), and (5) and WAC 173-303-809. The filing of a request for a permit modification, revocation and reissuance, or termination, or the notification of planned changes or anticipated noncompliance on the part of the Permittees shall not stay the applicability or enforceability of any condition [WAC 173-303-810(7)].

I.C.2. Permittee Initiated Modifications

Permit modifications pursuant to this Permit for the management of dangerous and/or mixed waste, at the request of the Permittees, must be done according to the three-tiered modification process specified in WAC 173-303-830(4). The permit modification request must include page changes to the Permit, Sections, and Permit supporting documentation as necessary to incorporate the proposed permit modification, and a draft with changes clearly noted in red-line strikeout must be provided to Ecology for review and approval.

I.C.3. Ecology may order an immediate termination of all operations at the facility at any time it determines that termination is necessary to protect human health and the environment in accordance with WAC 173-303-809(3).

I.D. Severability

I.D.1. Effect of Invalidation

The provisions of this Permit are severable. If any provision of this Permit, or the application of any provision of this Permit to any circumstance, is held invalid, the application of such provision to other circumstances and the remainder of this Permit shall not be affected thereby. Invalidation of any state or federal statutory or regulatory provision which forms the basis for any condition of this Permit does not affect the validity of any other state or federal statutory or regulatory basis for said condition.

DRAFT

I.E. Duties and Requirements

I.E.1. Duty to Comply

The Permittees shall comply with all conditions of this Permit [WAC 173-303-810(2)], except to the extent and for the duration that such noncompliance is authorized by an emergency permit issued under WAC 173-303-804. Any permit noncompliance, other than noncompliance authorized by an emergency permit, constitutes a violation of Chapter 173-303 WAC and/or RCRA and is grounds for: a) enforcement action; b) termination of this Permit; c) revocation and re-issuance of this Permit; d) modification of this Permit; or e) denial of a permit renewal application.

I.E.2. Need to Halt or Reduce Activity Not a Defense

A Permittee who has not complied with this Permit, and who subsequently is subject to enforcement actions, may not argue that it would have been necessary to halt or reduce the permitted activity in order to maintain compliance with the conditions of this Permit [WAC 173-303-810(4)].

I.E.3. Duty to Mitigate

The Permittees must take all steps required by Ecology to minimize or correct any adverse impacts on the environment resulting from non-compliance with the Permit. Such mitigation shall not be a defense to enforcement [WAC 173-303-810(5)].

I.E.4. Proper Operation and Maintenance

The Permittees shall at all times properly operate and maintain all facilities and all systems of treatment and control which are installed or used by the Permittees to achieve compliance with the conditions of this Permit. Proper operation and maintenance includes effective performance, adequate funding, adequate operator staffing and training, and adequate laboratory and process controls, including appropriate quality assurance/quality control (QA/QC) procedures. This provision requires the operation of back-up or auxiliary facilities or similar systems only when necessary to achieve compliance with the conditions of this Permit [WAC 173-303-810(6)].

I.E.5. Duty to Provide Information

The Permittees shall furnish to Ecology, within a reasonable time, any information which Ecology may request to determine whether cause exists for modifying, revoking and reissuing, or terminating this Permit, or to determine compliance with this Permit. The Permittees shall also furnish to Ecology, upon request, copies of records required to be kept by this Permit [WAC 173-303-810(9)].

I.E.6. Inspection and Entry

Pursuant to WAC 173-303-810(10), the Permittees shall allow representatives of Ecology upon the presentation of proper credentials to:

I.E.6.a. During operating hours, and at all other reasonable times, enter the SY Tank Farm in the 200 West Area or the TBI Phase 2 project area, where regulated activities or equipment are located or conducted, or where records must be kept under the conditions of this Permit;

I.E.6.b. Have access to and copy, at reasonable times, any records that must be kept under the conditions of this Permit;

I.E.6.c. Inspect, at reasonable times, any facilities, equipment (including monitoring and control equipment), practices, or operations regulated or required under this Permit; and

DRAFT

I.E.6.d. Sample or monitor, at reasonable times, for the purposes of assuring Permit compliance or as otherwise authorized by state law as amended, any substances or parameters at any location.

I.E.7. Anticipated Non-Compliance

The Permittees shall give advance notice to Ecology of any planned changes in the permitted facility or activity which may result in noncompliance with Permit requirements. Prior to the implementation of the planned change(s), the Permittee must submit a permit modification for Ecology approval.

I.E.8. Reporting Planned Changes

The Permittees shall give advanced notice to Ecology, as soon as possible, of any planned physical alterations or additions to the facility subject to this Permit. Such notice does not authorize any noncompliance with, or modification of, this Permit.

I.E.9. Other Information

Whenever the Permittees become aware that they failed to submit relevant facts in the Permit Application or submitted incorrect information in a Permit Application or in any report to Ecology, the Permittees shall promptly submit such facts or information [WAC 173-303-810(14)(h)].

I.F. Monitoring, Records, and Reporting

I.F.1. Samples and measurements taken for the purpose of monitoring shall be representative of the monitored activity. The method used to obtain a representative sample of the waste to be analyzed must be the appropriate method from WAC 173-303-110, or an equivalent method approved by Ecology. Laboratory methods must be those specified in WAC 173-303-110(3)(a), other alternate methods approved in this Permit, or an equivalent method in accordance with Permit Condition I.F.2. of this Permit.

I.F.2. The Permittees may substitute analytical methods that are equivalent or superior to those specifically approved for use in this Permit in accordance with the following:

I.F.2.a. The Permittees must submit to Ecology a request for substitution of analytical method(s) specifically approved for use in this Permit. The request shall provide information demonstrating that the proposed method(s) requested to be substituted are equivalent or superior in terms of sensitivity, accuracy, and precision (i.e., reproducibility); and

I.F.2.b. The Permittee must receive a written approval from Ecology for the substitution of analytical method(s). Such approval shall not require a permit modification under WAC 173-303-110.

I.F.3. Pursuant to WAC 173-303-810(11), records of monitoring information shall specify:

I.F.3.a. The dates, exact place, and times of sampling or measurements;

I.F.3.b. The individuals who performed the sampling or measurements;

I.F.3.c. The date(s) analyses were performed;

I.F.3.d. The individuals who performed the analyses;

I.F.3.e. The analytical techniques or methods used; and

I.F.3.f. The results of such analyses, including the QA/QC results and requirements.

DRAFT

I.F.4. Immediate Reporting

The Permittees shall immediately report to Ecology any release, fire, explosion, natural disaster, or incident of noncompliance with this Permit that may endanger human health or the environment. This reporting shall meet the requirements in WAC 173-303-360(2)(d) and WAC 173-303-810(14)(F).

I.F.5. Incident Reporting

Within five calendar days of an incident that requires implementation of the Contingency Plan, the Permittees shall submit a written report of the incident to the Director meeting the requirements of WAC 173-303-360(2)(k) and WAC 173-303-810(14)(f).

I.F.6. The Permittees shall report to Ecology all incidents of noncompliance with this Permit, other than incidents specified in Permit Conditions I.F.3., I.F.4., and I.F.5., every three months. These reports shall meet the requirements in WAC 173-303-810(14)(g).

I.F.7. Within 30 days of a release to the environment from a dangerous waste tank system, the Permittees must send a written report that complies with WAC 173-303-640(7)(d)(iii).

I.G. Compliance not Constituting Defense

Compliance with the terms of this Permit does not constitute a defense to any order issued or any action brought under any state or federal laws governing protection of public health or the environment. However, compliance with terms of this Permit does constitute a defense to any action alleging failure to comply with applicable standards upon which this Permit is based, or failure to operate under a permit required by WAC 173-303-800 with respect to those activities authorized by this Permit.

I.H. Transfer of Permits

This Permit is not transferable to any person, except after notice to Ecology. In such instances, Ecology will require modification or revocation and reissuance of the Permit pursuant to WAC 173-303-830(2)(b).

I.I. Permit Expiration

This Permit and all conditions herein are in effect as of the "effective date" as defined in the definitions of the Permit and will remain in effect:

I.I.1. For three hundred and sixty five (365) calendar days.

I.J. Reports, Notifications, and Submissions

All reports, notifications, or other submissions that are required by this Permit to be submitted to Ecology or the Director shall be sent certified mail or hand-delivered to:

Program Manager, Nuclear Waste Program
Washington State Department of Ecology
3100 Port of Benton Boulevard
Richland, Washington 99354-1670
Telephone: (509) 372-7950

I.K. Signatory Requirements

All final reports that are required by this Permit to be submitted to Ecology shall be signed and certified in accordance with WAC 173-303-810(12), (13), and (14).

DRAFT

PART II GENERAL FACILITY CONDITIONS

II.A. General Waste Management

II.A.1. The Permittees are authorized to retrieve and pretreat a maximum of 2,050 gallons of dangerous and/or mixed waste for the TBI Phase 2 project from SY Tank Farm, Tank SY-101 located in the 200 West Area.

II.A.2. Design and Construction of the TBI Phase 2 project

The Permittees shall conduct all fabrication and construction subject to this Permit in accordance with the approved designs, plans, and specifications that are required by this Permit.

II.A.3. Containment systems for all waste management operations shall be constructed, operated, and maintained to ensure no spilled waste or storm water migrates outside of the containment areas. In particular, the following waste management operations must be within such containment areas:

II.A.3.a. Loading and unloading of dangerous and/or mixed waste; and

II.A.3.b. Staging and processing of dangerous and/or mixed waste.

II.A.4. Generated Waste and Final Disposal

II.A.4.a. Solid Waste Disposal

The balance of the In-Tank Pretreatment System components will be packaged and disposed directly at an on-site permitted disposal facility in accordance with applicable waste acceptance criteria.

II.A.4.b. Ion Exchange Column Disposal

The Ion Exchange Column (IXC) will be placed in a Department of Transportation (DOT) compliant container and shipped from the SY Tank Farm to the Central Waste Complex (CWC) for interim storage, pending final treatment and disposal. The CWC Facility is operating pursuant to interim status standards set forth in WAC 173-303-805.

The IXC will be managed as a mixed High Level Waste.

II.B. Waste Analysis

II.B.1. The Permittees shall maintain adequate knowledge of any waste to be managed properly by the TBI Phase 2 project before retrieval, after retrieval, and during pretreatment and storage of these wastes. The Permittees will demonstrate this knowledge through compliance with the requirements of WAC 173-303-300 and with the provisions of the Waste Analysis Plan (WAP), Section 4.0, [WAC 173-303-806(4)(a)(iii) and WAC 173-303-300(1)].

II.B.2. When laboratory analytical methods are required to confirm the Permittees' knowledge of the waste, the Permittees must ensure that the sampling and test methods listed as acceptable by WAC 173-303-110, or equivalent methods approved in writing by Ecology, are used pursuant to Permit Conditions I.F.1. and I.F.2.

II.B.3. The Permittees are responsible for obtaining accurate information for each waste stream. Inaccurate waste analysis information is not a defense for noncompliance by the Permittees with the waste management requirements and conditions of this Permit, and WAC Chapter 173-303, including WAC 173-303-140

DRAFT

II.B.4. Records and results of waste analyses described in this Permit shall be maintained as described in Permit Condition II.G. The TBI Phase 2 Operating Record shall include, but not be limited to, information requirements for waste analysis in Permit Condition II.G.

II.B.5. All dangerous and/or mixed wastes shall be managed only in areas authorized for dangerous waste management under the conditions of this Permit.

II.B.6. The Permittees shall submit to Ecology for review and approval the Tank Sampling and Analysis Plan (SAP) and Data Quality Objective (DQO) documents prior to initiation of pretreatment operations.

II.B.7. The Permittees shall comply with requirements for waste analysis specified in Section 4.0.

II.C. Preparedness and Prevention

II.C.1. In accordance with WAC 173-303-340, the TBI Phase 2 project shall be designed, constructed, maintained, and operated to minimize the possibility of fire, explosion, or any unplanned release, sudden or non-sudden, of dangerous and/or mixed waste or dangerous waste constituent to air, soil, or surface or groundwater that could threaten human health or the environment.

II.C.2. The Permittees shall ensure all water related safety equipment, such as eyewash units and emergency showers, remain operable at all times, including during periods of subfreezing temperatures.

II.C.3. The Permittees shall comply with WAC 173-303-340(4) and WAC 173-303-355(1) pertaining to arrangements with local authorities.

II.C.4. The Permittees shall comply with Section 2.14 (WAC 173-303-340).

II.D. Inspection Plan

II.D.1. The Permittees shall include inspections for all areas where TBI Phase 2 project dangerous and/or mixed waste is managed to prevent malfunctions and deterioration, operator errors, and discharges that may cause or lead to the release of dangerous waste constituents to the environment, or a threat to human health. Inspections must be conducted in accordance with the TBI Phase 2 project Inspection Schedule, Section 5.2 [WAC 173-303-320].

II.E. Training

II.E.1. The Permittees shall ensure that the TBI Phase 2 project is operated and maintained at all times by persons who are trained and qualified to perform these and any other duties that may reasonably be expected to directly affect the project [WAC 173-303-680(2)] and in accordance with WAC 173-303-330.

II.E.2. The Permittees shall conduct personnel training in accordance with the training program, Section 2.15.

II.F. Contingency Plan

II.F.1. The Permittees shall comply with the requirements of WAC 173-303-350(4) for maintaining copies of the Contingency Plan, Section 2.14 at the TBI Phase 2 project, and providing copies to the authorities listed therein.

II.F.2. At all times, the Permittees shall have qualified persons designated as the emergency coordinator and alternate emergency coordinators.

DRAFT

II.F.3. The Permittees shall immediately carry out applicable provisions of Permit Section 2.14, pursuant to WAC 173-303-360(2), whenever there is a release of dangerous and/or mixed waste or dangerous waste constituents, or other emergency circumstance, any of which threatens human health or the environment.

II.G. Recordkeeping and Reporting

II.G.1. In addition to the recordkeeping and reporting requirements specified elsewhere in this Permit, including Permit Section 6.0, the Permittees shall comply with all the applicable notification, certification, and recordkeeping requirements described in WAC 173-303-380(l)(j), (k), (m), and (o).

II.G.2. The Permittees shall maintain a written operating record for the TBI Phase 2 project in accordance with WAC 173-303-380(1) consisting of records kept for the length of time specified below. Also, the Permittees shall record all information referenced in this Permit in the operating record within seven business days of the information becoming available. The operating record shall include, but is not limited to, the information listed below:

II.G.2.a. The following records shall be maintained until final closure is complete and certification is accepted by Ecology:

II.G.2.a.i. An up-to-date map showing the locations where dangerous and/or mixed wastes are managed within the facility;

II.G.2.a.ii. Written reports pursuant to Permit Condition II.F., Contingency Plan, and WAC 173-303-360(2)(k) of all incidents that require implementation of the Contingency Plan;

II.G.2.a.iii. Record of spills and releases;

II.G.2.a.iv. Written reports and records of immediate notification to the Director to address releases, fires, and explosions [WAC 173-303-810(14)(f)];

II.G.2.a.v. Summaries of all records of corrective action;

II.G.2.a.vi. All other environmental permits;

II.G.2.a.vii. Records and results of waste analyses required by Section 4.0 and WAC 173-303-380(1)(c) that include, at a minimum:

The date(s), exact location, and times of sampling or measurements;

The name(s) of the individual(s) who performed the sampling or measurements;

The date(s) analyses were performed demonstrating that EPA SW-846 holding times were satisfied;

The name of the individual(s) who performed the analyses;

The analytical techniques or methods used;

The analytical results;

The QA/QC results and requirements; and

The unique identity of the equipment or instrument used for the analysis including the type/model number and either the serial number or the inventory number;

II.G.2.a.viii. Training records of facility personnel.

DRAFT

II.G.2.b. The following records shall be maintained for a minimum of five years. This time period may be extended by the Director in the event of enforcement action or notification by the Director that an investigation is ongoing. In the case of notification of investigation/inspection, the Permittees will not be required to keep the records longer than one year past the normal timeframe unless an enforcement action is issued:

II.G.2.b.i. TBI Phase 2 project operation and maintenance records and reports prepared pursuant to this permit;

II.G.2.b.ii. Date(s) and methods(s) of pretreatment used for waste process operation;

II.G.2.b.iii. TBI Phase 2 Final Reports and any required notifications prepared pursuant to this Permit;

II.G.2.b.iv. The notice and certification required of a generator under WAC 173-303-140 (Land Disposal Restrictions);

II.G.2.b.v. Records of all inspection and monitoring information meeting requirements of WAC 173-303-320(2)(d) and this Permit including, at a minimum, the following calibration and maintenance records:

The date(s) and time(s) of data recording;

The name of the person taking and recording the information;

The recorded information itself whether consisting of observation, data measurement, instrument reading, or any other monitoring method;

II.G.2.b.vi. Manifests;

II.G.2.b.vii. Training records of former facility personnel; and

II.G.2.c. Up-to-date copies of the following documents as amended, revised, and modified shall be maintained at the facility until final closure certification is accepted by Ecology:

II.G.2.c.i. The Certified RD&D TBI Phase 2 Project Permit Application, dated May 9, 2019;

II.G.2.c.ii. Documentation of arrangements made with local authorities pursuant to Hanford Site Emergency Management Plan, DOE/RL 94-02;

II.G.2.c.iii. All closure documents prepared pursuant to this Permit [WAC 173-303-610(3)(a)].

II.G.2.d. For all new tank systems and components, pursuant to WAC 173-303-640(3)(a), an assessment by an independent, registered, professional engineer that the tank system has sufficient structural integrity and is acceptable for the storing and treating of dangerous waste.

II.G.2.e. For all TBI Phase 2 project components, pursuant to WAC 173-303-640(3)(c), an assessment by an independent, qualified, registered, professional engineer or by an independent, qualified tank installation inspector not affiliated with the tank vendor and certified by an independent, registered, professional engineer, that the tank system was installed properly and that all discrepancies have been repaired as required by WAC 173-303-640(3)(c).

II.G.3. The Permittees shall submit to Ecology a copy of the Final Report, in accordance with the Permit, Section 6.3. The final report shall provide sufficient information and data to allow evaluation against the project objectives.

DRAFT

II.H. Closure

II.H.1. The Permittees must perform closure of the TBI Phase 2 project in a manner that minimized the need for further maintenance; controls, minimizes or eliminates post-closure releases of dangerous waste constituents or residues to the extent necessary to protect human health and the environment; and returns to land to the appearance and use of the surrounding land areas to the degree possible given the nature of the previous dangerous waste activity. [WAC 173-303-610(2)(1)]

II.H.2. The Permittees must achieve clean closure by removing or decontaminating all equipment, structures, soils, and other materials contaminated with dangerous waste constituents or residues during the TBI Phase 2 project, as required by WAC 173-303-610(2)(b), -630(10), and -640(8). Such removal or decontamination must assure that levels of dangerous waste constituents or residues in soils, groundwater, surface water, and air do not exceed numeric cleanup levels calculated using unrestricted use exposure assumptions pursuant to the Model Toxics Control Act, Method B. [WAC 173-303-610(2)(b)(i)]

II.H.3. The Permittees must conduct closure of the TBI Phase 2 project and piping leading to the project according to Section 7.0. The Closure Plan shall be modified as necessary according to provisions of WAC 173-303-610(3)(b)(ii) and WAC 173-303-830(4).

II.H.3.a. The Permittees shall submit and receive written approval from Ecology for any update to the Closure Plan, prior to commencing such updated closure activities.

II.H.3.b. If an unexpected spill or failure of the secondary containment occurs, the Permittees shall submit and receive written approval from Ecology for a SAP and a revised Closure Plan prior to commencing final closure activities.

II.H.4. At least 45 days before initiating closure, the Permittees must provide Notification of Closure pursuant to WAC 173-303-610(3)(c).

II.H.5. Ecology may require additional sampling and/or inspection after the Permittees implement the approved SAP if Ecology determines that the sampling and analyses have not adequately demonstrated whether clean closure has been achieved. Such a requirement will be implemented pursuant to WAC 173-303-830(3). Additional sampling and analysis may be required for the following reasons:

II.H.5.a. Specialized sample collection or analytical techniques are required to ensure adequate quantization limits for chemical constituents; or

II.H.5.b. Results indicate the need to analyze for additional constituents at certain locations; or

II.H.5.c. Results indicate additional soil sampling is required in certain locations; or

II.H.5.d. Other reasons indicate the SAP has not adequately demonstrated whether clean closure has been achieved.

II.H.6. Documentation supporting the independent, qualified, registered professional engineer's certification of closure must be submitted to Ecology with the closure certification required by WAC 173-303-610(6). The Permittees are required to furnish documentation supporting the independent registered professional engineer's certification to Ecology upon request, until Ecology has notified the Permittees in writing that Ecology agrees with and has accepted the Permittees' closure certification. The closure documentation must include, at a minimum, the following:

II.H.6.a. Sampling procedures that were followed;

DRAFT

II.H.6.b. Sample labeling and handling procedures that were followed, including chain of custody procedures;

II.H.6.c. Description of procedures that were followed to decontaminate concrete or metal to meet the clean closure standards as set by Ecology, on a case by case basis, in accordance with the closure performance standards of WAC 173-303-610(2)(a)(ii) and in a manner that minimizes or eliminates post-closure escape of dangerous waste constituents, or to achieve a "clean debris surface" as specified in WAC 173-303-140 [WAC 173-303-610(2)(b)(ii)].

II.H.6.d. Laboratory and field data, including supporting QA/QC results and requirements;

II.H.6.e. Report that summarizes closure activities;

II.H.6.f. Copy of all field notes taken by the independent, qualified, registered professional engineer; and

II.H.6.g. Copy of all contamination survey results.

II.H.7. If the value from a soil sample analysis exceeds the applicable numeric cleanup level for any dangerous waste constituent and likely represents contamination from waste associated with the TBI Phase 2 project, then the area represented by the sample (subunit or unit) will be considered to be out of compliance with the standard for clean closure and the Permittees shall propose additional closure actions pursuant to Condition II.H.1. Ecology will determine whether the additional actions proposed are adequate considering circumstances at the facility. If Ecology determines the actions proposed by the Permittees are not adequate, then Ecology will specify additional actions to be taken. Examples of additional actions may include, but are not limited to, the following:

II.H.7.a. Removing or remediating soil that has contamination above the cleanup levels followed by conformational sampling to ensure clean closure standards are met;

II.H.7.b. Reanalyzing soils of the entire subunit or unit represented by the sample that has contamination above the cleanup levels using other samples taken within the subunit or unit and approved statistical methods. Approved statistical methods include, but are not limited to, calculating the upper 95 percent confidence interval about the mean for sample data. If this parameter value for the constituent in question is lower than the Ecology approved numeric cleanup level for clean closure in accordance with WAC 173-303-610(2)(b)(i), then the subunit or unit will be considered to meet the clean closure standards for that constituent. Samples included in this statistical analysis must be randomly selected and the distribution of their concentrations must fit a lognormal or normal distribution;

II.H.7.c. Establishing post-closure care and corrective action requirements for the areas not able to attain clean closure standards;

II.H.7.d. Sample labeling and handling including chain of custody procedures;

II.H.7.e. Decontamination procedures of secondary containment systems; and

II.H.8. Ecology may require modification of the closure plan if significant releases occur at the facility prior to the time of closure.

II.I. Cleanup of Released Material

II.I.1. The Permittees shall comply with the requirements of WAC 173-303-145, including but not limited to, notification, mitigation, and control measures specified in WAC 173-303-145(2) and (3) under any of the following circumstances:

DRAFT

II.I.1.a. A spill or non-permitted discharge of dangerous and/or mixed waste or hazardous substance that is intentionally or accidentally spilled or discharged into the environment (unless otherwise permitted) such that human health or the environment is threatened, regardless of the quantity of dangerous and/or mixed waste or hazardous substance. For spills or discharges onto the ground, into the groundwater, or into the surface water, the Permittees must notify all local authorities in accordance with the local emergency plan.

II.I.1.b. A spill or non-permitted discharge of dangerous or mixed waste or hazardous substance that results in emission into the air such that human health or the environment is threatened.

II.I.1.c. Other spills or discharges occur which threaten human health or the environment.

II.I.2. Consistent with good management for abatement of initiating cause and prudent consideration of health and safety risks to personnel, the Permittees shall remove spilled or leaked waste within secondary containment within twenty-four (24) hours, or in as timely a manner as is possible, to prevent harm to human health and the environment.

II.J. Financial Assurance and Liability Requirements

II.J.1. The Permittees are exempt from the liability requirements in WAC 173-303-620(8) and the financial assurance requirements in WAC 173-303-620(4).

II.K. Land Disposal Restrictions

II.K.1. The Permittees must meet Land Disposal Restrictions (LDR) standards for disposal of final waste forms for waste codes based on the Double-Shell Tank Part A Permit Application, dated December 14, 2009, as modified by the TBI Phase 2 RD&D permit application submitted on May 14, 2019. All waste forms subject to LDR standards must be demonstrated to meet all applicable treatment standards and requirements (WAC 173-303-140/40 CFR Part 268) prior to land disposal. For waste that has treatment standards that are not concentration based, the generator and/or treatment facility must demonstrate that the waste meets the applicable treatment standards using process knowledge and/or by waste analysis, as required by this Permit and the applicable sections of WAC 173-303-140/40 CFR 268.

II.K.2. Ecology has determined that the HLVIT treatment standard is attached to this waste in addition to the applicable 40 CFR 268.40 treatment standards for the dangerous waste codes other than D002 and D004-011 identified in the Double-Shell Tank Part A Permit Application, dated December 14, 2009, as modified by the TBI Phase 2 RD&D Permit application submitted on May 14, 2019.

II.K.3. The permittees shall complete LDR certification paperwork in accordance with 40 CFR 268.7, incorporated by reference in WAC 173-303-140.

DRAFT

PART III CONTAINERS

III.B. Container Storage Areas

III.B.1. The Permittees shall construct container storage areas identified in Section 3.0, Process Information, and as specified in all applicable drawings and specifications.

III.B.2. All container storage areas identified in Section 3.0 must be constructed in accordance with WAC 173-303-630(7)(a).

III.C. Container Management Practices

III.C.1. No dangerous and/or mixed waste shall be managed in the container storage areas except as authorized by the operating conditions specified under Permit Condition III.C.

III.C.2. The Permittees shall manage all containerized dangerous and/or mixed waste in the container storage areas identified in Section 3.0 in accordance with procedures described in the TBI Phase 2 Operating Record.

III.C.2.a. The operating records and waste tracking procedures shall indicate all times at which containerized dangerous and/or mixed waste was placed, removed from, and returned to designated storage areas as approved pursuant to Permit Condition II.G., Recordkeeping [WAC 173-303-380];

III.C.2.b. The physical arrangement (i.e., spacing) of dangerous and/or mixed waste containers shall be in compliance with WAC 173-303-630(5)(c) as specified in Section 3.0.

III.C.2.c. All container storage areas must be operated in accordance with WAC 173-303-630;

III.C.2.d. The Permittee shall not place and store ignitable and/or reactive dangerous and/or mixed waste in the container storage areas. [WAC 173-303-630 (8)];

III.C.2.e. At all times, the Permittees shall not place and store incompatible dangerous and/or mixed waste, or dangerous and/or mixed waste and materials, in the container storage areas. [WAC 173-303-630 (9)(a)];

III.C.2.f. If a container holding dangerous and/or mixed waste is not in good condition (e.g., exhibits severe rusting, apparent structural defects, or any other condition that could lead to container rupture or leakage) or is leaking, the Permittees shall manage the container in accordance with procedures described in the TBI Phase 2 Operating Record [WAC 173-303-630(2)];

III.C.2.g. The Permittees shall ensure that all containers used for dangerous and/or mixed waste management are made of or lined with materials which will not react with, and are otherwise compatible with, the waste to be stored [WAC 173-303-630(4)]; and

III.C.2.h. The Permittees shall not place incompatible dangerous and/or mixed wastes, or incompatible dangerous and/or mixed wastes and materials, in the same container unless WAC 173-303-395(1)(b) is complied with [WAC 173-303-630(9)(a)].

III.D. Identification of Containers and Container Storage Areas

III.D.1. Pursuant to WAC 173-303-630(3), the Permittees shall ensure that all dangerous and/or mixed waste containers are labeled in a manner that adequately identifies the hazard(s) associated with the contents.

III.D.2. For all dangerous and/or mixed waste containers, the Permittees shall ensure that:

III.D.2.a. Labels are not obscured or otherwise unreadable;

DRAFT

III.D.2.b. Waste containers are oriented so as to allow inspection of the labels identified in Permit Conditions III.D.1. and III.D.2., the container tracking number, and, to the extent possible, any labels which the generator placed upon the container; and

III.D.2.c. Empty dangerous and/or mixed waste containers, as defined by WAC 173-303-160(2), must have their dangerous and/or mixed waste labels destroyed, or otherwise removed, immediately upon being rendered empty.

III.D.3. The Permittees shall post entrances and access points to container storage areas with signs that meet the requirements of WAC 173-303-310(2)(a).

III.E. Container Storage Area Inspections and Recordkeeping

III.E.1. The Permittees shall ensure all containment areas are inspected and maintained such that they are free of cracks, gaps, and are impervious to leaks, spills, and accumulation of rainfall until the collected material is removed. The Permittees shall inspect the container storage areas in accordance with the Inspection Schedules in Section 5.2.

III.E.2. For the container storage areas, the Permittees shall record and maintain in the TBI Phase 2 Operating Record, all monitoring, recording, maintenance, calibration, test data, and inspection data compiled under the conditions of this Permit, in accordance with Permit Condition II.G.

DRAFT

PART IV TANK SYSTEMS

IV.A. Tank Systems

IV.A.1. Approved Waste and Storage Limits

IV.A.1.a. The Permittees may manage in tank systems all dangerous and/or mixed waste with the waste codes listed in the Double-Shell Tank Part A, excluding characteristic codes D001 and D003.

IV.A.1.b. The Permittees may manage dangerous and/or mixed waste only in approved tank systems listed in Section 3.0. The Permittees shall limit the total volume of waste to quantities specified for the individual units listed in Section 4.0.

IV.A.2. Integrity Assessments

IV.A.2.a. The Permittees shall submit to Ecology a written assessment attesting that the TBI System tank system and ancillary equipment has sufficient structural integrity and is acceptable for storing and treating dangerous waste. The integrity assessment shall be in accordance with WAC 173-303-640(3)(a).

IV.A.2.b. The integrity assessment must show that the foundation, structural support, seams, connections, and pressure controls (if applicable) are adequately designed and that the tank system has sufficient structural strength, compatibility with the waste(s) to be stored or treated, and corrosion protection to ensure that it will not collapse, rupture, or fail. The integrity assessment shall include the information specified in WAC 173-303-640(3)(a)(i-v).

IV.A.2.c. The integrity assessment shall be reviewed and certified by an independent, qualified, registered professional engineer (IQRPE), in accordance with WAC 173-303-810(13)(a).

IV.A.2.d. The Permittee must ensure that proper handling procedures are adhered to in order to prevent damage to the TBI system during installation. Prior to covering, enclosing, or placing the TBI system in use, a qualified installation inspector or an IQRPE, either of whom is trained and experienced in the proper installation of tank systems or components, must inspect the TBI system for the presence of any of the items specified in WAC 173-303-640(3)(c)(i-vi). Any discrepancies must be remedied before the TBI system is covered, enclosed, or placed in use.

IV.A.2.e. The TBI system must be tested for leak tightness prior to being covered, enclosed, or placed in use. If the system is found not to be tight, all repairs necessary to remedy the leak(s) in the system must be performed prior to the TBI system being covered, enclosed, or placed into use.

IV.A.2.f. Results of the installation assessment, including the leak tightness test, shall be included in the integrity assessment submitted to Ecology and a copy placed in the TBI system operating record.

IV.A.3. Tank Management Practices

IV.A.3.a. No dangerous and/or mixed waste shall be managed in the tank systems except as authorized by the operating conditions specified in Section 3.0.

IV.A.3.b. The Permittees shall install and test all process and leak detection system monitoring/instrumentation as specified in Section 3.2.1.

IV.A.3.c. The Permittees shall operate the tank systems to prevent spills and overflows using the description of controls and practices as required in WAC 173-303-640(5)(b).

DRAFT

IV.A.3.d. The Permittees must ensure ancillary equipment is supported and protected against physical damage and excessive stress due to settlement, vibration, expansion, or contraction [WAC 173-303-640(3)(f)].

IV.A.3.e. The Permittees shall ensure that the secondary containment systems for the TBI Phase 2 project are free of cracks or gaps to prevent any migration of dangerous and/or mixed waste or accumulated liquid out of the system to the soil, groundwater, or surface water at any time that waste is in the tank system. Any indication that a crack or gap may exist in the containment systems shall be investigated and repaired [WAC 173-303-320, WAC 173-303-640(4)(b)(i), WAC 173-303-640(4)(e)(i)(C), and WAC 173-303-640(6)].

IV.A.3.f. The Permittees shall inspect all secondary containment systems for the TBI Phase 2 tank systems in accordance with the Inspection Schedule specified in Section 5.2, and take the following actions if a leak or spill of dangerous and/or mixed waste is detected in these containment systems [WAC 173-303-320, WAC 173-303-640(5)(c), and WAC 173-303-640(6)]:

IV.A.3.g. Immediately and safely stop the flow of dangerous and/or mixed waste into the TBI Phase 2 tank system or secondary containment system, in accordance with procedures based on all applicable safety analysis documentation [WAC 173-303-640(7)(a)];

IV.A.3.g.i. Determine the source of the dangerous and/or mixed waste;

IV.A.3.g.ii. Remove the waste from the secondary containment area pursuant to WAC 173-303-640(7)(b). The waste removed from the containment areas of the tank system shall be managed as dangerous and/or mixed waste;

IV.A.3.g.iii. If the cause of the release was a spill that has not damaged the integrity of the tank system, the Permittees may return the tank system to service pursuant to WAC 173-303-640(7)(e)(ii). In such a case, the Permittees shall take action to ensure the incident that caused liquid to enter the containment systems of these tank systems will not reoccur [WAC 173-303-320(3)];

IV.A.3.g.iv. If the source of the dangerous and/or mixed waste is determined to be a leak from a tank system or the system is unfit for use as determined through an integrity assessment or other inspection, the Permittees must comply with the requirements of WAC 173-303-640(7) and close the tank system according to procedures in WAC 173-303-640)(7)(e)(i) through (iv) or repair and re-certify the tank system in accordance with WAC 173-303-810(13)(a) before the tank system is placed back into service [WAC 173-303-640(7)(e) and (f)];

IV.A.3.g.v. The Permittees shall document in the operating record actions/procedures taken to comply with i. through v. above in accordance with WAC 173-303-640(6)(d); and

IV.A.3.g.vi. The Permittees shall notify and report releases to the environment to Ecology in accordance with WAC 173-303-640(7)(d).

IV.A.3.h. If liquids (e.g., dangerous and/or mixed waste leaks and spills, precipitation, fire water liquids from damaged or broken pipes) cannot be removed from the tank systems secondary containment system within 24 hours, Ecology will be verbally notified within 24 hours of discovery. The notification shall provide the information in i., ii., and iii. listed below. The Permittees shall provide Ecology with a written demonstration within seven business days, identifying at a minimum [WAC 173-303-640(4)(c) and WAC 173-303-640(7)(b)(ii)]:

IV.A.3.h.i. The reasons for delayed removal;

DRAFT

IV.A.3.h.ii. The measures implemented to ensure continued protection of human health and the environment; and

IV.A.3.h.iii. The current actions being taken to remove liquids from secondary containment.

IV.A.4. Inspections [WAC 173-303-640(6)]

IV.A.4.a. The Permittees shall inspect the tank systems in accordance with the Inspection Schedules in Section 5.2.

IV.A.4.b. The inspection data for the tank systems shall be recorded, and the records shall be placed in the TBI Phase 2 Operating Record, as specified in accordance with Permit Condition II.G.

IV.A.5. Recordkeeping [WAC 173-303-380]

For the TBI Phase 2 project tank systems, the Permittees shall record and maintain in the operating record, all monitoring, calibration, recording, maintenance, test data, and inspection data compiled under the conditions of this Permit.

IV.A.6. Closure

The Permittees shall close the tank systems in accordance with Permit Condition II.H.

DRAFT

This page intentionally left blank.

DRAFT

DANGEROUS WASTE RESEARCH, DEVELOPMENT AND DEMONSTRATION PERMIT FOR THE TEST BED INITIATIVE PHASE 2 PROJECT

CHANGE CONTROL LOG

Change Control Logs ensure that changes to this unit are performed in a methodical, controlled, coordinated, and transparent manner. Each unit section will have its own change control log with a modification history table. The "**Modification Number**" represents Ecology's method for tracking the different versions of the permit. This log will serve as an up to date record of modifications and version history of the unit.

Modification History Table

Modification Date	Modification Number

DRAFT

This page intentionally left blank.

DRAFT

DANGEROUS WASTE RESEARCH, DEVELOPMENT AND DEMONSTRATION PERMIT FOR THE TEST BED INITIATIVE PHASE 2 PROJECT

TABLE OF CONTENTS

1.0 INTRODUCTION 1
1.1 Regulatory Basis 1
1.2 Facility Owner and Operator Information 1
1.3 Background Information 2
1.3.1 Previous Phases of the Test Bed Initiative 4
1.4 Purpose of the TBI Phase 2 RD&D Project 4
1.5 Project Objectives 5
1.6 Justification for Project 5
1.6.1 Compliance with Requirement 6
1.7 Planned Scale of Operation 6
2.0 FACILITY DESCRIPTION 7
2.1 Facility Siting 7
2.2 Infrastructure 8
2.3 Scope of the RD&D Project 8
2.4 Project Schedule 8
2.5 TBI System Components and Operations 9
2.6 Waste Characteristics 9
2.7 Secondary Wastes 9
2.8 Ignitable, Reactive, and/or Incompatible Materials 9
2.9 Total Amount of Waste Processed 10
2.9.1 Pretreated Waste Disposition 10
2.10 Support Systems 10
2.11 Non-Regulated Materials and Utilities 10
2.12 Other Facility Permits 10
2.13 Security 10
2.13.1 Hanford Facility Security 11
2.13.2 Warning Signs 11
2.13.3 Surveillance System 11
2.13.4 Artificial or Natural Barriers 11
2.14 Preparedness, Prevention, Emergency Procedures, and Contingency Plans 12

DRAFT

2.15 Training 12
2.16 Occupational Safety and Health 12
3.0 PROCESS DESCRIPTION 13
3.1 In-Tank Subsystem 13
3.1.1 Filter and Ion Exchange Column Design 13
3.2 Above Ground Subsystem 13
3.2.1 Secondary Containment and Leak Detection for the Above Ground Subsystem 14
3.2.2 Raw Water 14
3.2.3 Electrical System 15
3.2.4 Data Acquisition System 15
3.3 Fire Protection 15
3.4 Design, Fabrication, and Installation Verification 15
3.5 Container Storage Area and Container Management 16
3.6 Operational Activities Overview 17
3.6.1 Operational Limits 17
3.6.2 Pre-Operation Testing Activities (Startup) 17
3.6.3 TBI Processing 18
3.6.4 Backflush Operations 19
3.6.5 Waste Returns to SY-101 19
3.7 Post-Operational Activities 19
3.8 Secondary Waste Streams 19
3.8.1 Liquid Effluent Secondary Waste Streams 19
3.8.2 Solid/Semisolid Secondary Waste Streams 20
3.9 Criteria to Modify or Suspend Operations 20
4.0 WASTE ANALYSIS PLAN 20
4.1 Waste Feed Characteristics 21
4.1.1 Dangerous Waste Designations 21
4.1.2 Waste Feed Chemical Properties 21
4.2 Pretreated Waste Sampling 22
4.2.1 Sampling Methods and Frequency 22
4.3 Secondary Waste Stream Sampling 23
4.3.1 Secondary Solid Waste 23
4.4 Ion Exchange Column 23
4.5 Sampling the SY Tank Farm Exhauster System 23
4.6 Quality Assurance and Quality Control 23

DRAFT

4.6.1 General 23
4.6.2 Chain of Custody Requirements 24
4.6.3 Trip Blanks and Equipment Blanks 24
4.6.4 Duplicate Sampling Requirements & Blanks 24
4.6.5 Matrix Spike and Matrix Spike Duplicate Samples 24
4.6.6 Verification and Validation of Analytical Data 25
5.0 INSPECTION PLAN 25
5.1 Project Requirements 25
5.2 Inspection Schedule 26
5.2.1 General 26
5.2.2 Daily Inspections 26
5.2.3 Weekly Inspections 26
5.2.4 Monthly Inspections 26
5.3 Documentation 26
5.4 Corrective Action for Discrepancies and Non-compliances 27
6.0 RECORD KEEPING AND REPORTING 27
6.1 General 27
6.2 Operating Record Requirements 27
6.3 RD&D Project Final Report 28
7.0 CLOSURE PLAN 28
7.1 Introduction 28
7.2 Regulatory Compliance 28
7.3 Health and Safety Requirements during Closure 28
7.4 Closure Performance Standards 29
7.5 Closure Activities 29
7.5.1 Removal of Waste Containers 29
7.5.2 Decontaminating and Removing Structures and Equipment 29
7.5.3 Removing Dangerous Waste Residues 30
7.5.4 Removal and Closure of Secondary Containment 30
7.5.5 Sampling and Analysis to Identify Extent of Decontamination/Removal and to Verify Achievement of Closure Standard 30
7.6 Schedule for Closure 31
7.7 Certification of Closure 31
8.0 REFERENCES 31

DRAFT

TABLES

Table 2-1. TBI Phase 2 Project Schedule 8
Table 3-1. TBI Phase 2 Engineering Drawings 16
Table 4-1. Dangerous Waste Designation Associated with SY-101* 21
Table 4-2. Dangerous Waste Chemical Properties for SY-101 21

FIGURES

Figure 1-1. Hanford Site Map 2
Figure 1-2. Test Bed Initiative Phase 2 Overview 4
Figure 2-1. Site Location for TBI Phase 2 System 7

DRAFT

ACRONYMS AND ABBREVIATIONS

^{137}Cs	Cesium-137
AEA	Atomic Energy Act
ALARA	As Low As Reasonably Achievable
BCSO	Benton County Sheriff Office
CWC	Central Waste Complex
CFR	Code of Federal Regulations
COC	Constituents of Concern
CST	Crystalline Silicotitanate
DOE-ORP	United States Department of Energy, Office of River Protection
DOT	Department of Transportation
DQO	Data Quality Objectives
DST	Double-Shell Tank
DWTP	Dangerous Waste Training Plan
Ecology	Washington Statement of Ecology
EPA	Environmental Protection Agency
FAT	Factory Acceptance Testing
GPM	Gallons Per Minute
HEMP	Hanford Emergency Management Plan
HFFACO	Hanford Federal Facilities Agreement and Consent Order
IQRPE	Independent, Qualified, Registered Professional Engineer
ITPS	In-Tank Pretreatment System
IX	Ion Exchange
IXC	Ion Exchange Column
LDR	Land Disposal Restrictions
MLLW	Mixed Low-Level Waste
MS/MSD	Matrix Spike and Matrix Spike Duplicate
OSHA	Occupational Health and Safety Administration
QA/QC	Quality Assurance and Quality Control
RCRA	Resource Conservation and Recovery Act of 1976
RD&D	Research, Development and Demonstration
SPC	Statistical Process Control
SST	Single Shell Tank

DRAFT

Sr	Strontium
SY-101	Tank 241-SY-101
TBI	Test Bed Initiative
TSAP	Tank Sampling and Analysis Plan
WAC	Washington Administrative Code
WAP	Waste Analysis Plan
WIR	Waste Incidental to Reprocessing
WRPS	Washington River Protection Solutions, LLC

DRAFT

1.0 INTRODUCTION

1.1 Regulatory Basis

This application for a Research, Development and Demonstration (RD&D) Permit is submitted to the Washington State Department of Ecology (Ecology) pursuant to the provisions of U.S. Environmental Protection Agency (EPA) Regulation Title 40 Code of Federal Regulations (CFR) Section 270.65; Section 173-303-809 of the Washington Administrative Code (WAC); and the EPA Office of Solid Waste and Emergency Response (OSWER) *Guidance Manual for Research, Development, and Demonstration Permits under 40 CFR Section 270.65* (EPA 1986).

The U.S. Department of Energy (DOE), Office of River Protection (ORP) is proposing to do a field demonstration of a supernatant pretreatment system to process tank waste in support of the Hanford Test Bed Initiative (TBI) Phase 2 under an RD&D Permit. An RD&D Permit program objective is to accelerate the permitting of experimental and innovative hazardous waste treatment alternatives in a manner that is fully protective of human health and the environment (EPA 1986). The TBI Phase 2 purpose is to demonstrate a new approach to dispositioning liquid tank waste by performing an in-tank pretreatment process on liquid waste in a Hanford Double-Shell Tank (DST). This process will remove particulates and suspended solids by filtration, and remove cesium-137 (^{137}Cs) by ion exchange. This RD&D project also has the purpose of determining the effectiveness and performance capabilities of the technology.

1.2 Facility Owner and Operator Information

The TBI Phase 2 RD&D project is operated by DOE-ORP. ORP will have responsibility for all administrative, operational, regulatory compliance, and other responsibilities associated with activities under the proposed RD&D Permit. The TBI Phase 2 project will be managed and co-operated by Washington River Protection Solutions, LLC (WRPS) for ORP under Contract No. DE-AC27-08RV14800. All activities proposed for this RD&D Permit will be conducted at the Hanford Site, Richland, Washington (Figure 1-1). The Hanford Site is currently operated under one permit (Site-wide Permit) under the Resource Conservation and Recovery Act (RCRA), EPA identification number WA7890008967. RCRA in the State of Washington is implemented by the Dangerous Waste Act. (WAC 173-303). The RD&D Permit will be a separate permit from the Site-wide Permit but under the same EPA identification number WA7890008967, which is assigned to the Hanford Site.

FACILITY NAME

Test Bed Initiative (TBI) Phase 2
U.S. Department of Energy Hanford Site
Office of River Protection, Tank Farms

FACILITY LOCATION

Benton County, Washington; within the 200 West Area of the Hanford Site

OWNER/OPERATOR

U.S. Department of Energy
Office of River Protection
P.O. Box 450
Richland, Washington 99352

FACILITY MANAGER/CO-OPERATOR

Washington River Protection Solutions, LLC
P.O. Box 1500
Richland, Washington 99352

DRAFT

WRPS has been safely managing the operations of the Hanford tank farms for the DOE-ORP, and has staff personnel fully trained in accordance with Section 2.15, and experienced in performing similar work at the tank farms. WRPS will be responsible for the installation and operation of the TBI Phase 2 system. WRPS is also responsible for the sampling of the pretreated waste from the process totes, and the eventual shipment of the pretreated waste in Department of Transportation (DOT) compliant totes to an off-site permitted treatment facility. WRPS will also perform all field closure activities for the RD&D project.

1.3 Background Information

Located in southeastern Washington State along the Columbia River, the Hanford Site is approximately 586 square miles in size. Hanford's mission from the early 1940s through the late 1980s included defense-related nuclear research, development, and weapons production activities. A wide range of radioactive and chemical wastes were created during these activities. Hanford's mission now is focused on the cleanup of those wastes and ultimate closure of Hanford. DOE-ORP currently stores approximately 56 million gallons of mixed waste at the Hanford Site in 177 underground storage tanks, which was generated as a byproduct of recovering plutonium from spent nuclear fuel. There are 149 Single-Shell Tanks (SSTs) and 28 DSTs operating under interim status standards as detailed in WAC 173-303-805.

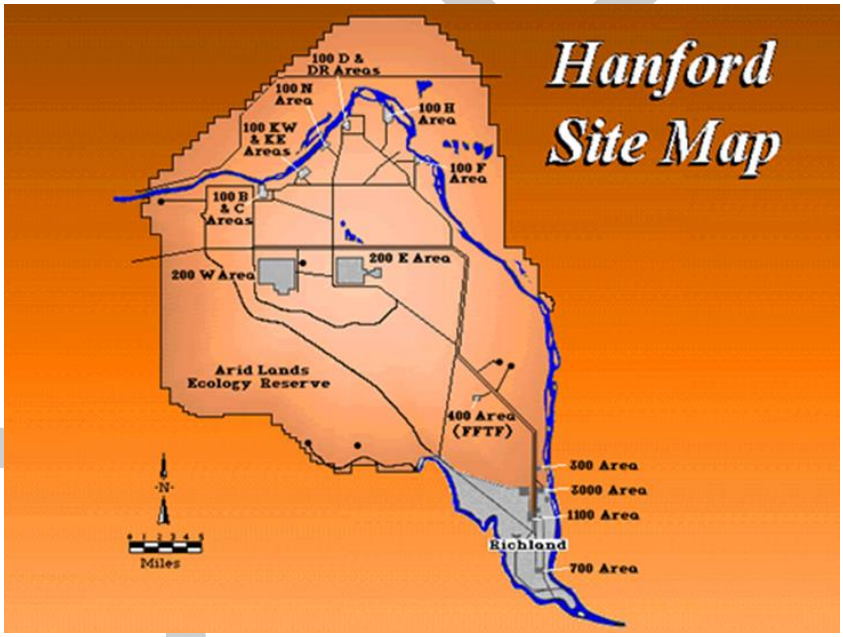

Figure 1-1. Hanford Site Map

The retrieval, treatment and disposal of tank waste is governed by the Hanford Federal Facilities Agreement and Consent Order (HFFACO) (Ecology et al. 1989), as amended, and the interim status standards in WAC 173-303-805. The purpose of the TBI Phase 2 project is to demonstrate the feasibility of an alternative process to perform pretreatment of supernatant using an in-tank waste column system to filter and remove radionuclides from the waste. This approach uses advances in waste treatment technology such as improved ion exchange media, as well as experience gained during other mixed waste management operations.

This RD&D Permit will authorize the TBI Phase 2 engineering scale demonstration project which will test the feasibility of deploying an in-tank pretreatment unit, and the subsequent processing, treatment and disposal of approximately 2,000 gallons of pretreated waste at off-site facilities[1]. Deployment of such an approach for treatment and disposition of waste from the Hanford 200 Area could enhance retrievals from SSTs, further conserve space in existing DSTs, and reduce costs from the current approach.

An overview of the TBI Phase 2 project approach is shown in Figure 1-2 and summarized below in the basic sequence of activities.

1. Extract liquid waste (supernatant) from a Hanford tank;
2. Pretreatment to filter solids and capture of ^{137}Cs using an ion exchange resin made of crystalline silicotitanate (CST);
3. Confirmation through laboratory analysis to support a Waste Incidental to Reprocessing (WIR) Evaluation and Determination that the pretreated liquid meets criteria to be managed as Mixed Low-Level Waste (MLLW)[2];
4. Transportation of the pretreated waste to an off-site facility for waste stabilization using a chemical and cementitious process; and,
5. Transportation of the solid, stabilized waste to a permitted facility for disposal.

DRAFT

[1]The total amount of waste that TBI Phase 2 project will pretreat is 2,000 gallons of waste +/- 50 gallons due to the accuracy range of the flow monitoring equipment.

[2]MLLW – Radioactive waste that is not high-level radioactive waste, spent nuclear fuel, transuranic waste, byproduct material (as defined in Section 11e(2) of the Atomic Energy Act (AEA) of 1954, as amended [Title 42 of the United States Code, Part 2014]), or naturally occurring radioactive material that is determined to contain both source, special nuclear, or byproduct material subject to the AEA of 1954, as amended, and a hazardous component subject to the RCRA, as amended.

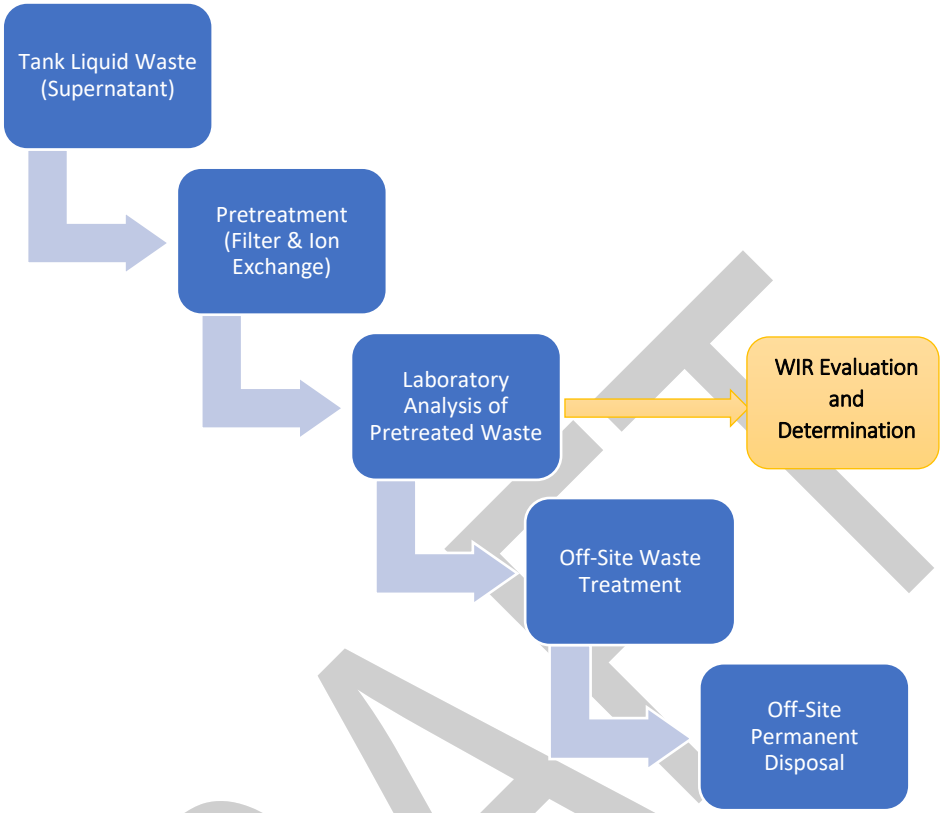

Figure 1-2. Test Bed Initiative Phase 2 Overview

1.3.1 Previous Phases of the Test Bed Initiative

An initial Phase 1 proof-of-concept demonstration with a small quantity of Hanford tank waste was completed as a RCRA Treatability Study in 2017. This initial phase included:

1. Pretreatment and filtration of ^{137}Cs and other radionuclides from three gallons of tank waste at the Hanford 222-S Laboratory and certification that the pretreated liquid could be managed as MLLW;
2. Treatment (stabilization and immobilization) of the pretreated liquid waste using a grouting process, in an off-site RCRA permitted facility in Richland, WA;
3. Transport and permanent disposal of the immobilized waste at the RCRA permitted disposal site in Andrews, TX.

Phase 1 was completed in December 2017 by final disposal of the waste form at the permitted facility.

1.4 Purpose of the TBI Phase 2 RD&D Project

TBI is a demonstration of a filter and ^{137}Cs removal technology for an in-tank pretreatment process that will provide information and data to future projects. This project is designed to investigate requirements for feed material handling, equipment operation, disposition of secondary wastes, and potential environmental impacts associated with the process. The demonstration will be used to evaluate:

- The capability to pretreat tank waste with an in-tank system that can perform both: 1) filtration to remove suspended solids from the supernatant; and 2) ion exchange (IX) to remove 99% of the ^{137}Cs from the liquid waste stream.
- The ability for the pretreated liquid waste to meet the waste acceptance criteria for an off-site permitted treatment facility, and permitted disposal facility;
- Efficiency, cost-effectiveness, and feasibility for full-scale application;
- Safety and overall protectiveness of human health and the environment.

The planned RD&D test activities described in this permit application include the construction and operation of the pretreatment system, interim storage of the ion exchange column (IXC), shipment of the waste totes to off-site permitted facilities, and closure activities.

Source, special nuclear and by-product materials, as defined in the Atomic Energy Act (AEA) of 1954 as amended, are regulated at DOE facilities exclusively by DOE acting pursuant to its AEA authority. These materials are not subject to regulation by the State of Washington under WAC 173-303, the federal RCRA, or any other relevant provision of law. Where information regarding processing, packaging, management, and disposal of the radioactive source, byproduct material and/or special nuclear components of mixed waste (as defined by the AEA of 1954, as amended) has been incorporated into this permit, it is not incorporated for the purpose of regulating the radiation hazards of such components under the authority of this permit modification nor Chapter 70.105 Revised Code of Washington, but is only presented for general knowledge in support of the project discussion.

1.5 Project Objectives

The overall project objective is to demonstrate that the process is successful in pretreating tank liquid waste (supernatant), support a determination that the waste can be managed as MLLW, and be transported to off-site permitted facilities for treatment and disposal.

Specific project objectives for the TBI Phase 2 RD&D Permit include:

- Provide direct experimental verification of the performance of the In-Tank Pretreatment System (ITPS), which uses filtration and IXC to remove 99% of the ^{137}Cs from the supernatant;
- Provide direct experimental verification that the final pretreated waste product will meet the waste acceptance criteria of the off-site permitted facility for treatment;
- Evaluate and determine that the waste, upon final treatment off-site, can meet Land Disposal Restrictions (LDRs) [40 CFR 268, incorporated by reference by WAC 173-303-140] criteria to be disposed at an off-site permitted facility;
- Determine any equipment or pretreatment requirements not recognized by testing conducted to date;
- Gather data for design to enhance decontamination and waste packaging;
- Develop and evaluate waste minimization techniques during operation of the pretreatment system equipment.

A final report will be prepared for TBI Phase 2 to document the results of the RD&D project, and will report performance against these objectives, as outlined in Section 6.3 of this Permit.

1.6 Justification for Project

Pursuant to WAC 173-303-809(1), an RD&D Permit is justified when the requesting entity proposes to employ an "innovative and experimental hazardous (dangerous) waste treatment technology or process for which permit standards for such experimental activity has not been promulgated..." [WAC 173-303-809(i)].

DRAFT

1.6.1 Compliance with Requirement

This permit application contains the information necessary to justify that TBI Phase 2 meet the requirements for permitting under as an RD&D project.

The TBI Phase 2 project is an engineering-scale test of the major elements of a new process that will involve the pretreatment of 2,000 gallons of supernatant waste in DST 241-SY-101 (SY-101) utilizing filtration and IX, followed by solidification and disposal of the waste at an off-site permitted facility once a WIR evaluation and determination has been made. The test will demonstrate: a) the effectiveness of an in-tank filtration and IX process, and b) the pretreated liquid stream will meet requirements to be managed as MLLW as was demonstrated during TBI Phase 1. This represents an innovative approach that minimizes waste handling and provides a new way to perform tank waste pretreatment at Hanford. In addition, this project is intended to provide additional filtration and IXC performance data to further supplement DOE's knowledge base to support future pretreatment design and operations.

The design, operation, and maintenance of processing equipment must function in the high radioactive and chemical environment. The following are aspects of the planned project that will be evaluated for TBI Phase 2:

a. Measured performance of the filtration and IXC on supernatant from a DST
b. Procedures to conduct waste handling and processing to minimize worker exposure As Low As Reasonably Achievable (ALARA).
c. System operational and maintenance requirements to accommodate remote manipulation and/or access by personnel wearing protective gear to further promote ALARA principles.
d. Placement of ancillary equipment to minimize potential contamination, thereby minimizing hazardous and radioactive waste generation (waste minimization).
e. Methods to perform decontamination when necessary.

1.7 Planned Scale of Operation

The TBI Phase 2 engineering-scale test project will be performed on 2,000 gallons of supernatant from SY-101. The resultant waste stream will be transferred into DOT compliant process totes, sampled and analyzed, and prepared for shipment following a WIR evaluation and determination by DOE. The pretreated liquid waste will be transported off-site for treatment by stabilization and permanent disposal at RCRA permitted facilities.

SY-101 was selected as the source for tank waste. The key benefits of this tank and drivers for its selection include:

- The tank contains ample supernatant (e.g. liquid waste) and the solids are well settled at the bottom of the tank;
- The tank is actively ventilated;
- The tank's waste chemistry and curie content are suitable for the ITPS approach and technology;
- The tank is located away from ongoing Direct Feed Low Activity Waste operations;
- The tank could facilitate retrieval and treatment of 200 West Area tank waste;
- The tank is a DST; completing the TBI Phase 2 project would create additional DST space.

DRAFT

2.0 FACILITY DESCRIPTION

2.1 Facility Siting

The TBI RD&D project (referred in this document as TBI) will be located within the DST SY Tank Farm, as shown in Figure 2-1. The SY Tank Farm is in the 200 West Area of the Hanford Site, and consists of three DSTs, each with a volume capacity of approximately 1 million gallons. The tank selected for the TBI is SY-101. The surface area within the SY Tank Farm consists of soft sand and soil that will be surveyed for contamination prior to setting up the TBI Phase 2 system. The site is sufficiently level to provide for equipment placement with minimum grading or excavation. In addition, skid mounted subsystems will contain integrated leveling systems.

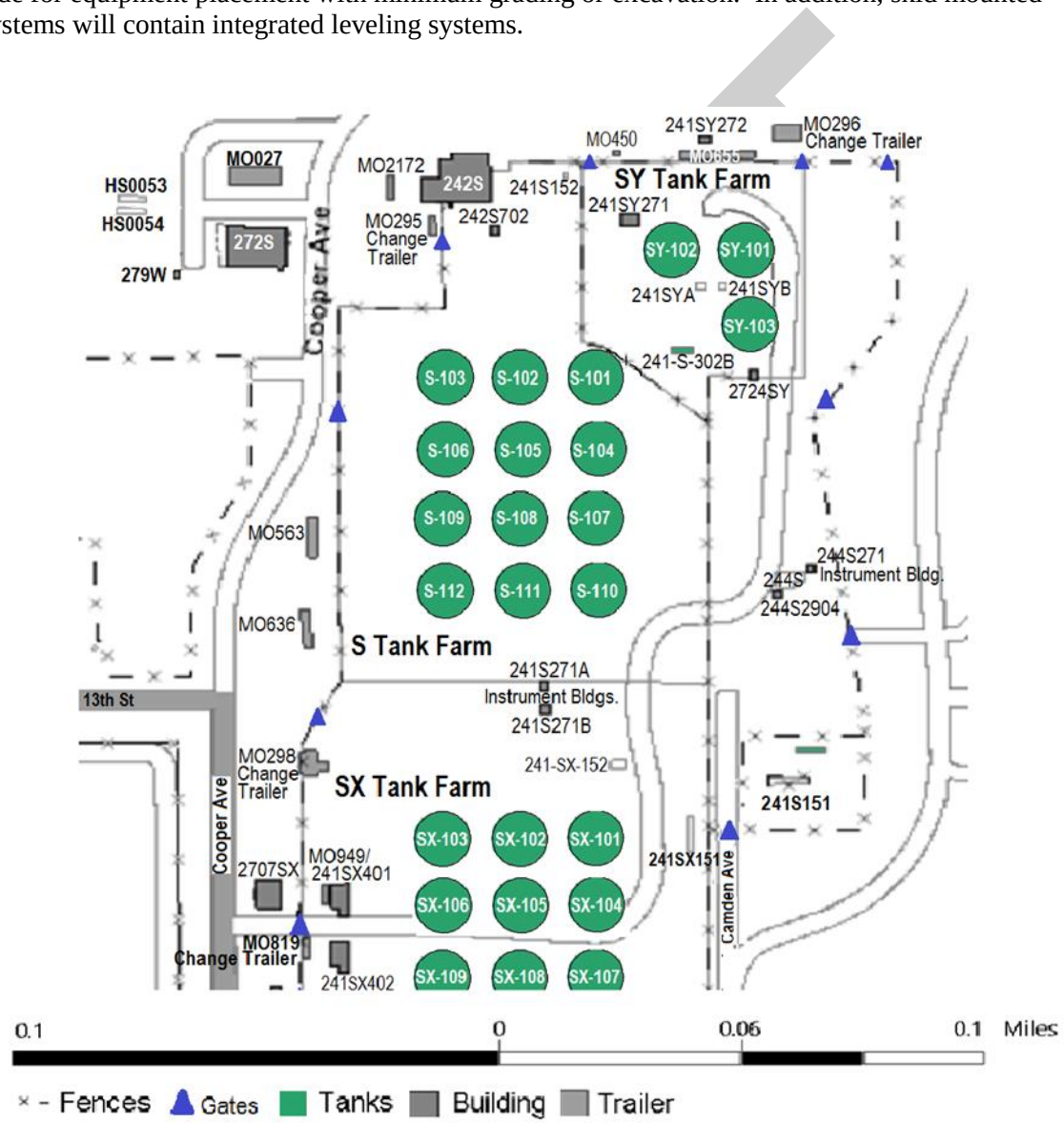

Figure 2-1. Site Location for TBI Phase 2 System

2.2 Infrastructure

TBI Phase 2 will make use of existing infrastructure to the maximum extent possible. Because of the unit-specific installation and operation, some infrastructure elements may be modified, augmented, or added. SY Tank Farm and SY-101 have key infrastructure for a small scale deployment (e.g., active ventilation) already available.

2.3 Scope of the RD&D Project

TBI Phase 2 implements a unit operational process to pretreat liquid waste from SY-101. SY-101 has been in static condition and solids have already settled in the tank; therefore supernatant is already separated within the tank. By removing only the supernatant, and using a combination of filtration and IX to pre-treat approximately 2,000 gallons of tank supernatant, the TBI Phase 2 project will be removing certain key radionuclides. Following the pretreatment, the supernatant will be sampled, analyzed and the results will be used to support a WIR evaluation and determination. The pretreated waste will then be treated and disposed of at off-Hanford Site permitted facilities.

Waste pretreatment will be achieved via a self-contained pump, filter and IXC assembly to be inserted in the existing Riser 14 of SY-101. The filter will remove suspended, undissolved solids (Strontium [Sr]) and the IXC will remove certain key radionuclides (^{137}Cs) from the liquid waste stream. The pre-treated liquid will be piped to portable containers (process totes) suitable for transportation in accordance with DOT requirements (49 CFR).

The needed pretreatment equipment will be operated on a temporary basis and removed after use, and undergo closure in accordance with Section 7.0.

2.4 Project Schedule

Table 2-1 shows the proposed schedule for the RD&D project. TBI Phase 2 operations are expected to last less than one calendar year to complete, including installation, testing, operation, and restoration of SY-101 to its original configuration.

Table 2-1. TBI Phase 2 Project Schedule

Activity Description	Expected Duration/Date
Installation and Verification of TBI Equipment at SY-101	
Preparation and installation of above ground subsystem components	October 1, 2019 – November 1, 2019
Installation of in-tank subsystem components	November 4, 2019 – December 6, 2020
Complete leak test and submit IQRPE certification	December 9, 2019 – December 20, 2019
In-field training	December 16, 2019 – January 3, 2020
Final operational readiness	January 6, 2020 – January 13, 2020
Operational Activities	
Operation of ITPS and transfer to totes	January 14, 2020 – January 22, 2020
Flushing of columns and ancillary equipment and placement into standby mode	January 31, 2020 – February 13, 2020
Sampling and Analysis of Pretreated Waste (Process Tote#6)	
Collect pretreated waste sample	January 22, 2020 – January 23, 2020
Analyze pretreated waste sample at 222-S	January 27, 2020 – January 30, 2020

DRAFT

Table 2-1. TBI Phase 2 Project Schedule

Activity Description	Expected Duration/Date
Generate waste profile of pretreated waste	January 31, 2020 – February 6, 2020
Final WIR determination*	January 27, 2020 – February 12, 2020
Closure Activities	
Shipment of totes to treatment facility	February 20, 2020 – February 23, 2020
Remove above ground subsystem equipment	February 20, 2020 – March 2, 2020
Remove in-tank subsystem components and package IXC	March 2, 2020 – March 27, 2020
Shipment of TBI System components to disposal or storage facilities	March 27, 2020 – April 13, 2020
Completion of Closure Activities	
Submit IQRPE closure certification	60 days after final closure activities complete (June 8, 2020)

*Activity is outside the scope of the RD&D Permit

2.5 TBI System Components and Operations

The arrangement of major TBI Phase 2 project components are detailed in Appendix A. Liquid waste will be pretreated in-tank at SY-101 using the ITPS, which uses filtration and IX to remove solids and key radionuclides such as ^{137}Cs and Sr. The system will perform these unit operations from within the confines of the SY-101. The pretreated waste will be pumped into first a delay tote, then transferred to one of six process totes for shipping off-site as outlined further in the Process Description (Section 3.0).

2.6 Waste Characteristics

The current waste characteristics of SY-101 are presented in Section 4.0, Waste Analysis Plan (WAP).

2.7 Secondary Wastes

A variety of secondary wastes may be generated during the TBI Phase 2 project. Details are provided in Section 3.8 of this application.

2.8 Ignitable, Reactive, and/or Incompatible Materials

Based on the current DST WAP, the Dangerous Waste Codes D001 (Ignitability) and D003 (Reactivity) do not apply to the waste stored in SY-101. Verification sampling was performed to confirm the waste designation; this information will be contained in the TBI Phase 2 Operating Record (RPP-PLAN-62774, 2018; RPP-RPT-61303-02, 2019). Only waste from SY-101 will be processed during TBI Phase 2. Based on the design, materials, and analytical sampling results of SY-101, there are no expected incompatible material issues during TBI Phase 2. A material compatibility assessment was performed to evaluated waste-contacting components in the TBI Phase 2 system to determine their compatibility with liquid waste. The assessment reached the following conclusions:

- There are no prohibited material issues for the system.
- There are no thermal compatibility issues for the system.
- There are no chemical compatibility issues for the system.
- There are no radiation compatibility issues for the system.

DRAFT

2.9 Total Amount of Waste Processed

To accomplish the RD&D project objectives, 2,000 gallons of liquid supernatant will be pretreated from SY-101. Tank waste storage and treatment limits are proposed in Section 3.5 of this RD&D application. Planned processing rates and storage requirements are also described in detail in Sections 3.6.1.

2.9.1 Pretreated Waste Disposition

The pretreated waste will be transported off-site to a permitted treatment facility where it will be treated to meet regulatory requirements and disposal site waste acceptance criteria. Upon analytical verification of compliance with these requirements, the treated waste will be transported and disposed out of the State of Washington at a licensed disposal facility. The off-site treatment and disposal at other RCRA permitted facilities is outside the scope of this RD&D Permit.

2.10 Support Systems

Support systems are systems that are required for TBI operations but not directly part of the TBI system. These support systems may be shared with the SY Tank Farm operations. The support systems will consist of:

- Shift Office;
- Personnel contamination control and survey station;
- Personal areas (e.g., lunch room and restrooms);
- Change room;
- Safety showers and eye wash stations;

2.11 Non-Regulated Materials and Utilities

Information provided in the following sections is general in nature and represents the minimum considerations for handling of non-regulated materials. Management of specific materials related to the TBI Phase 2 system operation are discussed in the Process Description (Section 3.0).

The ITPS shall be a self-contained unit and accordingly all utilities and services required to operate the system will be provided with the system when it is delivered. Factory Acceptance Tests (FAT) and post installation/pre-operations tests shall verify the intended services operate seamlessly and perform its intended function. Utilities and services may include, but are not limited to, instrument air, water, reagent, and electrical service.

2.12 Other Facility Permits

In addition to the RD&D Permit, ORP will apply for and obtain the following prior to operation:

- An alternate approval from Washington State Department of Health and the Environmental Protection Agency to AIR 15-414, “Notice of Construction 945, Tank Farm Operations Diffuse and Fugitive License,” to allow the TBI Phase 2 project to be conducted as a source of diffuse and fugitive emissions.

2.13 Security

The TBI Phase 2 project will be located within the fenceline boundary of the SY Tank Farm, part of the DST system. Facility security provisions and signage will comply with applicable portions of WAC 173-303-310, and follow the DST Security Addendum. A copy of the DST Security Addendum will be placed in the TBI Phase 2 Operating Record as described in Section 6.2.

The following sections describe the security measures, equipment, and warning signs used to control entry to the Hanford Facility in the 200 Area:

DRAFT

2.13.1 Hanford Facility Security

The Hanford Patrol maintains a continuous presence of security personnel. Hanford Patrol is comprised of highly trained security personnel that are present at the facility 24 hours a day, 7 days a week, including holidays. Hanford Patrol monitors access to, and exit from the Hanford Facility and provides security measures throughout the Hanford Facility.

The Benton County Sheriff Office (BCSO) provides law enforcement support for the Hanford Facility, including enforcement of traffic laws and automobile accident investigations. Activities of the BCSO include Columbia River patrol by watercraft, K9 units for narcotics detection operations, and warrant service. The detective and deputies of the BCSO also investigate property crimes involving theft of government and personal property on the Hanford Facility.

All personnel accessing locations on the Hanford Facility must possess and display a DOE approved security badge indicating the appropriate access authorization. All personnel entering or exiting the Hanford Facility are subject to random security badge inspections by Hanford Patrol to validate access authorization. All vehicles and hand-carried items entering or exiting the Hanford Facility are subject to random inspections and searches by Hanford Patrol to preclude the unauthorized introduction of prohibited/controlled articles, or the unauthorized removal of government or contractor assets.

Employees at the Hanford Facility are trained and have the responsibility to assist in maintaining access control on the facility. In general, this includes restricting access to authorized personnel only (e.g., challenging personnel without a security badge and making sure entrances are secured after entry and exit). Employees receive annual training on individual requirements to maintain security on the Hanford Facility as part of the general facility training.

2.13.2 Warning Signs

The TBI Phase 2 must comply with the requirements found in WAC 173-303-310(2)(a) to prevent entry, and minimize the possibility for the unauthorized entry, onto active portions of the Hanford Facility. Signs posted around the perimeter of the facility bear the legend, “No Trespassing By Order of the United States Department of Energy”. The “No Trespassing” signage is also posted around the 200, 300 and 400 Areas. These signs are posted every 500 feet. Warning signs posted for operating unit groups bear the legend, "Danger-Unauthorized Personnel Keep Out," or an equivalent legend, written in English, and are legible from a distance of at least 25 feet. Such warning signs are posted at entrance points to the active portions of operating unit groups and along the fence lines of the operating unit groups at distances not to exceed 250 feet between signs. Large warning signs posted along the Columbia River shoreline near the 100 Area surplus reactors are written in English and Spanish.

2.13.3 Surveillance System

24-hour surveillance is conducted at the Hanford Facility level to control entry onto the Hanford Facility and provide protection of government property, classified information, and special nuclear materials. This system is comprised of roving patrols and video surveillance at selected locations.

2.13.4 Artificial or Natural Barriers

Authorized access to active portions of the Hanford Facility is controlled through gates or other entrances at all times. Vehicular access to roads leading to the active portions of the Hanford Facility located in the 200 Areas is controlled through entrance points at the Yakima, Wye, and Rattlesnake Barricades, which are posted with signs. These barricades are controlled on a continuous or as needed basis by Hanford Patrol. When barricades are not manned, the gates are secured to prevent access.

DRAFT

The Hanford Facility perimeter fence is installed that extends approximately 32 miles from the northwest corner of the Hanford Facility, where the facility meets with the Columbia River at the Vernita Bridge, to the southeast corner of the facility near Stevens Road. The perimeter fence is constructed of steel fence posts strung with barbed wire. This fence provides a barrier to vehicle access on the west and south portion of the Hanford Facility. All other unimproved vehicle access roads along the facility boundary are controlled by locked vehicle access gates combined with the Hanford Facility perimeter fence.

The 200 East and 200 West areas are each surrounded by an area fence. Many of the active portions of the Hanford Facility are located within the 200 area fences. The area fences are chain link fencing that may be topped with barbed wire in certain places. Access through the 200 area fences is provided only at a limited number of entrances.

2.14 Preparedness, Prevention, Emergency Procedures, and Contingency Plans

The TBI Phase 2 project will be located within the fenceline boundary of the SY Tank Farm, part of the DST system. TBI Phase 2 project must comply with provisions in WAC 173-303-340, -350, and -360. To satisfy these requirements, TBI Phase 2 personnel will comply with the overall Hanford Emergency Management Plan (HEMP) (DOE/RL-94-02); and the DST Preparedness and Prevention Plan, Building Emergency Plan, and Contingency Plan. A copy of these will be placed in the TBI Phase 2 Operating Record as described in Section 6.2.

2.15 Training

TBI Phase 2 personnel will be trained in compliance with all requirements in WAC 173-303-330. General training is required for all Hanford Facility Personnel, which consists of both initial and ongoing general facility training to prepare for working at Hanford facilities. The introductory and continuing training will provide the following:

- Teach Hanford Facility personnel to perform their duties in a way that ensures the Hanford Facility's compliance with WAC 173-303;
- Teach Hanford Facility personnel dangerous waste management procedures, including implementation of the Contingency Plan, relevant to the job titles/positions in which they are employed;
- Ensure Hanford Facility personnel can respond effectively to emergencies.

Introductory and continuing training for personnel working at SY-101 on the TBI Phase 2 project consists of the following, depending on the job title/position: General Hanford Facility Orientation, Contingency Plan Training, Emergency Coordinator Training, and Operations Training. All TBI Phase 2 personnel must be fully trained to work (WAC 173-303-330(1)(c).

The Dangerous Waste Training Plan (DWTP) for the DST system will identify unit specific training to work in the SY Tank Farm. In addition, this DWTP will identify training requirements for specific job titles/positions, and a breakdown of the operations training required. A copy of the DST DWTP will be placed in the TBI Phase 2 Operating Record. Training records are maintained in accordance with the requirements of WAC 173-303-330(2)(c) and (3).

2.16 Occupational Safety and Health

All structures and equipment utilized in the planned project will incorporate design features that comply with applicable subparts of Occupational Health and Safety Administration (OSHA) Regulations found in 29 CFR 1910, *Occupational Safety and Health Standards* (29 CFR 1910).

DRAFT

3.0 PROCESS DESCRIPTION

The TBI Phase 2 project will be performed in SY-101, located in the SY Tank Farm located in the 200 West Area of Hanford site. A total of 2,000 gallons of supernatant from SY-101 will be pretreated using the filtration system/IXC under this RD&D Permit.

The TBI Phase 2 project consists of two subsystems, as shown in the process flow diagram (CEES-16-604-P-012). The first subsystem will consist of in-tank components installed in SY-101. This subsystem will include within a single assembly: a filter, a pump and an IXC filled with CST media. This system will be installed through Riser-014, a 12 inch riser. The second subsystem is comprised of the above ground equipment that will support transferring the pretreated tank waste stream into a delay tote, which will allow surveys to be performed to confirm barium decay as described in Section 3.6. After the surveys are completed, the contents of the delay tote will be transferred to one of the process totes. All of the above ground components that transfer or store waste will be in secondary containment to prevent spills or releases to the environment.

A sample of the last filled tote will be taken to confirm compliance with various requirements and support a WIR evaluation and determination that the waste meets standards to be managed as MLLW.

Following confirmation via sampling, the filled process totes will be transported to off-site permitted facilities for further treatment and disposal. Final treatment and disposal activities are outside the scope of this RD&D Permit.

Anticipated operation duration is less than one calendar week. However, due to the time for sampling and analysis, TBI Phase 2 system components will remain in place at SY-101 as described in Section 3.7 until closure activities begin.

3.1 In-Tank Subsystem

The in tank subsystem will filter the supernatant from SY-101, pump the liquid through the IXC and into the above ground system. The ITPS design shall utilize an IXC containing CST media. Filtered supernatant is routed through the IXC, which separates ^{137}Cs from the waste stream. The ITPS design shall utilize a strainer at the pump inlet that is submerged in the tank supernatant. A solids filter will be provided ahead of the IXC. The purpose of the filter is to prevent IXC media plugging due to entrained particles in the waste stream bridging across the IXC media or media screens.

The ITPS will include design features that allow for draining the system to SY-101. Design features of the ITPS have been included to catch, collect, and route any potential leakage to SY-101.

3.1.1 Filter and Ion Exchange Column Design

A filtration system will be installed to prevent the IXC from plugging, channeling, or losing efficiency or effectiveness due to particulate entrainment. The filter shall be capable of removing undissolved solids, resulting in a post filtered waste stream to be less than 10 micron.

The IXC containing CST media are designed to remove ^{137}Cs from the waste to the extent practicable. The IXC will be preloaded with CST prior to installation in SY-101. The total loading on the IXC is limited by the 2,000 gallons of supernatant permitted under this RD&D Permit.

3.2 Above Ground Subsystem

The above-ground subsystem includes:

- A monitoring system (laptop computer based).
- Instrument and power wiring.
- Flexible metal and rigid piping for transfer of waste from the tank to the totes, and to support water and caustic additions to the system.

DRAFT

- Caustic and water skid mounted systems for flushing the TBI Phase 2 system after use.
- Air hoses for drying the IXC and equipment after flushing.
- One delay tote and six process totes for holding the pretreated supernatant once it leaves the tank.
- Secondary containment.

Once in the above ground subsystem, the waste is sent first to the delay tote, then to one of the process totes located at grade within secondary containment. Further discussion of the containers (totes) and container storage area is in Section 3.5.

All above ground tank subsystem components shall comply with requirements in WAC 173-303-640. Piping shall be designed, fabricated, tested, and inspected against industry standards, and verified by an independent, qualified registered professional engineer (IQRPE) to be installed in accordance with design specifications, including the leak detection system.

The ITPS will include a decontamination spray ring in Riser-014. The ITPS components, fittings, and connections are designed to accommodate the pressures and flow rates of the decontamination spray ring without resulting in damage or the need to repair components after decontamination. The spray ring performance will be demonstrated during the FAT.

Components exposed to tank waste or that may become contaminated shall be constructed of materials to promote decontamination using the spray ring mounted to the tank riser as the ITPS is removed from the tank for disposal.

The ITPS shall be designed to be transportable using existing Hanford Site handling equipment, including cranes and forklifts as appropriate.

3.2.1 Secondary Containment and Leak Detection for the Above Ground Subsystem

All above ground subsystem components that contain liquid tank or pretreated waste outside the confines of the waste feed tank (e.g., flexible and rigid metal piping) shall comply with the secondary containment and leak detection requirements of WAC 173-303-640. The delay tote is located immediately adjacent to the riser containing the ITPS. Any leaks from the primary piping between SY-101 and the delay tote will drain directly back to the tank via the piping encasement, as the delay tote is located almost directly over the tank riser. The delay tote container is also housed within the secondary containment that will be inspected as described in Sections 5.2.2 and 5.2.3.

The SY-101-to-delay tote piping encasement terminates in the delay-tote top-hat which houses primary piping, valves and instrumentation essential to the process. The delay tote top-hat is equipped with an electronic leak detection element that will alarm. If the system alarms, the operator will shut down the in-tank pump or delay tote pump if running. Any leaks from the primary piping between the delay tote and process tote valve manifold will drain to the secondary containment via the piping encasement. All totes and flex metal piping are housed within the overall system secondary containment.

The secondary containment structure surrounding the above grade subsystem is a portable, deployable model designed and manufactured to meet the requirements of WAC 173-303-640 and 40 CFR 264.175. The secondary containment is made of a durable, coated geomembrane that resists chemicals, abrasion and tearing. The secondary containment berm features PVC sidewall assemblies for support. Similar secondary containment structures have been used previously at the tank farms and other Hanford site operational activities.

3.2.2 Raw Water

The ITPS shall not interface with a raw water system. Flush water will be utilized when required from a backflush skid.

DRAFT

3.2.3 Electrical System

The ITPS electrical system shall be designed in compliance with the requirements of the NFPA 70, National Electrical Code. The electrical system will be connected to the tank farm power system.

3.2.4 Data Acquisition System

The ITPS has an installed system for monitoring and acquiring data during the operation of TBI Phase 2.

3.3 Fire Protection

The process system design does not introduce additional flammable materials. The ITPS includes a passive vent to the SY-101 tank headspace to prevent buildup of hydrogen in the system.

3.4 Design, Fabrication, and Installation Verification

Equipment, components, and assemblies that may come into contact with waste or waste treatment materials will be compatible with the waste's physical, chemical, and radioactive properties for the planned duration of contact. This includes all piping, pump, and valve wetted surfaces. Metallic surfaces that will routinely contact tank waste shall be fabricated from stainless steel. The TBI Phase 2 tank system components will be designed and installed in accordance with WAC 173-303-640(3).

For design and installation of new tank systems or components WAC 173-303-640(2) and -640(3) require a written integrity assessment be reviewed and certified by an IQRPE in accordance with the certification statements in this Permit, and placed in the TBI Phase 2 Operating Record. The purpose of these integrity assessments is to perform and document an independent review of the design, fabrication, assembly, and testing to meet the requirements of WAC 173-303-640. Ecology guidance (Ecology 2014) will be followed in preparation of these integrity assessments. The integrity of the TBI Phase 2 tank system components will be assessed by an IQRPE in accordance with WAC 173-303-640(3)(a).

The integrity assessment must evaluate and determine that the subsystems are adequately designed and have sufficient structural strength and compatibility with the waste(s) they will store or treat to ensure that the tank system will not collapse, rupture, or fail. In addition the assessment must determine that the system is not leaking or is unfit for use, as required by WAC 173-303-640(2)(a).

An installation assessment report, reviewed and certified by the IQRPE, must be obtained and maintained in the facility record. The TBI Phase 2 system will be verified against functions and requirements (APT-F&R-1118), and a Certificate of Conformance demonstrating the system was engineered, designed, fabricated, and tested in accordance with the requirements of an NQA-1 QA program. The containers (totes) are fabricated and certified to be DOT compliant shipping containers and do not need any additional certifications (see Section 3.5); the IQRPE will only certify that the above ground piping into the delay tote and process totes is installed correctly. The IQRPE will also verify that appropriate quality assurance and quality control (QA/QC) personnel inspected and accepted the ITPS upon receipt to the field for use. The IQRPE will be present at the work site as appropriate to observe and verify conformance to requirements for selected field activities. These activities, at the discretion of the IQRPE or independent qualified installation inspector, should include a review of the elements identified in WAC 173-303-640(3)(c). A verification will be performed attesting to verify proper installation of the ITPS and related equipment and piping.

The integrity assessment and installation assessment may be combined into a single report to support the required IQRPE certifications for this work, which will be placed in the TBI Phase 2 Operating Record. All reports must document measures taken to correct deficiencies or other defects, if they are discovered in the TBI Phase 2 RD&D Project Final Report (Section 6.3).

DRAFT

Table 3-1 contains a list of engineering drawings that are submitted as part of supplemental information to this permit application. The engineering drawings are located in Appendix A of this Permit. The IQRPE will review and verify that fabrication, installation, and testing are in accordance with the design basis for TBI Phase 2.

Table 3-1. TBI Phase 2 Engineering Drawings

Number	Title
CEES-16-604-A-002	DOE TBI SY-101 Site Plan
CEES-16-604-P-004	DOE TBI SY-101 Piping & Instrumentation Diagram
CEES-16-604-P-012	DOE TBI SY-101 Process Flow Diagram
CEES-16-604-M-005	DOE TBI SY-101 IX Riser Adapter Assembly
CEES-16-604-M-006	DOE TBI SY-101 Pump Column Assembly
CEES-16-604-M-007	DOE TBI SY-101 Hose Assemblies
CEES-16-604-M-008	DOE TBI SY-101 Pipe Stands
CEES-16-604-M-022	DOE TBI SY-101 Distribution Valve Manifold
CEES-16-604-M-023	DOE TBI SY-101 Delay Tote Assembly
CEES-16-604-M-024	DOE TBI SY-101 Backflush Skid Assembly
CEES-16-604-M-026	DOE TBI SY-101 IX Column Vessel
CEES-16-604-M-028	DOE TBI SY-101 Filter Assembly
CEES-16-604-M-039	DOE TBI SY-101 Process Tote Assembly
CEES-16-604-M-054	DOE TBI SY-101 Spray Ring
CEES-16-604-M-065	DOE TBI SY-101 Pipe in Pipe

3.5 Container Storage Area and Container Management

Six 375-gallon process totes will be stored in the container storage area. These process totes will receive transfers from the delay tote, which is installed adjacent to the SY-101 Riser 014 where the pretreatment column is placed. The delay tote will provide temporary holding while pretreatment operations are occurring. Pretreated liquid waste will be pumped first into the delay tote, confirmatory surveys performed, and then finally pumped to the selected process tote as described in Section 3.6 and 3.6.3. The nominal liquid to be processed and stored in the totes is 2,000 gallons from SY-101. The total volume capacity of the six process totes is 2,250 gallons, excluding the delay tote.

Forklifts or cranes will be used to place the process totes into the SY-101 Tank Farm prior to use. All totes used (process and delay) shall meet all appropriate DOT requirements for the transport of the pretreated waste to an off-site permitted facility, provided in 49 CFR Subchapter C, “Hazardous Materials Regulations” (49 CFR). The totes will be DOT 7A Type A containers (49 CFR 178.350). The DOT 7A Type A requirements lead to a robust double walled container design and construction. The TBI totes will be certified by the vendor that they meet the DOT requirements; the Type A package documentation must be maintained in the Operating Record with the shipments of the waste.

As previously described in Section 3.2.1, appropriate spill prevention and secondary containment will be provided where liquid waste may be present outside of SY-101 in accordance with WAC 173-303-630(7).

DRAFT

The process totes (containers) and container storage area will be inspected in accordance with the Section 5.2.2 and 5.2.3 of this Permit.

The process totes (containers) will not be stacked in the container storage area. Only pretreated waste from one tank, SY-101, is included in TBI Phase 2, and will be the only waste allowed to be stored in totes in the container storage area. There are no expected issues with incompatible wastes, as all containers will contain liquid with the same waste characteristics. Therefore, no segregation of containers is required due to compatibility issues.

Containers (filled totes) will be appropriately labeled as required by WAC 173-303-395(6) while in the container storage area. When shipping to the off-site permitted treatment facility, all containers will be packaged and labeled for transport in accordance with WAC 173-303-190 and applicable DOT regulations under 49 CFR.

3.6 Operational Activities Overview

The ITPS shall have an expected supernatant treatment throughput of 0.5 gallons per minute (GPM), with an operating condition of 1.0 GPM. During active operations, the in-tank subsystem will filter the supernatant from SY-101, pump the liquid through the IXC, and into the above ground system. Once in the above ground subsystem, the waste is sent to a delay tote, which will allow for verification that any dose rate from the packages is the result of barium decay and not high levels of ^{137}Cs. High dose rates that do not decrease within 30 minutes may indicate that there is more ^{137}Cs left than predicted and the IXC performance may need to be evaluated further.

Once radiation levels are verified to be low enough, waste will be pumped from the delay tote to one of six, 375 gallon process totes. These process totes will eventually be used to ship the pretreated waste to a facility for final treatment. These transfers will continue until all six process totes are filled with nominally 333 gallons each. The transfers will be accomplished via a manually operated valve manifold, and the pretreated waste will be stored in the process totes until transported to an off-site permitted facility.

There are multiple operating modes for the TBI Phase 2 system; these operating modes are described further in Sections 3.6.2 to 3.6.5. Operating modes are further described in detail in the Process Control Plan (CEES-1409), which is included in Appendix A of this Permit and also located in the TBI Phase 2 Operating Record.

3.6.1 Operational Limits

The batch limit for the TBI Phase 2 will be 350 gallons. The controller software will have a setpoint of approximately 333 gallons in the delay tote top hat transmitter that will cause a shutdown of the transfer pump when that volume is reached. A backup transmitter has also been installed with the same setpoint of approximately 333 gallons, to prevent over-filling of the delay tote. The setpoint will be verified during the FAT.

The overall amount of SY-101 waste pretreated for TBI will be 2,000 gallons, transferred into six process totes. Due to the measurement accuracy of the flow meters, the TBI Phase 2 project has a maximum limit of 2,050 gallons of supernatant.

3.6.2 Pre-Operation Testing Activities (Startup)

Pre-operation and start-up activities (including testing and preparation of work packages) will be conducted to ensure proper performance of components and sub-systems individually and as part of overall system performance, either prior to delivery or after installation in the field.

At a minimum, the following shall be tested or verified, and documented:

- Verify no system leakage;

DRAFT

- Ability to open/close valves;
- Removal of fines from CST;
- Ability to condition and load the IXC with CST;
- Regulate waste feed flow/pressure to feed the ITPS at approximately 1 GPM;
- Processing simulated waste feed at approximately 1 GPM;
- Validation of IXC flow rate;
- Fill totes and switch to empty totes;
- Back flush the system;
- Dry the IXC;
- Responding to off-normal conditions; and
- Ability to detect and remove accumulated liquid from the secondary containment system.

The TBI system will need to have administrative controls in place for starting the waste transfer from SY-101 to the delay tote, including verification of pre-start conditions. Prior to start, the operations manager will confirm that all processes are in place and document approval that operations can commence.

3.6.3 TBI Processing

Processing of SY-101 supernatant will commence after the valves are positioned and independently verified to be in the correct position, and will be initiated by starting the pump. If flowing properly, the flow indicator will register a flow rate of 0.5 to 1 GPM.

When approximately 333 gallons has been transferred to the delay tote, radiological dose-rate surveys of the delay tote will be performed to verify radiological levels are under thresholds to allow transfer to the process totes. The TBI system will have administrative controls in place for transferring the waste from the delay tote to the selected process tote, including verification that the valves are in the correct position for TBI batch transfer.

After the operators position and independently verify the valve positions are correct, a pump will begin to transfer from the delay tote to the process tote until a transmitter level reads zero. After the pretreated waste has been transferred and the pump shut down, the high-point vent valve may be opened to allow any remaining liquids to gravity feed to the process tote.

After one complete batch of pretreatment (e.g. 333 gallons transferred from the tank to the delay tote and subsequently to a process tote), the system will undergo an administrative verification that valves are positioned correctly to start the next batch of pretreatment activities in the tank, which will again fill the delay tote and the next process tote. This process will continue until all six batches have completed and the six process totes are filled.

The TBI equipment is capable of running up to 24 hours a day until 2,000 gallons of waste have been processed, unless an unexpected event should occur as outlined in Section 3.9. Once pretreatment commences, the TBI equipment is expected to complete one batch of pretreatment and subsequent transfer to process totes primarily during one day shift and the totes secured for the following day operations; however additional shifts may be worked based on operational schedules and transfer rates.

DRAFT

The pretreated waste produced by the TBI Phase 2 must meet the waste acceptance criteria of the off-site treatment facility; this treatment facility will produce a waste form suitable for ultimate disposal in a permitted disposal facility. To confirm acceptability, sampling will occur per the WAP in Section 4.0, to support evaluation of the project objectives listed in Section 1.5 and support waste designation determinations. After sample(s) confirm that the pretreated waste meets the acceptable criteria, the totes will be placed onto a transport truck using a forklift and then shipped to the off-site permitted facility for treatment.

3.6.4 Backflush Operations

An alarm setpoint will be established to inform the operator that a backflush is needed. An alarm will be activated if a flow rate is less than 0.5 GPM. In response, a check valve will open and dump waste back into the SY-101 tank. To perform a backflush, the operator will verify proper controls are in place, valves are in correct positions, and the purge air line and spray ring line are disconnected. The operator will monitor the flow rate while backflushing.

3.6.5 Waste Returns to SY-101

If radiological surveys do not confirm the waste can be transferred from the delay tote to the process totes, the waste must return to SY-101. If the supernatant in the delay tote needs to return to SY-101, the operator will verify all pre-start conditions are in place and transfer waste from the delay tote back to SY-101. A level indicator will indicate to the operator when the delay tote is empty and the waste return complete.

3.7 Post-Operational Activities

At the completion of the operations and prior to layup/removal of the ITPS from the tank riser, the spent CST media in the IXC will be rinsed with caustic (sodium hydroxide) and water rinse. The operator will verify valves are in the correct position to perform the back flush with caustic/water. Flow rate will be monitored during the flush. The resulting caustic/water flush will be returned to SY-101.

The TBI system piping, including the process tote distribution manifold, will be purged with compressed air. The operator will verify all conditions are in place to purge all piping and hoses. All process totes remain connected until the piping blowdown is complete. Once the TBI system has been flushed with caustic/water and piping has been blown down, the IXC will also be dried with air prior to removal.

When all post-operation activities are complete, the TBI system will be placed into an interim shut down and storage condition while awaiting final closure. The caustic/water tote is verified as emptied and the line from the back flush skid to the process totes are removed. Valves are opened to allow hydrogen buildup in the piping to vent. The ITPS will remain inside SY-101 which is equipped with a ventilation system until its removal from the tank.

3.8 Secondary Waste Streams

Secondary waste includes the ITPS equipment, the IXC, secondary containment, tank-contacted general debris, back flush liquid waste, and other equipment/materials. Depending on the waste designation, disposition will be determined by the waste services organization and will be documented in the TBI Phase 2 Operating Record.

3.8.1 Liquid Effluent Secondary Waste Streams

All liquid secondary waste streams (e.g. backflushes with caustic/water) will return to SY-101 during operations.

DRAFT

3.8.2 Solid/Semisolid Secondary Waste Streams

Disposition of solid waste streams will be managed in accordance with the Hanford Site Solid Waste Acceptance Criteria (HNF-EP-0063). The spent IXC and supporting components shall be packaged in free standing, passive storage containers, appropriately shielded and designed to prevent radiological releases to the environment.

The internal components of the ITPS will undergo a caustic flush, water flush, and air drying at the completion of processing, as described in Section 3.7. The ITPS will be removed from the tank riser through a decontamination spray ring. The externally decontaminated ITPS will be placed in a container for further disassembly and preparation for disposal. The IXC will be disconnected from the ITPS assembly, fitted with passive ventilation filters, and placed in a shielded storage box. The IXC will be transferred for interim storage at the Central Waste Complex (CWC) pending final treatment and disposal. The balance of the ITPS components will be packaged and disposed directly at an on-site permitted facility in accordance with the waste acceptance criteria.

3.9 Criteria to Modify or Suspend Operations

The project operations staff will be trained to respond to off-normal conditions during processing, and have established operating instructions in place. Off-normal conditions may include loss of electrical power, equipment registering out of specification during monitoring (e.g. high/low pressure, high/low flow), and reaching or exceeding set radiological limits. Operations staff will evaluate responses to the off-normal conditions against their operating instructions and respond accordingly based on the assessment.

If there is a loss in ventilation for SY-101 during the TBI Phase 2 filtering/IXC process, TBI Phase 2 operations will be suspended, and the system placed in standby mode.

The TBI Phase 2 project operation staff will use the DST facility emergency procedures that will be located in the TBI Operating Record to respond to off-normal conditions (e.g. liquid spill, personnel injury) as described in Section 2.14.

4.0 WASTE ANALYSIS PLAN

The WAP provides the basis for measuring the adequacy of the waste pretreatment system and assists in optimizing the pretreatment operation based on the analysis of the pretreated waste. It also provides information on secondary waste streams to determine the required type and level of treatment, and/or appropriate disposal path. This WAP addresses the sampling and analyses necessary to manage waste at the TBI Phase 2 according to requirements in WAC 173-303.

The overall project goal for TBI Phase 2 is to pretreat liquid supernatant from SY-101 and transfer waste to DOT compliant totes for shipment to off-site treatment and disposal facilities. The purpose of the WAP is to ensure that all waste generated from TBI Phase 2 is managed in accordance with WAC 173-303-300. In addition, the WAP and subsequent Tank Sampling and Analysis Plan (TSAP) will document an approach to:

- Characterize the pretreated waste and evaluate the performance of the ITPS against the project objectives listed in Section 1.5.
- Provide data for waste management during the TBI Phase 2 project

DRAFT

4.1 Waste Feed Characteristics

TBI Phase 2 will pretreat supernatant from SY-101 and transfer the liquid to process totes, which will be sampled and, if criteria are met, subsequently transferred off-site for treatment and disposal. SY-101 contains both an aqueous supernatant and a thick solids layer comprised of saltcake and sludge. The only waste feed for the TBI Phase 2 unit is aqueous supernatant from SY-101; pretreatment or removal of the saltcake or sludge is not allowed under this Permit.

The waste entering the TBI Phase 2 pretreatment system is classified as a mixed waste, which contains a radioactive component and a chemical component that designates as a dangerous waste. This WAP contains information regarding the dangerous waste components.

4.1.1 Dangerous Waste Designations

SY-101 has the dangerous waste designations listed in Table 4-1 below. Because the TBI system only accepts aqueous phase supernatant waste feed, the characteristics of ignitability and reactivity do not apply since the waste does not exhibit those characteristics.

Table 4-1. Dangerous Waste Designation Associated with SY-101*

Characteristic Waste Numbers				Listed Waste Numbers		
D002	D004	D005	D006	F001	F002	F003
D007	D008	D009	D010	F004	F005	
D011	D030	D033				

4.1.2 Waste Feed Chemical Properties

The TBI pretreatment system is designed to receive and pretreat waste that has the average chemical composition listed in Table 4.2, as specified in the functions and requirements (APT-F&R-1118).

Table 4-2. Dangerous Waste Chemical Properties for SY-101

	Supernatant		Entrained Solids	
Analyte	**Concentration**	**Units**	**Concentration**	**Units**
Al	4.05E-03	kg/L	1.45E-05	kg/L
Bi	1.32E-05	kg/L	8.88E-09	kg/L
Ca	2.03E-05	kg/L	1.60E-07	kg/L
Cl	8.77E-04	kg/L	1.92E-06	kg/L
TIC as CO3	1.42E-02	kg/L	7.76E-06	kg/L
Cr	1.13E-04	kg/L	6.92E-06	kg/L
F	4.69E-04	kg/L	1.09E-08	kg/L
Fe	1.80E-06	kg/L	4.41E-07	kg/L
Hg	2.07E-09	kg/L	1.46E-10	kg/L
K	3.23E-04	kg/L	5.96E-07	kg/L
La	1.13E-06	kg/L	7.51E-09	kg/L
Mn	1.13E-06	kg/L	1.32E-07	kg/L

DRAFT

Table 4-2. Dangerous Waste Chemical Properties for SY-101

	Supernatant		Entrained Solids	
Analyte	**Concentration**	**Units**	**Concentration**	**Units**
Na	7.28E-02	kg/L	5.53E-05	kg/L
Ni	2.26E-06	kg/L	1.13E-07	kg/L
NO2	1.08E-02	kg/L	2.15E-05	kg/L
NO3	6.78E-02	kg/L	3.20E-05	kg/L
Free OH	9.94E-03	kg/L	7.79E-06	kg/L
Oxalate	2.33E-03	kg/L	3.57E-05	kg/L
Pb	1.14E-05	kg/L	1.10E-07	kg/L
PO4	9.80E-03	kg/L	1.76E-06	kg/L
Aroclors (Total PCB)	6.13E-08	kg/L	4.97E-11	kg/L
Si	2.57E-05	kg/L	1.01E-07	kg/L
SO4	2.42E-03	kg/L	1.03E-06	kg/L
Sr	1.09E-06	kg/L	4.16E-10	kg/L
Th	1.68E-05	kg/L	1.07E-10	kg/L
TOC	1.08E-03	kg/L	1.20E-05	kg/L
UTOTAL	3.43E-06	kg/L	1.35E-07	kg/L
Zr	1.13E-06	kg/L	1.10E-08	kg/L

4.2 Pretreated Waste Sampling

The final pretreated waste will be sampled to provide data to evaluate the performance of the ITPS against the project objectives established in Section 1.5, and to collect the data to support waste management of the pretreated waste. Through development of a TSAP, pretreated waste will be sampled and analyzed to gather data to support waste management and analysis of the performance of the RD&D project against stated objectives.

4.2.1 Sampling Methods and Frequency

A Data Quality Objectives (DQO) process and the resultant TSAP will be completed prior to project operations to support evaluation of the TBI Phase 2 against the project objectives. Samples will be collected consistent with WAC 173-303-110. To determine the performance of the IXC, it expected that liquid samples will be taken from the last process tote, as column performance in capturing ^{137}Cs is expected to decline as operations continue and the resin becomes loaded. The DQO process will determine the data required to evaluate the TBI Phase 2 pretreated waste performance against the project objectives. Sampling requirements (e.g. number of samples and locations) will be determined and documented in the TSAP. Samples collected for the TBI Phase 2 will be sent onsite for analysis at the 222-S Laboratory; the TSAP will identify information on transportation of the samples to the onsite laboratory, and tracking of the samples.

Sections of the TSAP for TBI Phase 2 will also include the following:

- **Sampling Objectives.** Sampling will be conducted to evaluate the extent of contamination and the decontamination effectiveness.

DRAFT

- **Analytical Parameters.** Analytical parameters, methods, and specific analytical and sampling procedures will be based on knowledge of the operations and wastes processed (i.e., process knowledge) in TBI Phase 2. A list of indicator parameters, or constituents of concern (COCs), will be developed based on potential COCs present and the closure performance standard (designation and/or risk-based limits). The analyses will follow the methods described in *Test Methods for Evaluating Solid Waste, Physical/Chemical Methods* (EPA 1999) and/or other approved methods.
- **Sampling Methods.** Sampling will be performed in a manner consistent with EPA and Ecology guidelines in the following documents:
  - *Quality Assurance/Quality Control Guidance for Removal Activities: Sampling and QA/QC Plan and Data Validation Procedures, Interim Final* (EPA 1990).
  - *Guidance on Sampling and Data Analysis Methods* (Ecology 1995).
- **Sampling Equipment, Containers, and Preservation.** The Sampling equipment containers, and sample preservation techniques will be in accordance with procedures outlined in *Test Methods for Evaluating Solid Waste, Physical Chemical Methods* (EPA 1996).
- **Chain-of-Custody Record.** The chain-of-custody record will ensure the integrity of the samples, from collection through analysis to final disposition.

4.3 Secondary Waste Stream Sampling

Secondary solid waste will be generated during operation of the TBI Phase 2 system. This section covers general requirements for management of expected secondary solid wastes. No secondary liquid wastes are expected to be generated in this process.

4.3.1 Secondary Solid Waste

A variety of solid and semisolid waste will be generated during operation of the TBI Phase 2 system. Waste streams may include, but are not limited to, waste material residues, protective equipment, and discarded samples taken during testing. These materials will be properly designated, packaged and be disposed on site at a permitted disposal facility unit in accordance with the unit's waste acceptance criteria. No sampling will be required to dispose of the secondary solid waste.

4.4 Ion Exchange Column

The IXC will be packaged and stored at the CWC Storage Facility at Hanford until final disposition occurs. The packaged IXC must meet the *Hanford Site Solid Waste Acceptance Criteria* (HNF-EP-0063) for storage at CWC; sampling of CST media from the loaded IXC is not expected to be required to comply with the criteria. Characterization requirements will be documented in the DQO and the Sampling and Analysis Plan (SAP).

4.5 Sampling the SY Tank Farm Exhauster System

The SY Tank Farm exhauster will be sampled as required by existing air permits for SY-101, for both radiological and toxics constituents; these permits are listed in the DST Part A. No revisions to current sampling will be required to support TBI Phase 2.

4.6 Quality Assurance and Quality Control

4.6.1 General

This QA/QC section is prepared to support sampling and analysis to be implemented for the TBI Phase 2 system operations.

DRAFT

The purpose of the QA/QC program is to ensure that an activity or project meet a required standards contained in the WAP and TSAP. QA is associated with recordkeeping, tracking, audits, and assessments, and involves determining the desired level of quality and setting limits in advance. QC is associated with the controls implemented while an activity is being performed. QC can be measured quantitatively, with the collection and analysis of duplicate sampling.

Any laboratory performing analyses in support of feed qualification shall conduct work in accordance with a laboratory QA plan. The QA plan is reviewed by DOE and its contractor for acceptability. Laboratory QC monitors the quality of the analytical methods. Specifically, QC results are compared to established evaluation criteria to determine if the analytical system performs properly when the analysis is conducted. Evaluation criteria, typically included in the laboratory QA plan, could be administrative limits specified in the standard methods upon which the laboratory procedure is based or performance-based limits established through statistical process control (SPC). SPC limits are statistically determined by multiple analyses over time. EPA encourages the use of performance-based criteria so SPC limits should be used whenever available. All data not meeting the QC acceptance criteria shall be flagged with appropriate qualifiers and discussed in the narrative of the data report.

Field and Laboratory QA/QC requirements for the TBI Phase 2 sampling will be documented in the TSAP.

4.6.2 Chain of Custody Requirements

Chain-of-custody forms are used to document the possession of samples from the time they are collected through completion of laboratory analysis. An examples chain-of-custody form will be included in the TSAP. The following information will be recorded for samples of waste, treatment residuals, and secondary waste:

- The type of waste collected;
- Names and signatures of sampling personnel;
- Sample number, date and time of collection, and designation, e.g., grab sample, etc.;
- Analyses to be performed;
- If applicable, the shipping number for samples shipped to off-site laboratories.

4.6.3 Trip Blanks and Equipment Blanks

The trip blank will be a water sample carried during the sample collection activities to ensure that contamination is not occurring during the different steps of sample collection and transportation to the laboratory. The equipment blank is a sample of analyte-free water used to rinse the sampling equipment. It is used to document the adequate decontamination of sampling equipment. Decontamination will be performed if disposable sampling equipment cannot be used. Analysis for the trip blank and equipment blank will be the same analytical test performed for the specified procedures.

4.6.4 Duplicate Sampling Requirements & Blanks

The duplicate sample is a second aliquot of the collected sample and is used to determine method precision. The relative percent difference of the two samples is calculated by first obtaining the difference of the two samples, dividing the difference by the average of the two samples, and multiplying by 100.

4.6.5 Matrix Spike and Matrix Spike Duplicate Samples

The matrix spike and matrix spike duplicate (MS/MSD) samples are QC samples spiked with known quantities of analytes. MS/MSD samples ensure that the analysis is testing for the specific analytes. Precision of a given sample can be calculated by the relative percent difference between the analytical results for the MS/MSD samples.

DRAFT

4.6.6 Verification and Validation of Analytical Data

The data verification and validation processes will ensure that the data resulting from the selected analytical method are consistent with requirements specified in the DQO/TSAP. The waste services group will analyze the data to support final waste designation of the pretreated waste in accordance with WAC 173-303-300. The data will also be used by the project staff to evaluate performance against the project objectives listed in Section 1.5. These evaluations will be documented in the TBI Phase 2 RD&D Project Final Report described in Section 6.3.

4.6.6.1 Data Verification

The primary data reporting will be by electronic data systems. Data verification will be performed on laboratory data packages that support environmental compliance to ensure that their content is complete and in order. A review of the data package will be performed to ensure that:

- The data package contains the required technical information;
- Deficiencies are identified and documented;
- Identified deficiencies are corrected by the laboratory and the appropriate revisions are made;
- Deficient pages are replaced with the laboratory corrections.

4.6.6.2 Data Validation

Data validation ensures that the data resulting from analytical measurements meet the quality requirements specified in the QA/QC plan. Data validation will be performed on data packages that support environmental compliance.

5.0 INSPECTION PLAN

5.1 Project Requirements

The purpose for conducting inspections of the TBI system is to ensure that situations do not exist that might cause or lead to the release of dangerous or mixed waste to the environment or that might pose a threat to human health and the environment. This inspection plan is designed to provide early warning of the potential for such events in order to make timely corrections and/or take preventative actions. Discrepancies or non-compliant conditions identified by inspections must be corrected on a schedule that helps prevent hazards to personnel, the public, and/or the environment. The inspections conducted during the operation and closure of TBI Phase 2 will meet applicable regulatory requirements including: WAC 173-303-320, WAC 173-303-630(6) and WAC 173-303-640(6). The TBI Phase 2 project inspection requirements are in addition to the inspection requirements for the SY Tank Farm.

A copy of the inspection schedule will be kept at the Shift Office and in the TBI Phase 2 Operating Record. Inspections within the schedule are performed by qualified personnel according to a frequency that has been developed through both regulatory requirements and operating experience. Inspection requirements will continue until certification of completion of closure. During an inspection, inspectors evaluate each inspection item against its associated acceptance criteria, defined in the schedule. The results of the inspections are documented in inspection logs that are dated and signed (handwritten or electronic signature) by the inspector.

Management-level staff responsible for implementation of the Inspection Plan are the Shift Operations Manager (i.e. Shift Operations Manager, Shift Manager, or Operations Manager) as described in the DST DWTP. Management-level staff review and concur with inspection records. All inspectors are trained in accordance with the DST DWTP, and a copy has been placed in the TBI Phase 2 Operating Record.

DRAFT

5.2 Inspection Schedule

5.2.1 General

The frequency of inspection is how often (at a minimum) an inspection must be performed. The frequency of inspections is based on the rate of possible deterioration of equipment and the probability of a threat to human health or the environment.

Unless otherwise noted, inspection frequencies are defined by the following periodicities:

- Daily means once per calendar day;
- Weekly means once during the period from Sunday to Saturday;
- Monthly means once per calendar month.

5.2.2 Daily Inspections

Daily inspections will include the following:

- Areas subject to spills;
- Above ground portions of the tank system to detect corrosion or releases of waste;
- Monitoring data from any leak detection equipment.

5.2.3 Weekly Inspections

Weekly inspections will consist of the following:

- Inspection of container storage areas for leaking containers (totes) and for deterioration of containers and secondary containment system;
- Confirmation that area security controls including placards and signage are in place, intact, and functional.

5.2.4 Monthly Inspections

Additional inspections will include, but are not limited to, safety equipment and emergency response supplies located at the SY Tank Farm, such as the following:

- Fire extinguishers;
- Eye wash stations;
- First aid supplies;
- Personnel protective clothing;
- Spill kits.

5.3 Documentation

Inspection reports will be maintained in a master inspection log maintained as a part of the TBI Phase 2 Project Operating Record. Frequency of inspection, format and content of the inspection report forms, and the inspection log will be in compliance with the requirements of WAC 173-303-320, WAC 173-303-630(6), and WAC 173-303-640(6). Notations of observations made and deficiencies noted during an inspection are recorded on inspection log. The inspection log will also include an account of spills or discharges in accordance with WAC 173-303-145, and the date and nature of any repairs or remedial actions taken.

If the inspection identifies a finding of deficiency, the inspector must specifically describe the situation on the inspection form and determine whether the condition of the item is “acceptable” for continued use pending repair or replacement, or is “unacceptable” and must be repaired or replaced prior to further use.

DRAFT

If while performing an inspection, a leak or spill to secondary containment is discovered, facility operations responds per the response procedures in Section 2.14. Action is taken to stop the leak, temporarily remove the unit from service, determine the cause, and the waste is removed from secondary containment within 24 hours or as soon as possible, preventing harm to human health and the environment. The inspection records are used to help determine any necessary corrective actions.

If an inspection was scheduled or attempted; but could not be performed or fully completed due to a planned event (e.g., planned power outage or a waste transfer), then a reasonable attempt will be made to re-schedule and complete the inspection within the identified inspection frequency. If the cause was due to an unplanned event (e.g., Hanford Site or local area emergency or injury; unplanned power outage; unexpected or radiological conditions, work, training, severe weather, or safety restrictions); the missed inspection or portions thereof that were not completed will be documented on the relevant inspection log and noted in the TBI Phase 2 RD&D Project Final Report described in Section 6.3.

5.4 Corrective Action for Discrepancies and Non-compliances

The TBI Phase 2 project inspection checklist for each activity or area must contain a signature and date block for review and approval of the corrective actions (if any). Discrepancies and non-compliant conditions noted on the checklist must be corrected at the first opportunity. Once a condition is corrected, the inspector is required to sign the inspection checklist, noting the area has been re-inspected and is in compliance with permit requirements. The inspector must also provide a brief description of those actions in the inspection log. The inspection log must contain all completed inspection reports and supporting documentation for corrective actions taken must be maintained in accordance with WAC 173-303-380 and Section 6.0 of this Permit. A current copy of the inspection log must be kept in the TBI Phase 2 Operating Record.

6.0 RECORD KEEPING AND REPORTING

6.1 General

Record keeping and reporting for the TBI project has two components:

- TBI Phase 2 Operating Record requirements;
- Final Report on the TBI Phase 2 RD&D Permit.

6.2 Operating Record Requirements

The Permittees for the RD&D Permit will maintain a "**written operating record"** of activities conducted under the TBI Phase 2 project. The record will be maintained until closure of the TBI Phase 2 project in the Integrated Document Management System.

The TBI Phase 2 Operating Record will include the following:

- A description and quantity of dangerous waste treated at the TBI Phase 2 project – WAC 173-303-380(1)(a);
- The location and quantity of dangerous waste within the container storage area – WAC 173-303-380(1)(b);
- Records and results of analyses required by WAC 173-303-300, Waste Analysis – WAC 173-303-380(1)(c);
- Summary reports and details of all incidents that require implementing the Contingency Plan – WAC 173-303-380(1)(d);
- Records and results of inspections conducted under the TBI Phase 2 Inspection Plan, Section 5.0 of this permit application – WAC 173-303-380(1)(e);

DRAFT

- Monitoring, testing, or analytical data, and corrective action where required by WAC 173-303-630 through 172-202-646 – WAC 173-303-380(1)(f);
- Manifests of waste shipped off-site – WAC 173-303-180(3)(iii);
- Copies of the DST Security Plan, HEMP, DST Preparedness and Prevention Plan, DST Building Emergency Plan, DST Contingency Plan, DST DWTP, and DST WAP;
- Design documents and drawings, and the IQRPE Integrity Assessment and Certifications as required in Section 3.4.

6.3 RD&D Project Final Report

Upon completion of the TBI Phase 2 RD&D project, a final report will be prepared to evaluate the performance of the experimental test that was conducted. Report content and discussion will provide sufficient information and data to allow evaluation against project objectives listed in Section 1.5 of this permit application, and how this information could be used by the DOE to support future work.

The Final Report on the TBI Phase 2 RD&D will present, at a minimum, process descriptions, data, and results. The final RD&D report will also be placed in the Operating Record for TBI Phase 2 and SY-101 to document actions taken at the tank.

7.0 CLOSURE PLAN

7.1 Introduction

The RCRA Closure of RD&D activities differs from closure of a full-scale operating unit at the Hanford Site. All equipment and facilities related to the TBI Phase 2 are only temporarily located at the SY Tank Farm. No permanent waste storage or disposal facilities will be constructed as part of TBI Phase 2. Therefore, the scope of closure activities is limited to those applicable to decontamination and removal of TBI Phase 2 equipment; decontamination of the site, if applicable; and restoration of the site to its pre-RD&D activity state. The amount of waste pretreated and stored as part of TBI Phase 2 at SY-101 will be 2,000 gallons[3].

7.2 Regulatory Compliance

Closure activities will comply with applicable portions of WAC 173-303-610. Some equipment will be removed during the course of the RD&D project and the remainder will be removed at the completion of the TBI Phase 2 project. Ecology Publication #94-111, *Guidance for Clean Closure of Dangerous Waste Facilities*, will be used to guide closure activities (Ecology 2005).

7.3 Health and Safety Requirements during Closure

Closure activities will be performed in a manner to ensure the safety of personnel and the surrounding environment. Qualified personnel will perform closure activities in compliance with established safety and environmental procedures. All work will be performed as low as ALARA with respect to worker exposure to radiation, dangerous waste, and other workplace hazards. Personnel will be equipped with appropriate personal protective equipment. Qualified personnel are trained in applicable safety and environmental procedures and have appropriate training in decontamination activities. Field operations will be performed in accordance with applicable health and safety requirements.

[3]The total amount of waste that TBI Phase 2 project will pretreat is 2,000 gallons of waste, +/- 50 gallons due to the accuracy range of the flow monitoring equipment.

DRAFT

This plan proposes an approach to clean closure of the TBI Phase 2 project system. If there is evidence of a release to the surrounding soils as identified in final closure actions, an amended closure plan in accordance with WAC 173-303-610(3) and WAC 173-303-830 will be submitted to Ecology. The amended closure plan will include additional closure activities as necessary to assure that levels of dangerous waste constituents or residues do not exceed numeric cleanup levels as specified by WAC 173-303-610(2)(b)(i).

7.4 Closure Performance Standards

Closure performance standards in WAC 173-303-610(2) require the unit to be clean closed in a manner that protects human health and the environment, minimizes the need for further maintenance, and returns the land to the appearance and use of surrounding land areas.

To satisfy the closure performance standards, the TBI Phase 2 project will be clean closed by removal or decontamination of all dangerous waste, waste residues, equipment, and secondary containment. All TBI Phase 2 equipment will be removed from SY-101 as part of closure. Pre-existing contamination in and around SY-101 will not be part of the clean closure activities. Closure will require the removal of all pretreated dangerous waste, removal of all TBI Phase 2 installed process equipment and contaminated structural components, shipment of the waste containers to permitted storage units, inspection of the secondary containment for any potential ruptures, and final removal of the secondary containment. Following final removal of all equipment and secondary containment, a physical walkdown will also be performed by the IQRPE to verify that no evidence of spills or leaks exist, and that the TBI Phase 2 has met the closure performance standards by removal of all components.

All material, equipment, or structures removed will be designated in accordance with WAC 173-303-070 and disposed. Equipment that does not meet the clean debris rule or cannot be 100% inspected will be managed as mixed waste and disposed appropriately. All equipment from the TBI Phase 2 project is expected to be removed and disposed of as waste.

7.5 Closure Activities

For this closure plan, closure activities are outlined from activities that are authorized as part of this RD&D Permit. Closure activities will entail decontamination and/or removal and disposal of all equipment. The general order of closure activities has been selected to minimize the potential release of mixed waste constituents by removing the bulk of the mixed waste early in the closure process.

7.5.1 Removal of Waste Containers

The process and delay totes will be removed from the secondary containment and shipped to a permitted facility as described in Section 3.6.3.

7.5.2 Decontaminating and Removing Structures and Equipment

Structures and equipment anticipated to be contaminated from the TBI Phase 2 project at closure include tank and pipe surfaces, the IXC in SY-101, and above ground ancillary equipment that is part of the ITPS. Decontamination of the equipment to place the unit in standby was previously described in Section 3.7. Decontamination methods will be selected based on demonstrated effectiveness in a radioactive environment and the ability to successfully achieve the closure performance standards. These methods will be based on information in the TBI Phase 2 Operating Record, existing radiation levels, and experience decontaminating similar components and equipment at the SY Tank Farm.

DRAFT

The above-ground TBI components are expected to have minimal surface contamination and are not expected to require extensive decontamination prior to packaging for shipment to a disposal facility. The in-tank subsystem TBI equipment will be extracted through the TBI installed spray ring and riser adapter assembly. As the equipment is extracted from SY-101, the spray ring is activated to remove any contamination present. As the equipment is pulled from the tank, the equipment will be remotely monitored for surface contamination. If undesirable levels are detected, the equipment will be re-inserted below the spray ring and washes will continue until acceptable levels are achieved prior to equipment removal.

Following any decontamination required, the majority of the TBI Phase 2 project system subject to this closure plan will be removed from the SY Tank Farm and disposed at a permitted disposal facility at Hanford. The IXC will be placed in a DOT compliant container and shipped from the SY Tank Farm to CWC for interim storage, pending final treatment and disposal. The CWC Facility is operating under interim status standards as detailed in WAC 173-303-805.

Air emission control equipment will remain in-place and in operation as necessary to facilitate pretreatment equipment deactivation and decontamination. Compliance with applicable air emission standards will be maintained. Air permits in place during the operational phase will be reviewed to determine applicability during the closure period and modified as necessary per applicable regulations.

7.5.3 Removing Dangerous Waste Residues

Residues remaining in the TBI Phase 2 system piping and equipment will be flushed and purged with compressed air prior to removal. Residues may be removed during decontamination and managed as mixed waste separately from the components. The majority of any contaminated residues are expected to remain with the contaminated piping and equipment for removal, and packaged for permanent disposal in a permitted facility to satisfy closure requirements.

7.5.4 Removal and Closure of Secondary Containment

After all of the TBI Phase 2 in-tank and above ground installed system is removed, a visual inspection will be performed on the secondary containment system to ensure that no cracks or potential leaks to the surrounding soil have occurred during operation. If any discrepancies are noted, the location will be recorded to facilitate sampling after the secondary containment is removed. If no discrepancies are noted, the secondary containment will be decontaminated, if necessary, and packaged for disposal at a permitted facility, which will satisfy the closure requirements.

7.5.5 Sampling and Analysis to Identify Extent of Decontamination/Removal and to Verify Achievement of Closure Standard

After closure activities have been completed as outlined in Sections 7.5.1 through 7.5.4, a records review will be completed to determine if any spills or releases to the soil are noted in the TBI Phase 2 Operating Record. The TBI Phase 2 is being performed inside an operating TSD tank, SY-101, which contains pre-existing contamination and waste. Therefore, closure of the TBI Phase 2 system will be restricted to only components and activities associated with this RD&D Permit and not previous activities in and around SY-101 as part of its permitted activities.

If no records are found to document a potential release associated with TBI Phase 2, and the final survey outlined in Section 7.5.4 does not identify any leaks in the secondary containment, closure performance standards will have been met by removal of the secondary containment and visual surveys of the soil underneath. No soil sampling for TBI Phase 2 will be required if there are no evidence of leaks, spills, or other potential soil contamination. To address final closure of SY-101 tank, future sampling of the surface soil will be included as part of closure of the SY Tank Farm in accordance with an approved closure plan.

DRAFT

If there are indications of a potential release to the soil, analytical sampling will be required to demonstrate achievement of the closure performance standards, and a SAP and a revised closure plan will be prepared and submitted for approval. The SAP will describe the approach to be followed for confirming that decontamination and/or removal activities have attained the closure performance standards for all applicable media as outlined in WAC 173-303-610(2)(b), including the achievements of Method B cleanup levels as defined in the Model Toxics Control Act.

Sections of a SAP will include:

- **Sampling Objectives.** Sampling will be conducted to evaluate the extent of contamination and the decontamination effectiveness.
- **Analytical Parameters.** Analytical parameters, methods, and specific analytical and sampling procedures will be based on knowledge of the operations and wastes processed (i.e., process knowledge) in TBI Phase 2. A list of indicator parameters, or COCs, will be developed based on potential COCs present and the closure performance standard (designation and/or risk-based limits). The analyses will follow the methods described in *Test Methods for Evaluating Solid Waste, Physical/Chemical Methods* (EPA 1999) and/or other approved methods.
- **Sampling Methods.** Sampling will be performed in a manner consistent with EPA and Ecology guidelines in the following documents:
  - *Quality Assurance/Quality Control Guidance for Removal Activities: Sampling and QA/QC Plan and Data Validation Procedures, Interim Final* (EPA 1990).
  - *Guidance on Sampling and Data Analysis Methods* (Ecology 1995).
- **Sampling Equipment, Containers, and Preservation.** The Sampling equipment containers, and sample preservation techniques will be in accordance with procedures outlined in *Test Methods for Evaluating Solid Waste, Physical Chemical Methods* (EPA 1999).
- **Chain-of-Custody Record.** The chain-of-custody record will ensure the integrity of the samples, from collection through analysis to final disposition.

7.6 Schedule for Closure

The TBI Phase 2 Project Schedule, Table 2-1, has identified a closure date for the components of the TBI Phase 2 system and submittal of the certification of closure. If closure plan modifications are necessary to achieve clean closure, a revised schedule will be proposed as part of a permit modification package that will be submitted to Ecology.

7.7 Certification of Closure

Within 60 days of completion of closure activities for the facility, a copy of the closure certification, signed by the owner or operator and an IQRPE, will be transmitted, via registered mail to Ecology and placed in the administrative record. The certification of closure will cover only the portions of the TBI Phase 2 covered by the closure activities outlined in this closure plan. The certification will occur upon disposition of waste generated and completion of closure activities. The IQRPE will provide a signed statement that meets the applicable requirements of WAC 173-303-610(6)(m) certifying that the closure activities were performed in accordance with the technical specifications of this closure plan.

8.0 REFERENCES

29 Code of Federal Regulations, Occupational Safety and Health Standards, U.S. Department of Labor. https://www.osha.gov/laws-regs/regulations/standardnumber/1910

40 Code of Federal Regulations, Protection of the Environment, U.S. Environmental Protection Agency. https://www.ecfr.gov/cgi-bin/text-idx?tpl=/ecfrbrowse/Title40/40tab_02.tpl

DRAFT

49 Code of Federal Regulations, Transportation¸ U.S. Department of Transportation. https://www.ecfr.gov/cgi-bin/ECFR?page=browse

APT-F&R-118-R0, *2018 Test Bed Initiative for Off-site Treatment and Disposal of 2,000 Gallons of Hanford Low Activity Waste*, Rev. 0, Aerostar Perma-Fix TRU Services LLC, Oak Ridge, Tennessee.

CEES-1409 2019, *Process Control Plan for the TBI System*, Rev. 1, Aerostar Perma-Fix TRU Services LLC, Oak Ridge, Tennessee.

DOE O 435.1, *Radioactive Waste Management Manual*, DOE M 435.1-1, Chg. 2, 2011, U.S. Department of Energy, Washington, D.C. https://www.emcbc.doe.gov/Content/Office/doe_m_435.1_1_chg_1.pdf

DOE/RL-94-02, *Hanford Emergency Management Plan*, Rev. 6, June 2014. https://fortress.wa.gov/ecy/nwp/permitting/HDWP/Rev/8c/Attachments/Att_04_Em_Mgt.pdf

Ecology, EPA, and DOE, 1989, *Hanford Federal Facility Agreement and Consent Order - Tri-Party Agreement*, as amended, State of Washington Department of Ecology, U.S. Environmental Protection Agency, and U.S. Department of Energy, Olympia, Washington. https://www.hanford.gov/page.cfm/TriParty

Ecology 1995, *Guidance on Sampling and Data Analysis Methods*, Publication Number 94-49, January 1995. https://fortress.wa.gov/ecy/publications/summarypages/9449.html

Ecology 2005, Ecology Publication #94-111, *Guidance for Clean Closure of Dangerous Waste Facilities.* https://fortress.wa.gov/ecy/publications/documents/94111.html

EPA 1986, 530-SW-86-008, *Guidance Manual for Research, Development, and Demonstration Permits under 40 CFR Section 270.65*. https://nepis.epa.gov/Exe/ZyPURL.cgi?Dockey=2000KSB1.txt

EPA 1990, *Quality Assurance/Quality Control Guidance for Removal Activities: Sampling and QA/QC Plan and Data Validation Procedures*, OSWER Directive 9360.4-01, April 1990. https://nepis.epa.gov/Exe/ZyPURL.cgi?Dockey=10001W5Q.txt

EPA 1999, *Test Methods for Evaluating Solid Waste, Physical/Chemical Methods*, EPA SW 846, March 1999, Update VI 2017. https://www.epa.gov/hw-sw846

HNF-EP-0063, 2011, *Hanford Site Solid Waste Acceptance Criteria*, Rev. 16, CH2M HILL Plateau Remediation Company, Richland, Washington. https://www.hanford.gov/files.cfm/HNF-EP-0063_R18_Website.pdf

RPP-PLAN-62774, *Tank 241-SY-101 Grab Sampling and Analysis Plan in Support of Test Bed Initiative-Phase 2*, Rev. 0, Washington River Protection Solutions, LLC, Richland, Washington.

RPP-RPT-61303, *Final Analytical Report for Tank 241-SY-101 TBI Grab Sampling 2018*, Rev. 2, U.S. Department of Energy Contract DE-AC27-08RV14800, Richland, Washington.

WAC 173-303, Dangerous Waste Regulations, Washington Administrative Code, as amended. http://apps.leg.wa.gov/WAC/default.aspx?cite=173-303

DRAFT

Appendix A: Test Bed Initiative Phase 2 Engineering Drawings and Process Control Plan

- Engineering Drawings
- Process Control Plan

Table 1 TBI Phase 2 Engineering Drawings and Plans

Number	Title
CEES-16-604-A-002	DOE TBI SY-101 Site Plan
CEES-16-604-P-004	DOE TBI SY-101 P&ID
CEES-16-604-P-012	DOE TBI SY-101 PFD
CEES-16-604-M-005	DOE TBI SY-101 IX Riser Adapter Assembly
CEES-16-604-M-006	DOE TBI SY-101 Pump Column Assembly
CEES-16-604-M-007	DOE TBI SY-101 Hose Assemblies
CEES-16-604-M-008	DOE TBI SY-101 Pipe Stands
CEES-16-604-M-022	DOE TBI SY-101 Distribution Valve Manifold
CEES-16-604-M-023	DOE TBI SY-101 Delay Tote Assembly
CEES-16-604-M-024	DOE TBI SY-101 Backflush Skid Assembly
CEES-16-604-M-026	DOE TBI SY-101 IX Column Vessel
CEES-16-604-M-028	DOE TBI SY-101 Filter Assembly
CEES-16-604-M-039	DOE TBI SY-101 Process Tote Assembly
CEES-16-604-M-054	DOE TBI SY-101 Spray Ring
CEES-16-604-M-065	DOE TBI SY-101 Pipe in Pipe
CEES-1409	Process Control Plan for the TBI System

Engineering Drawing

CEES-16-604-A-002

DOE TBI SY-101 Site Plan

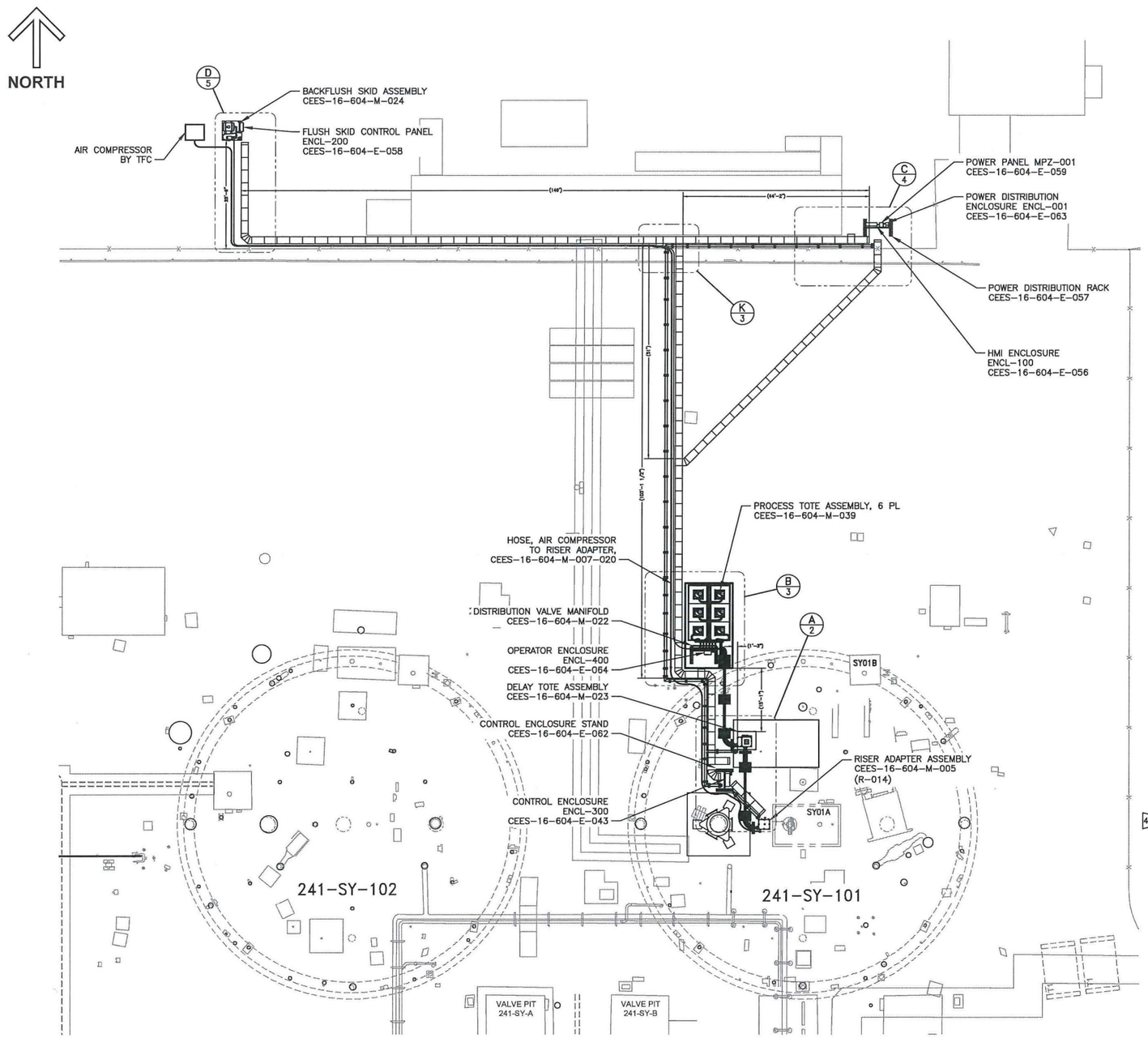

SITE PLAN
SCALE: 3/16"=1'

PARTS LIST/MATERIAL LIST

QTY -010	PARTS / DASH NUMBER	NOMENCLATURE/DESCRIPTION	MATERIAL/REFERENCE	SHEET	ITEM NO
121	YJ5-125	5-CHANNEL CORD PROTECTOR, YELLOW JACKET	CHECKERS INDUSTRIAL	2,3, 4,5	1
4	YJ5TR-125	45° RIGHT TURN CORD PROTECTOR, YELLOW JACKET	CHECKERS INDUSTRIAL	4	2
6	YJ5TL-125	45° LEFT TURN CORD PROTECTOR, YELLOW JACKET	CHECKERS INDUSTRIAL	2,3, 4,5	3
6	(YJ5X-200)	45° X PROTECTOR, YELLOW JACKET	CHECKERS INDUSTRIAL	3,4	4
AR	CF54150EZ	CABLE TRAY, 2" DEEP, 6" WIDE, 10' L	CABLOFIL	2,3, 4	5
AR	SWKEZ	SPLICE WASHER KIT	CABLOFIL	2,3, 4	6
AR	FS 41	FASTRUT CONNECTOR	CABLOFIL	2,3, 4	7
6	RADT90	90° CABLE TRAY HARDWARE	CABLOFIL	2,4	9
AR	(MB12)	PIPE SUPPORT WITH CHANNEL, 12" MORTAR BLOCK	(A-RISE PIPE SUPPORT INC.)	2,3, 4	10
7	YJ5EB-125	END BOOTS, YELLOW JACKET	CHECKERS INDUSTRIAL	2,3, 4,5	11
AR		BONDING JUMPER, BARE COPPER WIRE, #6 AWG	COML	2,3, 4	12
12		NUT, HEX, 7/8-9UNC-2B	ASTM A194, GR 8F	6	13
6	SS4CC-06-144	CABLE TRAY, 6" WIDE	B-LINE	6	14
3	SS4CC-06-90HB24	CABLE TRAY 90° HORIZONTAL BEND	B-LINE	2	15
2	SS4CC-06-60HB24	CABLE TRAY 60° HORIZONTAL BEND	B-LINE	2,3	16
36	9(SS4)-1246	CABLE TRAY HOLD DOWN CLAMP	B-LINE	6	17
36	1/2" X 1" HHCS	HEX HEAD CAP SCREW, 1/2-13	B-LINE	6	18
36	N225	SPRING NUT, 1/2-13	B-LINE	6	19
					20
2	(GKA4C)	GROUND LUG, UL LISTED, #4-14 AWG	(BURNDY)	2,5, 6	21
5	(KS20)	SPLIT BOLT, UL LISTED, #4-8 AWG	(BURNDY)	2,5, 6	22
AR	(LG6)	LOAD-GRIP CARGO RESTRAINT MAT	(KN RUBBER)	2,3	23

GENERAL NOTES: (UNLESS OTHERWISE SPECIFIED)

1. RECOMMENDED CABLE ROUTING ALONG WITH ASSOCIATED CABLE TRAYS AND/OR CORD PROTECTORS.
2. LOCATE EQUIPMENT IN APPROXIMATE LOCATION AS SHOWN.
3. ROUTE HOSES APPROXIMATELY AS SHOWN. SLOPE AS SHOWN ON P&ID (CEES-16-604-P-004).

4 LIST OF REFERENCE DRAWINGS.

DRAWING/DOCUMENT REFERENCES	
REF NUMBER	TITLE
CEES-16-604-E-042	CABLE & CONDUIT SCHEDULE
CEES-16-604-E-043	CONTROL ENCLOSURE
CEES-16-604-E-056	HMI ENCLOSURE
CEES-16-604-E-057	POWER DISTRIBUTION RACK
CEES-16-604-E-058	FLUSH SKID CONTROL PANEL
CEES-16-604-E-062	CONTROL ENCLOSURE
CEES-16-604-E-063	480VAC DISTRIBUTION ENCL
CEES-16-604-E-064	OPERATOR ENCLOSURE
CEES-16-604-M-005	RISER ADAPTER ASSEMBLY
CEES-16-604-M-007	HOSE ASSEMBLIES
CEES-16-604-M-008	PIPE STANDS
CEES-16-604-M-022	DISTRIBUTION VALVE MANIFOLD
CEES-16-604-M-023	DELAY TOTE ASSEMBLY
CEES-16-604-M-024	BACKFLUSH SKID ASSEMBLY
CEES-16-604-M-039	PROCESS TOTE ASSEMBLY
CEES-16-604-M-054	12" SPRAY RING

JOHN COLIN HENDERSON
STATE OF WASHINGTON
31912
REGISTERED
PROFESSIONAL ENGINEER
5/1/19

THIS DESIGN DEVELOPED FOR USE BY THE US DEPARTMENT OF ENERGY UNDER CONTRACT NO. DE-EM0004216.

	NAME	DATE
DESIGN BY	PM MCELROY	4/22/19
DRAFTING CHECKER	JT FOSS	5/1/19
ENGINEER	D CAP	5/2/19
ENGINEERING CHECKER	T BECK	5/2/19
PROJECT MANAGER	P BODEN	5/1/19

Columbia Energy AND ENVIRONMENTAL SERVICES

DOE TBI SY-101
SITE PLAN

SIZE F | DWG NO CEES-16-604-A-002 | REV 0
SCALE AS SHOWN | SHEET 1 OF 6

4								
REF NUMBER	TITLE	REV NO	DESCRIPTION	REV BY DATE	DRAFTING CHECKER DATE	ENGINEER DATE	ENGINEERING CHECKER DATE	PROJECT MANAGER DATE
DRAWING/DOCUMENT REFERENCES								
NEXT USED ON END ITEM		REVISIONS						

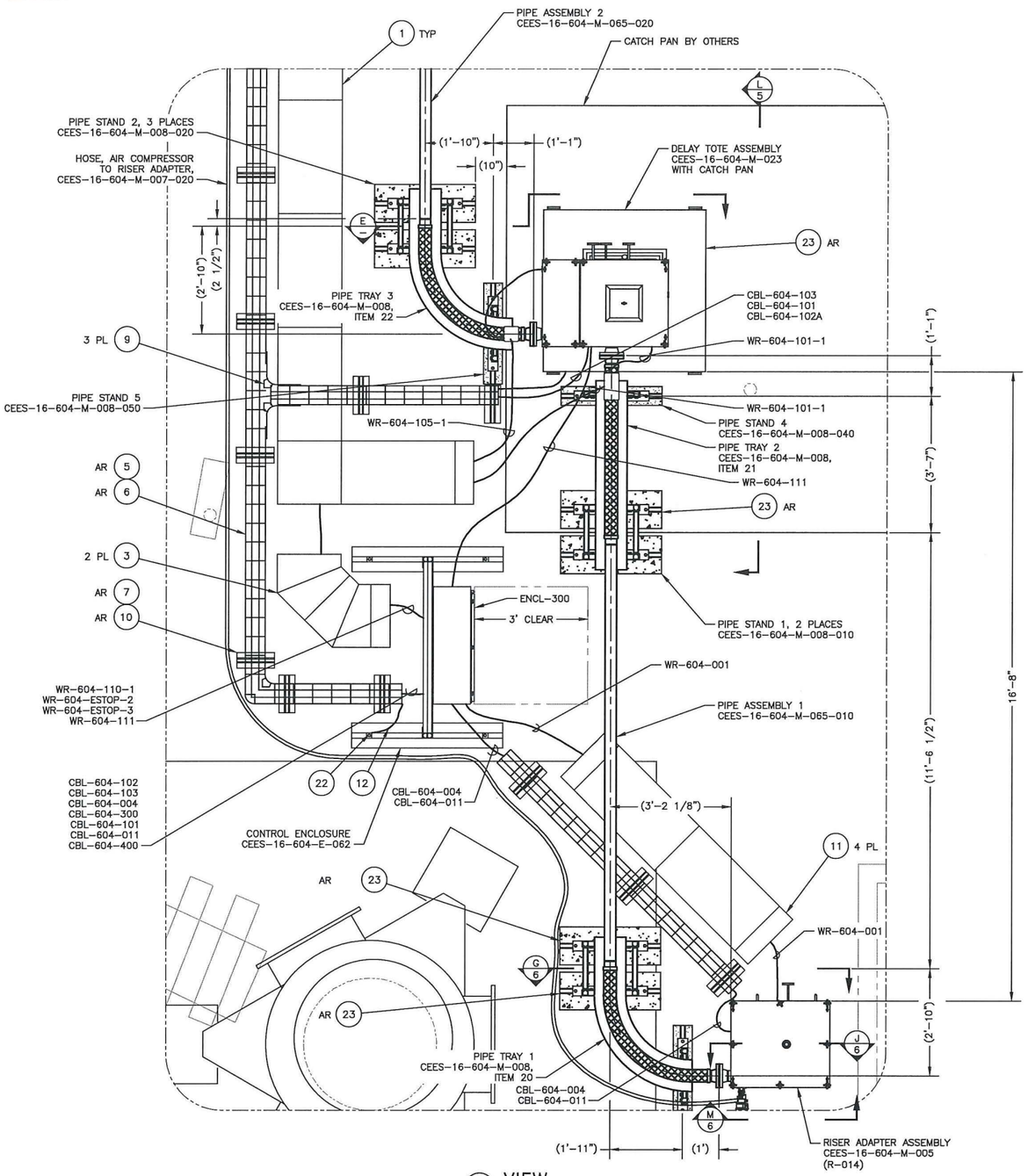

A 1 VIEW
SCALE: 3/4"=1'

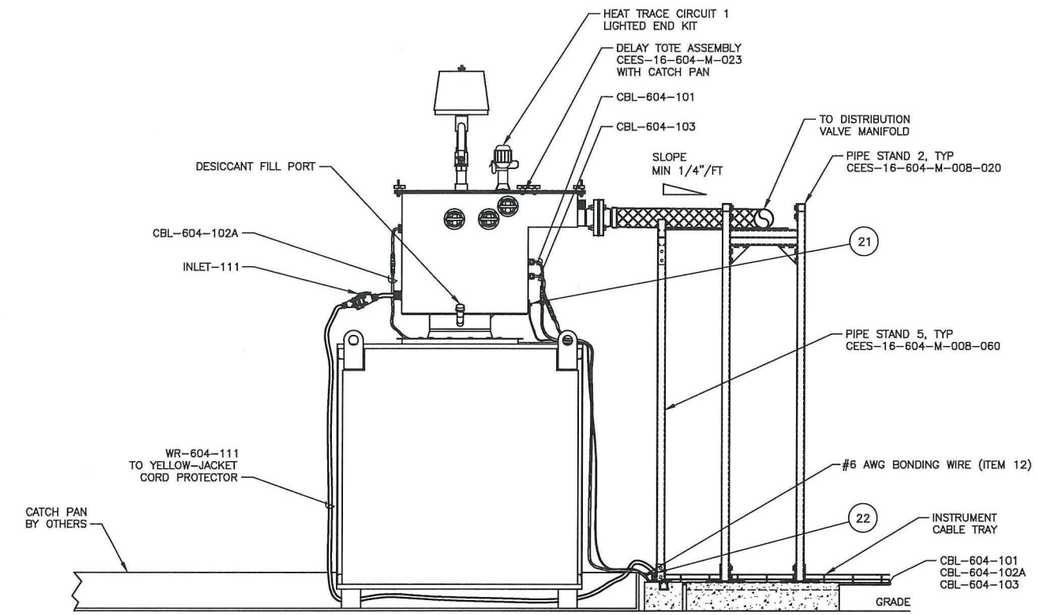

E VIEW
SCALE: 1"=1'
SOME BACKGROUND ITEMS REMOVED FOR CLARITY.

THIS DESIGN DEVELOPED FOR USE BY THE US DEPARTMENT OF ENERGY UNDER CONTRACT NO. DE-EM0004216.

	NAME	DATE
DRAWN BY	PM MCELROY	4/22/19
DRAFTING CHECKER	JT FOSS	5/1/19
ENGINEER	D CAP	5/2/19
ENGINEERING CHECKER	T BECK	5/2/19
PROJECT MANAGER	P BODEN	5/1/19

Columbia Energy AND ENVIRONMENTAL SERVICES

DOE TBI SY-101
SITE PLAN

SIZE F | DWG NO CEES-16-604-A-002 | REV 0
SCALE AS SHOWN | SHEET 2 OF

REV NO	DESCRIPTION	REV BY DATE	DRAFTING CHECKER DATE	ENGINEER DATE	ENGINEERING CHECKER DATE	PROJECT MANAGER DATE

REVISIONS

NORTH

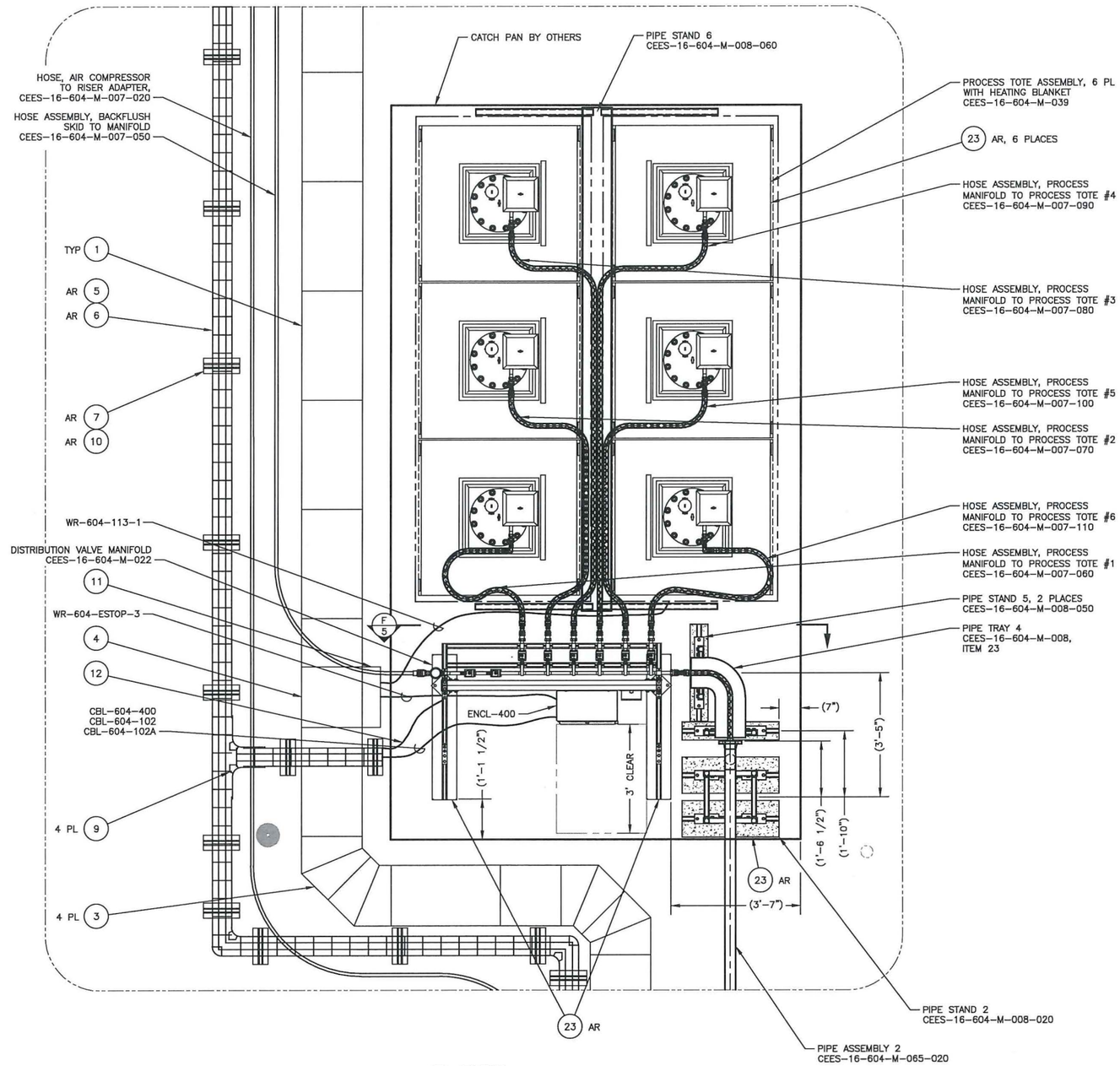

B 1 VIEW
SCALE: 3/4"=1'

JOHN COLIN HENDERSON
STATE OF WASHINGTON
31912
REGISTERED
PROFESSIONAL ENGINEER
5/2/19

THIS DESIGN DEVELOPED FOR USE BY THE US DEPARTMENT OF ENERGY UNDER CONTRACT NO. DE-EM0004216.

	NAME	DATE
DRAWN BY	P.M. MCELROY	4/22/19
DRAFTING CHECKER	JT FOSS	5/1/19
ENGINEER	D CAP	5/2/19
ENGINEERING CHECKER	T BECK	5/2/19
PROJECT MANAGER	P BODEN	5/1/19

Columbia Energy AND ENVIRONMENTAL SERVICES

DOE TBI SY-101
SITE PLAN

SIZE F | DWG NO CEES-16-604-A-002 | REV 0
SCALE AS SHOWN | SHEET 3 OF

REV NO	DESCRIPTION	REV BY DATE	DRAFTING CHECKER DATE	ENGINEER DATE	ENGINEERING CHECKER DATE	PROJECT MANAGER DATE

REVISIONS

NORTH

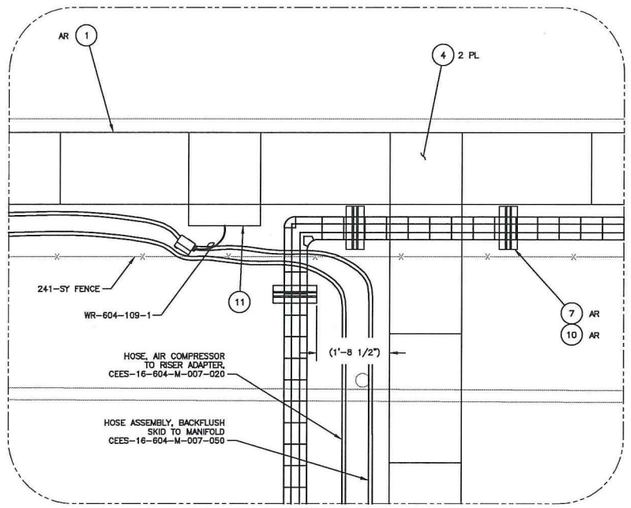

K/1 VIEW
SCALE: 1"=1'

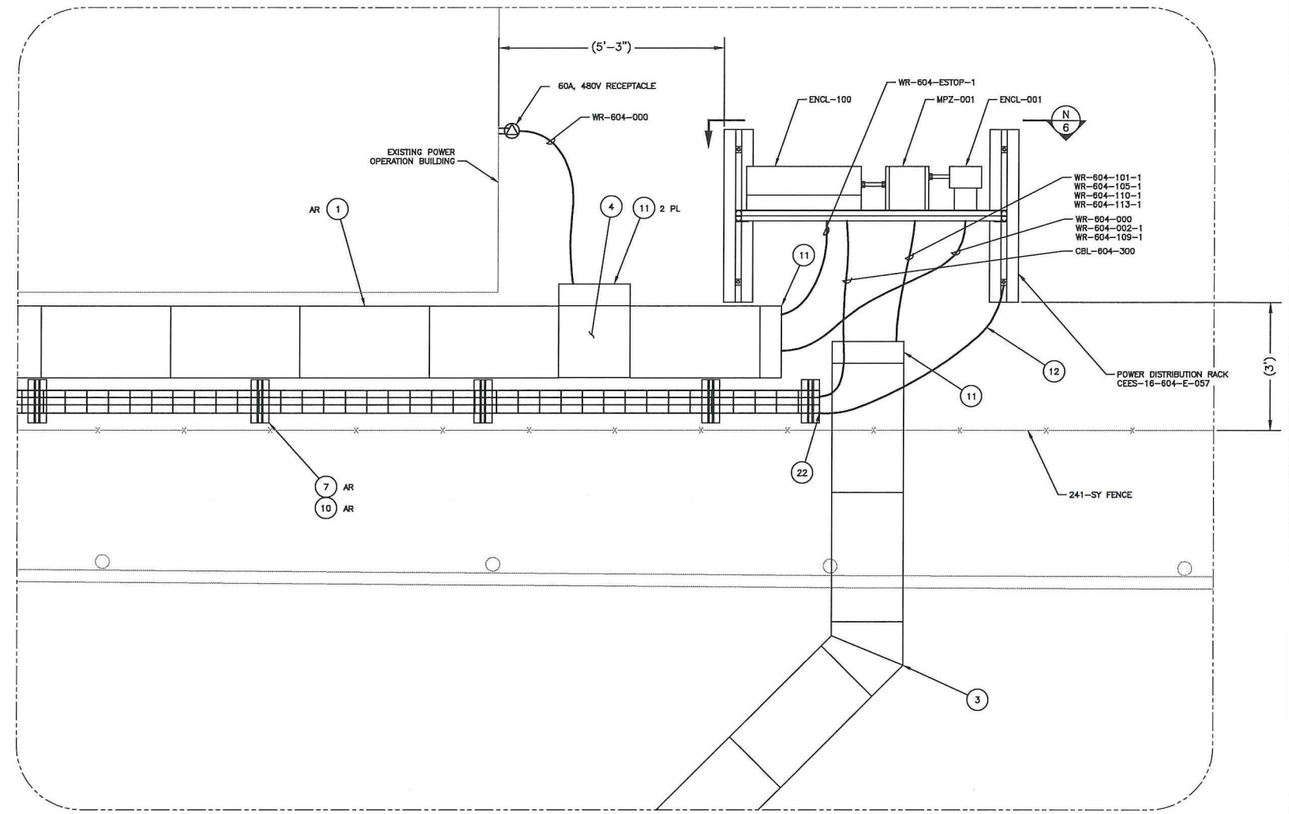

C/1 VIEW
SCALE: 1"=1'

THIS DESIGN DEVELOPED FOR USE BY THE US DEPARTMENT OF ENERGY UNDER CONTRACT NO. DE-EM0004216.

	NAME	DATE
DRAWN BY	PM MCELROY	4/22/19
DRAFTING CHECKER	JT FOSS	5/1/19
ENGINEER	D CAP	5/2/19
ENGINEERING CHECKER	T BECK	5/2/19
PROJECT MANAGER	P BODEN	5/1/19

Columbia Energy AND ENVIRONMENTAL SERVICES

DOE TBI SY-101
SITE PLAN

SIZE F | DWG NO CEES-16-604-A-002 | REV 0
SCALE AS SHOWN | SHEET 4 OF

REV NO	DESCRIPTION	REV BY DATE	DRAFTING CHECKER DATE	ENGINEER DATE	ENGINEERING CHECKER DATE	PROJECT MANAGER DATE

REVISIONS

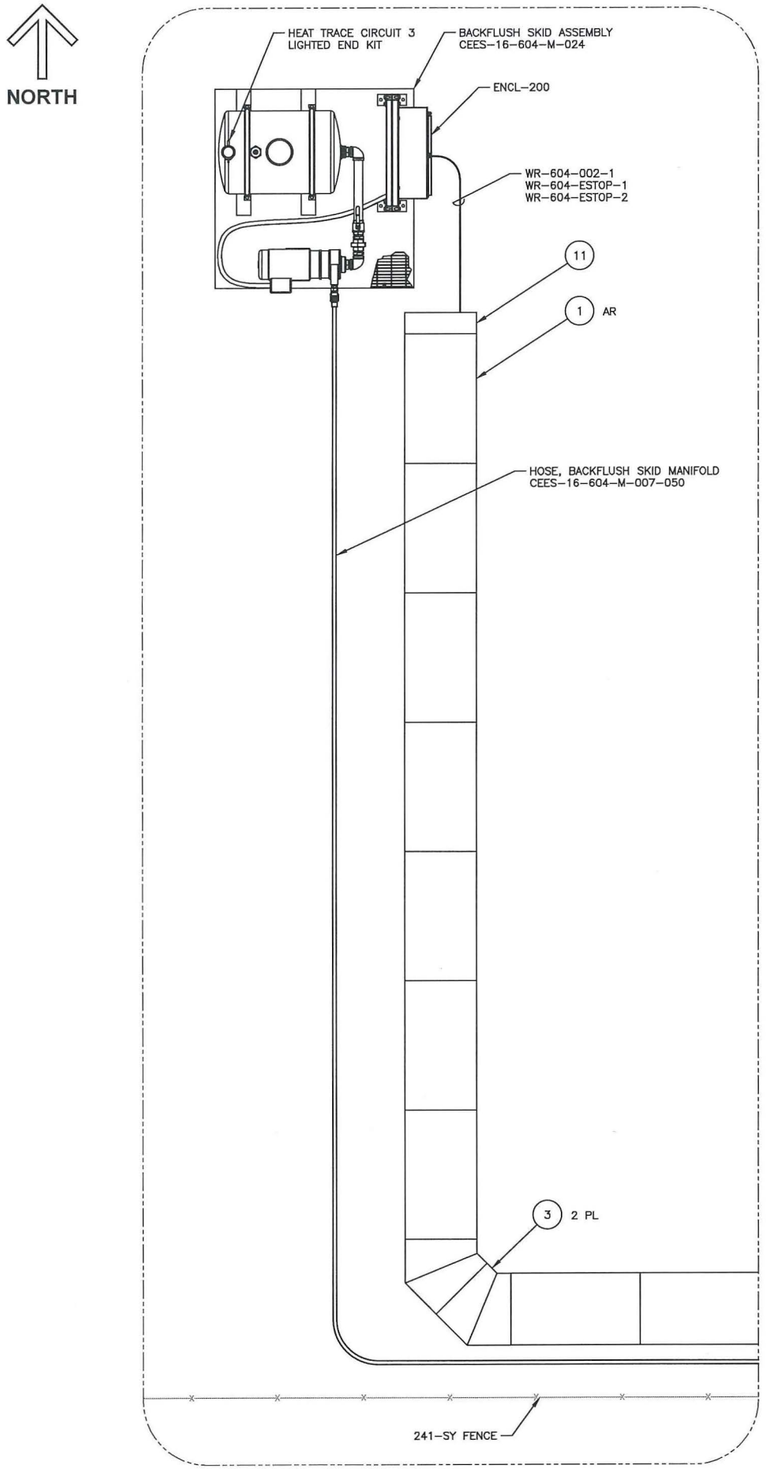

D 1 VIEW
SCALE: 1"=1'

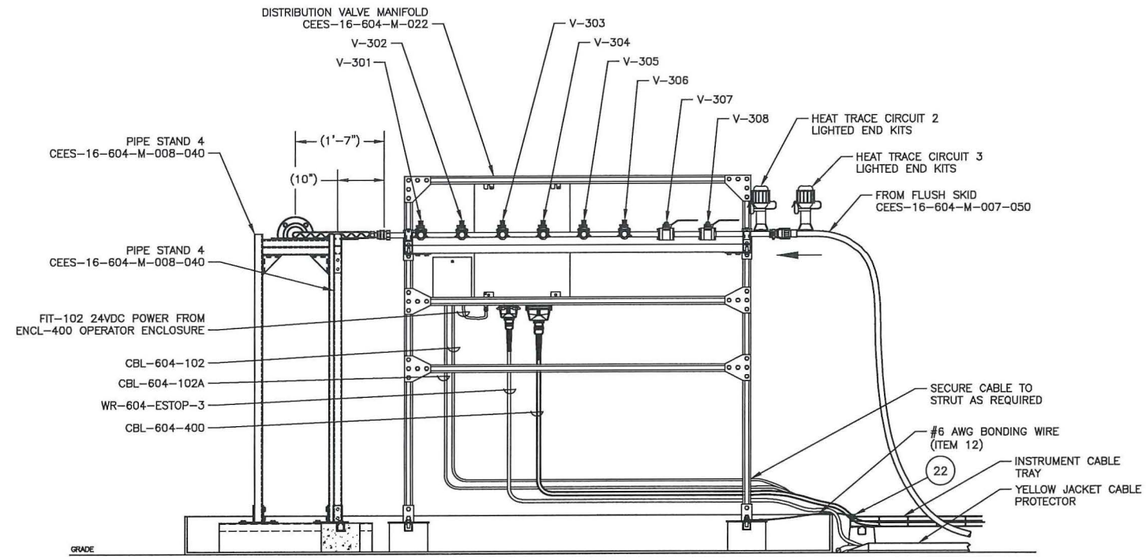

F 3 VIEW
SCALE: 1"=1'

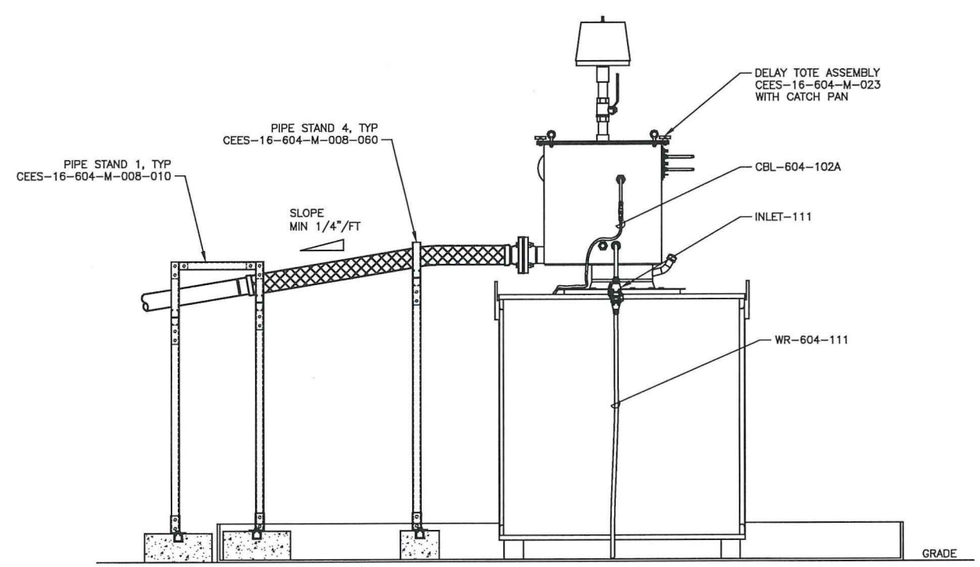

L 2 VIEW
SCALE: 1"=1'
SOME BACKGROUND ITEMS REMOVED FOR CLARITY.

THIS DESIGN DEVELOPED FOR USE BY THE US DEPARTMENT OF ENERGY UNDER CONTRACT NO. DE-EM0004216.

	NAME	DATE
DRAWN BY	PM MCELROY	4/22/19
DRAFTING CHECKER	JT FOSS	5/1/19
ENGINEER	D CAP	5/2/19
ENGINEERING CHECKER	T BECK	5/2/19
PROJECT MANAGER	P BODEN	5/1/19

Columbia Energy AND ENVIRONMENTAL SERVICES

DOE TBI SY-101
SITE PLAN

SIZE F | DWG NO CEES-16-604-A-002 | REV 0
SCALE AS SHOWN | SHEET 5 OF

REV NO	DESCRIPTION	REV BY DATE	DRAFTING CHECKER DATE	ENGINEER DATE	ENGINEERING CHECKER DATE	PROJECT MANAGER DATE

REVISIONS

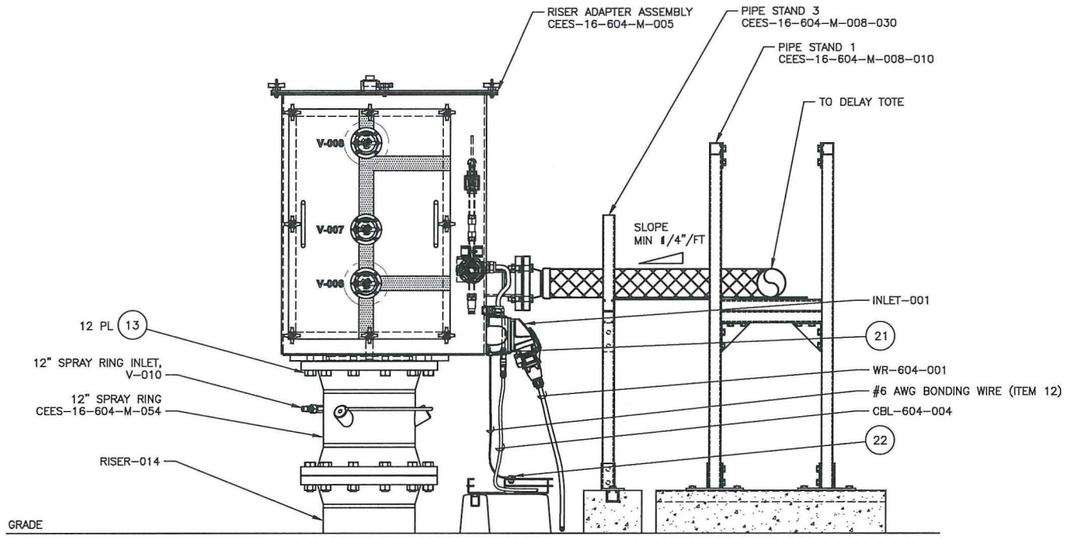

G 2 VIEW
SCALE: 1 1/2"=1'

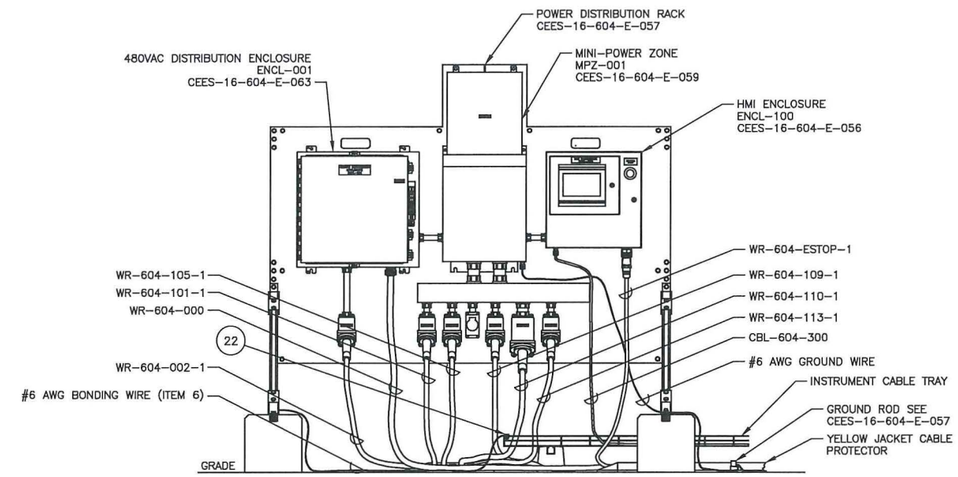

N 4 VIEW
SCALE: 1"=1'
SOME BACKGROUND ITEMS REMOVED FOR CLARITY.

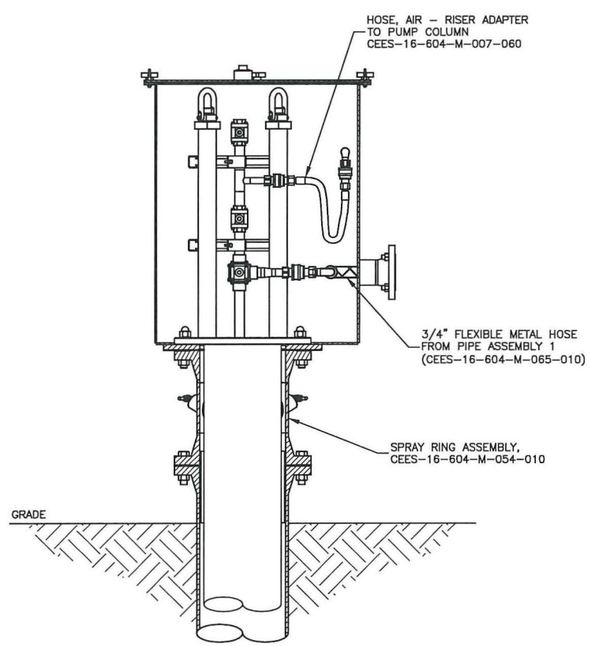

J 2 SECTION
SCALE: 1 1/2"=1'
RISER ADAPTER PINS
ROTATED FOR

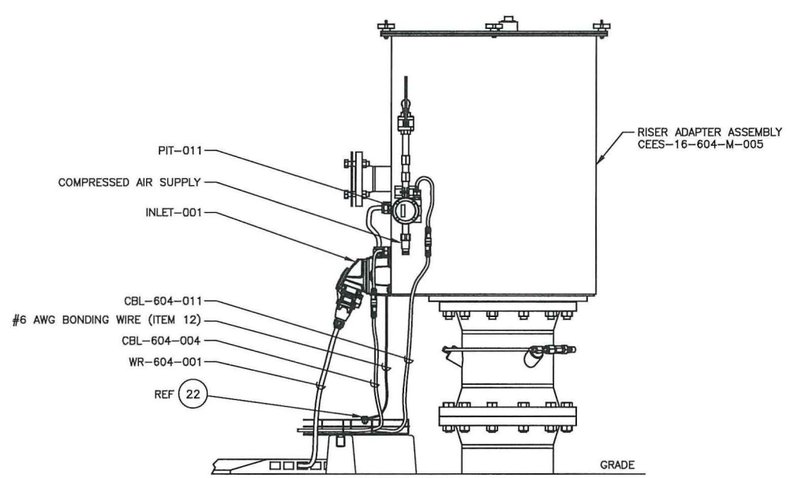

M 2 SECTION
SCALE: 1 1/2"=1'

THIS DESIGN DEVELOPED FOR USE BY THE US DEPARTMENT OF ENERGY UNDER CONTRACT NO. DE-EM0004216.

	NAME	DATE
DRAWN BY	P.M. MCELROY	4/22/19
DRAFTING CHECKER	JT FOSS	5/1/19
ENGINEER	D CAP	5/2/19
ENGINEERING CHECKER	T BECK	5/2/19
PROJECT MANAGER	P BODEN	5/1/19

Columbia Energy AND ENVIRONMENTAL SERVICES

DOE TBI SY-101
SITE PLAN

SIZE F | ORIG NO CEES-16-604-A-002 | REV 0
SCALE AS SHOWN | SHEET 6 OF

REV NO	DESCRIPTION	REV BY DATE	DRAFTING CHECKER DATE	ENGINEER DATE	ENGINEERING CHECKER DATE	PROJECT MANAGER DATE

REVISIONS

Engineering Drawing

CEES-16-604-P-004

DOE TBI SY-101 P&ID

SYMBOL LEGEND

- BALL VALVE (NORMALLY CLOSED)
- BALL VALVE (NORMALLY OPEN)
- 5. 3-WAY BALL VALVE WITH T-HANDLE
  - POSITION 1
  - POSITION 2
  - POSITION 3
- 5. T-HANDLE VALVE
- BLIND FLANGE
- CAP/PLUG
- CHECK VALVE
- CORIOLIS MASS FLOW METER
- ENCASED LINE HEAT TRACE, OR HEAT TRACED & INSULATED LINE
- FLT FILTER BREATHER
- FLANGED PIPE JOINT
- HOSE
- ION EXCHANGE COLUMN
- I HARD WIRED INTERLOCK
- I SOFTWARE INTERLOCK
- R LIGHT (LETTER DESIGNATE COLOR OF INDICATION: R = RED)
- LOCATED IN FIELD, NOT IN A PANEL, VISIBLE IN FIELD
- LOCATED IN OR ON FRONT OF PANEL
- MONITOR & CONTROL SYSTEM MCS IN FIELD OF HMI
- M MOTOR
- PUMP (CENTRIFUGAL)
- PUMP (DRUM)
- PUMP (PROGRESSIVE CAVITY)
- PRESSURE RELIEF VALVE
- QUICK DISCONNECT WITH INTERNAL CHECK VALVE
- CAMLOCK
- REDUCER
- STRAINER
- TOTE
- UNION

XXXXX / XXXXXX / X.X.X
- LOCATION/DESCRIPTION
- PURPOSE
- CONTINUED ON SHEET. VERTICAL ZONE. HORIZONTAL ZONE

LINE TYPES

- ELECTRICAL
- PIPING
- SOFTWARE OR INTERNAL COMMUNICATION SIGNAL
- PIPING WITH HEAT TRACE

ACRONYMS

ATM	ATMOSPHERE
CV	CHECK VALVE
FAL	FLOW ALARM LOW
FE	FLOW ELEMENT
FI	FLOW INDICATION
FIT	FLOW INDICATING TRANSMITTER
FLT	FILTER
FQAH	FLOW TOTALIZER ALARM HIGH
FQI	FLOW TOTALIZER INDICATION
HS	HAND SWITCH
H2O	WATER
IL	LIGHT
IX	ION EXCHANGE COLUMN
LE	LEVEL ELEMENT
LAH	LEVEL ALARM HIGH
LI	LEVEL INDICATOR
LIT	LEVEL INDICATING TRANSMITTER
LS	LEVEL SWITCH
LSA	LEVEL SWITCH ALARM
LSH	LEVEL SWITCH HIGH
LT	LEVEL TRANSMITTER
P	PUMP
PAH	PRESSURE ALARM HIGH
PI	PRESSURE INDICATOR
PIT	PRESSURE INDICATING TRANSMITTER
PLC	PROCESS LOGIC CONTROLLER
PT	PRESSURE TRANSMITTER
RD	RUPTURE DISK
TK	TANK
TS	TEMPERATURE SWITCH
TT	TOTE
V	VALVE
XI	RUNNING INDICATION

GENERAL NOTES: (UNLESS OTHERWISE SPECIFIED)

1. EQUIPMENT EIN NUMBERS TO BE PREFIXED WITH "TBI-". EXAMPLE: TBI-V-101
2. VALVES ARE SHOWN IN THEIR NORMAL OPERATING POSITION.
3. DELAY AND PROCESS TOTES ARE 375 GALLON CAPACITY.
4. BACK-FLUSH TANK HAS A 55 GALLON CAPACITY.
5. TEE HANDLES ARE DESIGNED FOR OPERATION OF VALVES THROUGH SECONDARY CONTAINMENT.

INTERLOCK TABLE

INTERLOCK #	WHAT TRIGGERS THE INTERLOCK	DESCRIPTION	SETPOINT	TYPE SOFTWARE/HARDWARE	ACTIONS TAKEN
I1	MANUAL ACTIVATION OF ANY E-STOP BUTTON HS-900A, HS-900B, HS-900C OR HS-900D	E-STOP	ANY ACTIVATION	HARDWIRE	STOPS P-001 STOPS P-111 STOPS P-202
I2	LEVEL (LAH-101) IN DELAY TOTE HAS EXCEEDED HIGH SETPOINT	LEVEL IN DELAY TOTE HAS EXCEEDED THE MAXIMUM FILL LEVEL	340 GALLONS	SOFTWARE	STOPS P-001 IN FORWARD
I3	LSH-103 ACTIVE	LEAK IN DELAY TOTE CONTAINMENT BOX	ANY ACTIVATION	HARDWARE	STOPS P-001 IN FORWARD STOPS P-111 STOPS P-202
I4	FQAH-102 ACTIVE	TOTALIZED VALUE OF FIT-102 HAS EXCEEDED SETPOINT	333 GALLONS	SOFTWARE	STOP P-001 IN FORWARD

REF NUMBER	TITLE
CEES-16-604-E-043	CONTROL ENCLOSURE
CEES-16-604-E-056	HMI ENCLOSURE
CEES-16-604-E-058	FLUSH SKID CONTROL PANEL
CEES-16-604-E-064	OPERATOR ENCLOSURE
CEES-16-604-M-005	RISER ADAPTER ASSEMBLY
CEES-16-604-M-006	PUMP COLUMN ASSEMBLY
CEES-16-604-M-022	DISTRIBUTION VALVE MANIFOLD
CEES-16-604-M-023	DELAY TOTE ASSEMBLY
CEES-16-604-M-024	BACKFLUSH SKID ASSEMBLY
CEES-16-604-M-026	IX COLUMN VESSEL
CEES-16-604-M-028	FILTER ASSEMBLY
CEES-16-604-M-039	PROCESS TOTE ASSEMBLY
CEES-16-604-M-054	SPRAY RING

DRAWING/DOCUMENT REFERENCES

NEXT USED ON END ITEM

REV NO	DESCRIPTION	REV BY DATE	DRAFTING CHECKER DATE	ENGINEER DATE	ENGINEERING CHECKER DATE	PROJECT MANAGER DATE

REVISIONS

THIS DESIGN DEVELOPED FOR USE BY THE US DEPARTMENT OF ENERGY UNDER CONTRACT NO. DE-EM0004216.

	NAME	DATE
DRAWN BY	A. EISCHENS	4/22/19
DRAFTING CHECKER	JT FOSS	5/1/19
ENGINEER	D CAP	5/2/19
ENGINEERING CHECKER	T BECK	5/2/19
PROJECT MANAGER	P BODEN	5/1/19

Columbia Energy AND ENVIRONMENTAL SERVICES

DOE TBI SY-101
P&ID

SIZE F | DWG NO CEES-16-604-P-004 | REV 0

SCALE AS SHOWN | SHEET 1 OF 4

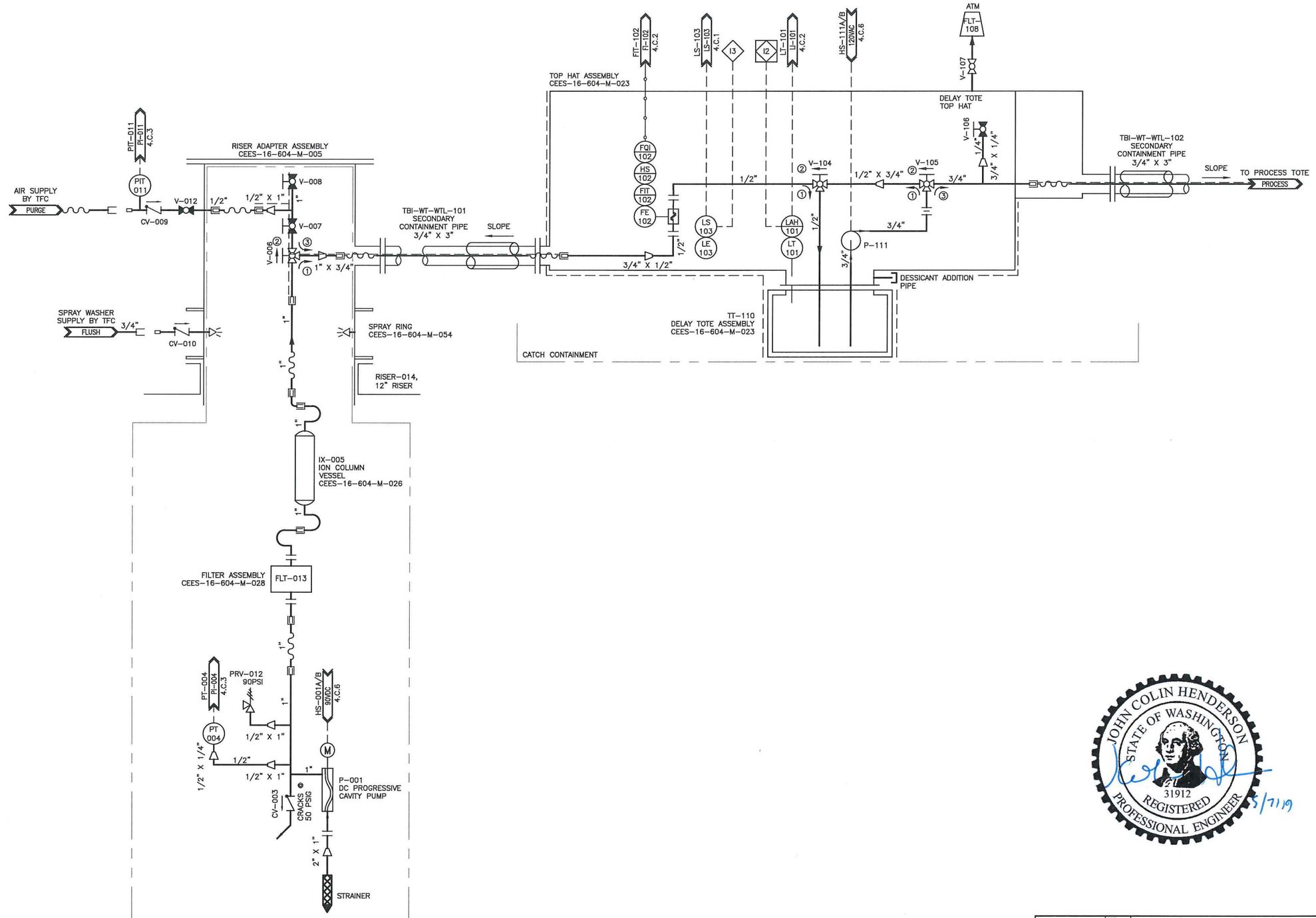

REF NUMBER	TITLE
DRAWING/DOCUMENT REFERENCES	
NEXT USED ON	

REV NO	DESCRIPTION	REV BY DATE	DRAFTING CHECKER DATE	ENGINEER DATE	ENGINEERING CHECKER DATE	PROJECT MANAGER DATE
REVISIONS						

	NAME	DATE
DRAWN BY	A EISCHENS	4/22/19
DRAFTING CHECKER	JT FOSS	5/1/19
ENGINEER	D CAP	5/2/19
ENGINEERING CHECKER	T BECK	5/2/19
PROJECT MANAGER	P BODEN	5/1/19

Columbia Energy
AND ENVIRONMENTAL SERVICES

DOE TBI SY-101
P&ID

SIZE F | DWG NO CEES-16-604-P-004 | REV 0

SCALE AS SHOWN | SHEET 2 OF

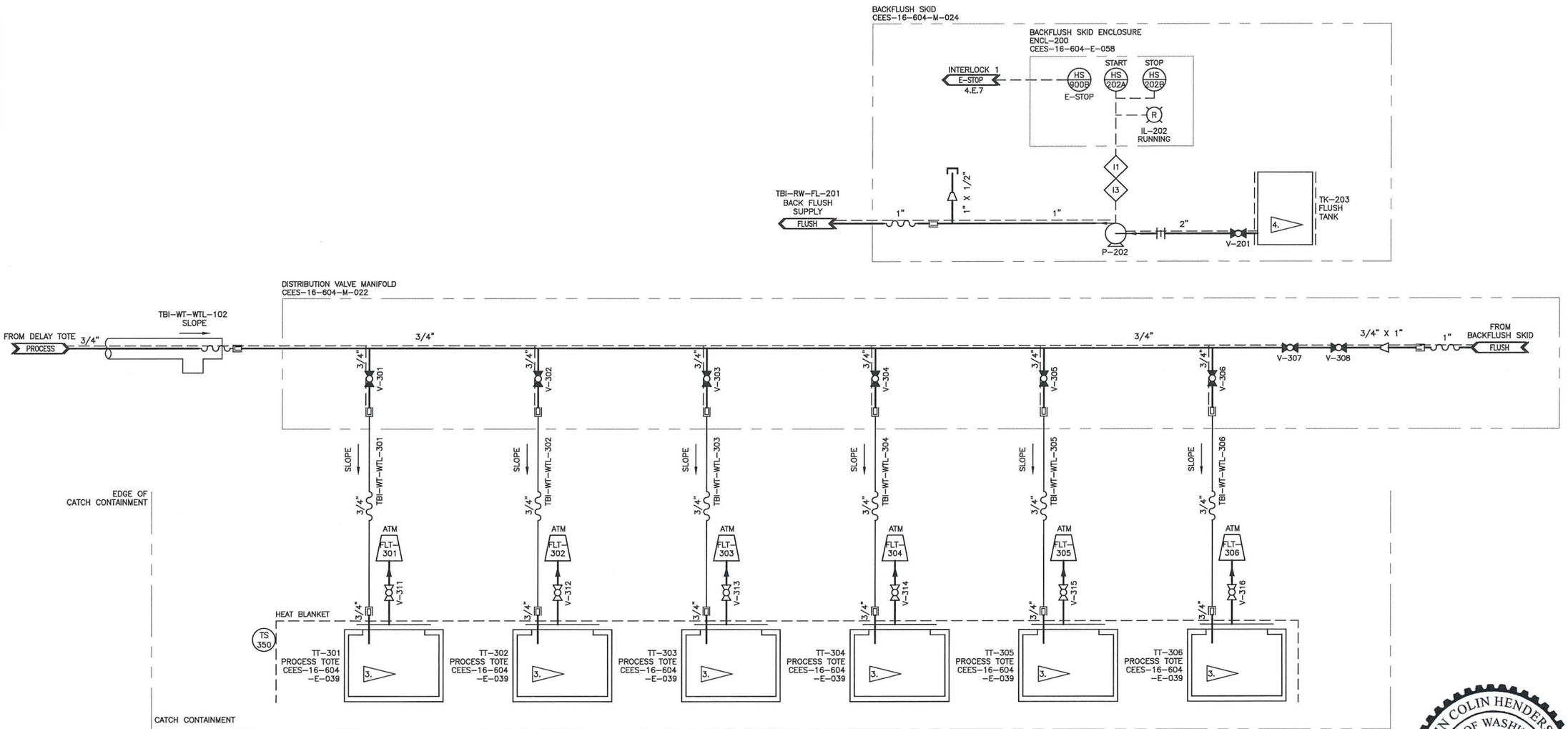

JOHN COLIN HENDERSON
STATE OF WASHINGTON
31912
REGISTERED
PROFESSIONAL ENGINEER
5/7/19

NAME	DATE
DRAWN BY A. EISCHENS	4/22/19
DRAFTING CHECKER JT FOSS	5/1/199
ENGINEER D CAP	5/2/19
ENGINEERING CHECKER T BECK	5/2/19
PROJECT MANAGER P BODEN	5/2/19

Columbia Energy
AND ENVIRONMENTAL SERVICES

DOE TBI SY-101
P&ID

SIZE F | DWG NO CEES-16-604-P-004 | REV 0
SCALE AS SHOWN | SHEET 3 OF

REF NUMBER	TITLE
DRAWING/DOCUMENT REFERENCES	
NEXT USED ON	

REV NO	DESCRIPTION	REV BY DATE	DRAFTING CHECKER DATE	ENGINEER DATE	ENGINEERING CHECKER DATE	PROJECT MANAGER DATE
REVISIONS						

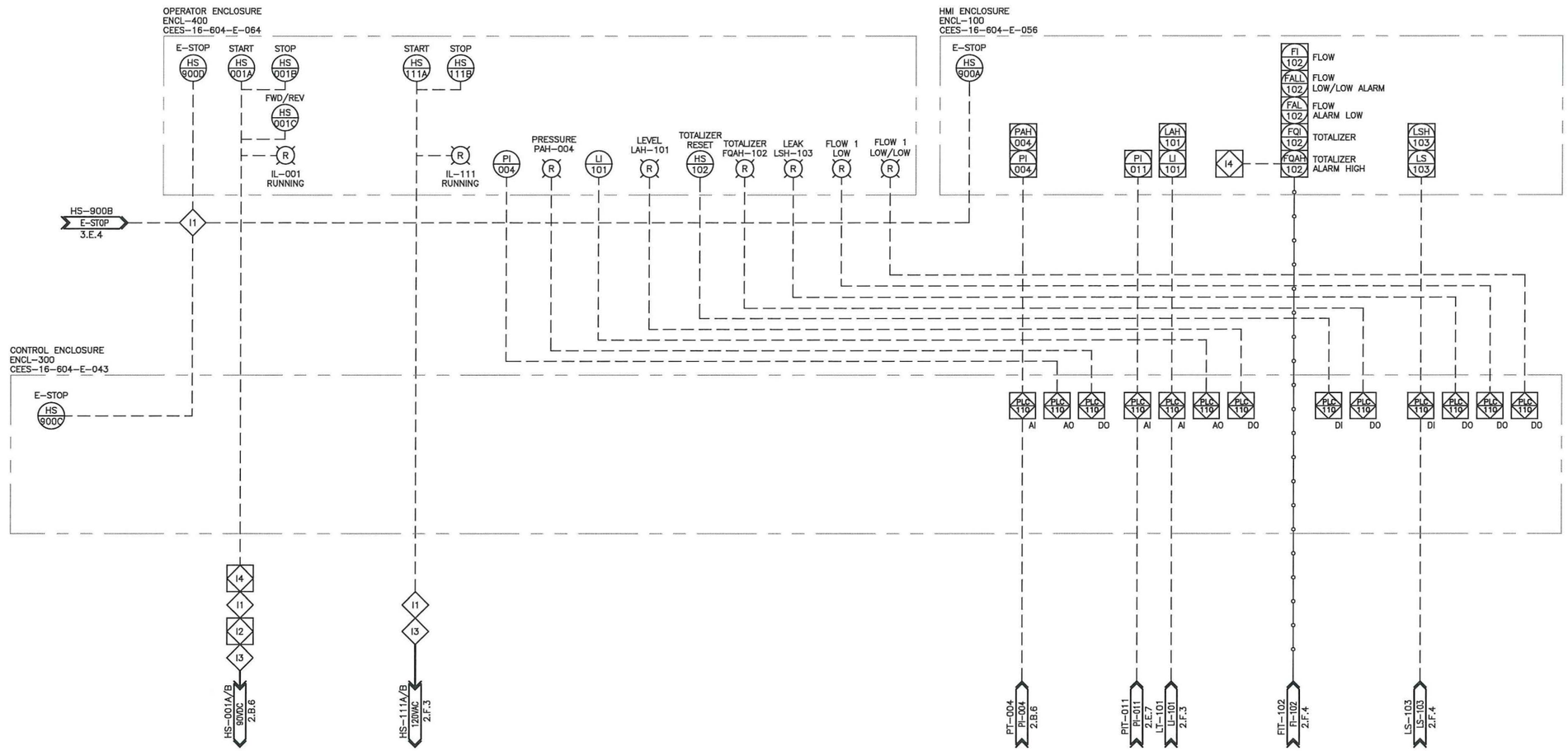

JOHN COLIN HENDERSON
STATE OF WASHINGTON
31912
REGISTERED
PROFESSIONAL ENGINEER
5/7/19

REF NUMBER	TITLE
DRAWING/DOCUMENT REFERENCES	
NEXT USED ON	

REV NO	DESCRIPTION	REV BY DATE	DRAFTING CHECKER DATE	ENGINEER DATE	ENGINEERING CHECKER DATE	PROJECT MANAGER DATE
REVISIONS						

	NAME	DATE
DRAWN BY	A. ESCHENS	4/22/19
DRAFTING CHECKER	JT FOSS	5/1/19
ENGINEER	D CAP	5/2/19
ENGINEERING CHECKER	T BECK	5/2/19
PROJECT MANAGER	P BODEN	5/1/19

Columbia Energy
AND ENVIRONMENTAL SERVICES

DOE TBI SY-101
P&ID

SIZE F | ORIG NO CEES-16-604-P-004 | REV 0

SCALE AS SHOWN | SHEET 4 OF

Engineering Drawing

CEES-16-604-P-012

DOE TBI SY-101 PFD

DOUBLE SHELL TANK FEED

STREAM NUMBER	1		6	8	15
STREAM NAME	DTS NOMINAL	DTS RANGE	DELAY TOTE	PROCESS TOTES (TOTAL)	DST POST PROCESSING
DENSITY (g/ml)	1.13	1.0–1.35	1.13	1.13	1.13
VISCOSITY (cP)	3	1–8	3	3	3
SOLIDS CONCENTRATION (PPM)	200	0–15,000	1	1	200
SOLIDS PARTICLE SIZE (μm)	100	<1–550	10	10	100
TEMPERATURE (°F)	63	68–86	63	63	63
SURFACE TENSION (dynes/cm)	80	70–100	80	80	80
VOLUME (GALLONS)	744,000	NA	333	2000	742,000
137Cs CONCENTRATION (Ci/gal)(Ci*)	8.75E–02	NA	0.0292*	0.175*	8.75E–02

PROCESSING

STREAM NUMBER	2	3	4	5	7	9	10	11	12	13	14
STREAM NAME	WASTE FEED	PRESSURIZED FEED	FILTERED FEED	DSS	DECAYED WASTE	NAOH BACKFLUSH	AIR PURGE	PUMP BYPASS	TOP HAT VENT	PROCESS TOTE VENT	DELAY TOTE DRAIN
PRESSURE (psig)	–0.2	17	17	16	19	NA	NA	NA	–0.2	ATM	NA
TEMPERATURE (°F)	63	63	63	63	63	NA	NA	NA	70	63	NA
FLOW RATE (gpm)(scfm*)	1	1	1	1	9	NA	NA	NA	0–40	1*	NA
SOLIDS CONCENTRATION (ppm)	200	200	1	1	1	NA	NA	NA	0–40	0	NA
137Cs CONCENTRATION (Ci/gal)	8.75E–02	8.75E–02	8.75E–02	8.75E–05	8.75E–05	NA	NA	NA	0–40	0	NA

FILTER BACKFLUSH

STREAM NUMBER	2	3	4	5	7	9	10	11	12	13	14
STREAM NAME	WASTE FEED	PRESSURIZED FEED	FILTERED FEED	DSS	DECAYED WASTE	NAOH BACKFLUSH	AIR PURGE	PUMP BYPASS	TOP HAT VENT	PROCESS TOTE VENT	DELAY TOTE DRAIN
PRESSURE (psig)	NA	NA	93	98	98	98	NA	60	–0.2	NA	NA
TEMPERATURE (°F)	NA	NA	70	70	70	70	NA	70	70	NA	NA
FLOW RATE (gpm)(scfm*)	NA	NA	12	12	12	12	NA	12	0–40	NA	NA
SOLIDS CONCENTRATION (ppm)	NA	NA	0	0	0	0	NA	18,100	0–40	NA	NA
137Cs CONCENTRATION (Ci/gal)	NA	NA	0	0	0	0	NA	0	0–40	NA	NA

PURGE/DRY

STREAM NUMBER	2	3	4	5	7	9	10	11	12	13	14
STREAM NAME	WASTE FEED	PRESSURIZED FEED	FILTERED FEED	DSS	DECAYED WASTE	NAOH BACKFLUSH	AIR PURGE	PUMP BYPASS	TOP HAT VENT	PROCESS TOTE VENT	DELAY TOTE DRAIN
PRESSURE (psig)	NA	NA	52	54	10	NA	55	51	–0.2	ATM	NA
TEMPERATURE (°F)	NA	NA	70	70	70	NA	70	70	70	70	NA
FLOW RATE (scfm)	NA	NA	120	120	35	NA	120	120	0–40	35	NA
SOLIDS CONCENTRATION (ppm)	NA	NA	0	0	0	NA	0	0	0–40	0	NA
137Cs CONCENTRATION (Ci/gal)	NA	NA	0	0	0	NA	0	0	0–40	0	NA

DELAY TOTE DRAIN

STREAM NUMBER	2	3	4	5	7	9	10	11	12	13	14
STREAM NAME	WASTE FEED	PRESSURIZED FEED	FILTERED FEED	DSS	DECAYED WASTE	NAOH BACKFLUSH	AIR PURGE	PUMP BYPASS	TOP HAT VENT	PROCESS TOTE VENT	DELAY TOTE DRAIN
PRESSURE (psig)	10	10	10	10	NA	NA	NA	NA	–0.2	NA	10
TEMPERATURE (°F)	63	63	63	63	NA	NA	NA	NA	70	NA	63
FLOW RATE (gpm)(scfm*)	1	1	1	1	NA	NA	NA	NA	0–40	NA	1
SOLIDS CONCENTRATION (ppm)	1	1	1	1	NA	NA	NA	NA	0–40	NA	1
137Cs CONCENTRATION (Ci/gal)	8.75E–05	8.75E–05	8.75E–05	8.75E–05	NA	NA	NA	NA	0–40	NA	8.75E–05

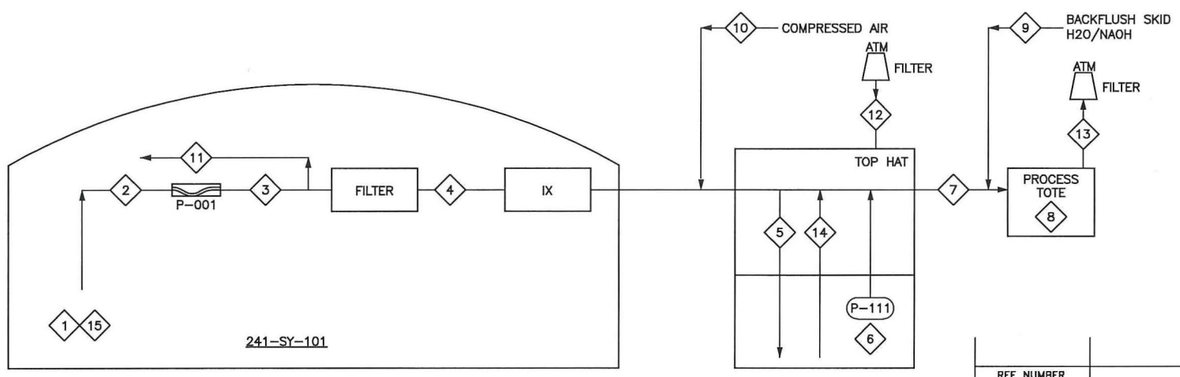

GENERAL NOTES: (UNLESS OTHERWISE SPECIFIED)

1. REFER TO CEES–CALC–604–P–001 FOR BASIS OF NUMBERS.

JOHN COLIN HENDERSON
STATE OF WASHINGTON
31912
REGISTERED PROFESSIONAL ENGINEER
5/7/19

REF NUMBER	TITLE
DRAWING/DOCUMENT REFERENCES	
NEXT USED ON END ITEM	

REV NO	DESCRIPTION	REV BY DATE	DRAFTING CHECKER DATE	ENGINEER DATE	ENGINEERING CHECKER DATE	PROJECT MANAGER DATE
REVISIONS						

THIS DESIGN DEVELOPED FOR USE BY THE US DEPARTMENT OF ENERGY UNDER CONTRACT NO. DE–EM0004216.

	NAME	DATE
DRAWN BY	C. ROLLINGER	4/22/19
DRAFTING CHECKER	JT FOSS	5/1/19
ENGINEER	K WELSCH	5/1/19
ENGINEERING CHECKER	T BECK	5/2/19
PROJECT MANAGER	P BODEN	5/1/19

Columbia Energy AND ENVIRONMENTAL SERVICES

DOE TBI SY–101
PFD

SIZE F | DRG NO CEES–16–604–P–012 | REV 0

SCALE AS SHOWN | SHEET 1 OF 1

Engineering Drawing

CEES-16-604-M-005

DOE TBI SY-101 IX Riser Adapter Assembly

GENERAL NOTES: (UNLESS OTHERWISE SPECIFIED)

1. DIMENSIONS ARE IN INCHES.
   TOLERANCES SHALL BE AS FOLLOWS:
   FRACTIONS = ±1/8
   .X = ±0.1
   .XX = ±0.03
   .XXX = ±0.010
   ANGLES = ±1°
2. REMOVE ALL BURRS AND BREAK SHARP EDGES.
3. LOCATE IDENTIFICATION LABELING AND WEIGHT LABELING IN APPROXIMATE LOCATION AS SHOWN.
   TEXT CONTENTS: CEES-16-604-M-005 XXX LBS (XXX = MEASURED WEIGHT)
   TEXT TYPE: BLOCK
   TEXT MATERIAL: ACRYLIC ENAMEL
   TEXT COLORS: BLACK ON YELLOW BACKGROUND
   TEXT SIZE: 1" HIGH CHARACTERS
4. WELD AND INSPECT STAINLESS STEEL PIPING COMPONENTS PER ASME B31.3-2016 NORMAL FLUID SERVICE AND STRUCTURAL COMPONENTS PER AWS D1.6-2007 AS APPLICABLE. WELD PROCEDURES AND QUALIFICATIONS PER ASME SECTION IX ARE ACCEPTABLE. PERFORM HYDROSTATIC PRESSURE TESTING OF PIPING. HYDROSTATIC PRESSURE TEST TO 150 PSIG +10/-0 PSIG PER ASME B31.3-2016 NORMAL FLUID SERVICE. MAINTAIN TEST PRESSURE FOR 10 MINUTES AND VERIFY NO LEAKAGE. RISER ADAPTER DESIGN PRESSURE 100 PSIG, DESIGN TEMPERATURE 105°F.
5. TIGHTEN ALL FASTENERS SNUG TIGHT.
6. SEAL THREADED PIPE CONNECTIONS WITH LOCTITE 567 THREAD SEALANT AND ACTIVATOR 7649.
7. ADD LABELS/INDICATORS AT FINAL ASSEMBLY. PAINT OR USE ADHESIVE DECALS PER THE LABEL/INDICATOR DETAILS ON SH 8. PAINT SHALL BE ACRYLIC ENAMEL. ADHESIVE DECALS SHALL BE VINYL.
8. FIELD FIT VALVE HANDLE ASSEMBLY (ITEM 5 & 6) DURING SYSTEM FIT-UP AND TESTING.
9. SHIM VALVE HANDLE INDICATOR PLATE AS REQUIRED TO REMOVE AXIAL TRAVEL. USE MINIMAL UHMWPE BETWEEN INDICATOR AND ITEM 38. USE UHMWPE BETWEEN INDICATOR PLATE AND ITEM 37 TO ACHIEVE FIT.
10. AFTER INSTALLATION ON TO SPRAY RING (CEES-16-604-M-024) TORQUE FASTENERS TO 250 +10, -0 FT-LBS.
11. PERFORM FIT UP OF VALVE HANDLES PRIOR TO DRILLING HOLES FOR CAPTURE PLATE (ITEM 37) MATCH DRILL HOLES WITH VALVE HANDLE IN ALIGNED POSITION.

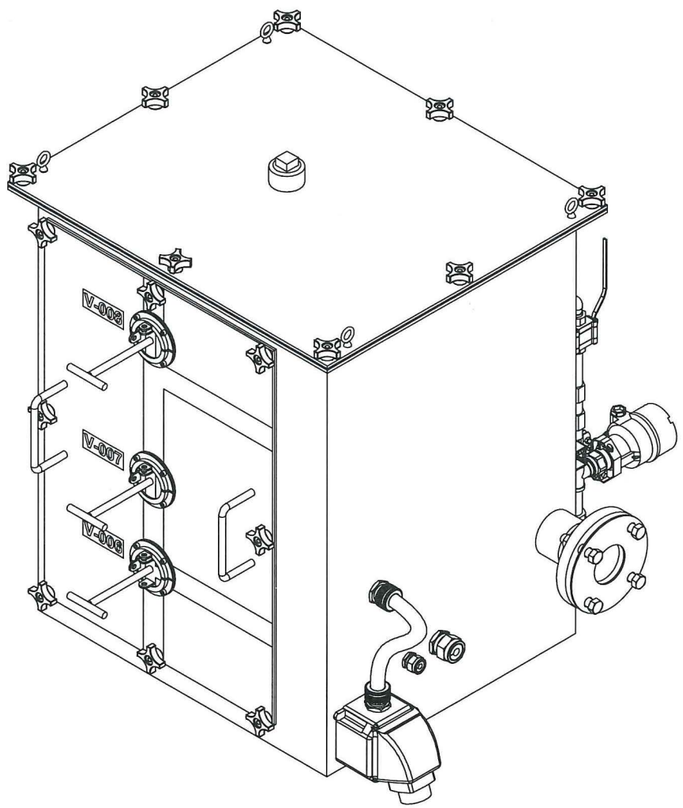

ISOMETRIC VIEW
SCALE: NTS

PARTS LIST/MATERIAL LIST

QTY -060	QTY -050	QTY -040	QTY -030	QTY -020	QTY -010	PARTS / DASH NUMBER	NOMENCLATURE/DESCRIPTION	MATERIAL/REFERENCE	SHEET	ITEM NO
					12		SOCKET HEAD CAP SCREW, 1/4-20UNC-2A, 1" L	ASTM F837 18-8 SST	2	41
					12		NUT, 1/4-20UNC-2B	ANY GR 300 SST	2	42
					4	9900208	EYEBOLT, SHOULDER TYPE, S-279, 3/8" x 1 1/4"	CROSBY	2	43
					1	SS-8C4-1	CHECK VALVE, POPPET CHECK VALVE, FIXED PRESSURE, 1/2" FNPT, 1 PSIG	SWAGELOK	2	44
					2		CLOSE NIPPLE, 1/2" NPT	ASTM A312	2	45
					1		TEE, 1/2" FNPT CLASS 3000	ASTM A182 GR F304L	2	46
					1	PMP51-FA21JD1SGJ R1JA1+AAF1PAZ1	TRANSMITTER, 1/2" FNPT	ENDRESS-HAUSER	2	47
					2		NIPPLE, 1/2" NPT, 4" L	ASTM A312 TP 304L	2	48
					1	B2025	STRUT MOUNTING PIPE CLAMP, 1/2"	B-LINE	2	49
				1		B22-SS	CHANNEL, B22, 3" L	B-LINE	3	50
					1	RSF-3001	TUFF-SEAL, RSF SERIES ALUMINUM CORD GRIP, 1" CONDUIT SIZE	REMKE	2	51
					1	CGB194 SG	CGB SERIES NON-ARMOURED GLAND, 1/2" NPT, .375-.500	EATON/CROUSE HINDS	3	52
					1	CGB294 SG	CGB SERIES NON-ARMOURED GLAND, 3/4" NPT, .375-.500	EATON/CROUSE HINDS	3	53
					1	1501540	CONNECTOR, MALE, 4 PIN, M12, UL LISTED, SACC-M12MS-4CON-PG 9-SH	PHOENIX CONTACT	3	54
					1	1515170	CONNECTOR, FEMALE, 4 PIN, M12, UL LISTED, SACC-M12FS-4CON-PG 9-SH	PHOENIX CONTACT	3	55
					1	BLUE-GARD 3700	GASKET, 1/8" THK	GARLOCK	2,6	56
					2	CGB296 SG	CGB SERIES NON-ARMOURED GLAND, 3/4" NPT, .625-.750	EATON/CROUSE HINDS	2	57
					1	711P0CP4	HANDLE WITH CORD GRIP	MELTRIC	2	58
					1	63-18147	DSN20 SWITCH RATED PLUG, MALE INLET	MELTRIC	2	59
					1	63-14147	DSN20 SWITCH RATED PLUG, FEMALE RECEPTACLE	MELTRIC	2	60
					4		NUT, 3/8-16UNC-2B	ASTM A194, GR 2H	2	61
					4		WASHER, 3/8"	ASTM A193, GR 304/304L	2	62
					1	711C7N07	JUNCTION BOX, 70' WITH 3/4 NPT	MELTRIC	2	63
					12		NUT, 7/8-9UNC-2B	ASTM A194 GR ZH	2	64
1	1					(92311A537)	SET SCREW, 1/4-20UNC-2A, X 1/2" LONG	(MCMASTER)	7	65
										66
					1	22-14147	DXN20 SWITCH RATED PLUG, FEMALE RECEPTACLE, HAZARDOUS LOCATION	MELTRIC	2	67
					1	251P0CPC	HANDLE WITH CORD GRIP	MELTRIC	2	68
					1	(S00W12-5)	CORD, 12/5 S00W, 2' LENGTH	(GENCABLE)	2	69
					2		HEAVY HEX NUT, 1-8UNC-2B	ASTM A194, GR 2H	3	70
					1	7103-3-R-R-L	VALVE, 1/2" FNPT, 3 PIECE	FLOWTEK	2	71
					4		BOLT, 5/8-11UNC-2A, 3" L	ASTM A193, GR B7	2	72
					4		NUT, 5/8-11UNC-2B	ASTM A194, GR 2H	2	73
					1	BLUE-GARD 3700	GASKET, 1/8" THK, SIZED FOR 3" FLANGE, RF, CLASS 150	GARLOCK	2	74

PARTS LIST/MATERIAL LIST

QTY -060	QTY -050	QTY -040	QTY -030	QTY -020	QTY -010	PARTS / DASH NUMBER	NOMENCLATURE/DESCRIPTION	MATERIAL/REFERENCE	SHEET	ITEM NO
					X	-010	RISER ADAPTER ASSEMBLY		2	1
				X	1	-020	RISER ADAPTER WELDMENT		2,3	2
			X		1	-030	DOOR WELDMENT		2,4	3
		X			1	-040	LID WELDMENT		2,4	4
	X				2	-050	2-WAY T-HANDLE		2,7	5
X					1	-060	3-WAY T-HANDLE		2,7	6
										7
										8
										9
			1				DOOR PLATE, 1/4" THK	ASTM A240, GR 304/304L	4	10
			2				DOOR HANDLE, BAR ø1/2"	ASTM A276, GR 304/304L	4	11
		1					LID PLATE, 1/4" THK	ASTM A240, GR 304/304L	4	12
					1		DOOR GASKET, 1/4" THK	EPDM, DUROMETER 40	2,5	13
					1		LID GASKET, 1/4" THK	EPDM, DUROMETER 40	2,5	14
				1			LID FLANGE, 1/4" THK PLATE	ASTM A240, GR 304/304L	3,5	15
				1			DOOR FLANGE PLATE, 1/4" THK	ASTM A240, GR 304/304L	3,5	16
				1			BACK PLATE, 1/4" THK	ASTM A240, GR 304/304L	3,5	17
				1			LEFT PLATE, 1/4" THK	ASTM A240, GR 304/304L	3,5	18
				1			RIGHT PLATE, 1/4" THK	ASTM A240, GR 304/304L	3,6	19
				1			BOTTOM FLANGE, PLATE 1/4" THK	ASTM A240, GR 304/304L	3,6	20
				1			BOTTOM BOLT FLANGE, PLATE 3/4" THK	ASTM A240, GR 304/304L	3,6	21
1	1						INDICATOR PLATE, ø3" OD, 3/16" THK	ASTM A240, GR 304/304L	7	22
AR	AR						ROUND BAR, ø1/2"	ASTM A276, GR 304/304L	7	23
					16	(5993K830)	KNOB, FOUR ARM, 1/4-20UNC	(MCMASTER)	2	24
					16		HEX HD BOLT, 1/4-20UNC-2A, 1 1/4 LONG, 18-8 SST	ASTM F573 CONDITION: CW1	3	25
		1					HALF COUPLING, 1 1/2" NPT, CLASS 3000	ASTM A182, GR F304L	4	26
					1		PIPE PLUG, 1 1/2" MNPT, CLASS 150	ASTM A351 GR CF8	2	27
				1			PIPE, ø1/2" SCH 40, 3" LONG, TBE	ASTM A312 TP 304L-S	3	28
					2		STREET ELBOW, ø1/2" CLASS 3000	ASTM A182 GR F304L	2	29
					2	FS-502-8FP	NIPPLE, FLAT FACE, 1/2" FNPT, 2000 PSI, 316 SST	PARKER	2	30
				1			PIPE, ø3" SCH 40, 2 1/2" LONG	ASTM A312 TP 304L-S	3	31
				1			FLANGE, ø3" WN RF, CLASS 150	ASTM A182 GR F304L	3	32
				2			ALIGNMENT PIN, ø1" ROUND BAR	ASTM A276, GR 304/304L	3,6	33
				12			THREADED ROD OR STUD, 7/8-9UNC-2A, 3 1/4" LONG	ASTM A193 GR B8 CL1	3	34
	1						2-WAY VALVE STEM SOCKET, ø1 1/8" ROUND BAR	ASTM A276	6,7	35
1							3-WAY VALVE STEM SOCKET, ø1 1/8" ROUND BAR	ASTM A276	6,7	36
					6		T-HANDLE CAPTURE RING, 1/2" THK	ASTM A240, 304/304L	2,6	37
					3		CAPTURE RING GASKET, 1/8" THK	EDPM, DUROMETER 40	2,6	38
					3		CAPTURE RING TAB, 1/8" THK	ASTM A240, 304/304L	2,6	39
3	2						T-HANDLE TAB, 1/8" THK	ASTM A240, 304/304L	6,7	40

JOHN COLIN HENDERSON
STATE OF WASHINGTON
31912
REGISTERED
PROFESSIONAL ENGINEER
5/7/19

REF NUMBER	TITLE
NEXT USED ON	DRAWING/DOCUMENT REFERENCES

REV NO	DESCRIPTION	REV BY DATE	DRAFTING CHECKER DATE	ENGINEER DATE	ENGINEERING CHECKER DATE	PROJECT MANAGER DATE
	REVISIONS					

THIS DESIGN DEVELOPED FOR USE BY THE US DEPARTMENT OF ENERGY UNDER CONTRACT NO. DE-EM0004216.

	NAME	DATE
DRAFTER	PM MCELROY	4/22/19
DRAFTING CHECKER	JT FOSS	5/1/19
ENGINEER	D CAP	5/2/19
ENGINEERING CHECKER	T BECK	5/2/19
PROJECT MANAGER	P BODEN	5/1/19

Columbia Energy AND ENVIRONMENTAL SERVICES

DOE TBI SY-101
RISER ADAPTER ASSEMBLY

SIZE F | DWG NO CEES-16-604-M-005 | REV 0
SCALE AS SHOWN | SHEET 1 OF 8

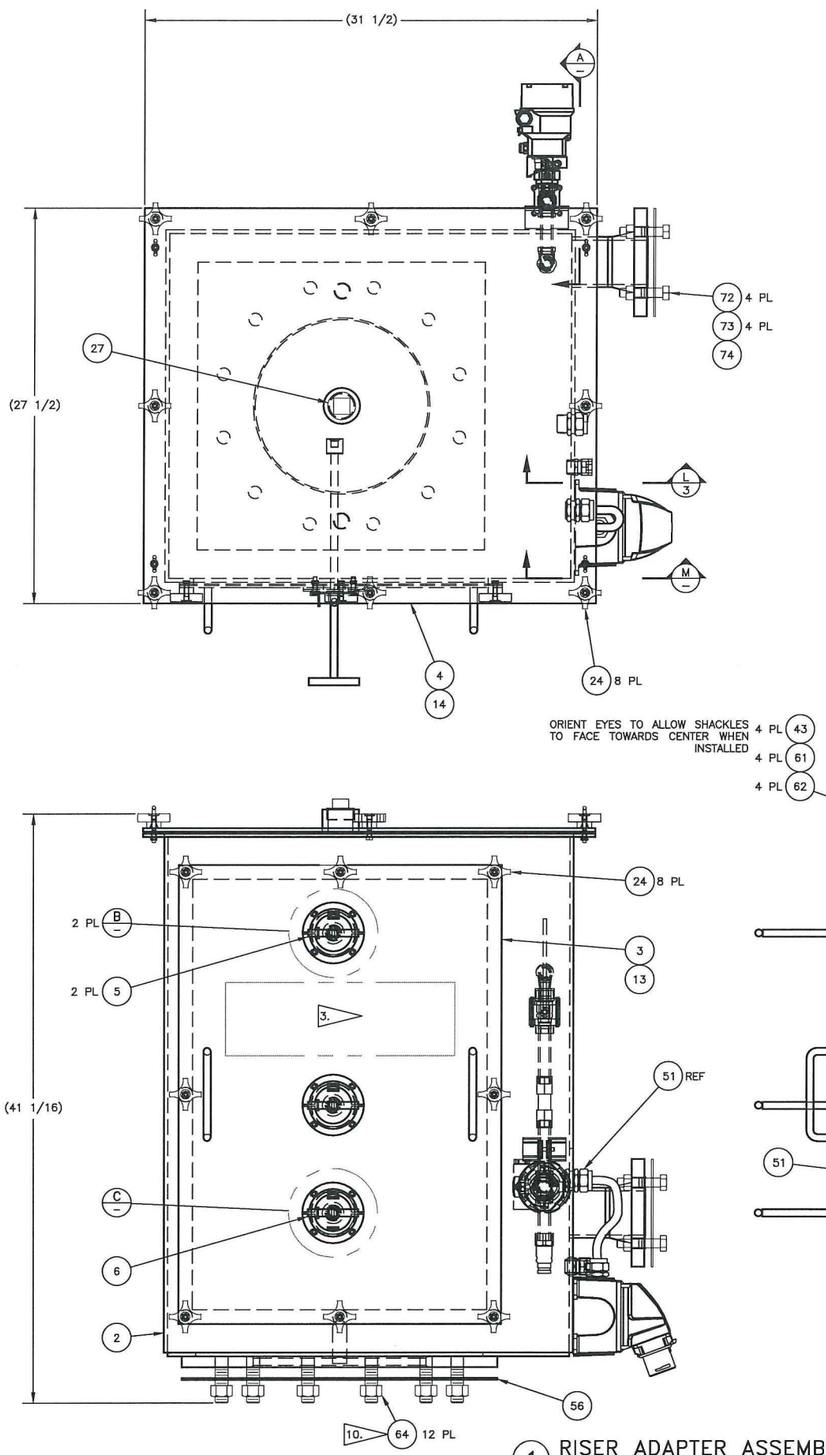

1 RISER ADAPTER ASSEMBLY
SCALE: 1/4

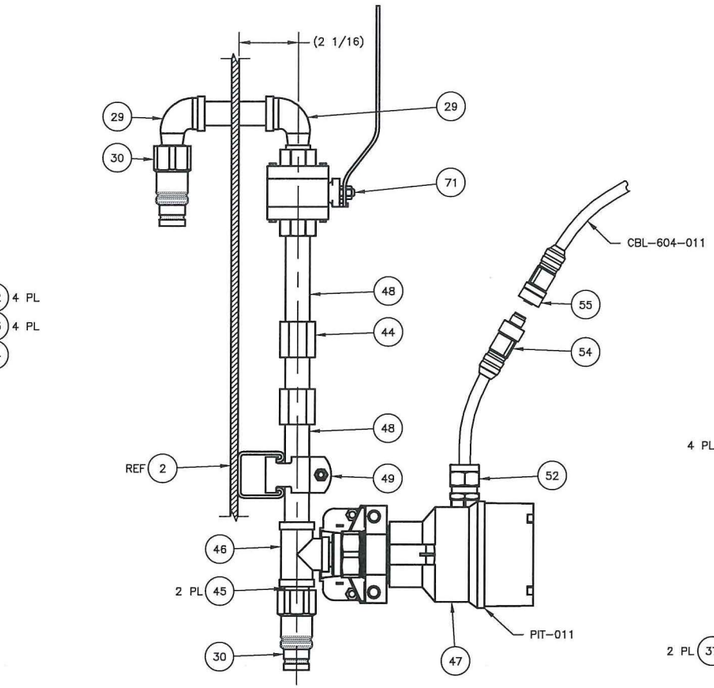

A SECTION
SCALE: 1/2

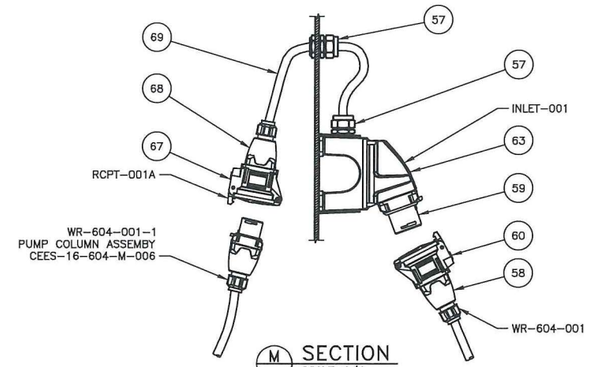

M SECTION
SCALE: 1/4

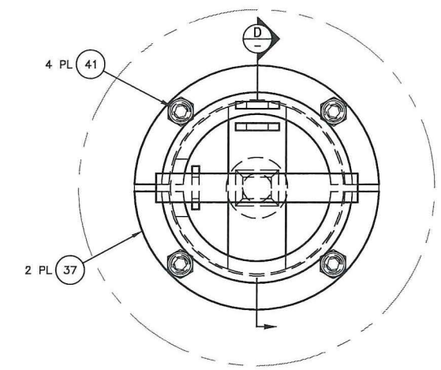

B DETAIL
SCALE: 1/1
2 PL

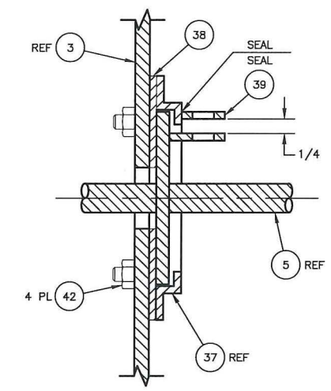

D SECTION
SCALE: 1/1
2 PL 9.

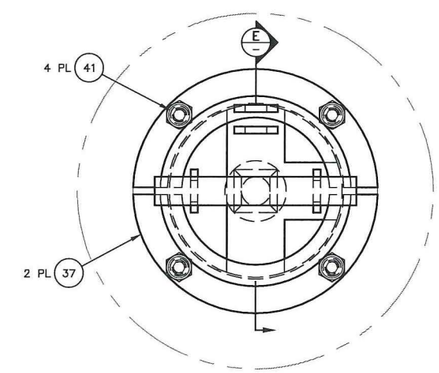

C DETAIL
SCALE: 1/1

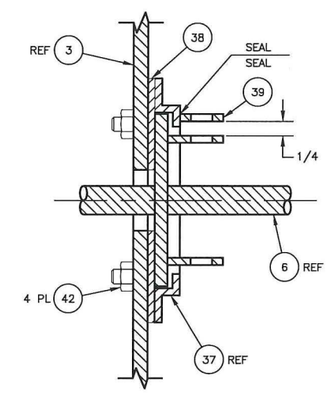

9. E SECTION
SCALE: 1/1

JOHN COLIN HENDERSON
STATE OF WASHINGTON
31912
REGISTERED
PROFESSIONAL ENGINEER
5/7/19

REF NUMBER	TITLE
DRAWING/DOCUMENT REFERENCES	
NEXT USED ON	

REV NO	DESCRIPTION	REV BY DATE	DRAFTING CHECKER DATE	ENGINEER DATE	ENGINEERING CHECKER DATE	PROJECT MANAGER DATE
REVISIONS						

	NAME	DATE
DRAWN BY	PM MCELROY	4/22/19
DRAFTING CHECKER	JT FOSS	5/1/19
ENGINEER	D CAP	5/2/19
ENGINEERING CHECKER	T BECK	5/2/19
PROJECT MANAGER	P BODEN	5/1/19

Columbia Energy
AND ENVIRONMENTAL SERVICES

DOE TBI SY-101 IX
RISER ADAPTER ASSEMBLY

SIZE F | DWG NO CEES-16-604-M-005 | REV 0
SCALE AS SHOWN | SHEET 2 OF

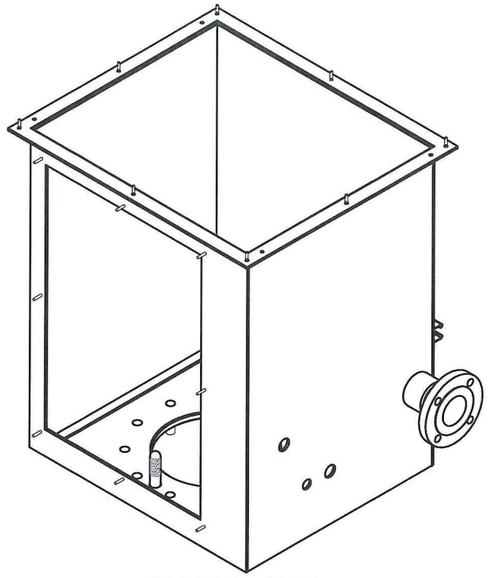

ISOMETRIC VIEW
SCALE: NTS

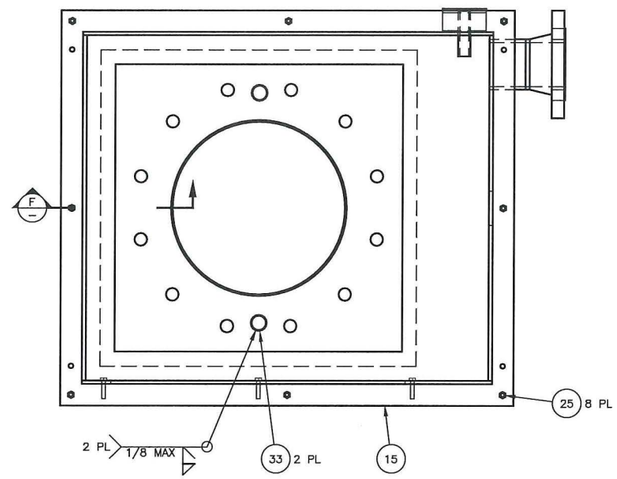

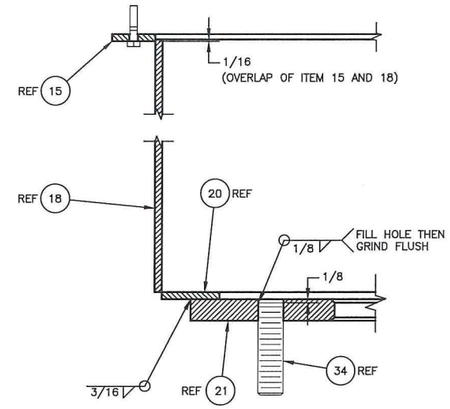

F SECTION
SCALE: 1/2

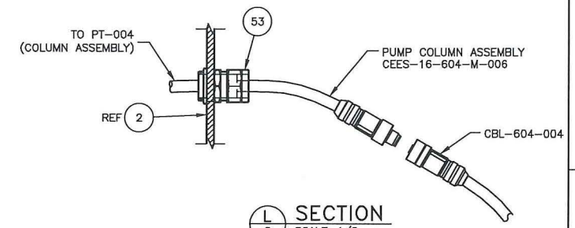

L SECTION
SCALE: 1/2

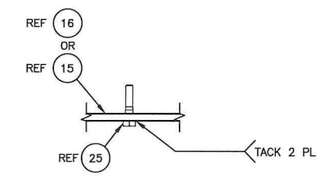

G SECTION
SCALE: 1/2
TYPICAL

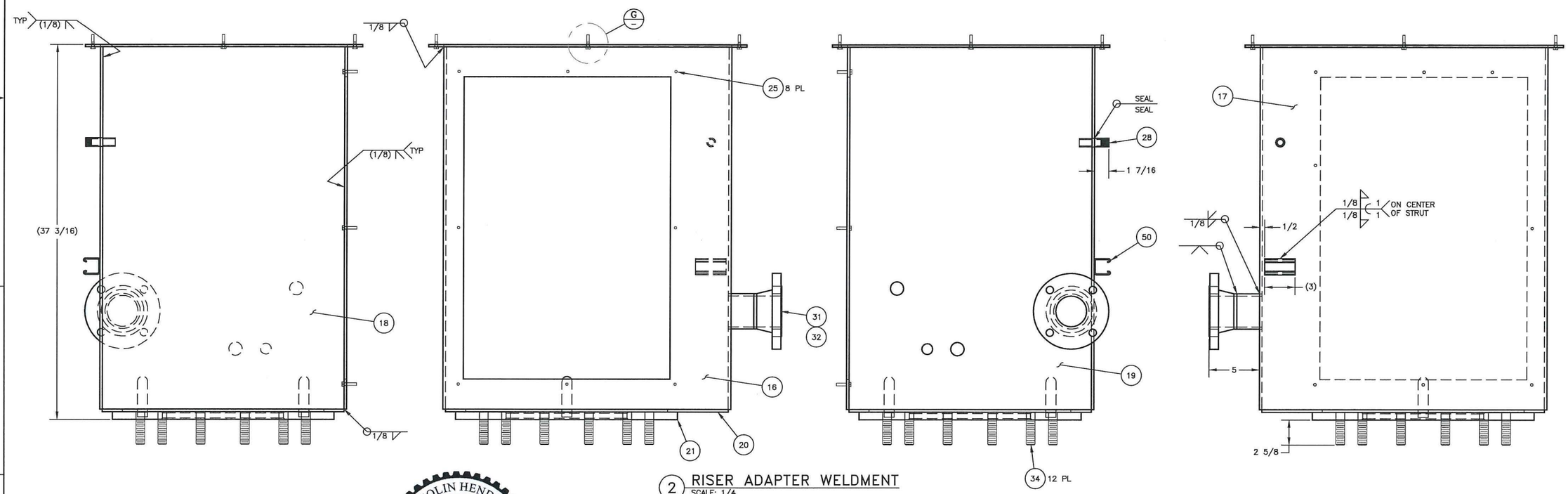

2 RISER ADAPTER WELDMENT
SCALE: 1/4

JOHN COLIN HENDERSON
STATE OF WASHINGTON
31912
REGISTERED
PROFESSIONAL ENGINEER
5/2/19

REF NUMBER	TITLE
DRAWING/DOCUMENT REFERENCES	
NEXT USED ON	

REV NO	DESCRIPTION	REV BY DATE	DRAFTING CHECKER DATE	ENGINEER DATE	ENGINEERING CHECKER DATE	PROJECT MANAGER DATE
REVISIONS						

	NAME	DATE
DRAWN BY	PM MCELROY	4/22/19
DRAFTING CHECKER	JT FOSS	5/1/19
ENGINEER	D CAP	5/2/19
ENGINEERING CHECKER	T BECK	5/2/19
PROJECT MANAGER	P BODEN	5/1/19

Columbia Energy
AND ENVIRONMENTAL SERVICES

DOE TBI SY-101 IX
RISER ADAPTER ASSEMBLY

SIZE F | DWG NO CEES-16-604-M-005 | REV 0
SCALE AS SHOWN | SHEET 3 OF

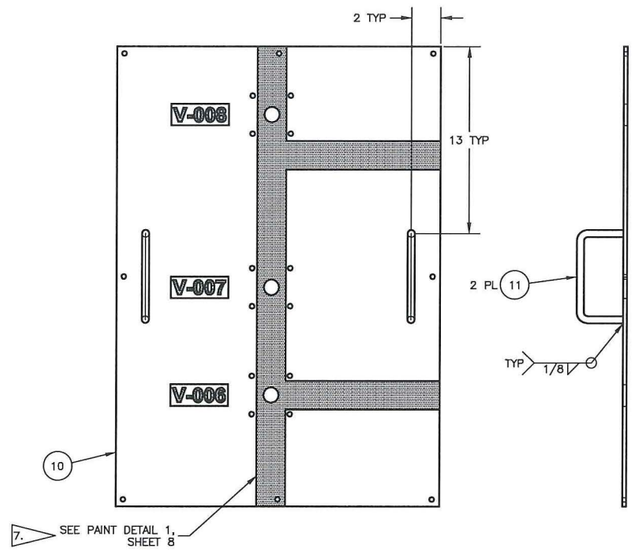

3 DOOR WELDMENT
SCALE: 1/4

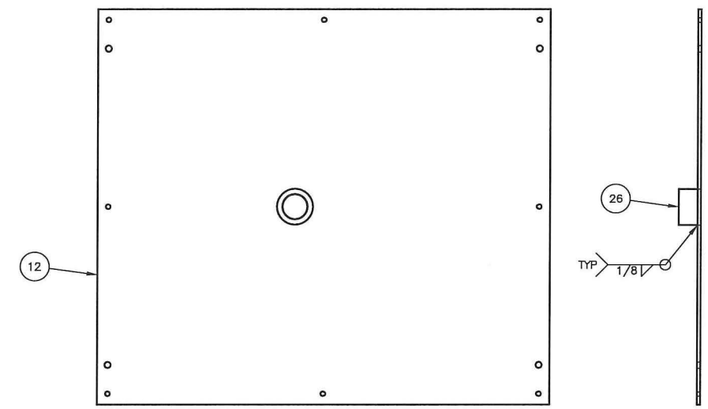

4 LID WELDMENT
SCALE: 1/4

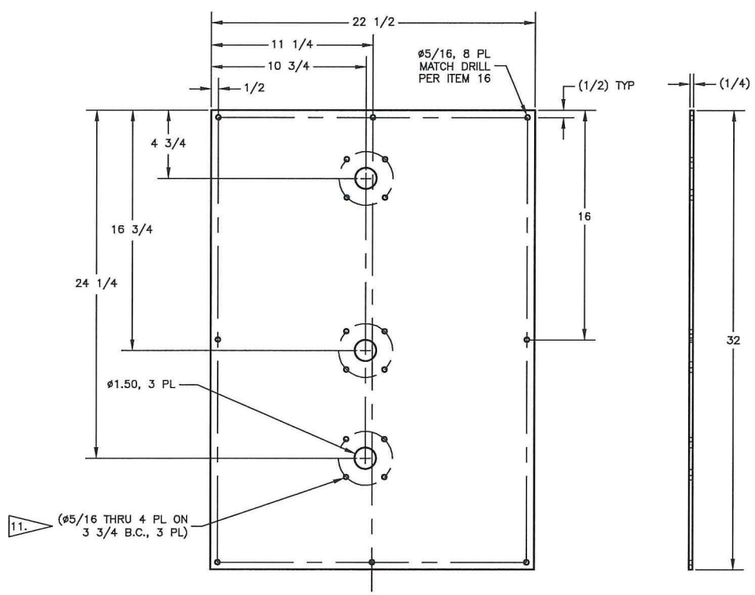

10 DOOR PLATE
SCALE: 1/4

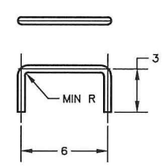

11 DOOR HANDLE
SCALE: 1/4

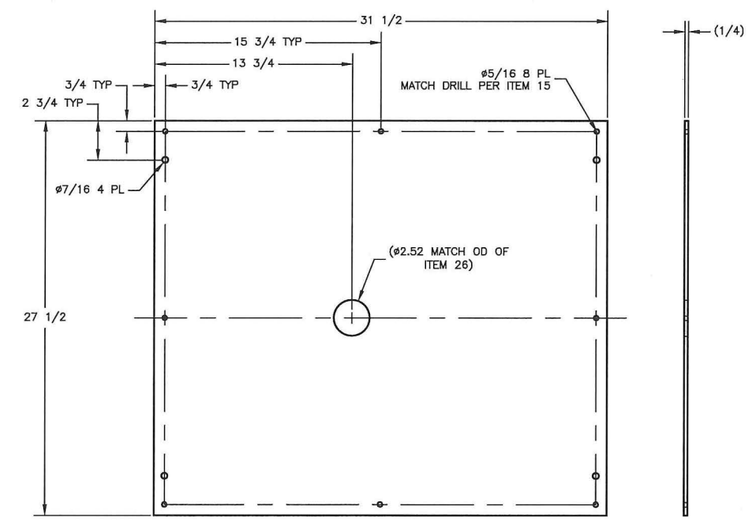

12 LID PLATE
SCALE: 1/4

REF NUMBER	TITLE
DRAWING/DOCUMENT REFERENCES	
NEXT USED ON	

REV NO	DESCRIPTION	REV BY DATE	DRAFTING CHECKER DATE	ENGINEER DATE	ENGINEERING CHECKER DATE	PROJECT MANAGER DATE
REVISIONS						

	NAME	DATE
DRAWN BY	M BERMUDEZ	4/22/19
DRAFTING CHECKER	JT FOSS	5/1/19
ENGINEER	D CAP	5/2/19
ENGINEERING CHECKER	T BECK	5/2/19
PROJECT MANAGER	P BODEN	5/1/19

Columbia Energy
AND ENVIRONMENTAL SERVICES

DOE TBI SY-101
RISER ADAPTER ASSEMBLY

SIZE F | DWG NO CEES-16-604-M-005 | REV 0
SCALE AS SHOWN | SHEET 4 OF

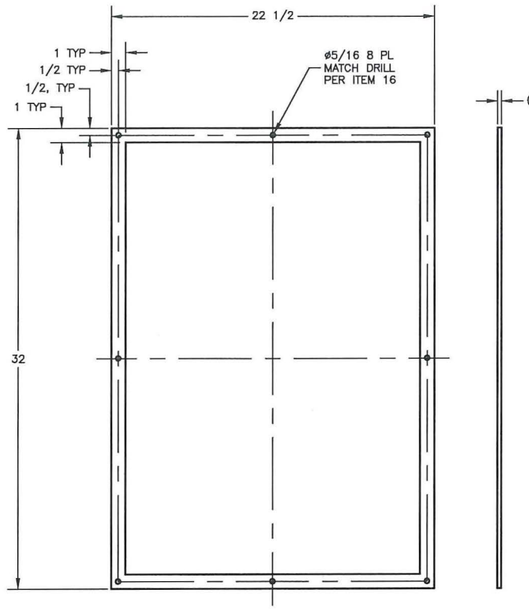

13 DOOR GASKET
SCALE: 1/4

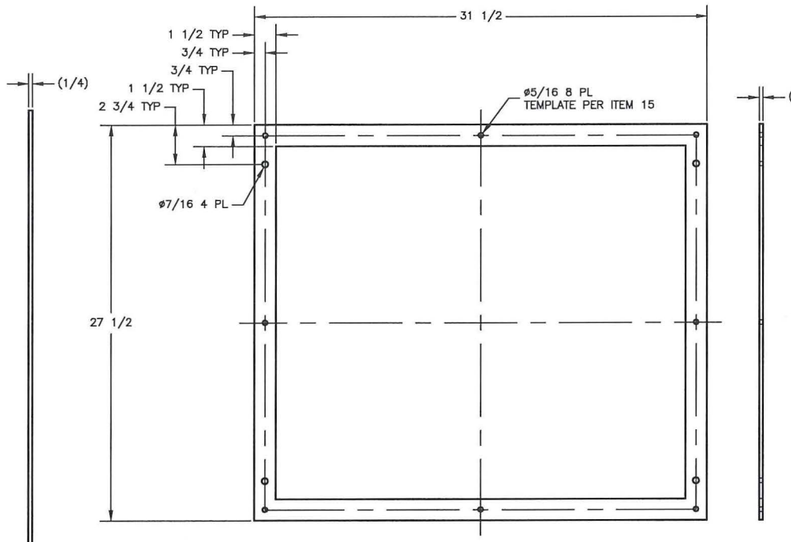

14 LID GASKET
SCALE: 1/4

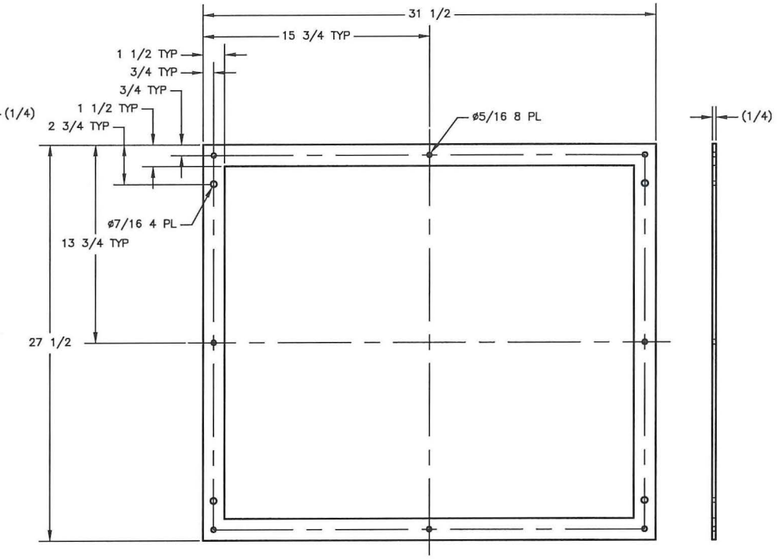

15 LID FLANGE
SCALE: 1/4

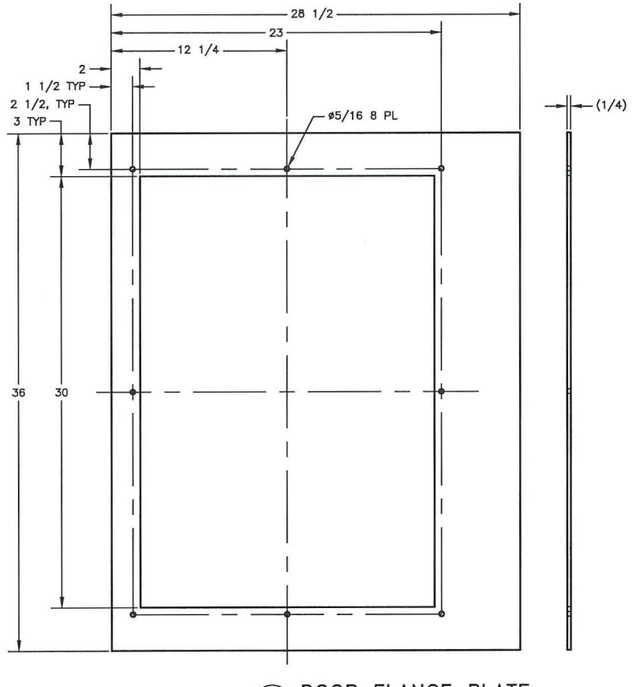

16 DOOR FLANGE PLATE
SCALE: 1/4

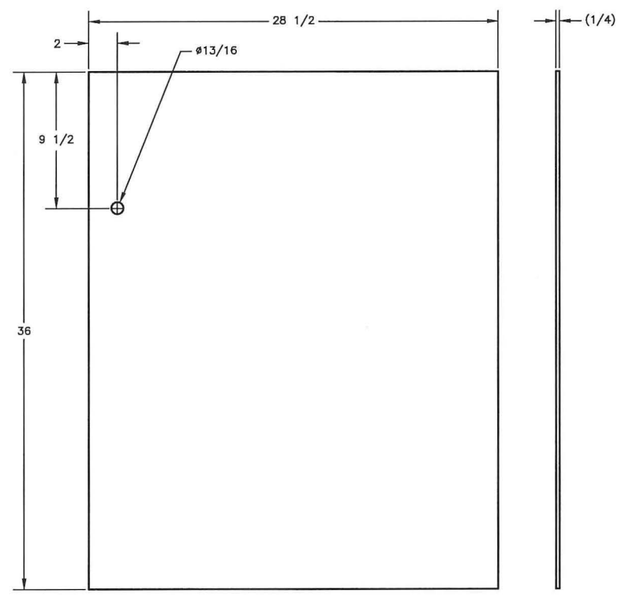

17 BACK PLATE
SCALE: 1/4

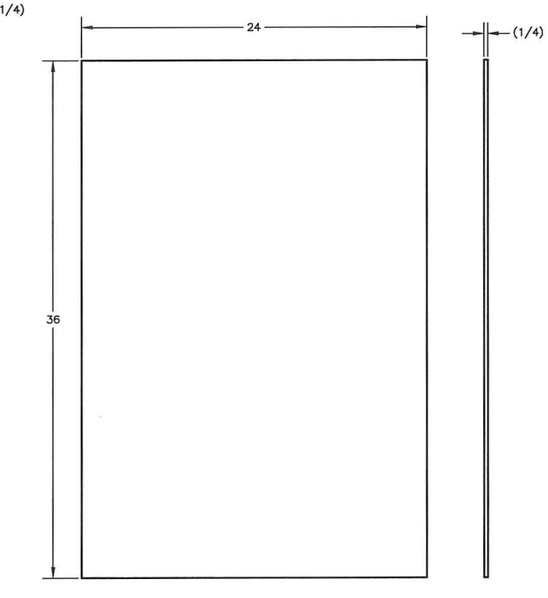

18 LEFT PLATE
SCALE: 1/4

REF NUMBER	TITLE
DRAWING/DOCUMENT REFERENCES	
NEXT USED ON	

REV NO	DESCRIPTION	REV BY DATE	DRAFTING CHECKER DATE	ENGINEER DATE	ENGINEERING CHECKER DATE	PROJECT MANAGER DATE
REVISIONS						

NAME	DATE
DRAWN BY M BERMUDEZ	4/22/19
DRAFTING CHECKER JT FOSS	5/1/19
ENGINEER D CAP	5/2/19
ENGINEERING CHECKER T BECK	5/2/19
PROJECT MANAGER P BODEN	5/1/19

Columbia Energy
AND ENVIRONMENTAL SERVICES

DOE TBI SY-101
RISER ADAPTER ASSEMBLY

SIZE F | DWG NO CEES-16-604-M-005 | REV 0
SCALE AS SHOWN | SHEET 5 OF

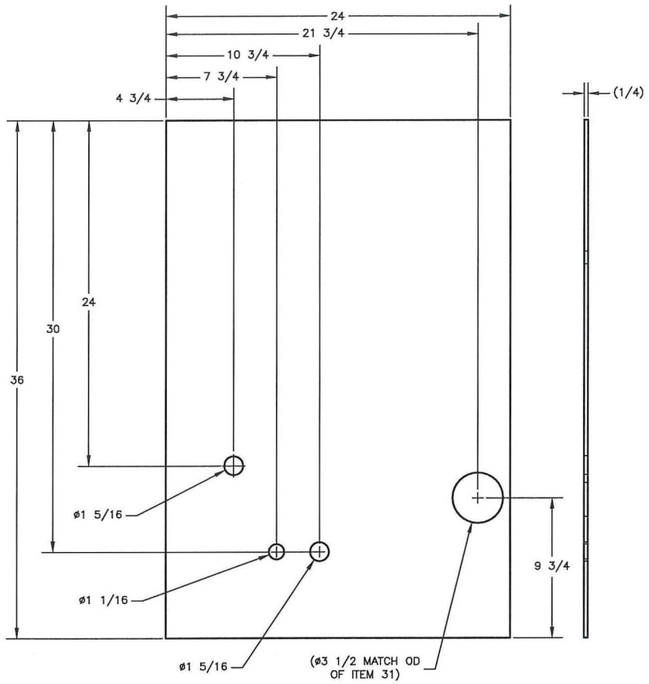

19 RIGHT PLATE
SCALE: 1/4

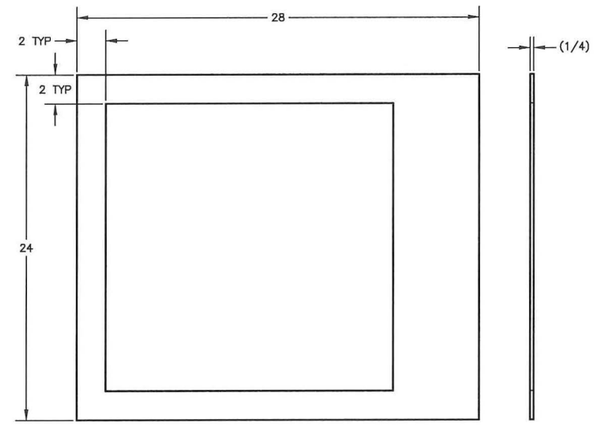

20 BOTTOM FLANGE
SCALE: 1/4

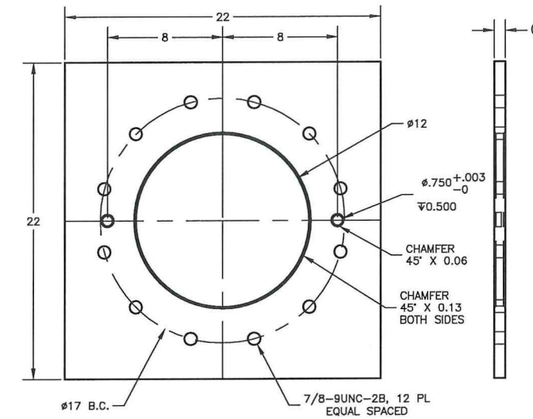

21 BOTTOM BOLT FLANGE
SCALE: 1/4

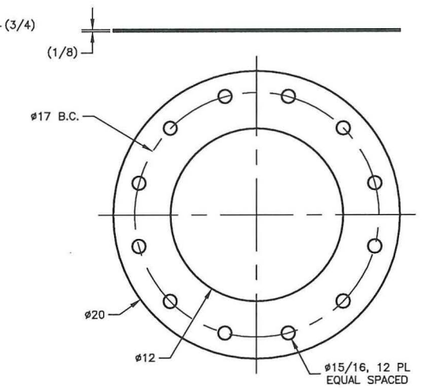

56 GASKET
SCALE: 1/4

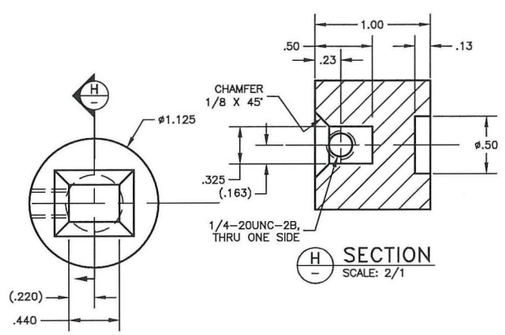

H SECTION
SCALE: 2/1

35 2–WAY VALVE STEM SOCKET
SCALE: 2/1

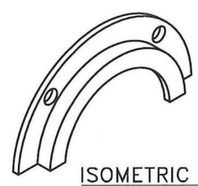

ISOMETRIC VIEW
SCALE: NTS

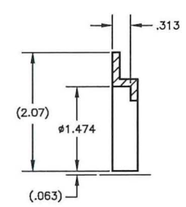

K SECTION
SCALE: 1/1

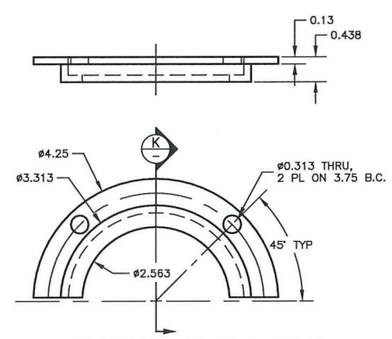

37 T–HANDLE CAPTURE RING
SCALE: 1/1

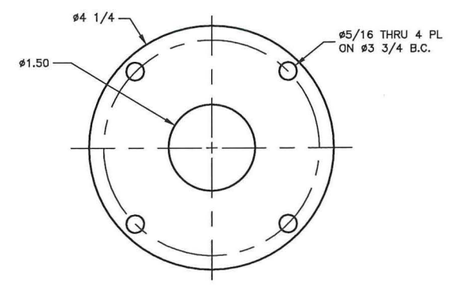

38 CAPTURE RING GASKET
SCALE: 1/1

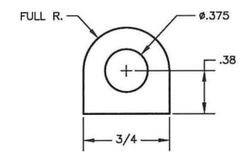

39 CAPTURE RING TAB
SCALE: 2/1

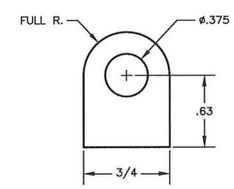

40 T–HANDLE TAB
SCALE: 2/1

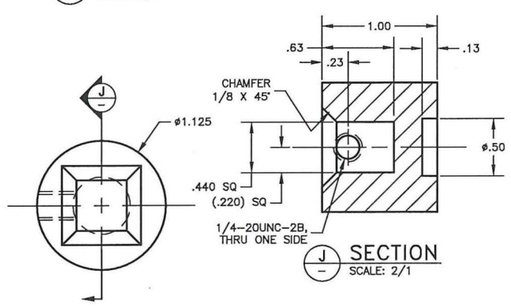

J SECTION
SCALE: 2/1

36 3–WAY VALVE STEM SOCKET
SCALE: 2/1

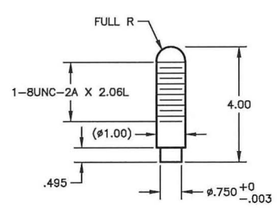

33 ALIGNMENT PIN
SCALE: 1/2

JOHN COLIN HENDERSON
STATE OF WASHINGTON
31912
REGISTERED
PROFESSIONAL ENGINEER
5/7/19

REF NUMBER	TITLE
DRAWING/DOCUMENT REFERENCES	
NEXT USED ON	

REV NO	DESCRIPTION	REV BY DATE	DRAFTING CHECKER DATE	ENGINEER DATE	ENGINEERING CHECKER DATE	PROJECT MANAGER DATE
REVISIONS						

NAME	DATE
DRAWN BY M BERMUDEZ	4/22/19
DRAFTING CHECKER JT FOSS	5/1/19
ENGINEER D CAP	5/2/19
ENGINEERING CHECKER T BECK	5/2/19
PROJECT MANAGER P BODEN	5/1/19

Columbia Energy AND ENVIRONMENTAL SERVICES

DOE TBI SY-101
RISER ADAPTER ASSEMBLY

SIZE F | DWG NO CEES-16-604-M-005 | REV 0
SCALE AS SHOWN | SHEET 6 OF

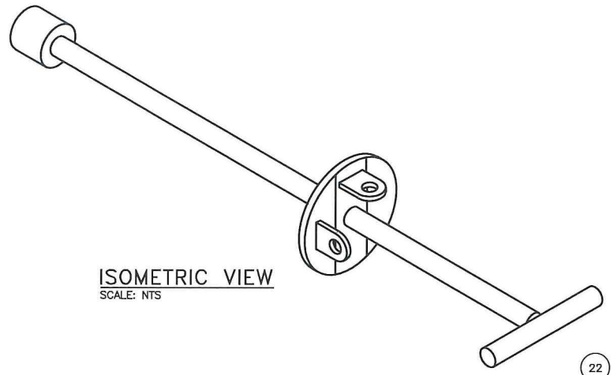

ISOMETRIC VIEW
SCALE: NTS

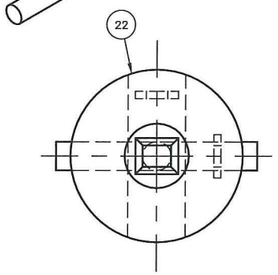

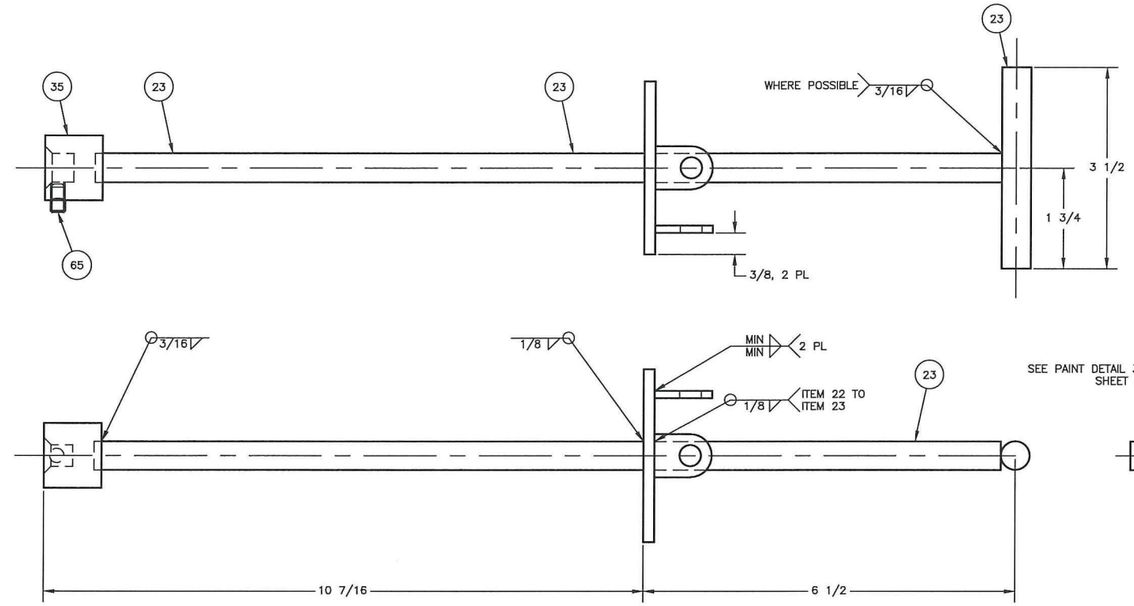

5 2-WAY T-HANDLE
SCALE: 1/1

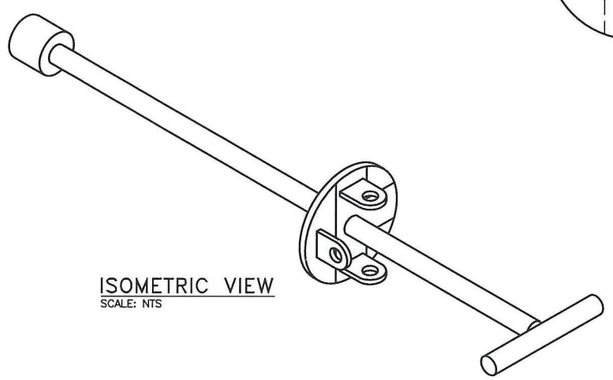

ISOMETRIC VIEW
SCALE: NTS

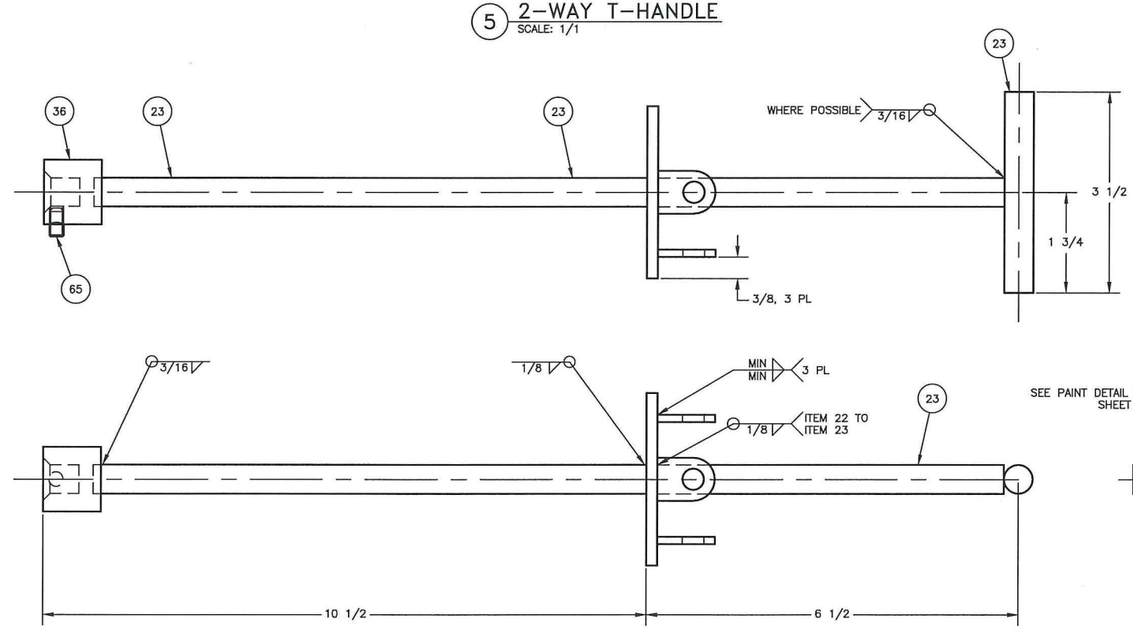

6 3-WAY T-HANDLE
SCALE: 1/1

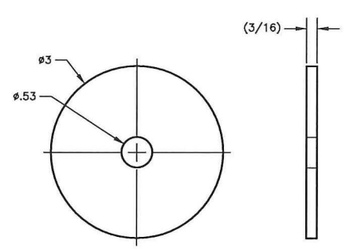

22 INDICATOR PLATE
SCALE: 1/1

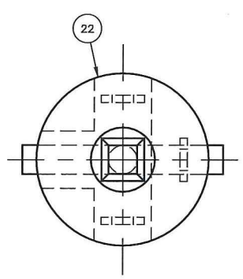

REF NUMBER	TITLE	REV NO	DESCRIPTION	REV BY DATE	DRAFTING CHECKER DATE	ENGINEER DATE	ENGINEERING CHECKER DATE	PROJECT MANAGER DATE
	DRAWING/DOCUMENT REFERENCES		REVISIONS					
NEXT USED ON								

	NAME	DATE
DRAWN BY	M BERMUDEZ	4/22/19
DRAWING CHECKER	JT FOSS	5/1/19
ENGINEER	D CAP	5/2/19
ENGINEERING CHECKER	J HARRINGTON	5/2/19
PROJECT MANAGER	P BODEN	5/1/19

Columbia Energy
AND ENVIRONMENTAL SERVICES

DOE TBI SY-101
RISER ADAPTER ASSEMBLY

SIZE F | DWG NO CEES-16-604-M-005 | REV 0
SCALE AS SHOWN | SHEET 7 OF

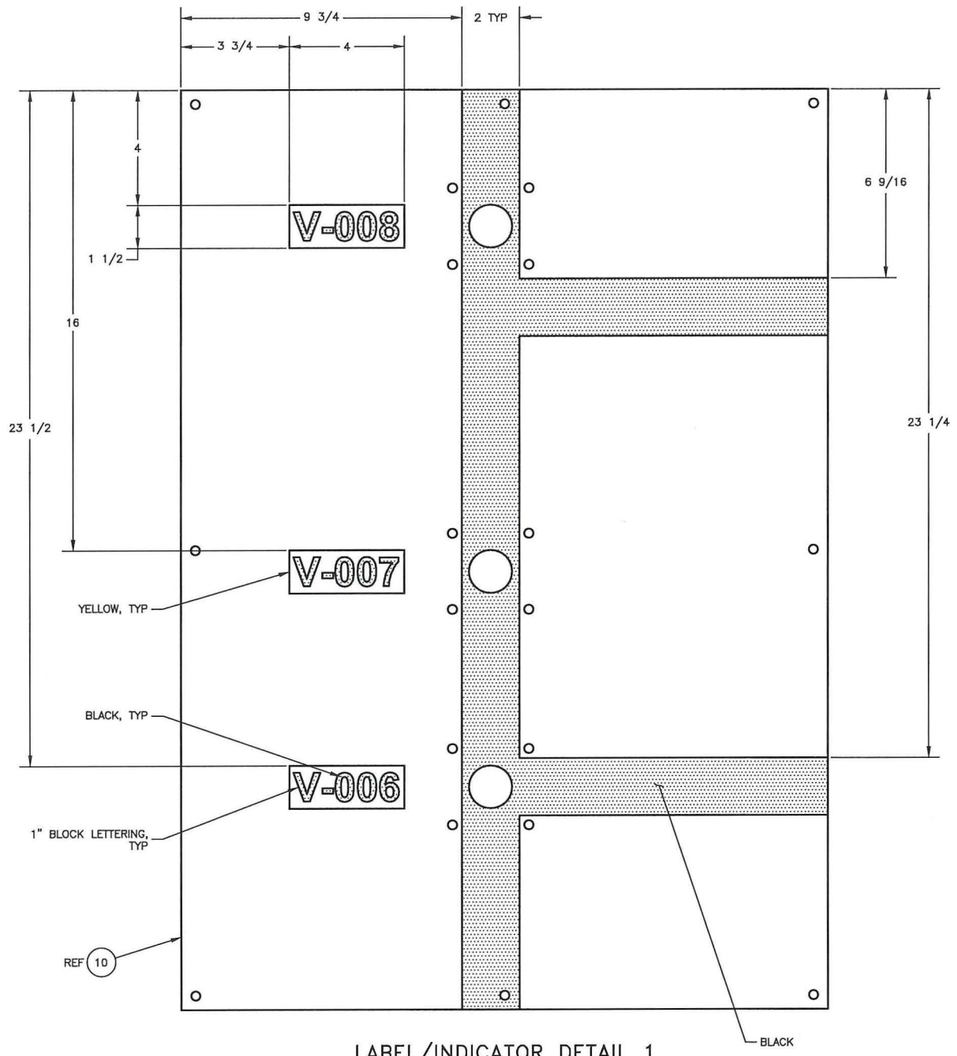

LABEL/INDICATOR DETAIL 1
SCALE: 1/2

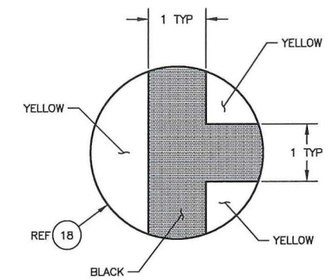

LABEL/INDICATOR DETAIL 2
SCALE: 1/1

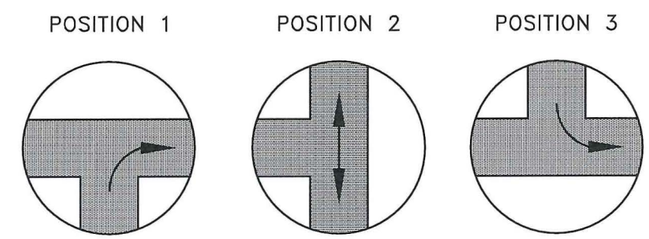

POSITIONS FOR DETAIL 2

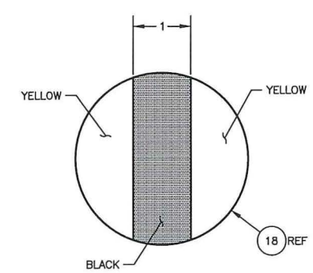

LABEL/INDICATOR DETAIL 3
SCALE: 1/1

REF NUMBER	TITLE
DRAWING/DOCUMENT REFERENCES	
NEXT USED ON	

REV NO	DESCRIPTION	REV BY DATE	DRAFTING CHECKER DATE	ENGINEER DATE	ENGINEERING CHECKER DATE	PROJECT MANAGER DATE
REVISIONS						

	NAME	DATE
DRAWN BY	M BERMUDEZ	4/22/19
DRAFTING CHECKER	JT FOSS	5/1/19
ENGINEER	D CAP	5/2/19
ENGINEERING CHECKER	J HARRINGTON	5/2/19
PROJECT MANAGER	P BODEN	5/1/19

Columbia Energy
AND ENVIRONMENTAL SERVICES

DOE TBI SY-101
RISER ADAPTER ASSEMBLY

SIZE F | DWG NO CEES-16-604-M-005 | REV 0
SCALE AS SHOWN | SHEET 8 OF

Engineering Drawing

CEES-16-604 M-006

DOE TBI SY-101 Pump Column Assembly

GENERAL NOTES: (UNLESS OTHERWISE SPECIFIED)

1. DIMENSIONS ARE IN INCHES.
2. TOLERANCES SHALL BE AS FOLLOWS:
   FRACTIONS = ±1/8
   .X = ±0.1
   .XX = ±0.03
   .XXX = ±0.010
   ANGLES = ±1°
3. REMOVE ALL BURRS AND BREAK SHARP EDGES.
4. LOCATE IDENTIFICATION LABELING AND WEIGHT LABELING IN APPROXIMATE LOCATION AS SHOWN.
   TEXT CONTENTS: CEES-16-604-M-006 X,XXX LBS (X,XXX = MEASURED WEIGHT)
   TEXT BLOCK: BLOCK
   TEXT MATERIAL: ACRYLIC ENAMEL
   TEXT COLORS BLACK ON YELLOW BACKGROUND
   TEXT SIZE 1" HIGH CHARACTERS
5. WELD AND INSPECT STAINLESS STEEL PIPING COMPONENTS PER ASME B31.3-2016 NORMAL FLUID SERVICE. WELD AND INSPECT STRUCTURAL CARBON AND STAINLESS STEEL PER AWS D1.1 OR D1.6. WELD PROCEDURES AND QUALIFICATIONS PER ASME SECTION IX ARE ACCEPTABLE. PERFORM HYDROSTATIC PRESSURE TESTING OF PUMP COLUMN ASSEMBLY. HYDROSTATIC PRESSURE TEST TO 150 PSIG +10/-0 PSIG. MAINTAIN TEST PRESSURE FOR 10 MINUTES AND VERIFY NO LEAKAGE. DESIGN PRESSURE 100 PSIG, DESIGN TEMPERATURE 105°F.
6. SEAL THREADED PIPE CONNECTIONS WITH LOCTITE 567 THREAD SEALANT AND ACTIVATOR 7649.
7. POWDER COAT STRONGBACK WELDMENT. FINISHED COLOR SHALL BE WHITE.
8. INSTALL STAINLESS STEEL SHIM STOCK (ITEM 87) BETWEEN STAINLESS STEEL PIPE AND CARBON STEEL ITEMS. WRAP PIPE AS NECESSARY TO ELIMINATE ALL STAINLESS TO CARBON STEEL CONTACT.
9. ROTATE REDUCING ELBOW APPROXIMATELY 15° AWAY FROM PUMP ASSEMBLY SO THAT PRV MAY BE INSTALLED WITHOUT COMING IN CONTACT WITH PUMP.
10. MATCH DRILL AND TAP PLATES (ITEM 61 AND 78) WITH PUMP AND MOTOR AS NECESSARY FOR ASSEMBLY. VERIFY IN THE SHOP THE CORRECT SIZES AND LENGTHS OF HEX HEAD BOLTS (ASTM A193 GR B7) NUTS (ASTM A194 GR 2H) WASHER (ANY GRADE) BASED ON RECEIVED HARDWARE.
11. TORQUE BOLTS TO 53 FT-LB +5, -0 FT-LB.
12. LOCATE STAINLESS STEEL TIE MOUNTS (ITEM 96) AS NECESSARY FOR ROUTING OF CABLES ALONG THE INSIDE WALL OF THE STRONGBACK WELDMENT. MATCH DRILL AND TAP FOR #10 SCREWS.
13. THE FOLLOWING ITEMS ARE SAFETY SIGNIFICANT: (ITEMS 65, 75, 76)

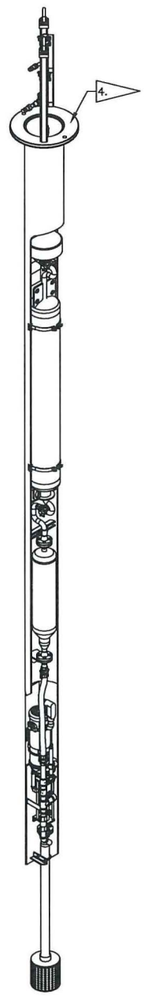

ISO VIEW
SCALE: NTS

JOHN COLIN HENDERSON
STATE OF WASHINGTON
31912
REGISTERED
PROFESSIONAL ENGINEER
5/7/19

PARTS LIST/MATERIAL LIST

QTY -070	QTY -060	QTY -050	QTY -040	QTY -030	QTY -020	QTY -010	PARTS / DASH NUMBER	NOMENCLATURE/DESCRIPTION	MATERIAL/REFERENCE	SHEET	ITEM NO
						1		ELBOW, 45°, 1", CL 3000, LR	ASTM A182 GRADE F304/304L	4	46
						1		REDUCER, 1" X 3/4" BW, SCH 40 SMLS	ASTM A403 GR WP304L-S	3	47
						1	(8889T33)	U-BOLT, 3/8-16UNC, 1 3/8" ID	(MCMASTER-CARR)	4	48
1		1	1					FLANGE, WN, ø1", 150#, RF	ASTM A182, GRADE F 304L	7	49
	1							HALF COUPLING, ø2" FNPT, CLASS 3000	ASTM A182, GR F304L	7	50
						1	FS-502-8FP	NIPPLE, FLAT FACE, 1/2" FNPT, 2000 PSI, 316 SST	PARKER	3	51
					1			SHIELD PLUG, PLATE, 4" THK	ASTM A36 OR A572	6,8	52
						2		STRAP SCREW, HEX STOCK 5/8	ASTM A36 OR A276	9	53
						1	CDPX3430	PUMP MOTOR	BALDOR	4	54
						1	SK11EF-56C	PUMP GEARBOX	NORD	4	55
						1	IS626	PRESSURE INDICATOR	DWYER	4	56
					1			PIPE, ø10", SCH 40 (MODIFIED)	ASTM A53, GRADE B	5	57
						1		CONDUIT ELBOW, 1"	COMMERCIAL	4	58
						1		CONDUIT ELBOW, 3/4"	COMMERCIAL	4	59
						1		CONDUIT REDUCER, 1" X 3/4"	COMMERCIAL	4	60
						1	CGB296-SG RPE417-117	CGB, 3/4" NPT, .625-.75 ORIFICES WITH OPTIONAL STRAIN RELIEF	EATON/CROUSE HINDS	4	61
						AR		CONDUIT, 1"	COMMERCIAL	4	62
						1	(8889T46)	U-BOLT, 3/8-16UNC, 2 7/16" ID	(MCMASTER-CARR)	4	63
						1	(LB-100)	CONDUIT BODY, 1"	(OZ/GEDNEY)	4	64
						1	81PSM48-4	PRESSURE RELIEF VALVE, 90PSI SET PRESSURE, 1/2" MNPT INLET X 1" FNPT OUTLET	EMERSON	4	65
					1			MOUNT PLATE, 1" THK	ASTM A36 OR A514	5,8	66
						8		NUT, 3/8-16UNC-2B	ASTM A194, GR 2H	4	67
					AR			PLATE, 1/4 THK	ASTM A36 OR A514	5	68
					1			COLUMN BASE PLATE, 1/2" THK	ASTM A36 OR A514	6,8	69
						AR		PIPE, ø3/4" SCH 40, SMLS	ASTM A312, TP 304L	3	70
					AR			PLATE, 3/8" THK	ASTM A36 OR A514	5	71
						12		BOLT, 1/2-13UNC-2A, 2" LONG	ASTM A193, GR B7	3	72
						12		NUT, 1/2-13UNC-2B	ASTM A194, GR 2H	3	73
						1		STREET ELBOW, 1", CL 3000	ASTM A182 GRADE F304/304L	3,4	74
						1		REDUCING TEE, 1" FNPT X 1" FNPT X 1/2" FNPT BRANCH, CL 2000	ASTM A182 GRADE F304/304L	4	75
						1		STREET ELBOW, 1/2", CL 2000	ASTM A182 GRADE F304/304L	4	76
						1		REDUCING ELBOW, 1/2" FNPT X 1/4" FNPT, CL 2000	ASTM A182 GRADE F304/304L	4	77
3				1				ELBOW, 90°, 1" SCH 40, LR, BW	ASTM A403, GR WP304L-S	7	78
						2		LEFT COLUMN STRAP, 1" THK	ASTM A240, TP 304/304L	3,9	79
						2		RIGHT COLUMN STRAP, 1" THK	ASTM A240, TP 304/304L	3,9	80
						4	1/4" X 5/8" HHCS	BOLT, 1/4-20UNC-2A X 5/8" L	B-LINE	3	81
						AR	5BTV2-CT	SELF-REGULATING HEATING CABLE	PENTAIR/RAYCHEM	10	82
						1	E-150	END SEAL KIT, LOW-PROFILE	PENTAIR/RAYCHEM	10	83
						AR	GT-66	GLASS-TAPE, 1/2" THK	PENTAIR/RAYCHEM	10	84
						AR		AP-ARMAFLEX, 1" THK	ARMACELL	10	85
						1		MOUNT PLATE GASKET, 1/8" THK, ADHESIVE BACKING	EPDM DURO 40	3	86
						AR		SHIM STOCK, ROLL, 0.005" THK	ASTM A666, 304	4	87
						8	1/4" X 1 1/4" HHCS	BOLT, 1/4-20UNC-2A X 1 1/4" LONG	B-LINE	3,4	88
						1		GUSSET, PLATE 1/4" THK	ASTM A36	6,9	89
						2		SHIM PLATE, (1/4" THK)	ASTM A240, TP 304/304L	3,9	90
						1	1501540	CONNECTOR, MALE, 4 PIN, M12, UL LISTED, SACC-M12MS-4CON-PG 9-SH	PHOENIX CONTACT	4	91
						1	1515170	CONNECTOR, FEMALE, 4 PIN, M12, UL LISTED, SACC-M12FS-4CON-PG 9-SH	PHOENIX CONTACT	4	92
					2			MOUNTING BLOCK, 5/8" THK	ASTM A36 OR A572	5,9	93
						1	251POCPC	HANDLE WITH CORD GRIP	MELTRIC	4	94
						1	22-18147	DXN20 SWITCH RATED PLUG, MALE INLET, HAZARDOUS LOCATION	MELTRIC	4	95
						AR	MTM1H10-C	CABLE TIE MOUNT, SST, W/ #10 SCREW	PANDUIT	3	96
						1		REDUCING TEE, 1" FNPT X 1" FNPT X 1/2" FNPT BRANCH, CL 2000	ASTM A182 GRADE F304/304L	4	97

PARTS LIST/MATERIAL LIST

QTY -070	QTY -060	QTY -050	QTY -040	QTY -030	QTY -020	QTY -010	PARTS / DASH NUMBER	NOMENCLATURE/DESCRIPTION	MATERIAL/REFERENCE	SHEET	ITEM NO
						X	-010	PUMP IX COLUMN ASSEMBLY		2	1
					X	1	-020	STRONGBACK WELDMENT		2,5	2
				X		1	-030	HOSE TO COLUMN SPOOL WELDMENT		2,7	3
			X			1	-040	PIPE ADAPTER WELDMENT		3,7	4
		X				1	-050	INLET PIPING WELDMENT		2,7	5
	X					1	-060	INLET SCREEN WELDMENT		2,7	6
X						1	-070	COLUMN TO FILTER SPOOL WELDMENT		2,7	7
											8
											9
						1	ANPL 3.2	PUMP ASSEMBLY	LIBERTY	2	10
						1	CEES-16-604-M -028-010	FILTER ASSEMBLY	COLUMBIA ENERGY	2	11
						1	CEES-16-604-M -026-010	IX COLUMN VESSEL	COLUMBIA ENERGY	2	12
						1	CEES-16-604-M -007-010	HOSE, PUMP OUTLET TO FILTER	COLUMBIA ENERGY	2	13
					1			PIPE SUPPORT 1, ANGLE, 1 1/2" X 1 1/2", 3/16" THK	ASTM A36	5,8	14
					1			PIPE SUPPORT 2, ANGLE, 1 1/2" X 1 1/2", 3/16" THK	ASTM A36	5,8	15
					4			COLUMN LATCH BLOCK	ASTM A36 OR A572	6,9	16
					2			COLUMN SPACER, PLATE, 1" THK	ASTM A36 OR A572	6,9	17
	1							SCREEN TOP PLATE, ø8" OD X ø3" ID, 1/4" THK	ASTM A240, TP 304/304L	7	18
	1							SCREEN BOTTOM PLATE, ø8", 1/4" THK	ASTM A240, TP 304/304L	7	19
					1			PIPE BRACKET, PLATE, 1/4" THK	ASTM A36 OR A514	6,8	20
					1			COLUMN SHIELDING PIN BAR, 4" THK	ASTM A36 OR A572	6,8	21
	AR						9358T53	SCREEN, ROLLED, ø8" ID, 1/2" PERFORATED, 16 GA, SST	(MCMASTER-CARR)	7	22
						1	FS-752-12FP	NIPPLE, FLAT FACE, 3/4" FNPT, 2000 PSI, 316 SST	PARKER	3	23
	1		1	2		2	100-A-SS	MALE CAMLOCK, 1" FNPT	DIXON	3,4, 7	24
						4		SOCKET HEAD CAP SCREW, 10-32UNC-2A, 2 1/4" L	ASTM F837, GROUP 1, CW1	3	25
						3	BLUE-GARD 3700	FLANGE RING GASKET, 1/8 THK, FOR 1" FLANGE	GARLOCK	3	26
						8		UHMWPE BUSHING, 1/4" THK	UHMWPE	3,9	27
						1	CEES-16-604-M -007-030	HOSE, IX COLUMN TO RISER ADAPTER	COLUMBIA ENERGY	2	28
					AR			HSS, 2" X 2" X 1/4"	ASTM A500, GR B	6	29
					2			ACTEK PLATE, 2 1/2" X 2 1/2" X 1" THK	ASTM A36 OR A572	6,8	30
						5	B2400-1	PIPE STRAP, FOR ø1" PIPE	B-LINE	3	31
					AR		B22-GLV	CHANNEL STRUT	B-LINE	6	32
						6	N224	SPRING NUT	B-LINE	3	33
											34
						2	46014	SWIVEL HOIST RING, 3/4"	ACTEK	2	35
						2	7305-3-R-R-L	VALVE, BALL, 1", BW	FLOWTEK	3	36
						1	MPT230 1 INCH	VALVE, 3-WAY, 180° T-PORT TYPE I BALL, 1" FNPT ENDS	FLOWTEK	3	37
						1	16F-C16L-50-EPR -SS	CHECK VALVE, 1"FNPT	PARKER	4	38
		AR						PIPE, ø2" SCH 40, SMLS	ASTM A312, TP 304L	7	39
AR			AR	AR		AR		PIPE, ø1" SCH 40, SMLS	ASTM A312, TP 304L	4,7	40
						AR		PIPE, ø1/2" SCH 40, SMLS	ASTM A312, TP 304L	3,4	41
		1						REDUCER, 2" X 1", SCH 40, BW	ASTM A403, GRADE WP304L-S	7	42
					1			PIPE (MODIFIED), ø10", SCH 40, SMLS	ASTM A53, GRADE B	5,7	43
						1		TEE, 1" FNPT, CL 3000	ASTM A182 GRADE F304/304L	4	44
						2		REDUCING TEE, 1" X 1/2", BW, SCH 40	ASTM A403, GRADE WP304L-S	3	45

REF NUMBER	TITLE
CEES-16-604-M-007	DOE TBI SY-101 HOSE ASSEMBLIES
CEES-16-604-M-028	DOE TBI SY-101 FILTER ASSEMBLY
CEES-16-604-M-026	DOE TBI SY-101 IX COLUMN VESSEL

DRAWING/DOCUMENT REFERENCES

NEXT USED ON CEES-16-604-A-002

REV NO	DESCRIPTION	REV BY DATE	DRAFTING CHECKER DATE	ENGINEER DATE	ENGINEERING CHECKER DATE	PROJECT MANAGER DATE

REVISIONS

THIS DESIGN DEVELOPED FOR USE BY THE US DEPARTMENT OF ENERGY UNDER CONTRACT NO. DE-EM0004216.

	NAME	DATE
DRAWN BY	M BERMUDEZ	4/22/19
DRAFTING CHECKER	JT FOSS	5/1/19
ENGINEER	D CAP	5/2/19
ENGINEERING CHECKER	J HARRINGTON	5/2/19
PROJECT MANAGER	P BODEN	5/1/19

Columbia Energy AND ENVIRONMENTAL SERVICES

DOE TBI SY-101
PUMP COLUMN ASSEMBLY

SIZE F | DWG NO CEES-16-604-M-006 | REV 0
SCALE AS SHOWN | SHEET 1 OF 10

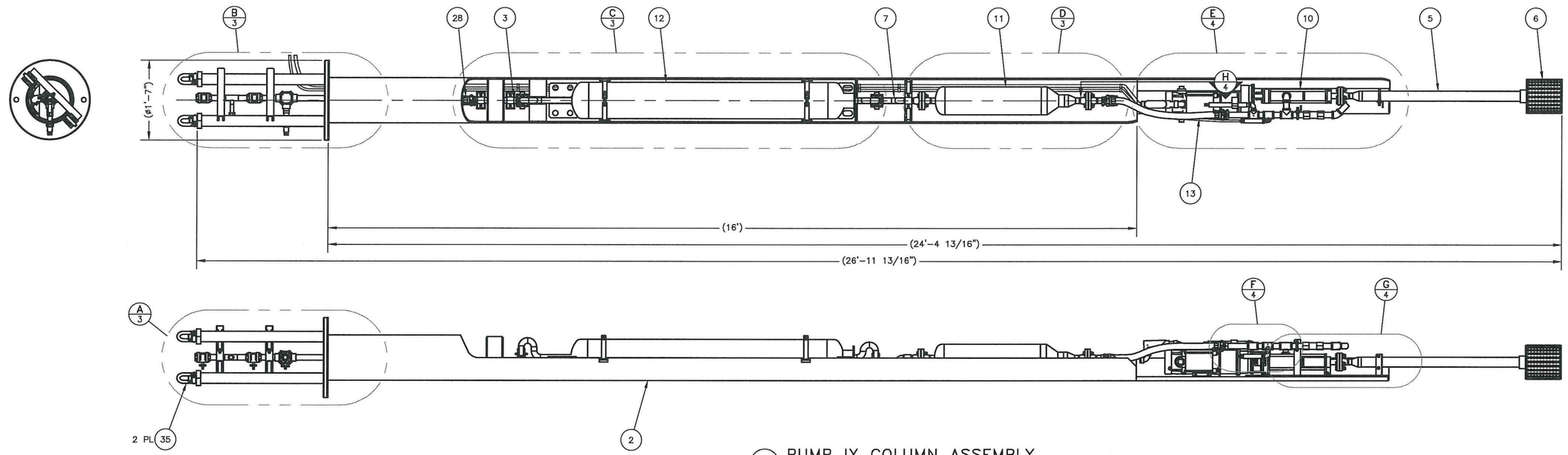

1 PUMP IX COLUMN ASSEMBLY
SCALE: 3/32

JOHN COLIN HENDERSON
STATE OF WASHINGTON
31912
REGISTERED
PROFESSIONAL ENGINEER
5/1/19

REF NUMBER	TITLE
DRAWING/DOCUMENT REFERENCES	
NEXT USED ON	

REV NO	DESCRIPTION	REV BY DATE	DRAFTING CHECKER DATE	ENGINEER DATE	ENGINEERING CHECKER DATE	PROJECT MANAGER DATE
REVISIONS						

	NAME	DATE
DRAWN BY	M BERMUDEZ	4/22/19
DRAFTING CHECKER	JT FOSS	5/1/19
ENGINEER	D CAP	5/2/19
ENGINEERING CHECKER	J HARRINGTON	5/2/19
PROJECT MANAGER	P BODEN	5/1/19

Columbia Energy AND ENVIRONMENTAL SERVICES

DOE TBI SY-101
PUMP COLUMN ASSEMBLY

SIZE F | DWG NO CEES-16-604-M-006 | REV 0
SCALE AS SHOWN | SHEET 2 OF

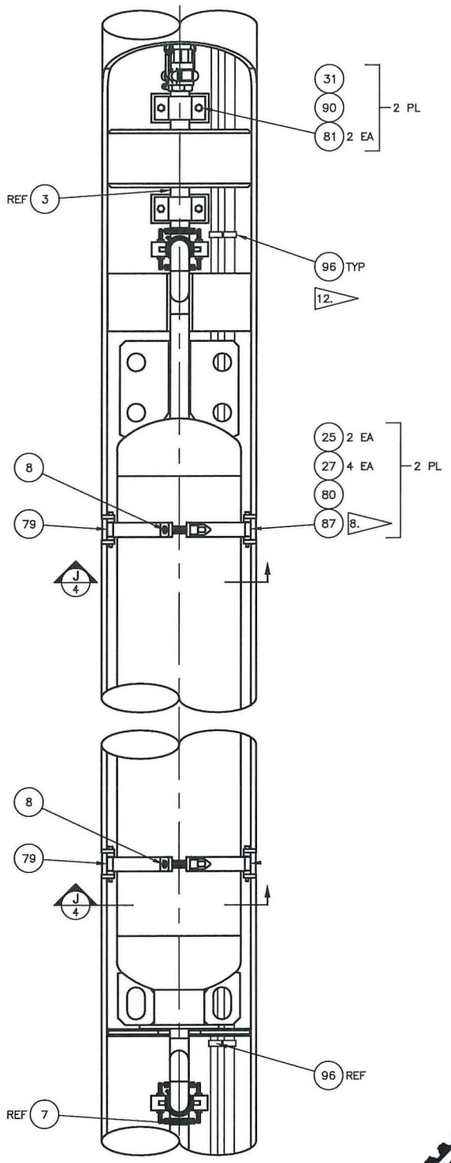

C 2 DETAIL
SCALE: 1/4
ROTATED VIEW FOR CLARITY.

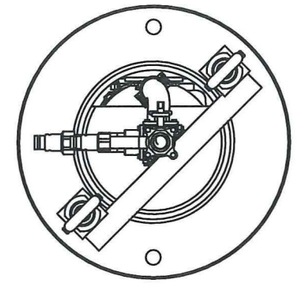

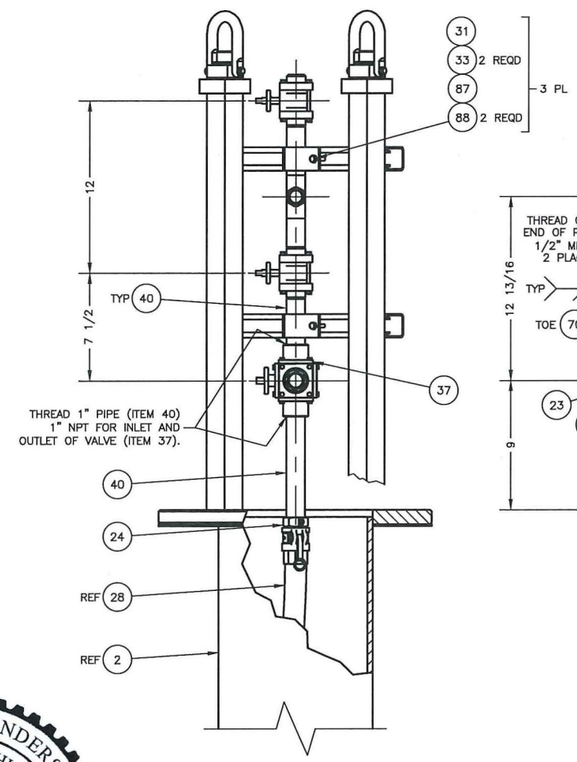

A 2 DETAIL
SCALE: 1/4
ROTATED VIEW FOR CLARITY.

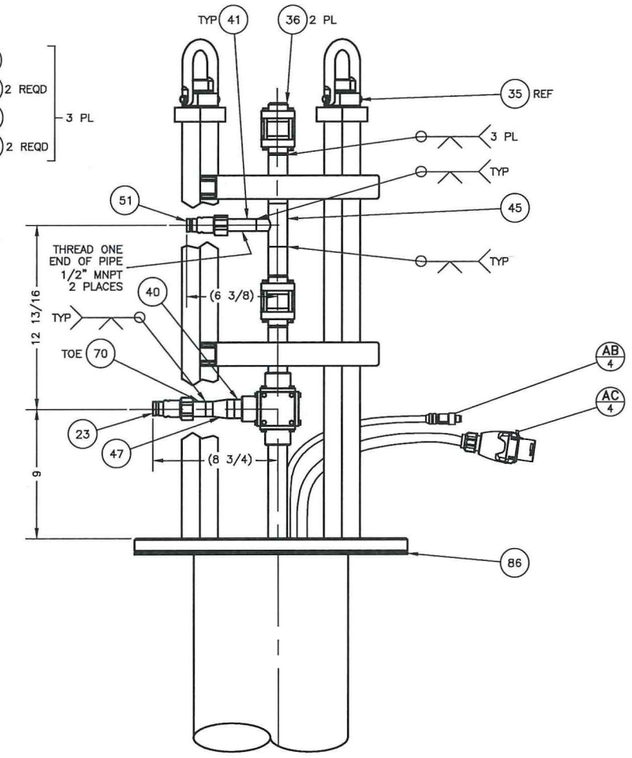

B 2 DETAIL
SCALE: 1/4
ROTATED VIEW FOR CLARITY.

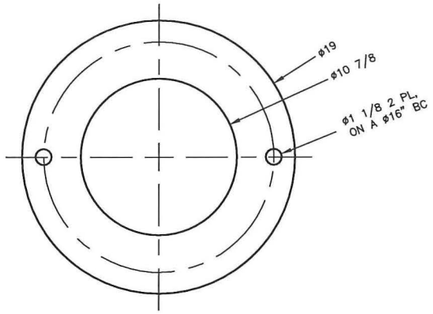

86 MOUNT PLATE GASKET
SCALE: 1/2

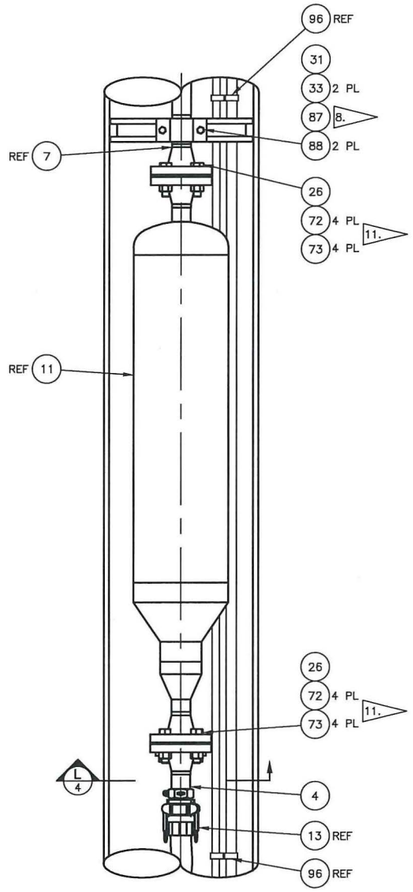

D 2 DETAIL
SCALE: 1/4
ROTATED VIEW FOR CLARITY.

JOHN COLIN HENDERSON
STATE OF WASHINGTON
31912
REGISTERED
PROFESSIONAL ENGINEER
5/7/19

REF NUMBER	TITLE
DRAWING/DOCUMENT REFERENCES	
NEXT USED ON	

REV NO	DESCRIPTION	REV BY DATE	DRAFTING CHECKER DATE	ENGINEER DATE	ENGINEERING CHECKER DATE	PROJECT MANAGER DATE
REVISIONS						

	NAME	DATE
DRAWN BY	M BERMUDEZ	4/22/19
DRAFTING CHECKER	JT FOSS	5/1/19
ENGINEER	D CAP	5/2/19
ENGINEERING CHECKER	J HARRINGTON	5/2/19
PROJECT MANAGER	P BODEN	5/1/19

Columbia Energy
AND ENVIRONMENTAL SERVICES

DOE TBI SY-101
PUMP COLUMN ASSEMBLY

SIZE F | DWG NO CEES-16-604-M-006 | REV 0
SCALE AS SHOWN | SHEET 3 OF

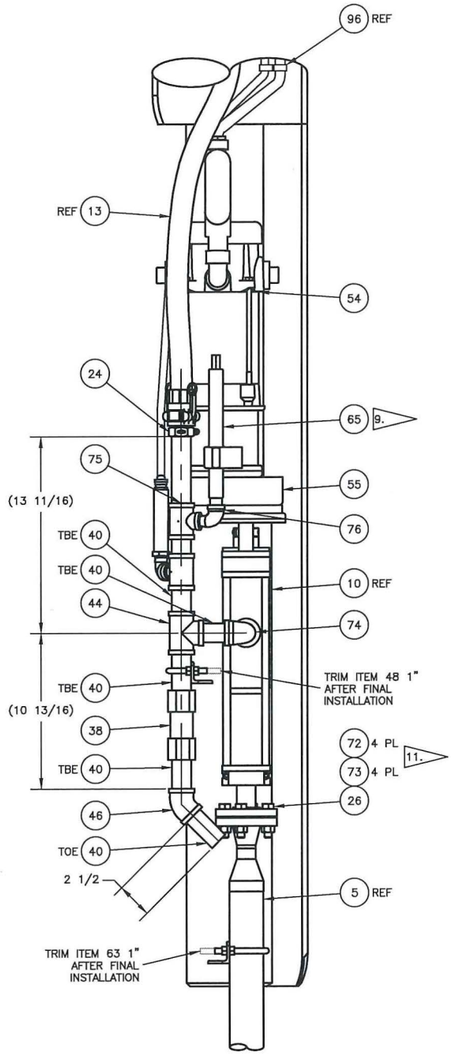

E 2 DETAIL 10.
SCALE: 1/4
ROTATED VIEW FOR CLARITY.

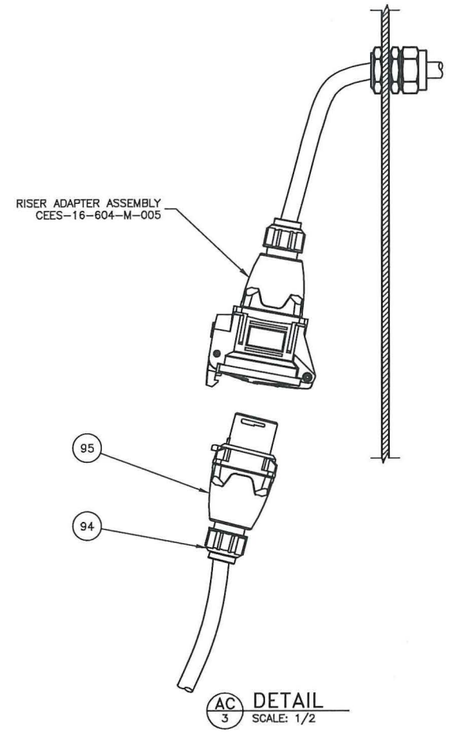

AC 3 DETAIL
SCALE: 1/2

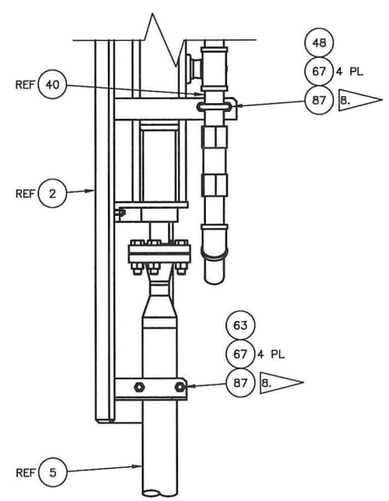

G 2 DETAIL 10.
SCALE: 1/4
ROTATED VIEW FOR CLARITY.

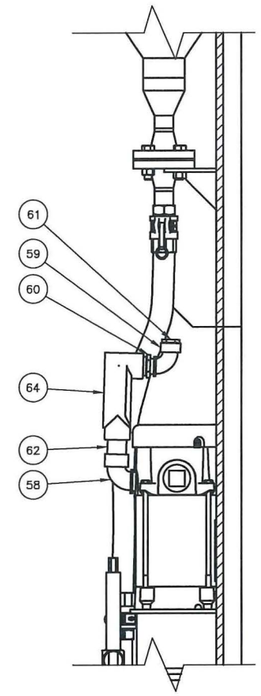

H 2 DETAIL
SCALE: 1/4
ROTATED VIEW FOR CLARITY.

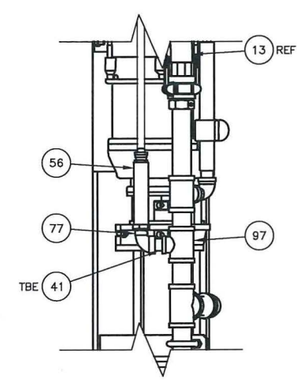

F 2 DETAIL 10.
SCALE: 1/4
ROTATED VIEW FOR CLARITY.

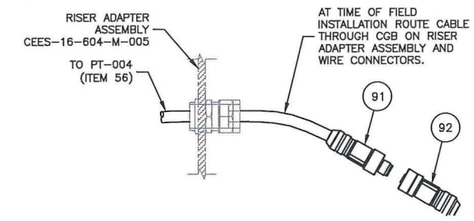

AB 3 DETAIL
SCALE: 1/2

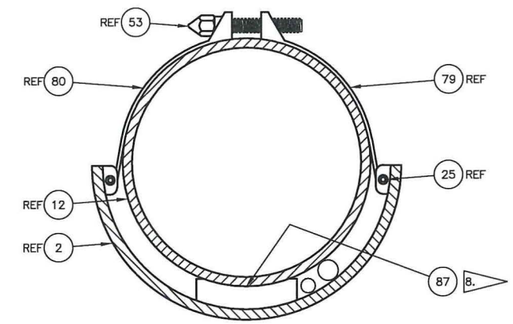

J 3 SECTION
SCALE: 1/2
2 PL

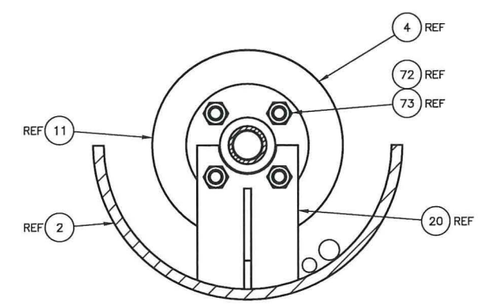

L 3 SECTION
SCALE: 1/2

JOHN COLIN HENDERSON
STATE OF WASHINGTON
31912
REGISTERED
PROFESSIONAL ENGINEER
5/2/19

REF NUMBER	TITLE
DRAWING/DOCUMENT REFERENCES	
NEXT USED ON	

REV NO	DESCRIPTION	REV BY DATE	DRAFTING CHECKER DATE	ENGINEER DATE	ENGINEERING CHECKER DATE	PROJECT MANAGER DATE
REVISIONS						

	NAME	DATE
DRAWN BY	M BERMUDEZ	4/22/19
DRAFTING CHECKER	JT FOSS	5/1/19
ENGINEER	D CAP	5/2/19
ENGINEERING CHECKER	J HARRINGTON	5/2/19
PROJECT MANAGER	P BODEN	5/1/19

Columbia Energy
AND ENVIRONMENTAL SERVICES

DOE TBI SY-101
PUMP COLUMN ASSEMBLY

SIZE F | DWG NO CEES-16-604-M-006 | REV 0
SCALE AS SHOWN | SHEET 4 OF

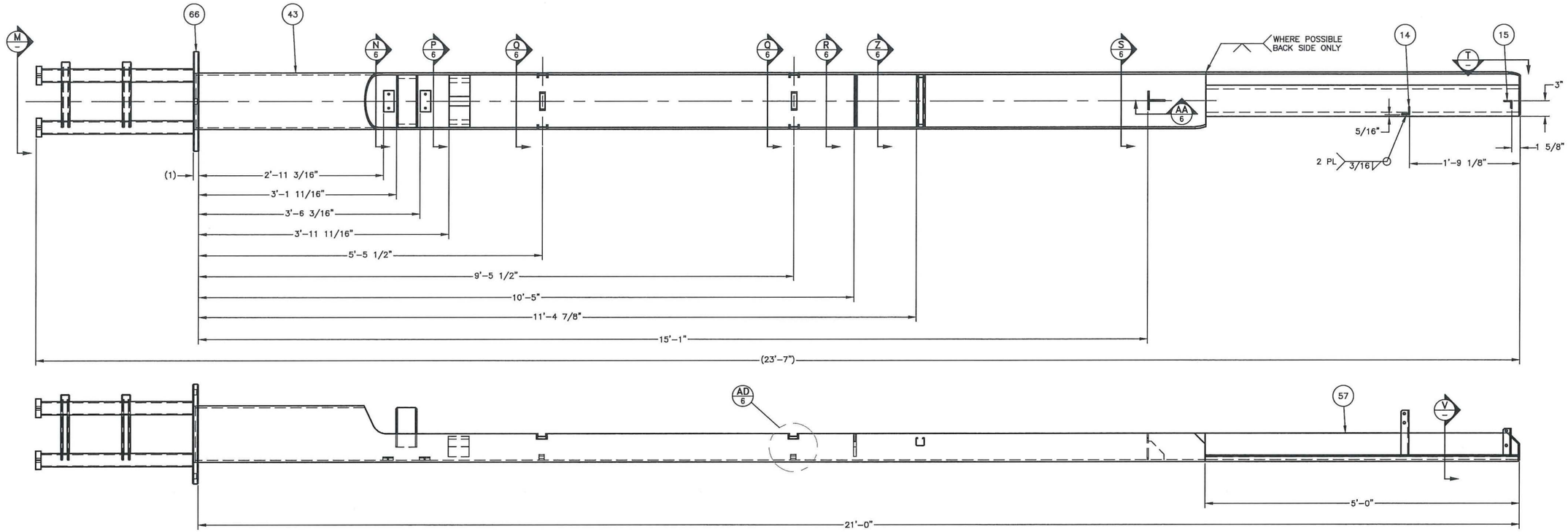

2 STRONGBACK WELDMENT
SCALE: 1/8

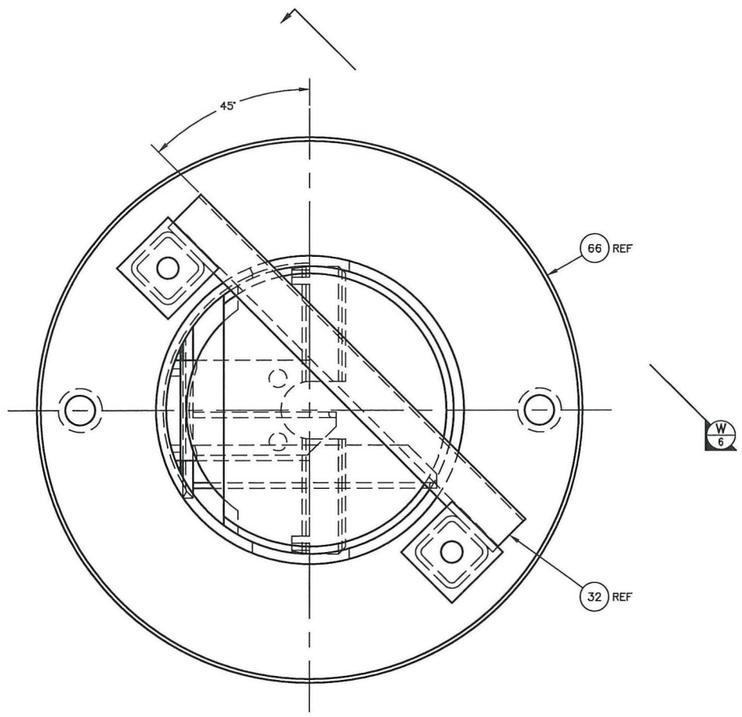

M VIEW
SCALE: 1/2

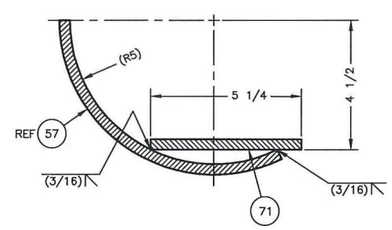

V SECTION
SCALE: 1/2

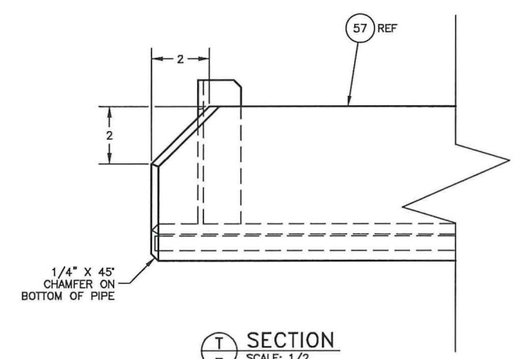

T SECTION
SCALE: 1/2
ROTATED VIEW FOR CLARITY.

JOHN COLIN HENDERSON
STATE OF WASHINGTON
31912
REGISTERED
PROFESSIONAL ENGINEER
5/1/19

REF NUMBER	TITLE
DRAWING/DOCUMENT REFERENCES	
NEXT USED ON	

REV NO	DESCRIPTION	REV BY DATE	DRAFTING CHECKER DATE	ENGINEER DATE	ENGINEERING CHECKER DATE	PROJECT MANAGER DATE
REVISIONS						

	NAME	DATE
DRAWN BY	M BERMUDEZ	4/22/19
DRAFTING CHECKER	JT FOSS	5/1/19
ENGINEER	D CAP	5/2/19
ENGINEERING CHECKER	J HARRINGTON	5/2/19
PROJECT MANAGER	P BODEN	5/1/19

Columbia Energy
AND ENVIRONMENTAL SERVICES

DOE TBI SY-101
PUMP COLUMN ASSEMBLY

SIZE F | DWG NO CEES-16-604-M-006 | REV 0
SCALE AS SHOWN | SHEET 5 OF

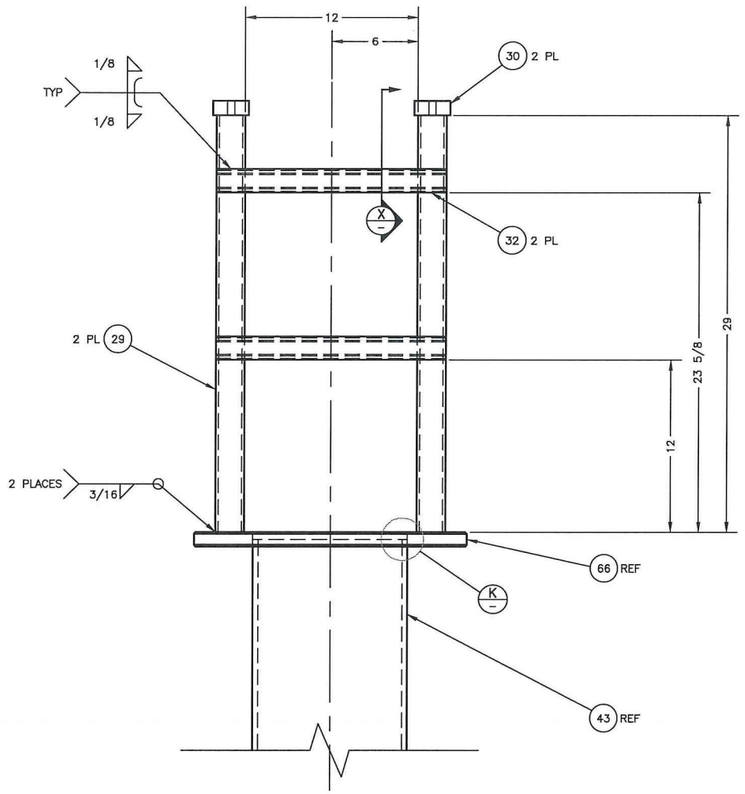

W 5 VIEW
SCALE: 1/4
ROTATED VIEW FOR CLARITY.

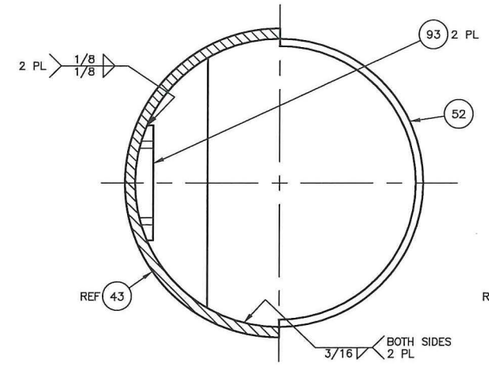

N 5 SECTION
SCALE: 1/2

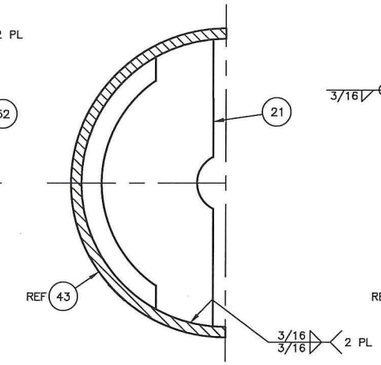

P 5 SECTION
SCALE: 1/2

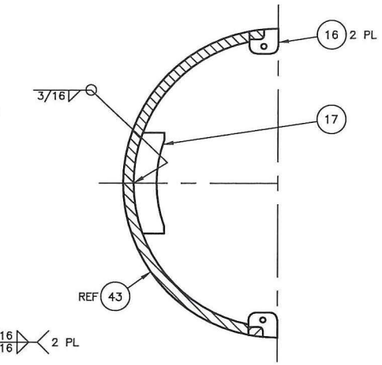

Q 5 SECTION
SCALE: 1/2
2 PL

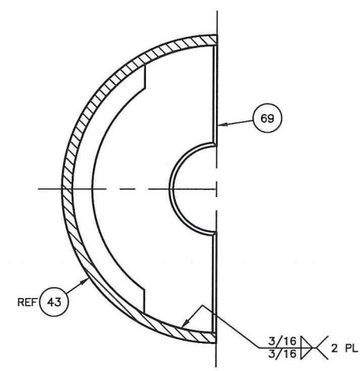

R 5 SECTION
SCALE: 1/2

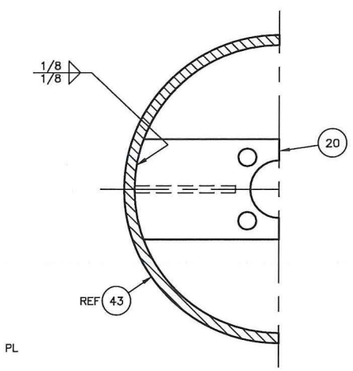

S 5 SECTION
SCALE: 1/2
2 PL

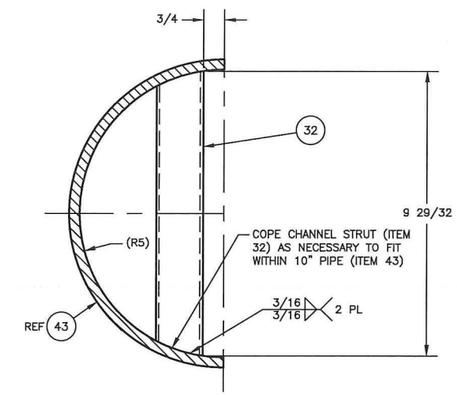

Z 5 SECTION
SCALE: 1/2

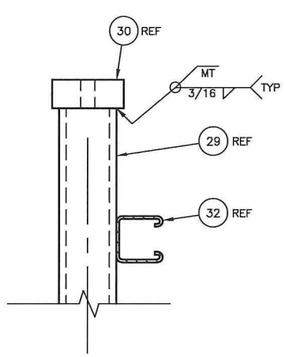

X — SECTION
SCALE: 1/2

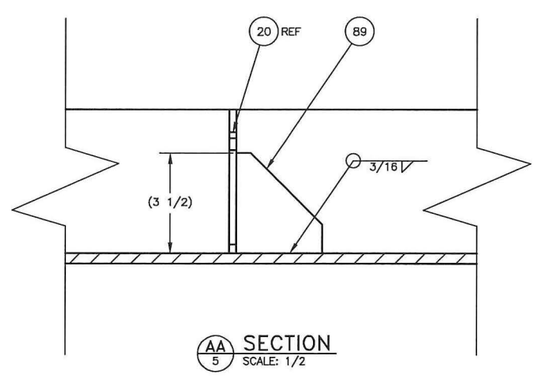

AA 5 SECTION
SCALE: 1/2

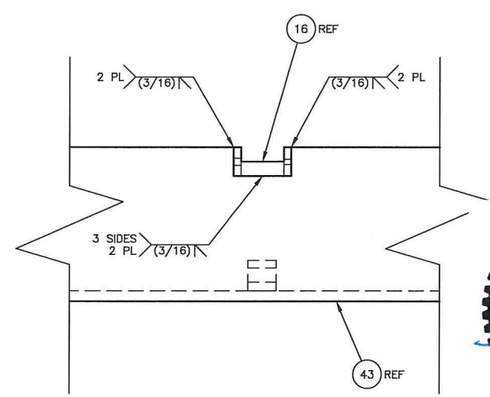

AD 5 DETAIL
SCALE: 1/2

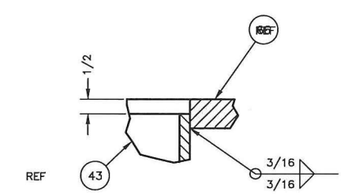

K — DETAIL
SCALE: 1/2

REF NUMBER	TITLE
DRAWING/DOCUMENT REFERENCES	
NEXT USED ON	

REV NO	DESCRIPTION	REV BY DATE	DRAFTING CHECKER DATE	ENGINEER DATE	ENGINEERING CHECKER DATE	PROJECT MANAGER DATE
REVISIONS						

	NAME	DATE
DRAWN BY	M BERMUDEZ	4/22/19
DRAFTING CHECKER	JT FOSS	5/1/19
ENGINEER	D CAP	5/2/19
ENGINEERING CHECKER	J HARRINGTON	5/2/19
PROJECT MANAGER	P BODEN	5/1/19

Columbia Energy
AND ENVIRONMENTAL SERVICES

DOE TBI SY-101
PUMP COLUMN ASSEMBLY

SIZE F | DWG NO CES-16-604-M-006 | REV 0
SCALE AS SHOWN | SHEET 6 OF

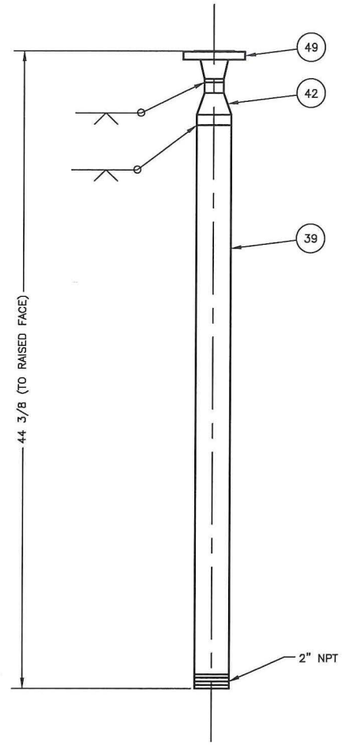

5 INLET PIPING WELDMENT
SCALE: 1/4

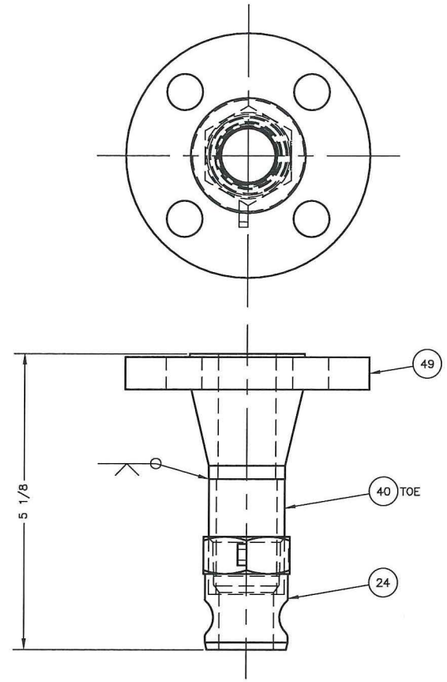

4 PIPE ADAPTER WELDMENT
SCALE: 1/1

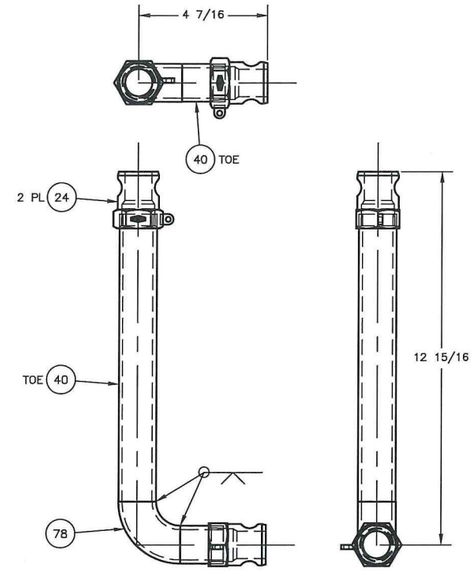

3 HOSE TO COLUMN SPOOL WELDMENT
SCALE: 1/2

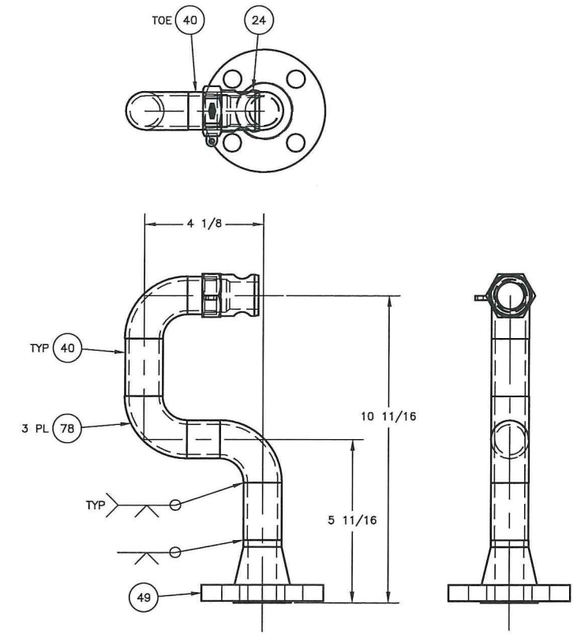

7 COLUMN TO FILTER SPOOL WELDMENT
SCALE: 1/2

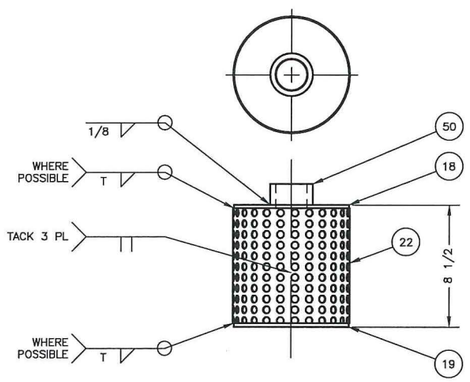

6 INLET SCREEN WELDMENT
SCALE: 1/4

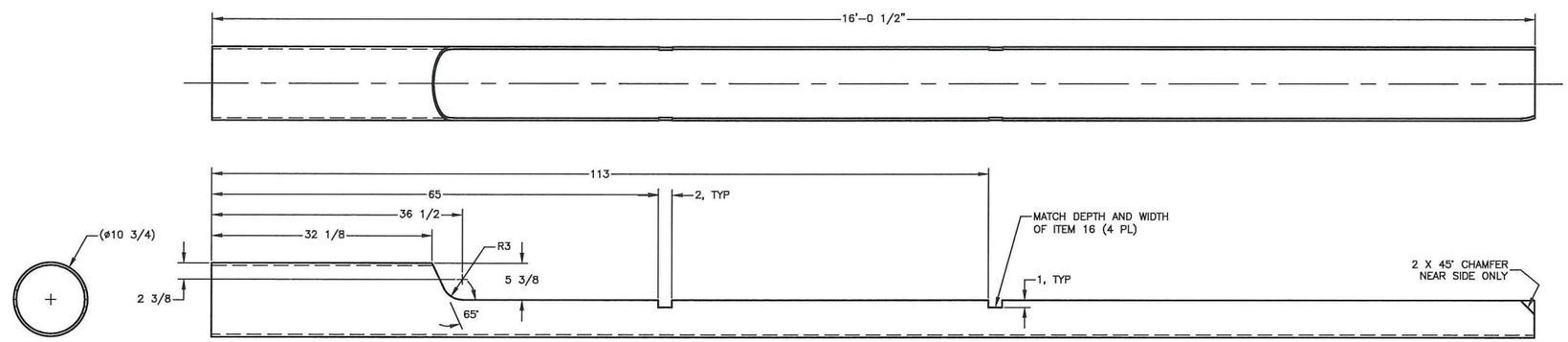

43 10" PIPE (MODIFIED)
SCALE: 1/8

5/7/19

REF NUMBER	TITLE
DRAWING/DOCUMENT REFERENCES	
NEXT USED ON	

REV NO	DESCRIPTION	REV BY DATE	DRAFTING CHECKER DATE	ENGINEER DATE	ENGINEERING CHECKER DATE	PROJECT MANAGER DATE
REVISIONS						

	NAME	DATE
DRAWN BY	M BERMUDEZ	4/22/19
DRAFTING CHECKER	JT FOSS	5/1/19
ENGINEER	D CAP	5/2/19
ENGINEERING CHECKER	J HARRINGTON	5/2/19
PROJECT MANAGER	P BODEN	5/1/19

Columbia Energy
AND ENVIRONMENTAL SERVICES

DOE TBI SY-101
PUMP COLUMN ASSEMBLY

SIZE F | DWG NO CEES-16-604-M-006 | REV 0
SCALE AS SHOWN | SHEET 7 OF

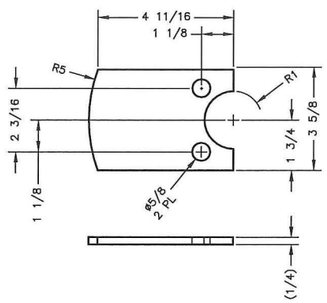

20 PIPE BRACKET
SCALE: 1/2

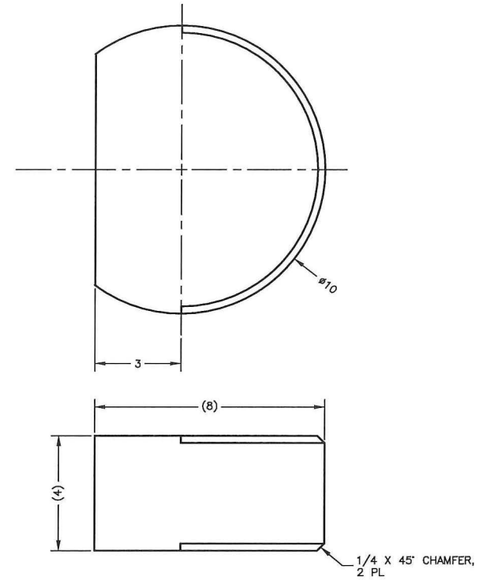

52 SHIELD PLUG
SCALE: 1/2

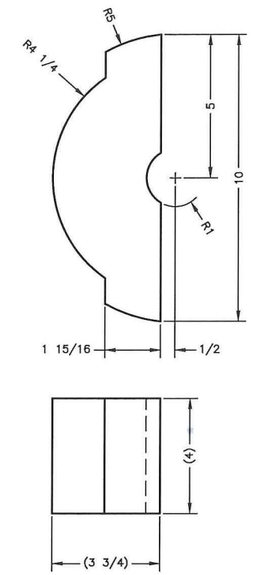

21 COLUMN SHIELDING PIN BAR
SCALE: 1/2

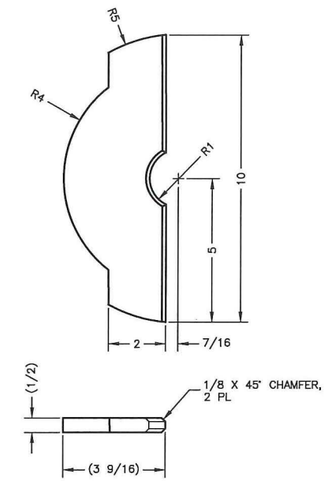

69 COLUMN BASE PLATE
SCALE: 1/2

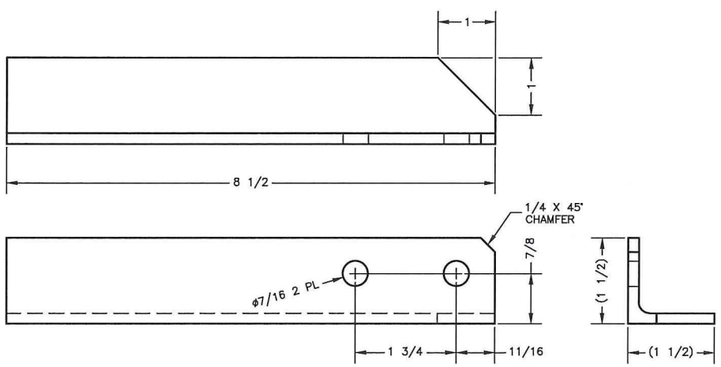

14 PIPE SUPPORT 1
SCALE: 1/1

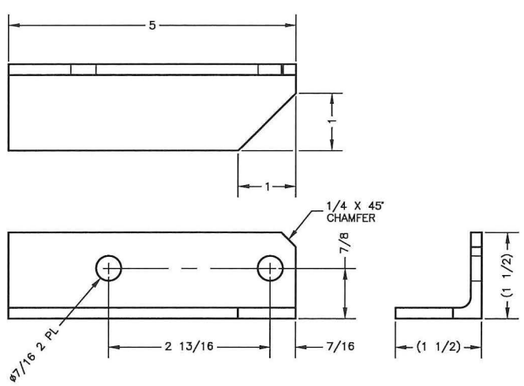

15 PIPE SUPPORT 2
SCALE: 1/1

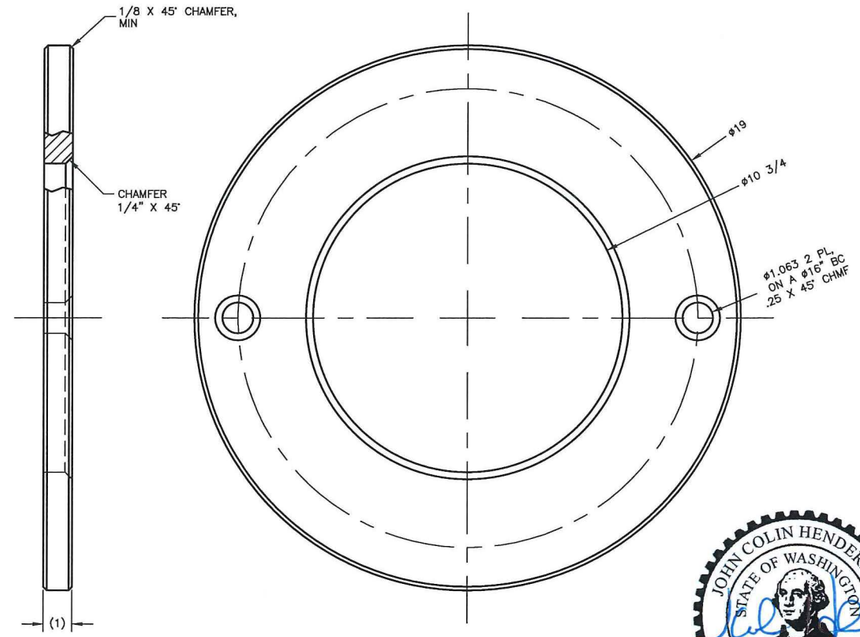

66 MOUNT PLATE
SCALE: 1/2

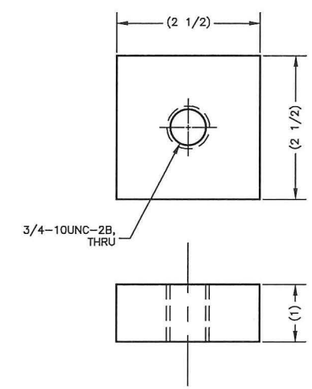

30 ACTEK PLATE
SCALE: 1/1

JOHN COLIN HENDERSON
STATE OF WASHINGTON
31912
REGISTERED
PROFESSIONAL ENGINEER

5/7/19

REF NUMBER	TITLE
DRAWING/DOCUMENT REFERENCES	
NEXT USED ON	

REV NO	DESCRIPTION	REV BY DATE	DRAFTING CHECKER DATE	ENGINEER DATE	ENGINEERING CHECKER DATE	PROJECT MANAGER DATE
REVISIONS						

	NAME	DATE
DRAWN BY	M BERMUDEZ	4/22/19
DRAFTING CHECKER	JT FOSS	5/1/19
ENGINEER	D CAP	5/2/19
ENGINEERING CHECKER	J HARRINGTON	5/2/19
PROJECT MANAGER	P BODEN	5/1/19

Columbia Energy AND ENVIRONMENTAL SERVICES

DOE TBI SY-101
PUMP COLUMN ASSEMBLY

SIZE F | DWG NO CEES-16-604-M-006 | REV 0

SCALE AS SHOWN | SHEET 8 OF

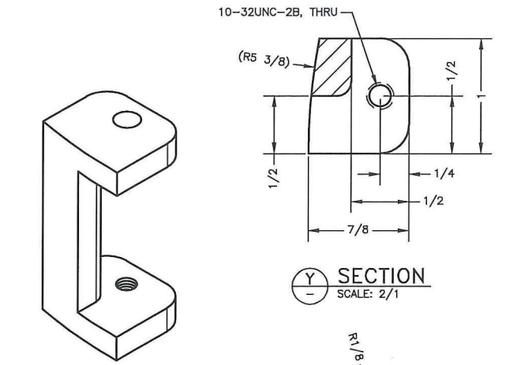

Y SECTION
SCALE: 2/1

ISO VIEW
SCALE: NTS

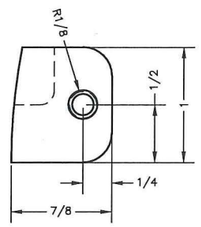

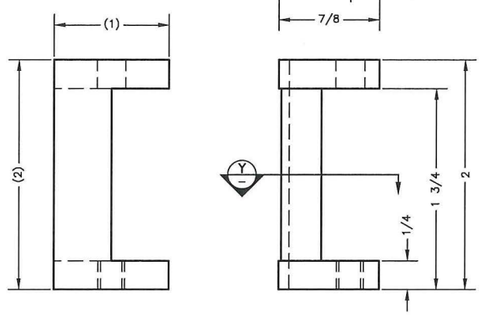

16 COLUMN LATCH BLOCK
SCALE: 2/1

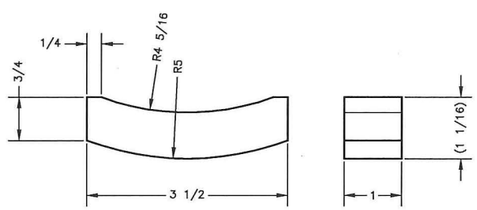

17 COLUMN SPACER
SCALE: 1/1

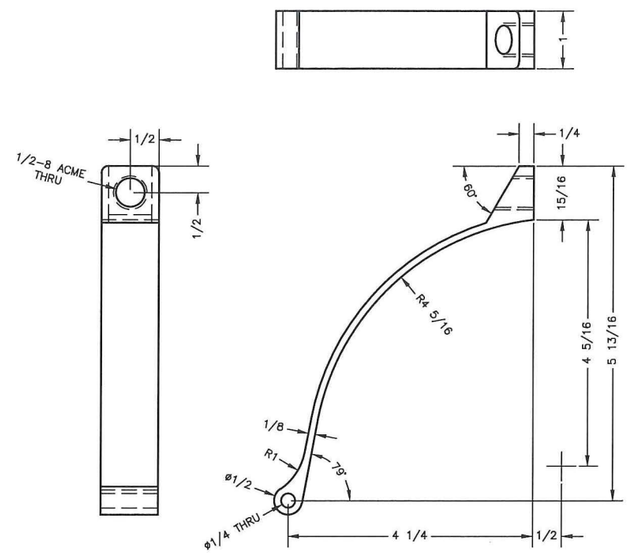

79 LEFT COLUMN STRAP
SCALE: 1/1

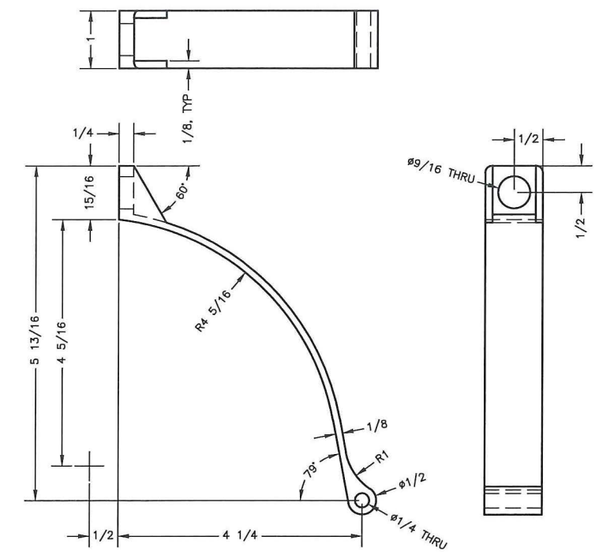

80 RIGHT COLUMN STRAP
SCALE: 1/1

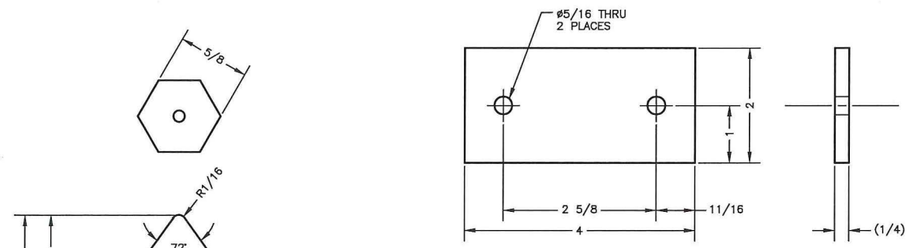

90 SHIM
SCALE: 1/1

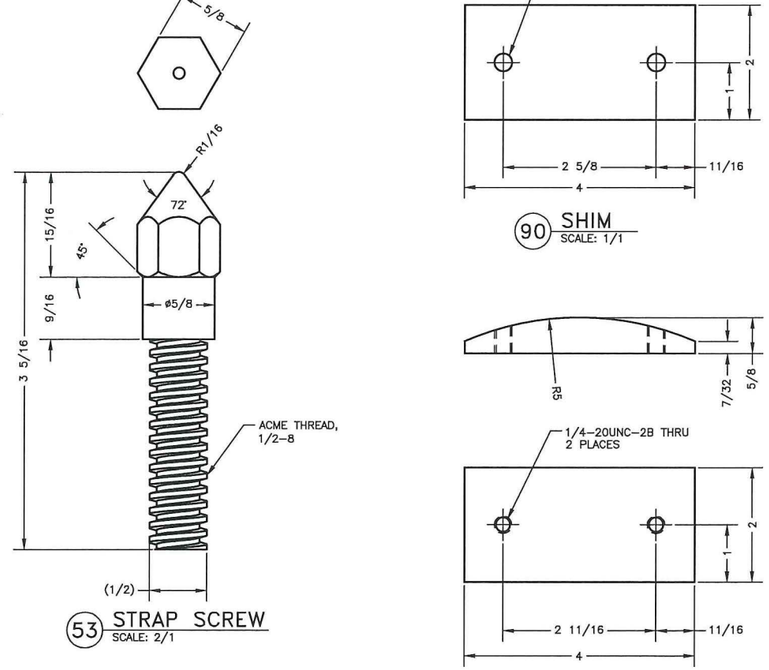

53 STRAP SCREW
SCALE: 2/1

93 MOUNTING BLOCK
SCALE: 1/1

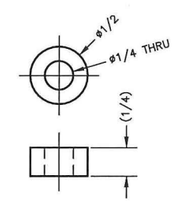

27 UHMWPE BUSHING
SCALE: 2/1

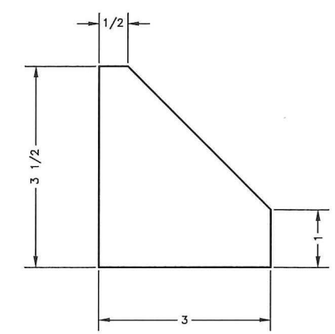

89 GUSSET
SCALE: 1/1

5/7/19

REF NUMBER	TITLE
DRAWING/DOCUMENT REFERENCES	
NEXT USED ON	

REV NO	DESCRIPTION	REV BY DATE	DRAFTING CHECKER DATE	ENGINEER DATE	ENGINEERING CHECKER DATE	PROJECT MANAGER DATE
REVISIONS						

	NAME	DATE
DRAWN	M BERMUDEZ	4/22/19
DRAFTING CHECKER	JT FOSS	5/1/19
ENGINEER	D CAP	5/2/19
ENGINEERING CHECKER	J HARRINGTON	5/2/19
PROJECT MANAGER	P BODEN	5/1/19

Columbia Energy
AND ENVIRONMENTAL SERVICES

DOE TBI SY-101
PUMP COLUMN ASSEMBLY

SIZE F | DWG NO CEES-16-604-M-006 | REV 0
SCALE AS SHOWN | SHEET 9 OF

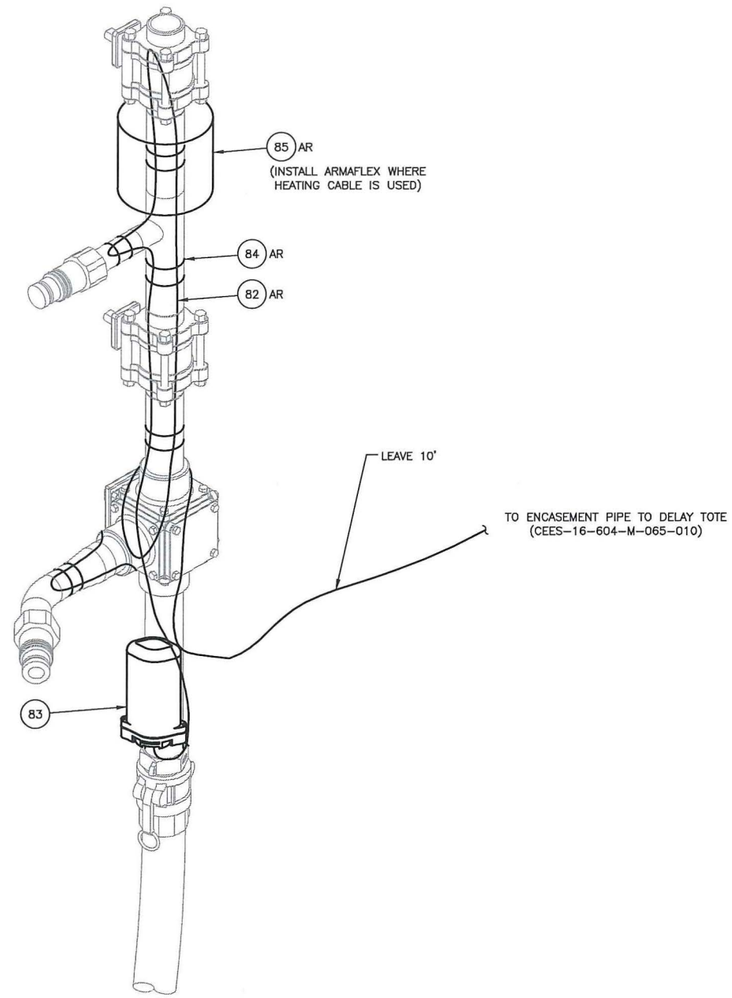

HEAT TRACE DETAIL
SCALE: 1/2

JOHN COLIN HENDERSON
STATE OF WASHINGTON
31912
REGISTERED
PROFESSIONAL ENGINEER
5/7/19

REF NUMBER	TITLE
DRAWING/DOCUMENT REFERENCES	
NEXT USED ON	

REV NO	DESCRIPTION	REV BY DATE	DRAFTING CHECKER DATE	ENGINEER DATE	ENGINEERING CHECKER DATE	PROJECT MANAGER DATE
REVISIONS						

	NAME	DATE
DRAWN BY	M BERMUDEZ	4/22/19
DRAFTING CHECKER	JT FOSS	5/1/19
ENGINEER	D CAP	5/2/19
ENGINEERING CHECKER	J HARRINGTON	5/2/19
PROJECT MANAGER	P BODEN	5/1/19

Columbia Energy
AND ENVIRONMENTAL SERVICES

DOE TBI SY-101
PUMP COLUMN ASSEMBLY

SIZE F | DWG NO CEES-16-604-M-006 | REV 0
SCALE AS SHOWN | SHEET 10 OF

Engineering Drawing

CEES-16-604-M-007

DOE TBI SY-101 Hose Assemblies

GENERAL NOTES: (UNLESS OTHERWISE SPECIFIED)

1. DIMENSIONS ARE IN INCHES.
   TOLERANCES:
   HOSE LENGTHS: ±3% OF OVERALL LENGTH FOR HOSES 5'–0" AND LESS, ±2% FOR HOSES 20'–0" AND LESS, ±1% FOR HOSES GREATER THAN 20'–0".
2. FOR HOSE ROUTING AND LOCATION SEE CEES–16–604–A–002.
3. HYDROSTATIC PROOF PRESSURE TEST HOSE AFTER FINAL ASSEMBLY. TEST PRESSURE SHALL BE TWICE THE WORKING DESIGN PRESSURE. MAINTAIN PRESSURE FOR 10 MINUTES, UNLESS OTHERWISE SPECIFIED BY ENGINEERING, VERIFY NO LEAKAGE.

4. HOSE WORKING DESIGN PRESSURE IS 100 PSIG. PROOF TESTING PRESSURE USED IS 200 PSIG. PNEUMATICALLY TEST NITROGEN HOSE WITH AIR AT 200 PSIG AND HOLD FOR 10 MINUTES. VERIFY NO LEAKAGE.

5. VERIFY HOSE LENGTH WITH AS–INSTALLED PIPING CONFIGURATION AND RECORD TOTAL LENGTH IN HOSE ASSEMBLY TABLE.

6. SEAL THREADED CONNECTIONS WITH LOCTITE 567 THREAD SEALANT AND ACTIVATOR 7649. APPLY PER MANUFACTURERS INSTRUCTIONS.

7. CRIMP FERRULE PART NUMBER XXX IS BASED ON ACTUAL HOSE OD. AFTER RECEIPT OF HOSE, CRIMP FERRULES (ITEMS 23) ARE TO BE OBTAINED TO MATCH THE HOSE OD.

8. HOSE WORKING PRESSURE IS 200 PSIG. HYDROSTATIC TESTING PRESSURE USED IS 400 PSIG. HOLD FOR 10 MINUTES. VERIFY NO LEAKS.

   PROOF PRESSURE TESTING SHALL BE PERFORMED ON A 3–FOOT LONG COUPON OF EACH INDIVIDUAL HOSE SIZE (ITEM 28, ITEM 30) TO QUALIFY THE ASSEMBLY (HOSE WITH HOSE SHANK AND CRIMP FERRULE AS AN ASME B31.3 UNLISTED COMPONENT). PROOF PRESSURE SHALL BE FOUR TIMES WORKING PRESSURE. MAINTAIN PRESSURE FOR 10 MINUTES. VERIFY NO LEAKAGE.

   THE INDIVIDUAL ASSEMBLIES TO BE TESTED ARE:

   1/2" HOSE (ITEM 28) 3 FT LONG WITH 1/2" MNPT CRIMP FITTING (ITEM 32) INSTALLED ON EACH END.

   1" HOSE (ITEM 30) 3 FT LONG WITH 1" MNPT HOSE SHANK (ITEM 29) AND 1" CRIMP FERRULE (ITEM 23) INSTALLED ON EACH END.

   PROOF TESTED HOSE COUPONS SHALL BE DISCARDED AFTER TESTING.

9. FLEXIBLE METAL HOSE SHALL BE 3/4" I.D. MICROFLEX INC. A240 316L STAINLESS STEEL CORRUGATED HOSE TYPE MSS–362 DOUBLE BRAID. BRAID SHALL BE ASTM A580 TYPE 304 STAINLESS STEEL. FLEXIBLE HOSE SHALL HAVE A MINIMUM RATED WORKING PRESSURE OF 200 PSIG AT 200°F, AND MINIMUM RATED BURST PRESSURE OF 800 PSIG AT 70°F. FLEXIBLE HOSE SHALL HAVE AN ALLOWABLE STATIC CENTERLINE BEND RADIUS OF 8" OR LESS. HOSE LIVE LENGTH (FLEXIBLE LENGTH) SHALL BE 5 3/4". FITTING TYPE SHALL BE PIPE 3/4" SCH 40 SEAMLESS ASTM A312 TYPE 304/304L, MNPT WITH HEX NUT ON EACH END. FLEXIBLE HOSE SHALL MEET ALL APPLICABLE REQUIREMENTS OF B31.3 CODE.

HOSE ASSEMBLY TABLE

PART/DASH NUMBER	NOMENCLATURE/DESCRIPTION	TOTAL LENGTH 5.	HOSE LENGTH	HOSE ASSEMBLY DETAIL
–010	PUMP OUTLET TO FILTER		2'–5"	B
–020	AIR COMPRESSOR TO RISER ADAPTER		320'–0"	C
–030	IX COLUMN TO RISER ADAPTER		2'–9"	B
–040	BACKFLUSH SKID TO MANIFOLD		235'–0	B
–050	AIR – RISER ADAPTER TO PUMP COLUMN		1'–7"	A
–060	PROCESS MANIFOLD TO PROCESS TOTE #1		7'–0"	E
–070	PROCESS MANIFOLD TO PROCESS TOTE #2		9'–6"	D
–080	PROCESS MANIFOLD TO PROCESS TOTE #3		14'–0"	D
–090	PROCESS MANIFOLD TO PROCESS TOTE #4		14'–0"	D
–100	PROCESS MANIFOLD TO PROCESS TOTE #5		9'–6"	D
–110	PROCESS MANIFOLD TO PROCESS TOTE #6		7'–0"	E

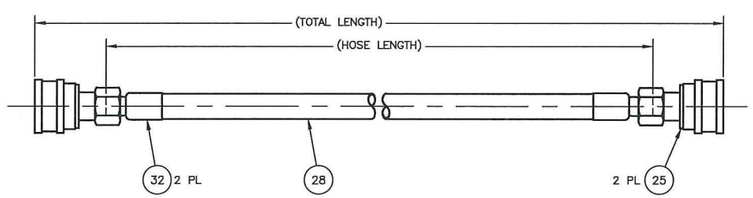

HOSE ASSEMBLY DETAIL – A 6.
SCALE: 1/2
NOTE: REFER TO HOSE ASSEMBLY TABLE FOR DESCRIPTIONS AND LENGTHS

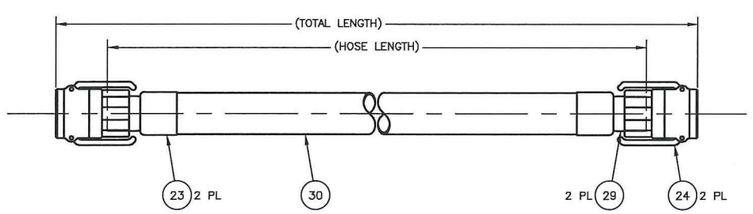

HOSE ASSEMBLY DETAIL – B 6.
SCALE: 1/2
NOTE: REFER TO HOSE ASSEMBLY TABLE FOR DESCRIPTIONS AND LENGTHS

	QTY –110	QTY –100	QTY –090	QTY –080	QTY –070	QTY –060	QTY –050	QTY –040	QTY –030	QTY –020	QTY –010	PARTS / DASH NUMBER	NOMENCLATURE/DESCRIPTION	MATERIAL/REFERENCE	SHEET	ITEM NO
8.											X	–010	PUMP OUTLET TO FILTER		1	1
										X		–020	AIR COMPRESSOR TO RISER ADAPTER		2	2
8.									X			–030	IX COLUMN TO RISER ADAPTER		1	3
								X				–040	BACKFLUSH SKID TO MANIFOLD			4
							X					–050	AIR – RISER ADAPTER TO PUMP COLUMN		1	5
						X						–060	PROCESS MANIFOLD TO PROCESS TOTE #1		1	6
					X							–070	PROCESS MANIFOLD TO PROCESS TOTE #2			7
4.				X								–080	PROCESS MANIFOLD TO PROCESS TOTE #3		1	8
			X									–090	PROCESS MANIFOLD TO PROCESS TOTE #4		1	9
		X										–100	PROCESS MANIFOLD TO PROCESS TOTE #5		1	10
	X											–110	PROCESS MANIFOLD TO PROCESS TOTE #6		1	11
															1	12
															1	13
																14
																15
																16
																17
																18
																19
								1				E–100–L–A	END SEAL, LIGHTED	PENTAIR/RAYCHEM	2	20
								AR					ARMAFLEX WB FINISH	ARMACELL	2	21
													FLANGE, THREADED, ø2, 150#, RF	ASTM A182, GR F304L	2	22
7.								2	2		2	10XXXC50SS	CRIMP FERRULE, 1" C50SS	PT COUPLING	1	23
								2	2		2	100–D–SS	CAM AND GROOVE, TYPE D COUPLER, 1" FNPT, SST	DIXON	1	24
							2			1		FS–501–8FP	COUPLER, FLAT FACE, 1/2" FNPT, 2000 PSI, 316 SST	PARKER	1,2	25
	2	2	2	2	2	2						FS–751–12FP	COUPLER, FLAT FACE, 3/4" FNPT, 2000 PSI, 316 SST	PARKER	2	26
										1		SS–8–A–8RS	STRAIGHT ADAPTER, 1/2" FNPT X 1/2" MALE ISO PARALLEL THREAD, SST	SWAGELOK	2	27
							AR			AR		ICH–ER–1/2–300BK	HOSE, 1/2", 0.88" OD, LAR, EPDM	INDUSTRIAL CHOICE	2	28
								2	2		2	10TMC50SS	1" MNPT X 1" HOSE SHANK	PT COUPLING	1	29
								AR	AR		AR	ICH–ER–1–300BK	HOSE, 1", 1.445" OD, LAR, EPDM	INDUSTRIAL CHOICE	1	30
																31
							2			2		SHF90L–08–08MP	CRIMP FITTING, 1/2", MNPT	SHF	1,2	32
9.	1					1						MSS–362	METAL HOSE, ø3/4", HEX MALE NPT NIPPLE X PIPE WELD END, 7' LONG	MICROFLEX INC	2	33
9.		1			1							MSS–362	METAL HOSE, ø3/4", HEX MALE NPT NIPPLE X PIPE WELD END, 9'–6" LONG	MICROFLEX INC	2	34
9.			1	1								MSS–362	METAL HOSE, ø3/4", HEX MALE NPT NIPPLE X PIPE WELD END, 14' LONG	MICROFLEX INC	2	35
								AR					AP ARMAFLEX, 1" THK	ARMACELL	2	36
								1				JBM–100–LE	MULTIPLE–ENTRY POWER/TEE CONNECTION WITH JUNCTION BOX	RAYCHEM	2	37
								AR				GT–66	GLASS TAPE, 1/2"	RAYCHEM	2	38
								1				S–150	LOW–PROFILE SPLICE KIT	RAYCHEM	2	39
								AR				5BTV2–CT	SELF–REGULATING HEATING CABLE	RAYCHEM	2	40
	1					1						SS–12–SE	STREET ELBOW, 3/4"	SWAGELOK	2	41

THIS DESIGN DEVELOPED FOR USE BY THE US DEPARTMENT OF ENERGY UNDER CONTRACT NO. DE–EM0004216.

	NAME	DATE
DESIGN BY	PM MCELROY	4/22/19
DRAFTING CHECKER	JT FOSS	5/1/19
ENGINEER	D CAP	5/2/19
ENGINEERING CHECKER	J HARRINGTON	5/2/19
PROJECT MANAGER	P BODEN	5/1/19

Columbia Energy AND ENVIRONMENTAL SERVICES

DOE TBI SY–101
HOSE ASSEMBLIES

SIZE F | DWG NO CEES–16–604–M–007 | REV 0
SCALE AS SHOWN | SHEET 1 OF 2

REF NUMBER	TITLE
CEES–16–604–A–002	SITE PLAN

DRAWING/DOCUMENT REFERENCES
NEXT USED ON CEES–16–604–A–002

REV NO	DESCRIPTION	REV BY DATE	DRAFTING CHECKER DATE	ENGINEER DATE	ENGINEERING CHECKER DATE	PROJECT MANAGER DATE

REVISIONS

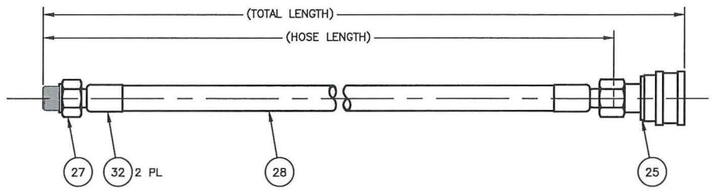

HOSE ASSEMBLY DETAIL – C 6.
SCALE: 1/2
NOTE: REFER TO HOSE ASSEMBLY TABLE FOR DESCRIPTIONS AND LENGTHS

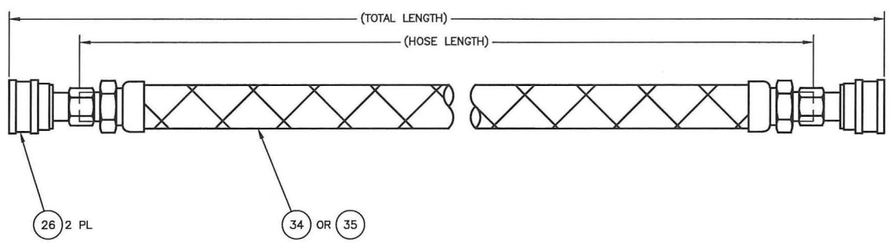

HOSE ASSEMBLY DETAIL – D 6.
SCALE: 1/2
NOTE: REFER TO HOSE ASSEMBLY TABLE FOR DESCRIPTIONS AND LENGTHS

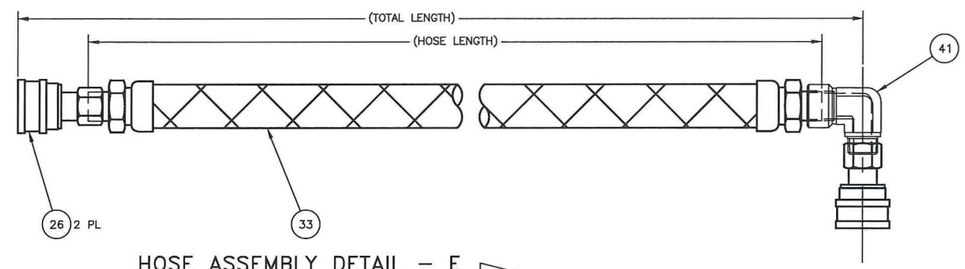

HOSE ASSEMBLY DETAIL – E 6.
SCALE: 1/2
NOTE: REFER TO HOSE ASSEMBLY TABLE FOR DESCRIPTIONS AND LENGTHS

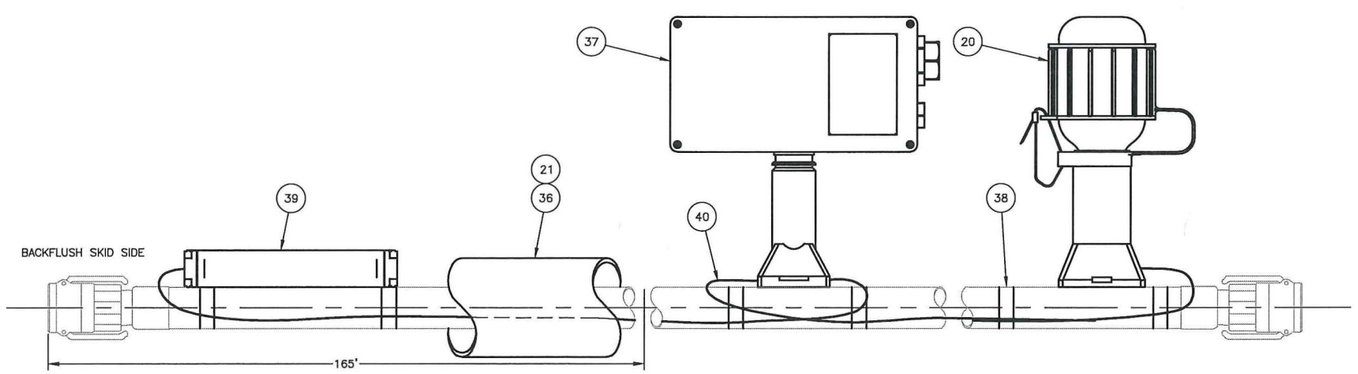

–040 BACKFLUSH SKID TO MANIFOLD HEAT TRACE
SCALE: 1/2

JOHN COLIN HENDERSON
STATE OF WASHINGTON
31912
REGISTERED
PROFESSIONAL ENGINEER
5/7/19

NAME	DATE
DRAWN BY PM MCELROY	4/22/19
DRAFTING CHECKER JT FOSS	5/1/19
ENGINEER D CAP	5/2/19
ENGINEERING CHECKER J HARRINGTON	5/2/19
PROJECT MANAGER P BODEN	5/1/19

Columbia Energy AND ENVIRONMENTAL SERVICES

DOE TBI SY–101
HOSE ASSEMBLIES

SIZE F | DWG NO CEES-16-604-M-007 | REV 0
SCALE AS SHOWN | SHEET 2 OF 2

REF NUMBER	TITLE
DRAWING/DOCUMENT REFERENCES	
NEXT USED ON END ITEM	

REV NO	DESCRIPTION	REV BY DATE	DRAFTING CHECKER DATE	ENGINEER DATE	ENGINEERING CHECKER DATE	PROJECT MANAGER DATE
REVISIONS						

Engineering Drawing

CEES-16-604-M-008

DOE TBI SY-101 Pipe Stands

GENERAL NOTES: (UNLESS OTHERWISE SPECIFIED)

1. REMOVE ALL BURRS AND BREAK SHARP EDGES.
2. DIMENSIONS ARE IN INCHES. TOLERANCES SHALL BE AS FOLLOWS:
   FRACTIONS = ±1/8
   .X = ±0.1
   .XX = ±0.03
   .XXX = ±0.010
   ANGLES = ±1°
3. TIGHTEN ALL FASTENERS SNUG TIGHT.
4. LOCATE IDENTIFICATION LABELING AND WEIGHT LABELING IN APPROXIMATE LOCATION AS SHOWN.
   TEXT CONTENTS: CEES-16-604-M-008 XXX LBS (XXX = MEASURED WEIGHT WITHOUT FOOTINGS)
   TEXT TYPE: BLOCK
   TEXT MATERIAL: PHENOLIC RESIN
   TEXT COLORS: BLACK ON WHITE BACKGROUND
   TEXT SIZE: 1" HIGH CHARACTERS
   MULTIPLE LINE ACCEPTABLE.
5. REMOVE CONCRETE FOOTINGS (ITEM 16) FOR LIFTING PIPE STANDS. FIELD INSTALL CONCRETE FOOTINGS SEPARATELY.
6. A QUANTITY OF 1 EACH OF THE PIPE TRAYS (ITEMS 20-23) ARE LOCATED ON SITE PLAN (CEES-16-604-A-002).
7. USE TIE WIRE AS REQUIRE TO LOCATE REBAR (ITEM 57). REBAR TO BE CENTERED IN LENGTH AND HEIGHT.

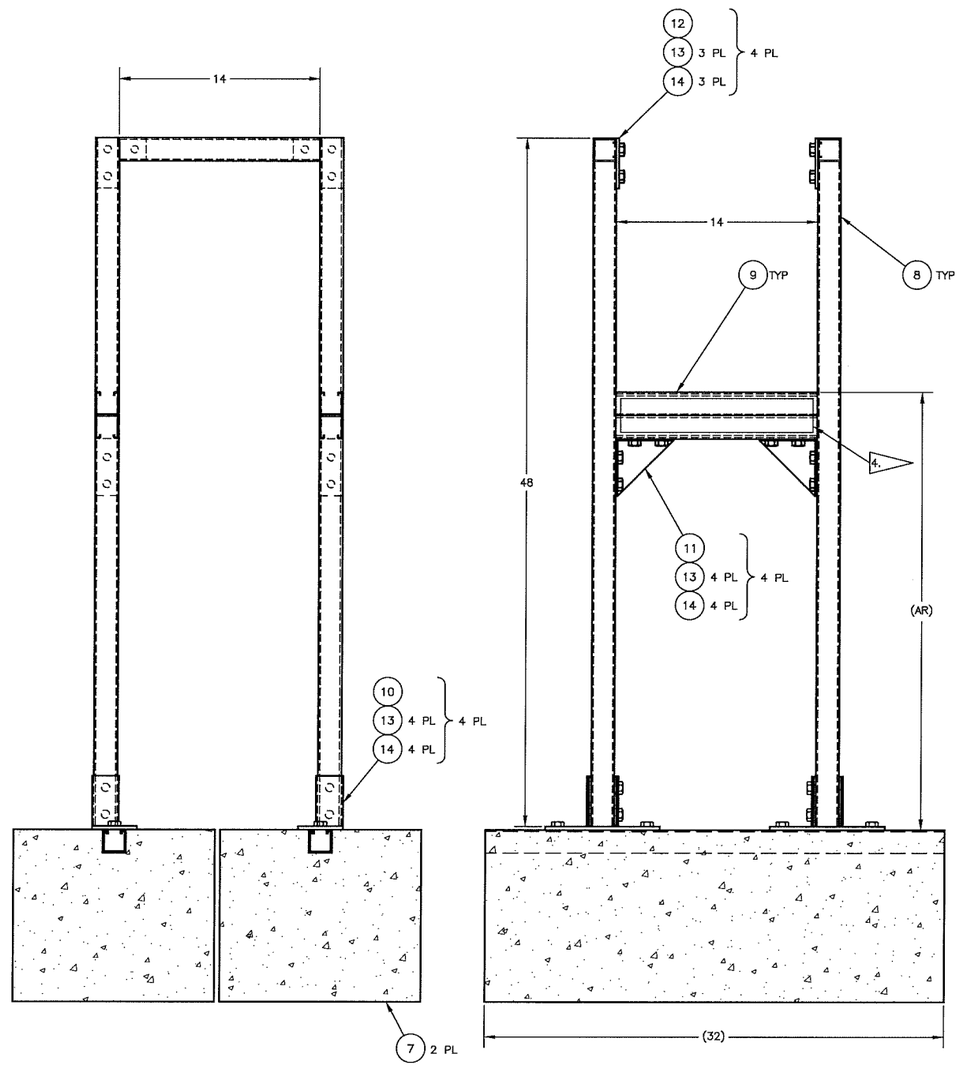

1 PIPE STAND 1
SCALE: 1/4

PARTS LIST/MATERIAL LIST

						QTY -020	QTY -010	PARTS / DASH NUMBER	NOMENCLATURE/DESCRIPTION	MATERIAL/REFERENCE	SHEET	ITEM NO
							X	-010	PIPE STAND 1		1	1
					X			-020	PIPE STAND 2		2	2
				X				-030	PIPE STAND 3		2	3
			X					-040	PIPE STAND 4		3	4
		X						-050	PIPE STAND 5		3	5
	X							-060	PIPE STAND 6		4	6
X					2	2		-070	12X12X32 CONCRETE FOOTING		1,2	7
		AR	AR	AR	AR	AR		B22-ZN	STRUT, SINGLE	B-LINE	1-3	8
		AR	AR	AR	AR	AR		B22A-ZN	STRUT, DOUBLE	B-LINE	1-3	9
		2	2	2	4	4		B280FL-ZN	POST BASE	B-LINE	1-3	10
		2	2	2	4	4		B844-ZN	UNIVERSAL SHELF BRACKET	B-LINE	1-3	11
					4	4		B140-ZN	THREE HOLE CORNER PLATE	B-LINE	1-2	12
		16	16	16	44	44		1/2" X 1" HHCS	HHCS, 1/2-13UNC-2A, 1" LONG	B-LINE	1-3	13
		16	16	16	44	44		N225-ZN	SPRING NUT, 1/2-13UNC-2B	B-LINE	1-3	14
												15
		1	1	1				H-2-815302-020	32" CONCRETE FOOTING		1-4	16
	1								BEAM, W10X15	ASTM A992	4	17
	AR								HSS, 2" X 2", 1/4" THK	ASTM A500, GR B	4	18
												19
6.									PIPE TRAY 1, 1/4" THK	ASTM A240, TP 304/304L	4	20
6.									PIPE TRAY 2, 1/4" THK	ASTM A240, TP 304/304L	4	21
6.									PIPE TRAY 3, 1/4" THK	ASTM A240, TP 304/304L	4	22
6.									PIPE TRAY 4, 1/4" THK	ASTM A240, TP 304/304L	4	23
	AR								REBAR, #5, 60ksi	(COMMERCIAL)	3	24
	AR								CONCRETE, 3,000 PSI COMPRESSIVE STRENGTH	COMMERCIAL	3	25
	1							(B22-I-32)	CONCRETE INSERT, 32"	(B-LINE)	3	26

JOHN COLIN HENDERSON
STATE OF WASHINGTON
31912
REGISTERED
PROFESSIONAL ENGINEER
5/8/19

THIS DESIGN DEVELOPED FOR USE BY THE US DEPARTMENT OF ENERGY UNDER CONTRACT NO. DE-EM0004216.

	NAME	DATE
DRAWN BY	PM MCELROY	4/22/19
DRAFTING CHECKER	JT FOSS	5/1/19
ENGINEER	J YUNKER	5/1/19
ENGINEERING CHECKER	D CAP	5/2/19
PROJECT MANAGER	P BODEN	5/1/19

Columbia Energy AND ENVIRONMENTAL SERVICES

DOE TBI SY-101
PIPE STANDS

SIZE F | DWG NO CEES-16-604-M-008 | REV 0
SCALE AS SHOWN | SHEET 1 OF 4

REF NUMBER	TITLE
CEES-16-604-A-002	DOE TBI SY-101 SITE PLAN

DRAWING/DOCUMENT REFERENCES
NEXT USED ON CEES-16-604-A-002

REV NO	DESCRIPTION	REV BY DATE	DRAFTING CHECKER DATE	ENGINEER DATE	ENGINEERING CHECKER DATE	PROJECT MANAGER DATE

REVISIONS

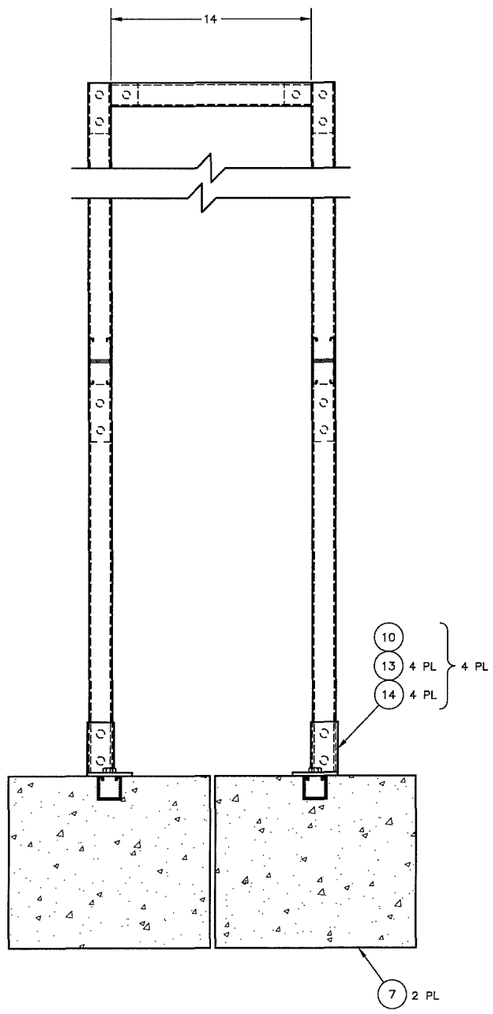

2 PIPE STAND 2
SCALE: 1/4

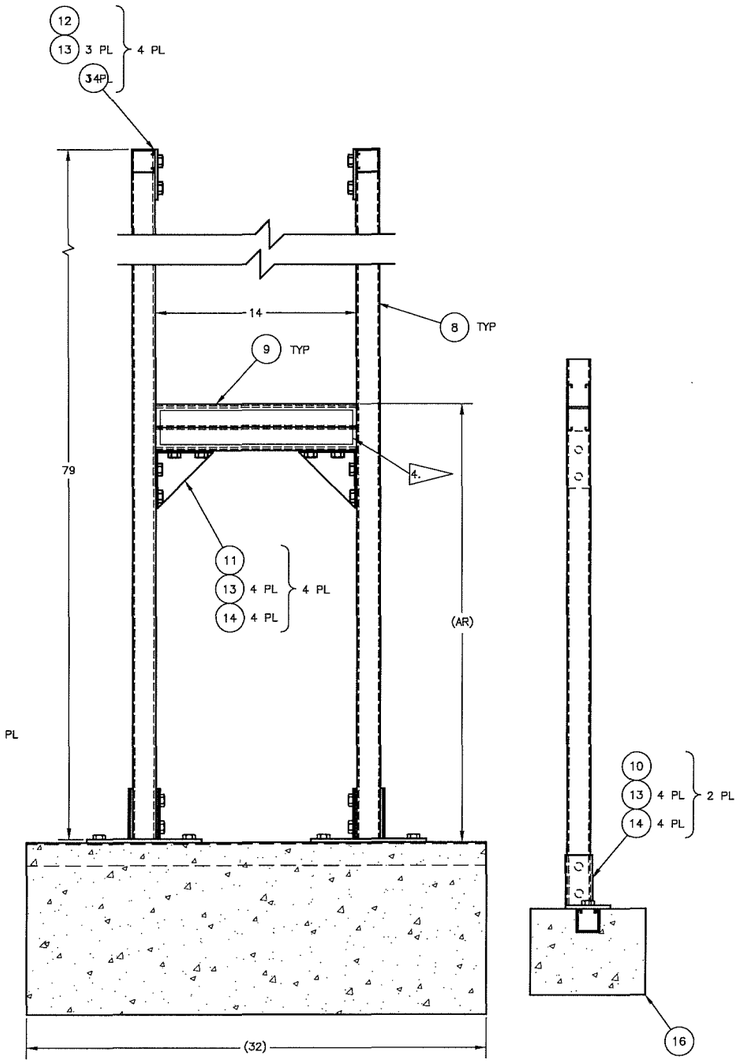

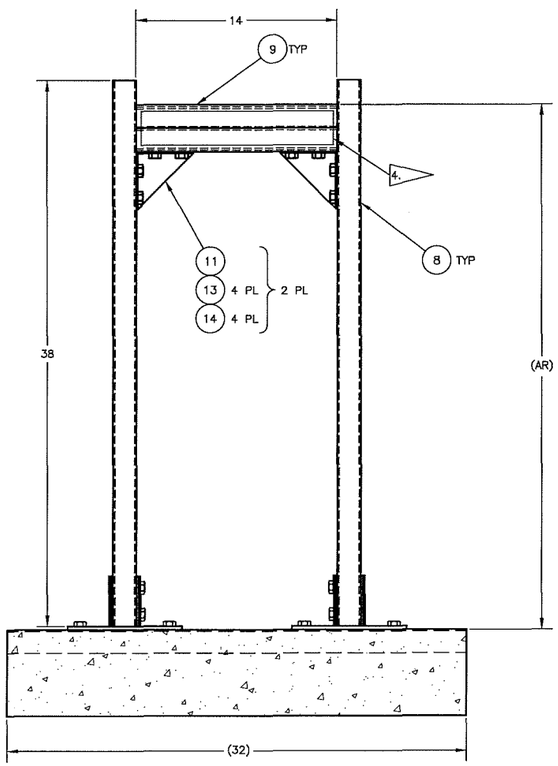

3 PIPE STAND 3
SCALE: 1/4

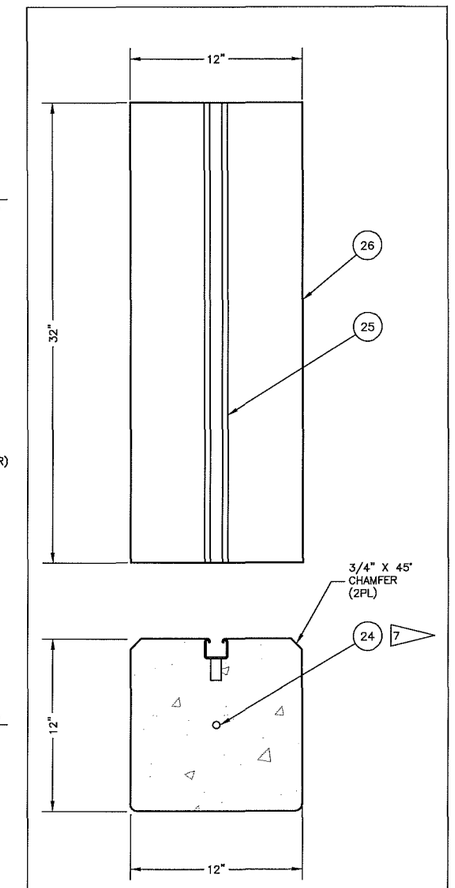

7 12x12x32 CONCRETE FOOTING
SCALE: 1/4

JOHN COLIN HENDERSON
STATE OF WASHINGTON
31912
REGISTERED
PROFESSIONAL ENGINEER
5/8/19

REF NUMBER	TITLE
DRAWING/DOCUMENT REFERENCES	
NEXT USED ON	

REV NO	DESCRIPTION	REV BY DATE	DRAFTING CHECKER DATE	ENGINEER DATE	ENGINEERING CHECKER DATE	PROJECT MANAGER DATE
REVISIONS						

THIS DESIGN DEVELOPED FOR USE BY THE US DEPARTMENT OF ENERGY UNDER CONTRACT NO. DE-EM0004216.

NAME	DATE
DRAWN BY FM MCELROY	4/22/19
DRAFTING CHECKER JT FOSS	5/1/19
ENGINEER J YUNKER	5/1/19
ENGINEERING CHECKER D CAP	5/2/19
PROJECT MANAGER P BODEN	5/1/19

Columbia Energy AND ENVIRONMENTAL SERVICES

DOE TBI SY-101
PIPE STANDS

SIZE F | DWG NO CEES-16-604-M-008 | REV 0
SCALE AS SHOWN | SHEET 2 OF

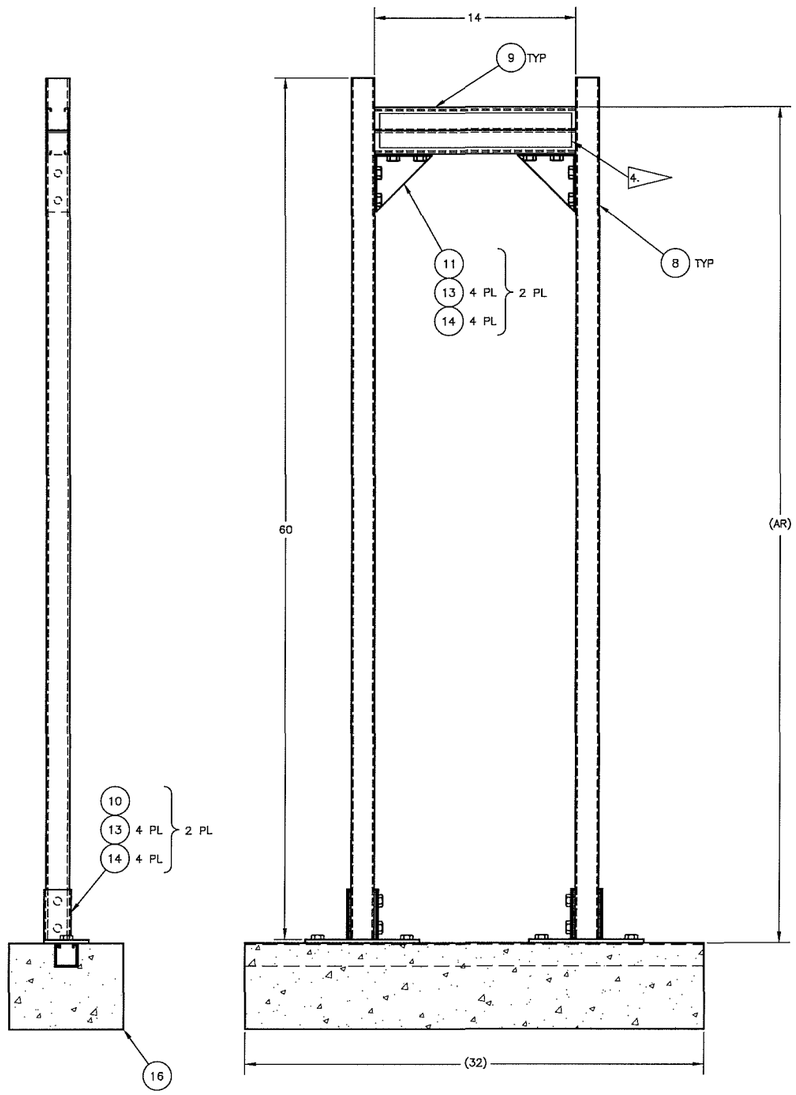

4 PIPE STAND 4
SCALE: 1/4

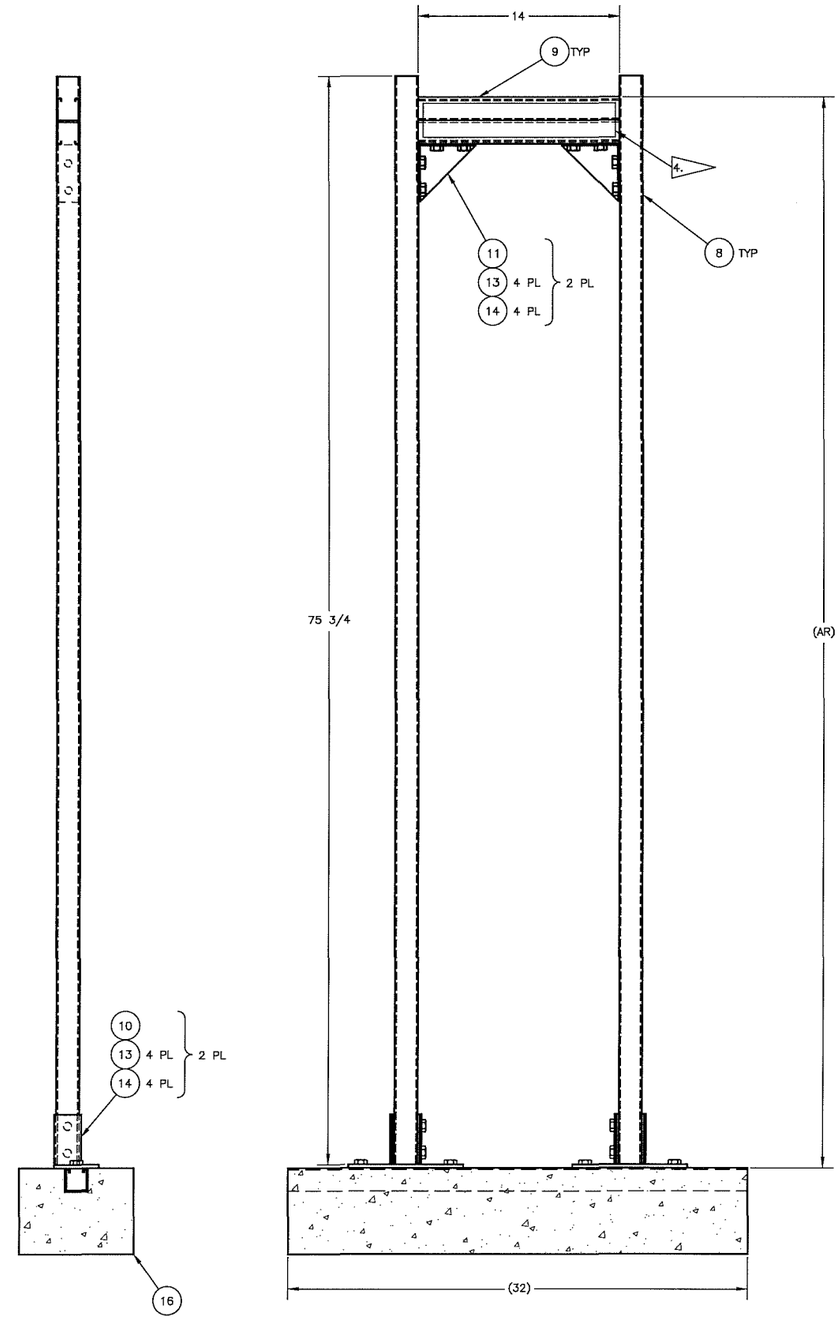

5 PIPE STAND 5
SCALE: 1/4

JOHN COLIN HENDERSON
STATE OF WASHINGTON
31912
REGISTERED
PROFESSIONAL ENGINEER
5/8/19

REF NUMBER	TITLE
DRAWING/DOCUMENT REFERENCES	
NEXT USED ON	

REV NO	DESCRIPTION	REV BY DATE	DRAFTING CHECKER DATE	ENGINEER DATE	ENGINEERING CHECKER DATE	PROJECT MANAGER DATE
REVISIONS						

THIS DESIGN DEVELOPED FOR USE BY THE US DEPARTMENT OF ENERGY UNDER CONTRACT NO. DE-EM0004216.

	NAME	DATE
DRAWN BY	PM MCELROY	4/22/19
DRAFTING CHECKER	JT FOSS	5/1/19
ENGINEER	J YUNKER	5/1/19
ENGINEERING CHECKER	D CAP	5/2/19
PROJECT MANAGER	P BODEN	5/1/19

Columbia Energy
AND ENVIRONMENTAL SERVICES

DOE TBI SY-101
PIPE STANDS

SIZE F | DWG NO CEES-16-604-M-008 | REV 0

SCALE AS SHOWN | SHEET 3 OF

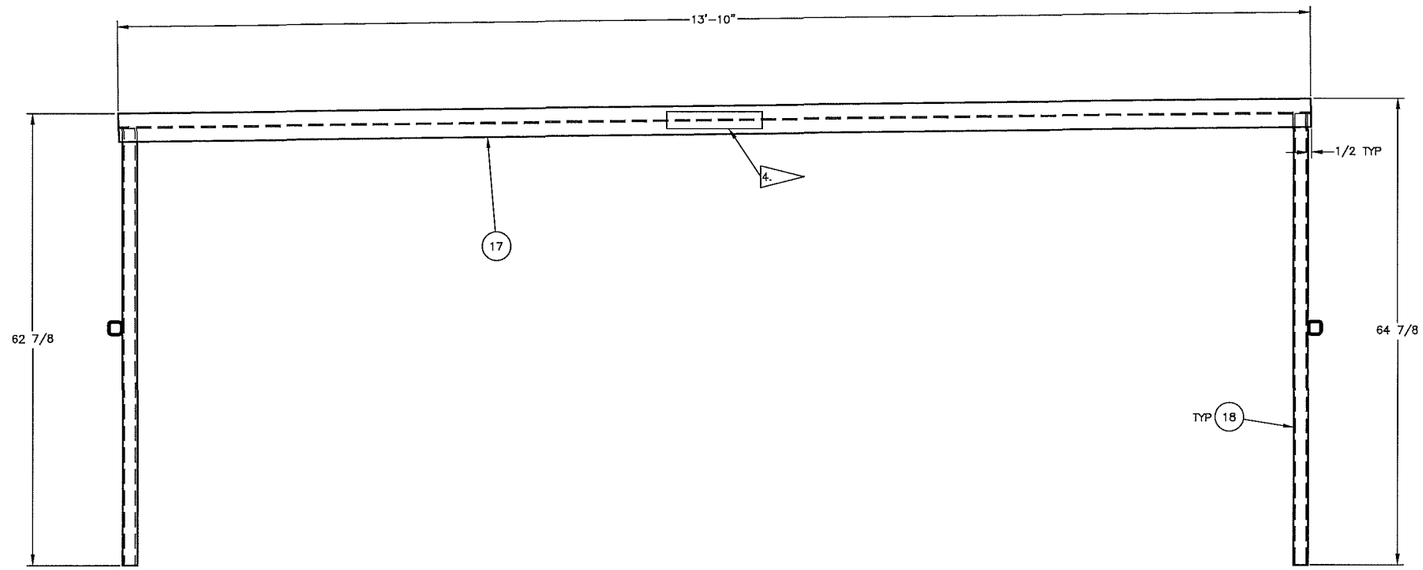

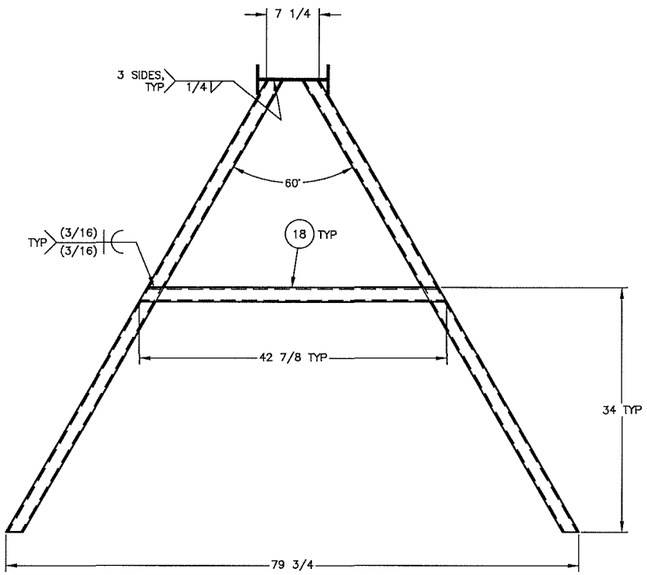

6 PIPE STAND 6
SCALE: 1/8

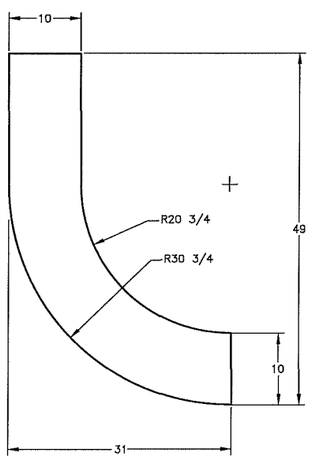

20 PIPE TRAY 1
SCALE: 1/8

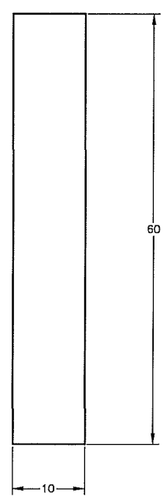

21 PIPE TRAY 2
SCALE: 1/8

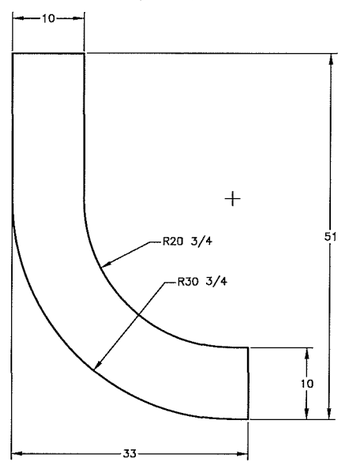

22 PIPE TRAY 3
SCALE: 1/8

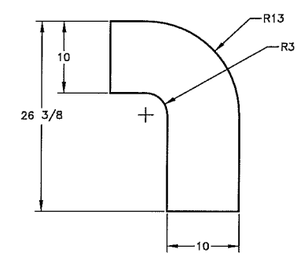

23 PIPE TRAY 4
SCALE: 1/8

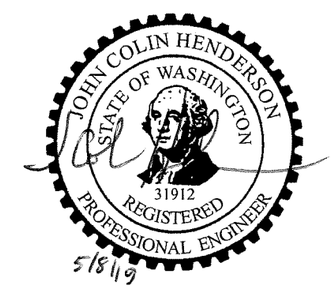

THIS DESIGN DEVELOPED FOR USE BY THE US DEPARTMENT OF ENERGY UNDER CONTRACT NO. DE-EM0004216.

	NAME	DATE
DESIGN BY	PM MCELROY	4/22/19
DRAFTING CHECKER	JT FOSS	5/1/19
ENGINEER	J YUNKER	5/1/19
ENGINEERING CHECKER	D CAP	5/2/19
PROJECT MANAGER	P BODEN	5/1/19

Columbia Energy AND ENVIRONMENTAL SERVICES

DOE TBI SY-101
PIPE STANDS

SIZE F | DWG NO CEES-16-604-M-008 | REV 0
SCALE AS SHOWN | SHEET 4 OF

REF NUMBER	TITLE
DRAWING/DOCUMENT REFERENCES	
NEXT USED ON	

REV NO	DESCRIPTION	REV BY DATE	DRAFTING CHECKER DATE	ENGINEER DATE	ENGINEERING CHECKER DATE	PROJECT MANAGER DATE
REVISIONS						

Engineering Drawing

CEES-16-604-M-022

DOE TBI SY-101 Distribution Valve Manifold

GENERAL NOTES: (UNLESS OTHERWISE SPECIFIED)

1. DIMENSIONS ARE IN INCHES.
2. TOLERANCES SHALL BE AS FOLLOWS:
   FRACTIONS = ±1/8
3. REMOVE ALL BURRS AND BREAK SHARP EDGES.
4. NAMEPLATES SHALL BE FABRICATED FROM 1/16"–1/8" THICK LAMINATED WHITE PLASTIC WITH BLACK CORE OR 1/16" MIN THICK STAINLESS STEEL USING ELECTRO CHEMICAL OR LASER AS THE ETCHING METHOD, ATTACH USING ø1/16" MIN WOVEN STAINLESS STEEL WIRE. TEXT HEIGHT IS INDICATED IN NAMEPLATE SCHEDULE. FIELD TO DETERMINE SIZE OF NAMEPLATE(S) AND MOUNT AS REQUIRED IN APPROXIMATE LOCATION SHOWN. NAMEPLATES SHALL MATCH NAMEPLATE SCHEDULE.
5. LOCATE IDENTIFICATION LABELING AND WEIGHT LABELING IN APPROXIMATE LOCATION AS SHOWN.
   TEXT CONTENTS: CEES–16–604–M–022 XXX LBS (XXX = MEASURED WEIGHT WITHOUT FOOTINGS)
   TEXT TYPE: BLOCK
   TEXT MATERIAL: PHENOLIC RESIN
   TEXT COLORS: BLACK ON WHITE BACKGROUND
   TEXT SIZE: 1" HIGH CHARACTERS
6. WELD AND INSPECT STAINLESS STEEL COMPONENTS PER ASME B31.3–2016 NORMAL FLUID SERVICE. WELD PROCEDURES AND QUALIFICATIONS PER ASME SECTION IX ARE ACCEPTABLE. PERFORM HYDROSTATIC PRESSURE TESTING OF VALVE MANIFOLD (ITEM 2). HYDROSTATIC PRESSURE TEST TO 150 PSIG +10/–0 PSIG. MAINTAIN TEST PRESSURE FOR 10 MINUTES AND VERIFY NO LEAKAGE. VALVE MANIFOLD DESIGN PRESSURE 100 PSIG, DESIGN TEMPERATURE 105°F.
7. REMOVE CONCRETE FOOTINGS (ITEM 10) FOR LIFTING DISTRIBUTION VALVE MANIFOLD ASSEMBLY. FIELD LOCATE CONCRETE FOOTING AND INSTALL MANIFOLD ASSEMBLY SEPARATELY.
8. TIGHTEN ALL FASTENERS SNUG TIGHT.
9. SEAL THREADED PIPE CONNECTIONS WITH LOCTITE 567 THREAD SEALANT AND ACTIVATOR 7649.
10. INSTALL ISO PIPE (ITEM 32) BETWEEN VALVE MANIFOLD (ITEM 2) AND STRUT. FOR CONNECTION POINTS BETWEEN CARBON AND STAINLESS STEEL.
11. APPLY LOCTITE 242 THREAD LOCKER TO THREADED FASTENERS.

4. NAMEPLATE SCHEDULE

TEXT	TXT SIZE	LABEL LENGTH	LABEL HEIGHT
TBI–V–301	3/8"	1 1/2"	3/4"
TBI–V–302	3/8"	1 1/2"	3/4"
TBI–V–303	3/8"	1 1/2"	3/4"
TBI–V–304	3/8"	1 1/2"	3/4"
TBI–V–305	3/8"	1 1/2"	3/4"
TBI–V–306	3/8"	1 1/2"	3/4"
TBI–V–307	3/8"	1 1/2"	3/4"
TBI–V–308	3/8"	1 1/2"	3/4"

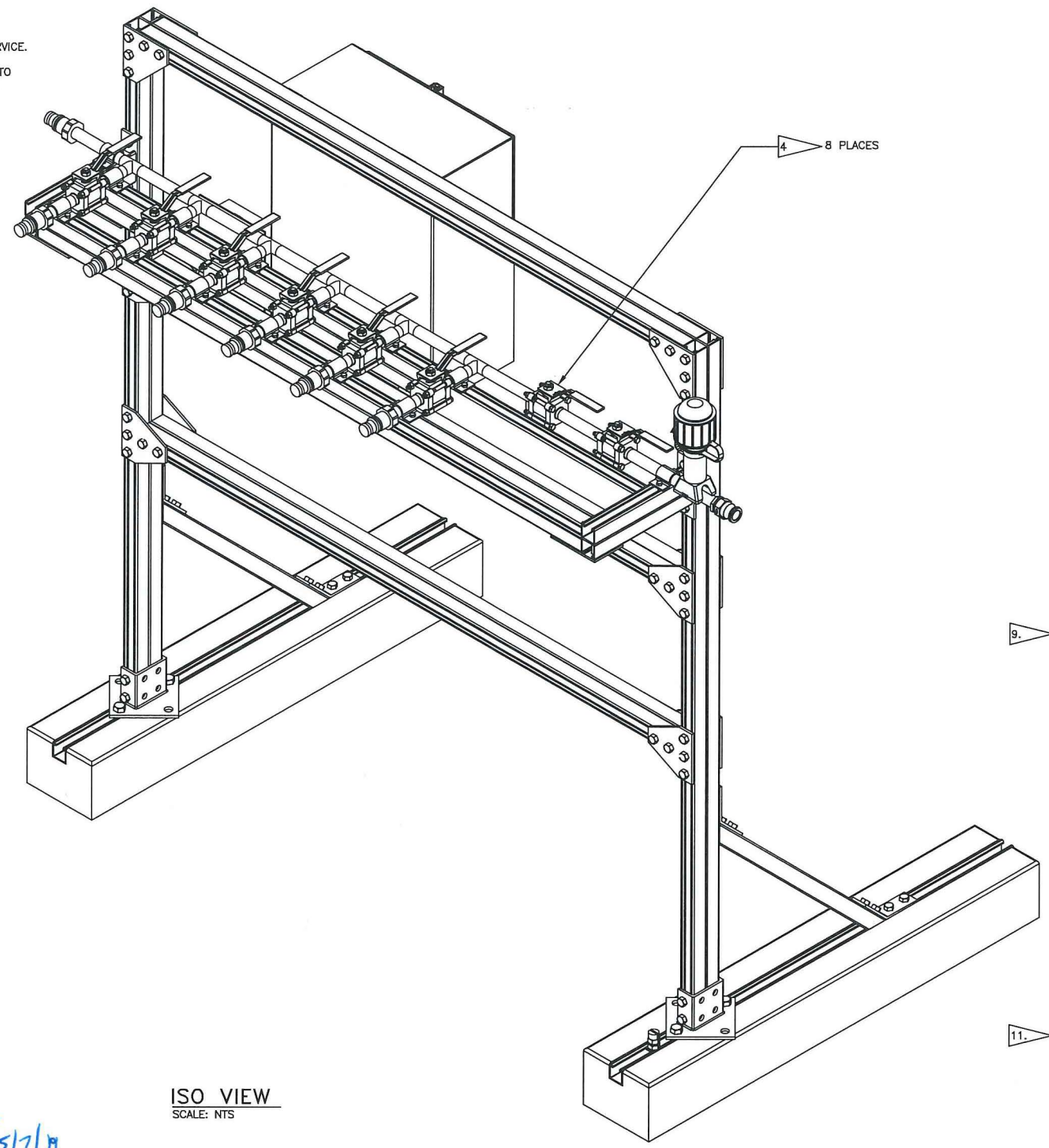

ISO VIEW
SCALE: NTS

JOHN COLIN HENDERSON
STATE OF WASHINGTON
31912
REGISTERED
PROFESSIONAL ENGINEER
5/7/19

PARTS LIST/MATERIAL LIST

QTY –020	QTY –010	PARTS / DASH NUMBER	NOMENCLATURE/DESCRIPTION	MATERIAL/REFERENCE	SHEET	ITEM NO
	1	1501540	CONNECTOR, 4 PIN, M12, UL LISTED, SACC–M12MS–4CON–PG 9–SH	PHOENIX CONTACT	2	44
	1	1405240	RECEPTACLE, 4 PIN, M12, UL LISTED, SACC–DSI–M12FS–4CON–PG9/0,5 VA	PHOENIX CONTACT	2	45
	1	100–A–SS	CAM AND GROOVE ADAPTER, TYPE A, 1" FNPT, SST	DIXON	3	46
	1		HEX BUSHING, 1" MNPT X 3/4" FNPT	ASTM A182, GRADE F304/304L	3	47

PARTS LIST/MATERIAL LIST

QTY –020	QTY –010	PARTS / DASH NUMBER	NOMENCLATURE/DESCRIPTION	MATERIAL/REFERENCE	SHEET	ITEM NO
	X	–010	DISTRIBUTION VALVE MANIFOLD		2	1
X	1	–020	VALVE MANIFOLD WELDMENT		3	2
						3
						4
						5
						6
	1	CEES–16–604–E–064	OPERATOR ENCLOSURE	CEES	2	7
	4	3/8 X 1 1/4 HHCS	HEX CAP SCREW, 3/8–16UNC–2A, 1 1/4 L	B–LINE	2	8
	5	N228	SPRING NUT, 3/8"	B–LINE	2	9
	2	H–2–815302–010	CONCRETE FOOTING ASSY, 48"		2	10
	2	B281–ZN	POST BASE	B–LINE	2	11
	4	B248–ZN	ANGLE BRACKET 45°	B–LINE	2	12
	8	B532–ZN	FIVE HOLE TEE GUSSET PLATE	B–LINE	2	13
	4	B556–ZN	FIVE HOLE CORNER GUSSET PLATE	B–LINE	2	14
	4	B143–ZN	FOUR HOLE CORNER PLATE	B–LINE	2	15
	2	B297–12–ZN	DOUBLE CHANNEL BRACKET, 12" LONG	B–LINE	2	16
1			PIPE, DIA 3/4", SCH 40, SMLS, 9 1/2" LONG, TOE	ATM A312 TP 304L–S	3	17
	14	B2400–3/4	PIPE CLAMP, 3/4"	B–LINE	2	18
	AR	B22–GLV	CHANNEL, SINGLE, GALVANIZED	B–LINE	2	19
	AR	B22A–GLV	CHANNEL, DOUBLE, GALVANIZED	B–LINE	2	20
	88	1/2 X 1 1/4 HHCS	HEX CAP SCREW, 1/2–13UNC–2A, 1 1/4 L	B–LINE	2	21
	88	N225	SPRING NUT, 1/2"	B–LINE	2	22
	4		HEX BOLT, 5/8–11UNC–2A, 1 1/4 L	SAE J429 GR 5	2	23
	4	N255	SPRING NUT, 5/8"	B–LINE	2	24
	28	1/4 X 1 HHCS	HEX CAP SCREW, 1/4–20UNC–2A, 1" LONG	B–LINE	2	25
	28	N224	SPRING NUT, 1/4"	B–LINE	2	26
AR			PIPE, DIA 3/4", SCH 40, SMLS	ASTM A312, TP 304L–S	3	27
7			PIPE, DIA 3/4", SCH 40, SMLS, 3 1/2" LONG, TOE	ASTM A312, TP 304L–S	3	28
8		FS–752–12FP	FLAT FACE NIPPLE, 3/4" FNPT, 2000 PSI, 316 SST	PARKER	3	29
8		7304–3–R–R–L	BALL VALVE, 3/4", BW	FLOWTEK	3	30
						31
	AR	ISO	ISO PIPE ISOLATOR	B–LINE	2	32
6			TEE, 3/4", BW, SCH 40	ASTM A403 GR WP304L–S	3	33
1		E–100–L–A	END SEAL, LIGHTED	PENTAIR/RAYCHEM	3	34
AR		5BTV2–CT	HEATING CABLE	PENTAIR/RAYCHEM	2	35
AR		GS–54	GLASS TAPE, 1/2"	RAYCHEM	3	36
AR			AP ARMAFLEX, 1" THK	ARMACELL	3	37
	1		MOUNTING PLATE, SHEET 10 GA	ASTM A240, 304/304L	2	38
	1	CEES–16–604–M–023, ITEM 30	REMOTE HEAD FOR PROMASS		2	39
	3		PAN HEAD SCREW, #10–UNF32–2A, 1" LONG	ANY SST	2	40
	2	N227	SPRING NUT, #10–32	B–LINE	2	41
	1		HEX NUT, #10–32UNF–2B	ANY SST	2	42
	1	(K2C23B1)	MECHANICAL GROUND CONNECTOR, #10–1 AWG, UL LISTED	(BURNDY)	2	43

REF NUMBER	TITLE
CEES–CALC–604–S–013	MISCELLANEOUS RACK LOADING ANALYSIS
CEES–CALC–604–M–007	ASME B31.3 ANALYSES OF THE TBI PIPING AND JUMPERS
CEES–16–604–E–064	OPERATOR ENCLOSURE

DRAWING/DOCUMENT REFERENCES
NEXT USED ON CEES–16–604–A–002

REV NO	DESCRIPTION	REV BY DATE	DRAFTING CHECKER DATE	ENGINEER DATE	ENGINEERING CHECKER DATE	PROJECT MANAGER DATE

REVISIONS

THIS DESIGN DEVELOPED FOR USE BY THE US DEPARTMENT OF ENERGY UNDER CONTRACT NO. DE–EM0004216.

	NAME	DATE
DRAWN BY	T.M. MCELROY	4/22/19
DRAFTING CHECKER	JT FOSS	5/1/19
ENGINEER	D CAP	5/2/19
ENGINEERING CHECKER	J CAMPBELL	5/2/19
PROJECT MANAGER	P BODEN	5/1/19

Columbia Energy AND ENVIRONMENTAL SERVICES

DOE TBI SY–101
DISTRIBUTION VALVE MANIFOLD

SIZE F | DWG NO CEES–16–604–M–022 | REV 0
SCALE AS SHOWN | SHEET 1 OF 3

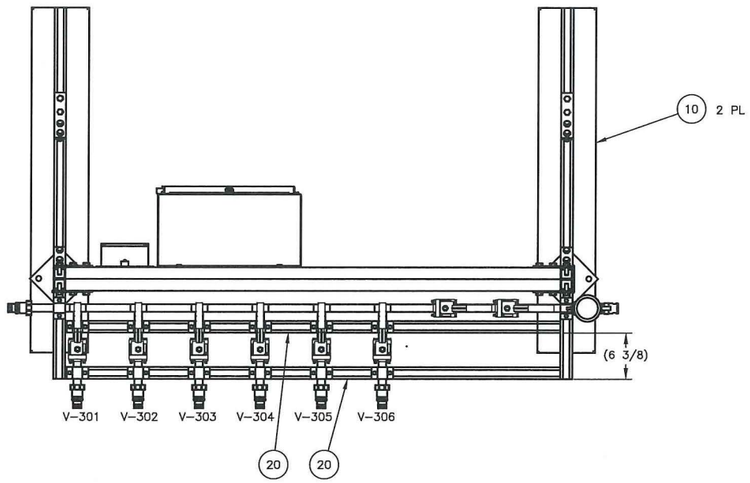

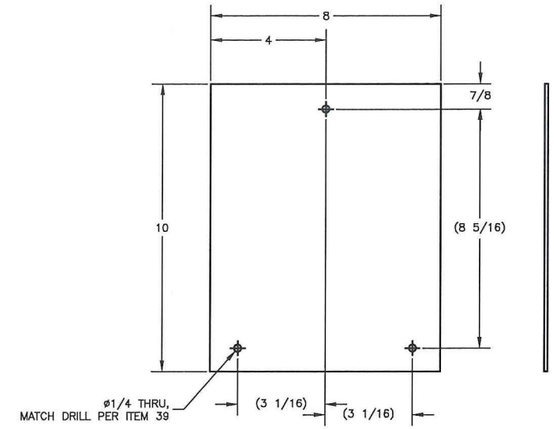

38 MOUNTING PLATE
SCALE: 1/2

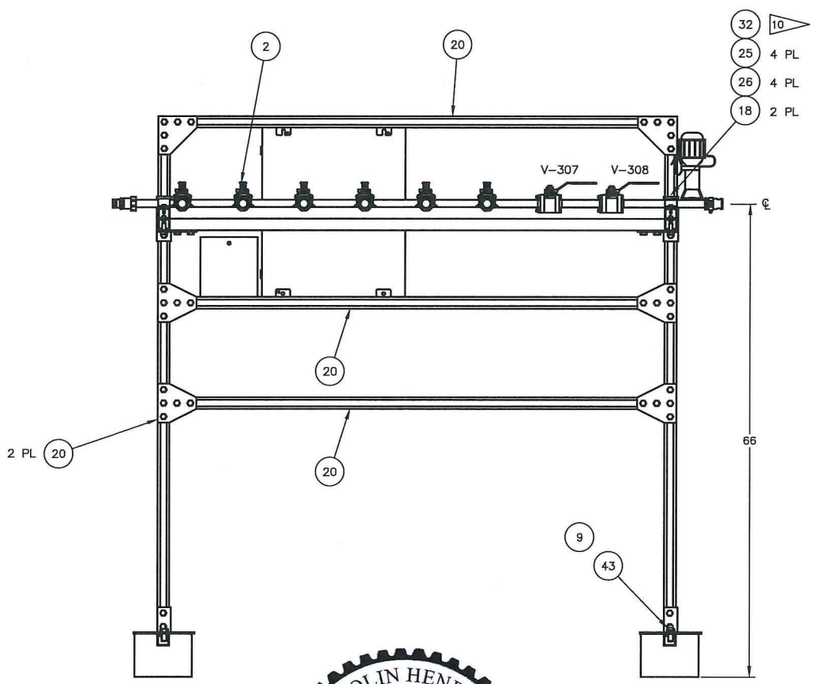

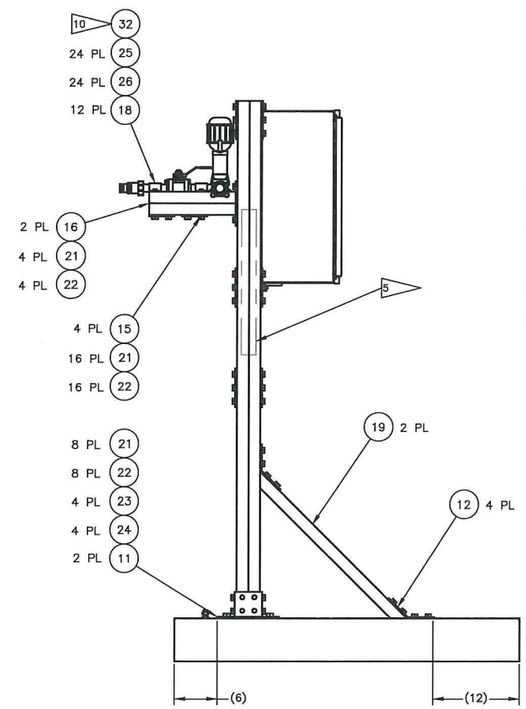

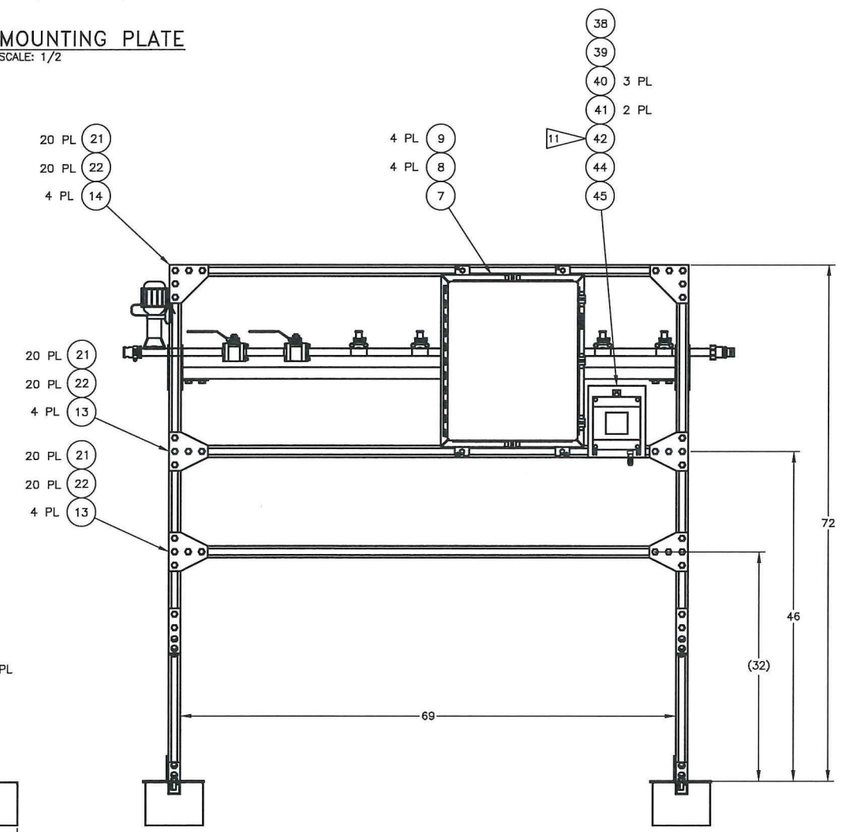

1 DISTRIBUTION VALVE MANIFOLD
SCALE: 1/8

JOHN COLIN HENDERSON
STATE OF WASHINGTON
31912
REGISTERED
PROFESSIONAL ENGINEER
5/21/19

REF NUMBER	TITLE
DRAWING/DOCUMENT REFERENCES	
NEXT USED ON	

REV NO	DESCRIPTION	REV BY DATE	DRAFTING CHECKER DATE	ENGINEER DATE	ENGINEERING CHECKER DATE	PROJECT MANAGER DATE
REVISIONS						

	NAME	DATE
DRAWN BY	PM MCELROY	4/22/19
DRAFTING CHECKER	JT FOSS	5/1/19
ENGINEER	D CAP	5/2/19
ENGINEERING CHECKER	J CAMPBELL	5/2/19
PROJECT MANAGER	P BODEN	5/1/19

Columbia Energy
AND ENVIRONMENTAL SERVICES

DOE TBI SY-101
DISTRIBUTION VALVE MANIFOLD

SIZE F | DWG NO CEES-16-604-M-022 | REV 0
SCALE AS SHOWN | SHEET 2 OF 3

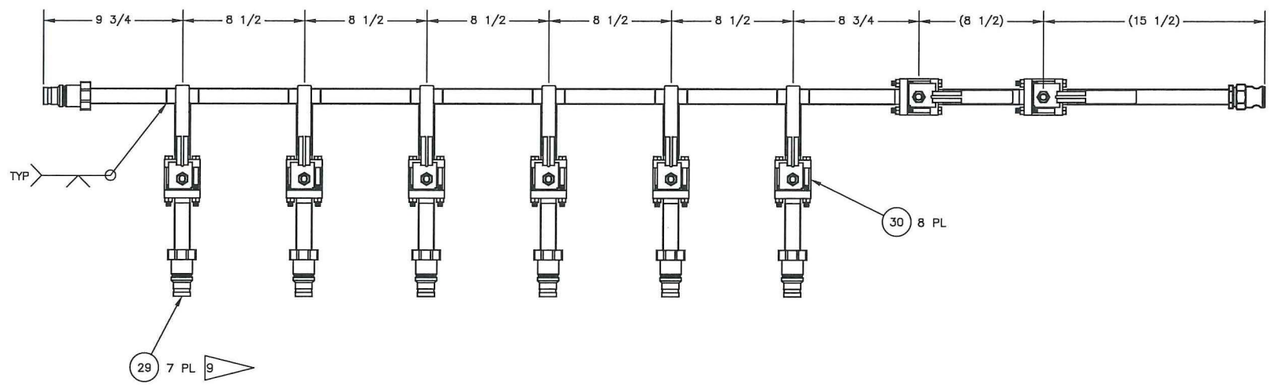

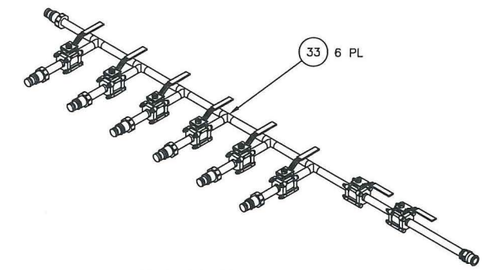

ISO VIEW
SCALE: NTS

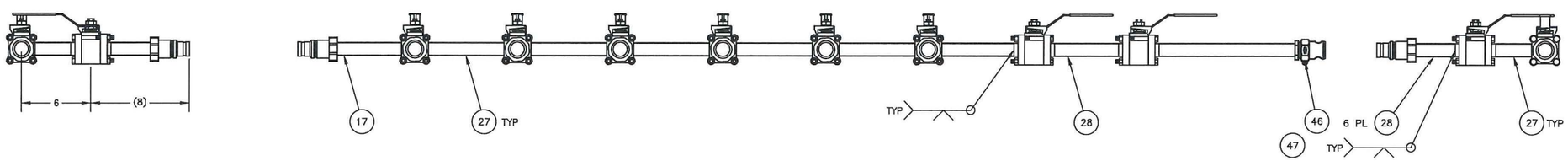

2 VALVE MANIFOLD WELDMENT
SCALE: 1/4

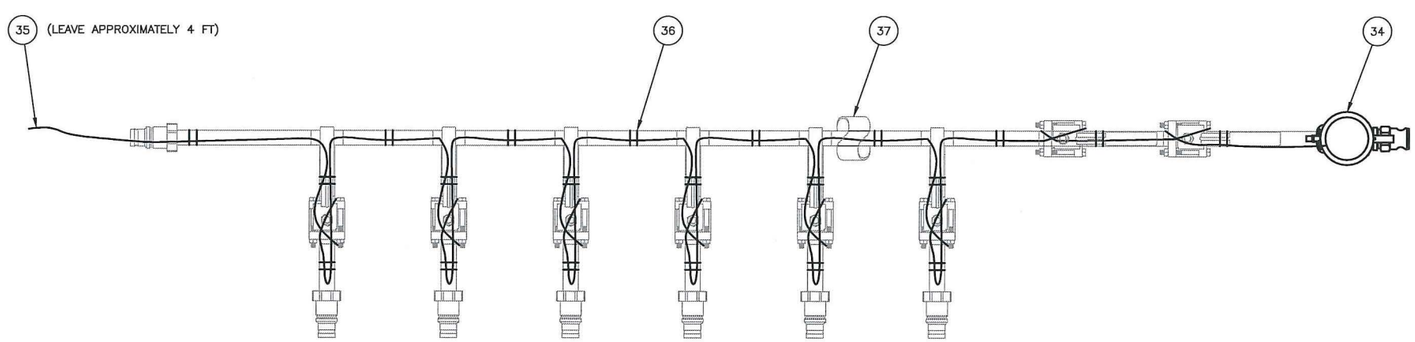

HEAT TRACE DETAIL
SCALE: 1/4

JOHN COLIN HENDERSON
STATE OF WASHINGTON
31912
REGISTERED
PROFESSIONAL ENGINEER
5/7/19

REF NUMBER	TITLE
DRAWING/DOCUMENT REFERENCES	
NEXT USED ON	

REV NO	DESCRIPTION	REV BY DATE	DRAFTING CHECKER DATE	ENGINEER DATE	ENGINEERING CHECKER DATE	PROJECT MANAGER DATE
REVISIONS						

	NAME	DATE
DRAWN BY	PM MCELROY	4/22/19
DRAFTING CHECKER	JT FOSS	5/1/19
ENGINEER	D CAP	5/2/19
ENGINEERING CHECKER	J CAMPBELL	5/2/19
PROJECT MANAGER	P BODEN	5/1/19

Columbia Energy
AND ENVIRONMENTAL SERVICES

DOE TBI SY-101
DISTRIBUTION VALVE MANIFOLD

SIZE F | DWG NO CEES-16-604-M-022 | REV 0
SCALE AS SHOWN | SHEET 3 OF 3

Engineering Drawing

CEES-16-604-M-023

DOE TBI SY-101 Delay Tote Assembly

GENERAL NOTES: (UNLESS OTHERWISE SPECIFIED)

1. DIMENSIONS ARE IN INCHES.
2. TOLERANCES SHALL BE AS FOLLOWS:
   FRACTIONS = ±1/8
   .X = ±0.1
   .XX = ±0.03
   .XXX = ±0.010
   ANGLES = ±1°
3. REMOVE ALL BURRS AND BREAK SHARP EDGES.
4. LOCATE IDENTIFICATION LABELING AND WEIGHT LABELING IN APPROXIMATE LOCATION AS SHOWN.
   TEXT CONTENTS: DELAY TOTE, CEES-16-604-M-023 XXXX LBS
   (XXXX=MEASURED WEIGHT)
   TEXT TYPE: BLOCK
   TEXT MATERIAL: ACRYLIC ENAMEL
   TEXT COLORS BLACK ON YELLOW BACKGROUND
   TEXT SIZE 1" HIGH CHARACTERS
5. WELD AND INSPECT STAINLESS STEEL PIPING COMPONENTS PER ASME B31.3-2016 NORMAL FLUID SERVICE. STRUCTRUAL COMPONENTS PER AWS D1.6-2007 AS APPLICABLE. WELD PROCEDURES AND QUALIFICATIONS PER ASME SECTION IX ARE ACCEPTABLE. PERFORM HYDROSTATIC PRESSURE TESTING OF PIPE SPOOL 1 (ITEM 5) AND PIPE SPOOL 2 (ITEM 6). HYDROSTATIC PRESSURE TEST TO 150 PSIG +10/-0 PSIG PER ASME B31.3-2016 NORMAL FLUID SERVICE. MAINTAIN TEST PRESSURE FOR 10 MINUTES AND VERIFY NO LEAKAGE. DESIGN PRESSURE 100 PSIG, DESIGN TEMPERATURE 105°F.
6. SEAL THREADED PIPE CONNECTIONS WITH LOCTITE 567 THREAD SEALANT AND ACTIVATOR 7649.
7. ADJUST LEVEL OF PUMP TUBE (ITEM 25) AND PIPE SPOOL 1 (ITEM 5) TO PLACE INLET AT THE BOTTOM OF THE INNER TANK.
8. REPLACE BLIND FLANGE PROVIDED WITH CONTAINER (ITEM 11) WITH TOP HAT ASSEMBLY (ITEM 2). REUSE FASTENERS AND REPLACE GASKET WITH NEW GASKET (ITEM 12). TORQUE 7/8 INCH FASTENERS TO 80 FT-LBS +5/-0 FT-LBS. REMOVED BLIND FLANGE IS TO BE SHIPPED WITH FINISHED ASSEMBLY TO SUPPORT FINAL REMOVAL/DISPOSAL OF DELAY TOTE ASSEMBLY AFTER USE.
9. PERFORM HYDROSTATIC PRESSURE TEST OF FILTER ASSEMBLY (ITEM 3) WITH FILTER (ITEM 35) REMOVED. HYDROSTATIC PRESSURE TEST TO 10 PSIG +5/-0 PSIG PER ASME B31.3-2016 NORMAL FLUID SERVICE, MAINTAIN TEST PRESSURE FOR 10 MINUTES AND VERIFY NO LEAKAGE. DESIGN PRESSURE WHEN FILTER (ITEM 35) INSTALLED, IS ATMOSPHERIC, DESIGN TEMPERATURE -25°F TO 115°F.
10. ADD TO EDGES AND AROUND THE HOLE OF THE BIRD SCREEN (ITEM 73) IN ORDER TO COVER THE CUT EDGES OF THE BIRD SCREEN.
11. FOR CABLE SPECIFICATIONS SEE CEES-16-604-E-042.
12. INSTALL LEAK DETECTOR (ITEM 72) IN ACCORDANCE WITH MANUFACTURES INSTRUCTIONS.
13. APPLY LOCTITE 242 THREAD LOCKER TO THREADED FASTENERS.
14. INSTALL ISO PIPE (ITEM 67) BETWEEN PIPE SPOOL - 1 (ITEM 5) AND STRUT. FOR CONNECTION POINTS BETWEEN CARBON AND STAINLESS STEEL.
15. INSTALL ARMAFLEX INSULATION (ITEM 91) PER MANUFACTURERS INSTRUCTIONS.
16. INSTALL HEATING CABLE (ITEM 87) PER MANUFACTURERS INSTRUCTIONS. CONTINUOUSLY WRAP TOP HAT ASSEMBLY (ITEM 2) AND LIQUID CONTAINER (ITEM 11), 6" MAXIMUM SPACING.
17. TORQUE 1/2" CLASS 300 FLANGE FASTENERS TO 20 FT-LBS +2/-0 FT-LBS.
18. TORQUE 12" CLASS 150 FLANGE FASTENERS TO 320 FT-LBS +5/-0 FT LBS.
19. PERFORM FIT UP OF VALVE HANDLES PRIOR TO DRILLING HOLES FOR CAPTURE RING (ITEM 78) MATCH DRILL HOLES WITH VALVE HANDLE IN ALIGNED POSITION.

PARTS LIST/MATERIAL LIST

QTY -100	QTY -090	QTY -080	QTY -070	QTY -060	QTY -050	QTY -040	QTY -030	QTY -020	QTY -010	PARTS / DASH NUMBER	NOMENCLATURE/DESCRIPTION	MATERIAL/REFERENCE	SHEET	ITEM NO
						AR					PIPE, 3" SCH 40, SMLS	ASTM A312, TP 304L	5,6	43
				1	1						FLANGE, 1/2", WN, RF, CLASS 300	ASTM A182, GR F 304L	9	44
				1	1						90° ELBOW, LR, BW, SCH 40, 1/2"	ASTM A403, GR WP304L-S	9	45
				AR	AR						PIPE, 1/2" SCH 40, SMLS, TOE	ASTM A312, TP 304L	9	46
				1	1						CONCENTRIC REDUCER 1/2" X 3/4" SCH 40	ASTM A403, GR WP304L-S	9	47
				AR	AR						PIPE, 3/4" SCH 40, SMLS, TOE	ASTM A312, TP 304L	9	48
					AR						PIPE, 3/4" SCH 40, SMLS, TBE	ASTM A312, TP 304L	9	49
				1	1					FS-752-12FP	NIPPLE, FLAT FACE, 3/4" FNPT, 2000 PSI, SST	PARKER	9	50
														51
	AR	AR	AR								ROUND BAR, ø1/2"	ASTM A276, TP 304L	10,11	52
					1					MPB230, 1/2"	90° T PORT TYPE G BALL, 1/2" NPT	FLOWTEK	9	53
					1					MPB230, 3/4"	180° T PORT TYPE I BALL, 3/4" NPT	FLOWTEK	9	54
								1		(CGB295 SG)	CGB, 3/4" NPT, .5-.625" ORIFICE	(EATON/ CROUSE-HINDS)	4	55
					AR						PIPE, 1/2" SCH 40, SMLS, TBE	ASTM A312, TP 304L	9	56
					2						90° ELBOW, 3/4" SCH 40, BW	ASTM A403, GR WP304L-S	9	57
						1					HALF COUPLING, 2" NPT, CLASS 3000	ASTM A182, GR F 304L	6	58
						1					HALF COUPLING, 1/2" NPT, CLASS 3000	ASTM A182, GR F 304L	6	59
							1				COUPLING, 1 1/2" NPT, CLASS 3000	ASTM A182, GR F 304L	4	60
							AR				PIPE, 1 1/2" NPT SCH 40, SMLS, TBE	ASTM A312, TP 304L	4	61
							1			7107-3-R-R-L	BALL VALVE, 1 1/2" FNPT, 3 PIECE	FLOWTEK	4	62
								2		712P0BP5	CABLE HANDLE, POLY, .562-.625" CABLE SIZE	MELTRIC	4	63
								1		63-38165	INLET, DSN SERIES, 304, 1P+N+G, 120V	MELTRIC	4	64
								AR		CEES-16-604-E-042	CABLE, WR604-202	CEES	4	65
								1		63-34165	RECEPTACLE, DSN SERIES, 30A, 1P+N+G, 120V	MELTRIC	4	66
								AR		ISO	ISO PIPE ISOLATOR	B-LINE	5	67
					1						COUPLING, 3/4" NPT, CLASS 3000	ASTM A182, GR F 304L	9	68
					1						THREADOLET, 1/4" NPT, CLASS 3000	(BONNEY FORGE)	9	69
								4		9900208	EYEBOLT, SHOULDER TYPE, S-279, 3/8" x 1 1/4"	CROSBY	3	70
					1					7101-3-R-R-L	BALL VALVE, 1/4" NPT, 3 PIECE	FLOWTEK	9	71
								1		DWP-25	LEAK DETECTOR SENSOR	WARRICK	5	72
								1			BIRD SCREEN	ANY 300 GR SST EXPANDED METAL	9	73
						1					PIPE, 1" SCH 40, SMLS, 2 3/4" L	ASTM A312, GR 304L	5	74
						1					45° ELBOW, 1" SCH 40, BW	ASTM A403, GR WP304L-S	5	75
						1					PIPE, 1" SCH 40, SMLS, TOE, 2" L	ASTM A312, TP 304L	5	76
						1					CAP, 1" CLASS 3000	ASTM A182, GR F 304L	5	77
								6			T-HANDLE CAPTURE RING, 7/16" THK	ASTM A240, TP 304/304L	10	78
								3			CAPTURE RING TAB, 1/8" THK	ASTM A240, TP 304/304L	10	79
	2	2	3								T-HANDLE TAB, 1/8" THK	ASTM A240, GR 304/304L	10,11	80
			1								3/4" VALVE STEM SOCKET, ø1 1/8"	ASTM A240, GR 304/304L	10,11	81
		1									1/2" VALVE STEM SOCKET, ø1 1/8"	ASTM A240, GR 304/304L	11	82
	1										1/4" VALVE STEM SOCKET, ø1 1/8"	ASTM A240, GR 304/304L	11	83
								12			BUTTON HEAD CAP SCREW, 1/4-20UNC-2A, 1" L	ASTM F837, 18-8 SST	10	84
								12			NUT, 1/4-20UNC-2B	ASTM A194, GR 2H	10	85

PARTS LIST CONTINUED ON SHEET 12

PARTS LIST/MATERIAL LIST

QTY -100	QTY -090	QTY -080	QTY -070	QTY -060	QTY -050	QTY -040	QTY -030	QTY -020	QTY -010	PARTS / DASH NUMBER	NOMENCLATURE/DESCRIPTION	MATERIAL/REFERENCE	SHEET	ITEM NO
									X	-010	DELAY TOTE ASSEMBLY		2	1
								X	1	-020	TOP HAT ASSEMBLY		3	2
							X	1		-030	FILTER ASSEMBLY		4	3
						X		1		-040	TOP HAT WELDMENT		6	4
					X			1		-050	PIPE SPOOL - 1		9	5
				X				1		-060	PIPE SPOOL - 2		9	6
			X					1		-070	3/4 VALVE T-HANDLE		10	7
		X						1		-080	1/2 VALVE T-HANDLE		11	8
	X							1		-090	1/4 VALVE T-HANDLE		11	9
X								1		-100	TOP PLATE WELDMENT		8	10
									1	LQ375	LIQUID CONTAINER, 375 GALLON CAPACITY, DOUBLE WALLED	CONTAINER PRODUCTS CORPORATION	2	11
								1		BLUE-GARD STYLE 3700	GASKET, 12" RF, CLASS 150, 1/8" THK	GARLOCK	3	12
								1			REDUCING STREET ELBOW, 1" FNPT X 3/4" MNPT, CLASS 3000	ASTM A182, GR F 304L	4	13
1											TOP HAT LID, PLATE, 1/4" THK	ASTM A240, TP 304/304L	8	14
								1		BLUE-GARD STYLE 3700	TOP HAT LID GASKET, 1/8" THK	GARLOCK	3,8	15
					1					3131-3	O-RING UNION, 1/2" FNPT, CLASS 3000, EPDM O-RING	HART INDUSTRIES	9	16
					1					3131-4	O-RING UNION, 3/4" FNPT, CLASS 3000, EPDM O-RING	HART INDURSTRIES	9	17
	1	1	1								INDICATOR PLATE, ø3" OD, 3/16" THK	ASTM A240, TP 304/304L	10,11	18
								8		(5993K830)	KNOB, FOUR ARM, 1/4"-20	(MCMASTER)	3	19
								8			HEX BOLT, 1/4-20UNC-2A, 1 1/2" L, 18-8 SST	ASTM F593 CON: CWI	3	20
1						1					HALF COUPLING, 1 1/2" NPT CLASS 3000	ASTM A182, GR F 304L	6,8	21
								1		0372-019	ADAPTER, 1 1/4" BSPPF X 1" NPTM, 316 SST	LUTZ	4	22
					1						CLOSE NIPPLE, 1/4" SCH 40, SMLS	ASTM A312, TP 304L	9	23
								1		0040-200	DRUM PUMP-MEI6120V, 1/2 HP, UL LISTED MOTOR	LUTZ	4	24
								1		0150-005	PUMP TUBE, MSL SS, 47" LONG	LUTZ	4	25
								3			CAPTURE RING GASKET, 1/8" THK	EPDM, 40 DURO	10	26
								1		0040-262	REMOTE OPERATION KIT	LUTZ	4	27
								1		0204-215	BARREL ADAPTER, MSL SERIES, STAINLESS STEEL	LUTZ	4	28
								1		FMR10-CAQBMVCEVEE2 +Z1	LEVEL TRANSMITTER	ENDRESS-HAUSER	5	29
								1		8E5B15-CSINAAAAFAA ABDSAABSIAI+AAEBZI	PROMASS, E500, 8E5B15, DN15 1/2" 300# FLANGE	ENDRESS-HAUSER	5	30
								8			HEX BOLT, 1/2-13UNC-2A, 1 3/4" L	ASTM A193, GR B7	5	31
								8			HEX NUT, 1/2-13UNC-2B	ASTM A194, GR 2H	5	32
								2		BLUE-GARD STYLE 3700	RING GASKET, 1/2" RF, CLASS 300, 1/8" THK	GARLOCK	5	33
								1		F0522997	WEATHER COVER FOR FLANDERS RADIAL FILTER	FLANDERS	3	34
							1			0-007-1-12-RF-NU -00-E3-Z04059*	40 CFM RADIAL HEPA FILTER	FLANDERS	4	35
								AR		75001624	BIRD SCREEN VINYL EDGING	STANPRO	3	36
								1			WINGNUT, 3/8-16UNC	ASTM A194 GR 2H	3	37
						1					TOP HAT FLANGE, 1/4" THK	ASTM A240, TP 304/304L	6,8	38
						1					LEFT PLATE, 1/4" THK	ASTM A240, TP 304/304L	6,7	39
						1					FLANGE, 12", WN, RF, CLASS 150	ASTM A182, GR F 304L	6	40
						2					FLANGE, 3" WN, RF, CLASS 150	ASTM A182, GR F 304L	5,6	41
						AR					PIPE, 12" SCH 40, SMLS	ASTM A312, GR TP 304L	6	42

JOHN COLIN HENDERSON
STATE OF WASHINGTON
31912
REGISTERED
PROFESSIONAL ENGINEER
5/8/19

REF NUMBER	TITLE
CEES-CALC-604-S-013	MISCELLANEOUS RACK LOADING ANALYSIS
CEES-16-604-E-042	CABLE AND CONDUIT SCHEDULE

DRAWING/DOCUMENT REFERENCES
NEXT USED ON CEES-16-604-A-002

REV NO	DESCRIPTION	REV BY DATE	DRAFTING CHECKER DATE	ENGINEER DATE	ENGINEERING CHECKER DATE	PROJECT MANAGER DATE

REVISIONS

THIS DESIGN DEVELOPED FOR USE BY THE US DEPARTMENT OF ENERGY UNDER CONTRACT NO. DE-EM0004216.

	NAME	DATE
DRAWN BY	M BERMUDEZ	4/22/19
DRAFTING CHECKER	JT FOSS	5/1/19
ENGINEER	D CAP	5/2/19
ENGINEERING CHECKER	J HARRINGTON	5/2/19
PROJECT MANAGER	P BODEN	5/1/19

Columbia Energy AND ENVIRONMENTAL SERVICES

DOE TBI SY-101
DELAY TOTE ASSEMBLY

SIZE F | DWG NO CEES-16-604-M-023 | REV 0
SCALE AS SHOWN | SHEET 1 OF 12

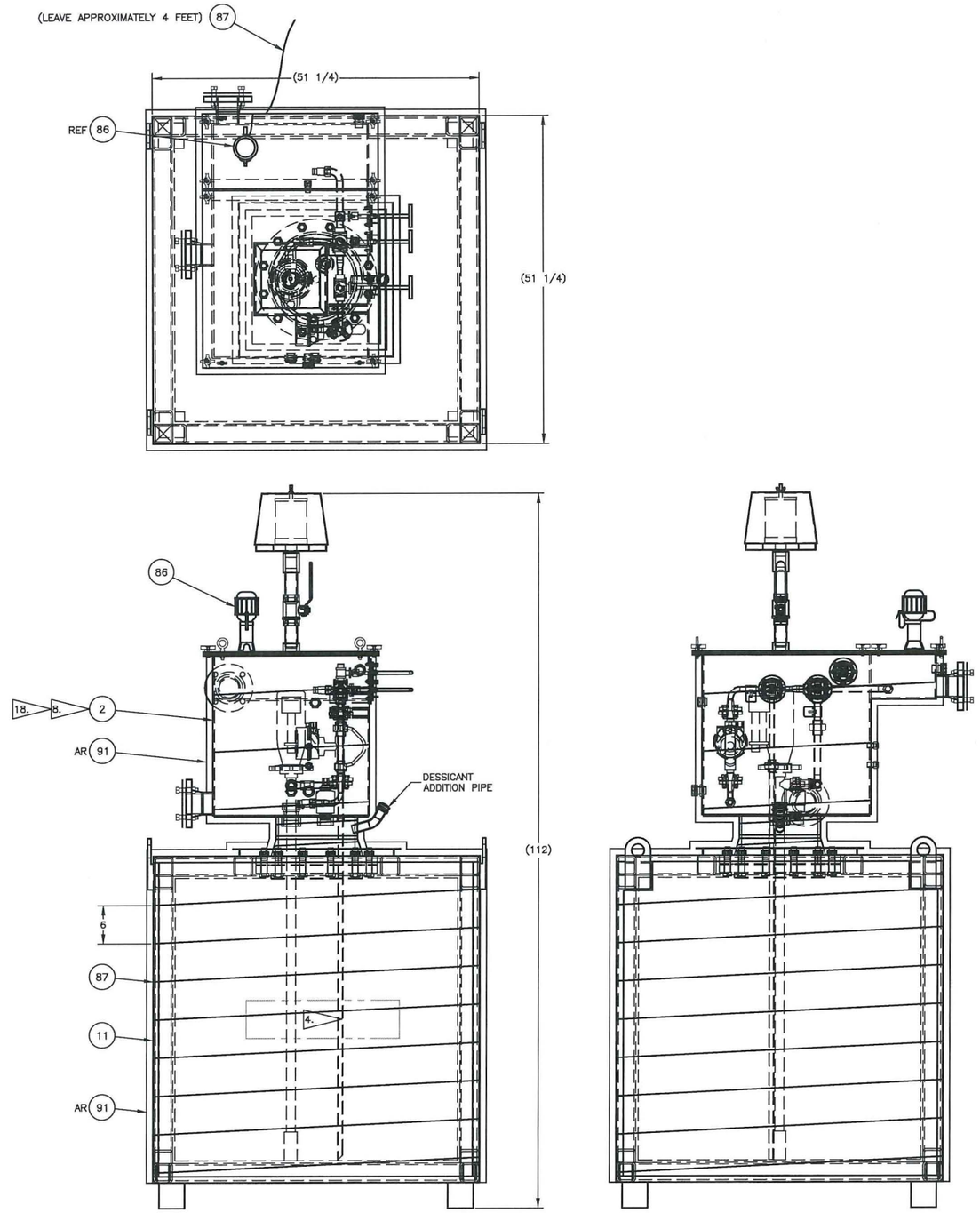

15. 16. 1 DELAY TOTE ASSEMBLY
SCALE: 1/8

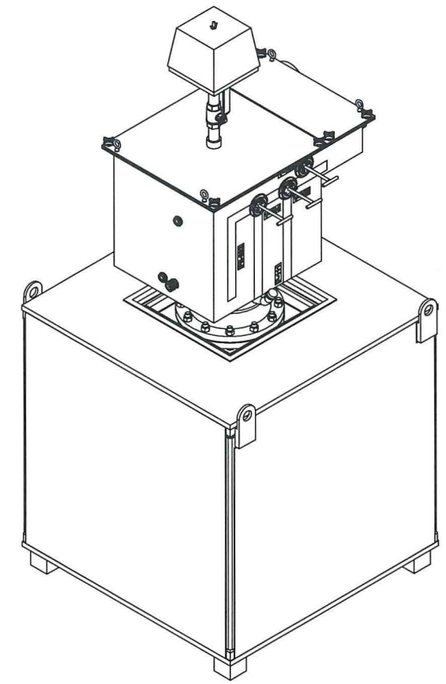

ISOMETRIC VIEW
SCALE: NTS

JOHN COLIN HENDERSON
STATE OF WASHINGTON
31912
REGISTERED
PROFESSIONAL ENGINEER
5/8/19

REF NUMBER	TITLE
DRAWING/DOCUMENT REFERENCES	
NEXT USED ON	

REV NO	DESCRIPTION	REV BY DATE	DRAFTING CHECKER DATE	ENGINEER DATE	ENGINEERING CHECKER DATE	PROJECT MANAGER DATE
REVISIONS						

	NAME	DATE
DRAWN BY	M. BERMUDEZ	4/22/19
DRAFTING CHECKER	JT FOSS	5/1/19
ENGINEER	D CAP	5/2/19
ENGINEERING CHECKER	J HARRINGTON	5/2/19
PROJECT MANAGER	P BODEN	5/1/19

Columbia Energy
AND ENVIRONMENTAL SERVICES

DOE TBI SY-101
DELAY TOTE ASSEMBLY

SIZE F | DWG NO CEES-16-604-M-023 | REV 0
SCALE AS SHOWN | SHEET 2 OF

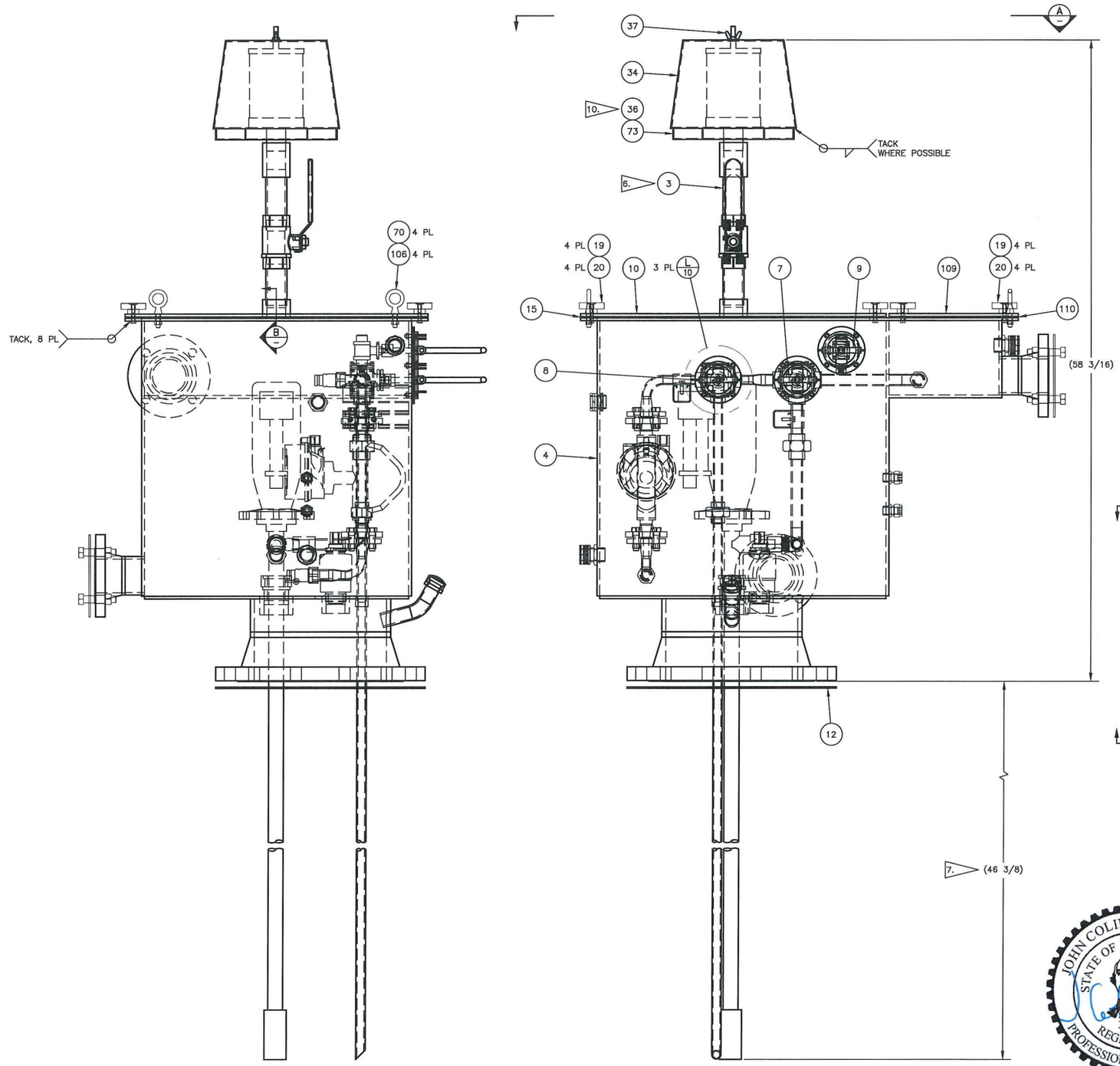

2 TOP HAT ASSEMBLY
SCALE: 1/4

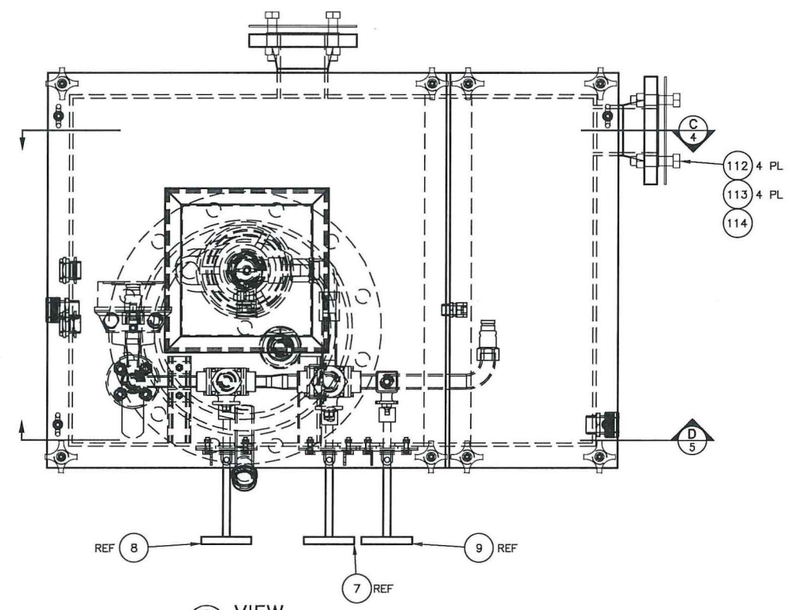

A VIEW
SCALE: 1/4

JOHN COLIN HENDERSON
STATE OF WASHINGTON
31912
REGISTERED
PROFESSIONAL ENGINEER
5/8/19

REF NUMBER	TITLE
DRAWING/DOCUMENT REFERENCES	
NEXT USED ON	

REV NO	DESCRIPTION	REV BY DATE	DRAFTING CHECKER DATE	ENGINEER DATE	ENGINEERING CHECKER DATE	PROJECT MANAGER DATE
REVISIONS						

	NAME	DATE
DRAWN BY	M BERMUDEZ	4/22/19
DRAFTING CHECKER	JT FOSS	5/1/19
ENGINEER	D CAP	5/2/19
ENGINEERING CHECKER	J HARRINGTON	5/2/19
PROJECT MANAGER	P BODEN	5/1/19

Columbia Energy AND ENVIRONMENTAL SERVICES

DOE TBI SY-101
DELAY TOTE ASSEMBLY

SIZE F | DWG NO CEES-16-604-M-023 | REV 0

SCALE AS SHOWN | SHEET 3 OF

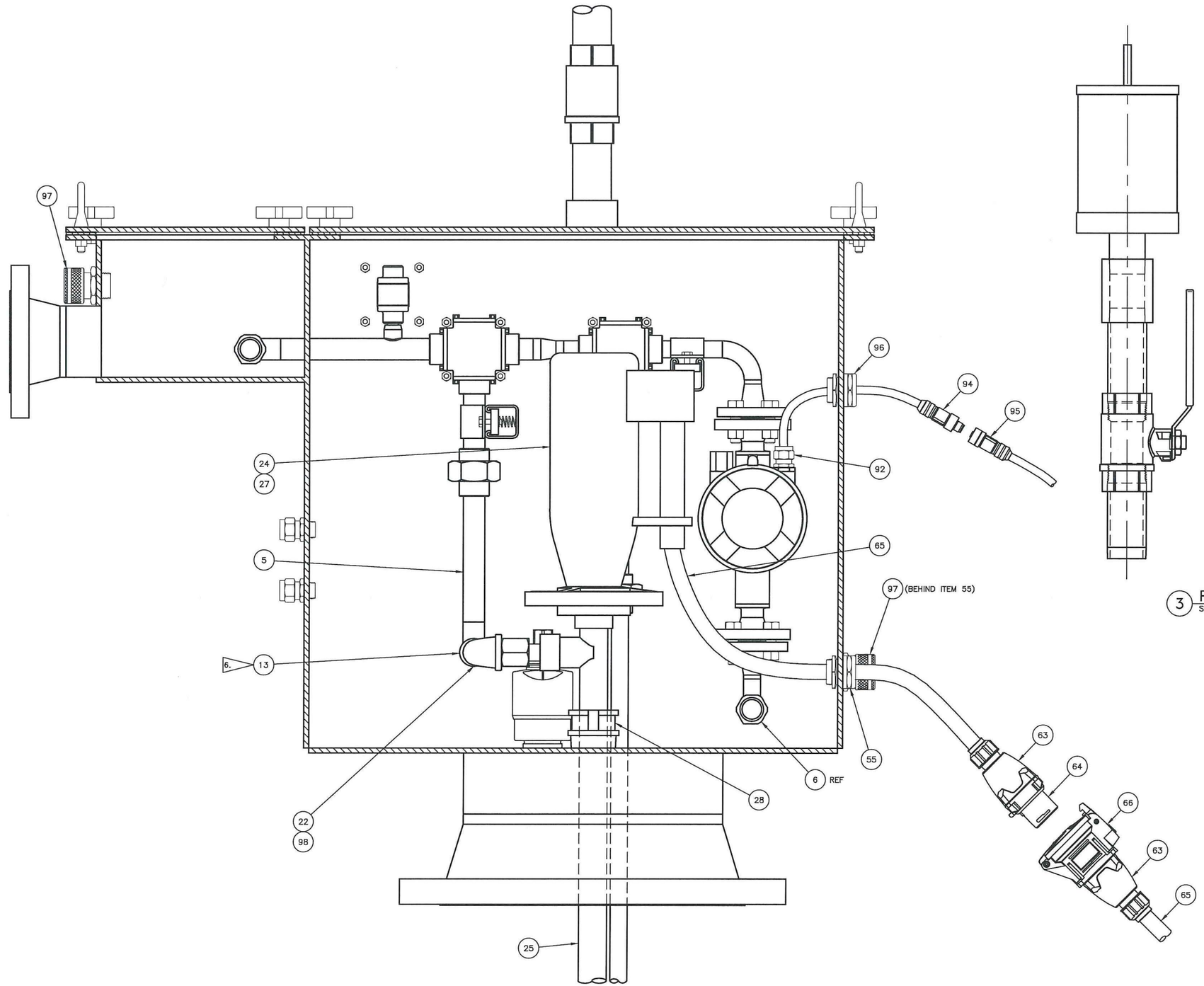

C/3 SECTION
SCALE: 1/2

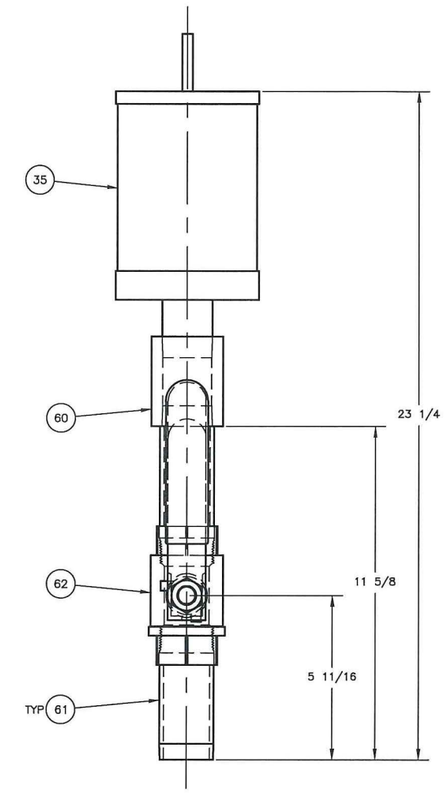

3 FILTER ASSEMBLY
SCALE: 1/2
6.

JOHN COLIN HENDERSON
STATE OF WASHINGTON
31912
REGISTERED
PROFESSIONAL ENGINEER
5/8/19

REF NUMBER	TITLE
DRAWING/DOCUMENT REFERENCES	
NEXT USED ON	

REV NO	DESCRIPTION	REV BY DATE	DRAFTING CHECKER DATE	ENGINEER DATE	ENGINEERING CHECKER DATE	PROJECT MANAGER DATE
REVISIONS						

	NAME	DATE
DRAWN BY	M BERMUDEZ	4/22/19
DRAFTING SUPERVISOR	JT FOSS	5/1/19
ENGINEER	D CAP	5/2/19
ENGINEERING CHECKER	J HARRINGTON	5/2/19
PROJECT MANAGER	P BODEN	5/1/19

Columbia Energy
AND ENVIRONMENTAL SERVICES

DOE TBI SY-101
DELAY TOTE ASSEMBLY

SIZE F | DWG NO CEES-16-604-M-023 | REV 0
SCALE AS SHOWN | SHEET 4 OF

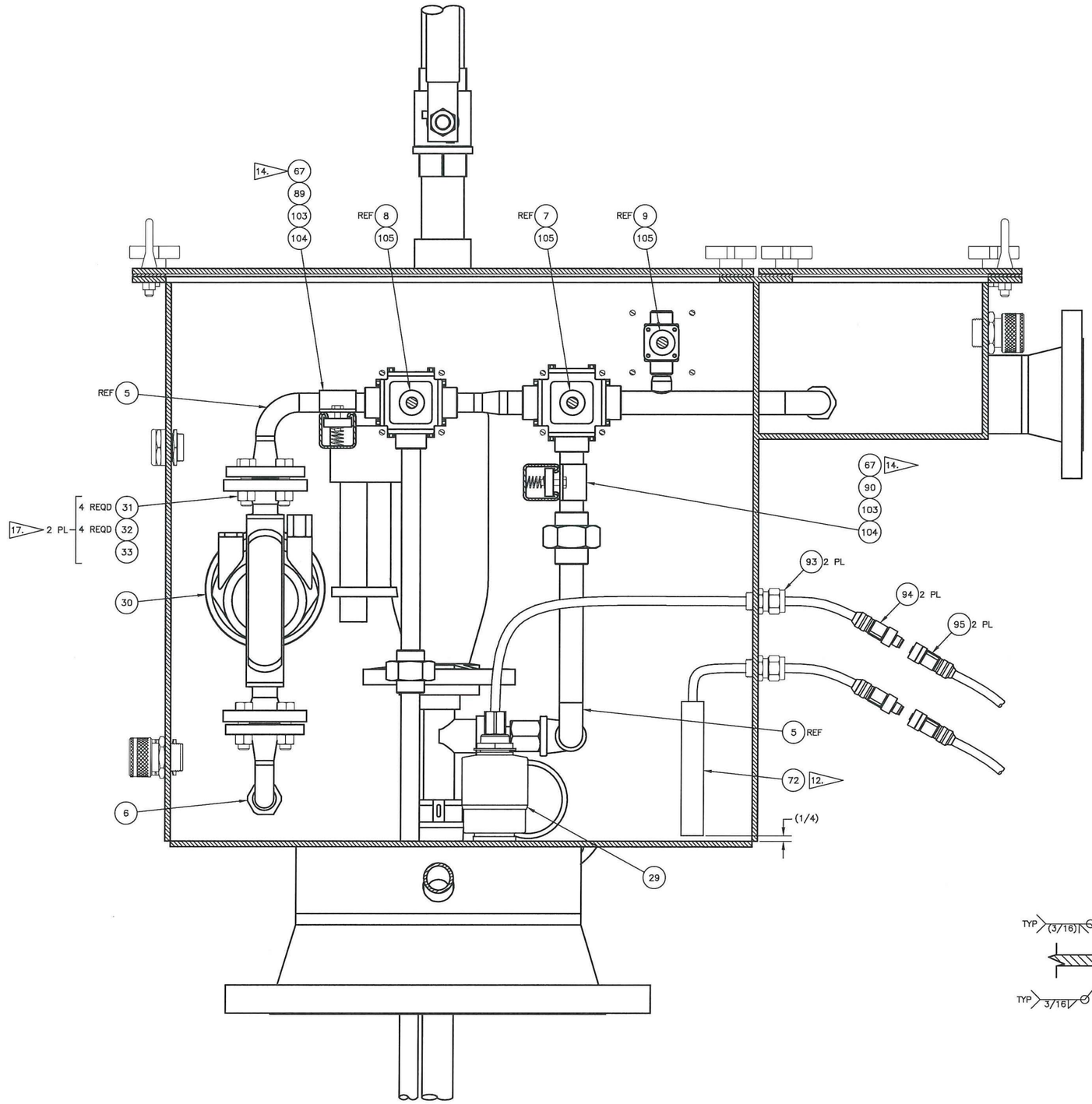

D 3 SECTION
SCALE: 1/2

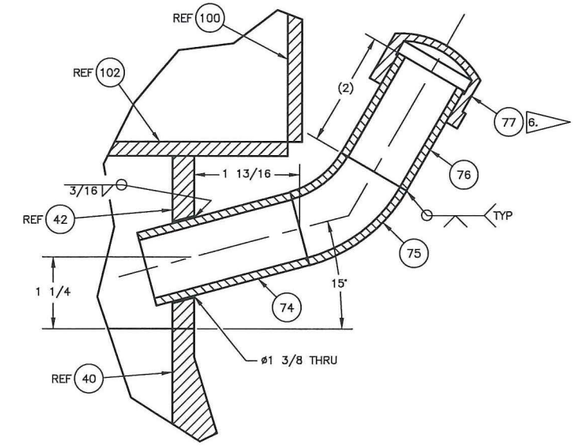

K 6 SECTION
SCALE: 1/1

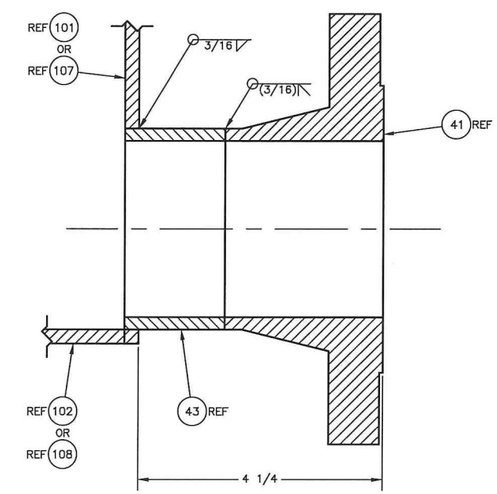

F 6 SECTION
SCALE: 1/1

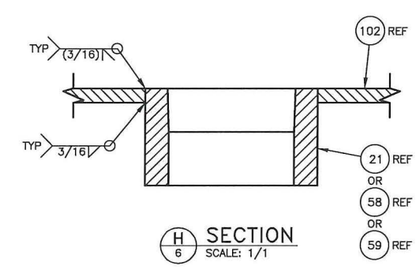

H 6 SECTION
SCALE: 1/1

NAME	DATE
DRAWN BY M BERMUDEZ	4/22/19
DRAFTING CHECKER JT FOSS	5/1/19
ENGINEER D CAP	5/2/19
ENGINEERING CHECKER J HARRINGTON	5/2/19
PROJECT MANAGER P BODEN	5/1/19

Columbia Energy AND ENVIRONMENTAL SERVICES

DOE TBI SY-101
DELAY TOTE ASSEMBLY

SIZE F | DWG NO CEES-16-604-M-023 | REV 0
SCALE AS SHOWN | SHEET 5 OF

REF NUMBER	TITLE
DRAWING/DOCUMENT REFERENCES	
NEXT USED ON	

REV NO	DESCRIPTION	REV BY DATE	DRAFTING CHECKER DATE	ENGINEER DATE	ENGINEERING CHECKER DATE	PROJECT MANAGER DATE
REVISIONS						

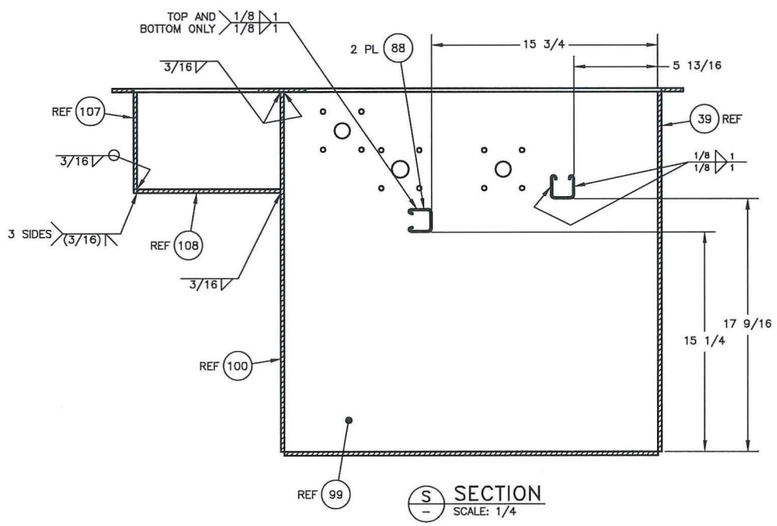

S SECTION
SCALE: 1/4

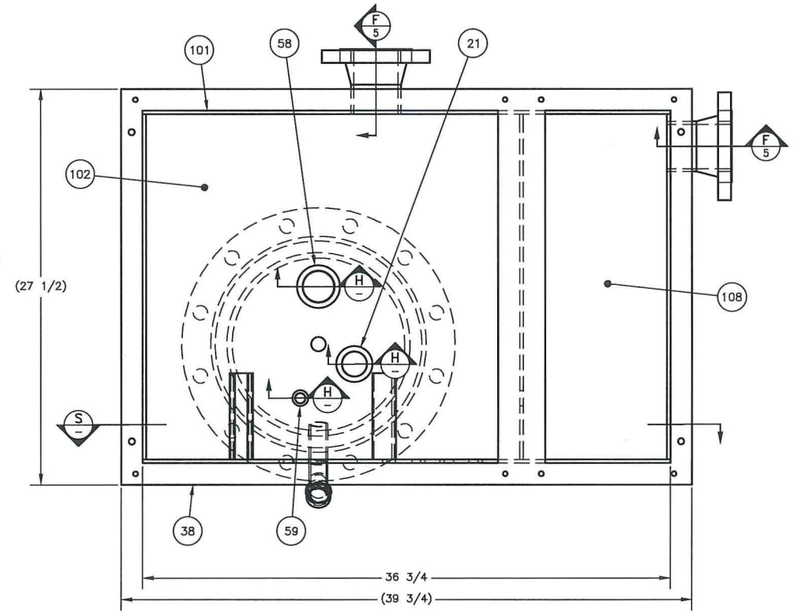

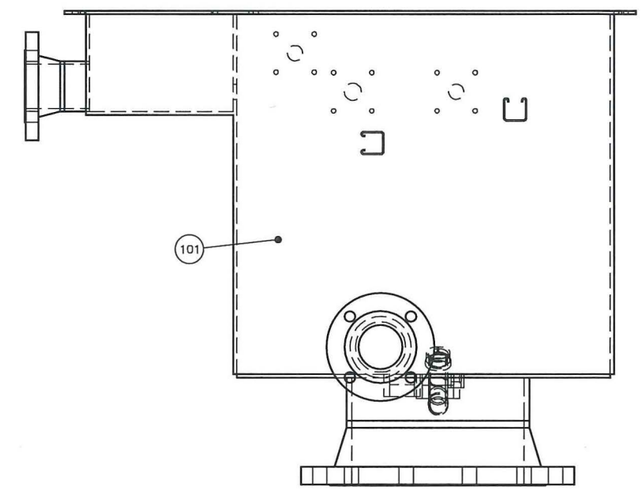

S VIEW
SCALE: 1/4

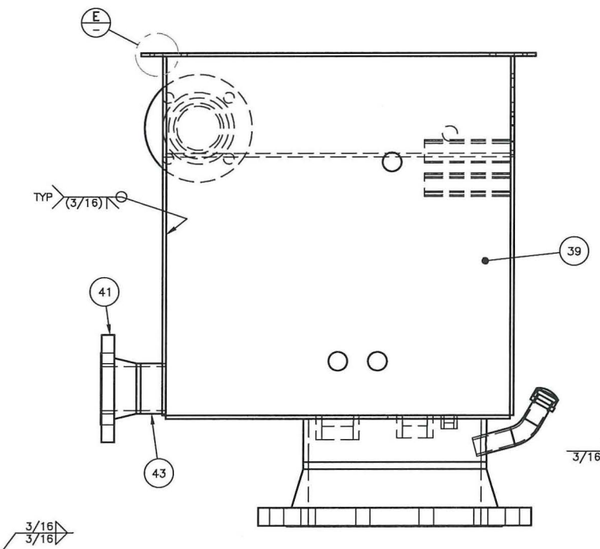

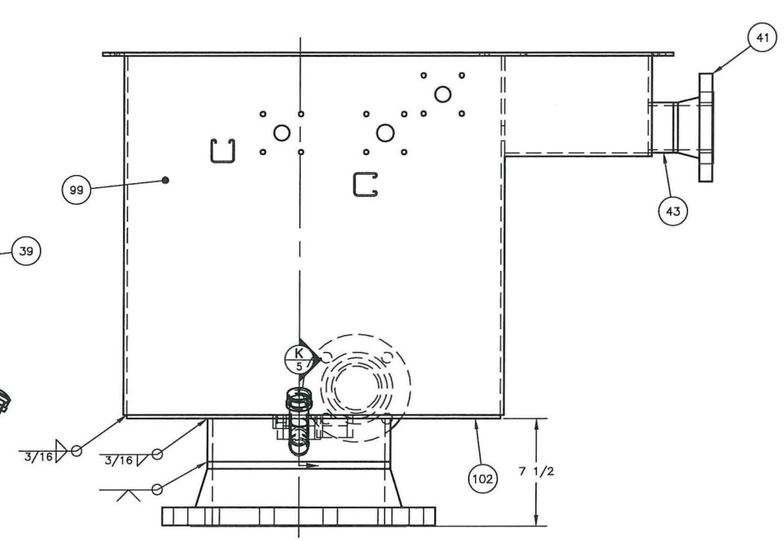

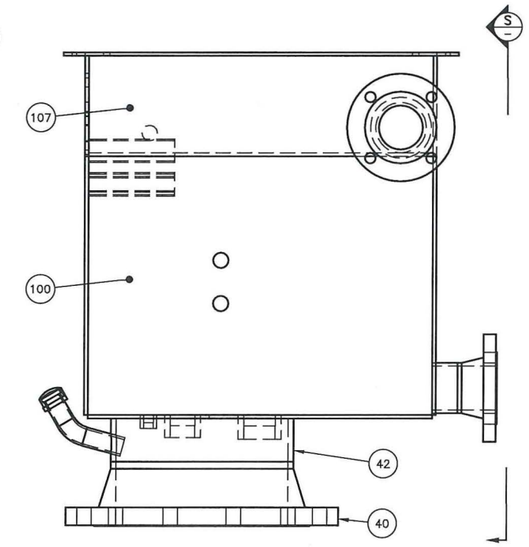

4 TOP HAT WELDMENT
SCALE: 1/4

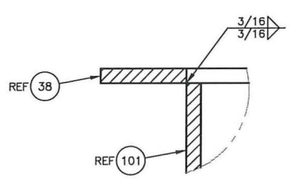

E DETAIL
SCALE: 1/1

REF NUMBER	TITLE
DRAWING/DOCUMENT REFERENCES	
NEXT USED ON	

REV NO	DESCRIPTION	REV BY DATE	DRAFTING CHECKER DATE	ENGINEER DATE	ENGINEERING CHECKER DATE	PROJECT MANAGER DATE
REVISIONS						

	NAME	DATE
DRAWN BY	M BERMUDEZ	4/22/19
DRAFTING CHECKER	JT FOSS	5/1/19
ENGINEER	D CAP	5/2/19
ENGINEERING CHECKER	J HARRINGTON	5/2/19
PROJECT MANAGER	P BODEN	5/1/19

Columbia Energy
AND ENVIRONMENTAL SERVICES

DOE TBI SY-101
DELAY TOTE ASSEMBLY

SIZE F | DWG NO CEES-16-604-M-023 | REV 0
SCALE AS SHOWN | SHEET 6 OF

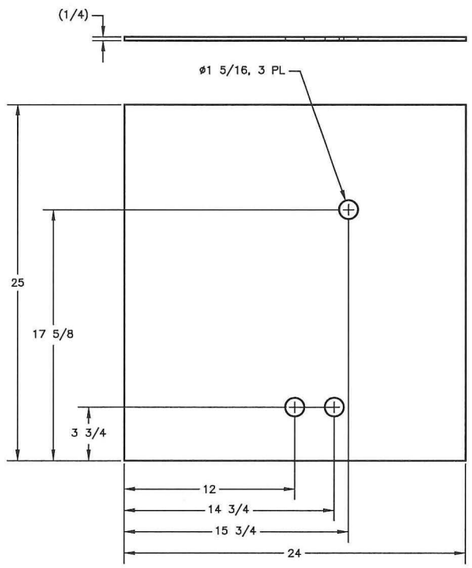

39 LEFT PLATE
SCALE: 1/4

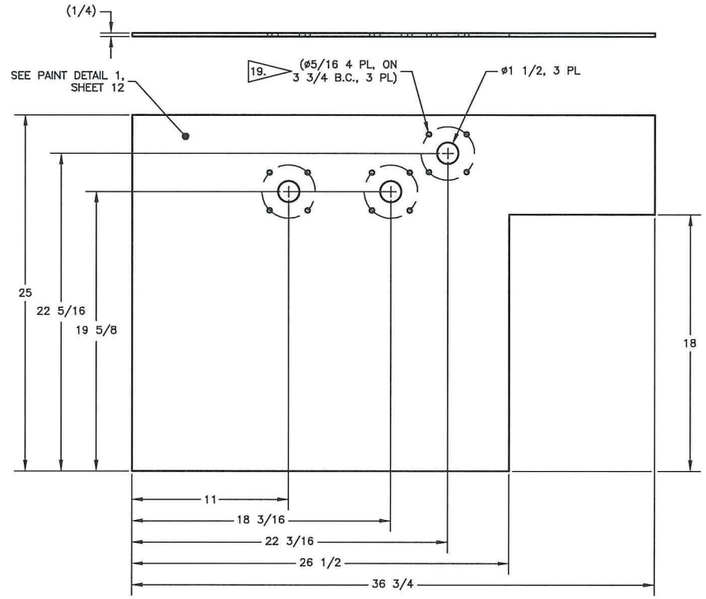

99 FRONT PLATE
SCALE: 1/4

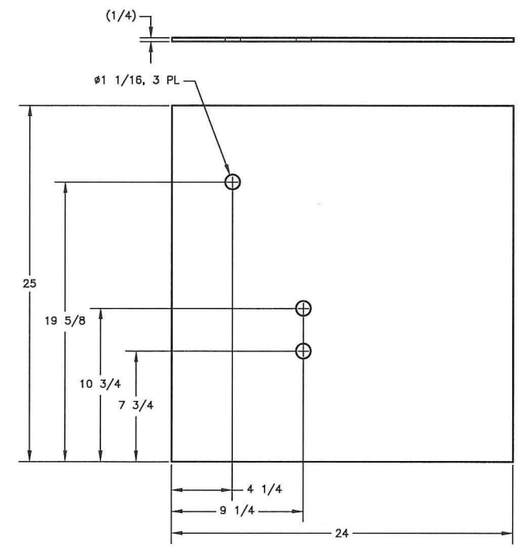

100 RIGHT PLATE
SCALE: 1/4

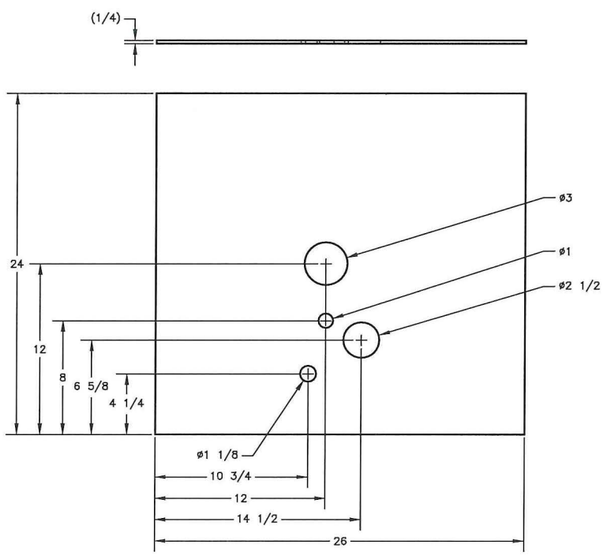

102 BOTTOM PLATE
SCALE: 1/4

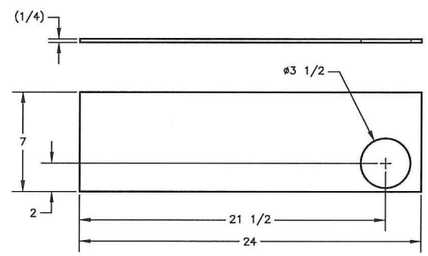

107 HOSE TRAY SIDE PLATE
SCALE: 1/4

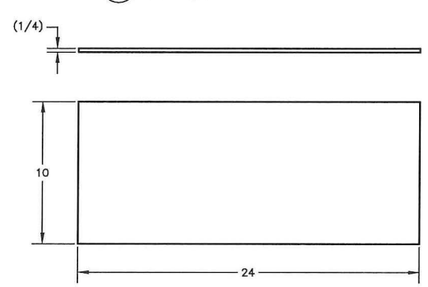

108 HOSE TRAY BOTTOM PLATE
SCALE: 1/4

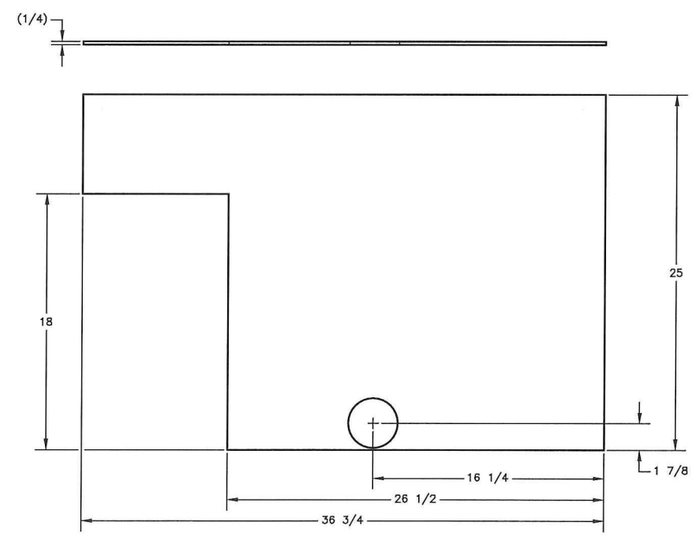

101 BACK PLATE
SCALE: 1/4

REF NUMBER	TITLE	REV NO	DESCRIPTION	REV BY DATE	DRAFTING CHECKER DATE	ENGINEER DATE	ENGINEERING CHECKER DATE	PROJECT MANAGER DATE
DRAWING/DOCUMENT REFERENCES		REVISIONS						
NEXT USED ON								

	NAME	DATE
DESIGN BY	M BERMUDEZ	4/22/19
DRAFTING CHECKER	JT FOSS	5/1/19
ENGINEER	D CAP	5/2/19
ENGINEERING CHECKER	J HARRINGTON	5/2/19
PROJECT MANAGER	P BODEN	5/1/19

Columbia Energy AND ENVIRONMENTAL SERVICES

DOE TBI SY-101
DELAY TOTE ASSEMBLY

SIZE F | DWG NO CEES-16-604-M-023 | REV 0

SCALE AS SHOWN | SHEET 7 OF

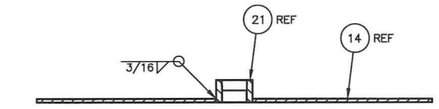

B SECTION
SCALE: 1/4

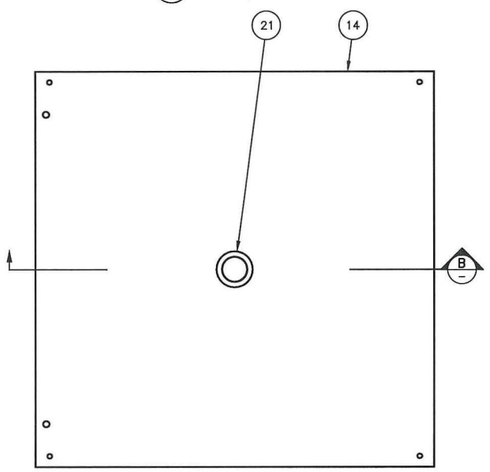

10 TOP PLATE WELDMENT
SCALE: 1/4

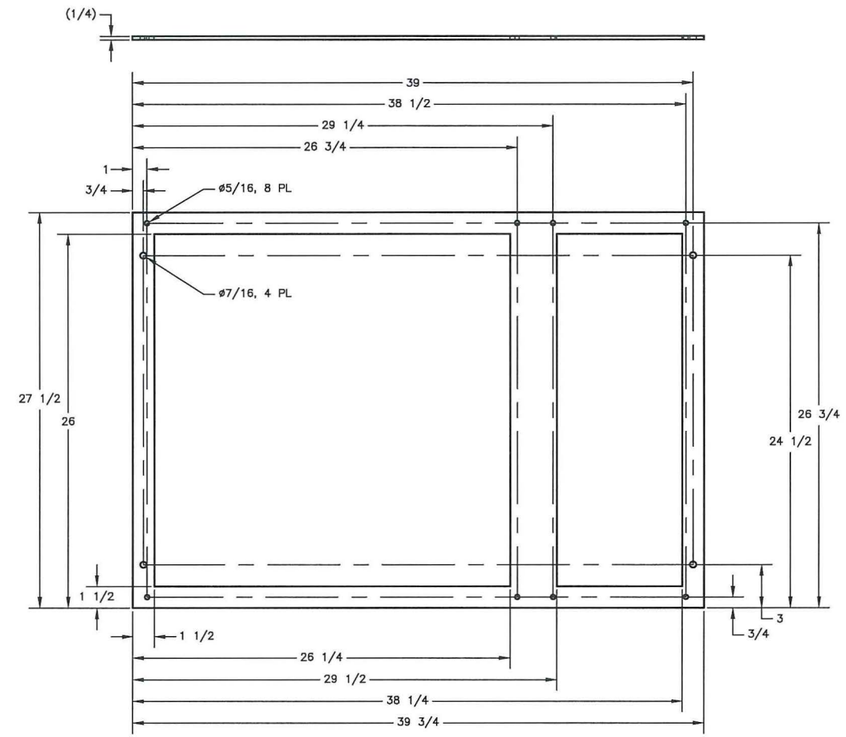

38 TOP HAT FLANGE
SCALE: 1/4

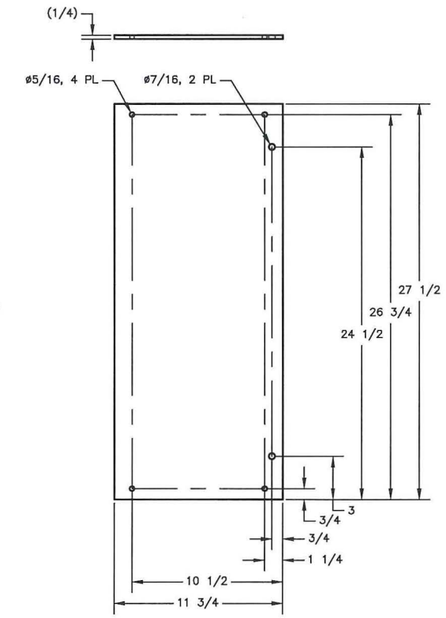

109 HOSE TRAY LID
SCALE: 1/4

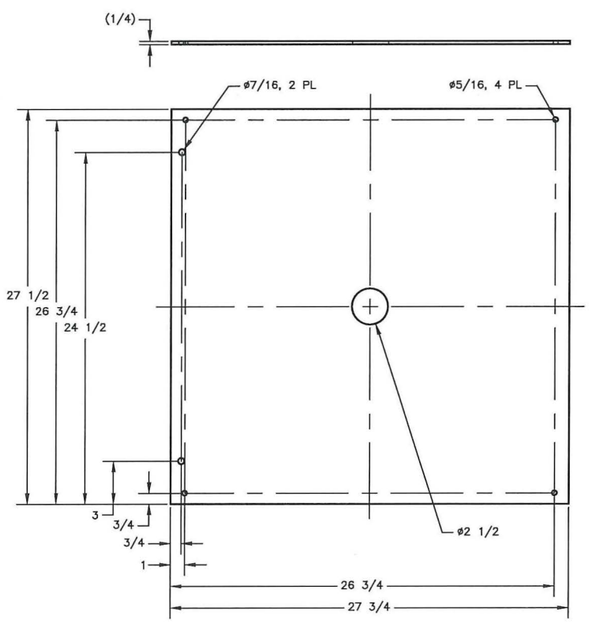

14 TOP HAT LID
SCALE: 1/4

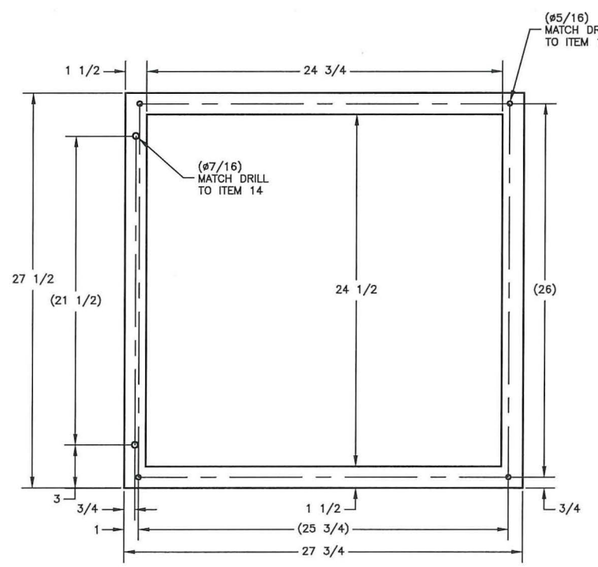

15 TOP HAT GASKET
SCALE: 1/4

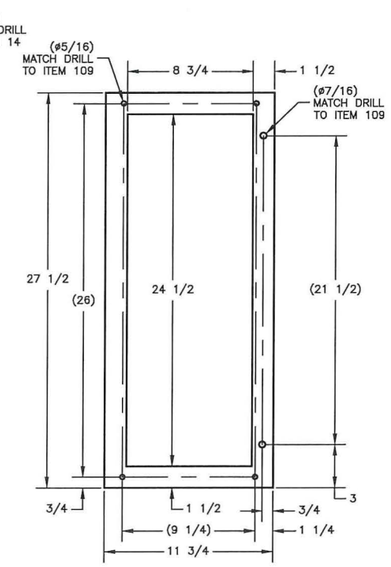

110 HOSE TRAY GASKET
SCALE: 1/4

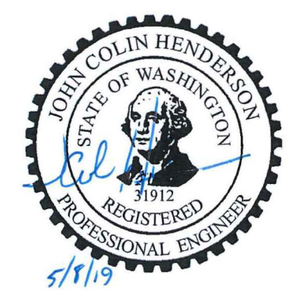

REF NUMBER	TITLE
DRAWING/DOCUMENT REFERENCES	
NEXT USED ON	

REV NO	DESCRIPTION	REV BY DATE	DRAFTING CHECKER DATE	ENGINEER DATE	ENGINEERING CHECKER DATE	PROJECT MANAGER DATE
REVISIONS						

	NAME	DATE
DRAWN BY	M BERMUDEZ	4/22/19
DRAFTING CHECKER	JT FOSS	5/1/19
ENGINEER	D CAP	5/2/19
ENGINEERING CHECKER	J HARRINGTON	5/1/19
PROJECT MANAGER	P BODEN	5/1/19

Columbia Energy
AND ENVIRONMENTAL SERVICES

DOE TBI SY-101
DELAY TOTE ASSEMBLY

SIZE F | DWG NO CEES-16-604-M-023 | REV 0

SCALE AS SHOWN | SHEET 8 OF

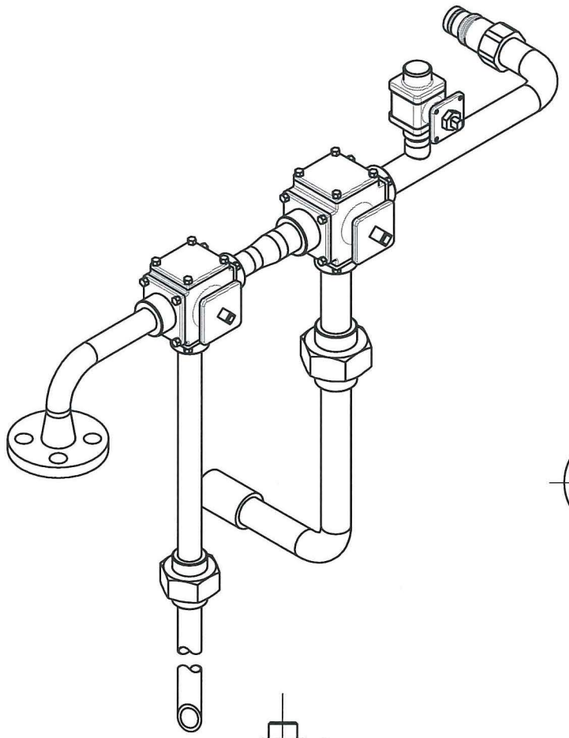

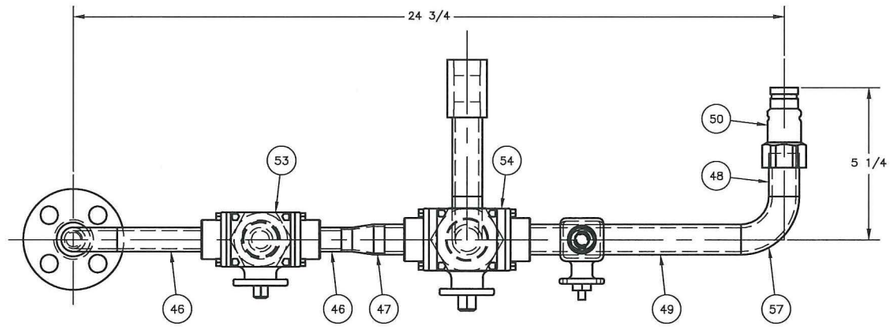

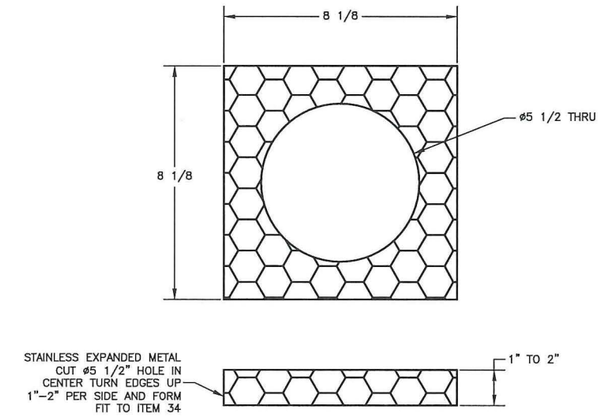

73 BIRD SCREEN
SCALE: 1/2

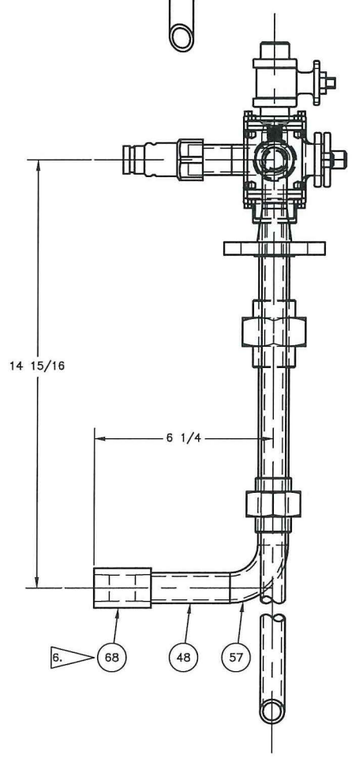

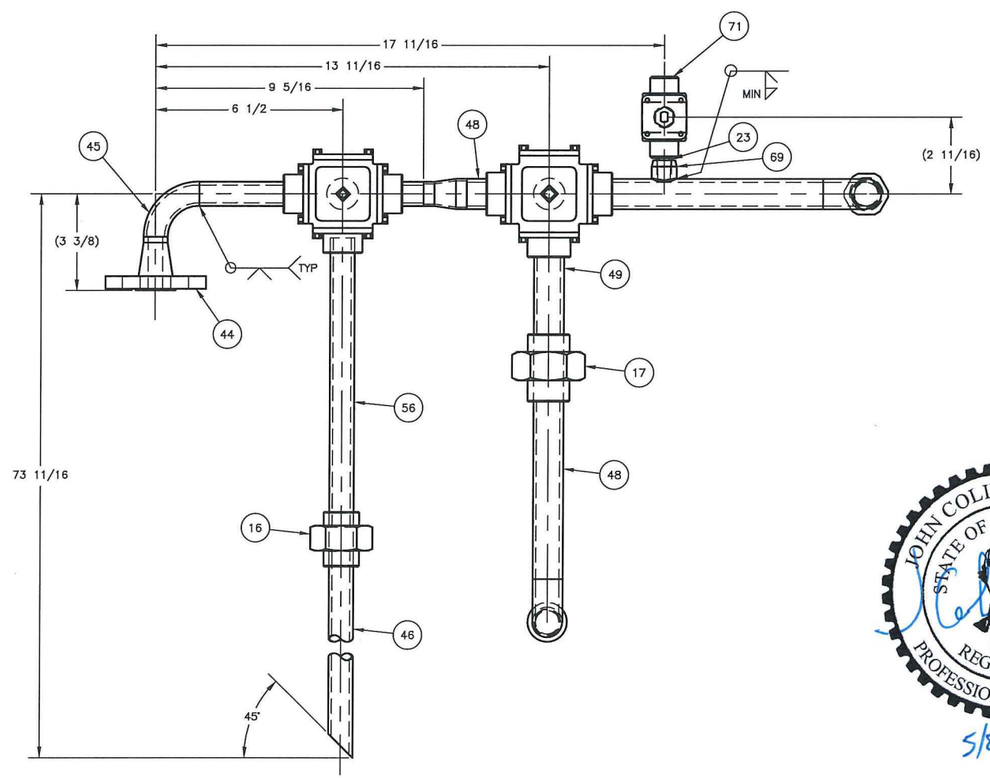

5 PIPE SPOOL – 1
SCALE: 1/2
6.

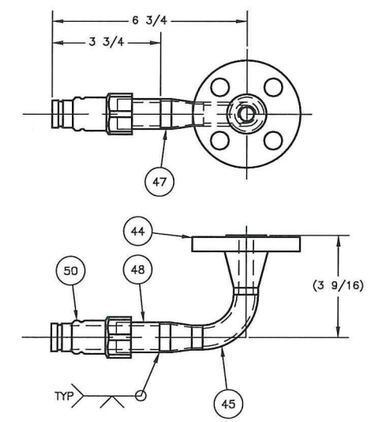

6 PIPE SPOOL – 2
SCALE: 1/2

5/8/19

REF NUMBER	TITLE
DRAWING/DOCUMENT REFERENCES	
NEXT USED ON	

REV NO	DESCRIPTION	REV BY DATE	DRAFTING CHECKER DATE	ENGINEER DATE	ENGINEERING CHECKER DATE	PROJECT MANAGER DATE
REVISIONS						

NAME	DATE
DRAWN BY M BERMUDEZ	4/22/19
DRAFTING CHECKER JT FOSS	5/1/19
ENGINEER D CAP	5/2/19
ENGINEERING CHECKER J HARRINGTON	5/2/19
PROJECT MANAGER P BODEN	5/1/19

Columbia Energy
AND ENVIRONMENTAL SERVICES

DOE TBI SY-101
DELAY TOTE ASSEMBLY

SIZE F | DWG NO CEES-16-604-M-023 | REV 0
SCALE AS SHOWN | SHEET 9 OF

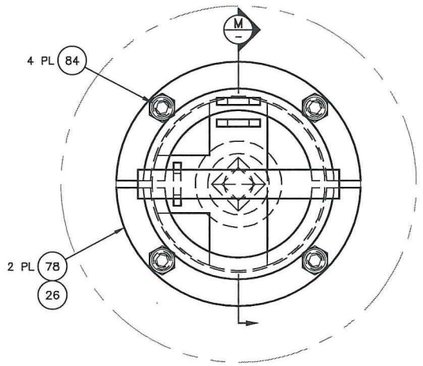

L/3 DETAIL
SCALE: 1/1
3 PL, ITEM 8 SHOWN

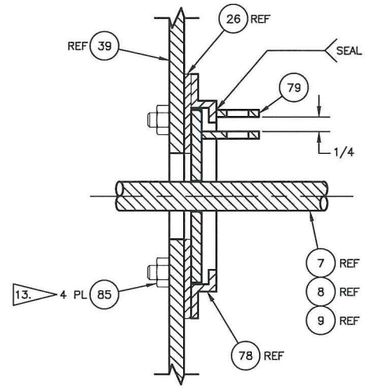

M/– SECTION
SCALE: 1/1
3 PL, ITEM 8 SHOWN
NOTE: SHIM VALVE HANDLE INDICATOR PLATE AS REQUIRED TO REMOVE AXIAL TRAVEL. USE MINIMAL UHMWPE BETWEEN INDICATOR PLATE AND ITEM 78 TO ACHIEVE FIT.

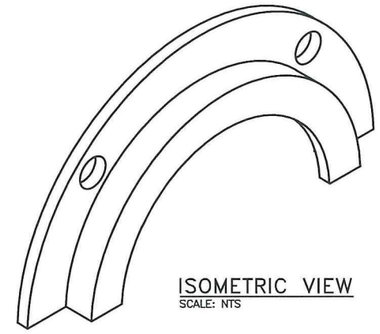

ISOMETRIC VIEW
SCALE: NTS

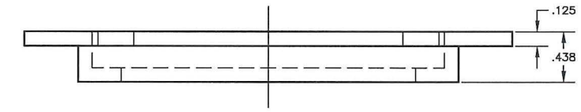

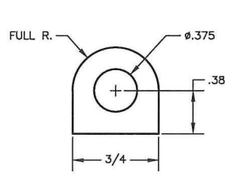

79 CAPTURE RING TAB
SCALE: 2/1

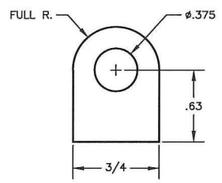

80 T-HANDLE TAB
SCALE: 2/1

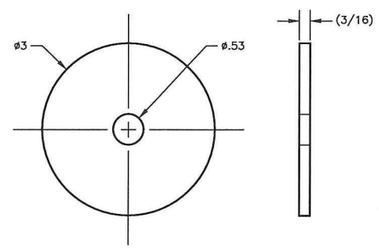

18 INDICATOR PLATE
SCALE: 1/1

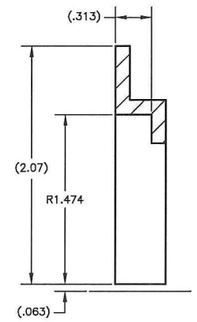

N/– SECTION
SCALE: 2/1

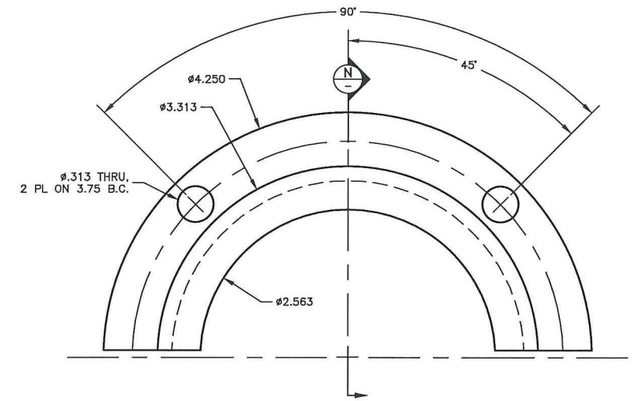

78 T-HANDLE CAPTURE RING
SCALE: 2/1

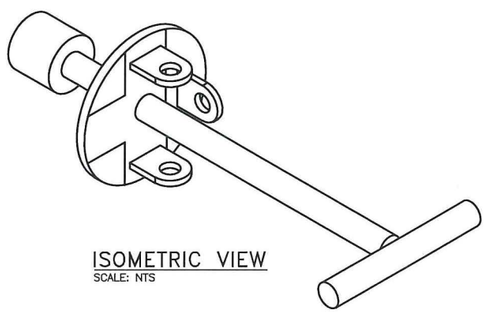

ISOMETRIC VIEW
SCALE: NTS

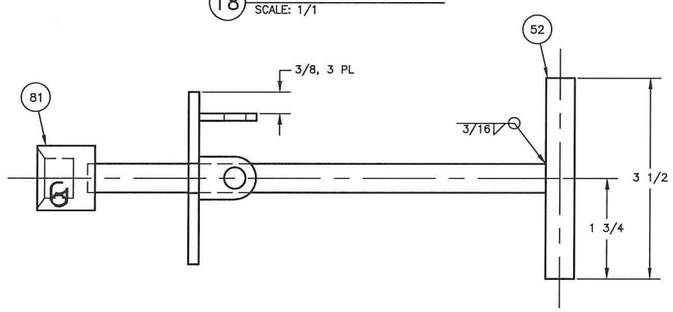

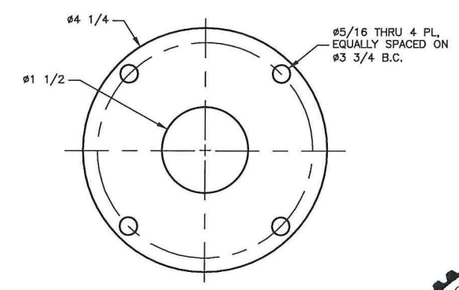

26 CAPTURE RING GASKET
SCALE: 1/1

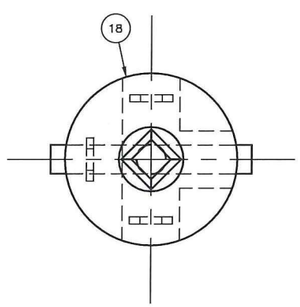

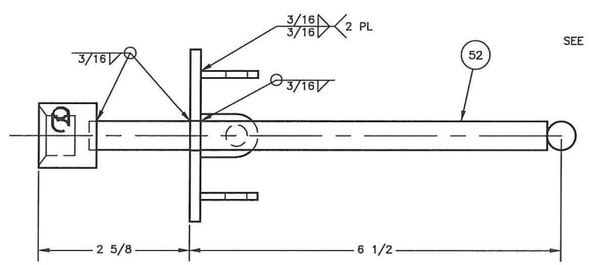

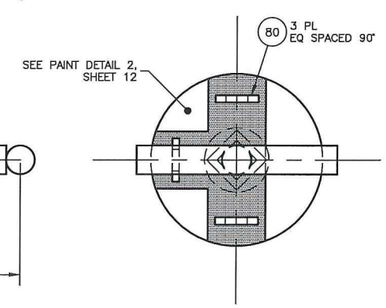

7 3/4 VALVE T-HANDLE
SCALE: 1/1

JOHN COLIN HENDERSON
STATE OF WASHINGTON
31912
REGISTERED
PROFESSIONAL ENGINEER
5/8/19

REF NUMBER	TITLE
DRAWING/DOCUMENT REFERENCES	
NEXT USED ON	

REV NO	DESCRIPTION	REV BY DATE	DRAFTING CHECKER DATE	ENGINEER DATE	ENGINEERING CHECKER DATE	PROJECT MANAGER DATE
REVISIONS						

	NAME	DATE
DESIGN BY	M BERMUDEZ	4/22/19
DRAFTING CHECKER	JT FOSS	5/1/19
ENGINEER	D CAP	5/2/19
ENGINEERING CHECKER	J HARRINGTON	5/2/19
PROJECT MANAGER	P BODEN	5/1/19

Columbia Energy AND ENVIRONMENTAL SERVICES

DOE TBI SY-101
DELAY TOTE ASSEMBLY

SIZE F | DWG NO CEES-16-604-M-023 | REV 0
SCALE AS SHOWN | SHEET 10 OF

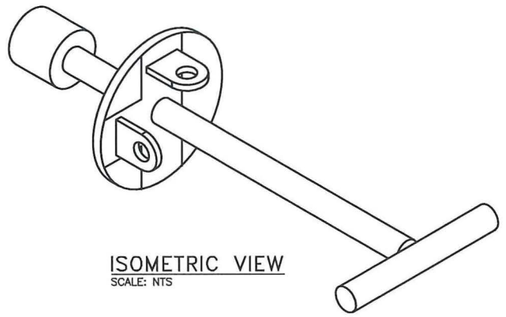

ISOMETRIC VIEW
SCALE: NTS

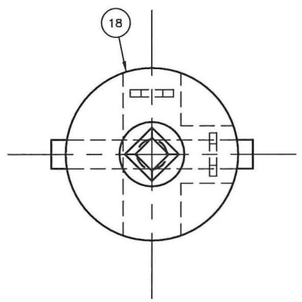

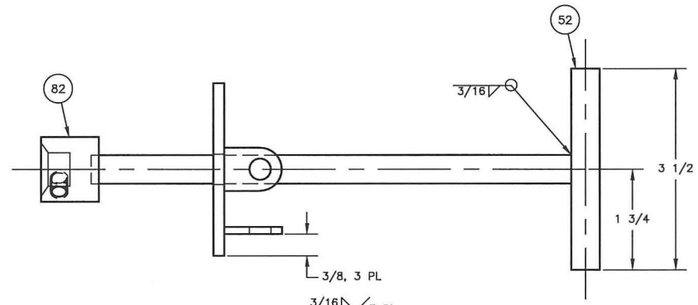

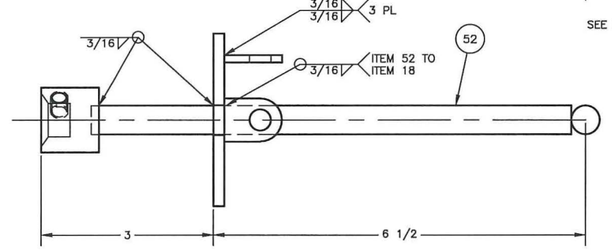

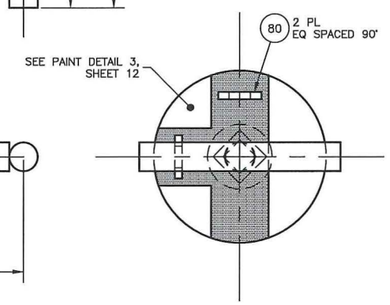

8 1/2 VALVE T-HANDLE
SCALE: 1/1

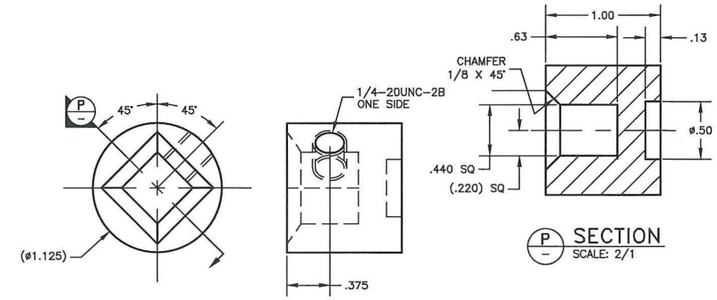

81 3/4 VALVE STEM SOCKET
SCALE: 2/1

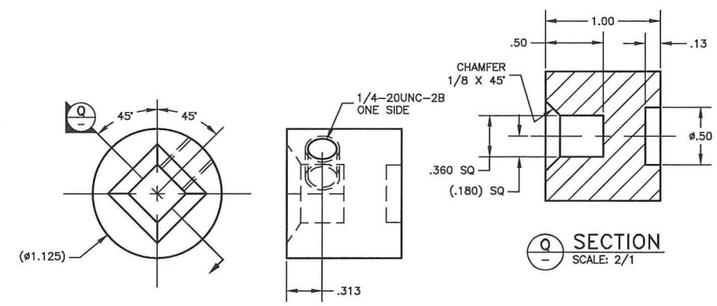

82 1/2 VALVE STEM SOCKET
SCALE: 2/1

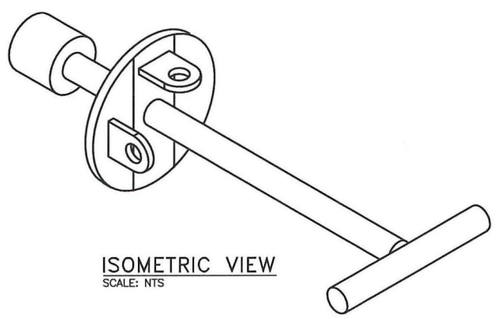

ISOMETRIC VIEW
SCALE: NTS

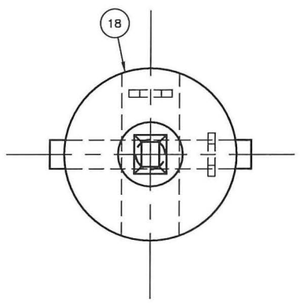

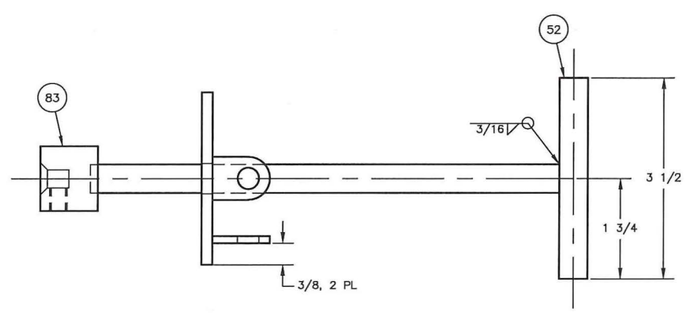

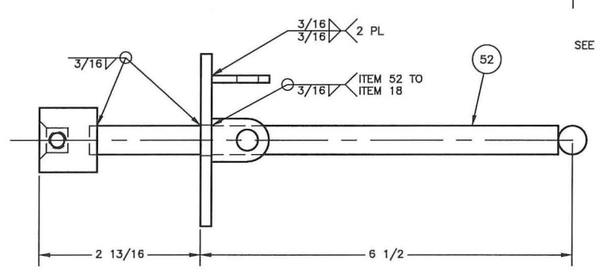

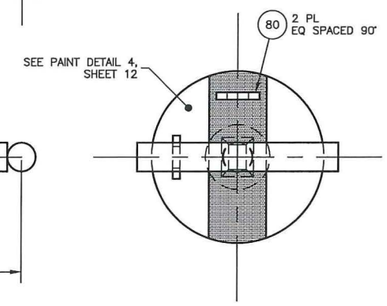

9 1/4 VALVE T-HANDLE
SCALE: 1/1

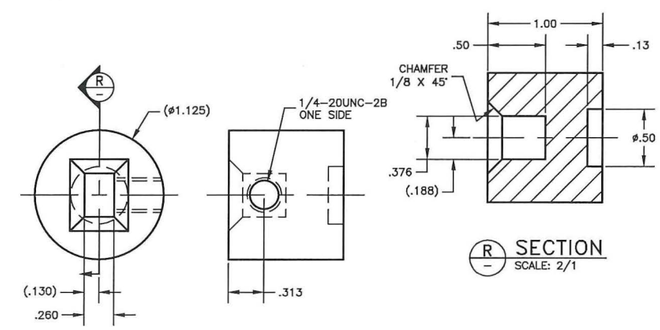

83 1/4 VALVE STEM SOCKET
SCALE: 2/1

NAME	DATE
DRAWN BY M BERMUDEZ	4/22/19
DRAFTING CHECKER JT FOSS	5/1/19
ENGINEER D CAP	5/2/19
ENGINEERING CHECKER J HARRINGTON	5/2/19
PROJECT MANAGER P BODEN	5/1/19

Columbia Energy
AND ENVIRONMENTAL SERVICES

DOE TBI SY-101
DELAY TOTE ASSEMBLY

SIZE F | DWG NO CEES-16-604-M-023 | REV 0
SCALE AS SHOWN | SHEET 11 OF

REF NUMBER	TITLE
DRAWING/DOCUMENT REFERENCES	
NEXT USED ON	

REV NO	DESCRIPTION	REV BY DATE	DRAFTING CHECKER DATE	ENGINEER DATE	ENGINEERING CHECKER DATE	PROJECT MANAGER DATE
REVISIONS						

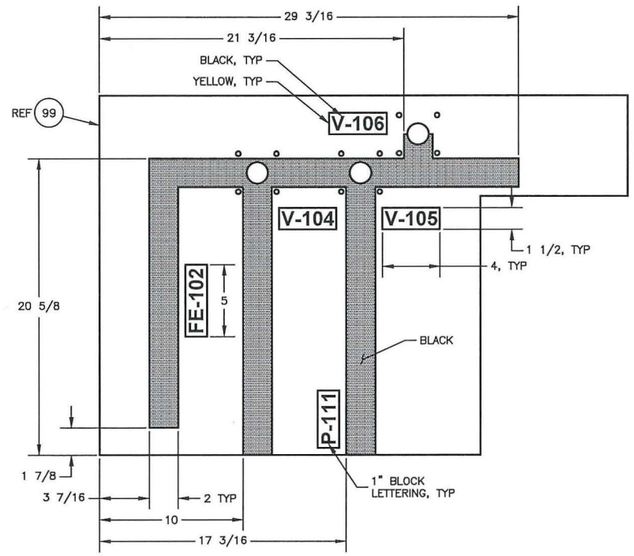

PAINT DETAIL 1
SCALE: 1/4

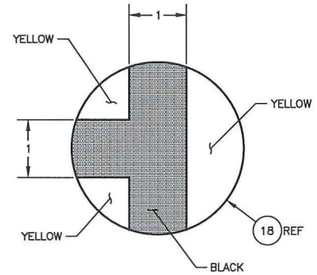

PAINT DETAIL 2
SCALE: 1/1

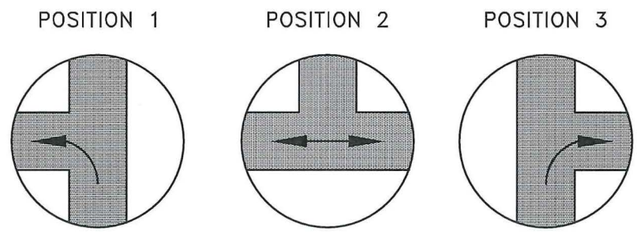

POSITIONS FOR DETAIL 2

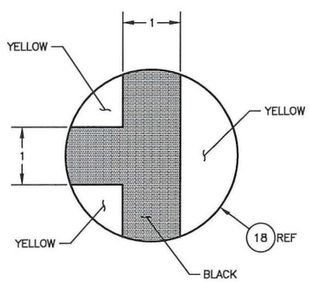

PAINT DETAIL 3
SCALE: 1/1

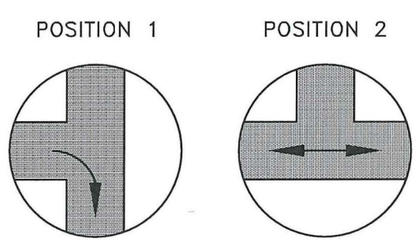

POSITIONS FOR DETAIL 3

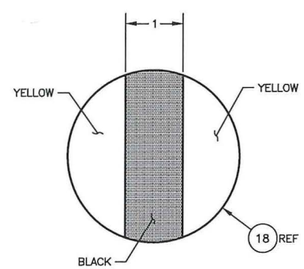

PAINT DETAIL 4
SCALE: 1/1

PARTS LIST/MATERIAL LIST

QTY -090	QTY -080	QTY -070	QTY -060	QTY -050	QTY -040	QTY -030	QTY -020	QTY -010	PARTS / DASH NUMBER	NOMENCLATURE/DESCRIPTION	MATERIAL/REFERENCE	SHEET	ITEM NO
								1	E-100-L-A	END SEAL, LIGHTED	PENTAIR/RAYCHEM	2	86
								AR	5BTV2-CT	HEATING CABLE	PENTAIR/RAYCHEM	2	87
					2				B22-SS	CHANNEL, 6" L	B-LINE	6	88
							1		B2400-1/2	PIPE CLAMP, 1/2" PIPE OD	B-LINE	5	89
							1		B2400-3/4	PIPE CLAMP, 3/4" PIPE OD	B-LINE	5	90
								AR		AP ARMAFLEX, 1" THK	ARMACELL	2	91
							1		(CGB293 SG)	CGB, 3/4" NPT, .250-.375" ORIFICE	(EATON/ CROUSE-HINDS)	4	92
							2		(CGB294 SG)	CGB, 3/4" NPT, .375-.500" ORIFICE	(EATON/ CROUSE-HINDS)	5	93
							3		1501540	CONNECTOR, MALE, 4 PIN, M12, UL LISTED, SACC-M12MS-4CON-PG 9-SH	PHOENIX CONTACT	4,5	94
							3		1515170	CONNECTOR, FEMALE, 4 PIN, M12, UL LISTED, SACC-M12FS-4CON-PG 9-SH	PHOENIX CONTACT	4,5	95
							1		RSR-305-S	CGB, 1" NPT, .250-.375 ORIFICE, SPLIT GROMMET	REMKE	4	96
							2		RSF-3001	CGB, 1" NPT, .660-.240 ORFICE	REMKE	4	97
							1		0313-195	O-RING, EPDM	LUTZ	4	98
					1					FRONT PLATE, 1/4" THK	ASTM A240, TP 304/304L	6,7	99
					1					RIGHT PLATE, 1/4" THK	ASTM A240, TP 304/304L	6,7	100
					1					BACK PLATE, 1/4" THK	ASTM A240, TP 304/304L	6,7	101
					1					BOTTOM PLATE, 1/4"	ASTM A240, TP 304/304L	6,7	102
							4		1/4 X 1 HHCS	HEX HEAD CAP SCREW, 1/4-20UNC-2A, 1" L	B-LINE	5	103
							4		N224	SPRING NUT, 1/4"	B-LINE	5	104
							3		(92311A137)	SET SCREW, 1/4-20UNC-2A, 1/2" L	(MCMASTER)	5	105
							4			NUT, 3/8-16UNC-2B	ASTM A194, GR 2H	3	106
					1					HOSE TRAY SIDE PLATE, 1/4" THK	ASTM A240, TP 304/304L	6,7	107
					1					HOSE TRAY BOTTOM PLATE, 1/4" THK	ASTM A240, TP 304/304L	6,7	108
							1			HOSE TRAY LID, PLATE, 1/4" THK	ASTM A240, TP 304/304L	3,8	109
							1		BLUE-GARD STYLE 3700	HOSE TRAY GASKET, 1/8" THK	GARLOCK	3,8	110
													111
								8		BOLT, 5/8-11UNC-2A, 3" L	ASTM A193, GR B7	2	112
								8		NUT, 5/8-11UNC-2B	ASTM A194, GR 2H	2	113
								2	BLUE-GARD 3700	GASKET, 1/8" THK, SIZED FOR 3" FLANGE, RF, CLASS 150	GARLOCK	2	114

REF NUMBER	TITLE
DRAWING/DOCUMENT REFERENCES	
NEXT USED ON	

REV NO	DESCRIPTION	REV BY DATE	DRAFTING CHECKER DATE	ENGINEER DATE	ENGINEERING CHECKER DATE	PROJECT MANAGER DATE
REVISIONS						

	NAME	DATE
DRAWN BY	M BERMUDEZ	4/22/19
DRAFTING CHECKER	JT FOSS	5/1/19
ENGINEER	D CAP	5/2/19
ENGINEERING CHECKER	J HARRINGTON	5/2/19
PROJECT MANAGER	P BODEN	5/1/19

Columbia Energy AND ENVIRONMENTAL SERVICES

DOE TBI SY-101
DELAY TOTE ASSEMBLY

SIZE F | DWG NO CEES-16-604-M-023 | REV 0
SCALE AS SHOWN | SHEET 12 OF

Engineering Drawing

CEES-16-604-M-024

DOE TBT SY-101 Backflush Skid Assembly

GENERAL NOTES: (UNLESS OTHERWISE SPECIFIED)

1. DIMENSIONS ARE IN INCHES.
2. TOLERANCES SHALL BE AS FOLLOWS:
   FRACTIONS = ±1/8
   .X = ±0.1
   .XX = ±0.03
   .XXX = ±0.010
   ANGLES = ±1°
3. REMOVE ALL BURRS AND BREAK SHARP EDGES.
4. ROUTE CONDUIT (ITEM 31) APPROXIMATELY AS SHOWN.
5. LOCATE IDENTIFICATION LABELING AND WEIGHT LABELING IN APPROXIMATE LOCATION AS SHOWN.
   TEXT CONTENTS: CEES-16-604-M-024 XXX LBS DRY
   (XXX = MEASURED DRY WEIGHT)
   TEXT TYPE: BLOCK
   TEXT MATERIAL: ACRYLIC ENAMEL
   TEXT COLORS: BLACK ON YELLOW BACKGROUND
   TEXT SIZE: 1" HIGH CHARACTERS
6. PERFORM HYDROSTATIC PRESSURE TESTING OF PIPING. HYDROSTATIC PRESSURE TEST TO 150 PSIG +10/-0 PSIG PER ASME B31.3-2016 NORMAL FLUID SERVICE. MAINTAIN TEST PRESSURE FOR 10 MINUTES AND VERIFY NO LEAKAGE. BACKFLUSH SKID DESIGN ASSEMBLY PRESSURE 100 PSIG, DESIGN TEMPERATURE 105°F.
7. TIGHTEN ALL FASTENERS SNUG TIGHT.
8. SEAL THREADED PIPE CONNECTIONS WITH LOCTITE 567 THREAD SEALANT AND ACTIVATOR 7649.
9. FIELD LOCATE ø9/16" HOLES AND MATCH DRILL.

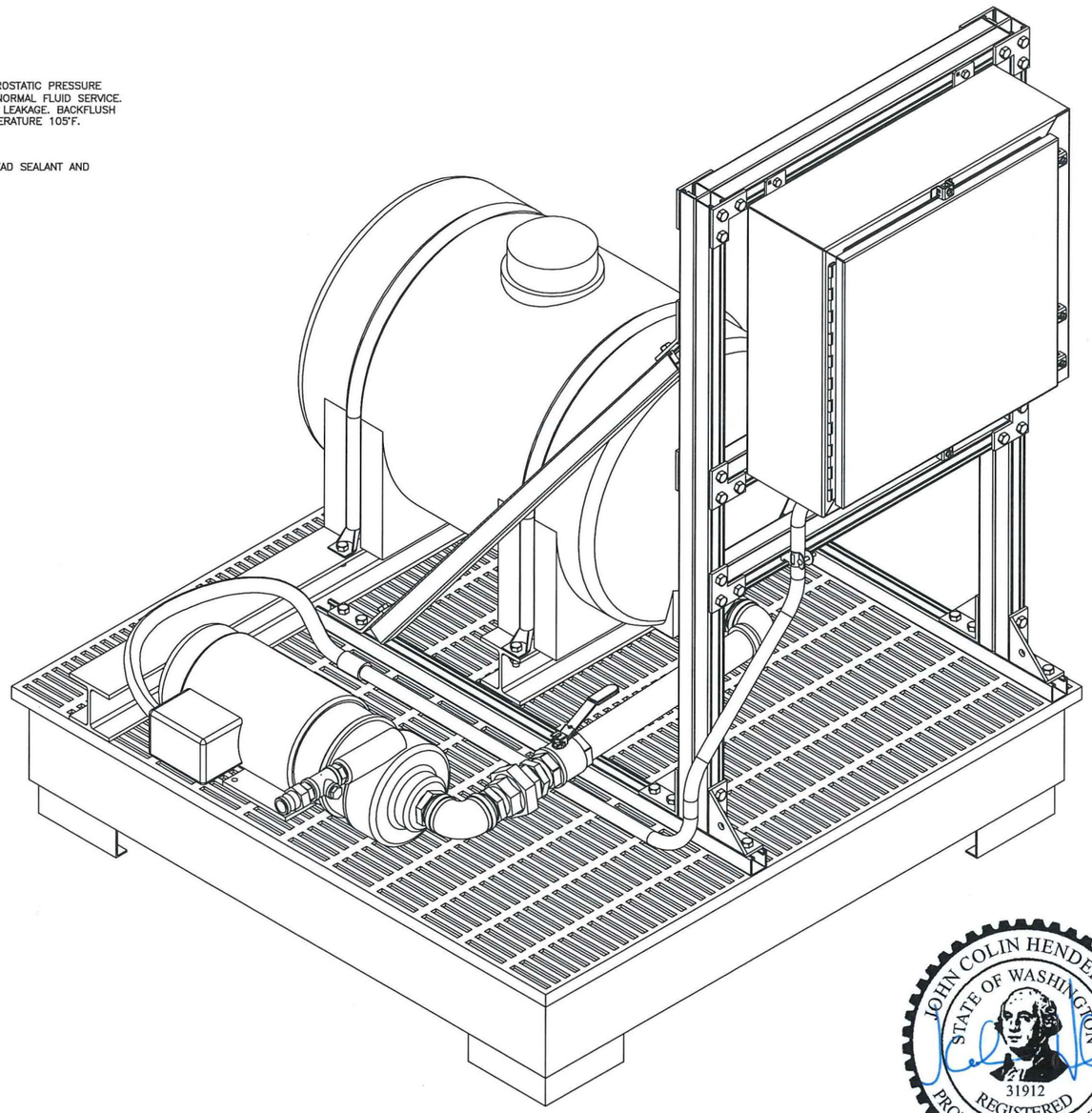

ISO VIEW
SCALE: NTS

PARTS LIST/MATERIAL LIST

QTY -010	PARTS / DASH NUMBER	NOMENCLATURE/DESCRIPTION	MATERIAL/REFERENCE	SHEET	ITEM NO
X	-010	BACKFLUSH SKID ASSEMBLY		2	1
					2
					3
					4
					5
1	41873	TANK, 55 GAL, HORIZONTAL	NORWESCO	2	6
1	9BF1JEC0	PUMP, GOULDS 3656, 5 HP, 2" FNPT INLET X 1" FNPT OUTLET	BECKWITH & KUFFEL	2	7
2	61745	TANK STRAP	NORWESCO	2	8
1	CEES-16-604-E-058	FLUSH SKID CONTROL PANEL	CLOUMBIA ENERGY	2	9
1	PAK241	PIG 4-DRUM STEEL SPILL CONTAINMENT	WWW.NEWPIG.COM	2	10
1	100-A-SS	CAM AND GROOVE, TYPE A ADAPTER, 1" FNPT, SST	DIXON	2	11
1	7108-3-R-R-L	BALL VALVE, 2" FNPT, SST	FLOWTEK	2	12
2		W4X13, LAR	ASTM A992	2	13
1	(3131-8-E-316)	O-RING UNION, 2" FNPT, CLASS 3000, EPDM ORING, SST	(HART)	2	14
4	B844W-ZN	4 HOLE CORNER BRACKET	B-LINE	2	15
AR	B22A-ZN	STRUT, DOUBLE	B-LINE	2	16
AR	B22-ZN	STRUT, SINGLE	B-LINE	2	17
10	B140-ZN	3 HOLE CORNER PLATE	B-LINE	2	18
4		CLOSE NIPPLE, 2" NPT, SCH 40	ASTM A312 TP 304/304L	2	19
2		CLOSE NIPPLE, 1" NPT, SCH 40	ASTM A312 TP 304/304L	2	20
52	N225	SPRING NUT, 1/2"	B-LINE	2	21
52	1/2" X 1 1/4" HHCS	HEX HEAD CAP SCREW, 1/2"	B-LINE	2	22
4	N228	SPRING NUT, 3/8"	B-LINE	2	23
8	3/8" X 1 1/4" HHCS	HEX HEAD CAP SCREW, 3/8"	B-LINE	2	24
1	63683	BULKHEAD, 2" FNPT W/ GASKET	NORWESCO	2	25
16		NUT, 3/8-16UNC-2B	ANY GRADE CS	2	26
16		FLAT WASHER, 3/8"	ANY GRADE CS	2	27
12	42114	J-BOLT, 3/8-16UNC-2A, 3 1/4"L, ZP, W/ NUT	FASTENAL	2	28
12	BXGG1A	G-CLIP 1" GG1A CLAMP CARBON STEEL GALVANIZED	BROWN CAMPBELL COMPANY	2	29
2	(ST 2)	MYERS HUB, 3/4"	(EATON/ CROUSE-HINDS)	2	30
AR	(55-08-27-03)	CONDUIT, LIQUID TIGHT FLEXIBLE METALLIC, UL LISTED, 3/4"	(SOUTHWIRE)	2	31
AR		CONDUIT, RMC, 3/4"	COMMERCIAL	2	32
1		CONDUIT COUPLING, RMC, 3/4"	COMMERCIAL	2	33
1	(LTK75)	CONDUIT CONNECTOR, LIQUID-TIGHT METALLIC FLEX, UL LISTED, 3/4"	(EATON/ CROUSE-HINDS)	2	34
2		ELBOW, 90°, 2", CLASS 3000	ASTM A182 GR F304	2	35
AR		PIPE, 2", SCH 40, TBE	ASTM A312 TP 304/304L	2	36
2	B247	4 HOLE ANGLE BRACKET 37.5°	B-LINE	2	37
2	B249	4 HOLE ANGLE BRACKET 52.5°	B-LINE	2	38
1		REDUCING TEE, THREADED, 1" X 1" X 1/2" CLASS 3000	ASTM A182 GR F304	2	39
1		PIPE PLUG, 1/2" MNPT CLASS 3000	ASTM A182 GR F304	2	40
1	E-100-L-A	END SEAL, LIGHTED	PENTAIR/RAYCHEM	3	41
					42
AR	5BTV2-CT	HEATING CABLE	PENTAIR/RAYCHEM	3	43
AR		AP ARMAFLEX, 1" THK	ARMACELL	3	44
1	(B2209PAZN)	STRUT CLAMP, 3/4"	(B-LINE)	2	45
AR	AT-180	ALUMINUM TAPE, 2 1/2"	PENTAIR/RAYCHEM	3	46
1	(K2C23B1)	MECHANICAL GROUND CONNECTOR, #10-1 AWG, UL LISTED	(BURNDY)	2	47

JOHN COLIN HENDERSON
STATE OF WASHINGTON
31912
REGISTERED
PROFESSIONAL ENGINEER
5/7/19

THIS DESIGN DEVELOPED FOR USE BY THE US DEPARTMENT OF ENERGY UNDER CONTRACT NO. DE-EM0004216.

	NAME	DATE
DRAWN BY	PM MCELROY	3/12/19
DRAWING CHECKER	JT FOSS	3/12/19
ENGINEER	D CAP	3/13/19
ENGINEERING CHECKER	J CAMPBELL	3/13/19
PROJECT MANAGER	P BOGEN	3/13/19

Columbia Energy AND ENVIRONMENTAL SERVICES

DOE TBI SY-101
BACKFLUSH SKID ASSEMBLY

SIZE F | DWG. NO CEES-16-604-M-024 | REV 0
SCALE AS SHOWN | SHEET 1 OF 3

REF NUMBER	TITLE
CEES-16-604-E-058	FLUSH SKID CONTROL PANEL

DRAWING/DOCUMENT REFERENCES
NEXT USED ON CEES-16-604-A-002

REV NO	DESCRIPTION	REV BY DATE	DRAWING CHECKER DATE	ENGINEER DATE	ENGINEERING CHECKER DATE	PROJECT MANAGER DATE

REVISIONS

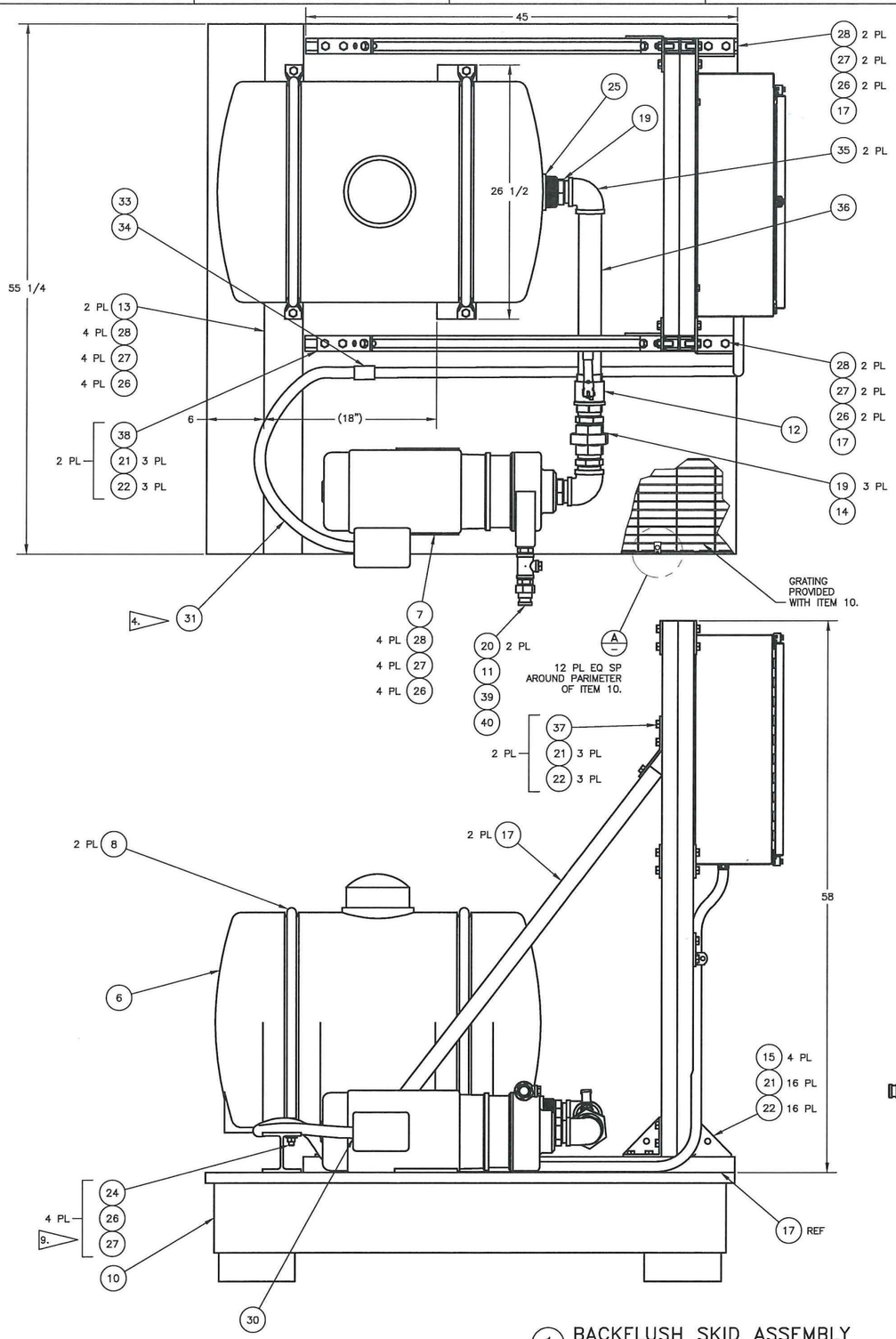

1 BACKFLUSH SKID ASSEMBLY
SCALE: 3/16

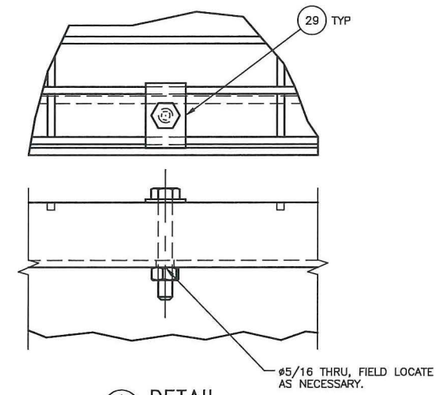

A DETAIL
SCALE: 1/1
12 PLACES

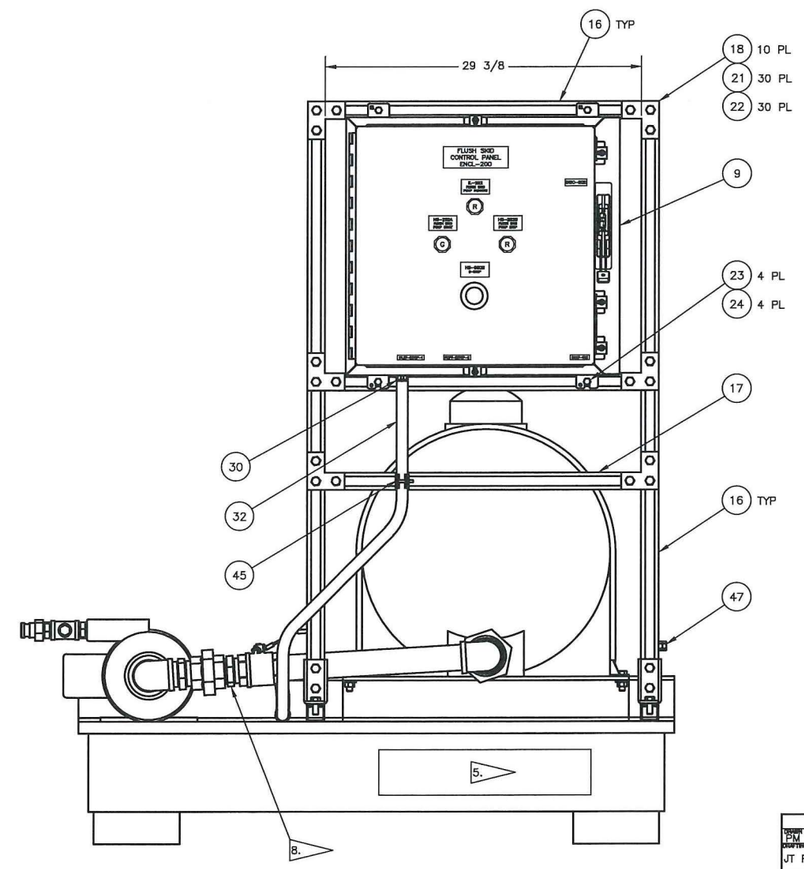

JOHN COLIN HENDERSON
STATE OF WASHINGTON
31912
REGISTERED
PROFESSIONAL ENGINEER
3/7/19

REF NUMBER	TITLE
DRAWING/DOCUMENT REFERENCES	
NEXT USED ON	

REV NO	DESCRIPTION	REV BY DATE	DRAFTING CHECKER DATE	ENGINEER DATE	ENGINEERING CHECKER DATE	PROJECT MANAGER DATE
REVISIONS						

	NAME	DATE
DRAWN BY	PN MCELROY	3/12/19
DRAFTING CHECKER	JT FOSS	3/12/19
ENGINEER	D CAP	3/13/19
ENGINEERING CHECKER	J CAMPBELL	3/13/19
PROJECT MANAGER	P BOGEN	3/13/19

Columbia Energy
AND ENVIRONMENTAL SERVICES

DOE TBI SY-101
BACKFLUSH SKID ASSEMBLY

SIZE F | DWG NO CEES-16-604-M-024 | REV 0
SCALE AS SHOWN | SHEET 2 OF 3

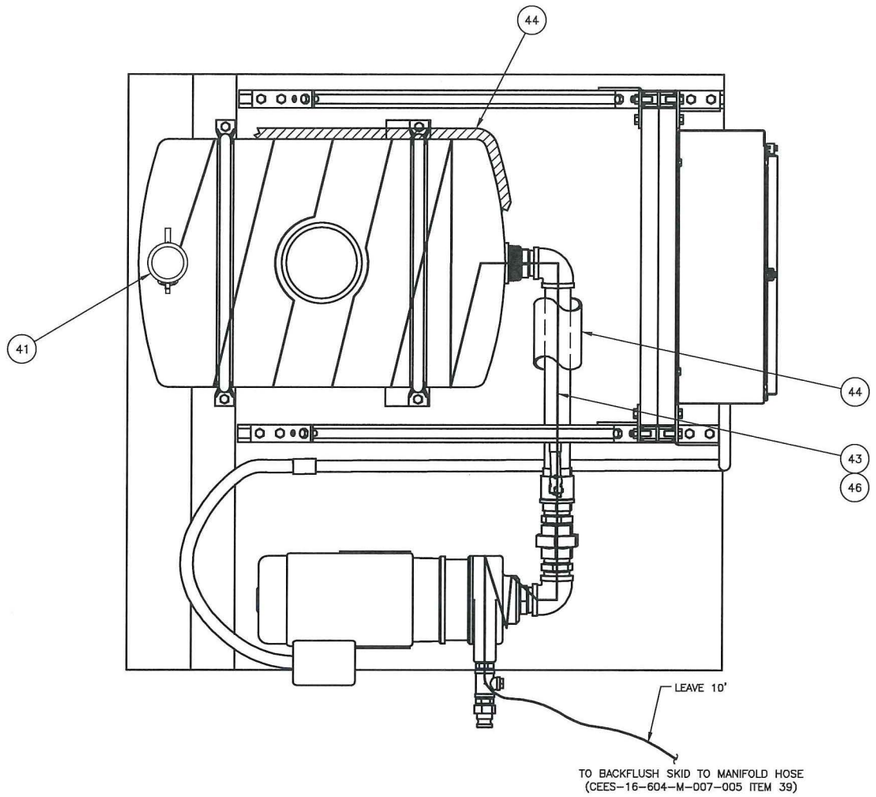

HEAT TRACE
SCALE: 3/16

JOHN COLIN HENDERSON
STATE OF WASHINGTON
31912
REGISTERED
PROFESSIONAL ENGINEER
5/11/19

REF NUMBER	TITLE	REV NO	DESCRIPTION	REV BY DATE	DRAFTING CHECKER DATE	ENGINEER DATE	ENGINEERING CHECKER DATE	PROJECT MANAGER DATE
DRAWING/DOCUMENT REFERENCES		REVISIONS						
NEXT USED ON								

	NAME	DATE
DRAWN BY	PM MCELROY	3/12/19
DRAFTING CHECKER	JT FOSS	3/12/19
ENGINEER	D CAP	3/13/19
ENGINEERING CHECKER	J CAMPBELL	3/13/19
PROJECT MANAGER	P BOGEN	3/13/19

Columbia Energy
AND ENVIRONMENTAL SERVICES

DOE TBI SY-101
BACKFLUSH SKID ASSEMBLY

SIZE F | DWG NO CEES-16-604-M-024 | REV 0
SCALE AS SHOWN | SHEET 3 OF 3

Engineering Drawing

CEES-16-604-M-026

DOE TEI SY-101 IX Column Vessel

GENERAL NOTES: (UNLESS OTHERWISE SPECIFIED)

1. DIMENSIONS ARE IN INCHES.
2. TOLERANCES SHALL BE AS FOLLOWS:
   FRACTIONS = ±1/8
   .X = ±0.1
   .XX = ±0.03
   .XXX = ±0.010
   ANGLES = ±1°
3. REMOVE ALL BURRS AND BREAK SHARP EDGES.
4. WELD AND INSPECT STAINLESS STEEL PIPING COMPONENTS PER ASME B31.3–2016 NORMAL FLUID SERVICE AND STRUCTURAL COMPONENTS PER AWS D1.6–2007 AS APPLICABLE. ADDITIONAL WELD INSPECTIONS AS NOTED. WELD PROCEDURES AND QUALIFICATIONS PER ASME SECTION IX ARE ACCEPTABLE. PERFORM HYDROSTATIC PRESSURE TESTING OF VESSEL INTERNAL PIPING (ITEMS 2 AND 3) PRIOR TO THE INSTALLATION OF NOZZLES (ITEMS 4) TO THE EXTENT POSSIBLE. TESTING WITH NOZZLES IN PLACE CANNOT BE PERFORMED DUE TO NOZZLE OPENINGS. HYDROSTATIC PRESSURE TEST TO 300 PSIG +10/–0 PSIG PER ASME B31.3–2016 NORMAL FLUID SERVICE. MAINTAIN TEST PRESSURE FOR 10 MINUTES AND VERIFY NO LEAKAGE FROM PIPE AND PERMANENT WELD JOINTS. DESIGN PRESSURE 200 PSIG, DESIGN TEMPERATURE 105°F.
5. PRIOR TO ASSEMBLY, ALL COMPONENTS SHALL BE CLEANED OF CUTTING OILS, MARKING DYES, WELD FLUX, SCALE, GRIME AND ALL OTHER FOREIGN MATERIALS. FINISH ASSEMBLY AND ALL INTERIOR SURFACES SHALL BE CLEANED AND VISUALLY OR WIPE TEST INSPECTED IN ACCORDANCE WITH ASTM A380.
6. THE PRESSURE VESSEL SHALL COMPLY WITH ASME BPVC SECTION VIII–2017, DIVISION 1, NO SERVICE RESTRICTIONS AS DEFINED IN PART UW–2. WELDING PROCEDURES AND PERSONNEL SHALL BE QUALIFIED IN ACCORDANCE WITH ASME BPVC SECTION IX–2017. VESSEL WELDS SHALL BE VT, PT, AND RT INSPECTED IN ACCORDANCE WITH ASME BPVC SECTION VIII–2017, DIVISION 1. VESSEL BUTT WELDS SHALL 100% RT INSPECTED WHERE POSSIBLE; OTHERWISE ROOT AND FINAL WELD PASS SHALL BE PT INSPECTED. UT INSPECTION MAY BE PERFORMED IN LIEU OF RT INSPECTION FOR THE PURPOSE OF ACCESSIBILITY.
7. PRESSURE VESSEL SHALL BE DESIGNED, FABRICATED, INSPECTED, AND TESTED IN ACCORDANCE WITH ASME BPVC SECTION VIII, 2017, DIVISION 1, PART UW. DESIGN PRESSURE IS FULL VACUUM TO 200 PSIG AT DESIGN TEMPERATURE OF 105 DEGREES FAHRENHEIT. VESSEL SHALL BE HYDROSTATIC PRESSURE TESTED TO 300 PSIG, +10/–0 PSIG IN ACCORDANCE WITH ASME BPVC, SECTION VIII–2017, DIVISION 1, UG–99.
8. VESSEL SHALL BE CODE STAMPED IN ACCORDANCE WITH ASME BPVC SECTION VIII, DIVISION 1, PARTS UG–115 THROUGH UG–119. THE VESSEL SHALL HAVE A STANDARD ASME NAMEPLATE LOCATED IN ACCORDANCE WITH ASME BPVC SECTION VIII–2017, DIVISION 1. THE NAME PLATE SHALL BE 11 GA. 304L SST ATTACHED BY TACK WELDING. PERFORM DYE PENETRANT TEST OF TACK WELDS. LOCATE NAME PLATE APPROXIMATELY AS SHOWN ON ISOMETRIC VIEW.
9. CERTIFIED MATERIAL TEST REPORT (CMTR) REQUIRED FOR ALL STEEL.
10. FABRICATION SEQUENCE SHALL BE DETERMINED BY FABRICATOR. CARE SHALL BE TAKEN TO ENSURE ALL INSPECTIONS ARE PERFORMED PRIOR TO MAKING OF REQUIRED INSPECTIONS INACCESSIBLE.
11. ESTIMATED WEIGHT FOR IX COLUMN VESSEL IS 200 LBS EMPTY.
12. ASSEMBLY FABRICATED BY JOHNSON SCREENS AND COMPRISED OF ITEMS NOTED IN PARTS LIST BELOW.
13. SEAL PIPE THREADS WITH LOCTITE 567.
14. SEAL WELD NPT THREADED JOINTS PER ASME B31.3 PRIOR TO HYDRO TEST. VT ONLY PER ASME B31.3. CONSUME ALL THREADS WITH WELD. ENSURE ITEM 23 LATCHING ARMS ARE ORIENTED AS SHOWN FOR BOTH TOP AND BOTTOM BEFORE WELDING.

NOZZLE SCHEDULE

IDENTIFIER	SIZE	SCHEDULE	USE
A	1"	80	INLET
B	1"	80	OUTLET
C	3/4"	CL3000	FILL PORT

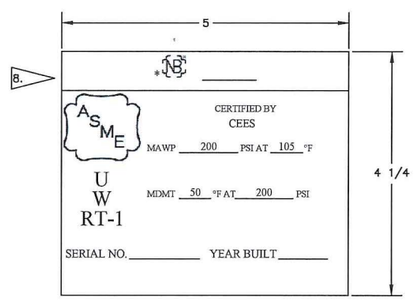

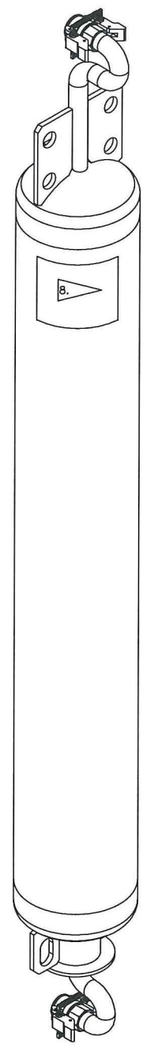

ISOMETRIC VIEW
SCALE: NTS

PARTS LIST/MATERIAL LIST

QTY –050	QTY –040	QTY –030	QTY –020	QTY –010	PARTS / DASH NUMBER	NOMENCLATURE/DESCRIPTION	MATERIAL/REFERENCE	SHEET	ITEM NO
				X	–010	IX COLUMN VESSEL		2	1
			X	1	–020	UPPER CAP WELDMENT		2	2
		X		1	–030	LOWER CAP WELDMENT		3	3
12.	X	4			–040	LOWER NOZZLE		3,4	4
12. X			4		–050	UPPER NOZZLE		2,4	5
									6
									7
									8
			1			UPPER CAP, 8" PIPE CAP, BW, SCH 40	ASME SA403, GR 304L	2,4	9
		1				LOWER CAP, 8" PIPE CAP, BW, SCH 40	ASME SA403, GR 304L	3,4	10
AR						PIPE, ø1 1/2" SCH 40, ASTM A312, GR TP 304L	JOHNSON SCREENS	4	11
1						WEDGE WIRE WRAPPED NOZZLE, STANDARD CONSTRUCTION, 2 1/4" OD X 1" SCREEN, 0.002 IN SLOT, 3/16" THK WELD RING, 3/16" THK TRANSITION PLATE, STAINLESS, TP 304L	JOHNSON SCREENS	4	12
			1			THREADED COUPLING, 3/4" CL 3000	ASME SA182, GR F304L	2	13
		1				LOWER CHAMBER, PIPE, ø3" SCH 40, 3" LONG	ASTM A312, TP 304L	3,4	14
		AR	AR			PIPE, ø1" SCH 80XS	ASME SA312, TP 304L	3	15
	1					PIPE, ø3/4" SCH 40, ASTM A312, TP 304L	JOHNSON SCREENS	4	16
AR	AR					PLATE, CLOSURE, 1/8" THK, ASTM A240, TP 304L	JOHNSON SCREENS	4	17
	1					WEDGE WIRE WRAPPED NOZZLE, STANDARD CONSTRUCTION, 1 7/16" OD X 1" SCREEN, 0.002 IN SLOT, 3/16" THK WELD RING, 3/16" THK TRANSITION PLATE, STAINLESS, TP 304L	JOHNSON SCREENS	4	18
		1	1			BOTTOM CHAMBER PLATE, 1/4" THK	ASTM A240, TP 304L	3,4	19
			1			UPPER CHAMBER, PIPE, ø3" SCH 40, 3" LONG	ASTM A312, TP 304L	2,4	20
		3	3			ELBOW, 90°, 1", LR, BW, SCH 80 SMLS	ASME, SA403, GR WP304L	3	21
		2	2			SPRING BAR, 1" THK	ASTM A240, TP 304L	2,3	22
		1	1		100–D–SS	CAM AND GROOVE TYPE D COUPLER, 1" FNPT, SST	DIXON	3	23
				1		PIPE PLUG, ø3/4", CLASS 3000	ASME SA182 GR F304L	2	24
				1		PIPE, ø8", SCH 40, SMLS, 56 3/4" LONG	ASME SA312, TP 304L	2	25
			2			TOP REMOVAL GUSSET, 3/8" THK	ASTM A240, TP 304L	2,4	26
		1	1			TOP CHAMBER PLATE, 1/4" THK	ASTM A240, TP 304L	3,4	27
		AR				PIPE, ø3", SCH 40	ASME SA312, TP 304L	3	28
		1				FOOT PLATE, 1/4" THK	ASTM A240, TP 304L	3,4	29
		2	2		98381A443	DOWEL PIN, ø3/32 X 1"L	MCMASTER CARR	2,3	30
		2	2		98381A490	DOWEL PIN, ø5/32 X 1"L	MCMASTER CARR	2,3	31
		4	4		94846A029	THIN HEX NUT, 1/4–20UNC–2B	MCMASTER CARR	2,3	32
		4	4		96376A330	SWIVELING ANCHOR STUD,	MCMASTER CARR	2,3	33
		2	2		9065K263	EXTENSION SPRING, 2.75"L, .36" OD, .045" WIRE DIA.	MCMASTER CARR	2,3	34
		2				BOTTOM REMOVAL GUSSET, 3/8" THK	ASTM A240, TP 304L	3	35

JOHN COLIN HENDERSON
STATE OF WASHINGTON
31912
REGISTERED
PROFESSIONAL ENGINEER
5/7/19

REF NUMBER	TITLE
DRAWING/DOCUMENT REFERENCES	
NEXT USED ON	CEES–16–604–M–006

REV NO	DESCRIPTION	REV BY DATE	DRAFTING CHECKER DATE	ENGINEER DATE	ENGINEERING CHECKER DATE	PROJECT MANAGER DATE
REVISIONS						

THIS DESIGN DEVELOPED FOR USE BY THE US DEPARTMENT OF ENERGY UNDER CONTRACT NO. DE–EM0004216.

	NAME	DATE
DRAWN BY	M BERMUDEZ	3/12/19
CHF OR MANAGER	P HALE	3/12/19
DRAFTING CHECKER	JT FOSS	3/12/19
ENGINEER	J CAMPBELL	3/12/19
ENGINEERING CHECKER	C HENDERSON	3/12/19
PROJECT MANAGER	P BOGEN	3/13/19

Columbia Energy
AND ENVIRONMENTAL SERVICES

DOE TBI SY–101
IX COLUMN VESSEL

SIZE F | DWG NO CEES–16–604–M–026 | REV 0
SCALE AS SHOWN | SHEET 1 OF 4

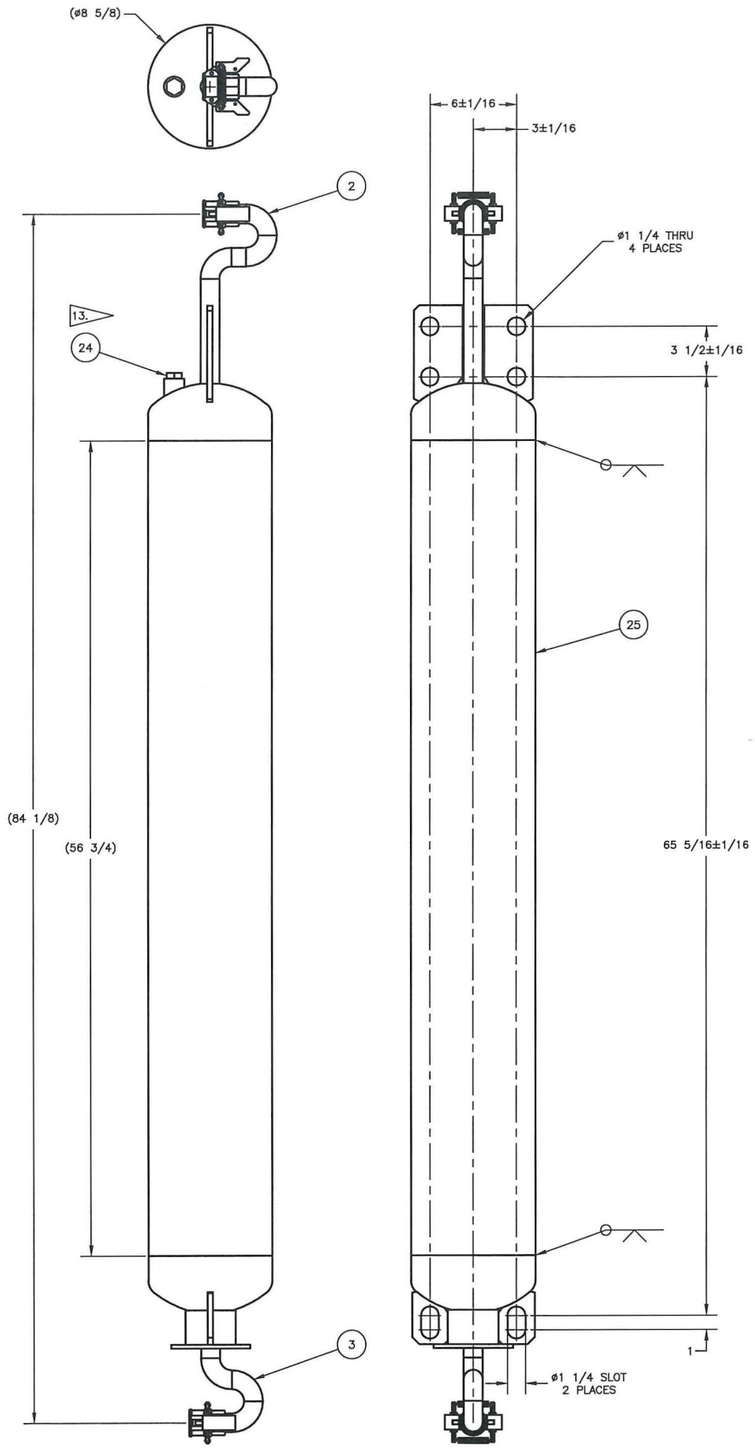

1 IX COLUMN VESSEL
SCALE: 1/4

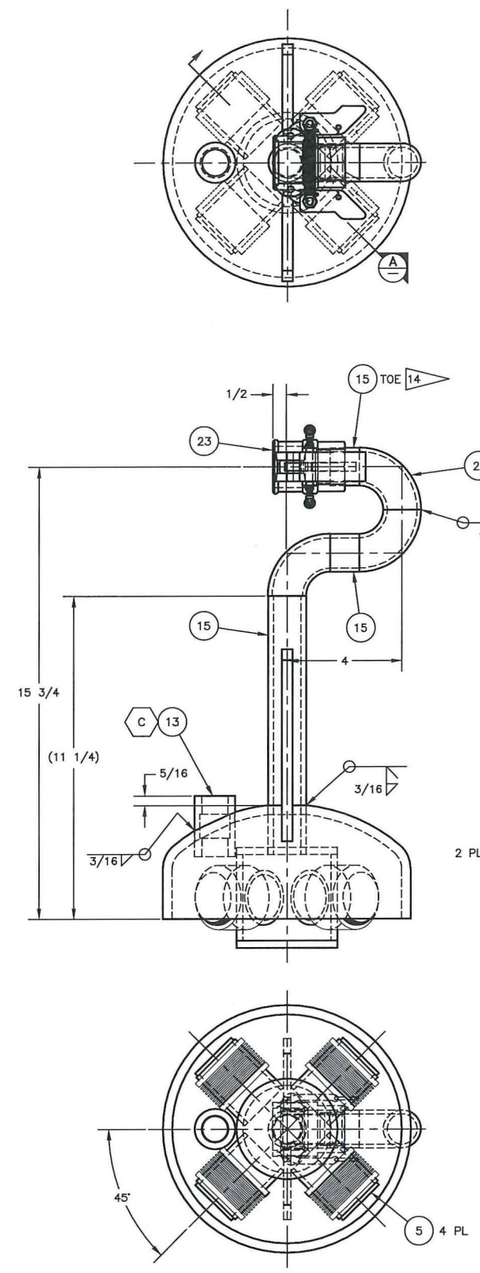

2 UPPER CAP WELDMENT
SCALE: 1/2

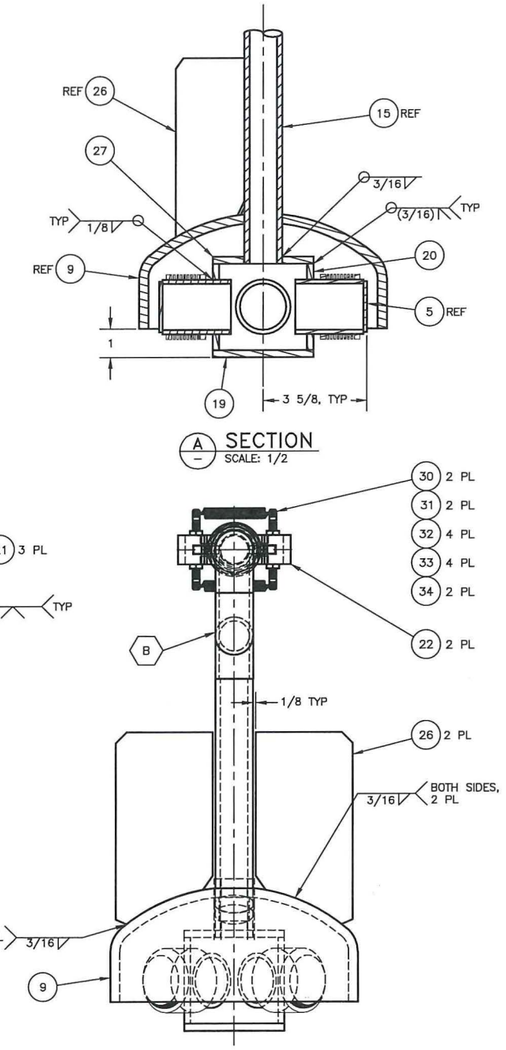

A SECTION
SCALE: 1/2

REF NUMBER	TITLE
DRAWING/DOCUMENT REFERENCES	
NEXT USED ON	

REV NO	DESCRIPTION	REV BY DATE	DRAFTING CHECKER DATE	ENGINEER DATE	ENGINEERING CHECKER DATE	PROJECT MANAGER DATE
REVISIONS						

	NAME	DATE
DRAWN BY	M BERMUDEZ	3/12/19
CAP OR MANAGER	P HALE	3/12/19
DRAFTING CHECKER	JT FOSS	3/12/19
ENGINEER	J CAMPBELL	3/12/19
ENGINEERING CHECKER	C HENSERSON	3/12/19
PROJECT MANAGER	P BOGEN	3/13/19

Columbia Energy
AND ENVIRONMENTAL SERVICES

DOE TBI SY-101
IX COLUMN VESSEL

SIZE F | DWG NO CEES-16-604-M-026 | REV 0
SCALE AS SHOWN | SHEET 2 OF

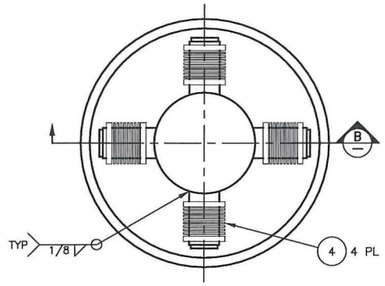

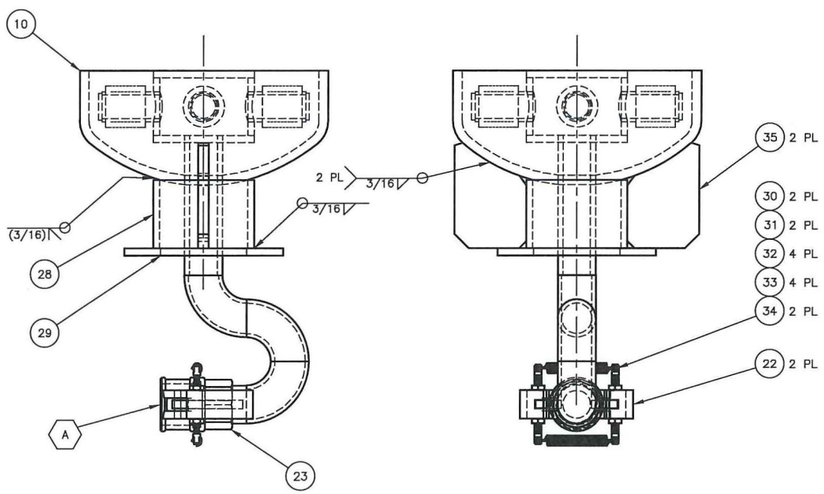

3 LOWER CAP WELDMENT
SCALE: 1/2
HIDDEN LINES REMOVED FOR CLARITY.

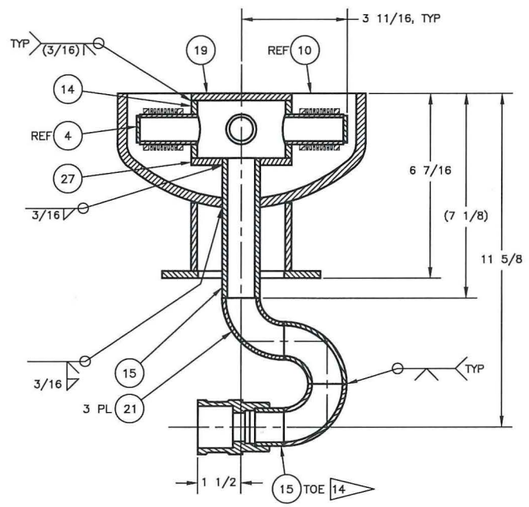

B SECTION
SCALE: 1/2

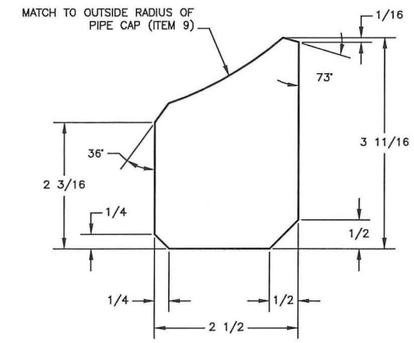

35 BOTTOM REMOVAL GUSSET
SCALE: 1/1

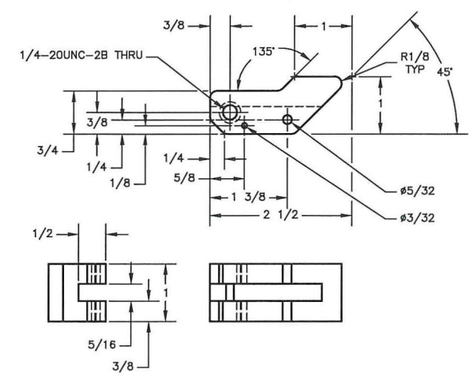

22 SPRING BAR
SCALE: 1/1

JOHN COLIN HENDERSON
STATE OF WASHINGTON
31912
REGISTERED
PROFESSIONAL ENGINEER
5/1/19

NAME	DATE
DRAWN BY: M BERMUDEZ	3/12/19
CHIEF OF DRAFTING: P HALE	3/12/19
DRAFTING CHECKER: JT FOSS	3/12/19
ENGINEER: J CAMPBELL	3/12/19
ENGINEERING CHECKER: C HENSERSON	3/12/19
PROJECT MANAGER: P BOGEN	3/13/19

Columbia Energy AND ENVIRONMENTAL SERVICES

DOE TBI SY-101
IX COLUMN VESSEL

SIZE F | DWG. NO CEES-16-604-M-026 | REV 0
SCALE AS SHOWN | SHEET 3 OF

REF NUMBER	TITLE
DRAWING/DOCUMENT REFERENCES	
NEXT USED ON	

REV NO	DESCRIPTION	REV BY DATE	DRAFTING CHECKER DATE	ENGINEER DATE	ENGINEERING CHECKER DATE	PROJECT MANAGER DATE
REVISIONS						

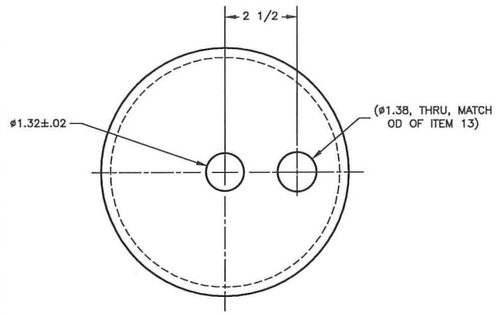

9 UPPER WELDED CAP
SCALE: 1/2

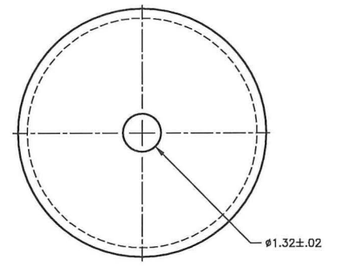

10 LOWER WELDED CAP
SCALE: 1/2

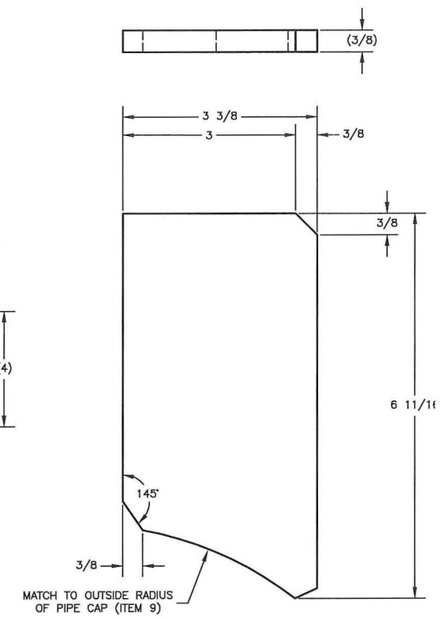

26 TOP REMOVAL GUSSET
SCALE: 1/1

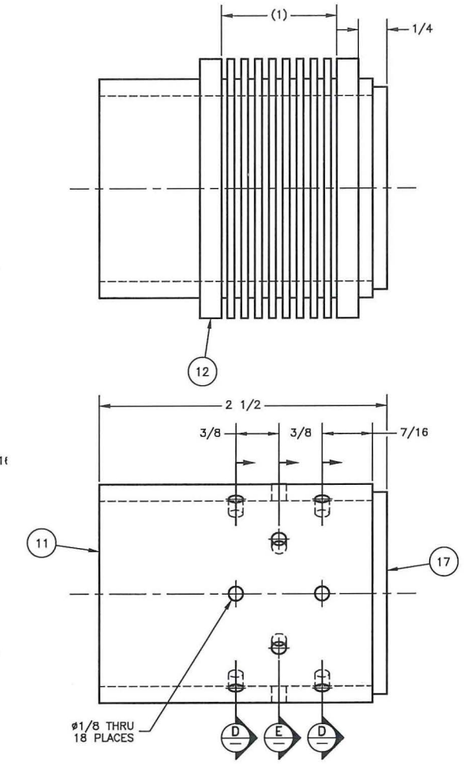

5 UPPER NOZZLE
SCALE: 2/1
WEDGE WIRE REMOVED FROM BOTTOM VIEW FOR CLARITY
NOTE: SEAL BETWEEN ITEM 18 AND PIPE AT BOTH ENDS WITH WELD RING BY JOHNSON SCREENS.

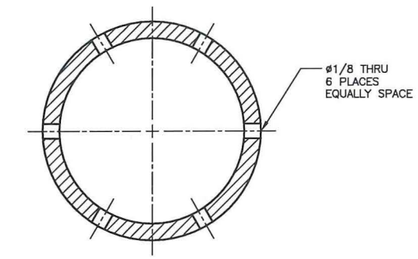

D SECTION
SCALE: 2/1
2 PL

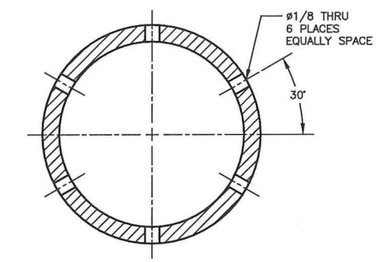

E SECTION
SCALE: 2/1

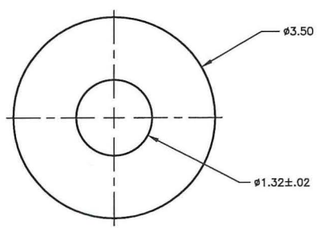

27 TOP CHAMBER PLATE
SCALE: 1/1

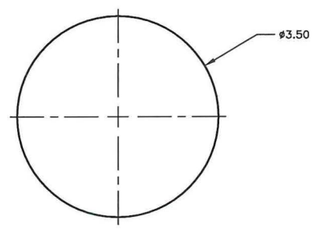

19 BOTTOM CHAMBER PLATE
SCALE: 1/1

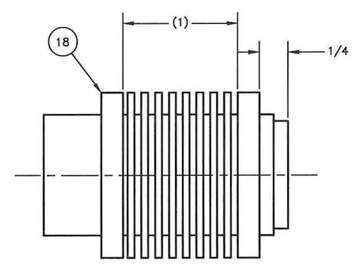

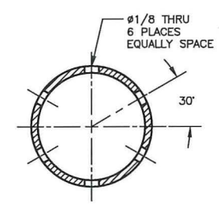

C SECTION
SCALE: 2/1

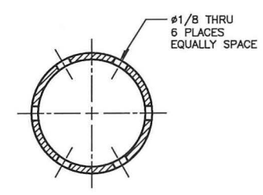

B SECTION
SCALE: 2/1
2 PL

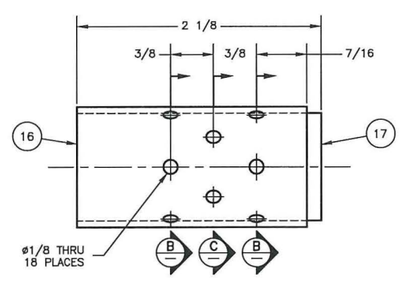

4 LOWER NOZZLE
SCALE: 2/1
WEDGE WIRE REMOVED FROM BOTTOM VIEW FOR CLARITY
NOTE: SEAL BETWEEN ITEM 18 AND PIPE AT BOTH ENDS WITH WELD RING BY JOHNSON SCREENS.

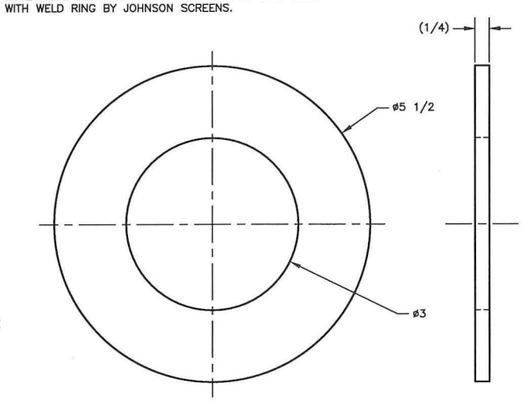

29 FOOT PLATE
SCALE: 1/1

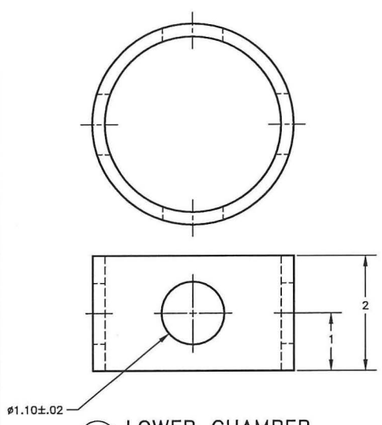

14 LOWER CHAMBER
SCALE: 1/1

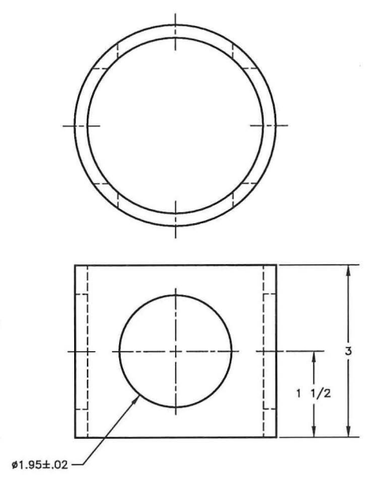

20 UPPER CHAMBER
SCALE: 1/1

JOHN COLIN HENDERSON
STATE OF WASHINGTON
31912
REGISTERED
PROFESSIONAL ENGINEER
5/7/19

NAME	DATE
DRAWN BY M BERMUDEZ	3/12/19
CHIEF OF MANAGER P HALE	3/12/19
DRAFTING CHECKER JT FOSS	3/12/19
DESIGNER J CAMPBELL	3/12/19
ENGINEERING CHECKER C HENDERSON	3/12/19
PROJECT MANAGER P BOGEN	3/13/19

Columbia Energy AND ENVIRONMENTAL SERVICES

DOE TBI SY-101
IX COLUMN VESSEL

SIZE F | DWG. NO CEES-16-604-M-026 | REV 0
SCALE AS SHOWN | SHEET 4 OF

REF NUMBER	TITLE
DRAWING/DOCUMENT REFERENCES	
NEXT USED ON	

REV NO	DESCRIPTION	REV BY DATE	DRAFTING CHECKER DATE	ENGINEER DATE	ENGINEERING CHECKER DATE	PROJECT MANAGER DATE
REVISIONS						

Engineering Drawing

CEES-16-604-M-028

DOE TBI SY-101 Filter Assembly

GENERAL NOTES: (UNLESS OTHERWISE SPECIFIED)

1. DIMENSIONS ARE IN INCHES.
2. TOLERANCES SHALL BE AS FOLLOWS:
   FRACTIONS = ±1/8
   .X = ±0.1
   .XX = ±0.03
   .XXX = ±0.010
   ANGLES = ±1°
3. REMOVE ALL BURRS AND BREAK SHARP EDGES.
4. WELD AND INSPECT STAINLESS STEEL COMPONENTS PER ASME B31.3 NORMAL FLUID SERVICE. WELD PROCEDURES AND QUALIFICATIONS PER ASME SECTION IX ARE ACCEPTABLE. PERFORM HYDROSTATIC PRESSURE TESTING OF FILTER ASSEMBLY. HYDROSTATIC PRESSURE TEST TO 300 PSIG +10/−0 PSIG PER ASME B31.3−2016 NORMAL FLUID SERVICE. MAINTAIN TEST PRESSURE FOR 10 MINUTES AND VERIFY NO LEAKAGE. DESIGN PRESSURE 200 PSIG, DESIGN TEMPERATURE 105°F.

5 THREADED END OF FILTER ELEMENT (ITEM 13) INTO THREADED HOLE ON BOTTOM SPACER PLATE (ITEM 7) 3 PLACES.

PARTS LIST/MATERIAL LIST

QTY −010	PARTS / DASH NUMBER	NOMENCLATURE/DESCRIPTION	MATERIAL/REFERENCE	SHEET	ITEM NO
X	−010	FILTER ASSEMBLY		1	1
					2
					3
					4
					5
1		TOP SPACER PLATE, 5/8" THK	ASTM A240, 304/304L	1	6
1		BOTTOM SPACER PLATE, 1/2" THK	ASTM A240, 304/304L	1	7
1		PIPE, DIA 1", SCH 40, SMLS	ASTM A312, TP 304L	1	8
1		PIPE CAP, 6", BW, SCH 40	ASTM A403, GR WP304L−S	1	9
AR		PIPE, DIA 6", SCH 40, SMLS, LAR	ASTM A312, TP 304L	1	10
1		REDUCER, CONCENTRIC, 6" X 2 1/2", SCH 40, BW	ASTM A403, GR WP304L−S	1	11
1		REDUCER, CONCENTRIC, 2 1/2" X 1", SCH 40, BW	ASTM A403, GR WP304L−S	1	12
3	F3035	FILTER ELEMENT, ø2.6" X 20" LONG, 316 SST MESH FILTER	PORVAIR	1	13
2		FLANGE, ø1", WN, RF, CLASS 150	ASTM A182, GR F304L	1	14

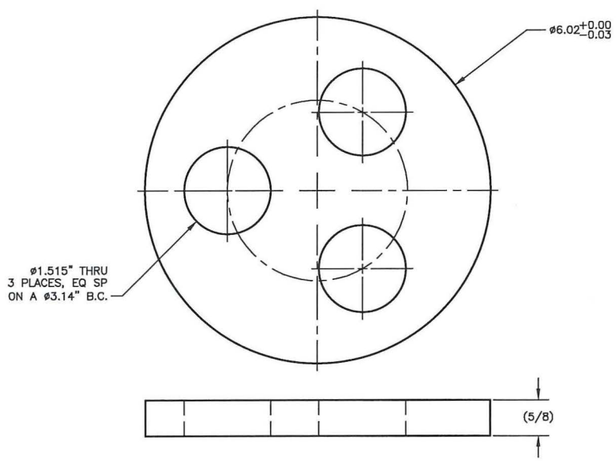

6 TOP SPACER PLATE
SCALE: FULL

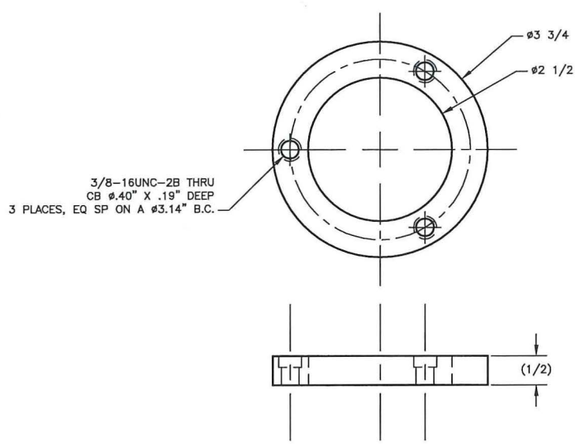

7 BOTTOM SPACER PLATE
SCALE: FULL

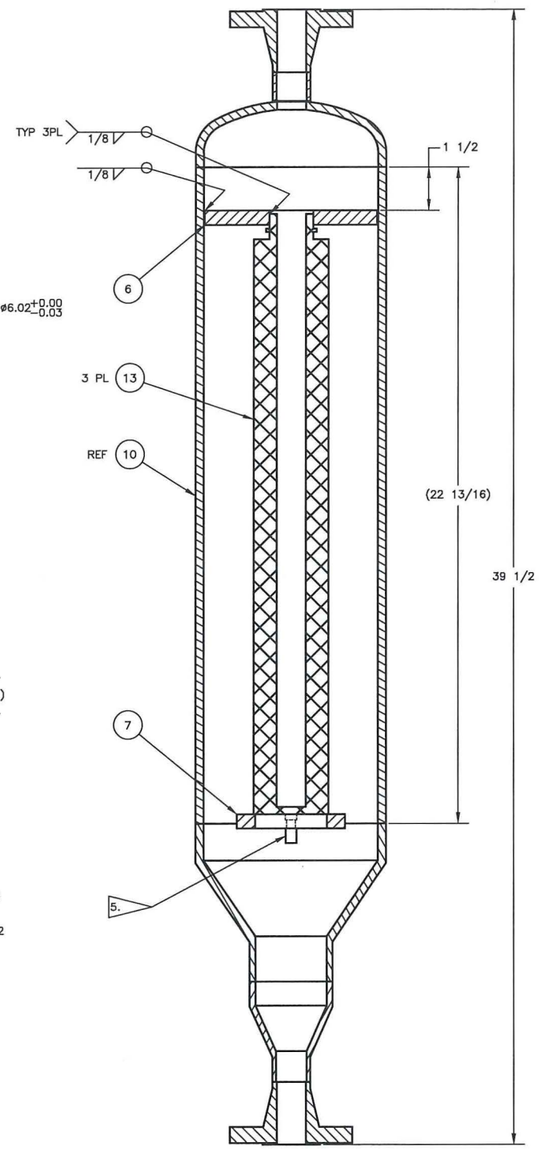

A/1 SECTION
SCALE: 1/2
ONLY ONE FILTER CARTRIDGE SHOWN CENTERED FOR CLARITY.

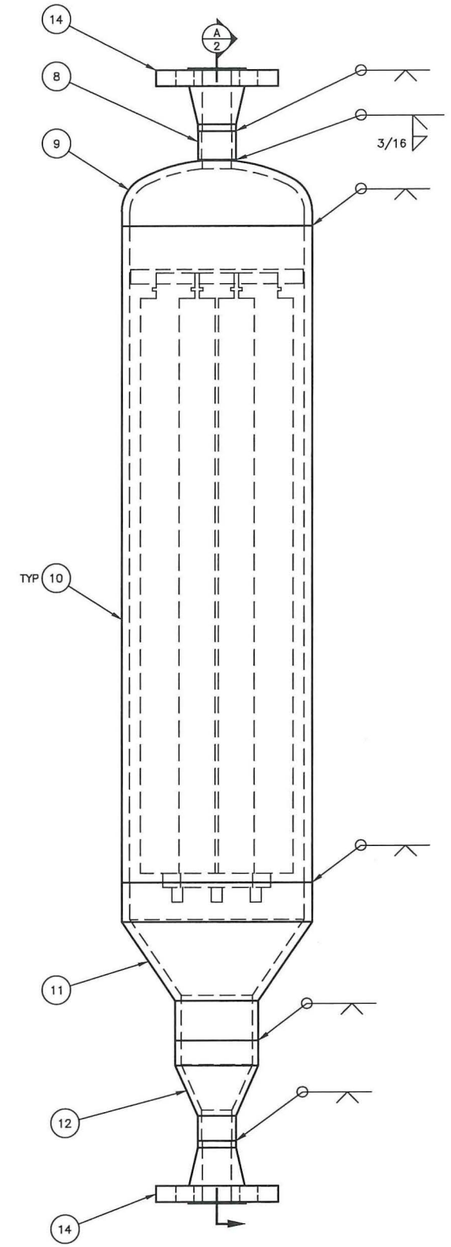

1 FILTER ASSEMBLY
SCALE: 1/2

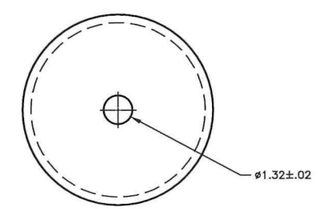

9 PIPE CAP
SCALE: 1/2

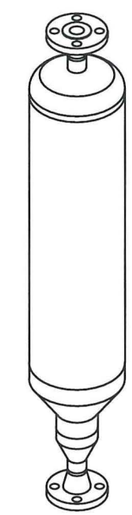

ISOMETRIC VIEW
SCALE: NTS

THIS DESIGN DEVELOPED FOR USE BY THE US DEPARTMENT OF ENERGY UNDER CONTRACT NO. DE−EM0004216.

	NAME	DATE
DRAWN BY	PM MCELROY	3/12/19
DRAFTING CHECKER	JT FOSS	3/13/19
ENGINEER	J CAMPBELL	3/13/19
ENGINEERING CHECKER	D CAP	3/13/19
PROJECT MANAGER	P BOGEN	3/13/19

Columbia Energy AND ENVIRONMENTAL SERVICES

DOE TBI SY−101
FILTER ASSEMBLY

SIZE F | DWG NO CEES−16−604−M−028 | REV 0
SCALE AS SHOWN | SHEET 1 OF 1

REF NUMBER	TITLE
DRAWING/DOCUMENT REFERENCES	
NEXT USED ON CEES−16−604−M−006	

REV NO	DESCRIPTION	REV BY DATE	DRAFTING CHECKER DATE	ENGINEER DATE	ENGINEERING CHECKER DATE	PROJECT MANAGER DATE
	REVISIONS					

Engineering Drawing

CEES-16-604-M-039

DOE TBI SY-101 Process Tote Assembly

GENERAL NOTES: (UNLESS OTHERWISE SPECIFIED)

1. DIMENSIONS ARE IN INCHES.
2. TOLERANCES SHALL BE AS FOLLOWS:
   FRACTIONS = ±1/8
   ANGLES = ±1°
3. REMOVE ALL BURRS AND BREAK SHARP EDGES.
4. LOCATE IDENTIFICATION LABELING AND WEIGHT LABELING IN APPROXIMATE LOCATION AS SHOWN.
   TEXT CONTENTS: PROCESS TOTE, CEES-16-604-M-039 XXXX LBS
   (XXXX = MEASURED WEIGHT)
   TEXT BLOCK: BLOCK
   TEXT MATERIAL: ACRYLIC ENAMEL PAINT
   TEXT COLORS BLACK ON YELLOW BACKGROUND
   TEXT SIZE 1" HIGH CHARACTERS
5. WELD AND INSPECT STAINLESS STEEL COMPONENTS PER ASME B31.3 NORMAL FLUID SERVICE. WELD PROCEDURES AND QUALIFICATIONS PER ASME SECTION IX ARE ACCEPTABLE. PERFORM HYDROSTATIC PRESSURE TESTING OF WASTE INLET SPOOL (ITEM 4). HYDROSTATIC PRESSURE TEST TO 150 PSIG +10/-0 PSIG. MAINTAIN TEST PRESSURE FOR 10 MINUTES AND VERIFY NO LEAKAGE. DESIGN PRESSURE 100 PSIG, DESIGN TEMPERATURE 105°F.
6. SEAL THREADED PIPE CONNECTIONS WITH LOCTITE 567 THREAD SEALANT AND ACTIVATOR 7649.
7. REPLACE BLIND FLANGE PROVIDED WITH CONTAINER (ITEM 17) WITH INLET FLANGE (ITEM 2). REUSE FASTENERS AND REPLACE GASKET WITH NEW GASKET (ITEM 12). TORQUE 7/8 INCH FASTENERS TO 80 FT-LBS +5/-0 FT-LBS. REMOVED BLIND FLANGE IS TO BE SHIPPED WITH FINISHED ASSEMBLY TO SUPPORT FINAL REMOVAL/DISPOSAL OF PROCESS TOTE ASSEMBLY AFTER USE.
8. ADD TO EDGES AND AROUND THE HOLE OF THE BIRD SCREEN (ITEM 24) IN ORDER TO COVER THE CUT EDGES OF THE BIRD SCREEN.
9. AFTER INSTALLING 6 PROCESS TOTE ASSEMBLIES WRAP THAWING BLANKET (ITEM 26) AROUND THE SIDES. CONNECT TO POWER CORD WR-604-113-1.
10. THERE ARE A TOTAL OF SIX PROCESS TOTE ASSEMBLIES NECESSARY FOR THE TBI DESIGN IN THE FIELD. THREE WILL ASSEMBLED AS SHOWN IN THE PROCESS TOTE ASSEMBLY (ITEM 1) AND THREE WILL BE ASSEMBLED WITH THE INLET FLANGE (ITEM 2) ROTATED 180° CREATING A LEFT AND RIGHT CONFIGURATION AS SHOWN IN THE ISOMETRIC VIEWS.

PARTS LIST/MATERIAL LIST

QTY -040	QTY -030	QTY -020	QTY -010	PARTS / DASH NUMBER	NOMENCLATURE/DESCRIPTION	MATERIAL/REFERENCE	SHEET	ITEM NO
			X	-010	PROCESS TOTE ASSEMBLY		1	1
		X	1	-020	INLET FLANGE		1,2	2
	X	1		-030	FILTER SPOOL		2,3	3
X		1		-040	WASTE INLET SPOOL		2,3	4
								5
		1			FLANGE, 12" BLIND, RF, CLASS 150	ASTM A182, GR F304L	2,3	6
	AR				PIPE, ø1 1/2", SCH 40, LAR, TBE	ASTM A312, TP 304/304L	3	7
	2				45° ELBOW, ø1 1/2", CLASS 150	ASTM A182, GR F304	3	8
1					PIPE, ø3/4" SCH 40	ASTM A312, TP 304L-S	3	9
1					90° ELBOW, ø3/4" SCH 40, LR, BW	ASTM A403, GR WP304L-S	3	10
1					PIPE, ø3/4" SCH 40, TOE, LAR	ASTM A312, TP 304L-S	3	11
			1	BLUEGAURD 3700	FLANGE GASKET, 1/8" THK, FOR 12" FLANGE	GARLOCK	1	12
	1			0-007-1-12-RF-NU-00-E3-Z04059	FLANDERS FILTER, 40 CFM, RADIAL, HEPA	AAF FLANDERS	3	13
		1		300-F-SS	CAM AND GROOVE TYPE F MALE ADAPTER X 3" MNPT, SST	DIXON	2	14
		1		RH300BL	BOSS-LOCK, CAM AND GROOVE, TYPE H, DUST CAP, 3", SST, BUNA-N SEAL	DIXON	2	15
		1		(3014T491)	EYEBOLT WITH SHOULDER, 1/2-13UNC, 1 1/2" L	(MCMASTER-CARR)	2	16
			1	LQ375	LIQUID CONTAINER, 375 GALLON CAPACITY, DOUBLE WALLED	CONTAINER PRODUCTS CORPORATION	1	17
		1			WASHER, SPRING LOCK, 3/8"	SST	2	18
1				FS-752-12FP	NIPPLE, FLAT FACE, 3/4" FNPT, 2000 PSI, SST	PARKER	3	19
		1			WING NUT, 3/8-16UNC	ANY GR 300 ST	2	20
		1		F0522997	WEATHER COVER FOR FLANDERS RADIAL FILTER	AAF FLANDERS	2	21
								22
	1			7107-3-R-R-L	BALL VALVE, 1 1/2" FNPT	FLOWTEK	3	23
		1			BIRD SCREEN	ANY 300 GRADE SST EXPANDED METAL	2,3	24
8.		AR		75001624	BIRD SCREEN VINYL EDGING	STANPRO	3	25
9.			1	CUSTOM -001	THAWING BLANKET SET, 144" X 42" X 50" (2X), 5680W	POWERBLANKET	1	26
								27

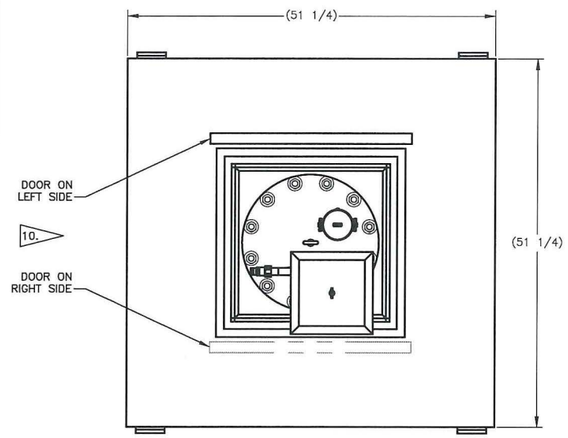

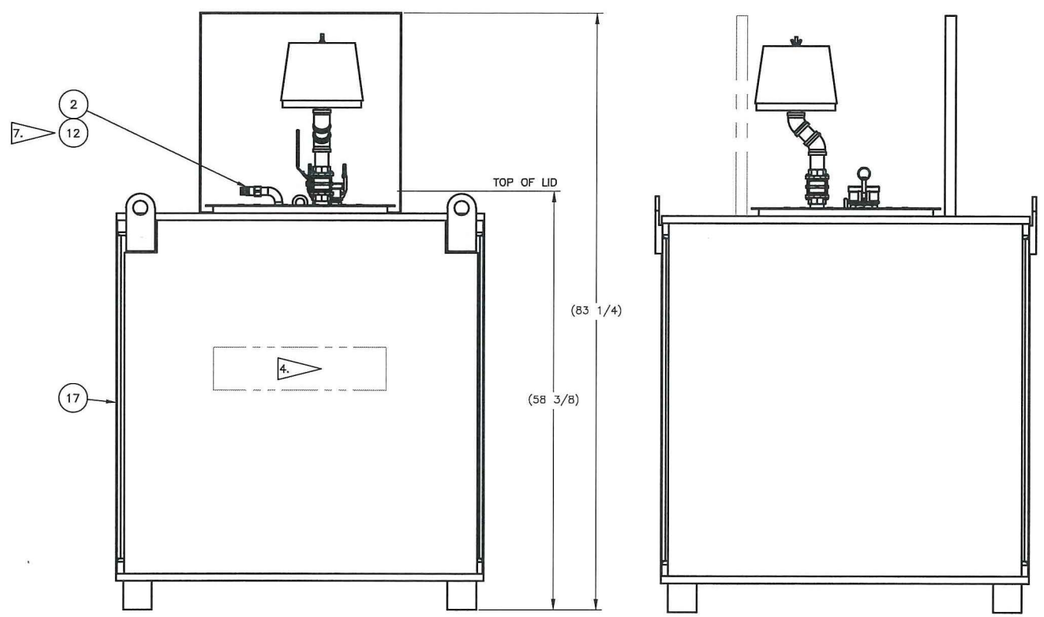

1 PROCESS TOTE ASSEMBLY
SCALE: 1/8

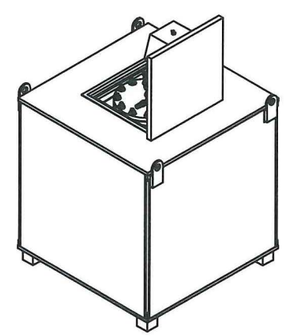

ISOMETRIC VIEW, RIGHT
SCALE: NTS
10.

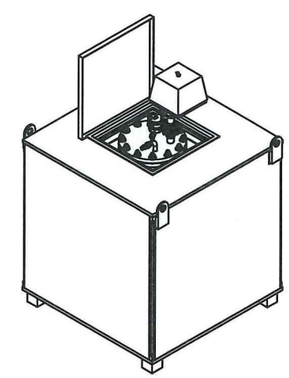

ISOMETRIC VIEW, LEFT
SCALE: NTS
10.

JOHN COLIN HENDERSON
STATE OF WASHINGTON
31912
REGISTERED
PROFESSIONAL ENGINEER
5/7/19

REF NUMBER	TITLE
DRAWING/DOCUMENT REFERENCES	
NEXT USED ON	

REV NO	DESCRIPTION	REV BY DATE	DRAFTING CHECKER DATE	ENGINEER DATE	ENGINEERING CHECKER DATE	PROJECT MANAGER DATE
REVISIONS						

THIS DESIGN DEVELOPED FOR USE BY THE US DEPARTMENT OF ENERGY UNDER CONTRACT NO. DE-EM0004216.

	NAME	DATE
DRAWN BY	M BERMUDEZ	4/22/19
DRAFTING CHECKER	JT FOSS	5/1/19
ENGINEER	D CAP	5/2/19
ENGINEERING CHECKER	J CAMPBELL	5/2/19
PROJECT MANAGER	P BODEN	5/1/19

Columbia Energy AND ENVIRONMENTAL SERVICES

DOE TBI SY-101
PROCESS TOTE ASSEMBLY

SIZE F | DWG NO CEES-16-604-M-039 | REV 0
SCALE AS SHOWN | SHEET 1 OF 3

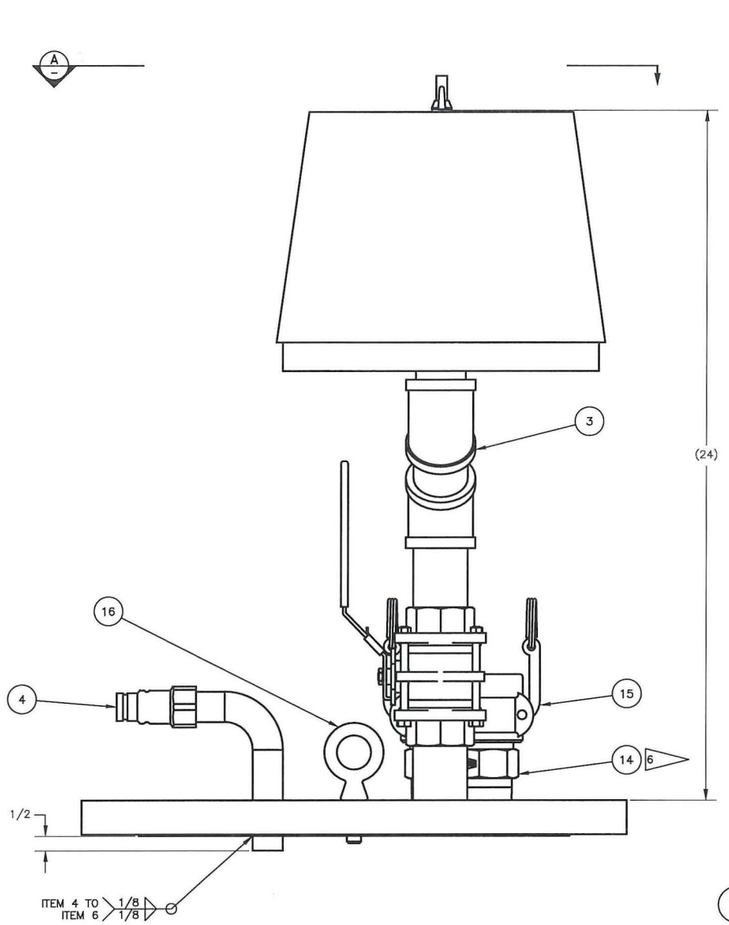

2 INLET FLANGE
SCALE: 1/2

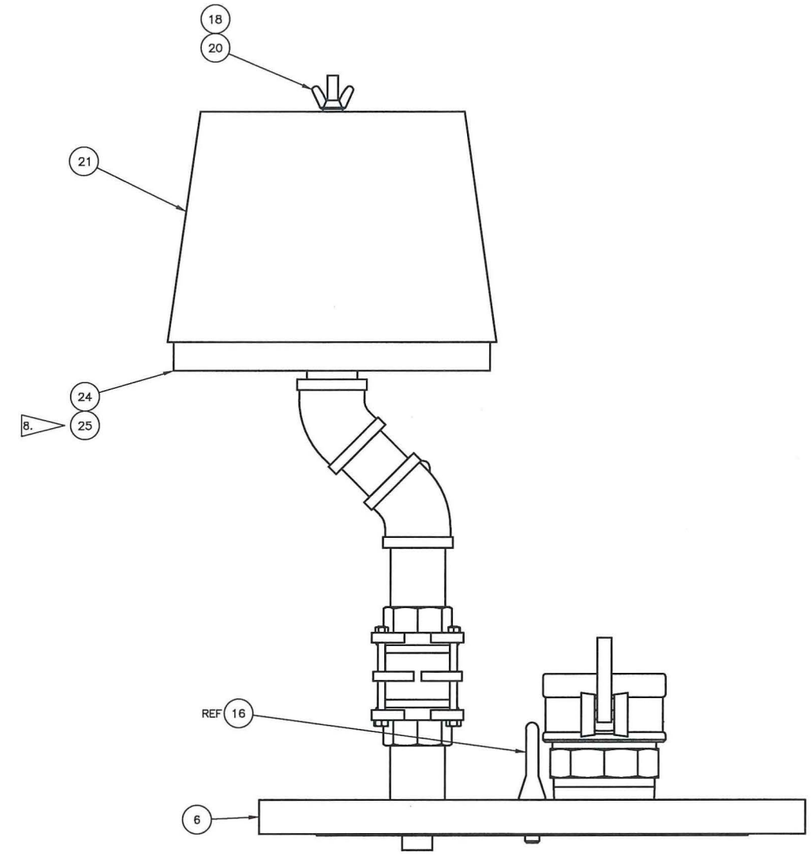

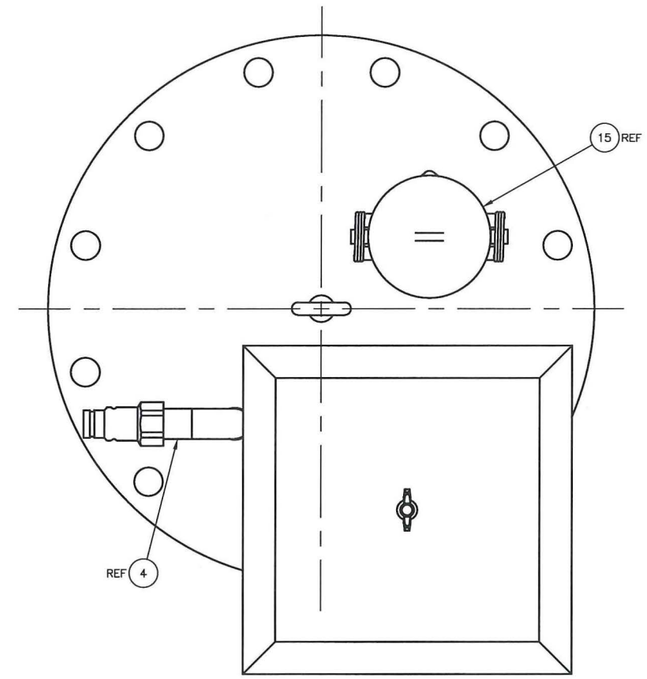

A VIEW
SCALE: 1/2

JOHN COLIN HENDERSON
STATE OF WASHINGTON
31912
REGISTERED
PROFESSIONAL ENGINEER
5/7/19

REF NUMBER	TITLE
DRAWING/DOCUMENT REFERENCES	
NEXT USED ON	

REV NO	DESCRIPTION	REV BY DATE	DRAFTING CHECKER DATE	ENGINEER DATE	ENGINEERING CHECKER DATE	PROJECT MANAGER DATE
REVISIONS						

	NAME	DATE
DRAWN BY	M BERMUDEZ	4/22/19
DRAFTING CHECKER	JT FOSS	5/1/19
ENGINEER	D CAP	5/2/19
ENGINEERING CHECKER	J CAMPBELL	5/2/19
PROJECT MANAGER	P BODEN	5/1/19

Columbia Energy
AND ENVIRONMENTAL SERVICES

DOE TBI SY-101
PROCESS TOTE ASSEMBLY

SIZE F | DWG NO CEES-16-604-M-039 | REV 0

SCALE AS SHOWN | SHEET 2 OF

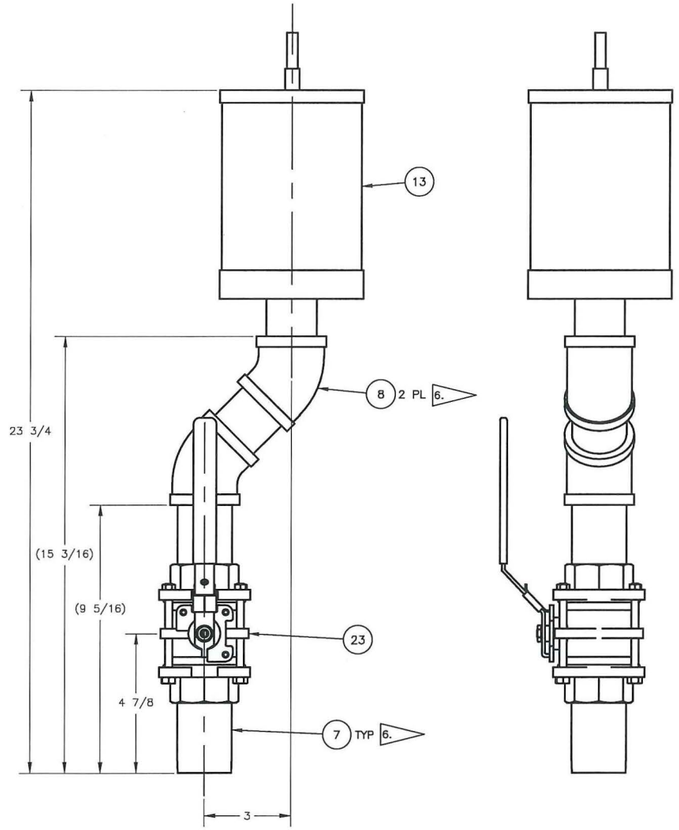

3 FILTER SPOOL
SCALE: 1/2

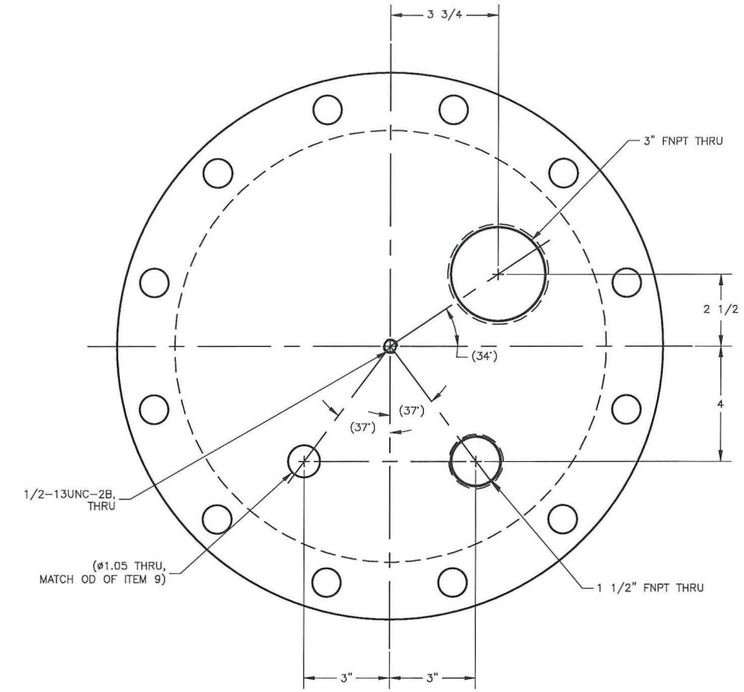

6 FLANGE
SCALE: 1/2

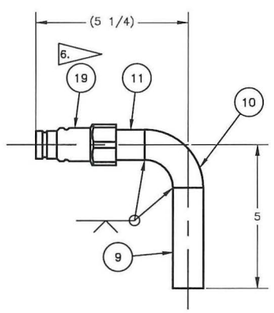

4 WASTE INLET SPOOL
SCALE: 1/2

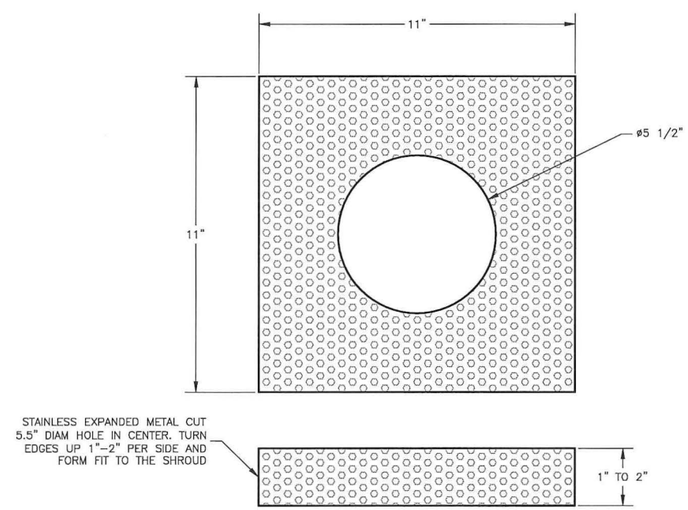

24 BIRD SCREEN
SCALE: 1/2

REF NUMBER	TITLE
DRAWING/DOCUMENT REFERENCES	
NEXT USED ON	

REV NO	DESCRIPTION	REV BY DATE	DRAFTING CHECKER DATE	ENGINEER DATE	ENGINEERING CHECKER DATE	PROJECT MANAGER DATE
REVISIONS						

	NAME	DATE
DRAWN BY	M BERMUDEZ	4/22/19
DRAFTING CHECKER	JT FOSS	5/1/19
ENGINEER	D CAP	5/2/19
ENGINEERING CHECKER	J CAMPBELL	5/2/19
PROJECT MANAGER	P BODEN	5/1/19

Columbia Energy
AND ENVIRONMENTAL SERVICES

DOE TBI SY-101
PROCESS TOTE ASSEMBLY

SIZE F | DWG NO CEES-16-604-M-039 | REV 0
SCALE AS SHOWN | SHEET 3 OF

Engineering Drawing

CEES-16-604-M-054

DOE TBI SY-101 Spray Ring

GENERAL NOTES: (UNLESS OTHERWISE SPECIFIED)

1. DIMENSIONS ARE IN INCHES.
2. TOLERANCES SHALL BE AS FOLLOWS:
   FRACTIONS = ±1/8
   .X = ±0.1
   .XX = ±0.03
   .XXX = ±0.010
   ANGLES = ±5°
3. REMOVE ALL BURRS AND BREAK SHARP EDGES.
4. LOCATE IDENTIFICATION LABELING AND WEIGHT LABELING IN APPROXIMATE LOCATION AS SHOWN.
   TEXT CONTENTS: DELAY TOTE, CEES-16-604-M-054
   TEXT BLOCK: BLOCK
   TEXT MATERIAL: ACRYLIC ENAMEL
   TEXT COLORS BLACK ON YELLOW BACKGROUND
   TEXT SIZE 1" HIGH CHARACTERS
5. WELD AND INSPECT STAINLESS STEEL COMPONENTS PER ASME B31.3-2016 NORMAL FLUID SERVICE. WELD PROCEDURE AND QUALIFICATIONS PER ASME SECTION IX ARE ACCEPTABLE. REMOVE NOZZLES (ITEM 5) AND PLUG TEMPORARILY FOR HYDROTEST. PERFORM HYDROSTATIC PRESSURE TESTING OF SPRAY RING ASSEMBLY. HYDROSTATIC PRESSURE TEST TO 150 PSIG +10/-0 PSIG PER ASME B31.3-2016 NORMAL FLUID SERVICE. MAINTAIN TEST PRESSURE FOR 10 MINUTES AND VERIFY NO LEAKAGE. DESIGN PRESSURE 100 PSIG, DESIGN TEMPERATURE 105°F.
6. SEAL THREADED PIPE CONNECTIONS WITH LOCTITE 567 THREAD SEALANT AND ACTIVATOR 7649.
7. BEND AND ROUTE TUBE (ITEM 16) APPROXIMATELY AS SHOWN.
8. PRIOR TO FINAL WELDING FIT UP AND VERIFY THAT SPRAY NOZZLE (ITEM 5) DOES NOT PROTRUDE THRU INSIDE WALL OF 12" PIPE (ITEM 14).
9. DURING INSTALLATION ON TO RISER, TORQUE FASTENERS TO 320 FT-LB +10, -0 FT-LB.

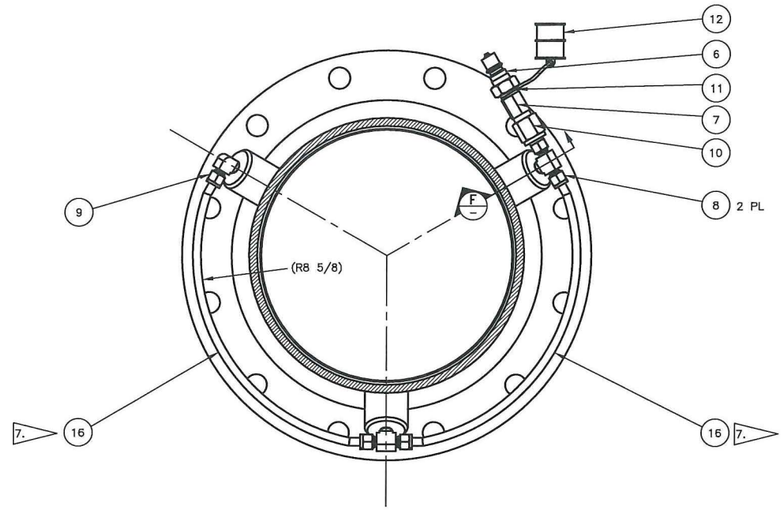

A SECTION
SCALE: 3/8

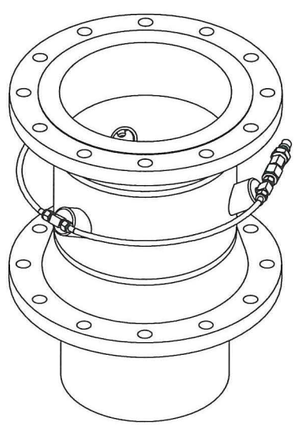

ISO VIEW
SCALE: NTS

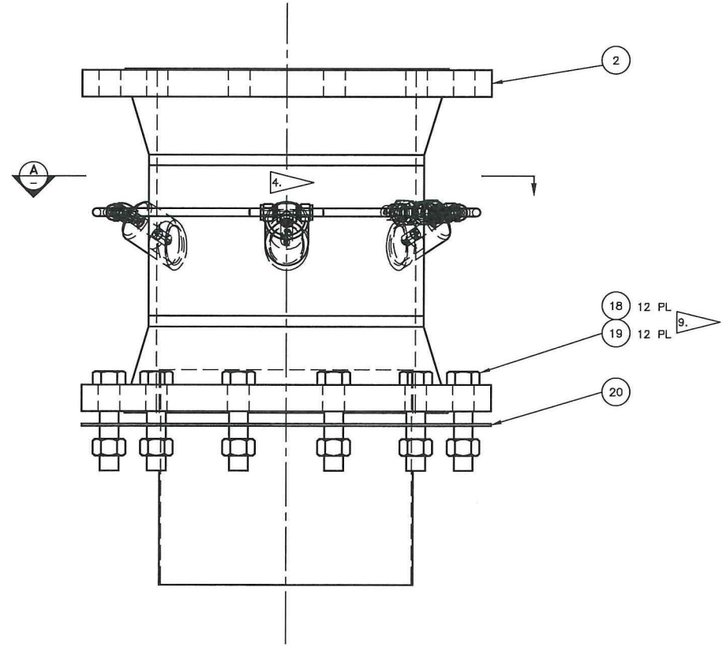

1 SPRAY RING ASSEMBLY
SCALE: 3/8

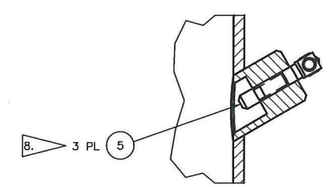

F DETAIL
SCALE: 3/8

PARTS LIST/MATERIAL LIST

QTY -020	QTY -010	PARTS / DASH NUMBER	NOMENCLATURE/DESCRIPTION	MATERIAL/REFERENCE	SHEET	ITEM NO
	X	-010	SPRAY RING ASSEMBLY		1	1
X	1	-020	SPRAY RING WELDMENT		1,2	2
						3
						4
	3	1/4HH-316SS-14W	SPRAY NOZZLE, FULLJET, WIDE ANGLE, 1/4" MNPT, 316 SST	SPRAYING SYSTEMS CO.	1	5
	1	ML6-KP-31	COUPLING, 3/4" NPT PLUG W/ VALVE	HANSEN	1	6
	1	SS-8CP2-10	CHECK VALVE, 1/2" MNPT	SWAGELOK	1	7
	2	SS-600-3TTM	MALE BRANCH TEE, 3/8" TUBE X 3/8" TUBE X 1/4" MNPT	SWAGELOK	1	8
	1	SS-600-2-4	MALE ELBOW, 90°, 3/8" TUBE X 1/4" MNPT	SWAGELOK	1	9
	1	SS-6-TA-7-8	FEMALE ADAPTER, 3/8" TUBE X 1/2" FNPT	SWAGELOK	1	10
	1	SS-12-RB-8	REDUCING HEX BUSHING, 3/4" MNPT X 1/2" FNPT	SWAGELOK	1	11
	1	PDC-6-HK	DUST CAP, 3/4" CAP	HANSEN	1	12
3			NOZZLE ADAPTER, ROUND BAR, ø2"	ASTM A276, ANY 300 SST	2	13
AR			MODIFIED PIPE, ø12", SCH 40, SMLS	ASTM A312, TP 304/304L	2	14
1			ROLLED DRIP SLEEVE, 16 GA	ASTM A240, 304/304L	2	15
	AR		TUBE, 3/8" X .065" WALL (16 GA)	ASTM A269, ANY 300 SST	1	16
2			FLANGE, WN, ø12", 150 LB, RF	ASTM A182, GR F304L	2	17
	12		BOLT, HEX HD, 7/8-9UNC-2A X 4"L	ASTM A193, GR B8	1	18
	12		NUT, HEX, 7/8-9UNC-2B	ASTM A194, GR 2H	1	19
	1	BLUE-GARD 3700	GASKET, 1/8" THK	GARLOCK	1	20
						21
						22

JOHN COLIN HENDERSON
STATE OF WASHINGTON
31912
REGISTERED
PROFESSIONAL ENGINEER
5/7/19

THIS DESIGN DEVELOPED FOR USE BY THE US DEPARTMENT OF ENERGY UNDER CONTRACT NO. DE-EM0004216.

	NAME	DATE
DESIGN BY	PM MCELROY	3/12/19
DRAFTING CHECKER	JT FOSS	3/12/19
ENGINEER	D CAP	3/13/19
ENGINEERING CHECKER	J CAMPBELL	3/13/19
PROJECT MANAGER	P BOGEN	3/13/19

Columbia Energy AND ENVIRONMENTAL SERVICES

DOE TBI SY-101
SPRAY RING

SIZE F | DWG NO CEES-16-604-M-054 | REV 0
SCALE AS SHOWN | SHEET 1 OF 2

REF NUMBER	TITLE
DRAWING/DOCUMENT REFERENCES	
NEXT USED ON CEES-16-604-A-002	

REV NO	DESCRIPTION	REV BY DATE	DRAFTING CHECKER DATE	ENGINEER DATE	ENGINEERING CHECKER DATE	PROJECT MANAGER DATE
REVISIONS						

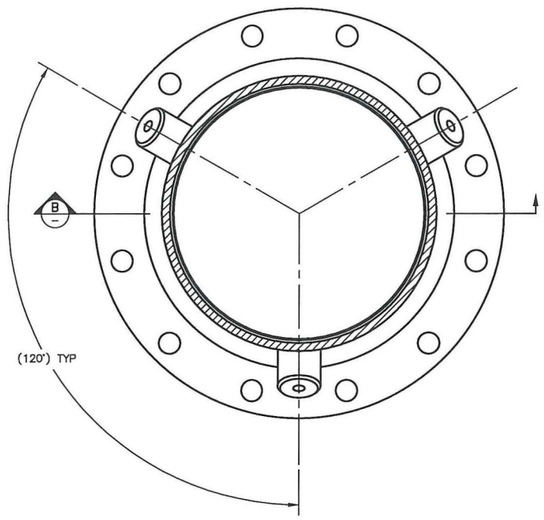

C SECTION
SCALE: 3/8

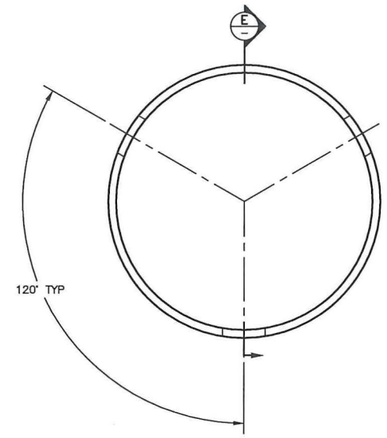

14 MODIFIED PIPE
SCALE: 3/8

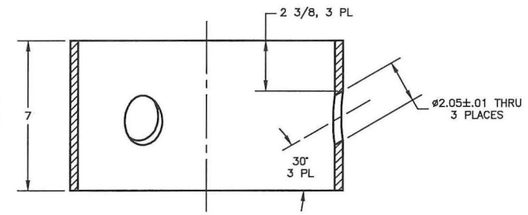

E SECTION
SCALE: 1/1

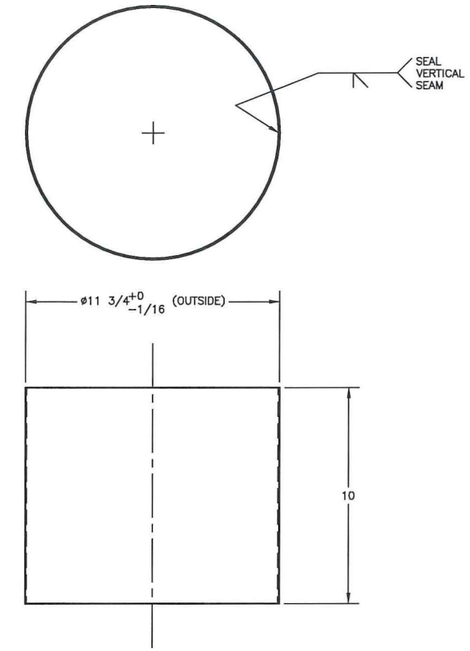

15 ROLLED DRIP SLEEVE
SCALE: 3/8

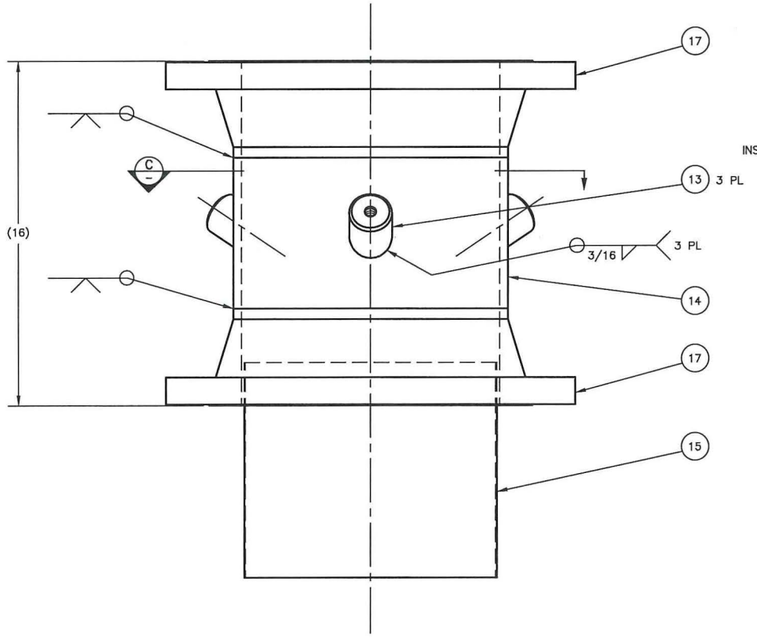

2 SPRAY RING WELDMENT
SCALE: 3/8

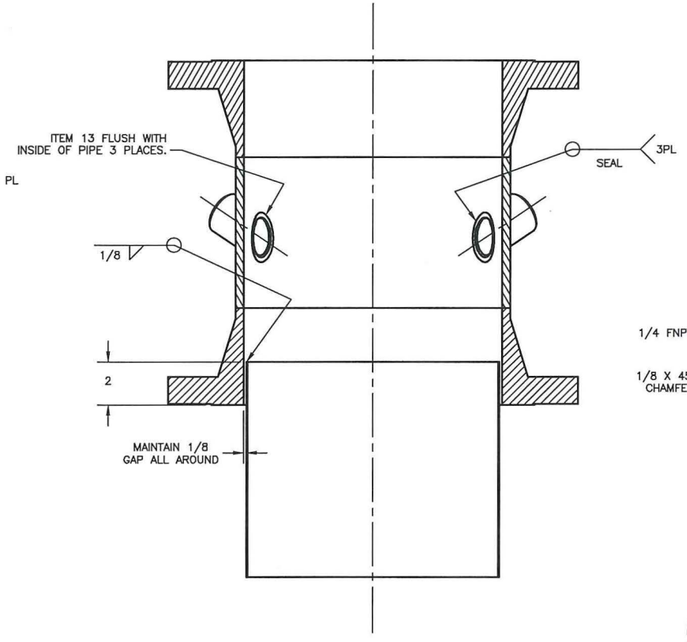

B SECTION
SCALE: 3/8

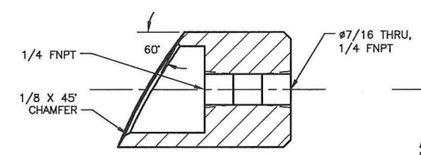

D SECTION
SCALE: 1/1

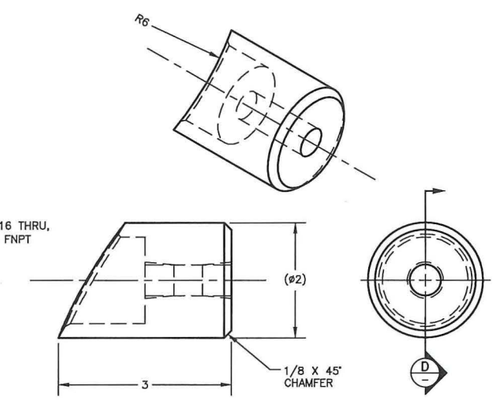

13 NOZZLE ADAPTER
SCALE: 1/1

JOHN COLIN HENDERSON
STATE OF WASHINGTON
31912
REGISTERED
PROFESSIONAL ENGINEER
5/7/19

REF NUMBER	TITLE
DRAWING/DOCUMENT REFERENCES	
NEXT USED ON	

REV NO	DESCRIPTION	REV BY DATE	DRAWING CHECKER DATE	ENGINEER DATE	ENGINEERING CHECKER DATE	PROJECT MANAGER DATE
REVISIONS						

	NAME	DATE
DRAWN BY	PM MCELROY	3/12/19
DRAFTING CHECKER	JT FOSS	3/12/19
ENGINEER	D CAP	3/13/19
ENGINEERING CHECKER	J CAMPBELL	3/13/19
PROJECT MANAGER	P BOGEN	3/13/19

Columbia Energy
AND ENVIRONMENTAL SERVICES

DOE TBI SY-101
SPRAY RING

SIZE F | DWG NO CEES-16-604-M-054 | REV 0
SCALE AS SHOWN | SHEET 2 OF 2

Engineering Drawing

CEES-16-604-M-065

DOE TBI SY-101 Pipe in Pipe

GENERAL NOTES: (UNLESS OTHERWISE SPECIFIED)

1. DIMENSIONS ARE IN INCHES.
2. TOLERANCES SHALL BE AS FOLLOWS:
   FRACTIONS = ±1/8
   .X = ±0.1
   .XX = ±0.03
   .XXX = ±0.010
   ANGLES = ±1°
3. REMOVE ALL BURRS AND BREAK SHARP EDGES.

4. LOCATE IDENTIFICATION LABELING AND WEIGHT LABELING IN APPROXIMATE LOCATION AS SHOWN.
   TEXT CONTENTS: PIPE ASSEMBLY 1, CEES-16-604-M-065-010 XXX LBS
   (XXX=MEASURED WEIGHT)
   TEXT TYPE: BLOCK
   TEXT MATERIAL: ACRYLIC ENAMEL
   TEXT COLORS BLACK ON YELLOW BACKGROUND
   TEXT SIZE 1" HIGH CHARACTERS

5. LOCATE IDENTIFICATION LABELING AND WEIGHT LABELING IN APPROXIMATE LOCATION AS SHOWN.
   TEXT CONTENTS: PIPE ASSEMBLY 2, CEES-16-604-M-065-020 XXX LBS
   (XXX=MEASURED WEIGHT)
   TEXT TYPE: BLOCK
   TEXT MATERIAL: ACRYLIC ENAMEL
   TEXT COLORS BLACK ON YELLOW BACKGROUND
   TEXT SIZE 1" HIGH CHARACTERS

6. WELD AND INSPECT STAINLESS STEEL PIPING COMPONENTS PER ASME B31.3-2016 NORMAL FLUID SERVICE. WELD PROCEDURES AND QUALIFICATIONS PER ASME SECTION IX ARE ACCEPTABLE. PERFORM HYDROSTATIC PRESSURE TESTING OF OUTER PIPE WELDMENT 1 (ITEM 3), OUTER PIPE WELDMENT 2 (ITEM 4), INNER PIPE WELDMENT 1 (ITEM 5) AND INNER PIPE WELDMENT 2 (ITEM 6). HYDROSTATIC PRESSURE TEST TO 150 PSIG +10/-0 PSIG PER ASME B31.3-2016 NORMAL FLUID SERVICE. MAINTAIN TEST PRESSURE FOR 10 MINUTES AND VERIFY NO LEAKAGE. DESIGN PRESSURE 100 PSIG, DESIGN TEMPERATURE 105°F.

7. INSTALL ARMAFLEX INSULATION (ITEM 21) PER MANUFACTURERS INSTRUCTIONS. INSTALL OVER 3" PIPE (ITEM 10) AND 3" FLEXIBLE METAL HOSE (ITEM 14). LEAVE 3-4 INCHES OF SPACE AT WELD NECK FLANGE FOR BOLTS.

8. INSTALL HEATING CABLE (ITEM 19) PER MANUFACTURERS INSTRUCTIONS.

9. FLEXIBLE METAL HOSE SHALL BE 3" I.D. MICROFLEX INC. ASTM A240 TYPE 316L STAINLESS STEEL CORRUGATED HOSE TYPE MSS-362 DOUBLE BRAID. BRAID SHALL BE ASTM A580 TYPE 304 STAINLESS STEEL. FLEXIBLE HOSE SHALL HAVE A MINIMUM RATED WORKING PRESSURE OF 200 PSIG AT 200°F, AND MINIMUM RATED BURST PRESSURE OF 800 PSIG AT 70°F. FLEXIBLE HOSE SHALL HAVE AN ALLOWABLE STATIC CENTERLINE BEND RADIUS OF 9" OR LESS. HOSE MINIMUM LIVE LENGTH (FLEXIBLE LENGTH) SHALL BE 11". FITTING TYPE SHALL BE PIPE WELD END, 3" SCH 40 SEAMLESS ASTM A312 TYPE 304/304L ON ONE END AND CLASS 150 RAISED FACE WELD NECK FLANGE ON OTHER END. FLEXIBLE HOSE SHALL MEET ALL APPLICABLE REQUIREMENTS OF B31.3 CODE.

10. FLEXIBLE METAL HOSE SHALL BE 3/4" I.D. MICROFLEX INC. ASTM A240 CLASS 316L STAINLESS STEEL CORRUGATED HOSE TYPE MSS-362 DOUBLE BRAID. BRAID SHALL BE ASTM A580 TYPE 304 STAINLESS STEEL. FLEXIBLE HOSE SHALL HAVE A MINIMUM RATED WORKING PRESSURE OF 200 PSIG AT 200°F, AND MINIMUM RATED BURST PRESSURE OF 800 PSIG AT 70°F. FLEXIBLE HOSE SHALL HAVE AN ALLOWABLE STATIC CENTERLINE BEND RADIUS OF 8" OR LESS. HOSE MINIMUM LIVE LENGTH (FLEXIBLE LENGTH) SHALL BE 5 3/4". FITTING TYPE SHALL BE PIPE 3/4" SCH 40 SEAMLESS ASTM A312 TYPE 304/304L, WELD END ON ONE SIDE AND MNPT WITH HEX NUT ON THE OTHER SIDE. FLEXIBLE HOSE SHALL MEET ALL APPLICABLE REQUIREMENTS OF B31.3 CODE.

PARTS LIST/MATERIAL LIST

QTY -060	QTY -050	QTY -040	QTY -030	QTY -020	QTY -010	PARTS / DASH NUMBER	NOMENCLATURE/DESCRIPTION	MATERIAL/REFERENCE	SHEET	ITEM NO
					X	-010	PIPE ASSEMBLY 1		1	1
				X		-020	PIPE ASSEMBLY 2		1	2
			X		1	-030	OUTER PIPE WELDMENT 1		2	3
		X		1		-040	OUTER PIPE WELDMENT 2		2	4
	X				1	-050	INNER PIPE WELDMENT 1		3	5
X				1		-060	INNER PIPE WELDMENT 2		3	6
										7
										8
										9
		AR	AR				PIPE, ø3" SCH 40, SMLS	ASTM A312, GR TP 304L	2	10
AR	AR						PIPE, ø3/4" SCH 40, SMLS	ASTM A312, GR TP 304L	3	11
		1					TEE, ø3" SCH 40, BW	ASTM A403, GR WP304L-S	2	12
2	2					FS-751-12FP	COUPLER, FLAT FACE, 3/4" FNPT, 2000 PSI, 316 SST	PARKER	3	13
		1	2			MSS-362	METAL HOSE, ø3", LAP JOINT RF X PIPE WELD END, 60" LONG	MICROFLEX INC	2	14
1						MSS-362	METAL HOSE, ø3/4", HEX MALE NPT NIPPLE X PIPE WELD END, 88 1/2" LONG	MICROFLEX INC	3	15
	1					MSS-362	METAL HOSE, ø3/4", HEX MALE NPT NIPPLE X PIPE WELD END, 100" LONG	MICROFLEX INC	3	16
1						MSS-362	METAL HOSE, ø3/4", HEX MALE NPT NIPPLE X PIPE WELD END, 37" LONG	MICROFLEX INC	3	17
12	9						SPACER PLATE, 1/4" THK	ASTM A240, TP 304/304L	3	18
AR	AR					5BTV2-CT	SELF-REGULATING HEATING CABLE	RAYCHEM	3	19
AR	AR					GT-54	GLASS TAPE, 1/2"	RAYCHEM	3	20
				AR	AR		AP ARMAFLEX, 1" THK	ARMACELL	1	21
				AR	AR		ARMAFLEX WB FINISH	ARMACELL	1	22
1	1					S-150	LOW-PROFILE SPLICE KIT	RAYCHEM	3	23
					1	JBM-100-LE	MULTIPLE-ENTRY POWER/TEE CONNECTION WITH JUNCTION BOX	RAYCHEM	1	24
				1		JBS-100-LE	SINGLE-ENTRY POWER CONNECTION WITH JUNCTION BOX	RAYCHEM	1	25
	1					MSS-362	METAL HOSE, ø3/4", LR 90 X PIPE WELD END, 88 1/2" LONG	MICROFLEX INC	3	26
	1						HALF NIPPLE, ø3/4" SCH 40, SMLS	ASTM A312, GR TP 304L	3	27
		1					FLANGE, ø3", WN, RF, CLASS 150	ASTM A182, GRADE F, 304L	2	28

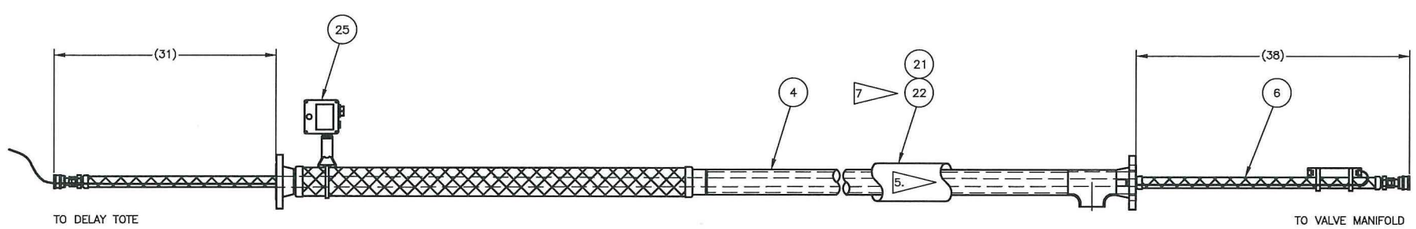

2 PIPE ASSEMBLY 2
SCALE: 1/8

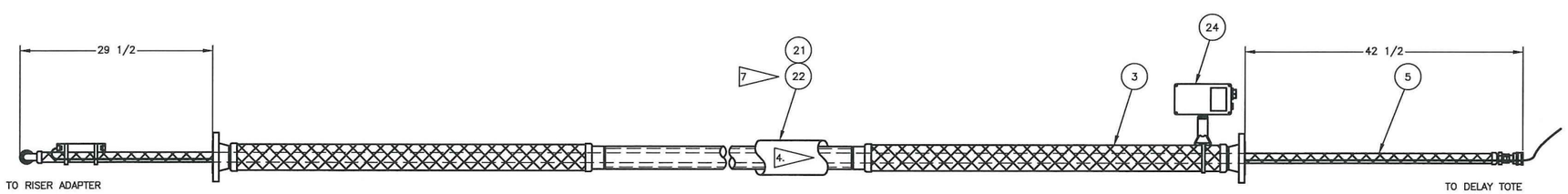

1 PIPE ASSEMBLY 1
SCALE: 1/8

JOHN COLIN HENDERSON
STATE OF WASHINGTON
31912
REGISTERED
PROFESSIONAL ENGINEER
5/7/19

REF NUMBER	TITLE
DRAWING/DOCUMENT REFERENCES	
NEXT USED ON CEES-16-604-A-002	

REV NO	DESCRIPTION	REV BY DATE	DRAFTING CHECKER DATE	ENGINEER DATE	ENGINEERING CHECKER DATE	PROJECT MANAGER DATE
REVISIONS						

	NAME	DATE
DRAWN BY	JT COSS	4/22/19
DRAWING CHECKER	PM MCELROY	5/2/19
ENGINEER	D CAP	5/2/19
ENGINEERING CHECKER	J HARRINGTON	5/2/19
PROJECT MANAGER	P BODEN	5/1/19

Columbia Energy AND ENVIRONMENTAL SERVICES

DOE TBI SY-101
PIPE IN PIPE

SIZE F | DWG NO CEES-16-604-M-065 | REV 0

SCALE AS SHOWN | SHEET 1 OF 3

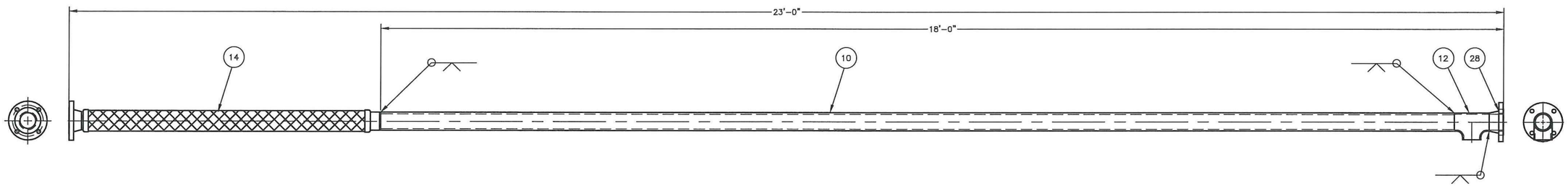

4 OUTER PIPE WELDMENT 2
SCALE: 1/8

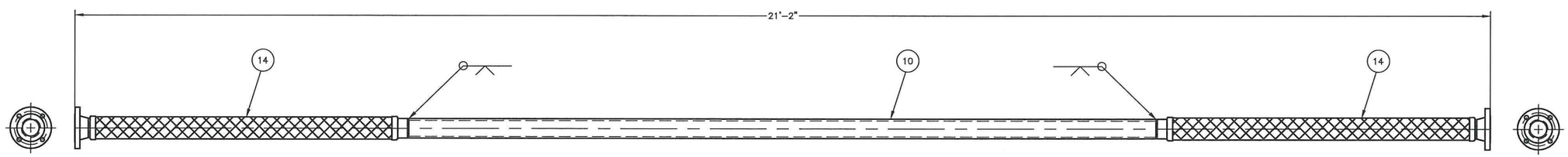

3 OUTER PIPE WELDMENT 1
SCALE: 1/8

JOHN COLIN HENDERSON
STATE OF WASHINGTON
31912
REGISTERED
PROFESSIONAL ENGINEER
5/7/19

NAME	DATE
DRAWN BY J.T. FOSS	4/22/19
DRAFTING CHECKER PM MCELROY	5/1/19
ENGINEER D CAP	5/2/19
ENGINEERING CHECKER J HARRINGTON	5/2/19
PROJECT MANAGER P BODEN	5/1/19

Columbia Energy
AND ENVIRONMENTAL SERVICES

DOE TBI SY-101
PIPE IN PIPE

SIZE F | DWG NO CEES-16-604-M-065 | REV 0
SCALE AS SHOWN | SHEET 2 OF

REF NUMBER	TITLE
DRAWING/DOCUMENT REFERENCES	
NEXT USED ON CEES-16-604-A-002	

REV NO	DESCRIPTION	REV BY DATE	DRAFTING CHECKER DATE	ENGINEER DATE	ENGINEERING CHECKER DATE	PROJECT MANAGER DATE
REVISIONS						

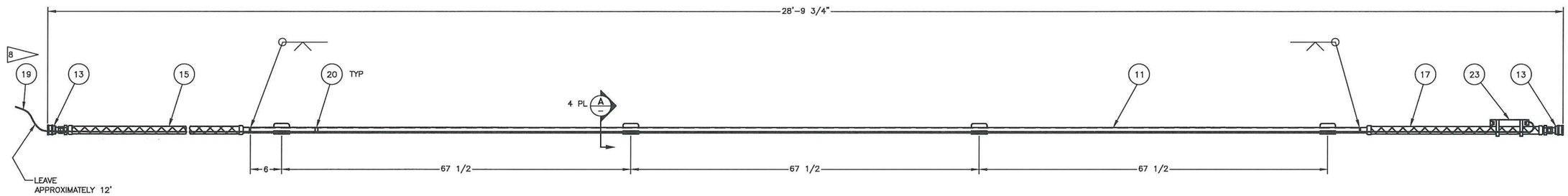

6 INNER PIPE WELDMENT 2
SCALE: 1/8

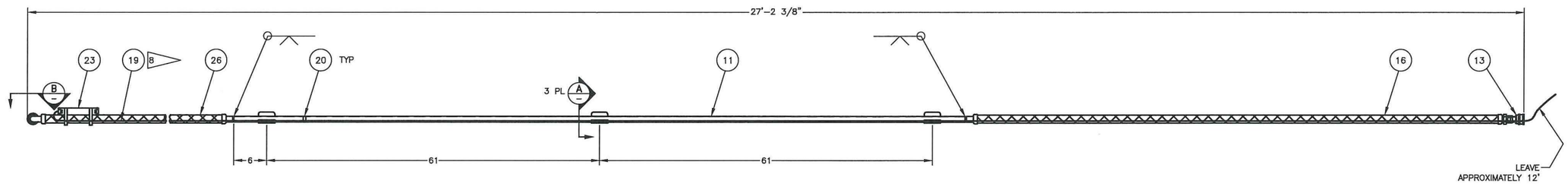

5 INNER PIPE WELDMENT 1
SCALE: 1/8

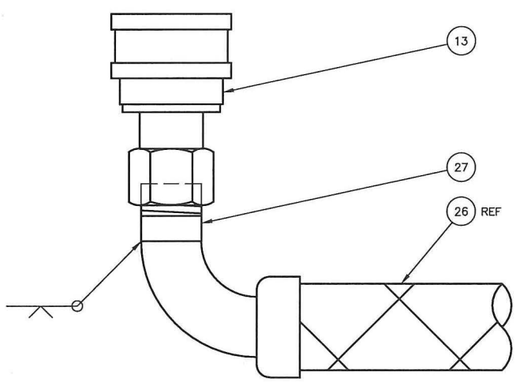

B VIEW
SCALE: 1/1

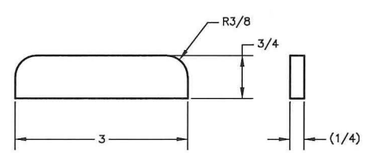

18 SPACER PLATE
SCALE: 1/1

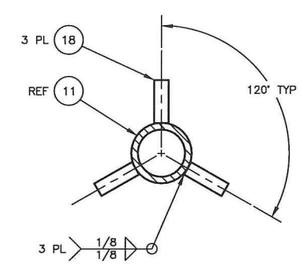

A SECTION
SCALE: 1/1

REF NUMBER	TITLE
DRAWING/DOCUMENT REFERENCES	
NEXT USED ON CEES-16-604-A-002	

REV NO	DESCRIPTION	REV BY DATE	DRAFTING CHECKER DATE	ENGINEER DATE	ENGINEERING CHECKER DATE	PROJECT MANAGER DATE
REVISIONS						

	NAME	DATE
DRAWN BY	JJ FOSS	4/22/19
DRAFTING CHECKER	PM MCELROY	5/1/19
ENGINEER	D CAP	5/2/19
ENGINEERING CHECKER	J HARRINGTON	5/2/19
PROJECT MANAGER	P BODEN	5/1/19

Columbia Energy
AND ENVIRONMENTAL SERVICES

DOE TBI SY-101
PIPE IN PIPE

SIZE F | DWG NO CEES-16-604-M-065 | REV 0
SCALE AS SHOWN | SHEET 3 OF

Engineering Plan

CEES-1409

Process Control Plan for the TBI System

Columbia Energy
AND ENVIRONMENTAL SERVICES

Document Review and Approval

Doc. No.	CEES-1409	**Rev.**	1	**Project Name**	TBI
Title	Process Control Plan for the TBI System			**Project No.**	C2106604

Purpose: **Final for Issue (numeric rev)** ☒ **For Review (alpha rev.)** ☐

Printed Name	*Signature*	*Date*	*Not Applicable*
Scott Henderson		4/30/2019	(Required)
Preparer [1]	**Signature**	**Date**	
			☒ NA
Reviewer	**Signature**	**Date**	
			☒ NA
Reviewer	**Signature**	**Date**	
Ward Feldmann		4/30/2019	☐ NA
Engineer/Checker [2]	**Signature**	**Date**	
Ward Feldmann		4/30/2019	☐ NA
Engineer/Approver [3]	**Signature**	**Date**	
Phil Bogen		4/30/2019	☐ NA
Project Manager (PM)	**Signature**	**Date**	
			☒ NA
QA Manager [4]	**Signature**	**Date**	
			☒ NA
Other	**Signature**	**Date**	

Notes:

1. *Documents, at a minimum, require a preparer signature and at least 1 reviewer who can also be the approver (depending on procedure requirements).*
2. *Engineering Documents require interdisciplinary review, and a signature by qualified engineer/checker and at least 1 approval signature. This approval shall be by an authorized engineer/approver or PM.*
3. *Engineer/approver signature is required only if the project manager is not qualified as an engineer.*
4. *QA Manager's signature is required for specification documents and Statements of Work to be used for procurement and Test Procedures (for quality affecting projects)*
5. *If a line has a name entered, then a signature is required in the signature space or if blank, an NA is required in the last column.*

Columbia Energy
AND ENVIRONMENTAL SERVICES

CEES-1409, Rev. 1

Process Control Plan for the TBI System

April 2019

1806 Terminal Drive
Richland, Washington 99354
Phone: 509.946.7111
Fax: 509.946.9365
www.columbia-energy.com

Table of Contents

1.0 Scope 1
1.1 Purpose 1
1.2 Design Basis 1
1.3 System Overview 1
1.4 TBI Valve Positions 1
2.0 Operating Modes 2
2.1 TBI Startup 3
2.2 TBI Processing 4
2.3 TBI Batch Transfer 4
2.4 TBI Return to Tank 5
2.5 TBI Filter Back Flush 7
2.6 TBI System Flush 8
2.7 TBI Piping Blowdown 9
2.8 TBI Column Drying 11
2.9 TBI Shut Down 12
2.10 TBI Off-Normal Conditions 13
3.0 Development Software 13
4.0 Interlocks 13
5.0 References 13

List of Figures

Figure 1. Valve Positions for V-006. 2
Figure 2. Valve Positions for V-104. 2
Figure 3. Valve Positions for V-105. 2

List of Tables

Table 1. TBI Valve Positions. 1
Table 2. Valve Positions for TBI Startup. 3
Table 3. Valve Positions for TBI Batch Transfer. 5
Table 4. Valve Positions for TBI Return to Tank. 6
Table 5. Valve Positions for TBI Back Flush. 8
Table 6. Valve Positions for TBI System Flushing. 9
Table 7. Valve Positions for TBI Pipe Blowdown. 10
Table 8. Valve Positions for TBI Delay Tote Blowdown. 11
Table 9. Valve Positions for TBI Column Drying. 12
Table 10. Valve Positions for TBI Shut Down. 12
Table 11. Interlocks Description. 13

List of Terms

Acronyms and Abbreviations

Ba	barium
Cs	cesium
CV	check valve
FAL	flow alarm low
FIT	flow indicating transmitter
HMI	human-machine interface
HS	hand switch
IXC	ion exchange column
LIT	level indicating transmitter
LSH	level switch high
NaOH	sodium hydroxide
PAH	pressure alarm high
PI	pressure indicator
PIT	pressure indicating transmitter
PLC	programmable logic controller
PRV	pressure relief valve
TBI	test bed initiative

Units

psig	pounds per square inch gauge
scfm	standard cubic feet per minute

1.0 Scope

The test bed initiative (TBI) system will be installed in tank 241-SY-101. The waste will be pumped out of tank 241-SY-101 riser-014 and transferred to a delay tote for accumulation. When the delay tote is full, operations will take readings to determine the radiation levels. If the radiation levels are low enough, the waste from the delay tote will be transferred to one of the process totes. This method will continue until all six process totes are filled with nominally 333 gallons each.

1.1 Purpose

The purpose of this document is to describe how the TBI system is going to process Hanford Site waste into six 375-gallon totes that will receive 333 gallons each for a nominal total of 2,000 gallons.

1.2 Design Basis

The design basis for the TBI system is being developed from APT-F&R-1118-R0, *Test Bed Initiative for Off-site Treatment and Disposal of 2,000 Gallons of Hanford Low Activity Waste.*

1.3 System Overview

Waste processing will be achieved via a set of filters and an ion exchange column (IXC) to remove undissolved solids and ^{137}Cs. The TBI system will discharge the pre-treated waste/mixed low-level waste into portable containers (totes) that are designed and certified for offsite shipment for further treatment and disposal.

1.4 TBI Valve Positions

Table 1 shows what orientation the three-way ball valves V-006, V-104, and V-105 are in during the different operating modes. Piping and instrumentation diagram CEES-16-604-P-004, *DOE TBI SY-101 P&ID,* can be used as a reference when determining the orientation of the valves.

Table 1. TBI Valve Positions.

Operating Mode	V-006 Position	V-104 Position	V-105 Position
Startup	1	1	1
Processing	1	1	1
Batch Transfer	2	1	3
Return to Tank	1	1	1
Filter Back Flush	1	2	2
System Flush	1	2	2
Column Drying	2	1	3
Pipe Blowdown	3	2	2
Delay Tote Blowdown	3	1	1
Shut Down	2	1	3

Figure 1. Valve Positions for V-006.

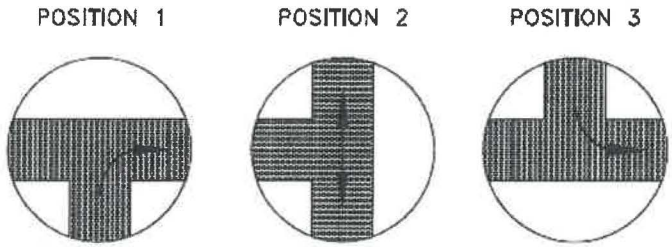

Reference drawing CEES-16-604-M-005, DOE TBI SY-101 IX Riser Adapter Assembly, for V-006 positions.

Figure 2. Valve Positions for V-104.

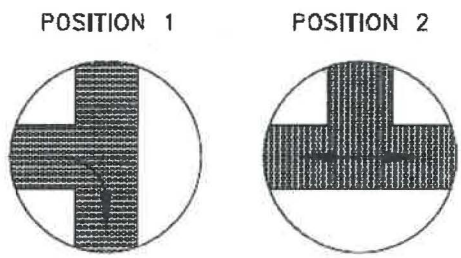

Reference drawing CEES-16-604-M-023, DOE TBI SY-101 Delay Tote Assembly, for V-104 positions.

Figure 3. Valve Positions for V-105.

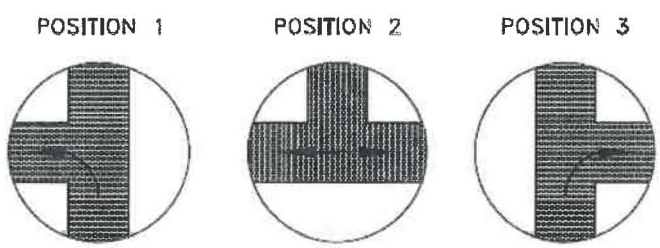

Reference drawing CEES-16-604-M-023, DOE TBI SY-101 Delay Tote Assembly, for V-105 positions.

2.0 Operating Modes

There are nine different operating modes, not including the off-normal mode associated with the TBI system. The nine modes are: startup, processing, batch transfer, return to tank, filter back flush, system flush, column drying, pipe blowdown, and shut down. All operating modes will be under administrative controls.

Note: The TBI system includes an in-tank Pressure Transmitter (PT-004) with unknown tolerance to radiation exposure. While operational, personnel may use PT-004/PI-004 to monitor the outlet pressure at Pump P-001. A high outlet pressure (40+ PSIG) may indicated that the filter assembly has become plugged and needs a back flush. If PT-004 becomes non-operations, personnel should use flow indication (FI-102) to monitor the filter assembly for plugging. Low/zero flow may indicate that the filter assembly has become plugged and needs a back flush.

2.1 TBI Startup

The TBI system will need to have administrative controls in place for starting the waste transfer from tank 241-SY-101 to the delay tote, including verification of the following pre-start conditions:

- Emergency stops HS-900A, HS-900B, HS-900C, and HS-900D are de-activated.
- No interlocks are active.
- HS-001C is in forward (FWD) operation.
- LSH-103 is not active and no visible leaks are detected in the catch containment tubs.
- Active tank ventilation.
- Process tote vent valves V-311, V-312, V-313, V-314, V-315, and V-316 are open until package handling.

Pumps P-001, P-111, and P-202 are not running. The air purge line, spray ring line, and back flush skid are all disconnected. The line to the process totes are connected and all process tote valves (V-301 through V-306) are closed as shown in Table 2.

Prior to operating a dry (or potentially dry) feed pump P-001 (e.g., prior to first operation of the feed pump), perform a backflush in accordance with Section 2.5 and run the feed pump in reverse for two minutes in accordance with Section 2.4. This will flood the pump stator and inlet piping to protect the stator from damage due to friction. It will also preclude the potential to build up an electrostatic charge in the pump that could ignite flammable gases (if present).

Table 2 lists the valve positions needed for the TBI system to start feed pump P-001.

Table 2. Valve Positions for TBI Startup.

Valve	Valve Position	Valve	Valve Position
V-006	Position 1	V-201	Closed
V-007	Closed	V-301	Closed
V-008	Closed	V-302	Closed
V-012	Closed	V-303	Closed
V-104	Position 1	V-306	Closed
V-105	Position 1	V-307	Closed
V-106	Closed	V-308	Closed
V-107	Open	---	---

2.2 TBI Processing

Note: If returning from the filter back flush or return to tank operations and the programming parameter for FIT-102 called "Operation mode" was changed from "Forward Total" to "Reverse Total" will need to be changed back to "Forward Total". Once this parameter is changed to "Forward Total", only flow going in the forward direction will be totalized.

Processing of tank 241-SY-101 supernatant will commence after the valves have been positioned according to Table 2. After all valves are verified in the correct position, the totalizer value for transmitter FIT-102 will be reset from the operator enclosure panel (ENCL-400) by pressing push button HS-102. This will reset the total gallons for transmitter FIT-102 to 0 gallons for the batch run.

The operator will start pump P-001 from the operator enclosure panel (ENCL-400) by pressing push button HS-001A to start flow for the TBI system. If operational, Indicator PI-004 located on the operator enclosure panel (ENCL-400) will start to increase in pressure as the supernatant starts to flow. If the filter and IXC have been drained, it will take a few minutes for the supernatant to fill the cartridge filter and the IXC. As the supernatant continues to flow toward the delay tote, transmitter FIT-102 in the delay tote top hat will begin to measure the volume of flow being supplied to the delay tote.

The programmable logic controller (PLC) software has a setpoint of 333 gallons for transmitter FIT-102 in the PLC logic that will shut down pump P-001 when the totalizer setpoint is reached. As a backup to the flow totalizer, the PLC software also has a high-level setpoint for transmitter LIT-101 that will shut down pump P-001 when the high-level setpoint is reached. The purpose of LIT-101 is to prevent over-filling of the delay tote and provide an indication of the level of supernatant in the delay tote on the human-machine interface (HMI). The HMI will have the ability to change the level setpoint of LIT-101. This setpoint will be password protected. The setpoint for LIT-101 will be established during the Factory Acceptance Testing (FAT).

2.3 TBI Batch Transfer

When the setpoint for transmitter FIT-102 has reached 333 gallons or the alarm setpoint LAH-101 for transmitter LIT-001 has been reached, the waste will need to be transferred to the process totes tote indicates acceptable decontamination (^{137}Cs and ^{137m}Ba depletion) occurred. Prior to transferring the waste to the process totes, radiological dose-rate surveys of the delay tote will be performed to verify that the batch contained in the delay

The TBI system will need to have administrative controls in place for transferring the waste from the delay tote to the selected process tote, including verification of the following pre-start conditions:

- Emergency stops HS-900A, HS-900B, HS-900C, and HS-900D are de-activated.
- No interlocks are active.
- LSH-103 is not active and no visible leaks are detected in the catch containment tubs.
- Active tank ventilation.
- Process tote vent valves V-311, V-312, V-313, V-314, V-315, and V-316 are open until shipment.

Pumps P-101, P-111, and P-202 are not running. The air purge line, spray ring line, and back flush skid are all disconnected. The line to the process totes is connected, but all process tote valves (V-301 through V-306) are closed as shown in Table 3.

Table 3 lists the valve positions the TBI system needs to be in for utilizing pump P-111. Valves V-301 through V-306 are closed but one of these valves will be opened to receive the supernatant waste from the delay tote. This will be part of the administrative controls for waste transfer and storage for shipping.

Table 3. Valve Positions for TBI Batch Transfer.

Valve	Valve Position	Valve	Valve Position
V-006	Position 2	V-301*	Closed
V-007	Open	V-302*	Closed
V-008	Open	V-303*	Closed
V-012	Closed	V-304*	Closed
V-104	Position 1	V-305*	Closed
V-105	Position 3	V-306*	Closed
V-106	Closed	V-307	Closed
V-107	Open	V-308	Closed
V-201	Closed	--	--

* Indicates one valve needs to be open for batch transfer.

After the operator verifies all valves positions are correct, pump P-111 is started from the operator enclosure panel (ENCL-400) by pressing push button HS-111A. Pump P-111 will continue to run until the operator shuts the pump off from the operator enclosure panel (ENCL-400) by pressing push button HS-111B. Transmitter LIT-101 can be used as an indicator for the operator to determine the delay tote level, when the level reads approximately zero, the delay tote should be empty and the 333 gallons of supernatant (minus the heel left in the bottom of the delay tank) has been transferred to the receiving process tote. During Factory Acceptance Testing (FAT) the heel volume will be measured. The flow totalizer can be reset during retrieval, if desired, to retrieve an additional volume equal to the volume of the heel.

After the supernatant has been transferred to the process tote, the operator will open valve V-106 to allow any supernatant remaining in the line to gravity feed to the process tote. After 30 minutes, valve V-105 will be turned to position 1. With the exception of one valve, valves V-301 through V-306 are to be closed.

2.4 TBI Return to Tank

This operation is to return unacceptable waste held in the delay tote back to tank 241-SY-101. If the supernatant in the delay tote needs to return to tank 241-SY-101, the operator will have administrative controls in place for returning the supernatant to tank 241-SY-101, including verification of the following pre-start conditions:

- Perform a backflush per Section 2.5 as required.
- Emergency stops HS-900A, HS-900B, HS-900C, and HS-900D are de-activated.

- No interlocks are active.
- HS-001C is in reverse (REV) operation.
- Active tank ventilation.
- Process tote vent valves V-311, V-312, V-313, V-314, V-315, and V-316 are open until shipment.

Pumps P-001, P-111, and P-202 are not running. The air purge line, spray ring line, and back flush skid are all disconnected. The line to the process totes are connected, but all process tote valves (V-301 through V-306) are closed as shown in Table 4.

The line up in Table 4 places the valves in the correct position to transfer waste back to tank 241-SY-101.

Table 4. Valve Positions for TBI Return to Tank.

Valve	Valve Position	Valve	Valve Position
V-006	Position 1	V-301	Closed
V-007	Closed	V-302	Closed
V-008	Closed	V-303	Closed
V-012	Closed	V-304	Closed
V-104	Position 1	V-305	Closed
V-105	Position 1	V-306	Closed
V-106	Open	V-307	Closed
V-107	Open	V-308	Closed
V-201	Closed	--	--

Note: If the volume of supernatant returning to tank 241-SY-101 needs to be monitored a programming parameter called "Operation mode" located within FIT-102 needs to be changed from "Forward Total" to "Reverse Total". Once this parameter is changed to "Reverse Total" only flow going in the reverse direction will be totalized. Prior to starting pump P-001 in reverse the totalizer value for transmitter FIT-102 can be reset from the operator enclosure panel (ENCL-400) by pressing push button HS-102. This will reset the total gallons for transmitter FIT-102 to 0 gallons.

After the operator verifies all valve positions are correct, pump P-001 is started in reverse from the operator enclosure panel by pressing push button HS-001A. A red running light will illuminate on the operator enclosure panel when pump P-001 starts. Pump P-001 will continue to run until the operator shuts the pump off from the operator enclosure panel by pressing push button HS-001B. The red running light should not be illuminated on the operator enclosure panel.

Transmitter LIT-101 can be used as an indicator for the operator to determine the delay tote level. When transmitter LIT-101 reads approximately zero, the delay tote should be empty and the supernatant should be transferred back to tank 241-SY-101.

If needed, pump P-111 may assist with a batch return to tank 241-SY-101. For this operation, change the position of valve V-104 from "Position 1" to "Position 2" and run pumps P-111 and P-001 simultaneously.

2.5 TBI Filter Back Flush

When flow FI-102 reaches the alarm setpoint (FAL-102) set in the PLC software, an alarm will activate on the HMI to inform the operator that back flushing needs to be initiated. If back flushing is not performed and the flow reaches the alarm setpoint (FALL-102) an alarm will activate on the HMI informing the operator to stop processing and initiate back flushing. These alarms are activated when filter FLT-013 builds up particles on the cartridges. In addition, (when operational) PI-004 has an alarm setpoint (PAH-004) set in the PLC software that will activate on the HMI to inform the operator that back flushing needs to be initiated.

Note: The P-001 feed pump will need to be stopped prior to initiating the back flush.

If flushing is not performed when the low/low-flow alarm FALL-102 is activated and the pressure increases above 50 psig, check valve CV-003 will open and dump the waste back into the tank. Check valve CV-003 has a cracking pressure of 40 psig. The purpose of the pressure relief valve (PRV-012), which has a pressure relief of 90 psig is to limit the system piping pressure to less than 100 psig. Valve PRV-012 should not be used to relieve pressure for the column and filter; it is intended to prevent excessive pressure developing in the system upstream of the tank riser adapter. If valve PRV-012 opens (as indicated by a decrease or loss of flow), all operations will need to be stopped. The operator will stop pump P-001 and the pressure will need to be relieved low enough for valve PRV-012 to close before operations can resume.

The operator will have administrative controls in place for filter back flushing, including verification of the following pre-start conditions:

- Emergency stops HS-900A, HS-900B, HS-900C, and HS-900D are de-activated.
- No interlocks are active.
- HS-001C is in forward (FWD) operation.
- Active tank ventilation.
- Process tote vent valves V-311, V-312, V-313, V-314, V-315, and V-316 are open until process tote handling.

Pumps P-001, P-111, and P-202 are not running. The air purge line and spray ring line are both disconnected. The back flush skid is connected. The line to the process totes are connected, but all process tote valves (V-301 through V-306) are closed as shown in Table 5.

Table 5 lists the valve positions the TBI system needs to be in for back flushing.

Table 5. Valve Positions for TBI Back Flush.

Valve	Valve Position	Valve	Valve Position
V-006	Position 1	V-301	Closed
V-007	Closed	V-302	Closed
V-008	Closed	V-303	Closed
V-012	Closed	V-304	Closed
V-104	Position 2	V-305	Closed
V-105	Position 2	V-306	Closed
V-106	Closed	V-307	Open
V-107	Open	V-308	Open
V-201	Open	--	--

Note: If the volume of back flushing needs to be monitored a programming parameter called "Operation mode" located within FIT-102 needs to be changed from "Forward Total" to "Reverse Total". Once this parameter is changed to "Reverse Total" only flow going in the reverse direction will be totalized. Prior to starting pump P-001 in reverse the totalizer value for transmitter FIT-102 can be reset from the operator enclosure panel (ENCL-400) by pressing push button HS-102. This will reset the total gallons for transmitter FIT-102 to 0 gallons.

Once the operator verifies the valve line up and the back flush skid is connected, the totalizer value for transmitter FIT-102 will be reset from the operator enclosure panel (ENCL-400) by pressing push button HS-102. This will reset the total gallons for transmitter FIT-102 to 0 gallons. Pump P-202 is started from the back flush skid enclosure (ENCL-200) by pressing push button HS-202A. A red running light will illuminate on the back flush skid enclosure when pump P-202 starts.

Indicator PI-004 can be used to monitor the system pressure while back flushing. Additionally, Indicator FI-102 can be used to monitor flow and total gallons used while back flushing.

Pump P-202 will continue to run until the operator shuts the pump off from the back flush skid enclosure (ENCL-200) by pressing push button HS-202B. The red running light should not be illuminated on the back flush enclosure.

2.6 TBI System Flush

At the conclusion of processing 2,000 gallons of tank 241-SY-101 supernatant, the system will require flushing to remove line holdup.

To perform flushing of the TBI system, caustic is pumped from the backflush skid though the TBI system, using pump P-202 located outside of the tank farm at the back flush skid. Pumps P-001, P-111, and P-202 are not running. The air purge line is disconnected and the spray ring line is disconnected. The back flush skid is connected. The line to the process totes is connected, but all process tote valves (V-301 through V-306) are closed as shown in Table 6.

The operator will have administrative controls in place for TBI system flushing, including verification of the following pre-start conditions:

- Emergency stops HS-900A, HS-900B, HS-900C, and HS-900D are de-activated.

- No interlocks are active.
- HS-001C is in forward (FWD) operation.
- Back flush tank (TK-203) is filled with NaOH.
- Active tank ventilation.
- Process tote vent valves V-311, V-312, V-313, V-314, V-315, and V-316 are open until shipment.

Table 6 lists the valve positions the TBI system needs to be in for flushing the piping.

Table 6. Valve Positions for TBI System Flushing.

Valve	Valve Position	Valve	Valve Position
V-006	Position 1	V-301	Closed
V-007	Closed	V-302	Closed
V-008	Closed	V-303	Closed
V-012	Closed	V-304	Closed
V-104	Position 2	V-305	Closed
V-105	Position 2	V-306	Closed
V-106	Closed	V-307	Open
V-107	Open	V-308	Open
V-201	Open	--	--

Once the operator verifies the valve line up and the back flush skid is connected, the totalizer value for transmitter FIT-102 will be reset from the operator enclosure panel (ENCL-400) by pressing push button HS-102. This will reset the total gallons for transmitter FIT-102 to 0 gallons. Pump P-202 is started from the back flush skid enclosure (ENCL-200) by pressing push button HS-202A. A red running light will illuminate on the back flush skid enclosure when pump P-202 starts.

If operational, Indicator PI-004 can be used to monitor the system pressure while flushing. The waste will be routed back into tank 241-SY-101 through check valve CV-003. The system pressure will need to be greater than 50 psig to overcome the cracking pressure of the check valve. Additionally, transmitter FI-102 can be used to monitor flow and total gallons used while flushing the system.

Pump P-202 will continue to run until the operator shuts the pump off from the back flush skid enclosure (ENCL-200) by pressing push button HS-202B. The red running light will turn off after the pump is stopped on the back flush enclosure.

2.7 TBI Piping Blowdown

Once the TBI system has been back flushed with NaOH, the TBI system piping including the process tote distribution manifold will be purged to remove any remaining fluids. Pumps P-001, P-111, and P-202 are not running. The air purge line is connected and the spray ring line is disconnected. The back flush skid is disconnected. Air will be supplied at a set flow rate and used to purge the lines back to the totes. The valves supplying the totes (V-301 through V-306)

will be opened one at a time to ensure all of the piping and flexible metal pipes are fully purged. All process totes are still connected until the piping blowdown is complete.

The operator will have administrative controls in place for piping blowdown, including verification of the following pre-start conditions:

- Emergency stops HS-900A, HS-900B, HS-900C, and HS-900D are de-activated.
- No interlocks are active.
- HS-001C is in reverse (REV) operation.
- Active tank ventilation.
- Process tote vent valves V-311, V-312, V-313, V-314, V-315, and V-316 are open until shipment.

Table 7 lists the valve positions the TBI system needs to be in for piping blowdown.

Table 7. Valve Positions for TBI Pipe Blowdown.

Valve	Valve Position	Valve	Valve Position
V-006	Position 3	V-301*	Closed
V-007	Open	V-302*	Closed
V-008	Closed	V-303*	Closed
V-012	Open	V-304*	Closed
V-104	Position 2	V-305*	Closed
V-105	Position 2	V-306*	Closed
V-106	Closed	V-307	Closed
V-107	Open	V-308	Closed
V-201	Closed	--	--

* Indicates one valve needs to be open for pipe blowdown.

Once the operator verifies the valve line up, air can be fed into the system until all piping has been determined to be dry. Transmitter PIT-011 can be used to monitor the pressure of the air being fed into the piping during blowdown. When all piping has been blown down for the process, tote-piping stop the air feed.

For delay tote blowdown, the operator will have administrative controls in place, including verification of the following pre-start conditions:

- Emergency stops HS-900A, HS-900B, HS-900C, and HS-900D are de-activated.
- No interlocks are active.
- HS-001C is in reverse (REV) operation.
- Active tank ventilation.
- Process tote vent valves V-311, V-312, V-313, V-314, V-315, and V-316 are open until shipment.

Table 8 lists the valve positions the TBI system needs to be in for delay tote blowdown.

Table 8. Valve Positions for TBI Delay Tote Blowdown.

Valve	Valve Position	Valve	Valve Position
V-006	Position 3	V-301	Closed
V-007	Open	V-302	Closed
V-008	Closed	V-303	Closed
V-012	Open	V-304	Closed
V-104	Position 1	V-305	Closed
V-105	Position 1	V-306	Closed
V-106	Closed	V-307	Closed
V-107	Open	V-308	Closed
V-201	Closed	--	--

Once the operator verifies the valve line up, air can be fed into the system until all piping to the delay tote has been determined to be dry. Transmitter PIT-011 can be used to monitor the pressure of the air being fed into the piping during blowdown. When all piping has been blown down for the delay, tote-piping stop the air feed.

2.8 TBI Column Drying

Once the TBI system has been flushed with NaOH and the piping has been blown down, the IXC will be purged of fluid and blown dry with air.

Pumps P-001, P-111, and P-202 are not running. The air purge line is connected and the spray ring line is disconnected. The back flush skid is disconnected. Air will be supplied at a set flow rate and used to purge the IXC and filter back into tank 241-SY-101.

The operator will have administrative controls in place for drying the column, including verification of the following pre-start conditions:

- Emergency stops HS-900A, HS-900B, HS-900C, and HS-900D are de-activated.
- No interlocks are active.
- HS-001C is in reverse (REV) operation.
- Active tank ventilation.
- Process tote vent valves V-311, V-312, V-313, V-314, V-315, and V-316 are open until shipment.

Table 9 lists the valve positions the TBI system needs to be in for column drying.

Table 9. Valve Positions for TBI Column Drying.

Valve	Valve Position	Valve	Valve Position
V-006	Position 2	V-301	Closed
V-007	Open	V-302	Closed
V-008	Closed	V-303	Closed
V-012	Open	V-304	Closed
V-104	Position 1	V-305	Closed
V-105	Position 3	V-306	Closed
V-106	Open	V-307	Closed
V-107	Open	V-308	Closed
V-201	Closed	--	--

Once the operator verifies the valve line up, the air supply will be opened to the system. Pressure transmitter PIT-011 can be used to monitor the pressure of the air being fed into the IXC during blowdown. The operator will start a timer on the HMI to time the drying of the column, which will require approximately 96 hours at 3 scfm. When timer has expired, shut down the supply of air.

2.9 TBI Shut Down

When supernatant pumping operations are complete, the TBI system is placed into a shut down and storage condition. The operator will have administrative controls in place for shut down and storage. The following valve configuration is used for TBI shut down. Table 10 lists the valve positions the TBI system needs to be in for shutdown.

Table 10. Valve Positions for TBI Shut Down.

Valve	Valve Position	Valve	Valve Position
V-006	Position 2	V-301	Closed
V-007	Open	V-302	Closed
V-008	Open	V-303	Closed
V-012	Closed	V-304	Closed
V-104	Position 1	V-305	Closed
V-105	Position 3	V-306	Closed
V-106	Open	V-307	Closed
V-107	Open	V-308	Closed
V-201	Closed	--	--

The back flush tote is emptied and the line from the back flush skid to the process totes can be removed. Valves V-007 and V-008 are opened to allow any hydrogen buildup in the piping to vent. Process tote vent valves V-311, V-312, V-313, V-314, V-315, and V-316 are open until shipment.

2.10 TBI Off-Normal Conditions

An off-normal condition is anything that prevents the TBI system from operating or shuts the TBI system down (such as loss of power, loss of air, or e-stop activated will cause) and any active pump to stop.

3.0 Development Software

The software used for developing and operating the TBI system will consist of FactoryTalk® View Machine Edition for the HMI and RSLogix™ 5000 for the PLC programming. Columbia Energy will obtain the HMI and PLC software packages.

4.0 Interlocks

Table 11 lists all the software and hardwired interlocks for the TBI system.

Table 11. Interlocks Description.

Interlock	Description	Initiating Event Trigger	Control Action
I1	E-stop	Manual activation of e-stop push button (HS-900A, HS-900B, HS-900C, HS-900D)	Stops P-001 Stops P-111 Stops P-202
I2	Level in delay tote has reached the maximum fill level	Level (LI-101) in delay tote has exceeded high setpoint (LAH-101)	Stops P-001 in FWD
I3	Leak in delay tote containment box	LE-102 active (LSH-103)	Stops P-001 in FWD Stops P-111 Stops P-202

5.0 References

APT-F&R-118-R0, 2018 *Test Bed Initiative for Off-site Treatment and Disposal of 2,000 Gallons of Hanford Low Activity Waste*, Rev. 0, Aerostar Perma-Fix TRU Services LLC, Oak Ridge, Tennessee.

CEES-16-604-M-005, 2019, DOE TBI SY-101 IX Riser Adapter Assembly, Rev. 0, Columbia Energy and Environmental Services, Inc., Richland, Washington.

CEES-16-604-M-023, 2019, DOE TBI SY-101 Delay Tote Assembly, Rev. 0, Columbia Energy and Environmental Services, Inc., Richland, Washington.

CEES-16-604-P-004, 2019, *DOE TBI SY-101 P&ID,* Rev. 0, Columbia Energy and Environmental Services, Inc., Richland, Washington.

® FactoryTalk is a registered trademark of Rockwell Automation, Inc.
™ RSLogix is a trademark of Rockwell Automation, Inc.