S

ENGINEERING CHANGE NOTICE

0050605

Page 1 of 2

1. ECN 645117

Proj. ECN

2. ECN Category (mark one)	3. Originator's Name, Organization, MSIN, and Telephone No.	4. USQ Required?	5. Date
Supplemental []	A.N. Praga, R3-86, 376-0721	[] Yes [X] No	August 6, 1998
Direct Revision [X]	6. Project Title/No./Work Order No.	7. Bldg./Sys./Fac. No.	8. Approval Designator
Change ECN []	SNF Project	N/A	SQ
Temporary []			
Standby []	9. Document Numbers Changed by this ECN (includes sheet no. and rev.)	10. Related ECN No(s).	11. Related PO No.
Supersedure []	HNF-SD-SNF-TI-009, Rev 1		
Cancel/Void []			

12a. Modification Work	12b. Work Package No.	12c. Modification Work Complete	12d. Restored to Original Condition (Temp. or Standby ECN only)
[ ] Yes (fill out Blk. 12b)	N/A	N/A	N/A
[X] No (NA Blks. 12b, 12c, 12d)		Design Authority/Cog. Engineer Signature & Date	Design Authority/Cog. Engineer Signature & Date

13a. Description of Change

13b. Design Baseline Document? [X] Yes [X] No

Title change to add "Volume 1, Fuel" to full title. All references to sludge are now included in 105-K Basin Material Design Basis Feed Description for Spent Nuclear Fuel Project Facilities, Volume 2, Sludge. (Via ECN# 649401)

1) Section 1.2: include "(see volume 2)" after the first paragraph reference to sludge.
2) Section 2.0: all sludge information from the summary tables removed.
3) Section 5.0: this section deleted and reference added to see Volume 2.
4) Section 6.0: sludge references removed.
5) Appendix E: this sludge section is deleted, and reference added to see Volume 2.
6) Section 1.1: reference to DESH removed and effort recognized as belonging to the SNF Project, since FDH as well as DESH is responsible to DOE for the SNF Project.
7) Section 1.2.1: this section removed as it contains information that is included in ECN# 645037 (Rev 1) under description and justification.
8) Appendix G: this section deleted as it was an independent review of Rev 0, which is no longer valid.

14a. Justification (mark one)

Criteria Change	[ ]	Design Improvement	[ ]	Environmental	[ ]	Facility Deactivation	[ ]
As-Found	[ ]	Facilitate Const	[ ]	Const. Error/Omission	[ ]	Design Error/Omission	[ ]

14b. Justification Details

This document has been divided into two volumes, one consisting of the spent nuclear fuel inventory (Volume 1), and one consisting of the sludge inventory in the 105-K Basins. This allows freedom for the Sludge Subproject to revise their document when necessary as updated chemical and radionuclide information becomes available. Each volume from this point on becomes freestanding and shall be revised independently, as necessary.

15. Distribution (include name, MSIN, and no. of copies)

See distribution sheet

RELEASE STAMP

DATE: AUG 12 1998

STA: 4

HANFORD RELEASE

ID: 2

APR 1999 RECEIVED EDMC

A-7900-013-2 (05/96) GEF095

A-7900-013-1

ENGINEERING CHANGE NOTICE	Page 2 of 2	1. ECN (use no. from pg. 1) 645117

16. Design Verification Required	17. Cost Impact						18. Schedule Impact (days)		
	ENGINEERING			CONSTRUCTION					
[ ] Yes	Additional	[ ]	$	Additional	[ ]	$	Improvement	[ ]	
[X] No	Savings	[ ]	$NA	Savings	[ ]	$NA	Delay	[ ]	NA

19. Change Impact Review: Indicate the related documents (other than the engineering documents identified on Side 1) that will be affected by the change described in Block 13. Enter the affected document number in Block 20.

SDD/DD	[ ]	Seismic/Stress Analysis	[ ]	Tank Calibration Manual	[ ]
Functional Design Criteria	[ ]	Stress/Design Report	[ ]	Health Physics Procedure	[ ]
Operating Specification	[ ]	Interface Control Drawing	[ ]	Spares Multiple Unit Listing	[ ]
Criticality Specification	[ ]	Calibration Procedure	[ ]	Test Procedures/Specification	[ ]
Conceptual Design Report	[ ]	Installation Procedure	[ ]	Component Index	[ ]
Equipment Spec.	[ ]	Maintenance Procedure	[ ]	ASME Coded Item	[ ]
Const. Spec.	[ ]	Engineering Procedure	[ ]	Human Factor Consideration	[ ]
Procurement Spec.	[ ]	Operating Instruction	[ ]	Computer Software	[ ]
Vendor Information	[ ]	Operating Procedure	[ ]	Electric Circuit Schedule	[ ]
OM Manual	[ ]	Operational Safety Requirement	[ ]	ICRS Procedure	[ ]
FSAR/SAR	[ ]	IEFD Drawing	[ ]	Process Control Manual/Plan	[ ]
Safety Equipment List	[ ]	Cell Arrangement Drawing	[ ]	Process Flow Chart	[ ]
Radiation Work Permit	[ ]	Essential Material Specification	[ ]	Purchase Requisition	[ ]
Environmental Impact Statement	[ ]	Fac. Proc. Samp. Schedule	[ ]	Tickler File	[ ]
Environmental Report	[ ]	Inspection Plan	[ ]		[ ]
Environmental Permit	[ ]	Inventory Adjustment Request	[ ]		[ ]

20. Other Affected Documents: (NOTE: Documents listed below will not be revised by this ECN.) Signatures below indicate that the signing organization has been notified of other affected documents listed below.

Document Number/Revision	Document Number/Revision	Document Number Revision
HNF-SD-SNF-TI-009, Volume 2, Rev 0 105-K Basin Material Design Basis Feed Description for Spent Nuclear Fuel Project Facilities, Volume 2, Sludge		

21. Approvals

	Signature	Date		Signature	Date
Design Authority	~~A.M. Sagreen~~		Design Agent		
Cog. Eng. A.N. Praga	A. N. Praga	8-6-98	PE		
Cog. Mgr. J.R. Frederickson	J.R. Frederickson	8/6/98	QA		
QA G.M. Davis	G.M. Davis	8/11/98	Safety		
Safety R.P. Omberg	R.P. Omberg for RPO	8/6/98	Design		
Environ.			Environ.		
Other			Other		

DEPARTMENT OF ENERGY

Signature or a Control Number that tracks the Approval Signature

ADDITIONAL

105-K BASIN MATERIAL DESIGN BASIS FEED DESCRIPTION FOR SPENT NUCLEAR FUEL PROJECT FACILITIES, VOLUME 1, FUEL

A. N. Praga
DE&S Hanford, Inc., Richland, WA 99352
U.S. Department of Energy Contract DE-AC06-96RL13200

EDT/ECN: 645117 UC: 510
Org Code: 2T950 Charge Code: LB051
B&R Code: EW3135040 Total Pages: 139

Key Words: N-Reactor fuel, 105-K Basin, SNF Project, spent nuclear fuel, fuel inventory, design basis feed, radionuclide inventory, chemical inventory, shielding basis, heat generation basis, safety/regulatory basis.

Abstract: This document provides estimated chemical and radionuclide inventories of spent nuclear fuel currently stored within the Hanford Site's 105-K Basins.

TRADEMARK DISCLAIMER. Reference herein to any specific commercial product, process, or service by trade name, trademark, manufacturer, or otherwise, does not necessarily constitute or imply its endorsement, recommendation, or favoring by the United States Government or any agency thereof or its contractors or subcontractors.

Printed in the United States of America. To obtain copies of this document, contact: Document Control Services, P.O. Box 950, Mailstop H6-08, Richland WA 99352, Phone (509) 372-2420; Fax (509) 376-4989.

8/12/98

Release Approval Date

DATE: HANFORD RELEASE
STA: 4 ID: 2
AUG 12 1998

Release Stamp

Approved for Public Release

RECORD OF REVISION	(1) Document Number VOL 1 HNF-SD-SNF-TI-009	Page 1

(2) Title

105-K Basin Material Design Basis Feed Description for Spent Nuclear Fuel Project Facilities, Volume 1, Fuel

CHANGE CONTROL RECORD — Page 1 of 2

(3) Revision	(4) Description of Change - Replace, Add, and Delete Pages	Authorized for Release (5) Cog. Engr.	(6) Cog. Mgr. Date
0	(7) Initial Release EDT# 613002 (8/01/95)	WL Willis 7/31/95	JR Frederickson 7/31/95
0A	Released via ECN# 191383 (12/20/95): Replace ^{60}Co and ^{244}Cm values in tables 2.2, 2.4, 2.5, 2.7, 3.5, 3.6, 3.7, 3.8, 3.9, and 3.10 to reflect better estimates of actual inventory. Change wording as shown on pages 29 and D-3 to account for change in ^{60}Co inventory numbers.	WL Willis 12/12/95	JR Frederickson 12/20/95
1	Released via ECN# 645037 (12/12/97): Incorporate ECN#645035 (which revised the tables to reflect: improved cross section data; a decision to use accountability data as the basis for total Pu; a corrected methodology for selection of the heat generation basis feed; and a revised decay date). Replace RADNUC output listings in Appendix B with updated runs for revised decay date. Add section 3.3.3.1 ("Limitations of the Methodology"). Change the pre-irradiation braze beryllium value (in sec 3.3.1) from 137 g per assembly to 1.37 g per assembly (this was a "type-o"--the 142 kg value remains unchanged in Table 3.4). Remove Figure 3.2, "Fuel Storage Areas..." and renumber subsequent figures in sec 3. Incorporate miscellaneous, non-substantive editorial changes throughout the document. Revise chemical tables (Tables 2.1 & 3.4).	DL Sherrell 12/11/97	JR Frederickson 12/11/97

CHANGE CONTROL RECORD			Page 2 of 2
(3) Revision	(4) Description of Change - Replace, Add, and Delete Pages	Authorized for Release (5) Cog. Engr.	(6) Cog. Mgr. Date
RS 2	Released via ECN# 645117 Title change to: 105-K Basin Material Design Basis Feed Description for Spent Nuclear Fuel Project Facilities, Volume 1, Fuel. All references to sludge are now included in 105-K Basin Material Design Basis Feed Description for Spent Nuclear Fuel Project Facilities, Volume 2, Sludge. (Via ECN# 649401) Changes include: The header of each page, then, is changed to read "HNF-SD-SNF-TI-009, Volume 1, Rev 2". Section 1.2: include "(see volume 2)" after the first paragraph reference to sludge. Section 2.0: all sludge information from the summary tables removed. Section 5.0: this section deleted and reference added to see Volume 2. Section 6.0: sludge references removed. Appendix E: this section referring to sludge is deleted, and reference added to see Volume 2. Other changes include: Section 1.1: reference to DESH removed and effort recognized as belonging to the SNF Project, since FDH as well as DESH is responsible to DOE for the SNF Project. Section 1.2.1: this section removed as it contains information that is included in ECN# 645037 (Rev 1) under description and justification. Appendix G: this section deleted as it was an independent review of Rev 0, which is no longer valid.	AN Praga A. N. Praga 8-6-98	JR Frederickson J.R. Frederickson 8/6/98

Table of Contents

1.0 INTRODUCTION 1
- 1.1 BACKGROUND 1
- 1.2 PURPOSE AND SCOPE 1

2.0 SUMMARY 3
- 2.1 NOMINAL DESIGN FEED 4
  - 2.1.1 Inventory Totals 4
  - 2.1.2 Unit Mass Uranium Inventory 7
- 2.2 SHIELDING DESIGN FEED BASES 9
- 2.3 SAFETY/REGULATORY ASSESSMENT FEED 9
- 2.4 HEAT GENERATION BASIS FEED 10
- 2.5 CRITICALITY ASSESSMENT FEED 11

3.0 N REACTOR FUEL 12
- 3.1 K BASIN DESCRIPTION 12
  - 3.1.1 Irradiated Fuel Storage at the KE and KW Basins 12
- 3.2 N REACTOR FUEL DESCRIPTION 15
  - 3.2.1 Fuel Fabrication 17
  - 3.2.2 Burnup and Time Since Discharge 18
- 3.3 NOMINAL N REACTOR DESIGN BASIS FEED 20
  - 3.3.1 N Reactor Fuel Chemical Content Methodology 20
  - 3.3.2 N Reactor Fuel Chemical Inventory 20
  - 3.3.3 N Reactor Fuel Radionuclide Content Methodology 22
    - 3.3.3.1 Limitations of the Methodology 23
  - 3.3.4 N Reactor Fuel Radionuclide Content 23
- 3.4 SHIELDING DESIGN BASIS FEED 27
- 3.5 SAFETY/REGULATORY ASSESSMENT DESIGN BASIS FEED 27
- 3.6 HEAT GENERATION BASIS FEED 28
- 3.7 CRITICALITY DESIGN BASIS FEED 28

4.0 SINGLE PASS REACTOR FUEL 33
- 4.1 BACKGROUND 33
- 4.2 FUEL DESCRIPTION 34
  - 4.2.1 Fuel Fabrication 36
- 4.3 FUEL INVENTORY 37
- 4.4 RADIONUCLIDE CONTENT 38
- 4.5 FUEL STORAGE 39

5.0 105-K BASIN SLUDGE (DELETED) 40

6.0 REFERENCES 41

APPENDIX A A-1

APPENDIX B B-1

APPENDIX C C-1

APPENDIX D D-1

APPENDIX E (DELETED) E-1

APPENDIX F F-1

APPENDIX G (DELETED) G-1

List of Figures

Figure 3.1: 105-K Basins 13
Figure 3.2: N Reactor Fuel Storage Canisters 14
Figure 3.3: N Reactor Mark IV Fuel Assembly 16
Figure 3.4: ^{137}Cs Shielding Design Basis Selection 29
Figure 4.1: Single Pass Reactor Fuel Elements 35

List of Tables

Table 1.1: Spent Fuel Project Facility Design Feeds 2
Table 2.1: Summary Chemical Constituents 5
Table 2.2: Summary Radionuclide Constituents 6
Table 2.3: Average Chemical Inventory/Unit Mass Uranium Summary 7
Table 2.4: Average Radionuclide Inventory/Unit Mass Uranium Summary 8
Table 2.5: Shielding Design Basis Summary 9
Table 2.6: Safety/Regulatory Assessment Design Basis Summary 10
Table 2.7: Heat Generation Basis Summary 11
Table 3.1: 105-N Reactor Fuel Element Description 18
Table 3.2: N Reactor Mark IV Fuel Burnup Summary 19
Table 3.3: N Reactor Mark 1A Fuel Burnup Summary 19
Table 3.4: N Reactor Fuel Chemical Inventory 21
Table 3.5: Radionuclide Inventory of the Combined K Basins 24
Table 3.6: K-East Basin Radionuclide Inventory 25
Table 3.7: K-West Basin Radionuclide Inventory 26
Table 3.8: Shielding Design Basis 30
Table 3.9: Safety/Regulatory Assessment Design Basis 31
Table 3.10: Safety/Regulatory Assessment Basis 32
Table 4.1: Operating Periods of the Hanford Single Pass Reactors 33
Table 4.2: Physical Characteristics of Single Pass Reactor Fuel 36
Table 4.3: Total Chemical Inventory in Single Pass Reactor Fuel Metals 37
Table 4.4: Single Pass Reactor Fuel Elements Stored in the K Basins 38
Table 4.5: Total Activity of Selected Radionuclides in SPR Fuel 39

List of Acronyms

CEDE	cumulative effective dose equivalents
CSB	Canister Storage Building
CVDF	Cold Vacuum Drying Facility
DOE	U.S. Department of Energy
EIS	Environmental Impact Statement
I&E	internally and externally cooled
MCO	multi-canister overpack
MWD	megawatt-day(s)
MT	metric ton(s)
MTHM	metric ton(s) heavy metal
MTU	metric ton(s) uranium
PUREX	plutonium uranium extraction
SPR	single pass reactor
SNF	spent nuclear fuel
USQ	unreviewed safety question

This page intentionally left blank.

105-K BASIN MATERIAL DESIGN BASIS FEED DESCRIPTION FOR SPENT NUCLEAR FUEL PROJECT FACILITIES, VOLUME 1, FUEL

1.0 INTRODUCTION

1.1 BACKGROUND

Metallic uranium Spent Nuclear Fuel (SNF) is currently stored within two water filled pools, 105-KE Basin (KE Basin) and 105-KW Basin (KW Basin), at the United States Department of Energy (U.S. DOE) Hanford Site, in south eastern Washington State. The Spent Nuclear Fuel Project (SNF Project) is responsible to DOE for operation of these fuel storage pools and for the 2100 metric tons of SNF materials that they contain. The SNF Project mission includes safe removal and transportation of all SNF from these storage basins to a new storage facility in the 200 East Area. To accomplish this mission, the SNF Project modifies the existing KE Basin and KW Basin facilities and constructs two new facilities: the 100 K Area Cold Vacuum Drying Facility (CVDF), which drains and drys the SNF; and the 200 East Area Canister Storage Building (CSB), which stores the SNF.

1.2 PURPOSE AND SCOPE

The purpose of this document is to describe the design basis feed compositions for materials stored or processed by SNF Project facilities and activities. This document is not intended to replace the *Hanford Spent Fuel Inventory Baseline* (WHC 1994b), but only to supplement it by providing more detail on the chemical and radiological inventories in the fuel (this volume) and sludge (see Volume 2).

A variety of feed definitions is required to support evaluation of specific facility and process considerations during the development of these new facilities. Six separate feed types have been identified for development of new storage or processing facilities. The approach for using each feed during design evaluations is to calculate the proposed facility flowsheet assuming each feed. The process flowsheet would then provide a basis for material compositions and quantities which are used in follow-on calculations.

Table 1-1 provides a list of the proposed feeds and the intended purpose of each feed definition.

Table 1.1: Spent Fuel Project Facility Design Feeds

Design Feed	Description/Purpose
Nominal Feed	Average feed to the facility over the plant life. Used to design systems that provide suitable performance over the entire plant life. Among other things, this feed is used to design shielding that will maintain radiation doses to workers as low as reasonably achievable (ALARA).
Shielding Basis Feed	A feed with the highest gamma shielding requirements as compared to the nominal feed (^{137}Cs is the dominate gamma contributor in either case). This feed is used to evaluate gamma shielding provided by the plant structure and equipment to determine if potential peak radiation dose rates are acceptable. This feed represents material which would be in the facility for short campaigns and would not be used for evaluations of performance over the entire plant life.
Safety/ Regulatory Assessment Feed	A feed with bounding ^{241}Am, plutonium isotopes, and ^{90}Sr radionuclides which, if released, dominate the estimate of dose to personnel (both onsite and offsite). This feed is used to analyze design basis accidents and support definition of mitigation systems. This feed represents material which would be in the facility for short campaigns and would not be used for evaluations of performance over the entire plant life.
Heat Generation Basis Feed	A feed with bounding amounts of those isotopes that dominate heat dissipation requirements. This feed is used to define heat removal requirements provided by the facility systems. The Heat removal basis feed represents the upper bound of the operating envelope for feed material which can be handled by the facility without special operating procedures or evaluations to determine if supplemental heat removal is required. This feed represents material which would be in the facility for short campaigns and would not be used for evaluations of performance over the entire plant life.
Criticality Assessment Feed	A feed with bounding fissile material content used to define criticality controls (e.g., geometric favorable equipment designs) which may impact the system design. This feed represents an upper bound of the operating envelope for material fissile content which could be introduced into the facility without special operating procedures or additional criticality safety evaluations. The feed represents material which would be in the facility for short campaigns and would not be used for evaluations of performance over the entire plant life. (Analysis to be completed in future revision).

2.0 SUMMARY

Chemical and radionuclide inventories are estimated for fuel stored in the KE and KW Basins. Inventory estimates are presented for the nominal (or overall average) inventory, selected shielding design basis, shielding design basis, selected safety/regulatory assessment design basis, selected heat generation basis, and selected criticality assessment basis materials. This document is intended to be revised as needed to support the Spent Nuclear Fuel Project.

The nominal design basis is presented as a total material inventory in the combined basins and as an average inventory per metric ton uranium (MTU). Bounding design basis feed compositions are also presented on a unit mass of uranium basis. The bounding feeds were selected by considering the range of radionuclide compositions in N Reactor and Single Pass Reactor fuel predicted to exist within the basins as a result of varying exposures and decay periods reported for each key (or group of fuel assemblies) in the accountability database.

Accountability records were used as a basis for the quantity, exposure variation, and decay time variation of stored fuel. Chemical constituents were estimated from the mid-point of fuel fabrication material impurity specification ranges. Variation of the chemical constituents over the specification ranges was not incorporated in the current design basis feed estimates. Radionuclide estimates were effectively derived from the following two computer models:

1) ORIGEN2 runs for N Reactor fuel provided radionuclide compositions for discharged fuel at selected exposure levels.

2) RADNUC 2A combined the ORIGEN2 fuel compositions at the selected points with accountability data on exposure and decay time to generate a composite radionuclide inventory decayed to a common date. Interpolations were used to estimate radionuclides in blocks of fuel irradiated to exposure levels between the ORIGEN 2 point projections.

Tests of the radionuclide estimate method indicate the interpolation results are within 2% of the ORIGEN2 projections for exposures near the interpolation points and within 10% of expected results for exposures between interpolation points. A comparison of ORIGEN2 and RADNUC outputs is included in the RADNUC documentation (WHC 1995a).

Development of the feed basis data emphasized best estimates of the actual bounds of material compositions, with a minimum of conservatism. This approach was used in order to allow future designs based on the bounds to apply known safety factors and avoid excessive over-design. Some conservatism is currently included in the radionuclide design basis bounds as a result of the following:

1) The decay date selected for presenting radionuclide inventories and bounds is May 31, 1998. This is conservative (i.e., early) in view of the November, 2000 official fuel removal operation startup date, and therefore, radionuclide inventories (and associated heat loads) could be reduced to reflect additional decay.

2) The radionuclide inventories were developed using the computer codes as described above. The plutonium inventory predicted was larger than that reported in the accountability data. While, the plutonium 239 and 240 isotope values in the overall total tables have been adjusted

to reflect the accountability plutonium inventory numbers, no adjustment has been made to the other isotope numbers in the tables (see section 3.3.3.1).

3) The shielding design basis includes a limited degree of conservatism due to selecting 16% ^{240}Pu content fuel, aged 13.5 years to 5/31/1998, as the composition basis. This represents material containing approximately 6.5% more ^{137}Cs and ^{90}Sr per MTU than the highest actual fuel content identified in the basin inventory (15.7% ^{240}Pu content Mark IV fuel, aged 14.5 years to 5/31/1998).

2.1 NOMINAL DESIGN FEED

The nominal design feed is an average of the current inventory of spent fuel stored in the K Basins. Tables in this section provide a summary of the current nominal design basis feed.

2.1.1 Inventory Totals

Tables 2.1 and 2.2 contain a summary of the nominal design basis feed information estimated for the entire inventory of fuel in the combined K Basins. Table 2.1 includes the chemical inventories, and Table 2.2 contains a summary of the radionuclide inventory for N Reactor fuel, Single Pass Reactor (SPR) fuel, and totals for each constituent.

Table 2.1: Summary Chemical Constituents

Chemical	N Reactor Fuel (kg)	SPR Fuel (kg)	Total (kg)
Al	1.70e+03	1.20e+02	1.82e+03
B	6.05e-01	1.20e-03	6.06e-01
Be	1.63e+02		1.63e+02
C	1.20e+03	2.54e+00	1.20e+03
Cd	6.05e-01	3.60e-03	6.09e-01
Co	1.54e+00	1.20e-03	1.54e+00
Cr	2.88e+02	2.20e-01	2.88e+02
Cu	1.66e+02	1.86e-01	1.66e+02
Fe	9.41e+02	1.38e+00	9.42e+02
H	8.06e+00		8.06e+00
Hf	3.02e+01		3.02e+01
Li		9.60e-03	9.60e-03
Mg	5.58e+01	8.45e-02	5.59e+01
Mn	6.03e+01	8.45e-02	6.04e+01
Mo	7.54e+00		7.54e+00
N	1.70e+02	3.38e-01	1.70e+02
Na	3.02e+00		3.02e+00
Ni			2.96e+02
O	2.94e+02	1.74e+00	6.53e+00
	6.53e+00		
Pb	1.52e+01	4.58e-01	1.57e+01
Si	2.77e+02		2.77e+02
Sm	6.54e+00		6.54e+00
Sn	2.19e+03		2.19e+03
Sr	7.33e+01		7.33e+01
Ti	7.54e+00		7.54e+00
V	7.54e+00		7.54e+00
W	7.68e+00		7.68e+00
Kr	7.71e+01		7.71e+01
Xe	1.04e+03		1.04e+03
Zr	1.48e+05		1.48e+05
U	2.10e+06	3.38e+03	2.10e+06
Np	8.11e+01		8.11e+01
Pu	4.12e+03		4.12e+03
Am	1.09e+02		1.09e+02
Cm	1.78e-02		1.78e-02
Se	1.20e+01		1.20e+01
Tc	1.70e+02		1.70e+02
Pd	1.33e+02		1.33e+02
I	4.61e+01		4.61e+01
Cs	4.65e+02		4.65e+02
Pm	5.0e+01		5.0e-01
Total	2.26e+06	3.51e+03	2.26e+06

Table 2.2: Summary Radionuclide Constituents

(Decay date basis: May 31. 1998)

Isotope	N Fuel (Ci)	SPR Fuel (Ci)	Total (Ci)
H-3	3.66e+04	5.94e+02	3.72e+04
C-14	6.93e+02		6.93e+02
Fe-55	1.84e+03		1.84e+03
Co-60	3.96e+03		3.96e+03
Ni-63	4.49e+03	6.62e+01	4.56e+03
Kr-85	5.90e+05	6.04e+02	5.91e+05
Se-79	8.62e+01		8.62e+01
Sr-90	1.01e+07	1.27e+04	1.01e+07
Y-90	1.01e+07	1.27e+04	1.01e+07
Zr-93	4.00e+02		4.00e+02
Nb-93m	2.47e+02		2.47e+02
Tc-99	2.88e+03	6.76e+00	2.89e+03
Ru-106	1.82e+03		1.82e+03
Rh-106	1.82e+03		1.82e+03
Sn-126	1.56e+02		1.56e+02
Sb-125	3.35e+04		3.35e+04
Te-125m	8.18e+03		8.18e+03
I-129	6.37e+00		6.37e+00
Cs-134	1.59e+04	2.47e+00	1.59e+04
Cs-135	7.75e+01		7.75e+01
Cs-137	1.32e+07	3.25e+04	1.32e+07
Ba-137m	1.25e+07	3.08e+04	1.25e+07
Ce-144	9.14e+02		9.14e+02
Pr-144	9.03e+02		9.03e+02
Pm-147	4.62e+05		4.62e+05
Sm-151	1.76e+05	3.97e+02	1.76e+05
Eu-152	9.45e+02		9.45e+02
Eu-154	1.07e+05	3.69e+02	1.07e+05
Eu-155	2.21e+04	7.40e+01	2.22e+04
U-234	8.74e+02		8.74e+02
U-235	3.37e+01		3.37e+01
U-236	1.27e+02		1.27e+02
U-238	6.96e+02		6.96e+02
Np-237	5.72e+01		5.72e+01
Pu-238	1.11e+05	1.42e+02	1.11e+05
Pu-239	2.18e+05	4.06e+02	2.18e+05
Pu-240	1.19e+05	6.42e+02	1.20e+05
Pu-241	6.68e+06	1.46e+04	6.69e+06
Pu-242	5.49e+01		5.49e+01
Am-241	3.75e+05	1.52e+03	3.77e+05
Cm-242	1.62e+02		1.62e+02
Cm-244	1.44e+03		1.44e+03

Note: This table provides a summary of key radionuclides for N Reactor fuel. A complete listing of estimated radionuclides in N Reactor fuel is provided in Table 3.3.

2.1.2 Unit Mass Uranium Inventory

Tables 2.3 and 2.4 contain an estimate of the chemical and radionuclide nominal design basis inventory on a uranium mass basis. Table 2.3 is a summary of the chemical composition of the fuel on a uranium mass basis. Table 2.4 is a summary of the radionuclide inventory on a uranium mass basis.

Table 2.3: Average Chemical Inventory/Unit Mass Uranium Summary

Chemical	Mass (kg/MTU)	Chemical	Mass (kg/MTU)
aluminum	8.1e-01	beryllium	7.8e-02
carbon	5.7e-01	cesium	1.0e-01
chromium	1.4e-01	copper	7.9e-02
iron	4.5e-01	manganese	2.9e-02
molybdenum	4.6e-03	nitrogen	8.1e-02
nickel	1.4e-01	plutonium	1.9e+00
silicon	1.3e-01	strontium	3.5e-02
technetium	7.6e-02	tin	1.0e+00
uranium	1.0e+03	zirconium	7.0e+01

Table 2.4: Average Radionuclide Inventory/Unit Mass Uranium Summary
(Decay date basis: May 31, 1998)

Nuclide	Activity (Ci/MTU)	Heat Generation (W/MTU)
H-3	1.74e+01	5.86e-04
C-14	3.30e-01	9.62e-05
Fe-55	8.76e-01	2.91e-05
Co-60	1.89e+00	2.90e-02
Ni-63	2.14e+00	2.16e-04
Kr-85	2.81e+02	4.21e-01
Sr-90	4.81e+03	5.57e+00
Y-90	4.81e+03	2.67e+01
Tc-99	1.37e+00	6.86e-04
Ru-106	8.67e-01	5.14e-05
Rh-106	8.67e-01	8.29e-03
Cd-113m	1.69e+00	1.86e-03
Sb-125	1.60e+01	5.00e-02
Te-125m	3.90e+00	3.28e-03
I-129	3.03e-03	1.42e-06
Cs-134	7.57e+00	7.71e-02
Cs-137	6.29e+03	6.33e+00
Ba-137m	5.95e+03	2.33e+01
Ce-144	4.35e-01	2.88e-04
Pr-144	4.30e-01	3.15e-03
Pm-147	2.20e+02	8.10e-02
Sm-151	8.38e+01	9.81e-03
Eu-152	4.50e-01	2.04e-03
Eu-154	5.09e+01	4.59e-01
Eu-155	1.05e+01	7.62e-03
U-234	4.16e-01	1.18e-02
U-235	1.60e-02	4.34e-04
U-236	6.05e-02	1.64e-03
U-238	3.31e-01	8.43e-03
Pu-238	5.28e+01	1.73e+00
Pu-239	1.04e+02	3.20e+00
Pu-240	5.67e+01	1.77e+00
Pu-241	3.18e+03	9.86e-02
Am-241	1.79e+02	5.86e+00
Cm-244	6.86e-01	2.36e-02
Totals[1]	2.62e+04	7.67e+01

[1] Totals include additional nuclides which are not itemized in this summary table. A complete listing of the estimated radionuclide inventory can be derived from Table 3.3.

2.2 SHIELDING DESIGN FEED BASES

The shielding design basis is defined here as Mark IV fuel, irradiated to 16% ^{240}Pu content, that has been discharged from the reactor for 13.5 years. This fuel was chosen for the shielding basis because it represents a bounding limit to the ^{137}Cs concentration. The shielding design basis radionuclide concentrations are summarized in Table 2.5.

The shielding basis ^{137}Cs content is approximately 1.7 times the average ^{137}Cs content in the basins. The shielding basis allows any combination of fuel canisters which may be encountered within the K Basins to be loaded into an MCO without concern for exceeding shielding requirements to limit peak (as opposed to average) dose rates.

Table 2.5: Shielding Design Basis Summary
(Based on MK IV fuel at 16% ^{240}Pu content, aged 13.5 years)

Isotope	Activity (Ci/MTU)	Heat Generation (W/MTU)
Cobalt-60	6.27e+00	9.64e-02
Cesium-137	1.13e+04	1.14e+01
Barium-137m	1.07e+04	4.18e+01
Samarium-151	1.08e+02	1.26e-02
Europium-154	2.02e+02	1.81e+00

Note: This summary table is limited to key isotopes which are important for gamma shielding calculations. Table 3.8 provides a complete list.

2.3 SAFETY/REGULATORY ASSESSMENT FEED

The safety/regulatory assessment design basis was selected by identifying the isotopic mixture of components expected to yield the largest dose to people per unit of material released. The selection process used to compare the isotopic mixtures focused on radionuclides that are anticipated to dominate dose calculations for accident scenarios. These included: all plutonium isotopes, ^{241}Am, ^{90}Sr, and ^{137}Cs. The dose from a unit release of material was summed for these nuclides assuming dose conversion factors modelling an inhalation exposure pathway. N Reactor fuel that was irradiated to 16.72% ^{240}Pu and discharged from the reactor during the month of February 1979 was selected as the safety/regulatory assessment basis from this comparison. The safety design basis is summarized on a unit mass basis in Table 2.6.

Safety Analysis documentation will identify accident scenarios and potential exposure pathways to establish a safety basis for new facilities. The intent of this document is not to present the accident scenarios or exposure pathways, but only to supply worst case information to be used in the development of the safety documentation.

Table 2.6: Safety/Regulatory Assessment Design Basis Summary
(Based on MK IV fuel at 16.72% ^{240}Pu, aged approximately 19 years)

Isotope	Activity (Ci/MTU)	Heat Generation (W/MTU)
Plutonium-238	1.33e+02	4.34e+00
Plutonium-239	1.73e+02	5.28e+00
Plutonium-240	1.37e+02	4.19e+00
Plutonium-241	6.82e+03	2.11e-01
Plutonium-242	8.71e-02	2.55e-03
Americium-241	4.34e+02	1.42e+01
Curium-242	3.08e-01	1.11e-02
Curium-244	4.47e+00	1.54e-01
Strontium-90	6.93e+03	8.03e+00
Cesium-137	9.66e+03	9.78e+00

Note: This summary is limited to key dose contributors. Table 3.9 provides a complete list.

2.4 HEAT GENERATION BASIS FEED

Whereas the Table 2.7 values in Revisions 0 and 0A of this document were based on selection of the shielding basis fuel material to also represent the heat generation basis feed material, those values have been adjusted downward in this revision (Revision 1) to reflect selection of the safety/regulatory assessment basis fuel material to replace the shielding basis fuel to represent the heat generation basis feed material.

The heat generation basis feed material selected for Revision 1 by choosing the fuel lot capable of generating the most heat within a fully loaded MCO, as opposed to the most heat per MTU. A comparison was made of different groups of fuel in the basins including the most recently discharged fuel, the shielding design basis fuel, the safety/regulatory assessment fuel, and a 13.4% ^{240}Pu key which has been discharged for approximately 8.5 years.

Although the shielding design basis fuel has the largest heat production on a per mass basis, the safety/regulatory assessment fuel has the highest heat generation on a per element basis. The reason for this apparent discrepancy is that the safety/regulatory assessment fuel is longer than the shielding basis fuel (E length vs S length {see table 3.1}). Current plans call for loading the Multi-canister Overpacks (MCO) with a given number of fuel pieces rather than a given mass of fuel. An MCO loaded with the safety/regulatory assessment fuel will produce more heat than an MCO loaded with the shielding basis fuel. The safety/regulatory assessment basis fuel was therefore selected to represent the heat generation basis fuel.

Table 2.7 provides a listing of important heat generating isotopes in the heat generation basis feed.

Table 2.7: Heat Generation Basis Summary
(Based on MK IV fuel at 16.72% ^{240}Pu content, aged approximately 19 years)

Isotope	Activity (Ci/MTU)	Heat Generation (W/MTU)
Co-60	2.09e+00	3.23e-02
Kr-85	3.70e+02	5.53e-01
Sr-90	6.93e+03	8.03e+00
Y-90	6.93e+03	3.84e+01
Cs-134	6.47e+00	6.59e-02
Cs-137	9.66e+03	9.78e+00
Ba-137m	9.14e+03	3.59e+01
Eu-154	1.13e+02	1.01e+00
Pu-238	1.33e+02	4.34e+00
Pu-239	1.73e+02	5.28e+00
Pu-240	1.37e+02	4.19e+00
Am-241	4.34e+02	1.42e+01
Cm-244	4.47e+00	1.54e-01

Note: This summary is limited to key heat contributors. Table 3.9 provides a complete list.

2.5 CRITICALITY ASSESSMENT FEED

The primary purpose of constructing a criticality assessment design basis feed is to identify special equipment geometries or operating limits which may be imposed by criticality safety evaluations. The criticality assessment feed is chosen as unirradiated fuel. Unirradiated Mark 1A fuel has an outer element with a ^{235}U enrichment of 1.25%, and an inner element ^{235}U enrichment of 0.947%. Unirradiated Mark IV fuel has ^{235}U enrichments of 0.947% in both inner and outer elements. The criticality assessment feed is therefore unirradiated Mark 1A fuel.

3.0 N REACTOR FUEL

3.1 K BASIN DESCRIPTION

The 105-K East and 105-K West (referred to as KE and KW) Reactors are located in the 100 Area of the Hanford Site, 0.4 km (0.25 mi) from the Columbia River. The two reactors, built in the early 1950's, were graphite-moderated plutonium-production reactors using once-through (single-pass) cooling. Each reactor was provided with a large basin for underwater storage of its irradiated fuel. The KW Reactor was shut down in February 1970, and the KE Reactor was shut down in February 1971. Essentially all stored fuel was shipped to the 200 East Area for processing, leaving the 105-KE and 105-KW fuel storage basins idle but filled with water. The two basins are nearly identical. A three dimensional representation of one basin is depicted in Figure 3.1.

In the mid 1970's, the need for additional storage space for irradiated N Reactor fuel was identified. Projects H-501 (Gydesen 1977) and H-508 (Gydesen 1975) modified the KE and KW Basins, respectively, so that the basins could be used for storage and handling of irradiated N Reactor fuel.

3.1.1 Irradiated Fuel Storage at the KE and KW Basins

The fuel at the KE and KW Basins is stored in canisters on the bottom of the basins in single stacked storage racks. Each canister consists of two 20 cm (8 in.) I.D. by 70 cm (28 in.)long open top cylinders, welded together in binocular fashion. Spacers at each end of the assembly, between the two cylinders, serve as lifting lugs. Each cylinder holds up to seven fuel assemblies, i.e., seven inner elements and seven outer elements. Three different types of canisters (Mark 0, Mark I, and Mark II) are currently deployed within the basins (see Figure 3.2). Mark 0 canisters have perforated bottoms and open tops, and are made of aluminum. Mark I and Mark II canisters have solid bottoms and sealable tops; however, Mark I and Mark II canisters located in the KE Basin do not have the tops installed. Mark I canisters are made of either aluminum or stainless steel. All Mark II canisters are made of stainless steel. There are approximately 3050 Mark II canisters, 2925 Mark I stainless steel canisters, and 1415 Mark 0 or Mark I aluminum canisters in the K Basins. There are 93 canisters in the KE Basin that were covered with debris and not identified as Mark 0, Mark I, or Mark II. In addition to the N Reactor fuel, there are approximately 30 containers of SPR fuel; see section 4.3 below. (Pitner 1995 and WHC 1995b)

The KE Basin stores 3,672 canisters containing 51,073 fuel assemblies, elements, or pieces. The KW Basin stores 3,841 canisters containing 53,964 fuel assemblies, elements, or pieces (WHC 1994b). The total mass of fuel elements at the KE Basin is approximately 1,233 metric tons. The total mass of fuel elements in the KW Basin is approximately 1,038 metric tons. Of this total mass, there are approximately 1,143,600 kg of uranium and 2,155 kg of plutonium in the KE Basin and approximately 951,900 kg of uranium and 1,875 kg of plutonium in the KW Basin.

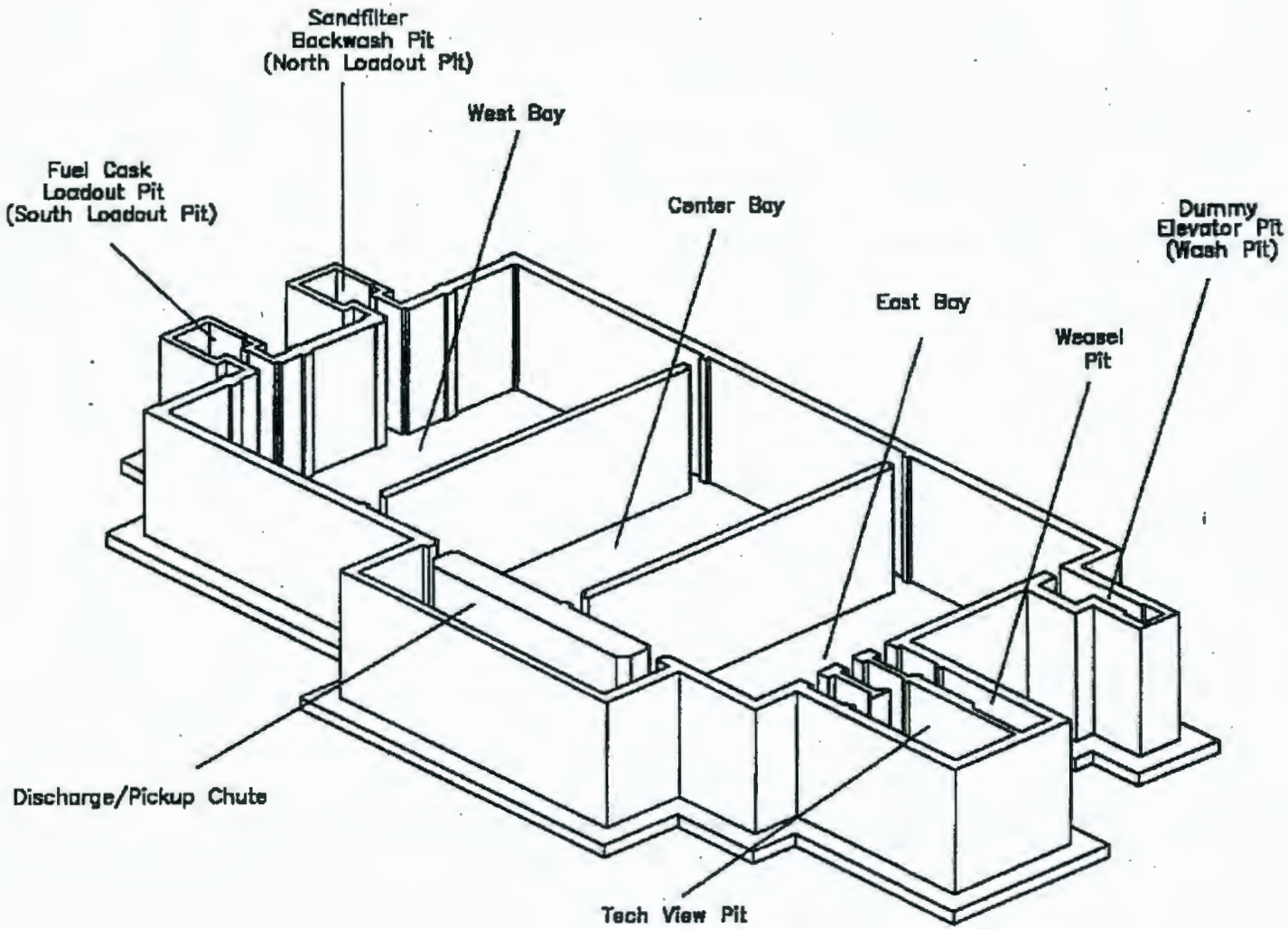

Figure 3.1: 105-K Basins

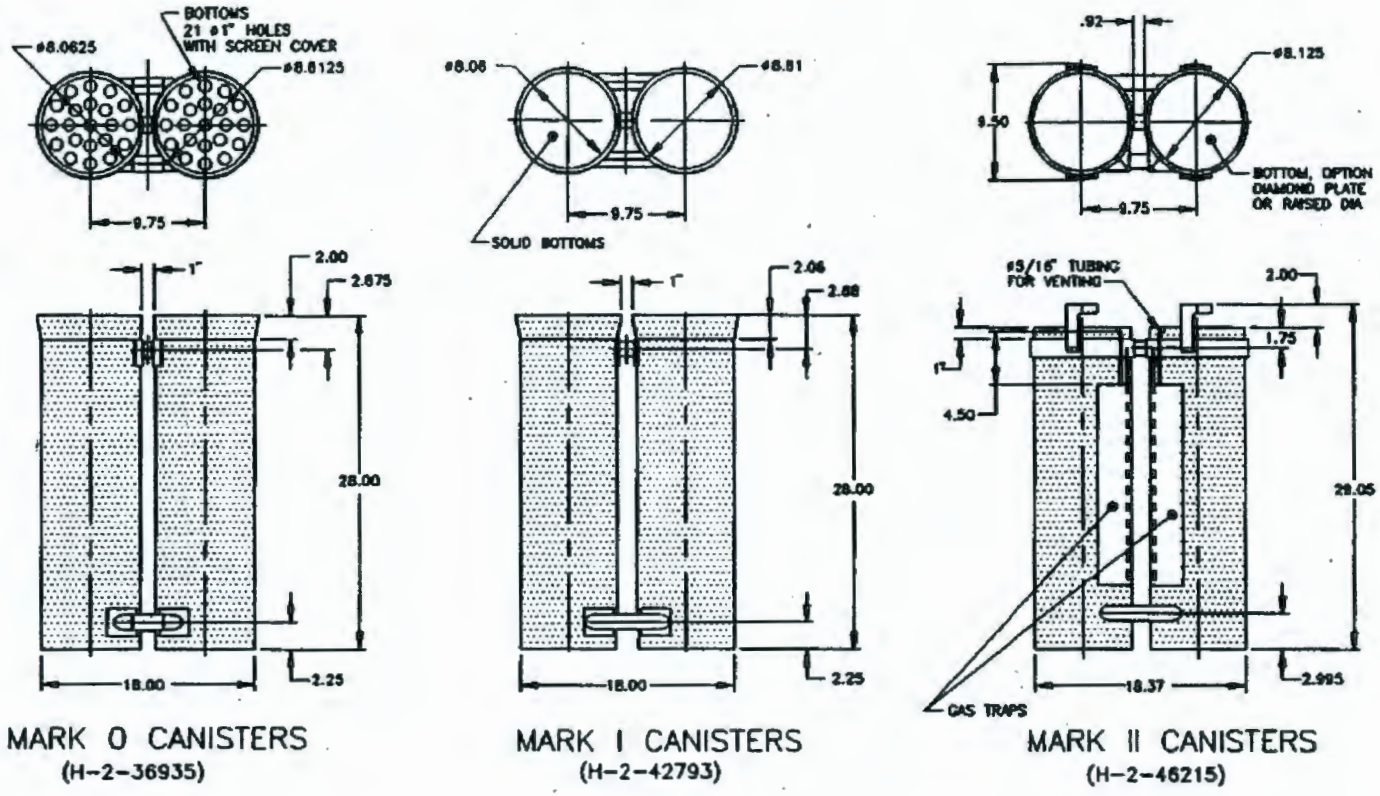

105-N REACTOR FUEL STORAGE CANISTERS

(FBI0009A)

Figure 3.2: N Reactor Fuel Storage Canisters

The cladding on a significant fraction of the fuel was damaged at reactor discharge or during subsequent fuel handling. Video imaging done in the summer of 1994 indicates that approximately 40% of the outer elements and 20% of the inner elements have breached cladding (Pitner 1995). As a result of the cladding damage, the uranium in some elements was exposed to the water and has oxidized during storage. The uranium oxidation causes the fuel elements to swell and leads to further damage of the cladding, thus exposing fresh uranium to the basin water. The loss of cladding integrity and oxidation of the uranium allows soluble and gaseous fission products to dissolve into the canister water. The open canisters used in the KE Basin allow free exchange of water between the canister and the basin; therefore, soluble and gaseous fission products are continually released to the water of the KE Basin.

All of the canisters in the KW Basin have closed lids and bottoms; therefore, with the exception of gaseous products, contamination resulting from damaged and/or oxidized fuel has been contained within the canisters. As compared to the KE Basin, the water in the KW Basin is relatively free of contamination.

In 1983 and 1984, Mark IV fuel in the KE Basin was segregated into fuel grade and weapons grade inventories. The segregation process involved retrieving the fuel canisters from the storage racks, removing the fuel from the canisters, separating the inner elements from the outer elements, measuring the ^{240}Pu content of the elements, reassembling similar grade elements, repackaging the fuel into canisters, and returning the canisters to the storage racks. Although some of the segregated fuels were later moved to the KW Basin no large scale segregation was undertaken at that facility.

3.2 N REACTOR FUEL DESCRIPTION

The N Reactor fuel assemblies consist of two concentric tubes (termed inner and outer elements) made of uranium metal co-extruded into Zircaloy-2 cladding. There are two basic types of fuel assemblies differentiated by their uranium enrichment. Mark IV fuel assemblies have a pre-irradiation enrichment of 0.947% ^{235}U in both elements and an average uranium weight of 22.7 kg (50 lb). The Mark IV assemblies have an outside diameter of 6.1 cm (2.42 in) and lengths of 44.2, 58.9, 62.5, or 66.3 cm (17.4, 23.2, 24.6, or 26.1 in). Mark IA fuel assemblies have a pre-irradiation enrichment of 1.25% ^{235}U in the outer element and 0.947% ^{235}U in the inner element. The Mark 1A assemblies have an average uranium weight of 16.3 kg (35.9 lb). Mark IA fuel assemblies have an outside diameter of 6.1 cm (2.40 in) and lengths of 37.8, 49.8, 53.1, or 66.3 cm (14.9, 19.6, 20.9, or 26.1 in). A Mark IV fuel assembly is shown schematically in Figure 3.3. Mark IA fuel assemblies are similar. There is also a small amount of fuel with 0.71% ^{235}U content that was designated as Mark IVB fuel. The Mark IVB fuel has the same dimensions and weights as the 66.3 cm (26.1 in) Mark IV fuel.

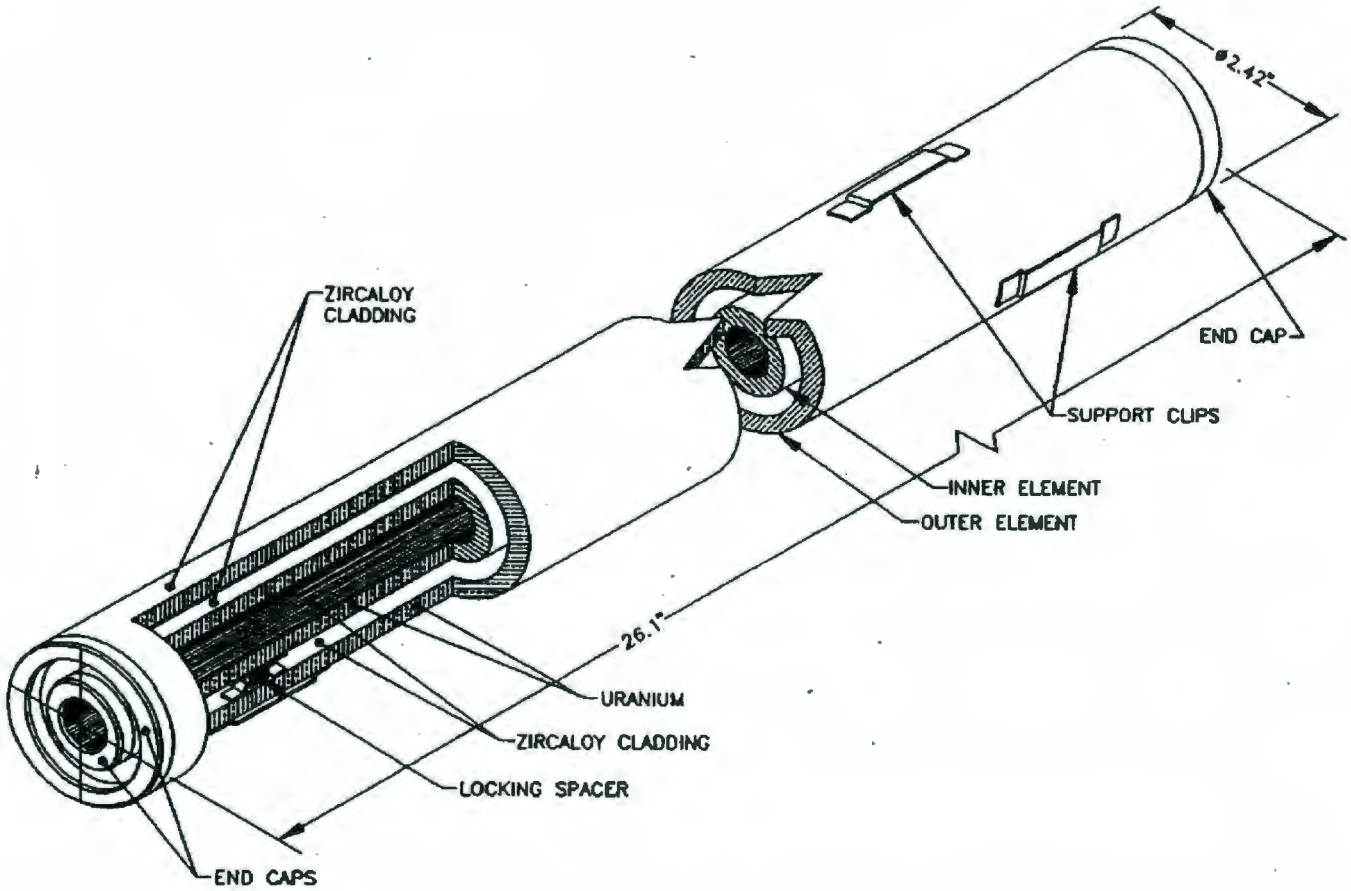

105-N REACTOR MARK IV FUEL ELEMENT ASSEMBLY

(DS00015A)

Figure 3.3: N Reactor Mark IV Fuel Assembly

3.2.1 Fuel Fabrication (WHC 1984, WHC 1989)

In the co-extrusion fabrication process, a tubular billet of uranium was encased in an inner and outer sleeve of Zircaloy-2 with an outer sheath of copper. This billet/cladding assembly was evacuated and sealed to prevent oxidation during preheating and extrusion. As the billet/cladding assembly was extruded under high pressure and elevated temperature, a solid state diffusion bond formed between the uranium core and the Zircaloy-2 cladding.

The extruded fuel was cut to the desired lengths and a recess was machined into the uranium at each end of the fuel section. The copper sheath was then stripped off by an acid bath, after which an acid etching process was used to remove residual uranium from the cladding. The tube ends were closed by placing a Zircaloy-2/5% beryllium braze ring and a Zircaloy-2 end cap into the recess in each end of the fuel and then induction heating the assembly to brazing temperature (approximately 1050°C) in a vacuum. The junction of the end cap, braze, and cladding was fusion welded to alloy the braze material with the cladding, improving corrosion resistance and providing a hermetic seal. The fuel was then heat treated and cleaned with an abrasive grit blast and acid baths.

Six spacers were welded to the outside of the inner element to ensure proper alignment and engagement with the outer element when the two elements were assembled together. Eight Zircaloy-2 support clips were welded to the outside of the outer tube to ensure proper alignment of the fuel when inserted into the N Reactor core. Low-carbon steel "shoes" were crimped onto these Zircaloy-2 clips to minimize the tendency for galling to occur between the assemblies and the reactor tubes during fuel insertion and removal. The shoes vary in thickness from 0.25 mm to 0.46 mm (10 to 18 mils) and contain 0.42 to 0.74 grams of iron. Finishing operations on each tube included nondestructive testing, heating in an autoclave, inspecting, and inserting an inner element into an outer element to produce the finished fuel assembly. Table 3.1 provides additional details concerning the two fuel assembly types (the Mark IV and Mark IA) that are prevalent in the basins.

Table 3.1: 105-N Reactor Fuel Element Description

	Mark IV	Mark IA
Pre-irradiation enrichment of ^{235}U	0.947% Enriched	1.25-0.947% Enriched
Type-Length code[1]	E S A C	E M T F
Length (cm)	66.3 62.5 58.9 44.2	66.3 53.1 49.8 37.8
Element diameter (cm)		
1. Outer of outer	6.15	6.10
2. Inner of outer	4.32	4.50
3. Outer of inner	3.25	3.18
4. Inner of inner	1.22	1.11
Cladding mass (kg)		
1. Outer element	1.09 1.04 0.99 0.79	1.07 0.88 0.83 0.66
2. Inner element	0.55 0.52 0.50 0.40	0.66 0.54 0.51 0.40
Mass of uranium in outer (kg)		
1. (0.947% ^{235}U)	16.0 15.0 14.1 10.5	
2. (1.25% ^{235}U)		13.8 11.1 10.4 7.85
Mass of uranium in inner (kg) 0.947% ^{235}U	7.48 7.03 6.62 4.94	6.84 5.49 5.12 3.90
Weighted average of uranium in element (kg)	22.7	16.3
Ratio of Zircaloy-2 to uranium (kg/MTU)	70.0 70.8 71.6 77.1	83.8 85.5 86.3 90.4
Weighted ave. (kg/MTU)	70.3	85.7
% of total elements	63	37
% of length type of each fuel	78 10 7 5	0.03[2] 87 10 3
Displacement volume (l/MTU)	67	67

1. Letter code differentiates the different lengths of the Mark IV or Mark IA fuel elements, i.e. a type "E" element is 66.3 centimeters long.
2. There are only 12 of the 66.3 cm Mark 1A assemblies.

3.2.2 Burnup and Time Since Discharge

Fuel burnup (or exposure level) and time since discharge determine the radionuclide content of a fuel assembly or group of assemblies. The K Basin inventory of N Reactor fuel is composed of elements which experienced a range of burnups and were discharged from the reactor between January 1971 and April 1987. The burnups range from 0 to approximately 6000 megawatt-days (MWD) per MTU (Roblyer 1995).

Accountability records have been used as the basis for estimating N Reactor fuel radionuclide content. The accountability record run data listing, dated November 17, 1994, includes discharge date, fuel type, and other information for 497 groups of fuel elements (the groups are also known as keys). Each group (or key) includes elements of the same type, and with the same burnup, that were discharged from the reactor at the same time. The mass of uranium associated with each key varies from 2.37×10^{-3} to 67.4 MTU. Appendix A lists the accountability database that forms the inventory basis. Tables 3.2 and 3.3 present breakdowns of the fuel burnups listed in the accountability database for Mark 1A and Mark IV fuel.

Table 3.2: N Reactor Mark IV Fuel Burnup Summary

Mark IV Fuel Burn-up Summary		
$\%^{240}Pu$ Range	Mass	% of total mass
≤5%	166.94 MTU	11.35%
>5% - 7%	125.25 MTU	8.51%
>7% - 9%	0.059761 MTU	0.00%
>9% - 11%	62.988 MTU	4.28%
>11% - 13%	270.56 MTU	18.39%
>13% - 15%	714.01 MTU	48.54%
>15%	131.29 MTU	8.92%
Total	1471.1 MTU	100%

Table 3.3: N Reactor Mark 1A Fuel Burnup Summary

Mark 1A Fuel Burn-up Summary		
$\%^{240}Pu$ Range	Mass	% of total mass
≤5%	36.124 MTU	5.75%
>5% - 7%	3.3729 MTU	0.54%
>7% - 9%	0 MTU	0.00%
>9% - 11%	68.008 MTU	10.83%
>11% - 13%	118.59 MTU	18.88%
>13% - 15%	401.88 MTU	64.00%
>15%	0 MTU	0.00%
Total	627.98 MTU	100

3.3 NOMINAL N REACTOR DESIGN BASIS FEED

3.3.1 N Reactor Fuel Chemical Content Methodology

The chemical content of the fuel is taken from concentration ranges and maximums found in the *Hanford Spent Fuel Inventory Baseline* (WHC 1994b) and totaled for all of the N Reactor fuel in the K Basins. The chemical content of the fuel is on a pre-irradiation basis derived by applying the reported pre-irradiation concentration range to the uranium, zirconium, and braze filling total in N Reactor fuel of approximately 2,100,000, 145,000, and 3000 kg, respectively. The pre-irradiation uranium and zircaloy-2 cladding quantities are based on information in the fuel inventory baseline (WHC 1994b). The pre-irradiation braze quantity is based on a total of 1.37 g of beryllium per assembly (Weakley 1994) in the braze, and the braze component listing in the fuel inventory baseline (WHC 1994b). In the post irradiated fuel, a small percentage of the uranium will have been fissioned or converted to plutonium, and some of the other constituents will have been activated by neutron bombardment, this is particularly true for the boron and hafnium which have relatively high neutron capture cross sections. Major actinide and fission product amounts were derived using the specific activities of the nuclides and the nuclide amounts calculated in section 3.3.4 of this report. The specific activities and half lives of the nuclides listed in this document are found in appendix C. The overall total chemical inventory is a composite of the uranium fuel, the zircaloy 2 cladding and the zirconium/beryllium braze filler material using the midpoint where a range is listed.

3.3.2 N Reactor Fuel Chemical Inventory

Table 3.4 lists kilogram quantities of the chemical inventory of N Reactor fuel currently stored in the K Basins.

Table 3.4: N Reactor Fuel Chemical Inventory

Element	Uranium Alloy 601 (kg)	Zircaloy-2 Cladding (kg)	Braze Filler (kg)	Totals (kg)[2]
Al	1,480 - 1,900	11.1	0.411	1,700
B	0.530	0.074	0.00142	0.605
Be	21.0	-	142	163
C	769 - 1,550	40.7	1.42	1,200
Cd	0.530	0.074	0.00142	0.605
Co	-	1.48	0.0567	1.54
Cr	137	74 - 222	1.42 - 4.26	288
Cu	158	7.40	0.170	166
Fe	632 - 843	104 - 296	1.70 - 5.96	941
H	4.22	3.70	0.142	8.06
Hf	-	29.6	0.567	30.2
Mg	52.7	2.96	0.170	55.8
Mn	52.7	7.40	0.170	60.3
Mo	-	7.40	0.142	7.54
N	158	11.8	0.567	170
Na	-	2.96	0.0567	3.02
Ni	211	44.4 - 118	0.851 - 2.27	294
O	-	-	6.53	6.53
Pb	-	14.8	0.369	15.2
Si	261	14.8	0.709	277
Sn	-	1,780 - 2,520	32.3 - 48.2	2,190
Ti	-	7.40	0.142	7.54
V	-	7.40	0.142	7.54
W	-	7.40	0.284	7.68
Zr	753	145,000	2,780	148,000
Actinides				
U	2,100,000	0.518	0.0113	2,100,000
Np	81.1	-	-	81.1
Pu	4,120	-	-	4,120
Am	109	-	-	109
Cm	0.018	-	-	0.018
Fission Products [2a]				
Se	12.0	-	-	12.0
Sr	152	-	-	152
Tc	170	-	-	170
Pd	133	-	-	133
Kr	77.1			77.1
I	46.1	-	-	46.1
Cs	4.65	-	-	4.65
Pm	0.50	-	-	0.50
Sm	176	-	-	176
Xe	1040			1040

[2] For the values with a range, the midpoint of the range is used

[2a] Stable fission product are based on the ratio of ^{99}Tc in Table 3.5 and the relative concentration of stable fission products from ORIGEN2 for 12% ^{240}Pu Mark IV assemblies.

3.3.3 N Reactor Fuel Radionuclide Content Methodology

Enabling assumptions used in the development of these data are listed in appendix D of this document. The basis for the radionuclide content estimates in the N Reactor fuel, with the exception of the plutonium 239 and 240, is the "RADNUC" computer program (WHC 1995a). The plutonium 239 and 240 data were taken from the *Westinghouse Hanford Company 1996 Materials Management Plan* (WHC 1996).

The RADNUC program was originally written to estimate the radionuclide content in tank waste. This code was selected for adaptation to the K Basin inventory estimates because it represented an available tool for taking multiple discharge dates and burnups of N Reactor fuel and developing a composite radionuclide inventory at a common decay date. The code has also maintained a quality assurance pedigree. RADNUC's fuel burnup estimates are based on the spent fuel's ^{240}Pu content, which increases with increasing burnup. The K Basin N Reactor fuel inventory, which includes fuel with burnups from 0 to 6000 MWD/MTU (Roblyer 1995), ranges from 0 to almost 17 percent ^{240}Pu.

Data are input to RADNUC from the output of the "ORIGEN2" program (Schwarz 97). ORIGEN2 estimates total radionuclide content of fuel with a given burnup in the reactor, and then decays the nuclides and predicts future radionuclide amounts. The results produced by ORIGEN2 are somewhat unwieldy because ORIGEN2 tracks a very large number of nuclides. Additionally, one ORIGEN2 run only produces results for one burnup level, and so a large number of runs would be required to directly estimate the radionuclide content in the N Reactor Fuel in the K Basins. For these reasons, a complete set of ORIGEN2 runs has not been thought to be practical for the N Reactor fuel. Instead, runs for burnups corresponding to ^{240}Pu contents of 6%, 9%, 12%, and 16% have been completed and used to estimate radionuclides in the fuel.

RADNUC uses ORIGEN2 estimates of eighty-nine nuclides that have been decayed to levels that would be present one year after discharge from the reactor. The one year decay period was introduced to reduce the number of nuclides to a manageable size by eliminating the short half life nuclides which would have decayed completely after one year. Tables of the eighty-nine nuclides for burnups corresponding to ^{240}Pu contents of 6%, 9%, 12%, and 16%, are included in the code for both Mark 1A and Mark IV fuel. The RADNUC user specifies a data file for each run. The data file must have at least one line, but may have any number of lines. Each line in the data file contains; the date the fuel was discharged from the reactor, fuel type (Mark IV or Mark 1A), ^{240}Pu content, and total mass of uranium in the fuel. RADNUC uses a logarithmic interpolation scheme to compute the amount of each of the eighty-nine nuclides. RADNUC then decays the nuclides to a date selected by the user. The output includes a summation of the total curies and heat production for each nuclide as well as overall totals.

The N Reactor fuel radionuclide activity and heat generation rates were derived directly from RADNUC output using the accountability records presented in Appendix A as input data and selecting a common decay date of May 31, 1998. The database was converted into RADNUC input files, which are presented in Appendix B. The RADNUC output files are presented in Appendix B as well. The output files were reformatted to generate the tables in this document.

3.3.3.1 Limitations of the Methodology. The method used to calculate radionuclide inventories (see section 3.3.3) produces conservative results because: 1) the calculations are based on irradiation at a single exposure value, whereas the actual fuel keys are blends of higher and lower exposure fuel; and 2) the ^{240}Pu content of the spent fuel is not a liner function of exposure. Consequently, a burnup calculation that treats the average ^{240}Pu concentration of a high/low burnup blend as if it resulted from a single exposure level overestimates the average burnup of the blend.

The resulting conservatism is acceptable for establishing the bounding case, but the more accurate accountability values for $^{239,240}Pu$ have been used, in the tables for basin totals. The accountability data for the combined basin result in an estimate that is 5% less than the ORIGEN2 based estimate. The information used to calculate the accountability concentration of Pu is not readily available for use in calculating other radionuclides, which, therefore, remain overstated. The decay heat is also overstated due to the same conservatism.

3.3.4 N Reactor Fuel Radionuclide Content

Tables 3.5, 3.6, and 3.7 list the radionuclide inventory of the N Reactor Fuel in storage at the K Basins. Table 3.5 provides an inventory estimate for the combined total for both basins. Table 3.6 provides an inventory estimate specific to the KE Basin, and Table 3.7 provides an inventory estimate specific to the KW Basin. The ^{85}Kr data provided in both tables assume there has been no release of this gaseous nuclide from the fuel.

Table 3.5: Radionuclide Inventory of the Combined K Basins[3]

Isotope	Activity (Ci)	Mass (Kg)	Heat Generation (W)	Isotope	Activity (Ci)	Mass (Kg)	Heat Generation (W)
Fission and Activation Products							
H-3	3.66e+04	3.79e-03	1.23e+00	Sn-123	1.74e-05	2.12e-12	5.42e-08
C-14	6.93e+02	1.55e-01	2.02e-01	Sn-126	1.56e+02	5.50e+00	4.78e-02
Fe-55	1.84e+03	7.36e-04	6.12e-02	Sb-124	3.03e-18	1.73e-25	4.01e-20
Co-60	3.96e+03	3.50e-03	6.09e+01	Sb-125	3.35e+04	3.24e-02	1.05e+02
Ni-59	4.10e+01	5.41e-01	1.63e-03	Sb-126	2.18e+01	2.61e-07	3.96e-01
Ni-63	4.49e+03	7.28e-02	4.54e-01	Sb-126m	1.56e+02	1.99e-09	2.00e+00
Se-79	8.62e+01	1.24e+00	2.66e-02	Te-123m	2.76e-11	3.11e-18	3.98e-14
Kr-85	5.90e+05	1.50e+00	8.85e+02	Te-125m	8.18e+03	4.54e-04	6.89e+00
Sr-89	0.00	0.00	0.00	Te-127	9.49e-07	3.60e-16	1.28e-09
Sr-90	1.01e+07	7.40e+01	1.17e+04	Te-127m	9.69e-07	1.03e-13	4.81e-10
Y-90	1.01e+07	1.86e-02	5.60e+04	Te-129	0.00	0.00	0.00
Y-91	2.23e-14	9.09e-22	8.00e-17	Te-129m	0.00	0.00	0.00
Zr-93	4.00e+02	1.59e+02	4.61e-02	I-129	6.37e+00	3.61e+01	2.99e-03
Zr-95	1.69e-12	7.85e-20	8.49e-15	Cs-134	1.59e+04	1.23e-02	1.62e+02
Nb-93m	2.47e+02	8.74e-04	4.42e-02	Cs-135	7.75e+01	6.73e+01	2.59e-02
Nb-95	3.74e-12	9.55e-20	1.79e-14	Cs-137	1.32e+07	1.52e+02	1.33e+04
Nb-95m	1.25e-14	3.29e-23	1.65e-17	Ba-137m	1.25e+07	2.32e-05	4.89e+04
Tc-99	2.88e+03	1.70e+02	1.44e+00	Ce-141	0.00	0.00	0.00
Ru-103	0.00	0.00	0.00	Ce-144	9.14e+02	2.86e-04	6.04e-01
Ru-106	1.82e+03	5.44e-04	1.08e-01	Pr-143	0.00	0.00	0.00
Rh-103m	0.00	0.00	0.00	Pr-144	9.03e+02	1.20e-08	6.62e+00
Rh-106	1.82e+03	5.11e-10	1.74e+01	Pr-144m	1.10e+01	6.06e-11	3.69e-03
Pd-107	1.63e+01	3.17e+01	8.94e-04	Pm-147	4.62e+05	4.98e-01	1.70e+02
Ag-110	2.84e-04	6.81e-17	2.13e-09	Pm-148	0.00	0.00	0.00
Ag-110m	2.14e-02	4.50e-09	3.55e-04	Pm-148m	0.00	0.00	0.00
Cd-113m	3.55e+03	1.64e-02	3.90e+00	Sm-151	1.76e+05	6.69e+00	2.06e+01
Cd-115m	0.00	0.00	0.00	Eu-152	9.45e+02	5.46e-03	4.28e+00
In-113m	2.14e-07	1.28e-17	4.95e-10	Eu-154	1.07e+05	3.96e-01	9.64e+02
Sn-113	2.14e-07	2.13e-14	3.55e-11	Eu-155	2.21e+04	4.75e-02	1.60e+01
Sn-119m	2.97e-01	6.62e-08	1.53e-04	Gd-153	1.28e-04	3.63e-11	1.15e-07
Sn-121m	7.96e+01	1.35e-03	8.36e-02	Tb-160	2.77e-15	2.45e-22	2.21e-17
Fission and Activation Product Totals					4.74e+07	7.07e+02	1.32e+05
Actinides							
U-234	8.74e+02	1.40e+02	2.47e+01	Pu-241	6.68e+06	6.48e+01	2.07e+02
U-235	3.37e+01	1.56e+04	9.14e-01	Pu-242	5.49e+01	1.44e+01	1.60e+00
U-236	1.27e+02	1.96e+03	3.40e+00	Am-241	3.75e+05	1.09e+02	1.23e+04
U-238	6.96e+02	2.07e+06	1.73e+01	Am-242	1.95e+02	2.41e-07	1.62e+00
Np-237	5.72e+01	8.11e+01	1.65e+00	Am-242m	1.96e+02	2.02e-02	2.99e-01
Pu-238	1.11e+05	6.48e+00	3.63e+03	Am-243	1.20e+02	6.02e-01	3.81e+00
Pu-239	2.18e+05	3.51e+03	6.72e+03	Cm-242	1.62e+02	4.90e-05	5.86e+00
Pu-240	1.19e+05	5.22e+02	3.71e+03	Cm-244	1.44e+03	1.78e-02	4.95e+01
Actinide Totals					7.51e+06	2.09e+06	2.66e+04

[3] 06/02/1997 RADNUC2A run for combined K Basins, with Results decayed to 05/31/1998. Total fuel mass in the combined basins 2.10e+03 MTU. Total fuel activity in the combined basins 5.50e+07 Ci. Total fuel heat generation in the combined basins 1.61e+05 W. Pu-239 and Pu-240 have been adjusted to ensure consistency with data previously reported by Safeguards.

Table 3.6: K-East Basin Radionuclide Inventory[4]

Isotope	Activity (Ci)	Mass (Kg)	Heat Generation (W)	Isotope	Activity (Ci)	Mass (Kg)	Heat Generation (W)
Fission and Activation Products							
H-3	1.80e+04	1.86e-03	6.04e-01	Sn-123	1.46e-05	1.78e-12	4.57e-08
C-14	3.62e+02	8.12e-02	1.06e-01	Sn-126	8.07e+01	2.84e+00	2.48e-02
Fe-55	9.64e+02	3.86e-04	3.22e-02	Sb-124	2.49e-18	1.42e-25	3.28e-20
Co-60	1.86e+03	1.64e-03	2.86e+01	Sb-125	1.69e+04	1.64e-02	5.31e+01
Ni-59	2.11e+01	2.79e-01	8.38e-04	Sb-126	1.13e+01	1.35e-07	2.05e-01
Ni-63	2.30e+03	3.73e-02	2.33e-01	Sb-126m	8.07e+01	1.03e-09	1.03e+00
Se-79	4.35e+01	6.24e-01	1.34e-02	Te-123m	2.33e-11	2.63e-18	3.37e-14
Kr-85	2.84e+05	7.24e-01	4.25e+02	Te-125m	4.13e+03	2.29e-04	3.46e+00
Sr-89	0.00	0.00	0.00	Te-127	7.90e-07	2.99e-16	1.07e-09
Sr-90	4.96e+06	3.64e+01	5.77e+03	Te-127m	8.07e-07	8.55e-14	3.98e-10
Y-90	4.97e+06	9.13e-03	2.75e+04	Te-129	0.00	0.00	0.00
Y-91	1.78e-14	7.26e-22	6.39e-17	Te-129m	0.00	0.00	0.00
Zr-93	2.01e+02	7.98e+01	2.30e-02	I-129	3.26e+00	1.85e+01	1.52e-03
Zr-95	1.35e-12	6.30e-20	6.83e-15	Cs-134	6.95e+03	5.37e-03	7.09e+01
Nb-93m	1.26e+02	4.46e-04	2.25e-02	Cs-135	3.96e+01	3.44e+01	1.32e-02
Nb-95	3.01e-12	7.69e-20	1.44e-14	Cs-137	6.55e+06	7.53e+01	6.62e+03
Nb-95m	1.00e-14	2.64e-23	1.33e-17	Ba-137m	6.19e+06	1.15e-05	2.43e+04
Tc-99	1.45e+03	8.55e+01	7.27e-01	Ce-141	0.00	0.00	0.00
Ru-103	0.00	0.00	0.00	Ce-144	7.56e+02	2.37e-04	4.98e-01
Ru-106	1.39e+03	4.15e-04	8.26e-02	Pr-143	0.00	0.00	0.00
Rh-103m	0.00	0.00	0.00	Pr-144	7.47e+02	9.89e-09	5.48e+00
Rh-106	1.39e+03	3.90e-10	1.32e+01	Pr-144m	9.07e+00	5.00e-11	3.05e-03
Pd-107	8.59e+00	1.67e+01	4.72e-04	Pm-147	2.45e+05	2.64e-01	9.00e+01
Ag-110	2.28e-04	5.47e-17	1.71e-09	Pm-148	0.00	0.00	0.00
Ag-110m	1.71e-02	3.60e-09	2.84e-04	Pm-148m	0.00	0.00	0.00
Cd-113m	1.80e+03	8.30e-03	1.98e+00	Sm-151	8.92e+04	3.39e+00	1.04e+01
Cd-115m	0.00	0.00	0.00	Eu-152	4.67e+02	2.70e-03	2.11e+00
In-113m	1.77e-07	1.06e-17	4.10e-10	Eu-154	5.30e+04	1.96e-01	4.75e+02
Sn-113	1.77e-07	1.76e-14	2.93e-11	Eu-155	1.12e+04	2.41e-02	8.12e+00
Sn-119m	2.50e-01	5.57e-08	1.28e-04	Gd-153	9.59e-05	2.72e-11	8.64e-08
Sn-121m	4.01e+01	6.78e-04	4.20e-02	Tb-160	2.29e-15	2.03e-22	1.83e-17
Fission and Activation Product Totals					2.34e+07	3.55e+02	6.53e+04
Actinides							
U-234	4.66e+02	7.46e+01	1.32e+01	Pu-241	3.42e+06	3.32e+01	1.06e+02
U-235	1.77e+01	8.19e+03	4.81e-01	Pu-242	3.07e+01	8.04e+00	8.94e-01
U-236	6.61e+01	1.02e+03	1.77e+00	Am-241	2.06e+05	6.00e+01	6.74e+03
U-238	3.80e+02	1.13e+06	9.46e+00	Am-242	1.13e+02	1.40e-07	9.43e-01
Np-237	3.02e+01	4.28e+01	8.70e-01	Am-242m	1.14e+02	1.17e-02	1.74e-01
Pu-238	6.05e+04	3.53e+00	1.97e+03	Am-243	7.12e+01	3.57e-01	2.25e+00
Pu-239	1.16e+05	1.87e+03	3.59e+03	Cm-242	9.40e+01	2.84e-05	3.40e+00
Pu-240	6.37e+04	2.80e+02	1.98e+03	Cm-244	8.71e+02	1.08e-02	2.99e+01
Actinide Totals					3.87e+06	1.14e+06	1.45e+04

[4] 06/02/1997 RADNUC2A run for K-East Basin fuel. Results decayed to 05/31/1998. Total fuel mass in K-East 1.15e+03 MTU. Total fuel activity in K-East 2.73e+07 Ci. Total fuel heat generation in K-East 8.06e+04 W. Pu-239 and Pu-240 have been adjusted to ensure consistency with data previously reported by safeguards.

Table 3.7: K-West Basin Radionuclide Inventory[5]

Isotope	Activity (Ci)	Mass (Kg)	Heat Generation (W)	Isotope	Activity (Ci)	Mass (Kg)	Heat Generation (W)
Fission and Activation Products							
H-3	1.86e+04	1.93e-03	6.24e-01	Sn-123	2.75e-06	3.35e-13	8.58e-09
C-14	3.31e+02	7.43e-02	9.67e-02	Sn-126	7.50e+01	2.64e+00	2.30e-02
Fe-55	8.75e+02	3.50e-04	2.92e-02	Sb-124	5.45e-19	3.12e-26	7.21e-21
Co-60	2.10e+03	1.86e-03	3.22e+01	Sb-125	1.66e+04	1.61e-02	5.23e+01
Ni-59	1.99e+01	2.63e-01	7.88e-04	Sb-126	1.05e+01	1.26e-07	1.90e-01
Ni-63	2.19e+03	3.55e-02	2.21e-01	Sb-126m	7.50e+01	9.55e-10	9.61e-01
Se-79	4.28e+01	6.14e-01	1.32e-02	Te-123m	4.28e-12	4.82e-19	6.21e-15
Kr-85	3.06e+05	7.80e-01	4.60e+02	Te-125m	4.05e+03	2.25e-04	3.40e+00
Sr-89	0.00	0.00	0.00	Te-127	1.59e-07	6.02e-17	2.14e-10
Sr-90	5.17e+06	3.79e+01	6.01e+03	Te-127m	1.62e-07	1.72e-14	8.03e-11
Y-90	5.17e+06	9.50e-03	2.86e+04	Te-129	0.00	0.00	0.00
Y-91	4.47e-15	1.82e-22	1.60e-17	Te-129m	0.00	0.00	0.00
Zr-93	2.01e+02	7.98e+01	2.30e-02	I-129	3.11e+00	1.76e+01	1.46e-03
Zr-95	3.30e-13	1.54e-20	1.66e-15	Cs-134	8.96e+03	6.92e-03	9.14e+01
Nb-93m	1.22e+02	4.32e-04	2.18e-02	Cs-135	3.79e+01	3.29e+01	1.27e-02
Nb-95	7.33e-13	1.87e-20	3.52e-15	Cs-137	6.64e+06	7.63e+01	6.71e+03
Nb-95m	2.45e-15	6.44e-24	3.23e-18	Ba-137m	6.28e+06	1.17e-05	2.46e+04
Tc-99	1.43e+03	8.43e+01	7.18e-01	Cs-141	0.00	0.00	0.00
Ru-103	0.00	0.00	0.00	Ce-144	1.58e+02	4.95e-05	1.04e-01
Ru-106	4.34e+02	1.30e-04	2.58e-02	Pr-143	0.00	0.00	0.00
Rh-103m	0.00	0.00	0.00	Pr-144	1.56e+02	2.06e-09	1.15e+00
Rh-106	4.34e+02	1.22e-10	4.13e+00	Pr-144m	1.90e+00	1.05e-11	6.39e-04
Pd-107	7.68e+00	1.49e+01	4.22e-04	Pm-147	2.17e+05	2.34e-01	7.97e+01
Ag-110	5.66e-05	1.36e-17	4.25e-10	Pm-148	0.00	0.00	0.00
Ag-110m	4.26e-03	8.97e-10	7.06e-05	Pm-148m	0.00	0.00	0.00
Cd-113m	1.75e+03	8.07e-03	1.92e+00	Sm-151	8.66e+04	3.29e+00	1.01e+01
Cd-115m	0.00	0.00	0.00	Eu-152	4.77e+02	2.76e-03	2.16e+00
In-113m	3.74e-08	2.24e-18	8.64e-11	Eu-154	5.44e+04	2.02e-01	4.89e+02
Sn-113	3.74e-08	3.73e-15	6.21e-12	Eu-155	1.08e+04	2.32e-02	7.85e+00
Sn-119m	4.75e-02	1.06e-08	2.45e-05	Gd-153	3.23e-05	9.16e-12	2.91e-08
Sn-121m	3.95e+01	6.68e-04	4.15e-02	Tb-160	4.77e-16	4.23e-23	3.81e-18
Fission and Activation Product Totals					2.40e+07	3.52e+02	6.72e+04
Actinides							
U-234	4.08e+02	6.53e+01	1.15e+01	Pu-241	3.26e+06	3.16e+01	1.01e+02
U-235	1.60e+01	7.40e+03	4.34e-01	Pu-242	2.42e+01	6.34e+00	7.03e-01
U-236	6.11e+01	9.44e+02	1.63e+00	Am-241	1.69e+05	4.92e+01	5.54e+03
U-238	3.16e+02	9.40e+05	7.85e+00	Am-242	8.15e+01	1.01e-07	6.77e-01
Np-237	2.70e+01	3.83e+01	7.79e-01	Am-242m	8.19e+01	8.43e-03	1.25e-01
Pu-238	5.10e+04	2.98e+00	1.66e+03	Am-243	4.89e+01	2.45e-01	1.54e+00
Pu-239	1.01e+05	1.63e+03	3.13e+03	Cm-242	6.76e+01	2.04e-05	2.45e+00
Pu-240	5.53e+04	2.42e+02	1.72e+03	Cm-244	5.72e+02	7.07e-03	1.97e+01
Actinide Totals					3.64e+06	9.50e+05	1.22e+04

[5] 06/02/1997 RADNUC2A run for K-West Basin. Results decayed to 05/31/1998. Total fuel mass in K-West 9.53e+02 MTU. Total fuel activity in K-West 2.77e+07 Ci. Total Heat Generation of fuel in K-West 8.03e+04 W. Pu-239 and Pu-240 have been adjusted to ensure consistency with data previously reported by Safeguards.

3.4 SHIELDING DESIGN BASIS FEED

The shielding design basis feed material was selected to include the fuel with the highest ^{137}Cs content. The ^{137}Cs content was used as the criterion because of that isotope's relative abundance in the fuel and its significant gamma radiation. The lines in Figure 3.4 represent the burnup levels required at different times to obtain the 1/1/1995 ^{137}Cs concentrations shown in the table. The accountability key data are also included in Figure 3.4. Each "x" in Figure 3.4 represents one key from the accountability database. The key nearest the highest ^{137}Cs concentration line is the key with the highest ^{137}Cs concentration. The fuel with the highest actual cesium content is Mark IV fuel with a ^{240}Pu Content of 15.74% discharged from the reactor in 1984. For the sake of conservatism, the design basis was selected as Mk IV fuel with 16% ^{240}Pu content aged ten years to 1/1/1995. The bounding case chosen here has a ^{137}Cs content approximately 6.5% higher than the maximum fuel in inventory. RADNUC was used to estimate the radionuclide content and heat generation rates of the 16% ^{240}Pu content fuel. Table 3.8 is a tabulation of the results. The RADNUC input and output files in their raw form are listed in Appendix B.

3.5 SAFETY/REGULATORY ASSESSMENT DESIGN BASIS FEED

The safety/regulatory assessment design basis feed material was selected by determining which fuel would result in the highest estimated dose to people if exposed to a unit of material. A potential dose was obtained using cumulative effective dose equivalents (CEDE)(DOE 1988) and nuclide levels generated by RADNUC to estimate a dose resulting from each nuclide. The potential dose resulting from inhalation and ingestion pathways was evaluated, and the inhalation pathway was selected as most likely. Americium, plutonium, strontium, and cesium are estimated to dominate the dose impacts of other nuclides in the fuel, therefore only these isotopes were included in the safety/regulatory assessment basis development.

Two parameters were considered in selecting the fuel with the highest concentration of the isotopes used for determining the safety/regulatory assessment design basis. The first is burnup; all else being equal, the concentrations of radionuclides increase with increasing burnup. The second is age (time since discharge); with the notable exception of ^{241}Am, radionuclide concentrations decrease with increasing time since discharge from the reactor. Because it results in the largest dose, ^{241}Am is the most important nuclide for development of the safety/regulatory assessment basis.

A small amount of ^{241}Am is produced directly as an activation product in the irradiated fuel, but a far larger amount results from the decay of ^{241}Pu. Because all of the ^{241}Pu will eventually decay to ^{241}Am, and because ^{241}Am has a half life of approximately 433 years whereas the half life of ^{241}Pu is only 14 years, the concentration of ^{241}Am continues to increase for approximately 60 years following reactor discharge. With half lives of 24,100 and 6,560 years respectively, ^{239}Pu and ^{240}Pu are also among the most important radionuclides for the safety/regulatory assessment design basis. Over a 50 year time scale, the concentration of $^{239,240}Pu$ will be nearly constant. Considering the two factors above, the highest burnup, oldest fuels should contain the largest concentration of the most important radionuclides for the safety/regulatory assessment design basis.

Single Pass Reactor and N Reactor fuels were both considered in the evaluation. In the case of the single pass reactor fuel, the americium, cesium, plutonium, and strontium were taken from the fuel inventory baseline document (WHC 1994b). The results of the evaluation indicate that N Reactor

Mark IV fuel discharged from the reactor 2/20/1979 with a ^{240}Pu content of 16.72% represents the mix of isotopes with the largest potential dose impact on people. There are 6.9 MTU total of this 16.72% fuel stored at K Basins. The selected safety/regulatory assessment basis fuel is shown in Table 3.9. Through decay, the safety/regulatory assessment basis radionuclide content changes over time. Table 3.10 lists the radionuclide content of the safety/regulatory assessment basis fuel decayed to 05/31/2038 (approximately 40 years after the projected date of first fuel movement from the K Basins).

Appendix B lists the RADNUC input and output files in their raw form. Appendix F provides comparisons of the safety basis fuel (16.72% ^{240}Pu Mk IV N Reactor fuel aged 19 years) with other fuels and provides additional details regarding its selection.

3.6 HEAT GENERATION BASIS FEED

The heat generation basis feed material was selected by choosing the fuel lot capable of generating the most heat within a fully loaded MCO, as opposed to the most heat per MTU. A comparison was made of different groups of fuel in the basins including: the most recently discharged fuel, the shielding design basis fuel, the safety/regulatory assessment fuel, and a 13.4% ^{240}Pu key which has been discharged for approximately 8.5 years. The heat generation from the most recently discharged fuel was 29 W/MTU; the shielding basis fuel was 147 W/MTU; the safety/regulatory assessment fuel was 137 W/MTU; and the 8.5 year old 13.4% ^{240}Pu fuel was 113 W/MTU. Although the shielding design basis fuel has a higher heat generation rate per MTU, the shielding design basis fuel keys include only S and C length fuel. The safety/regulatory assessment fuel keys contain the longer E length fuel. The safety/regulatory assessment fuel has the highest heat generation on a per assembly basis. The current strategy is to load up to 270 assemblies into an MCO. Therefore, an MCO fully loaded with the safety/regulatory assessment fuel would generate more heat than an MCO fully loaded with the shielding basis fuel. The heat generation basis fuel is therefore the same as the safety/regulatory assessment basis fuel already listed in Tables 3.9 and 3.10.

3.7 CRITICALITY DESIGN BASIS FEED

The criticality design basis feed was determined by selecting the fuel with the highest reactivity. In a conventional light water reactor such as the Hanford site production reactors (well moderated non-breeder reactor), more fissile atoms are used up than are created. The reactivity of the fuel therefore decreases with increasing burn-up. The highest reactivity fuels are the unirradiated Mark 1A fuels. Current planning calls for the fuel to be segregated by type so that a given MCO may contain either Mark 1A or Mark IV fuel, but not a mixture of the two. In the MCOs with Mark IV fuel, the criticality design basis is again un-irradiated Mark IV fuel.

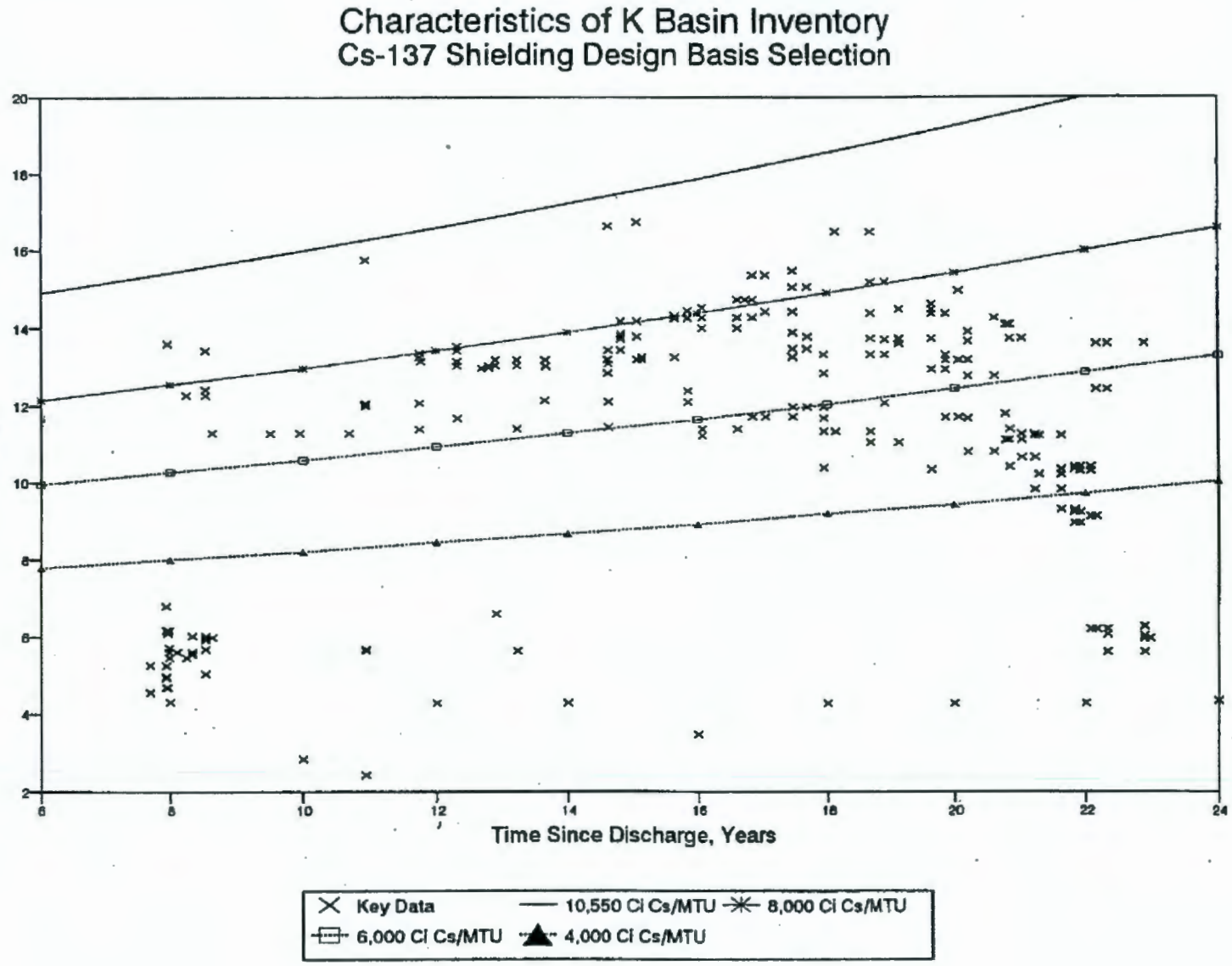

Figure 3.4: ^{137}Cs Shielding Design Basis Selection

Table 3.8: Shielding Design Basis[6]
(Based on MK IV fuel at 16% Pu-240 aged 13.5 years)

Isotope	Activity (Ci/MTU)	Heat Generation (W/MTU)	Isotope	Activity (Ci/MTU)	Heat Generation (W/MTU)
Fission and Activation Products					
H-3	4.03e+01	1.36e-03	Sn-123	4.08e-09	1.26e-11
C-14	5.27e-01	1.54e-04	Sn-126	1.22e-01	3.75e-05
Fe-55	5.23e+00	1.75e-04	Sb-124	0.00	0.00
Co-60	6.27e+00	9.64e-02	Sb-125	0.00	0.00
Ni-59	3.03e-02	1.21e-06	Sb-126	1.71e-02	3.10e-04
Ni-63	3.53e+00	3.57e-04	Sb-126m	1.22e-01	1.57e-03
Se-79	6.23e-02	1.93e-05	Te-123m	1.19e-13	1.72e-16
Kr-85	6.23e+02	9.33e-01	Te-125m	0.00	0.00
Sr-89	0.00	0.00	Te-127	1.16e-10	1.57e-13
Sr-90	8.19e+03	9.50e+00	Te-127m	1.19e-10	5.88e-14
Y-90	8.19e+03	4.53e+01	Te-129	0.00	0.00
Y-91	0.00	0.00	Te-129m	0.00	0.00
Zr-93	2.83e-01	3.25e-05	I-129	4.88e-03	2.29e-06
Zr-95	4.20e-18	2.12e-20	Cs-134	1.07e+02	1.10e+00
Nb-93m	1.38e-01	2.47e-05	Cs-135	5.77e-02	1.93e-05
Nb-95	9.33e-18	4.48e-20	Cs-137	1.13e+04	1.14e+01
Nb-95m	3.12e-20	4.12e-23	Ba-137m	1.07e+04	4.18e+01
Tc-99	2.08e+00	1.05e-03	Ce-141	0.00	0.00
Ru-103	0.00	0.00	Ce-144	1.75e+00	1.15e-03
Ru-106	9.38e+00	5.59e-04	Pr-143	0.00	0.00
Rh-103m	0.00	0.00	Pr-144	1.73e+00	1.26e-02
Rh-106	9.38e+00	8.97e-02	Pr-144m	2.10e-02	7.05e-06
Pd-107	1.44e-02	7.94e-07	Pm-147	1.06e+03	3.88e-01
Ag-110	4.15e-06	3.11e-11	Pm-148	0.00	0.00
Ag-110m	3.12e-04	5.18e-06	Pm-148m	0.00	0.00
Cd-113m	3.96e+00	4.35e-03	Sm-151	1.08e+02	1.26e-02
Cd-115m	0.00	0.00	Eu-152	1.22e+00	5.50e-03
In-113m	2.59e-11	5.98e-14	Eu-154	2.02e+02	1.81e+00
Sn-113	2.59e-11	4.30e-15	Eu-155	3.42e+01	2.48e-02
Sn-119m	0.00	0.00	Gd-153	3.92e-06	3.53e-09
Sn-121m	0.00	0.00	Tb-160	2.22e-19	1.78e-21
Fission and Activation Product Totals				4.05e+04	1.12e+02
Actinides					
U-234	3.92e-01	1.11e-02	Pu-241	9.42e+03	2.92e-01
U-235	1.31e-02	3.54e-04	Pu-242	7.46e-02	2.16e-03
U-236	7.12e-02	1.89e-03	Am-241	2.92e+02	9.57e+00
U-238	3.35e-01	8.35e-03	Am-242	3.19e-01	2.66e-03
Np-237	4.42e-02	1.27e-03	Am-242m	3.21e-01	4.91e-04
Pu-238	1.28e+02	4.16e+00	Am-243	2.22e-01	7.02e-03
Pu-239	1.68e+02	5.14e+00	Cm-242	2.65e-01	9.59e-03
Pu-240	1.28e+02	3.90e+00	Cm-244	4.62e+00	1.59e-01
Actinide Totals				1.01e+04	2.33e+01

[6] 06/02/1997 RADNUC2A run for shielding design basis (Mk IV fuel at 16% Pu-240). Results decayed to 05/31/1998. Total mass of fuel in this run 2.60e+00 MTU. Total activity of fuel in this run 1.32e+05 Ci. Total heat generation from the fuel in this run 3.55e+02 W.

Table 3.9: Safety/Regulatory Assessment Design Basis[7]
(Based on Mk IV fuel at 16.72% Pu-240)

Isotope	Activity (Ci/MTU)	Heat Generation (W/MTU)	Isotope	Activity (Ci/MTU)	Heat Generation (W/MTU)
Fission and Activation Products					
H-3	2.61e+01	8.77e-04	Sn-123	1.72e-16	5.35e-19
C-14	5.53e-01	1.62e-04	Sn-126	1.29e-01	3.97e-05
Fe-55	5.41e-01	1.80e-05	Sb-124	0.00	0.00
Co-60	2.09e+00	3.23e-02	Sb-125	0.00	0.00
Ni-59	3.18e-02	1.26e-06	Sb-126	1.81e-02	3.28e-04
Ni-63	3.47e+00	3.51e-04	Sb-126m	1.29e-01	1.66e-03
Se-79	6.54e-02	2.02e-05	Te-123m	1.50e-21	2.18e-24
Kr-85	3.70e+02	5.53e-01	Te-125m	0.00	0.00
Sr-89	0.00	0.00	Te-127	2.12e-19	2.85e-22
Sr-90	6.93e+03	8.03e+00	Te-127m	2.16e-19	1.07e-22
Y-90	6.93e+03	3.84e+01	Te-129	0.00	0.00
Y-91	0.00	0.00	Te-129m	0.00	0.00
Zr-93	2.95e-01	3.40e-05	I-129	5.16e-03	2.41e-06
Zr-95	0.00	0.00	Cs-134	6.47e+00	6.59e-02
Nb-93m	1.93e-01	3.45e-05	Cs-135	6.04e-02	2.02e-05
Nb-95	0.00	0.00	Cs-137	9.66e+03	9.78e+00
Nb-95m	0.00	0.00	Ba-137m	9.14e+03	3.59e+01
Tc-99	2.19e+00	1.10e-03	Ce-141	0.00	0.00
Ru-103	0.00	0.00	Ce-144	7.91e-04	5.23e-07
Ru-106	2.56e-02	1.52e-06	Pr-143	0.00	0.00
Rh-103m	0.00	0.00	Pr-144	7.82e-04	5.73e-06
Rh-106	2.56e-02	2.45e-04	Pr-144m	9.48e-06	3.18e-09
Pd-107	1.56e-02	8.56e-07	Pm-147	1.09e+02	4.02e-02
Ag-110	7.17e-10	5.38e-15	Pm-148	0.00	0.00
Ag-110m	5.39e-08	8.94e-10	Pm-148m	0.00	0.00
Cd-113m	2.78e+00	3.06e-03	Sm-151	1.02e+02	1.19e-02
Cd-115m	0.00	0.00	Eu-152	8.45e-01	3.81e-03
In-113m	1.36e-19	3.13e-22	Eu-154	1.13e+02	1.01e+00
Sn-113	1.36e-19	2.26e-23	Eu-155	1.06e+01	7.65e-03
Sn-119m	6.14e-08	3.16e-11	Gd-153	5.19e-10	4.67e-13
Sn-121m	6.27e-02	6.59e-05	Tb-160	0.00	0.00
Fission and Activation Product Totals				3.34e+04	9.38e+01
Actinides					
U-234	3.84e-01	1.09e-02	Pu-241	6.82e+03	2.11e-01
U-235	1.27e-02	3.44e-04	Pu-242	8.71e-02	2.55e-03
U-236	7.16e-02	1.91e-03	Am-241	4.34e+02	1.42e+01
U-238	3.31e-01	8.23e-03	Am-242	3.71e-01	3.08e-03
Np-237	4.66e-02	1.34e-03	Am-242m	3.72e-01	5.71e-04
Pu-238	1.33e+02	4.34e+00	Am-243	2.78e-01	8.82e-03
Pu-239	1.73e+02	5.28e+00	Cm-242	3.08e-01	1.11e-02
Pu-240	1.37e+02	4.19e+00	Cm-244	4.47e+00	1.54e-01
Actinide Totals				7.70e+03	2.85e+01

[7] 06/02/1997 RADNUC2A run for the safety basis (Mk IV fuel at 16.72% Pu-240). Results decayed to 05/31/1998. Total mass of the fuel in this run 1.16e+01 MTU. Total activity of the fuel in this run 4.77e+05 Ci. Total heat generation of the fuel in this run 1.42e+03 W.

Table 3.10: Safety/Regulatory Assessment Basis[8]
(Decayed to 05/31/2038)

Isotope	Activity (Ci/MTU)	Heat Generation (W/MTU)	Isotope	Activity (Ci/MTU)	Heat Generation (W/MTU)
Fission and Activation Products					
H-3	3.32e+00	1.11e-04	Sn-123	0.00	0.00
C-14	5.64e-01	1.65e-04	Sn-126	1.33e-01	4.08e-05
Fe-55	2.72e-05	9.09e-10	Sb-124	0.00	0.00
Co-60	1.61e-02	2.47e-04	Sb-125	1.10e-03	3.44e-06
Ni-59	3.25e-02	1.29e-06	Sb-126	1.86e-02	3.36e-04
Ni-63	2.68e+00	2.71e-04	Sb-126m	1.33e-01	1.70e-03
Se-79	6.68e-02	2.06e-05	Te-123m	0.00	0.00
Kr-85	3.41e+01	5.10e-02	Te-125m	2.68e-04	2.25e-07
Sr-89	0.00	0.00	Te-127	0.00	0.00
Sr-90	2.91e+03	3.38e+00	Te-127m	0.00	0.00
Y-90	2.91e+03	1.61e+01	Te-129	0.00	0.00
Y-91	0.00	0.00	Te-129m	0.00	0.00
Zr-93	3.02e-01	3.47e-05	I-129	5.29e-03	2.48e-06
Zr-95	0.00	0.00	Cs-134	2.52e-05	2.58e-07
Nb-93m	2.73e-01	4.88e-05	Cs-135	6.19e-02	2.07e-05
Nb-95	0.00	0.00	Cs-137	4.19e+03	4.23e+00
Nb-95m	0.00	0.00	Ba-137m	3.96e+03	1.55e+01
Tc-99	2.23e+00	1.12e-03	Ce-141	0.00	0.00
Ru-103	0.00	0.00	Ce-144	0.00	0.00
Ru-106	2.06e-13	1.22e-17	Pr-143	0.00	0.00
Rh-103m	0.00	0.00	Pr-144	0.00	0.00
Rh-106	2.06e-13	1.96e-15	Pr-144m	0.00	0.00
Pd-107	1.61e-02	8.87e-07	Pm-147	5.97e-03	2.19e-06
Ag-110	0.00	0.00	Pm-148	0.00	0.00
Ag-110m	0.00	0.00	Pm-148m	0.00	0.00
Cd-113m	4.87e-01	5.35e-04	Sm-151	7.67e+01	8.96e-03
Cd-115m	0.00	0.00	Eu-152	1.32e-01	5.94e-04
In-113m	0.00	0.00	Eu-154	5.93e+00	5.31e-02
Sn-113	0.00	0.00	Eu-155	5.94e-02	4.29e-05
Sn-119m	0.00	0.00	Gd-153	0.00	0.00
Sn-121m	3.84e-02	4.04e-05	Tb-160	0.00	0.00
Fission and Activation Product Totals				1.41e+04	3.94e+01
Actinides					
U-234	3.81e-01	1.08e-02	Pu-241	1.19e+03	3.69e-02
U-235	1.25e-02	3.38e-04	Pu-242	9.39e-02	2.73e-03
U-236	7.19e-02	1.92e-03	Am-241	6.17e+02	2.03e+01
U-238	3.29e-01	8.20e-03	Am-242	3.42e-01	2.85e-03
Np-237	4.77e-02	1.37e-03	Am-242m	3.43e-01	5.27e-04
Pu-238	1.04e+02	3.40e+00	Am-243	3.09e-01	9.77e-03
Pu-239	1.75e+02	5.35e+00	Cm-242	2.84e-01	1.03e-02
Pu-240	1.41e+02	4.33e+00	Cm-244	1.24e+00	4.25e-02
Actinide Totals				2.23e+03	3.35e+01

[8] 06/04/1997 RADNUC2A run for safety basis fuel (following 40 years CSB storage). Results decayed to 05/31/2038. Total mass of fuel in this run 6.90e+00 MTU. Total activity of the fuel in this run 1.13e+05 Ci. Total heat generation from the fuel in this run 5.04e+02 W.

4.0 SINGLE PASS REACTOR FUEL

The information included in this section was taken from the *Hanford Spent Fuel Inventory Baseline* (WHC 1994b).

4.1 BACKGROUND

Eight single-pass, water-cooled, graphite moderated reactors, commonly referred to as single pass reactors (SPR), operated at Hanford to produce plutonium, beginning in 1944 with the 105-B Reactor start-up and ending in 1971 with the 105-KE Reactor shut down (HAPO 1944, HAPO 1961, HAPO 1963a, HAPO 1963b, PNL 1991). The reactors and their operating periods are listed in Table 4.1.

Table 4.1: Operating Periods of the Hanford Single Pass Reactors

Reactor	Hanford Area	Operating Period	
		Startup	Shutdown
105-B	100-B/C	1944	1968
105-C	100-B/C	1952	1969
105-D	100-D/DR	1944	1967
105-DR	100-D/DR	1950	1964
105-F	100-F	1945	1965
105-H	100-H	1949	1965
105-KW	100-KW/KE	1955	1970
105-KE	100-KW/KE	1955	1971

The older reactors (105-B, 105-C, 105-D, 105-DR, 105-F, and 105-H) were similar in design. Their graphite block cores were 11 meters (36 ft) high by 11 meters (36 ft) wide by 8.5 meters (28 ft) long. A total of 2004 aluminum horizontal process tubes held the fuel and contained the cooling water. Most of the older reactors had nine horizontal, boron-containing, water-cooled control rods running perpendicular to the process tubes. The 105-C and 105-H Reactors each had 15 of these control rods. The control rods entered the reactor from the side and provided operating reactivity control, neutron flux shaping, and emergency shutdown control. A completely independent emergency shutdown control was provided by vertical channels penetrating the core which could be gravity filled with either boron-containing safety rods or boron-containing steel balls.

The basic design of the 105-KE and 105-KW Reactors was similar to the older reactors, with the following exceptions. Their graphite cores were 12.5 meters (41 ft) high by 12.5 meters (41 ft) wide by 10.7 meters (35 ft) long. There were 3220 aluminum horizontal process tubes, 2400 of which were later replaced with zirconium tubes. There were 20 horizontal control rods.

4.2 FUEL DESCRIPTION (HAPO 1955, DUN 1967)

The single pass reactor fuel consisted of a machined uranium core that was sealed within, and metallurgically bonded to, an aluminum can. There were three basic designs for SPR fuel elements; solid core cylinders, hollow core cylinders, and tubes. All three types are shown in Figure 4.1. The solid cylinder fuel was used from 1944 until the late 1950s. This design was adequate until 1951, when increasing reactor power levels and fuel exposure began to result in significant fuel failures. The hollow cored fuel was used concurrently with the solid fuel from late-1954 until 1957 in an attempt to reduce fuel failures, but this strategy was unsuccessful. Beginning in late-1955, the fuel failure rate was successfully reduced by introduction of a tubular fuel design called an internally and externally cooled (I&E) fuel.

Many variations of these basic designs were created in attempts either to improve cooling of the fuel element during irradiation or to simplify the fabrication process. In one successful variation, called the tru-line design, one end of the fuel element had a raised face while the other end had a recessed face. The raised face mated with the recessed face of the adjacent fuel element in the tube to improve cooling through better alignment of the fuel elements within the reactor tubes. Tru-line features are shown on the I&E fuel element in Figure 4.1.

The SPR fuel was made primarily in two ^{235}U concentrations, natural (0.71%) and 0.947%; although other enriched fuel (including 1.25%, 1.7%, and 2.1% ^{235}U) and depleted fuel (including 0.14% and 0.22% ^{235}U) were also made. The lengths of the fuel elements range from approximately 12 cm (4.7 in) to 23 cm (9.0 in), with specific lengths generally associated with specific ranges of enrichment. The diameters of most of the fuel elements vary from 3.45 cm (1.36 in) to 3.63 cm (1.43 in) to accommodate slight differences in the process tubes of different reactors. The fuel for the KE and KW Reactors was generally the largest, and even included some 5.1 cm (2 in) diameter elements. The fuel for the 105-C Reactor was larger than that used in the other five older reactors. These variations in length, diameter, and secondary features, such as tru-line ends, lead to a large number of similar, but distinct, fuel element types. To allow for easy differentiation, each fuel element is stamped with a six character code. The second letter of the code identifies the specific model of fuel element, including the enrichment, dimensions, and group of reactors to receive it.

The physical characteristics of some SPR fuel element types are listed in Table 4.2 and reference drawings H-3-7350 and H-3-7352 (HAPO 1963b). Additional details are available in the reference drawings.

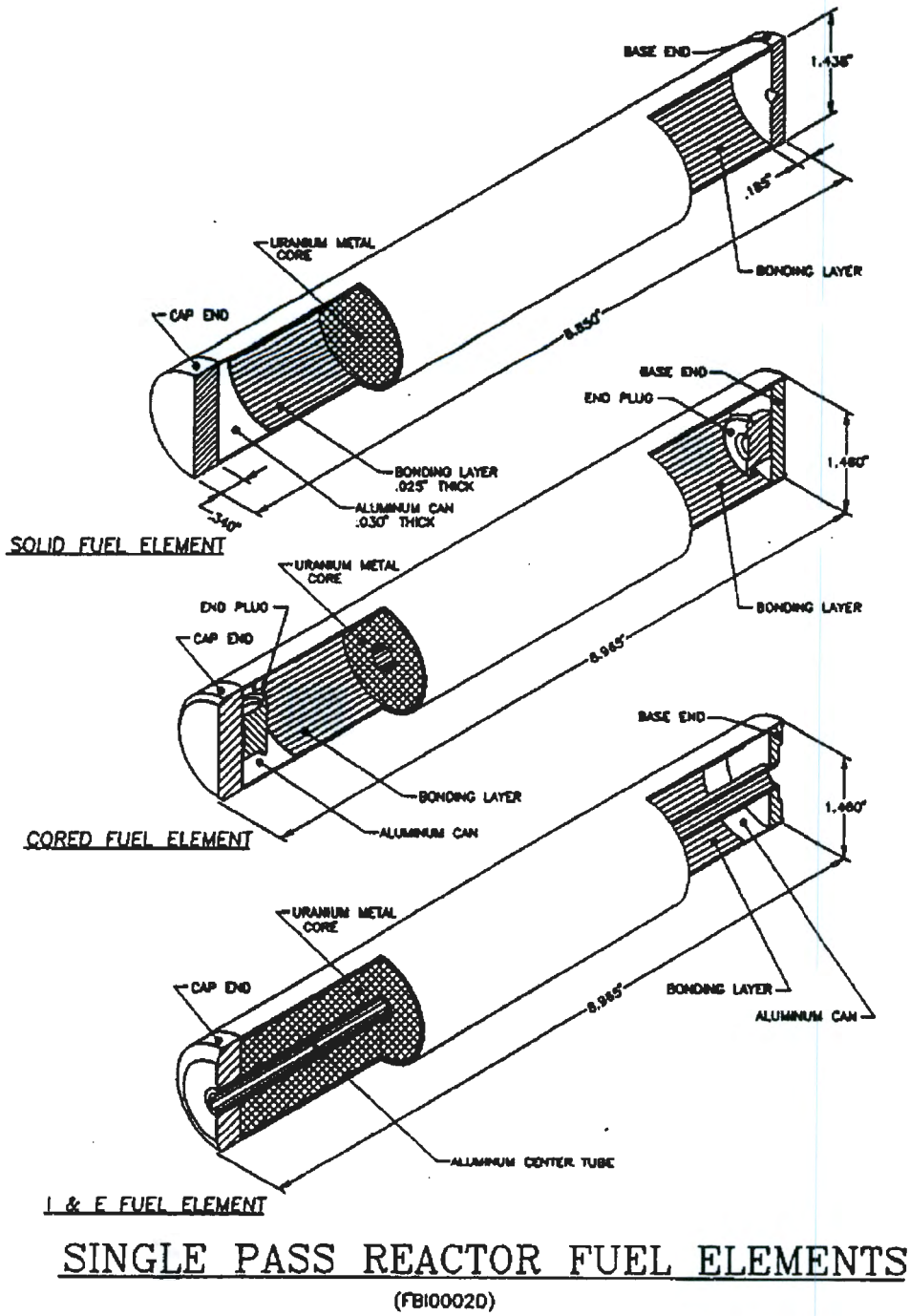

Figure 4.1: Single Pass Reactor Fuel Elements

Table 4.2: Physical Characteristics of Single Pass Reactor Fuel[1]

		Fuel Element					Uranium Core				Cap
		Length	Diameter		Cladding Wall Thickness		Length	Diameter		Weight	Length
Code[2]	$\%^{235}U$		Outer	Inner	Outer	Inner		Outer	Inner		
C2N	0.714	22.8	3.72	0.953	0.10	0.114	21.3	3.48	1.22	3.34	0.635
K4N	0.714	22.8	3.71	0.978	0.094	0.13	21.3	3.48	1.26	3.30	0.635
K5N	0.714	22.5	3.86	1.07	0.094	0.13	21.1	3.63	1.35	3.56	0.635
O3N	0.714	22.8	3.67	0.787	0.094	0.13	21.3	3.44	1.07	3.37	0.635
C6N	0.714	22.5	5.04	0.848	0.11	0.13	21.1	4.78	1.15	6.75	0.635
C3E	0.947	16.9	3.71	0.953	0.094	0.13	15.4	3.48	1.24	2.40	0.635
K5E	0.947	16.6	3.83	1.10	0.094	0.13	15.2	3.60	1.38	2.49	0.635
O3E	0.947	16.9	3.67	0.787	0.094	0.13	15.4	3.44	1.07	2.43	0.635
K4W	0.714	16.9	3.71	1.02	0.094	0.13	15.4	4.48	1.30	2.36	0.635
K5(1.25)	1.25	14.1	3.82	1.12	0.094	0.13	12.7	3.61	1.38	2.08	0.635

1. All dimensions are in centimeters, except that the uranium core weight is in kilograms.

2. The first letter of the code indicates in which reactors the fuel was used. "K" designates the 105-KE and 105-KW Reactors. "C" designates the 105-C Reactor. "O" designates the other five reactors. The number indicates the number of times the design has been modified. The third character indicates the general uranium content and other features. "N" indicates natural uranium content (0.714% ^{235}U). "E" indicates 0.947% ^{235}U enrichment. "W" indicates natural enrichment with a 2 inch cooling water mixing attachment. "D" indicates depleted uranium. Enrichments above 0.947% ^{235}U are indicated by the specific enrichment enclosed within parentheses.

4.2.1 Fuel Fabrication (HAPO 1955, HAPO 1958)

In the lead dip fabrication process used since 1954, a machined uranium core was sealed within, and metallurgically bonded to, an aluminum can. The core was first subjected to a degreasing and pickling operation to clean its surface. Then the core was heated to bonding temperature by immersion in a "duplex" bath of aluminum-silicon alloy (Al-Si) floating on lead. The core was preheated to brazing temperature by the lead layer and then pre-wet with the brazing alloy by brief agitation within the Al-Si layer. The core was then transferred to a heated Al-Si canning bath, where it was inserted into a preheated aluminum can and topped with an aluminum cap. After quenching, the fuel element was welded to create a continuous bond between the uranium core, the Al-Si braze, and the aluminum can. The braze layer was approximately 20 mils thick. Next, the ends of the fuel element were machined to the proper length and contour. Then, the exposed braze area was closed by a tungsten inert-gas weld bead. Finally, the completed fuel element was heated in an autoclave and inspected visually and by other non-destructive methods.

Table 4.3 lists the chemical inventory in the SPR currently stored at Hanford. This information was calculated using typical impurities of the materials in the SPR fuel elements found in fuel manufacturing documentation (HAPO 1955, HAPO 1958).

Table 4.3: Total Chemical Inventory in Single Pass Reactor Fuel Metals
(All quantities in kg)

Impurity	Uranium Alloy 501	Aluminum Alloy X-8001	Al-Si Braze
Boron	NA[1]	1.20e-03	NA
Cadmium	NA	3.60e-03	NA
Carbon	2.54e+00	NA	NA
Chromium	2.20e-01	NA	NA
Cobalt	NA	1.20e-03	NA
Copper	NA	1.77e-01	9.30e-03
Iron	5.07e-01	8.40e-01	3.00e-02
Lithium	NA	9.60e-03	NA
Magnesium	8.45e-02	NA	NA
Manganese	8.45e-02	NA	NA
Nickel	3.38e-01	1.40e+00	NA
Nitrogen	3.38e-01	NA	NA
Silicon	2.54e-01	2.05e-01	NA
Others, each	NA	6.00e-02	3.00e-03
Others, total	NA	1.80e-01	1.20e-02

[1] NA indicates that the impurity is not present at any appreciable level.

4.3 FUEL INVENTORY

There are 3.38 metric tons [as total] heavy metal (MTHM) of SPR fuel at Hanford. The majority consists of 2.87 metric tons (MT) of highly depleted uranium and 8.7 kilograms of plutonium, contained in 779 fuel elements. This highly depleted SPR fuel, stored until 1995 at the PUREX facility, has been moved to the KW Basin. The highly depleted fuel is a portion of the fuel which was irradiated in the KE and KW Reactors between December 1966 and May 1968 to produce high ^{240}Pu content plutonium (WHC 1994b). The pre-irradiation ^{235}U content of the fuel was 0.14% and the fuel was irradiated to an average exposure of 3000 MWD/MT. The post-irradiation ^{235}U content is 0.064% and the plutonium contains 26% ^{240}Pu.

The remaining 0.50 MTHM of the SPR fuel is natural or enriched uranium contained in 185 fuel elements; 0.40 MTHM in 138 elements within the KE Basin and 0.10 MTHM in 47 elements within the KW Basin (WHC 1991). The fuel is predominately the I&E tru-line design. Most of this fuel is residual material from the KE and the KW Reactors. A small amount of fuel from the clean-out of the 105-C and the 105-D Storage Basins is also included in the 0.50 MTHM total. The specific types and numbers of fuel elements are listed below.

Table 4.4: Single Pass Reactor Fuel Elements Stored in the K Basins

Fuel Type	Basin	Quantity
C2N	KE	2
K4N	KE	3
K5N	KE	42
O3N	KE	15
C3E	KE	42
K5E	KE	29
O3E	KE	4
K4W	KE	1
Uncertain[1]	KW	47

1) Existing records of these fuel elements do not indicate the specific fuel type, however their ^{235}U enrichment does not exceed 1.25% (Larson 1990).

4.4 RADIONUCLIDE CONTENT

The radionuclide content of the depleted SPR fuel, estimated using the ORIGEN2 and WIMS-E computer codes, is shown in Table 4.5 (Schwinkendorf 1993). Radionuclide concentration and decay heat of the other SPR fuel stored in the KE and KW Basins are not available because of its small quantity, varied sources, and uncertain discharge and exposure history. However, nuclide concentrations and decay heat should be similar to that of N Reactor Mark IA fuel irradiated to a 6% ^{240}Pu content because typical SPR fuel irradiation was less than 1000 MWD/MTU (HAPO 1944). It has been at least 20 years since the fuel was irradiated because the last SPR was shut down in 1971.

Table 4.5: Total Activity of Selected Radionuclides in SPR Fuel
(decayed to 1/1/94)

Radionuclide	Activity (Ci)
^{3}H	7.03e+02
^{63}Ni	6.76e+01
^{85}Kr	7.33e+02
^{90}Sr	1.36e+04
^{90}Y	1.36e+04
^{99}Tc	6.67e+00
^{113m}Cd	1.69e+01
^{134}Cs	6.76e+00
^{137}Cs	3.48e+04
^{137m}Ba	3.30e+04
^{151}Sm	4.06e+02
^{154}Eu	4.70e+02
^{155}Eu	1.15e+02
^{238}Pu	1.45e+02
^{239}Pu	4.06e+02
^{240}Pu	6.42e+02
^{241}Pu	1.69e+04
^{241}Am	1.45e+03
Total	**7.05e+04**

4.5 FUEL STORAGE

The majority of the SPR fuel was stored until 1995 at the PUREX storage basin, although smaller amounts were also stored at the K Basins. As of September 1995, when the fuel from PUREX was transferred into the KW Basin, all SPR fuel has been located in the K Basins.

The fuel formerly stored at PUREX was stored in four buckets. Three of the four fuel buckets were briefly lifted out of the water so that the condition of the fuel could be observed and videotaped. The buckets were full of fuel elements. There were several larger elements that appeared to be either the 2 inch (5.1 centimeter) diameter fuel elements or overpack containers. Tru-line end features could be seen on a few elements, although end features on most elements could not be seen. There appeared to be sludge or corrosion product on many of the fuel elements.

5.0 105-K BASIN SLUDGE (DELETED)

This section has been deleted. See Volume 2 of this document (HNF-SD-SNF-TI-009) for sludge information.

6.0 REFERENCES

DOE, 1988, *Internal Dose Conversion Factors for Calculation of Dose to the Public*, DOE/EH-0071, United States Department of Energy, Washington, D.C.

DOE, 1994, *Department of Energy Programmatic Spent Nuclear Fuel Management and Idaho National Engineering Laboratory Environmental Restoration and Waste Management Programs Draft Environmental Impact Statement*, DOE/EIS-0203-D, United States Department of Energy, Washington, D.C.

DUN, 1967, *Fuel Element Lot Identification and Component Codes*, Document, DUN-117, Rev. 4, E. A. Weakley and K. C. Bowles, Douglas United Nuclear, Inc.

DUN, 1972, *U. S. Atomic Energy Commission Nuclear Material Transaction Report,-Irradiated Special Depleted Uranium, Plutonium, and Neptunium*, Nuclear Material Transaction Report, Douglas United Nuclear, Inc.

Gydesen, C. H., 1975, *Functional Design Criteria Supplemental N-Reactor Fuel Storage 105-KW*, UNI-410, Rev. 0, United Nuclear Industries, Inc., Richland, Washington.

Gydesen, C. H., 1977, *Functional Design Criteria Supplemental N-Reactor Irradiated Fuel Storage, 105-KE*, UNI-108, Rev. 3, United Nuclear Industries, Inc., Richland, Washington.

HAPO, 1944, *Hanford Engineering Works Technical Manual*, Controlled Manual, HW-10475B, Hanford Atomic Products Operation, Richland, Washington.

HAPO, 1955, *PUREX Technical Manual*, Controlled Manual, HW-31000, Hanford Atomic Products Operation, Richland, Washington.

HAPO, 1958, *Technology of the HAPO Lead Dip Fuel Element Canning Process*, Supporting Document, HW-58115, E. A. Weakley, Hanford Atomic Products Operation, Richland, Washington.

HAPO, 1961, *Reactor Physics Primer*, Controlled Manual, H2-51856 Comp., E. H. Lockwood, Hanford Atomic Products Operation, Richland, Washington.

HAPO, 1963a, *Hazards Summary Report, Volume 2, Process Control and Technical Data, Hanford K Production Reactors*, Supporting Document, HW-74905, Hanford Atomic Products Operation, Richland, Washington.

HAPO, 1963b, *Hazards Summary Report, Volume 3, Process Control and Technical Data, Hanford K Production Reactors*, Supporting Document, HW74905, Hanford Atomic Products Operation, Richland, Washington.

Larson, 1990, *SPR Fuel Value Assignment*, (Internal Memo), Westinghouse Hanford Company, Richland, Washington.

Pitner, A. L., 1995, *KE Basin Underwater Visual Fuel Survey*, WHC-SD-SNF-TI-012, Rev. 0, Westinghouse Hanford Company, Richland, Washington.

PNL, 1991, *A History of Major Hanford Facilities and Processes Involving Radioactive Material*, PNL-6964 HEDR UC-707, M. Y. Ballinger and R. B. Hall, Pacific Northwest Laboratory, Richland, Washington.

Roblyer, 1995, *K Basin Fuel Decay Heating Characterization*, (Internal Memorandum to J. J. Irwin, December 29), Westinghouse Hanford Company, Richland, Washington.

Schwarz, R. A., 1997, *Modification to ORIGEN2 For Generating N Reactor Source Terms*, PNNL-11555 UC-610 (3 Volumes), Pacific Northwest National Laboratory, Richland, Washington.

Schwinkendorf, K. N., 1993, *Source Terms in K Reactor Depleted Fuel*, (Internal Memorandum to W. G. Jasen, November 16), Westinghouse Hanford Company, Richland, Washington.

Schwinkendorf, K. N., S. P. Roblyer, and S. A. Parra, 1996, *Use of the WIMS-E Lattice Code for Prediction of the Transuranic Source Term for Spent Fuel Dose Estimation*, the SPECTRUM 96 International Topical Meeting on Nuclear and Hazardous Waste Management, Seattle, Washington, August 18-23, 1996, Vol. 1, pp. 709-713.

Weakley, 1994, Telephone conversation between the author and Everett Weakley, N Reactor fuel assembly area, November 10, 1994

WHC, 1996, *Westinghouse Hanford Company FY 1996 Materials Management Plan (MMP)*, WHC-SP-1177, Westinghouse Hanford Company, Richland, Washington.

WHC, 1995a, *Certification of RADNUC*, WHC-SD-HWV-SWD-001, Rev. 1, Westinghouse Hanford Company, Richland, Washington.

WHC, 1995b, *K Basins Environmental Impact Statement Technical Input*, WHC-SD-SNF-TI-013, Rev A, Westinghouse Hanford Company, Richland Washington.

WHC, 1995c, *Integrated Process Strategy for K Basins Spent Nuclear Fuel*, WHC-SD-SNF-SP-005, Volume 1, Rev 0, Westinghouse Hanford Company, Richland Washington.

WHC, 1994a, *Hanford Spent Nuclear Fuel Project Recommended Path Forward, Volume I: Recommended Path Forward*, WHC-EP-0830, Vol. I, rev. 0, Westinghouse Hanford Company, Richland, Washington.

WHC, 1994b, *Hanford Irradiated Fuel Inventory Baseline*, WHC-SD-SNF-TI-001, Rev. 0, Westinghouse Hanford Company, Richland, Washington.

WHC, 1991, *Fuel Metal Accountability*, Internal Publication, WHC-IP-0069, Rev. 162, Westinghouse Hanford Company, Richland, Washington.

WHC, 1989, *PUREX Technical Manual*, Controlled Manual, WHC-CM-SP-0479, Westinghouse Hanford Company, Richland, Washington.

WHC, 1984, *Engineering Specifications, Hanford N Reactor Fuel Elements*, Controlled Manual, WHC-CM-5-17, (formerly DUN-4000, Vol. 3), Westinghouse Hanford Company, Richland, Washington.

This page intentionally left blank.

APPENDIX A

ACCOUNTABILITY DATA BASE FOR N REACTOR FUEL IN THE K BASINS

The following pages contain the database used in the development of the radionuclide tables in the document. The database includes the following 8 fields:

- The first field is a location code a 108 in this field indicates the 105 K-East Basin and a 107 indicates the 105 K-West Basin.

- The second field is the key number which corresponds to the date the fuel was discharged from the reactor. The numbers are HAPO days and increase by one each day. HAPO day number one occurred September 26, 1944, the day that B Reactor achieved initial criticality.

  A few records have key numbers in excess of 20000, (which correspond to dates no earlier than 1999) these few had 10000 added to differentiate fuel types with two different burnup rates discharged on the same day. 10000 was subtracted from the key date of all records with key dates in excess of 20000 when the database was converted into a data file.

- The third field is the fuel model, and was not used.

- The fourth field is the material type and this explains why there is from one to three lines for each record. The numbers are codes for uranium, plutonium, and neptunium as follows: 10 = depleted uranium (contains less than 0.71% ^{235}U); 20 = enriched uranium (contains more than 0.71% ^{235}U); 50 = plutonium; 81 = naturally occurring uranium (contains 0.71% ^{235}U); and 82 = neptunium. most of the records contain a line for uranium, a line for plutonium, and a line for neptunium; some contain only uranium and plutonium; and a few contain only uranium.

- The fifth field is a sub ID code, and was not used.

- The sixth field is the fuel type, V = mark IV fuel, and I = mark 1A fuel.

- The seventh field contains isotopic breakdown information. In the uranium lines the seventh field is the post-irradiation ^{235}U content given as a percent of the total uranium. In the plutonium lines the seventh field is the ^{240}Pu content given as a percent of the total plutonium. The seventh field has no meaning in the neptunium lines.

- The eighth field is the discharge mass in metric tons. In the uranium line it is the total uranium mass, in the plutonium line it is the total plutonium mass.

Of the approximately 500 records in the accountability database, 9 records may be single pass reactor fuel. These 9 records account for 0.32 MTU or about 0.015% of the total inventory in the K Basins. All 9 records contain 5.49% ^{240}Pu and are modeled as N Reactor Mark IV fuel. This fuel does not significantly impact either the chemical or radiological inventory of N Reactor fuel in the K Basins and therefore is modeled as N Reactor fuel.

Location Code	Key Number	Fuel Model	Material Type	sub ID Code	Fuel Type	Isotopic Breakdown	Discharge Mass
108	09621	C2N	10		V	0.61	0.006668
108	09621	C2N	50		V	5.94	0.000005
108	09621	C3E	10		V	0.61	0.076639
108	09621	C3E	50		V	5.94	0.000055
108	09621	C3E	20	1	V	0.84	0.023952
108	09621	C3E	50	1	V	6.01	0.00002
108	09621	K4N	10		V	0.62	0.009893
108	09621	K4N	50		V	5.94	0.000007
108	09621	K4W	10		V	0.61	0.002372
108	09621	K4W	50		V	5.94	0.000002
108	09621	K5E	10		V	0.61	0.072602
108	09621	K5E	50		V	5.94	0.000052
108	09621	K5N	10		V	0.61	0.149739
108	09621	K5N	50		V	5.94	0.000108
108	09621	O3E	10		V	0.61	0.009721
108	09621	O3E	50		V	5.94	0.000007
108	09621	O3N	10		V	0.61	0.050439
108	09621	O3N	50		V	5.94	0.000036
108	10001	B09C	20		V	0.79	0.042041
108	10001	B09C	50		V	12.4	0.000078
108	10001	B09C	82		V	0	0.000001
108	10001	B09S	20		V	0.73	0.014875
108	10001	B09S	50		V	12.4	0.000027
108	10001	B09S	82		V	0	3.60e-07
108	10001	X09A	20		V	0.79	0.006627
108	10001	X09A	50		V	12.4	0.000012
108	10001	X09A	82		V	0	1.60e-07
108	10001	X09C	20		V	0.79	0.009892
108	10001	X09C	50		V	12.4	0.000018
108	10001	X09C	82		V	0	2.40e-07
108	10001	X09E	20		V	0.73	0.029876
108	10001	X09E	50		V	12.4	0.000055
108	10001	X09E	82		V	0	7.20e-07
108	10001	X09S	20		V	0.73	0.035
108	10001	X09S	50		V	12.4	0.000065
108	10001	X09S	82		V	0	8.50e-07
108	10201	A09A	20		V	0.77	1.073737
108	10201	A09A	50		V	9.09	0.001702
108	10201	A09A	82		V	0	0.00002
108	10201	B09E	20		V	0.76	0.363445
108	10201	B09E	50		V	9.09	0.000579
108	10201	B09E	82		V	0	0.000007
108	10201	B09S	20		V	0.77	0.343367
108	10201	B09S	50		V	9.09	0.000544
108	10201	B09S	82		V	0	0.000006
108	10201	N09A	20		V	0.8	0.53617
108	10201	N09A	50		V	9.09	0.000849
108	10201	N09A	82		V	0	0.00001

See pages A-1 and A-2 for an explanation of the columns

Location Code	Key Number	Fuel Model	Material Type	sub ID Code	Fuel Type	Isotopic Breakdown	Discharge Mass
108	10201	X09E	20		V	0.8	0.171798
108	10201	X09E	50		V	9.09	0.000272
108	10201	X09E	82		V	0	0.000003
108	10201	X09S	20		V	0.78	0.16156
108	10201	X09S	50		V	9.09	0.000256
108	10201	X09S	82		V	0	0.000003
108	10259	A09A	20		V	0.76	0.05052
108	10259	A09A	50		V	10.41	0.000091
108	10259	A09A	82		V	0	0.000001
108	10259	B09C	20		V	0.76	1.474138
108	10259	B09C	50		V	10.41	0.002666
108	10259	B09C	82		V	0	0.000034
108	10259	B09E	20		V	0.74	12.32238
108	10259	B09E	50		V	10.41	0.022279
108	10259	B09E	82		V	0	0.000279
108	10259	N09A	20		V	0.78	0.03153
108	10259	N09A	50		V	10.41	0.000057
108	10259	N09A	82		V	0	7.00e-07
108	10259	X09C	20		V	0.79	0.717121
108	10259	X09C	50		V	10.41	0.001296
108	10259	X09C	82		V	0	0.000016
108	10259	X09E	20		V	0.77	5.748173
108	10259	X09E	50		V	10.41	0.010395
108	10259	X09E	82		V	0	0.000131
108	10294	A07B	10		V	0.54	0.032558
108	10294	A07B	50		V	8.94	0.000049
108	10294	A07B	82		V	0	6.00e-07
108	10294	A09A	20		V	0.74	0.012625
108	10294	A09A	50		V	10.4	0.000023
108	10294	A09A	82		V	0	2.90e-07
108	10294	B09C	20		V	0.76	0.810745
108	10294	B09C	50		V	10.4	0.001462
108	10294	B09C	82		V	0	0.000018
108	10294	B09E	20		V	0.74	24.10675
108	10294	B09E	50		V	10.4	0.043476
108	10294	B09E	82		V	0	0.000546
108	10294	B09S	20		V	0.74	0.760911
108	10294	B09S	50		V	10.4	0.001372
108	10294	B09S	82		V	0	0.000017
108	10294	N07B	10		V	0.56	0.027111
108	10294	N07B	50		V	8.94	0.000041
108	10294	N07B	82		V	0	5.00e-07
108	10294	N09A	20		V	0.77	0.006305
108	10294	N09A	50		V	10.4	0.000011
108	10294	N09A	82		V	0	1.40e-07
108	10294	X09C	20		V	0.78	0.380707
108	10294	X09C	50		V	10.4	0.000687
108	10294	X09C	82		V	0	0.000008
108	10294	X09E	20		V	0.77	11.33217
108	10294	X09E	50		V	10.4	0.020432
108	10294	X09E	82		V	0	0.000258

See pages A-1 and A-2 for an explanation of the columns

Location Code	Key Number	Fuel Model	Material Type	sub ID Code	Fuel Type	Isotopic Breakdown	Discharge Mass
108	10294	X09S	20		V	0.77	0.344011
108	10294	X09S	50		V	10.4	0.00062
108	10294	X09S	82		V	0	0.000008
108	10350	B09C	20		V	0.77	0.031594
108	10350	B09C	50		V	9.28	0.000051
108	10350	B09C	82		V	0	6.30e-07
108	10350	B09E	20		V	0.77	0.238337
108	10350	B09E	50		V	9.28	0.000386
108	10350	B09E	82		V	0	0.000005
108	10350	B09S	20		V	0.77	0.08958
108	10350	B09S	50		V	9.28	0.000145
108	10350	B09S	82		V	0	0.000002
108	10350	X09C	20		V	0.79	0.014837
108	10350	X09C	50		V	9.28	0.000024
108	10350	X09C	82		V	0	3.00e-07
108	10350	X09E	20		V	0.79	0.11202
108	10350	X09E	50		V	9.28	0.000182
108	10350	X09E	82		V	0	0.000002
108	10350	X09S	20		V	0.78	0.042138
108	10350	X09S	50		V	9.28	0.000068
108	10350	X09S	82		V	0	8.40e-07
108	10385	A07B	10		V	0.51	0.130147
108	10385	A07B	50		V	10.21	0.000234
108	10385	A07B	82		V	0	0.000003
108	10385	B09A	20		V	0.72	0.14074
108	10385	B09A	50		V	11.21	0.000274
108	10385	B09A	82		V	0	0.000004
108	10385	B09E	20		V	0.72	23.76333
108	10385	B09E	50		V	11.21	0.046287
108	10385	B09E	82		V	0	0.000614
108	10385	B09S	20		V	0.73	0.298316
108	10385	B09S	50		V	11.21	0.000581
108	10385	B09S	82		V	0	0.000008
108	10385	N07B	10		V	0.53	0.075856
108	10385	N07B	50		V	10.21	0.000136
108	10385	N07B	82		V	0	0.000002
108	10385	X09A	20		V	0.76	0.059597
108	10385	X09A	50		V	11.21	0.000116
108	10385	X09A	82		V	0	0.000002
108	10385	X09E	20		V	0.76	11.15723
108	10385	X09E	50		V	11.21	0.021722
108	10385	X09E	82		V	0	0.000284
108	10385	X09S	20		V	0.76	0.154433
108	10385	X09S	50		V	11.21	0.000301
108	10385	X09S	82		V	0	0.000004
108	10456	A9D	20		V	0.72	0.00953
108	10456	A9D	50		V	11.24	0.000018
108	10456	A9D	82		V	0	2.40e-07
108	10456	B09E	20		V	0.88	0.031856
108	10456	B09E	50		V	11.24	0.000061
108	10456	B09E	82		V	0	8.00e-07

See pages A-1 and A-2 for an explanation of the columns

Location Code	Key Number	Fuel Model	Material Type	sub ID Code	Fuel Type	Isotopic Breakdown	Discharge Mass
108	10456	BXA	20		V	0.73	0.413963
108	10456	BXA	50		V	11.24	0.000793
108	10456	BXA	82		V	0	0.000011
108	10456	BXC	20		V	0.74	1.345611
108	10456	BXC	50		V	11.24	0.002577
108	10456	BXC	82		V	0	0.000035
108	10456	BXE	20		V	0.73	21.40138
108	10456	BXE	50		V	11.24	0.040972
108	10456	BXE	82		V	0	0.000541
108	10456	BXS	20		V	0.74	3.180601
108	10456	BXS	50		V	11.24	0.00609
108	10456	BXS	82		V	0	0.000081
108	10576	BXE	20		V	0.74	3.874377
108	10576	BXE	50		V	11.09	0.00738
108	10576	BXE	82		V	0	0.000098
108	10576	BXS	20		V	0.74	0.043871
108	10576	BXS	50		V	11.09	0.000084
108	10576	BXS	82		V	0	0.000001
108	10602	A7B	10		V	0.48	0.081265
108	10602	A7B	50		V	13.75	0.000188
108	10602	A7B	82		V	0	0.000003
108	10602	B09E	20		V	0.95	0.031895
108	10602	B09E	50		V	11.09	0.00003
108	10602	B09E	82		V	0	4.00e-07
108	10602	BXA	10		V	0.69	0.558238
108	10602	BXA	50		V	13.75	0.001293
108	10602	BXA	82		V	0	0.000019
108	10602	BXC	20		V	0.74	0.030929
108	10602	BXC	50		V	11.09	0.000029
108	10602	BXC	82		V	0	3.80e-07
108	10602	BXE	10		V	0.69	24.73497
108	10602	BXE	50		V	13.75	0.057294
108	10602	BXE	82		V	0	0.000828
108	10602	BXS	10		V	0.64	1.225649
108	10602	BXS	50		V	13.75	0.002839
108	10602	BXS	82		V	0	0.000041
108	10679	A7B	10		V	0.48	0.308771
108	10679	A7B	50		V	14.09	0.000728
108	10679	A7B	82		V	0	0.000011
108	10679	B09A	20		V	0.83	0.014109
108	10679	B09A	50		V	11.09	0.000027
108	10679	B09A	82		V	0	3.50e-07
108	10679	BXA	10		V	0.67	0.123994
108	10679	BXA	50		V	14.09	0.000292
108	10679	BXA	82		V	0	0.000004
108	10679	BXC	20		V	0.74	1.252617
108	10679	BXC	50		V	11.09	0.002385
108	10679	BXC	82		V	0	0.000031
108	10679	BXE	10		V	0.68	22.91124
108	10679	BXE	50		V	14.09	0.054006
108	10679	BXE	82		V	0	0.000796

See pages A-1 and A-2 for an explanation of the columns

Location Code	Key Number	Fuel Model	Material Type	sub ID Code	Fuel Type	Isotopic Breakdown	Discharge Mass
108	10679	BXS	10		V	0.71	1.293334
108	10679	BXS	50		V	14.09	0.003049
108	10679	BXS	82		V	0	0.000045
108	10742	B09C	10		V	0.7	1.167243
108	10742	B09C	50		V	14.25	0.002818
108	10742	B09C	82		V	0	0.000042
108	10742	B09E	10		V	0.66	12.33092
108	10742	B09E	50		V	14.25	0.029774
108	10742	B09E	82		V	0	0.000443
108	10742	B09S	10		V	0.67	0.461833
108	10742	B09S	50		V	14.25	0.001115
108	10742	B09S	82		V	0	0.000017
108	10742	X09C	20		V	0.74	0.548368
108	10742	X09C	50		V	10.8	0.001091
108	10742	X09C	82		V	0	0.000017
108	10742	X09E	10		V	0.71	5.791929
108	10742	X09E	50		V	14.25	0.013986
108	10742	X09E	82		V	0	0.00021
108	10742	X09S	20		V	0.72	0.224427
108	10742	X09S	50		V	10.8	0.000447
108	10742	X09S	82		V	0	0.000007
108	10764	B09S	20		V	0.95	0.052151
108	10764	B7E	81		V	0	0.04681
108	10764	BXA	20		V	0.95	0.446186
108	10764	BXE	20		V	0.95	0.365569
108	10764	BXR	20		V	0.95	0.373599
108	10764	BXS	20		V	0.95	0.681973
108	10764	X09A	20		V	0.93	0.00572
108	10764	X09E	20		V	0.94	0.013134
108	10764	X09R	20		V	0.95	0.00537
108	10770	BXC	20		V	0.73	0.680305
108	10770	BXC	50		V	11.66	0.001345
108	10770	BXC	82		V	0	0.000018
108	10770	BXE	10		V	0.69	14.07941
108	10770	BXE	50		V	13.91	0.032713
108	10770	BXE	82		V	0	0.000489
108	10770	BXS	10		V	0.69	4.426014
108	10770	BXS	50		V	13.91	0.010284
108	10770	BXS	82		V	0	0.000152
108	10832	A7B	10		V	0.49	0.260079
108	10832	A7B	50		V	13.65	0.0006
108	10832	A7B	82		V	0	0.000009
108	10832	BXA	10		V	0.66	0.041328
108	10832	BXA	50		V	13.65	0.000095
108	10832	BXA	82		V	0	0.000001

See pages A-1 and A-2 for an explanation of the columns

Location Code	Key Number	Fuel Model	Material Type	sub ID Code	Fuel Type	Isotopic Breakdown	Discharge Mass
108	10832	BXC	10		V	0.71	2.039846
108	10832	BXC	50		V	13.65	0.004703
108	10832	BXC	82		V	0	0.00007
108	10832	BXE	10		V	0.69	47.20901
108	10832	BXE	50		V	13.65	0.108844
108	10832	BXE	82		V	0	0.0016
108	10832	BXS	10		V	0.66	3.131132
108	10832	BXS	50		V	13.65	0.00722
108	10832	BXS	82		V	0	0.000106
108	10982	A07B	10		V	0.48	0.173428
108	10982	A07B	50		V	14.97	0.000433
108	10982	A07B	82		V	0	0.000007
108	10982	B09A	10		V	0.69	0.126571
108	10982	B09A	50		V	14.97	0.000316
108	10982	B09A	82		V	0	0.000005
108	10982	B09C	20		V	0.71	0.704745
108	10982	B09C	50		V	11.7	0.001436
108	10982	B09C	82		V	0	0.00002
108	10982	B09E	10		V	0.65	15.16333
108	10982	B09E	50		V	14.97	0.037897
108	10982	B09E	82		V	0	0.000584
108	10982	B09S	10		V	0.67	0.938379
108	10982	B09S	50		V	14.97	0.002345
108	10982	B09S	82		V	0	0.000036
108	10982	N07B	10		V	0.52	0.08666
108	10982	N07B	50		V	14.97	0.000217
108	10982	N07B	82		V	0	0.000003
108	10982	X09A	20		V	0.76	0.059598
108	10982	X09A	50		V	11.7	0.000122
108	10982	X09A	82		V	0	0.000002
108	10982	X09C	20		V	0.75	0.331073
108	10982	X09C	50		V	11.7	0.000675
108	10982	X09C	82		V	0	0.000009
108	10982	X09E	10		V	0.7	7.072527
108	10982	X09E	50		V	14.97	0.01768
108	10982	X09E	82		V	0	0.000275
108	10982	X09S	20		V	0.72	0.497909
108	10982	X09S	50		V	11.7	0.001015
108	10982	X09S	82		V	0	0.000014
108	11036	A09D	10		V	0.68	0.006356
108	11036	A09D	50		V	14.37	0.000015
108	11036	A09D	82		V	0	2.30e-07
108	11036	B09C	20		V	0.73	0.326187
108	11036	B09C	50		V	13.31	0.000729
108	11036	B09C	82		V	0	0.000011
108	11036	B09E	10		V	0.66	7.798047
108	11036	B09E	50		V	14.37	0.018824
108	11036	B09E	82		V	0	0.000285
108	11036	B09S	10		V	0.65	0.684893
108	11036	B09S	50		V	14.37	0.001654
108	11036	B09S	82		V	0	0.000025

See pages A-1 and A-2 for an explanation of the columns

Location Code	Key Number	Fuel Model	Material Type	sub ID Code	Fuel Type	Isotopic Breakdown	Discharge Mass
108	11036	N09D	20		V	0.73	0.003169
108	11036	N09D	50		V	13.31	0.000007
108	11036	N09D	82		V	0	1.00e-07
108	11036	X09A	10		V	0.69	0.013225
108	11036	X09A	50		V	14.37	0.000032
108	11036	X09A	82		V	0	4.80e-07
108	11036	X09C	20		V	0.76	0.123564
108	11036	X09C	50		V	13.31	0.000276
108	11036	X09C	82		V	0	0.000004
108	11036	X09E	10		V	0.71	3.689834
108	11036	X09E	50		V	14.37	0.00891
108	11036	X09E	82		V	0	0.000134
108	11036	X09S	10		V	0.7	0.329476
108	11036	X09S	50		V	14.37	0.000795
108	11036	X09S	82		V	0	0.000012
108	11109	B09A	10		V	0.69	0.16879
108	11109	B09A	50		V	14.62	0.000413
108	11109	B09A	82		V	0	0.000006
108	11109	B09C	10		V	0.71	0.673131
108	11109	B09C	50		V	14.62	0.001648
108	11109	B09C	82		V	0	0.000026
108	11109	B09E	10		V	0.65	15.07112
108	11109	B09E	50		V	14.62	0.036899
108	11109	B09E	82		V	0	0.000571
108	11109	B09S	10		V	0.65	1.235751
108	11109	B09S	50		V	14.62	0.003025
108	11109	B09S	82		V	0	0.000046
108	11109	X09A	20		V	0.73	0.079413
108	11109	X09A	50		V	10.32	0.00015
108	11109	X09A	82		V	0	0.000002
108	11109	X09C	20		V	0.75	0.331074
108	11109	X09C	50		V	10.32	0.000628
108	11109	X09C	82		V	0	0.000009
108	11109	X09E	10		V	0.7	7.073428
108	11109	X09E	50		V	14.62	0.017319
108	11109	X09E	82		V	0	0.000266
108	11109	X09S	10		V	0.7	0.574785
108	11109	X09S	50		V	14.62	0.001407
108	11109	X09S	82		V	0	0.000021
108	11183	A07B	10		V	0.44	0.184081
108	11183	A07B	50		V	14.49	0.00045
108	11183	A07B	82		V	0	0.000007
108	11183	B09A	10		V	0.62	0.140425
108	11183	B09A	50		V	14.49	0.000343
108	11183	B09A	82		V	0	0.000005
108	11183	B09C	10		V	0.69	0.189234
108	11183	B09C	50		V	14.49	0.000462
108	11183	B09C	82		V	0	0.000007
108	11183	B09E	10		V	0.66	32.82243
108	11183	B09E	50		V	14.49	0.080189
108	11183	B09E	82		V	0	0.001222

See pages A-1 and A-2 for an explanation of the columns

Location Code	Key Number	Fuel Model	Material Type	sub ID Code	Fuel Type	Isotopic Breakdown	Discharge Mass
108	11183	B09S	10		V	0.63	1.012043
108	11183	B09S	50		V	14.49	0.002472
108	11183	B09S	82		V	0	0.000038
108	11183	BXC	10		V	0.71	0.030941
108	11183	BXC	50		V	14.49	0.000076
108	11183	BXC	82		V	0	0.000001
108	11183	BXE	10		V	0.71	0.209737
108	11183	BXE	50		V	14.49	0.000512
108	11183	BXE	82		V	0	0.000008
108	11183	BXS	10		V	0.71	0.043783
108	11183	BXS	50		V	14.49	0.000107
108	11183	BXS	82		V	0	0.000002
108	11183	N07B	10		V	0.49	0.097432
108	11183	N07B	50		V	14.49	0.000238
108	11183	N07B	82		V	0	0.000004
108	11183	X09A	10		V	0.68	0.06605
108	11183	X09A	50		V	14.49	0.000161
108	11183	X09A	82		V	0	0.000003
108	11183	X09C	20		V	0.73	0.088899
108	11183	X09C	50		V	11.02	0.000183
108	11183	X09C	82		V	0	0.000003
108	11183	X09E	10		V	0.71	15.39268
108	11183	X09E	50		V	14.49	0.037604
108	11183	X09E	82		V	0	0.000578
108	11183	X09S	10		V	0.69	0.49053
108	11183	X09S	50		V	14.49	0.001198
108	11183	X09S	82		V	0	0.000018
108	11372	A07B	10		V	0.47	0.130046
108	11372	A07B	50		V	15.17	0.000323
108	11372	A07B	82		V	0	0.000005
108	11372	B09A	10		V	0.63	0.042131
108	11372	B09A	50		V	15.17	0.000105
108	11372	B09A	82		V	0	0.000002
108	11372	B09C	10		V	0.69	0.420552
108	11372	B09C	50		V	15.17	0.001044
108	11372	B09C	82		V	0	0.000016
108	11372	B09E	10		V	0.66	19.86085
108	11372	B09E	50		V	15.17	0.04928
108	11372	B09E	82		V	0	0.000752
108	11372	B09S	10		V	0.65	0.684839
108	11372	B09S	50		V	15.17	0.001699
108	11372	B09S	82		V	0	0.000026
108	11372	N07B	10		V	0.51	0.059569
108	11372	N07B	50		V	15.17	0.000148
108	11372	N07B	82		V	0	0.000002
108	11372	X09A	20		V	0.72	0.019848
108	11372	X09A	50		V	12.05	0.000043
108	11372	X09A	82		V	0	6.60e-07
108	11372	X09C	20		V	0.74	0.177825
108	11372	X09C	50		V	12.05	0.000388
108	11372	X09C	82		V	0	0.000006

See pages A-1 and A-2 for an explanation of the columns

Location Code	Key Number	Fuel Model	Material Type	sub ID Code	Fuel Type	Isotopic Breakdown	Discharge Mass
108	11372	X09E	20		V	0.71	9.393451
108	11372	X09E	50		V	12.05	0.020513
108	11372	X09E	82		V	0	0.000315
108	11372	X09S	10		V	0.7	0.30841
108	11372	X09S	50		V	15.17	0.000765
108	11972	X09S	82		V	0	0.000011
108	11449	B09A	10		V	0.66	0.196778
108	11449	B09A	50		V	14.37	0.000471
108	11449	B09A	82		V	0	0.000007
108	11449	B09C	10		V	0.69	0.094623
108	11449	B09C	50		V	14.37	0.000226
108	11449	B09C	82		V	0	0.000004
108	11449	B09E	10		V	0.66	16.23012
108	11449	B09E	50		V	14.37	0.03882
108	11449	B09E	82		V	0	0.000594
108	11449	B09S	10		V	0.69	3.353249
108	11449	B09S	50		V	14.37	0.008021
108	11449	B09S	82		V	0	0.000124
108	11449	X09A	10		V	0.71	0.085984
108	11449	X09A	50		V	14.37	0.000206
108	11449	X09A	82		V	0	0.000003
108	11449	X09C	20		V	0.74	0.039517
108	11449	X09C	50		V	11.03	0.00008
108	11449	X09C	82		V	0	0.000001
108	11449	X09E	10		V	0.71	7.611167
108	11449	X09E	50		V	14.37	0.018204
108	11449	X09E	82		V	0	0.000276
108	11449	X09S	20		V	0.73	1.613429
108	11449	X09S	50		V	11.03	0.003255
108	11449	X09S	82		V	0	0.000048
108	11540	A07B	10		V	0.5	0.151821
108	11540	A07B	50		V	11.66	0.0003
108	11540	A07B	82		V	0	0.000004
108	11540	B09A	20		V	0.72	0.140757
108	11540	B09A	50		V	11.3	0.000274
108	11540	B09A	82		V	0	0.000004
108	11540	B09C	20		V	0.72	0.042084
108	11540	B09C	50		V	11.3	0.000082
108	11540	B09C	82		V	0	0.000001
108	11540	B09E	20		V	0.73	7.588326
108	11540	B09E	50		V	11.3	0.014761
108	11540	B09E	82		V	0	0.000206
108	11540	B09S	20		V	0.72	0.596613
108	11540	B09S	50		V	11.3	0.001161
108	11540	B09S	82		V	0	0.000016
108	11540	BXE	20		V	0.72	0.980828
108	11540	BXE	50		V	11.3	0.001908
108	11540	BXE	82		V	0	0.000026
108	11540	N07B	10		V	0.53	0.075854
108	11540	N07B	50		V	11.66	0.00015
108	11540	N07B	82		V	0	0.000002

See pages A-1 and A-2 for an explanation of the columns

Location Code	Key Number	Fuel Model	Material Type	sub ID Code	Fuel Type	Isotopic Breakdown	Discharge Mass
108	11540	X09A	20		V	0.75	0.072834
108	11540	X09A	50		V	11.3	0.000142
108	11540	X09A	82		V	0	0.000002
108	11540	X09C	20		V	0.76	0.02471
108	11540	X09C	50		V	11.3	0.000048
108	11540	X09C	82		V	0	6.50e-07
108	11540	X09E	20		V	0.76	3.560047
108	11540	X09E	50		V	11.3	0.006926
108	11540	X09E	82		V	0	0.000095
108	11540	X09S	20		V	0.75	0.273709
108	11540	X09S	50		V	11.3	0.000532
108	11540	X09S	82		V	0	0.000007
108	11733	B09E	10		V	0.7	0.349069
108	11733	B09E	50		V	12.82	0.000762
108	11733	B09E	82		V	0	0.000011
108	11733	B09S	10		V	0.7	0.089444
108	11733	B09S	50		V	12.82	0.000195
108	11733	B09S	82		V	0	0.000003
108	11733	X09E	20		V	0.74	0.156671
108	11733	X09E	50		V	10.36	0.000304
108	11733	X09E	82		V	0	0.000004
108	11733	X09S	20		V	0.74	0.049116
108	11733	X09S	50		V	10.36	0.000095
108	11733	X09S	82		V	0	0.000001
108	11806	A07B	10		V	0.47	0.162563
108	11806	A07B	50		V	15.03	0.000399
108	11806	A07B	82		V	0	0.000006
108	11806	B09A	20		V	0.73	0.084459
108	11806	B09A	50		V	11.94	0.000181
108	11806	B09A	82		V	0	0.000003
108	11806	B09C	20		V	0.74	0.021051
108	11806	B09C	50		V	11.94	0.000045
108	11806	B09C	82		V	0	7.00e-07
108	11806	B09E	10		V	0.67	18.21424
108	11806	B09E	50		V	15.03	0.044708
108	11806	B09E	82		V	0	0.000678
108	11806	B09S	10		V	0.63	0.267865
108	11806	B09S	50		V	15.03	0.000657
108	11806	B09S	82		V	0	0.00001
108	11806	BXE	20		V	0.72	0.326966
108	11806	BXE	50		V	11.94	0.0007
108	11806	BXE	82		V	0	0.000011
108	11806	N07B	10		V	0.51	0.070407
108	11806	N07B	50		V	15.03	0.000173
108	11806	N07B	82		V	0	0.000003
108	11806	X09A	20		V	0.76	0.033111
108	11806	X09A	50		V	11.94	0.000071
108	11806	X09A	82		V	0	0.000001
108	11806	X09C	20		V	0.78	0.009888
108	11806	X09C	50		V	11.94	0.000021
108	11806	X09C	82		V	0	3.20e-07

See pages A-1 and A-2 for an explanation of the columns

Location Code	Key Number	Fuel Model	Material Type	sub ID Code	Fuel Type	Isotopic Breakdown	Discharge Mass
108	11806	X09E	20		V	0.72	8.589093
108	11806	X09E	50		V	11.94	0.018397
108	11806	X09E	82		V	0	0.000288
108	11806	X09S	10		V	0.69	0.126152
108	11806	X09S	50		V	15.03	0.00031
108	11806	X09S	82		V	0	0.000005
108	11897	B09C	20		V	0.72	3.040089
108	11897	B09C	50		V	11.69	0.00602
108	11897	B09C	82		V	0	0.000084
108	11897	B09E	10		V	0.63	20.32167
108	11897	B09E	50		V	15.47	0.053014
108	11897	B09E	82		V	0	0.000847
108	11897	B09S	10		V	0.64	1.607559
108	11897	B09S	50		V	15.47	0.004194
108	11897	B09S	82		V	0	0.000067
108	11897	X09A	10		V	0.69	0.006612
108	11897	X09A	50		V	15.47	0.000017
108	11897	X09A	82		V	0	2.80e-07
108	11897	X09C	20		V	0.76	1.428212
108	11897	X09C	50		V	11.69	0.002829
108	11897	X09C	82		V	0	0.00004
108	11897	X09E	10		V	0.69	9.55962
108	11897	X09E	50		V	15.47	0.024942
108	11897	X09E	82		V	0	0.000398
108	11897	X09S	10		V	0.69	0.749897
108	11897	X09S	50		V	15.47	0.001956
108	11897	X09S	82		V	0	0.000031
108	11979	A7B	10		V	0.49	0.081282
108	11979	A7B	50		V	15.34	0.000208
108	11979	A7B	82		V	0	0.000003
108	11979	B09C	10		V	0.68	1.849931
108	11979	B09C	50		V	15.34	0.004734
108	11979	B09C	82		V	0	0.000076
108	11979	B09E	10		V	0.63	14.22384
108	11979	B09E	50		V	15.34	0.036396
108	11979	B09E	82		V	0	0.000584
108	11979	B09S	10		V	0.66	1.921296
108	11979	B09S	50		V	15.34	0.004916
108	11979	B09S	82		V	0	0.000079
108	11979	BXC	10		V	0.69	0.370705
108	11979	BXC	50		V	15.34	0.000949
108	11979	BXC	82		V	0	0.000015
108	11979	BXE	10		V	0.66	9.597243
108	11979	BXE	50		V	15.34	0.024559
108	11979	BXE	82		V	0	0.000391
108	11979	BXS	10		V	0.67	0.459883
108	11979	BXS	50		V	15.34	0.001177
108	11979	BXS	82		V	0	0.000019
108	11979	X09C	20		V	0.73	0.893048
108	11979	X09C	50		V	11.7	0.001882
108	11979	X09C	82		V	0	0.000029

See pages A-1 and A-2 for an explanation of the columns

Location Code	Key Number	Fuel Model	Material Type	sub ID Code	Fuel Type	Isotopic Breakdown	Discharge Mass
108	11979	X09E	10		V	0.69	6.676392
108	11979	X09E	50		V	15.34	0.017087
108	11979	X09E	82		V	0	0.000269
108	11979	X09S	20		V	0.71	0.890476
108	11979	X09S	50		V	11.7	0.001875
108	11979	X09S	82		V	0	0.000029
108	12127	A7B	10		V	0.45	0.146157
108	12127	A7B	50		V	14.73	0.000365
108	12127	A7B	82		V	0	0.000006
108	12127	BXA	10		V	0.67	0.496056
108	12127	BXA	50		V	14.73	0.001237
108	12127	BXA	82		V	0	0.000019
108	12127	BXC	10		V	0.69	0.339818
108	12127	BXC	50		V	14.73	0.000848
108	12127	BXC	82		V	0	0.000013
108	12127	BXE	10		V	0.67	26.16562
108	12127	BXE	50		V	14.73	0.065269
108	12127	BXE	82		V	0	0.001022
108	12127	BXS	10		V	0.66	3.327976
108	12127	BXS	50		V	14.73	0.008302
108	12127	BXS	82		V	0	0.000129
108	12201	A7B	10		V	0.49	0.130051
108	12201	A7B	50		V	13.98	0.000305
108	12201	A7B	82		V	0	0.000005
108	12201	B09C	20		V	0.95	0.01057
108	12201	B09C	50		V	11.38	0.000019
108	12201	B09C	82		V	0	2.70e-07
108	12201	BXC	20		V	0.74	0.448464
108	12201	BXC	50		V	11.38	0.000823
108	12201	BXC	82		V	0	0.000012
108	12201	BXE	10		V	0.69	15.898
108	12201	BXE	50		V	13.98	0.037237
108	12201	BXE	82		V	0	0.000566
108	12201	BXS	10		V	0.68	5.651549
108	12201	BXS	50		V	13.98	0.013238
108	12201	BXS	82		V	0	0.000201
108	12201	X09E	20		V	0.95	0.007493
108	12201	X09E	50		V	11.38	0.000014
108	12201	X09E	82		V	0	1.90e-07
108	12240	B09E	10		V	0.68	0.063436
108	12240	B09E	50		V	14.51	0.000146
108	12240	B09E	82		V	0	0.000002
108	12240	X09E	20		V	0.73	0.029835
108	12240	X09E	50		V	11.22	0.00006
108	12240	X09E	82		V	0	8.80e-07
108	12285	B09A	10		V	0.64	0.014048
108	12285	B09A	50		V	14.45	0.000034
108	12285	B09A	82		V	0	5.30e-07
108	12285	B09E	10		V	0.67	0.031693
108	12285	B09E	50		V	14.45	0.000077
108	12285	B09E	82		V	0	0.000001

See pages A-1 and A-2 for an explanation of the columns

Location Code	Key Number	Fuel Model	Material Type	sub ID Code	Fuel Type	Isotopic Breakdown	Discharge Mass
108	12285	BXC	20		V	0.72	0.757435
108	12285	BXC	50		V	12.1	0.001555
108	12285	BXC	82		V	0	0.000022
108	12285	BXE	10		V	0.67	57.56088
108	12285	BXE	50		V	14.45	0.140543
108	12285	BXE	82		V	0	0.002174
108	12285	BXS	10		V	0.66	6.086724
108	12285	BXS	50		V	14.45	0.014859
108	12285	BXS	82		V	0	0.000228
108	12285	X09C	20		V	0.95	0.004962
108	12285	X09C	50		V	12.1	0.00001
108	12285	X09C	82		V	0	1.40e-07
108	12480	BXA	10		V	0.66	0.578595
108	12480	BXA	50		V	14.29	0.001403
108	12480	BXA	82		V	0	0.000022
108	12480	BXC	20		V	0.72	0.247324
108	12480	BXC	50		V	12.38	0.000509
108	12480	BXC	82		V	0	0.000007
108	12480	BXE	10		V	0.68	49.49961
108	12480	BXE	50		V	14.29	0.119985
108	12480	BXE	82		V	0	0.001848
108	12480	BXS	10		V	0.67	3.723296
108	12480	BXS	50		V	14.29	0.009025
108	12480	BXS	82		V	0	0.000138
108	12565	BXA	10		V	0.69	0.289453
108	12565	BXA	50		V	14.15	0.00069
108	12565	BXA	82		V	0	0.000011
108	12565	BXC	10		V	0.68	0.13899
108	12565	BXC	50		V	14.15	0.000331
108	12565	BXC	82		V	0	0.000005
108	12565	BXE	10		V	0.68	34.70278
108	12565	BXE	50		V	14.15	0.082699
108	12565	BXE	82		V	0	0.001266
108	12565	BXS	10		V	0.7	3.637973
108	12565	BXS	50		V	14.15	0.00867
108	12565	BXS	82		V	0	0.000133
108	12565	X09E	20		V	0.95	0.014986
108	12565	X09E	50		V	0	1.20e-07
108	12639	B09E	10		V	0.69	0.031703
108	12639	B09E	50		V	13.84	0.000074
108	12639	B09E	82		V	0	0.000001
108	12639	B7E	10		V	0.55	0.023035
108	12639	B7E	50		V	13.84	0.000054
108	12639	B7E	82		V	0	8.20e-07
108	12639	BXE	10		V	0.69	40.23534
108	12639	BXE	50		V	13.84	0.094447
108	12639	BXE	82		V	0	0.001415
108	12639	BXS	10		V	0.67	5.387353
108	12639	BXS	50		V	13.84	0.012647
108	12639	BXS	82		V	0	0.000192

See pages A-1 and A-2 for an explanation of the columns

Location Code	Key Number	Fuel Model	Material Type	sub ID Code	Fuel Type	Isotopic Breakdown	Discharge Mass
108	12852	BXE	20		V	0.74	2.520529
108	12852	BXE	50		V	11.43	0.004749
108	12852	BXE	82		V	0	0.000065
108	13015	BXC	20		V	0.72	0.21617
108	13015	BXC	50		V	13.19	0.000428
108	13015	BXC	82		V	0	0.000006
108	13015	BXE	20		V	0.72	0.652963
108	13015	BXE	50		V	13.19	0.001293
108	13015	BXE	82		V	0	0.000018
108	13016	BXS	20		V	0.86	0.021922
108	13016	BXS	50		V	5.63	0.000018
108	13016	BXS	82		V	0	2.10e-07
108	13371	BXE	20		V	0.84	0.021108
108	13371	BXE	50		V	6.58	0.00002
108	13371	BXE	82		V	0	2.40e-07
108	13649	B7E	10		V	0.57	0.374046
108	13649	B7E	50		V	11.4	0.000631
108	13649	B7E	82		V	0	0.000008
108	13649	BXC	20		V	0.72	0.587287
108	13649	BXC	50		V	13.25	0.001159
108	13649	BXC	82		V	0	0.000017
108	13649	BXE	20		V	0.72	3.965021
108	13649	BXE	50		V	13.25	0.007825
108	13649	BXE	82		V	0	0.000116
108	13685	BXE	20		V	0.72	2.612148
108	13685	BXE	50		V	13.34	0.005193
108	13685	BXE	82		V	0	0.000077
108	14065	X09E	20		V	0.86	0.023268
108	14065	X09E	50		V	5.62	0.000019
108	14065	X09E	82		V	0	2.40e-07
108	14355	B09C	10		V	0.66	0.094561
108	14355	B09C	50		V	15.74	0.000253
108	14355	B09C	82		V	0	0.000004
108	14355	B09E	20		V	0.72	6.189737
108	14355	B09E	50		V	12	0.012254
108	14355	B09E	82		V	0	0.000172
108	14355	B09S	10		V	0.61	0.312363
108	14355	B09S	50		V	15.74	0.000836
108	14355	B09S	82		V	0	0.000013
108	14355	X09C	10		V	0.71	0.044429
108	14355	X09C	50		V	15.74	0.000119
108	14355	X09C	82		V	0	0.000002
108	14355	X09E	20		V	0.76	2.910359
108	14355	X09E	50		V	12	0.00576
108	14355	X09E	82		V	0	0.000082
108	14355	X09S	10		V	0.67	0.147105
108	14355	X09S	50		V	15.74	0.000394
108	14355	X09S	82		V	0	0.000006
108	14356	A09A	20		V	0.81	0.180411
108	14356	A09A	50		V	11.28	0.000283
108	14356	A09A	82		V	0	0.000003

See pages A-1 and A-2 for an explanation of the columns

Location Code	Key Number	Fuel Model	Material Type	sub ID Code	Fuel Type	Isotopic Breakdown	Discharge Mass
108	14356	A9A	20		V	0.81	3.202667
108	14356	A9A	50		V	11.28	0.005031
108	14356	A9A	82		V	0	0.000059
108	14356	B09S	20		V	0.78	0.022
108	14356	B09S	50		V	11.28	0.000035
108	14356	B09S	82		V	0	4.00e-07
108	14356	BXA	20		V	0.75	8.148949
108	14356	BXA	50		V	11.28	0.012802
108	14356	BXA	82		V	0	0.00015
108	14356	BXE	20		V	0.76	1.349992
108	14356	BXE	50		V	11.28	0.002121
108	14356	BXE	82		V	0	0.000025
108	14356	BXS	20		V	0.74	0.371997
108	14356	BXS	50		V	11.28	0.000584
108	14356	BXS	82		V	0	0.000007
108	14356	N09A	20		V	0.81	0.084899
108	14356	N09A	50		V	11.28	0.000133
108	14356	N09A	82		V	0	0.000002
108	14356	X09E	20		V	0.81	0.1035
108	14356	X09E	50		V	11.28	0.000163
108	14356	X09E	82		V	0	0.000002
108	14722	B7E	10		V	0.65	0.068792
108	14722	B7E	50		V	5.05	0.00005
108	14722	B7E	82		V	0	5.40e-07
108	15204	B09E	20		V	0.85	0.015905
108	15204	B09E	50		V	6.01	0.000014
108	15204	B09E	82		V	0	1.60e-07
108	15204	B7E	10		V	0.65	0.35096
108	15204	B7E	50		V	5.53	0.000281
108	15204	B7E	82		V	0	0.000003
108	15204	BXA	20		V	0.85	14.29324
108	15204	BXA	50		V	6.01	0.01245
108	15204	BXA	82		V	0	0.000145
108	15204	BXC	20		V	0.85	3.16191
108	15204	BXC	50		V	6.01	0.002754
108	15204	BXC	82		V	0	0.000033
108	15204	BXE	20		V	0.85	59.433
108	15204	BXE	50		V	6.01	0.051786
108	15204	BXE	82		V	0	0.00061
108	15204	BXS	20		V	0.85	20.09126
108	15204	BXS	50		V	6.01	0.017503
108	15204	BXS	82		V	0	0.000201
108	15204	X09E	20		V	0.85	0.007485
108	15204	X09E	50		V	6.01	0.000007
108	15204	X09E	82		V	0	8.00e-08
108	15240	B09E	20		V	0.86	0.015906
108	15240	B09E	50		V	5.6	0.000013
108	15240	B09E	82		V	0	1.40e-07
108	15240	B7E	10		V	0.65	0.374369
108	15240	B7E	50		V	5.71	0.00043
108	15240	B7E	82		V	0	0.000005

See pages A-1 and A-2 for an explanation of the columns

Location Code	Key Number	Fuel Model	Material Type	sub ID Code	Fuel Type	Isotopic Breakdown	Discharge Mass
108	15240	BXS	20		V	0.86	0.087938
108	15240	BXS	50		V	5.6	0.000069
108	15240	BXS	82		V	0	7.60e-07
108	15240	X09A	20		V	0.87	0.006639
108	15240	X09A	50		V	5.6	0.000005
108	15240	X09A	82		V	0	6.00e-08
108	15240	X09S	20		V	0.86	0.007035
108	15240	X09S	50		V	5.6	0.000006
108	15240	X09S	82		V	0	6.00e-08
108	15316	BXA	20		V	0.85	10.03809
108	15316	BXA	50		V	6.1	0.008775
108	15316	BXA	82		V	0	0.000106
108	15316	BXC	20		V	0.86	0.185878
108	15316	BXC	50		V	6.1	0.000163
108	15316	BXC	82		V	0	0.000002
108	15316	BXE	20		V	0.85	4.958521
108	15316	BXE	50		V	6.1	0.004338
108	15316	BXE	82		V	0	0.000053
108	15316	BXS	20		V	0.86	4.330962
108	15316	BXS	50		V	6.1	0.003786
108	15316	BXS	82		V	0	0.000047
108	15316	X09E	20		V	0.85	0.007485
108	15316	X09E	50		V	6.1	0.000007
108	15316	X09E	82		V	0	8.00e-08
108	15399	BXE	20		V	0.95	0.374485
108	15444	BXA	20		V	0.88	0.103645
108	15444	BXA	50		V	4.7	0.00006
108	15444	BXA	82		V	0	6.50e-07
108	15444	BXE	20		V	0.89	0.116888
108	15444	BXE	50		V	4.7	0.000068
108	15444	BXE	82		V	0	7.50e-07
108	15444	BXS	20		V	0.89	0.08789
108	15444	BXS	50		V	4.7	0.000051
108	15444	BXS	82		V	0	5.20e-07
108	15451	B7E	10		V	0.66	1.496212
108	15451	B7E	50		V	4.97	0.000914
108	15451	B7E	82		V	0	0.00001
108	15451	BXA	20		V	0.83	6.792276
108	15451	BXA	50		V	6.79	0.007239
108	15451	BXA	82		V	0	0.000082
108	15451	BXC	20		V	0.83	0.092584
108	15451	BXC	50		V	6.79	0.000099
108	15451	BXC	82		V	0	0.000001
108	15451	BXS	20		V	0.9	0.04396
108	15451	BXS	50		V	6.79	0.000047
108	15451	BXS	82		V	0	5.40e-07
108	15455	BXA	20		V	0.86	0.372934
108	15455	BXA	50		V	4.94	0.000225
108	15455	BXA	82		V	0	0.000002

Location Code	Key Number	Fuel Model	Material Type	sub ID Code	Fuel Type	Isotopic Breakdown	Discharge Mass
108	15455	BXE	20		V	0.88	0.747968
108	15455	BXE	50		V	4.94	0.000452
108	15455	BXE	82		V	0	0.000005
108	15455	BXS	20		V	0.92	0.373739
108	15455	BXS	50		V	4.94	0.000226
108	15455	BXS	82		V	0	0.000003
108	15457	B7E	10		V	0.69	0.046788
108	15457	B7E	50		V	1.69	0.000012
108	15457	B7E	82		V	0	1.20e-07
108	15457	BXA	20		V	0.87	0.290174
108	15457	BXA	50		V	4.35	0.000198
108	15457	BXA	82		V	0	0.000002
108	15458	B7E	10		V	0.67	0.374152
108	15458	B7E	50		V	3.44	0.000181
108	15458	B7E	82		V	0	0.000002
108	15458	BXA	20		V	0.88	21.26727
108	15458	BXA	50		V	4.26	0.011707
108	15458	BXA	82		V	0	0.000123
108	15458	BXC	20		V	0.9	2.596366
108	15458	BXC	50		V	4.26	0.00143
108	15458	BXC	82		V	0	0.000015
108	15458	BXE	20		V	0.89	67.3323
108	15458	BXE	50		V	4.26	0.037094
108	15458	BXE	82		V	0	0.000374
108	15458	BXR	20		V	0.91	0.373308
108	15458	BXR	50		V	4.26	0.000206
108	15458	BXR	82		V	0	0.000002
108	15458	BXS	20		V	0.89	40.34478
108	15458	BXS	50		V	4.26	0.022216
108	15458	BXS	82		V	0	0.000239
108	15460	B7E	10		V	0.69	2.947289
108	15460	B7E	50		V	2.83	0.000971
108	15460	B7E	82		V	0	0.000009
108	15460	BXA	20		V	0.88	14.92423
108	15460	BXA	50		V	4.29	0.00972
108	15460	BXA	82		V	0	0.000108
108	15461	BXE	20		V	0.93	12.72751
108	15461	BXE	50		V	1.55	0.00247
108	15461	BXE	82		V	0	0.000022
107	09621	K5A	20		I	1.11	0.105496
107	09621	K5A	50		I	6.04	0.000103
107	09964	A2M	20		I	1.01	0.017123
107	09964	A2M	50		I	6.18	0.000017
107	09964	A2M	82		I	0	1.90e-07
107	09964	A2T	20		I	1.01	0.279637
107	09964	A2T	50		I	6.18	0.000278
107	09964	A2T	82		I	0	0.000003
107	09964	BXA	20		V	0.85	0.041658
107	09964	BXA	50		V	6.26	0.000038
107	09964	BXA	82		V	0	3.80e-07

Location Code	Key Number	Fuel Model	Material Type	sub ID Code	Fuel Type	Isotopic Breakdown	Discharge Mass
107	09964	N09E	20		I	0.81	0.013771
107	09964	N09E	50		I	6.18	0.000014
107	09964	N09E	82		I	0	1.60e-07
107	09964	N09F	20		I	0.81	0.003879
107	09964	N09F	50		I	6.18	0.000004
107	09964	N09F	82		I	0	4.00e-08
107	09964	N09M	20		I	0.81	0.00548
107	09964	N09M	50		I	6.18	0.000005
107	09964	N09M	82		I	0	6.00e-08
107	09964	X09A	20		V	0.85	0.03334
107	09964	X09A	50		V	6.26	0.00003
107	09964	X09A	82		V	0	3.00e-07
107	09993	A2F	20		I	0.91	0.246184
107	09993	A2F	50		I	10.29	0.000405
107	09993	A2F	82		I	0	0.000005
107	09993	A2M	20		I	0.91	4.636134
107	09993	A2M	50		I	10.29	0.007627
107	09993	A2M	82		I	0	0.000104
107	09993	A2T	20		I	0.91	3.566373
107	09993	A2T	50		I	10.29	0.005865
107	09993	A2T	82		I	0	0.000078
107	10001	B09C	10		V	0.71	0.03156
107	10001	B09C	50		V	13.59	0.000064
107	10001	B09C	82		V	0	9.00e-07
107	10001	B09E	10		V	0.71	0.03169
107	10001	B09E	50		V	13.59	0.000064
107	10001	B09E	82		V	0	9.00e-07
107	10001	B09R	20		V	0.88	0.013353
107	10001	B09R	50		V	5.61	0.000011
107	10001	B09R	82		V	0	1.30e-07
107	10001	B09S	10		V	0.71	0.029772
107	10001	B09S	50		V	13.59	0.00006
107	10001	B09S	82		V	0	8.60e-07
107	10001	BXE	10		V	0.71	0.72243
107	10001	BXE	50		V	13.59	0.001455
107	10001	BXE	82		V	0	0.00002
107	10001	BXR	20		V	0.88	0.019638
107	10001	BXR	50		V	5.61	0.000016
107	10001	BXR	82		V	0	1.90e-07
107	10001	BXS	20		V	0.86	0.021922
107	10001	BXS	50		V	5.61	0.000018
107	10001	BXS	82		V	0	2.10e-07
107	10001	X09E	10		V	0.7	0.007459
107	10001	X09E	50		V	13.59	0.000015
107	10001	X09E	82		V	0	2.10e-07
107	10001	X09R	20		V	0.88	0.006284
107	10001	X09R	50		V	5.61	0.000005
107	10001	X09R	82		V	0	6.00e-08
107	10001	X09S	10		V	0.71	0.01401
107	10001	X09S	50		V	13.59	0.000028
107	10001	X09S	82		V	0	4.00e-07

See pages A-1 and A-2 for an explanation of the columns

Location Code	Key Number	Fuel Model	Material Type	sub ID Code	Fuel Type	Isotopic Breakdown	Discharge Mass
107	10201	A2E	20		I	0.94	0.24942
107	10201	A2E	50		I	9.22	0.000368
107	10201	A2E	82		I	0	0.000005
107	10201	A2F	20		I	0.94	0.489995
107	10201	A2F	50		I	9.22	0.000723
107	10201	A2F	82		I	0	0.000009
107	10201	A2M	20		I	0.94	12.12241
107	10201	A2M	50		I	9.22	0.017897
107	10201	A2M	82		I	0	0.000228
107	10201	A2T	20		I	0.94	1.234542
107	10201	A2T	50		I	9.22	0.001822
107	10201	A2T	82		I	0	0.000023
107	10259	A2F	20		I	0.91	0.734838
107	10259	A2F	50		I	10.35	0.001217
107	10259	A2F	82		I	0	0.000016
107	10259	A2M	20		I	0.91	2.225036
107	10259	A2M	50		I	10.35	0.003683
107	10259	A2M	82		I	0	0.00005
107	10294	A2M	20		I	0.93	19.05676
107	10294	A2M	50		I	9.8	0.02994
107	10294	A2M	82		I	0	0.000393
107	10294	A2T	20		I	0.93	0.06176
107	10294	A2T	50		I	9.8	0.000097
107	10294	A2T	82		I	0	0.000001
107	10350	A12M	20		I	0.9	0.01099
107	10350	A12M	50		I	10.65	0.000019
107	10350	A12M	82		I	0	2.60e-07
107	10350	A2F	20		I	0.9	1.306433
107	10350	A2F	50		I	10.65	0.002225
107	10350	A2F	82		I	0	0.000031
107	10350	A2M	20		I	0.9	13.56264
107	10350	A2M	50		I	10.65	0.023102
107	10350	A2M	82		I	0	0.000313
107	10350	A2T	20		I	0.9	0.895177
107	10350	A2T	50		I	10.65	0.001524
107	10350	A2T	82		I	0	0.000021
107	10350	N09M	20		I	0.9	0.005494
107	10350	N09M	50		I	10.65	0.000009
107	10350	N09M	82		I	0	1.30e-07
107	10385	A12M	20		I	0.91	0.011208
107	10385	A12M	50		I	10.42	0.000019
107	10385	A12M	82		I	0	2.50e-07
107	10385	A2M	20		I	0.91	7.481947
107	10385	A2M	50		I	10.42	0.012467
107	10385	A2M	82		I	0	0.000168
107	10385	A2T	20		I	0.91	0.740783
107	10385	A2T	50		I	10.42	0.001235
107	10385	A2T	82		I	0	0.000017
107	10456	A2M	20		I	0.89	15.58376
107	10456	A2M	50		I	11.37	0.028304
107	10456	A2M	82		I	0	0.000407

See pages A-1 and A-2 for an explanation of the columns

Location Code	Key Number	Fuel Model	Material Type	sub ID Code	Fuel Type	Isotopic Breakdown	Discharge Mass
107	10456	A2T	20		I	0.89	0.956295
107	10456	A2T	50		I	11.37	0.001737
107	10456	A2T	82		I	0	0.000025
107	10602	A12M	20		I	0.89	0.011218
107	10602	A12M	50		I	11.11	0.00002
107	10602	A12M	82		I	0	2.80e-07
107	10602	A2M	20		I	0.89	13.84097
107	10602	A2M	50		I	11.11	0.024583
107	10602	A2M	82		I	0	0.000344
107	10602	A2T	20		I	0.89	0.64864
107	10602	A2T	50		I	11.11	0.001152
107	10602	A2T	82		I	0	0.000016
107	10679	A2F	20		I	0.87	0.163593
107	10679	A2F	50		I	11.76	0.000308
107	10679	A2F	82		I	0	0.000004
107	10679	A2M	20		I	0.87	7.750192
107	10679	A2M	50		I	11.76	0.01457
107	10679	A2M	82		I	0	0.000212
107	10679	A2T	20		I	0.87	3.551796
107	10679	A2T	50		I	11.76	0.006677
107	10679	A2T	82		I	0	0.000097
107	10742	A12F	20		I	0.85	0.007946
107	10742	A12F	50		I	12.77	0.000016
107	10742	A12F	82		I	0	2.50e-07
107	10742	A2F	20		I	0.85	0.21033
107	10742	A2F	50		I	12.77	0.000428
107	10742	A2F	82		I	0	0.000007
107	10742	A2M	20		I	0.85	3.642564
107	10742	A2M	50		I	12.77	0.007417
107	10742	A2M	82		I	0	0.000115
107	10742	A2T	20		I	0.85	2.777783
107	10742	A2T	50		I	12.77	0.005657
107	10742	A2T	82		I	0	0.000086
107	10742	N09M	20		I	0.85	0.003274
107	10742	N09M	50		I	12.77	0.000011
107	10742	N09M	82		I	0	1.70e-07
107	10764	A2M	20		I	1.15	0.016656
107	10764	BXB	20		V	0.95	0.304268
107	10770	A12T	20		I	0.84	0.010337
107	10770	A12T	50		I	13.16	0.000022
107	10770	A12T	82		I	0	3.40e-07
107	10770	A2M	20		I	0.84	6.146783
107	10770	A2M	50		I	13.16	0.012895
107	10770	A2M	82		I	0	0.000201
107	10770	A2T	20		I	0.84	2.005478
107	10770	A2T	50		I	13.16	0.004206
107	10770	A2T	82		I	0	0.000066
107	10770	N09T	20		I	0.86	0.003095
107	10770	N09T	50		I	13.16	0.000011
107	10770	N09T	82		I	0	1.70e-07

See pages A-1 and A-2 for an explanation of the columns

Location Code	Key Number	Fuel Model	Material Type	sub ID Code	Fuel Type	Isotopic Breakdown	Discharge Mass
107	10832	A2M	20		I	0.84	13.05217
107	10832	A2M	50		I	12.92	0.02688
107	10832	A2M	82		I	0	0.00042
107	10832	A2T	20		I	0.84	3.6888
107	10832	A2T	50		I	12.92	0.007598
107	10832	A2T	82		I	0	0.00012
107	10982	A12T	20		I	0.82	0.020936
107	10982	A12T	50		I	13.73	0.000046
107	10982	A12T	82		I	0	7.40e-07
107	10982	A2F	20		I	0.82	0.023339
107	10982	A2F	50		I	13.73	0.000051
107	10982	A2F	82		I	0	8.20e-07
107	10982	A2M	20		I	0.82	16.45954
107	10982	A2M	50		I	13.73	0.036006
107	10982	A2M	82		I	0	0.000581
107	10982	A2T	20		I	0.82	0.692735
107	10982	A2T	50		I	13.73	0.001515
107	10982	A2T	82		I	0	0.000024
107	10982	N09M	20		I	0.82	0.010524
107	10982	N09M	50		I	13.73	0.000023
107	10982	N09M	82		I	0	3.80e-07
107	11036	A2M	20		I	0.82	7.596712
107	11036	A2M	50		I	13.6	0.01647
107	11036	A2M	82		I	0	0.000263
107	11109	A2F	20		I	0.82	0.467032
107	11109	A2F	50		I	13.7	0.00102
107	11109	A2F	82		I	0	0.000016
107	11109	A2M	20		I	0.82	14.60046
107	11109	A2M	50		I	13.7	0.031879
107	11109	A2M	82		I	0	0.000524
107	11109	N09M	20		I	0.82	0.005263
107	11109	N09M	50		I	13.7	0.000011
107	11109	N09M	82		I	0	1.90e-07
107	11183	A12M	20		I	0.83	0.022046
107	11183	A12M	50		I	13.31	0.000047
107	11183	A12M	82		I	0	7.60e-07
107	11183	A2F	20		I	0.83	0.677131
107	11183	A2F	50		I	13.31	0.001439
107	11183	A2F	82		I	0	0.000023
107	11183	A2M	20		I	0.83	9.341152
107	11183	A2M	50		I	13.31	0.019857
107	11183	A2M	82		I	0	0.000318
107	11183	A2T	20		I	0.83	0.246348
107	11183	A2T	50		I	13.31	0.000524
107	11183	A2T	82		I	0	0.000008
107	11183	N09M	20		I	0.83	0.010858
107	11183	N09M	50		I	13.31	0.000023
107	11183	N09M	82		I	0	3.60e-07
107	11372	A2F	20		I	0.82	0.688631
107	11372	A2F	50		I	13.77	0.001513
107	11372	A2F	82		I	0	0.000025

See pages A-1 and A-2 for an explanation of the columns

Location Code	Key Number	Fuel Model	Material Type	sub ID Code	Fuel Type	Isotopic Breakdown	Discharge Mass
107	11372	A2M	20		I	0.82	18.52989
107	11372	A2M	50		I	13.77	0.040707
107	11372	A2M	82		I	0	0.000665
107	11372	A2T	20		I	0.82	0.708117
107	11372	A2T	50		I	13.77	0.001556
107	11372	A2T	82		I	0	0.000026
107	11449	A2F	20		I	0.83	0.105028
107	11449	A2F	50		I	13.45	0.000226
107	11449	A2F	82		I	0	0.000004
107	11449	A2M	20		I	0.83	18.54239
107	11449	A2M	50		I	13.45	0.039825
107	11449	A2M	82		I	0	0.000641
107	11449	A2T	20		I	0.83	1.295873
107	11449	A2T	50		I	13.45	0.002783
107	11449	A2T	82		I	0	0.000045
107	11540	A2M	20		I	0.83	12.46058
107	11540	A2M	50		I	13.26	0.026407
107	11540	A2M	82		I	0	0.000423
107	11806	A2F	20		I	0.82	0.209843
107	11806	A2F	50		I	13.86	0.000465
107	11806	A2F	82		I	0	0.000008
107	11806	A2M	20		I	0.82	19.19476
107	11806	A2M	50		I	13.86	0.042523
107	11806	A2M	82		I	0	0.000699
107	11806	A2T	20		I	0.82	0.539924
107	11806	A2T	50		I	13.86	0.001196
107	11806	A2T	82		I	0	0.00002
107	11897	A12F	20		I	0.8	0.023429
107	11897	A12F	50		I	14.4	0.000054
107	11897	A12F	82		I	0	9.30e-07
107	11897	A2F	20		I	0.8	1.981819
107	11897	A2F	50		I	14.4	0.004559
107	11897	A2F	82		I	0	0.000078
107	11897	A2M	20		I	0.8	17.6565
107	11897	A2M	50		I	14.4	0.040607
107	11897	A2M	82		I	0	0.000697
107	11897	N09F	20		I	0.8	0.003847
107	11897	N09F	50		I	14.4	0.000009
107	11897	N09F	82		I	0	1.50e-07
107	11979	A12F	20		I	0.8	0.007963
107	11979	A12F	50		I	14.27	0.000018
107	11979	A12F	82		I	0	3.10e-07
107	11979	A12M	20		I	0.8	0.011208
107	11979	A12M	50		I	14.27	0.000026
107	11979	A12M	82		I	0	4.30e-07
107	11979	A12T	20		I	0.8	0.010483
107	11979	A12T	50		I	14.27	0.000024
107	11979	A12T	82		I	0	4.10e-07
107	11979	A2F	20		I	0.8	1.947591
107	11979	A2F	50		I	14.27	0.004442
107	11979	A2F	82		I	0	0.000075

See pages A-1 and A-2 for an explanation of the columns

Location Code	Key Number	Fuel Model	Material Type	sub ID Code	Fuel Type	Isotopic Breakdown	Discharge Mass
107	11979	A2M	20		I	0.8	14.46003
107	11979	A2M	50		I	14.27	0.032986
107	11979	A2M	82		I	0	0.000553
107	11979	A2T	20		I	0.8	8.864286
107	11979	A2T	50		I	14.27	0.020223
107	11979	A2T	82		I	0	0.000345
107	11979	N09M	20		I	0.8	0.010706
107	11979	N09M	50		I	14.27	0.000024
107	11979	N09M	82		I	0	4.20e-07
107	12127	A2F	20		I	0.81	0.980225
107	12127	A2F	50		I	14.22	0.00223
107	12127	A2F	82		I	0	0.000037
107	12127	A2M	20		I	0.81	13.29014
107	12127	A2M	50		I	14.22	0.030238
107	12127	A2M	82		I	0	0.000508
107	12127	A2T	20		I	0.81	1.47972
107	12127	A2T	50		I	14.22	0.003366
107	12127	A2T	82		I	0	0.000057
107	12201	A2F	20		I	0.83	0.746713
107	12201	A2F	50		I	13.24	0.001585
107	12201	A2F	82		I	0	0.000026
107	12201	A2M	20		I	0.83	24.3225
107	12201	A2M	50		I	13.24	0.051616
107	12201	A2M	82		I	0	0.000827
107	12285	A2F	20		I	0.84	0.245655
107	12285	A2F	50		I	13.17	0.000519
107	12285	A2F	82		I	0	0.000008
107	12285	A2M	20		I	0.84	19.5256
107	12285	A2M	50		I	13.17	0.04124
107	12285	A2M	82		I	0	0.000662
107	12480	A12M	20		I	0.82	0.022123
107	12480	A12M	50		I	13.78	0.000049
107	12480	A12M	82		I	0	8.00e-07
107	12480	A2M	20		I	0.82	19.38647
107	12480	A2M	50		I	13.78	0.042851
107	12480	A2M	82		I	0	0.000704
107	12565	A12M	20		I	0.82	0.011067
107	12565	A12M	50		I	13.7	0.000024
107	12565	A12M	82		I	0	4.00e-07
107	12565	A2M	20		I	0.82	25.18379
107	12565	A2M	50		I	13.7	0.055373
107	12565	A2M	82		I	0	0.000915
107	12639	A12M	20		I	0.84	0.011071
107	12639	A12M	50		I	13.06	0.000023
107	12639	A12M	82		I	0	3.70e-07
107	12639	A2M	20		I	0.84	23.55778
107	12639	A2M	50		I	13.06	0.049425
107	12639	A2M	82		I	0	0.000799
107	12639	N09M	20		I	0.84	0.005453
107	12639	N09M	50		I	13.06	0.000011
107	12639	N09M	82		I	0	1.80e-07

See pages A-1 and A-2 for an explanation of the columns

Location Code	Key Number	Fuel Model	Material Type	sub ID Code	Fuel Type	Isotopic Breakdown	Discharge Mass
107	12823	A2M	20		I	0.83	7.198119
107	12823	A2M	50		I	13.17	0.015247
107	12823	A2M	82		I	0	0.000244
107	12823	A2T	20		I	0.83	0.635473
107	12823	A2T	50		I	13.17	0.001346
107	12823	A2T	82		I	0	0.000022
107	12852	A2M	20		I	0.84	10.83763
107	12852	A2M	50		I	13.01	0.022663
107	12852	A2M	82		I	0	0.00036
107	12852	A2T	20		I	0.84	2.868037
107	12852	A2T	50		I	13.01	0.006
107	12852	A2T	82		I	0	0.000096
107	12852	B09E	20		V	0.72	0.047572
107	12852	B09E	50		V	13.42	0.000095
107	12852	B09E	82		V	0	0.000001
107	12852	BXE	20		V	0.72	66.47092
107	12852	BXE	50		V	13.42	0.132468
107	12852	BXE	82		V	0	0.001881
107	12852	BXS	20		V	0.72	0.372719
107	12852	BXS	50		V	13.42	0.000743
107	12852	BXS	82		V	0	0.000011
107	12852	X09E	20		V	0.72	0.022379
107	12852	X09E	50		V	13.42	0.000045
107	12852	X09E	82		V	0	6.30e-07
107	12942	A2F	20		I	0.84	0.739118
107	12942	A2F	50		I	13.03	0.00155
107	12942	A2F	82		I	0	0.000025
107	12942	A2M	20		I	0.84	17.40925
107	12942	A2M	50		I	13.03	0.036494
107	12942	A2M	82		I	0	0.000589
107	12942	A2T	20		I	0.84	2.246109
107	12942	A2T	50		I	13.03	0.00471
107	12942	A2T	82		I	0	0.000075
107	12942	B7E	10		V	0.56	0.373946
107	12942	B7E	50		V	12.1	0.000671
107	12942	B7E	82		V	0	0.000009
107	12942	BXA	20		V	0.73	0.369594
107	12942	BXA	50		V	12.82	0.000702
107	12942	BXA	82		V	0	0.00001
107	12942	BXC	20		V	0.73	0.556128
107	12942	BXC	50		V	12.82	0.001057
107	12942	BXC	82		V	0	0.000015
107	12942	BXE	20		V	0.73	50.04592
107	12942	BXE	50		V	12.82	0.095109
107	12942	BXE	82		V	0	0.00133
107	12942	BXS	20		V	0.73	1.468644
107	12942	BXS	50		V	12.82	0.002791
107	12942	BXS	82		V	0	0.00004
107	13015	B09C	20		V	0.72	0.010503
107	13015	B09C	50		V	13.19	0.000021
107	13015	B09C	82		V	0	2.90e-07

See pages A-1 and A-2 for an explanation of the columns

Location Code	Key Number	Fuel Model	Material Type	sub ID Code	Fuel Type	Isotopic Breakdown	Discharge Mass
107	13015	B7E	10		V	0.56	0.373937
107	13015	B7E	50		V	12.13	0.000673
107	13015	B7E	82		V	0	0.000009
107	13015	BXC	20		V	0.72	4.585912
107	13015	BXC	50		V	13.19	0.009088
107	13015	BXC	82		V	0	0.000128
107	13015	BXE	20		V	0.72	36.5893
107	13015	BXE	50		V	13.19	0.072519
107	13015	BXE	82		V	0	0.00102
107	13015	BXS	20		V	0.72	2.609064
107	13015	BXS	50		V	13.19	0.005172
107	13015	BXS	82		V	0	0.000074
107	13015	X09C	20		V	0.72	0.004942
107	13015	X09C	50		V	13.19	0.00001
107	13015	X09C	82		V	0	1.40e-07
107	13016	A2F	20		I	0.83	0.762811
107	13016	A2F	50		I	13.18	0.001639
107	13016	A2F	82		I	0	0.000026
107	13016	A2M	20		I	0.83	19.57218
107	13016	A2M	50		I	13.18	0.042032
107	13016	A2M	82		I	0	0.000674
107	13016	A2T	20		I	0.83	0.247751
107	13016	A2T	50		I	13.18	0.000532
107	13016	A2T	82		I	0	0.000008
107	13016	N09M	20		I	0.83	0.005235
107	13016	N09M	50		I	13.18	0.000011
107	13016	N09M	82		I	0	1.80e-07
107	13016	N09T	20		I	0.83	0.015329
107	13016	N09T	50		I	13.18	0.000033
107	13016	N09T	82		I	0	5.40e-07
107	13017	BXC	20		V	0.76	1.129932
107	13017	BXC	50		V	11.39	0.001898
107	13017	BXC	82		V	0	0.000025
107	13017	BXE	20		V	0.76	25.38336
107	13017	BXE	50		V	11.39	0.042626
107	13017	BXE	82		V	0	0.000565
107	13017	BXS	20		V	0.76	0.373695
107	13017	BXS	50		V	11.39	0.000627
107	13017	BXS	82		V	0	0.000008
107	13371	A12F	20		I	0.84	0.015875
107	13371	A12F	50		I	12.95	0.000033
107	13371	A12F	82		I	0	5.40e-07
107	13371	A2F	20		I	0.84	0.245132
107	13371	A2F	50		I	12.95	0.000511
107	13371	A2F	82		I	0	0.000008
107	13371	A2M	20		I	0.84	4.713549
107	13371	A2M	50		I	12.95	0.009835
107	13371	A2M	82		I	0	0.000162
107	13371	N09T	20		I	0.84	0.010219
107	13371	N09T	50		I	12.95	0.000021
107	13371	N09T	82		I	0	3.60e-07

See pages A-1 and A-2 for an explanation of the columns

Location Code	Key Number	Fuel Model	Material Type	sub ID Code	Fuel Type	Isotopic Breakdown	Discharge Mass
107	13372	B09S	20		V	0.72	0.014931
107	13372	B09S	50		V	13.02	0.000029
107	13372	B09S	82		V	0	4.20e-07
107	13372	BXC	20		V	0.72	3.170657
107	13372	BXC	50		V	13.02	0.006132
107	13372	BXC	82		V	0	0.00009
107	13372	BXE	20		V	0.72	11.76885
107	13372	BXE	50		V	13.02	0.022756
107	13372	BXE	82		V	0	0.000333
107	13372	BXS	20		V	0.72	4.324834
107	13372	BXS	50		V	13.02	0.008363
107	13372	BXS	82		V	0	0.000122
107	13372	X09C	20		V	0.72	0.004951
107	13372	X09C	50		V	13.02	0.00001
107	13372	X09C	82		V	0	1.40e-07
107	13524	BXA	20		V	0.72	4.098228
107	13524	BXA	50		V	13.13	0.008005
107	13524	BXA	82		V	0	0.000117
107	13524	BXC	20		V	0.72	2.923896
107	13524	BXC	50		V	13.13	0.005712
107	13524	BXC	82		V	0	0.000083
107	13524	BXE	20		V	0.72	25.92515
107	13524	BXE	50		V	13.13	0.050638
107	13524	BXE	82		V	0	0.000744
107	13524	BXS	20		V	0.72	4.630184
107	13524	BXS	50		V	13.13	0.009046
107	13524	BXS	82		V	0	0.000133
107	13525	A2F	20		I	0.82	1.217087
107	13525	A2F	50		I	13.52	0.002653
107	13525	A2F	82		I	0	0.000045
107	13525	A2M	20		I	0.82	16.33464
107	13525	A2M	50		I	13.52	0.035608
107	13525	A2M	82		I	0	0.000613
107	13648	A2M	20		I	0.88	0.032513
107	13648	A2M	50		I	11.67	0.000061
107	13648	A2M	82		I	0	9.40e-07
107	13650	A2F	20		I	0.83	1.435141
107	13650	A2F	50		I	13.41	0.003108
107	13650	A2F	82		I	0	0.000053
107	13650	A2M	20		I	0.83	12.39377
107	13650	A2M	50		I	13.41	0.026841
107	13650	A2M	82		I	0	0.000451
107	13650	A2T	20		I	0.83	2.7182
107	13650	A2T	50		I	13.41	0.005885
107	13650	A2T	82		I	0	0.000099
107	13686	A2F	20		I	0.86	0.023339
107	13686	A2F	50		I	12.41	0.000047
107	13686	A2F	82		I	0	7.60e-07
107	13686	A2M	20		I	0.86	17.5855
107	13686	A2M	50		I	12.41	0.035252
107	13686	A2M	82		I	0	0.000564

See pages A-1 and A-2 for an explanation of the columns

Location Code	Key Number	Fuel Model	Material Type	sub ID Code	Fuel Type	Isotopic Breakdown	Discharge Mass
107	13686	A2T	20		I	0.86	0.247249
107	13686	A2T	50		I	12.41	0.000496
107	13686	A2T	82		I	0	0.000008
107	13724	A2T	20		I	1.02	0.015508
107	13724	A2T	50		I	5.99	0.000015
107	13724	A2T	82		I	0	1.80e-07
107	13858	B7E	10		V	0.56	0.373955
107	13858	B7E	50		V	12.01	0.000668
107	13858	B7E	82		V	0	0.000009
107	13858	BXC	20		V	0.74	3.122185
107	13858	BXC	50		V	12.04	0.005575
107	13858	BXC	82		V	0	0.000077
107	13858	BXE	20		V	0.74	48.26557
107	13858	BXE	50		V	12.04	0.086215
107	13858	BXE	82		V	0	0.00122
107	13858	BXS	20		V	0.74	1.009438
107	13858	BXS	50		V	12.04	0.001803
107	13858	BXS	82		V	0	0.000026
107	13858	X09C	20		V	0.74	0.004946
107	13858	X09C	50		V	12.04	0.000009
107	13858	X09C	82		V	0	1.20e-07
107	13859	A12F	20		I	0.86	0.007911
107	13859	A12F	50		I	12.28	0.000016
107	13859	A12F	82		I	0	2.50e-07
107	13859	A2F	20		I	0.86	0.011634
107	13859	A2F	50		I	12.28	0.000023
107	13859	A2F	82		I	0	3.70e-07
107	13859	A2M	20		I	0.86	25.82511
107	13859	A2M	50		I	12.28	0.051268
107	13859	A2M	82		I	0	0.000829
107	13859	A2T	20		I	0.86	3.743876
107	13859	A2T	50		I	12.28	0.007432
107	13859	A2T	82		I	0	0.000119
107	13859	N09M	20		I	0.86	0.005235
107	13859	N09M	50		I	12.28	0.00001
107	13859	N09M	82		I	0	1.70e-07
107	14055	BXE	20		V	0.91	0.327834
107	14055	BXE	50		V	2.39	0.000111
107	14055	BXE	82		V	0	5.60e-07
107	14065	B09E	20		V	0.86	0.015889
107	14065	B09E	50		V	5.67	0.000013
107	14065	B09E	82		V	0	1.50e-07
107	14065	BXE	20		V	0.86	0.071892
107	14065	BXE	50		V	5.67	0.000059
107	14065	BXE	82		V	0	6.60e-07
107	14065	X09C	20		V	0.86	0.004456
107	14065	X09C	50		V	5.67	0.000004
107	14065	X09C	82		V	0	4.00e-08
107	14065	X09E	20		V	0.86	0.024224
107	14065	X09E	50		V	5.67	0.00002
107	14065	X09E	82		V	0	2.40e-07

See pages A-1 and A-2 for an explanation of the columns

Location Code	Key Number	Fuel Model	Material Type	sub ID Code	Fuel Type	Isotopic Breakdown	Discharge Mass
107	14065	X09S	20		V	0.86	0.007015
107	14065	X09S	50		V	5.67	0.000006
107	14065	X09S	82		V	0	7.00e-08
107	14448	B09S	20		V	0.82	0.01226
107	14448	B09S	50		V	5.99	0.000012
107	14448	B09S	82		V	0	1.50e-07
107	14883	BXE	20		V	0.86	0.022244
107	14883	BXE	50		V	5.66	0.000018
107	14883	BXE	82		V	0	2.10e-07
107	15204	B09E	20		V	0.85	0.015905
107	15204	B09E	50		V	5.92	0.000014
107	15204	B09E	82		V	0	1.50e-07
107	15244	A12F	20		I	0.95	0.007942
107	15244	A12F	50		I	5.44	0.000007
107	15244	A12F	82		I	0	9.00e-08
107	15244	A12M	20		I	1.03	0.011251
107	15244	A12M	50		I	5.44	0.000009
107	15244	A12M	82		I	0	1.20e-07
107	15244	A12T	20		I	1.03	0.042134
107	15244	A12T	50		I	5.44	0.000035
107	15244	A12T	82		I	0	4.80e-07
107	15244	A2F	20		I	0.95	0.02336
107	15244	A2F	50		I	5.44	0.000019
107	15244	A2F	82		I	0	2.60e-07
107	15244	A2M	20		I	1.03	0.132363
107	15244	A2M	50		I	5.44	0.00011
107	15244	A2M	82		I	0	0.000001
107	15244	A2T	20		I	1.03	0.123923
107	15244	A2T	50		I	5.44	0.000103
107	15244	A2T	82		I	0	0.000001
107	15244	N09F	20		I	0.95	0.007475
107	15244	N09F	50		I	5.44	0.000006
107	15244	N09F	82		I	0	8.00e-08
107	15244	N09T	20		I	1.03	0.004957
107	15244	N09T	50		I	5.44	0.000004
107	15244	N09T	82		I	0	5.00e-08
107	15244	X09S	10		V	0.71	0.007005
107	15244	X09S	50		V	13.58	0.000014
107	15244	X09S	82		V	0	2.00e-07
107	15347	A12F	20		I	0.95	0.007941
107	15347	A12F	50		I	6.16	0.000008
107	15347	A12F	82		I	0	1.00e-07
107	15347	A2F	20		I	0.95	0.011679
107	15347	A2F	50		I	6.16	0.000011
107	15347	A2F	82		I	0	1.50e-07
107	15347	A2M	20		I	1.02	0.083087
107	15347	A2M	50		I	6.16	0.00008
107	15347	A2M	82		I	0	0.000001
107	15347	A2T	20		I	1.02	0.031107
107	15347	A2T	50		I	6.16	0.00003
107	15347	A2T	82		I	0	4.20e-07

See pages A-1 and A-2 for an explanation of the columns

Location Code	Key Number	Fuel Model	Material Type	sub ID Code	Fuel Type	Isotopic Breakdown	Discharge Mass
107	15347	N09M	20		I	1.02	0.010635
107	15347	N09M	50		I	6.16	0.00001
107	15347	N09M	82		I	0	1.40e-07
107	15445	A2M	20		I	1.05	1.296922
107	15445	A2M	50		I	5.23	0.000984
107	15445	A2M	82		I	0	0.000012
107	15445	A2T	20		I	1.03	0.668979
107	15445	A2T	50		I	5.23	0.000508
107	15445	A2T	82		I	0	0.000006
107	15448	A12F	20		I	1.02	0.007997
107	15448	A12F	50		I	4.54	0.000005
107	15448	A12F	82		I	0	7.00e-08
107	15448	A2T	20		I	1.03	0.015801
107	15448	A2T	50		I	4.54	0.000011
107	15448	A2T	82		I	0	1.30e-07
107	15448	N09F	20		I	1.02	0.003763
107	15448	N09F	50		I	4.54	0.000003
107	15448	N09F	82		I	0	3.00e-08
107	15448	N09M	20		I	1.07	0.005323
107	15448	N09M	50		I	4.54	0.000004
107	15448	N09M	82		I	0	4.00e-08
107	15451	A2M	20		I	1.04	0.465448
107	15451	A2M	50		I	5.31	0.000387
107	15451	A2M	82		I	0	0.000005
107	15457	A2M	20		I	1.09	0.033277
107	15457	A2M	50		I	2.85	0.000015
107	15457	A2M	82		I	0	1.80e-07
107	15459	A2M	20		I	1.07	25.26509
107	15459	A2M	50		I	4.06	0.01519
107	15459	A2M	82		I	0	0.000182
107	15459	A2T	20		I	1.07	8.655769
107	15459	A2T	50		I	4.06	0.00521
107	15459	A2T	82		I	0	0.000067
107	15460	A2M	20		I	1.08	2.096243
107	15460	A2M	50		I	3.32	0.001042
107	15460	A2M	82		I	0	0.000011
107	15555	A12F	20		I	1.02	0.007997
107	15555	A12F	50		I	4	0.000005
107	15555	A12F	82		I	0	5.00e-08
107	15555	A12M	20		I	1.08	0.011313
107	15555	A12M	50		I	4	0.000006
107	15555	A12M	82		I	0	8.00e-08
107	21540	B09C	10		V	0.68	0.031533
107	21540	B09C	50		V	16.49	0.000089
107	21540	B09C	82		V	0	0.000001
107	21540	B09E	10		V	0.6	6.853472
107	21540	B09E	50		V	16.49	0.019269
107	21540	B09E	82		V	0	0.00032
107	21540	B09S	10		V	0.59	0.981302
107	21540	B09S	50		V	16.49	0.002759
107	21540	B09S	82		V	0	0.000046

See pages A-1 and A-2 for an explanation of the columns

Location Code	Key Number	Fuel Model	Material Type	sub ID Code	Fuel Type	Isotopic Breakdown	Discharge Mass
107	21540	X09C	20		V	0.73	0.009877
107	21540	X09C	50		V	13.73	0.000025
107	21540	X09C	82		V	0	4.00e-07
107	21540	X09E	10		V	0.67	3.231976
107	21540	X09E	50		V	16.49	0.009088
107	21540	X09E	82		V	0	0.000152
107	21540	X09S	10		V	0.66	0.455183
107	21540	X09S	50		V	16.49	0.00128
107	21540	X09S	82		V	0	0.000021
107	22565	BXE	10		V	0.61	6.655418
107	22565	BXE	50		V	16.72	0.019233
107	22565	BXE	82		V	0	0.000323
107	22565	BXS	10		V	0.64	0.175075
107	22565	BXS	50		V	16.72	0.000506
107	22565	BXS	82		V	0	0.000008
107	22852	BXE	10		V	0.62	4.188897
107	22852	BXE	50		V	16.62	0.0121
107	22852	BXE	82		V	0	0.000202
108	14356	B09A	20		V	0.75	0.014029
108	14356	B09A	50		V	11.28	0.000022
108	14356	B09A	82		V	0	2.60e-07
108	14356	B09C	20		V	0.75	0.010454
108	14356	B09C	50		V	11.28	0.000016
108	14356	B09C	82		V	0	1.90e-07

APPENDIX B

RADNUC INPUT AND OUTPUT FILES

Selected information was taken from the accountability database (Appendix A) to develop the following data files which were used as input files in the RADNUC program. Five separate data files were used; one for the combined basins, one for K-East alone, one for K-West alone, one for the shielding basis, and one for the safety/regulatory assessment basis. Eleven keys in the K East Basin (2.38 MTU) and two keys in the K West Basin (0.32 MTU) in the accountability database were un-irradiated fuel, these keys are not included in the RADNUC input files. The uranium from the keys not included in the RADNUC input is added to the uranium mass, activity, and heat generation tables within the document.

The first four lines of the data files are used to identify the information, and are ignored by RADNUC. RADNUC uses the information following the first four lines to estimate the radionuclide content. Each line represents one record from the accountability database, and contains the following information:

- First Field — The first field is the Key Number. This is the date (HAPO day) that the fuel was discharged from the reactor.
- Second Field — The second field is the grade and is ignored by RADNUC. The grade corresponds to the percent ^{240}Pu of the total plutonium.
- Third Field — The third field is the type fuel, and indicates the initial ^{235}U enrichment. This field contains either a 1 corresponding to mark 1A fuel or a 4 corresponding to mark 4 fuel.
- Fourth Field — The fourth field is the number of elements in the record. This field is ignored by RADNUC.
- Fifth Field — The fifth field is the percent ^{240}Pu of the total plutonium.
- Sixth Field — The sixth field is the combined masses of uranium and plutonium from the accountability database. The intent is to estimate the pre-irradiation uranium content of the fuel this will be a slight underestimation of the pre-irradiation uranium because it does not account for fission product mass.
- Seventh Field — The seventh field is the month the fuel was processed in PUREX. It is important to note that the RADNUC program was written to estimate radionuclides in tank waste. The numbers used in the seventh and eighth fields is described in the eighth fields definition below.
- Eighth Field — The eighth field is the year the fuel was processed in PUREX. The seventh and eighth fields were set to 12 and 99 corresponding to December 1999, a date later than 1/1/1995 (decay date).

"105-K Basins charge data"

"Key"	"Grade"	"Fuel"	"Pieces"	"%Pu-240"	"Uranium"	"Mo"	"Yr"
09621	1	4	000	5.94	0.006673	12	99
09621	1	4	000	5.94	0.076694	12	99
09621	1	4	000	6.01	0.023972	12	99
09621	1	4	000	5.94	0.0099	12	99
09621	1	4	000	5.94	0.002374	12	99
09621	1	4	000	5.94	0.072655	12	99
09621	1	4	000	5.94	0.149847	12	99
09621	1	4	000	5.94	0.009728	12	99
09621	1	4	000	5.94	0.050475	12	99
10001	3	4	000	12.4	0.04212	12	99
10001	3	4	000	12.4	0.014903	12	99
10001	3	4	000	12.4	0.006639	12	99
10001	3	4	000	12.4	0.00991	12	99
10001	3	4	000	12.4	0.029932	12	99
10001	3	4	000	12.4	0.035065	12	99
10201	2	4	000	9.09	1.075459	12	99
10201	2	4	000	9.09	0.366031	12	99
10201	2	4	000	9.09	0.343918	12	99
10201	2	4	000	9.09	0.537029	12	99
10201	2	4	000	9.09	0.172074	12	99
10201	2	4	000	9.09	0.161819	12	99
10259	3	4	000	10.41	0.050612	12	99
10259	3	4	000	10.41	1.476838	12	99
10259	3	4	000	10.41	12.34494	12	99
10259	3	4	000	10.41	0.031588	12	99
10259	3	4	000	10.41	0.718433	12	99
10259	3	4	000	10.41	5.758699	12	99
10294	2	4	000	8.94	0.032608	12	99
10294	3	4	000	10.4	0.012648	12	99
10294	3	4	000	10.4	0.812226	12	99
10294	3	4	000	10.4	24.15077	12	99
10294	3	4	000	10.4	0.762301	12	99
10294	2	4	000	8.94	0.027153	12	99
10294	3	4	000	10.4	0.006317	12	99
10294	3	4	000	10.4	0.381403	12	99
10294	3	4	000	10.4	11.35286	12	99
10294	3	4	000	10.4	0.344639	12	99
10350	2	4	000	9.28	0.031646	12	99
10350	2	4	000	9.28	0.238728	12	99
10350	2	4	000	9.28	0.089727	12	99
10350	2	4	000	9.28	0.014861	12	99
10350	2	4	000	9.28	0.112204	12	99
10350	2	4	000	9.28	0.042207	12	99
10385	3	4	000	10.21	0.130384	12	99

10385	3	4	000	11.21	0.141018	12	99
10385	3	4	000	11.21	23.81023	12	99
10385	3	4	000	11.21	0.298905	12	99
10385	3	4	000	10.21	0.075994	12	99
10385	3	4	000	11.21	0.059715	12	99
10385	3	4	000	11.21	11.17924	12	99
10385	3	4	000	11.21	0.154738	12	99
10456	3	4	000	11.24	0.009548	12	99
10456	3	4	000	11.24	0.031918	12	99
10456	3	4	000	11.24	0.414766	12	99
10456	3	4	000	11.24	1.348222	12	99
10456	3	4	000	11.24	21.44289	12	99
10456	3	4	000	11.24	3.186772	12	99
10576	3	4	000	11.09	3.881855	12	99
10576	3	4	000	11.09	0.043956	12	99
10602	4	4	000	13.75	0.081456	12	99
10602	3	4	000	11.09	0.031925	12	99
10602	4	4	000	13.75	0.55955	12	99
10602	3	4	000	11.09	0.030958	12	99
10602	4	4	000	13.75	24.79309	12	99
10602	4	4	000	13.75	1.22853	12	99
10679	4	4	000	14.09	0.309509	12	99
10679	3	4	000	11.09	0.014136	12	99
10679	4	4	000	14.09	0.124291	12	99
10679	3	4	000	11.09	1.255033	12	99
10679	4	4	000	14.09	22.96605	12	99
10679	4	4	000	14.09	1.296428	12	99
10742	4	4	000	14.25	1.170103	12	99
10742	4	4	000	14.25	12.36114	12	99
10742	4	4	000	14.25	0.462965	12	99
10742	3	4	000	10.8	0.549476	12	99
10742	4	4	000	14.25	5.806125	12	99
10742	3	4	000	10.8	0.22488	12	99
10770	3	4	000	11.66	0.681667	12	99
10770	4	4	000	13.91	14.11261	12	99
10770	4	4	000	13.91	4.436449	12	99
10832	4	4	000	13.65	0.260688	12	99
10832	4	4	000	13.65	0.041425	12	99
10832	4	4	000	13.65	2.044619	12	99
10832	4	4	000	13.65	47.31945	12	99
10832	4	4	000	13.65	3.138458	12	99
10982	4	4	000	14.97	0.173868	12	99
10982	4	4	000	14.97	0.126892	12	99
10982	3	4	000	11.7	0.706201	12	99
10982	4	4	000	14.97	15.20181	12	99
10982	4	4	000	14.97	0.94076	12	99
10982	4	4	000	14.97	0.08688	12	99
10982	3	4	000	11.7	0.059721	12	99

10982	3	4	000	11.7	0.331757	12 99
10982	4	4	000	14.97	7.090482	12 99
10982	3	4	000	11.7	0.498938	12 99
11036	4	4	000	14.37	0.006372	12 99
11036	4	4	000	13.31	0.326927	12 99
11036	4	4	000	14.37	7.817157	12 99
11036	4	4	000	14.37	0.686572	12 99
11036	4	4	000	13.31	0.003176	12 99
11036	4	4	000	14.37	0.013257	12 99
11036	4	4	000	13.31	0.123844	12 99
11036	4	4	000	14.37	3.698878	12 99
11036	4	4	000	14.37	0.330283	12 99
11109	4	4	000	14.62	0.16921	12 99
11109	4	4	000	14.62	0.674804	12 99
11109	4	4	000	14.62	15.10859	12 99
11109	4	4	000	14.62	1.238823	12 99
11109	3	4	000	10.32	0.079566	12 99
11109	3	4	000	10.32	0.331711	12 99
11109	4	4	000	14.62	7.091013	12 99
11109	4	4	000	14.62	0.576213	12 99
11183	4	4	000	14.49	0.184538	12 99
11183	4	4	000	14.49	0.140773	12 99
11183	4	4	000	14.49	0.189703	12 99
11183	4	4	000	14.49	32.90384	12 99
11183	4	4	000	14.49	1.014554	12 99
11183	4	4	000	14.49	0.031018	12 99
11183	4	4	000	14.49	0.210257	12 99
11183	4	4	000	14.49	0.043892	12 99
11183	4	4	000	14.49	0.097674	12 99
11183	4	4	000	14.49	0.066214	12 99
11183	3	4	000	11.02	0.089084	12 99
11183	4	4	000	14.49	15.43086	12 99
11183	4	4	000	14.49	0.491747	12 99
11372	4	4	000	15.17	0.130374	12 99
11372	4	4	000	15.17	0.042237	12 99
11372	4	4	000	15.17	0.421612	12 99
11372	4	4	000	15.17	19.91088	12 99
11372	4	4	000	15.17	0.686564	12 99
11372	4	4	000	15.17	0.059719	12 99
11372	3	4	000	12.05	0.019892	12 99
11372	3	4	000	12.05	0.178219	12 99
11372	3	4	000	12.05	9.414279	12 99
11372	4	4	000	15.17	0.309187	12 99
11449	4	4	000	14.37	0.197256	12 99
11449	4	4	000	14.37	0.094853	12 99
11449	4	4	000	14.37	16.26954	12 99
11449	4	4	000	14.37	3.361394	12 99
11449	4	4	000	14.37	0.086193	12 99

11449	3	4	000	11.03	0.039598	12	99
11449	4	4	000	14.37	7.629647	12	99
11449	3	4	000	11.03	1.616732	12	99
11540	3	4	000	11.66	0.152125	12	99
11540	3	4	000	11.3	0.141035	12	99
11540	3	4	000	11.3	0.042167	12	99
11540	3	4	000	11.3	7.603293	12	99
11540	3	4	000	11.3	0.59779	12	99
11540	3	4	000	11.3	0.982763	12	99
11540	3	4	000	11.66	0.076006	12	99
11540	3	4	000	11.3	0.072978	12	99
11540	3	4	000	11.3	0.024759	12	99
11540	3	4	000	11.3	3.567068	12	99
11540	3	4	000	11.3	0.274249	12	99
11733	3	4	000	12.82	0.349841	12	99
11733	3	4	000	12.82	0.089642	12	99
11733	3	4	000	10.36	0.156979	12	99
11733	3	4	000	10.36	0.049213	12	99
11806	4	4	000	15.03	0.162968	12	99
11806	3	4	000	11.94	0.084643	12	99
11806	3	4	000	11.94	0.021097	12	99
11806	4	4	000	15.03	18.25962	12	99
11806	4	4	000	15.03	0.268532	12	99
11806	3	4	000	11.94	0.327677	12	99
11806	4	4	000	15.03	0.070582	12	99
11806	3	4	000	11.94	0.033183	12	99
11806	3	4	000	11.94	0.00991	12	99
11806	3	4	000	11.94	8.607779	12	99
11806	4	4	000	15.03	0.126466	12	99
11897	3	4	000	11.69	3.046193	12	99
11897	4	4	000	15.47	20.37553	12	99
11897	4	4	000	15.47	1.61182	12	99
11897	4	4	000	15.47	0.00663	12	99
11897	3	4	000	11.69	1.431082	12	99
11897	4	4	000	15.47	9.584959	12	99
11897	4	4	000	15.47	0.751884	12	99
11979	4	4	000	15.34	0.081493	12	99
11979	4	4	000	15.34	1.854741	12	99
11979	4	4	000	15.34	14.26082	12	99
11979	4	4	000	15.34	1.926291	12	99
11979	4	4	000	15.34	0.371669	12	99
11979	4	4	000	15.34	9.622194	12	99
11979	4	4	000	15.34	0.461079	12	99
11979	3	4	000	11.7	0.89586	12	99
11979	4	4	000	15.34	6.693747	12	99
11979	3	4	000	11.7	0.892379	12	99
12127	4	4	000	14.73	0.146527	12	99
12127	4	4	000	14.73	0.497313	12	99

12127	4	4	000	14.73	0.340679	12	99
12127	4	4	000	14.73	26.23191	12	99
12127	4	4	000	14.73	3.336408	12	99
12201	4	4	000	13.98	0.13036	12	99
12201	3	4	000	11.38	0.01059	12	99
12201	3	4	000	11.38	0.449298	12	99
12201	4	4	000	13.98	15.9358	12	99
12201	4	4	000	13.98	5.664989	12	99
12201	3	4	000	11.38	0.007507	12	99
12240	4	4	000	14.51	0.063584	12	99
12240	3	4	000	11.22	0.029896	12	99
12285	4	4	000	14.45	0.014083	12	99
12285	4	4	000	14.45	0.031772	12	99
12285	3	4	000	12.1	0.759011	12	99
12285	4	4	000	14.45	57.7036	12	99
12285	4	4	000	14.45	6.101811	12	99
12285	3	4	000	12.1	0.004972	12	99
12480	4	4	000	14.29	0.580019	12	99
12480	3	4	000	12.38	0.24784	12	99
12480	4	4	000	14.29	49.62144	12	99
12480	4	4	000	14.29	3.732459	12	99
12565	4	4	000	14.15	0.290153	12	99
12565	4	4	000	14.15	0.139326	12	99
12565	4	4	000	14.15	34.78675	12	99
12565	4	4	000	14.15	3.646776	12	99
12639	4	4	000	13.84	0.02309	12	99
12639	4	4	000	13.84	40.3312	12	99
12639	4	4	000	13.84	5.400192	12	99
12852	3	4	000	11.43	2.525342	12	99
13015	4	4	000	13.19	0.216604	12	99
13015	4	4	000	13.19	0.654274	12	99
13016	1	4	000	5.63	0.02194	12	99
13371	1	4	000	6.58	0.021128	12	99
13649	3	4	000	11.4	0.374685	12	99
13649	4	4	000	13.25	0.588463	12	99
13649	4	4	000	13.25	3.972961	12	99
13685	4	4	000	13.34	2.617419	12	99
14065	1	4	000	5.62	0.023287	12	99
14355	4	4	000	15.74	0.094818	12	99
14355	3	4	000	12	6.202162	12	99
14355	4	4	000	15.74	0.313212	12	99
14355	4	4	000	15.74	0.04455	12	99
14355	3	4	000	12	2.916202	12	99
14355	4	4	000	15.74	0.147505	12	99
14356	3	4	000	11.28	0.180698	12	99
14356	3	4	000	11.28	3.207757	12	99
14356	3	4	000	11.28	0.022035	12	99
14356	3	4	000	11.28	8.161901	12	99

14356	3	4	000	11.28	1.352138	12	99
14356	3	4	000	11.28	0.372588	12	99
14356	3	4	000	11.28	0.085034	12	99
14356	3	4	000	11.28	0.103665	12	99
14722	1	4	000	5.05	0.068843	12	99
15204	1	4	000	6.01	0.015919	12	99
15204	1	4	000	5.53	0.351245	12	99
15204	1	4	000	6.01	14.30584	12	99
15204	1	4	000	6.01	3.164697	12	99
15204	1	4	000	6.01	59.48539	12	99
15204	1	4	000	6.01	20.10897	12	99
15204	1	4	000	6.01	0.007492	12	99
15240	1	4	000	5.6	0.015919	12	99
15240	1	4	000	5.71	0.374804	12	99
15240	1	4	000	5.6	0.088008	12	99
15240	1	4	000	5.6	0.006644	12	99
15240	1	4	000	5.6	0.007041	12	99
15316	1	4	000	6.1	10.04697	12	99
15316	1	4	000	6.1	0.186043	12	99
15316	1	4	000	6.1	4.962912	12	99
15316	1	4	000	6.1	4.334796	12	99
15316	1	4	000	6.1	0.007492	12	99
15444	1	4	000	4.7	0.103706	12	99
15444	1	4	000	4.7	0.116956	12	99
15444	1	4	000	4.7	0.087941	12	99
15451	1	4	000	4.97	1.497135	12	99
15451	1	4	000	6.79	6.799597	12	99
15451	1	4	000	6.79	0.092684	12	99
15451	1	4	000	6.79	0.044007	12	99
15455	1	4	000	4.94	0.373161	12	99
15455	1	4	000	4.94	0.748424	12	99
15455	1	4	000	4.94	0.373987	12	99
15457	1	4	000	1.69	0.046801	12	99
15457	1	4	000	4.35	0.290374	12	99
15458	1	4	000	3.44	0.374335	12	99
15458	1	4	000	4.26	21.2791	12	99
15458	1	4	000	4.26	2.597811	12	99
15458	1	4	000	4.26	67.36977	12	99
15458	1	4	000	4.26	0.373516	12	99
15458	1	4	000	4.26	40.36723	12	99
15460	1	4	000	2.83	2.948269	12	99
15460	1	4	000	4.29	14.93406	12	99
15461	1	4	000	1.55	12.73	12	99
14356	3	4	000	11.28	0.014051	12	99
14356	3	4	000	11.28	0.010471	12	99
09621	1	1	000	6.04	0.105599	12	99
09964	1	1	000	6.18	0.01714	12	99
09964	1	1	000	6.18	0.279918	12	99

09964	1	4	000	6.26	0.041696	12	99
09964	1	1	000	6.18	0.013785	12	99
09964	1	1	000	6.18	0.003883	12	99
09964	1	1	000	6.18	0.005486	12	99
09964	1	4	000	6.26	0.033371	12	99
09993	3	1	000	10.29	0.246594	12	99
09993	3	1	000	10.29	4.643864	12	99
09993	3	1	000	10.29	3.572316	12	99
10001	4	4	000	13.59	0.031624	12	99
10001	4	4	000	13.59	0.031755	12	99
10001	1	4	000	5.61	0.013364	12	99
10001	4	4	000	13.59	0.029833	12	99
10001	4	4	000	13.59	0.723905	12	99
10001	1	4	000	5.61	0.019654	12	99
10001	1	4	000	5.61	0.02194	12	99
10001	4	4	000	13.59	0.007474	12	99
10001	1	4	000	5.61	0.006289	12	99
10001	4	4	000	13.59	0.014039	12	99
10201	2	1	000	9.22	0.249793	12	99
10201	2	1	000	9.22	0.490728	12	99
10201	2	1	000	9.22	12.14053	12	99
10201	2	1	000	9.22	1.236388	12	99
10259	3	1	000	10.35	0.736071	12	99
10259	3	1	000	10.35	2.228769	12	99
10294	2	1	000	9.8	19.0871	12	99
10294	2	1	000	9.8	0.061858	12	99
10350	3	1	000	10.65	0.011009	12	99
10350	3	1	000	10.65	1.30869	12	99
10350	3	1	000	10.65	13.58606	12	99
10350	3	1	000	10.65	0.896723	12	99
10350	3	1	000	10.65	0.005503	12	99
10385	3	1	000	10.42	0.011227	12	99
10385	3	1	000	10.42	7.494582	12	99
10456	3	1	000	11.37	15.61247	12	99
10456	3	1	000	11.37	0.958057	12	99
10602	3	1	000	11.11	0.011238	12	99
10602	3	1	000	11.11	13.86589	12	99
10602	3	1	000	11.11	0.649808	12	99
10679	3	1	000	11.76	0.163905	12	99
10679	3	1	000	11.76	7.764973	12	99
10679	3	1	000	11.76	3.558569	12	99
10742	3	1	000	12.77	0.007962	12	99
10742	3	1	000	12.77	0.210765	12	99
10742	3	1	000	12.77	3.650096	12	99
10742	3	1	000	12.77	2.783527	12	99
10742	3	1	000	12.77	0.005285	12	99
10770	4	1	000	13.16	0.010359	12	99
10770	4	1	000	13.16	6.159879	12	99

10770	4	1	000	13.16	2.009749	12	99
10770	4	1	000	13.16	0.005106	12	99
10832	3	1	000	12.92	13.07947	12	99
10832	3	1	000	12.92	3.696517	12	99
10982	4	1	000	13.73	0.020983	12	99
10982	4	1	000	13.73	0.023391	12	99
10982	4	1	000	13.73	16.49613	12	99
10982	4	1	000	13.73	0.694274	12	99
10982	4	1	000	13.73	0.010547	12	99
11036	4	1	000	13.6	7.613446	12	99
11109	4	1	000	13.7	0.468068	12	99
11109	4	1	000	13.7	14.63286	12	99
11109	4	1	000	13.7	0.005275	12	99
11183	4	1	000	13.31	0.022094	12	99
11183	4	1	000	13.31	0.678594	12	99
11183	4	1	000	13.31	9.361327	12	99
11183	4	1	000	13.31	0.24688	12	99
11183	4	1	000	13.31	0.010881	12	99
11372	4	1	000	13.77	0.690168	12	99
11372	4	1	000	13.77	18.57126	12	99
11372	4	1	000	13.77	0.709699	12	99
11449	4	1	000	13.45	0.105257	12	99
11449	4	1	000	13.45	18.58285	12	99
11449	4	1	000	13.45	1.298701	12	99
11540	4	1	000	13.26	12.48741	12	99
11806	4	1	000	13.86	0.210315	12	99
11806	4	1	000	13.86	19.23798	12	99
11806	4	1	000	13.86	0.54114	12	99
11897	4	1	000	14.4	0.023484	12	99
11897	4	1	000	14.4	1.986457	12	99
11897	4	1	000	14.4	17.69781	12	99
11897	4	1	000	14.4	0.003856	12	99
11979	4	1	000	14.27	0.007981	12	99
11979	4	1	000	14.27	0.011234	12	99
11979	4	1	000	14.27	0.010507	12	99
11979	4	1	000	14.27	1.952108	12	99
11979	4	1	000	14.27	14.49357	12	99
11979	4	1	000	14.27	8.884854	12	99
11979	4	1	000	14.27	0.010731	12	99
12127	4	1	000	14.22	0.982493	12	99
12127	4	1	000	14.22	13.32088	12	99
12127	4	1	000	14.22	1.483142	12	99
12201	4	1	000	13.24	0.748323	12	99
12201	4	1	000	13.24	24.37494	12	99
12285	4	1	000	13.17	0.246182	12	99
12285	4	1	000	13.17	19.5675	12	99
12480	4	1	000	13.78	0.022173	12	99
12480	4	1	000	13.78	19.43003	12	99

12565	4	1	000	13.7	0.011092	12 99
12565	4	1	000	13.7	25.24008	12 99
12639	4	1	000	13.06	0.011095	12 99
12639	4	1	000	13.06	23.608	12 99
12639	4	1	000	13.06	0.005465	12 99
12823	4	1	000	13.17	7.213609	12 99
12823	4	1	000	13.17	0.63684	12 99
12852	4	1	000	13.01	10.86065	12 99
12852	4	1	000	13.01	2.874132	12 99
12852	4	4	000	13.42	0.047668	12 99
12852	4	4	000	13.42	66.60527	12 99
12852	4	4	000	13.42	0.373472	12 99
12852	4	4	000	13.42	0.022424	12 99
12942	4	1	000	13.03	0.740693	12 99
12942	4	1	000	13.03	17.44634	12 99
12942	4	1	000	13.03	2.250894	12 99
12942	3	4	000	12.1	0.374625	12 99
12942	3	4	000	12.82	0.370306	12 99
12942	3	4	000	12.82	0.557199	12 99
12942	3	4	000	12.82	50.14236	12 99
12942	3	4	000	12.82	1.471475	12 99
13015	4	4	000	13.19	0.010524	12 99
13015	3	4	000	12.13	0.374619	12 99
13015	4	4	000	13.19	4.595128	12 99
13015	4	4	000	13.19	36.66284	12 99
13015	4	4	000	13.19	2.61431	12 99
13015	4	4	000	13.19	0.004952	12 99
13016	4	1	000	13.18	0.764476	12 99
13016	4	1	000	13.18	19.61489	12 99
13016	4	1	000	13.18	0.248292	12 99
13016	4	1	000	13.18	0.005246	12 99
13016	4	1	000	13.18	0.015362	12 99
13017	3	4	000	11.39	1.131855	12 99
13017	3	4	000	11.39	25.42655	12 99
13017	3	4	000	11.39	0.374331	12 99
13371	3	1	000	12.95	0.015909	12 99
13371	3	1	000	12.95	0.245652	12 99
13371	3	1	000	12.95	4.723547	12 99
13371	3	1	000	12.95	0.010241	12 99
13372	4	4	000	13.02	0.01496	12 99
13372	4	4	000	13.02	3.176879	12 99
13372	4	4	000	13.02	11.79194	12 99
13372	4	4	000	13.02	4.333318	12 99
13372	4	4	000	13.02	0.004961	12 99
13524	4	4	000	13.13	4.10635	12 99
13524	4	4	000	13.13	2.929691	12 99
13524	4	4	000	13.13	25.97653	12 99
13524	4	4	000	13.13	4.639363	12 99

13525	4	1	000	13.52	1.219785	12	99
13525	4	1	000	13.52	16.37086	12	99
13648	3	1	000	11.67	0.032575	12	99
13650	4	1	000	13.41	1.438302	12	99
13650	4	1	000	13.41	12.42106	12	99
13650	4	1	000	13.41	2.724184	12	99
13686	3	1	000	12.41	0.023387	12	99
13686	3	1	000	12.41	17.62132	12	99
13686	3	1	000	12.41	0.247753	12	99
13724	1	1	000	5.99	0.015523	12	99
13858	3	4	000	12.01	0.374632	12	99
13858	3	4	000	12.04	3.127837	12	99
13858	3	4	000	12.04	48.353	12	99
13858	3	4	000	12.04	1.011267	12	99
13858	3	4	000	12.04	0.004955	12	99
13859	3	1	000	12.28	0.007927	12	99
13859	3	1	000	12.28	0.011657	12	99
13859	3	1	000	12.28	25.87721	12	99
13859	3	1	000	12.28	3.751426	12	99
13859	3	1	000	12.28	0.005246	12	99
14055	1	4	000	2.39	0.327945	12	99
14065	1	4	000	5.67	0.015902	12	99
14065	1	4	000	5.67	0.071951	12	99
14065	1	4	000	5.67	0.00446	12	99
14065	1	4	000	5.67	0.024244	12	99
14065	1	4	000	5.67	0.007021	12	99
14448	1	4	000	5.99	0.012272	12	99
14883	1	4	000	5.66	0.022262	12	99
15204	1	4	000	5.92	0.015919	12	99
15244	1	1	000	5.44	0.007949	12	99
15244	1	1	000	5.44	0.01126	12	99
15244	1	1	000	5.44	0.042169	12	99
15244	1	1	000	5.44	0.02338	12	99
15244	1	1	000	5.44	0.132474	12	99
15244	1	1	000	5.44	0.124027	12	99
15244	1	1	000	5.44	0.007481	12	99
15244	1	1	000	5.44	0.004961	12	99
15244	4	4	000	13.58	0.007019	12	99
15347	1	1	000	6.16	0.007949	12	99
15347	1	1	000	6.16	0.01169	12	99
15347	1	1	000	6.16	0.083168	12	99
15347	1	1	000	6.16	0.031137	12	99
15347	1	1	000	6.16	0.010645	12	99
15445	1	1	000	5.23	1.297919	12	99
15445	1	1	000	5.23	0.669493	12	99
15448	1	1	000	4.54	0.008002	12	99
15448	1	1	000	4.54	0.015812	12	99
15448	1	1	000	4.54	0.003766	12	99

15448	1	1	000	4.54	0.005327	12	99
15451	1	1	000	5.31	0.46584	12	99
15457	1	1	000	2.85	0.033293	12	99
15459	1	1	000	4.06	25.28046	12	99
15459	1	1	000	4.06	8.661046	12	99
15460	1	1	000	3.32	2.097296	12	99
15555	1	1	000	4	0.008002	12	99
15555	1	1	000	4	0.01132	12	99
11540	4	4	000	16.49	0.031623	12	99
11540	4	4	000	16.49	6.873061	12	99
11540	4	4	000	16.49	0.984106	12	99
11540	4	4	000	13.73	0.009902	12	99
11540	4	4	000	16.49	3.241216	12	99
11540	4	4	000	16.49	0.456485	12	99
12565	4	4	000	16.72	6.674973	12	99
12565	4	4	000	16.72	0.175589	12	99
12852	4	4	000	16.62	4.201198	12	99

"06/02/1997 RADNUC2A run for combined K Basins "
" Results decayed to 05/31/1998 "
" Total MTU " 2099.1
" Total Curies " 5.50E+07
" Total BTU " 5.49E+05

"Isotope"	"Curies"	"BTUs"
"H-3	"3.59E+04	4.12E+00
"C-14	"2.35E-02	2.34E-05
"Se-79	"8.62E+01	9.07E-02
"Kr-85	"5.90E+05	3.02E+03
"Sr-89	"0.00E+00	0.00E+00
"Sr-90	"1.01E+07	4.01E+04
"Y-90	"1.01E+07	1.91E+05
"Y-91	"2.23E-14	2.73E-16
"Zr-93	"3.87E+02	1.52E-01
"Nb-93m	"2.39E+02	1.46E-01
"Zr-95	"1.67E-12	2.87E-14
"Nb-95	"3.70E-12	6.06E-14
"Nb-95m	"1.24E-14	5.58E-17
"Tc-99	"2.88E+03	4.93E+00
"Ru-103	"0.00E+00	0.00E+00
"Rh-103m	"0.00E+00	0.00E+00
"Ru-106	"1.82E+03	3.70E-01
"Rh-106	"1.82E+03	5.94E+01
"Pd-107	"1.63E+01	3.05E-03
"Ag-110	"2.84E-04	7.28E-09
"Ag-110m	"2.14E-02	1.21E-03
"Cd-113m	"3.55E+03	1.33E+01
"Cd-115m	"0.00E+00	0.00E+00
"Sn-119m	"2.76E-02	4.85E-05
"Sn-121m	"2.69E+01	9.64E-02
"Sn-123	"1.74E-05	1.85E-07
"Te-123m	"2.76E-11	1.36E-13
"Sb-124	"3.03E-18	1.37E-19
"Sb-125	"3.23E+04	3.47E+02
"Te-125m	"7.89E+03	2.27E+01
"Sn-126	"1.56E+02	1.63E-01
"Sb-126	"2.18E+01	1.35E+00
"Sb-126m	"1.56E+02	6.81E+00
"Te-127	"9.49E-07	4.37E-09
"Te-127m	"9.69E-07	1.64E-09
"Te-129	"0.00E+00	0.00E+00
"Te-129m	"0.00E+00	0.00E+00
"I-129	"6.37E+00	1.02E-02
"Cs-134	"1.59E+04	5.54E+02
"Cs-135	"7.75E+01	8.84E-02
"Cs-137	"1.32E+07	4.55E+04

"Ba-137m"	1.25E+07	1.67E+05
"Ce-141 "	0.00E+00	0.00E+00
"Pr-143 "	0.00E+00	0.00E+00
"Ce-144 "	9.14E+02	2.06E+00
"Pr-144 "	9.03E+02	2.26E+01
"Pr-144m"	1.10E+01	1.26E-02
"Pm-147 "	4.62E+05	5.79E+02
"Pm-148 "	0.00E+00	0.00E+00
"Pm-148m"	0.00E+00	0.00E+00
"Sm-151 "	1.76E+05	7.02E+01
"Eu-152 "	9.45E+02	1.46E+01
"Gd-153 "	1.28E-04	3.94E-07
"Eu-154 "	1.07E+05	3.29E+03
"Eu-155 "	2.21E+04	5.45E+01
"Tb-160 "	2.77E-15	7.55E-17
"H-3 "	7.24E+02	8.31E-02
"C-14 "	6.93E+02	6.91E-01
"Fe-55 "	1.84E+03	2.09E-01
"Ni-59 "	4.10E+01	5.55E-03
"Co-60 "	3.96E+03	2.08E+02
"Ni-63 "	4.49E+03	1.55E+00
"Zr-93 "	1.32E+01	5.20E-03
"Nb-93m "	8.18E+00	5.00E-03
"Zr-95 "	1.64E-14	2.81E-16
"Nb-95 "	3.63E-14	5.94E-16
"Nb-95m "	1.21E-16	5.47E-19
"In-113m"	2.14E-07	1.69E-09
"Sn-113 "	2.14E-07	1.21E-10
"Sn-119m"	2.69E-01	4.73E-04
"Sn-121m"	5.27E+01	1.89E-01
"Sb-125 "	1.19E+03	1.27E+01
"Te-125m"	2.89E+02	8.32E-01
"U-234 "	8.74E+02	8.44E+01
"U-235 "	3.37E+01	3.12E+00
"U-236 "	1.27E+02	1.16E+01
"U-238 "	6.96E+02	5.92E+01
"Np-237 "	5.72E+01	5.63E+00
"Pu-238 "	1.11E+05	1.24E+04
"Pu-239 "	2.51E+05	2.62E+04
"Pu-240 "	1.44E+05	1.51E+04
"Pu-241 "	6.68E+06	7.07E+02
"Pu-242 "	5.49E+01	5.45E+00
"Am-241 "	3.75E+05	4.19E+04
"Am-242m"	1.96E+02	1.02E+00
"Am-242 "	1.95E+02	5.53E+00
"Am-243 "	1.20E+02	1.30E+01
"Cm-242 "	1.62E+02	2.00E+01
"Cm-244 "	1.44E+03	1.69E+02

"105 K-East charge data"

"Key"	"Grade"	"Fuel"	"Pieces"	"%Pu-240"	"Uranium"	"Mo"	"Yr"
09621	1 4	000	5.94	0.006673	12	99	
09621	1 4	000	5.94	0.076694	12	99	
09621	1 4	000	6.01	0.023972	12	99	
09621	1 4	000	5.94	0.0099	12	99	
09621	1 4	000	5.94	0.002374	12	99	
09621	1 4	000	5.94	0.072655	12	99	
09621	1 4	000	5.94	0.149847	12	99	
09621	1 4	000	5.94	0.009728	12	99	
09621	1 4	000	5.94	0.050475	12	99	
10001	3 4	000	12.4	0.04212	12	99	
10001	3 4	000	12.4	0.014903	12	99	
10001	3 4	000	12.4	0.006639	12	99	
10001	3 4	000	12.4	0.00991	12	99	
10001	3 4	000	12.4	0.029932	12	99	
10001	3 4	000	12.4	0.035065	12	99	
10201	2 4	000	9.09	1.075459	12	99	
10201	2 4	000	9.09	0.366031	12	99	
10201	2 4	000	9.09	0.343918	12	99	
10201	2 4	000	9.09	0.537029	12	99	
10201	2 4	000	9.09	0.172074	12	99	
10201	2 4	000	9.09	0.161819	12	99	
10259	3 4	000	10.41	0.050612	12	99	
10259	3 4	000	10.41	1.476838	12	99	
10259	3 4	000	10.41	12.34494	12	99	
10259	3 4	000	10.41	0.031588	12	99	
10259	3 4	000	10.41	0.718433	12	99	
10259	3 4	000	10.41	5.758699	12	99	
10294	2 4	000	8.94	0.032608	12	99	
10294	3 4	000	10.4	0.012648	12	99	
10294	3 4	000	10.4	0.812226	12	99	
10294	3 4	000	10.4	24.15077	12	99	
10294	3 4	000	10.4	0.762301	12	99	
10294	2 4	000	8.94	0.027153	12	99	
10294	3 4	000	10.4	0.006317	12	99	
10294	3 4	000	10.4	0.381403	12	99	
10294	3 4	000	10.4	11.35286	12	99	
10294	3 4	000	10.4	0.344639	12	99	
10350	2 4	000	9.28	0.031646	12	99	
10350	2 4	000	9.28	0.238728	12	99	
10350	2 4	000	9.28	0.089727	12	99	
10350	2 4	000	9.28	0.014861	12	99	
10350	2 4	000	9.28	0.112204	12	99	
10350	2 4	000	9.28	0.042207	12	99	
10385	3 4	000	10.21	0.130384	12	99	
10385	3 4	000	11.21	0.141018	12	99	

10385	3	4	000	11.21	23.81023	12	99
10385	3	4	000	11.21	0.298905	12	99
10385	3	4	000	10.21	0.075994	12	99
10385	3	4	000	11.21	0.059715	12	99
10385	3	4	000	11.21	11.17924	12	99
10385	3	4	000	11.21	0.154738	12	99
10456	3	4	000	11.24	0.009548	12	99
10456	3	4	000	11.24	0.031918	12	99
10456	3	4	000	11.24	0.414766	12	99
10456	3	4	000	11.24	1.348222	12	99
10456	3	4	000	11.24	21.44289	12	99
10456	3	4	000	11.24	3.186772	12	99
10576	3	4	000	11.09	3.881855	12	99
10576	3	4	000	11.09	0.043956	12	99
10602	4	4	000	13.75	0.081456	12	99
10602	3	4	000	11.09	0.031925	12	99
10602	4	4	000	13.75	0.55955	12	99
10602	3	4	000	11.09	0.030958	12	99
10602	4	4	000	13.75	24.79309	12	99
10602	4	4	000	13.75	1.22853	12	99
10679	4	4	000	14.09	0.309509	12	99
10679	3	4	000	11.09	0.014136	12	99
10679	4	4	000	14.09	0.124291	12	99
10679	3	4	000	11.09	1.255033	12	99
10679	4	4	000	14.09	22.96605	12	99
10679	4	4	000	14.09	1.296428	12	99
10742	4	4	000	14.25	1.170103	12	99
10742	4	4	000	14.25	12.36114	12	99
10742	4	4	000	14.25	0.462965	12	99
10742	3	4	000	10.8	0.549476	12	99
10742	4	4	000	14.25	5.806125	12	99
10742	3	4	000	10.8	0.22488	12	99
10770	3	4	000	11.66	0.681667	12	99
10770	4	4	000	13.91	14.11261	12	99
10770	4	4	000	13.91	4.436449	12	99
10832	4	4	000	13.65	0.260688	12	99
10832	4	4	000	13.65	0.041425	12	99
10832	4	4	000	13.65	2.044619	12	99
10832	4	4	000	13.65	47.31945	12	99
10832	4	4	000	13.65	3.138458	12	99
10982	4	4	000	14.97	0.173868	12	99
10982	4	4	000	14.97	0.126892	12	99
10982	3	4	000	11.7	0.706201	12	99
10982	4	4	000	14.97	15.20181	12	99
10982	4	4	000	14.97	0.94076	12	99
10982	4	4	000	14.97	0.08688	12	99
10982	3	4	000	11.7	0.059721	12	99
10982	3	4	000	11.7	0.331757	12	99

10982	4	4	000	14.97	7.090482	12	99
10982	3	4	000	11.7	0.498938	12	99
11036	4	4	000	14.37	0.006372	12	99
11036	4	4	000	13.31	0.326927	12	99
11036	4	4	000	14.37	7.817157	12	99
11036	4	4	000	14.37	0.686572	12	99
11036	4	4	000	13.31	0.003176	12	99
11036	4	4	000	14.37	0.013257	12	99
11036	4	4	000	13.31	0.123844	12	99
11036	4	4	000	14.37	3.698878	12	99
11036	4	4	000	14.37	0.330283	12	99
11109	4	4	000	14.62	0.16921	12	99
11109	4	4	000	14.62	0.674804	12	99
11109	4	4	000	14.62	15.10859	12	99
11109	4	4	000	14.62	1.238823	12	99
11109	3	4	000	10.32	0.079566	12	99
11109	3	4	000	10.32	0.331711	12	99
11109	4	4	000	14.62	7.091013	12	99
11109	4	4	000	14.62	0.576213	12	99
11183	4	4	000	14.49	0.184538	12	99
11183	4	4	000	14.49	0.140773	12	99
11183	4	4	000	14.49	0.189703	12	99
11183	4	4	000	14.49	32.90384	12	99
11183	4	4	000	14.49	1.014554	12	99
11183	4	4	000	14.49	0.031018	12	99
11183	4	4	000	14.49	0.210257	12	99
11183	4	4	000	14.49	0.043892	12	99
11183	4	4	000	14.49	0.097674	12	99
11183	4	4	000	14.49	0.066214	12	99
11183	3	4	000	11.02	0.089084	12	99
11183	4	4	000	14.49	15.43086	12	99
11183	4	4	000	14.49	0.491747	12	99
11372	4	4	000	15.17	0.130374	12	99
11372	4	4	000	15.17	0.042237	12	99
11372	4	4	000	15.17	0.421612	12	99
11372	4	4	000	15.17	19.91088	12	99
11372	4	4	000	15.17	0.686564	12	99
11372	4	4	000	15.17	0.059719	12	99
11372	3	4	000	12.05	0.019892	12	99
11372	3	4	000	12.05	0.178219	12	99
11372	3	4	000	12.05	9.414279	12	99
11372	4	4	000	15.17	0.309187	12	99
11449	4	4	000	14.37	0.197256	12	99
11449	4	4	000	14.37	0.094853	12	99
11449	4	4	000	14.37	16.26954	12	99
11449	4	4	000	14.37	3.361394	12	99
11449	4	4	000	14.37	0.086193	12	99
11449	3	4	000	11.03	0.039598	12	99

11449	4	4	000	14.37	7.629647	12	99
11449	3	4	000	11.03	1.616732	12	99
11540	3	4	000	11.66	0.152125	12	99
11540	3	4	000	11.3	0.141035	12	99
11540	3	4	000	11.3	0.042167	12	99
11540	3	4	000	11.3	7.603293	12	99
11540	3	4	000	11.3	0.59779	12	99
11540	3	4	000	11.3	0.982763	12	99
11540	3	4	000	11.66	0.076006	12	99
11540	3	4	000	11.3	0.072978	12	99
11540	3	4	000	11.3	0.024759	12	99
11540	3	4	000	11.3	3.567068	12	99
11540	3	4	000	11.3	0.274249	12	99
11733	3	4	000	12.82	0.349841	12	99
11733	3	4	000	12.82	0.089642	12	99
11733	3	4	000	10.36	0.156979	12	99
11733	3	4	000	10.36	0.049213	12	99
11806	4	4	000	15.03	0.162968	12	99
11806	3	4	000	11.94	0.084643	12	99
11806	3	4	000	11.94	0.021097	12	99
11806	4	4	000	15.03	18.25962	12	99
11806	4	4	000	15.03	0.268532	12	99
11806	3	4	000	11.94	0.327677	12	99
11806	4	4	000	15.03	0.070582	12	99
11806	3	4	000	11.94	0.033183	12	99
11806	3	4	000	11.94	0.00991	12	99
11806	3	4	000	11.94	8.607779	12	99
11806	4	4	000	15.03	0.126466	12	99
11897	3	4	000	11.69	3.046193	12	99
11897	4	4	000	15.47	20.37553	12	99
11897	4	4	000	15.47	1.61182	12	99
11897	4	4	000	15.47	0.00663	12	99
11897	3	4	000	11.69	1.431082	12	99
11897	4	4	000	15.47	9.584959	12	99
11897	4	4	000	15.47	0.751884	12	99
11979	4	4	000	15.34	0.081493	12	99
11979	4	4	000	15.34	1.854741	12	99
11979	4	4	000	15.34	14.26082	12	99
11979	4	4	000	15.34	1.926291	12	99
11979	4	4	000	15.34	0.371669	12	99
11979	4	4	000	15.34	9.622194	12	99
11979	4	4	000	15.34	0.461079	12	99
11979	3	4	000	11.7	0.89586	12	99
11979	4	4	000	15.34	6.693747	12	99
11979	3	4	000	11.7	0.892379	12	99
12127	4	4	000	14.73	0.146527	12	99
12127	4	4	000	14.73	0.497313	12	99
12127	4	4	000	14.73	0.340679	12	99

12127	4	4	000	14.73	26.23191	12	99
12127	4	4	000	14.73	3.336408	12	99
12201	4	4	000	13.98	0.13036	12	99
12201	3	4	000	11.38	0.01059	12	99
12201	3	4	000	11.38	0.449298	12	99
12201	4	4	000	13.98	15.9358	12	99
12201	4	4	000	13.98	5.664989	12	99
12201	3	4	000	11.38	0.007507	12	99
12240	4	4	000	14.51	0.063584	12	99
12240	3	4	000	11.22	0.029896	12	99
12285	4	4	000	14.45	0.014083	12	99
12285	4	4	000	14.45	0.031772	12	99
12285	3	4	000	12.1	0.759011	12	99
12285	4	4	000	14.45	57.7036	12	99
12285	4	4	000	14.45	6.101811	12	99
12285	3	4	000	12.1	0.004972	12	99
12480	4	4	000	14.29	0.580019	12	99
12480	3	4	000	12.38	0.24784	12	99
12480	4	4	000	14.29	49.62144	12	99
12480	4	4	000	14.29	3.732459	12	99
12565	4	4	000	14.15	0.290153	12	99
12565	4	4	000	14.15	0.139326	12	99
12565	4	4	000	14.15	34.78675	12	99
12565	4	4	000	14.15	3.646776	12	99
12639	4	4	000	13.84	0.02309	12	99
12639	4	4	000	13.84	40.3312	12	99
12639	4	4	000	13.84	5.400192	12	99
12852	3	4	000	11.43	2.525342	12	99
13015	4	4	000	13.19	0.216604	12	99
13015	4	4	000	13.19	0.654274	12	99
13016	1	4	000	5.63	0.02194	12	99
13371	1	4	000	6.58	0.021128	12	99
13649	3	4	000	11.4	0.374685	12	99
13649	4	4	000	13.25	0.588463	12	99
13649	4	4	000	13.25	3.972961	12	99
13685	4	4	000	13.34	2.617419	12	99
14065	1	4	000	5.62	0.023287	12	99
14355	4	4	000	15.74	0.094818	12	99
14355	3	4	000	12	6.202162	12	99
14355	4	4	000	15.74	0.313212	12	99
14355	4	4	000	15.74	0.04455	12	99
14355	3	4	000	12	2.916202	12	99
14355	4	4	000	15.74	0.147505	12	99
14356	3	4	000	11.28	0.180698	12	99
14356	3	4	000	11.28	3.207757	12	99
14356	3	4	000	11.28	0.022035	12	99
14356	3	4	000	11.28	8.161901	12	99
14356	3	4	000	11.28	1.352138	12	99

14356	3	4	000	11.28	0.372588	12	99
14356	3	4	000	11.28	0.085034	12	99
14356	3	4	000	11.28	0.103665	12	99
14722	1	4	000	5.05	0.068843	12	99
15204	1	4	000	6.01	0.015919	12	99
15204	1	4	000	5.53	0.351245	12	99
15204	1	4	000	6.01	14.30584	12	99
15204	1	4	000	6.01	3.164697	12	99
15204	1	4	000	6.01	59.48539	12	99
15204	1	4	000	6.01	20.10897	12	99
15204	1	4	000	6.01	0.007492	12	99
15240	1	4	000	5.6	0.015919	12	99
15240	1	4	000	5.71	0.374804	12	99
15240	1	4	000	5.6	0.088008	12	99
15240	1	4	000	5.6	0.006644	12	99
15240	1	4	000	5.6	0.007041	12	99
15316	1	4	000	6.1	10.04697	12	99
15316	1	4	000	6.1	0.186043	12	99
15316	1	4	000	6.1	4.962912	12	99
15316	1	4	000	6.1	4.334796	12	99
15316	1	4	000	6.1	0.007492	12	99
15444	1	4	000	4.7	0.103706	12	99
15444	1	4	000	4.7	0.116956	12	99
15444	1	4	000	4.7	0.087941	12	99
15451	1	4	000	4.97	1.497135	12	99
15451	1	4	000	6.79	6.799597	12	99
15451	1	4	000	6.79	0.092684	12	99
15451	1	4	000	6.79	0.044007	12	99
15455	1	4	000	4.94	0.373161	12	99
15455	1	4	000	4.94	0.748424	12	99
15455	1	4	000	4.94	0.373987	12	99
15457	1	4	000	1.69	0.046801	12	99
15457	1	4	000	4.35	0.290374	12	99
15458	1	4	000	3.44	0.374335	12	99
15458	1	4	000	4.26	21.2791	12	99
15458	1	4	000	4.26	2.597811	12	99
15458	1	4	000	4.26	67.36977	12	99
15458	1	4	000	4.26	0.373516	12	99
15458	1	4	000	4.26	40.36723	12	99
15460	1	4	000	2.83	2.948269	12	99
15460	1	4	000	4.29	14.93406	12	99
15461	1	4	000	1.55	12.73	12	99
14356	3	4	000	11.28	0.014051	12	99
14356	3	4	000	11.28	0.010471	12	99

"06/02/1997 RADNUC2A run for K-EAST "
" Results decayed to 05/31/1998 "
" Total MTU " 1146.0
" Total Curies " 2.73E+07
" Total BTU " 2.75E+05

"Isotope"	"Curies"	"BTUs"
"H-3	"1.76E+04	2.02E+00
"C-14	"1.18E-02	1.18E-05
"Se-79	"4.35E+01	4.57E-02
"Kr-85	"2.84E+05	1.45E+03
"Sr-89	"0.00E+00	0.00E+00
"Sr-90	"4.96E+06	1.97E+04
"Y-90	"4.97E+06	9.37E+04
"Y-91	"1.78E-14	2.18E-16
"Zr-93	"1.94E+02	7.60E-02
"Nb-93m	"1.22E+02	7.43E-02
"Zr-95	"1.34E-12	2.31E-14
"Nb-95	"2.98E-12	4.87E-14
"Nb-95m	"9.95E-15	4.48E-17
"Tc-99	"1.45E+03	2.48E+00
"Ru-103	"0.00E+00	0.00E+00
"Rh-103m	"0.00E+00	0.00E+00
"Ru-106	"1.39E+03	2.82E-01
"Rh-106	"1.39E+03	4.52E+01
"Pd-107	"8.59E+00	1.61E-03
"Ag-110	"2.28E-04	5.83E-09
"Ag-110m	"1.71E-02	9.70E-04
"Cd-113m	"1.80E+03	6.77E+00
"Cd-115m	"0.00E+00	0.00E+00
"Sn-119m	"2.35E-02	4.13E-05
"Sn-121m	"1.38E+01	4.94E-02
"Sn-123	"1.46E-05	1.56E-07
"Te-123m	"2.33E-11	1.15E-13
"Sb-124	"2.49E-18	1.12E-19
"Sb-125	"1.63E+04	1.75E+02
"Te-125m	"3.98E+03	1.14E+01
"Sn-126	"8.07E+01	8.46E-02
"Sb-126	"1.13E+01	6.98E-01
"Sb-126m	"8.07E+01	3.53E+00
"Te-127	"7.90E-07	3.64E-09
"Te-127m	"8.07E-07	1.36E-09
"Te-129	"0.00E+00	0.00E+00
"Te-129m	"0.00E+00	0.00E+00
"I-129	"3.26E+00	5.20E-03
"Cs-134	"6.95E+03	2.42E+02
"Cs-135	"3.96E+01	4.52E-02
"Cs-137	"6.55E+06	2.26E+04

"Ba-137m"	6.19E+06	8.29E+04
"Ce-141 "	0.00E+00	0.00E+00
"Pr-143 "	0.00E+00	0.00E+00
"Ce-144 "	7.56E+02	1.70E+00
"Pr-144 "	7.47E+02	1.87E+01
"Pr-144m"	9.07E+00	1.04E-02
"Pm-147 "	2.45E+05	3.07E+02
"Pm-148 "	0.00E+00	0.00E+00
"Pm-148m"	0.00E+00	0.00E+00
"Sm-151 "	8.92E+04	3.56E+01
"Eu-152 "	4.67E+02	7.21E+00
"Gd-153 "	9.59E-05	2.95E-07
"Eu-154 "	5.30E+04	1.62E+03
"Eu-155 "	1.12E+04	2.77E+01
"Tb-160 "	2.29E-15	6.25E-17
"H-3 "	3.75E+02	4.30E-02
"C-14 "	3.62E+02	3.61E-01
"Fe-55 "	9.64E+02	1.10E-01
"Ni-59 "	2.11E+01	2.86E-03
"Co-60 "	1.86E+03	9.76E+01
"Ni-63 "	2.30E+03	7.95E-01
"Zr-93 "	6.58E+00	2.59E-03
"Nb-93m "	4.13E+00	2.53E-03
"Zr-95 "	1.31E-14	2.26E-16
"Nb-95 "	2.91E-14	4.77E-16
"Nb-95m "	9.73E-17	4.39E-19
"In-113m"	1.77E-07	1.40E-09
"Sn-113 "	1.77E-07	1.00E-10
"Sn-119m"	2.26E-01	3.97E-04
"Sn-121m"	2.63E+01	9.41E-02
"Sb-125 "	5.96E+02	6.39E+00
"Te-125m"	1.45E+02	4.18E-01
"U-234 "	4.66E+02	4.51E+01
"U-235 "	1.77E+01	1.64E+00
"U-236 "	6.61E+01	6.03E+00
"U-238 "	3.80E+02	3.23E+01
"Np-237 "	3.02E+01	2.97E+00
"Pu-238 "	6.05E+04	6.73E+03
"Pu-239 "	1.32E+05	1.38E+04
"Pu-240 "	7.64E+04	7.98E+03
"Pu-241 "	3.42E+06	3.62E+02
"Pu-242 "	3.07E+01	3.05E+00
"Am-241 "	2.06E+05	2.30E+04
"Am-242m"	1.14E+02	5.95E-01
"Am-242 "	1.13E+02	3.22E+00
"Am-243 "	7.12E+01	7.68E+00
"Cm-242 "	9.40E+01	1.16E+01
"Cm-244 "	8.71E+02	1.02E+02

"150-K WEST charge data"

"Key"	"Grade"	"Fuel"	"Pieces"	"%Pu-240"	"Uranium"	"Mo"	"Yr"
09621	1	1	000	6.04	0.105599	12	99
09964	1	1	000	6.18	0.01714	12	99
09964	1	1	000	6.18	0.279918	12	99
09964	1	4	000	6.26	0.041696	12	99
09964	1	1	000	6.18	0.013785	12	99
09964	1	1	000	6.18	0.003883	12	99
09964	1	1	000	6.18	0.005486	12	99
09964	1	4	000	6.26	0.033371	12	99
09993	3	1	000	10.29	0.246594	12	99
09993	3	1	000	10.29	4.643864	12	99
09993	3	1	000	10.29	3.572316	12	99
10001	4	4	000	13.59	0.031624	12	99
10001	4	4	000	13.59	0.031755	12	99
10001	1	4	000	5.61	0.013364	12	99
10001	4	4	000	13.59	0.029833	12	99
10001	4	4	000	13.59	0.723905	12	99
10001	1	4	000	5.61	0.019654	12	99
10001	1	4	000	5.61	0.02194	12	99
10001	4	4	000	13.59	0.007474	12	99
10001	1	4	000	5.61	0.006289	12	99
10001	4	4	000	13.59	0.014039	12	99
10201	2	1	000	9.22	0.249793	12	99
10201	2	1	000	9.22	0.490728	12	99
10201	2	1	000	9.22	12.14053	12	99
10201	2	1	000	9.22	1.236388	12	99
10259	3	1	000	10.35	0.736071	12	99
10259	3	1	000	10.35	2.228769	12	99
10294	2	1	000	9.8	19.0871	12	99
10294	2	1	000	9.8	0.061858	12	99
10350	3	1	000	10.65	0.011009	12	99
10350	3	1	000	10.65	1.30869	12	99
10350	3	1	000	10.65	13.58606	12	99
10350	3	1	000	10.65	0.896723	12	99
10350	3	1	000	10.65	0.005503	12	99
10385	3	1	000	10.42	0.011227	12	99
10385	3	1	000	10.42	7.494582	12	99
10456	3	1	000	11.37	15.61247	12	99
10456	3	1	000	11.37	0.958057	12	99
10602	3	1	000	11.11	0.011238	12	99
10602	3	1	000	11.11	13.86589	12	99
10602	3	1	000	11.11	0.649808	12	99
10679	3	1	000	11.76	0.163905	12	99
10679	3	1	000	11.76	7.764973	12	99
10679	3	1	000	11.76	3.558569	12	99

10742	3	1	000	12.77	0.007962	12	99
10742	3	1	000	12.77	0.210765	12	99
10742	3	1	000	12.77	3.650096	12	99
10742	3	1	000	12.77	2.783527	12	99
10742	3	1	000	12.77	0.005285	12	99
10770	4	1	000	13.16	0.010359	12	99
10770	4	1	000	13.16	6.159879	12	99
10770	4	1	000	13.16	2.009749	12	99
10770	4	1	000	13.16	0.005106	12	99
10832	3	1	000	12.92	13.07947	12	99
10832	3	1	000	12.92	3.696517	12	99
10982	4	1	000	13.73	0.020983	12	99
10982	4	1	000	13.73	0.023391	12	99
10982	4	1	000	13.73	16.49613	12	99
10982	4	1	000	13.73	0.694274	12	99
10982	4	1	000	13.73	0.010547	12	99
11036	4	1	000	13.6	7.613446	12	99
11109	4	1	000	13.7	0.468068	12	99
11109	4	1	000	13.7	14.63286	12	99
11109	4	1	000	13.7	0.005275	12	99
11183	4	1	000	13.31	0.022094	12	99
11183	4	1	000	13.31	0.678594	12	99
11183	4	1	000	13.31	9.361327	12	99
11183	4	1	000	13.31	0.24688	12	99
11183	4	1	000	13.31	0.010881	12	99
11372	4	1	000	13.77	0.690168	12	99
11372	4	1	000	13.77	18.57126	12	99
11372	4	1	000	13.77	0.709699	12	99
11449	4	1	000	13.45	0.105257	12	99
11449	4	1	000	13.45	18.58285	12	99
11449	4	1	000	13.45	1.298701	12	99
11540	4	1	000	13.26	12.48741	12	99
11806	4	1	000	13.86	0.210315	12	99
11806	4	1	000	13.86	19.23798	12	99
11806	4	1	000	13.86	0.54114	12	99
11897	4	1	000	14.4	0.023484	12	99
11897	4	1	000	14.4	1.986457	12	99
11897	4	1	000	14.4	17.69781	12	99
11897	4	1	000	14.4	0.003856	12	99
11979	4	1	000	14.27	0.007981	12	99
11979	4	1	000	14.27	0.011234	12	99
11979	4	1	000	14.27	0.010507	12	99
11979	4	1	000	14.27	1.952108	12	99
11979	4	1	000	14.27	14.49357	12	99
11979	4	1	000	14.27	8.884854	12	99
11979	4	1	000	14.27	0.010731	12	99
12127	4	1	000	14.22	0.982493	12	99
12127	4	1	000	14.22	13.32088	12	99

12127	4	1	000	14.22	1.483142	12	99
12201	4	1	000	13.24	0.748323	12	99
12201	4	1	000	13.24	24.37494	12	99
12285	4	1	000	13.17	0.246182	12	99
12285	4	1	000	13.17	19.5675	12	99
12480	4	1	000	13.78	0.022173	12	99
12480	4	1	000	13.78	19.43003	12	99
12565	4	1	000	13.7	0.011092	12	99
12565	4	1	000	13.7	25.24008	12	99
12639	4	1	000	13.06	0.011095	12	99
12639	4	1	000	13.06	23.608	12	99
12639	4	1	000	13.06	0.005465	12	99
12823	4	1	000	13.17	7.213609	12	99
12823	4	1	000	13.17	0.63684	12	99
12852	4	1	000	13.01	10.86065	12	99
12852	4	1	000	13.01	2.874132	12	99
12852	4	4	000	13.42	0.047668	12	99
12852	4	4	000	13.42	66.60527	12	99
12852	4	4	000	13.42	0.373472	12	99
12852	4	4	000	13.42	0.022424	12	99
12942	4	1	000	13.03	0.740693	12	99
12942	4	1	000	13.03	17.44634	12	99
12942	4	1	000	13.03	2.250894	12	99
12942	3	4	000	12.1	0.374625	12	99
12942	3	4	000	12.82	0.370306	12	99
12942	3	4	000	12.82	0.557199	12	99
12942	3	4	000	12.82	50.14236	12	99
12942	3	4	000	12.82	1.471475	12	99
13015	4	4	000	13.19	0.010524	12	99
13015	3	4	000	12.13	0.374619	12	99
13015	4	4	000	13.19	4.595128	12	99
13015	4	4	000	13.19	36.66284	12	99
13015	4	4	000	13.19	2.61431	12	99
13015	4	4	000	13.19	0.004952	12	99
13016	4	1	000	13.18	0.764476	12	99
13016	4	1	000	13.18	19.61489	12	99
13016	4	1	000	13.18	0.248292	12	99
13016	4	1	000	13.18	0.005246	12	99
13016	4	1	000	13.18	0.015362	12	99
13017	3	4	000	11.39	1.131855	12	99
13017	3	4	000	11.39	25.42655	12	99
13017	3	4	000	11.39	0.374331	12	99
13371	3	1	000	12.95	0.015909	12	99
13371	3	1	000	12.95	0.245652	12	99
13371	3	1	000	12.95	4.723547	12	99
13371	3	1	000	12.95	0.010241	12	99
13372	4	4	000	13.02	0.01496	12	99
13372	4	4	000	13.02	3.176879	12	99

13372	4	4	000	13.02	11.79194	12	99
13372	4	4	000	13.02	4.333318	12	99
13372	4	4	000	13.02	0.004961	12	99
13524	4	4	000	13.13	4.10635	12	99
13524	4	4	000	13.13	2.929691	12	99
13524	4	4	000	13.13	25.97653	12	99
13524	4	4	000	13.13	4.639363	12	99
13525	4	1	000	13.52	1.219785	12	99
13525	4	1	000	13.52	16.37086	12	99
13648	3	1	000	11.67	0.032575	12	99
13650	4	1	000	13.41	1.438302	12	99
13650	4	1	000	13.41	12.42106	12	99
13650	4	1	000	13.41	2.724184	12	99
13686	3	1	000	12.41	0.023387	12	99
13686	3	1	000	12.41	17.62132	12	99
13686	3	1	000	12.41	0.247753	12	99
13724	1	1	000	5.99	0.015523	12	99
13858	3	4	000	12.01	0.374632	12	99
13858	3	4	000	12.04	3.127837	12	99
13858	3	4	000	12.04	48.353	12	99
13858	3	4	000	12.04	1.011267	12	99
13858	3	4	000	12.04	0.004955	12	99
13859	3	1	000	12.28	0.007927	12	99
13859	3	1	000	12.28	0.011657	12	99
13859	3	1	000	12.28	25.87721	12	99
13859	3	1	000	12.28	3.751426	12	99
13859	3	1	000	12.28	0.005246	12	99
14055	1	4	000	2.39	0.327945	12	99
14065	1	4	000	5.67	0.015902	12	99
14065	1	4	000	5.67	0.071951	12	99
14065	1	4	000	5.67	0.00446	12	99
14065	1	4	000	5.67	0.024244	12	99
14065	1	4	000	5.67	0.007021	12	99
14448	1	4	000	5.99	0.012272	12	99
14883	1	4	000	5.66	0.022262	12	99
15204	1	4	000	5.92	0.015919	12	99
15244	1	1	000	5.44	0.007949	12	99
15244	1	1	000	5.44	0.01126	12	99
15244	1	1	000	5.44	0.042169	12	99
15244	1	1	000	5.44	0.02338	12	99
15244	1	1	000	5.44	0.132474	12	99
15244	1	1	000	5.44	0.124027	12	99
15244	1	1	000	5.44	0.007481	12	99
15244	1	1	000	5.44	0.004961	12	99
15244	4	4	000	13.58	0.007019	12	99
15347	1	1	000	6.16	0.007949	12	99
15347	1	1	000	6.16	0.01169	12	99
15347	1	1	000	6.16	0.083168	12	99

15347	1	1	000	6.16	0.031137	12	99
15347	1	1	000	6.16	0.010645	12	99
15445	1	1	000	5.23	1.297919	12	99
15445	1	1	000	5.23	0.669493	12	99
15448	1	1	000	4.54	0.008002	12	99
15448	1	1	000	4.54	0.015812	12	99
15448	1	1	000	4.54	0.003766	12	99
15448	1	1	000	4.54	0.005327	12	99
15451	1	1	000	5.31	0.46584	12	99
15457	1	1	000	2.85	0.033293	12	99
15459	1	1	000	4.06	25.28046	12	99
15459	1	1	000	4.06	8.661046	12	99
15460	1	1	000	3.32	2.097296	12	99
15555	1	1	000	4	0.008002	12	99
15555	1	1	000	4	0.01132	12	99
11540	4	4	000	16.49	0.031623	12	99
11540	4	4	000	16.49	6.873061	12	99
11540	4	4	000	16.49	0.984106	12	99
11540	4	4	000	13.73	0.009902	12	99
11540	4	4	000	16.49	3.241216	12	99
11540	4	4	000	16.49	0.456485	12	99
12565	4	4	000	16.72	6.674973	12	99
12565	4	4	000	16.72	0.175589	12	99
12852	4	4	000	16.62	4.201198	12	99

"06/02/1997 RADNUC2A run for K-WEST "
" Results decayed to 05/31/1998 "
" Total MTU " 953.1
" Total Curies " 2.77E+07
" Total BTU " 2.74E+05

"Isotope"	"Curies"	"BTUs"
"H-3	"1.83E+04	2.09E+00
"C-14	"1.17E-02	1.16E-05
"Se-79	"4.28E+01	4.50E-02
"Kr-85	"3.06E+05	1.57E+03
"Sr-89	"0.00E+00	0.00E+00
"Sr-90	"5.17E+06	2.05E+04
"Y-90	"5.17E+06	9.76E+04
"Y-91	"4.47E-15	5.46E-17
"Zr-93	"1.94E+02	7.60E-02
"Nb-93m	"1.18E+02	7.20E-02
"Zr-95	"3.27E-13	5.62E-15
"Nb-95	"7.26E-13	1.19E-14
"Nb-95m	"2.43E-15	1.09E-17
"Tc-99	"1.43E+03	2.45E+00
"Ru-103	"0.00E+00	0.00E+00
"Rh-103m	"0.00E+00	0.00E+00
"Ru-106	"4.34E+02	8.81E-02
"Rh-106	"4.34E+02	1.41E+01
"Pd-107	"7.68E+00	1.44E-03
"Ag-110	"5.66E-05	1.45E-09
"Ag-110m	"4.26E-03	2.41E-04
"Cd-113m	"1.75E+03	6.56E+00
"Cd-115m	"0.00E+00	0.00E+00
"Sn-119m	"4.15E-03	7.29E-06
"Sn-121m	"1.31E+01	4.70E-02
"Sn-123	"2.75E-06	2.93E-08
"Te-123m	"4.28E-12	2.12E-14
"Sb-124	"5.45E-19	2.46E-20
"Sb-125	"1.60E+04	1.72E+02
"Te-125m	"3.91E+03	1.12E+01
"Sn-126	"7.50E+01	7.86E-02
"Sb-126	"1.05E+01	6.49E-01
"Sb-126m	"7.50E+01	3.28E+00
"Te-127	"1.59E-07	7.31E-10
"Te-127m	"1.62E-07	2.74E-10
"Te-129	"0.00E+00	0.00E+00
"Te-129m	"0.00E+00	0.00E+00
"I-129	"3.11E+00	4.98E-03
"Cs-134	"8.96E+03	3.12E+02
"Cs-135	"3.79E+01	4.32E-02
"Cs-137	"6.64E+06	2.29E+04

```
"Ba-137m"6.28E+06    8.41E+04
"Ce-141 "0.00E+00    0.00E+00
"Pr-143 "0.00E+00    0.00E+00
"Ce-144 "1.58E+02    3.56E-01
"Pr-144 "1.56E+02    3.91E+00
"Pr-144m"1.90E+00    2.18E-03
"Pm-147 "2.17E+05    2.72E+02
"Pm-148 "0.00E+00    0.00E+00
"Pm-148m"0.00E+00    0.00E+00
"Sm-151 "8.66E+04    3.46E+01
"Eu-152 "4.77E+02    7.36E+00
"Gd-153 "3.23E-05    9.92E-08
"Eu-154 "5.44E+04    1.67E+03
"Eu-155 "1.08E+04    2.68E+01
"Tb-160 "4.77E-16    1.30E-17
"H-3    "3.49E+02    4.00E-02
"C-14   "3.31E+02    3.30E-01
"Fe-55  "8.75E+02    9.95E-02
"Ni-59  "1.99E+01    2.69E-03
"Co-60  "2.10E+03    1.10E+02
"Ni-63  "2.19E+03    7.54E-01
"Zr-93  "6.65E+00    2.61E-03
"Nb-93m "4.04E+00    2.47E-03
"Zr-95  "3.23E-15    5.57E-17
"Nb-95  "7.18E-15    1.17E-16
"Nb-95m "2.40E-17    1.08E-19
"In-113m"3.74E-08    2.95E-10
"Sn-113 "3.74E-08    2.12E-11
"Sn-119m"4.33E-02    7.62E-05
"Sn-121m"2.64E+01    9.48E-02
"Sb-125 "5.91E+02    6.33E+00
"Te-125m"1.44E+02    4.14E-01
"U-234  "4.08E+02    3.94E+01
"U-235  "1.60E+01    1.48E+00
"U-236  "6.11E+01    5.57E+00
"U-238  "3.16E+02    2.68E+01
"Np-237 "2.70E+01    2.66E+00
"Pu-238 "5.10E+04    5.68E+03
"Pu-239 "1.19E+05    1.24E+04
"Pu-240 "6.77E+04    7.07E+03
"Pu-241 "3.26E+06    3.45E+02
"Pu-242 "2.42E+01    2.40E+00
"Am-241 "1.69E+05    1.89E+04
"Am-242m"8.19E+01    4.28E-01
"Am-242 "8.15E+01    2.31E+00
"Am-243 "4.89E+01    5.27E+00
"Cm-242 "6.76E+01    8.35E+00
"Cm-244 "5.72E+02    6.71E+01
```

"105-K Basins shielding basis charge data"

"Key"	"Grade"	"Fuel"	"Pieces"	"%Pu-240"	"Uranium"	"Mo"	"Yr"
14707	4	4	000	16.00	1.000000	12	99
14707	4	4	000	16.00	1.000000	12	99
14707	4	4	000	16.00	0.630000	12	99

"06/02/1997 RADNUC2A run for shielding basis "
" Results decayed to 05/31/1998 "
" Total MTU " 2.6
" Total Curies " 1.32E+05
" Total BTU " 1.21E+03

"Isotope"	"Curies"	"BTUs"
"H-3	"1.02E+02	1.17E-02
"C-14	"4.45E-05	4.44E-08
"Se-79	"1.62E-01	1.71E-04
"Kr-85	"1.62E+03	8.28E+00
"Sr-89	"0.00E+00	0.00E+00
"Sr-90	"2.13E+04	8.43E+01
"Y-90	"2.13E+04	4.02E+02
"Y-91	"0.00E+00	0.00E+00
"Zr-93	"7.10E-01	2.79E-04
"Nb-93m	"3.47E-01	2.12E-04
"Zr-95	"1.08E-17	1.86E-19
"Nb-95	"2.40E-17	3.93E-19
"Nb-95m	"8.03E-20	3.62E-22
"Tc-99	"5.42E+00	9.28E-03
"Ru-103	"0.00E+00	0.00E+00
"Rh-103m	"0.00E+00	0.00E+00
"Ru-106	"2.44E+01	4.96E-03
"Rh-106	"2.44E+01	7.96E-01
"Pd-107	"3.75E-02	7.05E-06
"Ag-110	"1.08E-05	2.76E-10
"Ag-110m	"8.11E-04	4.60E-05
"Cd-113m	"1.03E+01	3.86E-02
"Cd-115m	"0.00E+00	0.00E+00
"Sn-119m	"1.28E-04	2.25E-07
"Sn-121m	"6.39E-02	2.29E-04
"Sn-123	"1.06E-08	1.12E-10
"Te-123m	"3.10E-13	1.53E-15
"Sb-124	"0.00E+00	0.00E+00
"Sb-125	"2.48E+02	2.65E+00
"Te-125m	"6.04E+01	1.74E-01
"Sn-126	"3.18E-01	3.33E-04
"Sb-126	"4.45E-02	2.75E-03
"Sb-126m	"3.18E-01	1.39E-02
"Te-127	"3.02E-10	1.39E-12
"Te-127m	"3.09E-10	5.22E-13
"Te-129	"0.00E+00	0.00E+00
"Te-129m	"0.00E+00	0.00E+00
"I-129	"1.27E-02	2.03E-05
"Cs-134	"2.79E+02	9.72E+00
"Cs-135	"1.50E-01	1.71E-04
"Cs-137	"2.93E+04	1.01E+02

"Ba-137m"	2.77E+04	3.71E+02
"Ce-141 "	0.00E+00	0.00E+00
"Pr-143 "	0.00E+00	0.00E+00
"Ce-144 "	4.55E+00	1.02E-02
"Pr-144 "	4.49E+00	1.12E-01
"Pr-144m"	5.45E-02	6.26E-05
"Pm-147 "	2.75E+03	3.44E+00
"Pm-148 "	0.00E+00	0.00E+00
"Pm-148m"	0.00E+00	0.00E+00
"Sm-151 "	2.80E+02	1.12E-01
"Eu-152 "	3.16E+00	4.88E-02
"Gd-153 "	1.02E-05	3.13E-08
"Eu-154 "	5.24E+02	1.61E+01
"Eu-155 "	8.90E+01	2.20E-01
"Tb-160 "	5.78E-19	1.58E-20
"H-3 "	2.89E+00	3.32E-04
"C-14 "	1.37E+00	1.37E-03
"Fe-55 "	1.36E+01	1.55E-03
"Ni-59 "	7.88E-02	1.07E-05
"Co-60 "	1.63E+01	8.55E-01
"Ni-63 "	9.19E+00	3.17E-03
"Zr-93 "	2.49E-02	9.76E-06
"Nb-93m "	1.21E-02	7.40E-06
"Zr-95 "	1.17E-19	2.02E-21
"Nb-95 "	2.61E-19	4.26E-21
"Nb-95m "	8.71E-22	3.92E-24
"In-113m"	6.74E-11	5.31E-13
"Sn-113 "	6.73E-11	3.82E-14
"Sn-119m"	1.08E-03	1.91E-06
"Sn-121m"	1.10E-01	3.95E-04
"Sb-125 "	8.13E+00	8.72E-02
"Te-125m"	1.98E+00	5.71E-03
"U-234 "	1.02E+00	9.83E-02
"U-235 "	3.40E-02	3.14E-03
"U-236 "	1.85E-01	1.68E-02
"U-238 "	8.71E-01	7.41E-02
"Np-237 "	1.15E-01	1.13E-02
"Pu-238 "	3.32E+02	3.69E+01
"Pu-239 "	4.38E+02	4.56E+01
"Pu-240 "	3.32E+02	3.46E+01
"Pu-241 "	2.45E+04	2.59E+00
"Pu-242 "	1.94E-01	1.92E-02
"Am-241 "	7.58E+02	8.49E+01
"Am-242m"	8.34E-01	4.36E-03
"Am-242 "	8.30E-01	2.36E-02
"Am-243 "	5.77E-01	6.23E-02
"Cm-242 "	6.89E-01	8.51E-02
"Cm-244 "	1.20E+01	1.41E+00

"105-K Basins Maximum Pu-240 charge data safety/regulatory assessment basis"

"Key"	"Grade"	"Fuel"	"Pieces"	"%Pu-240"	"Uranium"	"Mo"	"Yr"
12565	4	4	000	16.72	6.674973	12	99
12565	4	4	000	16.72	0.175589	12	99

"06/02/1997 RADNUC2A run for Safety Basis "
" Results decayed to 05/31/1998 "
" Total MTU " 11.6
" Total Curies " 4.77E+05
" Total BTU " 4.84E+03

"Isotope"	"Curies"	"BTUs"
"H-3	"2.94E+02	3.37E-02
"C-14	"2.08E-04	2.08E-07
"Se-79	"7.59E-01	7.98E-04
"Kr-85	"4.29E+03	2.19E+01
"Sr-89	"0.00E+00	0.00E+00
"Sr-90	"8.04E+04	3.18E+02
"Y-90	"8.04E+04	1.52E+03
"Y-91	"0.00E+00	0.00E+00
"Zr-93	"3.31E+00	1.30E-03
"Nb-93m	"2.16E+00	1.32E-03
"Zr-95	"0.00E+00	0.00E+00
"Nb-95	"0.00E+00	0.00E+00
"Nb-95m	"0.00E+00	0.00E+00
"Tc-99	"2.54E+01	4.34E-02
"Ru-103	"0.00E+00	0.00E+00
"Rh-103m	"0.00E+00	0.00E+00
"Ru-106	"2.97E-01	6.03E-05
"Rh-106	"2.97E-01	9.68E-03
"Pd-107	"1.81E-01	3.39E-05
"Ag-110	"8.32E-09	2.13E-13
"Ag-110m	"6.25E-07	3.54E-08
"Cd-113m	"3.22E+01	1.21E-01
"Cd-115m	"0.00E+00	0.00E+00
"Sn-119m	"7.58E-08	1.33E-10
"Sn-121m	"2.70E-01	9.69E-04
"Sn-123	"1.99E-15	2.12E-17
"Te-123m	"1.74E-20	8.62E-23
"Sb-124	"0.00E+00	0.00E+00
"Sb-125	"1.33E+02	1.42E+00
"Te-125m	"3.24E+01	9.30E-02
"Sn-126	"1.50E+00	1.57E-03
"Sb-126	"2.10E-01	1.30E-02
"Sb-126m	"1.50E+00	6.56E-02
"Te-127	"2.46E-18	1.13E-20
"Te-127m	"2.51E-18	4.25E-21
"Te-129	"0.00E+00	0.00E+00
"Te-129m	"0.00E+00	0.00E+00
"I-129	"5.98E-02	9.55E-05
"Cs-134	"7.50E+01	2.61E+00
"Cs-135	"7.01E-01	7.99E-04
"Cs-137	"1.12E+05	3.87E+02

"Ba-137m"	1.06E+05	1.42E+03
"Ce-141 "	0.00E+00	0.00E+00
"Pr-143 "	0.00E+00	0.00E+00
"Ce-144 "	9.18E-03	2.07E-05
"Pr-144 "	9.07E-03	2.27E-04
"Pr-144m"	1.10E-04	1.26E-07
"Pm-147 "	1.27E+03	1.59E+00
"Pm-148 "	0.00E+00	0.00E+00
"Pm-148m"	0.00E+00	0.00E+00
"Sm-151 "	1.18E+03	4.71E-01
"Eu-152 "	9.80E+00	1.51E-01
"Gd-153 "	6.02E-09	1.85E-11
"Eu-154 "	1.31E+03	4.00E+01
"Eu-155 "	1.23E+02	3.03E-01
"Tb-160 "	0.00E+00	0.00E+00
"H-3 "	8.78E+00	1.01E-03
"C-14 "	6.42E+00	6.40E-03
"Fe-55 "	6.28E+00	7.14E-04
"Ni-59 "	3.69E-01	5.00E-05
"Co-60 "	2.43E+01	1.28E+00
"Ni-63 "	4.03E+01	1.39E-02
"Zr-93 "	1.17E-01	4.58E-05
"Nb-93m "	7.61E-02	4.65E-05
"Zr-95 "	0.00E+00	0.00E+00
"Nb-95 "	0.00E+00	0.00E+00
"Nb-95m "	0.00E+00	0.00E+00
"In-113m"	1.58E-18	1.24E-20
"Sn-113 "	1.58E-18	8.93E-22
"Sn-119m"	6.37E-07	1.12E-09
"Sn-121m"	4.57E-01	1.64E-03
"Sb-125 "	4.32E+00	4.64E-02
"Te-125m"	1.05E+00	3.03E-03
"U-234 "	4.46E+00	4.31E-01
"U-235 "	1.47E-01	1.36E-02
"U-236 "	8.31E-01	7.58E-02
"U-238 "	3.84E+00	3.26E-01
"Np-237 "	5.40E-01	5.31E-02
"Pu-238 "	1.54E+03	1.72E+02
"Pu-239 "	2.01E+03	2.09E+02
"Pu-240 "	1.59E+03	1.66E+02
"Pu-241 "	7.91E+04	8.37E+00
"Pu-242 "	1.01E+00	1.01E-01
"Am-241 "	5.03E+03	5.63E+02
"Am-242m"	4.32E+00	2.26E-02
"Am-242 "	4.30E+00	1.22E-01
"Am-243 "	3.23E+00	3.49E-01
"Cm-242 "	3.57E+00	4.41E-01
"Cm-244 "	5.19E+01	6.09E+00

"06/04/1997 RADNUC2A run for safety basis fuel (40 "
" Results decayed to 05/31/2038 "
" Total MTU " 6.9
" Total Curies " 1.13E+05
" Total BTU " 1.72E+03

"Isotope"	"Curies"	"BTUs"
"H-3	"2.22E+01	2.54E-03
"C-14	"1.26E-04	1.26E-07
"Se-79	"4.61E-01	4.85E-04
"Kr-85	"2.35E+02	1.20E+00
"Sr-89	"0.00E+00	0.00E+00
"Sr-90	"2.01E+04	7.96E+01
"Y-90	"2.01E+04	3.80E+02
"Y-91	"0.00E+00	0.00E+00
"Zr-93	"2.01E+00	7.89E-04
"Nb-93m	"1.82E+00	1.11E-03
"Zr-95	"0.00E+00	0.00E+00
"Nb-95	"0.00E+00	0.00E+00
"Nb-95m	"0.00E+00	0.00E+00
"Tc-99	"1.54E+01	2.64E-02
"Ru-103	"0.00E+00	0.00E+00
"Rh-103m	"0.00E+00	0.00E+00
"Ru-106	"1.42E-12	2.88E-16
"Rh-106	"1.42E-12	4.62E-14
"Pd-107	"1.11E-01	2.09E-05
"Ag-110	"0.00E+00	0.00E+00
"Ag-110m	"0.00E+00	0.00E+00
"Cd-113m	"3.36E+00	1.26E-02
"Cd-115m	"0.00E+00	0.00E+00
"Sn-119m	"0.00E+00	0.00E+00
"Sn-121m	"9.90E-02	3.55E-04
"Sn-123	"0.00E+00	0.00E+00
"Te-123m	"0.00E+00	0.00E+00
"Sb-124	"0.00E+00	0.00E+00
"Sb-125	"7.33E-03	7.85E-05
"Te-125m	"1.79E-03	5.14E-06
"Sn-126	"9.16E-01	9.60E-04
"Sb-126	"1.28E-01	7.92E-03
"Sb-126m	"9.16E-01	4.00E-02
"Te-127	"0.00E+00	0.00E+00
"Te-127m	"0.00E+00	0.00E+00
"Te-129	"0.00E+00	0.00E+00
"Te-129m	"0.00E+00	0.00E+00
"I-129	"3.65E-02	5.83E-05
"Cs-134	"1.74E-04	6.07E-06
"Cs-135	"4.27E-01	4.87E-04
"Cs-137	"2.89E+04	9.96E+01

```
"Ba-137m"2.73E+04    3.66E+02
"Ce-141 "0.00E+00    0.00E+00
"Pr-143 "0.00E+00    0.00E+00
"Ce-144 "0.00E+00    0.00E+00
"Pr-144 "0.00E+00    0.00E+00
"Pr-144m"0.00E+00    0.00E+00
"Pm-147 "4.12E-02    5.16E-05
"Pm-148 "0.00E+00    0.00E+00
"Pm-148m"0.00E+00    0.00E+00
"Sm-151 "5.29E+02    2.11E-01
"Eu-152 "9.09E-01    1.40E-02
"Gd-153 "0.00E+00    0.00E+00
"Eu-154 "4.09E+01    1.25E+00
"Eu-155 "4.10E-01    1.01E-03
"Tb-160 "0.00E+00    0.00E+00
"H-3    "6.79E-01    7.78E-05
"C-14   "3.89E+00    3.88E-03
"Fe-55  "1.88E-04    2.14E-08
"Ni-59  "2.24E-01    3.04E-05
"Co-60  "1.11E-01    5.82E-03
"Ni-63  "1.85E+01    6.39E-03
"Zr-93  "7.10E-02    2.79E-05
"Nb-93m "6.43E-02    3.93E-05
"Zr-95  "0.00E+00    0.00E+00
"Nb-95  "0.00E+00    0.00E+00
"Nb-95m "0.00E+00    0.00E+00
"In-113m"0.00E+00    0.00E+00
"Sn-113 "0.00E+00    0.00E+00
"Sn-119m"0.00E+00    0.00E+00
"Sn-121m"1.66E-01    5.96E-04
"Sb-125 "2.38E-04    2.55E-06
"Te-125m"5.81E-05    1.67E-07
"U-234  "2.63E+00    2.54E-01
"U-235  "8.61E-02    7.96E-03
"U-236  "4.96E-01    4.53E-02
"U-238  "2.27E+00    1.93E-01
"Np-237 "3.29E-01    3.23E-02
"Pu-238 "7.20E+02    8.01E+01
"Pu-239 "1.21E+03    1.26E+02
"Pu-240 "9.75E+02    1.02E+02
"Pu-241 "8.22E+03    8.69E-01
"Pu-242 "6.48E-01    6.44E-02
"Am-241 "4.26E+03    4.77E+02
"Am-242m"2.37E+00    1.24E-02
"Am-242 "2.36E+00    6.70E-02
"Am-243 "2.13E+00    2.30E-01
"Cm-242 "1.96E+00    2.42E-01
"Cm-244 "8.55E+00    1.00E+00
```

APPENDIX C

HALF-LIFE, SPECIFIC ACTIVITY, AND SPECIFIC HEAT FOR SELECTED RADIONUCLIDES

Specific Activity and Decay Heat Generation Rates for Selected Radionuclides.						
Radio-nuclide	Atomic Weight	Half-life		Specific Activity (Ci/g)	Decay Heat Generation Rate	
					(W/Ci)	(W/g)
H-3	3	3.897e+08	s	9.651e+03	3.367e-05	3.250e-01
C-14	14	1.808e+11	s	4.458e+00	2.933e-04	1.307e-03
Fe-55	55	2.600e+00	y	2.500e+03	3.379e-05	8.448e-02
Co-60	60	1.663e+08	s	1.131e+03	1.542e-02	1.744e+01
Ni-59	59	8.000e+01	ky	7.575e-02	3.972e-05	3.009e-06
Ni-63	63	9.200e+01	y	6.169e+01	3.972e-04	2.450e-02
Se-79	79	2.050e+12	s	6.967e-02	2.490e-04	1.735e-05
Kr-85	85	3.383e+08	s	3.924e+02	1.498e-03	5.878e-01
Sr-89	89	4.363e+06	s	2.906e+04	3.457e-03	1.005e+02
Sr-90	90	9.190e+08	s	1.364e+02	1.161e-03	1.583e-01
Y-90	90	2.304e+05	s	5.441e+05	5.543e-03	3.016e+03
Y-91	91	5.055e+06	s	2.453e+04	3.592e-03	8.810e+01
Zr-93	93	4.828e+13	s	2.513e-03	1.162e-04	2.920e-07
Zr-95	95	5.528e+06	s	2.148e+04	5.066e-03	1.088e+02
Nb-93m	93	4.292e+08	s	2.827e+02	1.772e-04	5.009e-02
Nb-95	95	3.037e+06	s	3.911e+04	4.797e-03	1.876e+02
Nb-95m	95	3.118e+05	s	3.809e+05	1.390e-03	5.293e+02
Tc-99	99	6.722e+12	s	1.695e-02	5.015e-04	8.503e-06
Ru-103	103	3.394e+06	s	3.228e+04	3.346e-03	1.080e+02
Ru-106	106	3.181e+07	s	3.346e+03	5.946e-05	1.990e-01
Rh-103m	103	3.367e+03	s	3.253e+07	2.302e-04	7.489e+03
Rh-106	106	2.990e+01	s	3.560e+09	9.592e-03	3.415e+07
Pd-107	107	2.050e+14	s	5.144e-04	5.928e-05	3.049e-08
Ag-110	110	2.460e+01	s	4.170e+09	7.185e-03	2.996e+07
Ag-110m	110	2.159e+07	s	4.751e+03	1.670e-02	7.934e+01
Cd-113m	113	4.604e+08	s	2.169e+02	1.684e-03	3.651e-01
Cd-115m	115	3.853e+06	s	2.546e+04	3.730e-03	9.498e+01
In-113m	113	5.969e+03	s	1.673e+07	2.330e-03	3.897e+04
Sn-113	113	9.945e+06	s	1.004e+04	1.666e-04	1.672e+00
Sn-119m	119	2.117e+07	s	4.479e+03	5.169e-04	2.315e+00
Sn-121m	121	1.577e+09	s	5.913e+01	2.004e-03	1.185e-01
Sn-123	123	1.116e+07	s	8.220e+03	3.124e-03	2.567e+01

Specific Activity and Decay Heat Generation Rates for Selected Radionuclides.						
Radio-nuclide	Atomic Weight	Half-life		Specific Activity (Ci/g)	Decay Heat Generation Rate	
					(W/Ci)	(W/g)
Sn-126	126	3.156e+12	s	2.837e-02	1.247e-03	3.539e-05
Sb-124	124	5.201e+06	s	1.750e+04	1.328e-02	2.323e+02
Sb-125	125	8.741e+07	s	1.033e+03	3.126e-03	3.229e+00
Sb-126	126	1.071e+06	s	8.361e+04	1.848e-02	1.545e+03
Sb-126m	126	1.140e+03	s	7.855e+07	1.273e-02	1.000e+06
Te-125m	125	5.011e+06	s	1.801e+04	8.406e-04	1.514e+01
Te-127	127	3.366e+04	s	2.639e+06	1.350e-03	3.564e+03
Te-127m	127	9.418e+06	s	9.433e+03	5.379e-04	5.074e+00
Te-129	129	4.176e+03	s	2.094e+07	3.573e-03	7.483e+04
Te-129m	129	2.903e+06	s	3.013e+04	1.754e-03	5.283e+01
I-129	129	4.954e+14	s	1.766e-04	4.626e-04	8.168e-08
Cs-134	134	6.507e+07	s	1.294e+03	1.018e-02	1.317e+01
Cs-135	135	7.258e+13	s	1.152e-03	3.338e-04	3.843e-07
Cs-137	137	9.467e+08	s	8.699e+01	1.106e-03	9.623e-02
Ba-137m	137	1.531e+02	s	5.379e+08	3.927e-03	2.112e+06
Ce-141	141	2.809e+06	s	2.849e+04	1.464e-03	4.171e+01
Ce-144	144	2.456e+07	s	3.190e+03	6.634e-04	2.116e+00
Pr-143	143	1.172e+06	s	6.732e+04	1.863e-03	1.254e+02
Pr-144	144	1.037e+03	s	7.556e+07	7.351e-03	5.554e+05
Pr-144m	144	4.320e+02	s	1.814e+08	3.422e-04	6.206e+04
Pm-147	147	8.279e+07	s	9.271e+02	3.587e-04	3.326e-01
Pm-148	148	4.640e+05	s	1.643e+05	7.701e-03	1.265e+03
Pm-148m	148	3.568e+06	s	2.137e+04	1.268e-02	2.709e+02
Sm-151	151	2.840e+09	s	2.631e+01	1.173e-04	3.085e-03
Eu-152	152	4.292e+08	s	1.730e+02	7.564e-03	1.308e+00
Eu-154	154	2.714e+08	s	2.700e+02	8.946e-03	2.415e+00
Eu-155	155	1.565e+08	s	4.651e+02	7.274e-04	3.383e-01
Gd-153	153	2.091e+07	s	3.527e+03	9.034e-04	3.186e+00
Tb-160	160	6.247e+06	s	1.129e+04	8.145e-03	9.195e+01
U-234	234	7.716e+12	s	6.249e-03	2.880e-02	1.800e-04
U-235	235	2.221e+16	s	2.162e-06	2.619e-02	5.662e-08
U-236	236	7.389e+14	s	6.470e-05	2.709e-02	1.753e-06
U-238	238	1.410e+17	s	3.362e-07	2.537e-02	8.529e-09

Specific Activity and Decay Heat Generation Rates for Selected Radionuclides.

Radio-nuclide	Atomic Weight	Half-life		Specific Activity (Ci/g)	Decay Heat Generation Rate	
					(W/Ci)	(W/g)
Np-237	237	6.753e+13	s	7.050e-04	3.057e-02	2.155e-05
Pu-238	238	2.769e+09	s	1.712e+01	3.314e-02	5.675e-01
Pu-239	239	7.594e+11	s	6.217e-02	3.082e-02	1.916e-03
Pu-240	240	2.063e+11	s	2.279e-01	3.114e-02	7.096e-03
Pu-241	241	4.544e+08	s	1.030e+02	3.100e-05	3.194e-03
Pu-242	242	1.221e+13	s	3.819e-03	2.953e-02	1.128e-04
Am-241	241	1.364e+10	s	3.432e+00	3.322e-02	1.140e-01
Am-242	242	5.767e+04	s	8.085e+05	1.135e-03	9.178e+02
Am-242m	242	4.797e+09	s	9.719e+00	3.950e-04	3.840e-03
Am-243	243	2.329e+11	s	1.994e-01	3.215e-02	6.409e-03
Cm-242	242	1.410e+07	s	3.307e+03	3.685e-02	1.218e+02
Cm-244	244	5.715e+08	s	8.091e+01	3.498e-02	2.830e+00

Time abbreviations are as follows: "Gy" gigayears, "My" megayears, "Ky" kiloyears, "y" years, "d" days, "h" hours, "m" minutes, and "s" seconds.

APPENDIX D

ENABLING ASSUMPTIONS

ENABLING ASSUMPTIONS

The following is a list of the assumptions that were made to enable the development of this document. This list indicates the limitations of the data that have been developed. A projected method of validation is presented for each assumption. It is anticipated that a decision will be made on the need to validate each assumption, comparing the cost of validation with the uncertainty associated with retaining the assumption invalidated.

- Nuclear Accountability Database

The assumption is that the database is an accurate reflection of the fuel that is stored in the K Basins. There are at least two such databases: the one used here, and another known as Reconstructed SCATS which was developed in parallel with the Nuclear Accountability database. The Reconstructed SCATS database was used in the development of the safety analysis which was done totally independently of the feed basis. The results of feed development in this document are within about 10% of those presented in the safety documentation for ^{137}Cs and ^{241}Am, two important isotopes for shielding and safety basis calculations.

The Nuclear Accountability database was used because it represents the official accepted numbers for tracking special nuclear materials. Because the Nuclear Accountability data contains the official plutonium inventory for the Hanford site, the plutonium isotopes reported in tables 2.2, 2.4, 3.5, 3.6, and 3.7 come directly from the database (WHC 1996).

For the purpose of this development, the most important aspects of the database are: the type of fuel (Mark 1A or Mark IV); the date irradiation of the fuel ended, listed here as a key date (date of discharge from the reactor); the percentage ^{240}Pu in the fuel; and the mass of uranium in the fuel. Validation of the database, for these factors, could be obtained by direct measurement of the beta/gamma energy levels emitted by the fuel and the use those energies to estimate concentrations of particular nuclides. With knowledge of the nuclide concentrations in the fuel, time since discharge and ^{240}Pu content could be estimated accurately. The mass of uranium, at least for the undamaged elements, could be obtained by weighing the fuel, and then adjusting the weight to account for the cladding, fission, activation, and actinide products. This activity would be difficult and costly.

- ORIGEN2

The assumption is that ORIGEN2 accurately predicts fission, activation, and actinide products in irradiated N-Reactor fuel, when correct input information is used. There is reason to suspect that some impurities in the fuel were inadequately defined, and that activation products from those impurities may become important for shielding and/or safety basis definition.

The ^{60}Co amounts were specifically changed in RADNUC from those predicted in ORIGEN2 because of higher than expected ^{60}Co concentrations in tank waste samples. It is important to note that radionuclides in the tank waste originated in irradiated N Reactor fuel processed at the PUREX Plant. Subsequent samples showed somewhat lower cobalt concentrations, and RADNUC was changed to reflect these lower numbers. In the development work done here, the ^{60}Co concentrations as predicted by RADNUC produced about half the dose rates resulting from the ^{137}Cs and therefore shielding basis is derived by cesium, and not cobalt. For the present the shielding design basis should be as listed here.

Another potentially important isotope is ^{14}C which results from the activation of nitrogen in the fuel or cladding, and as a fission product. Activation of nitrogen produces orders of magnitude more ^{14}C than fission.
As in the case of cobalt, the ^{14}C amounts in RADNUC were changed to reflect higher than expected concentrations in tank waste samples.

Validation of ORIGEN2 for N Reactor would need to be done by analysis of a statistically meaningful sampling of irradiated N Reactor fuels. The analysis results would need to be compared with ORIGEN2 predictions.

Levels of activation products in the fuel and cladding will depend on impurity levels in the unirradiated fuel. Since the fuel was fabricated using many different shipments of uranium and zircaloy 2, it is possible that impurity levels varied significantly over time.

- RADNUC

The assumption is that RADNUC accurately predicts nuclide concentrations in N Reactor fuel. RADNUC was originally written to predict nuclides in tank waste. The nuclides in tank waste however, originated in the irradiated fuel. Therefore, RADNUC was written to determine fission, activation, and actinide products in the fuel. As originally written, RADNUC gave the user the option of removing some of the actinides and fission products to simulate processing activities at PUREX and other facilities. RADNUC was recently changed to allow the user to specify fuel or tank waste in the case of fuel, no nuclides are removed.

RADNUC uses ORIGEN2 runs for Mark 1A and Mark IV N Reactor fuel as the basis for estimating radionuclide amounts. Output from ORIGEN2 runs for 6%, 9%, 12%, and 16% ^{240}Pu are included in the RADNUC code. It is important to note that although the runs are referred to as 6%, 9%, 12%, and 16% ^{240}Pu runs, ORIGEN2 input files only include burnup information and were iterated to arrive at the desired ^{240}Pu content. In the case of the "16% ^{240}Pu" run the actual ^{240}Pu content is only slightly over 15% at discharge and actually drops below 15% at 120 days after discharge. This apparent weakness in the available ORIGEN2 runs was factored into the RADNUC code however, and should not present a problem in the predictions.

RADNUC reads the $\%^{240}Pu$ content from the input data file and interpolates the radionuclide per MTU content from the 2 nearest ORIGEN2 runs. For ^{240}Pu contents between 0% and 6% a direct linear interpolation scheme is used, for ^{240}Pu contents between 6% and 15% the log of ^{240}Pu content is interpolated, and for ^{240}Pu contents above 15%, the log of the ^{240}Pu content is used to extrapolate the nuclides. Each of the 88 isotopes are interpolated or extrapolated for each entry in the input data file. Each of the nuclides are summed to arrive at total for each of the 88 for the entire data file. For fission and activation products, the concentration of nuclides in the fuel is nearly linear with ^{240}Pu content, and therefore should be predicted well by RADNUC. Actinides are somewhat less linear, and therefore accurate prediction by interpolation is limited to the range well covered by the available data. Fortunately, the maximum ^{240}Pu content is only slightly above 16%.

RADNUC has been validated by comparison with ORIGEN2 runs for identical ^{240}Pu content fuels. This validation was performed and documented as part of the changes to the RADNUC code.

- Fuel vs Sludge

The assumption is that all the fuel in the K Basins is intact, and contains all of the nuclides within its cladding. In fact this assumption is not correct, much of the fuel in the basins has damaged, and in some cases severely damaged, cladding which has allowed the uranium to corrode and release fission, activation, and actinide products into the surrounding basin as either gases, soluble materials, or solids (sludge). Some of this material (^{85}Kr and ^{3}H) has been released to the environment, and some has been removed from the basin water in the treatment systems (filtration and ion exchange). It is difficult to account for the exact origin of the radionuclides in the basin sludge, filtration systems, ion exchange columns, and other basin systems because of the long history of fuel storage in the basins.

Extensive analyses would be required to determine the origin of radionuclides in: sludge or other basin systems; ion exchange columns; or environmental releases. These analyses are not recommended because of the high cost and small likelihood that any such results would cause significant changes to fuel storage or treatment systems. A conservative approach is to assume that the radionuclides in basin sludge, basin water systems, and any which may have been released to the environment, originated in fuel not currently stored in the basins. At the same time the most conservative assumption is that all nuclides which originated in the fuel currently in storage remain with the fuel.

APPENDIX E (DELETED)

CALCULATION OF SLUDGE COMPONENT INVENTORY

This appendix has been deleted. See Volume 2 of this document (HNF-SD-SNF-TI-009) for sludge information.

This page intentionally left blank.

APPENDIX F

SAFETY/REGULATORY ASSESSMENT BASIS METHODOLOGY

The Safety/Regulatory assessment basis was selected by estimating a relative dose commitment to people resulting from an accidental release. The dose rates were estimated using "*Internal Dose Conversion Factors for Calculation of Dose to the Public*" (DOE 1988), which includes tables for radionuclides. The tables give the dose rate per unit intake of the radionuclide for ingestion and inhalation pathways to various organs and a total dose known as a cumulative effective dose equivalent or CEDE.

For a release of irradiated fuel, the total dose to people per unit mass released, is dominated by only a few nuclides. The dose results from a product of the activity/unit mass of fuel, and the CEDE (REM/unit activity). ^{241}Am, with a CEDE of 520 rem/μCi for the inhalation pathway and a total of 315,000 Ci in the K Basins, results in the largest potential dose from a single nuclide in a release. Plutonium isotopes, with CEDE's of 330 rem/μCi for ^{239}Pu and ^{240}Pu; 300 rem/μCi for ^{238}Pu; and 5.7 rem/μCi for ^{241}Pu, and totals of 225,000 Ci of ^{239}Pu, 130,000 Ci ^{240}Pu, 125,000 Ci ^{238}Pu, and 7,380,000 Ci ^{241}Pu in the K Basins, also result in significant potential dose in comparison to ^{241}Am. ^{90}Sr, with a CEDE of 1.3 rem/μCi, and a total of 10,500,000 Ci in the K Basins, also results in a significant potential dose in comparison with ^{241}Am. ^{137}Cs, the isotope with the largest activity (13,500,000 Ci in the K Basins), and with a CEDE of 0.032 rem/μCi results in a dose about 2.5 orders of magnitude less than the ^{241}Am. The dose resulting from other nuclides in the fuel is negligible in comparison to those above because of their lower abundance and smaller CEDE.

The fuel in the K basins containing the mix of these isotopes per unit mass of fuel with the largest potential dose consequence is used to establish a safety envelope. ^{241}Am with a half life of approximately 433 years results in the fuel primarily from the decay of ^{241}Pu. Because of the difference in half lives, ^{241}Pu has a half life of approximately 14 years, the concentration of ^{241}Am in the fuel increases for approximately 60 years following discharge from the reactor. ^{241}Am concentrations are increasing in both single pass and N Reactor fuels. The most important plutonium isotopes from a safety/regulatory assessment standpoint are ^{239}Pu and ^{240}Pu with half lives of 24,100 and 6,560 years respectively. Over a fifty year life, the concentrations of ^{239}Pu and ^{240}Pu will not change appreciably in the fuel. The concentrations of ^{90}Sr, ^{137}Cs, ^{238}Pu, and ^{241}Pu all change significantly over a fifty year facility life.

Two factors are important in determining which fuel to use in determining the safety/regulatory assessment design basis: burn-up, and time since discharge from the reactor. The safety/regulatory assessment basis should be the highest burn-up fuel in the basins. Time since discharge is also an important factor. As a first guess, the highest burn-up fuel N Reactor fuel (16.72% ^{240}Pu Mk IV fuel discharged from N Reactor 2/20/1995) is used as a starting point in the determination. Tables F.1 and F.2 show the concentrations of the safety basis nuclides in this fuel on 1/1/1995, and 1/1/2015 respectively.

Tables F.3 and F.4 are 16.49% ^{240}Pu fuel discharged from N Reactor on May 1, 1976. Table F.5 is single Pass reactor fuel with 26% ^{240}Pu content. Note that the dose equivalent for the lower burn-up N reactor fuel and for SPR fuel is lower than for the 16.72% ^{240}Pu fuel in all cases.

Table F.1: Maximum ^{240}Pu Content N Reactor Fuel in the K Basins
As of 1/1/1995

Isotope	Activity (Ci/MTU)	CEDE (rem/uCi)	Dose Equivalent (rem/MTU)
Sr-90	7.84e+03	1.30e+00	1.02e+10
Cs-137	1.08e+04	3.20e-02	3.46e+08
Pu-238	1.71e+02	3.00e+02	5.13e+10
Pu-239	1.58e+02	3.30e+02	5.21e+10
Pu-240	1.28e+02	3.30e+02	4.22e+10
Pu-241	9.25e+03	5.70e+00	5.27e+10
Pu-242	1.05e-01	3.10e+02	3.25e+07
Am-241	3.58e+02	5.20e+02	1.86e+11
Total Dose Equivalent (rem/MTU) 3.95e+11			

RADNUC 2.0 run 3/7/1995 for Maximum Pu-240 content K Basin fuel
Results decayed to 01/01/1995. Total mass in run 6.90e+00 MTU. Total Activity in run 3.35e+05 Ci.

Table F.2: Maximum ^{240}Pu Content N Reactor Fuel in the K Basins
As of 1/1/2015

Isotope	Activity (Ci/MTU)	C.E.D.E. (rem/uCi)	Dose Equivalent (rem/MTU)
Sr-90	4.87e+03	1.30e+00	6.33e+09
Cs-137	6.81e+03	3.20e-02	2.18e+08
Pu-238	1.46e+02	3.00e+02	4.39e+10
Pu-239	1.58e+02	3.30e+02	5.21e+10
Pu-240	1.28e+02	3.30e+02	4.21e+10
Pu-241	3.54e+03	5.70e+00	2.02e+10
Pu-242	1.05e-01	3.10e+02	3.25e+07
Am-241	5.33e+02	5.20e+02	2.77e+11
Total Dose Equivalent (rem/MTU) 4.42e+11			

RADNUC 2.0 run 3/7/1995 for Maximum pu-240 K Basin Fuel. Results decayed to 01/01/2015.
Total mass for run 6.90e+00 MTU. Total Activity for run 1.92e+05 Ci

Table F.3: 16.49% ^{240}Pu Fuel Discharged from N Reactor 5/1/1976 as of 1/1/1995

Isotope	Activity (Ci/MTU)	CEDE (rem/uCi)	Dose Equivalent (rem/MTU)
Sr-90	7.20e+03	1.30e+00	9.36e+09
Cs-137	9.91e+03	3.20e-02	3.17e+08
Pu-238	1.59e+02	3.00e+02	4.76e+10
Pu-239	1.56e+02	3.30e+02	5.15e+10
Pu-240	1.24e+02	3.30e+02	4.10e+10
Pu-241	7.72e+03	5.70e+00	4.40e+10
Pu-242	9.74e-02	3.10e+02	3.02e+07
Am-241	3.78e+02	5.20e+02	1.96e+11
Total Equivalent Dose (rem/MTU) 3.90e+11			
RADNUC 2.0 run 1/26/1995 for Safety Basis Fuel Results decayed to 01/01/1995. Total Mass 1.16e+01 MTU. Total Activity 5.04e+05 Ci.			

Table F.4: 16.49% ^{240}Pu Fuel Discharged from N Reactor 5/1/1976 as of 1/1/2015

Isotope	Activity (Ci/MTU)	CEDE (rem/MTU)	Dose Equivalent (rem/MTU)
Sr-90	4.47e+03	1.30e+00	5.82e+09
Cs-137	6.25e+03	3.20e-02	2.00e+08
Pu-238	1.35e+02	3.00e+02	4.06e+10
Pu-239	1.56e+02	3.30e+02	5.15e+10
Pu-240	1.23e+02	3.30e+02	4.07e+10
Pu-241	2.95e+03	5.70e+00	1.68e+10
Pu-242	9.74e-02	3.10e+02	3.02e+07
Am-241	5.22e+02	5.20e+02	2.72e+11
Total Dose Equivalent (rem/MTU) 4.27e+11			
RADNUC 2.0 run 3/7/1995 for 1/1/1995 Safety Basis. Results decayed to 01/01/2015. Total Mass this run 1.16e+01 MTU. Total Activity this run 2.93e+05 Ci.			

Table F.5: 26.% ^{240}Pu SPR Fuel Currently in storage at PUREX

Isotope	Activity (Ci/MTU)	CEDE (rem/uCi)	Dose Equivalent (rem/MTU)
Sr-90	4.03e+03	1.30e+00	5.24e+09
Cs-137	1.03e+04	3.20e-02	3.30e+08
Pu-238	4.30e+01	3.00e+02	1.29e+10
Pu-239	1.20e+02	3.30e+02	3.96e+10
Pu-240	1.90e+02	3.30e+02	6.27e+10
Pu-241	5.00e+03	5.70e+00	2.85e+10
Pu-242	not available	3.10e+02	N/A
Am-241	4.30e+02	5.20e+02	2.24e+11
Total Dose Equivalent (rem/MTU) 3.73e+11			
Single Pass Reactor Fuel. Results decayed to 01/01/1994.			

The 16.72% ^{240}Pu fuel is the safety/regulatory assessment basis fuel.

This page intentionally left blank.

APPENDIX G (DELETED)

INDEPENDENT REVIEW

This section has been deleted as the independent review was completed on Rev. 0 information, which has since been updated.

This page intentionally left blank.

DISTRIBUTION SHEET

To	From	Page 1 of 1
Distribution	Process Engineering	Date August 6, 1998
Project Title/Work Order		EDT No. N/A
105-K Basin Material Design Basis Feed Description for Spent Nuclear Fuel Project Facilities, Volume 1, Fuel		ECN No. 645117

Name	MSIN	Text With All Attach.	Text Only	Attach. / Appendix Only	EDT/ECN Only
COGEMA Engineering Corporation					
A. L. Pajunen	R3-86	X			
DE&S Hanford, Inc.					
C. J. Alderman	X3-85	X			
R. B. Baker	H0-40	X			
D. E. Ball	R3-86	X			
D. W. Bergmann	X3-79	X			
K. H. Bergsman	X3-85	X			
G. M. Davis	X3-80	X			
D. R. Duncan	R3-86	X			
J. R. Frederickson	R3-86	X			
W. M. Funderburke	X3-71	X			
R. G. Gant	X3-79	X			
L. H. Goldmann	R3-86	X			
P. G. Leroy	X3-79	X			
M. K. Mahaffey	R3-86	X			
R. H. Meichle	X3-79	X			
R. G. Morgan	R3-26	X			
R. P. Omberg	R3-26	X			
K. L. Pearce	H7-20	X			
A. N. Praga (3)	R3-86	X			
M. A. Reilly	R3-86	X			
R. P. Ruth	R3-11	X			
A. M. Segrest	R3-11	X			
E. J. Shen	X3-75	X			
D. L. Sherrell	R3-86	X			
D. W. Smith	R3-26	X			
K. E. Smith	R3-86	X			
J. A. Swenson	R3-11	X			
C. A. Thompson	R3-86	X			
J. E. Turnbaugh	X3-79	X			
Central Files (Orig + 1)	A3-88	X			
SNF Project Files	R3-11	X			
Fluor Daniel Hanford					
E. W. Gerber	R3-11	X			
R. L. McCormack	R3-11	X			
Fluor Daniel Northwest Services					
L. J. Garvin	R3-26	X			
D. A. Smith	R1-49	X			
NUMATEC Hanford Company					
G. D. Bazinet	S8-06	X			
J. J. Irwin	R3-86	X			
C. R. Miska	R3-86	X			
J. P. Sloughter	H5-49	X			
XWEST					
B. D. Lorenz	R3-26	X			